An Oshkosh Corporation Company

Service & Maintenance Manual

Model

4045R

3121761

August 23, 2019 - Rev F

ANSI CE AS/NZS GB

An Oshkosh Corporation Company

SECTION A. INTRODUCTION - MAINTENANCE SAFETY PRECAUTIONS

GENERAL

This section contains the general safety precautions which must be observed during maintenance of the Mobile Elevating Work Platform (MEWP). It is of utmost importance that maintenance personnel pay strict attention to these warnings and precautions to avoid possible injury to themselves or others, or damage to the equipment. A maintenance program must be followed to ensure that the machine is safe to operate.

WARNING

MODIFICATION OR ALTERATION OF A MEWP SHALL BE MADE ONLY WITH WRITTEN PERMISSION FROM THE MANUFACTURER.

The specific precautions to be observed during maintenance are inserted at the appropriate point in the manual. These precautions are, for the most part, those that apply when servicing hydraulic and larger machine component parts.

Your safety, and that of others, is the first consideration when engaging in the maintenance of equipment. Always be conscious of weight. Never attempt to move heavy parts without the aid of a mechanical device. Do not allow heavy objects to rest in an unstable position. When raising a portion of the equipment, ensure that adequate support is provided.

WARNING

SINCE THE MACHINE MANUFACTURER HAS NO DIRECT CONTROL OVER THE FIELD INSPECTION AND MAINTENANCE, SAFETY IN THIS AREA RESPONSIBILITY OF THE OWNER/OPERATOR.

HYDRAULIC SYSTEM SAFETY

It should be noted that the machines hydraulic systems operate at extremely high potentially dangerous pressures. Every effort should be made to relieve any system pressure prior to disconnecting or removing any portion of the system.

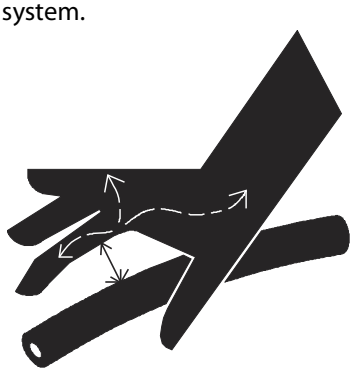

MAINTENANCE

WARNING

FAILURE TO COMPLY WITH SAFETY PRECAUTIONS LISTED IN THIS SECTION COULD RESULT IN MACHINE DAMAGE, PERSONNEL INJURY OR DEATH AND IS A SAFETY VIOLATION.

- USE ONLY REPLACEMENT PARTS OR COMPONENTS THAT ARE APPROVED BY JLG. TO BE CONSIDERED APPROVED, REPLACEMENT PARTS OR COMPONENTS MUST BE IDENTICAL OR EQUIVALENT TO ORIGINAL PARTS OR COMPONENTS.
- NO SMOKING IS MANDATORY. NEVER REFUEL DURING ELECTRICAL STORMS. ENSURE THAT FUEL CAP IS CLOSED AND SECURE AT ALL OTHER TIMES.
- REMOVE ALL RINGS, WATCHES AND JEWELRY WHEN PERFORMING ANY MAINTENANCE.
- DO NOT WEAR LONG HAIR UNRESTRAINED, OR LOOSE-FITTING CLOTHING AND NECKTIES WHICH ARE APT TO BECOME CAUGHT ON OR ENTANGLED IN EQUIPMENT.
- OBSERVE AND OBEY ALL WARNINGS AND CAUTIONS ON MACHINE AND IN SERVICE MANUAL.
- KEEP OIL, GREASE, WATER, ETC. WIPED FROM STANDING SURFACES AND HAND HOLDS.
- USE CAUTION WHEN CHECKING A HOT, PRESSURIZED COOLANT SYSTEM.
- NEVER WORK UNDER AN ELEVATED SCISSOR UNTIL PLATFORM HAS BEEN SAFELY RESTRAINED FROM ANY MOVEMENT BY BLOCKING OR OVERHEAD SLING, OR SAFETY PROP HAS BEEN ENGAGED.
- BEFORE MAKING ADJUSTMENTS, LUBRICATING OR PERFORMING ANY OTHER MAINTENANCE, SHUT OFF ALL POWER CONTROLS.
- BATTERY SHOULD ALWAYS BE DISCONNECTED DURING REPLACEMENT OF ELECTRICAL COMPONENTS.
- KEEP ALL SUPPORT EQUIPMENT AND ATTACHMENTS STOWED IN THEIR PROPER PLACE.
- USE ONLY APPROVED, NONFLAMMABLE CLEANING SOLVENTS.

REVISION LOG

Original Issue	A - June 19, 2017
Revised	B - August 11, 2017
Revised	C - November 20, 2017
Revised	D - February 6, 2018
Revised	E - June 29, 2018 - Revised Covers
Revised	F - August 23, 2019

TABLE OF CONTENTS

SUBJECT - SECTION, PARAGRAPH **PAGE NO.**

SECTION A - INTRODUCTION - MAINTENANCE SAFETY PRECAUTIONS

General A-1
Hydraulic System Safety A-1
Maintenance A-1

SECTION 1 - SPECIFICATIONS

1.1 Specification 1-1
Platform Capacities 1-2
Machine Dimensional Data 1-2
Tires 1-2
Batteries 1-3
Motors 1-3
Electrical System 1-4
1.2 Limit Switch Activation 1-5
Tilt Alarm 1-5
High Drive Speed Cutout 1-5
1.3 Lubrication 1-5
Lubrication Capacities 1-5
Hydraulic Oil 1-5
Lubrication Specifications 1-6
1.4 Hydraulic Pressure Settings 1-8
1.5 Hydraulic Cylinder Specifications 1-8
1.6 Serial Number Location 1-8
1.7 Critical Stability Weights 1-9
1.8 Major Component Weights 1-9
1.9 Torque Requirements 1-9
Torque Charts 1-10

SECTION 2 - GENERAL

2.1 Machine Preparation, Inspection, and Maintenance 2-1
General 2-1
Preparation, Inspection, and Maintenance 2-1
Pre-Start Inspection 2-1
Pre-Delivery Inspection and Frequent Inspection 2-1
Annual Machine Inspection 2-1
Preventative Maintenance 2-1
2.2 Preventive Maintenance and Inspection Schedule 2-3
Maintenance and Inspection Schedule Codes 2-3
2.3 Service Maintenance Components 2-6
Scissor Arm - Safety Prop 2-6
Hydraulic Oil Check Procedure 2-7
2.4 Service and Guidelines 2-8
General 2-8
Safety and Workmanship 2-8
Cleanliness 2-8
Components Removal and Installation 2-8
Component Disassembly and Reassembly 2-8
Pressure-Fit Parts 2-8
Bearings 2-8
Gaskets 2-8
Bolt Usage and Torque Application 2-8

Hydraulic Lines and Electrical Wiring 2-9
Hydraulic System 2-9
Lubrication 2-9
Battery 2-9
2.5 Lubrication and Information 2-9
Hydraulic System 2-9
Hydraulic Oil 2-9
Changing Hydraulic Oil 2-9
2.6 Cylinder Drift Test 2-10
Platform Drift 2-10
Cylinder Drift 2-10
2.7 Pins and Composite Bearing Repair Guidelines 2-10

SECTION 3 - CHASSIS & SCISSOR ARMS

3.1 Left and Right Side component compartments 3-1
3.2 Battery Removal/Maintenance 3-2
Battery Quick-Disconnect (If Equipped) 3-2
Battery Maintenance and Safety Practices 3-3
3.3 Battery Charging 3-3
Delta-Q - Battery Charger 3-4
Green Power - Battery Charger (China (GB) Only) 3-4
Eagle Performance - Battery Charger 3-4
Battery Charger Maintenance 3-5
3.4 DC/AC Power Inverter Installation - Option 3-9
3.5 Logic Control Module Installation 3-10
3.6 Main Power Contactor Relay and Pump Control Module 3-11
3.7 Pump Control Module 3-12
Removal 3-12
Installation 3-12
3.8 Ground Control Station - Folding Cover 3-14
Components Location 3-14
Removal 3-14
Installation 3-14
3.9 Ground Control Station - Fixed Cover 3-16
Components Location 3-16
Removal 3-16
Installation 3-16
3.10 Platform Control Station 3-18
Installation/Removal 3-19
Control Station Disassembly 3-19
Joystick Controller 3-21
3.11 Tilt Sensor Installation 3-22
Tilt Sensor Removal 3-22
Tilt Sensor Installation 3-22
3.12 Elevation Sensor 3-23
Elevation Sensor Installation 3-24
3.13 Pot-Hole Protection System Components 3-25
3.14 Steer and Spindle Assembly Components 3-26
Drive Motor Covers Installation - Option 3-27
Tire Wear and Damage 3-28
Wheel and Tire Replacement 3-28
Wheel Installation 3-28
3.15 Arms and Platform Positioning and Support 3-29
3.16 Platform Removal 3-29
3.17 Scissor Arms Removal 3-29
Removing Scissor Arm Assembly as a Complete Unit 3-29
Removing/Installing Scissor Arms Individually 3-29

SECTION 4 - HYDRAULICS

4.1 Cylinders - Theory of Operation 4-1
4.2 Valves - Theory of Operation 4-1
Solenoid Control Valves (Bang-Bang) 4-1
Relief Valves 4-1
Crossover Relief Valves 4-1
Proportional Valve 4-1
Manual Descent Valve 4-1
4.3 Pump/Motor 4-2
Pump Motor Electrical Evaluation 4-2
4.4 Hydraulic Tank Installation 4-4
Hydraulic Oil Check Procedure 4-5
4.5 Hydraulic Pump and Electric Motor Assembly 4-6
Pump/Motor Removal 4-6
Pump/Motor Disassembly 4-7
Pump/Motor Assembly 4-7
Pump/Motor Installation 4-7
4.6 Hydraulic Manifold Valve Installation 4-8
4.7 Drive Motor Installation 4-12
4.8 Hydraulic Brake Installation 4-13
Hydraulic Brake Release 4-13
4.9 Pressure Setting Procedure 4-14
Main Relief 4-14
Lift Up Relief 4-14
Steer Relief 4-14
4.10 Cylinder Checking Procedure 4-15
4.11 Lift Cylinder Removal/Installation 4-15
4.12 Lower Lift Cylinder 4-16
Disassembly 4-16
Assembly 4-16
4.13 Upper Lift Cylinder 4-16
Disassembly 4-16
Assembly 4-16
4.14 Cylinder Repair 4-20
Disassembly 4-20
Cleaning and Inspection 4-21
Assembly 4-21

SECTION 5 - JLG CONTROL SYSTEM

5.1 Hand Held Analyzer 5-1
Diagnostic Port 5-1
To Connect the Hand Held Analyzer 5-1
Using the Analyzer 5-3
Changing the Access Level of the Hand Held Analyzer 5-4
Adjusting Parameters Using the Hand Held Analyzer 5-5
Machine Setup 5-5
5.2 Joystick Calibration 5-6
5.3 Tilt Sensor Calibration 5-6
Tilt Sensor Failure Troubleshooting 5-6
5.4 Elevation Sensor Calibration 5-7
5.5 Updating Software 5-7
5.6 Machine ConfiguRation Programming Information 5-12
5.7 Machine Model Adjustment (Personality Settings) 5-13

SECTION 6 - LSS (LOAD SENSING SYSTEM) SERVICE

6.1 Theory of Operation 6-1
6.2 Analyzer Information 6-3
Personalities Menu 6-3
Diagnostic Menu 6-3
6.3 Calibration Preparation 6-5
6.4 Calibration and Verification Procedures 6-6
Empty Platform (Load 0%) Calibration 6-6
Loaded Platform (Load 110%) Calibration 6-6
Verify Load 6-7
Partial Height Calibration 6-7
6.5 Testing 6-8
6.6 LSS Connector Pin Assignments 6-9
6.7 LSS Troubleshooting 6-9

SECTION 7 - DIAGNOSTIC TROUBLE CODES

7.1 Introduction 7-1
System Fault/DTC Indication 7-1
7.2 Diagnostic Trouble Codes (DTC) 7-1
7.3 DTC Check Tables 7-2

SECTION 8 - GENERAL ELECTRICAL INFORMATION & SCHEMATICS

8.1 General 8-1
8.2 Multimeter Basics 8-1
Grounding 8-1
Backprobing 8-1
Min/Max 8-1
Polarity 8-1
Scale 8-1
Voltage Measurement 8-2
Resistance Measurement 8-2
Continuity Measurement 8-3
Current Measurement 8-3
Continuity Measurement Over Long Distances 8-4
Requirements: 8-4
Procedure 8-4
8.3 Applying Silicone Dielectric Compound To Amp Connectors 8-5
8.4 Dielectric Grease Application 8-5
Installation 8-5
AMP Mate-N-Lok 8-5
AMP Faston 8-6
AMP Micro-Fit 8-6
AMP Mini Fit Jr 8-6
Mini Fit Sr 8-7
DIN Connectors 8-7
Exceptions 8-7
8.5 AMP Connector 8-8
Assembly 8-9
Disassembly 8-10
Wedge Lock 8-11
Service - Voltage Reading 8-11

8.6 Working With Deutsch Connectors 8-13
DT/DTP Series Assembly 8-13
DT/DTP Series Disassembly 8-13
HD30/HDP20 Series Assembly 8-13
HD30/HDP20 Series Disassembly 8-14
8.7 Switches. 8-15
Basic Check 8-15
Limit Switches. 8-15
Automatic Switches 8-16
Switch Wiring - Low Side, High Side 8-16
8.8 Electrical Schematics. 8-17
8.9 Hydraulic SchematicS 8-30

LIST OF FIGURES

FIGURE NO.	TITLE	PAGE NO.
1-1.	Hydraulic Oil Operating Temperature Specifications	1-7
1-2.	Serial Number Location	1-8
1-3.	Torque Chart - Sheet 1 of 5 (SAE Fasteners)	1-10
1-4.	Torque Chart - Sheet 2 of 5 (SAE Fasteners)	1-11
1-5.	Torque Chart - Sheet 3 of 5 (SAE Fasteners)	1-12
1-6.	Torque Chart - Sheet 4 of 5 (METRIC Fasteners)	1-13
1-7.	Torque Chart - Sheet 5 of 5 (METRIC Fasteners)	1-14
2-1.	Machine Component Locations	2-6
2-2.	Scissor Arm - Safety Prop	2-6
2-3.	Scissor Arm - Safety Prop	2-7
2-4.	Hydraulic Oil Check Procedure	2-7
2-5.	Hydraulic Oil Fill Procedure	2-7
3-1.	Components Mounded on Side Swing - Out Compartment Doors	3-1
3-2.	Side Swing - Out Compartment Door Installation	3-1
3-3.	Battery Cable Connections	3-2
3-4.	Battery Fluid Level	3-3
3-5.	DC/AC Power Inverter - Installation	3-9
3-6.	Logic Module Components	3-10
3-7.	Logic Module CO01 - Harness Connector Identification	3-10
3-8.	Main Power Contactor Relay and Pump Controller Module Location	3-11
3-9.	Hydraulic Pump Control - Power Connections	3-13
3-10.	Ground Control Station - Folding Cover	3-14
3-11.	Ground Control Station Removal	3-15
3-12.	Ground Control Station - Rear of Panel	3-15
3-13.	Ground Control Station - Fixed Cover	3-16
3-14.	Ground Control Station Removal	3-17
3-15.	Ground Control Station - Rear of Panel	3-17
3-16.	Platform Control Station Installation	3-19
3-17.	Platform Control Station Disassembly	3-19
3-18.	Platform Control Station Components - Internal	3-20
3-19.	Joystick	3-21
3-20.	Tilt Sensor Installation	3-22
3-21.	Elevation Sensor Location	3-23
3-22.	Elevation Sensor Installation	3-24
3-23.	Pot-Hole-Protection Assembly	3-25
3-24.	Steer and Spindle Assembly Installation	3-26
3-25.	Drive Motor Cover Installation - Option	3-27
3-26.	Wheel Installation	3-28
3-27.	Arms and Platform Positioning with Overhead Support	3-30
3-28.	Platform Assembly - Installation/Removal	3-31
3-29.	Scissor Arm Assembly	3-32
3-30.	Scissor Arm Assembly - Pin Configuration	3-33
3-31.	Scissor Arm Assembly - Cable Routing	3-34
3-32.	Scissor Arm Assembly - Cable Routing (FTSW)	3-35
3-33.	Scissor Arm Assembly - Cable Routing (Coiled)	3-36
3-34.	Scissor Arm Assembly - Cable Routing (Coiled) (FTSW)	3-37
4-1.	Hydraulic Tank Installation	4-4
4-2.	Hydraulic Oil Check Procedure	4-5
4-3.	Hydraulic Oil Fill Procedure	4-5
4-4.	Hydraulic Pump - Motor Components	4-6
4-5.	Hydraulic Pump - Motor Components	4-7
4-6.	Hydraulic Manifold Assembly - Installation	4-8
4-7.	Hydraulic Manifold Assembly - Schematic	4-8
4-8.	Hydraulic Manifold Assembly - Component Location	4-9

4-9. Hydraulic Manifold Assembly - Component Torque 4-10
4-10. Hydraulic Hose Routing 4-11
4-11. Drive Motor - Installation 4-12
4-12. Rear Hydraulic Brake - Installation 4-13
4-13. Hydraulic Brakes - Manual Disengage 4-13
4-14. Lift Cylinder - Lower 4-17
4-15. Lift Cylinder - Upper 4-18
4-16. Steer Cylinder 4-19
4-17. Cylinder Barrel Support 4-20
4-18. Cylinder Rod Support 4-20
4-19. Gar-Max Bearing Installation 4-21
4-20. Rod Seal Installation 4-21
4-21. Poly-Pak Piston Seal Installation 4-22
4-22. Wiper Seal Installation 4-22
4-23. Installation of Head Seal Kit 4-22
4-24. Rod Assembly Installation 4-23
5-1. Hand Held Analyzer 5-1
5-2. Diagnostic Port Location 5-2
5-3. Analyzer Software P1.9.0 - Sheet 1 of 4 5-8
5-4. Analyzer Software P1.9.0 - Sheet 2 of 4 5-9
5-5. Analyzer Software P1.9.0 - Sheet 3 of 4 5-10
5-6. Analyzer Software P1.9.0 - Sheet 4 of 4 5-11
6-1. LSS Component Locations 6-2
8-1. Voltage Measurement (DC) 8-2
8-2. Resistance Measurement 8-2
8-3. Continuity Measurement 8-3
8-4. Current Measurement (DC) 8-3
8-5. AMP Connector 8-8
8-6. Connector Assembly (1 of 4) 8-9
8-7. Connector Assembly (2 of 4) 8-9
8-8. Connector Assembly (3 of 4) 8-10
8-9. Connector Assembly (4 of 4) 8-10
8-10. Connector Disassembly 8-11
8-11. Connector Installation 8-12
8-12. DT/DTP Contact Installation 8-13
8-13. DT/DTP Contact Removal 8-13
8-14. HD/HDP Contact Installation 8-13
8-15. HD/HDP Locking Contacts Into Position 8-14
8-16. HD/HDP Contact Removal 8-14
8-17. HD/HDP Unlocking Contacts 8-14
8-18. Electrical Schematic - Sheet 1 of 13 8-17
8-19. Electrical Schematic - Sheet 2 of 13 8-18
8-20. Electrical Schematic - Sheet 3 of 13 8-19
8-21. Electrical Schematic - Sheet 4 of 13 8-20
8-22. Electrical Schematic - Sheet 5 of 13 8-21
8-23. Electrical Schematic - Sheet 6 of 13 8-22
8-24. Electrical Schematic - Sheet 7 of 13 8-23
8-25. Electrical Schematic - Sheet 8 of 13 8-24
8-26. Electrical Schematic - Sheet 9 of 13 8-25
8-27. Electrical Schematic - Sheet 10 of 13 8-26
8-28. Electrical Schematic - Sheet 11 of 13 8-27
8-29. Electrical Schematic - Sheet 12 of 13 8-28
8-30. Electrical Schematic - Sheet 13 of 13 8-29
8-31. Hydraulic Schematic - Sheet 1 of 2 8-30
8-32. Hydraulic Schematic - Sheet 2 of 2 8-31

LIST OF TABLES

TABLE NO.	TITLE	PAGE NO.
1-1	Operating Specifications	1-1
1-2	Platform Capacities	1-2
1-3	Dimensions	1-2
1-4	Tire Specifications	1-2
1-5	OEM Battery Specifications	1-3
1-6	Battery Charger Specifications	1-4
1-7	Tilt Activation Setting	1-5
1-8	High Drive Cutout Height	1-5
1-9	Capacities	1-5
1-10	Hydraulic Oil	1-5
1-11	Lubrication Specifications	1-6
1-12	Mobilfluid 424 Specs	1-6
1-13	Mobil DTE 10 Excel 15 Specs	1-6
1-14	Biodegradable Hydraulic Fluid Specs	1-6
1-15	Hydraulic Pressure Settings	1-8
1-16	Hydraulic Cylinder Specifications	1-8
1-17	Critical Stability Weights	1-9
1-18	Major Component Weights	1-9
2-1	Inspection and Maintenance Responsibilities	2-2
2-2	Preventive Maintenance & Inspection Schedule	2-4
2-3	Cylinder Drift	2-10
3-1	Battery Charger Specifications	3-5
3-2	Diagnostic Trouble Codes (Delta Q Battery Charger)	3-6
3-3	Fault Codes (Green Power)	3-7
3-4	Fault Codes (Eagle Battery Charger)	3-8
3-5	Pump Control Module Specifications	3-12
3-6	Pump Power Module Terminal Functions (CO117-J1)	3-12
3-7	Joystick Specifications	3-21
3-8	Connector Chart	3-21
3-9	Tilt Sensor Wiring Pin Assignment	3-22
5-1	Machine Configuration Programming Information - Version P1.9.0	5-12
5-2	Machine Model Adjustment (Personality Settings) - Version P1.9.0	5-13
6-1	Personalities Menu Description	6-3
6-2	Diagnostic Menu Descriptions	6-3
6-3	Calibrations Menu	6-5
6-4	Platform 110% Calibration Weight	6-6
6-5	Platform 100% Calibration Weight	6-8
6-6	Platform 120% Calibration Weight	6-8
6-7	Connections for 4045R Lift Cylinder Rod Pressure Transducer	6-9
6-8	Connections for 4045R Lower & Upper Lift Cylinder Head Pressure Transducer	6-9
6-9	LSS Troubleshooting	6-9
7-1	Diagnostic Trouble Codes (DTC)	7-2

SECTION 1. SPECIFICATIONS

1.1 SPECIFICATION

Table 1-1. Operating Specifications

DESCRIPTION	4045R
PLATFORM	**ANSI/CSA/CE/AUS/GB**
Maximum Platform Height (Ground to Platform Floor - Elevated)	39 ft. 3 in. (11.9 m)
Machine Height (Ground to Top of Rails)	8 ft. 4 in. (2.549 m)
Machine Height - Rails Folded (Ground to Top of Folded Rails)	6 ft. 3 in. (1.903 m)
Platform Lift Time (No Load) Lift Up: Lift Down:	 63 - 73 Seconds 38 - 44 Seconds
Platform Lift Time (Rated Load) Lift Up: Lift Down:	 70 - 80 Seconds 35 - 41 Seconds
Electronic Arm Guards (Activation Height)	75 in. (190.5 cm)
DRIVING	
Maximum Operating Slope *(platform fully elevated)* Front to Back: Side to Side:	 3.5° 1.5°
Maximum Stowed Travel Side Slope	2.5°
Maximum Drive Speed (FWD/REV) (Seconds to Drive 25 ft. (7.62 m) Stowed: Elevated:	8 seconds (2.0 mph (3.4 kph) 34 seconds (0.5 mph (0.8 kph)
Elevated Drive Height Indoor: Outdoor - ANSI/CE/CSA/GB: AUS:	 39 ft. (11.9 m) 28.7 ft. (8.75 m) 39 ft. (11.9 m)
Turning Radius Inside: (Curb to Curb) Outside:	 0 in. (0 cm) 92 in. (233.68 cm)
CHASSIS	
Approximate Gross Machine Weight ANSI/CE/CSA/GB: AUS:	 7,000 lb (3175 kg) 7,525 lb (3413 kg)
Wheelbase	80 in. (2.032 m)
Machine Overall Width	45 in. (1.143 m)
Maximum Tire Load (per wheel)	2,680 lb (1216 kg)
Ground Bearing Pressure	137 psi (943 kPa)
Ground Clearance PHP Retracted: PHP Deployed: Break Over Angle:	 5 in. (126 mm) 1.26 in. (32 mm) 14.5° (26%)
Maximum Hydraulic Pressure Main Relief: Steer Relief: Lift Relief:	 3200 psi (220 bar) 1150 psi (80 bar) 2550 psi (176 bar)

Platform Capacities

Table 1-2. Platform Capacities

SPECIFICATION	MAXIMUM OPERATING HEIGHT	MAXIMUM PLATFORM CAPACITY (1)	MAXIMUM CAPACITY ALLOWED ON PLATFORM EXTENSION	MAXIMUM PERSONS ALLOWED IN PLATFORM	MAX. SIDE FORCE (Platform Fully Extended @ Max. Capacity)	MAXIMUM OPERATING WIND SPEED	ENVIRONMENT (2)
ANSI/CSA/CE/AUS/GB	FULL	770 lb (350 Kg)	250 lb. (113 Kg)	3 Persons + 242 lb (110 Kg)	90 lb (400 N)	0 mph (0 m/s)	INDOOR
ANSI/CSA/CE/AUS/GB	29 ft. (8.8 m)	550 lb (249 Kg)		1 Person + 371 lb (169 Kg)	45 lb (200 N)	28 mph (12.5 m/s)	OUTDOOR
AUS	FULL	300 lb (136 Kg)		1 Person + 124 lb (56 Kg)			

NOTE: *(1) Maximum Platform Capacity includes platform and platform extension.*
(2) INDOOR USE is use of a MEWP in areas shielded from wind so that there is no wind. OUTDOOR USE is use of a MEWP in an environment that can be exposed to wind.

Machine Dimensional Data

Table 1-3. Dimensions

DESCRIPTION	4045R
Platform Height - Elevated (Ground to Platform Floor)	39 ft. 3 in. (12 m)
Platform Height - Stowed (Ground to Platform Floor)	55 in. (140 cm)
Rail Height (Platform Floor to Top of Rail)	44 in. (111.76 cm)- Folding Rail
Overall Height (Ground to Top Rail): (Rails Folded Down):	100 in. (254 cm) 76.8 in. (192.4 cm)
Overall Machine Width	45 in. (114.3 cm)
Overall Machine Length (w/ladder)	106 in. (269.24 cm)
Platform Size - Length (Inside)	96 in. (243.84 cm)
Platform Size - Width (Inside)	41 in. (104.14 cm)
Wheelbase	80 in. (203.2 cm)

Tires

Table 1-4. Tire Specifications

DESCRIPTION	4045R
Size	16 in. x 5 in. (40.6 cm x 12.7 cm)
Wheel Nut Torque (1-1/8 inch - Slotted Nut with Cotter Pin)	150 ft. lbs. (203 Nm)

Batteries

Table 1-5. OEM Battery Specifications

DESCRIPTION	Lead Acid		AGM
Voltage (24 V System - Series)	12V per battery		
Amp Hour Rating	150 AH @ 20 HR rate	185 AH @ 20 HR rate	150 AH @ 20 HR rate
Reserve Capacity	280 Minutes @ 25 Amps	324 Minutes @ 25 Amps	320 Minutes @ 25 Amps
Weight (each battery)	82 lb (37 kg)	106 lb (48 kg)	88 lb (40 kg)

NOTICE

JLG MACHINES EQUIPPED WITH DELTA Q BATTERY CHARGERS ARE DESIGNED FOR THE BEST PERFORMANCE WITH OEM FACTORY APPROVED BATTERIES.

APPROVED JLG REPLACEMENT BATTERIES ARE AVAILABLE THROUGH JLG'S AFTERMARKET PARTS DISTRIBUTION CENTERS OR JLG'S AFTERMARKET PROGRAMS. FOR ASSISTANCE WITH PROPER BATTERY REPLACEMENT, PLEASE CONTACT YOUR LOCAL JLG SUPPORT OFFICE.

BATTERIES APPROVED BY JLG HAVE BEEN TESTED FOR COMPATIBILITY WITH THE ALGORITHM PROGRAMMING OF THE DELTA Q BATTERY CHARGER TO OPTIMIZE BATTERY LIFE AND MACHINE CYCLE TIMES. THE USE OF NON APPROVED BATTERIES IN YOUR JLG EQUIPMENT MAY RESULT IN PERFORMANCE ISSUES OR BATTERY CHARGER FAULT CODES. JLG ASSUMES NO RESPONSIBILITY FOR SERVICE OR PERFORMANCE ISSUES ARISING FROM THE USE OF NON APPROVED BATTERIES.

Motors

- **Drive Motors**

  Type: Hydraulic

  Displacement: 364 cc/rev (22.2 in^3/rev)

  Torque: at 100 psi, 4.2 gpm 2700 in. lbs. (305.1 Nm)

  at 3000 psi, 2.2 gpm 8500 in. lbs. (960.4 Nm)

  Max. Power: 45 hp (34 kW)

  Max. Oil Flow: 18 gpm (68 Lpm) - Continuous

- **Hydraulic Brake**

  Type: Hydraulic Release

  Holding Torque: 10,000 in. lbs. (1130 Nm)

  Max. Speed: 250 rpm

  Release Pressure: 406 psi (28 bar)

  Max Release Pressure: 3000 psi (207 bar)

  Release Volume: 0.7 cu. in. (11.5 cc)

- **Hydraulic Pump/Electric Motor**

  Motor Type: 24V DC Wound Field

  Motor Power: 4.5 kW

  Pump Displacement: 0.29 in. /rev (4.77cc/rev)

  Pump Pressure: 2100 psi Continuous
  3500 psi Intermittent

Electrical System

Table 1-6. Battery Charger Specifications

DESCRIPTION	ALL MACHINES		
Electrical System Voltage (DC)	24 V		
Battery Charger:	**Delta-Q**	**PRO - Eagle Perf. Series**	**Green Power - Pylon International**
Input:			
AC Input Voltage:	85-270 V AC	108-132 V AC	100-240 V AC
Nominal AC Input Voltage:	100 VAC / 240 VAC RMS	120 VAC	— —
Input Frequency:	50 - 60 Hz	45 - 65 Hz	45 - 65 Hz
Max. AC Input Current:	7.5 A	12 A	8.5 A
Ingress Protection:	IP66 NEMA 4 Type 4	IP35	IP66
Operating Temperature:	-40° F (-40° C) to 149° F (+65° C)	-22° F (-30° C) to 122° F (+50° C)	-4° F (-20° C) to 122° F (+50° C)
Output:			
Nominal DC Output Voltage:	24 V	24 V	24 V
Max. DC Output Voltage:	36 V	31.92 V	34 V
Max DC Output Current:	27.1 A	25 A	30 A
Max. Interlock Current:	1 A @ 24 V	1 A @ 24 V	1 A @ 24 V
Protection:			
Output Reverse Polarity:	Electronic Protection - Auto Reset	Electronic Protection-Auto Reset	Electronic Protection-Auto Reset
Output Short Circuit:	Current Limited	Electronic Protection-Auto Reset	Electronic Protection-Auto Reset
AC Overload:	Current Limited	Branch Circuit Protection	Current Limited
DC Overload:	Current Limited	Current Limited	Current Limited

1.2 LIMIT SWITCH ACTIVATION

Tilt Alarm

NOTE: *When the tilt indicator warning is activated the following functions are affected;*
Platform Lowered: *Only Drive Allowed.*
Platform Raised: *Drive and lift up functions are disabled, platform must be fully lowered (stowed) to drive out of tilt condition.*

Table 1-7. Tilt Activation Setting

MODEL	TILT SETTING Y-Axis (front to back)	TILT SETTING X-Axis (side to side)	Maximum Deck Elevation	
4045R	3.5°	1.50° - outdoor 1.50° - indoor	25-28.7 ft. 31 ft. - max.	7.6 - 8.7 m 9.4 - max.
		2.00° - outdoor 2.00° - indoor	23 - 25 ft. 27 - 31 ft.	7 - 7.6 m 8.2 - 9.4 m
		2.50° - outdoor 2.50° - indoor	0 - 23 ft. 0 - 27 ft.	0 - 7 m 0 - 8.2 m

High Drive Speed Cutout

High drive speed is cut out when the platform is raised above the preset height per model as follows:

NOTE: *These figures are given with a tolerance of ± 12 in. (0.31 m).*

Table 1-8. High Drive Cutout Height

MODEL	HIGH DRIVE SPEED CUTOUT HEIGHT	DRIVE SPEED REDUCTION
4045R	75 in. (190.5 cm)	2.0 mph (3.2 kph) to 0.5 mph (0.8 kph)

1.3 LUBRICATION

Lubrication Capacities

Table 1-9. Capacities

COMPONENT	4045R
Hydraulic Reservoir (at Full mark)	6.6 Gal. (25 L)
Hydraulic System (Including Reservoir)	7.9 Gal. (30 L)

Hydraulic Oil

Table 1-10. Hydraulic Oil

HYDRAULIC SYSTEM OPERATING TEMPERATURE RANGE	SAE VISCOSITY GRADE
0°F to +23°F (-18°C to -5°C)	10W
0°F to 210°F (-18°C to +99°C)	10W-20, 10W-30
50°F to 210°F (+10°C to +99°C)	20W-20

NOTE: *Aside from JLG recommendations, it is not advisable to mix oils of different brands or types, as they may not contain the same required additives or be of comparable viscosities.*

Lubrication Specifications

Table 1-11. Lubrication Specifications

KEY	SPECIFICATIONS
MPG	Multipurpose Grease having a minimum dripping point of 350° F. Excellent water resistance and adhesive qualities, and being of extreme pressure type. (Timken OK 40 pounds minimum.)
EPGL	Extreme Pressure Gear Lube (oil) meeting API service classification GL-5 or MIL-Spec MIL-L-2105.
HO	JLG Recommends - Mobil - Mobilfluid 424 Mobil EAL ENVIRONSYN H 32 Mobil SHC HYDRAULIC EAL 32 ***NOTE:*** *EAL and SHC are compatible with each other.*

Table 1-12. Mobilfluid 424 Specs

Inspection Data	Recommended	Optional
ISO Viscosity Grade	10W-30	10W-20
Spec Gravity API	29.0	29.3
Density, LB/GAL, 60° F	7.35	7.3
Flash Point, °F (°C)	442(228)	380 (193)
Pour Point, °F (°C)	-46 (-43)	-30 (-34)
Viscosity		
Brookfield, cP at -18° C	2700	
Brookfield, cP at 0° F		2500
Viscosity, cST at 40° C	55	52.1
Viscosity, cST at 100° C	9.3	8.95
Viscosity Index	152	152
Viscosity, Sus at 100° F		26.0
Viscosity, Sus at 210° F		56.8
Color, ASTM D 1500	3.0	

Table 1-13. Mobil DTE 10 Excel 15 Specs

ISO Viscosity Grade	15
Pour Point, °C Max.	-54
Flash Point, °C Min.	182
Viscosity	
cSt @ 40° C	15.8
cSt @ 100° C	4.07
cSt @ 100° F	15.8
cSt @ 212° F	4.07
Viscosity Index	168
Density (Kg/l) @ 15° C	0.8375
Density (lb/in^3) @ 60° F	0.0302

Table 1-14. Biodegradable Hydraulic Fluid Specs

Inspection Data	MOBIL EAL ENVIRONSYN H 32	MOBIL SHC HYDRAULIC EAL 32
SAE Grade	32	32
Density @ 15° C ASTM D 4052, kg/L	0.869	0.936
Flash Point, °F(°C)	514 (268)	540 (282)
Pour Point, °F (°C)	-38 (-39)	-27 (-33)
Operating Temp, °F (°C)	-20 (-29) to 200 (93)	1.4 (-17) to 200 (93)
Viscosity		
Viscosity, cST at 40° C	33.1	31.1
Viscosity, cST at 100° C	6.36	6.2
Viscosity Index	147	152

Specified lubricants, as recommended by the component manufacturers, are always the best choice, however, multi-purpose greases usually have the qualities which meet a variety of single purpose grease requirements.

Should any question arise, regarding the use of greases in maintenance stock, consult your local supplier for evaluation. Refer to Table 1-11, Lubrication Specifications for an explanation of the lubricant key designations.

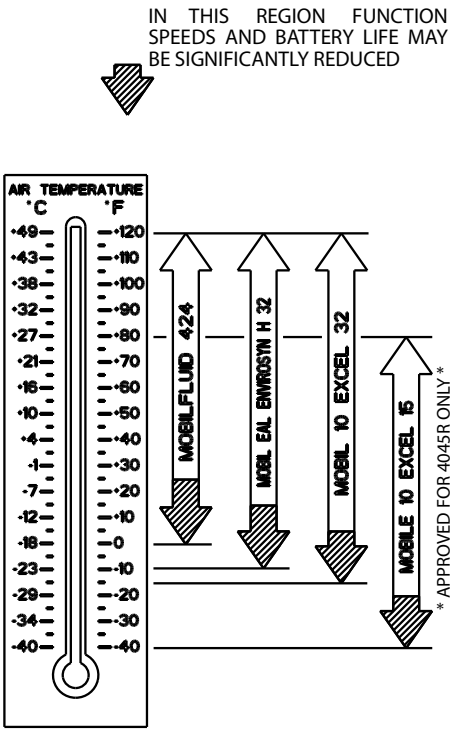

Fluid	Properties		Base				Classifications		
	Viscosity at 40°C (cSt, Typical)	Viscosity Index	Mineral Oils	Vegetable Oils	Synthetic	Synthetic Polyol Esters	Readily Biodegradeable*	Virtually Non-toxic**	Fire Resisstant***
Mobilfluid 424	55	145	X						
Mobil EAL Envirosyn H 32	33	147			X		X		
Mobil DTE 10 Excel 32	32	164	X					X	
Mobil DTE 10 Excel 15	15	168	X					X	

* Readily biodegradeable classification indicates one of the following:

CO2 Conversion>60% per EPA 56016-82-003

CO2 Conversion>80% per CEC-L-33-A-93

** Virtually Non-toxic classification indicates an LC50>5000 ppm per OECD 203

*** Fire Resistant classification indicates Factory Mutual Research Corp. (FMRC) Approval

NOTICE:

MACHINE OPERATION USING NON-JLG APPROVED HYDRAULIC FLUIDS OR OPERATION OUTSIDE OF THE TEMPERATURE BOUNDARIES OUTLINED IN THE "HYDRAULIC FLUID OPERATION CHART" MAY RESULT IN PREMATURE WEAR OR DAMAGE TO COMPONENTS OF THE HYDRAULIC SYSTEM.

1001219909-D
MAE39090D

Figure 1-1. Hydraulic Oil Operating Temperature Specifications

1.4 HYDRAULIC PRESSURE SETTINGS

Table 1-15. Hydraulic Pressure Settings

MODEL	MAIN RELIEF	LIFT RELIEF	STEER RELIEF
4045R	3000 ± 70 psi (207 ± 5 bar)	2500 ± 70 psi (172 ± 5 bar)	1250 ± 70 psi (86 ± 5 bar)

1.5 HYDRAULIC CYLINDER SPECIFICATIONS

Table 1-16. Hydraulic Cylinder Specifications

DESCRIPTION	4045R
Lift Cylinder Bore Diameter Upper: Lower:	 2.56 in. (65 mm) 3.94 in. (100 mm)
Lift Cylinder Stroke Upper: Lower:	 54.92 in. (1395 mm) 54.92 in. (1395 mm)
Lift Cylinder Rod Diameter Upper: Lower:	 2.2 in. (55 mm) 2.56 in. (65 mm)
Steer Cylinder Bore Diameter	2.75 in. (70 mm)
Steer Cylinder Stroke (left or right)	8.94 in. (227.1 mm)
Steer Cylinder Rod Diameter	1.97 in. (50 mm)

1.6 SERIAL NUMBER LOCATION

For machine identification, a serial number plate is affixed to the machine. See Figure 1-2.

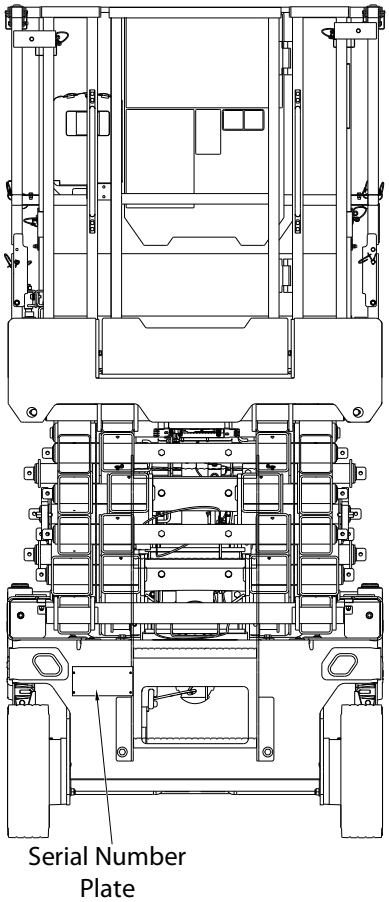

Figure 1-2. Serial Number Location

1.7 CRITICAL STABILITY WEIGHTS

⚠ WARNING

DO NOT REPLACE ITEMS CRITICAL TO STABILITY, SUCH AS BATTERIES OR TIRES, WITH ITEMS OF DIFFERENT WEIGHT OR SPECIFICATION. DO NOT MODIFY THE MEWP IN ANY WAY TO AFFECT STABILITY.

Table 1-17. Critical Stability Weights

COMPONENT		4045R
Wheel and Tire Assembly (each)		52.7 lb (23.9 kg)
Wheel/Tire and Drive Assembly (each)		81.1 lb (36.8 kg)
Wheel/Tire and Brake Assembly (each)		89.7 lb (40.7 kg)
Batteries (each)	Standard:	82 lb (37 kg)- 150 AH 106 lb (48 kg) - 185 AH
	AGM:	88 lb (40 kg)
Batteries (combined X4)	Standard:	328 lb (148 kg) - 150 AH 424 lb (192 kg) - 185 AH
	AGM:	352 lb (160 kg)

1.8 MAJOR COMPONENT WEIGHTS

Table 1-18. Major Component Weights

COMPONENT	ANSI/CE/CSA/GB	AUS
Platform with Rails/Extension (Rail in Rail)	524 lb (238 Kg)	524 lb (238 Kg)
Platform with Rails/Extension (Dual Rail)	539 lb (244 Kg)	539 lb (244 Kg)
Arm Assembly - (Includes Lift Cylinder)	3648 lb (1654 Kg)	3648 lb (1654 Kg)
Chassis w/Wheel/Tire/Steering/PHP and Drive Assembly	2778 lb (1260 Kg)	3298 lb (1496 Kg)

1.9 TORQUE REQUIREMENTS

Self locking fasteners, such as nylon insert and thread deforming locknuts, are not intended to be reinstalled after removal. Always use new replacement hardware when installing locking fasteners.

NOTE: *When maintenance becomes necessary or a fastener has loosened, refer to the Torque Charts on page 1-10 to determine proper torque value.*

Torque Charts

				Values for Zinc Yellow Chromate Fasteners (Ref 4150707)															
				SAE GRADE 5 BOLTS & GRADE 2 NUTS									SAE GRADE 8 (HEX HD) BOLTS & GRADE 8 NUTS*						
Size	TPI	Bolt Dia	Tensile Stress Area	Clamp Load	Torque (Dry)		Torque Lubricated		Torque (Loctite® 242™ or 271™ OR Vibra-TITE™ 111 or 140)		Torque (Loctite® 262™ or Vibra-TITE™ 131)		Clamp Load	Torque (Dry or Loctite® 263) K= 0.20		Torque (Loctite® 242™ or 271™ OR Vibra-TITE™ 111 or 140) K=.18		Torque (Loctite® 262™ or Vibra-TITE™ 131) K=0.15	
		In	Sq In	LB	IN-LB	[N.m]	IN-LB	[N.m]	IN-LB	[N.m]	IN-LB	[N.m]	LB	IN-LB	[N.m]	IN-LB	[N.m]	IN-LB	[N.m]
4	40	0.1120	0.00604	380	8	0.9	6	0.7											
	48	0.1120	0.00661	420	9	1.0	7	0.8											
6	32	0.1380	0.00909	580	16	1.8	12	1.4											
	40	0.1380	0.01015	610	18	2.0	13	1.5											
8	32	0.1640	0.01400	900	30	3.4	22	2.5											
	36	0.1640	0.01474	940	31	3.5	23	2.6					1320	43	5				
10	24	0.1900	0.01750	1120	43	4.8	32	3.5					1580	60	7				
	32	0.1900	0.02000	1285	49	5.5	36	4					1800	68	8				
1/4	20	0.2500	0.0318	2020	96	10.8	75	9	105	12			2860	143	16	129	15		
	28	0.2500	0.0364	2320	120	13.5	86	10	135	15			3280	164	19	148	17		
		In	Sq In	LB	FT-LB	[N.m]	FT-LB	[N.m]	FT-LB	[N.m]	FT-LB	[N.m]	LB	FT-LB	[N.m]	FT-LB	[N.m]	FT-LB	[N.m]
5/16	18	0.3125	0.0524	3340	17	23	13	18	19	26	16	22	4720	25	35	20	25	20	25
	24	0.3125	0.0580	3700	19	26	14	19	21	29	17	23	5220	25	35	25	35	20	25
3/8	16	0.3750	0.0775	4940	30	41	23	31	35	48	28	38	7000	45	60	40	55	35	50
	24	0.3750	0.0878	5600	35	47	25	34	40	54	32	43	7900	50	70	45	60	35	50
7/16	14	0.4375	0.1063	6800	50	68	35	47	55	75	45	61	9550	70	95	65	90	50	70
	20	0.4375	0.1187	7550	55	75	40	54	60	82	50	68	10700	80	110	70	95	60	80
1/2	13	0.5000	0.1419	9050	75	102	55	75	85	116	68	92	12750	105	145	95	130	80	110
	20	0.5000	0.1599	10700	90	122	65	88	100	136	80	108	14400	120	165	110	150	90	120
9/16	12	0.5625	0.1820	11600	110	149	80	108	120	163	98	133	16400	155	210	140	190	115	155
	18	0.5625	0.2030	12950	120	163	90	122	135	184	109	148	18250	170	230	155	210	130	175
5/8	11	0.6250	0.2260	14400	150	203	110	149	165	224	135	183	20350	210	285	190	260	160	220
	18	0.6250	0.2560	16300	170	230	130	176	190	258	153	207	23000	240	325	215	290	180	245
3/4	10	0.7500	0.3340	21300	260	353	200		285	388	240	325	30100	375	510	340	460	280	380
	16	0.7500	0.3730	23800	300	407	220	298	330	449	268	363	33600	420	570	380	515	315	430
7/8	9	0.8750	0.4620	29400	430	583	320	434	475	646	386	523	41600	605	825	545	740	455	620
	14	0.8750	0.5090	32400	470	637	350	475	520	707	425	576	45800	670	910	600	815	500	680
1	8	1.0000	0.6060	38600	640	868	480	651	675	918	579	785	51500	860	1170	770	1045	645	875
	12	1.0000	0.6630	42200	700	949	530	719	735	1000	633	858	59700	995	1355	895	1215	745	1015
1 1/8	7	1.1250	0.7630	42300	800	1085	600	813	840	1142	714	968	68700	1290	1755	1160	1580	965	1310
	12	1.1250	0.8560	47500	880	1193	660	895	925	1258	802	1087	77000	1445	1965	1300	1770	1085	1475
1 1/4	7	1.2500	0.9690	53800	1120	1518	840	1139	1175	1598	1009	1368	87200	1815	2470	1635	2225	1365	1855
	12	1.2500	1.0730	59600	1240	1681	920	1247	1300	1768	1118	1516	96600	2015	2740	1810	2460	1510	2055
1 3/8	6	1.3750	1.1550	64100	1460	1979	1100	1491	1525	2074	1322	1792	104000	2385	3245	2145	2915	1785	2430
	12	1.3750	1.3150	73000	1680	2278	1260	1708	1750	2380	1506	2042	118100	2705	3680	2435	3310	2030	2760
1 1/2	6	1.5000	1.4050	78000	1940	2630	1460	1979	2025	2754	1755	2379	126500	3165	4305	2845	3870	2370	3225
	12	1.5000	1.5800	87700	2200	2983	1640	2224	2300	3128	1974	2676	142200	3555	4835	3200	4350	2665	3625

NOTES:
1. THESE TORQUE VALUES DO NOT APPLY TO CADMIUM PLATED FASTENERS
2. ALL TORQUE VALUES ARE STATIC TORQUE MEASURED PER STANDARD AUDIT METHODS TOLERANCE = ±10%
3. * ASSEMBLY USES HARDENED WASHER

NO. 5000059 REV. K

REFERENCE JLG THREAD LOCKING COMPOUND

JLG P/N	Loctite® P/N	ND Industries P/N	Description
0100011	242™	Vibra-TITE™ 121	Medium Strength (Blue)
0100019	271™	Vibra-TITE™ 140	High Strength (Red)
0100071	262™	Vibra-TITE™ 131	Medium - High Strength (Red)

Figure 1-3. Torque Chart - Sheet 1 of 5 (SAE Fasteners)

				Values for Magni Coating Fasteners (Ref 4150701)													
				SAE GRADE 5 BOLTS & GRADE 2 NUTS							SAE GRADE 8 (HEX HD) BOLTS & GRADE 8 NUTS*						
Size	TPI	Bolt Dia	Tensile Stress Area	Clamp Load	Torque (Dry) K=0.17		Torque (Loctite® 242™ or 271™ OR Vibra-TITE™ 111 or 140) K=0.16		Torque (Loctite® 262™ or Vibra-TITE™ 131) K=0.15		Clamp Load	Torque (Dry or Loctite® 263) K= 0.17		Torque (Loctite® 242™ or 271™ OR Vibra-TITE™ 111 or 140) K=.16		Torque (Loctite® 262™ or Vibra-TITE™ 131) K=0.15	
		In	Sq In	LB	IN-LB	[N.m]	IN-LB	[N.m]	IN-LB	[N.m]	LB	IN-LB	[N.m]	IN-LB	[N.m]	IN-LB	[N.m]
4	40	0.1120	0.00604	380	7	0.8											
	48	0.1120	0.00661	420	8	0.9											
6	32	0.1380	0.00909	580	14	1.5											
	40	0.1380	0.01015	610	14	1.6											
8	32	0.1640	0.01400	900	25	2.8											
	36	0.1640	0.01474	940	26	2.9					1320	37	4				
10	24	0.1900	0.01750	1120	36	4.1					1580	51	6				
	32	0.1900	0.02000	1285	42	4.7					1800	58	7				
1/4	20	0.2500	0.0318	2020	86	9.7	80	9			2860	122	14	114	13		
	28	0.2500	0.0364	2320	99	11.1	95	11			3280	139	16	131	15		
		In	Sq In	LB	FT-LB	[N.m]	FT-LB	[N.m]	FT-LB	[N.m]	LB	FT-LB	[N.m]	FT-LB	[N.m]	FT-LB	[N.m]
5/16	18	0.3125	0.0524	3340	15	20	14	19	15	20	4720	20	25	20	25	20	25
	24	0.3125	0.0580	3700	15	20	15	21	15	20	5220	25	35	20	25	20	25
3/8	16	0.3750	0.0775	4940	25	35	25	34	25	34	7000	35	50	35	50	35	50
	24	0.3750	0.0878	5600	30	40	28	38	25	34	7900	40	55	40	55	35	50
7/16	14	0.4375	0.1063	6800	40	55	40	54	35	48	9550	60	80	55	75	50	70
	20	0.4375	0.1187	7550	45	60	44	60	40	54	10700	65	90	60	80	60	80
1/2	13	0.5000	0.1419	9050	65	90	60	82	55	75	12750	90	120	85	115	80	110
	20	0.5000	0.1599	10700	75	100	71	97	65	88	14400	100	135	95	130	90	120
9/16	12	0.5625	0.1820	11600	90	120	87	118	80	109	16400	130	175	125	170	115	155
	18	0.5625	0.2030	12950	105	145	97	132	90	122	18250	145	195	135	185	130	175
5/8	11	0.6250	0.2260	14400	130	175	120	163	115	156	20350	180	245	170	230	160	220
	18	0.6250	0.2560	16300	145	195	136	185	125	170	23000	205	280	190	260	180	245
3/4	10	0.7500	0.3340	21300	225	305	213	290	200	272	30100	320	435	300	410	280	380
	16	0.7500	0.3730	23800	255	345	238	324	225	306	33600	355	485	335	455	315	430
7/8	9	0.8750	0.4620	29400	365	495	343	466	320	435	41600	515	700	485	660	455	620
	14	0.8750	0.5090	32400	400	545	378	514	355	483	45800	570	775	535	730	500	680
1	8	1.0000	0.6060	38600	545	740	515	700	480	653	51500	730	995	685	930	645	875
	12	1.0000	0.6630	42200	600	815	563	765	530	721	59700	845	1150	795	1080	745	1015
1 1/8	7	1.1250	0.7630	42300	675	920	635	863	595	809	68700	1095	1490	1030	1400	965	1310
	12	1.1250	0.8560	47500	755	1025	713	969	670	911	77000	1225	1665	1155	1570	1085	1475
1 1/4	7	1.2500	0.9690	53800	955	1300	897	1219	840	1142	87200	1545	2100	1455	1980	1365	1855
	12	1.2500	1.0730	59600	1055	1435	993	1351	930	1265	96600	1710	2325	1610	2190	1510	2055
1 3/8	6	1.3750	1.1550	64100	1250	1700	1175	1598	1100	1496	104000	2025	2755	1905	2590	1785	2430
	12	1.3750	1.3150	73000	1420	1930	1338	1820	1255	1707	118100	2300	3130	2165	2945	2030	2760
1 1/2	6	1.5000	1.4050	78000	1660	2260	1560	2122	1465	1992	126500	2690	3660	2530	3440	2370	3225
	12	1.5000	1.5800	87700	1865	2535	1754	2385	1645	2237	142200	3020	4105	2845	3870	2665	3625

NOTES: 1. THESE TORQUE VALUES DO NOT APPLY TO CADMIUM PLATED FASTENERS
2. ALL TORQUE VALUES ARE STATIC TORQUE MEASURED PER STANDARD AUDIT METHODS TOLERANCE = ±10%
3. * ASSEMBLY USES HARDENED WASHER

NO. 5000059 REV. K

Figure 1-4. Torque Chart - Sheet 2 of 5 (SAE Fasteners)

				SOCKET HEAD CAP SCREWS													
				Magni Coating (Ref 4150701)*							Zinc Yellow Chromate Fasteners (Ref 4150707)*						
Size	TPI	Bolt Dia	Tensile Stress Area	Clamp Load See Note 4	Torque (Dry) K = .17		Torque (Loctite® 242™ or 271™ OR Vibra-TITE™ 111 or 140 OR Precoat 85®) K=0.16		Torque (Loctite® 262™ or Vibra-TITE™ 131) K=0.15		Clamp Load See Note 4	Torque (Dry) K = .20		Torque (Loctite® 242™ or 271™ OR Vibra-TITE™ 111 or 140 OR Precoat 85®) K=0.18		Torque (Loctite® 262™ or Vibra-TITE™ 131) K=0.15	
		In	Sq In	LB	IN-LB	[N.m]	IN-LB	[N.m]	IN-LB	[N.m]	LB	IN-LB	[N.m]	IN-LB	[N.m]	IN-LB	[N.m]
4	40	0.1120	0.00604														
	48	0.1120	0.00661														
6	32	0.1380	0.00909														
	40	0.1380	0.01015														
8	32	0.1640	0.01400														
	36	0.1640	0.01474														
10	24	0.1900	0.01750														
	32	0.1900	0.02000														
1/4	20	0.2500	0.0318	2860	122	14	114	13			2860	143	16	129	15		
	28	0.2500	0.0364	3280	139	16	131	15			3280	164	19	148	17		
		In	Sq In	LB	FT-LB	[N.m]	FT-LB	[N.m]	FT-LB	[N.m]	LB	FT-LB	[N.m]	FT-LB	[N.m]	FT-LB	[N.m]
5/16	18	0.3125	0.0524	4720	20	25	20	25	20	25	4720	25	35	20	25	20	25
	24	0.3125	0.0580	5220	25	35	20	25	20	25	5220	25	35	25	35	20	25
3/8	16	0.3750	0.0775	7000	35	50	35	50	35	50	7000	45	60	40	55	35	50
	24	0.3750	0.0878	7900	40	55	40	55	35	50	7900	50	70	45	60	35	50
7/16	14	0.4375	0.1063	9550	60	80	55	75	50	70	9550	70	95	65	90	50	70
	20	0.4375	0.1187	10700	65	90	60	80	60	80	10700	80	110	70	95	60	80
1/2	13	0.5000	0.1419	12750	90	120	85	115	80	110	12750	105	145	95	130	80	110
	20	0.5000	0.1599	14400	100	135	95	130	90	120	14400	120	165	110	150	90	120
9/16	12	0.5625	0.1820	16400	130	175	125	170	115	155	16400	155	210	140	190	115	155
	18	0.5625	0.2030	18250	145	195	135	185	130	175	18250	170	230	155	210	130	175
5/8	11	0.6250	0.2260	20350	180	245	170	230	160	220	20350	210	285	190	260	160	220
	18	0.6250	0.2560	23000	205	280	190	260	180	245	23000	240	325	215	290	180	245
3/4	10	0.7500	0.3340	30100	320	435	300		280	380	30100	375	510	340	460	280	380
	16	0.7500	0.3730	33600	355	485	335	455	315	430	33600	420	570	380	515	315	430
7/8	9	0.8750	0.4620	41600	515	700	485	660	455	620	41600	605	825	545	740	455	620
	14	0.8750	0.5090	45800	570	775	535	730	500	680	45800	670	910	600	815	500	680
1	8	1.0000	0.6060	51500	730	995	685	930	645	875	51500	860	1170	775	1055	645	875
	12	1.0000	0.6630	59700	845	1150	795	1080	745	1015	59700	995	1355	895	1215	745	1015
1 1/8	7	1.1250	0.7630	68700	1095	1490	1030	1400	965	1310	68700	1290	1755	1160	1580	965	1310
	12	1.1250	0.8560	77000	1225	1665	1155	1570	1085	1475	77000	1445	1965	1300	1770	1085	1475
1 1/4	7	1.2500	0.9690	87200	1545	2100	1455	1980	1365	1855	87200	1815	2470	1635	2225	1365	1855
	12	1.2500	1.0730	96600	1710	2325	1610	2190	1510	2055	96600	2015	2740	1810	2460	1510	2055
1 3/8	6	1.3750	1.1550	104000	2025	2755	1905	2590	1785	2430	104000	2385	3245	2145	2915	1785	2430
	12	1.3750	1.3150	118100	2300	3130	2165	2945	2030	2760	118100	2705	3680	2435	3310	2030	2760
1 1/2	6	1.5000	1.4050	126500	2690	3660	2530	3440	2370	3225	126500	3165	4305	2845	3870	2370	3225
	12	1.5000	1.5800	142200	3020	4105	2845	3870	2665	3625	142200	3555	4835	3200	4350	2665	3625

NOTES: 1. THESE TORQUE VALUES DO NOT APPLY TO CADMIUM PLATED FASTENERS
2. ALL TORQUE VALUES ARE STATIC TORQUE MEASURED PER STANDARD AUDIT METHODS TOLERANCE = ±10%
*3. ASSEMBLY USES HARDENED WASHER OR FASTENER IS PLACED AGAINST PLATED STEEL OR RAW ALUMINUM
4. CLAMP LOAD LISTED FOR SHCS IS SAME AS GRADE 8 OR CLASS 10.9 AND DOES NOT REPRESENT FULL STRENGTH CAPABILITY OF SHCS. IF HIGHER LOAD IS REQUIRED, ADDITIONAL TESTING IS REQUIRED.

NO. 5000059 REV. K

Figure 1-5. Torque Chart - Sheet 3 of 5 (SAE Fasteners)

			Values for Zinc Yellow Chromate Fasteners (Ref 4150707)								
			CLASS 8.8 METRIC (HEX/SOCKET HEAD) BOLTS CLASS 8 METRIC NUTS					CLASS 10.9 METRIC (HEX HEAD) BOLTS CLASS 10 METRIC NUTS CLASS 12.9 SOCKET HEAD CAP SCREWS M3 - M5*			
Size	PITCH	Tensile Stress Area	Clamp Load	Torque (Dry or Loctite® 263™)	Torque (Lub)	Torque (Loctite® 262™ OR Vibra-TITE™ 131)	Torque (Loctite® 242™ or 271™ OR Vibra-TITE™ 111 or 140)	Clamp Load	Torque (Dry or Loctite® 263™) K = 0.20	Torque (Lub OR Loctite® 242™ or 271™ OR Vibra-TITE™ 111 or 140) K= 0.18	Torque (Loctite® 262™ OR Vibra-TITE™ 131) K=0.15
		Sq mm	KN	[N.m]	[N.m]	[N.m]	[N.m]	KN	[N.m]	[N.m]	[N.m]
3	0.5	5.03	2.19	1.3	1.0	1.2	1.4	3.13			
3.5	0.6	6.78	2.95	2.1	1.6	1.9	2.3	4.22			
4	0.7	8.78	3.82	3.1	2.3	2.8	3.4	5.47			
5	0.8	14.20	6.18	6.2	4.6	5.6	6.8	8.85			
6	1	20.10	8.74	11	7.9	9.4	12	12.5			
7	1	28.90	12.6	18	13	16	19	18.0	25	23	19
8	1.25	36.60	15.9	26	19	23	28	22.8	37	33	27
10	1.5	58.00	25.2	50	38	45	55	36.1	70	65	55
12	1.75	84.30	36.7	88	66	79	97	52.5	125	115	95
14	2	115	50.0	140	105	126	154	71.6	200	180	150
16	2	157	68.3	219	164	197	241	97.8	315	280	235
18	2.5	192	83.5	301	226	271	331	119.5	430	385	325
20	2.5	245	106.5	426	320	383	469	152.5	610	550	460
22	2.5	303	132.0	581	436	523	639	189.0	830	750	625
24	3	353	153.5	737	553	663	811	222.0	1065	960	800
27	3	459	199.5	1080	810	970	1130	286.0	1545	1390	1160
30	3.5	561	244.0	1460	1100	1320	1530	349.5	2095	1885	1575
33	3.5	694	302.0	1990	1490	1790	2090	432.5	2855	2570	2140
36	4	817	355.5	2560	1920	2300	2690	509.0	3665	3300	2750
42	4.5	1120	487.0	4090	3070	3680	4290	698.0	5865	5275	4395

NOTES: 1. THESE TORQUE VALUES DO NOT APPLY TO CADMIUM PLATED FASTENERS
2. ALL TORQUE VALUES ARE STATIC TORQUE MEASURED PER STANDARD AUDIT METHODS TOLERANCE = ±10%
*3. ASSEMBLY USES HARDENED WASHER OR FASTENER IS PLACED AGAINST PLATED STEEL OR RAW ALUMINUM
4. CLAMP LOAD LISTED FOR SHCS IS SAME AS GRADE 8 OR CLASS 10.9 AND DOES NOT REPRESENT FULL STRENGTH CAPABILITY OF SHCS. IF HIGHER LOAD IS REQUIRED, ADDITIONAL TESTING IS REQUIRED.

NO. 5000059 REV. K

Figure 1-6. Torque Chart - Sheet 4 of 5 (METRIC Fasteners)

			Values for Magni Coated Fasteners (Ref 4150701)							
			CLASS 8.8 METRIC (HEX/SOCKET HEAD) BOLTS CLASS 8 METRIC NUTS				CLASS 10.9 METRIC (HEX HEAD) BOLTS CLASS 10 METRIC NUTS CLASS 12.9 SOCKET HEAD CAP SCREWS M6 AND ABOVE*			
Size	PITCH	Tensile Stress Area	Clamp Load	Torque (Dry or Loctite® 263™) K=0.17	Torque (Loctite® 262™ OR Vibra-TITE™ 131) K=0.16	Torque (Loctite® 242™ or 271™ OR Vibra-TITE™ 111 or 140) K=0.15	Clamp Load	Torque (Dry or Loctite® 263™) K = 0.17	Torque (Lub OR Loctite® 242™ or 271™ OR Vibra-TITE™ 111 or 140) K= 0.16	Torque (Loctite® 262™ OR Vibra-TITE™ 131) K=0.15
		Sq mm	KN	[N.m]	[N.m]	[N.m]	KN	[N.m]	[N.m]	[N.m]
3	0.5	5.03	2.19	1.1	1.1	1.0	3.13			
3.5	0.6	6.78	2.95	1.8	1.7	1.5	4.22			
4	0.7	8.78	3.82	2.6	2.4	2.3	5.47			
5	0.8	14.20	6.18	5.3	4.9	4.6	8.85			
6	1	20.10	8.74	9	8.4	7.9	12.5	13	12	11
7	1	28.90	12.6	15	14	13	18.0	21	20	19
8	1.25	36.60	15.9	22	20	19	22.8	31	29	27
10	1.5	58.00	25.2	43	40	38	36.1	61	58	55
12	1.75	84.30	36.7	75	70	66	52.5	105	100	95
14	2	115	50.0	119	110	105	71.6	170	160	150
16	2	157	68.3	186	175	165	97.8	265	250	235
18	2.5	192	83.5	256	240	225	119.5	365	345	325
20	2.5	245	106.5	362	340	320	152.5	520	490	460
22	2.5	303	132.0	494	465	435	189.0	705	665	625
24	3	353	153.5	627	590	555	222.0	905	850	800
27	3	459	199.5	916	860	810	286.0	1315	1235	1160
30	3.5	561	244.0	1245	1170	1100	349.5	1780	1680	1575
33	3.5	694	302.0	1694	1595	1495	432.5	2425	2285	2140
36	4	817	355.5	2176	2050	1920	509.0	3115	2930	2750
42	4.5	1120	487.0	3477	3275	3070	698.0	4985	4690	4395

NOTES: 1. THESE TORQUE VALUES DO NOT APPLY TO CADMIUM PLATED FASTENERS
2. ALL TORQUE VALUES ARE STATIC TORQUE MEASURED PER STANDARD AUDIT METHODS TOLERANCE = ±10%
*3. ASSEMBLY USES HARDENED WASHER OR FASTENER IS PLACED AGAINST PLATED STEEL OR RAW ALUMINUM
4. CLAMP LOAD LISTED FOR SHCS IS SAME AS GRADE 8 OR CLASS 10.9 AND DOES NOT REPRESENT FULL STRENGTH CAPABILITY OF SHCS. IF HIGHER LOAD IS REQUIRED, ADDITIONAL TESTING IS REQUIRED.

NO. 5000059 REV. K

Figure 1-7. Torque Chart - Sheet 5 of 5 (METRIC Fasteners)

SECTION 2. GENERAL

2.1 MACHINE PREPARATION, INSPECTION, AND MAINTENANCE

General

This section provides the necessary information needed by those personnel that are responsible to place the machine in operation readiness and maintain its safe operating condition. For maximum service life and safe operation, ensure that all the necessary inspections and maintenance have been completed before placing the machine into service. With proper care, maintenance and inspections performed per JLG's recommendations with any and all discrepancies corrected, this product will be fit for continued use.

Preparation, Inspection, and Maintenance

It is important to establish and conform to a comprehensive inspection and preventive maintenance program. The following table outlines the periodic machine inspections and maintenance recommended by JLG Industries, Inc. Consult your national, regional, or local regulations for further requirements for Mobile Elevating Work Platform (MEWP). The frequency of inspections and maintenance must be increased as environment, severity and frequency of usage requires.

Pre-Start Inspection

It is the User's or Operator's primary responsibility to perform a Pre-Start Inspection of the machine prior to use daily or at each change of operator. Reference the Operation and Safety Manual for completion procedures for the Pre-Start Inspection. The Operation and Safety Manual must be read in its entirety and understood prior to performing the Pre-Start Inspection.

Pre-Delivery Inspection and Frequent Inspection

The Pre-Delivery Inspection and Frequent Inspection shall be performed by a qualified JLG equipment mechanic. JLG Industries, Inc. recognizes a qualified JLG equipment mechanic as a person who, by possession of a recognized degree, certificate, extensive knowledge, training, or experience, has successfully demonstrated the ability and proficiency to service, repair, and maintain the subject JLG product model.

The Pre-Delivery Inspection and Frequent Inspection procedures are performed in the same manner, but at different times. The Pre-Delivery Inspection shall be performed prior to each sale, lease, or rental delivery. The Frequent Inspection shall be accomplished for each machine in service for 3 months or 150 hours (whichever comes first); out of service for a period of more than 3 months; or when purchased used. The frequency of this inspection must be increased as environment, severity and frequency of usage requires.

Reference the JLG Pre-Delivery and Frequent Inspection Form and the Inspection and Preventative Maintenance Schedule for items requiring inspection during the performance of these inspections. Reference the appropriate areas of this manual for servicing and maintenance procedures.

Annual Machine Inspection

JLG recommends that the Annual Machine Inspection be performed by a Factory-Trained Service Technician on an annual basis, no later than thirteen (13) months from the date of the prior Annual Machine Inspection. JLG Industries, Inc. recognizes a Factory-Trained Service Technician as a person who has successfully completed the JLG Service Training School for the subject JLG product model. Reference the machine Service and Maintenance Manual and appropriate JLG inspection form for performance of this inspection.

Reference the JLG Annual Machine Inspection Form and the Inspection and Preventative Maintenance Schedule for items requiring inspection during the performance of this inspection. Reference the appropriate areas of this manual for servicing and maintenance procedures.

For the purpose of receiving safety-related bulletins, it is important that JLG Industries, Inc. has updated ownership information for each machine. When performing each Annual Machine Inspection, notify JLG Industries, Inc. of the current machine ownership.

Preventative Maintenance

In conjunction with the specified inspections, maintenance shall be performed by a qualified JLG equipment mechanic. JLG Industries, Inc. recognizes a qualified JLG equipment mechanic as a person who, by possession of a recognized degree, certificate, extensive knowledge, training, or experience, has successfully demonstrated the ability and proficiency to service, repair, and maintain the subject JLG product model.

Reference the Preventative Maintenance Schedule and the appropriate areas of this manual for servicing and maintenance procedures. The frequency of service and maintenance must be increased as environment, severity and frequency of usage requires.

Table 2-1. Inspection and Maintenance Responsibilities

TYPE	FREQUENCY	PRIMARY RESPONSIBILITY	SERVICE QUALIFICATION	REFERENCE
Pre-Start Inspection	Prior to use each day; or At each Operator change.	User or Operator	User or Operator	Operation and Safety Manual
Pre-Delivery Inspection	Prior to each sale, lease, or rental delivery.	Owner, Dealer, or User	Qualified JLG Mechanic	Service and Maintenance Manual and applicable JLG inspection form.
Frequent Inspection	In service for 3 months or 150 hours, whichever comes first; or Out of service for a period of more than 3 months; or Purchased used.	Owner, Dealer, or User	Qualified JLG Mechanic	Service and Maintenance Manual and applicable JLG inspection form.
Annual Machine Inspection	Annually, no later than 13 months from the date of the prior inspection.	Owner, Dealer, or User	Factory-Trained Service Technician (recommended)	Service and Maintenance Manual and applicable JLG inspection form.
Preventative Maintenance	At intervals as specified in the Service and Maintenance Manual.	Owner, Dealer, or User	Qualified JLG Mechanic	Service and Maintenance Manual
NOTE: *Inspection forms are available from JLG. Use the Service and Maintenance Manual to perform inspections.*				

NOTICE

JLG INDUSTRIES, INC. RECOGNIZES A FACTORY-TRAINED SERVICE TECHNICIAN AS A PERSON WHO HAS SUCCESSFULLY COMPLETED THE JLG SERVICE TRAINING SCHOOL FOR THE SPECIFIC JLG PRODUCT MODEL.

2.2 PREVENTIVE MAINTENANCE AND INSPECTION SCHEDULE

The preventive maintenance and inspection checks are listed and defined in the following table. This table is divided into two basic parts, the "AREA" to be inspected and the "INTERVAL" at which the inspection is to take place. Under the "AREA" portion of the table, the various systems along with the components that make up that system are listed. The "INTERVAL" portion of the table is divided into two columns representing the various inspection time periods. The numbers listed within the interval column represent the applicable inspection code for which that component is to be checked.

The checks and services listed in this schedule are not intended to replace any local or regional regulations that may pertain to this type of equipment nor should the lists be considered as all inclusive. Variances in interval times may occur due to climate and/or conditions and depending on the location and use of the machine.

NOTICE

JLG INDUSTRIES REQUIRES THAT A COMPLETE ANNUAL INSPECTION BE PERFORMED IN ACCORDANCE WITH THE "ANNUAL MACHINE INSPECTION REPORT" FORM.

NOTE: *This machine requires periodic safety and maintenance inspections by a qualified JLG mechanic. Notify JLG dealer if inspection is overdue.*

Maintenance and Inspection Schedule Codes

1. Check for proper and secure: installation, adjustment, or torque.
2. Visual inspection for damage: (cracks, corrosion, abrasions, distortion, excessive wear, broken welds, gouges, chafing and threads showing).
3. Proper operation.
4. Check for proper sealing, signs of leakage and fluid level.
5. Clean and free of debris.
6. Decals installed and legible.
7. Check for proper tolerances, routing, and lubrication.
8. Fully Charged.
9. Verify/Perform.

a. Drain, Clean

b. Refill/Replace

c. Lubricate

Table 2-2. Preventive Maintenance & Inspection Schedule

AREA ON MACHINE	INSPECTIONS	
	PRE-DELIVERY (1) OR FREQUENT (2) INSPECTION	ANNUAL (3) (YEARLY) INSPECTION
Scissor Arms		
Scissor Arms	1, 2	1, 2
Safety Prop	1, 2	1, 2
Nuts, Bolts, Shafts, Shields, Bearings and Locking Devices	1, 2	1, 2
Cylinder/Pivot Pins and Attaching Hardware	1, 2	1, 2
Arm Pads and Sliding Block	1, 2	1, 2
Platform Assembly		
Platform	1	1
Platform Gate Assembly	1, 3	1, 3
Extension Deck and Locks	1, 3	1, 3
Guard Rails and Floor	1, 2	1, 2
Platform Roll Pins and Fold Down Rails	1, 2	1, 2
Lanyard Anchorage Points	1, 2, 6	1, 2, 6
Chassis Assembly		
Wheel Rim Nuts	1[50]	1[50]
Tires	1	1, 2
Oscillating Axle and Lock Nut	3	3
Steer, Drive, and Axle Components	1	1, 2, 5
Hydraulic and Battery Compartments	1, 3	1, 3
Side-Compartment Door Installation	1, 3, 5	1, 3, 5
Drive Motor	1	1, 4, 5
Platform Ladder	1, 5	1, 5
Drive Brakes	1	1, 5
Drive Hubs	1	1, 4, 5
Sliding Wear Pads**	1, 2, 5, 7	1, 2, 5, 7
Front Wheel Spindle Nuts/Bolts	1[50]	1[50]
Functions/Controls		
Control Levers, Switches, Gauges, and Instruments	1,3	1,3
Detents, Control Enclosure, and Protective Boots/Guards	1,3	1,3
Emergency Stop Switches at Ground and Platform	1,3	1,3
Lift, Drive and Speed Cutouts	3	3
Auxiliary Power System	3	3
Function Enable System	3	3
Brakes	3	3,5

Table 2-2. Preventive Maintenance & Inspection Schedule (Continued)

AREA ON MACHINE	INSPECTIONS	
	PRE-DELIVERY (1) OR FREQUENT (2) INSPECTION	ANNUAL (3) (YEARLY) INSPECTION
Machine Functions	3	3
Joystick/Toggle Return to Neutral/Off When Released	1,3	1,3
Batteries	4	4
Battery Fluid	4	4
Battery Charger	-	3
HYDRAULIC/ELECTRIC SYSTEM		
Hydraulic Cylinders	1,7	1,7,2,4,5
Pumps, Oil Lines and Reservoir	1	1,4
Hydraulic Filter	5	5
Hydraulic Tank, Cap, Breather and Vent	1	1,4
Hydraulic Fitting	1	1,4
Electrical Connections	1,3	1,3
Switches, Gauges, Horn and Lights	1,3	1,3
Switches and Controls	1,3	1,3
All Hydraulic Pressures	3	3
Hydraulic Fluid	8	8
GENERAL		
No Unauthorized Modification or Additions	9	9
Paint and Overall Appearance.	5	5
Operation and Safety Manual	9	9
General Structural Condition and Welds	2	2
Grease and Lubrication Specification	9	9
Function Test of All System	9	9
Notify JLG Change in Machine Ownership	-	9
ANSI and AEM handbook	9	9
Capacity Decals	9	9
All Decals/Placards	9	9
Annual Machine Inspection	-	9
Safety Publication	9	9
All Fasteners, Pins, Shields, and Covers	1,2	1,2

Footnotes:

[1]Prior to each sale, lease, or delivery.

[2]In service for 3 months; Out of service for 3 months or more; Purchased used.

[3]Annually, no later than 13 months from the date of the prior inspection, Includes all daily and quarterly inspections, mandated by regulating body.

[50]Indicates a 50 hour interval required to perform task after initial use of machine. This only occurs once in machine life.

** Refer to Operation and Safety Manual for machine specific instructions.

2.3 SERVICE MAINTENANCE COMPONENTS

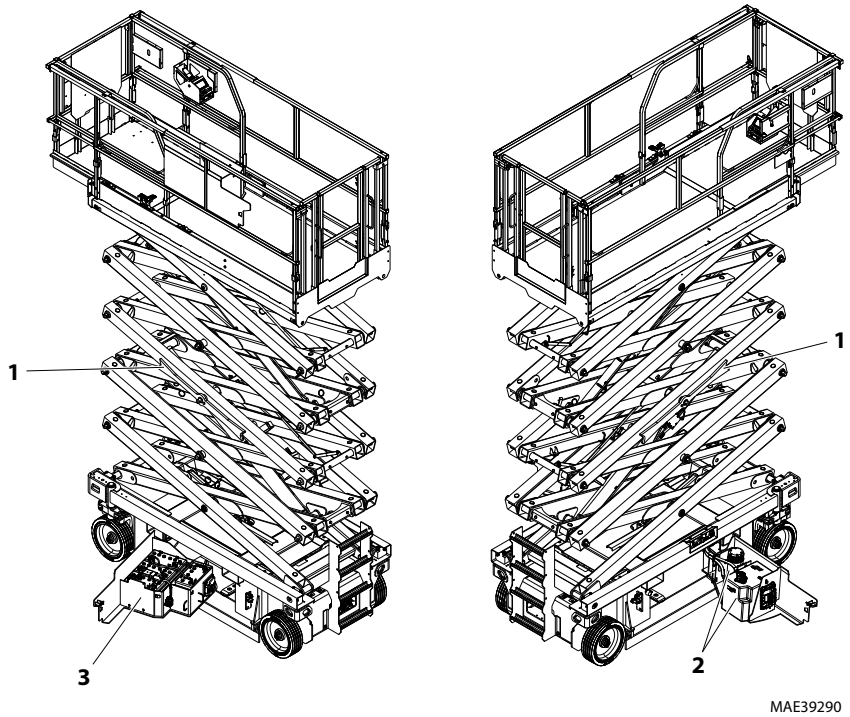

Figure 2-1. Machine Component Locations

1. Scissor Arm - Safety Prop
2. Hydraulic Tank/Pump Assembly
3. Batteries Location

Scissor Arm - Safety Prop

(See Figure 2-2. and Figure 2-3.)

WARNING

NEVER WORK UNDER AN ELEVATED PLATFORM UNTIL IT HAS BEEN RESTRAINED FROM MOVEMENT WITH THE SAFETY PROPS, BLOCKING OR OVERHEAD SLING.

CAUTION

BOTH SAFETY PROPS MUST BE USED WHENEVER MAINTENANCE PERFORMED ON THE MACHINE REQUIRES THE SCISSOR ARMS TO BE RAISED AND ONLY WITH NO LOAD IN THE PLATFORM.

The safety props are located, one each side of the machine on the scissor arms.

To engage the safety prop:

1. From the Ground Control Station, raise the platform far enough to allow the safety props to be engaged.
2. Release the locking pin and rotate the prop on each side of machine. Always set both when engaging.
3. Lower the platform until the safety props rest against the safety prop stops on the arm set below it, stopping all downward movement of the platform/scissor arm assembly.

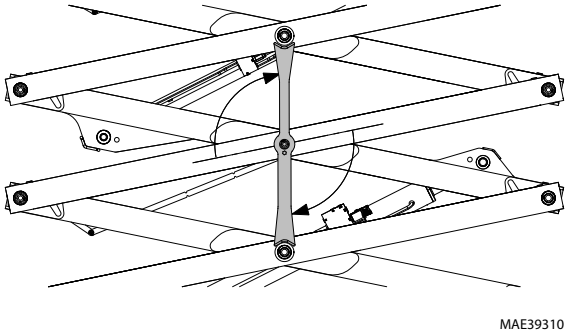

Prop Engaged

Figure 2-2. Scissor Arm - Safety Prop

To disengage the safety prop:

1. Raise the platform enough to release the safety props off the safety prop stops.
2. Rotate the prop assemblies until they align with the scissor arm and the release pin locks into the detent disk behind the arm.

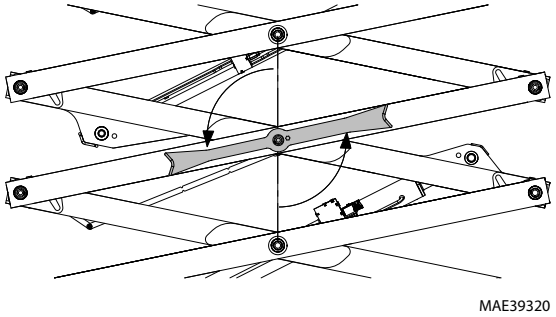

Prop Disengaged

Figure 2-3. Scissor Arm - Safety Prop

Hydraulic Oil Check Procedure

(Figure 2-4., and Figure 2-5.)

- Lube Points - Hydraulic Reservoir
- Reservoir Capacity - 6.6 gal. (25 L)
- Lube - Hydraulic Oil
- Interval - Check Daily

NOTE: *Check the hydraulic oil level with the platform in the stowed position only. Be certain the hydraulic oil has warmed to operating temperature before checking the oil level in the reservoir.*

1. On the right side of the machine on the hydraulic compartment door there is a **cutout (1)** which allows viewing of the hydraulic oil tank **marking (2)**. The reservoir is marked with a **MAX (maximum) marking (2)**. The **MIN marking (3)** is the bottom edge of the cutout on the door. The oil level must be kept within these markings for the hydraulic system to operate properly.
2. If additional oil is required, swing compartment door open and wipe all dirt and debris from the **filler/filter cap (4)** area, add proper grade of oil. Fill until oil level is close to the **MAX marking (3),** but not over the **MAX marking**.

NOTE: *Care should be taken not to introduce any impurities (dirt, water, etc.) while cap is removed.*

NOTE: *Recommended lubricating intervals are based on machine operations under normal conditions. For machines used in multi-shift operations and/or exposed to hostile environments or conditions, lubrication frequencies must be increased accordingly.*

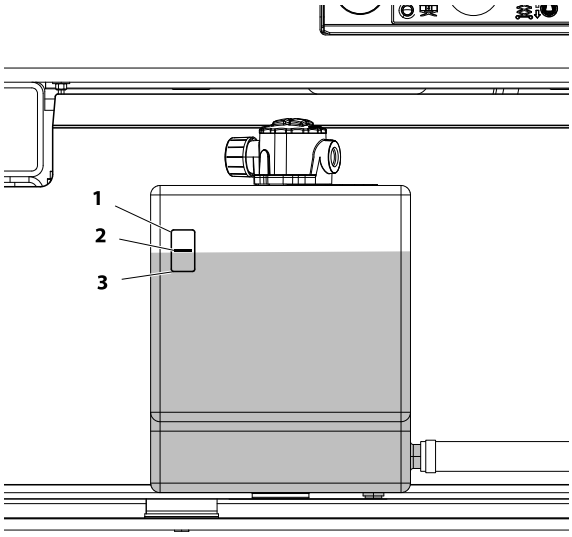

Figure 2-4. Hydraulic Oil Check Procedure

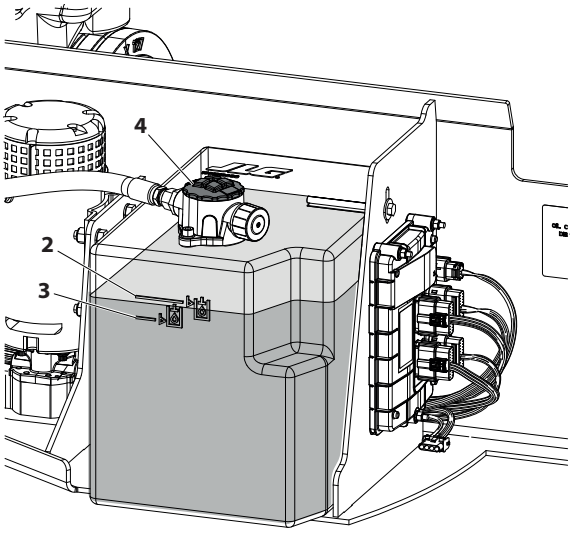

Figure 2-5. Hydraulic Oil Fill Procedure

2.4 SERVICE AND GUIDELINES

General

The following information is provided to assist you in the use and application of servicing and maintenance procedures contained in this book.

Safety and Workmanship

Your safety, and that of others, is the first consideration when engaging in the maintenance of equipment. Always be conscious of weight. Never attempt to move heavy parts without the aid of a mechanical device. Do not allow heavy objects to rest in an unstable position. When raising a portion of the equipment, ensure that adequate support is provided.

Cleanliness

1. The most important single item in preserving the long service life of a machine is to keep dirt and foreign materials out of the vital components. Precautions have been taken to safeguard against this. Shields, covers, seals, and filters are provided to keep air, fuel, and oil supplies clean; however, these items must be maintained on a scheduled basis in order to function properly.
2. At any time when air, fuel, or oil lines are disconnected, clean adjacent areas as well as the openings and fittings themselves. As soon as a line or component is disconnected, cap or cover all openings to prevent entry of foreign matter.
3. Clean and inspect all parts during servicing or maintenance, and assure that all passages and openings are unobstructed. Cover all parts to keep them clean. Be sure all parts are clean before they are installed. New parts should remain in their containers until they are ready to be used.

Components Removal and Installation

1. Use adjustable lifting devices, whenever possible, if mechanical assistance is required. All slings (chains, cables, etc.) should be parallel to each other and as near perpendicular as possible to top of part being lifted.
2. Should it be necessary to remove a component on an angle, keep in mind that the capacity of an eyebolt or similar bracket lessens, as the angle between the supporting structure and the component becomes less than 90°.
3. If a part resists removal, check to see whether all nuts, bolts, cables, brackets, wiring, etc., have been removed and that no adjacent parts are interfering.

Component Disassembly and Reassembly

When disassembling or reassembling a component, complete the procedural steps in sequence. Do not partially disassemble or assemble one part, then start on another. Always recheck your work to assure that nothing has been overlooked. Do not make any adjustments, other than those recommended, without obtaining proper approval.

Pressure-Fit Parts

When assembling pressure-fit parts, use an anti-seize or molybdenum disulfide base compound to lubricate the mating surface.

Bearings

1. When a bearing is removed, cover it to keep out dirt and abrasives. Clean bearings in nonflammable cleaning solvent and allow to drip dry. Compressed air can be used but do not spin the bearing.
2. Discard bearings if the races and balls (or rollers) are pitted, scored, or burned.
3. If bearing is found to be serviceable, apply a light coat of oil and wrap it in clean (waxed) paper. Do not unwrap reusable or new bearings until they are ready to install.
4. Lubricate new or used serviceable bearings before installation. When pressing a bearing into a retainer or bore, apply pressure to the outer race. If the bearing is to be installed on a shaft, apply pressure to the inner race.

Gaskets

Check that holes in gaskets align with openings in the mating parts. If it becomes necessary to hand-fabricate a gasket, use gasket material or stock of equivalent material and thickness. Be sure to cut holes in the right location, as blank gaskets can cause serious system damage.

Bolt Usage and Torque Application

1. Self locking fasteners, such as nylon insert and thread deforming locknuts, are not intended to be reinstalled after removal. Always use new replacement hardware when installing locking fasteners.
2. Use bolts of proper length. A bolt which is too long will bottom before the head is tight against its related part. If a bolt is too short, there will not be enough thread area to engage and hold the part properly. When replacing bolts, use only those having the same specifications of the original, or one which is equivalent.
3. Unless specific torque requirements are given within the text, standard torque values should be used on heat-treated bolts, studs, and steel nuts, in

accordance with recommended shop practices. (See Torque Charts in Section 1.)

Hydraulic Lines and Electrical Wiring

Clearly mark or tag hydraulic lines and electrical wiring, as well as their receptacles, when disconnecting or removing them from the unit. This will assure that they are correctly reinstalled.

Hydraulic System

1. Keep the system clean. If evidence of metal or rubber particles are found in the hydraulic system, drain and flush the entire system.
2. Disassemble and reassemble parts on a clean work surface. Clean all metal parts with non-flammable cleaning solvent. Lubricate components, as required, to aid assembly.

Lubrication

Service applicable components with the amount, type, and grade of lubricant recommended in this manual, at the specified intervals. When recommended lubricants are not available, consult your local supplier for an equivalent that meets or exceeds the specifications listed.

Battery

Clean battery, using a non-metallic brush and a solution of baking soda and water. Rinse with clean water. After cleaning, thoroughly dry battery and coat terminals with an anti corrosion compound.

2.5 LUBRICATION AND INFORMATION

Hydraulic System

1. The primary enemy of a hydraulic system is contamination. Contaminants enter the system by various means, e.g., using inadequate hydraulic oil, allowing moisture, grease, filings, sealing components, sand, etc., to enter when performing maintenance, or by permitting the pump to cavitate due to insufficient quantity of oil in supply tube.
2. The design and manufacturing tolerances of the component working parts are very close, therefore, even the smallest amount of dirt or foreign matter entering a system can cause wear or damage to the components and generally results in faulty operation. Every precaution must be taken to keep hydraulic oil clean, including reserve oil in storage. Hydraulic system filters should be checked, cleaned, and/or replaced as necessary, at the specified intervals required, see Table 2-2, Preventive Maintenance & Inspection Schedule Always examine filters for evidence of metal particles.
3. Cloudy oils indicate a high moisture content which permits organic growth, resulting in oxidation or corrosion. If this condition occurs, the system must be drained, flushed, and refilled with clean oil.
4. It is not advisable to mix oils of different brands or types, as they may not contain the same required additives or be of comparable viscosities. Good grade mineral oils, with viscosities suited to the ambient temperatures in which the machine is operating, are recommended for use.

NOTE: *Metal particles may appear in the oil or filters of new machines due to the wear-in of meshing components.*

Hydraulic Oil

1. Refer to Section 1 for recommendations for viscosity ranges.
2. JLG recommends Mobilfluid 424 hydraulic oil, which has an SAE viscosity of 10W-30 and a viscosity index of 152.

NOTE: *Start-up of hydraulic system with oil temperatures below -15° F (-26° C) is not recommended. If it is necessary to start the system in a sub-zero environment, it will be necessary to heat the oil with a low density, electrical heater to a minimum temperature of -15° F (-26° C).*

Changing Hydraulic Oil

1. Use of any of the recommended crankcase or hydraulic oils eliminates the need for changing the oil on a regular basis. However, filter elements must be changed annually unless operating in extreme conditions. If it is necessary to change the oil, use only those oils meeting or exceeding the specifications appearing in this manual. If unable to obtain the same type of oil supplied with the machine, consult local supplier for assistance in selecting the proper equivalent. Avoid mixing petroleum and synthetic base oils. JLG Industries recommends changing the hydraulic oil annually.
2. Use every precaution to keep the hydraulic oil clean. If the oil must be poured from the original container into another, be sure to clean all possible contaminants from the service container. Always replace the filter and clean magnet any time the system oil is changed.
3. While the unit is shut down, a good preventive maintenance measure is to make a thorough inspection of all hydraulic components, lines, fittings, etc., as well as a functional check of each system, before placing the machine back in service.

NOTE: *Refer to section 4 for oil checking and oil changing procedure.*

2.6 CYLINDER DRIFT TEST

Maximum acceptable cylinder drift is to be measured using the following methods.

Platform Drift

Measure the drift of the platform to the ground. Fully elevate the platform. Maximum allowable drift is 2 inches (5 cm) in 10 minutes. If the machine does not pass this test, proceed with the following.

Cylinder Drift

Table 2-3. Cylinder Drift

CYLINDER BORE DIAMETER		MAX. ACCEPTABLE DRIFT IN 10 MINUTES	
INCHES	MM	INCHES	MM
3	76.2	0.026	0.66
3.5	89	0.019	0.48
4	101.6	0.015	0.38
5	127	0.009	0.22
6	152.4	0.006	0.15
7	177.8	0.005	0.13

Drift is to be measured at the cylinder rod with a calibrated dial indicator. The cylinder oil must be at ambient temperature and temperature stabilized.

The cylinder must have the normal load, which is the normal platform load applied.

If the cylinder passes this test, it is acceptable.

NOTE: *This information is based on 6 drops per minute cylinder leakage.*

2.7 PINS AND COMPOSITE BEARING REPAIR GUIDELINES

Filament wound bearings.

1. Pinned joints should be disassembled and inspected if the following occurs:
   a. Excessive sloppiness in joints.
   b. Noise originating from the joint during operation.
2. Filament wound bearings should be replaced if any of the following is observed:
   a. Frayed or separated fibers on the liner surface.
   b. Cracked or damaged liner backing.
   c. Bearings that have moved or spun in their housing.
   d. Debris embedded in liner surface.
3. Pins should be replaced if any of the following is observed (pin should be properly cleaned prior to inspection):
   a. Detectable wear in the bearing area.
   b. Flaking, pealing, scoring, or scratches on the pin surface.
   c. Rusting of the pin in the bearing area.
4. Re-assembly of pinned joints using filament wound bearings.
   a. Housing should be blown out to remove all dirt and debris, bearings and bearing housings must be free of all contamination.
   b. Bearing / pins should be cleaned with a solvent to remove all grease and oil.

NOTE: *Filament wound bearings are dry joints and should not be lubricated.*

   c. Pins should be inspected to ensure it is free of burrs, nicks, and scratches which would damage the bearing during installation and operation.

SECTION 3. CHASSIS & SCISSOR ARMS

3.1 LEFT AND RIGHT SIDE COMPONENT COMPARTMENTS

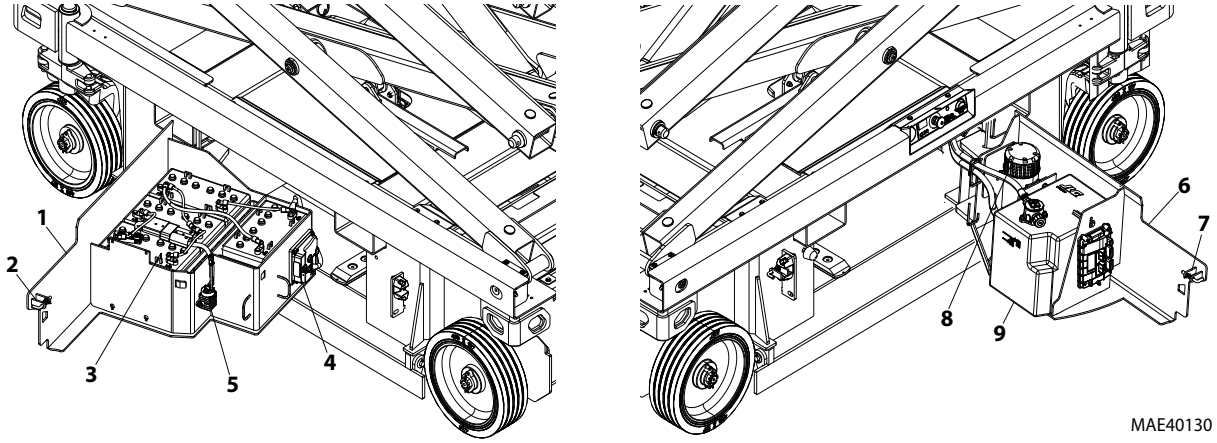

Figure 3-1. Components Mounded on Side Swing - Out Compartment Doors

1. Left Side Component Compartment Door
2. Compartment Latch and Release Handle
3. Batteries
4. Pump Power Module
5. Main Contactor Relay
6. Right Side Component Compartment Door
7. Compartment Latch and Release Handle
8. Hydraulic Pump/Motor Assy.
9. Hydraulic Tank w/Filter

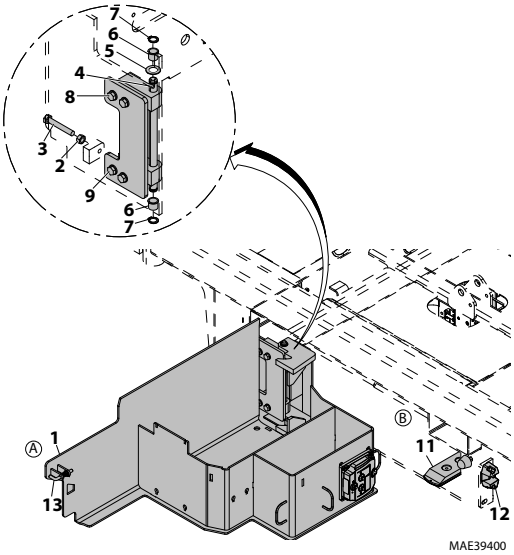

Figure 3-2. Side Swing - Out Compartment Door Installation

1. Side Compartment Door
2. Nut
3. Door Adjuster Bolt (See Note 1)
4. Hinge Pin Bearing
5. Thrust Washer
6. Bearing
7. Washer
8. Hinge Tightening Bolts (See Note 2)
9. Door Hinge
10. Wear Pad
11. Bolt
12. Latch Ramp
13. Latch Pin - Spring Loaded

NOTE 1: *To adjust SURFACE A to be parallel with SURFACE B within 3mm when doors are closed. Rotate the Door Adjuster Bolt in clockwise to decrease and counterclockwise to increase the distance between surface A and B.*

NOTE 2: *Torque Hinge Tightening Bolts to 71.5 ft. lbs. (97 Nm).*

3.2 BATTERY REMOVAL/MAINTENANCE

NOTICE

JLG MACHINES EQUIPPED WITH DELTA Q BATTERY CHARGERS ARE DESIGNED FOR THE BEST PERFORMANCE WITH OEM FACTORY APPROVED BATTERIES.
APPROVED JLG REPLACEMENT BATTERIES ARE AVAILABLE THROUGH JLG'S AFTERMARKET PARTS DISTRIBUTION CENTERS OR JLG'S AFTERMARKET PROGRAMS. FOR ASSISTANCE WITH PROPER BATTERY REPLACEMENT, PLEASE CONTACT YOUR LOCAL JLG SUPPORT OFFICE.
BATTERIES APPROVED BY JLG HAVE BEEN TESTED FOR COMPATIBILITY WITH THE ALGORITHM PROGRAMMING OF THE DELTA Q BATTERY CHARGER TO OPTIMIZE BATTERY LIFE AND MACHINE CYCLE TIMES. THE USE OF NON APPROVED BATTERIES IN YOUR JLG EQUIPMENT MAY RESULT IN PERFORMANCE ISSUES OR BATTERY CHARGER FAULT CODES. JLG ASSUMES NO RESPONSIBILITY FOR SERVICE OR PERFORMANCE ISSUES ARISING FROM THE USE OF NON APPROVED BATTERIES.

Battery Quick-Disconnect (If Equipped)

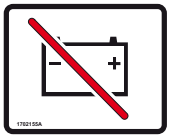

Machines equipped with the battery quick-disconnect allow all machine power to be easily disconnected at the batteries without removing battery cables from the battery posts. To disconnect power, locate the RED quick-disconnect connector on top of the batteries inside the battery compartment and pull halves apart.

⚠ CAUTION

BEFORE BATTERY REMOVAL CAN BEGIN, ENSURE THAT THE (+) AND (–) BATTERY CABLES HAVE BEEN PROPERLY DISCONNECTED.

1. The machine batteries are located inside the machine left side compartment door. Release the latch bar at the rear of the door and swing door open.
2. Once the battery door is open, battery replacement/maintenance can begin.
3. To remove one or more batteries from the machine, first disconnect the positive (+) battery cable from the forward most battery connected to the main contactor relay.
4. After any maintenance on the batteries or replacement of the batteries is complete, reconnect the batteries and check for proper operation.
5. Close and latch the left side compartment door.

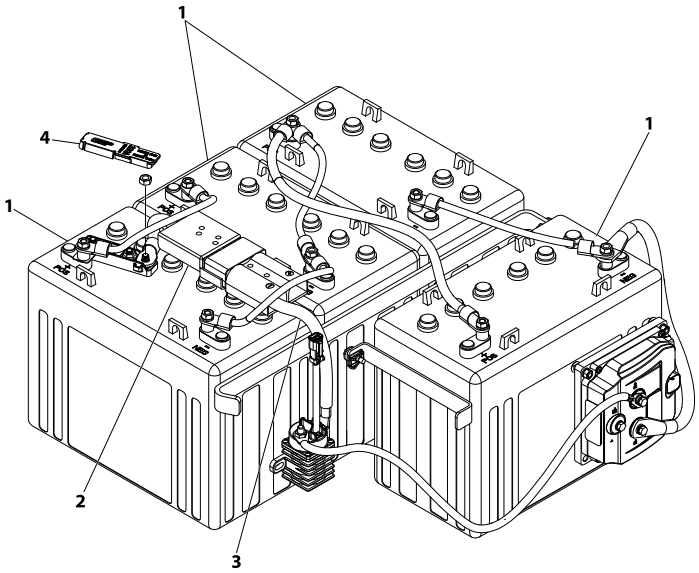

Figure 3-3. Battery Cable Connections

1. Batteries (12 V)
2. Battery Fuse (300 Amp)
3. Battery Quick Disconnect (If Equipped)
4. Mega Fuse Holder (300 Amp)

Battery Maintenance and Safety Practices

Non-Sealed - Refillable Lead Acid Batteries Only

CAUTION

ENSURE THAT BATTERY ACID DOES NOT COME INTO CONTACT WITH SKIN OR CLOTHING. WEAR PROTECTIVE CLOTHING AND EYEWEAR WHEN WORKING WITH BATTERIES. NEUTRALIZE ANY BATTERY ACID SPILLS WITH BAKING SODA AND WATER.

BATTERY ACID RELEASES AN EXPLOSIVE GAS WHILE CHARGING, ALLOW NO OPEN FLAMES, SPARKS OR LIGHTED TOBACCO PRODUCTS IN THE AREA WHILE CHARGING BATTERIES. CHARGE BATTERIES ONLY IN A WELL VENTILATED AREA.

ADD ONLY DISTILLED WATER TO BATTERIES. WHEN ADDING DISTILLED WATER TO THE BATTERIES, A NON-METALLIC CONTAINER AND/OR FUNNEL MUST BE USED.

WARNING

DO NOT REPLACE ITEMS CRITICAL TO STABILITY, SUCH AS BATTERIES, WITH ITEMS OF DIFFERENT WEIGHT OR SPECIFICATION. DO NOT MODIFY UNIT IN ANY WAY TO AFFECT STABILITY.

Check the electrolyte level of the batteries often, adding only distilled water when required. When fully charged, battery fluid level should be 1/8" below vent tubes. (See Figure 3-4.).

- DO NOT fill to bottom of vent tubes.
- DO NOT allow fluid level to go below the top of the plates when charging or operating.

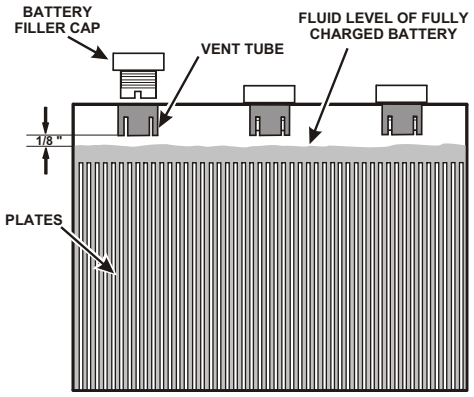

Figure 3-4. Battery Fluid Level

3.3 BATTERY CHARGING

NOTE: *Be sure that machine is parked in a well ventilated area before charging begins.*

CAUTION

ONLY PLUG THE CHARGER INTO A PROPERLY INSTALLED AND GROUNDED OUTLET. DO NOT USE GROUND ADAPTORS OR MODIFY PLUG. DO NOT TOUCH NON-INSULATED PORTION OF OUTPUT CONNECTOR OR NON-INSULATED BATTERY TERMINAL.
DO NOT OPERATE CHARGER IF THE AC SUPPLY CORD IS DAMAGED OR IF THE CHARGER HAS RECEIVED A SHARP BLOW, BEEN DROPPED, OR OTHERWISE DAMAGED IN ANY WAY.
ALWAYS DISCONNECT THE CHARGER AC SUPPLY BEFORE MAKING OR BREAKING THE (POSITIVE/NEGATIVE) CONNECTIONS TO THE BATTERY. DO NOT OPEN OR DISASSEMBLE CHARGER.

1. The battery charger AC input plug is located inside the frame at the left rear of the machine next to the battery charger.
2. Connect the charger AC input plug to a grounded outlet using a 3 wire heavy duty extension cord (See Table 3-1, Battery Charger Specifications, for battery charger AC input specifications).
3. After connecting the charger to an AC outlet at the start of the charging cycle, check the LED indicators on the charger for normal operation or if a fault has occurred.
4. Current battery charge state can also be seen on the platform control station panel LEDs, or the MDI indicator (if equipped) on the ground control station, when machine is powered up.
5. The batteries are fully charged when all three GREEN LED indicators on the platform control station or MDI battery charger status panel are illuminated.

NOTE: *If the charger is left plugged in, the charger will automatically restart a complete charge cycle if the batteries voltage drops below a minimum voltage or 30 days has elapsed.*

Delta-Q - Battery Charger

All chargers are located at rear of machine inside chassis.

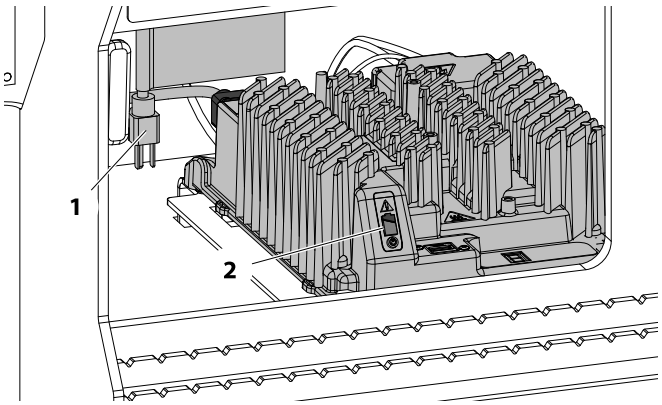

1. AC Voltage Input Plug **2.** Charge Indicator LEDs

- **AC Power On** - BLUE LED ON
- **Low State of Charge** - (Bottom Panel - GREEN LED Flashing) - (Top Panel - GREEN LED OFF)
- **High State of Charge** - (Bottom Panel - GREEN LED ON) - (Top Panel - GREEN LED Flashing)
- **Charge Complete** - (Bottom Panel - GREEN LED ON) - (Top Panel - GREEN LED ON)
- **Fault Indicator** - (RED LED ON)
- **External Error Condition Caution** - (AMBER LED Flashing)

Green Power - Battery Charger (China (GB) Only)

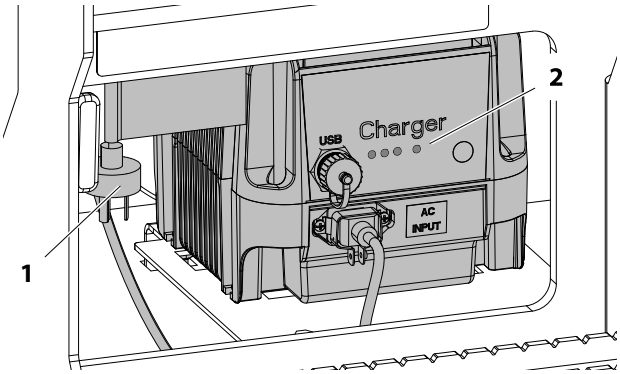

1. AC Voltage Input Cable **2.** Charge Indicator LEDs

- **Battery Charging** - (YELLOW LED - AGM - Flashes Quickly/FLOODED - Remains ON/ AGM-FLOODED - Flashes Slowly)
- **Charge Complete** - (GREEN LED ON)
- **Fault Indicator** - (RED LED ON)
- **Performing Self-Diagnostic** - (YELLOW and GREEN LEDs Flashing Simultaneously)

Eagle Performance - Battery Charger

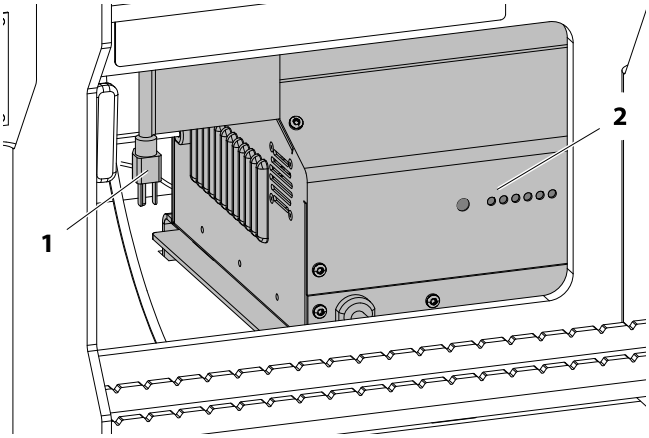

1. AC Voltage Input Cable **2.** Charge Indicator LEDs

- **Battery Type Indicator** - (YELLOW LED ON)
- **Battery Charging** - (30%-60%-90% RED LED ON)
- **Charge Complete** - (GREEN LED ON)
- **No Battery Detected** - (30% RED Blinking)
- **Overall Timer Shutdown** - (30-60-90% RED LEDs Blinking)
- **Internal OverTemp Shutdown** - (30 - 90% RED LEDs Blinking)

If required, further general and troubleshooting information about the battery charger can be found in the charger manufacturers Owner's Guide.

Table 3-1. Battery Charger Specifications

DESCRIPTION	ALL MACHINES		
Electrical System Voltage (DC)	24V		
Battery Charger:	**Delta-Q**	**PRO - Eagle Perf. Series**	**Green Power - Pylon International**
Input:			
AC Input Voltage:	85-270 V AC	108-132 V AC	100-240 V AC
Nominal AC Input Voltage:	100 VAC / 240 VAC RMS	120 VAC	— —
Input Frequency:	50 - 60 Hz	45 - 65 Hz	45 - 65 Hz
Max. AC Input Current:	7.5 A	12 A	8.5 A
Ingress Protection:	IP66 NEMA 4 Type 4	IP35	IP66
Operating Temperature:	-40° F (-40° C) to 149° F (+65° C)	-22° F (-30° C) to 122° F (+50° C)	-4° F (-20° C) to 122° F (+50° C)
Output:			
Nominal DC Output Voltage:	24 V	24 V	24 V
Max. DC Output Voltage:	36 V	31.92 V	34 V
Max DC Output Current:	27.1 A	25 A	30 A
Max. Interlock Current:	1 A @ 24 V	1 A @ 24 V	1 A @ 24 V
Protection:			
Output Reverse Polarity:	Electronic Protection-Auto Reset	Electronic Protection-Auto Reset	Electronic Protection-Auto Reset
Output Short Circuit:	Current Limited	Electronic Protection-Auto Reset	Electronic Protection-Auto Reset
AC Overload:	Current Limited	Branch Circuit Protection	Current Limited
DC Overload:	Current Limited	Current Limited	Current Limited
NOTE: *See LED indicator status of each charger on page 3-4 of this section.*			

Battery Charger Maintenance

CAUTION

USE CHARGER ONLY ON BATTERY SYSTEMS WITH AN ALGORITHM SELECTED THAT IS APPROPRIATE TO THE SPECIFIC BATTERY TYPE. OTHER USAGE MAY CAUSE PERSONAL INJURY AND DAMAGE.

LEAD ACID BATTERIES MAY GENERATE EXPLOSIVE HYDROGEN GAS DURING NORMAL OPERATION. KEEP SPARKS, FLAMES, AND SMOKING MATERIALS AWAY FROM BATTERIES. PROVIDE ADEQUATE VENTILATION DURING CHARGING. NEVER CHARGE A FROZEN BATTERY.

STUDY ALL BATTERY MANUFACTURER'S SPECIFIC PRECAUTIONS SUCH AS RECOMMENDED RATES OF CHARGE AND REMOVING OR NOT REMOVING CELL CAPS WHILE CHARGING.

CAUTION

ONLY PLUG THE CHARGER INTO A PROPERLY INSTALLED AND GROUNDED OUTLET. DO NOT USE GROUND ADAPTORS OR MODIFY PLUG. DO NOT TOUCH NON-INSULATED PORTION OF OUTPUT CONNECTOR OR NON-INSULATED BATTERY TERMINAL.

DO NOT OPERATE CHARGER IF THE AC SUPPLY CORD IS DAMAGED OR IF THE CHARGER HAS RECEIVED A SHARP BLOW, BEEN DROPPED, OR OTHERWISE DAMAGED IN ANY WAY.

ALWAYS DISCONNECT THE CHARGER AC SUPPLY BEFORE MAKING OR BREAKING THE (POS/NEG) CONNECTIONS TO THE BATTERY.
DO NOT OPEN OR DISASSEMBLE CHARGER.

1. For flooded lead-acid batteries, regularly check water levels of each battery cell after charging and add distilled water as required to level specified by battery manufacturer. Follow the safety instructions recommended by the battery manufacturer.
2. Make sure charger connections to battery terminals are tight and clean.
3. Do not expose charger to oil or to direct heavy water spraying when cleaning vehicle.

Excessive Battery Watering Requirements or Strong Sulphur (Rotten Egg) Smell

These symptoms indicate over-charging or high battery temperature. These symptoms are unlikely to be caused by too high a charge current since the maximum charge current of the charger will be small compared to even a moderately sized battery pack. The most likely cause for this problem is incorrect charge algorithm setting and/or high ambient temperatures.

1. Confirm that the battery pack is not too small - usually > 50Ah.
2. Confirm that the nominal battery voltage matches the charger output voltage.
3. If the output voltage of the charger seems excessive, return the charger for service. Contact JLG to get the expected battery voltage settings for the charger in question. Be sure to have the charger's serial number and charge algorithm setting available when calling.

Table 3-2. Diagnostic Trouble Codes (Delta Q Battery Charger)

DTC	Fault	Solution
E-0-0-1 E-0-2-1	Battery high voltage	Check the battery voltage and cable connections. Check battery size and condition. This error will automatically clear once the condition has been corrected.
E-0-0-2 E-0-2-2	Battery low voltage	Check the battery voltage and cable connections. Check battery size and condition. This error will automatically clear once the condition has been corrected.
E-0-0-3	Charge timeout caused by battery pack not reaching required voltage within safe time limit.	Possible causes: Charger output reduced due to high temperatures, poor battery health, very deeply discharged battery and /or poorly connected battery. Possible solutions: Operate at lower ambient temperature. Replace battery pack. Check DC connections. This error will automatically clear once the charger is reset by cycling DC.
E-0-0-4	Battery could not meet minimum voltage	Check for shorted or damaged cells. Replace battery pack. Check DC connections. This error will automatically clear once the charger is reset by cycling DC.
E-0-0-7	Battery amp hour limit exceeded	Possible causes include poor battery health, very deeply discharged battery, poorly connected battery, and / or high parasitic loads on battery while charging. Possible solutions: Replace battery pack. Check DC connections. Disconnect parasitic loads. This error will automatically clear once the charger is reset by cycling DC.
E-0-0-8	Battery temperature is out of range	Possible battery temperature sensor error. Check temperature sensor and connections. Reset charger. This error will automatically clear once the condition has been corrected.
E-0-1-2	Reverse polarity error	Battery is connected to the charger incorrectly. Check the battery connections. This error will automatically clear once the condition has been corrected.
E-0-1-6 E-0-1-8 E-0-2-6	USB operation failed	Software upgrade failure or script operation failure. Ensure the USB flash drive is properly formatted and retry inserting the USB flash drive into the charger.
E-0-2-3	High AC voltage error (>270 VAC)	Connect charger to an AC source that provides stable AC between 85 - 270 VAC / 45- 65 Hz. This error will automatically clear once the condition has been corrected.
E-0-2-4	Charger failed to initialize	The charger has failed to turn on properly. Disconnect AC input and battery for 30 seconds before retrying.
E-0-2-5	Low AC voltage oscillation error	AC source is unstable. Could be caused by undersized generator and /or severely undersized input cables. Connect charger to an AC source that provides stable AC between 85 - 270 VAC / 45-65 Hz. This error will automatically clear once the condition has been corrected.
F-0-0-1, F-0-0-2, F-0-0-3, F-0-0-4, F-0-0-6		Internal charger fault. Remove AC and battery for minimum 30 seconds and retry charger. If it fails again, please contact the manufacturer of your vehicle or machine.

Table 3-3. Fault Codes (Green Power)

Flash Code	Cause	Solution
1	Connection Issue	1) Check battery connection is correct. 2) Check charger connection is correct. 3) Check each battery is good.
2	Abnormal AC Power Input (Voltage)	1) Check AC input cord is connected between charger and AC outlet. 2) Make sure AC plug is tightly secured into AC outlet.
3	Charger High Temperature Protection	1) Charger shuts down and goes into protection mode due to charger/environmental temperature is too high for charger to function properly. Please place the charger into an area with ambient air flow or to a cooler place. 2) Disconnect the charger and wait for 15-20 mins before reco necting for charging.
4	Battery High Temperature Protection	1) Charger will reduce or even stop charging when the battery temperature exceeds 50° C. This is to avoid battery overheating. 2) Disconnect the charger and wait for 15-20 mins before reconnecting for charging.
5	Output Current is too high	Return to factory for repair.
6	Battery Voltage is too high(>30.5 V)	Check and assure that the correct output battery voltage is connected.
7	Battery Voltage is too low(<18 V)	Check and assure that the correct output battery voltage is connected.

Table 3-4. Fault Codes (Eagle Battery Charger)

LED Indications	Fault	Solution
30% RED LED BLINKING	NO BATTERY DETECTED	This indication occurs whenever the charger circuitry cannot detect a battery. The charger circuitry will not allow charge current to flow under this condition. With the AC power supply cord unplugged, check the connection to the batteries for proper polarity (black wire to negative). Also check for corrosion free secure connections to the battery.
30 & 60% RED LEDS BLINKING	FORMING STAGE TIMEOUT SHUTDOWN	This indication occurs if the battery voltage has not risen above 1.75 volts per cell within the first 3 hours of charging. This indicates that a possible battery problem exists and that the charge cycle has been terminated at this point.
30, 60 & 90% RED LEDS BLINKING	OVERALL TIMER SHUTDOWN	This indication occurs if the charger has not completed the charge cycle within the allowable factory set time period. This indicates that a possible battery problem exists and that the charge cycle has been terminated at this point.
30 & 90% RED LEDS BLINKING	INTERNAL OVERTEMP SHUTDOWN	This indication occurs if the charger circuitry has detected operating temperatures inside the charger enclosure that are above factory specified levels. This could indicate that a possible charger problem exists and that the charge cycle has been terminated.
30% RED & 100% GREEN LEDS BLINKING	BULK STAGE SHUTDOWN	This indication occurs if the battery voltage does not rise properly during the Bulk Stage. This indicates that a possible battery problem exists and that the charge cycle has been terminated at this point.
30% RED & 100% GREEN LEDS ALTERNATE BLINKING ON OFF	DELTAVIEW SIGNAL OR NO BATTERY DETECTED	This will be the NORMAL indication when the charger is plugged into A/C but not connected to a battery pack, allowing the DeltaView signal to be retrieved with a DeltaView Reader. This can also be considered the NO BATTERY DETECTED fault code.
NOTE: *Disconnecting and reconnecting the AC power supply cord will reset the charger.*		

3.4 DC/AC POWER INVERTER INSTALLATION - OPTION

DESCRIPTION	ALL MACHINES
Electrical System Voltage (DC)	24 V
Power Inverter:	**Power Bright**
DC Input:	
DC Input Voltage:	20 to 30 VDC
Operating Temperature:	-4° F (-20° C) to 113° F (+45° C)
AC Output:	
Output Power (Continuous):	900 W
Output Power (Surge):	1800 W
Output Power (AC):	7.5 A
Output Voltage (AC):	117 V +/– 10%
Output Frequency:	60 Hz
Type:	Modified Sine Wave
Protection:	
Out put Reverse DC Polarity:	3 X 25 A Replaceable Fuse

Set the master power switch *(item 5)* on the side of the inverter unit to ON and leave it there. Use the inverter on/off switch at the Ground Control panel (see Figure 3-10., item 3) to power the inverter on and off, via the DC power contactor relay (item 6 in illustration below).

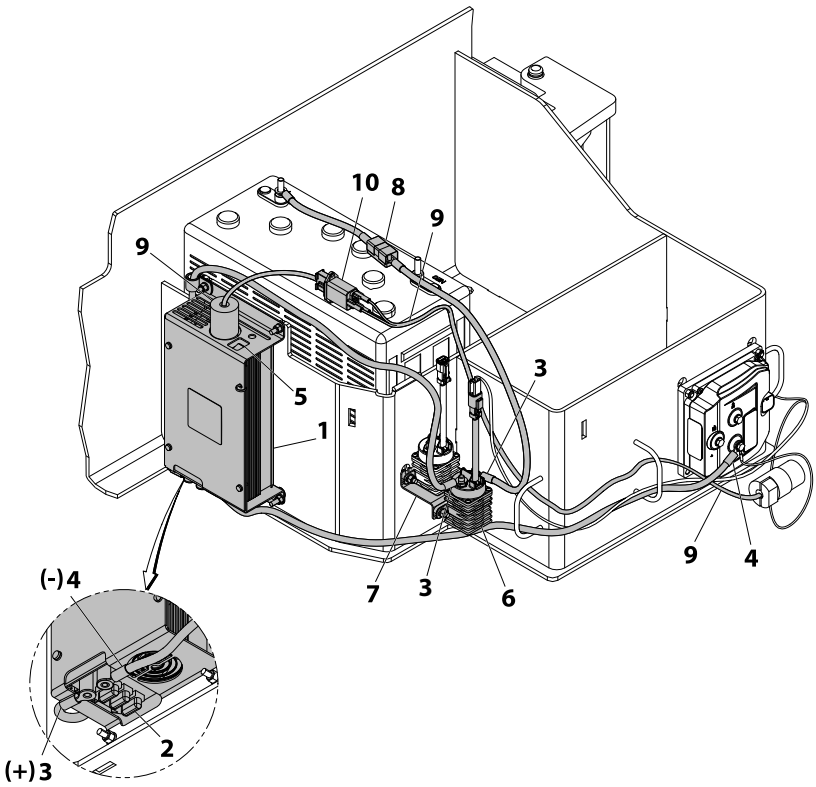

Figure 3-5. DC/AC Power Inverter - Installation

1. DC/AC Power Inverter
2. DC Input Fuses (3 X 25 Amp Each)
3. DC (+) Positive Input from Batteries
4. DC (–) Negative Input from Batteries
5. Inverter Master Power Switch (On Side Panel)
6. DC Power Contactor Relay
7. Contactor Relay Mounting Bracket and Hardware
8. DC (+) Positive 80 Amp Inline Fuse For Inverter Circuit Power Feed
9. AC Power Output to Platform Receptacle Cable
10. AC Line Filter

3.5 LOGIC CONTROL MODULE INSTALLATION

All machine electrical functions are controlled through the logic control module, the logic control module also monitors all the machine's electrical systems. If a system fault should happen with the logic module or one of the machine's electrical systems, the logic module will generate a DTC code. Refer to the DTC (Diagnostic Trouble Codes), see Section 6, Diagnostic Trouble Codes for diagnostic information concerning any DTC code generated by the logic module.

The logic control module is located on the machine chassis inside the right side compartment door.

To Access Module

1. Open the right side compartment to access the logic control module.

To Remove the Module from the Machine

1. Disconnect machine power at the positive (+) battery cable or use quick disconnect, if equipped.
2. Mark or note the harness connector positions before removing from the module.
3. Disconnect the harness connectors from the front of the module.
4. Remove the three (3) bolts, nuts and washers, two on top and one on bottom of module, to remove the module from door plate.

Re-install by reversing the above steps.

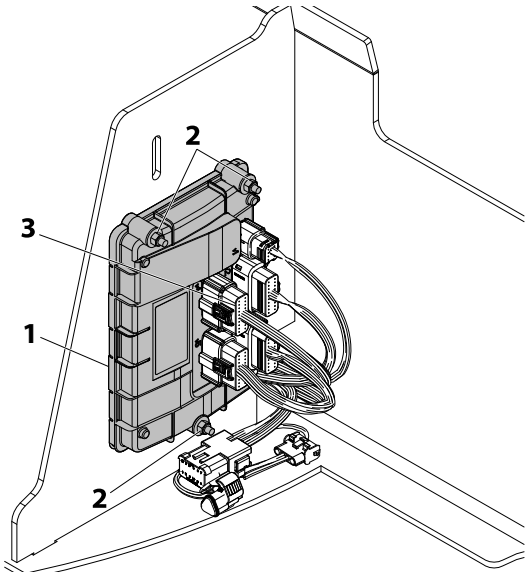

Figure 3-6. Logic Module Components

1. Logic Module Assembly
2. Module Mounting Bolts/Nuts and Washers*
3. Main Harness Connectors

NOTE: ** Torque mounting bolts (M8) - 14 ft. lb. (19.2 Nm) max.*

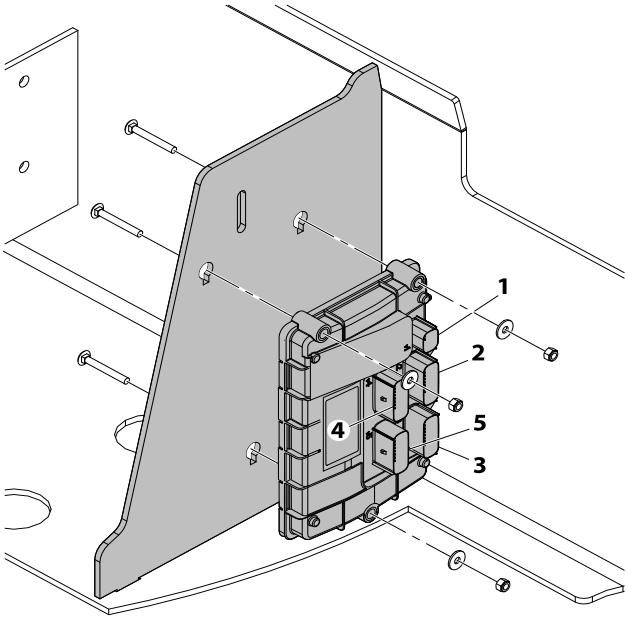

Figure 3-7. Logic Module CO01 - Harness Connector Identification

1. C001 - V1 Connector - 8 Pin
2. C001 - V2 Connector - 20 Pin
3. C001 - V3 Connector - 20 Pin
4. C001- V4 Connector - 20 Pin
5. C001 - V5 Connector - 20 Pin

NOTE: *For detailed connector pin assignments see the Electrical Schematic in Section 8.*

3.6 MAIN POWER CONTACTOR RELAY AND PUMP CONTROL MODULE

The main power contactor relay and pump control module are located on the left side swing out compartment door, next to the batteries.

NOTICE

DISCONNECT MAIN POWER FROM THE BATTERIES BEFORE ATTEMPTING TO REMOVE THE MAIN POWER CONTACTOR RELAY OR SERVICING THE ELECTRICAL SYSTEM. FAILURE TO DO SO COULD CAUSE DAMAGE TO THE MACHINES ELECTRICAL COMPONENTS.

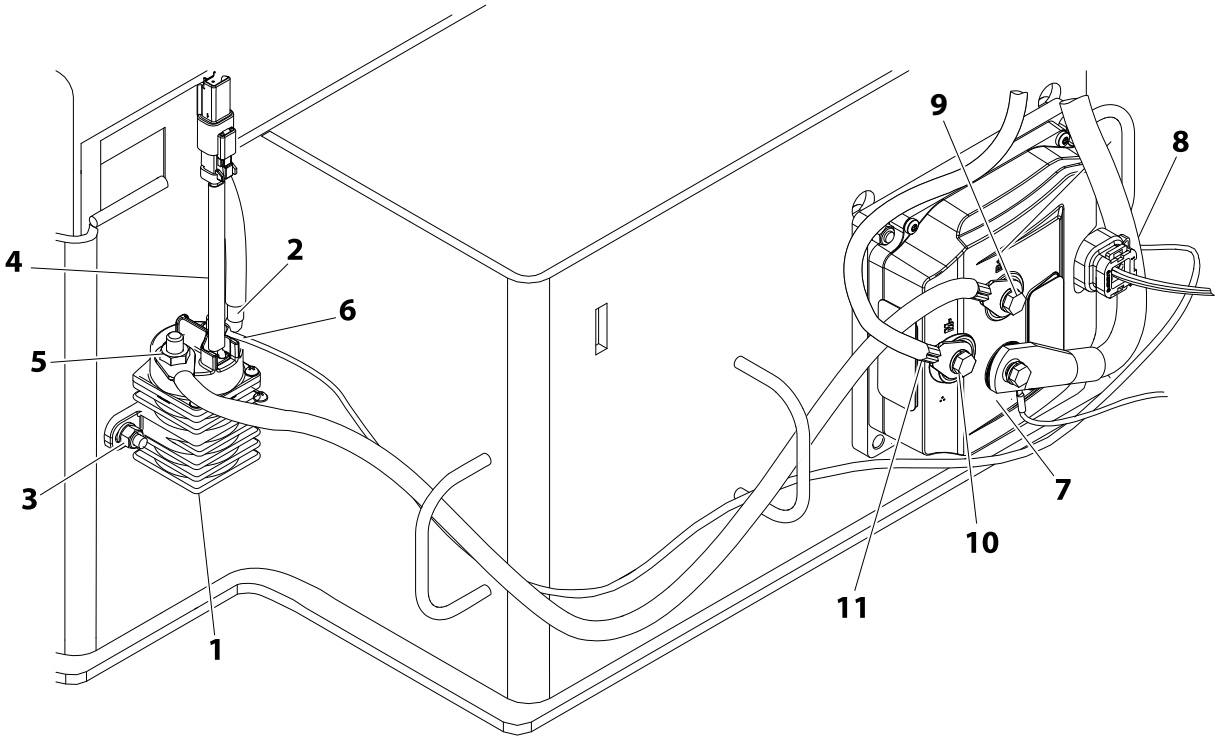

Figure 3-8. Main Power Contactor Relay and Pump Controller Module Location

1. Main Power Contactor Relay
2. Battery (+) Cable
3. Mounting Bolts, Nuts and Washers
4. From Machine Logic Control Module
5. To Pump Controller B (+) Post
6. Battery Charger Output (+) To Battery (+) Cable
7. Pump Control Module
8. Connector C0117- J1 - Wires From Logic Controller
9. B (+) Cable to Had. Pump
10. B (–) Cable to Hyd. Pump
11. Pump Controller B (–) Post

3.7 PUMP CONTROL MODULE

The pump control module (item 7 - Figure 3-8.) is located inside the left side component door, mounted to the side of the battery box. Use the following instructions when replacing the pump control module.

Removal

1. Turn machine power off.
2. Open the left side component door on the machine, disconnect the battery (+) terminal.
3. Tag and note the cable/wire terminal locations before removing the pump control module.
4. Disconnect all wire connectors and cables from the pump control module and remove it from the machine.

Installation

1. When installing the pump control module, be sure that the terminals are oriented as shown in Figure 3-8.
2. After installing the new power module, begin connecting the wire connectors/cables to the module.
3. Torque all terminal bolts to torque specifications as shown in Table 3-5. Overtightening could damage the module.
4. After all connections to the pump module are made, the batteries can be reconnected.
5. Close the left side compartment door.
6. Power up machine and check for normal machine operation.

Table 3-5. Pump Control Module Specifications

Nominal Voltage:	24 V
IGN Active Range:	8 to 40 V
Normal Operation:	12 to 36 V
Current Cutback Above	185° F (85° C)
Voltage:	
Under Voltage Cutback:	12 V
Under Voltage Cutback Rate:	Linear
Under Voltage Cutoff:	9.6 V
Over Voltage Cutoff:	36 V
Maximum Current Limits	
2 Min. Continuous:	300 A
1 Hr. Continuous:	120 A at 50% duty cycle
Terminal Bolt Torque:	80-100 in. lbs. (9.1-11.3 Nm)

Table 3-6. Pump Power Module Terminal Functions (CO117-J1)

J1-1	Power Input (8 - 40 V) - Input
J1-2	Speed Command Input (0-5 V) - Input
J1-3	Low-Side Driver for Contactor - Output
J1-4	CAN BUS High Signal - Input/Output
J1-5	CAN BUS Low Signal - Input/Output
J1-6	Active High Input (24 V ON/0V OFF)-Input
J1-7	No Connect
J1-8	No Connect

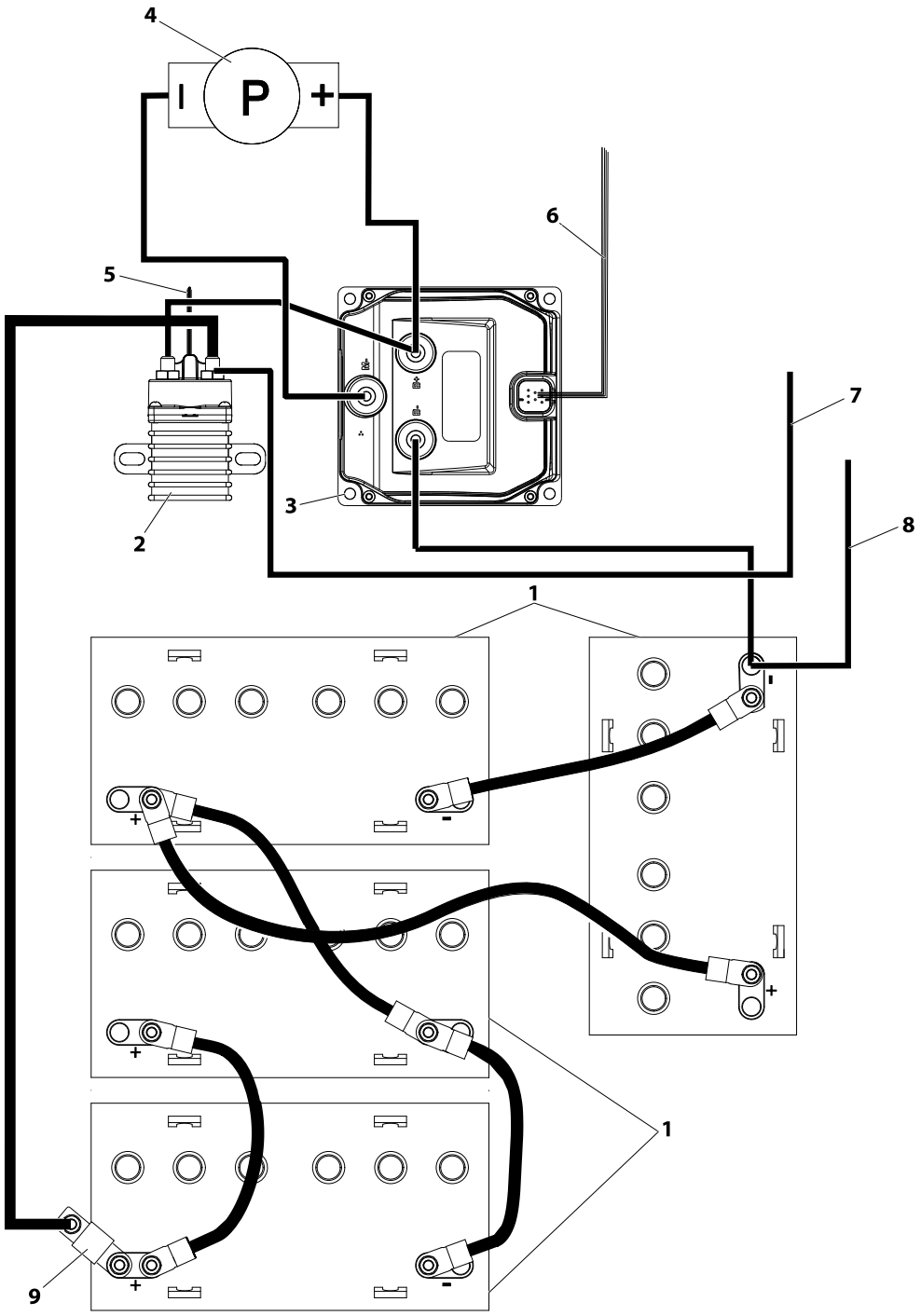

Figure 3-9. Hydraulic Pump Control - Power Connections

1. Batteries
2. Main Power Contactor Relay
3. Pump Control Module
4. Hydraulic Pump Motor
5. To Logic Module Controller
6. To Logic Control Module
7. To Battery Charger (+)
8. To Battery Charger (–)
9. Battery Mega Fuse

3.8 GROUND CONTROL STATION - FOLDING COVER

Components Location

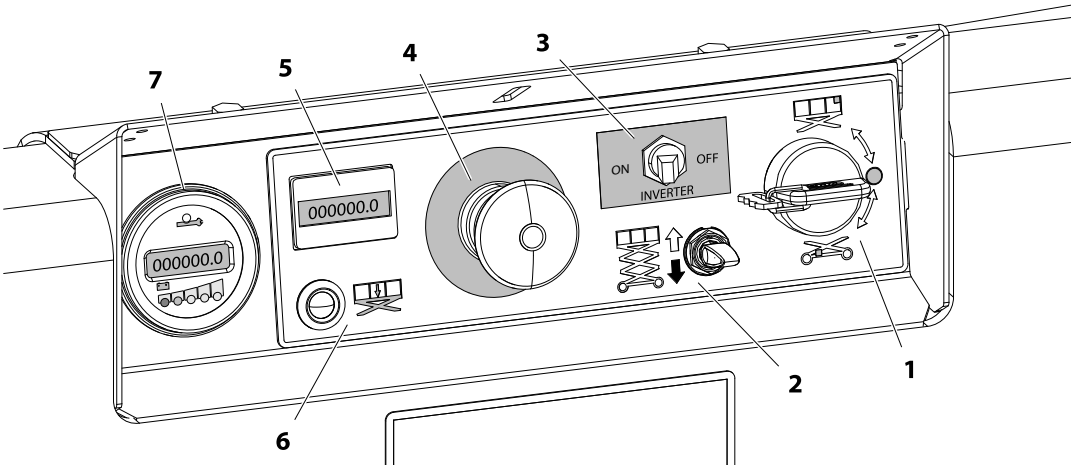

Figure 3-10. Ground Control Station - Folding Cover

1. Ground/Platform/OFF Key Selector Switch
2. Platform Lift/Lower Switch
3. Inverter ON/OFF Switch (If Equipped)
4. Ground Emergency Stop Button
5. Hourmeter
6. Overload Indicator
7. MDI - Indicator (If Equipped)

NOTICE

DISCONNECT MAIN POWER FROM THE BATTERIES BEFORE ATTEMPTING TO SERVICE THE ELECTRICAL SYSTEM. FAILURE TO DO SO COULD CAUSE DAMAGE TO THE MACHINES ELECTRICAL COMPONENTS.

Removal

1. Disconnect main power at the batteries.
2. Lift the rear panel cover flap to gain access to the mounting nuts on the control station bracket mounting bolts.
3. Remove the (2) screws, washers and nuts attaching the ground control panel to the frame.
4. When panel is released, lift and remove protective rear cover and lay aside.
5. Rotate the ground control station and position to unplug or disconnect the desired connectors and remove components on the back of the panel.

Installation

1. Check that all components are installed into the control station panel and connected to the wiring harness on the back of the panel.
2. Insert the control station into position on the machine and align the mounting holes in the panel with the mounting holes in the frame.
3. Insert the rear panel cover (flap) between the frame and the control station bracket. Align the holes in the cover with the holes in the frame, and control station bracket.
4. Attach using the (2) mounting screws, washers and nuts. Tighten securely.
5. Position the rear panel cover by folding under the rear of control station cover protecting the wiring and switches.
6. Reconnect the main power at the batteries, power machine up and check machine operation.

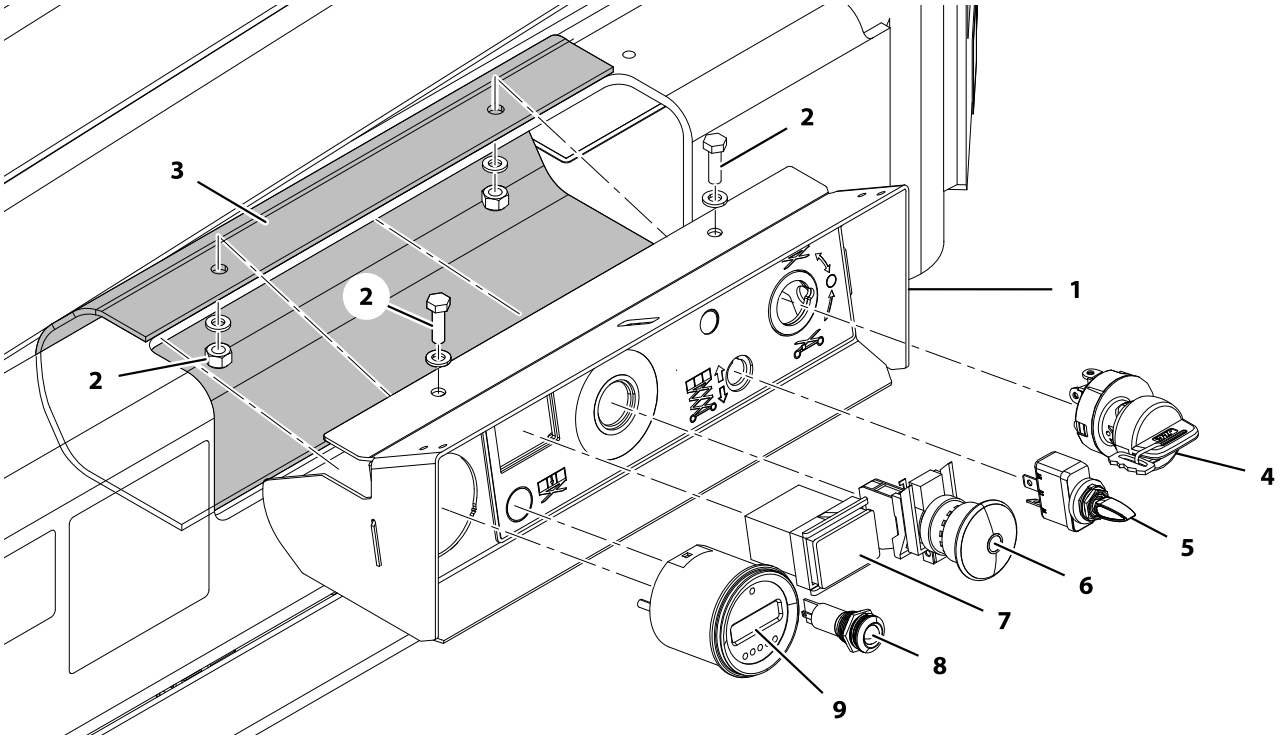

Figure 3-11. Ground Control Station Removal

1. Ground Control Housing
2. Attach Bolt, Nut and Washers
3. Rear Panel Protective Cover (Fold-Under)
4. Platform/OFF/Ground Select Switch
5. Platform UP/DOWN Switch
6. Emergency Stop Switch
7. Hourmeter
8. Overload Indicator (If LSS Equipped)
9. Multi-Display-Indicator (If Equipped)

NOTE: *See electrical schematic Section 8 for wiring connections to switches and gauges.*

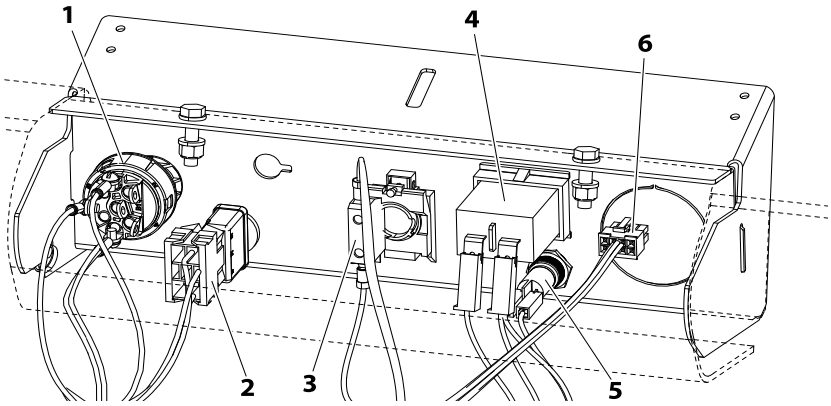

Figure 3-12. Ground Control Station - Rear of Panel

1. Platform/OFF/Ground Selector
2. Platform UP/DOWN Switch
3. Emergency Stop Switch
4. Hour Meter
5. Overload Indicator
6. Multi-Display-Indicator (If Equipped)

3.9 GROUND CONTROL STATION - FIXED COVER

Components Location

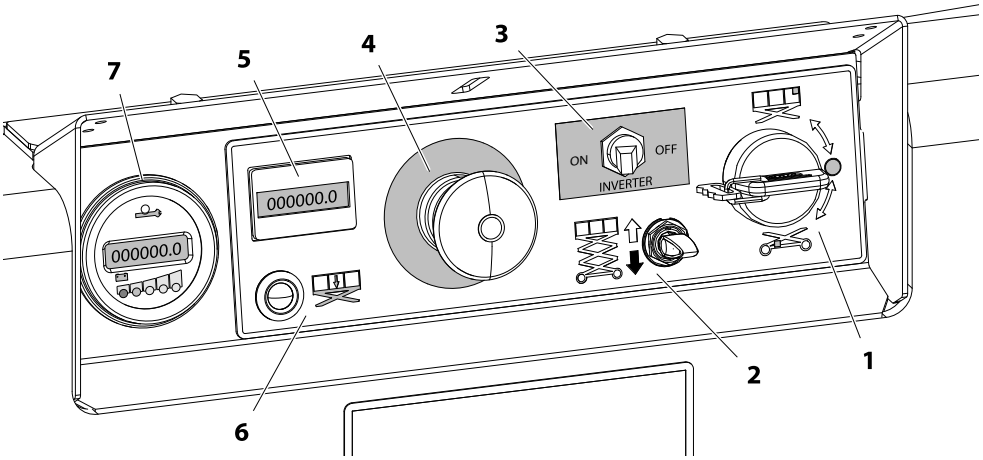

Figure 3-13. Ground Control Station - Fixed Cover

1. Ground/Platform/OFF Key Selector Switch
2. Platform Lift/Lower Switch
3. Inverter ON/OFF Switch (If Equipped)
4. Ground Emergency Stop Button
5. Hourmeter
6. Overload Indicator
7. MDI - Indicator (If Equipped)

NOTICE

DISCONNECT MAIN POWER FROM THE BATTERIES BEFORE ATTEMPTING TO SERVICE THE ELECTRICAL SYSTEM. FAILURE TO DO SO COULD CAUSE DAMAGE TO THE MACHINES ELECTRICAL COMPONENTS.

Removal

1. Disconnect main power at the batteries.
2. Remove the (2) mounting screws and washers, attaching the ground control panel to the frame.
3. When panel is released remove the (2) tinnerman nuts & ground control back bracket and lay aside.
4. Rotate the ground control station and position to unplug or disconnect the desired connectors and remove components on the back of the panel.

Installation

1. Check that all components are installed into the control station panel and connected to the wiring harness on the back of the panel.
2. Insert the control station into position on the machine and align the mounting holes in the panel with the mounting holes in the frame. Ensure the (2) tinnerman nuts are properly installed on the frame.
3. Insert the ground control back bracket between the frame and the control station bracket. Align the holes in the cover with the holes in the frame, and control station bracket.
4. Attach using the (2) mounting screws and washers. Tighten securely.
5. Reconnect the main power at the batteries, power machine up and check machine operation.

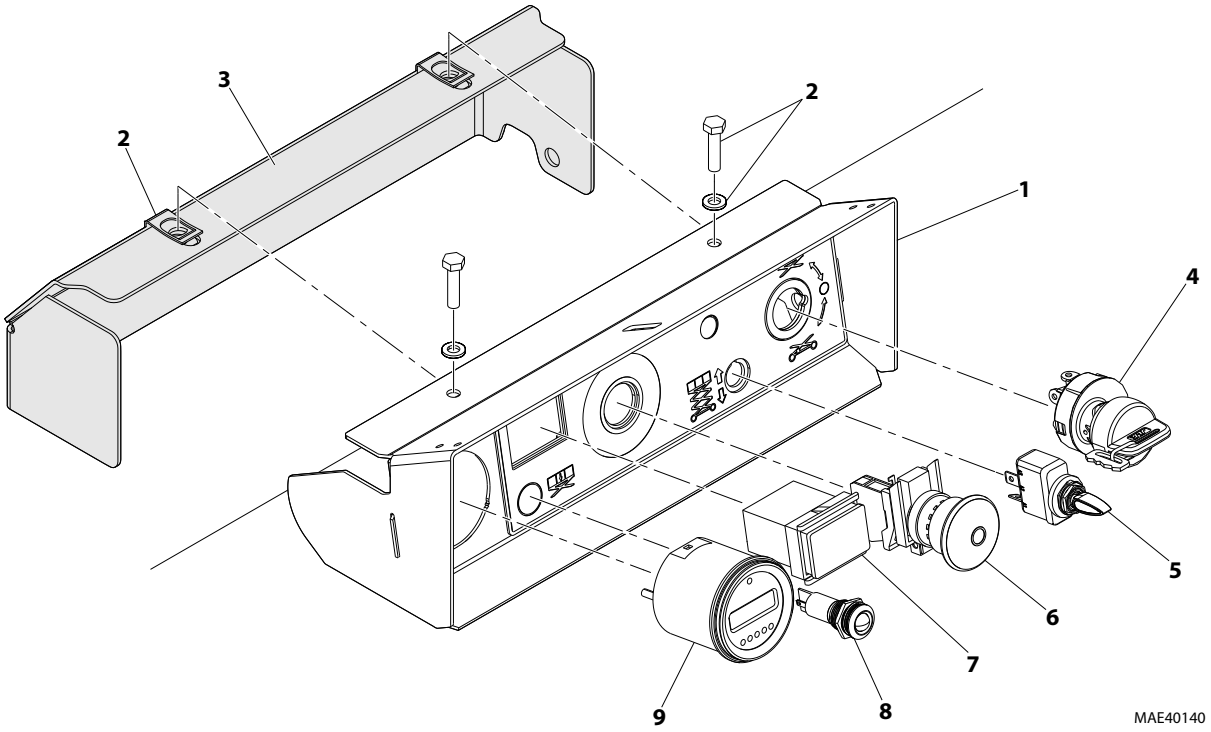

Figure 3-14. Ground Control Station Removal

1. Ground Control Housing
2. Attach Bolts, Washers and Tinnerman Nuts
3. Ground Control Back Bracket
4. Platform/OFF/Ground Select Switch
5. Platform UP/DOWN Switch
6. Emergency Stop Switch
7. Hourmeter
8. Overload Indicator (If LSS Equipped)
9. Multi-Display-Indicator (If Equipped)

NOTE: *See electrical schematic Section 8 for wiring connections to switches and gauges.*

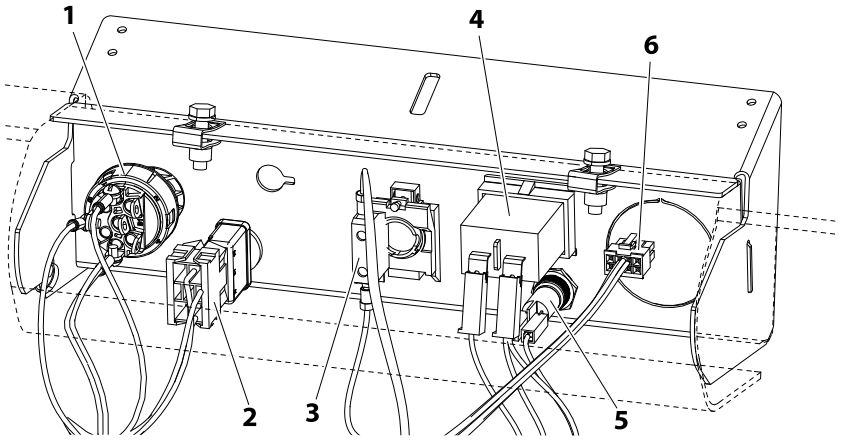

Figure 3-15. Ground Control Station - Rear of Panel

1. Platform/OFF/Ground Selector
2. Platform UP/DOWN Switch
3. Emergency Stop Switch
4. Hour Meter
5. Overload Indicator
6. Multi-Display-Indicator (If Equipped)

3.10 PLATFORM CONTROL STATION

NOTICE

POWER MACHINE DOWN AT THE GROUND CONTROL STATION BEFORE DISCONNECTING THE PLATFORM CONTROL STATION.

Overview of Control Station Components

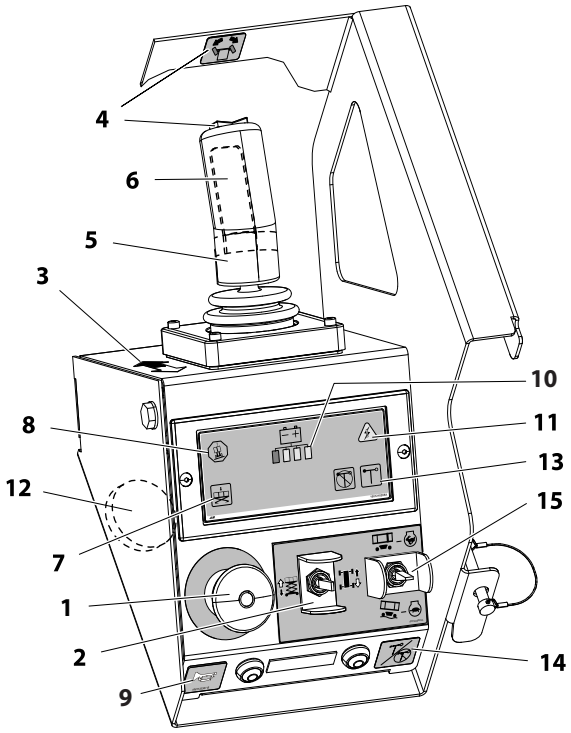

1. Emergency Stop Switch
2. Lift/Drive Select Switch
3. Black/White Directional Arrow
4. Steer Switch and Decal
5. Controller
6. Trigger Switch (on front of controller)
7. Overload Indicator (LSS)
8. Tilt Indicator
9. Horn Button
10. Battery Discharge Indicator
11. System Fault Indicator
12. Alarm (not shown, located on bottom of box)
13. Indoor/Outdoor - Capacity Indicators
14. Indoor/Outdoor - Capacity Select Switch
15. Speed Select Switch

NOTE: *This control console will have platform control module PN 1001224873.*

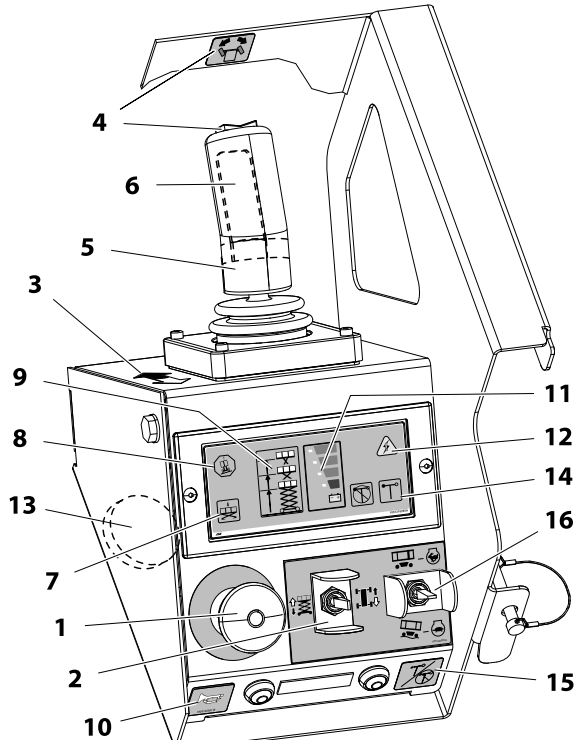

1. Emergency Stop Switch
2. Lift/Drive Select Switch
3. Black/White Directional Arrow
4. Steer Switch and Decal
5. Controller
6. Trigger Switch (on front of controller)
7. Overload Indicator (LSS)
8. Tilt Indicator
9. Variable Tilt - Platform Restricted Height Indicator
10. Horn Button
11. Battery Discharge Indicator
12. System Fault Indicator
13. Alarm (not shown, located on bottom of box)
14. Indoor/Outdoor - Capacity Indicators
15. Indoor/Outdoor - Capacity Select Switch
16. Speed Select Switch

NOTE: *This control console will have platform control module PN 1001228112.*

Installation/Removal

1. Disconnect the platform control station harness at the round connector on front the control station.
2. Remove the pin securing the control station to the platform station mount, lift up and swing tab out of slot in mount, remove control station from the machine.
3. To install, reverse steps 1 and 2 above.

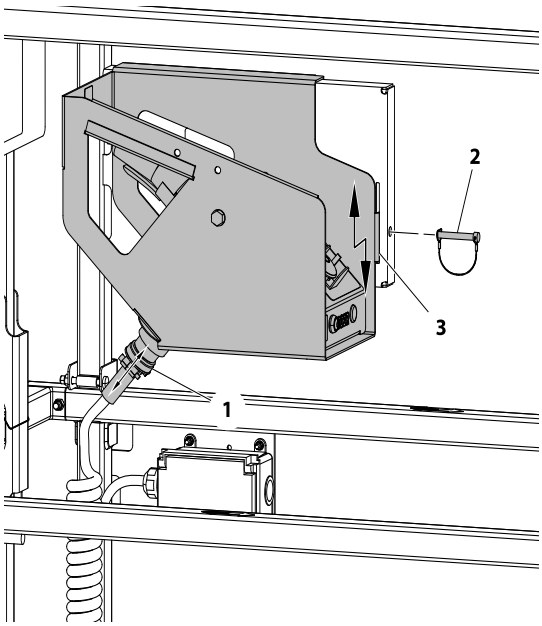

Figure 3-16. Platform Control Station Installation

1. Harness Connector
2. Mounting Pin
3. Lift and Remove

Control Station Disassembly

1. Place the platform control station assembly on a suitable work bench.
2. Remove the main body from the mount, by removing the long through bolt, cap-nut and washers (item 1) and the two (2) bolts and washers (item 2) on the bottom of the assembly.

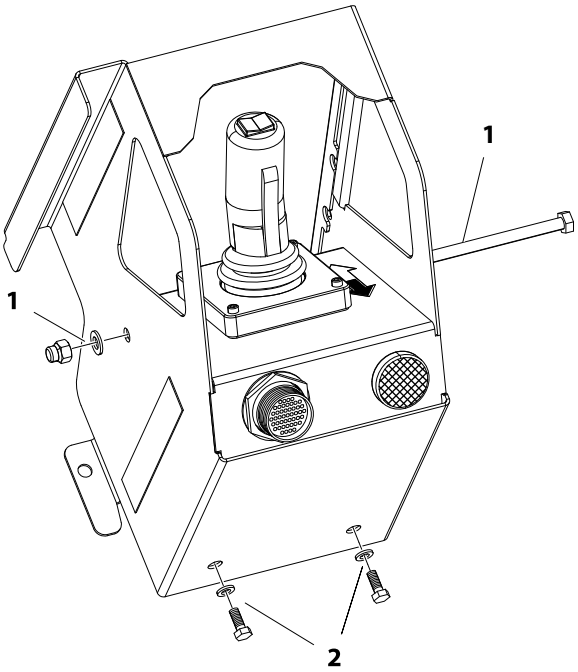

Figure 3-17. Platform Control Station Disassembly

1. Through Bolt, Cap-nut and Washers
2. Rear Edge Bolts and Nuts

3. To install, reverse steps 1 and 2 above.

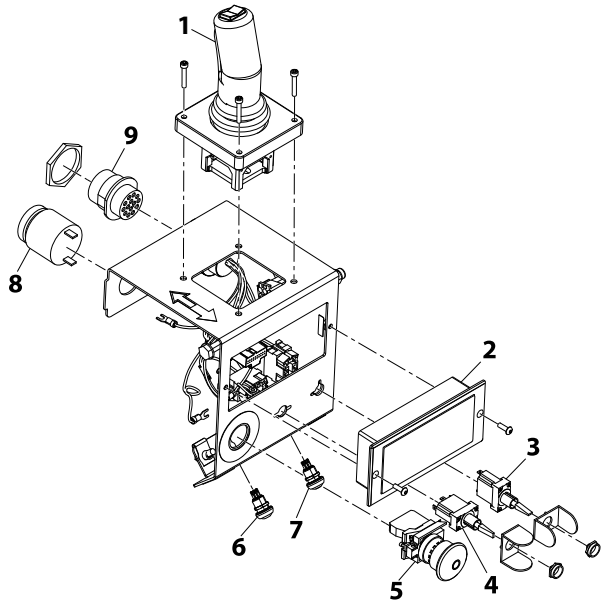

Figure 3-18. Platform Control Station Components - Internal

1. Drive, Lift and Steer Joystick Control
2. Indicator Panel Module
3. Speed Select Switch
4. Lift/Drive Select Switch
5. Emergency Stop Switch
6. Horn Button Switch
7. Overload Indicator (If Equipped)
8. Alarm
9. Main Harness Connector

Joystick Controller

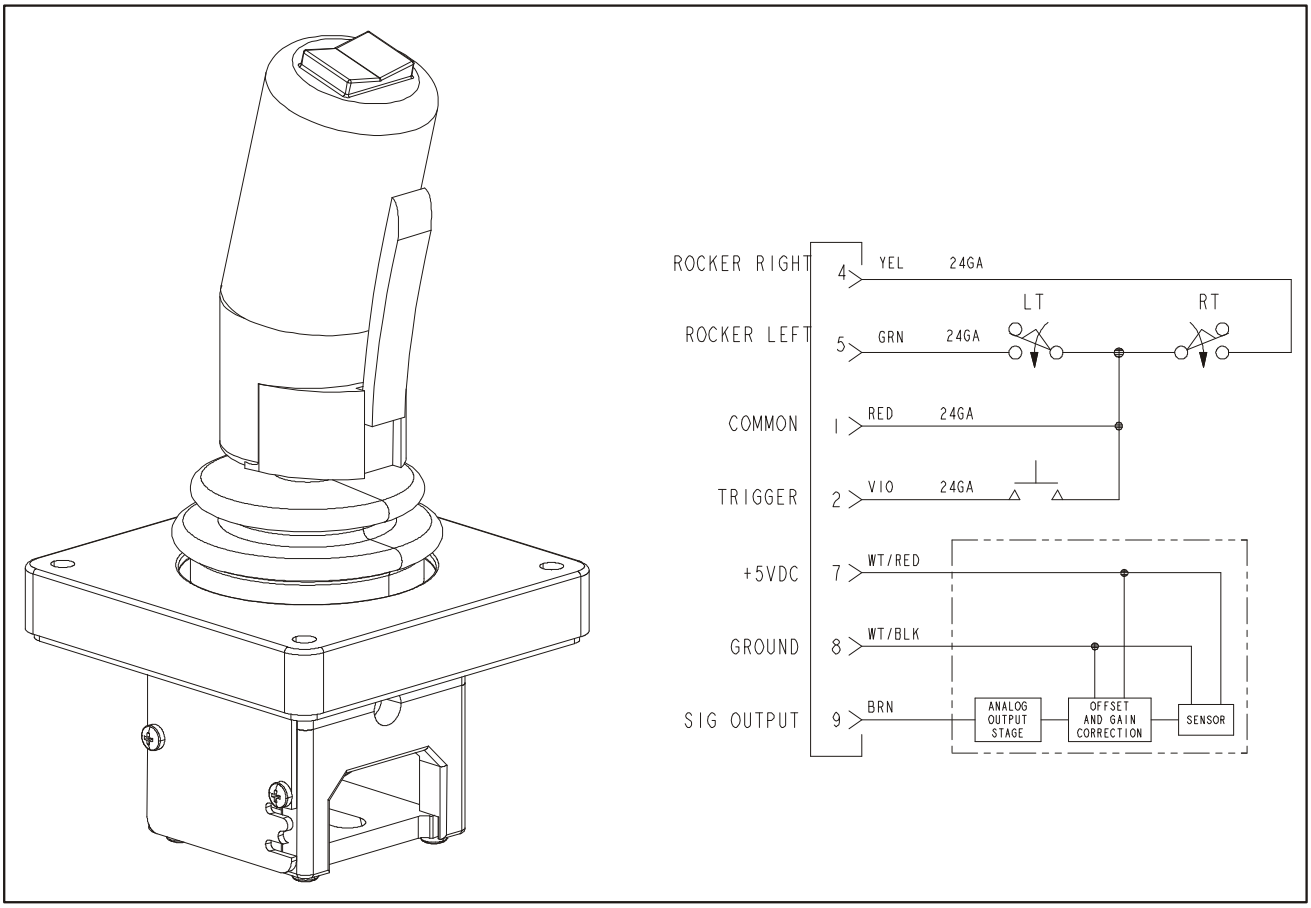

Figure 3-19. Joystick

Table 3-7. Joystick Specifications

Input Voltage	+5 (±0.1) VDC
Current Consumption	10 mA @ 12 VDC
Output: Handle Centered	2.5 (±0.1) VDC
Output: Full Positive (Reverse) Deflection	4 (±0.1) VDC
Output: Full Negative (Forward) Deflection	1 (±0.1) VDC

NOTE: *For joystick calibration procedure see Section 5.2, Joystick Calibration.*

Table 3-8. Connector Chart

CONNECTOR PINOUT		
Term	**Color**	**Function**
1	RED	HANDLE COM
2	VIOLET	TRIGGER N.O.
3	--	SPARE
4	YELLOW	ROCKER RT
5	GREEN	ROCKER LT
6	--	SPARE
7	WHITE/RED	+5 VDC
8	WHITE/BLACK	GROUND
9	BROWN	SIG OUTPUT

3.11 TILT SENSOR INSTALLATION

The tilt sensor is located inside the right side machine compartment door on mounting plate towards front of machine.

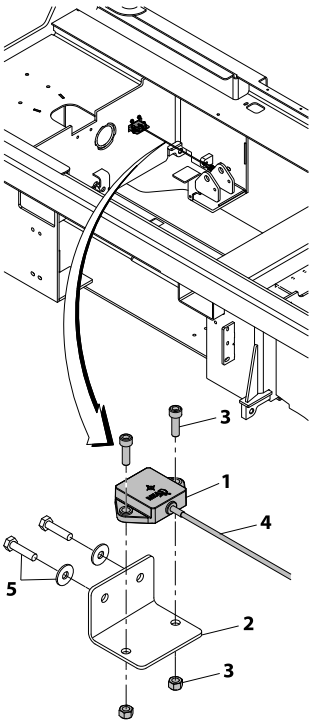

Figure 3-20. Tilt Sensor Installation
(pot-hole bar removed for clarity)

1. Tilt Sensor
2. Mounting Plate
3. Tilt Sensor Mounting Hardware
4. Wire Harness Connector
5. Mounting Plate Hardware

Tilt Sensor Removal

1. Open right side compartment door, Disconnect the positive (+) power cable at the batteries.
2. Locate the tilt sensor on the frame mounting plate next to the right side compartment door hinge assembly. Unplug the tilt sensor harness connector.
3. Remove the two mounting bolts and lock nuts attaching the sensor to the mounting plate.
4. Remove the two mounting bolts, washer and nuts attaching mounting plate to the base frame.

Tilt Sensor Installation

1. Before mounting the mounting plate, tilt sensor to the base frame, check the mating surfaces of the sensor, mounting plate and base frame, be certain there is no debris or burrs to prevent a flush mount.
2. Install mounting plate onto base frame with bolts, washer and nuts.
3. When mounting the tilt sensor back onto the mounting plate, mount with the wiring harness pointing to the rear of the machine. Align the two mounting holes of the sensor with the holes of the mounting plate.
4. Secure tilt sensor onto mounting plate with mounting hardware.
5. Plug the wire harness connector into the tilt sensor.
6. Reconnect power at the batteries.
7. Power machine up and check tilt sensor calibration with handheld analyzer. See Section 5, JLG Control System for tilt sensor calibration procedure.

Table 3-9. Tilt Sensor Wiring Pin Assignment

Pin	Function	Wire Color	Description
1	VCC	WHT	+8 To 30 V (32 V Max)
2	GND	YEL	Ground
3	CANH	GRN	CAN HIGH LINE
4	CANL	BRN	CAN LOW LINE

3.12 ELEVATION SENSOR

This machine is equipped with a scissor arm elevation sensor switch. This sensor communicates with the machine control module to determine platform height.

On LSS-equipped machines, this sensor works in tandem with the lift cylinder pressure switch to accurately determine platform load for any given platform height.

There is no adjustment to the elevation sensor switch, just install in the proper orientation and calibrate.

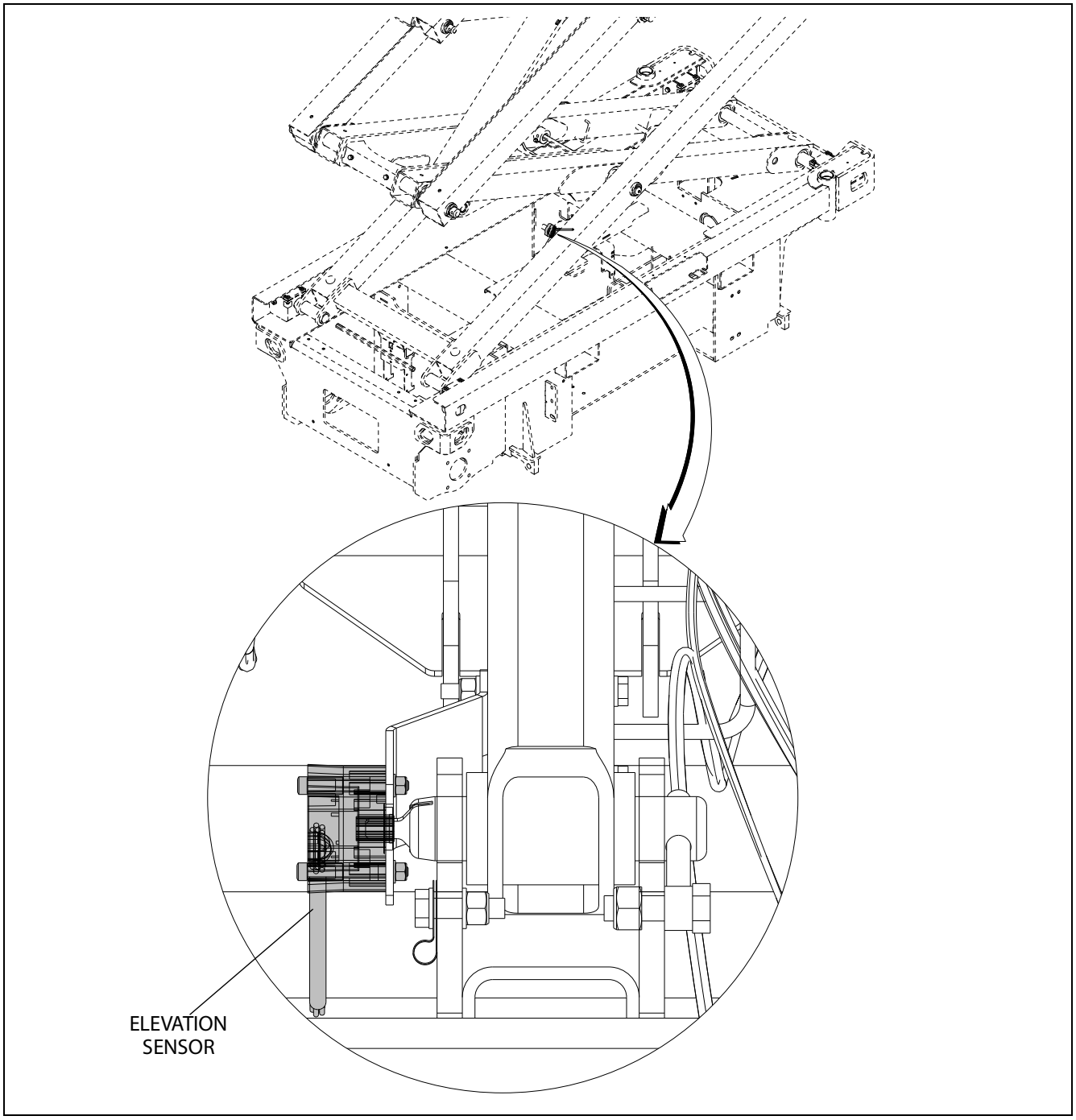

Figure 3-21. Elevation Sensor Location

Elevation Sensor Installation

See Figure 3-22.

1. Install elevation sensor to mounting bracket with wire lead pointing away from bend in mounting bracket. Secure with bolts, locknuts and washers.
2. Insert key into slot in the scissor arm pin with the narrow tab end pointing away from the pin.
3. Insert narrow end of key into slot of angle sensor.
4. With the Angle sensor and bracket oriented as shown (1) in (Figure 3-22.), gently slide keeper pin into sensor pin from other end. Secure keeper pin with mounting hardware.
5. Gently rotate sensor and bracket to load sensor spring until holes in the bracket line up with slots on frame mounting plate (2) (Figure 3-22.). Rotation is approximately 120°, or 1/3 of a turn.
6. Secure mounting bracket to frame with bolts, locknuts and washers. Care should be taken to maintain alignment between rotating sensor slot and key so they can freely rotate together when arm stack is elevated. Secure all hardware.
7. Calibrate the sensor after installation. (See Section 5.4, Elevation Sensor Calibration).

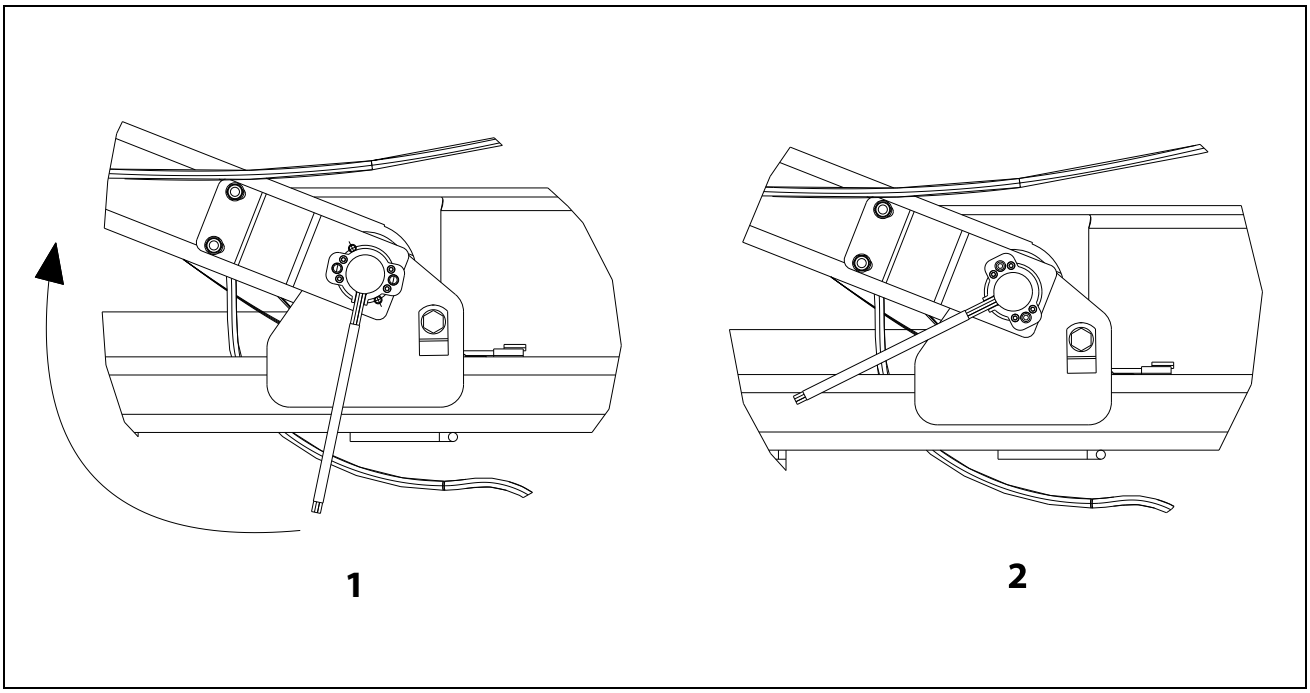

Figure 3-22. Elevation Sensor Installation

3.13 POT-HOLE PROTECTION SYSTEM COMPONENTS

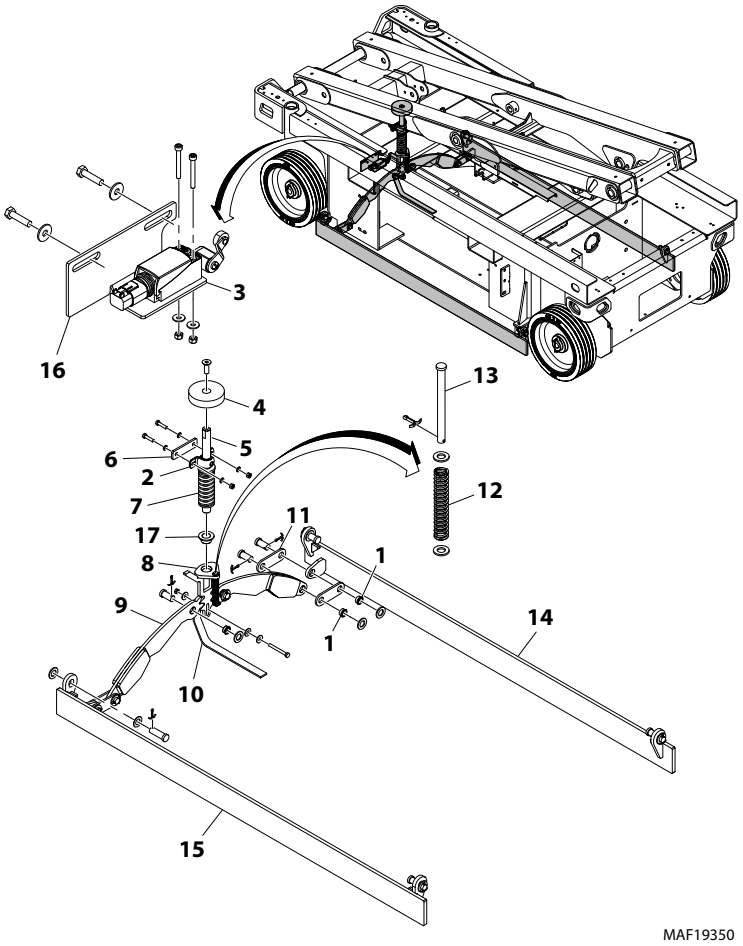

1. Bearing
2. Bearing Bracket
3. Limit Switch
4. Pad
5. Upper Actuator
6. Mounting Plate
7. Spring
8. Lower Actuator
9. Pinion Plate
10. Anti-Static Strap
11. Link
12. Spring
13. Pin
14. Bar (RH)
15. Bar (LH)
16. Sensor Mounting Plate
17. Bearing

Figure 3-23. Pot-Hole-Protection Assembly

⚠ WARNING

NEVER WORK UNDER AN ELEVATED PLATFORM UNTIL IT HAS BEEN RESTRAINED FROM MOVEMENT WITH SAFETY PROPS, BLOCKING, OR OVERHEAD SLING.

1. Install flange bearings into the frame holes with the flange side facing outside of frame against Pot-Hole bar hinge.
2. PHP Bearing Adjustment - If reassembling or replacing PHP components, PHP bars may not store at same height due to manufacturing tolerances of parts. Adjustment may be needed after assembly:
   - **a.** Completely lower the platform and compress the actuator assembly to raise the PHP bars, check to see If only one PHP bar is raised against the frame.
   - **b.** If Yes, elevate the platform to release the actuator assembly and deploy the PHP bars. The actuator bearing bracket (2) allows for some side to side adjustment, mark the current position of the actuator bearing bracket (2) on the frame.
   - **c.** Loosen and move the actuator bearing bracket slightly towards the PHP bar that will not raise completely, and re-tighten bracket down.
   - **d.** Compress the actuator assembly again to stow the PHP bars and check bar ground clearance. Repeat steps (a) through (c) above until both PHP bars achieve maximum ground clearance. (See Ground Clearance - Table 1-1, "Operating Specifications," on page 1-1).
3. Do not tighten limit switch mounting screws beyond 31 in. lb. (3.5 Nm).
4. PHP Limit Switch Adjustment - When the platform is raised and PHP bars fully DOWN, adjust the switch until it lightly contacts the ramp on the lower actuator.

3.14 STEER AND SPINDLE ASSEMBLY COMPONENTS

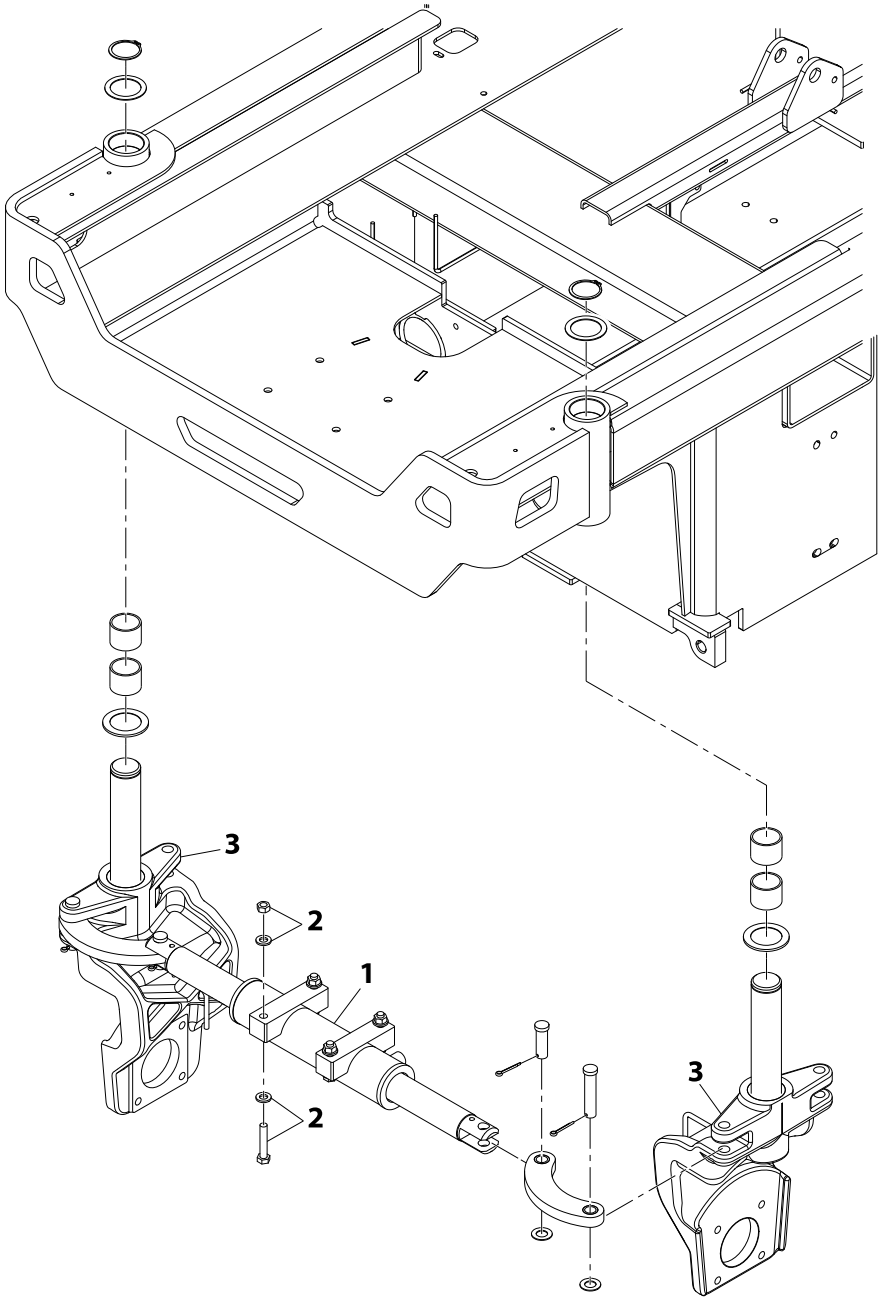

Figure 3-24. Steer and Spindle Assembly Installation

1. Mount steer cylinder with ports facing the rear of the machine.
2. Apply JLG Threadlocker PN 0100011 to bolt threads before tightening.
3. Spindle weldment interchangeable with either side.lo

Drive Motor Covers Installation - Option

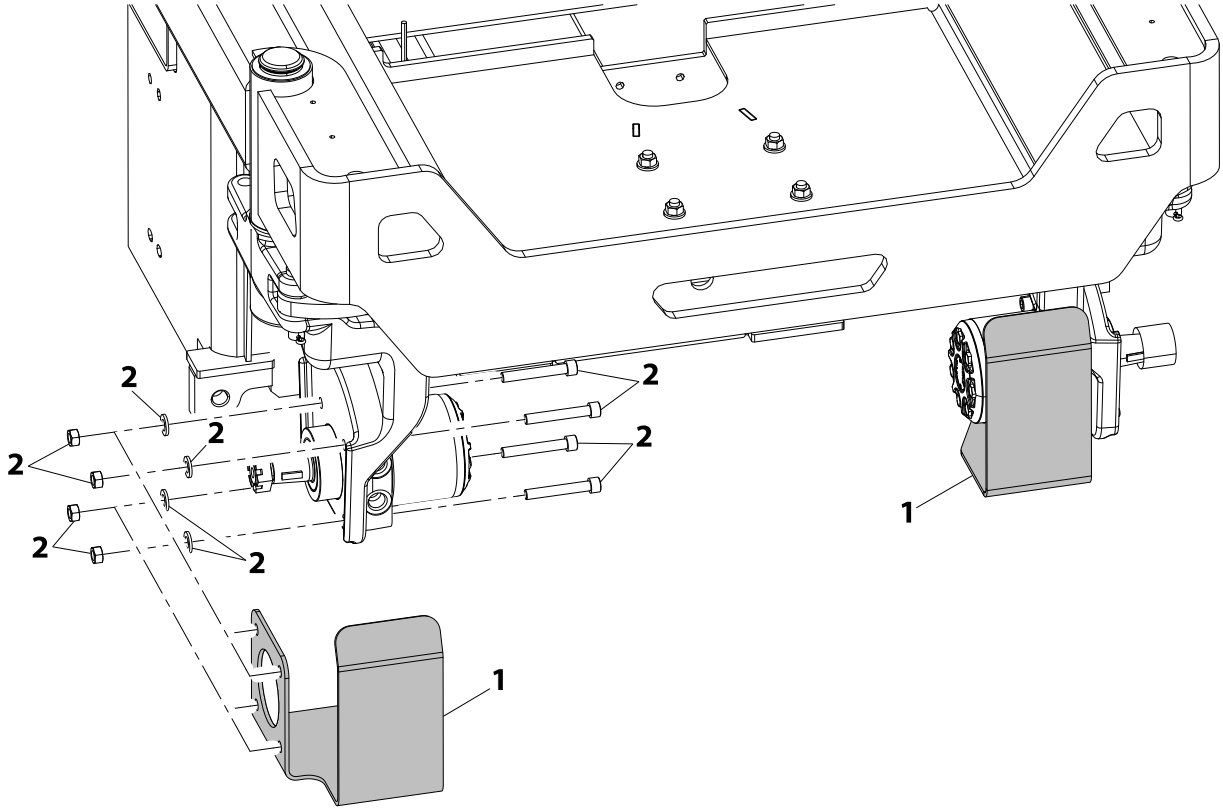

Figure 3-25. Drive Motor Cover Installation - Option

NOTE: *Cover installation same for both sides.*

1. Drive Motor Cover **2.** Cover carriage bolts, nuts, and washers

Tire Wear and Damage

The tire and rim assemblies installed on machines have been approved by the tire manufacturer for applications in which those products are intended to be used. The tire and rims installed on each product model have been designed for stability requirements, which consist of track width, tire compound, and load capacity. Tire changes such as rim width, centerpiece location, larger or smaller diameter, tire compound, etc., without written manufacturers approval, could result in an unsafe condition regarding stability.

The tires and rims installed on machines are to be inspected daily as part of the daily walk-around inspection. JLG requires that the daily walk-around inspection be performed at each operator change during a shift and at each shift change.

Wheel and Tire Replacement

JLG recommends that any replacement tire be the same size and brand as originally installed on the machine or offered by JLG as an approved replacement. Please refer to the JLG Parts Manual for the part number of the approved tires for a particular machine model.

If any of the following is discovered during tire inspection, measures must be taken to remove the JLG product from service immediately. Arrangements must be made for replacement of the tire(s) or tire assembly(s). Both tires/wheels on the same axle must be replaced:

- If the overall diameter of the tire is less than one of the following:

  406 x 127 Tire – 15.55 in. (395 mm) minimum

- If any uneven wear is discovered.

  A tire with significant damage in the tread area or sidewall requires immediate evaluation before placing the machine into service. If a cut, tear, chunk, or other discrepancy exceeds any one or more of the following dimensions, the tire must be replaced:

  3.0 in. (76 mm) long
  0.75 in. (19 mm) wide
  0.75 in. (19 mm) deep

- If the metal wheel is visible at any point through the tread area of the tire.
- If more than one discrepancy exists in any quadrant of the wheel (within 90 degrees of one another).

Wheel Installation

It is extremely important to apply and maintain proper wheel mounting torque.

⚠ WARNING

WHEEL SLOTTED NUTS MUST BE INSTALLED AND MAINTAINED AT THE PROPER TORQUE TO PREVENT LOOSE WHEELS, A BROKEN NUT, AND POSSIBLE SEPARATION OF WHEEL FROM THE AXLE.

Tighten the slotted nuts to the proper torque to prevent wheels from coming loose. Use a torque wrench to tighten the slotted nuts. The proper procedure for attaching wheels is as follows:

1. If not already installed, install shaft key **(5)** to shaft and align with wheel keyway, install wheel and hub **(3)** onto tapered shaft **(4)**.
2. Start slotted nut **(1)** by hand to prevent cross threading. DO NOT use a lubricant on threads or nut.
3. Torque the slotted nut to 150 ft. lb. (203 Nm).
4. Install cotter pin **(2)**, if hole in slots do not align with cotter pin hole on the tapered shaft, continue to turn nut clockwise to align nut with hole. Do not loosen to align hole.

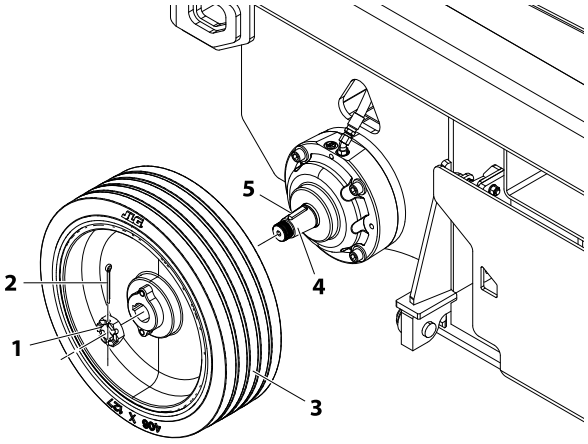

Figure 3-26. Wheel Installation

1. Slotted Nut
2. Cotter Pin
3. Wheel and Hub Assembly
4. Tapered Shaft
5. Shaft Key

3.15 ARMS AND PLATFORM POSITIONING AND SUPPORT

⚠ WARNING

NEVER WORK UNDER AN ELEVATED PLATFORM UNTIL IT HAS BEEN RESTRAINED FROM MOVEMENT WITH SAFETY PROPS, BLOCKING OR OVERHEAD SLING.

The arm stack can be supported by using an overhead crane, (See Figure 3-27.). If an overhead crane is not available the stack may also be lifted by using a fork-truck using the following instructions:

1. With the forks on the fork-truck slid close together, enter from the front of the machine and place the forks on the cross tube of the second arm assembly below the platform.
2. Slowly lift the arm stack with the fork-truck while the manual descent valve is being engaged (this allows the oil to drain back into the tank).
3. Place machine on safety prop and leave the fork truck in place.
4. At this point the lift cylinder removal may begin (Refer to Section 4.11, Lift Cylinder Removal/ Installation).

If removal of the platform becomes necessary use the above procedure to stabilize the platform for pin and platform removal.

3.16 PLATFORM REMOVAL

1. Support the platform using an overhead crane with straps capable of lifting at least 500 lbs. (227 kg) (See Figure 3-27.).
2. Disconnect and remove the platform control station and wiring harness at the platform. Disconnect AC receptacle cable if applicable. Route the cables out through the hole at the right-rear of the platform to free platform of any constraints when lifting.
3. Remove hardware securing pin to the slide block. Carefully remove the four pin attaching platform to the arm stack.
4. Remove hardware securing pin to the centering link plate at bottom side of platform. Carefully remove the pin attaching arm attach link to centering link plate of platform.
5. Lift the platform from the arm stack and set aside.

NOTE: *When attaching platform back onto scissor arm assembly, follow removal procedures in reverse order.*

3.17 SCISSOR ARMS REMOVAL

1. Remove platform (refer to Section 3.16, Platform Removal).
2. Disconnect all wiring and cables attached to scissor arm assembly.
3. The scissor arms can be removed as a complete unit or individually.

Removing Scissor Arm Assembly as a Complete Unit

1. Remove the elevation sensor.
2. Remove the ladder from the frame.
3. Remove hardware securing pin attaching arm link to base frame. Carefully remove pin attaching arm link to base frame.
4. Place two straps around each end of the entire scissor arm assembly. Using an overhead crane, slowly and carefully move the arm stack backwards so that slide blocks at rear of machine slide out the rear of the slide channel on the frame.

NOTE: *Overhead crane and straps must be capable of lifting at least 2000 lbs (907 kg).*

5. Once slide blocks are clear of machine, the scissor stack can be moved to a more desirable location for further arm disassembly.

Removing/Installing Scissor Arms Individually

See Figure 3-29. and Figure 3-30.

1. If reusing the pins, number each pin and journal before removing, so the pin can be reinstalled back in same location. Odd numbers on one side and even numbers on other side.
2. With the platform removed, start with the top arms (closest to platform).
3. Secure each arm section being removed using an overhead crane with suitable lifting straps.
4. Remove the bolts securing the connecting pins in place.
5. Remove the pins from the arms.
6. Remove the arm section from the machine using the overhead crane.
7. Repeat previous steps for remaining arm sections.

NOTE: *When attaching scissor arm assembly back onto frame, follow removal procedures in reverse order.*

Self locking fasteners, such as nylon insert and thread deforming locknuts, are not intended to be reinstalled after removal. Always use new replacement hardware when installing locking fasteners.

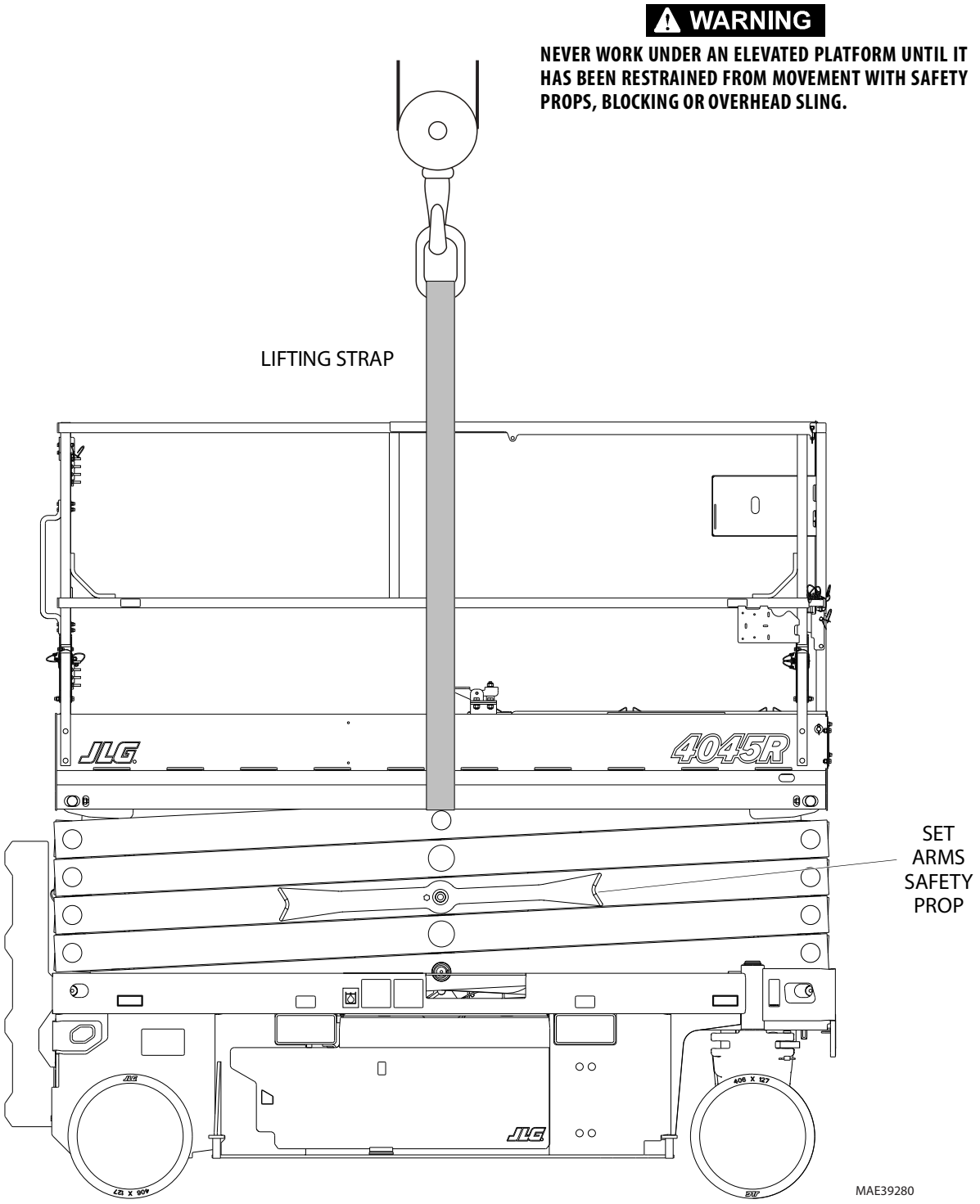

Figure 3-27. Arms and Platform Positioning with Overhead Support

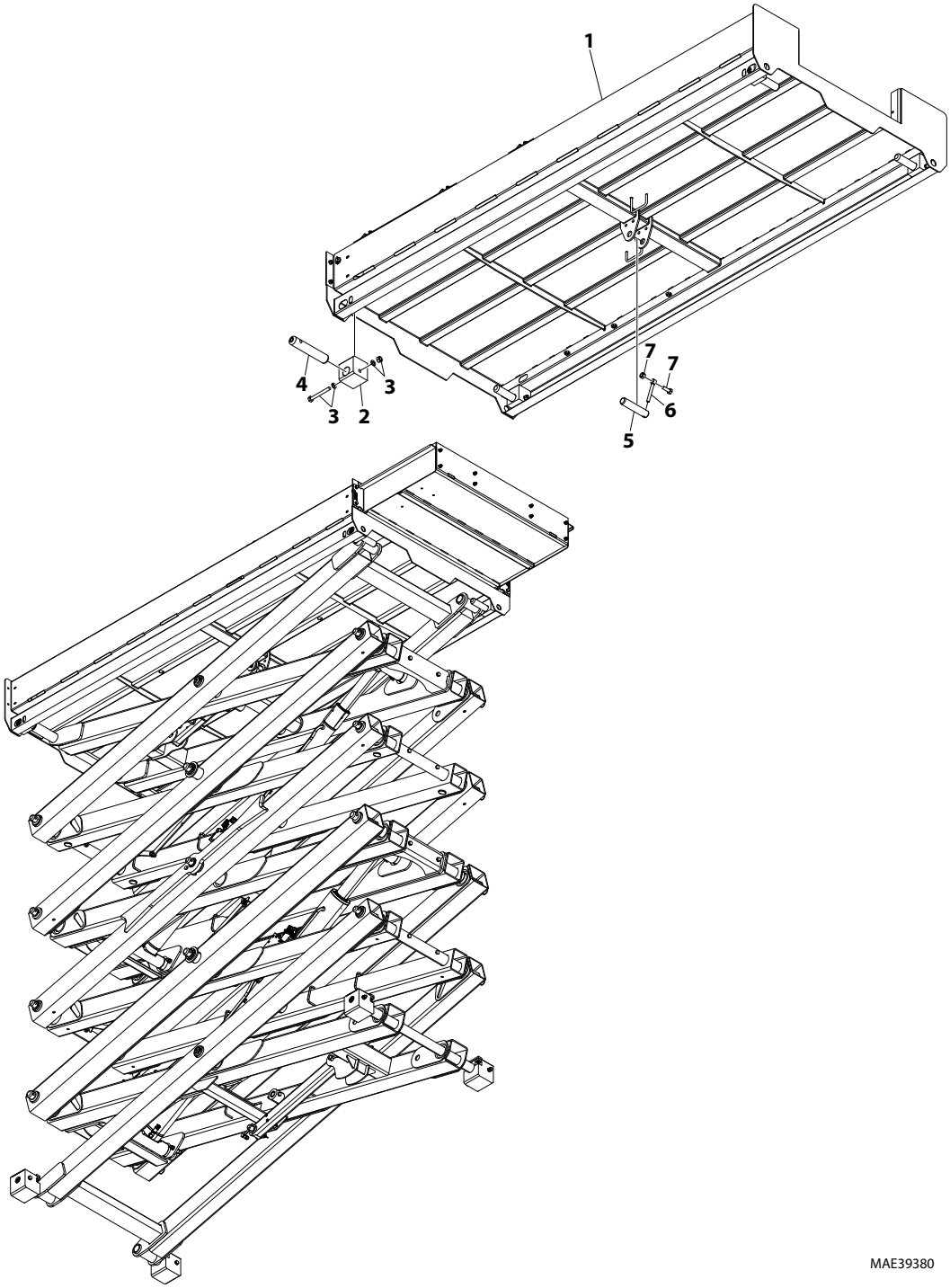

Figure 3-28. Platform Assembly - Installation/Removal

1. Platform
2. Slide Block (Install with thick section above hole)
3. Bolt and Washer
4. Platform to Arm Attach Pin
5. Centering Link to Arm Attach Pin
6. Cotter Pin
7. Bolt and Nut

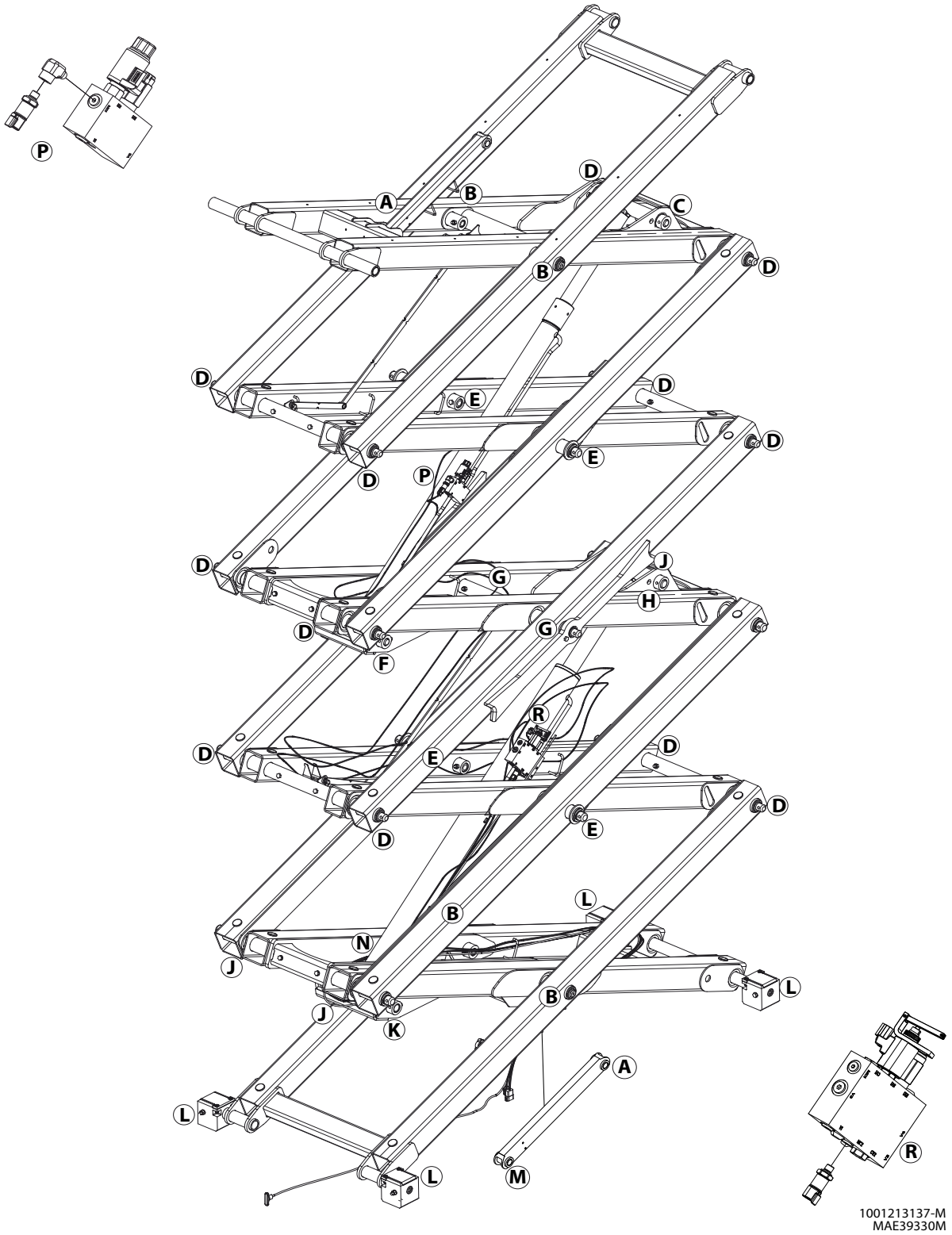

Figure 3-29. Scissor Arm Assembly

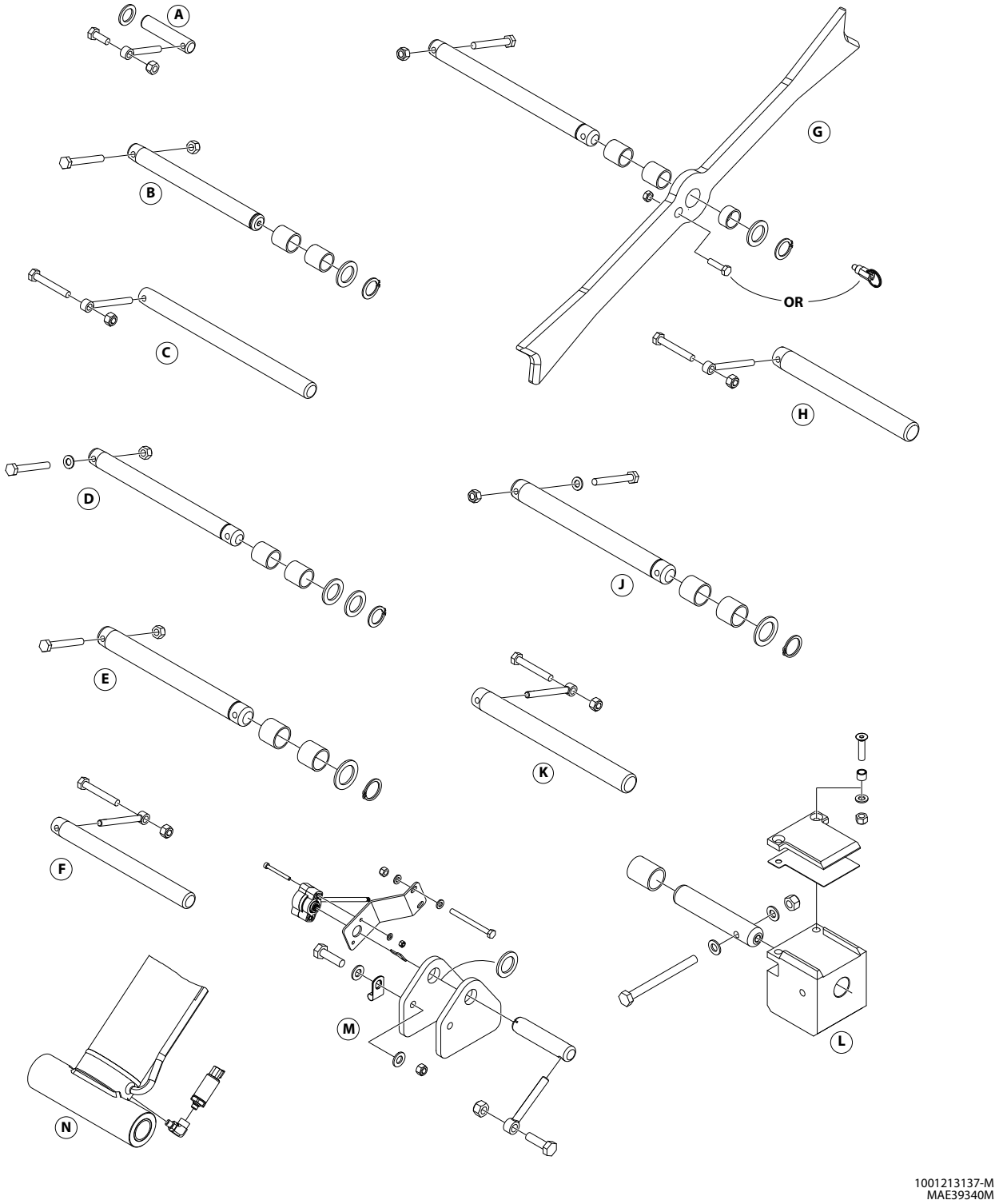

Figure 3-30. Scissor Arm Assembly - Pin Configuration

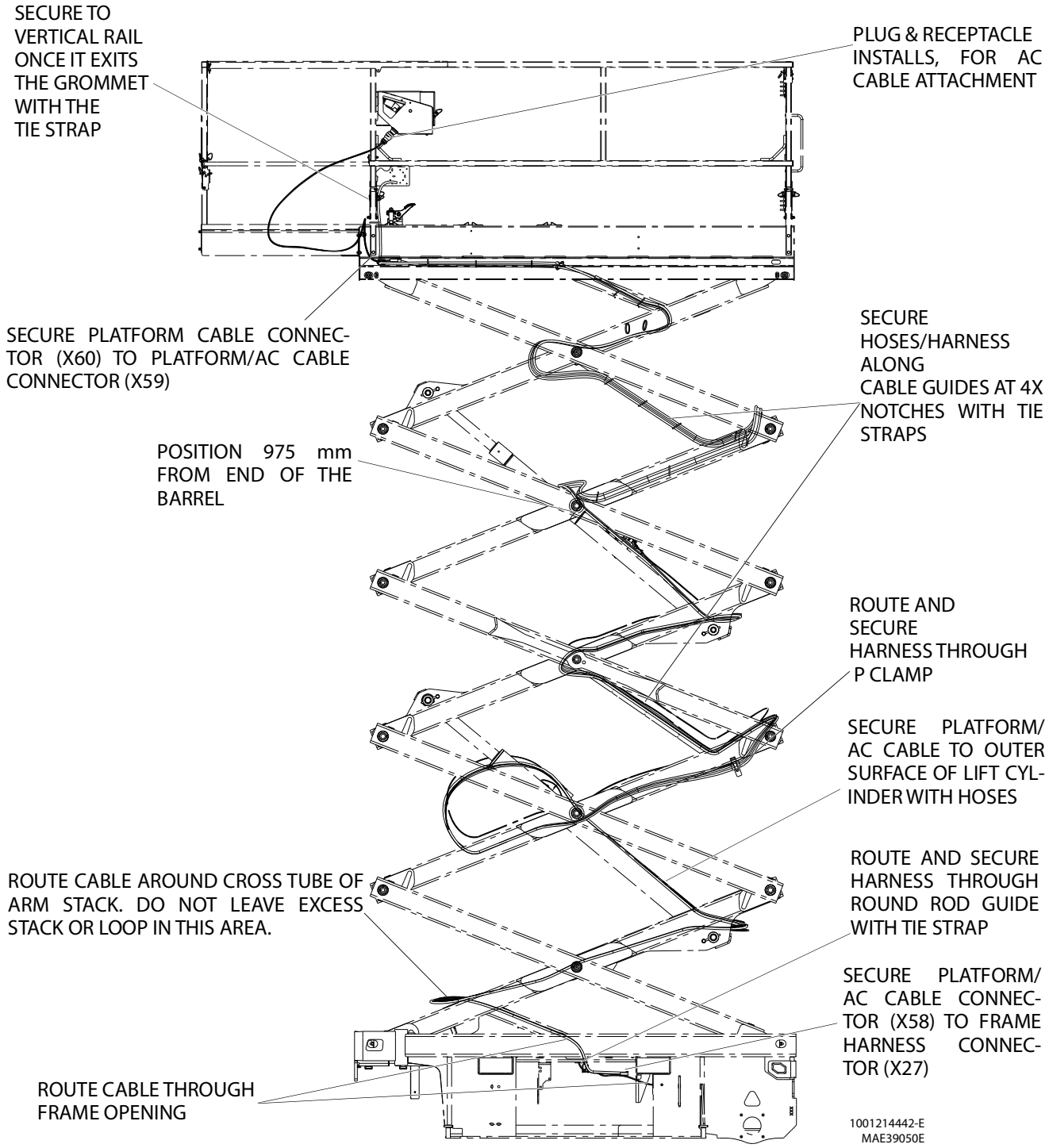

Figure 3-31. Scissor Arm Assembly - Cable Routing

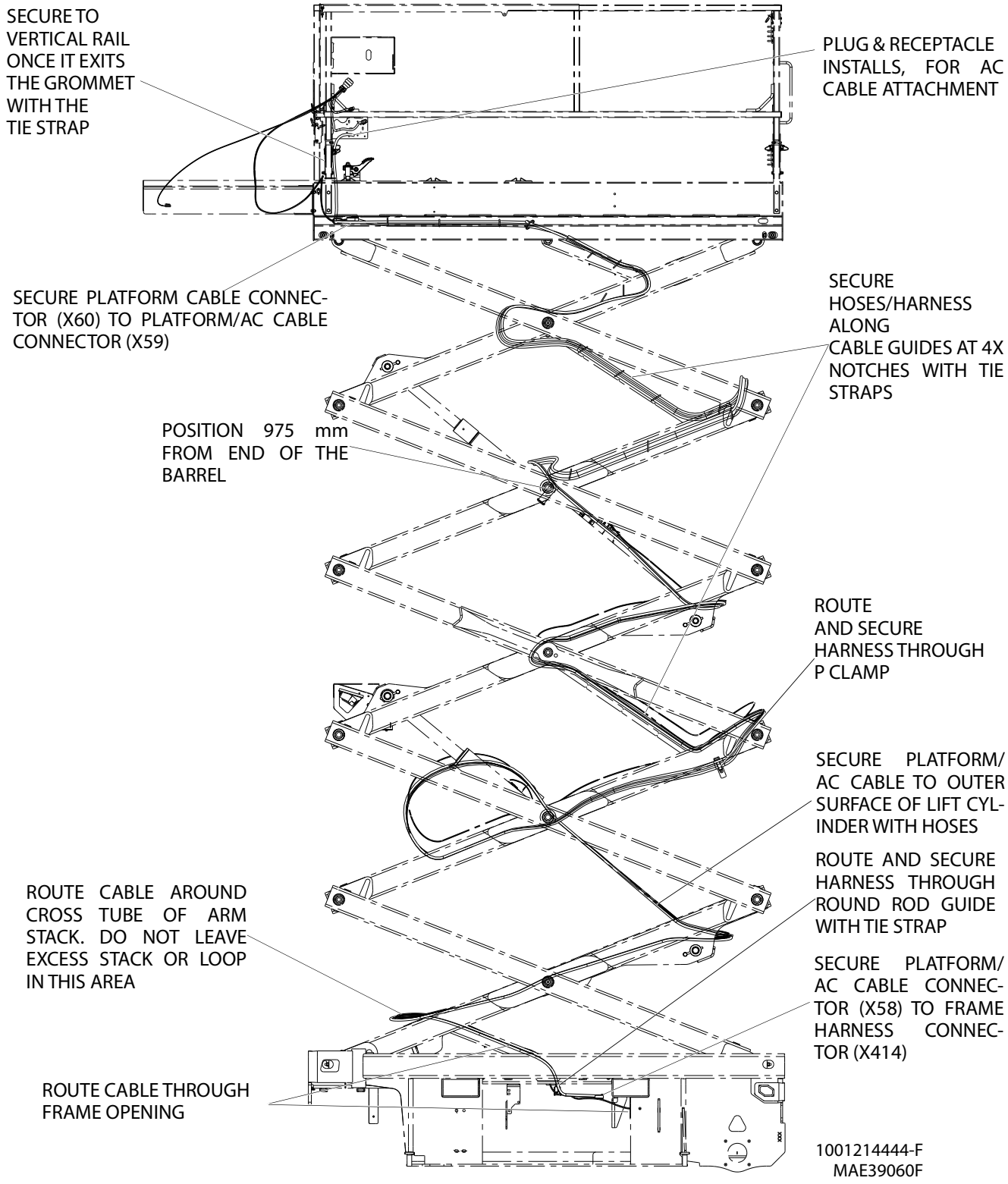

Figure 3-32. Scissor Arm Assembly - Cable Routing (FTSW)

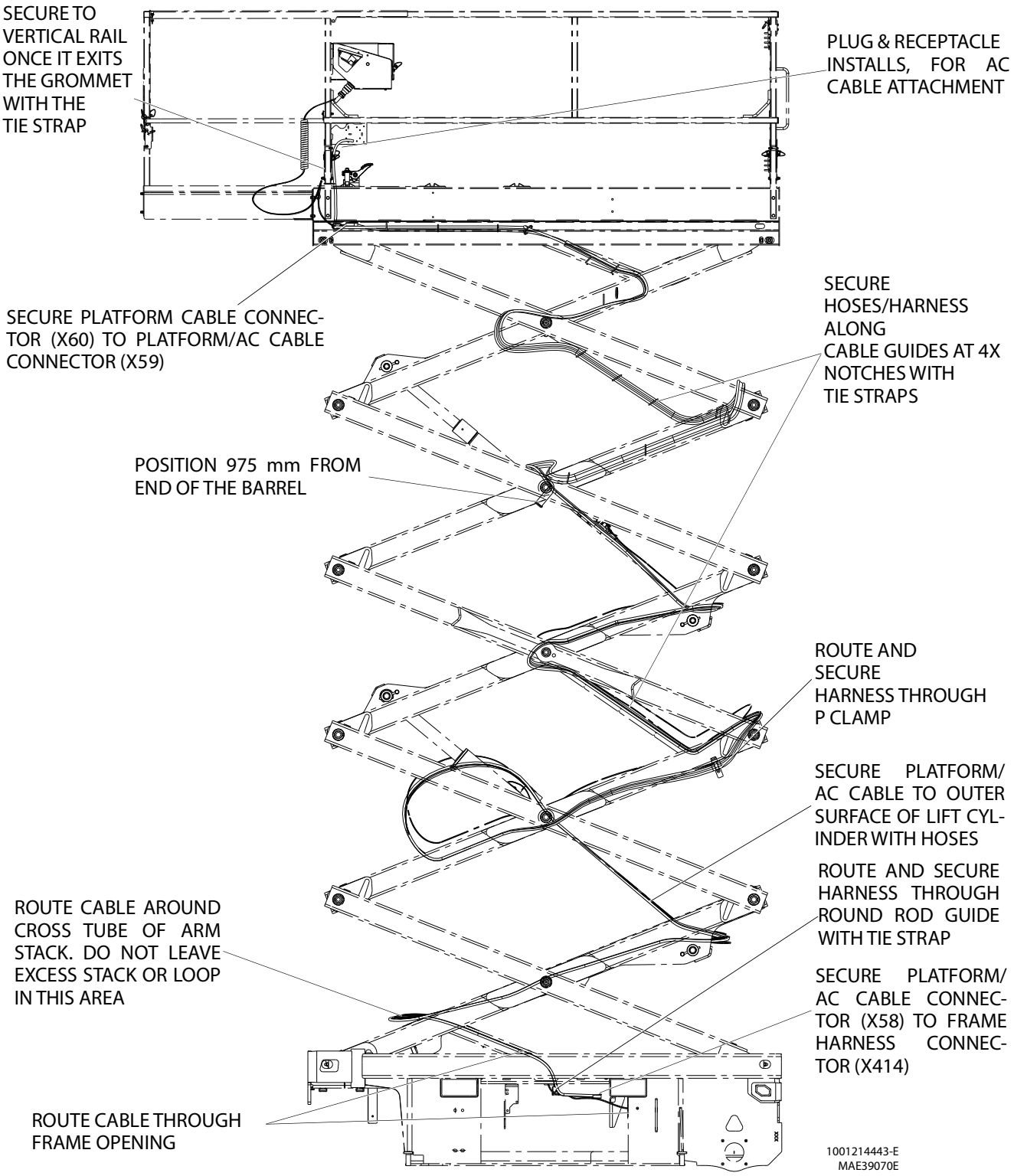

Figure 3-33. Scissor Arm Assembly - Cable Routing (Coiled)

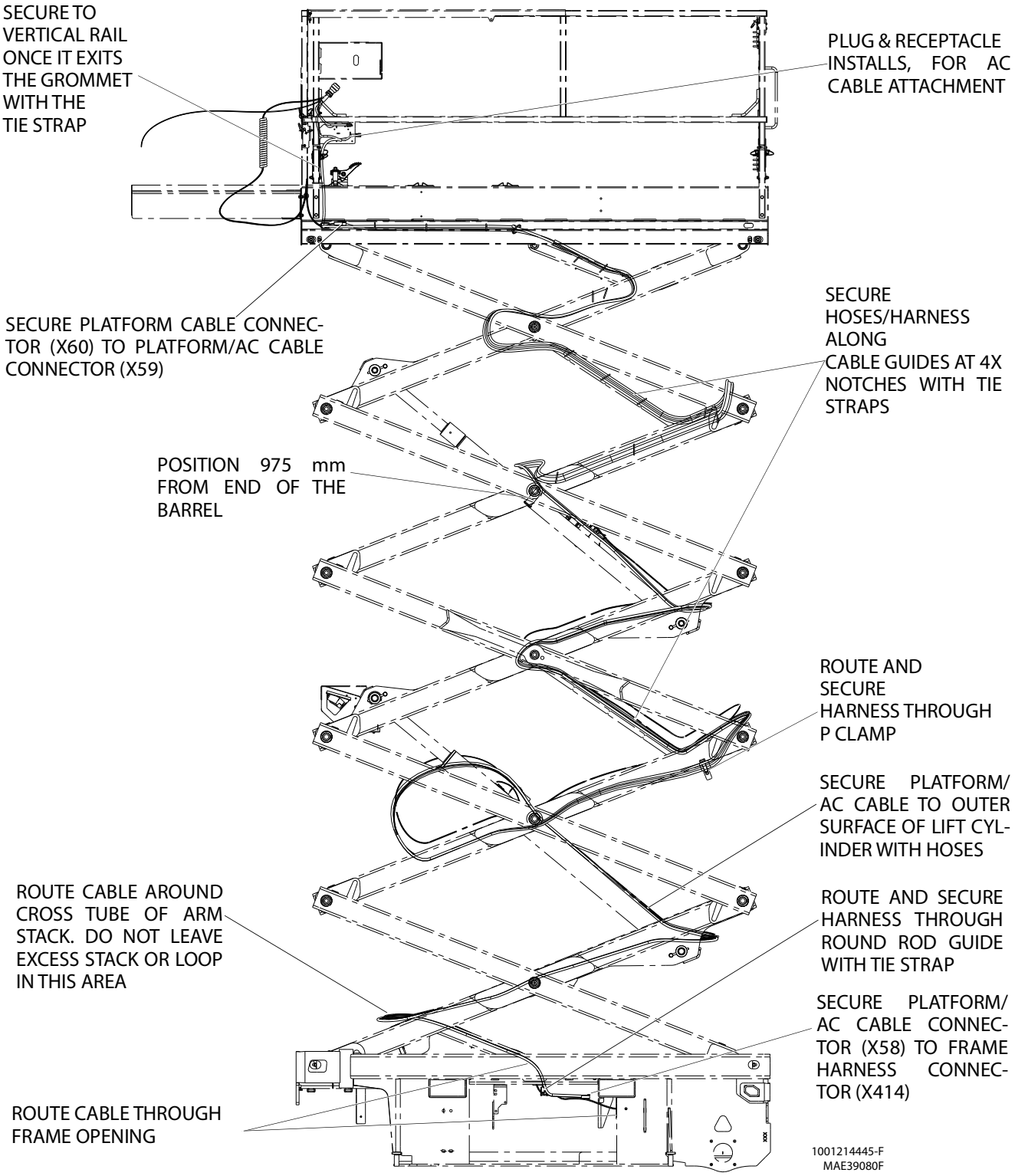

Figure 3-34. Scissor Arm Assembly - Cable Routing (Coiled) (FTSW)

SECTION 4. HYDRAULICS

4.1 CYLINDERS - THEORY OF OPERATION

Cylinders are of the double acting type. The Lift and Steer systems incorporate double acting cylinders. A double acting cylinder is one that requires oil flow to operate the cylinder rod in both directions. Directing oil (by actuating the corresponding control valve to the piston side of the cylinder) forces the piston to travel toward the rod end of the barrel, extending the cylinder rod (piston attached to rod). When the oil flow is stopped, movement of the rod will stop. By directing oil to the rod side of the cylinder, the piston will be forced in the opposite direction and the cylinder rod will retract.

NOTE: *The lift cylinder is a single acting cylinder which takes hydraulic pressure to extend and gravity to retract.*

A holding valve is used in the hydraulic lift circuit to prevent motion unintended by the operator in the event of a hydraulic line failure.

4.2 VALVES - THEORY OF OPERATION

Solenoid Control Valves (Bang-Bang)

Control valves used are four-way, three-position solenoid valves of the sliding spool design. When a circuit is activated and the control valve solenoid energizes, the spool is shifted and the corresponding work port opens to permit oil flow to the component in the selected circuit, with the opposite work port opening to reservoir. Once the circuit is deactivated (control returned to neutral), the valve spool returns to neutral (center) and oil flow is then directed through the valve body and returns to reservoir. A typical control valve consists of the valve body, sliding spool, and two solenoid assemblies. The spool is machine fitted in the bore of the valve body. Lands on the spool divide the bore into various chambers, which, when the spool is shifted, align with corresponding ports in the valve body open to common flow. At the same time other ports would be blocked to flow. The spool is spring-loaded to center position, therefore when the control is released, the spool automatically returns to neutral, prohibiting any flow through the circuit.

Relief Valves

Main relief valves are installed at various points within the hydraulic system to protect associated systems and components against excessive pressure. Excessive pressure can be developed when a cylinder reaches its limit of travel and the flow of pressurized fluid continues from the system control. The relief valve provides an alternate path for the continuing flow from the pump, thus preventing rupture of the cylinder, hydraulic line or fitting. Complete failure of the system pump is also avoided by relieving circuit pressure. The relief valve is installed in the circuit between the pump outlet (pressure line) and the cylinder of the circuit, generally as an integral part of the system valve bank. Relief pressures are set slightly higher than the load requirement, with the valve diverting excess pump delivery back to the reservoir when operating pressure of the component is reached.

Crossover Relief Valves

Crossover relief valves are used in circuits where the actuator requires an operating pressure lower than that supplied to the system. When the circuit is activated and the required pressure at the actuator is developed, the crossover relief diverts excess pump flow to the reservoir. Individual, integral relief's are provided for each side of the circuit.

Proportional Valve

Flow is proportional to the amount of voltage supplied to the valve coil. Voltage is gained by the machine controller and determined by the position of the joystick.

Manual Descent Valve

The manual descent valve is located on the top of the holding valve on the lift cylinder. The holding valve is a normally closed solenoid valve, and holds the platform in place when raised. When activated, the valve opens to permit lift down. The holding valve is connected to the manual descent valve, which is connected to a cable which, when pulled, manually opens the lift down port of the valve and allows the platform to be lowered in the event hydraulic and/or electric power is lost.

4.3 PUMP/MOTOR

Theory of Operation

The Power Module is essentially a “low-side” switch for the pump motor. The positive terminal of the pump is tied to Battery Positive after the Line Contactor. The negative terminal of the pump connects to the P Terminal of the Power Module, which switches current through MOSFET transistors to the Battery Negative.

For variable speed pump operation, the MOSFET transistors switch On and Off at high frequencies (16kHz). The Duty Cycle is varied to control the voltage applied to the pump motor. When the MOSFET's spend 50% of the period On and 50% Off, approximately ½ of the available Battery Voltage will be applied to the pump motor. Similarly, the MOSFET are On continuously (100% Duty Cycle) to apply all available Battery Voltage to the pump motor (as in Lift Up at full speed).

When the Control System is energized, the voltage at the P Terminal will be approximately +24 V (referenced to -B) when the pump is static. The P Terminal will be approximately at +1 V (referenced to -B) when the pump is running at full speed (Lift Up from Ground Mode).

Pump Motor Electrical Evaluation

Several basic electrical tests can be performed on the Pump Motor. Failure of one of these evaluations is significant and may indicate that the device is physically damaged.

Refer to Figure 8-2., Resistance Measurement. Make all measurements with a voltmeter set to resistance scale (Ohms). Disconnect main power at the batteries and all pump motor cables during this analysis.

- **Resistance < 5 Ohms between Motor Terminals.** The internal windings are very low impedance and should appear to be a short-circuit for an ordinary voltmeter (other tests can determine if the windings are truly shorted). High resistance can signal worn brushes, a faulty commutator, or open windings.
- **Resistance > 1 Mega-Ohms between Motor Terminals and Motor Housing.** The internal windings should be electrically isolated from the motor housing. Low resistance may be an indication of a broken motor terminal, damaged brush, faulty commutator, or burned winding.

Troubleshooting

The following difficulties can be examined using the JLG Analyzer, a voltmeter, and simple hand tools. Unless otherwise noted, the Control System shall be energized in Ground Mode during testing. For a convenient Ground Reference, place the black meter lead on the negative post of the left battery in the left-side batter compartment. The vehicle should be placed on a smooth, firm, and level surface for all analysis.

1. **Open-Circuit between +B Terminal and Pump Motor Positive Terminal**

   This issue will allow the vehicle to drive, but Lift Up and Steer Functionality will be lost and the Pump Motor will not operate. Under DIAGNOSTICS - PUMP, the JLG Analyzer will show PUMP PWM 100% and PUMP CUR 0.0A when Lift Up is operated from Ground Mode.

   As shown in the diagram, the voltage measured between the Pump Motor Positive Terminal and Ground Reference should be 24 V. If it is not, examine the cable between the terminal and the Power Module compartment. Inspect crimps for corrosion and ensure that bolted connections are tight. Ensure that the cable is not crushed where it passes between the frame side sheets and the cylinder assembly.

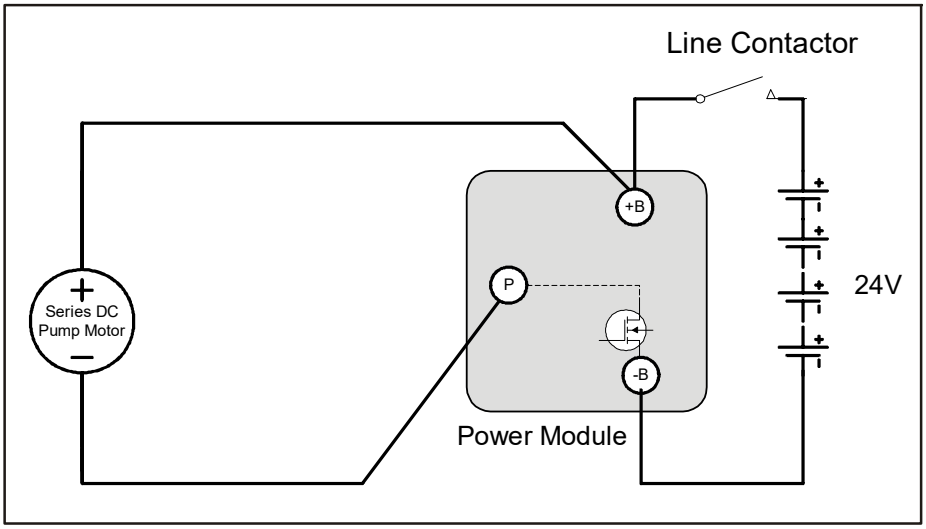

2. **Open-Circuit between Pump Motor Negative Terminal and P Terminal**

   This issue will allow the vehicle to drive, but Lift Up and Steer Functionality will be lost and the Pump Motor will not operate. Under DIAGNOSTICS - PUMP, the JLG Analyzer will show PUMP PWM 100% and PUMP CUR 0.0 A when Lift Up is operated from Ground Mode.

   After ensuring there is not an Open-Circuit between the +B Terminal and Pump Motor Positive Terminal, check that the voltage measured between the Pump Motor Negative Terminal and Ground Reference is 24 V. If not, examine the issues within Open-Circuit Pump Motor. This voltage should ramp to approximately 0 V when Lift Up is operated from Ground Mode. If not, examine the cable between the terminal and the Power Module compartment (P Terminal). Inspect crimps for corrosion and ensure that bolted connections are tight. Ensure that the cable is not crushed where it passes between the frame side sheets and the cylinder assembly.

3. **Open-Circuit Pump Motor**

   This issue will allow the vehicle to drive, but Lift Up and Steer Functionality will be lost and the Pump Motor will not operate. Under DIAGNOSTICS - PUMP, the JLG Analyzer will show PUMP PWM 100% and PUMP CUR 0.0 A when Lift Up is operated from Ground Mode.

   Disconnect main power at the batteries to completely de-energize the Control System. Next, detach the cable from Pump Motor Positive Terminal. Using a voltmeter set for resistance measurement (Ohms), ensure that the resistance between the Pump Motor Positive and Negative Terminals is less than 2 Ohms. If not, examine the pump motor for worn brushes or broken terminals. After examination, re-connect the Pump Motor Positive Terminal and main power at the batteries.

4. **Short-Circuit between Pump Motor Positive and Negative Terminals**

   This issue will allow the vehicle to drive, but Lift Up and Steer Functionality will be lost and the Pump Motor will not operate. Under DIAGNOSTICS - PUMP, the JLG Analyzer will show an erratic reading for PUMP PWM % and PUMP CUR will hover around 150A when Lift Up is operated from Ground Mode.

   Disconnect main power at the batteries to completely de-energize the Control System. Next, detach both Pump Motor Terminals and insulate them independently. Re-connect main power at the batteries and re-try Lift Up. If the same symptoms persist (erratic PUMP PWM%, PUMP CUR around 150 A), examine the cabling between the Pump Motor and Power Module compartment for a short-circuit (most likely near area where cylinder retracts between frame side sheets or near pot-hole mechanism, if equipped). If the symptoms change, suspect a short-circuited (or mechanically frozen) pump motor.

   A clamp-on ammeter (set for 200 A DC) can be placed on either Pump Motor Cable for verification. During Lift Up, the ammeter will read approximately 150 A.

4.4 HYDRAULIC TANK INSTALLATION

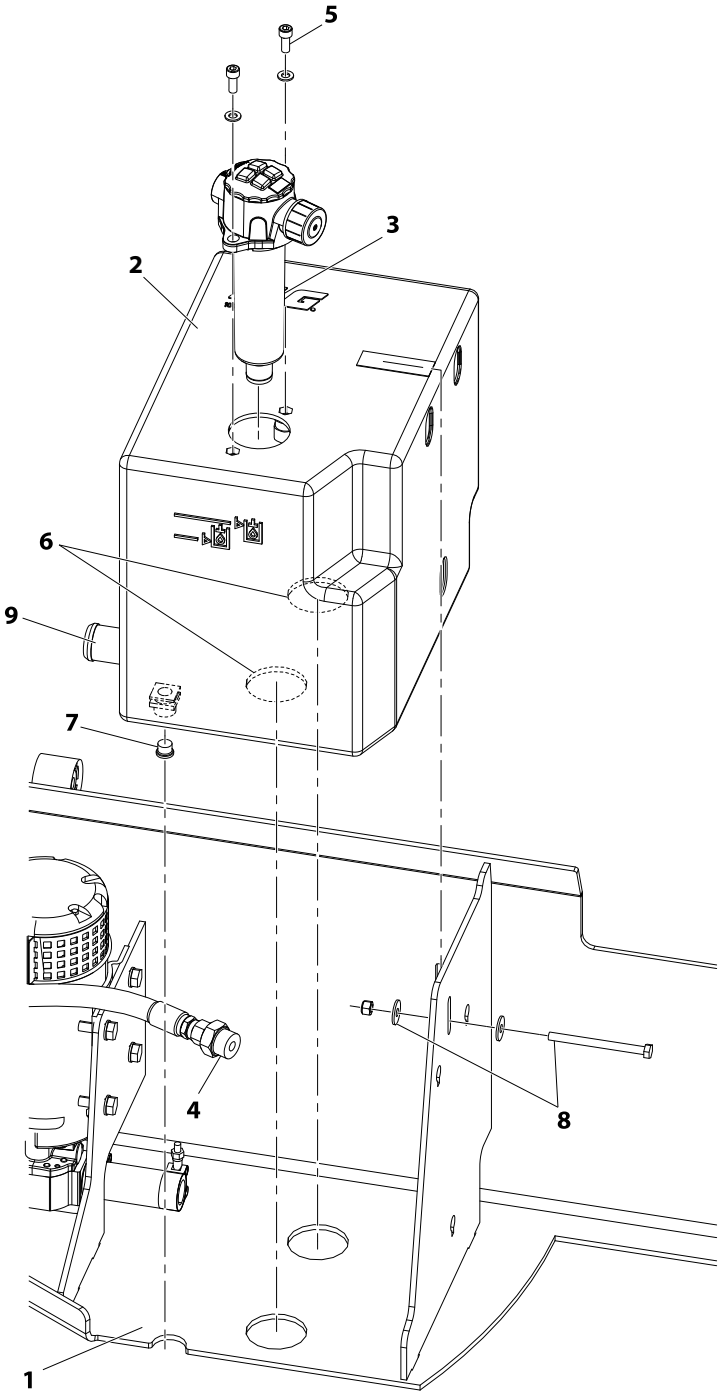

1. Machine Right Side Swing-Out Compartment Door
2. Hydraulic Oil Tank
3. Hydraulic Oil Filter
4. Tank Return Hose/Port
5. Filter/Return Housing Screws and Washers (Torque to 5 ft. lbs.)
6. Tank Placement Emboss Features On Bottom of Tank
7. Tank Drain Plug
8. Tank Hold-Down Bolt/Nut/Washers
9. Tank Outlet to Pump

Figure 4-1. Hydraulic Tank Installation

Hydraulic Oil Check Procedure

See Figure 4-2., and Figure 4-3.

- Lube Point(s) - Hydraulic Reservoir
- Reservoir Capacity - 6.6 gal. (25 L)
- Lube - Hydraulic Oil
- Interval - Check Daily

NOTE: *Check the hydraulic oil level with the platform in the stowed position ONLY. Be certain the hydraulic oil has warmed to operating temperature before checking the oil level in the reservoir.*

1. On the right side of the machine on the hydraulic compartment door there is a rectangular **cutout (1)** which allows viewing of the hydraulic oil tank **marking (2)**. The reservoir is marked with a **MAX (maximum) marking (2)**. The **MIN marking (3)** is the bottom edge of the cutout on the door. The oil level must be kept within these markings for the hydraulic system to operate properly.
2. If additional oil is required, swing compartment door open and wipe all dirt and debris from the **filler/filter cap (4)** area. Remove filler cap and add proper grade of oil. Fill until oil level is close to the **MAX marking (3),** but not over the **MAX marking**.

NOTE: *Care should be taken not to introduce any impurities (dirt, water, etc.) while cap is removed.*

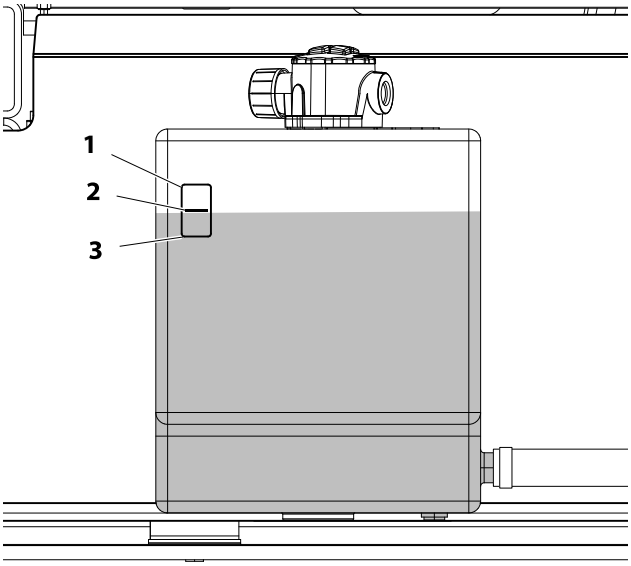

Figure 4-2. Hydraulic Oil Check Procedure

NOTE: *Recommended lubricating intervals are based on machine operations under normal conditions. For machines used in multi-shift operations and/or exposed to hostile environments or conditions, lubrication frequencies must be increased accordingly.*

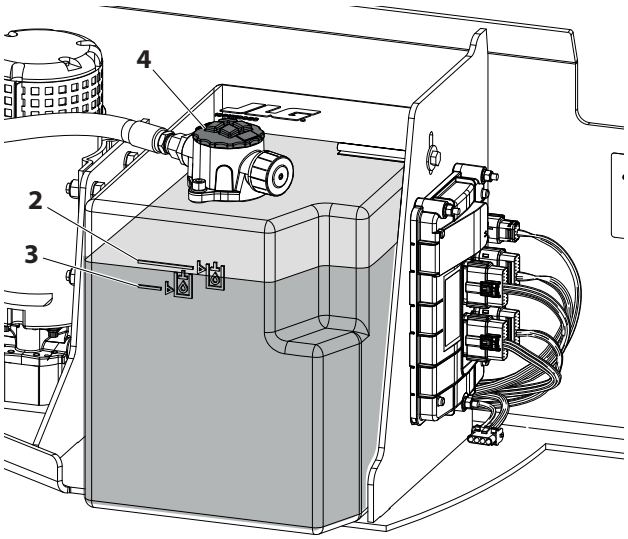

Figure 4-3. Hydraulic Oil Fill Procedure

4.5 HYDRAULIC PUMP AND ELECTRIC MOTOR ASSEMBLY

The hydraulic pump and motor are located on the right side component swing out door, next to the hydraulic tank assembly.

Pump/Motor Removal

1. Shut off machine power.
2. Disconnect the battery (+) cable or quick disconnect, if equipped.
3. Open right side component swing out door and locate the hydraulic pump and motor assembly.
4. Label and disconnect the positive (+) and negative (–) power cables on the electric motor.
5. Unbolt the four bolts (4), and washers (3) from the pump/motor assembly and raise the pump end up above the oil level in the hydraulic tank.
6. Loosen and remove the pump pressure side fitting and hose. Cap the pump port and the hose fitting. Keep pressure hose elevated if necessary.
7. Loosen the suction side hose, keeping it above the oil level in the hydraulic tank. Plug the end of the hose and tie up to keep the end higher than the oil level in the tank.
8. Move the pump/motor assembly to a suitable work surface for disassembly.

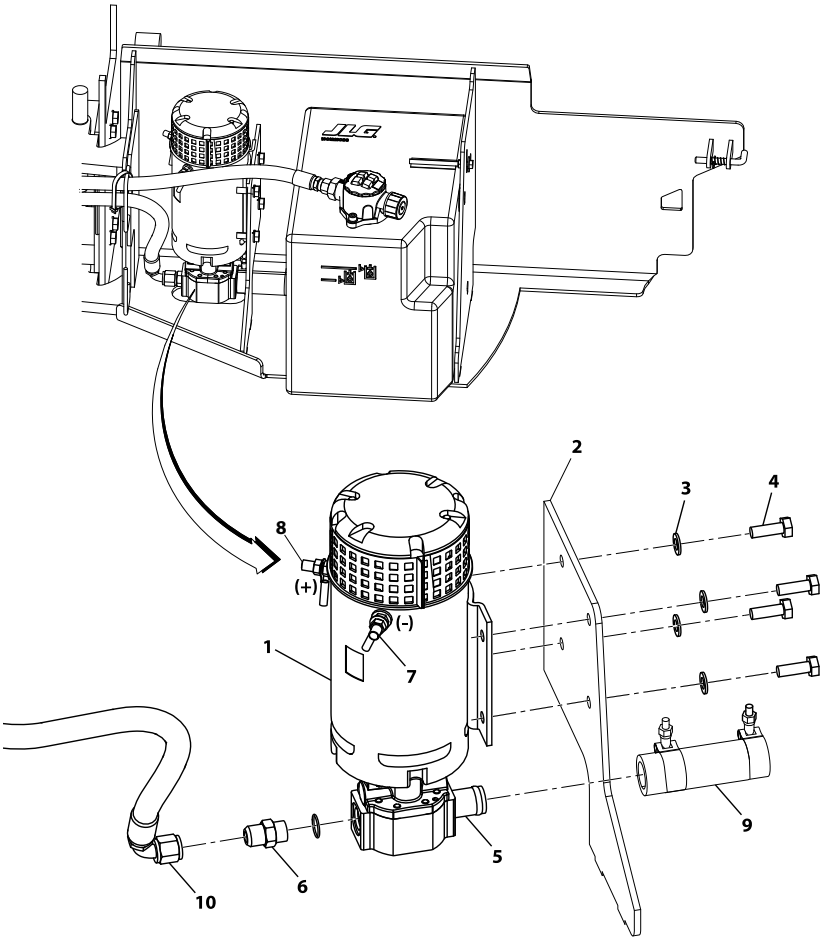

Figure 4-4. Hydraulic Pump - Motor Components

1. Pump/Motor Assembly
2. Mounting Plate
3. Washer
4. Bolt
5. Pump Suction Port
6. Pump Pressure Port Fitting with O-Ring
7. Negative (–) Cable Connection
8. Positive (+) Cable Connection
9. Inlet Hose from Hyd. Tank
10. Outlet Hose to Manifold Valve

Pump/Motor Disassembly

1. Remove the four bolts and washers securing the pump to the pump motor.
2. Slide the pump out of the pump motor until the drive shaft clears the motor.
3. If necessary, remove the snap ring from the pump shaft housing and remove the old seal.

Pump/Motor Assembly

1. Install a new seal and secure with a new snap ring.
2. Replace the pump to motor gasket and slide the pump assembly into the motor assembly aligning the pump shaft with the motor receptacle.
3. Slide the motor all the way into the pump motor and install the four bolts and washers. Torque bolts to 180-216 in. lbs. (20.3-24.4 Nm).

Pump/Motor Installation

Reverse instructions for removal.

When reinstalling the Negative and Positive cable terminal nuts, hold bottom nut and torque the top nut no more than 166 - 177 in. lbs. (19 - 20 Nm).

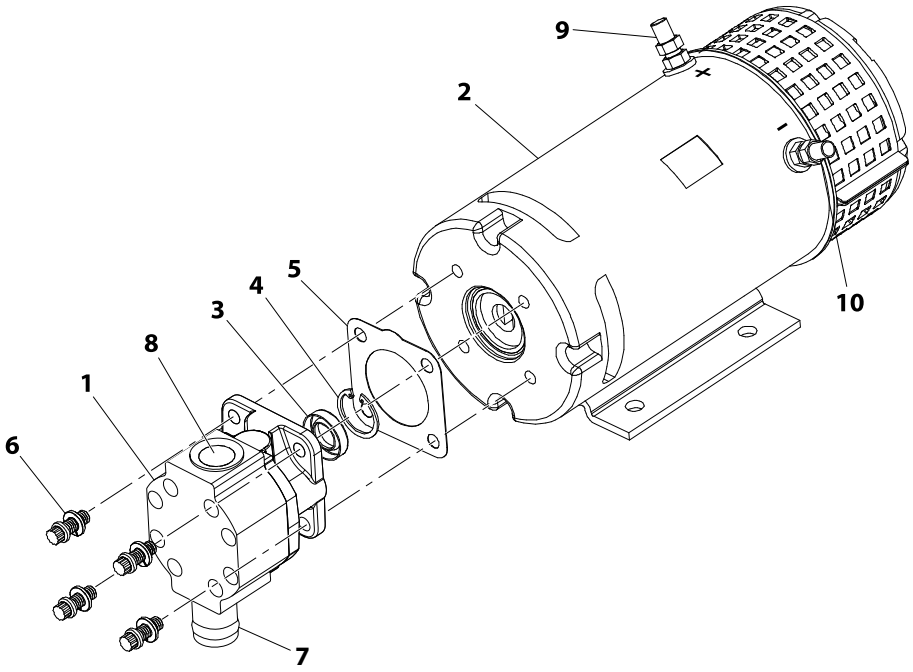

Figure 4-5. Hydraulic Pump - Motor Components

1. Hydraulic Pump
2. Electric Motor
3. Pump Drive Shaft Seal
4. Seal to Pump Retaining Snap Ring
5. Pump To Motor Gasket
6. Pump To Motor Bolts and Washers
7. Pump Suction Port
8. Pump Pressure Port
9. Electric Motor Positive (+) Post
10. Electric Motor Negative (–) Post

4.6 HYDRAULIC MANIFOLD VALVE INSTALLATION

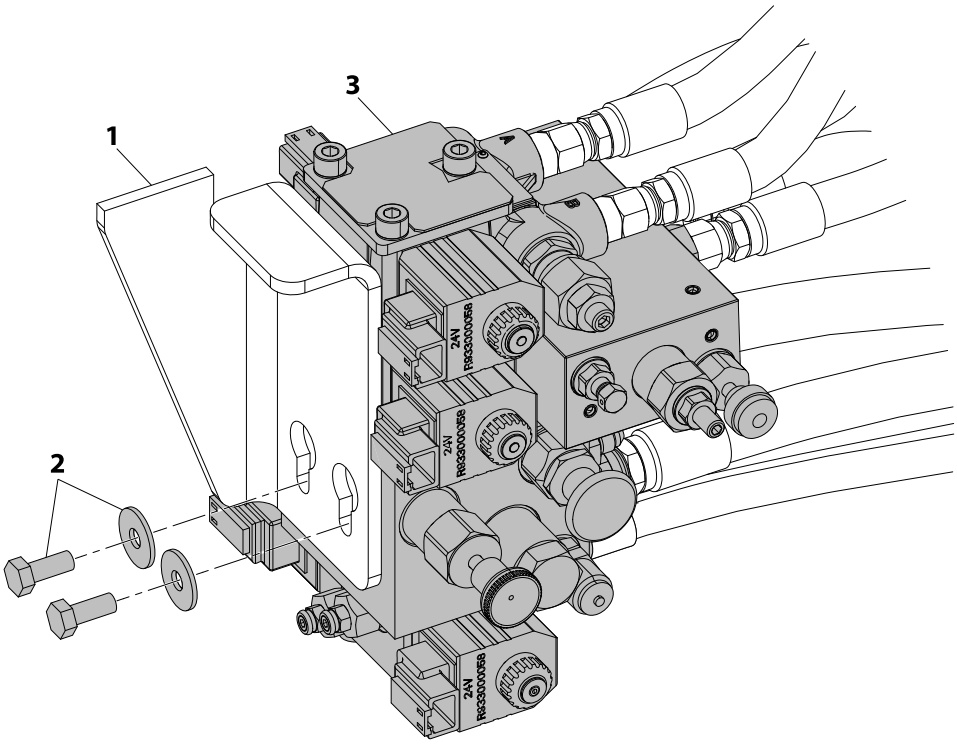

Figure 4-6. Hydraulic Manifold Assembly - Installation
(Located mid-chassis inside right side compartment door)

1. Chassis Mounting Plate
2. Valve Mounting Screws/Washers - (Apply JLG Thread-locker PN 0100011 and Torque to 10 ft. lb. (13.5 Nm) max.)
3. Manifold Valve Assembly

NOTE: *The mounting screws (item 2) when only loosened, allow the manifold assembly to be rotated down for servicing if necessary.*

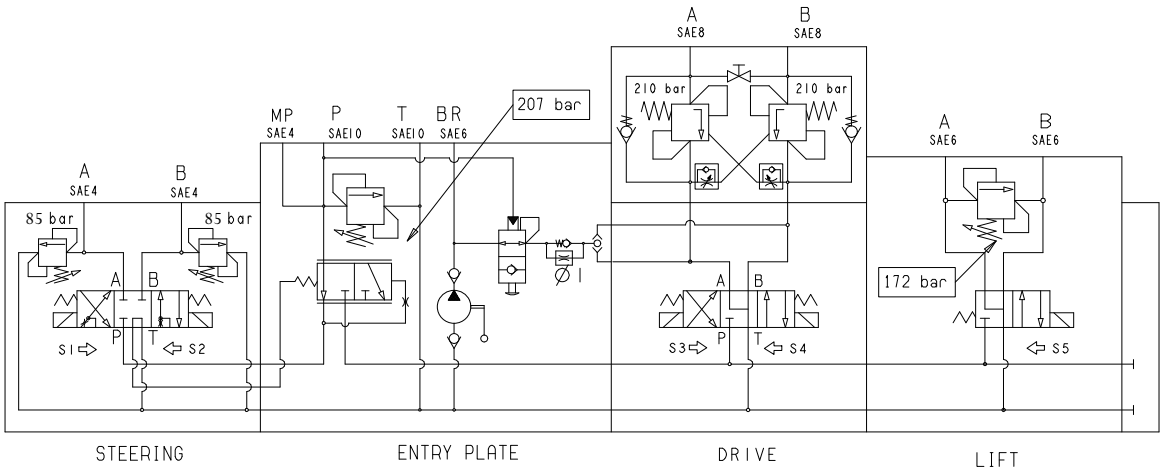

Figure 4-7. Hydraulic Manifold Assembly - Schematic

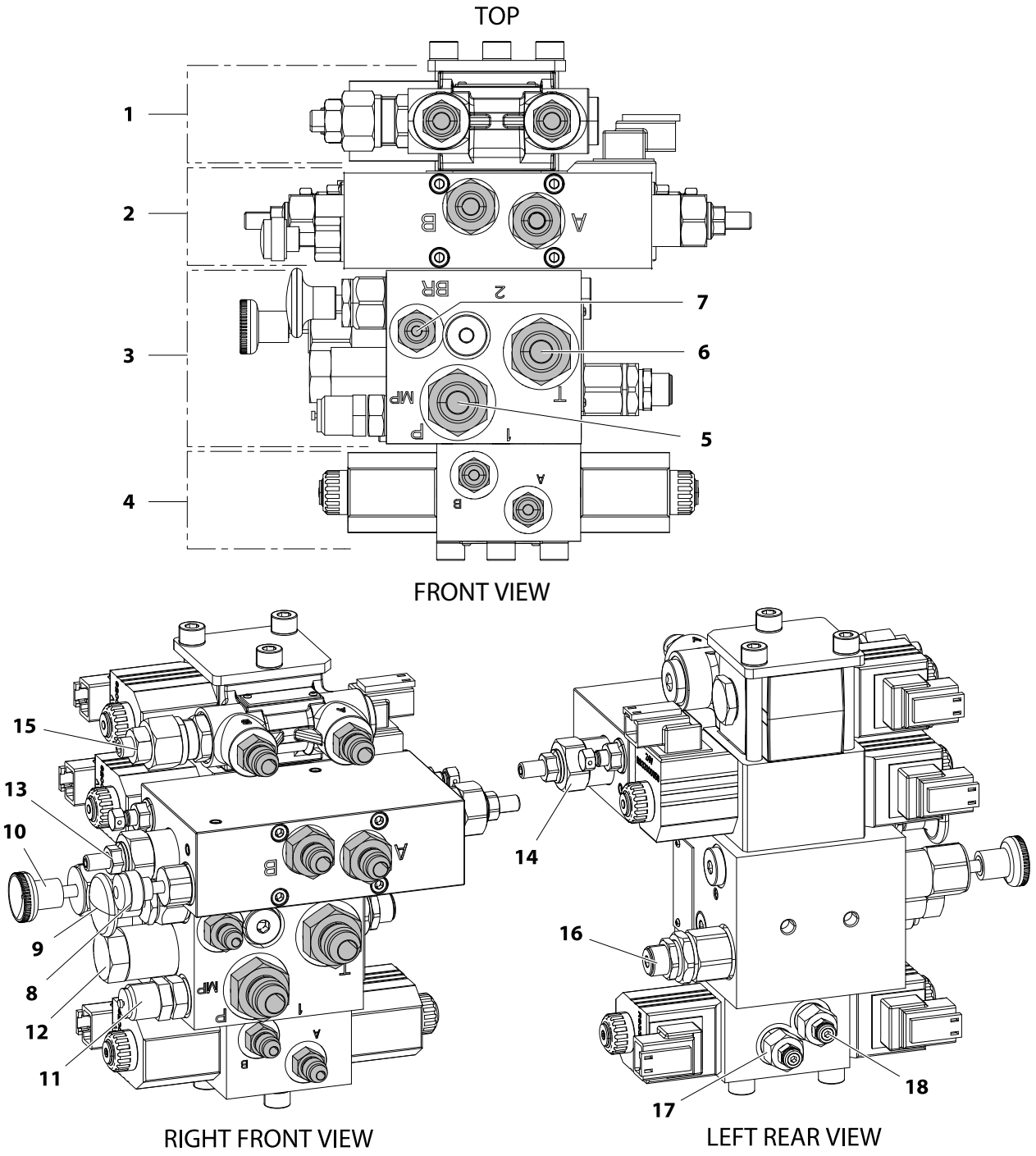

Figure 4-8. Hydraulic Manifold Assembly - Component Location

1. Lift Cylinder Control Valve Block
2. Drive Motor Control Valve Block
3. Pressure/Tank Ports and Brake Control Block
4. Steer Cylinder Control Valve Block
5. Pump Pressure Port
6. Tank Return Port
7. Brake Circuit Port
8. Drive Motor Release (Needle) Valve
9. Brake Release Valve
10. Hand Pump
11. Diagnostic Pressure Port
12. Bypass Valve
13. Drive Pressure Relief Adjust (Port B)
14. Drive Pressure Relief Adjust (Port A)
15. Lift Pressure Relief Adjust
16. Main Relief Pressure Adjust
17. Steer Pressure Relief Adjust (Port A)
18. Steer Pressure Relief Adjust (Port B)

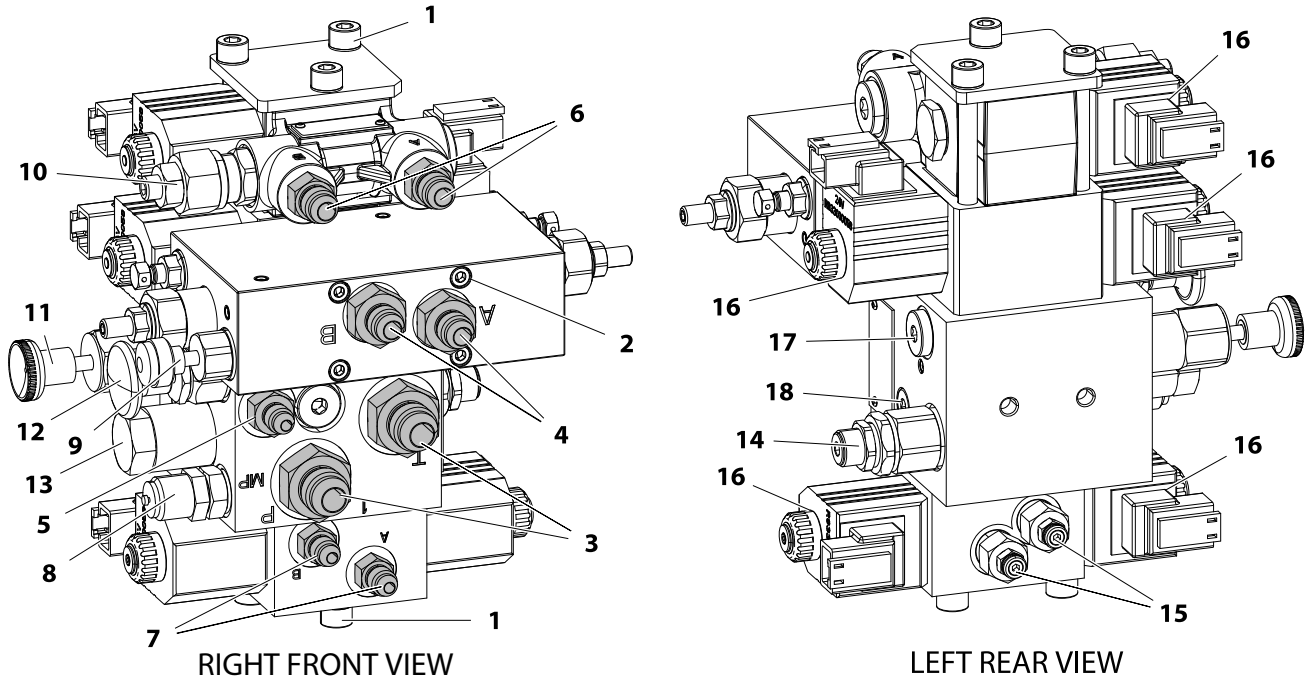

Figure 4-9. Hydraulic Manifold Assembly - Component Torque

1. Socket Head Screws - 16 ft. lbs. (21 Nm)
2. Screw - 4 ft. lbs. (5.5 Nm)
3. Pressure/Tank Port Fittings - 59 ft. lbs. (79 Nm)
4. Port A/B Fittings - Drive - 36 ft. lbs. (49 Nm)
5. Brake Port Fittings - 20 ft. lbs. (27 Nm)
6. Port A/B Fitting - Lift - 31 ft. lbs. (42 Nm)
7. Port B Fitting - Steer - 23 ft. lbs. (31 Nm)
8. MP Port Fitting - 50 ft. lbs. (20 Nm)
9. Needle Valve - 26 ft. lbs. (35 Nm)
10. Relief Valve - Lift - 31 ft. lbs. (43 Nm)
11. Hand Pump - 28 ft. lbs. (38 Nm)
12. Brake Release Valve - 33 ft. lbs. (45 Nm)
13. Bypass Valve - 33 ft. lbs. (45 Nm)
14. Main Relief Valve - 31 ft. lbs. (43 Nm)
15. Steer Relief Valves - 7 ft. lbs. (9.5 Nm)
16. Solenoid Valves - 4 ft. lbs. (5.5 Nm)
17. Plug - 9 ft. lbs. (12.5 Nm)
18. Plug - 23 ft. lbs. (32 Nm)

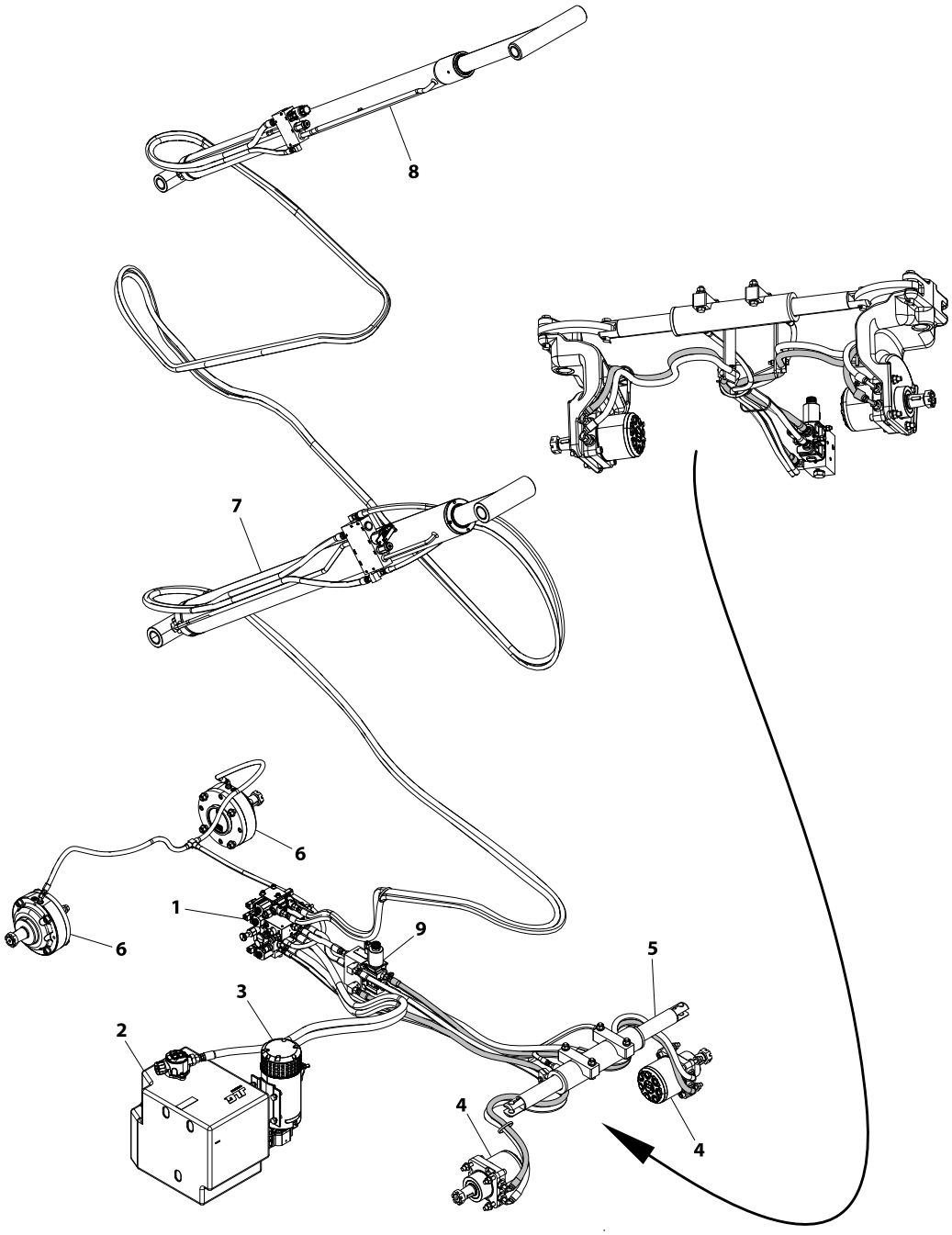

Figure 4-10. Hydraulic Hose Routing

1. Manifold Valve Block
2. Oil Tank/Filter/Drain Plug
3. Pump/Motor
4. Drive Motors (Interchangeable)
5. Steer Cylinder
6. Brakes
7. Lift Cylinder - Lower (Also reference Figure 3-31. to Figure 3-34.)
8. Lift Cylinder - Upper (Also reference Figure 3-31. to Figure 3-34.)
9. Traction Valve

4.7 DRIVE MOTOR INSTALLATION

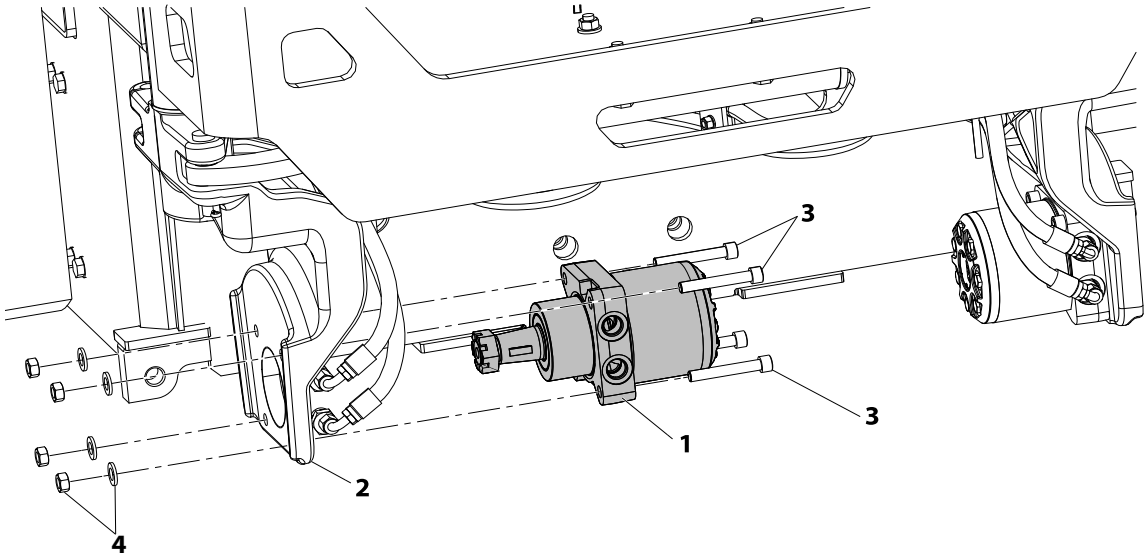

Figure 4-11. Drive Motor - Installation
(Right Motor shown, Left Motor the same, flip motor over, keeping ports facing forward.)

1. Hydraulic Drive Motor
2. Steer/Spindle Mount
3. Motor Mounting Screws (Apply JLG Threadlocker PN 0100011 on assembly)
4. Motor Mounting Nuts/Washers

NOTE: *The drive motors for the 4045R may make an audible noise when driving and turning the machine. This condition is normal due to the hydraulic oil flow characteristics of the series drive circuit.*

4.8 HYDRAULIC BRAKE INSTALLATION

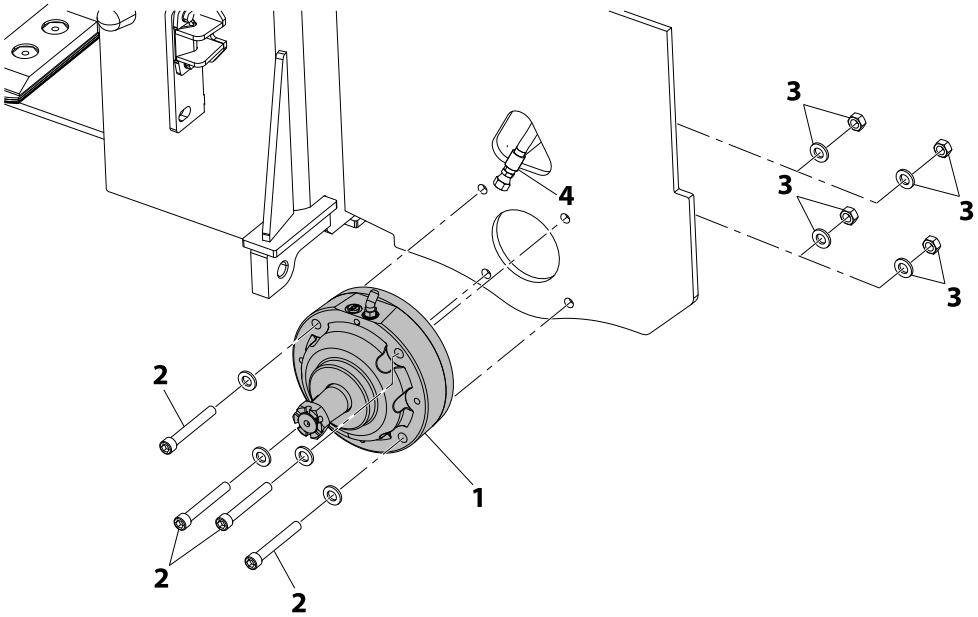

Figure 4-12. Rear Hydraulic Brake - Installation

1. Hydraulic Brake Assembly (Mount with Ports on Top)
2. Mounting Screws and Washers (Apply JLG Threadlocker PN 0100011 on assembly and Torque to 74 ft. lb. (100 Nm))
3. Mounting Nuts and Washers (Inside of Frame)
4. Hyd. Hose to Right Side Brake Assembly

Hydraulic Brake Release *(See Figure 4-13.)*

⚠ CAUTION

CHOCK WHEELS OR SECURE MACHINE WITH TOW VEHICLE.

1. At the ground control station turn power off by pressing the Emergency Stop switch in.
2. Open the right side compartment door and locate the main hydraulic manifold control valve.
3. Perform the following to set the drive motor control valve to tow mode. On the drive control valve locate the **tow mode needle valve knob (1)**, screw the valve out till it stops.
4. On the main valve body, to release the brakes, push the **BLACK brake override button (2)** in, (there is a detent which will hold the valve in place).
5. Pump the **RED Knob (3)** until pressure builds, approximately 5 to 10 strokes. The brakes should now be released.
6. Chock the machine wheels, After towing is complete, release the **BLACK brake override button (2)** and screw the **tow mode needle valve knob (1)** all the way in to reset the hydraulic brake.

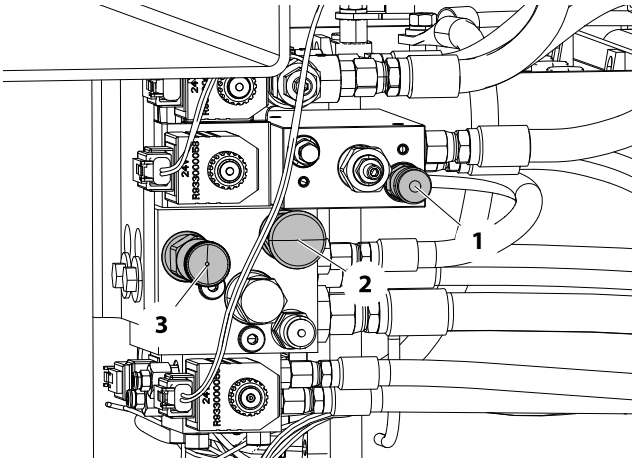

Figure 4-13. Hydraulic Brakes - Manual Disengage
(Inside Right Side Compartment Door)

4.9 PRESSURE SETTING PROCEDURE

Install a pressure gauge capable of measuring 4000 psi (275.8 bar) at the MP port of the main control valve. (Refer to Figure 4-8.)

NOTE: *Refer to Section 5 for more information on using the JLG handheld analyzer and switching between access levels.*

Main Relief

1. Attach the Analyzer at the ground controls. Turn on the machine.
2. Press the right arrow key and scroll to ACCESS LEVEL 1. Press ENTER.
3. Use the arrow keys to enter the password for ACCESS LEVEL 1 (33271). After entering the password, press ENTER.
4. Press the right arrow key to scroll to the PERSONALITIES menu. Press ENTER.
5. Press the right arrow key to scroll to the PERSONALITIES: LIFT menu. Press ENTER.
6. Press the up arrow key to change the Lift Up Max personality to 100%. Press ENTER. Then press ESC twice to return to the main menu.
7. Press the right arrow key to scroll to the CALIBRATIONS menu. Press ENTER.
8. Press the right arrow key to scroll to the CALIBRATIONS: RELIEF PRESSURE menu. Press ENTER.
9. To set pressure, activate Lift Up at the ground controls when the Analyzer prompts LIFT UP TO RUN PUMP.

NOTE: *When activating Lift Up at ground controls, the machine will not elevate.*

Lift Up Relief

With Lift Up still set at default (100%), lift the scissor until the platform is at full stroke. Adjust lift up relief until the MP port gauge reads 2550 psi (176 bar).

NOTE: *To return the Lift Up personality to its original settings, navigate to the PERSONALITIES: LIFT and adjust. Cycle power when personality is back at desired value.*

Steer Relief

NOTE: *To diagnose cylinder problems it may be necessary to install tee fittings and diagnostic ports due to the steer spool restricting flow.*

1. Install gauge rated for 4000 psi (275.8 bar) on the MP port.
2. Reduce steer personality to 26%. If personality is not reduced, main pressure may be active.
3. Steer wheels fully to the right and adjust steer right relief to 1150 psi (80 bar) & lock the relief adjustment.
4. Now steer wheels fully to the left and adjust the left relief to 1150 psi (80 bar) & lock the relief adjustment.
5. Return Steering Personalities to their original settings.

4.10 CYLINDER CHECKING PROCEDURE

NOTE: *Cylinder check must be performed anytime a system component is replaced or when improper system operation is suspected.*

1. Using all applicable safety precautions, activate pump motor and fully extend cylinder to be checked.
2. Carefully disconnect hydraulic hoses from retract port of cylinder. There will be some initial weeping of hydraulic fluid which can be caught in a suitable container. After the initial discharge, there should be no further drainage from the retract port.
3. Activate pump motor and extend cylinder.
4. If cylinder retract port leakage is less than 6-8 drops per minute, carefully reconnect hose to port and retract cylinder. If leakage continues at a rate of 6-8 drops per minute or more, cylinder repair must be made.

NOTE: *Steps 5 through 7 for Steer Cylinder Only.*

5. With cylinder fully retracted, shut down machine power and carefully disconnect hydraulic hose from cylinder extend port.
6. Activate pump motor and retract cylinder. Check extend port for leakage.
7. If extend port leakage is less than 6-8 drops per minute, carefully reconnect hose to extend port, than activate cylinder through one complete cycle and check for leaks. If leakage continues at a rate of 6-8 drops per minute or more, cylinder repairs must be made.

4.11 LIFT CYLINDER REMOVAL/INSTALLATION

NOTE: *If there is a pump failure, a crane or a forktruck can be used to raise the platform.*

⚠ WARNING

NEVER WORK UNDER AN ELEVATED PLATFORM UNTIL IT HAS BEEN RESTRAINED FROM MOVEMENT WITH SAFETY PROPS, BLOCKING, OR OVERHEAD SLINGS.

Self-locking fasteners, such as nylon insert and thread deforming locknuts, are not intended to be reinstalled after removal. Always use new replacement hardware when installing locking fasteners.

1. Use an overhead crane or fork truck to secure the platform and scissor arms before lift cylinder removal begins.
2. Cut any wire ties that attach any cables or hoses to the lift cylinder.

NOTICE

DISCONNECT MAIN POWER FROM THE BATTERIES BEFORE REMOVING ANY COMPONENTS FROM THE LIFT CYLINDER ASSEMBLY.

3. Remove the valve connector, the two hoses and the manual descent cable from the cylinder.

NOTE: *To avoid having to readjust the manual descent, remove the large nut located behind the manual descent bracket as shown.*
Also see See Figure 3-29. for lift cylinder mounting hardware configurations.

4. Ensuring that the deck and scissor arms are properly secure, support the lift cylinder and remove the top lift cylinder pin and rest the top of the cylinder on the arm cross tube directly below the cylinder.
5. Remove the bolt from the lower cylinder pin and have someone assist you in lifting the cylinder from the scissor arms.
6. Place the cylinder on a clean workbench.
7. For installation reverse above steps.

4.12 LOWER LIFT CYLINDER

NOTE: *Refer Figure 4-14., Lift Cylinder - Lower.*

Disassembly

1. Fully close then remove cylinder from machine.
2. Drain internal oil from cylinder through V4 and MC1.
3. Loosen the head using adjustable face pin spanner and unscrew.
4. Remove complete rod piston & head assembly from tube weld assembly. MC1 to remain open to allow air into cylinder.
5. Remove piston head. To do this, first remove grub screw and then loosen piston head using 80mm socket and unscrew. Note: It is best to clamp rod weld assembly on rod end to protect chrome rod.
6. Gland can now be pulled off rod assembly.
7. Remove snap ring using a flat screwdriver to remove wiper.
8. All seals can now be changed. Note: It is best to leave valves and orifice plugs in tube assembly unless they need to be changed.

Assembly

1. Follow disassembly process in reverse. Take care not to damage the seals when putting the gland onto the rod.
2. Assembly torques & adhesive recommendations are as per assembly drawing.

4.13 UPPER LIFT CYLINDER

NOTE: *Refer Figure 4-15., Lift Cylinder - Upper.*

Disassembly

1. Fully close then remove cylinder from machine.
2. Drain internal oil from cylinder through V2 and MC1.
3. Loosen the head using C-spanner and unscrew.
4. Remove complete rod piston & head assembly from tube weld assembly. MC1 to remain open to allow air into cylinder.
5. Remove piston head. To do this, first remove grub screw and then loosen piston head using 40mm open spanner and unscrew. Note: It is best to clamp rod weld assembly on rod end to protect chrome rod.
6. Remove wire ring using flat screwdriver.
7. Gland can now be pulled off rod assembly.
8. Remove snap ring using a flat screwdriver to remove wiper.
9. All seals can now be changed. Note: It is best to leave valves in tube assembly unless they need to be changed.

Assembly

1. Follow disassembly process in reverse. Take care not to damage the seals when putting the gland onto the rod.
2. Assembly torques & adhesive recommendations are as per assembly drawing.

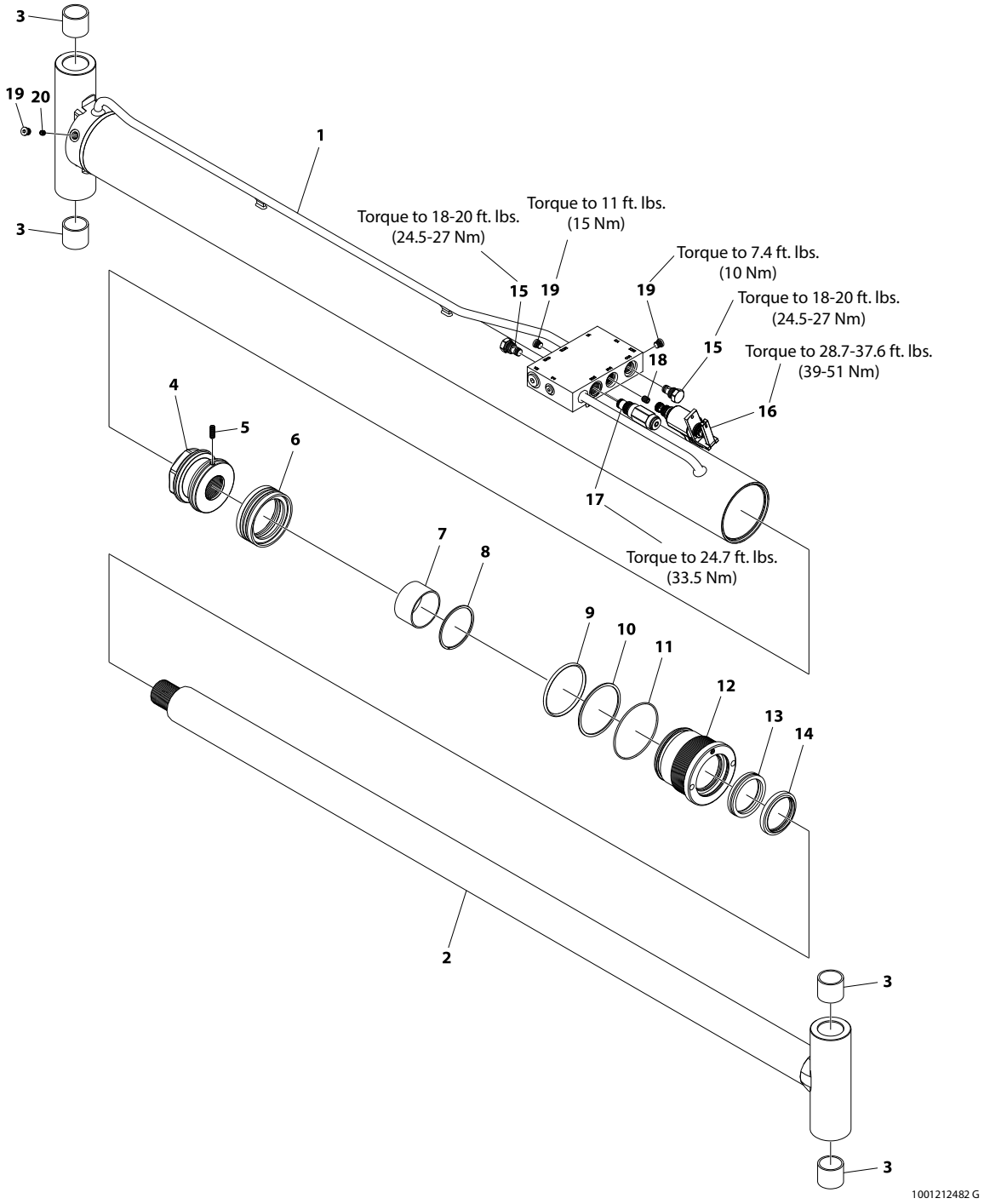

Figure 4-14. Lift Cylinder - Lower

1. Barrel	**6.** Piston Seal	**11.** O-ring	**16.** Valve Assembly
2. Rod	**7.** Spacer	**12.** Head	**17.** Relief Valve
3. Bushing	**8.** Snap Ring	**13.** Rod Seal	**18.** Orifice
4. Piston Head	**9.** O-ring	**14.** Wiper Seal	**19.** Plug
5. Setscrew	**10.** Backup Ring	**15.** Check Valve	**20.** Orifice

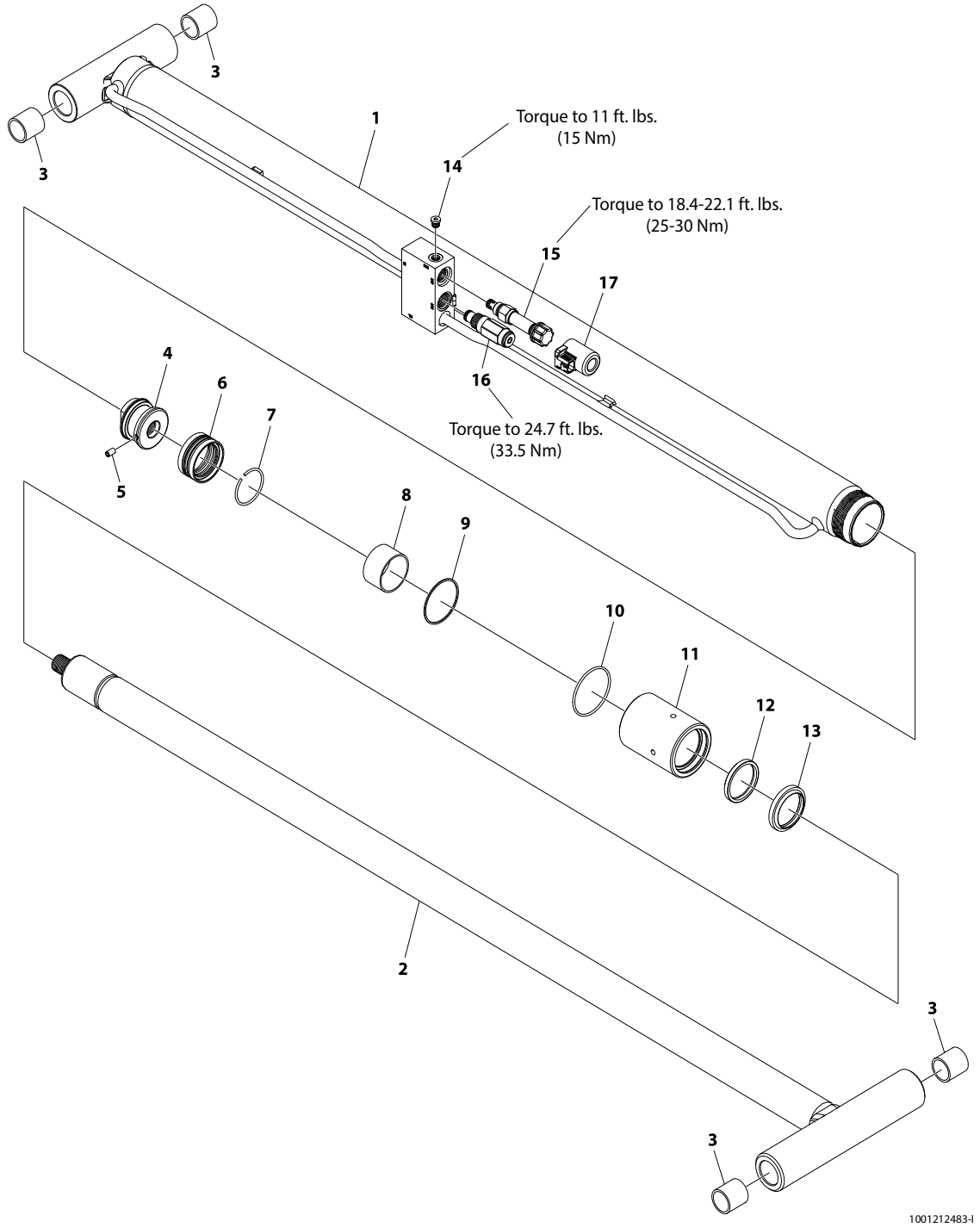

Figure 4-15. Lift Cylinder - Upper

1. Barrel
2. Rod
3. Bushing
4. Piston
5. Setscrew
6. Piston Seal
7. Snap Ring
8. Spacer
9. Retaining Ring
10. O-ring
11. Head
12. Rod Seal
13. Wiper Seal
14. Plug
15. Cartridge Valve Assembly
16. Relief Valve
17. Coil

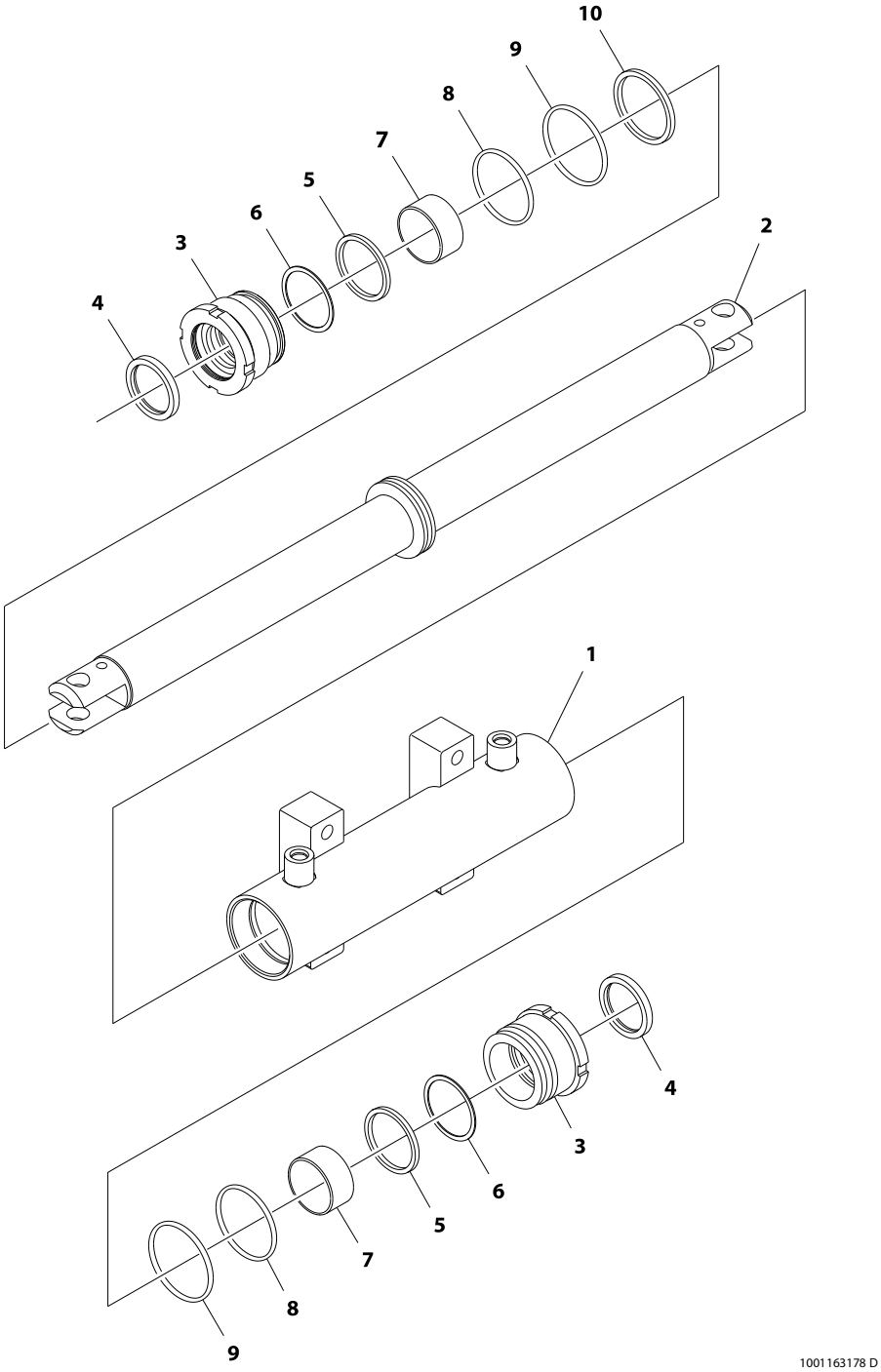

Figure 4-16. Steer Cylinder

1. Barrel
2. Rod
3. Head (Torque to 434 ft. lb. (588 Nm))
4. Wiper Seal
5. Rod Seal
6. Backup Ring
7. Dry Bearing
8. O-ring
9. O-ring
10. Piston Seal

4.14 CYLINDER REPAIR

NOTE: *The following are general procedures that apply to the cylinders on this machine. Procedures that apply to a specific cylinder will be so noted.*

Disassembly

NOTICE

DISASSEMBLY OF THE CYLINDER SHOULD BE PERFORMED ON A CLEAN WORK SURFACE IN A DIRT FREE WORK AREA.

1. Connect a suitable auxiliary hydraulic power source to the port block fitting in the manifold located on the cylinder.

⚠ WARNING

DO NOT FULLY EXTEND CYLINDER TO THE END OF STROKE. RETRACT CYLINDER SLIGHTLY TO AVOID TRAPPING PRESSURE.

2. Operate the hydraulic power source and extend the cylinder. Shut down and disconnect the power source. Adequately support the cylinder rod, if applicable.
3. If applicable, remove the cartridge-type holding valve and fittings from the cylinder port block. Discard o-rings.
4. Place the cylinder barrel into a suitable holding fixture.

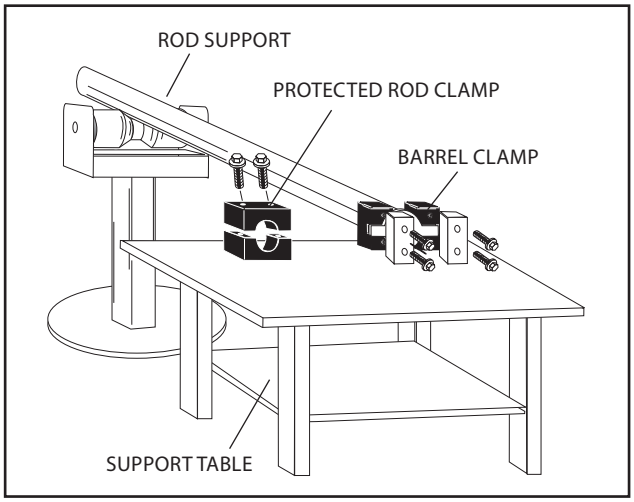

Figure 4-17. Cylinder Barrel Support

5. Mark cylinder head and barrel with a center punch for easy realignment. Loosen the cylinder head setscrew.
6. Using the proper wrench, loosen the cylinder head and remove head from cylinder barrel. When removing cylinder head do not force if binding occurs. Reverse rotation a couple times and try removing again. If still no release, tap barrel with hammer in threaded area, and try again. Repeat if necessary, until head is completely removed.
7. Attach a suitable pulling device to the cylinder rod port block end or cylinder rod end, as applicable.

NOTICE

EXTREME CARE SHOULD BE TAKEN WHEN REMOVING THE CYLINDER ROD, HEAD, AND PISTON. AVOID PULLING THE ROD OFF-CENTER, WHICH COULD CAUSE DAMAGE TO THE PISTON AND CYLINDER BARREL SURFACES.

8. With the barrel clamped securely, apply pressure to the rod pulling device and carefully withdraw the complete rod assembly from the cylinder barrel.

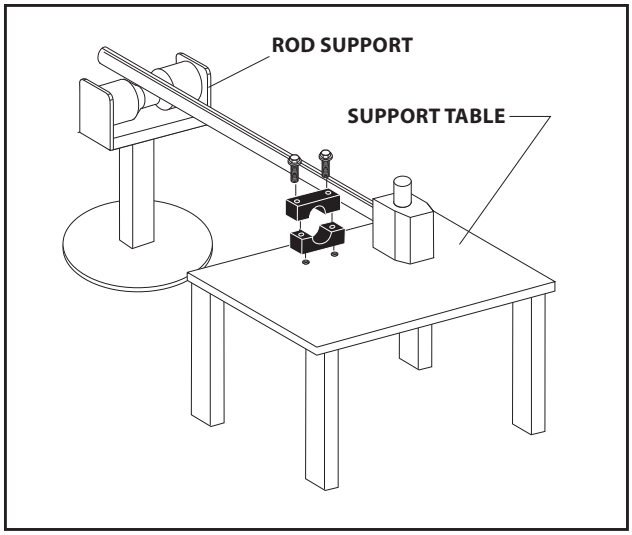

Figure 4-18. Cylinder Rod Support

9. Using suitable protection, clamp the cylinder rod in a vise or similar holding fixture as close to the piston as possible.
10. Loosen and remove the capscrew(s), if applicable, which attach the tapered bushing to the piston.
11. Insert the capscrew(s) in the threaded holes in the outer piece of the tapered bushing. Progressively tighten the cap screw(s) until the bushing is loose on the piston.
12. Remove the bushing from the piston.
13. Screw the piston CCW, by hand, and remove the piston from cylinder rod.
14. Remove and discard the piston o-rings, seal rings, and backup rings.
15. If applicable, remove the piston spacer from the rod.
16. Remove the rod from the holding fixture. Remove the cylinder head gland and retainer

plate, if applicable. Discard the o-rings, back-up rings, rod seals, and wiper seals.

Cleaning and Inspection

1. Clean all parts thoroughly in an approved cleaning solvent.
2. Inspect the cylinder rod for scoring, tapering, ovality, or other damage. If necessary, dress rod with Scotch Brite or equivalent. Replace rod if necessary.
3. Inspect threaded portion of rod for excessive damage. Dress threads as necessary.
4. Inspect inner surface of cylinder barrel tube for scoring or other damage. Check inside diameter for tapering or ovality. Replace if necessary.
5. Inspect threaded portion of barrel for damage. Dress threads as necessary.
6. Inspect piston surface for damage and scoring and for distortion. Dress piston surface or replace piston as necessary.
7. Inspect threaded portion of piston for damage. Dress threads as necessary.
8. Inspect seal and o-ring grooves in piston for burrs and sharp edges. Dress applicable surfaces as necessary.
9. Inspect cylinder head inside diameter for scoring or other damage and for ovality and tapering. Replace as necessary.
10. Inspect threaded portion of head for damage. Dress threads as necessary.
11. Inspect seal and o-ring grooves in head for burrs and sharp edges. Dress applicable surfaces as necessary.
12. Inspect cylinder head outside diameter for scoring or other damage and ovality and tapering. Replace as necessary.
13. If applicable, inspect rod and barrel bearings for signs of correct excessive wear or damage. Replace as necessary.
    a. Thoroughly clean hole, (steel bushing) of burrs, dirt etc. to facilitate bearing installation.
    b. Inspect steel bushing for wear or other damage. If steel bushing is worn or damaged, rod/barrel must be replaced.
    c. Lubricate inside of steel bushing with WD40 prior to bearing installation.
    d. Using an arbor of the correct size, carefully press the bearing into steel bushing.

NOTE: *Install pin into the Gar-Max bearing dry. Lubrication is not required with nickel plated pins and bearings.*

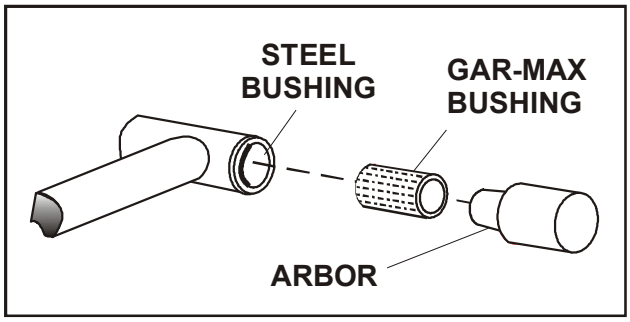

Figure 4-19. Gar-Max Bearing Installation

14. Inspect travel limiting collar or spacer for burrs and sharp edges. If necessary, dress inside diameter surface with Scotch Brite or equivalent.
15. If applicable, inspect port block fittings and holding valve. Replace as necessary.
16. Inspect the oil ports for blockage or the presence of dirt or other foreign material. Repair as necessary.
17. If applicable, inspect piston rings for cracks or other damage. Replace as necessary.

Assembly

NOTE: *Prior to cylinder assembly, ensure that the proper cylinder seal kit is used. See your JLG Parts Manual for these machine models.*

Apply a light film of hydraulic oil to all components prior to assembly.

1. A special tool is used to install a new rod seal into the applicable cylinder head gland groove.

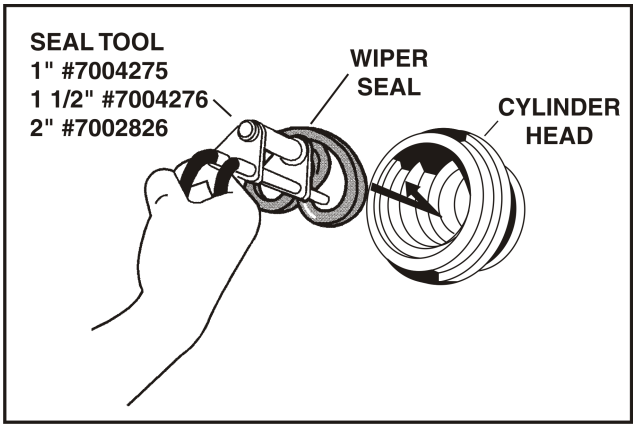

Figure 4-20. Rod Seal Installation

NOTICE

WHEN INSTALLING 'POLY-PAK' PISTON SEALS, ENSURE SEALS ARE INSTALLED PROPERLY. REFER TO WIPER SEAL INSTALLATION FOR CORRECT SEAL ORIENTATION. IMPROPER SEAL INSTALLATION COULD RESULT IN CYLINDER LEAKAGE AND IMPROPER CYLINDER OPERATION.

2. Use a soft mallet to tap a new wiper seal into the applicable cylinder head gland groove. Install a new wear ring into the applicable cylinder head glandgroove.

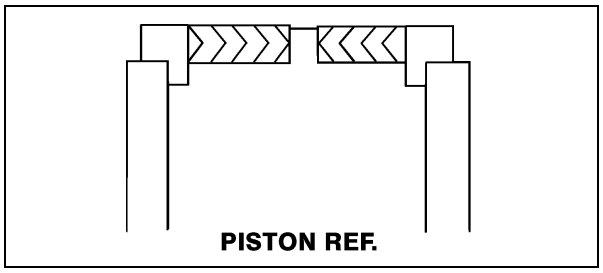

Figure 4-21. Poly-Pak Piston Seal Installation

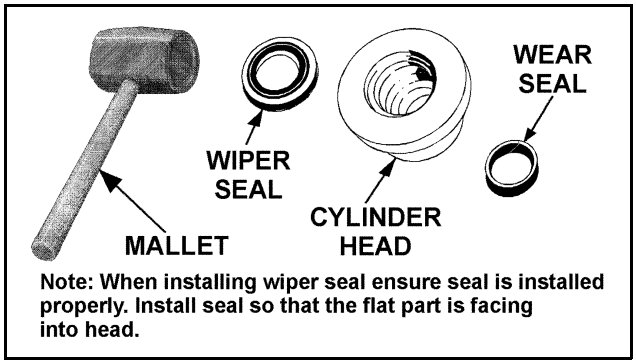

Figure 4-22. Wiper Seal Installation

3. Place a new o-ring and back-up seal in the applicable outside diameter groove of the cylinder head.

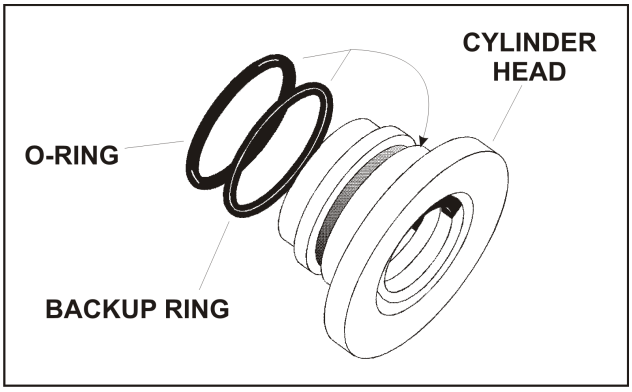

Figure 4-23. Installation of Head Seal Kit

4. Install washer ring onto rod, carefully install the head gland on the rod, ensuring that the wiper and rod seals are not damaged or dislodged. Push the head along the rod to the rod end, as applicable.
5. If applicable, correctly place new o-ring in the inner piston diameter groove. (The backup ring side facing the O-ring is grooved.)
6. If applicable, correctly place new seals and guide lock rings in the outer piston diameter groove. (A tube, with I.D. slightly larger than the O.D. of the piston is recommended to install the solid seal.)

NOTE: *The backup rings for the solid seal have a radius on one side. This side faces the solid seal.(See magnified insert in Figure 4-9. The split of seals and backup rings are to be positioned so as not to be in alignment with each other.*

7. Using suitable protection, clamp the cylinder rod in a vise or similar holding fixture as close to piston as possible.
8. Carefully thread the piston on the cylinder rod hand tight, ensuring that the o-ring and back-up rings are not damaged or dislodged.
9. Thread the piston onto the rod until it abuts the spacer end and install the tapered bushing.

NOTE: *When installing the tapered bushing, piston and mating end of rod must be free of oil.*

10. Assemble the tapered bushing loosely into the piston and insert JLG capscrews (not vendor capscrews) through the drilled holes in the bushing and into the tapped holes in the piston.
11. Tighten the capscrews evenly and progressively in rotation to the specified torque value.

12. After the screws have been torqued, tap the tapered bushing with a hammer (16 to 24 oz.) and brass shaft (approximately 3/4" in diameter) as follows;
    a. Place the shaft against the cylinder rod and in contact with the bushing in the spaces between the capscrews.
    b. Tap each space once; this means the tapered bushing is tapped 3 times as there are 3 spaces between the capscrews.
13. Retorque the capscrews evenly and progressively in rotation to the specified torque value.
14. Remove the cylinder rod from the holding fixture.
15. Place new guide locks and seals in the applicable outside diameter grooves of the cylinder piston.
16. Position the cylinder barrel in a suitable holding fixture.

NOTICE

EXTREME CARE SHOULD BE TAKEN WHEN INSTALLING THE CYLINDER ROD, HEAD, AND PISTON. AVOID PULLING THE ROD OFF-CENTER, WHICH COULD CAUSE DAMAGE TO THE PISTON AND CYLINDER BARREL SURFACES.

17. With the barrel clamped securely, and while adequately supporting the rod, insert the piston end into the barrel cylinder. Ensure that the piston loading o-ring and seal ring are not damaged or dislodged.
18. Continue pushing the rod into the barrel until the cylinder head gland can be inserted into the barrel cylinder.
19. Secure the cylinder head gland using the washer ring and socket head bolts.

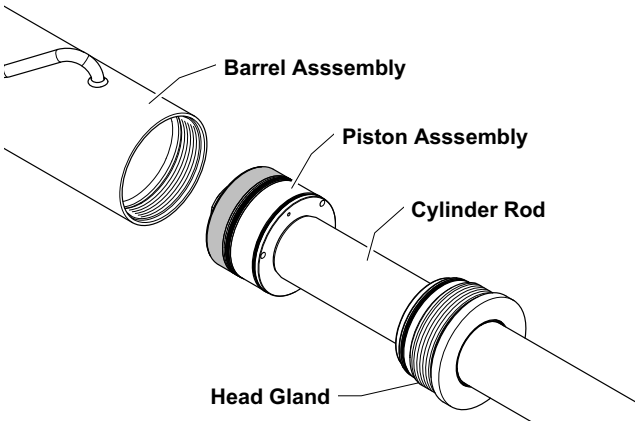

Figure 4-24. Rod Assembly Installation

20. After the cylinder has been reassembled, the rod should be pushed all the way in (fully retracted) prior to the reinstallation of any holding valve or valves.
21. If applicable, install the cartridge-type holding valve and fittings in the rod port block, using new o-rings as applicable.
22. Push the piston onto the rod until it abuts the spacer end and install the attaching nut.

⚠ WARNING

WHEN REBUILDING THE CYLINDERS, APPLY JLG THREADLOCKER PN 0100071 TO THE PISTON NUT, THEN TORQUE PISTON NUT. REFER TO APPLICABLE CYLINDER ILLUSTRATION FOR TORQUE REQUIREMENT.

1. Remove the cylinder rod from the holding fixture.
2. Position the cylinder barrel in a suitable holding fixture.

NOTICE

EXTREME CARE SHOULD BE TAKEN WHEN INSTALLING THE CYLINDER ROD, HEAD, AND PISTON. AVOID PULLING THE ROD OFF-CENTER, WHICH COULD CAUSE DAMAGE TO THE PISTON AND CYLINDER BARREL SURFACES.

3. With barrel clamped securely, and while adequately supporting the rod, insert the piston end into the barrel cylinder. Ensure that the piston loading o-ring and seal ring are not damaged or dislodged.
4. Continue pushing the rod into the barrel until the cylinder head gland can be inserted into the barrel cylinder.
5. If applicable, secure the cylinder head retainer using a suitable chain wrench.
6. After the cylinder has been reassembled, the rod should be pushed all the way in (fully retracted) prior to the reinstallation of any holding valve or valves.
7. If applicable, install the cartridge-type holding valve and fittings in the port block using new o-rings as applicable. Refer to Figure 4-14., Lift Cylinder - Lower on page 4-17 and Figure 4-15., Lift Cylinder - Upper on page 4-18.

SECTION 5. JLG CONTROL SYSTEM

5.1 HAND HELD ANALYZER

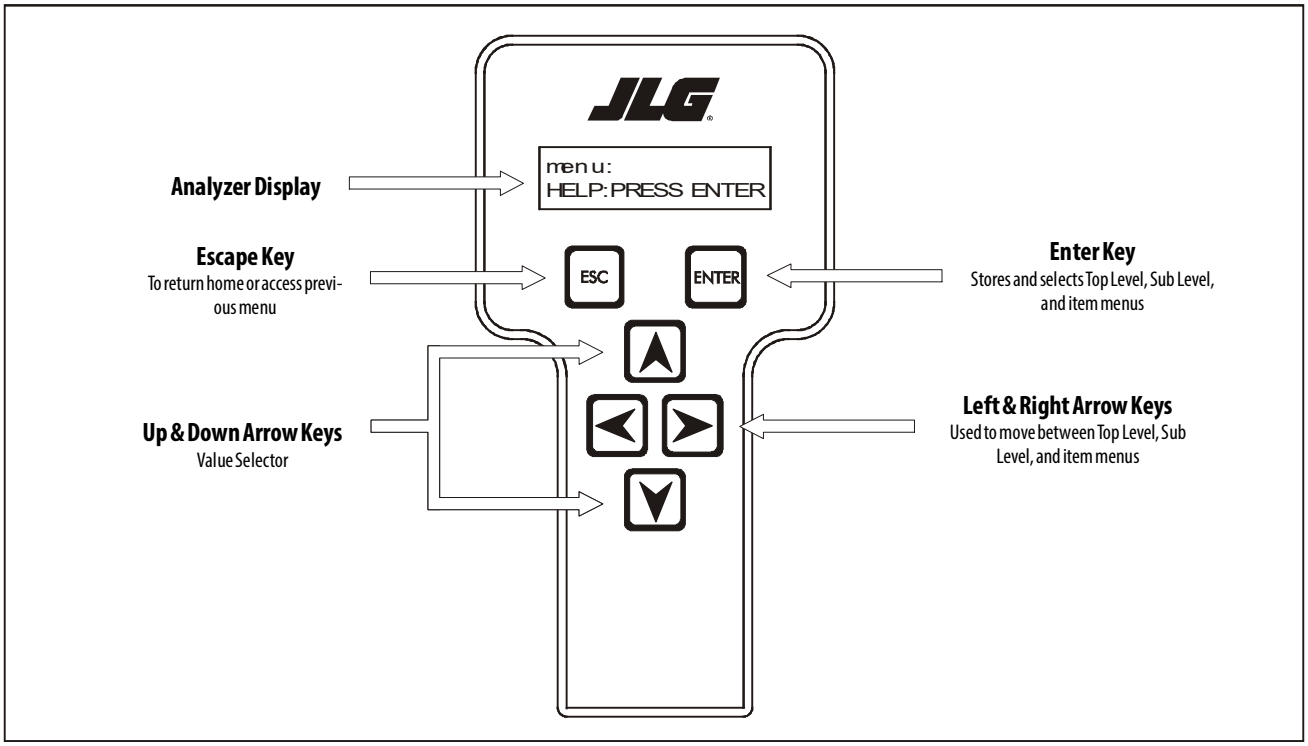

Figure 5-1. Hand Held Analyzer

Diagnostic Port

To connect the Hand Held Analyzer, the diagnostic port plug **(1)** is located in the wiring harness close to the hydraulic valve manifold **(2)**, and machine controller logic module **(3),** inside the right side compartment door, as shown in Figure 5-2.

To Connect the Hand Held Analyzer

1. Connect the four pin end of the cable supplied with the analyzer, to the diagnostic port plug and connect the remaining end of the cable to the analyzer.

NOTE: *The cable has a four pin connector at each end of the cable; the cable cannot be connected backwards.*

2. Power up the control system by turning the ground control station - platform/ground selector switch - to the platform position and pulling both platform and ground control emergency stop buttons on.

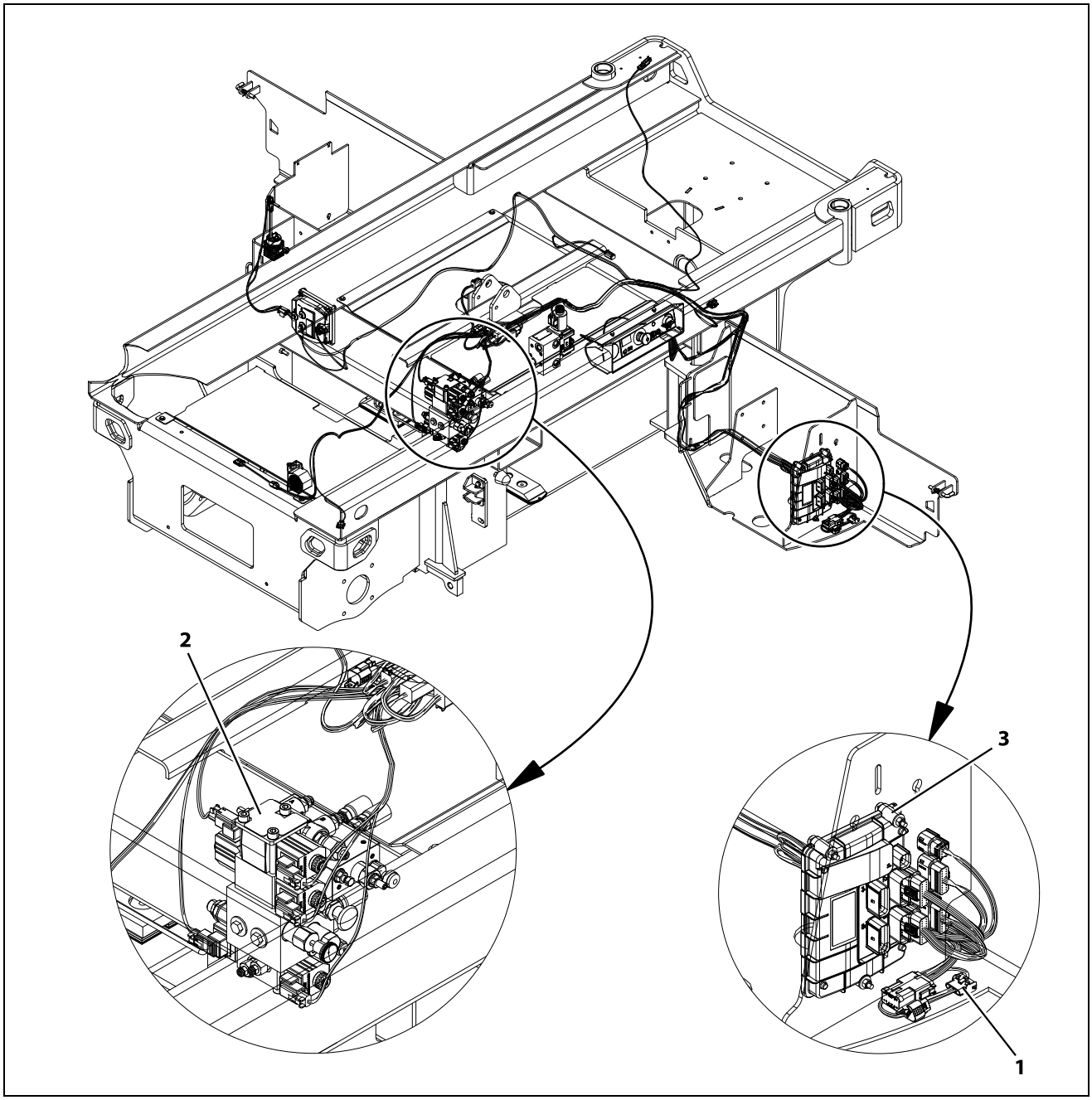

1. Diagnostic Port Plug
2. Hydraulic Valve Manifold
3. Controller Logic Module

Figure 5-2. Diagnostic Port Location
(Inside right side compartment door)

Using the Analyzer

With the machine power on and the analyzer connected properly, the analyzer will display the following:

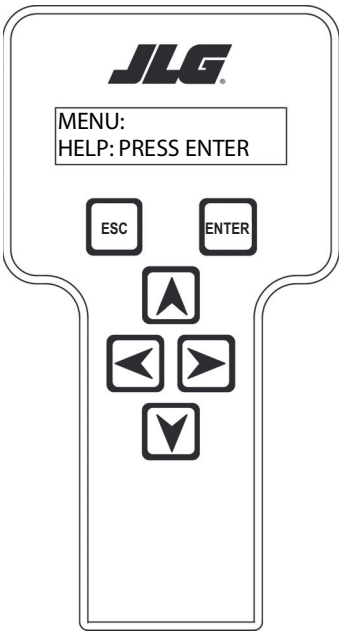

HELP:
PRESS ENTER

At this point, using the **RIGHT** and **LEFT** arrow keys, you can move between the top level menu items. To select a displayed menu item, press **ENTER.** To cancel a selected menu item, press **ESC**; then you will be able to scroll using the right and left arrow keys to select a different menu item.

The top level menus are as follows:

HELP
DIAGNOSTICS
SYSTEM TEST
ACCESS LEVEL
PERSONALITIES
MACHINE SETUP
CALIBRATION

If you press **ENTER**, at the HELP: PRESS ENTER display, and a fault is present, the analyzer display will scroll the fault across the screen. If more than one fault is present only the highest priority fault will show. The other active faults are viewable in Logged Help. If there was no fault detected, the display will read:

In platform mode**,**
HELP: (001)
EVERYTHING OK,

In ground mode**,**
HELP: (002)
GROUND MODE OK

If **ENTER** is pressed again, the display moves to the following display:

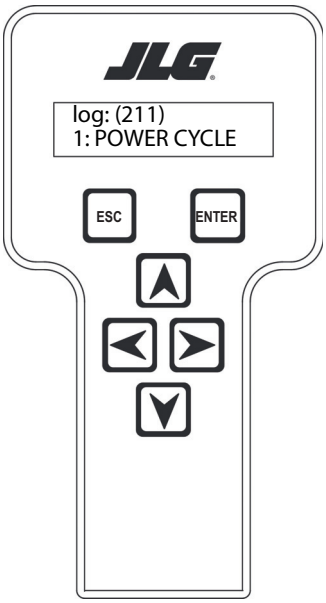

LOG: (211)
1: Power Cycle (Or last recorded fault)

At this point, the analyzer will display the highest priority active fault, if any are present. You may scroll through the fault logs to view what the last fifteen faults were. Use the right and left arrow keys to scroll through the fault logs. The active faults, are listed before the first POWER CYCLE. To return to the top menu, press **ESC** two times.
When a top level menu is selected, a new set of menu items may be offered; If for example you choose Personalities:

DRIVE
LIFT
STEER
GROUND

Pressing **ENTER** with any of the above displayed menus, will display additional sub-menus within the selected menu. In some cases the next level is the parameter or information to be changed. Refer to the flow chart for what menus are available within the top level menus. You may only view the personality settings for selected menus while in access level 2. Remember, you may always cancel a selected menu item by pressing the **ESC** key.

Changing the Access Level of the Hand Held Analyzer

When the analyzer is first connected, you will be in access level 2 which enables you to only view most configuration settings which cannot be changed until you enter a password to advance to a lower level. This ensures that a setting cannot be accidentally altered. To change the access level, the correct password must be entered. To enter the password, scroll to the **ACCESS LEVEL** menu.

For example:

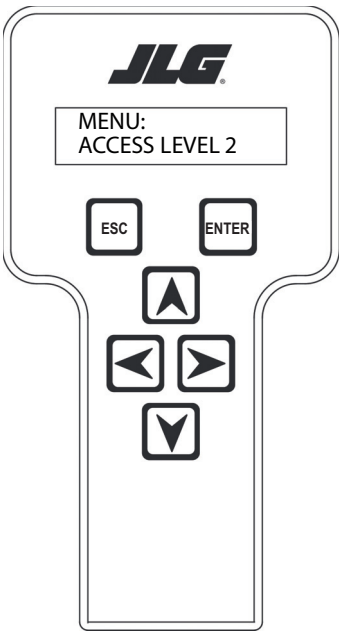

MENU:
ACCESS LEVEL 2

Press **ENTER** to select the **ACCESS LEVEL** menu.
Using the **UP** or **DOWN** arrow keys, enter the first digit of the password, 3.
Then using the **RIGHT** arrow key, position the cursor to the right one space to enter the second digit of the password.
Use the **UP** or **DOWN** arrow key to enter the second digit of the password which is 3.
Repeat this process until you have entered all five digits of the password which is **33271**.
Once the correct password is displayed, press **ENTER**. The access level should display the following, if the password was entered correctly:

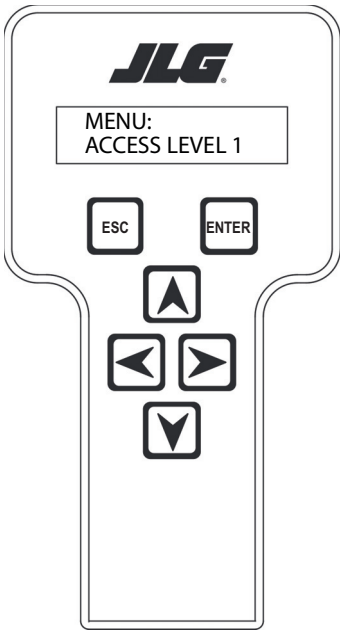

MENU:
ACCESS LEVEL 1

Repeat the above steps if the correct access level is not displayed or you can not adjust the personality settings:

Adjusting Parameters Using the Hand Held Analyzer

Once you have gained access to level 1, and a personality item is selected, press the UP or DOWN arrow keys to adjust its value, for example:

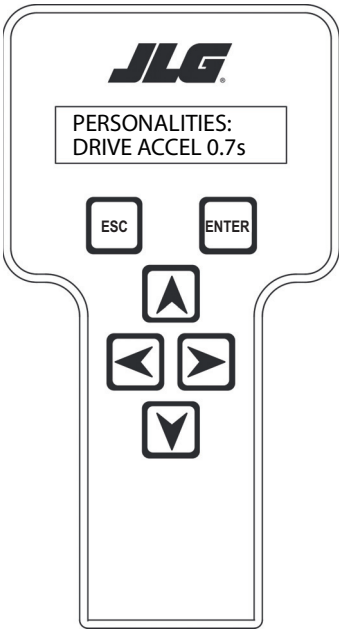

PERSONALITIES:
DRIVE ACCEL 0.7s

There will be a minimum and maximum for the value to ensure efficient operation. The Value will not increase if the **UP** arrow is pressed when at the maximum value nor will the value decrease if the **DOWN** arrow is pressed and the value is at the minimum value for any particular personality. If the value does not change when pressing the up and down arrows, check the access level to ensure you are at access level 1.

Machine Setup

When a machine digit item is selected, press the **UP** or **DOWN** arrow keys to adjust its value, for example:

WARNING

FAILURE TO MAKE THE PROPER SETTINGS FOR THE PARTICULAR MACHINE CAN RESULT IN IMPROPER OPERATION.

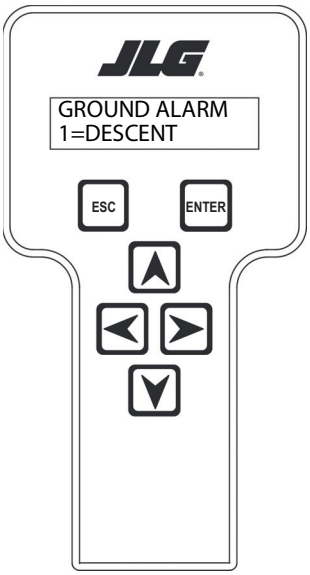

GROUND ALARM:
1=DESCENT

The effect of the machine digit value is displayed along with its value. The above display would be selected if the machine was equipped with a ground alarm and you wanted it to sound when driving. There are certain settings allowed to install optional features or select the machine model.
When selecting the machine model to match the size of the machine, the personality settings will return to default settings.

NOTE: *Refer to Table 5-2, Machine Model Adjustment (Personality Settings) - Version P1.9.0 and Table 5-1, Machine Configuration Programming Information - Version P1.9.0 for the default settings.*

Password 33271 will give you access to level 1, which will permit you to change all machine personality and/or machine setup settings.

WARNING

CHANGING THESE SETTINGS MAY ADVERSELY AFFECT THE PERFORMANCE OF YOUR MACHINE.

5.2 JOYSTICK CALIBRATION

The joystick calibration should be completed if the joystick is replaced. To perform the joystick calibration both emergency stop switches must be pulled out (reset) and the ground control keyswitch set on platform mode.

1. Plug the analyzer into the machine, "Help Press Enter" should be displayed on the analyzer display.
2. Press the right arrow key to "Access Level 2".
3. Press Enter once. At this screen, you are asked to enter a password: Enter "33271" by doing the following:
   - **a.** Using the up and down key enter the first number.
   - **b.** Right arrow key once and enter the next number.
   - **c.** Repeat steps A and B until you have entered "33271" and press Enter.
   - **d.** Access level 1 should be on the display.
4. Press right arrow key to "Calibrations" and press Enter once.
5. "Calibration: Joystick" should appear, press Enter once.
6. "Cal Joystick: Yes: Enter, No: Esc" should appear, press Enter once.
7. "Cal Joystick: Fwd to Max" will appear. Move joystick completely forward and hold, then press Enter.
8. "Cal Joystick: Center" will appear. Release joystick to the neutral position and press Enter.
9. "Cal Joystick: Rev to Max" will appear. Move joystick completely in the reverse position and hold, then press Enter.
10. "Cal Joystick: Complete" will appear. Power down the machine.

5.3 TILT SENSOR CALIBRATION

Be sure that the machine is parked and stowed on level ground.

NOTE: *Tilt Sensor Calibration can not be performed if the main contactor switch is open due to an alarm.*

1. Enter Access Level 1 and go to the CALIBRATION/ TILT SENSOR/LEVEL VEHICLE screen.
2. Choose the right arrow key to view the raw, uncalibrated tilt sensor values. If either raw angle reads ±5.0 or more, the machine is too unlevel and the software will prohibit calibration. Therefore, attempt to dissect the three areas of error to find the primary contributor:
   - **a.** Machine mounting and/or grade: Try to measure the top of the tilt sensor for levelness. If unable to get a good reading, unbolt the tilt sensor and check the sensor's mounting surface for levelness.
   - **b.** Observe whether the tilt sensor is properly seated.
   - **c.** Tilt sensor has developed an offset shift: Keep the tilt sensor electrically connected. Level one axis of the tilt sensor and observe the raw reading (should be within ± 2.0). Do the same for the other axis. If either axis is greater than ± 2.0, replace the tilt sensor.

NOTE: *Check that the tilt switch is properly set by referring to the Tilt Activation Settings table in Section 1 of this manual.*

Tilt Sensor Failure Troubleshooting

Some possible reasons that the tilt sensor will not calibrate are:

- **a.** The surface the machine is sitting on is off level by a few degrees (flat doesn't imply level; parking lots are often not level).
- **b.** The tilt sensor has failed one or both of the channels (X axis and Y axis).
- **c.** Tilt sensor has moisture intrusion that has shifted its output.
- **d.** Water and/or corrosion in the sensor has corrupted electrical connections or caused a tilt sensor failure (observe any cracks in the housing).

For the following troubleshooting steps, a bubble level (smaller is better) will be needed and the machine must be on a level surface:

1. If the Analyzer displays angles other than +20.0°, attempt to calibrate. If machine won't calibrate, note the reason displayed on Analyzer:
   - **a.** SENSOR FAILURE – tilt sensor internal frequency is out of range (replace sensor).
   - **b.** NOT LEVEL - tilt sensor has either developed an offset or it is too unlevel as mounted on the machine.

5.4 ELEVATION SENSOR CALIBRATION

Any time the elevation sensor is calibrated, LSS (Load Sensing System) must also be calibrated in order for the pressure curves to align properly (refer to Section 6.4 for more information on calibrating LSS).

NOTICE

MACHINE MUST BE ON LEVEL GROUND BEFORE ELEVATION SENSOR CAN BE SET.

1. Be sure that the machine is parked and platform stowed on level ground.
2. Attach the analyzer near the ground control station.
3. Go to Access Level 1 and scroll through to CALIBRATION.
4. Under CALIBRATION, go to SET STOW ELEV.
5. Press ENTER for YES to set the stowed height for the elevation sensor.
6. Fully raise the platform.
7. Under CALIBRATION, go to SET MAX ELEV.
8. Press ENTER for YES to set the maximum height for the elevation sensor.

NOTE: *Check the sensor by lifting the scissor arms, from the platform, and driving until the drive speed cuts back. Refer to Table 1-8, High Drive Cutout Height in Section 1 for proper speed cut out height.*

5.5 UPDATING SOFTWARE

Software updates are available via OLE (Online Express). Navigate to the website and follow the instructions to download software updates.

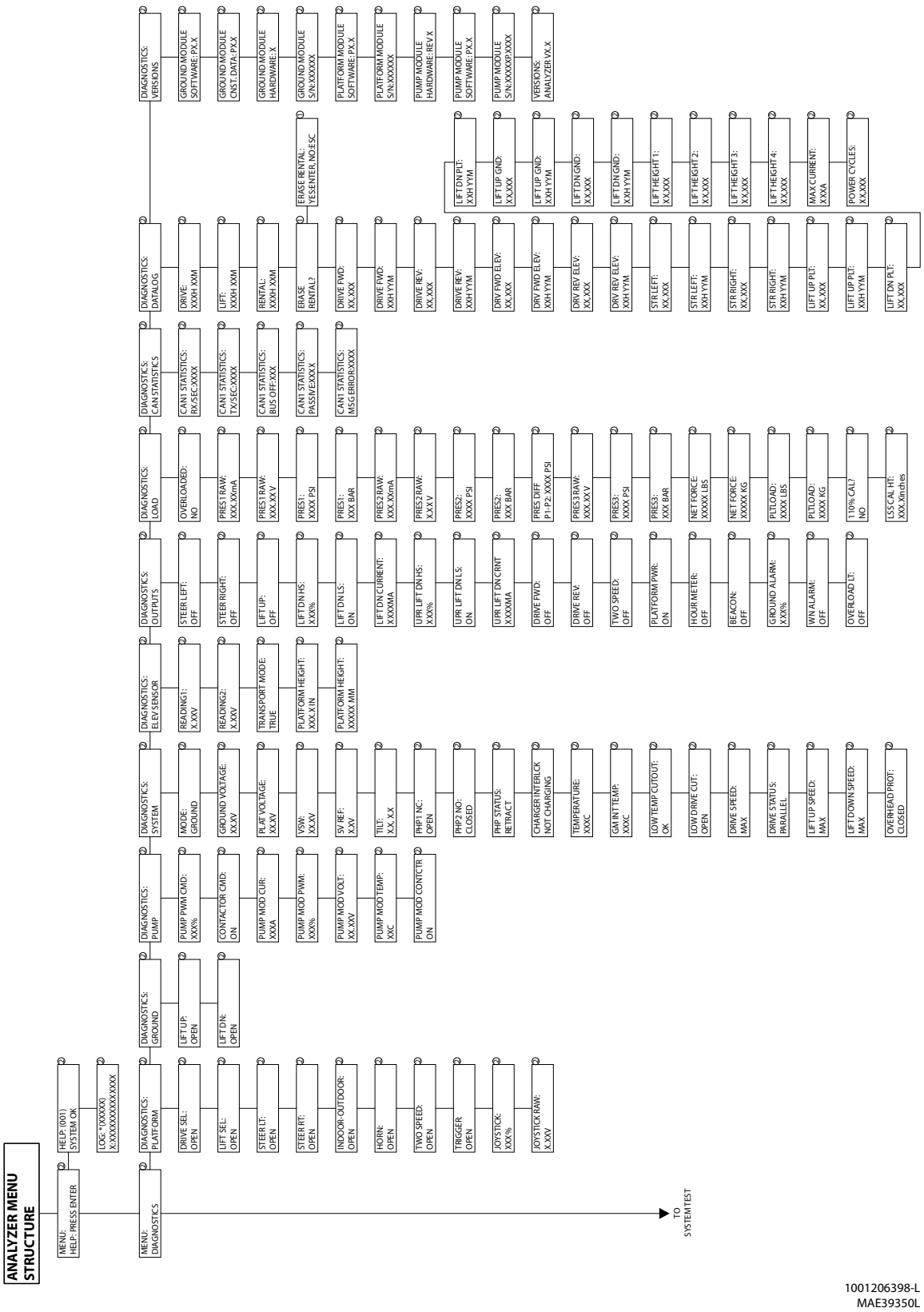

1001206398-L
MAE39350L

Figure 5-3. Analyzer Software P1.9.0 - Sheet 1 of 4

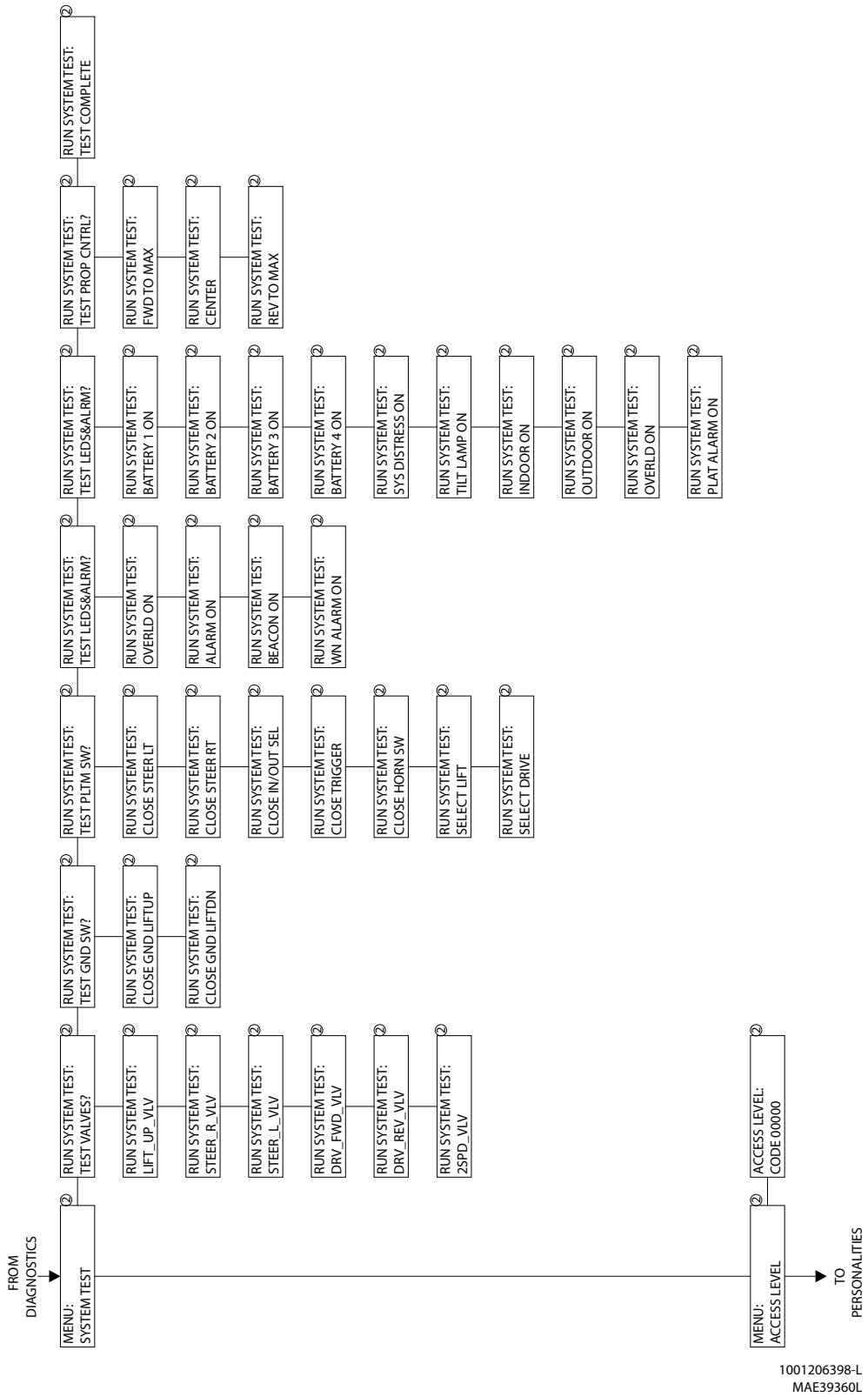

Figure 5-4. Analyzer Software P1.9.0 - Sheet 2 of 4

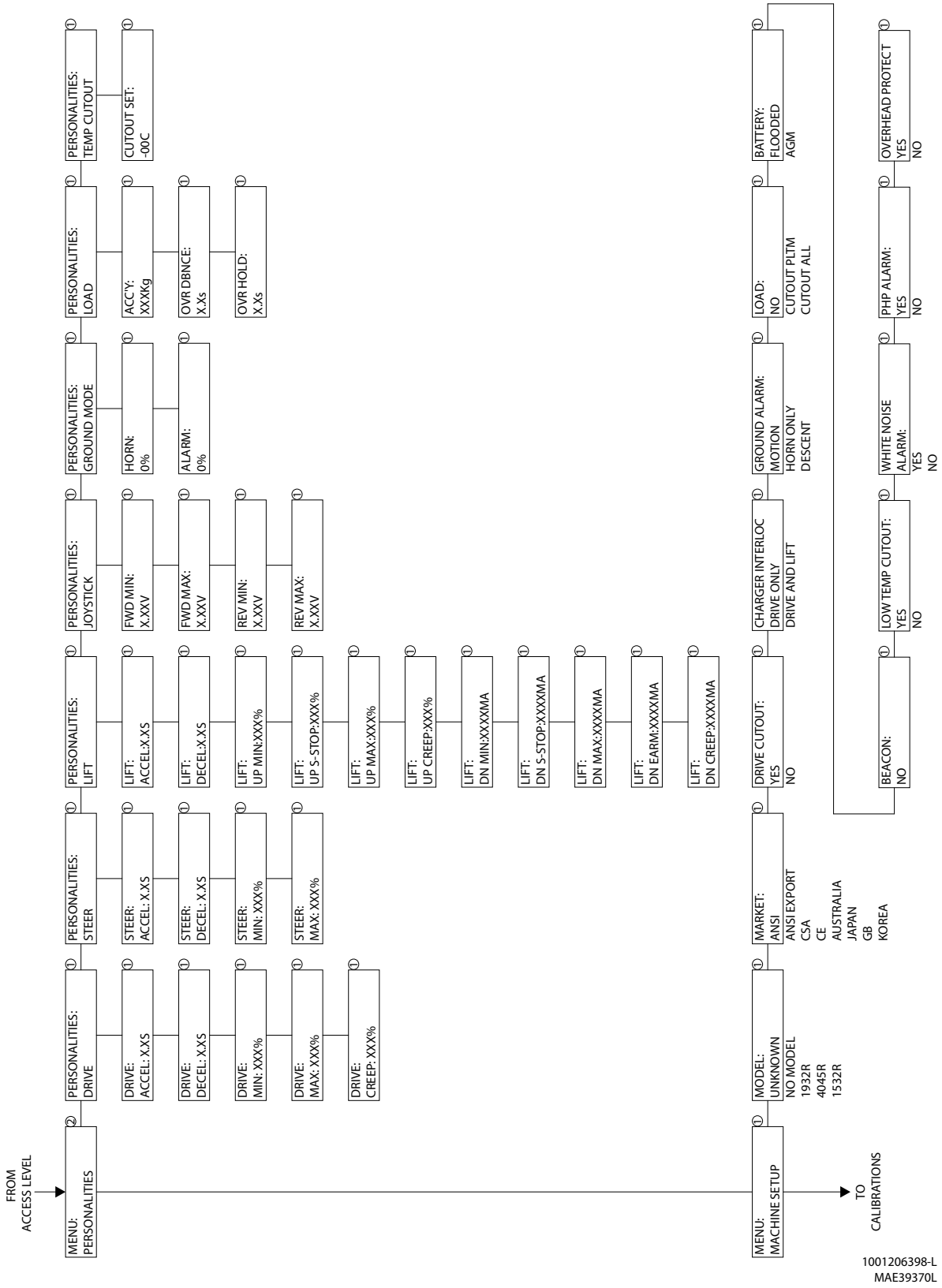

Figure 5-5. Analyzer Software P1.9.0 - Sheet 3 of 4

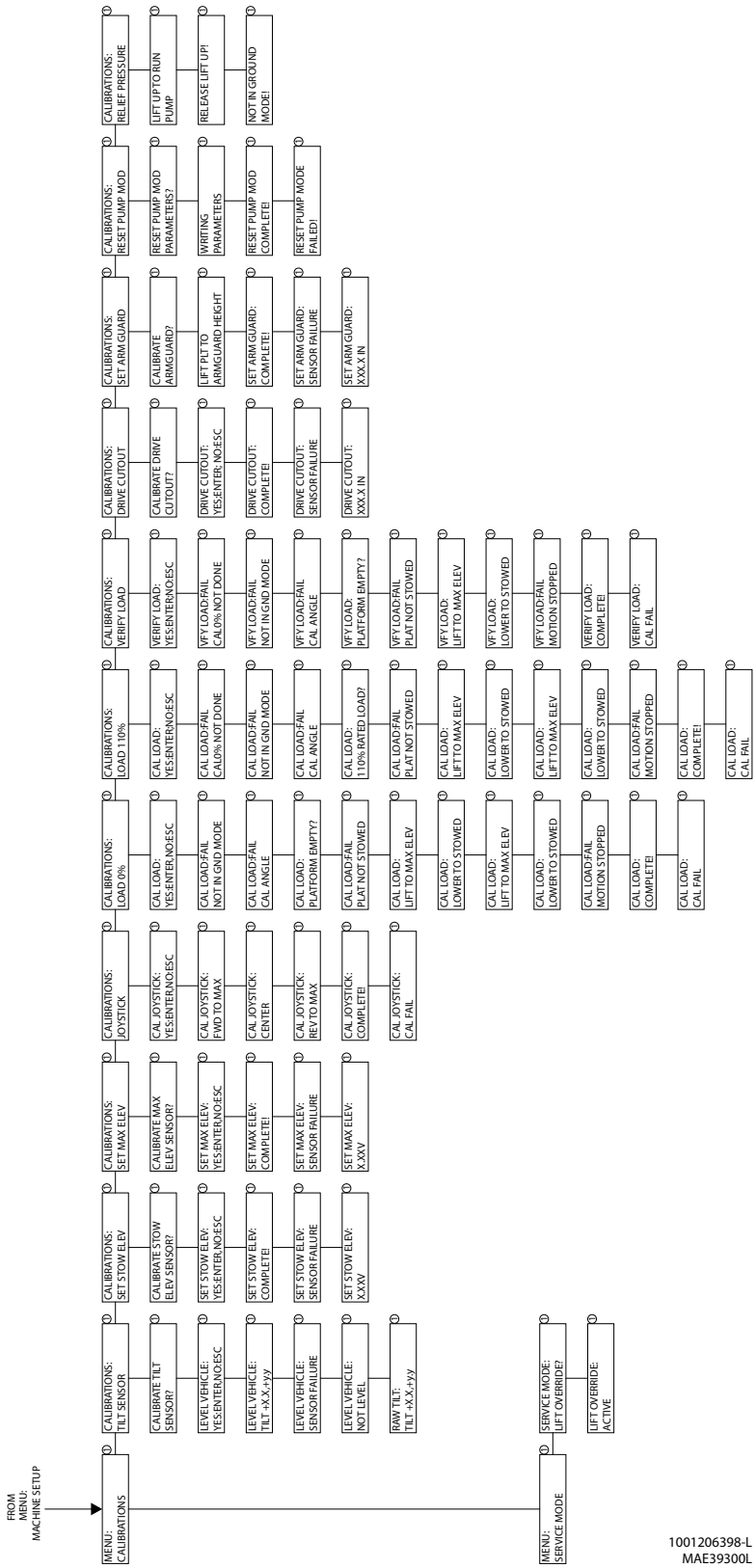

Figure 5-6. Analyzer Software P1.9.0 - Sheet 4 of 4

5.6 MACHINE CONFIGURATION PROGRAMMING INFORMATION

NOTE: *1. When configuring a R scissors machine, the Machine Configuration must be completed before any Personality settings can be changed, see Table 5-2. Changing the personality settings first and then changing the model number of the machine configuration will cause the personality settings to return to default.*

2. Solid shaded entries are not available for the selected Market.

Table 5-1. Machine Configuration Programming Information - Version P1.9.0

Configuration Digit	Setting	Description	Market Default Setting							
			1	2	3	4	5	6	7	8
MODEL	1 2 3	1932R 1532R 4045R	1	1	1	1	1	1	1	1
MARKET	1 2 3 4 5 6 7 8	ANSI USA ANSI EXPORT CSA CE AUSTRALIA JAPAN GB KOREA	1	1	1	1	1	1	1	1
DRIVE CUTOUT	1 2	NO - Vehicle is not configured with Drive cutout when elevated. YES - Vehicle is configured with Drive cutout when elevated.	1	1	1	1	1	1	1	1
CHARGER INTERLOCK	1 2	DRIVE ONLY - Drive motion prevented while vehicle is charging. DRIVE AND LIFT UP - Drive and lift up motions are prevented while vehicle is charging. Required for CE.	1	1	1	1	1	1	1	1
GROUND ALARM	1 2 3	MOTION – Ground Alarm sounds during Lift Up, Lift Down, Drive Forward, or Drive Reverse. HORN ONLY – Ground Alarm only sounds when user presses Platform Horn button. DESCENT – Ground Alarm sounds during Lift Down.	1	1	1	2	1	1	2	1
LOAD	1 2 3	NO - Load Sensing System (LSS) is not fitted to the vehicle. CUTOUT PLATFORM - Load Sensing System (LSS) is fitted, and Platform Controls are prevented in the event of an Overload. Ground Controls remain functional. CUTOUT ALL - Load Sensing System (LSS) is fitted. Platform and Ground Controls are prevented in the event of an Overload.	1	2	1	3	2	2	3	2
BATTERY	1 2	FLOODED - Batteries are conventional lead-acid type. AGM - Batteries are absorbed glass mat type.	1	1	1	1	1	1	1	1
BEACON	1 2	YES - Optional beacon is present. NO - Optional beacon not present.	2	2	2	1	2	2	1	2
LOW TEMP CUTOUT	1 2	YES - Low temp cutout is active. NO - Low temp cutout is not active.	2	2	2	2	2	2	2	2
WHITE NOISE ALARM	1 2	NO – Vehicle does not have the white noise alarm. YES – Vehicle has the white noise alarm.	1	1	1	1	2	1	1	1
PHP ALARM	1 2	NO – Vehicle is not configured with PHP Alarm when Pothole bar is blocked. YES – Vehicle is configured with PHP Alarm when Pothole bar is blocked.	1	1	1	1	1	1	1	1
OVERHEAD PROTECT	1 2	NO– Vehicle is not configured with Overhead Protection System Sensors. YES – Vehicle is configured with Overhead Protection System Sensors.	1	1	1	1	1	1	1	1

1001207563-E

5.7 MACHINE MODEL ADJUSTMENT (PERSONALITY SETTINGS)

Table 5-2. Machine Model Adjustment (Personality Settings) - Version P1.9.0

Adjustment	Adjustment Range	4045R
DRIVE		
ACCEL	0.1 - 5.0 (Sec)	1.8
DECEL	0.1 - 2.0 (Sec)	1.2
MINIMUM	1 - 25%	1
MAXIMUM	26 - 100%	100
ElEV. MAXIMUM	0 - 50%	46
STEER		
ACCEL	0.1 - 5.0 (Sec)	0.1
DECEL	0.1 - 1.0 (Sec)	0.1
MIN	1 - 25%	10
MAX	26 - 100%	35
LIFT		
ACCEL	0.1 - 5.0 (Sec)	1.6
DECEL	0.1 - 1.0 (Sec)	0.8
UP MIN	1 - 45%	30
UP STOP	1 - 100%	55
UP MAX	31 - 100%	100
UP CREEP	1 - 100%	50
DN MIN	250 - 350 mA	300
DN S-STOP	250 - 1200 mA	370
DN MAX	351 - 1200 mA	1050
DN EARM	250 - 1200 mA	370
DN CREEP	250 - 1200 mA	550
JOYSTICK		
FWD MIN	1.95 - 2.45 V	2.20
FWD MAX	0.94 - 1.44 V	1.19
REV MIN	2.59 - 3.09V	2.84
REV MAX	3.53 - 4.03 V	3.78
GROUND		
HORN	1 - 100%	94
ALARM	1 - 100%	25
LOAD		
OVERLOAD DEBOUNCE	0.0 - 5.0s	1.0s
OVERLOAD HOLD	0.0 - 5.0s	5.0s
ACC'Y	0 - 200KG	0
TEMP CUTOUT		
CUTOUT SET	-18 - 0 C	-18

1001207564-G

NOTE: *These settings may be changed in order to achieve optimal performance.*

SECTION 6. LSS (LOAD SENSING SYSTEM) SERVICE

6.1 THEORY OF OPERATION

The Load Sensing System (LSS) is designed to measure platform load and prevent overload situations. The system consists of pressure sensors on the lift cylinder, an elevation angle sensor, and the control module.

For vehicles with a single lift cylinder, a dual-channel pressure sensor with current output is mounted on the lift cylinder to measure head pressure. The primary feedback is scaled 0-3626 PSI as 4-20 mA. The backup feedback is scaled 0-5802 PSI as 4-20 mA. A single channel pressure with voltage output is mounted on the lift cylinder to measure rod pressure. The rod feedback is scaled 0-1450 PSI as 0.5-4.5 V. The pressures are combined with geometric information about the lift cylinder to calculate the net lift cylinder force. The primary and backup channels of the lift cylinder head pressure transducer are continuously compared to detect sensor integrity issues.

For vehicles with a double lift cylinder (4045R), a single channel pressure transducer with voltage output (0.5 V to 4.5 V) is mounted on the lower lift cylinder to measure head pressure. Another single channel pressure transducer is mounted on the upper lift cylinder to measure head pressure. The lower and upper feedback is scaled 0-3000 PSI as 0.5-4.5 V. A single channel pressure transducer with voltage output is mounted on the lower lift cylinder to measure the common rod pressure for the upper and lower cylinders. The rod feedback is scaled 0-1450 PSI as 0.5-4.5 V. These pressure are combined with geometric information about the lower and upper lift cylinders to calculate the net lift cylinder force. The lower and upper lift cylinder head pressure transducers are compared during lift up to detect sensor integrity issues.

The elevation angle sensor is used to estimate platform height based on lower arm angle. The calibration process teaches the control system the feedback voltage for the stowed and fully elevated positions. The feedback voltage and calibration information are combine with geometric information to calculate the platform height.

The LSS can be calibrated in the field without test weights using the procedure within the CALIBRATIONS ' LOAD 0% menu. The procedure allows the control system to measure net lift cylinder force at a variety of platform heights while lifting up and down with an empty platform. Once the force profile is validated, the control system uses geometric information to calculate the remaining calibration information for a loaded platform. Vehicles calibrated with this method may experience a slight capacity reduction (10% to 20%) but remain regulatory compliant. The control system will flash the Ground Overload Indicator twice at power-up to indicate LSS has been calibrated without test weights (refer to DIAGNOSTICS ' LOAD ' 110% CAL).

The LSS can be calibrated to maximum accuracy in the service center with test weights using the procedure within the CALIBRATIONS ' LOAD 110% menu. This procedure should be executed after CALIBRATIONS ' LOAD 0%. The procedure allows the control system to replace the calculated calibration information with measured net lift cylinder forces while lifting up and down with a loaded platform.

If the vehicle must be calibrated in a situation with restrictive ceiling height, the LSS will accept a partial height calibration. The platform should be lifted as close as practical to the ceiling when prompted to LIFT TO MAX ELEV. The control system will automatically restrict lift up to the demonstrated platform height until the system is re-calibrated to full height in the future.

The LSS can be periodically verified without test weights to extend calibration intervals. The procedure within the CALIBRATIONS ' VERIFY LOAD menu allows the control system to confirm net lift cylinder forces against calibration information at a variety of platform heights while lifting up and down with an empty platform. The control system will indicate PASS if the measured forces compare within a tight tolerance to the calibration information, and FAIL otherwise. Verification automatically restricts lift up if the vehicle is calibrated in a situation with restrictive ceiling height.

During operation, the control system does not measure platform load when platform height is below 10% of travel height.

The control system provides a mechanism to ignore instantaneous changes in friction and avoid spurious overloads. Measured platform load must be greater than the capacity limit for a period that exceeds the PERSONALITIES ' LOAD ' OVR DBNCE (seconds) setting before the LSS indicates an overload. Once an overload has occurred, measured platform load must be less than the capacity limits for a period that exceeds the PERSONALITIES ' LOAD ' OVR HOLD (seconds) setting before the LSS indicates no overload.

Accessories mounted in the platform have an impact on the LSS capacity limit. The PERSONALITY ' LOAD ' ACC'Y (KG) setting is used to account for accessories by reducing the capacity limit. The control system will manage accessories properly when the LOAD ' ACC'Y setting is adjusted prior to LSS calibration according to the documentation furnished with the factory-provided accessories. Light-weight accessories like optional lighting or foot-switches do not impact the LSS capacity limit and the LOAD ' ACC'Y setting should be set to zero. Accessories like the Electrician's Tree reduce the LSS capacity

limit according to their weight and the LOAD ' ACC'Y setting must be set to account for their total weight. Finally, accessories like the Panel Carrier induce wind loading on the vehicle and reduce the LSS capacity limit by more than their weight and the LOAD ' ACC'Y setting must be to the values recommended by JLG. Follow the documentation furnished with factory-provided accessories when fitting more than one accessory to a vehicle or consult JLG.

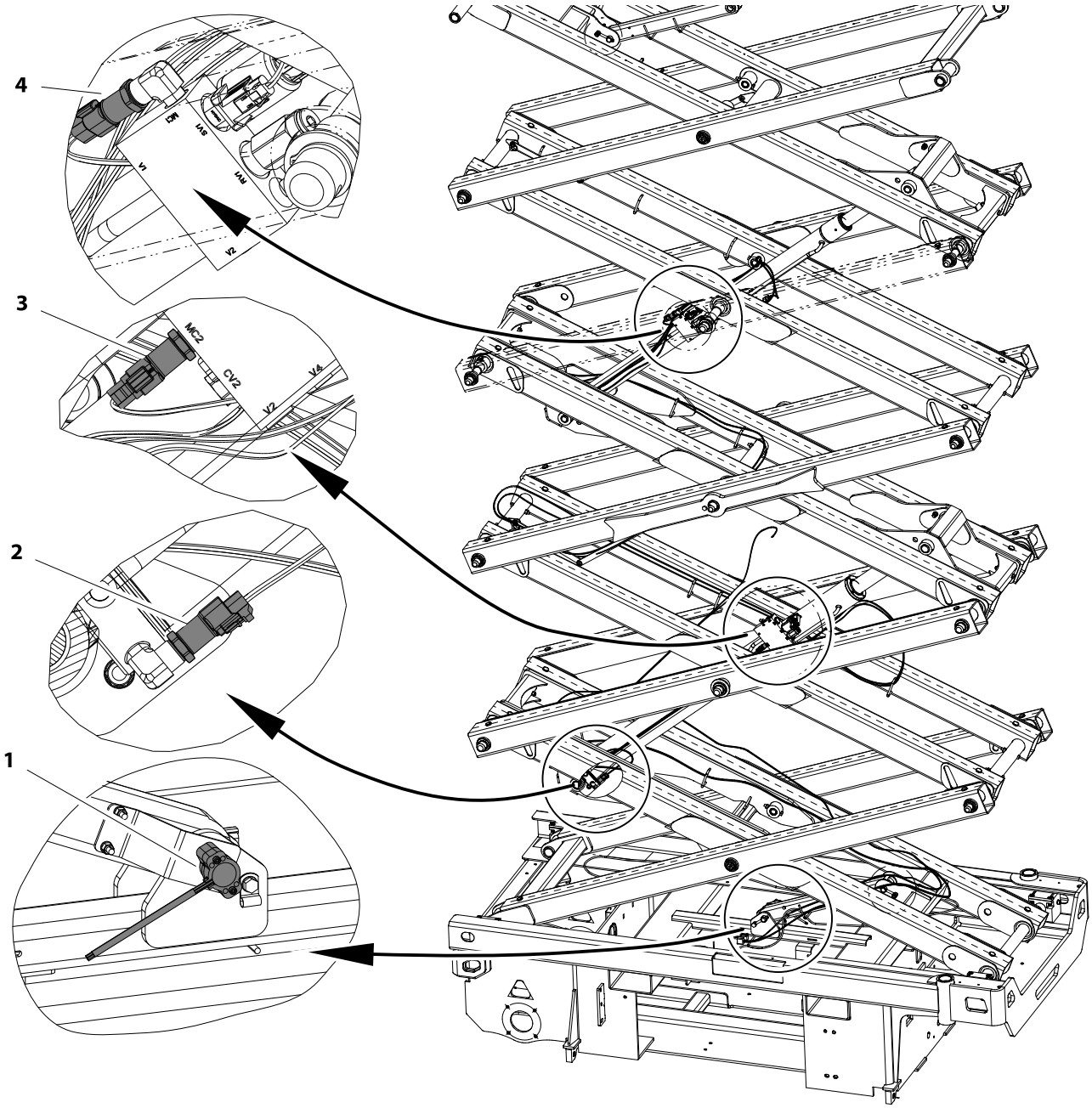

1. Elevation Angle Sensor
2. Lower Cylinder - Head Pressure Sensor
3. Lower Cylinder Rod Pressure Sensor
4. Upper Cylinder Head Pressure Sensor

Figure 6-1. LSS Component Locations

6.2 ANALYZER INFORMATION

Personalities Menu

The following parameter in the PERSONALITIES, LOAD menu adjust performance of the LSS. All adjustments must be made in Access Level 1 (33271).

Table 6-1. Personalities Menu Description

SUBMENU (Displayed on Analyzer 1st line)	PARAMETER (Displayed on Analyzer 2nd Line)	DESCRIPTION
LOAD:	OVR DBNCE: 0.3 S	This parameter sets the debounce time (in seconds) where platform load must be greater than the capacity limit before triggering overload
	OVR HOLD: 5.0 S	This parameter sets the minimum hold time (in seconds) where platform load must be less than the capacity limit before releasing overload.
	ACC'Y: 0 KG	This parameter reduces the capacity limit for permanently mounted platform accessories.

Diagnostic Menu

The Diagnostic Load menu's are another troubleshooting tool for the Load Sensing System. Sensor and status information is presented in real-time for the technician.

To access the Diagnostic Menu, use the LEFT and RIGHT Arrow keys to select DIAGNOSTICS from the Top Level Menu. Press the ENTER key to select the menu.

NOTE: *The Diagnostic Load menu's are not available when the LSS is not enabled. (Machine Setup, Load is set to 0=Not Installed*

Press the LEFT and RIGHT arrow keys to view the load and angle sub-menu and press the enter key. Once in the load and angle submenu, press the LEFT and RIGHT arrow keys to view the various displays.

The Table 6-2 details the structure of the Diagnostic, Load Menu, and describes the meaning of each piece of information presented.

Table 6-2. Diagnostic Menu Descriptions

DIAGNOSTICS MENU (Displayed on Analyzer 1st Line)	PARAMETER (Displayed on Analyzer 2nd Line)	PARAMETER VALUE (Displayed on Analyzer 2nd Line)	DESCRIPTION
DIAGNOSTICS: LOAD			Menu available only when Machine Setup's LOAD is CUTOUT PLTM or CUTOUT ALL
	OVERLOADED? NO	NO/YES	Displays NO when the platform load is within rated capacity of the vehicle; YES when platform load is excessive
	PRES1 RAW: 0.00 mA/V	mA or Volts	Displays the lift cylinder head pressure 1 raw reading; shown as volts for 4045R and mA for all remaining models
	PRES1: XXXX PSI	0.0-9999.9 PSI	Displays the lift cylinder head pressure 1 scaled reading in PSI
	PRES1: XXXX.X BAR	0.0 to 9999.9 BAR	Displays the lift cylinder head pressure 1 scaled reading in BAR
	PRES2 RAW: 00.00 mA/V	mA or Volts	Displays the lift cylinder head pressure 2 raw reading; shown as volts for 4045R and mA for all remaining models

Table 6-2. Diagnostic Menu Descriptions (Continued)

DIAGNOSTICS MENU (Displayed on Analyzer 1st Line)	PARAMETER (Displayed on Analyzer 2nd Line)	PARAMETER VALUE (Displayed on Analyzer 2nd Line)	DESCRIPTION
	PRES2: XXXX PSI	0.0-9999.9 PSI	Displays the lift cylinder head pressure 2 scaled reading in PSI
	PRES2: XXXX.X BAR	0.0 to 9999.9 BAR	Displays the lift cylinder head pressure 2 scaled reading in BAR
	PRES DIFF P1-P2: XXX PSI	0-999 PSI	Displays the difference between the lift cylinder 1 and 2 pressure readings
	PRES3 RAW: 0.00 V	0.00-9.99 V	Displays the lift cylinder rod pressure raw reading in volts
	PRES3: XXXX PSI	0.0-9999.9 PSI	Displays the lift cylinder rod pressure scaled reading in PSI
	PRES3: XXXX.X BAR	0.0 to 9999.9 BAR	Displays the lift cylinder rod pressure scaled reading in BAR
	NET FORCE: XX,XXX LBS	0.0 to 50,000 LBS	Displays the calculated lift cylinder net force in LBS
	PLT LOAD: XX,XXX LBS	0.0 to 25,000 LBS	Displays the estimate platform load in LBS
	110% CAL? NO	NO / YES	Displays NO when the vehicle is calibrated without test weights using CALIBRATIONS -> LOAD 0% only; YES when the vehicle is fully calibrated with test weights using CALIBRATIONS -> LOAD 0% and CALIBRATIONS -> LOAD 110%

6.3 CALIBRATION PREPARATION

The following procedure must be executed to prepare for calibration and verification.

NOTICE

IF THE CALIBRATION MUST BE PERFORMED OUTDOORS, ENSURE THE FOLLOWING ADDITIONAL CONDITIONS ARE MET BEFORE BEGINNING CALIBRATION PROCEDURES:

- **MACHINE IS ON A SLOPE LESS THAN OR EQUAL TO 0.5 DEGREE.**
- **WIND SPEED IS LESS THAN OR EQUAL TO 20 MPH (32 KPH).**
- **CALIBRATION WEIGHT IN THE PLATFORM IS CENTERED AND EVENLY DISTRIBUTED.**

1. Ensure the batteries are fully charged (25.0 V or greater) and hydraulic fluid level is acceptable.
2. Resolve any active control system faults before attempting calibration.
3. Park the vehicle on a level surface. The platform should be fully stowed and level within +/- 0.5 degrees in both directions.
4. Ensure the vehicle temperature is at least +32° F/0° C.
5. Complete Elevation Sensor calibration before attempting to calibrate the LSS.
6. Set key switch to Ground Mode.
7. Fully lift down to the stowed position.
8. Remove all foreign materials and debris from the deck.
9. Install any JLG Accessories that will be permanently attached (Electrician's Tree, Panel Carrier, etc.).
10. Connect the JLG Analyzer to the diagnostic port in the wire harness and enter the Access Level 1 password.
11. Adjust the PERSONALITY ' LOAD ' ACC'Y setting (See Figure 6-1) according to the documentation furnished with the factory-provided accessories or consult JLG.

Table 6-3. Calibrations Menu

MENU	SUBMENU	DESCRIPTION
CALIBRATIONS: LOAD 0%	CAL LOAD: YES:ENTER;NO:ESC	Press ENTER to begin calibration or ESC to exit.
	CAL LOAD:FAIL NOT IN GND MODE	Vehicle must be calibrated in Ground Mode. Set the keyswitch to Ground Mode and retry.
	CAL LOAD:FAIL CAL ANGLE	Elevation sensor must be fully calibrated. Follow procedure at CALIBRATIONS -> SET STOW ELEV and CALIBRATIONS -> SET MAX ELEV and retry.
	CAL LOAD: PLATFORM EMPTY?	Verify the platform is empty and continue by pressing ENTER, or exit by pressing ESC.
	CAL LOAD:FAIL PLAT NOT STOWED	Vehicle must be fully stowed. Lift down and retry.
	CAL LOAD: LIFT TO MAX ELEV	Engage lift up so the control system can gather dynamic calibration information until the platform reaches maximum height and then press ENTER
	CAL LOAD: LOWER TO STOWED	Engage lift down so the control system can gather dynamic calibration information until the platform reaches the stowed position
	CAL LOAD: LIFT TO MAX ELEV	For the 4045R, engage lift up so the control system can gather static calibration information until the platform reaches maximum height; control system will automatically pause lift up to take measurements
	CAL LOAD: LOWER TO STOWED	For the 4045R, engage lift down so the control system can gather static calibration information until the platform reaches stowed height; control system will automatically pause lift down to take measurements
	CAL LOAD:FAIL MOTION STOPPED	Lift motion was interrupted and calibration could not be completed
	CAL LOAD: COMPLETE!	Load Sensing System calibration was successful
	CAL LOAD: CAL FAIL	Load Sensing System calibration was not successful so the original values were retained; retry

6.4 CALIBRATION AND VERIFICATION PROCEDURES

For each of the following procedures in this section, ensure these conditions have been met before beginning:

- Vehicle temperature is at least +32° F/0° C.
- Batteries are fully charged (25.0 V or greater).
- Machine is on a level surface.

Empty Platform (Load 0%) Calibration

The following procedure should be executed to calibrate LSS with and without test weights. Machines calibrated with this method may experience a slight capacity reduction (10% - 20%) but remain regulatory compliant.

NOTE: *Ensure the Elevation Sensor calibration has been completed before beginning this procedure (refer to Section 5.4).*

1. Ensure the platform is empty.
2. Initiate calibration using the CALIBRATIONS LOAD 0% menu.
3. Lift up to maximum elevation using the ground controls when the LIFT TO MAX ELEV prompt appears.

NOTE: *Continuously hold the lift up switch until the machine reaches maximum elevation. If the switch is released, the system will recognize the height at which the switch was released as the maximum elevation height. Then, the calibration procedure will proceed to the next step.*

4. Lift down to the stowed position using the ground controls when the LOWER TO STOWED prompt appears.
5. The Analyzer will then prompt another LIFT TO MAX ELEV. This time, the machine will raise to max elevation in 21 increments with an extended pause in between each increment. Activate and maintain Lift Up at the ground controls for the entirety of the elevation.

NOTE: *Continuously hold the lift up switch until the machine reaches maximum elevation. If the switch is released, the system will recognize the height at which the switch was released as the maximum elevation height. Then, the calibration procedure will proceed to the next step.*

6. Once the Analyzer prompts LOWER TO STOWED, the machine will lower in 21 increments with an extended pause in between each increment. Activate and maintain Lift Down at the ground controls for the entirety of the descent.

NOTE: *If the lift down switch is released before the machine is in the stowed position, calibration will fail.*

7. If successful, the Analyzer will display the COMPLETE prompt. If unsuccessful, a message will be displayed that will help lead to a resolution (reference the Troubleshooting section of this manual). Press ESC to return to the top level menu.

Loaded Platform (Load 110%) Calibration

The following procedure should be executed to calibrate LSS with test weights.

1. Place weight corresponding to 110% of the vehicle's rated load in the center of the platform. See the chart below to determine the correct weight for calibration on each machine.

Table 6-4. Platform 110% Calibration Weight

MACHINE	CALIBRATION WEIGHT
	ANSI/ANSI EXPORT CE GB CSA AUS
4045R	847 lb (385 Kg)

2. Initiate calibration using the CALIBRATIONS ' LOAD 110% menu.
3. Lift up to maximum elevation using the ground controls when the LIFT TO MAX ELEV prompt appears.
4. Lift down to the stowed position using the ground controls when the LOWER TO STOWED prompt appears.
5. The Analyzer will then prompt another LIFT TO MAX ELEV. This time, the machine will raise to max elevation in 21 increments with an extended pause in between each increment. Activate and maintain Lift Up at the ground controls for the entirety of the elevation.
6. Once the Analyzer prompts LOWER TO STOWED, the machine will lower in 21 increments with an extended pause in between each increment. Activate and maintain Lift Down at the ground controls for the entirety of the descent.
7. If successful, the Analyzer will display the COMPLETE prompt. If unsuccessful, a message will be displayed that will help lead to a resolution (reference the Troubleshooting section of this manual). Press ESC to return to the top level menu.

Verify Load

NOTE: *Perform this verification procedure annually to confirm LSS is functioning properly.*

The following procedure should be executed to verify LSS. Verification is a time-saving and effective diagnostic alternative to calibration at maintenance intervals. Refer to the troubleshooting section of this manual if the Load Sensing System fails to meet these guidelines.

1. Ensure the platform is empty.
2. Initiate verification using the CALIBRATIONS VERIFY LOAD menu.
3. Lift up to maximum elevation using the ground controls when the LIFT TO MAX ELEV prompt appears.

NOTE: *If the lift up switch is released before reaching maximum elevation, the machine will not elevate any further. Then, the analyzer will proceed to the next step (LOWER TO STOWED). Once the machine is stowed, verification is complete.*

Partial Height Calibration

The machine can be calibrated to only reach a certain elevation when the machine is at maximum height.

To perform this calibration, ensure the platform is empty, the machine is parked on level ground, and the platform is in the stowed position.

1. Attach the Analyzer at the ground controls.

2. Go to Access Level 1, then scroll to the CALIBRATIONS LOAD 0% menu.

3. Lift up to desired maximum elevation using the ground controls when the LIFT TO MAX ELEV prompt appears.

4. Lift down to the stowed position using the ground controls when the LOWER TO STOWED prompt appears.

5. The Analyzer will then prompt another LIFT TO MAX ELEV. This time, the machine will raise to the new max elevation in 21 increments with an extended pause in between each increment. Activate and maintain Lift Up at the ground controls for the entirety of the elevation.

6. Once the Analyzer prompts LOWER TO STOWED, the machine will lower in 21 increments with an extended pause in between each increment. Activate and maintain Lift Down at the ground controls for the entirety of the descent.

7. If successful, the Analyzer will display the COMPLETE prompt. If unsuccessful, a message will be displayed that will help lead to a resolution (refer to the Troubleshooting section of this manual). Press ESC to return to the top level menu.

8. Ensure the new maximum height has been set by running a lift up/lift down cycle.

9. Repeat steps 1 through 8 for Loaded Platform (Load 110%) calibration.

NOTE: *To recalibrate the machine to reach full elevation, perform the Empty Platform (Load 0%) and Loaded Platform (Load 110%) Calibration. Allow the machine to reach full elevation.*

6.5 TESTING

The following procedure should be executed to test LSS. The test confirms the LSS does not trigger when the platform carries 100% rated load, and the LSS continuously triggers when the platform carries 120% rated load. Refer to the troubleshooting section of this manual if the Load Sensing System fails to meet these guidelines.

1. Connect the JLG Analyzer to the diagnostic port in the wire harness and enter the Access Level 1 password.
2. Note the current setting of MACHINE SETUP ' LOAD and then adjust it to CUTOUT ALL. This will allow LSS interlocks to work from Ground Mode.
3. Place weight corresponding to 100% of the vehicle's rated load in the center of the platform. Refer to the LSS Testing Weight Table below.

Table 6-5. Platform 100% Calibration Weight

MACHINE	CALIBRATION WEIGHT ANSI/ANSI EXPORT CE GB CSA AUS
4045R	770 lb (349 Kg)

4. Lift up to maximum elevation using the ground controls. LSS should not prevent motion and the Ground Overload Indicator should not illuminate.
5. Lift down to the stowed position using the ground control. LSS should not prevent motion and the Ground Overload Indicator should not illuminate.
6. Place weight corresponding to 120% of the vehicle's rated load in the center of the platform. Refer to the LSS Testing Weight Table above.

Table 6-6. Platform 120% Calibration Weight

MACHINE	CALIBRATION WEIGHT ANSI/ANSI EXPORT CE GB CSA AUS
4045R	924 lb (419 Kg)

7. Lift up using the ground controls. LSS should prevent motion after 10% of lift height, the Ground Overload Indicator should flash, and the alarm should sound.
8. Use the JLG Analyzer to set MACHINE SETUP ' LOAD to CUTOUT PLTM. This will prevent LSS interlocks to work from Ground Mode.
9. Continue lift up using the ground controls. The Ground Overload Indicator should flash and the arm should sound. Pause at intervals to evaluate various heights. LSS indication should continue until the deck exceeds 90% of maximum platform height.
10. Lift down using the ground control. Pause at intervals to evaluate various heights. LSS indication should continue until the deck is nearly stowed.
11. If successful, the Analyzer will display the COMPLETE prompt. Press ESC to return to the top level menu and then re-adjust MACHINE SETUP ' LOAD to the original setting.
12. If unsuccessful, the LSS should be re-calibrated. Press ESC to return to the top level menu and then re-adjust MACHINE SETUP ' LOAD to the original setting.

6.6 LSS CONNECTOR PIN ASSIGNMENTS

(Also See Electrical Schematic - Section 8)

Table 6-7. Connections for 4045R Lift Cylinder Rod Pressure Transducer

PIN	SIGNAL	DESCRIPTION
A	PWR	Pressure Transducer Supply (+5 V)
B	SIG	Voltage Feedback (0.5-4.5 V)
C	GND	Pressure Transducer Ground (0 V)

Table 6-8. Connections for 4045R Lower & Upper Lift Cylinder Head Pressure Transducer

PIN	SIGNAL	DESCRIPTION
A	PWR	Pressure Transducer Supply (+5 V)
B	SIG	Voltage Feedback (0.5-4.5 V)
C	GND	Pressure Transducer Ground (0 V)

6.7 LSS TROUBLESHOOTING

The following tables are furnished to provide possible resolutions for common difficulties.

Table 6-9. LSS Troubleshooting

PROBLEM	POSSIBLE RESOLUTION
JLG Analyzer displays "FAIL NOT IN GND MODE" during LSS calibration	The technician has triggered the calibration process but the keyswitch is not in the Ground Mode position. Change the key-switch position and re-attempt LSS calibration.
JLG Analyzer displays "FAIL CAL ANGLE" during LSS calibration	The elevation sensor is not calibrated and this must be completed prior to LSS calibration. Execute the elevation sensor calibration procedure using CALIBRATIONS à SET STOW ELEV and CALIBRATIONS à SET MAX ELEV. Re-attempt LSS calibration afterward.
JLG Analyzer displays "FAIL PLAT NOT STOWED" during LSS calibration	The LSS calibration procedure must start with the platform completely stowed. Lift down using ground controls and then re-attempt LSS calibration.
JLG Analyzer displays "FAIL MOTION STOPPED" during LSS calibration	The technician released lift down during the LSS calibration procedure and the calibration data points could not be collected by the control system. Re-attempt LSS calibration.
JLG Analyzer displays "CAL FAIL" during LSS calibration	The technician halted the LSS calibration procedure by pressing ESC. Alternately, calibration data points collected from the vehicle did not fit within guidelines. This can be caused by debris in the platform, excessive slide block friction, or structural damage. This can also occur when accessories are fitted to the platform and the PERSONALITY à LOAD à ACC'Y setting is adjusted improperly. Remove debris and address any damaged components. Refer to the documentation for Sky Accessories.
LSS Visual and Audible Overload Warnings fail to sound when the platform is loaded beyond rated load. Controls remain functional at Ground and Platform Control positions.	• LSS is not enabled in the control system. Connect the JLG Analyzer and enter the Access Level 1 password (33271). Navigate to MACHINE SETUP à LOAD and adjust the configuration to CUTOUT ALL to prevent platform and ground controls during an overload. Adjust the configuration to CUTOUT PLTM to prevent platform controls only during an overload. • LSS requires re-calibration. Re-calibrate the elevation sensor first, and then the LSS using the procedures listed in this document.
LSS Visual and Audible Overload Warnings are active when the platform is empty.	• LSS has not been calibrated or calibration has been lost. Calibration data points are stored within the Ground Module so replacement of this component will cause the need for re-calibration. Adjusting some settings within the MACHINE SETUP menu will also delete the calibration. • LSS requires re-calibration. Re-calibrate the elevation sensor first, and then the LSS using the procedures listed in this document. • A fault related to LSS has occurred and the vehicle has assumed the platform is overloaded to be conservative. Refer to the resolution of specific faults in the table below.
Controls remain functional at the Ground Control position during an overload. Controls at the Platform Control position are prevented.	The MACHINE SETUP à LOAD setting is configured to prevent Platform Controls only. Connect the JLG Analyzer and enter the Access Level 1 password (33271). Proceed to the MACHINE SETUP à LOAD menu and adjust the configuration to CUTOUT ALL to prevent platform and ground controls during an overload.
PLATFORM OVERLOADED (255) fault is triggered	This fault is triggered whenever the LSS is enabled and overloaded.
LSS HAS NOT BEEN CALIBRATED (825)	This fault is triggered when LSS has not been calibrated or a configuration change in MACHINE SETUP has deleted the calibration. Follow the procedure in this document for LSS calibration to resolve.

Table 6-9. LSS Troubleshooting (Continued)

LSS – OUT OF CALIBRATIO N (8217)	LSS did not meet performance expectations during the verification procedure. If the procedure was not executed properly, cycle power and re-attempt. Otherwise, the LSS should be re-calibrated. Follow the procedure in this document for LSS calibration to resolve.
LIFT CYLINDER HEAD PRESSURE 1 – OUT OF RANGE HIGH (8523)	For the 4045R, this fault is triggered when the lower lift cylinder head pressure reading is high. This occurs when ground module V4-7 exceeds 4.75 V for 500 mS. Check the wire harness that connects to the lift cylinder for short circuits (crushed). Replace the lift cylinder head pressure transducer if the wire harness is intact. Refer to LSS Theory of Operation.
LIFT CYLINDER HEAD PRESSURE 1 – OUT OF RANGE LOW (8524)	For the 4045R, this fault is triggered when the lower lift cylinder head pressure reading is low. This occurs when ground module V4-7 falls below 0.25 V for 500 mS. Check the wire harness that connects to the lift cylinder for open circuits (cut or crushed). Ensure the harness is connected to the pressure transducer and none of the contacts are out of position. Replace the lift cylinder head pressure transducer if the wire harness is intact. Refer to LSS Theory of Operation.
LIFT CYLINDER HEAD PRESSURE 2 – OUT OF RANGE HIGH (8525)	For the 4045R, this fault is triggered when the upper lift cylinder head pressure reading is high. This occurs when ground module V3-15 exceeds 4.75 V for 500 mS. Check the wire harness that connects to the lift cylinder for short circuits (crushed). Replace the lift cylinder head pressure transducer if the wire harness is intact. Refer to LSS Theory of Operation.
LIFT CYLINDER HEAD PRESSURE 2 – OUT OF RANGE LOW (8526)	For the 4045R, this fault is triggered when the upper lift cylinder head pressure reading is low. This occurs when ground module V3-15 falls below 0.25 V for 500 mS. Check the wire harness that connects to the lift cylinder for open circuits (cut or crushed). Ensure the harness is connected to the pressure transducer and none of the contacts are out of position. Replace the lift cylinder head pressure transducer if the wire harness is intact. Refer to LSS Theory of Operation.
LIFT CYLINDER HEAD PRESSURE – DISAGREEMENT (8527)	For the 4045R, this fault is triggered when the difference between the lower and upper lift cylinder head pressures is greater than 250 PSI for 2000 mS during lift up (V4-7 & V3-15). The fault indicates an issue with the wire harness, pressure transducer(s), or the ground module. Confirm currents and voltages at the ground module to determine the origin of the issue. Refer to LSS Theory of Operation.
LIFT CYLINDER ROD PRESSURE 1 – OUT OF RANGE HIGH (8528)	This fault is triggered when the lift cylinder rod pressure reading is excessively high. This occurs when ground module V3-5 exceeds 4.75 V for 500 mS. Check the wire harness that connects to the lift cylinder for short circuits (crushed). Replace the lift cylinder rod pressure transducer if the wire harness is intact. Refer to LSS Theory of Operation.
LIFT CYLINDER ROD PRESSURE 1 – OUT OF RANGE LOW (8529)	This fault is triggered when the lift cylinder rod pressure reading is excessively low. This occurs when ground module V3-5 falls below 0.25 V for 500 mS. Check the wire harness that connects to the lift cylinder for open circuits (cut or crushed). Ensure the harness is connected to the pressure transducer and none of the contacts are out of position. Replace the lift cylinder rod pressure transducer if the wire harness is intact. Refer to LSS Theory of Operation.
LIFT CYLINDER ROD PRESSURE – DISAGREEMENT (8532)	This fault is triggered when the lift cylinder rod pressure fails to fall below 50 PSI after 3000 mS (V3-5). This fault is not detected when the vehicle is driving, lifting, or steering. This fault indicates an issue with the wire harness, pressure transducer, or the ground module. Confirm voltage at the ground module to determine the origin of the issue. Refer to LSS Theory of Operation.

SECTION 7. DIAGNOSTIC TROUBLE CODES

7.1 INTRODUCTION

This section provides a reference for Diagnostic Trouble Codes (DTC) read from the Multifunction Digital Indicator (MDI) or a handheld analyzer. For more information on any sensors or indicators, refer to the appropriate manual section. Many of the checks below require configuring and using a multimeter. Refer to Section 8: General Electrical Information & Schematics for multimeter basics. To troubleshoot multiple DTCs, start with the DTC with the higher first two digits. The machine is powered by four 6 Volt batteries in series, providing a nominal 24 Volts to the control system. Some procedures below refer to this nominal voltage (VMN) as 24 V. Actual voltage measurements may differ based on the charge of the batteries. **If a correction is made during a check, conclude the check by cycling the machine power, using the emergency stop switch.** It may also be helpful to run a system test, ANALYZER -> SYSTEM TEST for intermittent or difficult problems.

System Fault/DTC Indication

In addition to the DTC codes being displayed on the MDI and handheld analyzer, DTC codes are indicated by the number of flashes and pauses of the System Fault indicator on the face of the platform control box as shown below:

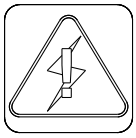

7.2 DIAGNOSTIC TROUBLE CODES (DTC)

The DTC tables following are sorted in groups by the first two digits, these digits represent the number of flashes the system distress indicator lamp will flash on the platform indicator panel when a fault occurs.

For example: a “211” on page 7-3 - Power Up would be indicated by 2 flashes, a pause, then 1 flash, a pause, then would keep repeating until the fault is cleared.

The more detailed three digit code numbers in the DTC column of the following tables are only indicated on a JLG handheld diagnostic analyzer.

To troubleshoot multiple DTCs, start with the DTC with the higher first two digits. **If a correction is made during a check, conclude the check by cycling the machine power off then back on, using the emergency stop switch.**

7.3 DTC CHECK TABLES

Table 7-1. Diagnostic Trouble Codes (DTC)

DTC	Help Message	Alarm	Flash Code	Action	Trigger
001	EVERYTHING OK	None	None	• No Motion restrictions	Platform Mode and no Faults are active.
002	GROUND MODE OK	None	None	• No Motion restrictions	Ground Mode and no Faults are active.
003	ALARM SOUNDING – TILTED & ABOVE ELEVATION	PF: Continuous	None	• No Motion restrictions	Platform is elevated and chassis is not level • {MACHINE SETUP->TILT CUTOUT = NO} AND Transport State = FALSE AND Tilted State= TRUE
004	DRIVING AT CUTBACK – ABOVE ELEVATION	None	None	• Drive State = CREEP	Platform is elevated and the machine is in the drive mode of operation • In Platform Mode, Transport State = FALSE AND Move State = DRIVE
005	DRIVE & LIFT UP PREVENTED TILTED & ELEVATED	PF: Continuous	None	• Drive State = PREVENTED • Lift Up State = PREVENTED	Driving and lift up are not possible since the platform is elevated and the chassis is not level. • In Platform Mode, Transport State = FALSE AND Tilted State = TRUE AND {MACHINE SETUP->TILT CUTOUT = YES}.
006	LIFT UP PREVENTED – MAX HEIGHT ZONE A	None	None	• Lift Up State = PREVENTED	The vehicle has reached the maximum height allowed by the Indoor/Outdoor selection and further lift up motion is not possible. • Platform Height Value? Max Height Allowed Value
007	DRIVING AT CUTBACK – POT-HOLE STILL ENGAGED	None	None	• Drive State = CREEP	While stowed, drive speed is reduced (due to lower ground clearance) since the control system detected that the pot-hole protection mechanism is deployed (failed to retract). Clear the obstacle blocking the pot-hole protection mechanism, repair the mechanical problem, re-adjust the pot-hole limit switches, or repair the wiring to correct the problem. Alternately, there may be difficulty with the Elevation Angle Sensor that causes the Control System to improperly believe the platform is stowed. • Applicable only in Platform Mode, and Move State =DRIVE. • Transport State = TRUE AND the Pot-Hole State = BLOCKED or EXTENDED
008	FUNCTIONS LOCKED OUT – SYSTEM POWERED DOWN	None	None	• Enter Safe Mode • Lift Down State = PREVENTED	A period of time elapsed without activity and the Control System entered a low-power state to preserve battery charge (2 hours). Cycle the Ground EMS in Ground Mode or the Platform EMS in Platform Mode to re-enable the vehicle. • Two hours (10 minutes if Ground Mode) without Drive Forward, Drive Reverse, Lift Up, Lift Down, Steer Left, or Steer Right. • Timer resets if user changes Platform Mode/ Ground Mode
009	DRIVE PREVENTED – ELEVATED ABOVE DRIVE CUTOUT HEIGHT	None	None	• Drive State = PREVENTED	The Drive Cutout functionality is enabled, and the Platform is Elevated above the Calibrated Cutout Height. (Refer to Drive Cutout Functionality) • (Machine Setup-> Drive Cut-Out = YES) AND the Platform Height Value > Drive Cut Value

Table 7-1. Diagnostic Trouble Codes (DTC)

DTC	Help Message	Alarm	Flash Code	Action	Trigger
211	POWER CYCLE	None	2_1	• No Motion restrictions	This Help Message is issued at each power-up. This serves to indicate which messages have been recorded in the failure log since the last power-up event.
212	KEYSWITCH FAULTY	None	2_1	• Force to Ground Mode	Both the Ground Select and Platform Select signals are energized, which means there is an issue with the key switch or one of the lines are shorted to battery. • V4-20 PF_SEL and V1-5 GRND_SEL are energized simultaneously.
221	FUNCTION PROBLEM – HORN PERMANENTLY SELECTED	None	2_2	• Horn Prevented	Horn Switch in the Platform Control Box was closed during power-up. Release or repair the switch to clear the message. • In Platform Mode and HORN is Energized during Platform Mode Startup. Retained until HORN is momentarily De-energized.
2210	TRIGGER CLOSED TOO LONG WHILE IN NEUTRAL	None	2_2	• Trigger State = FALSE therefore • Drive State = PREVENTED • Lift Up State = PREVENTED • Lift Down State = PREVENTED	Trigger Switch in the Platform Control Box was closed for more than five seconds while the Joystick (accelerator) was in the neutral position (centered). Release switch or repair the switch / wiring to clear the difficulty. • In Platform Mode, the TRIGGER input was Energized for 5,000mS AND Joystick Command is 0% and Stable (within +/- 0.05V change). Retained until the TRIGGER input is momentarily De-energized.
222	FUNCTION PROBLEM – INDOOR / OUTDOOR PERMANENTLY SELECTED	None	2_2	• Previously selected Indoor / Outdoor Mode maintained	Indoor / Outdoor Switch in the Platform Control Box was closed during power-up. Release or repair the switch to clear the message. • In Platform Mode, the IN/OUT switch is energized during Platform Mode Startup. Retained until IN/OUT is momentarily De-energized. • Only applicable if {MACHINE SETUP-> MARKET = CSA, CE, AUSTRALIA, or GB}
223	FUNCTION PROBLEM – DRIVE & LIFT ACTIVE TOGETHER	None	2_2	• Move State = LIFT • Drive State = PREVENTED • Lift Up State = PREVENTED • Lift Down State = PREVENTED	The Drive - Lift Selector Switch indicates that both functions are selected simultaneously. Repair the wiring or switch to clear the message. • In Platform Mode and DRIVE_SEL and LIFT_SEL are energized at the same time. Retained until either is momentarily open circuit.
2232	FUNCTION PROBLEM – DRIVE & LIFT BOTH OPEN	None	2_2	• Move State = LIFT • Drive State = PREVENTED • Lift Up State = PREVENTED • Lift Down State = PREVENTED	In Platform Mode, the Drive - Lift Selector Switch indicates that neither function is selected. Repair the wiring or switch to clear the message. • In Platform Mode, the DRIVE_SEL and LIFT_SEL are open circuit at the same time. Retained until either is momentarily energized.
224	FUNCTION PROBLEM – STEER LEFT PERMANENTLY SELECTED	None	2_2	• Drive State = PREVENTED	Steer Left Switch in the Platform Control Box was closed during power-up. Release or repair the switch to clear the message. • In Platform Mode, the STEER_L_SW is Energized during Platform Mode Startup. Retained until Digital Input is momentarily De-energized.

Table 7-1. Diagnostic Trouble Codes (DTC)

DTC	Help Message	Alarm	Flash Code	Action	Trigger
225	FUNCTION PROBLEM – STEER RIGHT PERMANENTLY SELECTED	None	2_2	• Drive State = PREVENTED	Steer Right Switch in the Platform Control Box was closed during power-up. Release or repair the switch to clear the message. • In Platform Mode, the STEER_R_SW is Energized during Platform Mode Startup. Retained until momentarily De-energized.
226	ACCELERATOR FAULTY – WIPER OUT OF RANGE	None	2_2	• Drive State = PREVENTED • Lift Up State = PREVENTED • Lift Down State = PREVENTED	The joystick (accelerator) wiper signal input is outside the acceptable voltage range. The wiper wire may be off, shorted to +B, or shorted to –B (ground) to cause this difficulty. • In Platform Mode, JOY_SIG is > 4.50V OR < 0.50V. Retained until the EMS is cycled.
227	STEER SWITCHES FAULTY	None	2_2	• Drive State = PREVENTED	Both the Steer Left and Steer Right Inputs are closed as the same time. A short in the Steer Switch wiring or a failed Steer Switch can cause this difficulty. • In Platform Mode, the STEER_L_SW is Energized AND STEER_R_SW is Energized. Retained until the EMS is cycled.
228	FUNCTION LOCKED OUT – ACCELERATOR NOT CENTERED	None	2_2	• Drive State = PREVENTED • Lift Up State = PREVENTED • Lift Down State = PREVENTED	Selected function (Drive or Lift) is not allowed because the joystick (accelerator) was not centered at power-up. Return joystick to center momentarily. • In Platform Mode, the JOY_SIG must be 0% and Stable (within +/- 0.05V change) for 1000mS after Power-up or this fault will be issued. Recovery permitted once the conditions are met (EMS re-cycle not necessary).
229	FUNCTION PROBLEM – TRIGGER PERMANENTLY CLOSED	None	2_2	• Drive State = PREVENTED • Lift Up State = PREVENTED • Lift Down State = PREVENTED	Trigger Switch in the Platform Control Box was closed at power-up. Release switch or repair the switch / wiring to clear the difficulty. • In Platform Mode, the TRIGGER is Energized during Platform Mode Startup. Cleared once TRIGGER is momentarily De-energized.
231	FUNCTION PROBLEM – LIFT PERMANENTLY SELECTED	None	2_3	In Ground Mode then • Lift Up State = PREVENTED • Lift Down State = PREVENTED	Lift Switch (Up or Down) in the Ground Control Box was closed during power-up. Release or repair the switch to clear the message. • In Ground Mode, [LIFT_UP_SW OR LIFT_DN_SW is Energized] during Ground Mode Startup. Retained until the respective Digital Input is momentarily De-energized. • This fault should not become active in Platform mode.
23196	PRESSURE SENSOR 1 OUT OF RANGE HIGH		2_3	• Overload State= TRUE	A short to Battery was detected on the PRSTR_SIG1 or reading was >22mA. The Ground module should disable the VSHORT FET to protect the board components. • Only applicable if {MACHINE SETUP-> LOAD = CUTOUT ALL or CUTOUT PLTM}
23197	PRESSURE SENSOR 1 OUT OF RANGE LOW		2_3	• Lift Up State = PREVENTED	The Pressure1RawValue is considered out of range low since it is <3.5 mA. • Only applicable if {MACHINE SETUP-> LOAD = CUTOUT ALL or CUTOUT PLTM}

Table 7-1. Diagnostic Trouble Codes (DTC)

DTC	Help Message	Alarm	Flash Code	Action	Trigger
23198	PRESSURE SENSOR 2 OUT OF RANGE HIGH		2_3	• Overload State= TRUE	A short to Battery was detected on the PRSTR_SIG2 or reading was >22 mA. The Ground module should disable the VSHORT FET to protect the board components. • Only applicable if {MACHINE SETUP-> LOAD = CUTOUT ALL or CUTOUT PLTM}
23199	PRESSURE SENSOR 2 OUT OF RANGE LOW		2_3	• Lift Up State = PREVENTED	The Pressure1RawValue is considered out of range low since it is <3.5 mA. • Only applicable if {MACHINE SETUP-> LOAD = CUTOUT ALL or CUTOUT PLTM}
232	GROUND LIFT UP/DOWN ACTIVE TOGETHER	None	2_3	In Ground Mode then • Lift Up State = PREVENTED • Lift Down State = PREVENTED	In Ground Mode, the control system has detected the Lift Up and Down are active simultaneously. Check the Lift Switch and associated wiring in the Ground Control Box. • In Ground Mode, LIFT_UP_SW is Energized AND LIFT_DN_SW is Energized. Retained until the EMS is cycled. • This fault should not become active in Platform Mode.
23200	LIFT UP SWITCH - INVALID SIGNAL		2_3	• Lift UpState = PREVENTED	In Ground Mode and the Ground Module detects a redundancy disagreement on the LIFT_UP_SW input for 500 ms. Ignore this fault in Platform Mode.
23201	LIFT DOWN SWITCH - INVALID SIGNAL		2_3	• Lift Up State = PREVENTED • Lift Down State = PREVENTED	In Ground Mode and the Ground Module detects a redundancy disagreement on the LIFT_DN_SW input for 500 ms. Ignore this fault in Platform Mode.
23202	POT HOLE PREVENTION SWITCH 1 - INVALID SIGNAL		2_3	• Pot-Hole State = BLOCKED	The Ground Module detects a redundancy disagreement on the PHP_SW1 input for 500 ms. This error is valid in both Ground Mode and Platform Mode.
23203	POT HOLE PREVENTION SWITCH 2 - INVALID SIGNAL		2_3	• Pot-Hole State = BLOCKED	The Ground Module detects a redundancy disagreement on the PHP_SW2 input for 500 ms. This error is valid in both Ground Mode and Platform Mode.
23204	CHARGE INTERLOCK - INVALID SIGNAL		2_3	• Charge Interlock State = TRUE	The Ground Module detects a redundancy disagreement on the CHARGE_INTRLK input for 500 ms. This error is valid in both Ground Mode and Platform mode.
23205	ELEVATION SENSORS - INVALID SIGNAL		2_3	• Lift Up State = PREVENTED • Platform Height Value assumed to be Full Elevation for the purposes of other interlocks • OverLoad State = TRUE	The control system has detected a disagreement between Elevation Sensor 1 and Elevation Sensor 2. Check the Elevation Sensors and associated wiring. • Only Valid if {MACHINE SETUP->LOAD? NO} AND ROTS1_SIG and ROTS2_SIG are not +/- 25 V of the normalized voltage. • This fault shall be suppressed if the DTC 252 ELEVATION SENSORS NOT CALIBRATED fault is active.

Table 7-1. Diagnostic Trouble Codes (DTC)

DTC	Help Message	Alarm	Flash Code	Action	Trigger
241	AMBIENT TEMPERATURE SENSOR – OUT OF RANGE LOW	PF: Continuous	2_4	• Drive and Lift Restrictions	The temperature as communicated by the temperature/tilt sensor is less than -40 degrees Celsius. • If Transport State = FALSE, then set Drive State = CREEP, Lift Down State = MAX Lift Up State = PREVENTED. The platform alarm shall continuously sound. • If Transport State = TRUE, then set Drive State = MAX, Lift Down State = MAX, and Lift Up State = PREVENTED, the platform alarm shall continuously sound.
242	AMBIENT TEMPERATURE SENSOR – OUT OF RANGE HIGH	PF: Continuous	2_4	• Drive and Lift Restrictions	The temperature as communicated by the temperature/tilt sensor is greater than +85 degrees Celsius. • If Transport State = FALSE, then set Drive State = CREEP, Lift Down State = MAX, and Lift Up State = PREVENTED. The platform alarm shall continuously sound. • If Transport State = TRUE, then set Drive State = MAX, Lift Down State = MAX, and Lift Up State = PREVENTED, the platform alarm shall continuously sound.
251	ELEV ANGLE SENSOR FAULTY – VOLTAGE OUT OF RANGE	None	2_5	• Lift Up State = PREVENTED • Platform Height Value assumed to be Full Elevation for the purposes of other interlocks • Arm Guard Functionality shall be disabled • OverLoad State = TRUE if {MACHINE SETUP->LOAD ≠ NO)	The input voltage from the sensor that measures lower arm motion is outside acceptable range. This may be caused by difficulty with the sensor wiring, or a faulty sensor. Check mounting, review sensor wiring against the electrical schematic, or replace the sensor to clear the message. • Elevation1RawValue from the ROTS1_SIG is (>4.5V OR <0.50V).

Table 7-1. Diagnostic Trouble Codes (DTC)

DTC	Help Message	Alarm	Flash Code	Action	Trigger
2512	ELEV ANGLE SENSOR NOT DETECTING CHANGE	None	2_5	• Lift Up State = PREVENTED • Platform Height Value assumed to be Full Elevation • OverLoad State = TRUE if {MACHINE SETUP->LOAD ≠ NO)	The input voltage from the Elevation Angle Sensor that measures lower arm motion did not increment/ decrement properly while the vehicle was lifting down or up. Check mounting, review sensor wiring against the electrical schematic, or replace the sensor to clear the message. • Elevation1RawValue is Stagnant (within 0.30 degrees) while lifting up or lifting down for 5000 mS, or value is decrements while lifting up, or incrementing while lifting down. Not applicable when the following conditions are TRUE: • Lifting Down AND Platform Height Value < Physical Min Height Value +5%*PlatformHeightRange • Lifting Up AND Platform Height Value> Physical Min Height Value + 95%*Platform Height Range • Lifting Up AND Pump Command < {PERSONALITIES->LIFT->UP MIN} + (40%* ({PERSONALITIES->LIFT->UP MAX}-{PERSONALITIES->LIFT->UP MIN})) • Lifting Down AND Current Command is < {PERSONALITIES->LIFT->DOWN MIN} +(40%*({PERSONALITIES->LIFT->DOWN MAX}-{PERSONALITIES->LIFT->DOWN MIN})) Not applicable when the following faults are active: • DTC251 ELEV ANGLE SENSOR FAULTY – VOLTAGE OUT OF RANGE • DTC2511 ELEV ANGLE SENSOR FAULTY – NOT MOUNTED • DTC252 ELEV ANGLE SENSOR HAS NOT BEEN CALIBRATED
252	ELEV ANGLE SENSOR HAS NOT BEEN CALIBRATED	None	2_5	• Lift Up State = PREVENTED • Platform Height Value assumed to be Full Elevation for the purposes of other interlocks • OverLoad State = TRUE if {MACHINE SETUP->LOAD ≠ NO)	Calibrate the Elevation Angle Sensor using the calibration procedure to clear the message. • The Elevation Sensor's Calibration EEPROM is set to the signature implanted by the In-Circuit Test Fixture (has never been calibrated by the factory). Retained until Calibration EEPROM is over-written by a valid calibration. • Need to recheck this setting for the redundant sensors as well if MACHINE SETUP->LOAD ≠ NO
2520	FUNCTIONS LOCKED OUT - CONSTANT DATA VERSION IMPROPER	None	2_5	• Drive State = PREVENTED • Lift Up State = PREVENTED • Lift Down State = PREVENTED	The Ground Module's Application and Constant Data Versions do not match which could lead to improper operation therefore machine shall not be allowed to function. • The Ground Module's Application and Constant Data Versions do not match
253	DRIVE PREVENTED – CHARGER CONNECTED	None	2_5	• Drive State = PREVENTED	Driving is not possible since the vehicle is charging. • In Platform Mode, the Charge Interlock State = TRUE AND Move State = Drive.

Table 7-1. Diagnostic Trouble Codes (DTC)

DTC	Help Message	Alarm	Flash Code	Action	Trigger
254	DRIVE & LIFT UP PREVENTED – CHARGER CONNECTED	None	2_5	• Drive State = PREVENTED • Lift Up State = PREVENTED	Driving and Lifting are not possible since the vehicle is charging and it is configured to prevent all motion. • Charge Interlock State = TRUE AND {MACHINE SETUP-> CHARGE INTERLOC= DRV & LIFT UP}.
255	PLATFORM OVERLOADED	PF: 5000 ms ON/2000 ms OFF GND: 5000 ms ON/2000 ms OFF	2_5	• Drive and Lift Restrictions	While the Load Sensing System is enabled, the Platform Load measured by the Load Sensing System is excessive. Functions from Platform Control Station are prevented, and from Ground Control may be prevented, depending on machine configuration. Refer to LSS functionality for Lift and Drive restrictions. • This fault shall be suppressed if technician navigates to the CALIBRATIONS menu of the ANALYZER ***NOTE:*** *In Australia only, in the event of an overloaded platform and active fault code 255, Lift Down functions are allowed.*
256	DRIVE PREVENTED – POT-HOLE NOT ENGAGED	If {MACHINE SETUP->PHP ALARM = YES} PF: 500 ms On/500 ms Off GND: 500 ms On/500 ms Off	2_5	• Drive State = PREVENTED	While elevated, driving is not possible since the control system detected that the pot-hole protection mechanism failed to deploy. Clear the obstacle blocking the pot-hole protection mechanism, repair the mechanical problem, re-adjust the pot-hole limit switches, or repair the wiring to correct the problem. Alternately, there may be difficulty with the Elevation Angle Sensor that causes the Control System to improperly believe the platform is elevated. • In Platform Mode AND Move State = DRIVE AND Transport State = FALSE AND Pot-Hole State = BLOCKED or RETRACTED. • Platform and Ground alarm shall only sound if {MACHINE SETUP->PHP ALARM = YES} and this DTC is active
2568	TEMPERATURE CUTOUT ACTIVE - AMBIENT TEMPERATURE TOO LOW	If Transport Mode = TRUE PF: Continuous If Transport Mode = FALSE PF: OFF	2_5	• Drive and Lift Restrictions	The temperature as communicated by the temperature sensor located on the temperature/tilt sensor is less than or equal to {PERSONALITIES->TEMP CUTOUT->CUTOUT SET} (See Low Temperature Cutout Functionality) • Only applicable if {MACHINE SETUP->LOW TEMP CUTOUT=YES} • This DTC shall not be displayed in Ground Mode, and no restrictions shall be implemented.
259	MODEL CHANGED – HYDRAULICS SUSPENDED – CYCLE EMS	None	2_5	• Drive State = PREVENTED • Lift Up State = PREVENTED • Lift Down State = PREVENTED	The user changed the Model Selection using the JLG Analyzer. All functions are being prevented until the EMS is cycled. • This fault shall be suppressed if DTC 9924 is active. Similar to DTC 9924 but a valid model has been selected • {MACHINE SETUP-> MODEL NUMBER} selection was changed via the Analyzer.

Table 7-1. Diagnostic Trouble Codes (DTC)

DTC	Help Message	Alarm	Flash Code	Action	Trigger
311	OPEN CIRCUIT LINE CONTACTOR	None	3_1	• Drive State = PREVENTED • Lift Up State = PREVENTED	The vehicle's Main Line Contactor did not close when energized. Check the line contactor coil and the associated power wiring. • The Power Module detected an open-circuit for the line contactor coil; alternately, the Negative Main Contactor driver was activated, but the line contactor did not provide voltage to the B+ terminal on the controller. • Power Module returns Main Line Contactor Open Fault **Curtis Code 39:Main Contactor Did Not Close** **Set:** With the main contactor commanded closed, the capacitor bank voltage (B+ connection terminal) did not charge to B+ **Effect:** Shutdown Motor, Shutdown Main Contactor, Shutdown EM Brake, Shutdown Throttle, Full Brake, Shutdown Pump **Possible Cause:** • Main contactor did not close • Main contactor tips are oxidized, burned, or not making good contact. • External load on capacitor bank (B+ terminal connection) that prevents capacitor bank from charging. • Blown B+ fuse.
321	LINE CONTACTOR WELDED OR MISWIRED	None	3_2	• Drive State = PREVENTED • Lift Up State = PREVENTED	The Line contactor is off, but the Power Module is being energized. The line contactor's coil or power interconnect may be mis-wired. Alternately, the line contactor is faulty (welded or stuck). • The Power Module did not activate the Negative Main Contactor driver, but battery voltage was detected on the B+ terminal of the controller. **Curtis Code 38: Main Contactor Welded** **Set:** Just prior to the main contactor closing, the capacitor bank voltage (B+ connection terminal) was loaded for a short time and voltage did not discharge. **Effect:** Shutdown Motor, Shutdown Main Contactor, Shutdown EM Brake, Shutdown Throttle, Full Brake, Shutdown Pump **Possible Cause:** • Main contactor tips are welded closed. • Motor phase U or V is disconnected or open • An alternate voltage path (such as an external precharge resistor) is providing a current to the capacitor bank (B+ connection terminal)

Table 7-1. Diagnostic Trouble Codes (DTC)

DTC	Help Message	Alarm	Flash Code	Action	Trigger
3213	POWER MODULE MAIN CONTACTOR - SHORT TO GROUND OR OPEN CIRCUIT	None	3_2	• Drive State = PREVENTED • Lift Up State = PREVENTED	**Curtis Code 31: Coil 1 Driver Open/Short** **Set:** Driver 1 (pin 6) is either open or shorted. This fault can be set only when Main Enable = Off **Effect:** ShutdownDriver1 **Possible Cause:** • Open or short on driver load. • Dirty connector pins. • Bad crimps or faulty wiring. **Curtis Code 31: Main Open/Short** **Set:** Main Contactor Driver (pin 6) is either open or shorted. This fault can be set only when Main Enable = On **Effect**: Shutdown Motor, Shutdown Main Contactor, Shutdown EM Brake, Shutdown Throttle, Full Brake, Shutdown Pump **Possible Cause:** • Open or short on driver load. • Dirty connector pins. • Bad crimps or faulty wiring.
324	VALVE ENABLE DRIVER PERMANENTLY ON	None	3_2	• Drive State = PREVENTED • Lift Up State = PREVENTED	The VSW signal is shorted to Battery during startup prior to enabling the VSW switch. • VSW > 5V when VSW switch is in the off state.
3310	STEER RIGHT VALVE – OPEN CIRCUIT	None	3_3	• Disable Output • Drive State = PREVENTED	Open Circuit detected on STEER_R_VLV
3311	GROUND ALARM– SHORT TO BATTERY	None	3_3	• Disable Output	Only applicable if {MACHINE SETUP->WHITE NOISE ALARM=YES} Short to Battery was detected on WN_ALARM
33208	HORN - SHORT TO BATTERY	None	3_3	• Disable Output	Short to Battery was detected on GRND_ALRM_SIG
33209	HORN SHORT TO GROUND	None	3_3	• Disable Output	Short to Ground was detected on GRND_ALRM_SIG
33298	STEER LEFT VALVE – SHORT TO GROUND	None	3_3	• Disable Output • Drive State = PREVENTED	Short to Ground was detected on STEER_L_VLV
33299	LINE CONTACTOR COIL – SHORT TO BATTERY	None	3_3	• Enter Safe Mode • Lift Down State = MAX	The Ground Module has been powered up due to a wiring fault since neither the Ground Mode or Platform Mode Digital input are Energized. This could be due to the VON pin being shorted to battery. • Ground Module is powered but both V4-20 PF_SEL and V1-5 GRND_SEL are read as de-energized.
333	LIFT UP VALVE – SHORT TO BATTERY	None	3_3	• Disable Output • Lift Up State = PREVENTED • Drive State = PREVENTED	Short to Battery was detected on LIFT_UP_VLV
33305	STEER RIGHT VALVE – SHORT TO GROUND	None	3_3	• Disable Output • Drive State = PREVENTED	Short to Ground was detected on STEER_R_VLV
33317	DRIVE FORWARD VALVE – OPEN CIRCUIT	None	3_3	• Disable Output • Drive State = PREVENTED	Open Circuit detected on DRIVE_FWD_VLV
33318	DRIVE FORWARD VALVE – SHORT TO BATTERY	None	3_3	• Disable Output • Lift Up State = PREVENTED • Drive State = PREVENTED	Short to Battery was detected on DRIVE_FWD_VLV
33319	DRIVE FORWARD VALVE – SHORT TO GROUND	None	3_3	• Disable Output • Drive State = PREVENTED	Short to Ground was detected on DRIVE_FWD_VLV

Table 7-1. Diagnostic Trouble Codes (DTC)

DTC	Help Message	Alarm	Flash Code	Action	Trigger
33320	DRIVE REVERSE VALVE – OPEN CIRCUIT	None	3_3	• Disable Output • Drive State = PREVENTED	Open Circuit detected on DRIVE_REV_VLV
33321	DRIVE REVERSE VALVE – SHORT TO BATTERY	None	3_3	• Disable Output • Drive State = PREVENTED • Lift Up State = PREVENTED	Short to Battery was detected on DRIVE_REV_VLV
33322	DRIVE REVERSE VALVE – SHORT TO GROUND	None	3_3	• Disable Output • Drive State = PREVENTED	Short to Ground was detected on DRIVE_REV_VLV
33383	BEACON LIGHT – OPEN CIRCUIT	None	3_3	• Disable output • No motion restrictions	Open Circuit was detected on BEACON AND {MACHINE SETUP-> BEACON= YES}. • This only detectable during Arm guard, since that is the only time that the BEACON is disabled when {MACHINE SETUP-> BEACON= YES}.
33384	BEACON LIGHT – SHORT TO GROUND	None	3_3	• Disable output • No motion restrictions	Short to Ground was detected on BEACON AND {MACHINE SETUP-> BEACON= YES}.
334	LIFT UP VALVE – OPEN CIRCUIT	None	3_3	• Disable Output • Lift Up State = PREVENTED	Open Circuit detected on LIFT_UP_VLV
33406	LIFT UP VALVE – SHORT TO GROUND	None	3_3	• Disable Output • Lift Up State = PREVENTED	Short to Ground was detected on LIFT_UP_VLV
33407	LIFT DOWN VALVE – SHORT TO GROUND	None	3_3	• Disable High side Output • Open Low side Output • Lift Down State = PREVENTED • Lift Up State = PREVENTED	Short to Ground was detected on LIFT_DN_VLV • This fault covers both if the High side Output or if the Low side Output is shorted to Ground. • If Low side is shorted to Ground, the feedback will read 0 mA while the High side is commanding a PWM… this shall lead to this fault being triggered.
335	LIFT DOWN VALVE – SHORT TO BATTERY	None	3_3	• Disable High side Output • Open Low side Output • Lift Down State = PREVENTED • Lift Up State = PREVENTED	Short to Battery was detected on LIFT_DN_VLV • This fault covers both if the High side Output or if the Low side Output is shorted to Battery.
33537	AUXILIARY LIFT DOWN VALVE - SHORT TO GROUND	None	3_3	• Disable High side Output • Open Low side Output • Lift Down State = PREVENTED • Lift Up State = PREVENTED	Short to Ground was detected on LIFT_DN_VLV_2 AND {MACHINE SETUP-> MODEL->4047R}
33538	AUXILIARY LIFT DOWN VALVE - OPEN CIRCUIT	None	3_3	• Disable High side Output • Open Low side Output • Lift Down State = PREVENTED • Lift Up State = PREVENTED	Open Circuit detected on LIFT_DN_VLV_2 AND {MACHINE SETUP-> MODEL->4047R}
33539	AUXILIARY LIFT DOWN VALVE - SHORT TO BATTERY	None	3_3	• Disable High side Output • Open Low side Output • Lift Down State = PREVENTED • Lift Up State = PREVENTED	Short to Battery was detected on LIFT_DN_VLV_2 AND {MACHINE SETUP-> MODEL->4047R}
33562	BEACON LIGHT – SHORT TO BATTERY	None	3_3	• Disable output • No motion restrictions	Short to Battery was detected on BEACON AND {MACHINE SETUP-> BEACON=YES}. • This will only be triggered when ARMGUARD is active and the short to battery occurs under the Arm guard limit.

Table 7-1. Diagnostic Trouble Codes (DTC)

DTC	Help Message	Alarm	Flash Code	Action	Trigger
336	LIFT DOWN VALVE – OPEN CIRCUIT	None	3_3	• Disable High side Output • Open Low side Output • Lift Down State = PREVENTED • Lift Up State = PREVENTED	Open Circuit detected on LIFT_DN_VLV
33674	PLATFORM POWER – SHORT TO BATTERY	None	3_3	Ground Mode • Disable output	Short to Battery was detected on PLATFORM_PWR Ignore this Fault in Platform Mode
33675	PLATFORM POWER – OPEN CIRCUIT	None	3_3	• N/A	Ignore this fault for following reasons. • N/A in Ground Mode • No diagnostic value in Platform Mode, would only increase startup time.
33676	PLATFORM POWER – SHORT TO GROUND	None	3_3	• Platform Mode Prevented • Disable output	Short to Ground was detected on PLATFORM_PWR Ignore this Fault in Ground Mode
3368	TWO SPEED VALVE - SHORT TO GROUND	None	3_3	Platform Mode • Disable output, Normal Operation	Short to Ground was detected on 2SPD_VLV AND {MACHINE SETUP-> MODEL =4047R}. Ignore this Fault in Ground Mode
3369	TWO SPEED VALVE - OPEN CIRCUIT	None	3_3	Platform Mode •Normal Operation	Open Circuit detected on 2SPD_VLV AND {MACHINE SETUP-> MODEL =4047R}. Ignore this Fault in Ground Mode
337	STEER LEFT VALVE – SHORT TO BATTERY	None	3_3	• Disable Output • Drive State = PREVENTED • Lift Up State = PREVENTED	Short to Battery was detected on STEER_L_VLV
3370	TWO SPEED VALVE - SHORT TO BATTERY	None	3_3	Platform Mode • Disable output, Normal Operation	Short to Battery was detected on 2SPD_VLV AND {MACHINE SETUP-> MODEL =4047R}. Ignore this Fault in Ground Mode
3371	GROUND ALARM– SHORT TO GROUND	None	3_3	• Disable output	Short to Ground was detected on WN_ALARM Only applicable if {MACHINE SETUP->WHITE NOISE ALARM=YES}
3379	HOUR METER– SHORT TO GROUND	None	3_3	• Disable output	Short to Ground was detected on HOUR_MTR
338	STEER LEFT VALVE – OPEN CIRCUIT	None	3_3	• Disable Output • Drive State = PREVENTED	Open Circuit detected on STEER_L_VLV
3380	HOUR METER– OPEN CIRCUIT	None	3_3	• Disable output	Open Circuit was detected on HOUR_MTR
3381	HOUR METER– SHORT TO BATTERY	None	3_3	• Disable output	Short to Battery was detected on HOUR_MTR
339	STEER RIGHT VALVE – SHORT TO BATTERY	None	3_3	• Disable Output • Drive State = PREVENTED • Lift Up State = PREVENTED	Short to Battery was detected on STEER_R_VLV
421	POWER MODULE TOO HOT - PLEASE WAIT	None	4_2	• Drive State = PREVENTED • Lift Up State = PREVENTED	**Curtis Code 16: Controller Severe Over temp** **Set:** Heat sink temperature above 203° F (95° C). **Effect:** Shutdown Motor, Shutdown Main Contactor, Shutdown EM Brake, Shutdown Throttle, Full Brake, Shutdown Pump **Possible Cause:** • See Monitor menu >> Controller: Temperature • Controller is operating in an extreme environment. • Excessive load on vehicle. • Improper mounting of controller

Table 7-1. Diagnostic Trouble Codes (DTC)

DTC	Help Message	Alarm	Flash Code	Action	Trigger
4235	POWER MODULE TOO HOT - REDUCED OPERATION	None	4_2	• Drive State =CREEP • Lift Up State = CREEP	**Curtis Code 22: Controller Over temp Cutback** **Set:** Heat sink temperature exceeded 185° F (85° C). **Effect:** Reduced drive and brake torque. **Possible Cause:** • See Monitor menu >> Controller: Temperature • Controller is performance-limited at this temperature. • Controller is operating in an extreme environment. • Excessive load on vehicle • Improper mounting of controller.
4236	POWER MODULE TOO COLD - MODULE SHUTDOWN	None	4_2	• Drive State = PREVENTED • Lift Up State = PREVENTED	**Curtis Code 15: Controller Severe Under temp** **Set:** Heat sink temperature below -40° F (-40° C). **Effect:** Shutdown Motor, Shutdown Main Contactor, Shutdown EM Brake, Shutdown Throttle, Full Brake, Shutdown Pump **Possible Cause:** • See Monitor menu >> Controller: Temperature • Controller is operating in an extreme environment.
426	MASTER MODULE TEMPERATURE – OUT OF RANGE		4_2	• Normal operation	The Ground Module's internal temperature sensor is out of range. (< 104° F/40° C or > 302° F/150° C) • Flag Error to show that analog input readings are not being temperature compensated, and allow normal operation. • Not having temperature compensation affects Elevation sensor accuracy and Pressure transducer accuracy
441	BATTERY VOLTAGE TOO LOW – SYSTEM SHUTDOWN	None	4_4	• Safe Mode • Lift Down State = PREVENTED	Battery Voltage (VBAT) momentarily dropped below 14.5 V when using flooded lead-acid batteries, or 16.0 V when using AGM batteries. With a low battery charge, this can occur during heavy current demand due to Drive, Steer, or Lift Up. Recharge batteries or check for damaged batteries, sulfated batteries, or poor power connections. VBAT shall be measured at all times, and this fault can be engaged at any time, even while Driving, Lifting, or Steering is active. • The Ground Module measured battery voltage less than 14.5 V when {MACHINE SETUP-> BATTERY = FLOODED}. • The Ground Module measured battery voltage less than 16.0 V when {MACHINE SETUP-> BATTERY = AGM}. • Suppress all Help Messages caused by the lack of system power.

Table 7-1. Diagnostic Trouble Codes (DTC)

DTC	Help Message	Alarm	Flash Code	Action	Trigger
442	BATTERY VOLTAGE TOO HIGH – SYSTEM SHUTDOWN	None	4_4	• Enter Safe Mode • Lift Down State = MAX	The Ground Module measured excessively high battery voltage (VBAT) (>32.0 V) and de-energized the Main Line Contactor and Battery Relay to protect system devices and was unable to bring voltage down to normal operating range. This may be due to improper battery charging or incorrect voltage batteries being used. • The Ground Module measured battery voltage greater than 32.0 V • Main Line Contactor and Battery Relay should be de-energized • Suppress all Help Messages caused by the lack of system power.
4421	LOGIC SUPPLY VOLTAGE OUT OF RANGE HIGH	None	4_4	• Enter Safe Mode • Lift Down State = MAX	The Ground Module's VSW voltage was measured to be more than 32 V. This may be caused by loose battery terminal, severely discharge batteries, a damaged battery, or an improper wire harness connection.
4424	POWER MODULE VOLTAGE TOO LOW - MODULE SHUTDOWN	None	4_4	• Drive State = PREVENTED • Lift Up State = PREVENTED	**Curtis Code 17: Severe B+ Under voltage** **Set:** Capacitor bank voltage dropped below Severe Under voltage limit with FET bridge enabled. **Effect:** Reduced Drive Torque **Possible Cause:** • Battery menu parameters are mis adjusted • Non-controller system drain on battery • Battery resistance too high • Battery disconnected while driving • See Monitor menu >> Battery: Capacitor Voltage • Blown B+ fuse or main contactor not closed
4425	POWER MODULE VOLTAGE TOO HIGH - MODULE SHUTDOWN	None	4_4	• Drive State = PREVENTED • Lift Up State = PREVENTED	**Curtis Code 18: Severe B+ Overvoltage** **Set**: Capacitor bank voltage exceeded the Severe Overvoltage limit with FET bridge enabled **Effect:** Shutdown Motor, Shutdown Main Contactor, Shutdown EM Brake, Shutdown Throttle, Full Brake, Shutdown Pump **Possible Cause:** • See Monitor menu >> Battery: Capacitor Voltage • Battery menu parameters are mis adjusted • Battery resistance too high for given regen current. • Battery disconnected while regen braking.
446	LOGIC SUPPLY VOLTAGE OUT OF RANGE LOW	None	4_4	• Drive State = PREVENTED • Lift Up State = PREVENTED	The Ground Module's VSW voltage was measured to be out of range <13 V by the Ground Module. This may be caused by loose battery terminal, severely discharged batteries, a damaged battery, or an improper wire harness connection. • This fault shall be suppressed if DTC 441 is active.
447	VOLTAGE REFERENCE OUT OF RANGE	None	4_4	• Drive State = PREVENTED • Lift Up State = PREVENTED	The Ground Modules 5 V supply voltage was measured to be out of range (<4.5 V or >5.5 V). This may be caused by loose battery terminal, severely discharged batteries, a damaged battery, or an improper wire harness connection.

Table 7-1. Diagnostic Trouble Codes (DTC)

DTC	Help Message	Alarm	Flash Code	Action	Trigger
4473	POWER MODULE VOLTAGE TOO LOW - REDUCED OPERATION	None	4_4	• Drive State =CREEP • Lift Up State = CREEP	**Curtis Code 23:B+ Under voltage Cutback** **Set**: Capacitor bank voltage dropped below the Under voltage limit with FET bridge enabled **Effect:** Reduced Drive Torque **Possible Cause:** • Normal operation. Fault shows that the batteries need recharging. Controller performance limited at this voltage. • Battery menu parameters are mis-adjusted • Non-controller system drain on battery • Battery resistance too high. • Battery disconnected while driving • See Monitor menu >> Battery: Capacitor Voltage • Blown B+ fuse or main contactor did not close
4474	POWER MODULE VOLTAGE TOO HIGH - REDUCED OPERATION	None	4_4	• Drive State =CREEP • Lift Up State = CREEP	**Curtis Code 24: B+ Overvoltage Cutback** **Set:** Capacitor bank voltage exceeded the Overvoltage limit with FET bridge enabled **Effect:** Reduced Brake Torque **Possible Cause:** • Normal operation. Fault shows that regen braking currents elevated the battery voltage during regen braking. Controller performance limited at this voltage. • Battery menu parameters are mis adjusted • Battery resistance too high for given regen current. • Battery disconnected while regen braking • See Monitor menu >> Battery: Capacitor Voltage
4475	POWER MODULE - BDI FAULT	None	4_4	• Drive State = PREVENTED • Lift Up State = PREVENTED	**Curtis Code 96: Pump BDI Fault** **Set:** BDI Percentage charge at 0% when the pump was activated. **Effect:** Shutdown Pump **Possible Cause:** • Battery is fully discharged • BDI parameters are mis-tuned
4476	BATTERY VOLTAGE TOO HIGH – UNPLUG CHARGER	None	4_4	• Enter Safe Mode • Lift Down State = MAX	The Ground Module momentarily measured excessively high battery voltage (VBAT) (>32.0 V) and entered Safe Mode to protect system devices. This may be due to improper battery charging or incorrect voltage batteries being used. • The Ground Module measured battery voltage greater than 32.0 V and Charge Interlock State = TRUE. • Main Line Contactor and Battery Relay should be de-energized • Suppress all Help Messages caused by the lack of system power.

Table 7-1. Diagnostic Trouble Codes (DTC)

DTC	Help Message	Alarm	Flash Code	Action	Trigger
4477	BATTERY VOLTAGE TOO HIGH – FORCING DISCHARGE	None	4_4	• Disable VSW, Lift Down State = PREVENTED Lift Up State = PREVENTED Drive State = PREVENTED suppress other system errors, then Energize STEER_R_VLV and STEER_L_VLV and monitor VBAT	The Ground Module momentarily measured excessively high battery voltage (VBAT) (>32.0 V) and entered Safe Mode. This may be due to improper battery charging or incorrect voltage batteries being used. • The Ground Module measured battery voltage greater than 32.0 V and Charge Interlock State = FALSE. • System Devices powered by VSW will be disabled • Suppress all DTC Messages caused by the lack of system power. (Pump Module, Platform Module, Tilt Sensors, LSS, and Pot-Hole Protection) • GM shall energize STEER_L_VLV and STEER_R_VLV in an effort to lower float charge down below 31 V to get to normal operation state. • If VBAT reading does not go below 31 V after 10 seconds, GM shall de-energize the STEER_L_VLV and STEER_R_VLV and latch DTC 442. • If VBAT reading does go below 31 V before 10 seconds, GM shall enable VSW and resume with normal startup procedure.
4478	GROUND MODULE - OVERCURRENT	None	4_4	• Enter Safe Mode • Lift Down State = MAX	The current being measured through the Ground Module is too high. • The Ground Module measure more than 8 Amps through the VSW switch.
448	VOLTAGE REFERENCE OUT OF RANGE	None	4_4	• Lift Up State = PREVENTED • Drive State = PREVENTED	The Ground Modules 3.3 V supply voltage was measured to be out of range (<3.135 V or >3.465 V). This may be caused by issues with the 3.3 V supply or the V5P0 reference supply on the Ground Module.
661	CANBUS FAILURE – POWER MODULE	None	6_6	• Drive State = PREVENTED • Lift Up State = PREVENTED	The control system failed to receive messages from the Pump Module. This may occur if re-programming was interrupted. Alternately, this may be an internal fault. • Pump Module Messages not received for 250 mS • This error shall be suppressed anytime that VSW is De-energized or if unit is in Safe Mode **Curtis Code 51: Communication Fault** Set: Ground Module is unable to communicate with Pump Module. Effect: Shutdown Motor, Shutdown Main Contactor, Shutdown EM Brake, Shutdown Throttle, Full Brake, Shutdown Pump Possible Cause: • CAN speed or protocol mismatch • CAN wires damaged. • Controller is disconnected.

Table 7-1. Diagnostic Trouble Codes (DTC)

DTC	Help Message	Alarm	Flash Code	Action	Trigger
662	CANBUS FAILURE – PLATFORM MODULE	None	6_6	• All Platform functions Prevented. Normal operation from Ground Mode	In Platform Mode, the control system failed to receive messages from the Platform Module. Check wiring at the Platform Box. Check wiring along scissor arms leading up to Platform. • Digital Input Message – Motion (0x00) not received for 250 mS AND Platform Mode selected. • This error shall be suppressed anytime that VSW is De-energized or if unit is in Safe Mode
6649	CANBUS FAILURE – TILT/TEMP SENSOR	None	6_6	•Tilted State= TRUE •Low Temp Cut = TRUE if {MACHINE SETUP->TEMP CUTOUT = YES}	The control system failed to receive messages from the tilt sensor. • Tilt Sensor CAN communication not received for 1000ms • Temp Sensor considered to be unhealthy if Low Temperature Cutout configured
811	TILT SENSOR NOT CALIBRATED	None	8_1	• Tilted State = TRUE (+20.0′ X, +20.0′Y); Max Drive Speed Value = Worst-Case Slope Descent Functionality for both Forward and Reverse	The Chassis Tilt Sensor has never been calibrated so the control system assumes that the vehicle is tilted. Drive speed is reduced since a valid tilt reading is not available. Calibrate the Tilt Sensor using the calibration procedure to clear the message. • The Tilt Sensor's Calibration EEPROM is set to the signature implanted by the In-Circuit Test Fixture. Retained until Calibration EEPROM is over-written by a valid calibration.
8212	LSS PRESSURE SENSOR DISAGREEMENT	None	8_2	• Lift Up State = PREVENTED if Platform Height Value ≥ LSS-Min Height.	Pressure Sensor 1 (Pressure 1 Value) and Pressure Sensor 2 (Pressure 2 Value) do not agree. The control system shall use the worst case Pressure Transducer to determine whether OverLoad State = TRUE. Only applicable if {MACHINE SETUP-> LOAD ≠ NO}. • Pressure sensor disagreement shall be defined as a pressure difference between Pressure1Value and Pressure2Value greater than 75 PSI for 500 ms. • This fault shall be suppressed if DTC 23196/23197/23198/23199 are active.
8214	LSS ANGLE SENSOR – OUT OF RANGE HIGH	None	8_2	• Lift Up State = PREVENTED • Platform Height Value assumed to be Full Elevation for the purposes of other interlocks • Arm Guard Functionality shall be disabled • Latch DTC 252 to require re-calibration of Angle Sensors	The Elevation1 Raw Value reading when the machine is at maximum elevation has deviated from the Elevation1MaxCalValue. Only applicable if {MACHINE SETUP-> LOAD ≠ NO}. • Elevation1RawValue > (Elevation1MaxCalValue + .2V) • This fault shall be suppressed if DTC 825 LSS HAS NOT BEEN CALIBRATED fault is active. • This fault shall be suppressed if DTC 252 ELEV ANGLE SENSOR HAS NOT BEEN CALIBRATED fault is active.

Table 7-1. Diagnostic Trouble Codes (DTC)

DTC	Help Message	Alarm	Flash Code	Action	Trigger
8215	LSS ANGLE SENSOR – OUT OF RANGE LOW	None	8_2	• Lift Up State = PREVENTED • Platform Height Value assumed to be Full Elevation for the purposes of other interlocks • Arm Guard Functionality shall be disabled • Latch DTC 252 to require re-calibration of Angle Sensors	The Elevation1RawValue reading when the machine is at minimum elevation has deviated from the Elevation1MinCalValue. Only applicable if {MACHINE SETUP-> LOAD ≠ NO}. • Elevation1RawValue < (Elevation1MinCalValue - .2V) • This fault shall be suppressed if DTC 825 LSS HAS NOT BEEN CALIBRATED fault is active. • This fault shall be suppressed if DTC 252 ELEV ANGLE SENSOR HAS NOT BEEN CALIBRATED fault is active.
825	LSS HAS NOT BEEN CALIBRATED	None	8_2	• Overload State= TRUE	The Load Sensing System has never been calibrated and the control system assumes that the platform is overloaded. Calibrate the Load Sensing System using the calibration procedure to clear the message. Only applicable if {MACHINE SETUP-> LOAD ≠ NO}. • The Load Sensing System's Calibration EEPROM for Empty Platform Load is set to Never Set (signature implanted by the In-Circuit Test Fixture) Retained until Calibration EEPROM is over-written by a valid calibration.
9910	FUNCTIONS LOCKED OUT – PLATFORM MODULE SOFTWARE VERSION IMPROPER	None	9_9	If Platform Mode • Drive State = PREVENTED • Lift Up State = PREVENTED • Lift Down State = PREVENTED	The control system will not function in Platform Mode because the Platform Module Software Version is not compatible with the rest of the system. Re-program or replace with a Version 1.xx module. • The Platform Module reported a Software Major Version that was not equal to "1" while in Platform Mode. The control system may resume operation once the difficulty has been corrected.
9912	POWER MODULE FAILURE - SYSTEM MONITOR	None	9_9	• Drive State = PREVENTED • Lift Up State = PREVENTED	**Curtis Code 77: Supervision Fault** **Set:** Supervisor logic fails? **Effect:** Shutdown Motor, Shutdown Main Contactor, Shutdown EM Brake, Shutdown Throttle, Full Brake, Shutdown Pump
99162	EEPROM FAILURE POWER MODULE - CHECK ALL SETTINGS	None	9_9	• Drive State = PREVENTED • Lift Up State = PREVENTED	**Curtis Code 46: EEPROM Failure** **Set:** Controller operating system tried to write to EEPROM memory and failed. **Effect:** Shutdown Motor, Shutdown Main Contactor, Shutdown EM Brake, Shutdown Throttle, Shutdown Interlock, Shutdown Drivers1-4, Shutdown PD, Full-Brake, Shutdown Pump **Possible Cause:** • Failure to write to EEPROM memory. This can be caused by EEPROM memory writes initiated by VCL, by the CAN bus, by adjusting parameters with the programmer, or by loading new software into the controller.

Table 7-1. Diagnostic Trouble Codes (DTC)

DTC	Help Message	Alarm	Flash Code	Action	Trigger
9924	FUNCTIONS LOCKED OUT – MACHINE NOT CONFIGURED	None	9_9	• Drive State = PREVENTED • Lift Up State = PREVENTED • Lift Down State = PREVENTED	The Ground Module has not been configured for the first time. Use the JLG Analyzer to adjust all Machine Setup and Personality settings and re-cycle power to clear difficulty. • This fault shall be suppressed if DTC 259 is active. This fault shall only be active if current selection is UNKNOWN or NO MODEL. Otherwise, as long as user changes to a valid selection DTC 259 shall be active • The Ground Module's non-volatile flag indicates that the vehicle has not been configured (new control system components). Retained until {MACHINE SETUP-> MODEL} and {MACHINE SETUP->MARKET} are selected and power is re-cycled.
9949	MACHINE CONFIGURATION OUT OF RANGE – CHECK ALL SETTINGS	Continuously	9_9	• Drive State = PREVENTED • Lift Up State = PREVENTED • Lift Down State = PREVENTED	Ground Module detects one of these issues: • Machine Setup parameter or Personality is out of range • Machine Setup checksum improper
995	POWER MODULE FAILURE - PERSONALITY RANGE ERROR	None	9_9	• Drive State = PREVENTED • Lift Up State = PREVENTED	The Pump Module detected an out-of-range or corrupt personality setting. Reset control system Personalities to default settings to clear difficulty. **Curtis Code 82: Bad Calibrations** Set: Calibration values are missing or out of range. Effect: Shutdown Motor, Shutdown Main Contactor, Shutdown EM Brake, Shutdown Throttle, Full Brake, Shutdown Pump **Possible Cause:** • Memory issues • Incorrect settings
9950	POWER MODULE FAILURE – INTERNAL ERROR	None	9_9	• Drive State = PREVENTED • Lift Up State = PREVENTED	**Curtis Code 14: Pre charge Failed** **Set:** Pre charge failed to charge the capacitor bank to the KSI voltage. **Effect:** Shutdown Motor, Shutdown Main Contactor, Shutdown EM Brake, Shutdown Throttle, Full Brake, Shutdown Pump **Possible Cause:** • See Monitor menu >> Battery: Capacitor Voltage • External load on capacitor bank (B+ connection terminal) that prevents the capacitor bank from charging.
9951	POWER MODULE FAILURE – INTERNAL ERROR	None	9_9	• Drive State = PREVENTED • Lift Up State = PREVENTED	**Curtis Code 71: OS General** **Set:** Internal controller fault detected **Effect:** Shutdown Motor, Shutdown Main Contactor, Shutdown EM Brake, Shutdown Throttle, Shutdown Drivers, Shutdown PD Full Brake, Shutdown Pump **Possible Cause:** • Internal Controller fault.

Table 7-1. Diagnostic Trouble Codes (DTC)

DTC	Help Message	Alarm	Flash Code	Action	Trigger
9952	POWER MODULE FAILURE – INTERNAL ERROR	None	9_9	• Drive State = PREVENTED • Lift Up State = PREVENTED	**Curtis Code 43: Pump Throttle Wiper High** **Set:** Pot2 wiper voltage is lower than the high fault threshold (can be changed with the VCL funciton Setup_Pot_Faults()) **Effect:** Shutdown Pump (if Lift_Switch_Only_Enable = Off), Shutdown PD (If Lower_Switch_Only_Enable = Off) **Possible Cause:** • See Monitor Menu>> Inputs: Pot2 Raw • Pot2 wiper voltage too high
9953	POWER MODULE FAILURE – INTERNAL ERROR	None	9_9	• Drive State = PREVENTED • Lift Up State = PREVENTED	**Curtis Code 97: Pump Hardware Fault** **Set:** Controller hardware indicated inappropriate voltage at pump motor M- connection, or internal supply voltage problem. **Effect:** Shutdown Motor, Shutdown Main Contactor, Shutdown EM Brake, Shutdown Throttle, Full Brake, Shutdown Pump **Possible Cause:** • External short of the pump motor • Controller defective
9954	POWER MODULE FAILURE – INTERNAL ERROR	None	9_9	• Drive State = PREVENTED • Lift Up State = PREVENTED	**Curtis Code 47: Pump HPD Fault** **Set:** Incorrect sequence of KSI and lift, lower, or hydraulic throttle inputs according to Hyd_Inhibit_Type parameter. **Effect:** Shutdown Pump **Possible Cause:** • KSI and Hydraulic throttle input applied in incorrect sequence; hydraulic throttle input was active when KSI was turned on. • Fault wiring, crimps, or switches at KSI, lift, lower, or hydraulic throttle inputs. • See Monitor menu >> Inputs
9955	POWER MODULE FAILURE – INTERNAL ERROR	None	9_9	• Drive State = PREVENTED • Lift Up State = PREVENTED	**Curtis Code 52: Pump Not Responding** **Set:** Pump current is equal to 0, when it is being commanded to percentage larger than 0% **Effect:** Shutdown Pump **Possible Cause:** • Load is disconnected
9956	POWER MODULE FAILURE – INTERNAL ERROR	None	9_9	• Drive State = PREVENTED • Lift Up State = PREVENTED	**Curtis Code 49: Parameter Change Fault** **Set:** Adjustment of a parameter setting that requires cycling of KSI. **Effect:** Shutdown Motor, Shutdown Main Contactor, Shutdown EM Brake, Shutdown Throttle, Full Brake, Shutdown Pump **Possible Cause:** • This is a safety fault caused by a change in certain parameter setting so that the vehicle will not operate until KSI is cycled. For example, if a user changes the Throttle Type this fault will appear and require cycling of KSI before vehicle can operate.

Table 7-1. Diagnostic Trouble Codes (DTC)

DTC	Help Message	Alarm	Flash Code	Action	Trigger
9957	POWER MODULE FAILURE – INTERNAL ERROR	None	9_9	• Drive State = PREVENTED • Lift Up State = PREVENTED	**Curtis Code 68: VCL Run Time Error** **Set:** Runtime VCL code error condition **Effect:** Shutdown Motor, Shutdown Main Contactor, Shutdown EM Brake, Shutdown Throttle, Shutdown Interlock, Shutdown Drivers1-4, Shutdown PD, Full Brake, Shutdown Pump **Possible Cause:** • VCL code encountered a runtime VCL error • See Monitor menu >> Controller. This error can then be compared to the runtime VCL module ID and error code definitions found in the specific OS system information file.
9958	POWER MODULE FAILURE – INTERNAL ERROR	None	9_9	• Drive State = PREVENTED • Lift Up State = PREVENTED	**Curtis Code 91: VCL/OS Mismatch** **Set:** VCL and OS software do not match; when KSI cycles, a check is made to verify that they match and a fault issued when they do not. **Effect:** Shutdown Motor, Shutdown Main Contactor, Shutdown EM Brake, Shutdown Throttle, Shutdown Interlock, Shutdown Drivers1-4, Shutdown PD, Full Brake, Shutdown Pump **Possible Cause:** • The VCL software in the controller does not match the OS software in the controller.
9959	POWER MODULE FAILURE – INTERNAL ERROR	None	9_9	• Drive State = PREVENTED • Lift Up State = PREVENTED	**Curtis Code 44: Pump Throttle Wiper Low** **Set:** Pot2 wiper voltage is lower than the low fault threshold (can be changed with the VCL function Setup_Pot_Faults()) **Effect:** Shutdown Pump (if Lift_Switch_Only_Enable = Off), Shutdown PD (If Lower_Switch_Only_Enable = Off) **Possible Cause:** • See Monitor Menu >> Inputs: Pot2 Raw • Pot2 wiper voltage too low
997	POWER MODULE FAILURE - CHECK POWER CIRCUITS OR MOSFET SHORT CIRCUIT	None	9_9	• Drive State = PREVENTED • Lift Up State = PREVENTED	**Curtis Code 95: Pump Over current Fault** **Set:** Pump current exceeded the current measurement limit. **Effect:** Shutdown Pump **Possible Cause:** • External short of the pump motor • Controller defective
998	EEPROM FAILURE – CHECK ALL SETTINGS	None	9_9	· Enter Safe Mode • Lift Down State = PREVENTED	The control system detected an EEPROM failure. Personalities and Machine Setup settings may be reset to default values. Check / correct all settings and recycle power to clear difficulty. • The Ground Module's EEPROM checksum indicates corruption. Retained until EEPROM settings are corrected and power is re-cycled.

Table 7-1. Diagnostic Trouble Codes (DTC)

DTC	Help Message	Alarm	Flash Code	Action	Trigger
999	FUNCTIONS LOCKED OUT - POWER MODULE SOFTWARE VERSION IMPROPER	None	9_9	• Drive State = PREVENTED • Lift Up State = PREVENTED	The control system will not function because the Pump Module Software Version is not compatible with the rest of the system. Re-program or replace with the version matched to the Ground Module • The Pump Module reported a Software Type, Software Major, or Software Minor Version that was not equal to Interface Module (all must match for compatibility). The control system may resume operation once the difficulty has been corrected. **Curtis Code 98: Illegal Model Number** Set: Illegal Model_Number variable; when KSI cycles, a check is made to confirm a legal Model_Number, and a fault is issued if one is not found. Effect: Shutdown Motor, Shutdown Main Contactor, Shutdown EM Brake, Shutdown Throttle, Full Brake, Shutdown Pump **Possible Cause:** • Model_Number variable contains illegal value (not 1210). • Software and Hardware do not match • Controller defective.

SECTION 8. GENERAL ELECTRICAL INFORMATION & SCHEMATICS

8.1 GENERAL

This section contains schematics to be used for locating and correcting most of the operating problems which may develop. If a problem should develop which is not presented in this section or which is not corrected by listed corrective actions, technically qualified guidance should be obtained before proceeding with any maintenance.

NOTICE

IT IS A GOOD PRACTICE TO AVOID PRESSURE-WASHING ELECTRICAL/ELECTRONIC COMPONENTS. SHOULD PRESSURE-WASHING BE UTILIZED TO WASH AREAS CONTAINING ELECTRICAL/ELECTRONIC COMPONENTS, JLG INDUSTRIES, INC. RECOMMENDS A MAXIMUM PRESSURE OF 750 PSI (52 BAR) AT A MINIMUM DISTANCE OF 12 INCHES (30.5 CM) AWAY FROM THESE COMPONENTS. IF ELECTRICAL/ELECTRONIC COMPONENTS ARE SPRAYED, SPRAYING MUST NOT BE DIRECT AND BE FOR BRIEF TIME PERIODS TO AVOID HEAVY SATURATION.

8.2 MULTIMETER BASICS

A wide variety of multimeters or Volt Ohm Meters (VOM) can be used for troubleshooting your equipment. A digital meter with reasonable accuracy (within 7%) is recommended for the measurements in these procedures. This section shows diagrams of a common, digital VOM configured for several different circuit measurements. Instructions for your VOM may vary. Please consult the meter operator's manual for more information.

Grounding

"Grounding the meter" means to take the black lead (which is connected to the COM (common) or negative port) and touch it to a good path to the negative side of the voltage source.

Backprobing

To "backprobe" means to take the measurement by accessing a connector's contact on the same side as the wires, the back of the connector. Readings can be done while maintaining circuit continuity this way. If the connector is the sealed type, great care must be taken to avoid damaging the seal around the wire. It is best to use probes or probe tips specifically designed for this technique, especially on sealed connectors. Whenever possible insert probes into the side of the connector such that the test also checks both terminals of the connection. It is possible to inspect a connection within a closed connector by backprobing both sides of a connector terminal and measuring resistance. Do this after giving each wire a gentle pull to ensure the wires are still attached to the contact and contacts are seated in the connector.

Min/Max

Use of the "Min/Max" recording feature of some meters can help when taking measurements of intermittent conditions while alone. For example, you can read the voltage applied to a solenoid when it is only operational while a switch, far from the solenoid and meter, is held down.

Polarity

Finding a negative voltage or current reading when expecting a positive reading frequently means the leads are reversed. Check what reading is expected, the location of the signal and that the leads are connected to the device under test correctly. Also check that the lead on the "COM" port goes to the ground or negative side of the signal and the lead on the other port goes to the positive side of the signal.

Scale

M = Mega = 1,000,000 * (Displayed Number)
k = kilo = 1,000 * (Displayed Number)
m = milli = (Displayed Number) / 1,000
µ = micro = (Displayed Number) / 1,000,000
Example: 1.2 kΩ = 1200 Ω
Example: 50 mA = 0.05 A

Voltage Measurement

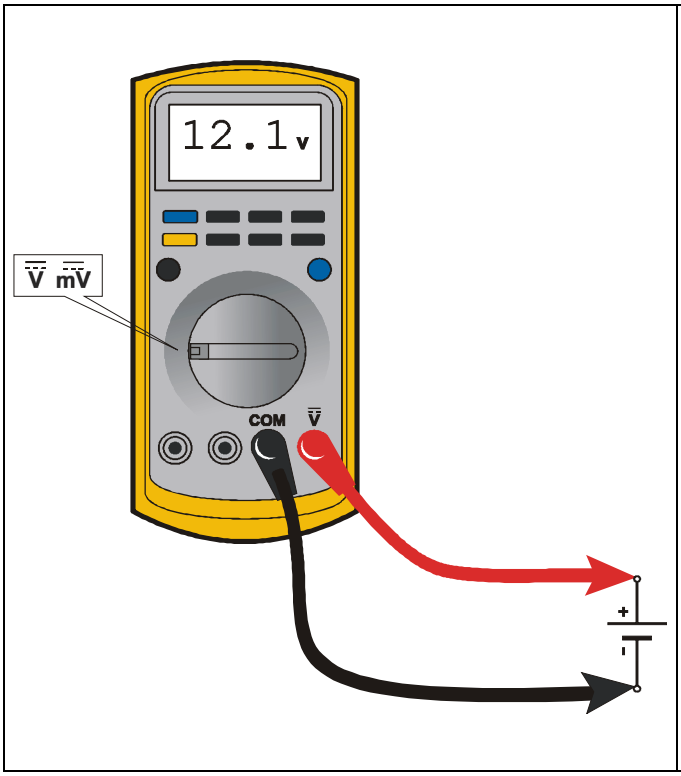

Figure 8-1. Voltage Measurement (DC)

- If meter is not auto ranging, set it to the correct range (See multimeter's operation manual).
- Use firm contact with meter leads.

Resistance Measurement

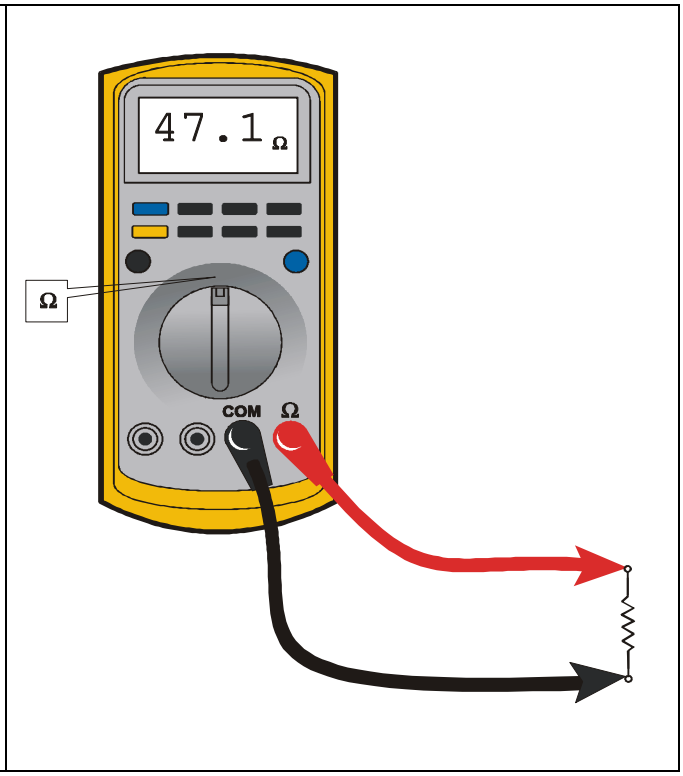

Figure 8-2. Resistance Measurement

- First test meter and leads by touching leads together. Resistance should read a short circuit (very low resistance).
- Circuit power must be turned OFF before testing resistance.
- Disconnect component from circuit before testing.
- If meter is not auto ranging, set it to the correct range (See multimeter's operation manual).
- Use firm contact with meter leads.

Continuity Measurement

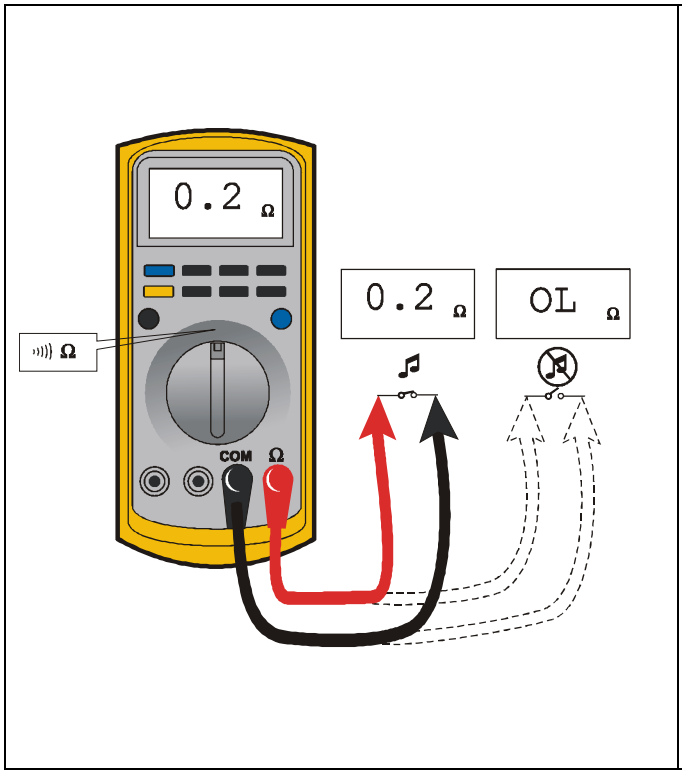

Figure 8-3. Continuity Measurement

- Some meters require a separate button press to enable audible continuity testing.
- Circuit power must be turned OFF before testing continuity.
- Disconnect component from circuit before testing.
- Use firm contact with meter leads.
- First test meter and leads by touching leads together. Meter should produce an audible alarm, indicating continuity.

Current Measurement

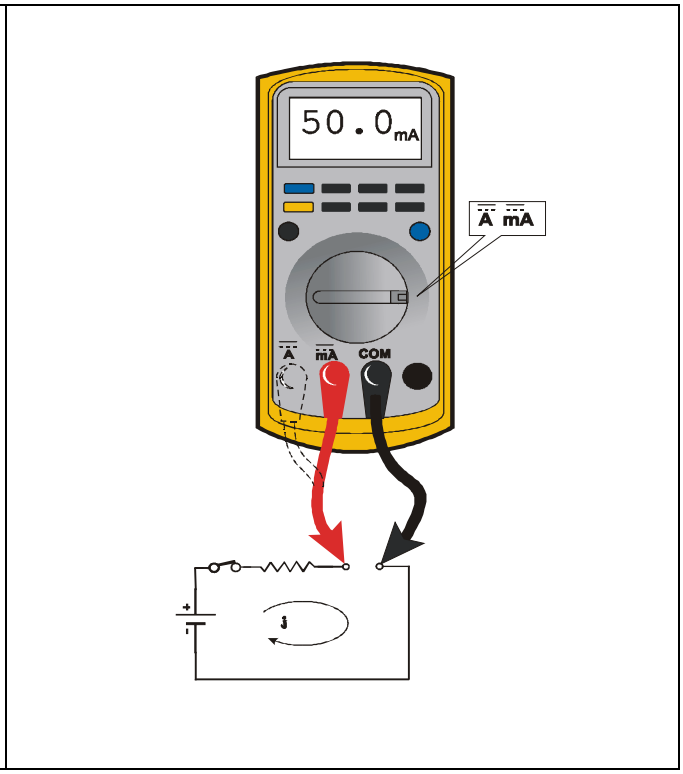

Figure 8-4. Current Measurement (DC)

- Set up the meter for the expected current range.
- Be sure to connect the meter leads to the correct jacks for the current range you have selected.
- If meter is not auto ranging, set it to the correct range (See multi meter's operation manual).
- Use firm contact with meter leads.

Continuity Measurement Over Long Distances

When trying to determine continuity of a harness or wire, longer than the reach of standard instrument leads, is possible to perform the check without excessively long leads. Using the other wires in the harness one can determine the condition of a particular wire in the harness.

Requirements:

- Harness with at least three separate wires including the wire under test.
- These wires must be able to be isolated from other wires, etc.
- Jumper or method to connect contacts on one side of harness.
- Meter that can measure resistance or continuity.

Procedure

Test multimeter leads resistance. Subtract this value from the measured resistance of the wires to get a more accurate measurement.

Consult the circuit schematic to determine which wires to use in addition to wire under test, here called wire #1 and wire #2, and how to isolate these wires. These wires should appear in the same connectors as the wire under test or are within reach of the jumper.

1. Disconnect all connections associated with the wire under test and the two additional wires. If harness is not completely isolated disconnect battery terminals also, as a precaution.
2. Measure continuity between all three wires, the wire under test, wire #1 and wire #2. These should be open. If not, repair the shorted wires or replace the harness.
3. On one side, jumper from contact of wire #1 and wire #2.
4. Measure continuity between wire #1 and wire #2. If there is continuity, both wires are good and can be used for this test. If there is not continuity, either wire could be bad. Check connections and measurement setup. Redo measurement. If still no continuity, repair wires or consult schematic for other wires to use for test.
5. Jumper from wire under test to wire #1.
6. Measure continuity. If there is continuity, the wire under test is good. Resistance of a wire increases as the length increases and as the diameter decreases.

One can find the continuity of two wires, here #1 and #2, at once by following steps 1 through 4. If there is a problem the third wire is used to troubleshoot the other wires. To find the problem, start at step 1 and use the entire procedure.

8.3 APPLYING SILICONE DIELECTRIC COMPOUND TO AMP CONNECTORS

Silicone Dielectric Compound must be used on the AMP connections for the following reasons:

- To prevent oxidation at the mechanical joint between male and female pins.
- To prevent electrical malfunction caused by low level conductivity between pins when wet.

Use the following procedure to apply Silicone Dielectric Compound to the electrical connectors.

1. To prevent oxidation and low level conductivity, silicone dielectric grease must be packed completely around male and female pins on the inside of the connector after the mating of the housing to the header. This is easily achieved by using a syringe to fill the header with silicone dielectric compound, to a point just above the top of the male pins inside the header. When assembling the housing to the header, it is possible that the housing will become air locked, thus preventing the housing latch from engaging.
2. Pierce one of the unused wire seals to allow the trapped air inside the housing to escape.
3. Install a hole plug into this and/or any unused wire seal that has silicone dielectric compound escaping from it.

8.4 DIELECTRIC GREASE APPLICATION

Dielectric grease helps to prevent corrosion of electrical contacts and improper conductivity between contacts from moisture intrusion. Non-waterproof connectors benefit from the application of dielectric grease.

Installation

The following is general guidance for the installation of dielectric grease in a connector system.

- Use dielectric grease in a tube for larger connection points or apply with a syringe for small connectors.
- Apply dielectric grease to plug/male connector housing which typically contains sockets contact/female terminals.
- Leave a layer of dielectric grease on the mating face of the connector, completely covering each connector terminal hole. Refer the pictures shown below.
- Assemble the connector system immediately to prevent moisture ingress or dust contamination.

The following connector systems are specifically addressed because of their widespread use at JLG. However, this guidance may be applied to similar devices.

AMP Mate-N-Lok

This connector system is widely used inside enclosures for general-purpose interconnect. Follow the general guidance for installation.

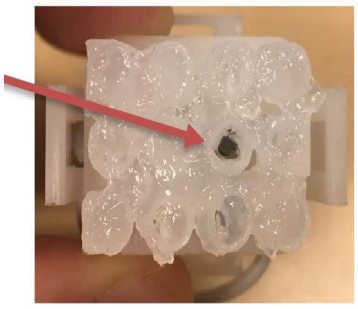

Improper

Proper

AMP Faston

This connector system is typically used on operator switches at JLG. Follow the general guidance for installation.

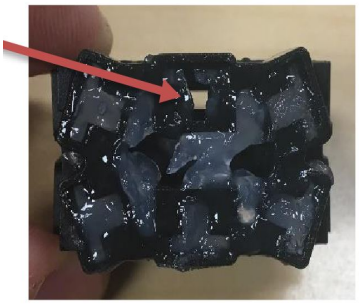

Improper

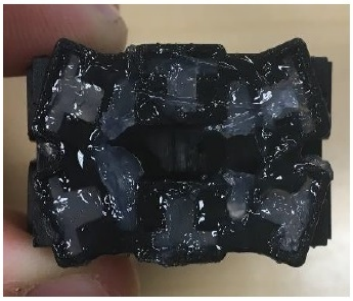

Proper

AMP Micro-Fit

This connector system is typically used on control modules at JLG. Follow the general guidance for installation.

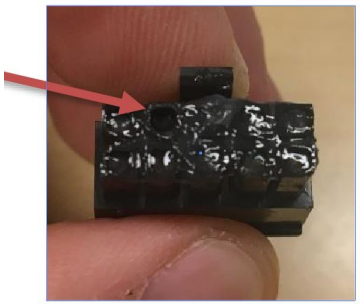

Improper

Proper

AMP Mini Fit Jr

This connector system is typically used on control modules at JLG. Follow the general guidance for installation.

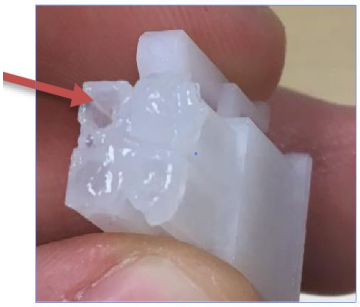

Improper

Proper

Mini Fit Sr

This connector system is typically used on control modules at JLG. Follow the general guidance for installation.

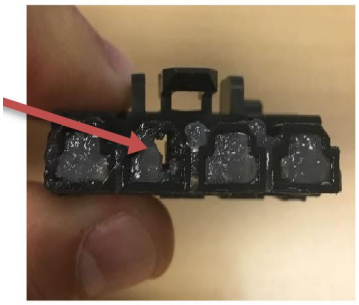

Improper

Proper

DIN Connectors

This connector is typically used on hydraulic valves. Follow the installation instructions

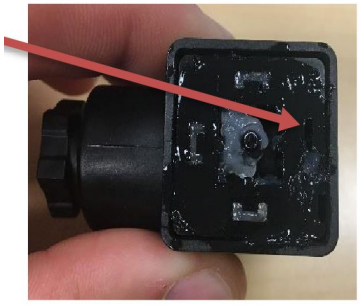

Improper

Proper

Exceptions

Some waterproof connector applications do benefit from dielectric grease, and some non waterproof connectors do not benefit from dielectric grease.

In the exceptions below, we have found dielectric grease is not needed for some applications, and in some cases can interfere with the intended connection. Dielectric grease shall be used as an exception in other applications.

Enclosures

Application of dielectric grease is not required in properly sealed enclosures. To meet criteria, the enclosure must be rated to at least IP56 (dust protected; protected from powerful jets of water).

Carling Switch Connectors

Carling switches may experience high impedance, or discontinuity, due to silicone dielectric grease ingress when switching inductive loads. Therefore, dielectric grease shall not be applied to Carling switch mating connectors unless specifically noted.

Scissor Platform Cable at the Platform Control

Some waterproof connectors are exposed to the elements when disconnected by the customer benefit from having protection using dielectric grease.

8.5 AMP CONNECTOR

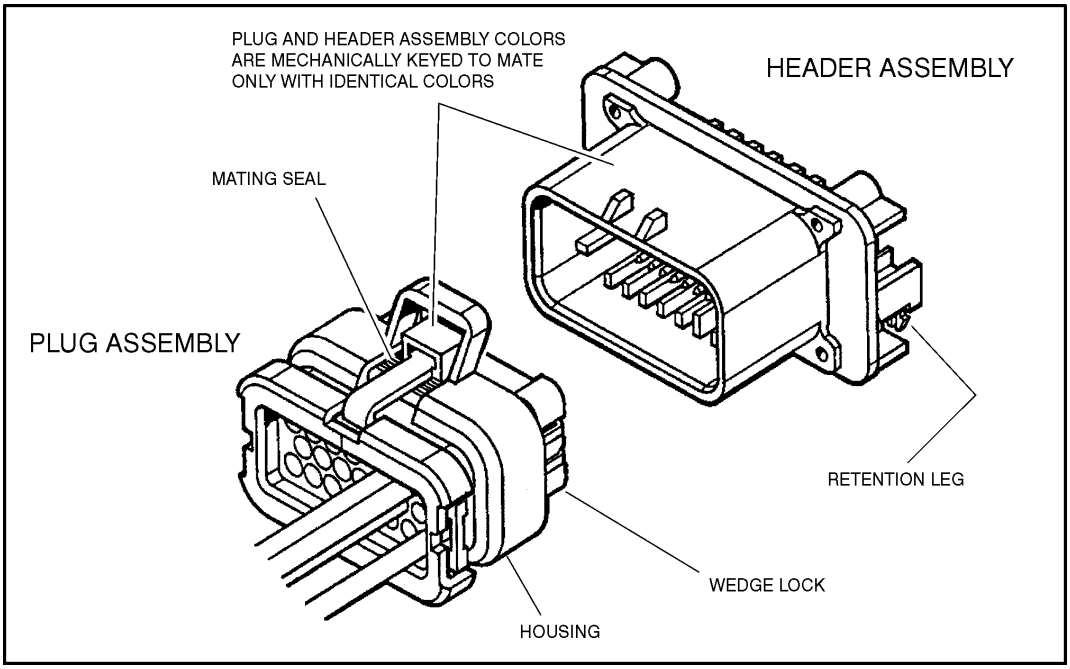

Figure 8-5. AMP Connector

Assembly

Check to be sure the wedge lock is in the open, or as-shipped, position (See Figure 8-6. Connector Assembly (1 of 4)). Proceed as follows:

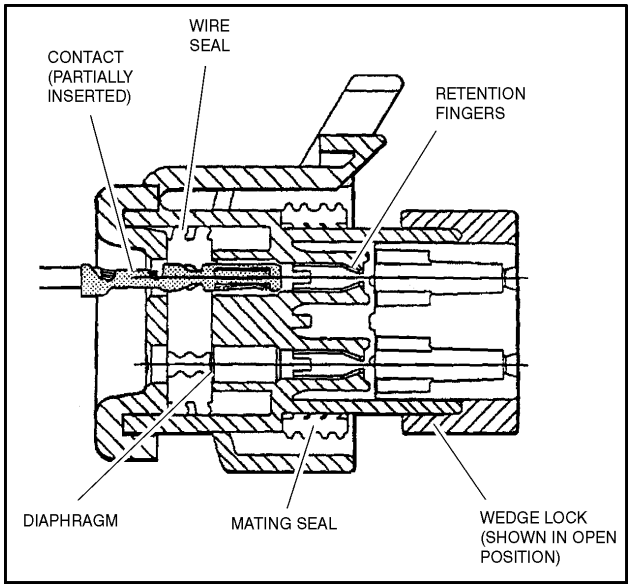

Figure 8-6. Connector Assembly (1 of 4)

1. To insert a contact, push it straight into the appropriate circuit cavity as far as it will go (See Figure 8-7. Connector Assembly (2 of 4)).
2. Pull back on the contact wire with a force of 1 or 2 lb. to be sure the retention fingers are holding the contact (See Figure 8-7. Connector Assembly (2 of 4)).
3. After all required contacts have been inserted, the wedge lock must be closed to its locked position. Release the locking latches by squeezing them inward (See Figure 8-8. Connector Assembly (3 of 4)).
4. Slide the wedge lock into the housing until it is flush with the housing (See Figure 8-9. Connector Assembly (4 of 4)).

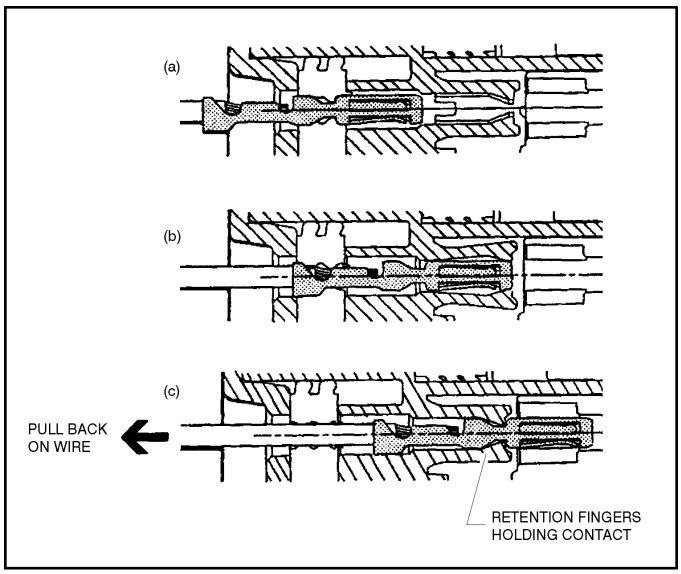

Figure 8-7. Connector Assembly (2 of 4)

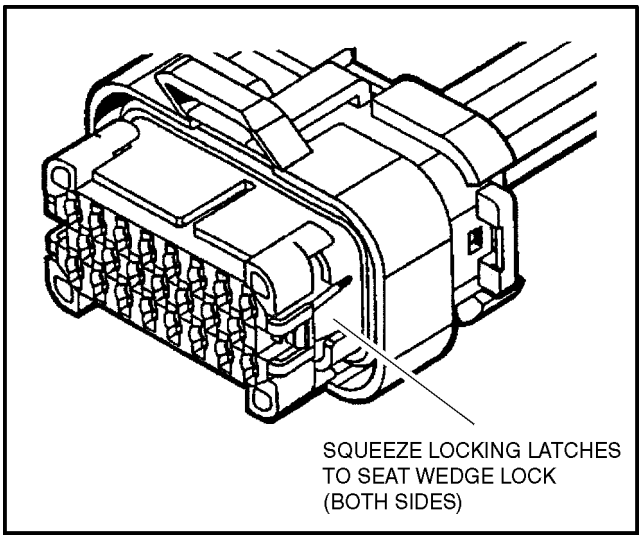

Figure 8-8. Connector Assembly (3 of 4)

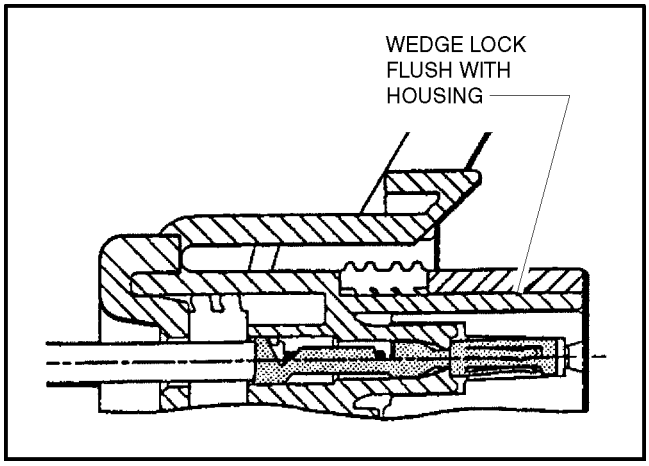

Figure 8-9. Connector Assembly (4 of 4)

Disassembly

1. Insert a 4.8 mm (3/16") wide screwdriver blade between the mating seal and one of the red wedge lock tabs.
2. Pry open the wedge lock to the open position.
3. While rotating the wire back and forth over a half turn (1/4 turn in each direction), gently pull the wire until the contact is removed.

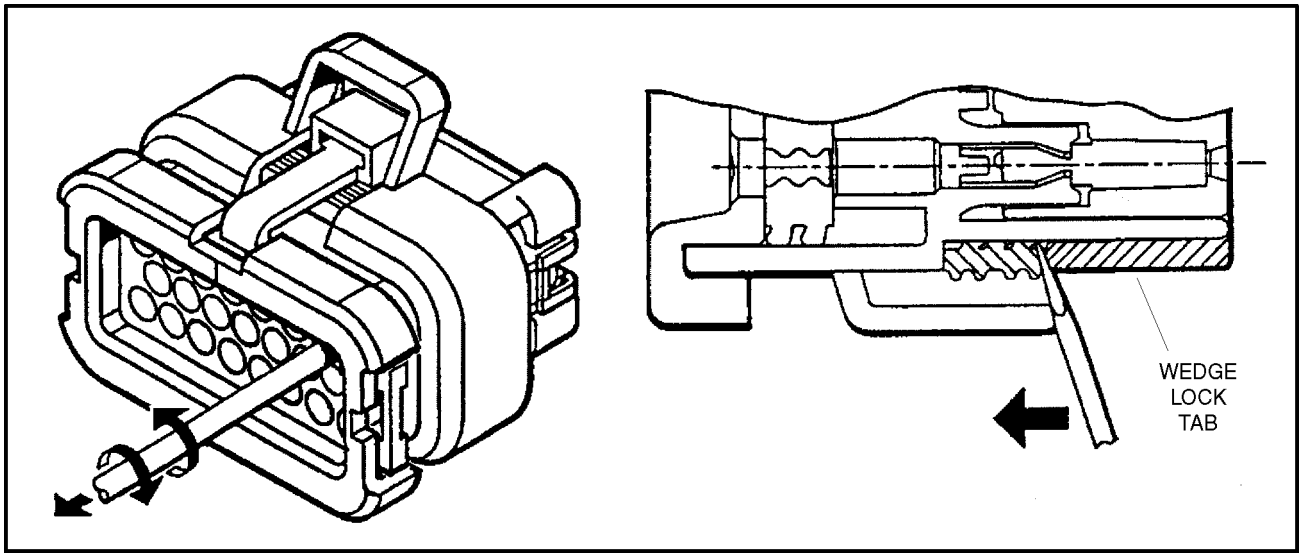

Figure 8-10. Connector Disassembly

NOTE: *The wedge lock should never be removed from the housing for insertion or removal of the contacts.*

Wedge Lock

The wedge lock has slotted openings in the forward, or mating end. These slots accommodate circuit testing in the field, by using a flat probe such as a pocket knife. DO NOT use a sharp point such as an ice pick.

Service - Voltage Reading

⚠ CAUTION

DO NOT PIERCE WIRE INSULATION TO TAKE VOLTAGE READINGS.

It has been common practice in electrical troubleshooting to probe wires by piercing the insulation with a sharp point. This practice should be discouraged when dealing with the AMPSEAL plug assembly, or any other sealed connector system. The resulting pinholes in the insulation will allow moisture to invade the system by traveling along the wire strands. This nullifies the effectiveness of the connector seals and could result in system failure.

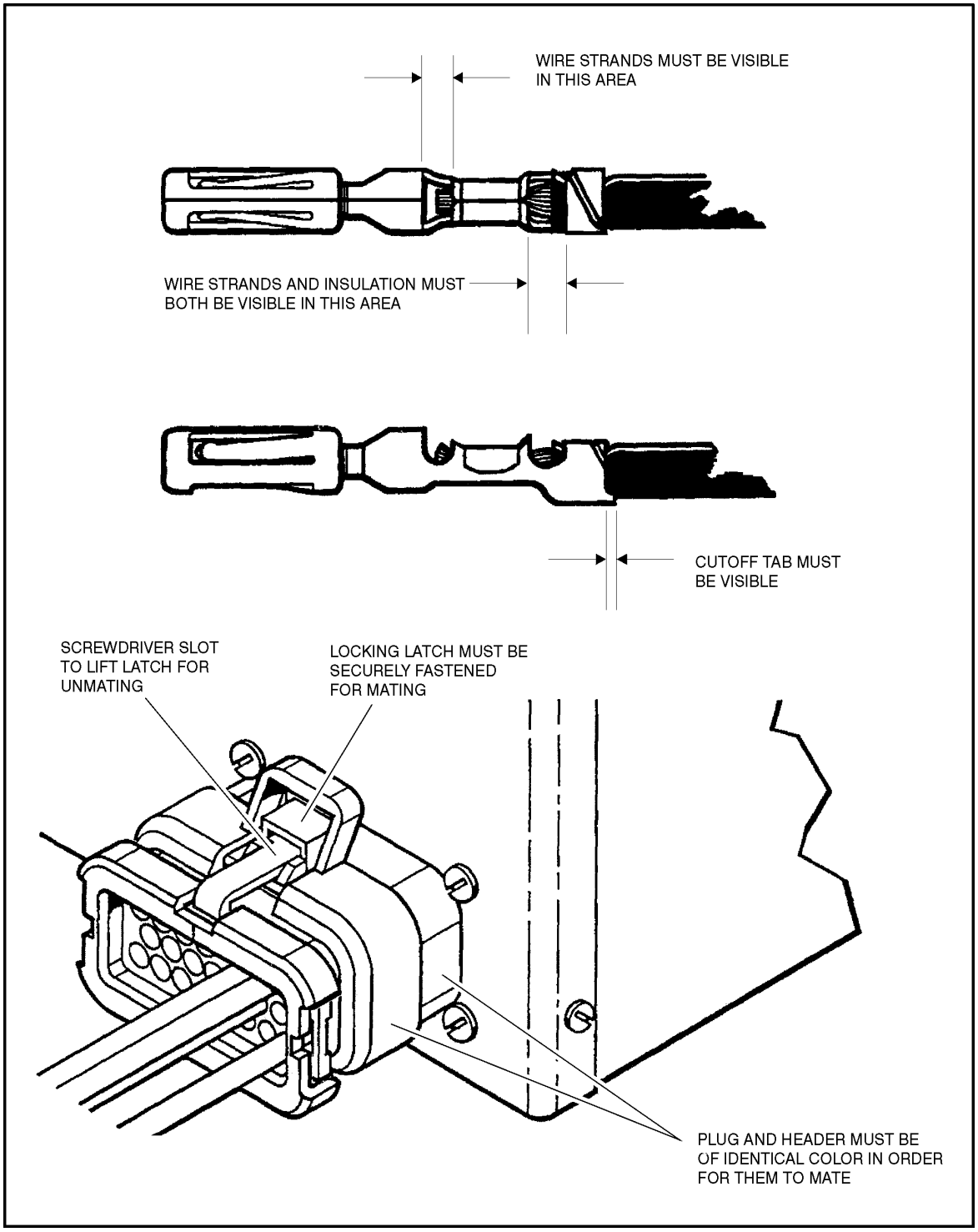

Figure 8-11. Connector Installation

8.6 WORKING WITH DEUTSCH CONNECTORS

DT/DTP Series Assembly

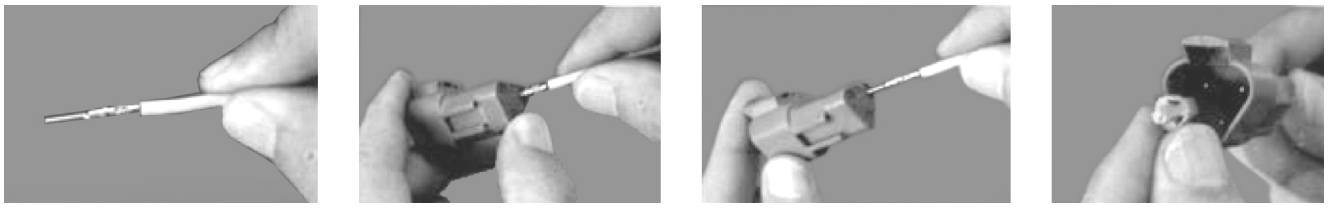

Figure 8-12. DT/DTP Contact Installation

1. Grasp crimped contact about 25 mm behind the contact barrel.
2. Hold connector with rear grommet facing you.
3. Push contact straight into connector grommet until a click is felt. A slight tug will confirm that it is properly locked in place.
4. Once all contacts are in place, insert wedge lock with arrow pointing toward exterior locking mechanism. The wedge lock will snap into place. Rectangular wedges are not oriented. Thy may go in either way.

NOTE: *The receptacle is shown - use the same procedure for plug.*

DT/DTP Series Disassembly

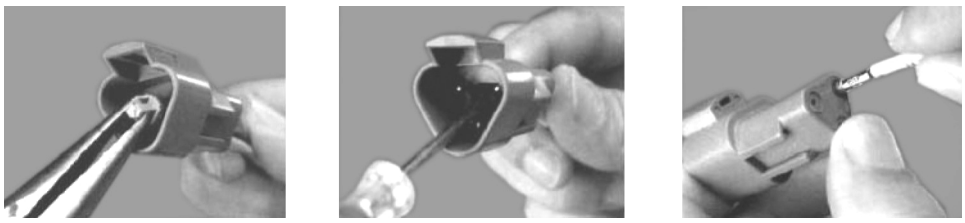

Figure 8-13. DT/DTP Contact Removal

1. Remove wedge lock using needle nose pliers or a hook shaped wire to pull wedge straight out.
2. To remove the contacts, gently pull wire backwards, while at the same time releasing the locking finger by moving it away from the contact with a screwdriver.
3. Hold the rear seal in place, as removing the contact may displace the seal.

HD30/HDP20 Series Assembly

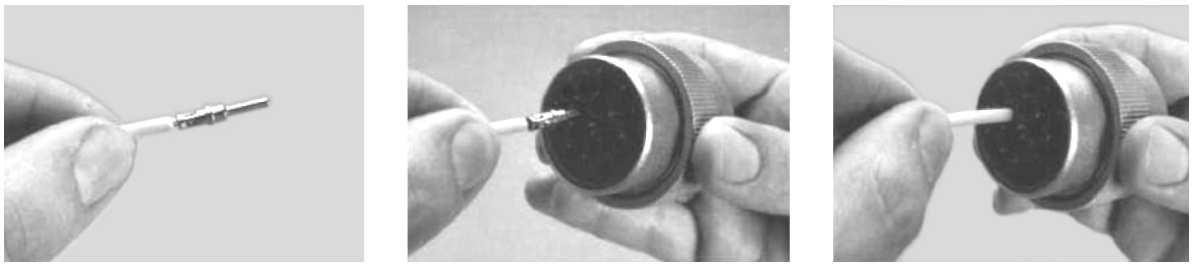

Figure 8-14. HD/HDP Contact Installation

1. Grasp contact about 25mm behind the contact crimp barrel.
2. Hold connector with rear grommet facing you.

3. Push contact straight into connector grommet until a positive stop is felt. A slight tug will confirm that it is properly locked in place.

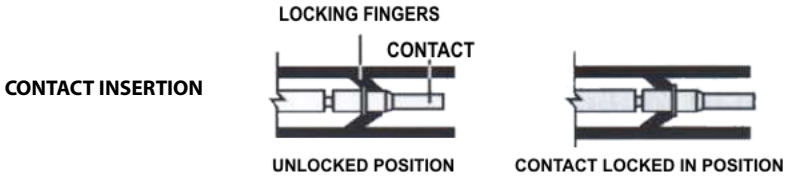

Figure 8-15. HD/HDP Locking Contacts Into Position

NOTE: *For unused wire cavities, insert sealing plugs for full environmental sealing.*

HD30/HDP20 Series Disassembly

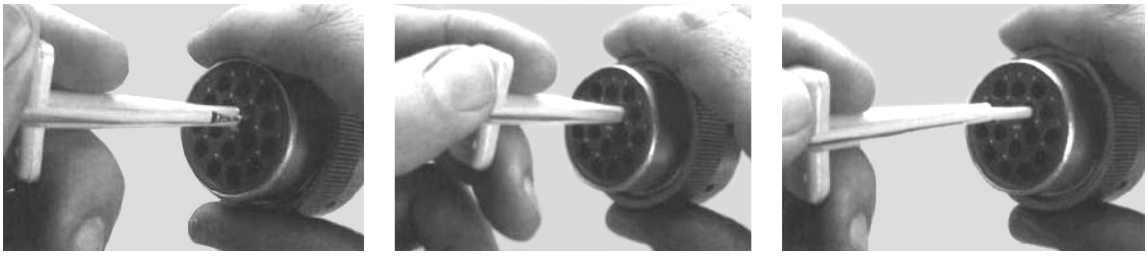

Figure 8-16. HD/HDP Contact Removal

1. With rear insert toward you, snap appropriate size extractor tool over the wire of contact to be removed.
2. Slide tool along into the insert cavity until it engages contact and resistance is felt.
3. Pull contact-wire assembly out of connector.

Figure 8-17. HD/HDP Unlocking Contacts

NOTE: *Do Not twist or insert tool at an angle.*

8.7 SWITCHES

Basic Check

The following check determines if the switch is functioning properly, not the circuit in which the switch is placed. A switch is functioning properly when there is continuity between the correct terminals or contacts only when selected.

1. De-energize the circuit.
2. Isolate the switch from the rest of the circuit if possible. If not possible, keep in mind it may affect readings.
3. Access the terminals to the switch.
4. If the switch has two terminals:
   a. Measure resistance across the terminals.
   b. Change the switch position.
   c. Measure resistance again with the leads in the same positions. If the meter was reading short, it should read an open. If the meter was reading open it should read short.
5. If the switch has more than two terminals, consult the schematic or switch diagram to determine what terminals will be connected. The test is similar to testing a switch with two terminals.
   a. Place one meter lead on the common contact and the other on a different contact in the same circuit.
   b. Cycle through all positions of the switch. The meter should read short only when the switch connects the two terminals and open otherwise.
   c. If the switch has more than one common contact repeat the process for that circuit.

Limit Switches

Limit switches are used to control movement or indicate position. Mechanical limit switches are just like manually operated switches except that the moving object operates the switch. These switches can be tested the same way as a standard switch by manually operating the sensing arm.

Another type of limit switch used by JLG is the inductive proximity switch, also referred to as a "prox switch". Inductive proximity switches are actuated only by ferrous metal (metal that contains Iron, such as steel) near the switch. They do not require contact, and must be energized to actuate. These types of switches can be used to detect boom or platform position, for example. These switches have a sensing face where the switch can detect ferrous metal close to it. To find the sensing face, take note how the switch is mounted and how the mechanisms meet the switch. Test this type of switch as follows:

1. Remove prox switch from its mount.
2. Reconnect harness if it was disconnected for step a, and turn on machine.
3. Hold switch away from metal and observe switch state in the control system diagnostics using the Analyzer. See vehicle or control system documentation on how to do this.
4. Place sensing face of switch on the object to be sensed by the switch. If that is not available, use a piece of ferrous metal physically similar to it. The switch state in the control system diagnostics should change.
5. When reinstalling or replacing switch be sure to follow mounting instructions and properly set the gap between the switch and object sensed.

Automatic Switches

If the switch is actuated automatically, by temperature or pressure for example, find a way to manually actuate the switch to test it. Do this either by applying heat or pressure, for example, to the switch. These switches may need to be energized to actuate.

1. Connect instrumentation to monitor and/or control the parameter the switch is measuring.
2. Observe switch state in control system with the Analyzer. See vehicle or control system documentation on how to do this.
3. Operate system such that the switch actuates. This could be going over a certain pressure or temperature, for example. The state indicated in the control system should change.

Switch Wiring - Low Side, High Side

When controlling a load, a switch can be wired between the positive side of the power source and the load. This switch is called a “high side” switch. The switch supplies the power to the load. When a switch is wired between the negative side of the power source and the load, it is a “low side” switch. The switch provides the ground to the load.

A low side switch will allow voltage to be present on the load. No power is applied because the switch is stopping current flow. This voltage can be seen if the measurement is taken with one test lead on the load and the other on the battery negative side or grounded to the vehicle. What is actually being measured is the voltage drop across the switch. This could mislead a technician into thinking the load is receiving power but not operating. To produce an accurate picture of power or voltage applied to the load, measure voltage across the load’s power terminals. Also, the technician can measure the voltage at both power terminals with respect to battery ground. The difference between those two measurements is the voltage applied to the load.

8.8 ELECTRICAL SCHEMATICS

SHEET 2:

POWER CABLES
LIFT DOWN LSS
PLATFORM CONTROL CABLE
BATTERY DISCONNECT
BATTERY JUMPER
CHARGER INTERLOCK
CHARGER INTERLOCK OVERRIDE
CHARGER DC CONNECTION

SHEET 3:

BEACON (DUAL)
PLATFORM CONTROL W/FST
PLATFORM CONTROL, COILED W/FST
PLATFORM CONTROL, COILED
INVERTER:
BATT+ TO INV CONTACTOR CABLE
INV CONTACTOR TO INV+ CABLE
INVERTER HARNESS
INVERTER TO AC FILTER
AC FILTER TO AC PLUG
PUMP CTRL B- TO INV-

SHEET 4:

PLATFORM BOX HARNESS

SHEET 5:

4045R CHASSIS HARNESS

SHEET 6:

WORKLIGHTS CABLE
QUICKWELDER CABLE
PLATFORM CONTROL, COILED W/OVER HEAD SWT
PLATFORM CONTROL, W/OVER HEAD SWT
HARNESS, TAA
CABLE, TAA
CABLE, LSS
CABLE, FORCE BASED LSS (4045R)

SHEET 7:

DATA LOGGER
HARNESS,RSCISSOR CLEARSKY CAN

1001200627-F

Figure 8-18. Electrical Schematic - Sheet 1 of 13

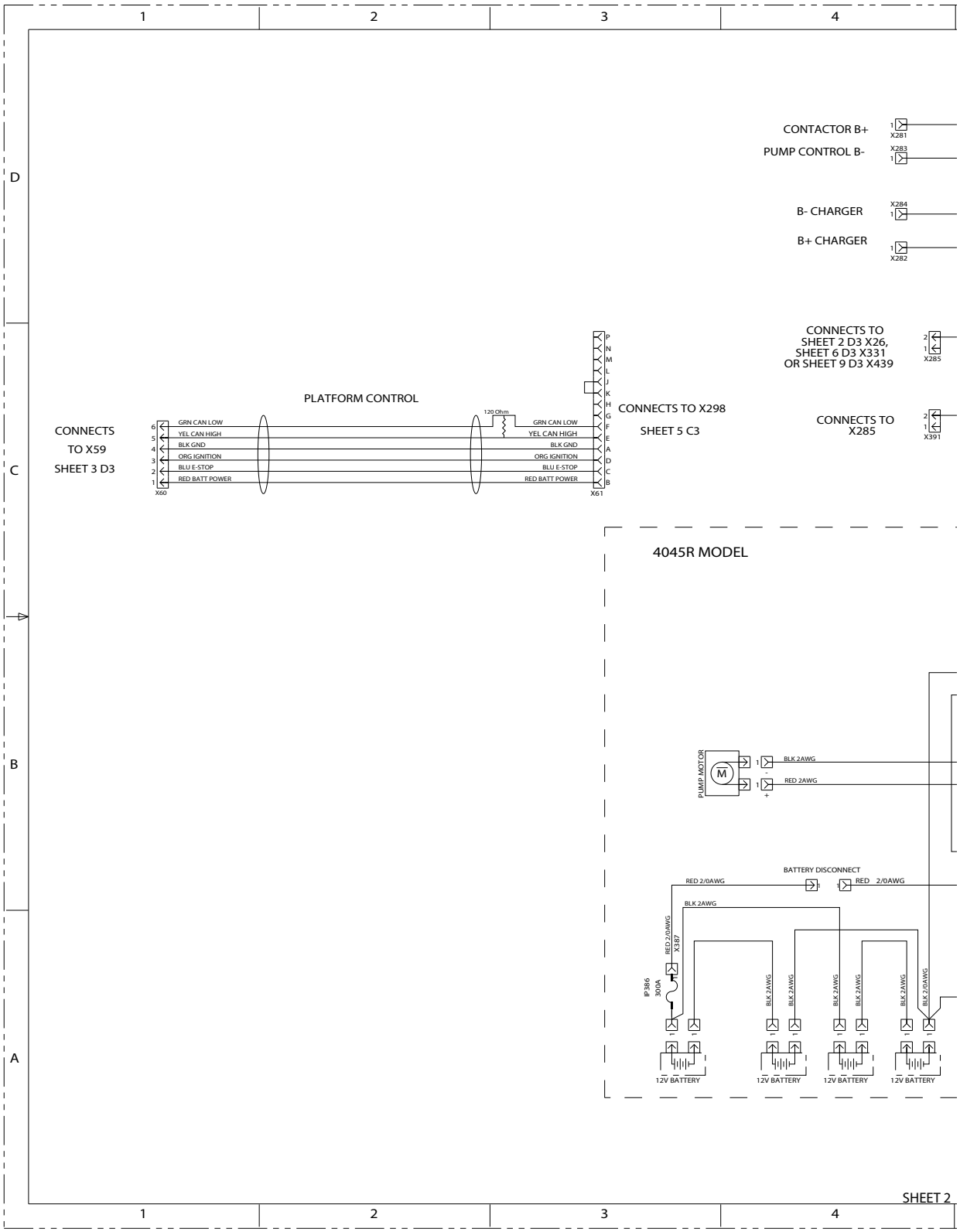

Figure 8-19. Electrical Schematic - Sheet 2 of 13

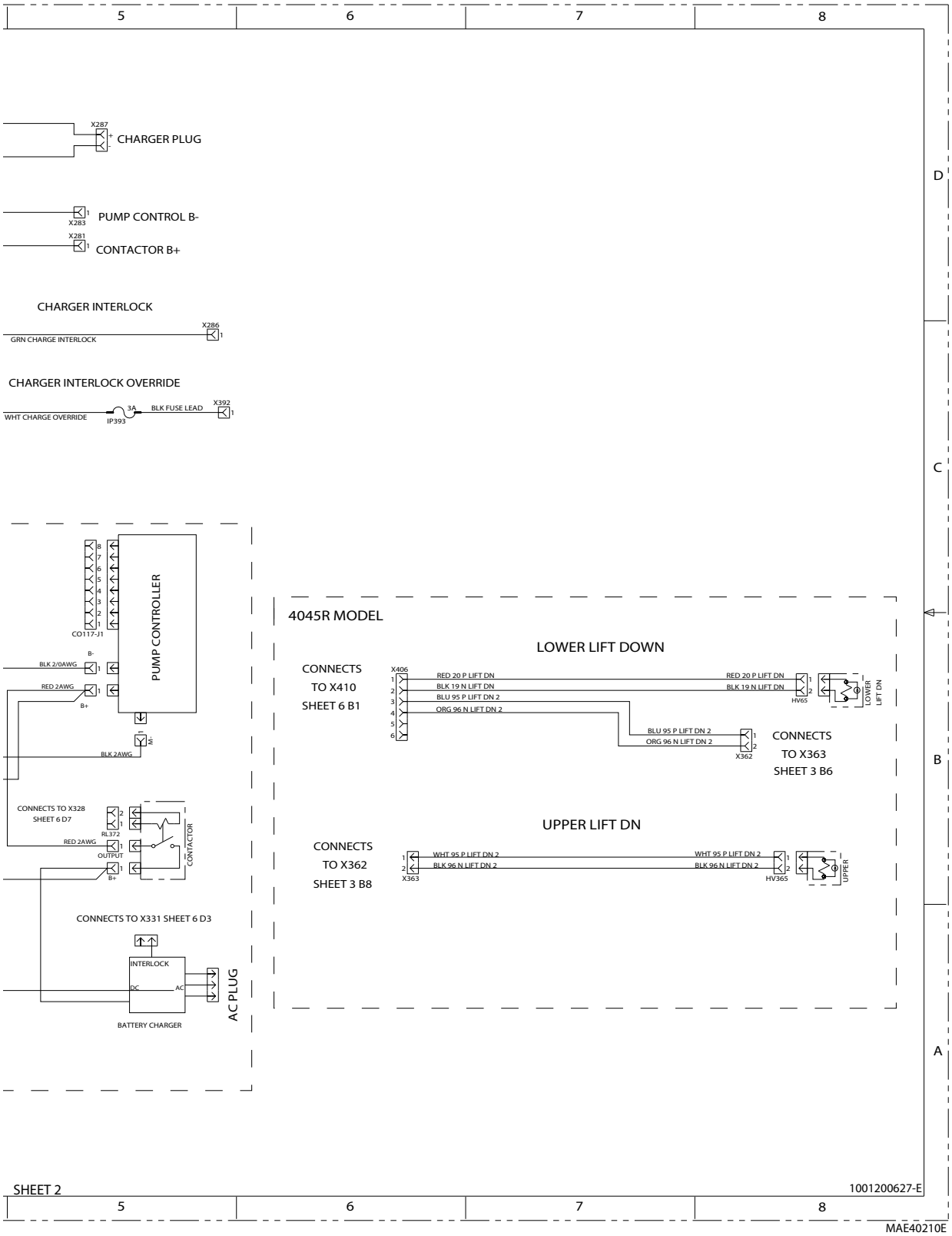

Figure 8-20. Electrical Schematic - Sheet 3 of 13

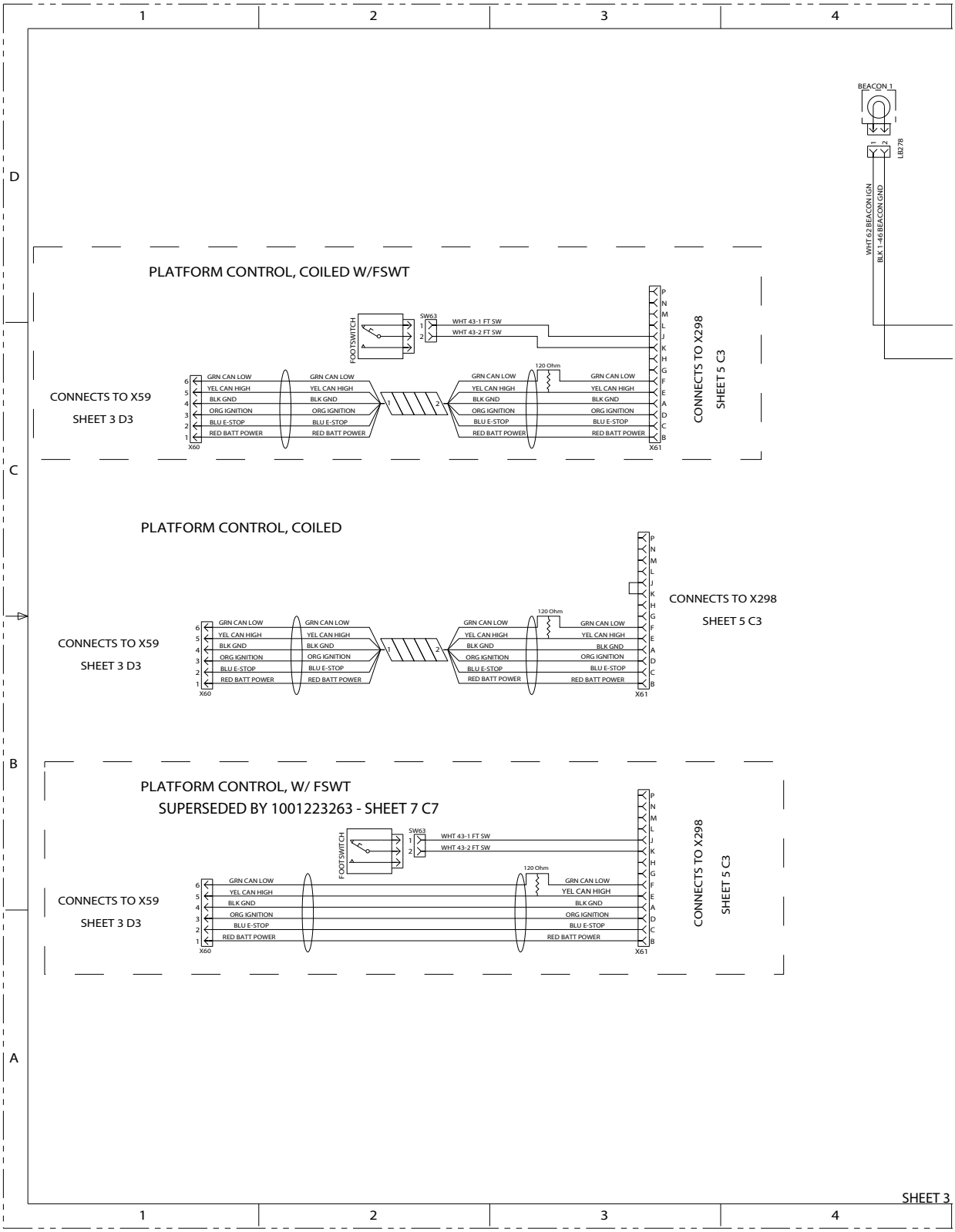

Figure 8-21. Electrical Schematic - Sheet 4 of 13

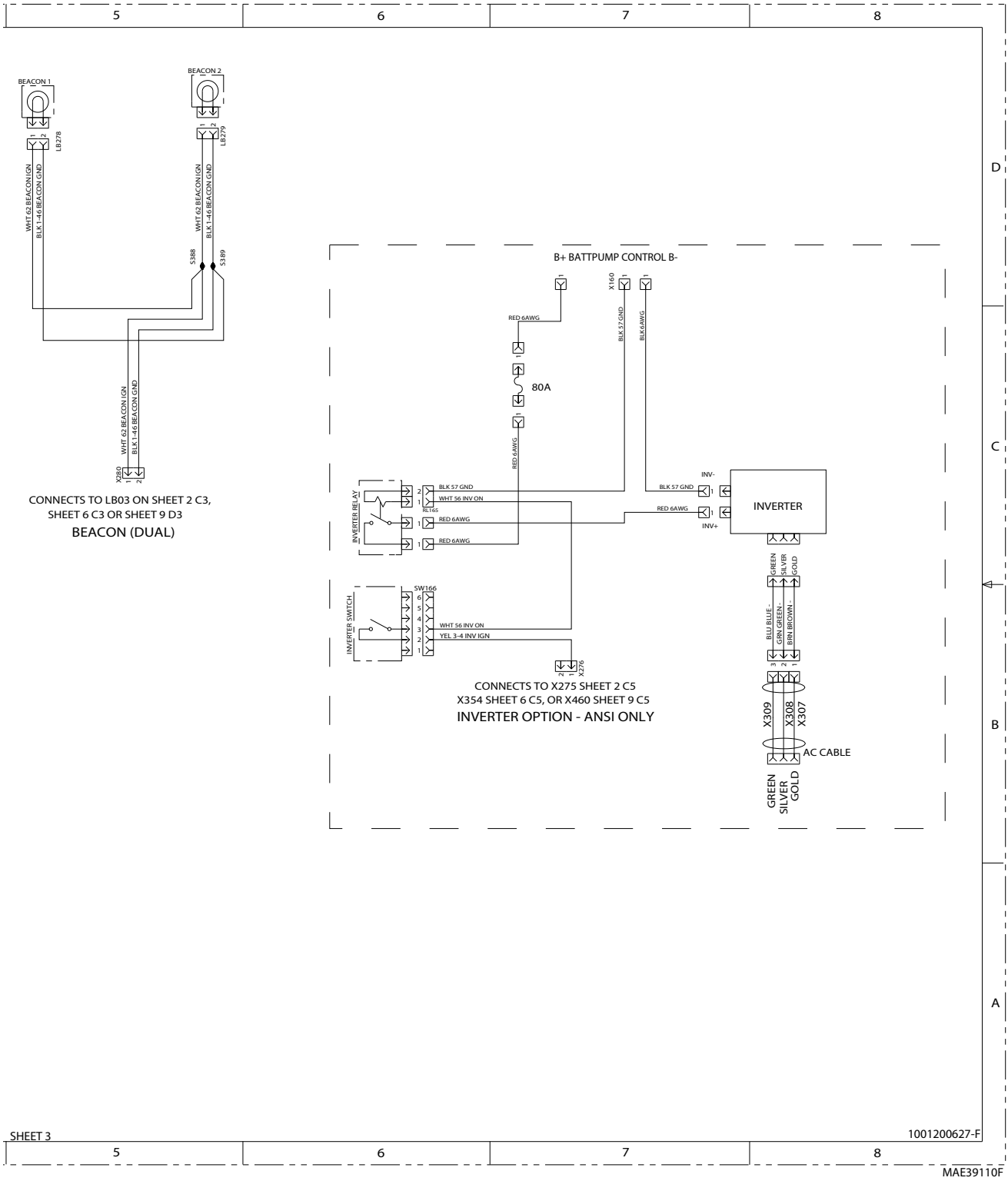

Figure 8-22. Electrical Schematic - Sheet 5 of 13

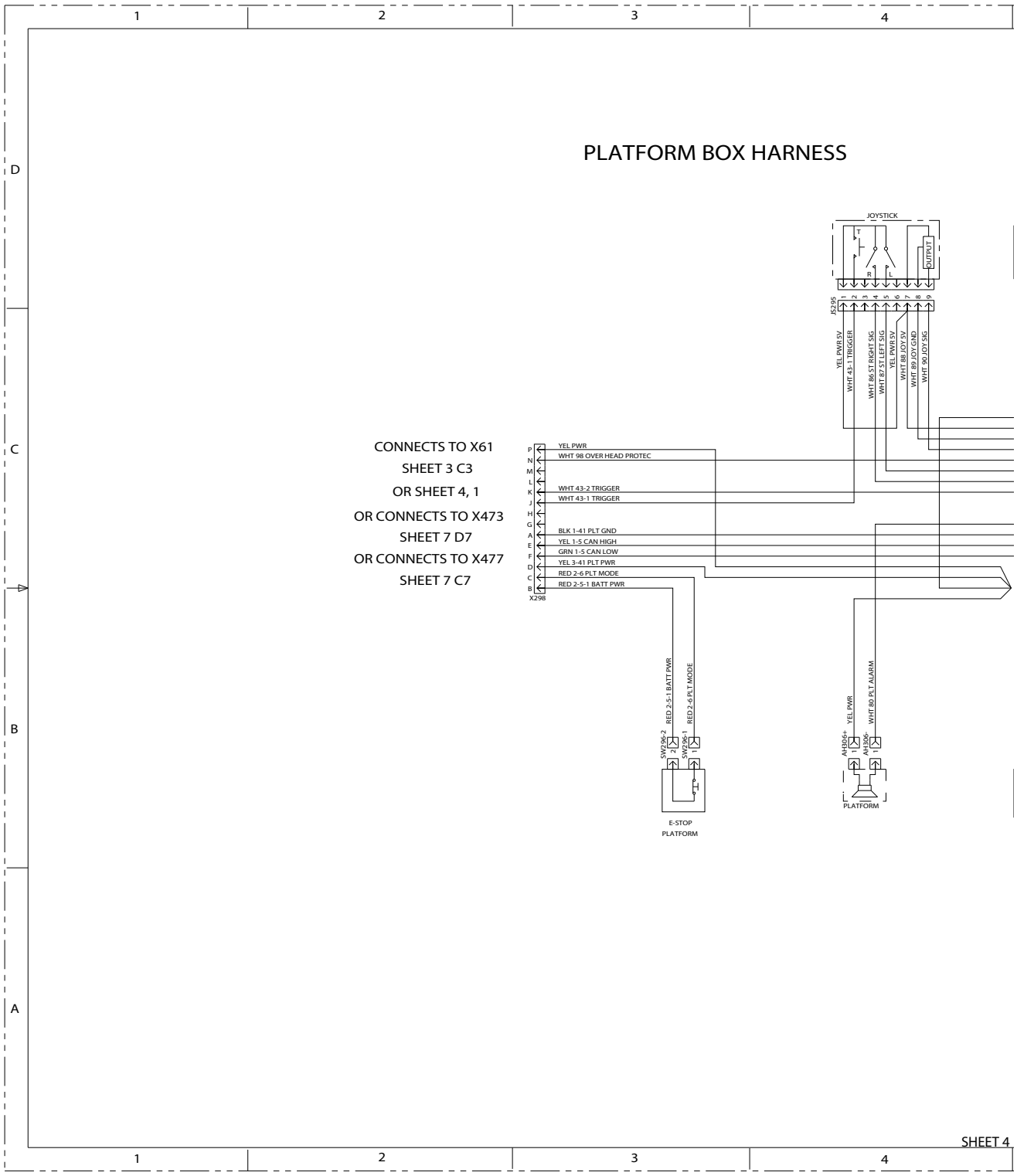

Figure 8-23. Electrical Schematic - Sheet 6 of 13

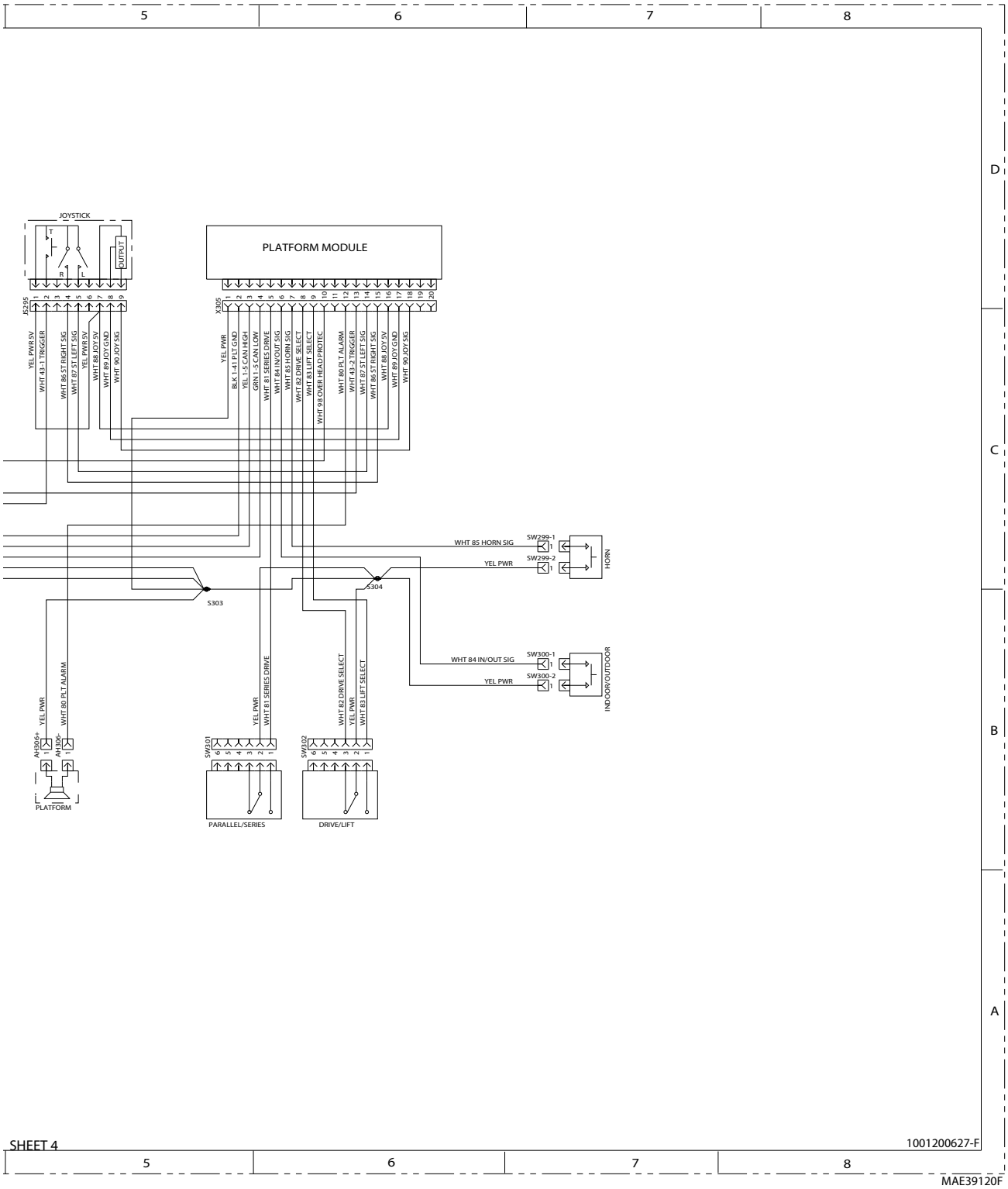

Figure 8-24. Electrical Schematic - Sheet 7 of 13

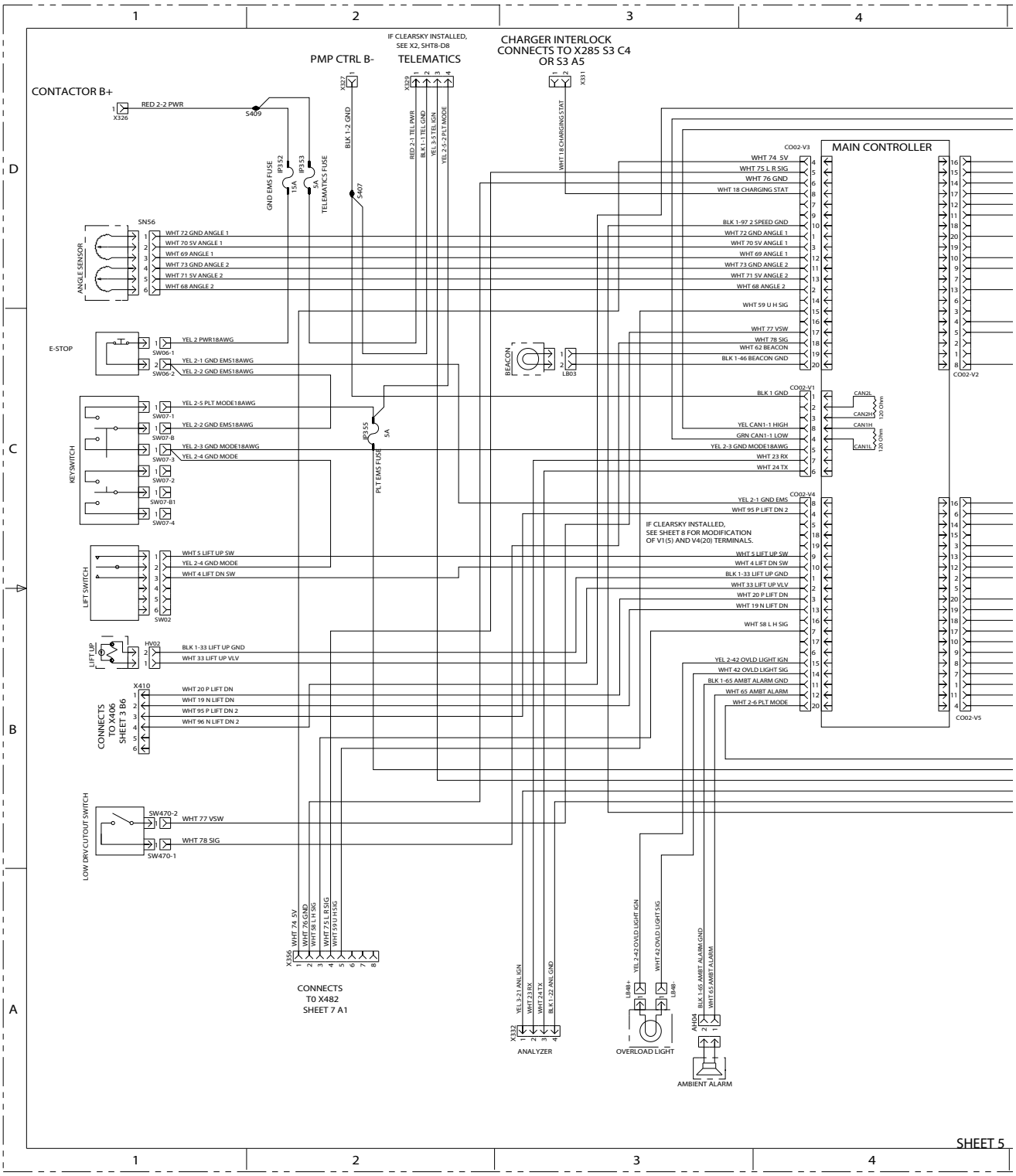

Figure 8-25. Electrical Schematic - Sheet 8 of 13

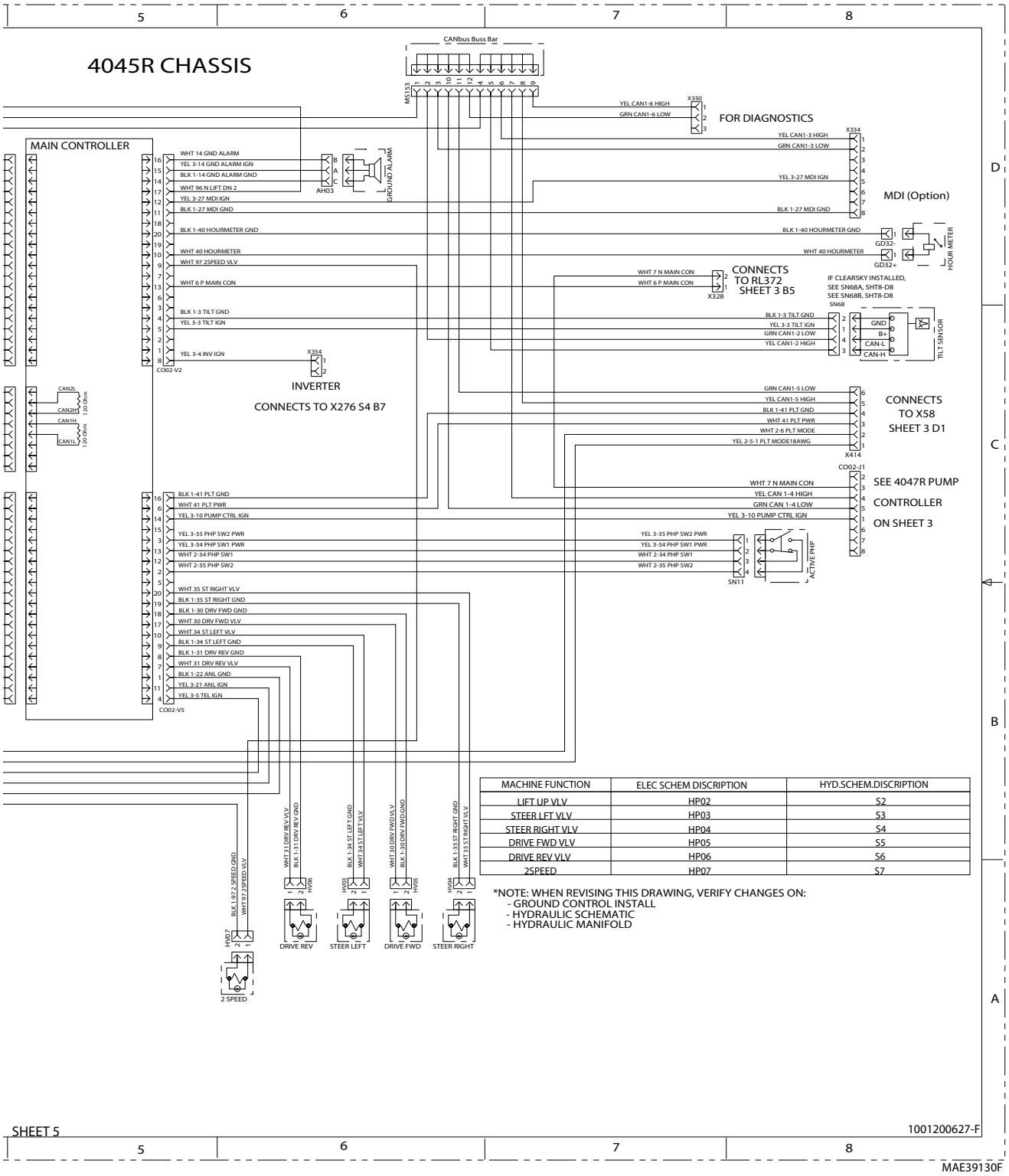

MACHINE FUNCTION	ELEC SCHEM DISCRIPTION	HYD.SCHEM.DISCRIPTION
LIFT UP VLV	HP02	S2
STEER LFT VLV	HP03	S3
STEER RIGHT VLV	HP04	S4
DRIVE FWD VLV	HP05	S5
DRIVE REV VLV	HP06	S6
2SPEED	HP07	S7

Figure 8-26. Electrical Schematic - Sheet 9 of 13

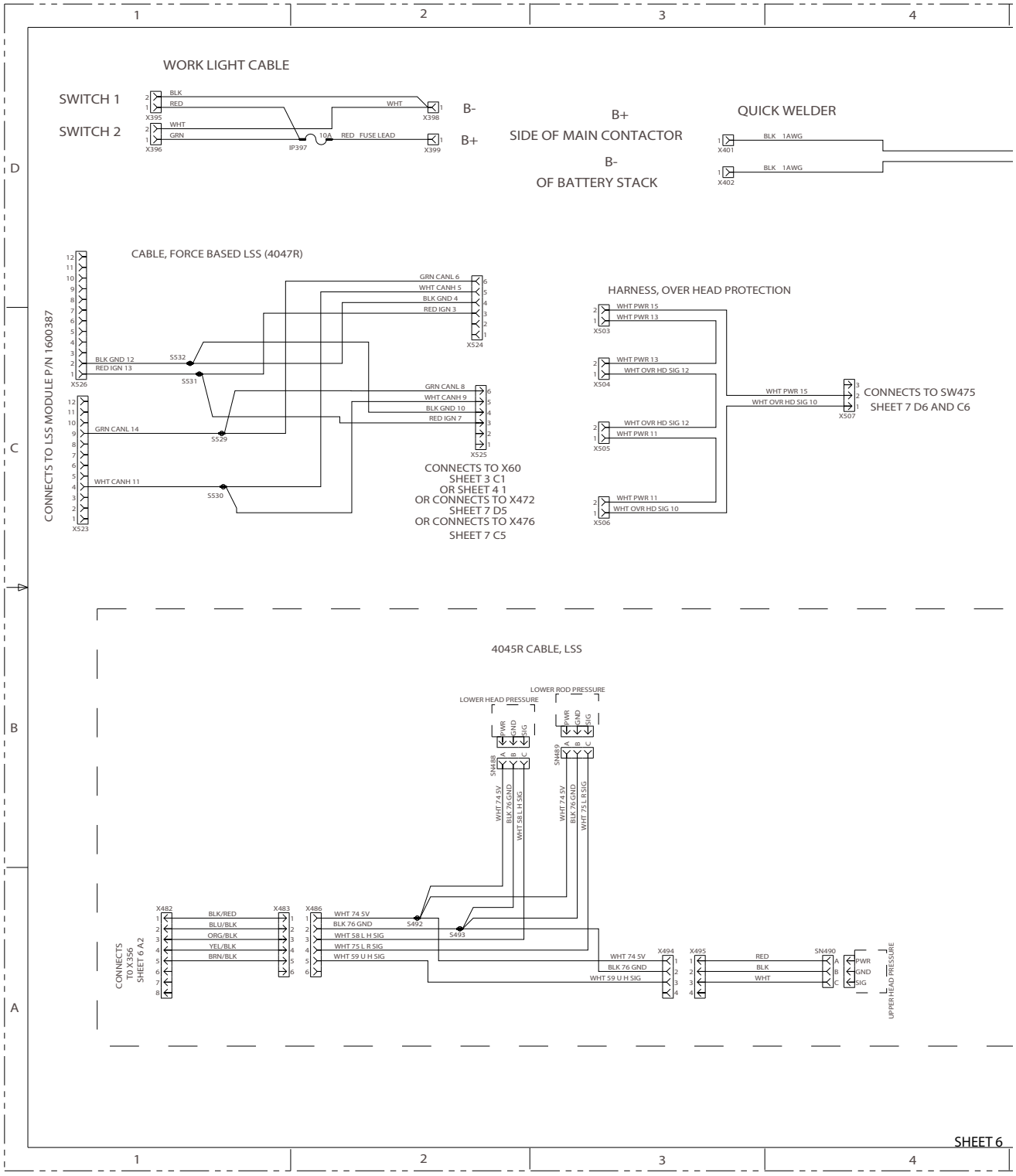

Figure 8-27. Electrical Schematic - Sheet 10 of 13

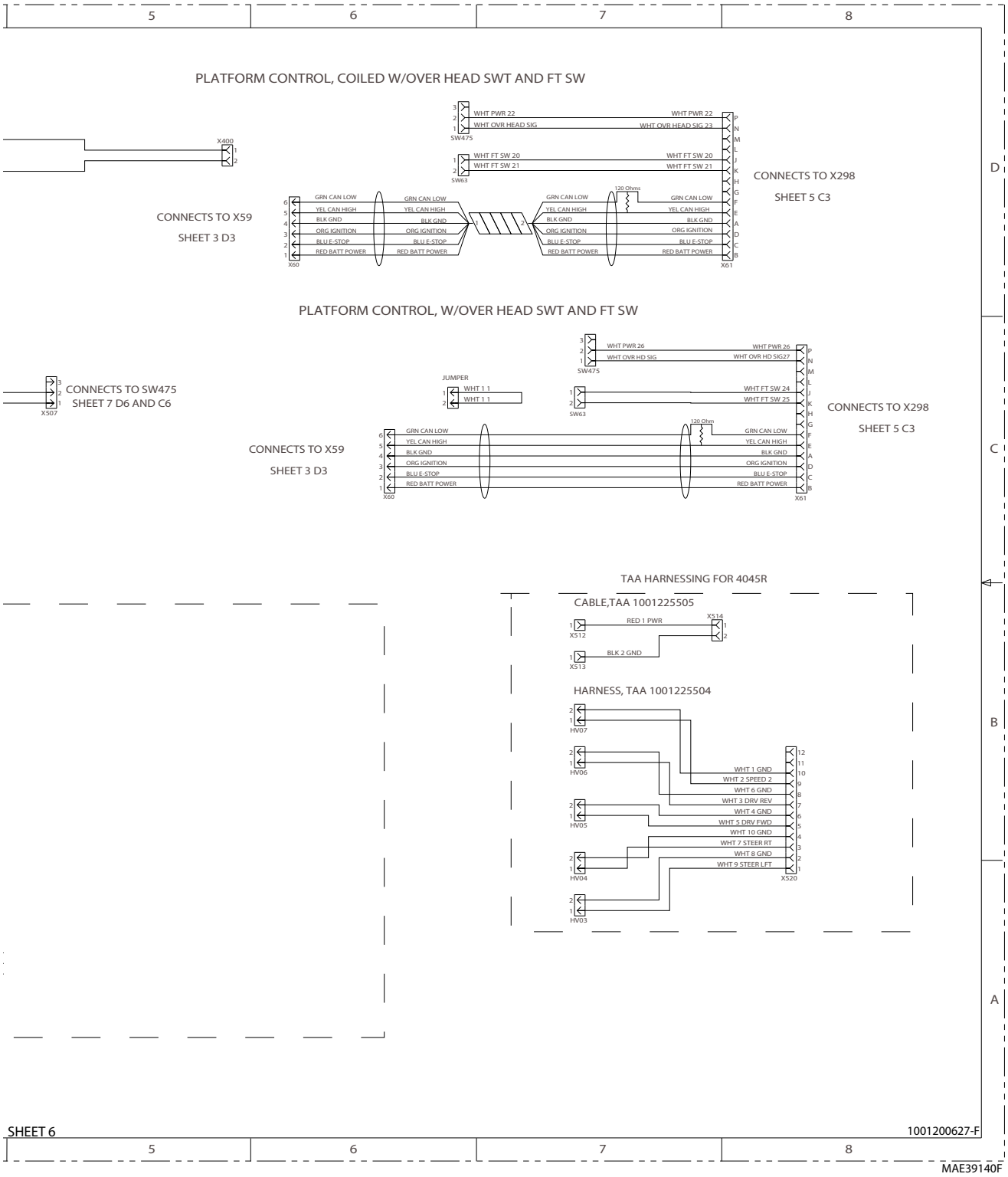

Figure 8-28. Electrical Schematic - Sheet 11 of 13

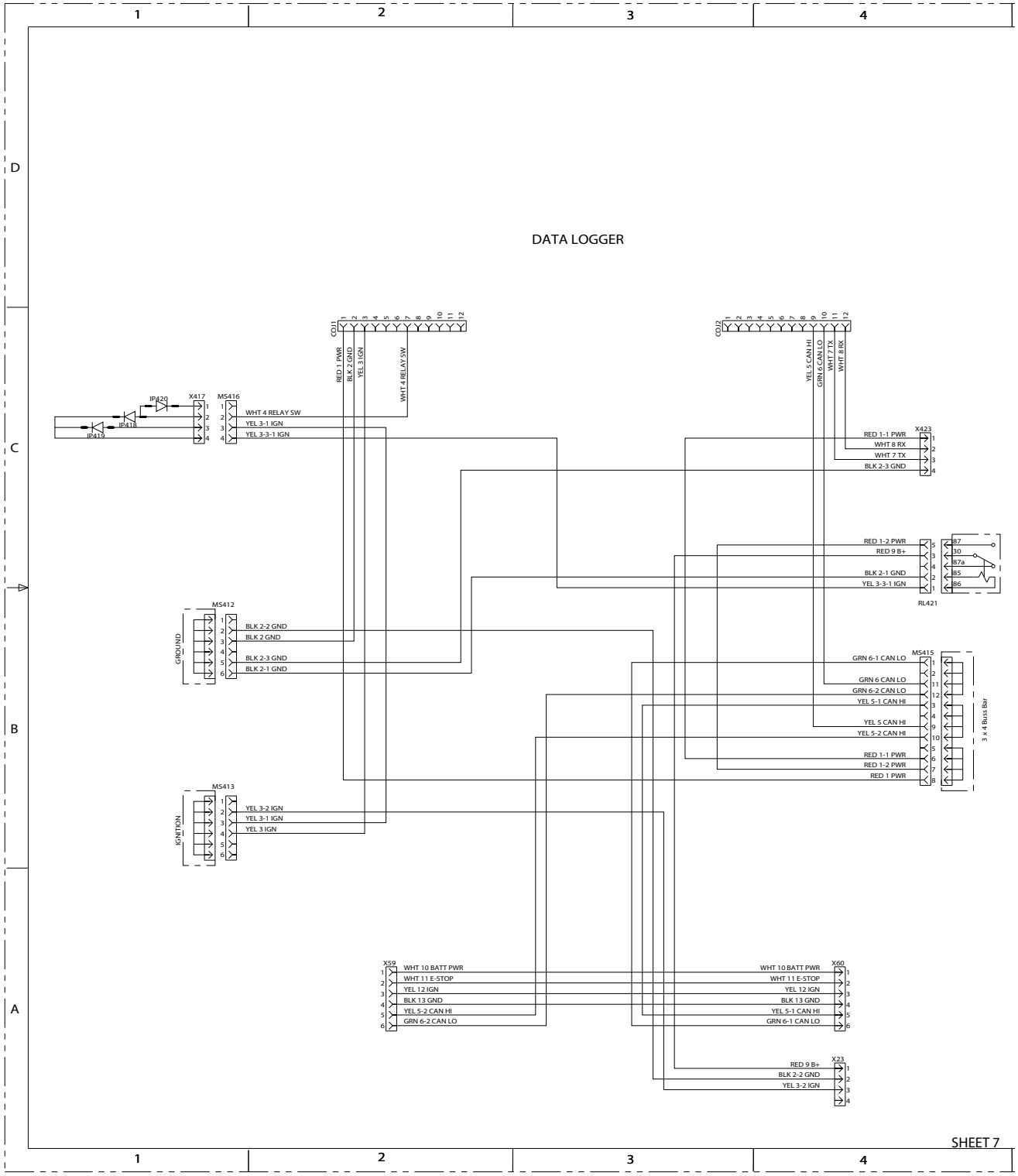

Figure 8-29. Electrical Schematic - Sheet 12 of 13

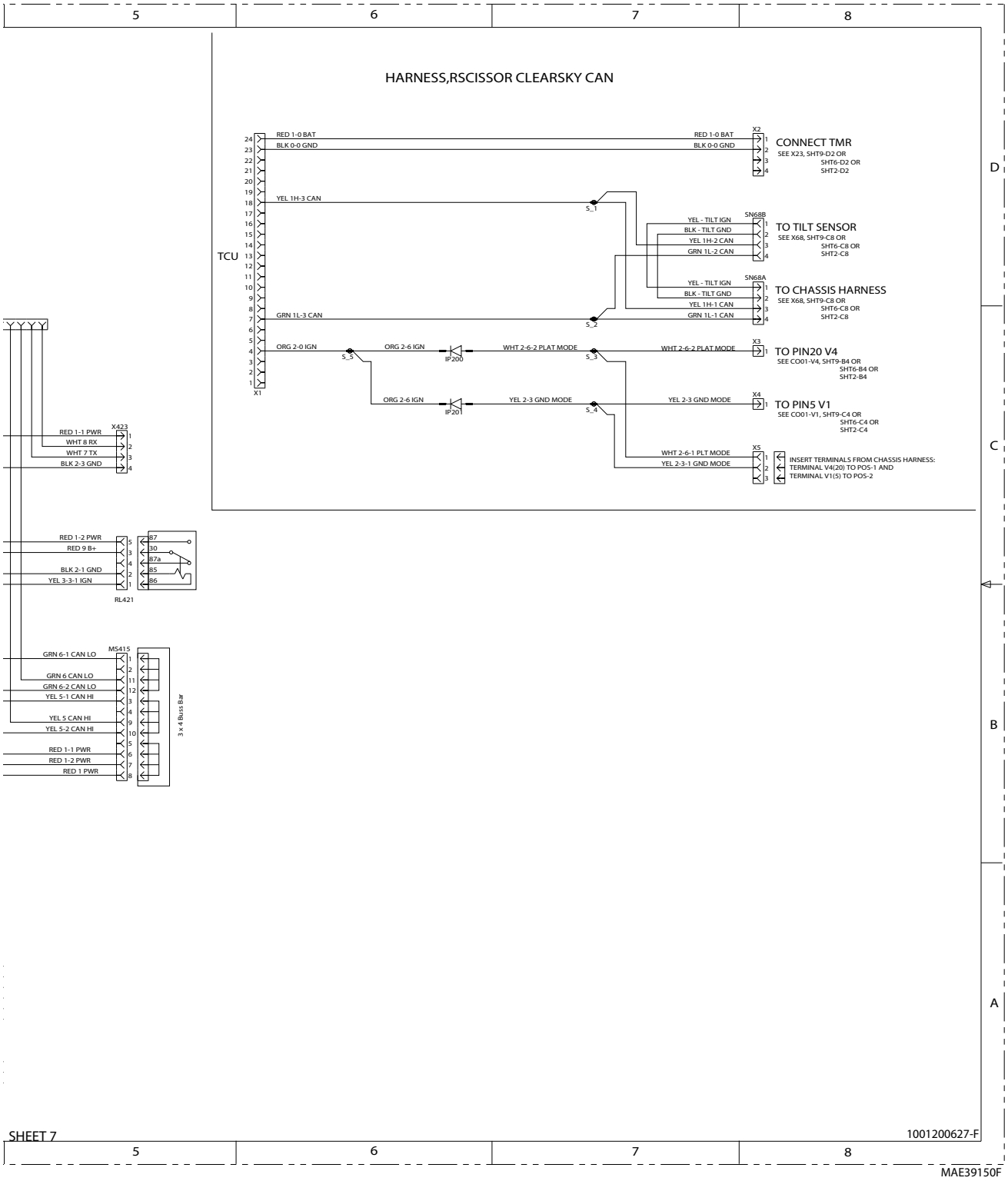

Figure 8-30. Electrical Schematic - Sheet 13 of 13

8.9 HYDRAULIC SCHEMATICS

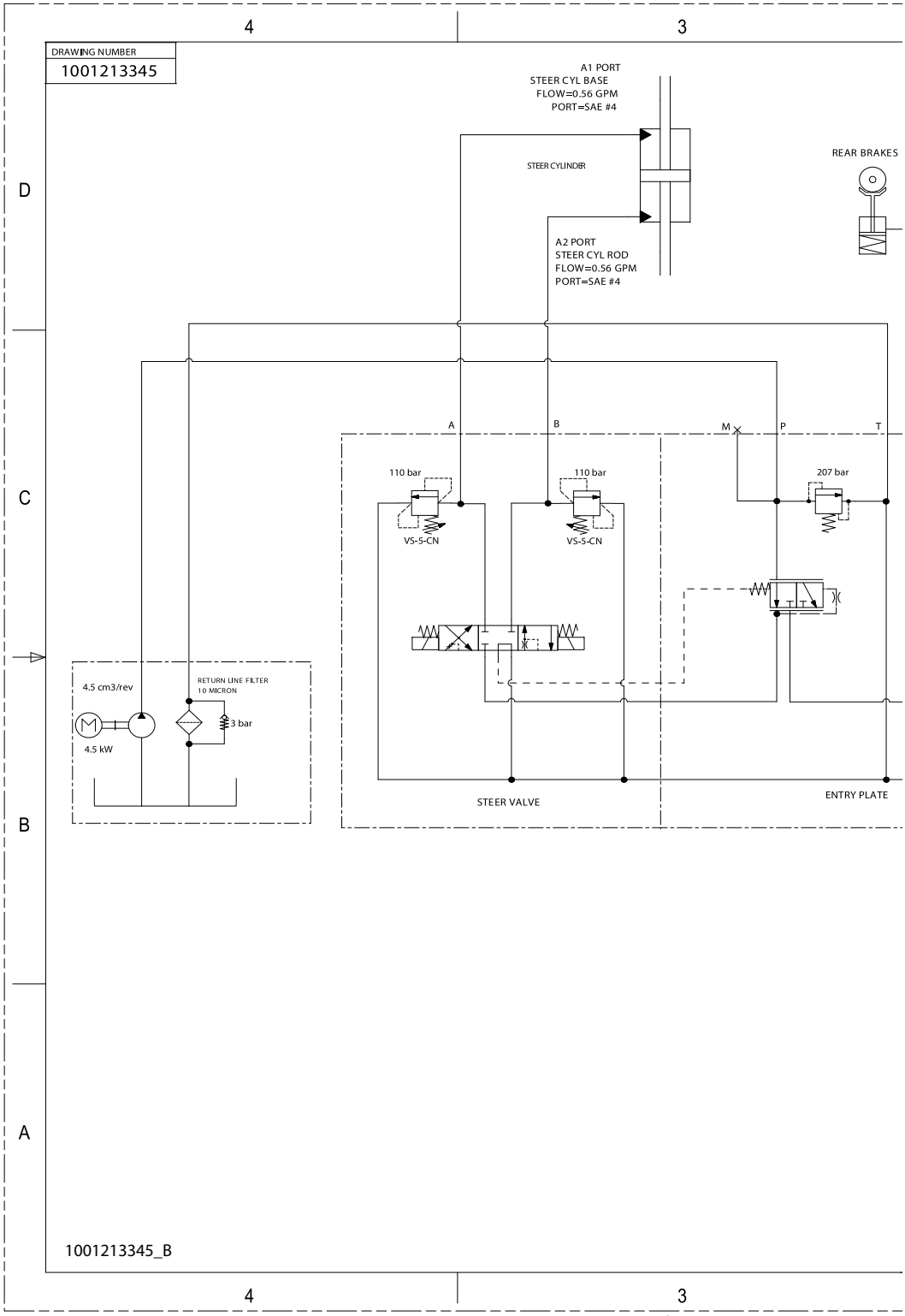

Figure 8-31. Hydraulic Schematic - Sheet 1 of 2

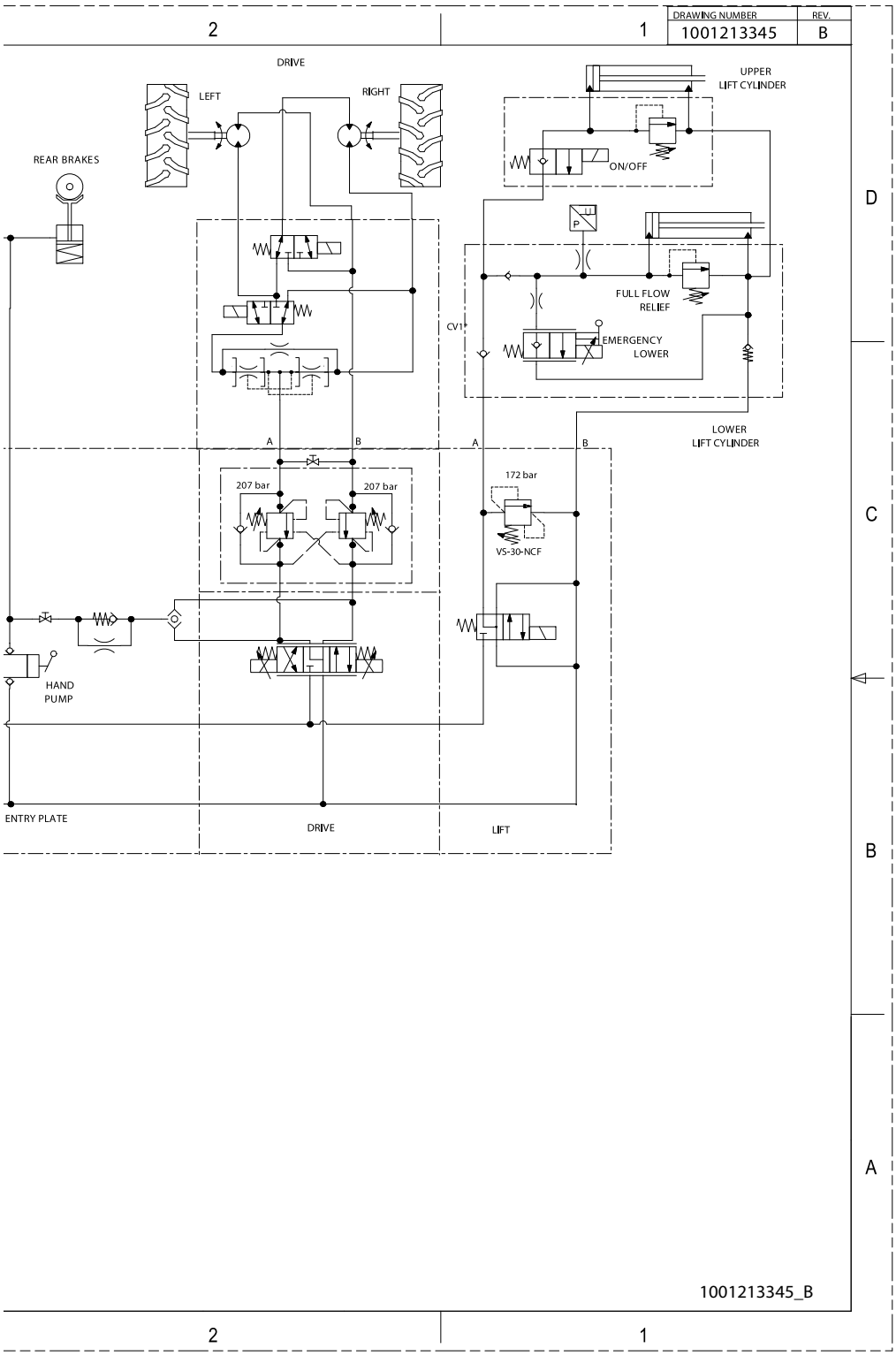

Figure 8-32. Hydraulic Schematic - Sheet 2 of 2

An Oshkosh Corporation Company

Corporate Office
JLG Industries, Inc.
1 JLG Drive
McConnellsburg, PA 17233-9533 USA
(717) 485-5161 (Corporate)
(877) 554-5438 (Customer Support)
(717) 485-6417

Visit our website for JLG Worldwide Locations.
www.jlg.com