Lull®

Operators and Safety Manual

Models 644 844

10709980

Revision B

ANSI

JLG®

CAB LAYOUT

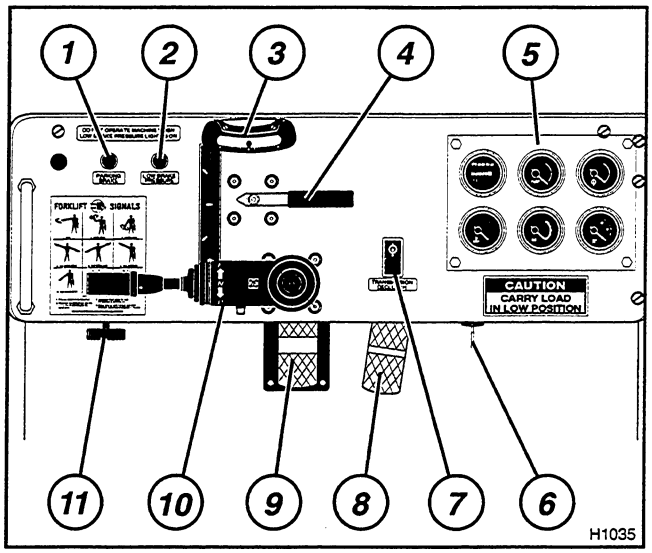

Model 644 Instrument Panel Layout (Steering Wheel Removed for Clarity)

1 Park Brake Light

2 Low Brake Pressure Light

3 Frame Level Indicator

4 Steer Mode Selector

5 Gauges

6 Ignition Switch

7 Transmission Declutch Switch

8 Throttle Pedal

9 Service Brakes Pedal

10 Transmission Shift Selector

11 Park Brake Knob

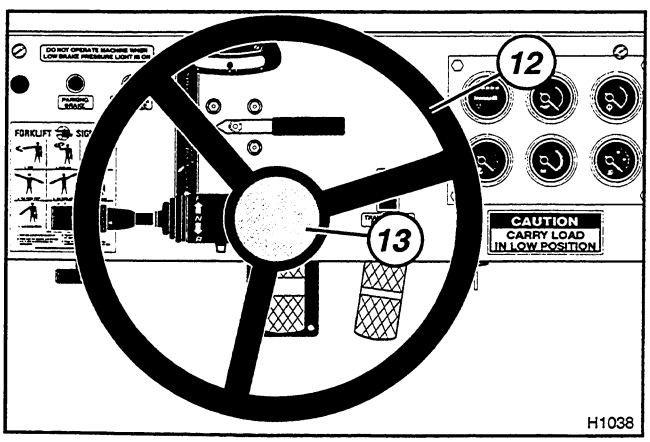

Steering Wheel

12 Steering Wheel

13 Horn Button

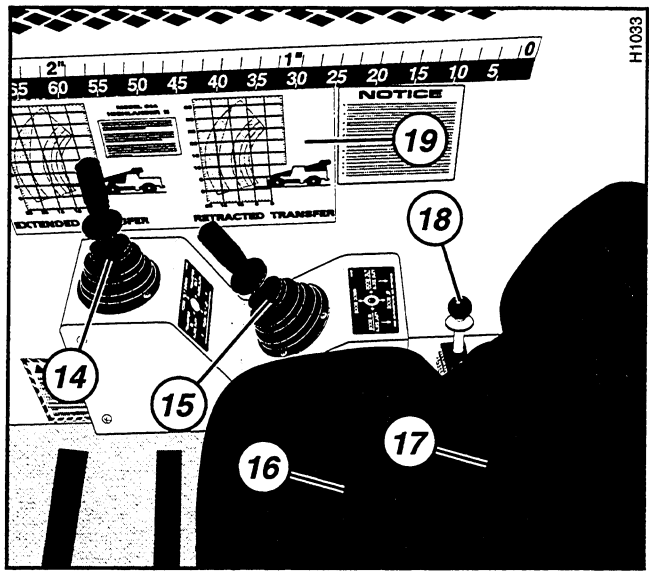

Model 644 Cab Layout — Side View

14 Front Joystick

15 Rear Joystick

16 Seat

17 Seat Belt

18 Frame Tilt Control

19 Load Charts

THROTTLE

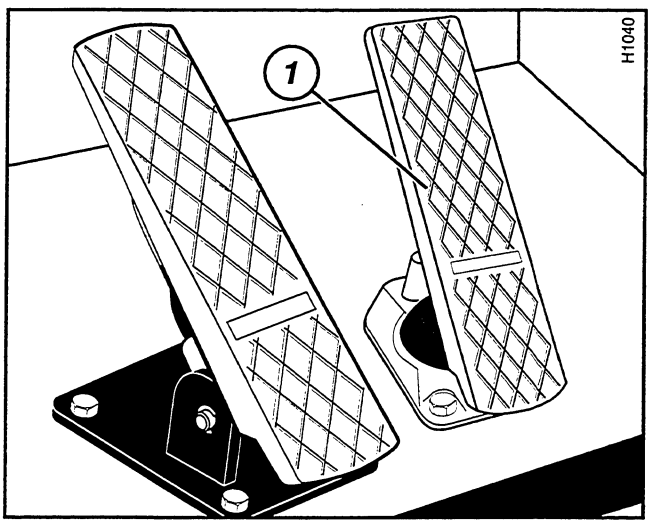

Engine Throttle Pedal

Push throttle pedal *1* down to increase engine speed.

BRAKE PEDAL

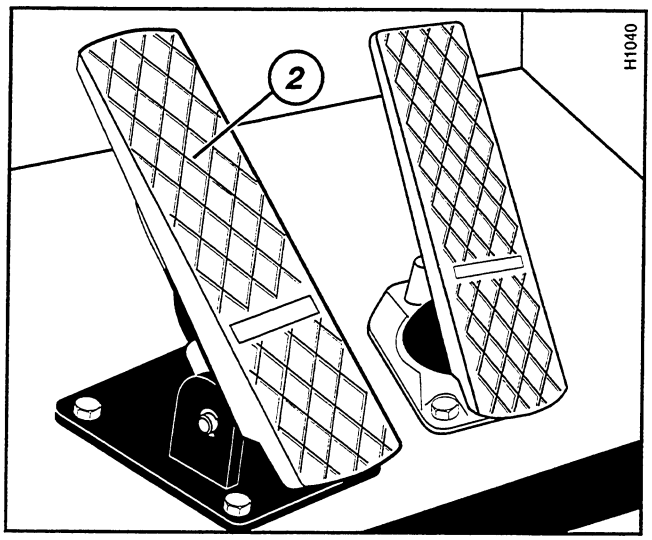

Service Brake Pedal

Push brake pedal *2* down to slow or stop machine.

GAUGES

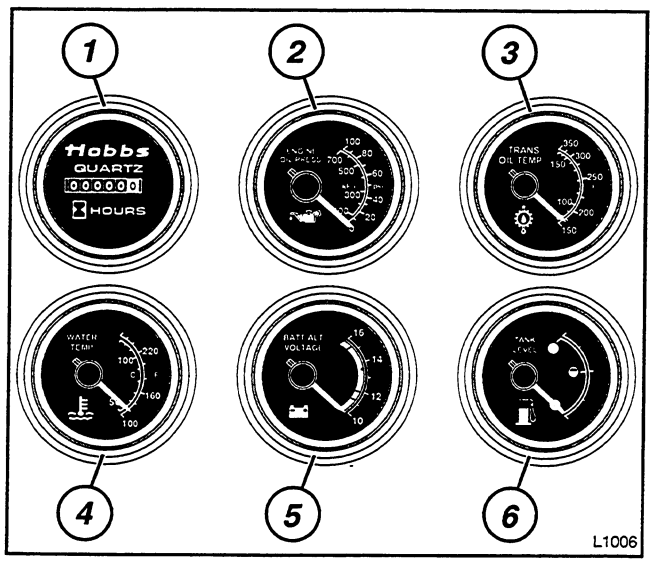

Gauges

Note: *Gauges and indicator lights operate only when the ignition switch is in the "ON" position.*

1 **Hourmeter**—Registers total hours of machine operation.

2 **Engine Oil Pressure**—Shows operating engine oil pressure. Gauge registers from 0 to 100 PSI with metric equivalents in kPa. Normal operating pressure is 55 to 60 PSI.

3 **Transmission Oil Temperature**—Registers from 150 to 350 °F with Celsius equivalents. If temperature rises above 230 °F (110 °C) stop the vehicle immediately, shift to neutral and run the engine at half throttle. The temperature should drop quickly. If the temperature does not drop, shut off engine and investigate.

4 **Engine Water Temperature**—Registers from 100 to 280 °F with Celsius equivalents. Normal operating temperature is 180 to 185 °F (82 to 85 °C).

5 **Voltmeter**—Indicates system voltage. Gauge registers from 10 to 16 volts. Normal operating voltage range is 14.5 to 15 volts. With ignition in ON position and engine off, battery voltage is indicated. This should normally be 12.6 volts.

6 **Fuel Level**—Shows fuel level in fuel tank.

INDICATOR LIGHTS

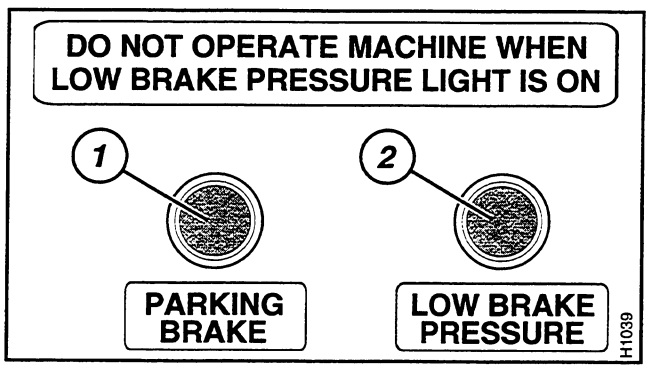

Indicator Lights

1 **Park Brake**: Red lamp lights to show when park brake is applied and goes out when park brake is released.

2 **Low Brake Pressure**: Red lamp lights and buzzer sounds when service brake hydraulic system pressure drops below the safe operating level. Under normal conditions, the light and buzzer will go out quickly after engine start. If the light or buzzer does not go out or comes on during machine operation, shut off engine immediately, investigate, and repair before operating. Do not operate machine when low brake pressure light or buzzer is on.

IGNITION SWITCH

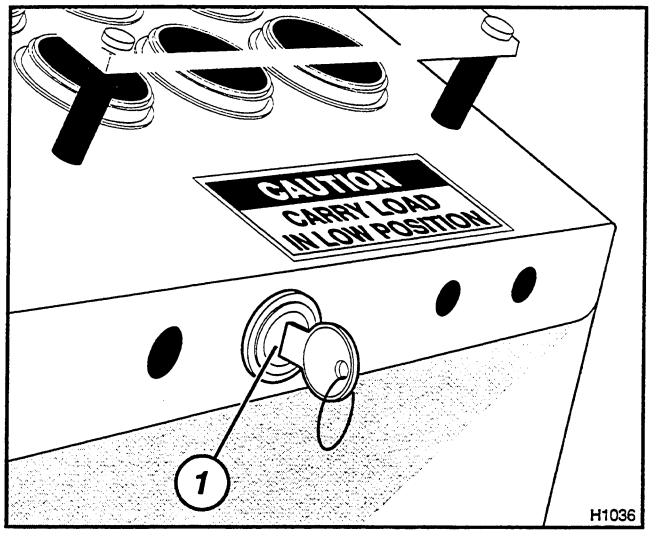

Ignition Switch Location

The ignition switch ***1*** is located on the dash, near the right side.

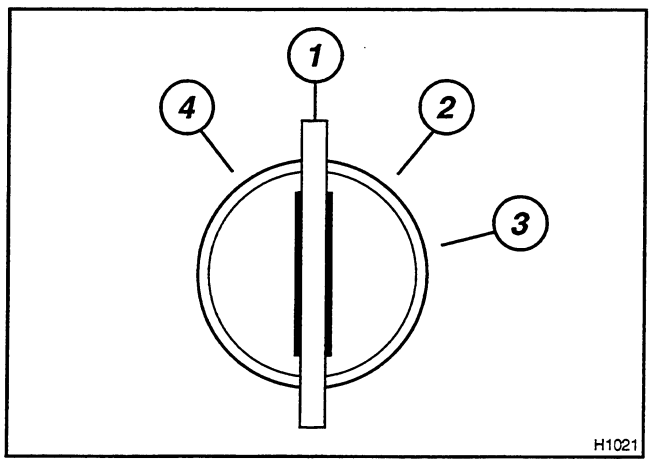

Ignition Switch Positions

The ignition switch has four positions:

1 **OFF**: The key may only be removed or inserted at this position. The engine and all electrical circuits are shut down.

2 **ON**: All electrical circuits except the engine starter circuit are operational.

3 **START**: Activates the engine starter. When the key is released the switch will return to the ON position and remain there.

4 This position is reserved for future use and currently has no function.

Note: *The starter will not engage unless the shift selector is placed in the NEUTRAL position.*

PARK BRAKE CONTROL

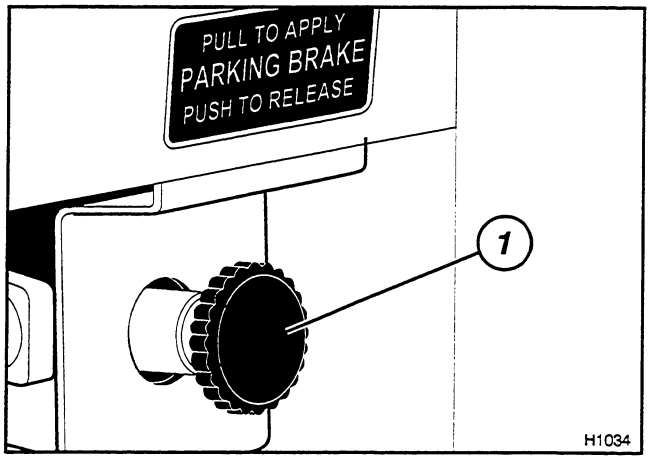

Park Brake Control

Pull knob ***1*** out (toward you) to engage the park brake.

Do not use the park brake to slow or stop the machine. Always stop the machine with service brakes before engaging park brake.

Note: *When park brake is engaged, transmission will default to NEUTRAL, regardless of shift selector position.*

SHIFT SELECTOR

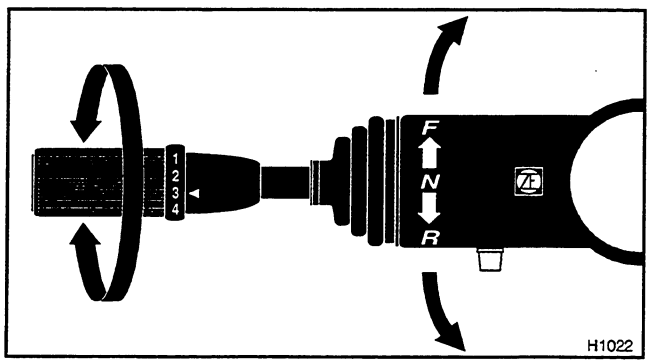

Shift Selector

The shift selector is located on the steering wheel column. It controls machine direction and transmission speed.

Direction Control

Machine direction is controlled by moving the shift lever to one of three positions:

FORWARD (F): Move the lever fully forward to select forward machine movement.

NEUTRAL (N): Move the lever to the center position to disengage the transmission. The engine may be started only when the transmission is in NEUTRAL.

REVERSE (R): Move the lever fully rearward to select reverse machine movement.

Speed Selection

The transmission has three speeds in forward or reverse. To select different transmission speeds, rotate the selector handle to the desired position. Speeds may be selected while the vehicle is moving in forward or reverse.

The following table shows the maximum travel speed for each position on the selector:

ZF 3WG-100 Speeds

POSITION	SPEED
1	2.5 mph
2	5.9 mph
3	13.2 mph
4	(See Note)

Note: *Your machine is not equipped with a fourth speed. If fourth is selected, the transmission will remain in third speed.*

Neutral Lock

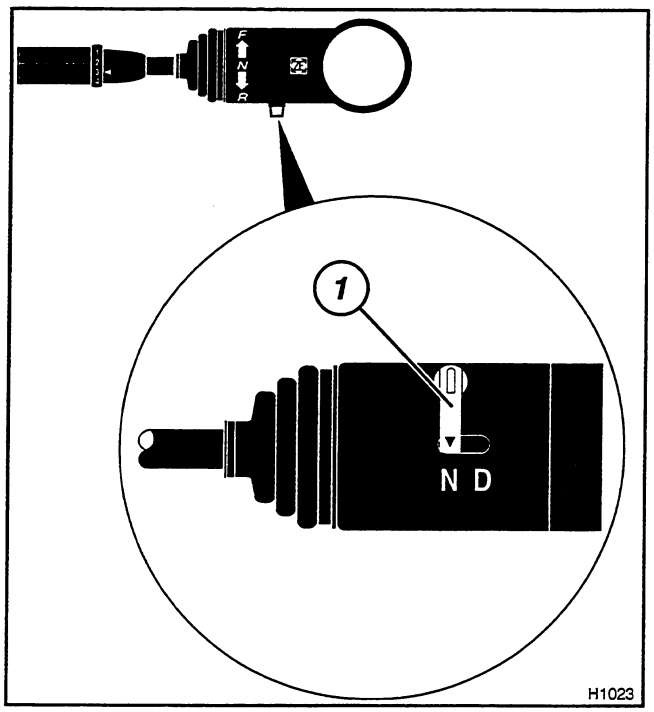

Neutral Lock

The shift selector is equipped with a neutral lock. To lock the shift lever in the NEUTRAL position, place the lever in the NEUTRAL position and move the neutral lock lever to the (N) NEUTRAL LOCK position. To unlock, move the neutral lock lever to the (D) DRIVE position.

TRANSMISSION DECLUTCH SWITCH

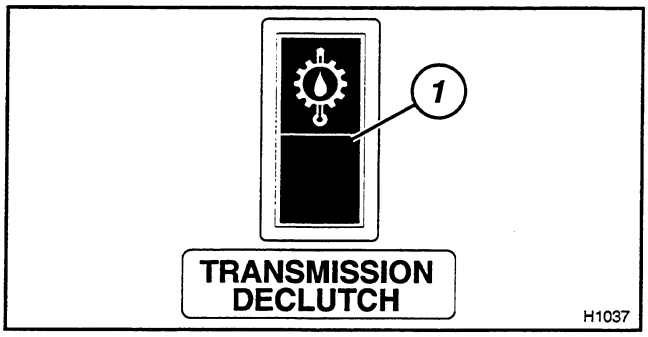

Transmission Declutch Switch

The transmission declutch switch *1* is an internally lighted rocker switch. Pressing the forward side of the switch activates the transmission declutch feature when the foot brake pedal is applied.

This feature eliminates the need to shift to NEUTRAL before operating the hydraulic system at high engine speeds. When the transmission is declutched, the drive train is disconnected and the hydraulic system has full engine power.

To use the transmission declutch feature:

1. Press the forward side of the transmission declutch switch.
2. The transmission must be in first or second speed, forward or reverse. The declutch feature will not operate when the transmission is in third speed.
3. Press the service brake pedal or pull the park brake knob.
4. The switch will illuminate to show the transmission clutch has disengaged.

Press the rear side of the switch to deactivate the declutch feature.

STEER MODE SELECTOR

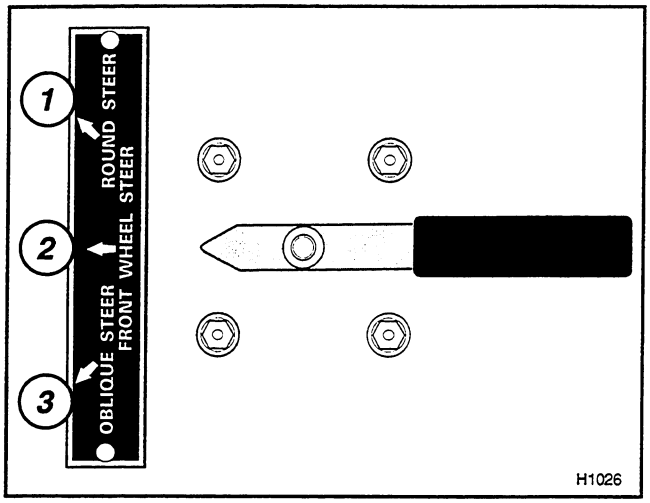

Steer Mode Selector

There are three steer modes available on your machine:

1 Round Steer (4-Wheel Steer)

2 Front Wheel Steer (2-Wheel Steer)

3 Oblique Steer (Crab Steer)

To select a steer mode, turn the steer mode selector so the pointer aligns with a selection on the adjacent plate. You will feel the selector slip into a detent, or "catch," when the desired mode is selected.

Never change steer modes while the machine is moving. The wheels can become misaligned and cause loss of control.

Always stop the machine completely and synchronize (straighten and align) the wheels before changing steer mode. See "Synchronizing Wheels" on page 6.

Front Wheel Steer Mode

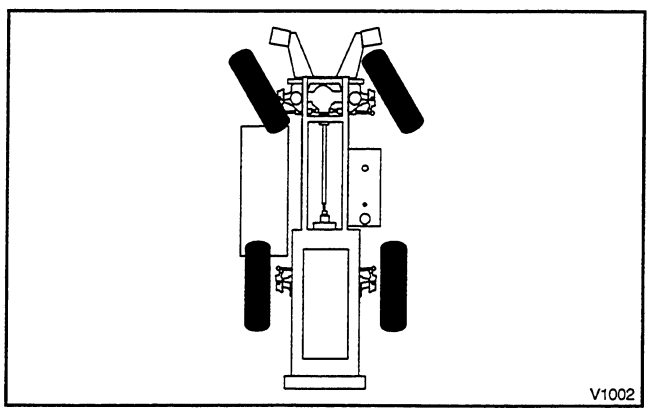

Front Wheel Steer Mode

Front Wheel Steer mode, also known as "2-Wheel Steer" mode, allows the operator to steer the machine in a conventional manner. The front wheels of the machine steer and the rear wheels remain in position.

Use this mode when traveling on flat surfaces at higher speeds. Front Wheel Steer mode should not be used in confined and congested areas.

Note: *It is very important that all wheels be synchronized (straightened and aligned) before engaging Front Wheel Steer mode.*

Round Steer Mode

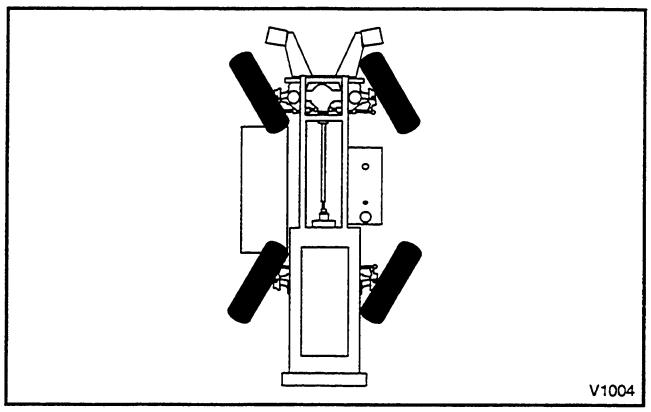

Round Steer Mode

Round Steer mode, also known as "4-Wheel Steer" mode, allows the front and rear wheels to steer in opposite directions.

Use Round Steer when tight turning is required. This mode is very useful on job sites.

Oblique Steer Mode

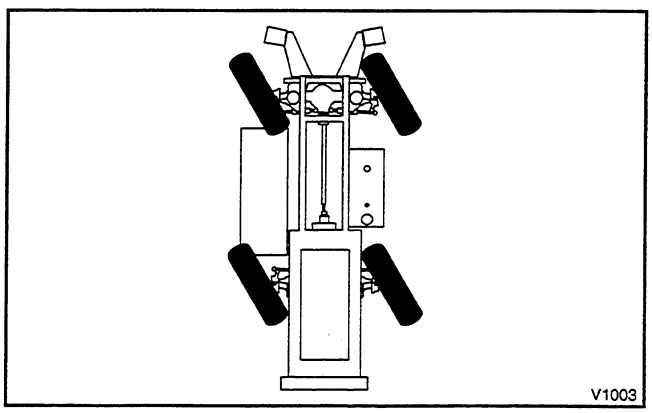

Oblique Steer Mode

Oblique Steer mode, also known as "Crab Steer" mode, enables steering of the front and rear wheels in the same direction.

It is generally used to angle the machine in tight areas. Oblique Steer mode moves the machine to the side while moving forward or reverse.

Synchronizing Wheels

As different steer modes are selected it is possible for the wheels to become misaligned. It is also possible for the wheels to drift out of alignment when traveling over long distances or rough terrain.

To synchronize (straighten and align) the wheels:

1. Select ROUND steer mode.

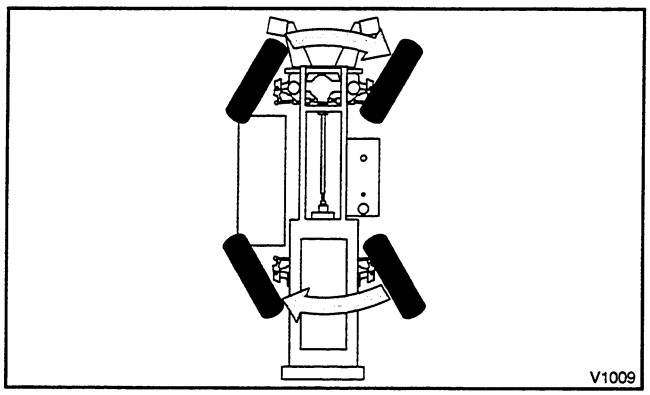

Step 2

2. Turn steering wheel to the right until it reaches the stop.
3. Select FRONT WHEEL steer mode.

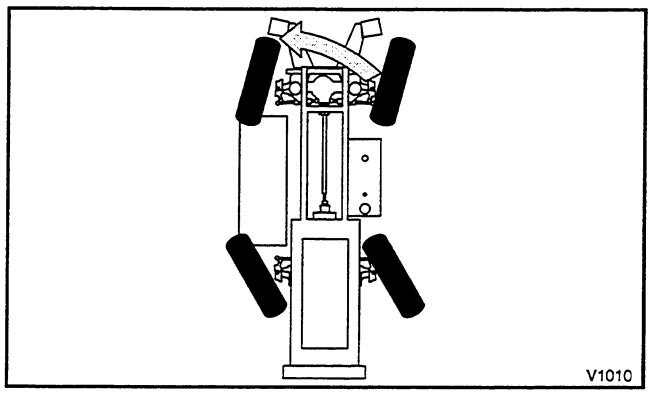

Step 4

4. Turn steering wheel to left about one-half turn.
5. Select ROUND steer mode.
6. Turn steering wheel to the right until it reaches the stop. This makes sure rear wheels are fully against right stop.
7. Select FRONT WHEEL steer mode.

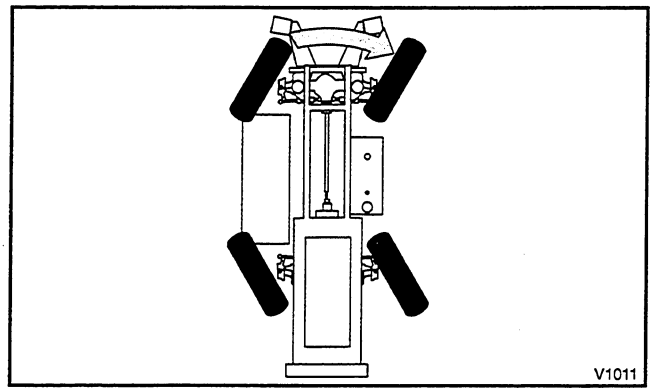

Step 8

8. Turn steering wheel to the right until it reaches the stop.
9. Select ROUND steer mode.

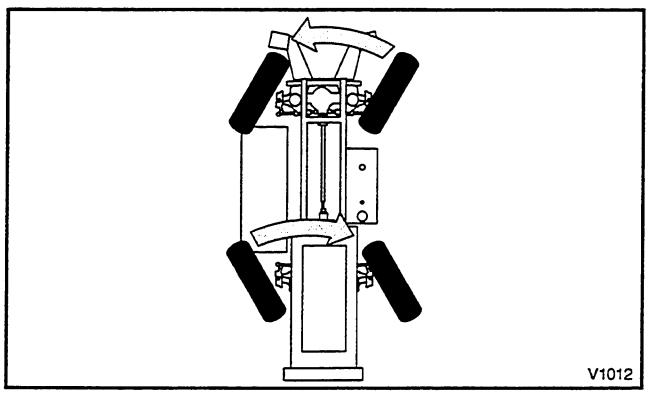

Step 10

10. Turn steering wheel to left until wheels are pointed straight ahead.

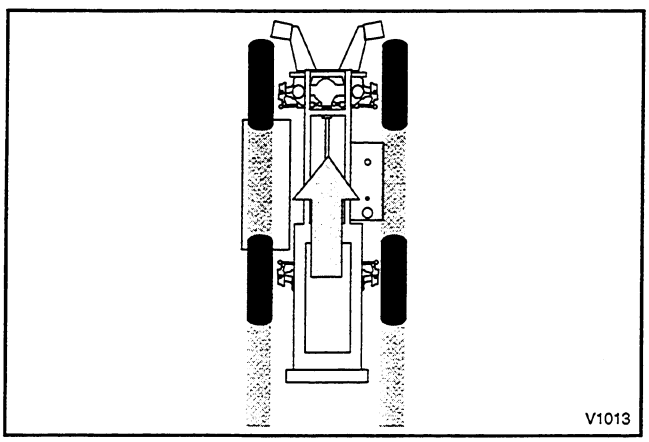

Step 11

11. Drive the machine forward a short distance to check wheel tracking.
12. Stop the machine and select the desired steer mode.

Note: *The above procedure can also be done to the left side.*

STANDARD JOYSTICK CONTROLS

General Description — Joysticks

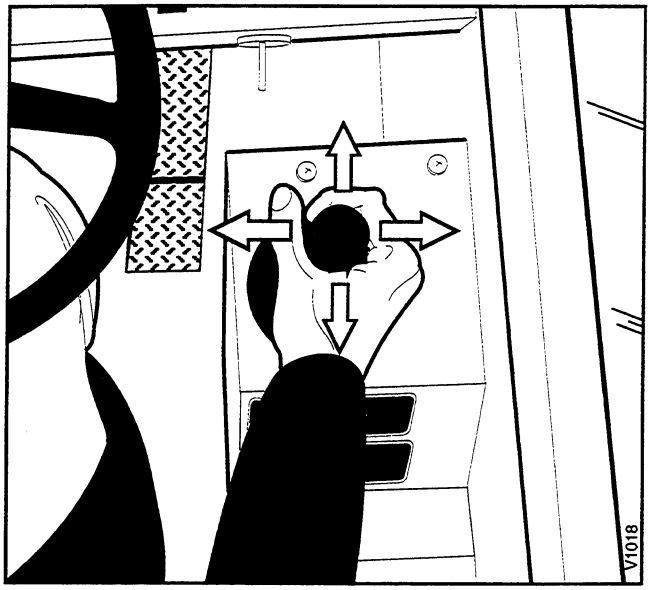

Joystick

The joysticks control hydraulic flow to the associated cylinders. Control is proportional: The more movement of the joystick, the greater the action. The speed of cylinder action is also affected by engine/hydraulic pump speed. Action is quicker at higher engine speeds.

Joysticks can be moved in any direction and are not limited to front/back, left/right movement. Moving a joystick in a diagonal direction will cause a combination of actions.

Front Joystick

The front joystick controls transfer carriage extension and attachment tilt.

An auxiliary function is also available by pressing the button on top of the handle. See "Auxiliary Joystick Controls" on page 9 for further information.

Tilting Attachment Up

Pulling back on the front joystick causes the attachment to tilt upwards.

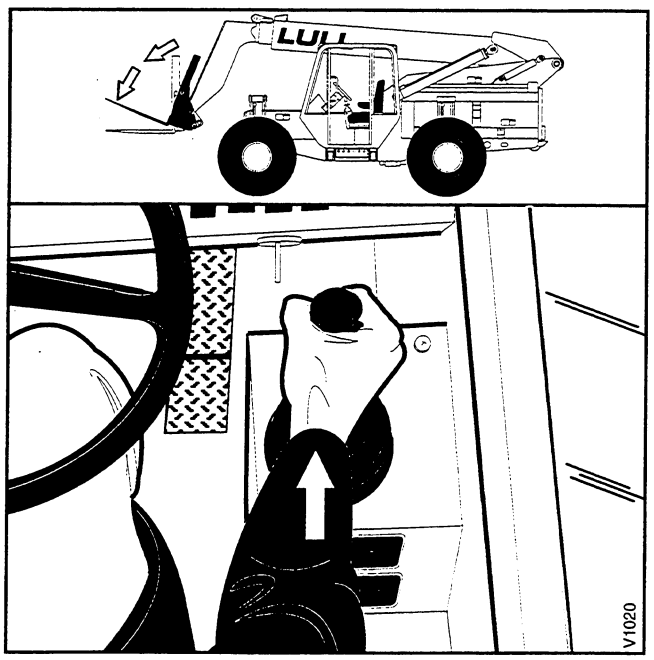

Tilting Attachment Down

Pushing forward on the front joystick tilts the attachment down.

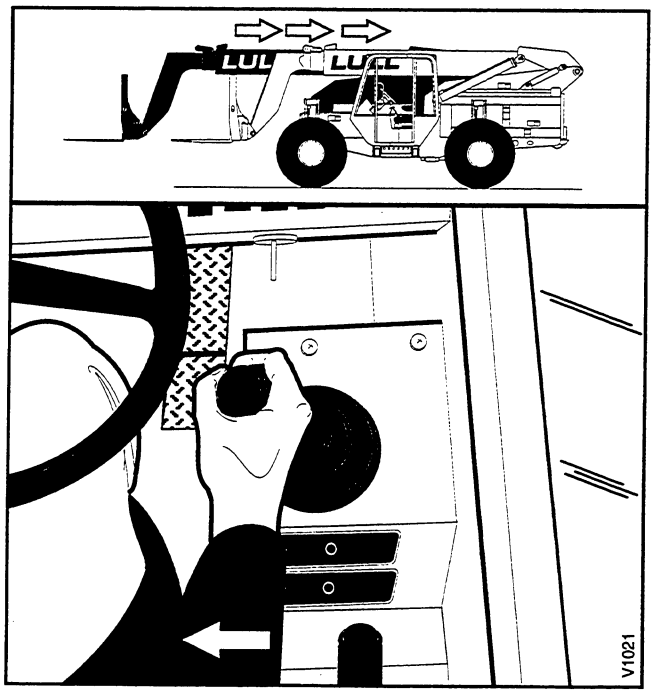

Retracting the Transfer Carriage

Moving the front joystick to the left retracts the transfer carriage.

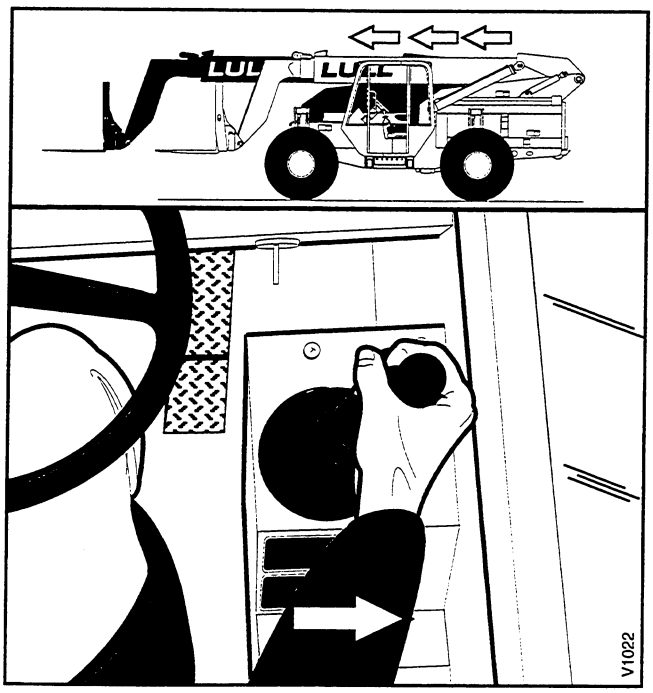

Extending the Transfer Carriage

Moving the front joystick to the right extends the transfer carriage.

Rear Joystick

The rear joystick controls boom elevation and extension. An auxiliary function is included on the rear joystick. This auxiliary function is reserved for future attachment designs and is not activated on current Model 644 machines.

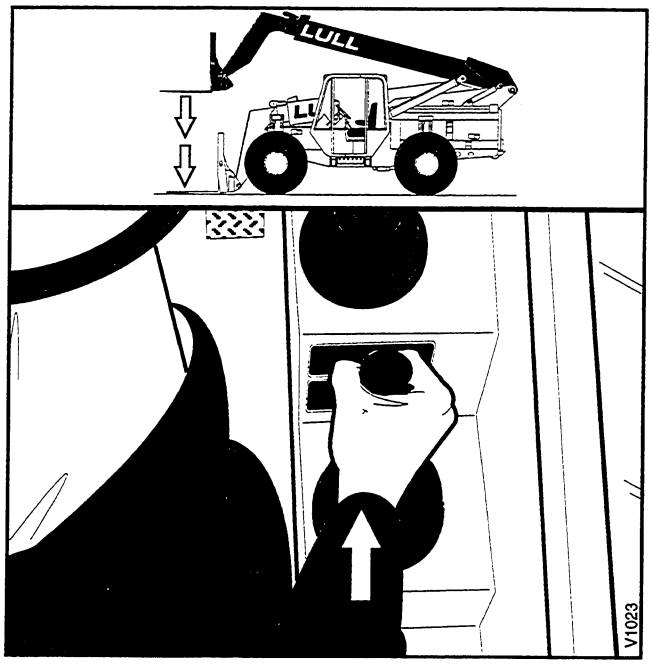

Lowering the Boom

Moving the rear joystick forward lowers the boom.

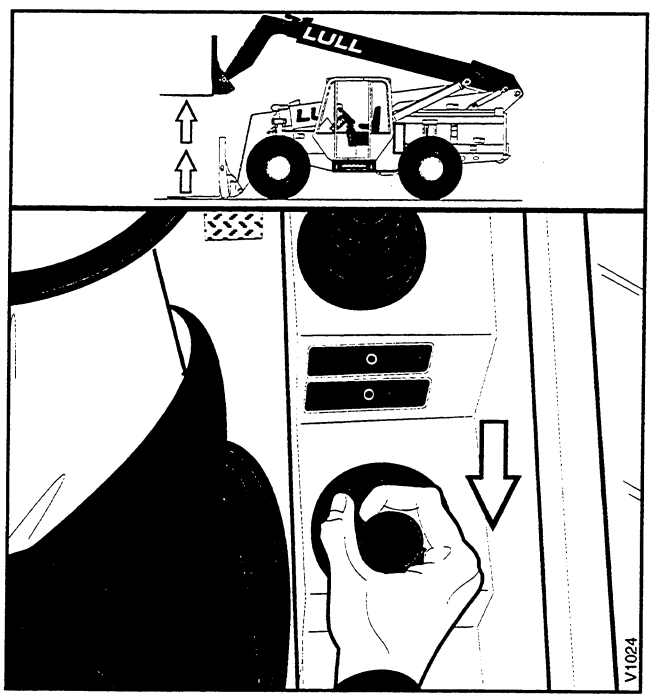

Raising the Boom

Pulling back on the rear joystick raises the boom.

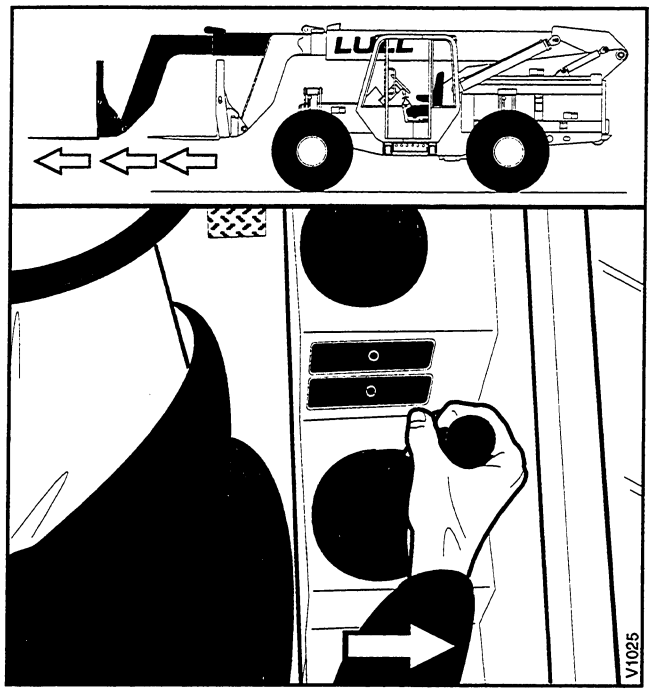

Extending the Boom

Moving the rear joystick to the right extends the boom.

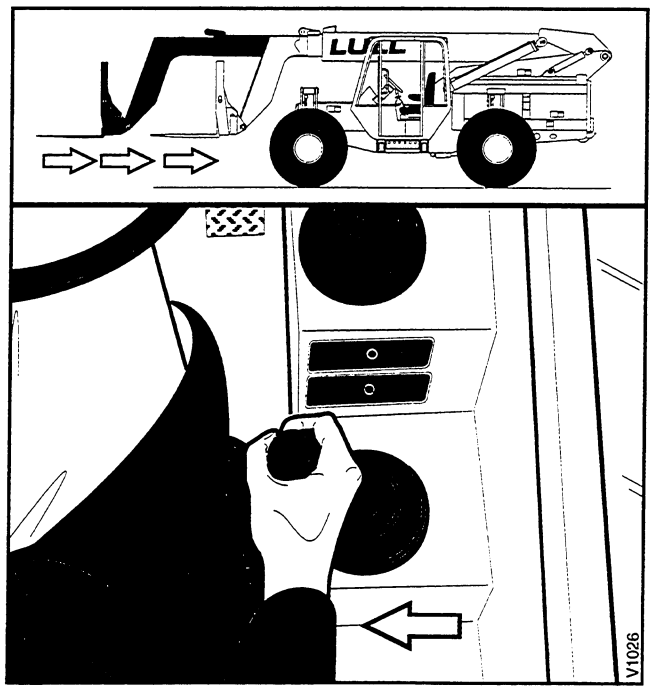

Retracting the Boom

Moving the rear joystick to the left retracts the boom.

AUXILIARY JOYSTICK CONTROLS

General Description — Auxiliary Joystick Controls

Auxiliary Joystick Control

A switch is located on the top of the front joystick, under a protective rubber cap. Pressing this switch down with your thumb activates the auxiliary function.

Hold the switch down while moving the joystick left and right. Functions for specific attachments are shown below.

Note: *Releasing the switch while moving the joystick left or right changes the function of the joystick back to transfer carriage control.*

Tilting Carriage Control

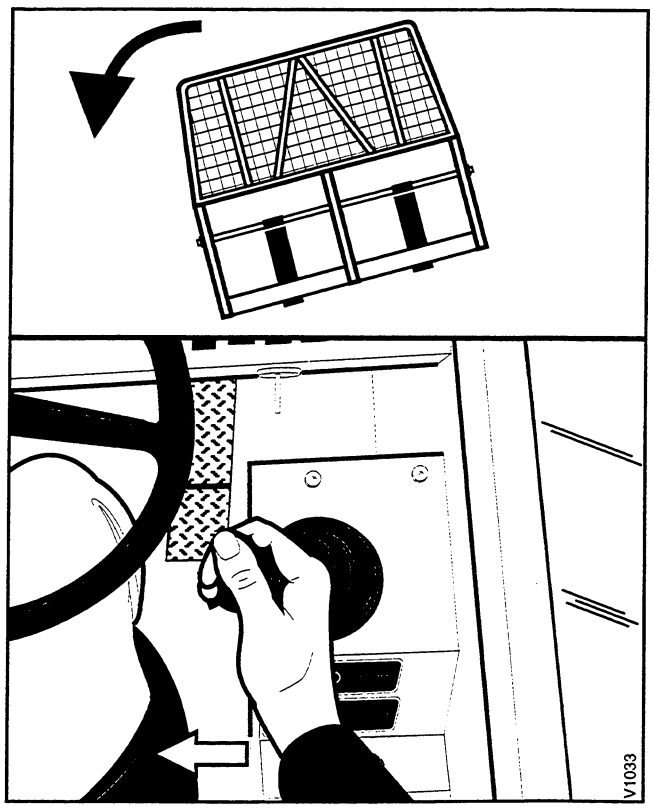

Rotating Tilt Carriage to Left

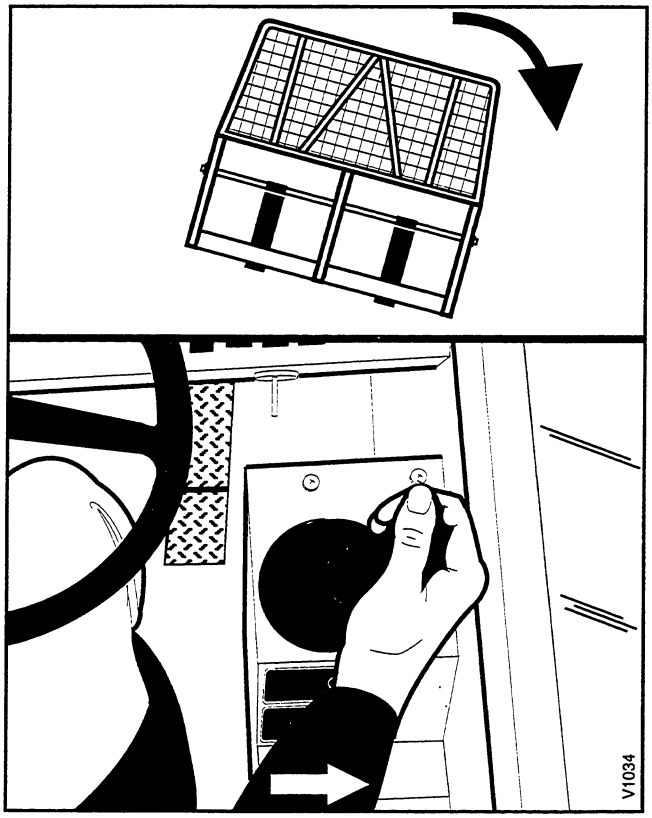

Rotating Tilt Carriage to Right

BOOM ANGLE INDICATOR

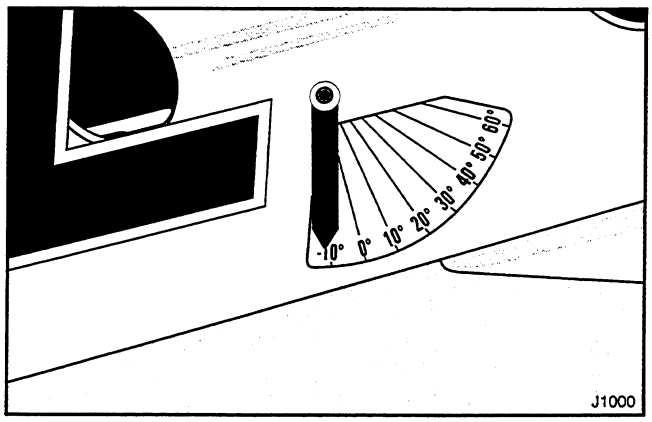

Boom Angle Indicator

The Boom Angle Indicator shows the angle of the boom relative to level ground. The scale range is from -10° to 60°. Use this indicator with the Boom Extension Indicator, Transfer Carriage Extension Indicator, and machine Load Chart to determine correct boom lifting capacities.

BOOM EXTENSION INDICATOR

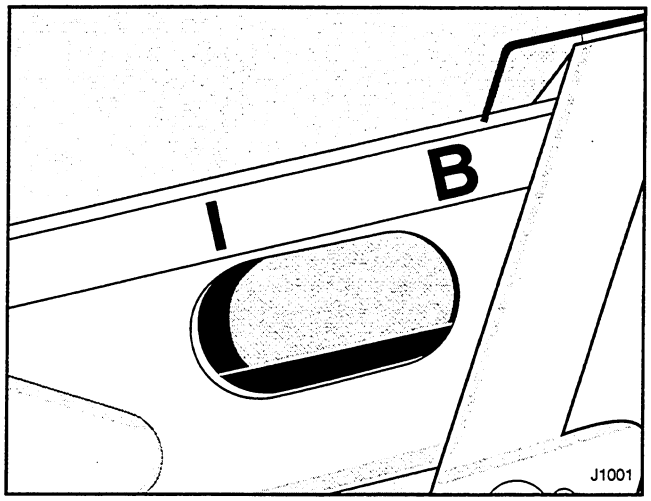

Boom Extension Indicator

The Boom Extension Indicator shows the amount of boom extension. The letters on the boom correspond to the lettered zones on the Load Chart. Use this indicator with the Boom Angle Indicator, Transfer Carriage Extension Indicator, and machine Load Chart to determine correct boom lifting capacities.

TRANSFER CARRIAGE EXTENSION INDICATOR

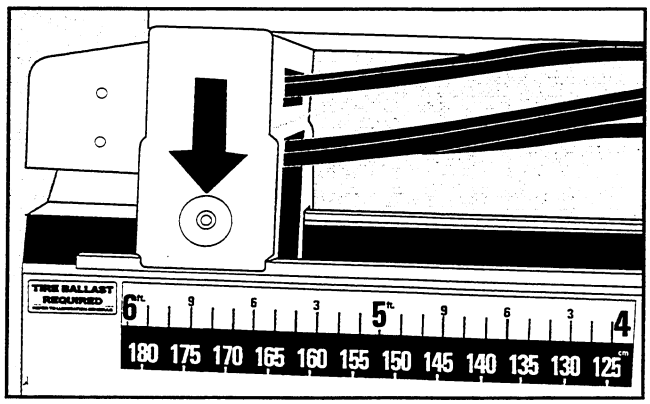

Transfer Carriage Extension Indicator

The Transfer Carriage Extension Indicator shows the distance of the carriage from the fully retracted position. Use this indicator with the Boom Angle Indicator, Boom Extension Indicator, and machine Load Chart to determine correct boom lifting capacities.

FRAME LEVEL INDICATOR

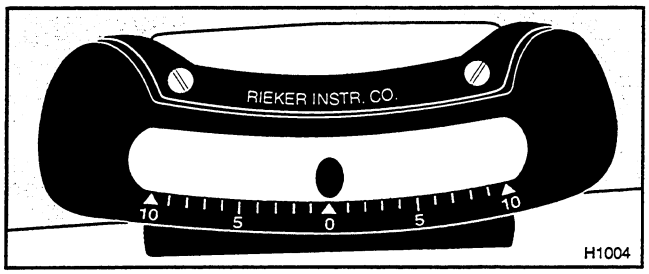

Frame Level Indicator

The Frame Level Indicator shows the lateral (side-to-side) angle of the frame relative to level ground. Indicator range is from 0° to 10° left or right, in increments of one degree. When the ball is centered (0°), the machine is laterally level. The frame tilt feature may be used to correct machine angles up to 12.5° to the left or right. See "Frame Tilt Control" below.

The frame must always be level before raising the boom.

FRAME TILT CONTROL

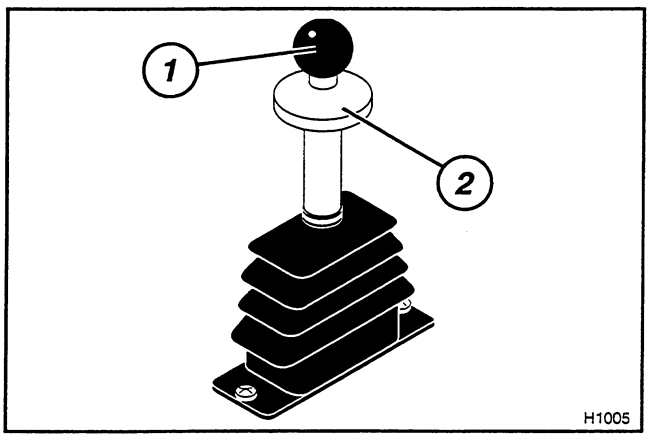

Frame Tilt Control

The frame tilt control is used to level the machine laterally (side-to-side) up to 12.5°, left or right. The lateral angle of the machine, relative to level ground, is shown on the frame level indicator (see "Frame Level Indicator" above). The control is functional only while the engine is running.

Refer to the above figure. The control lever ***1*** is equipped with a safety lock to prevent inadvertent operation. Lift the lock ring ***2*** to unlock the lever and allow it to be moved left or right. Return the control lever to center position and release lock ring to secure lever.

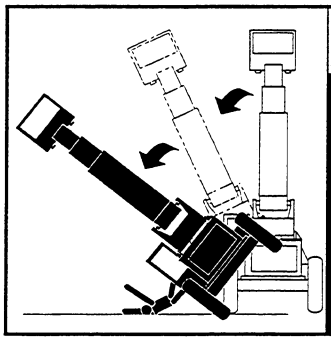

⚠DANGER!

NEVER TILT FRAME WITH ELEVATED BOOM. MACHINE MAY TIP AND CAUSE DEATH OR SERIOUS PERSONAL INJURY!

The lever can be moved either left or right, tilting the frame accordingly. To level the frame, move the lever in the direction you want the ball in the frame level indicator to move.

CHECK THE EQUIPMENT

1. Check the engine oil level.
2. Check the hydraulic fluid level.
3. Check radiator coolant level.
4. Check transmission oil cooler and engine radiator for dirty fins.
5. Check back-up alarm and horn.
6. Check forks for welds, cracks, wear and misalignment. Have repaired or replaced as necessary.

⚠ WARNING!

Never repair forks by welding. Never use forks with welded repairs. Forks may break and falling load or forks will cause death or serious injury.

7. Check tires for cuts, bulges, correct tire pressure and proper ballast content.
8. Check all wheel lugs.
9. Check service and park brakes for proper operation.

SAFE MACHINE OPERATION

For safe operation of this rough terrain forklift you must be a qualified and authorized operator. To be qualified, you must understand the written instructions supplied by the manufacturer, have training (including actual operation of this machine) and know the safety rules and regulations for the jobsite. A self-training course available from the Mason Contractors Association of America is highly recommended. An operator must not use drugs or alcohol which can affect his alertness and coordination. An operator on prescription or over-the-counter drugs needs medical advice on whether or not they can safely operate these machines.

KNOW THE RULES

Most employers have rules governing proper operation and maintenance of equipment. Before you start work at a new location, check with your supervisor or the safety coordinator. Ask about rules you may be expected to obey.

Make sure you understand the rules covering traffic at your jobsite. Make sure you recognize and understand the meaning of all signs, flags, and markings. Make sure you understand all hand, flag, whistle, siren, or bell signals. Make sure you know when to use lights, turn signals, flashers and horn

PROTECT YOURSELF

Wear all the protective clothing and personal safety devices issued to you or called for by job conditions. **You may need:**

- A hard hat
- Safety shoes
- Safety glasses, goggles, or face shield
- Heavy gloves
- Hearing Protection
- Reflective Clothing
- Wet Weather Gear
- Respirator or Filter mask

MOUNT AND DISMOUNT PROPERLY

Always use "three point contact", facing the machine when you enter or leave. ("three point contact" means that three out of four arms and legs are in contact with the machine at all times during mount and dismount.)

Clean your shoes and wipe your hands before mounting machine. Always use hand-hold and step when mounting.

Never use control levers as a hand-hold when mounting or dismounting the machine. Never step on foot controls when mounting or dismounting the machine.

Never attempt to mount a moving machine.

STARTING PROCEDURES

Before operating, walk completely around the machine. Make certain no one is under it, on it or close to it. Let all other workers and bystanders know you are preparing to start machine. **DO NOT** start machine until everyone is clear.

To start engine:

1. Be properly seated and fasten seat belt.
2. Set park brake.
3. Move shift selector to NEUTRAL position. Move selector safety lock to NEUTRAL LOCK position.
4. Apply brakes.
5. Turn ignition switch clockwise, cranking the engine. (Do not crank the engine longer than 20 seconds. Wait 2 minutes to allow starter to cool down before trying again.)
6. Allow engine to warm-up.

Note: *The transmission requires 3 seconds immediately after engine start for self-diagnostics. Always wait at least 3 seconds after engine start before engaging transmission.*

In cold weather operation, progressively move each function a small distance back and forth until full cycle has been accomplished.

Level machine, move frame tilt to full right, then full left, then back to level. Raise boom full up to and full down. Extend inner boom full out retract full in. Tilt fork carriage full down and full back. Move transfer carriage full forward and full back. After the engine is shut off, move all hydraulic levers. If any machine movement is detected, advise your supervisor immediately. **DO NOT put the machine into service until problem has been resolved.**

Note: *It is your responsibility to evaluate working conditions and adjust your operation of the forklift accordingly.*

SHUTDOWN PROCEDURES

Correct shutdown is important to the safe operation of the machine. Always follow these general steps.

1. Come to a full stop.
2. Set park brake.
3. Lower forks to the ground.
4. Place transmission shift selector in neutral position.
5. Idle engine for 1-3 minutes for gradual cooling.
6. Shut off engine.
7. Cycle hydraulic controls to eliminate residual pressure.
8. Remove Ignition key.
9. Lock anti-vandalism covers and closures.
10. Dismount.
11. Block wheels if on a slope or incline.

TRAVELING

⚠CAUTION!

When traveling over rough terrain, soft ground, or wet/ icy surfaces, slow down and shift to a lower gear.
Travel only at speeds that permit stopping in a safe manner.

⚠WARNING!

When traveling, keep forks as low as possible while maintaining safe clearance with the ground.

Start and stop machine to check brakes.

Check park brake by holding on hill.

Check the three steering modes;

- Round
- Front Wheel
- Oblique

FOLLOW SAFE OPERATING PROCEDURES

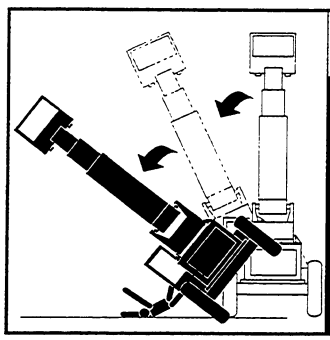

⚠DANGER!

FAILURE TO FOLLOW THESE PRECAUTIONS WILL RESULT IN MACHINE TIPPING OVER, CAUSING DEATH OR SERIOUS INJURY.

Operate the controls smoothly - don't jerk the steering wheel or hydraulic controls.

Avoid sudden stops, starts, turns or changes in direction.

Only operate machine controls while seated in the operators compartment.

Never leave the operator's seat without first lowering the forks to the ground, setting the park brake, and placing transmission in neutral.

⚠ WARNING!

Keep all parts of your body Inside the operators compartment while operating the rough terrain forklift!

DO NOT touch, lean on, or reach through the boom, lift mechanism or transfer carriage areas. DO NOT permit others to do so. Never climb on the boom, lift mechanism or transfer carriage.

STAY ALERT! Should something break, come loose, or fail to operate on your machine, stop work, shut off the engine and remove key, set park brake and alert your supervisor immediately!

LIFT THE LOAD SAFELY

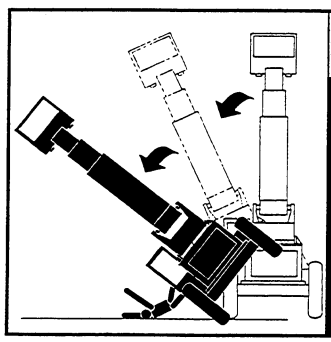

⚠ DANGER!

FAILURE TO FOLLOW THESE PRECAUTIONS WILL RESULT IN MACHINE TIPPING OVER, CAUSING DEATH OR SERIOUS INJURY.

If possible, plan to load, unload and turn on flat level ground. If not level, use frame tilt to level machine. Level indicator must be centered. If loads are to be rehandled several times, place stacking blocks under loads. For sideshift equipped forklifts, center the forks and carriage before lifting. Inspect load to be lifted. Approach the load slowly and squarely with fork tips straight and level. If necessary, adjust pallet forks. Move boom slowly forward and engage load. Position load equally on both forks. Move boom forward until load touches the carriage backrest.

Tilt the forks back to position the load for travel, then lift the load only enough to clear obstacles - avoid erratic stops. Be sure there is sufficient clearance overhead and all around for lifting and traveling. Watch the front and rear clearances when turning.

TRANSPORT THE LOAD SAFELY

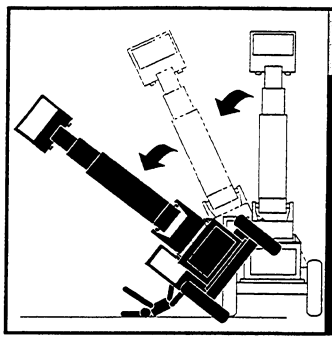

⚠ DANGER!

FAILURE TO FOLLOW THESE PRECAUTIONS WILL RESULT IN MACHINE TIPPING OVER, CAUSING DEATH OR SERIOUS INJURY.

When traveling with a load, keep the forks tilted back with boom retracted and the load close to the ground.

When traveling with a load, slow down for turns, ramps, dips, uneven or slippery surfaces and in congested areas.

⚠ WARNING!

Keep the load as low as possible. Never carry load above eye level.

Avoid excessively steep slopes or unstable surfaces. If you must drive on a slope, level the machine, keep the load low and proceed with extreme caution. DO NOT, under any circumstances, drive ACROSS excessively steep slopes.

If a slope is too steep to allow the frame to be leveled, do not raise the boom. The frame must always be level before raising the boom.

⚠ WARNING!

Travel over inclines, slopes, ramps and downgrades only as follows:

Tilt the attachment back and raised only enough to clear the ground.

Avoid turning.

Proceed slowly and with extreme caution.

Travel straight up and down the grade.

When loaded and traveling up or down grades, travel with the load uphill.

When unloaded, travel with the attachment downhill.

Reduce speed and sound horn at blind intersections, exits and when approaching pedestrians.

Slow down for turns, ramps, dips, uneven or slippery surfaces and in congested areas. Avoid driving over loose objects and holes in roadway surfaces to prevent losing the load or tipping the machine.

Avoid crossing ditches, curbs or exposed railroad tracks. If crossing cannot be avoided, keep the load as low as possible, travel very slowly, and proceed with caution.

Avoid panic braking. Apply brakes smoothly for a controlled stop to prevent toppling the load.

SAFELY PLACING THE LOAD

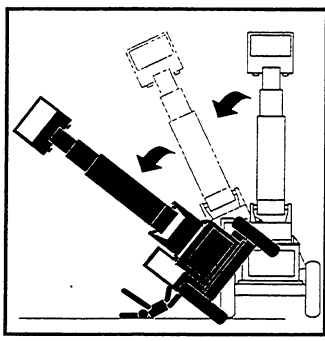

⚠DANGER!

FAILURE TO FOLLOW THESE PRECAUTIONS WILL RESULT IN MACHINE TIPPING OVER, CAUSING DEATH OR SERIOUS INJURY.

Elevated or Overhead Placement

When stacking or placing a load to a high landing use extreme caution! There may be other workers in the immediate area you cannot see. Make sure that all bystanders are away from the area where the load could tip or fall.

Bring the forklift as close as possible to the landing point with the load held low. DO NOT raise the load for placement if the forks are tilted to one side. Level machine using frame tilt BEFORE the load is raised.

Set the park brake. Tilt carriage to cradle the load. Slowly and carefully raise the load.

As lift height increases, your depth perception decreases. Placing the load safely at a high elevation may require a signalman to guide you.

If there is any indication of instability during the lift (i.e. movement, leaning, swaying), stop immediately, lower the load, move the forklift to a more stable, level position.

As the load approaches the desired height, slow the lift speed to a minimum. Continue the lift until load is slightly higher than the landing point.

Do not ram a hydraulic lift cylinder to the end of its stroke. The resulting jolt could spill the load.

Once the load is higher than the landing point use the transfer carriage to place the load directly over the landing point. Consult load charts for transfer capacity. Forks should be nearly level and parallel to the landing surface so that they may be easily retracted from under the load.

Lower the load slowly to place it and relieve the weight from the forks. Retract the transfer carriage until the forks are clear of the load. Lower and retract the boom BEFORE moving the machine.

TRANSMISSION OIL SPECIFICATIONS

The following table shows approved lubricants and associated temperature ranges for use with ZF 3WG and 4WG series transmissions.

Transmission Oil Selection Chart

ZF 3WG-100 & 4WG-100 Transmissions		
Oil Grade	Minimum oil temp. for starting engine	Minimum oil temp. for engaging transmission
Engine Oils		
SAE 20W-20	+14 °F (-10 °C)	+41 °F (+5 °C)
SAE 15W-40	+5 °F (-15 °C)	+32 °F (0 °C)
SAE 10W, 10W-30, 10W-40	-4 °F (-20 °C)	+23 °F (-5 °C)
Automatic Transmission Fluid (ATF)		
ATF	-22 °F (-30 °C)	+14 °F (-10 °C)
Approved Lubricants (Engine Oils)		
API CD/ CE/ CF/ SF/ SG MIL-L-2104 C/ D/ E MIL-L-46152 C/ D/ E SAE 10W SAE 10W-30 SAE 10W-40 SAE 15W-40 SAE 20W-20		
Automatic Transmission Fluid (ATF) may only be used at ambient temperatures below +14 °F (-10 °C)		

FUEL REQUIREMENTS

General

Diesel fuels are blended to meet the local temperature requirements. The standard grades are:

1. 1D for temperatures -22 to +86 °F (-30 to +30 °C).
2. 2D for temperatures +14 to +122 °F (-10 to +50 °C)

There are two main classifications of diesel fuel in general use:

1. Low-sulphur, "on-highway" diesel fuel.
2. Medium-sulfur, "off-highway" diesel fuel. This fuel contains blue dye.

The engine manufacturer specifies the diesel fuel requirements. Additional information can be found below and in the engine manufacturer's Operator's Manual.

Consult your local fuel distributor for the properties of the diesel fuels available in your area.

John Deere Engines

Use of regular-sulfur "off-highway" diesel fuel is recommended.

If low-sulfur "on-highway" diesel fuel is used, John Deere Diesel Fuel Conditioner (TY22030) must be added.

Use of low-sulfur fuel without the specified conditioner may cause premature failure of the engine's fuel system components and void the warranty.

JLG® JLG Industries, Inc.

TRANSFER OF OWNERSHIP

To: JLG, Gradall, Lull and Sky Trak product owner:

If you now own, but ARE NOT the original purchaser of the product covered by this manual, we would like to know who you are. For the purpose of receiving safety-related bulletins, it is very important to keep JLG Industries, Inc. updated with the current ownership of all JLG products. JLG maintains owner information for each JLG product and uses this information in cases where owner notification is necessary.

Please use this form to provide JLG with updated information with regard to the current ownership of JLG Products. Please return completed form to the JLG Product Safety & Reliability Department via facsimile (717) 485-6573 or mail to address as specified on the back of this form.

Thank you,
Product Safety & Reliability Department
JLG Industries, Inc.
1 JLG Drive
McConnellsburg, PA 17233-9533
Telephone: (717) 485-5161
Fax: (717) 485-6573

NOTE: Leased or rented units should not be included on this form.

Mfg. Model: _____

Serial Number: _____

Previous Owner: _____

Address: _____

City: _____ State: _____

Zip: _____ Telephone: (_____) _____

Date Of Transfer: _____

Current Owner: _____

Address: _____

City: _____ State: _____

Zip: _____ Telephone: (_____) _____

Who in your organization should we notify?

Name: _____

Title: _____

Please cut on the dotted line and fax to 717-485-6573

Corporate Office
JLG Industries, Inc.
1 JLG Drive
McConnellsburg PA. 17233-9533
USA
Phone: (717) 485-5161
Customer Support Toll Free: (877) 554-5438
Fax: (717) 485-6417

JLG Worldwide Locations

JLG Industries (Australia)
P.O. Box 5119
11 Bolwarra Road
Port Macquarie
N.S.W. 2444
Australia
Phone: (61) 2 65 811111
Fax: (61) 2 65 810122

JLG Industries (UK)
Unit 12, Southside
Bredbury Park Industrial Estate
Bredbury
Stockport
SK6 2sP
England
Phone: (44) 870 200 7700
Fax: (44) 870 200 7711

JLG Deutschland GmbH
Max Planck Strasse 21
D-27721 Ritterhude/lhlpohl
Bei Bremen
Germany
Phone: (49) 421 693 500
Fax: (49) 421 693 5035

JLG Industries (Italia)
Via Po. 22
20010 Pregnana Milanese - MI
Italy
Phone: (39) 02 9359 5210
Fax: (39) 02 9359 5845

JLG Latino Americana Ltda.
Rua Eng. Carlos Stevenson,
80-Suite 71
13092-310 Campinas-SP
Brazil
Phone: (55) 19 3295 0407
Fax: (55) 19 3295 1025

JLG Europe B.V.
Jupiterstraat 234
2132 HJ Foofddorp
The Netherlands
Phone: (31) 23 565 5665
Fax: (31) 23 557 2493

JLG Industries (Norge AS)
Sofeimyrveien 12
N-1412 Sofienyr
Norway
Phone: (47) 6682 2000
Fax: (47) 6682 2001

JLG Polska
Ul. Krolewska
00-060 Warsawa
Poland
Phone: (48) 91 4320 245
Fax: (48) 91 4358 200

JLG Industries (Europe)
Kilmartin Place,
Tannochside Park
Uddingston G71 5PH
Scotland
Phone: (44) 1 698 811005
Fax: (44) 1 698 811055

JLG Industries (Pty) Ltd.
Unit 1, 24 Industrial Complex
Herman Street
Meadowdale
Germiston
South Africa
Phone: (27) 11 453 1334
Fax: (27) 11 453 1342

Plataformas Elevadoras
JLG Iberica, S.L.
Trapadella, 2
P.I. Castellbisbal Sur
08755Castellbisbal
Spain
Phone: (34) 93 77 24700
Fax: (34) 93 77 11762

JLG Industries (Sweden)
Enkopingsvagen 150
Box 704
SE - 175 27 Jarfalla
Sweden
Phone: (46) 8 506 59500
Fax: (46) 8 506 59534