An Oshkosh Corporation Company

Operation and Safety Manual

Original Instructions - Keep this manual with the machine at all times.

Trailer-Mounted Boom Lifts

T350

T500J

PVC 2007

ANSI

31217420

June 17, 2020 - Rev A

⚠ WARNING

Operating, servicing and maintaining this vehicle or equipment can expose you to chemicals including engine exhaust, carbon monoxide, phthalates, and lead, which are known to the State of California to cause cancer and birth defects or other reproductive harm. To minimize exposure, avoid breathing exhaust, do not idle the engine except as necessary, service your vehicle or equipment in a well-ventilated area and wear gloves or wash your hands frequently when servicing. For more information go to www.P65Warnings.ca.gov.

FOREWORD

This manual is a very important tool! Keep it with the machine at all times.

The purpose of this manual is to provide owners, users, operators, lessors, and lessees with the precautions and operating procedures essential for the safe and proper machine operation for its intended purpose.

Due to continuous product improvements, JLG Industries, Inc. reserves the right to make specification changes without prior notification. Contact JLG Industries, Inc. for updated information.

Refer to www.JLG.com for Warranty, Product Registration, and other machine-related documentation.

SAFETY ALERT SYMBOLS AND SAFETY SIGNAL WORDS

This is the Safety Alert Symbol. It is used to alert you to the potential personal injury hazards. Obey all safety messages that follow this symbol to avoid possible injury or death

DANGER

INDICATES AN IMMINENTLY HAZARDOUS SITUATION. IF NOT AVOIDED, WILL RESULT IN SERIOUS INJURY OR DEATH. THIS DECAL WILL HAVE A RED BACKGROUND.

WARNING

INDICATES A POTENTIALLY HAZARDOUS SITUATION. IF NOT AVOIDED, COULD RESULT IN SERIOUS INJURY OR DEATH. THIS DECAL WILL HAVE AN ORANGE BACKGROUND.

CAUTION

INDICATES A POTENTIALLY HAZARDOUS SITUATION. IF NOT AVOIDED, MAY RESULT IN MINOR OR MODERATE INJURY. IT MAY ALSO ALERT AGAINST UNSAFE PRACTICES. THIS DECAL WILL HAVE A YELLOW BACKGROUND.

NOTICE

INDICATES INFORMATION OR A COMPANY POLICY THAT RELATES DIRECTLY OR INDIRECTLY TO THE SAFETY OF PERSONNEL OR PROTECTION OF PROPERTY.

⚠ WARNING

THIS PRODUCT MUST COMPLY WITH ALL SAFETY RELATED BULLETINS. CONTACT JLG INDUSTRIES, INC. OR THE LOCAL AUTHORIZED JLG REPRESENTATIVE FOR INFORMATION REGARDING SAFETY-RELATED BULLETINS WHICH MAY HAVE BEEN ISSUED FOR THIS PRODUCT.

NOTICE

JLG INDUSTRIES, INC. SENDS SAFETY RELATED BULLETINS TO THE OWNER OF RECORD OF THIS MACHINE. CONTACT JLG INDUSTRIES, INC. TO ENSURE THAT THE CURRENT OWNER RECORDS ARE UPDATED AND ACCURATE.

NOTICE

JLG INDUSTRIES, INC. MUST BE NOTIFIED IMMEDIATELY IN ALL INSTANCES WHERE JLG PRODUCTS HAVE BEEN INVOLVED IN AN ACCIDENT INVOLVING BODILY INJURY OR DEATH OR WHEN SUBSTANTIAL DAMAGE HAS OCCURRED TO PERSONAL PROPERTY OR THE JLG PRODUCT.

For:

- Accident Reporting
- Product Safety Publications
- Current Owner Updates
- Questions Regarding Product Safety
- Standards and Regulations Compliance Information
- Questions Regarding Special Product Applications
- Questions Regarding Product Modifications

Contact:

Product Safety and Reliability Department
JLG Industries, Inc.
13224 Fountainhead Plaza
Hagerstown, MD 21742
USA

or Your Local JLG Office
(See addresses on inside of manual cover)

In USA:

Toll Free: 877-JLG-SAFE (877-554-7233)

Outside USA:

Phone: 240-420-2661
Fax: 301-745-3713
E-mail: ProductSafety@JLG.com

REVISION LOG

Original Issue	A - June 17, 2020

SECTION - 1 - SAFETY

1.1 GENERAL 1-1
Operator Training and Knowledge 1-1
1.2 TOWING REGULATIONS 1-2
1.3 BEFORE OPERATING THE LIFT 1-2
Workplace Inspection 1-2
Machine Inspection 1-2
1.4 OPERATION 1-3
General 1-3
Trip and Fall Hazards 1-4
Electrocution Hazards 1-5
Tipping Hazards 1-7
Crushing and Collision Hazards 1-8
1.5 LIFTING, AND HAULING 1-9
1.6 TOWING HAZARDS 1-9
1.7 ADDITIONAL HAZARDS / SAFETY 1-9

SECTION - 2 - USER RESPONSIBILITIES, MACHINE PREPARATION, AND INSPECTION

2.1 PERSONNEL TRAINING 2-1
Operator Training 2-1
Training Supervision 2-1
Operator Responsibility 2-1
2.2 PREPARATION, INSPECTION, AND MAINTENANCE 2-2
Pre-Start Inspection 2-4
Function Check 2-5
General 2-9

SECTION - 3 - TOWING

3.1 GENERAL TOWING INFORMATION 3-1
3.2 COUPLER 3-1
3.3 TOW VEHICLE AND HITCH INFORMATION 3-1
Towing Hitch 3-1
3.4 COUPLING AND UNCOUPLING THE TRAILER 3-1
Before Coupling the Trailer to Tow Vehicle 3-1
Tongue Height 3-2
Coupler and Ball 3-2
Tongue Jack 3-2
Coupling the Trailer to the Hitch 3-3
Uncoupling the Trailer from the Hitch 3-3
Rigging Safety Chains (If equipped) 3-4
Testing Breakaway Brake 3-4
Connect the Electrical Cables 3-6
3.5 ENGAGING MANUAL LOCKOUT LEVER 3-7
3.6 TRAILER MANEUVERING 3-7
3.7 TOWING GUIDELINES 3-7
3.8 PRE-TOW INSPECTION 3-9

SECTION - 4 - MACHINE CONTROLS AND INDICATORS

4.1 GENERAL 4-1
4.2 CONTROLS AND INDICATORS 4-1
Ground Control Station 4-2
Platform Station 4-5

SECTION - 5 - MACHINE OPERATION

5.1 DESCRIPTION 5-1
5.2 BOOM OPERATING CHARACTERISTICS & LIMITATIONS 5-1
Capacities 5-1
Stability 5-1
5.3 ENGINE OPERATION (IF EQUIPPED) 5-6
Starting Procedure 5-6
Shutdown Procedure 5-6
Fuel Valve Lever 5-7
5.4 OUTRIGGERS 5-7
From the Ground Console 5-7
From the Platform Console (Drive & Set Only) 5-8
5.5 PLATFORM 5-8
Platform Level Adjustment 5-8
Platform Rotation (If Equipped) 5-8
5.6 BOOM 5-8
Swinging the Boom 5-9
Raising and Lowering the Boom 5-9
Telescoping the Boom 5-9
5.7 JIB LIFT 5-10
5.8 USER FAULT CODES 5-10
5.9 BATTERY CHARGING 5-12
Battery Charger Fault Codes 5-14
5.11 PLATFORM REMOVAL & INSTALLATION 5-15
5.12 MATERIAL HOOK INSTALLATION 5-16
5.13 MATERIAL HOOK OPERATING PRECAUTIONS 5-17
5.14 ACCESSORY TRAY 5-18
5.15 PANEL TRAY 5-18
5.16 DRIVE & SET 5-20
To Set Up The Machine for Drive & Set Operation: . 5-20
To Prepare the Machine For Towing After Drive & Set Operation: 5-23
5.17 SHUT DOWN AND PARK 5-26
5.18 TIE DOWN 5-27

SECTION - 6 - EMERGENCY PROCEDURES

6.1 GENERAL 6-1
6.2 INCIDENT NOTIFICATION 6-1
6.3 EMERGENCY OPERATION 6-1
Operator Unable to Control Machine 6-1
Platform or Boom Caught Overhead 6-2
6.4 MANUAL DESCENT 6-2
Lift Down 6-3
Telescope In 6-4
Telescope Out 6-5
Swing 6-5
Platform Jib 6-6

SECTION - 7 - GENERAL SPECIFICATIONS & OPERATOR MAINTENANCE

7.1 INTRODUCTION 7-1
7.2 OPERATING SPECIFICATIONS 7-1
Dimensional Data 7-3
Fluid Capacities. 7-3
Electric Power Unit 7-3
Taillight and Marker Light Bulb Information (ANSI Machines) 7-4
Tires. 7-4
Engine 7-5
Batteries (Electric Machines) 7-5
Component Weights. 7-6
Lubrication 7-7
7.3 OPERATOR MAINTENANCE 7-9
7.4 TIRES & WHEELS. 7-15
Glossary of Tire and Loading Terminology 7-15
Basic Tire Maintenance 7-15
Tire Inflation. 7-16
Tire Wear. 7-16
Tire Repair. 7-17
Tire Replacement 7-17
Tire Fundamentals. 7-17
Wheel Replacement 7-20
Wheel Installation 7-20
Lug Nuts (Bolts). 7-21
Unsealed Wheel Bearings (Hubs) 7-22

SECTION - 8 - INSPECTION AND REPAIR LOG

2-1. Basic Nomenclature 2-6
2-2. Daily Walk-Around Inspection - Sheet 1 of 3 2-7
2-3. Daily Walk-Around Inspection - Sheet 2 of 3 2-8
2-4. Daily Walk-Around Inspection - Sheet 3 of 3 2-9
3-1. Pre-Tow Inspection - Sheet 1 of 2 3-10
3-2. Pre-Tow Inspection - Sheet 2 of 2 3-11
4-1. Ground Control Station 4-3
4-2. Platform Control Console - Standard Machine. 4-7
4-3. Platform Control Console w/Drive & Set Option 4-8
5-1. Position of Least Forward Stability (T350) 5-2
5-2. Position of Least Backward Stability (T350). 5-3
5-3. Position of Least Forward Stability (T500J) 5-4
5-4. Position of Least Backward Stability (T500J) 5-5
5-5. Generator Plug Location 5-13
5-6. Panel Tray 5-19
5-7. Grade and Sideslope 5-22
5-8. Lifting and Tie Down Chart 5-28
5-9. Decal Location - ANSI (Sheet 1 of 2). 5-29
5-10. Decal Location - ANSI (Sheet 2 of 2). 5-30
5-11. Decal Location - Country Specs (Sheet 1 of 2) 5-33
5-12. Decal Location - Country Specs (Sheet 2 of 2) 5-34
7-1. Operator Maintenance & Lubrication Diagram 7-8
7-2. Information on Tires - Sheet 1 of 2 7-18
7-3. Information on Tires - Sheet 2 of 2 7-19

1-1 Minimum Approach Distances (M.A.D.) 1-6
1-2 Beaufort Scale (For Reference Only) 1-10
2-1 Inspection and Maintenance Table 2-3
5-1 User Fault Codes 5-10
5-10 Battery Charger Fault Codes (Delta-Q) 5-14
5-2 Decal Legend (ANSI) 5-31
5-3 Decal Legend - Country Specs 5-35
7-1 Operating & Towing Specifications 7-1
7-2 Dimensional Data 7-3
7-3 Capacities 7-3
7-4 Electric Power Unit Specifications 7-3
7-5 Taillight and Marker Light Bulb Information 7-4
7-6 Tire Specifications 7-4
7-7 Engine Specifications 7-5
7-8 Engine Battery Specifications 7-5
7-9 Battery Specifications 7-5
7-10 Component Weights - T350 7-6
7-11 Component Weights - T500J 7-6
7-12 Hydraulic Oil Temperature Range 7-7
7-13 Hydraulic Oil Specifications 7-7
7-14 Lubrication Specifications 7-9
7-15 Tire Wear 7-17
7-16 Wheel Torque Chart - ANSI 7-21
8-1 Inspection and Repair Log 8-1

SECTION 1. SAFETY

1.1 GENERAL

This section outlines the necessary precautions for towing and also proper and safe machine operation and maintenance. For proper machine use, it is mandatory that a daily routine is established based on the content of this manual. A maintenance program, using the information provided in this manual and the Service and Maintenance Manual, must also be established by a qualified person and followed to ensure the machine is safe to operate.

An owner's manual that provides general trailer information cannot cover all of the specific details necessary for the proper combination of every trailer, tow vehicle and hitch. Therefore, you must read, understand and follow the instructions given by the tow vehicle and trailer hitch manufacturers, as well as the instructions in this manual.

The owner/user/operator/lessor/lessee of the machine should not operate the machine until this manual has been read, training is accomplished, and operation of the machine has been completed under the supervision of an experienced and qualified operator.

If there are any questions with regard to safety, training, inspection, maintenance, application, and operation, please contact JLG Industries, Inc. ("JLG").

⚠ WARNING

FAILURE TO COMPLY WITH THE SAFETY PRECAUTIONS LISTED IN THIS MANUAL COULD RESULT IN MACHINE DAMAGE, PROPERTY DAMAGE, PERSONAL INJURY OR DEATH.

Operator Training and Knowledge

- Read and understand this manual before towing or operating the machine.

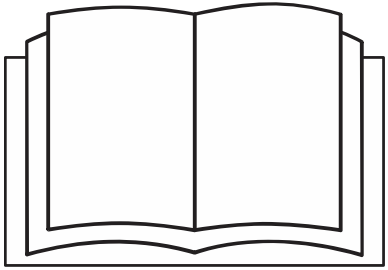

- Do not tow or operate this machine until complete training is performed by authorized persons.
- Only authorized and qualified personnel can operate the machine.

- Read, understand, and obey all DANGERS, WARNINGS, CAUTIONS, and operating instructions on the machine and in this manual.
- Use the machine in a manner which is within the scope of its intended application set by JLG.
- All operating personnel must be familiar with the emergency controls and emergency operation of the machine as specified in this manual.
- Read, understand, and obey all applicable employer, local, and governmental regulations as they pertain to towing and operation of the machine.

1.2 TOWING REGULATIONS

There are local and national regulations (height, width, brakes etc.) that must be followed by the owner and operator. It is the responsibility of the trailer mounted boom lift owner and operator to determine which regulations apply and to comply with these requirements.

1.3 BEFORE OPERATING THE LIFT

Workplace Inspection

- The operator is to take safety measures to avoid all hazards in the work area prior to machine operation.
- Do not operate or raise the platform while on trucks, trailers, railway cars, floating vessels, scaffolds or other equipment unless approved in writing by JLG.
- Do not operate the machine in hazardous environments unless approved for that purpose by JLG.
- Be sure that the ground conditions are able to support the maximum load shown on the decals located on the machine.

Machine Inspection

- Before machine operation, perform inspections and functional checks. Refer to Section 2 of this manual for detailed instructions.

- Do not operate this machine until it has been serviced and maintained according to requirements specified in the Service and Maintenance Manual.
- Be sure the enable trigger and all other safety devices are operating properly. Modification of these devices is a safety violation.

⚠ WARNING

MODIFICATION OR ALTERATION OF AN AERIAL WORK PLATFORM SHALL BE MADE ONLY WITH WRITTEN PERMISSION FROM THE MANUFACTURER

- Do not operate any machine on which safety or instruction placards or decals are missing or illegible.
- Check the machine for modifications to original components. Ensure that any modifications have been approved by JLG.
- Avoid any buildup of debris on the platform floor. Keep mud, oil, grease, and other slippery substances from footwear and platform floor.

1.4 OPERATION

General

- Do not use the machine for any purpose other than positioning personnel, their tools, and equipment unless using the optional JLG Material Hook attachment.
- Never operate a machine that is not working properly. If a malfunctions occurs, shut down the machine.
- Never slam a control switch or lever through neutral to an opposite direction. Always return switch to neutral and stop before moving the switch to the next function. Operate controls with slow and even pressure.
- Hydraulic cylinders should never be left fully extended for long periods of time.
- Do not allow personnel to tamper with or operate the machine from the ground with personnel in the platform, except in an emergency.
- Do not carry materials directly on platform railing unless approved by JLG.
- When two or more persons are in the platform, the operator shall be responsible for all machine operations.

- Always ensure that power tools are properly stowed and never left hanging by their cord from the platform work area.
- Supplies or tools which extend outside the platform are prohibited unless approved by JLG.
- Do not place boom or platform against any structure to steady the platform or to support the structure.
- Stow boom and shut off all power before leaving machine.

Trip and Fall Hazards

During operation, occupants in the platform must wear a full body harness with a lanyard attached to an authorized lanyard anchorage point. Attach only one (1) lanyard per lanyard anchorage point.

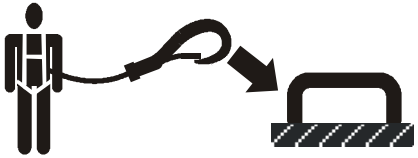

- Before operating the machine, make sure all gates are closed and fastened in their proper position.

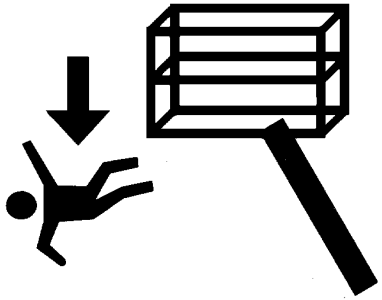

- Keep both feet firmly positioned on the platform floor at all times. Do not climb on platform rails. Never use ladders, boxes, steps, planks, or similar items on platform to provide additional reach.
- Never use the boom assembly or the trailer structure to enter or leave the platform.
- Use extreme caution when entering or leaving platform. Be sure that the boom is telescoped out and fully lowered. Face the platform, maintain “three point contact” with the machine, using two hands and one foot or two feet and one hand during entry and exit.

Electrocution Hazards

- This machine is not insulated and does not provide protection from contact or proximity to electrical current.

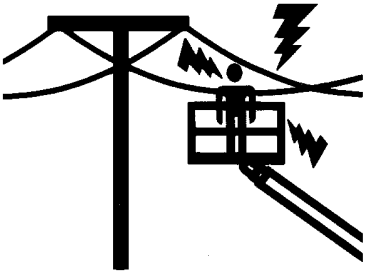

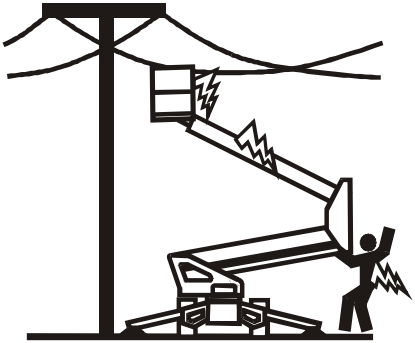

- Maintain safe distance from electrical lines, apparatus, or any energized (exposed or insulated) parts according to the Minimum Approach Distance (MAD) as shown in Table 1-1.
- Allow for machine movement and electrical line swaying.

Table 1-1. Minimum Approach Distances (M.A.D.)

Voltage Range (Phase to Phase)	MINIMUM APPROACH DISTANCE in Feet (Meters)
0 to 50 KV	10 (3)
Over 50 KV to 200 KV	15 (5)
Over 200 KV to 350 KV	20 (6)
Over 350 KV to 500 KV	25 (8)
Over 500 KV to 750 KV	35 (11)
Over 750 KV to 1000 KV	45 (14)
NOTE: This requirement shall apply except where employer, local or governmental regulations are more stringent.	

- Maintain a clearance of at least 10 ft. (3m) between any part of the machine and its occupants, their tools, and their equipment from any electrical line or apparatus carrying up to 50,000 volts. One foot additional clearance is required for every additional 30,000 volts or less.
- The minimum approach distance may be reduced if insulating barriers are installed to prevent contact, and the barriers are rated for the voltage of the line being guarded. These barriers shall not be part of (or attached to) the machine. The minimum approach distance shall be reduced to a distance within the designed working dimensions of the insulating barrier. This determination shall be made by a qualified person in accordance with the employer, local, or governmental requirements for work practices near energized equipment

⚠ DANGER

DO NOT MANEUVER MACHINE OR PERSONNEL INSIDE PROHIBITED ZONE (MAD). ASSUME ALL ELECTRICAL PARTS AND WIRING ARE ENERGIZED UNLESS KNOWN OTHERWISE.

Tipping Hazards

- The user should be familiar with the surface before operating. Do not exceed the allowable sideslope and grade while operating.

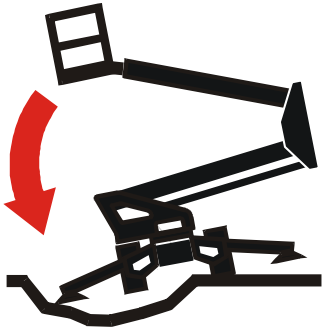

- Do not elevate platform while on a soft surface.
- Before operating on floors, bridges, trucks, and other surfaces, check allowable capacity of the surfaces.
- Never exceed the maximum platform capacity. Distribute loads evenly on platform floor.
- Do not raise the platform unless the machine is on firm surfaces and outriggers are properly set.
- Keep the chassis and outriggers of the machine at least 2 ft. (0.6m) from holes, bumps, drop-offs, obstructions, debris, concealed holes, and other potential hazards on the floor/surface.
- Do not push or pull any object with the boom.
- Never attempt to use the machine as a crane with platform attached. Do not tie-off machine to any adjacent structure.
- Do not operate the machine when wind conditions exceed 28 mph (12.5 m/s).
- Do not increase the surface area of the platform or the load. Increase of the area exposed to the wind will decrease stability and could result in a tip-over.
- Do not increase the platform size with unauthorized platform extensions or attachments.
- If boom assembly or platform is in a position that one or more outriggers are off the ground, all persons must be removed before attempting to stabilize the machine. Use cranes, forklift trucks, or other appropriate equipment to stabilize machine.

Crushing and Collision Hazards

- Approved head gear must be worn by all operating and ground personnel.
- Check work area for clearances overhead, on sides, and bottom of platform when lifting or lowering platform, and driving.

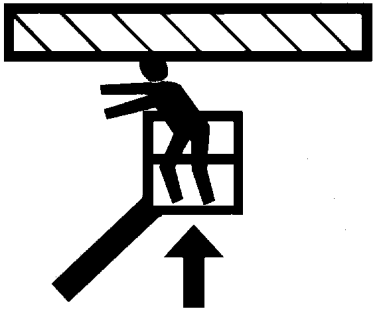

- During operation, keep all body parts inside platform railing.
- Always post a lookout when driving in areas where vision is obstructed.
- Keep non-operating personnel at least 6 ft. (1.8m) away from machine during all operations.
- Under all travel conditions, the operator must limit travel speed according to conditions of ground surface, congestion, visibility, slope, location of personnel, and other factors causing hazards of collision or injury to personnel.
- Exercise extreme caution at all times to prevent obstacles from striking or interfering with operating controls and persons in the platform.
- Be sure that operators of other overhead and floor level machines are aware of the aerial work platform's presence. Disconnect power to overhead cranes.
- Warn personnel not to work, stand, or walk under a raised boom or platform. Position barricades on floor if necessary.

1.5 LIFTING, AND HAULING

- Never allow personnel in platform while towing, lifting, or hauling the machine.
- Ensure boom is in the stowed position and the transportation latch is locked prior to towing, lifting or hauling. The platform must be completely empty.
- When lifting machine, lift only at designated areas of the machine. Lift the unit with equipment of adequate capacity.
- Refer to the Machine Operation section of this manual for lifting information.

1.6 TOWING HAZARDS

Safe and proper usage of the trailer mounted boom lift is essential to avoid accidents. Unsafe use; separation of trailer mounted boom lift from tow vehicle or loss of control of the trailer mounted boom lift or trailer/tow vehicle combination could result in death or serious injury. Common causes for trailer accidents include:

a. Driving too fast for conditions;
b. Failure to adjust handling while towing a trailer;
c. Trailer improperly coupled to the hitch;
d. Incorrect use of safety chains;
e. Incorrect use of breakaway brake;
f. Mismatch of trailer and hitch;
g. Unsafe tires, lug nuts or wheels;
h. Inoperable brakes, lights or mirrors;
i. Modifying the trailer;
j. Inadequate tow vehicle or towing hitch; and
k. Not properly maintaining the trailer structure.

1.7 ADDITIONAL HAZARDS / SAFETY

- Do not use machine as a ground for welding.
- When performing welding or metal cutting operations, precautions must be taken to protect the chassis from direct exposure to weld and metal cutting spatter.
- Do not refuel the machine with the engine running.
- Battery fluid is highly corrosive. Avoid contact with skin and clothing at all times.
- Charge batteries only in a well ventilated area.

NOTICE

DO NOT OPERATE THE MACHINE WHEN WIND CONDITIONS EXCEED 28 MPH (12.5 M/S).

Table 1-2. Beaufort Scale (For Reference Only)

Beaufort Number	Wind Speed		Description	Land Conditions
	mph	m/s		
0	0	0-0.2	Calm	Calm. Smoke rises vertically.
1	1-3	0.3-1.5	Light air	Wind motion visible in smoke.
2	4-7	1.6-3.3	Light breeze	Wind felt on exposed skin. Leaves rustle.
3	8-12	3.4-5.4	Gentle breeze	Leaves and smaller twigs in constant motion.
4	13-18	5.5-7.9	Moderate breeze	Dust and loose paper raised. Small branches begin to move.
5	19-24	8.0-10.7	Fresh breeze	Smaller trees sway.
6	25-31	10.8-13.8	Strong breeze	Large branches in motion. Whistling heard in overhead wires. Umbrella use becomes difficult.
7	32-38	13.9-17.1	Near Gale/Moderate Gale	Whole trees in motion. Effort needed to walk against the wind.
8	39-46	17.2-20.7	Fresh Gale	Twigs broken from trees. Cars veer on road.
9	47-54	20.8-24.4	Strong Gale	Light structure damage.

SECTION 2. USER RESPONSIBILITIES, MACHINE PREPARATION, AND INSPECTION

2.1 PERSONNEL TRAINING

The aerial platform is a personnel handling device; so it is necessary that it be operated and maintained only by trained personnel.

Persons under the influence of drugs or alcohol or who are subject to seizures, dizziness or loss of physical control must not operate this machine.

Operator Training

Operator training must cover:

1. Use and limitations of the controls in the platform and at the ground, emergency controls and safety systems.
2. Control labels, instructions, and warnings on the machine.
3. Rules of the employer and government regulations.
4. Use of approved fall protection device.
5. Enough knowledge of the mechanical operation of the machine to recognize a malfunction or potential malfunction.
6. The safest means to operate the machine where overhead obstructions, other moving equipment, and obstacles, depressions, holes, drop-offs.
7. Means to avoid the hazards of unprotected electrical conductors.
8. Specific job requirements or machine application.

Training Supervision

Training must be done under the supervision of a qualified person in an open area free of obstructions until the trainee has developed the ability to safely control and operate the machine.

Operator Responsibility

The operator must be instructed that they have the responsibility and authority to shut down the machine in case of a malfunction or other unsafe condition of either the machine or the job site.

2.2 PREPARATION, INSPECTION, AND MAINTENANCE

The following table covers the machine inspections and maintenance required by JLG Industries, Inc. Consult local regulations for further requirements for aerial work platforms. The frequency of inspections and maintenance must be increased as necessary when the machine is used in a harsh or hostile environment, if the machine is used with increased frequency, or if the machine is used in a severe manner.

Table 2-1. Inspection and Maintenance Table

Type	Frequency	Primary Responsibility	Service Qualification	Reference
Pre-Start Inspection	Before using each day; or whenever there's an Operator change.	User or Operator	User or Operator	Operator and Safety Manual
Pre-Delivery Inspection (See Note)	Before each sale, lease, or rental delivery.	Owner, Dealer, or User	Qualified JLG Mechanic	Service and Maintenance Manual and applicable JLG inspection form
Frequent Inspection	In service for 3 months or 150 hours, whichever comes first; or Out of service for a period of more than 3 months; or Purchased used.	Owner, Dealer, or User	Qualified JLG Mechanic	Service and Maintenance Manual and applicable JLG inspection form
Annual Machine Inspection	Annually, no later than 13 months from the date of prior inspection.	Owner, Dealer, or User	Factory Trained Service Technician (Recommended)	Service and Maintenance Manual and applicable JLG inspection form
Preventative Maintenance	At intervals as specified in the Service and Maintenance Manual.	Owner, Dealer, or User	Qualified JLG Mechanic	Service and Maintenance Manual

NOTE: *Inspection forms are available from JLG. Use the Service and Maintenance Manual to perform inspections.*

NOTICE

JLG INDUSTRIES, INC. RECOGNIZES A FACTORY-TRAINED SERVICE TECHNICIAN AS A PERSON WHO HAS SUCCESSFULLY COMPLETED THE JLG SERVICE TRAINING SCHOOL FOR THE SPECIFIC JLG PRODUCT MODEL.

Pre-Start Inspection

The Pre-Start Inspection should include each of the following:

1. **Cleanliness –** Check all surfaces for leakage (oil, fuel, or battery fluid) or foreign objects. Report any leakage to the proper maintenance personnel.
2. **Structure** - Inspect the machine structure for dents, damage, weld or parent metal cracks or other discrepancies.

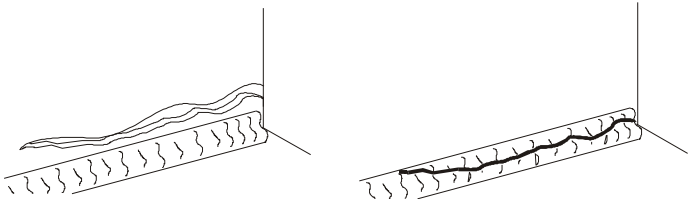

3. **Decals and Placards** – Check all for cleanliness and legibility. Make sure none of the decals and placards are missing. Make sure all illegible decals and placards are cleaned or replaced.
4. **Operation and Safety Manuals** – Make sure a copy of the Operator and Safety Manual, AEM Safety Manual (ANSI markets only), and ANSI Manual of Responsibilities (ANSI markets only) is enclosed in the weather resistant storage container.
5. **"Walk-Around" Inspection** – Refer to Figure 2-3.
6. **Battery –** Charge as required.
7. **Fuel** (Combustion Engine Powered Machines) – Add the proper fuel as necessary.
8. **Engine Oil Supply** - Ensure the engine oil level is at the Full mark on the dipstick and the filler cap is secure.
9. **Hydraulic Oil** – Check the hydraulic oil level. Ensure hydraulic oil is added as required.
10. **Accessories/Attachments** - Reference the Operator and Safety Manual of each attachment or accessory installed upon the machine for specific inspection, operation, and maintenance instructions.
11. **Function Check** – Once the "Walk-Around" Inspection is complete, perform a functional check of all systems in an area free of overhead and ground level obstructions. Refer to Section 4 for more specific operating instructions.

⚠ WARNING

IF THE MACHINE DOES NOT OPERATE PROPERLY, TURN OFF THE MACHINE IMMEDIATELY! REPORT THE PROBLEM TO THE PROPER MAINTENANCE PERSONNEL. DO NOT OPERATE THE MACHINE UNTIL IT IS DECLARED SAFE FOR OPERATION.

Function Check

Perform the Function Check as follows:

1. From the ground control console with no load in the platform:
   - **a.** Check that all guards protecting the function control switches and controllers are in place;
   - **b.** Operate all functions;
   - **c.** Ensure that all machine functions are disabled when the Emergency Stop Button is pushed in.
   - **d.** Ensure all boom functions stop when the function enable switch is released.
2. With the platform in the stowed position:
   - **a.** Check that telescope out and lift up above horizontal are disabled with the outriggers retracted and the boom out of transport position.
3. From the platform control console:
   - **a.** Ensure that the control console is firmly secured in the proper location;
   - **b.** Check that all guards protecting the function control switches and controllers are in place;
   - **c.** Operate all functions;
   - **d.** Ensure all boom functions stop when the function enable switch is released.
   - **e.** Ensure that all machine functions are disabled when the Emergency Stop Button is pushed in.

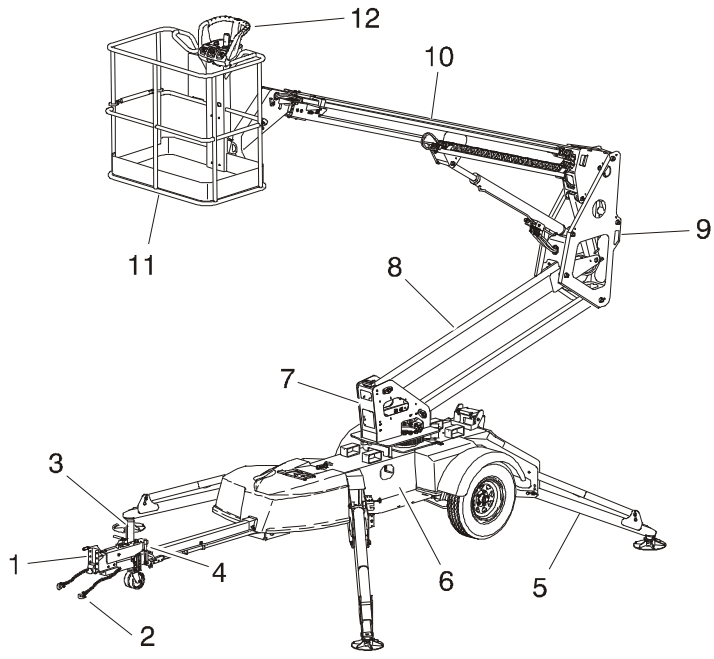

1. Coupler
2. Safety Chains (N/A on South Africa Spec)
3. Tongue Jack
4. Parking Brake
5. Outrigger
6. Chassis
7. Turntable
8. Lower Boom
9. Upright
10. Boom
11. Platform
12. Platform Console

Figure 2-1. Basic Nomenclature

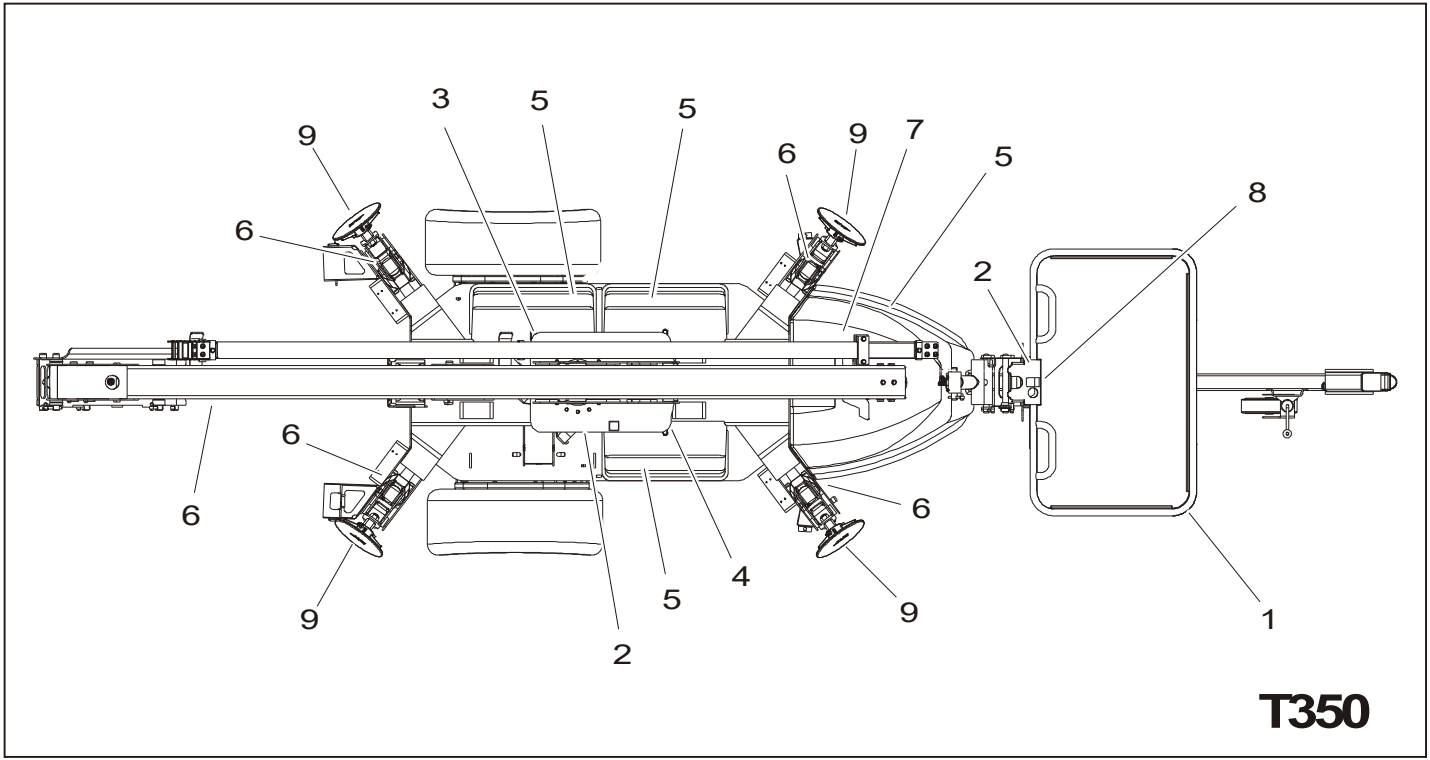

Figure 2-2. Daily Walk-Around Inspection - Sheet 1 of 3

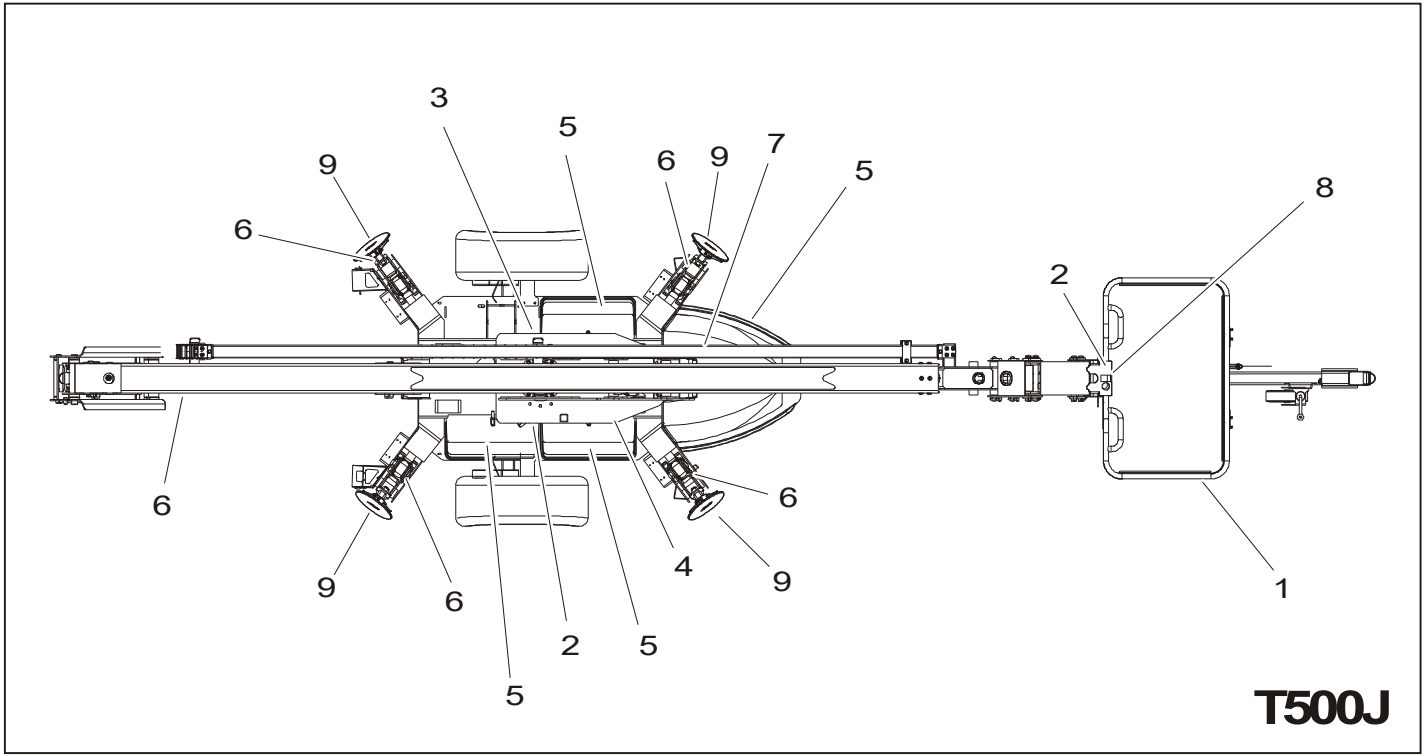

Figure 2-3. Daily Walk-Around Inspection - Sheet 2 of 3

General

Begin the "Walk-Around Inspection" at Item 1, as noted on the diagram. Continue checking each item in sequence for the conditions listed in the following checklist.

WARNING

TO AVOID POSSIBLE INJURY, BE SURE MACHINE POWER IS OFF.

DO NOT OPERATE MACHINE UNTIL ALL MALFUNCTIONS HAVE BEEN CORRECTED.

***INSPECTION NOTE**: On all components, make sure there are no loose or missing parts, that they are securely fastened, and no visible damage, leaks or excessive wear exists in addition to any other criteria mentioned.*

1. **Platform Assembly and Gate** - See Inspection Note; access drop bar slides freely. Platform retention pin properly installed and locked.
2. **Platform & Ground Control Consoles** - Switches and levers return to neutral, decals/placards secure and legible, control markings legible.
3. **Boom Sections/Turntable** - See Inspection Note.
4. **Swing Drive & Turntable Bearing**- No evidence of damage. Evidence of proper lubrication. No evidence of loose bolts or looseness between bearing and machine.
5. **Cover Assemblies** - See Inspection Note.
6. **All Hydraulic Cylinders** - No visible damage; pivot pins and hydraulic hoses undamaged, not leaking.
7. **Main Hydraulic Pump** - See Inspection Note.
8. **Platform Rotator (If Equipped)** - See Inspection Note.
9. **Outriggers** - See Inspection Note; pads pivot freely.

Figure 2-4. Daily Walk-Around Inspection - Sheet 3 of 3

SECTION 3. TOWING

3.1 GENERAL TOWING INFORMATION

⚠ WARNING

DO NOT MOVE THE TRAILER UNTIL THE TRAILER IS PROPERLY HITCHED TO THE TOW VEHICLE AND THE TRAILER JACK IS FULLY RETRACTED.

3.2 COUPLER

The trailer is equipped with a ball hitch coupler that is suitable for the size and weight of the trailer. The load rating of the coupler and the necessary ball size are listed on the trailer tongue. Do not change the coupler to a smaller size.

3.3 TOW VEHICLE AND HITCH INFORMATION

⚠ WARNING

IF THE VEHICLE OR HITCH IS NOT PROPERLY SELECTED AND MATCHED TO THE GROSS VEHICLE WEIGHT RATING (GVWR) OF YOUR TRAILER, YOU CAN CAUSE AN ACCIDENT THAT COULD LEAD TO DEATH OR SERIOUS INJURY.

Towing Hitch

The towing hitch attached to your tow vehicle must have a capacity equal to or greater than the load rating of the trailer you intend to tow. The hitch capacity must also be matched to the tow vehicle capacity.

3.4 COUPLING AND UNCOUPLING THE TRAILER

⚠ WARNING

THE TRAILER MUST BE PROPERLY AND SECURELY COUPLED TO THE HITCH OF THE TOW VEHICLE. UNCOUPLING OF THE TRAILER DURING TRANSPORT COULD RESULT IN DEATH OR SERIOUS INJURY.

Before Coupling the Trailer to Tow Vehicle

1. Wipe the hitch ball clean and inspect it visually and by feel for flat spots, cracks and pits.
2. Ensure boom is stowed with platform over hitch. Secure the boom with the transport latch.
3. Push in the Emergency Stop at Platform Controls.
4. Push in the Emergency Stop at Ground Controls. Position Platform/Ground Select switch to center OFF.
5. Remove loose items from the platform.

Tongue Height

Proper tongue height is critical to maintaining stability during towing. The trailer should always be as level as possible while towing. Due to varying vehicle height, the coupling height may need adjusted with a raised or dropped ball mount.

⚠ WARNING

THE TRAILER TONGUE MUST BE LEVEL BEFORE TOWING. ADJUST THE COUPLER OR TOW VEHICLE HITCH TO ACHIEVE THIS HEIGHT.

Coupler and Ball

The coupler on the trailer connects to the ball attached to the hitch on the tow vehicle. Before each tow, coat the ball with a thin layer of automotive bearing grease to reduce wear and ensure proper operation; and check the locking device that secures the coupler to the ball for proper operation.

If you see or feel evidence of wear, such as flat spots, deformations, pitting or corrosion, on the ball or coupler, immediately have your dealer inspect them to determine the proper action to prevent possible failure of the ball and coupler system. All bent or broken coupler parts must be replaced before towing the trailer.

The coupler must operate properly and automatically snap into the latched position. Oil the pivot points, sliding surfaces, and spring ends with SAE 30W motor oil. Keep the ball pocket and latch mechanism clean. Dirt or contamination can prevent proper operation of the latching mechanism.

When replacing a ball, the load rating must match or exceed the GVWR of the trailer.

Tongue Jack

NOTE: *To avoid damaging the handle while trailering in the horizontal position, secure the handle to the jack with a bungee cord or rope.*

The jack is designed to be swiveled into a horizontal or storage position. In both the vertical and horizontal positions, the plunger must be securely positioned in the mating hole in the mounting bracket. To place the jack into the horizontal position, allow about 2" (5 cm) of ground clearance beneath the wheels. Pull the plunger pin out of the opening and swivel the jack. Rotate either left or right until the plunger pin snaps into the proper mounting bracket hole.

Coupling the Trailer to the Hitch

Lubricate the hitch ball and the inside of the coupler with a thin layer of automotive bearing grease before each tow to reduce wear and ensure proper operation. If your trailer is equipped with a tongue jack, raise the coupler above the ball height.

1. Wipe the inside and outside of the coupler clean and inspect it visually for cracks and deformations; feel the inside of the coupler for worn spots and pits.
   Be sure the coupler is tight to the tongue of the trailer. All coupler fasteners must be visibly solid against the trailer frame.
2. Raise the bottom surface of the coupler to be above the top of the hitch ball by using the tongue jack.
3. Once the hitch on the trailer is open, align the tow vehicle up with the trailer hitch.
4. Using the tongue jack, lower the entire weight of the trailer on to the ball hitch of the tow vehicle.
5. Insert the pin into the hole behind the collar to lock the collar into place.
6. Disengage the parking brake.
7. Be sure the coupler is all the way on the hitch ball and the collar/locking mechanism is engaged. A properly engaged locking mechanism will allow the coupler to raise the rear of the tow vehicle. Using the tongue jack, test to see that you can raise the rear of the tow vehicle by 1 inch (2.5 cm), after the coupler is locked to the hitch.

NOTICE

OVERLOADING CAN DAMAGE THE TONGUE JACK. DO NOT USE THE TONGUE JACK TO RAISE THE TOW VEHICLE MORE THAN 1 INCH (2.5 CM).

NOTE: *If the coupler cannot be secured to the hitch ball, do not tow the trailer.*

8. Retract the tongue jack until it is fully retracted and stow.

Uncoupling the Trailer from the Hitch

Follow these steps to uncouple your trailer from the tow vehicle:

1. Engage the parking brake.
2. Disconnect the electrical connector.
3. Disconnect the breakaway brake switch cable. For an electric breakaway break system, promptly replace the pull pin in the switchbox.
4. Disconnect the safety chains from the tow vehicle.

5. Unlock the coupler and open it.
6. Before extending the tongue jack, make certain the ground surface below the jack pad will support the tongue load.
7. Rotate the jack handle (or crank) clockwise. This will slowly extend the tongue jack and transfer the weight of the trailer tongue to the jack.

Rigging Safety Chains (If equipped)

Visually inspect the safety chains and hooks for wear or damage. Replace worn or damaged safety chains and hooks before towing.

Rig the safety chains so that they:

a. Cross each other underneath the coupler
b. Loop around a frame member of the tow vehicle or to holes provided in the hitch system (DO NOT attach them to an interchangeable part of the hitch assembly)
c. Have enough slack to permit tight turns, but not be close to the road surface, so if the trailer uncouples, the safety chains can hold the tongue up above the road.

Testing Breakaway Brake

If the coupler or hitch fails, a properly connected and working breakaway brake system will apply electric brakes on the trailer. The safety chains will keep the tow vehicle attached and as the brakes are applied at the trailer's axles, the trailer/tow vehicle combination can come to a controlled stop.

ELECTRIC BRAKES

The breakaway brake system includes a battery, a switch with a pull pin, and a breakaway brake controller. The breakaway brake system may be fitted with a charging facility that draws power from the tow vehicle. If the electrical system on your tow vehicle does not provide power to the breakaway brake battery, you must periodically charge the battery to keep the breakaway brake system in working order.

1. Connect the pull pin cable to the tow vehicle so that the pull pin will be pulled out before all of the slack in the safety chains is taken up. Do **not** connect the pull pin cable to a safety chain or to the hitch ball or hitch ball assembly. This would keep the breakaway brake system from operating when it is needed.

2. Remove the pull pin from the switch and test tow the trailer, at less than 5 mph (8 kph). You should feel the trailer resisting being towed, but the wheels will not necessarily be locked. If the brakes do not function, do not tow the trailer until the brakes are repaired.
3. Immediately replace the pull pin. The breakaway brake system battery discharges rapidly when the pull pin is removed.

⚠ WARNING

TO AVOID POSSIBLE INJURY DO NOT TOW THE TRAILER WITH THE PULL PIN REMOVED AND THE BREAKAWAY BRAKE SYSTEM ON BECAUSE THE BRAKES WILL OVERHEAT WHICH CAN RESULT IN PERMANENT BRAKE FAILURE.

If you do not use your trailer for three or more months, or during winter months:

a. Store the battery indoors; and
b. Charge the battery every three months.

Replace the breakaway brake battery according to the intervals specified by the battery manufacturer.

HYDRAULIC BRAKES

The breakaway brake system includes a cable attached to an activation lever. Read and follow the instructions here as well as the instructions that have been prepared by the breakaway brake controller manufacturer.

Connect the breakaway cable to the tow vehicle so that the activation lever will be pulled before all of the slack in the safety chains is taken up. Do **not** connect the breakaway cable to a safety chain or to the hitch ball or hitch ball assembly. This would keep the breakaway brake system from operating when it is needed.

Manually pull the activation lever and test tow the trailer, at less than 5 mph (8 kph). You should feel the trailer resisting being towed, but the wheels will not necessarily be locked. If the brakes do not function, do not tow the trailer until the brakes are repaired.

Reset the activation lever prior to towing.

⚠ WARNING

CONNECT THE BREAKAWAY CABLE TO THE TOW VEHICLE; AND NOT TO THE HITCH, BALL OR SUPPORT. BEFORE TOWING THE TRAILER, TEST THE FUNCTION OF THE BREAKAWAY BRAKE SYSTEM. IF THE BREAKAWAY BRAKE SYSTEM IS NOT WORKING, DO NOT TOW THE TRAILER. HAVE IT SERVICED OR REPAIRED.

NOTE: *Do **not** tow the trailer with the breakaway brake system ON because the brakes will overheat which can result in permanent brake failure.*

Connect the Electrical Cables

Connect the trailer lights to the tow vehicle's electrical system using the electrical connectors.

Check all lights for proper operation:

- **a.** Clearance and Running Lights (Turn on tow vehicle headlights).
- **b.** Brake Lights (Step on tow vehicle brake pedal).
- **c.** Turn Signals (Operate tow vehicle directional signal lever).
- **d.** Backup Lights (Put tow vehicle gear shift into reverse).

Check electric brakes (if equipped) for proper operation.

If your trailer has electric brakes, your tow vehicle must have an electric brake controller that sends power to the trailer brakes. Before towing the trailer on the road, you must operate the brake controller while trying to pull the trailer in order to confirm that the electric brakes operate. While towing the trailer at less than 5 mph (8 kph), manually operate the electric brake controller in the tow vehicle cab. You should feel the operation of the trailer brakes.

⚠ WARNING

BEFORE EACH TOW CHECK THAT THE TAILLIGHTS, BRAKE LIGHTS AND TURN SIGNALS WORK. CHECK THAT THE ELECTRIC BRAKES WORK BY OPERATING THE BRAKE CONTROLLER INSIDE THE TOW VEHICLE.

3.5 ENGAGING MANUAL LOCKOUT LEVER

The manual lockout lever is used to control the brake pressure being applied to the trailer when backing up. Having the actuator in the extended position will make it easier to engage the lockout lever. To engage the lockout lever, move the lever back and upwards until the front of the lever nests into the round spacer as shown below. This will prohibit movement of the actuator when backing up. The lockout lever will move to the towing position when you drive forward again.

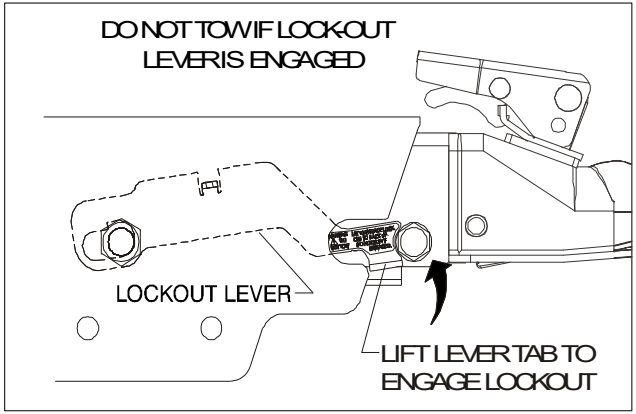

3.6 TRAILER MANEUVERING

The hazards and risks of injury are also much greater than when driving without a trailer. Driving a vehicle with a trailer in tow is different from driving without a trailer in tow. Acceleration, maneuverability and braking, are all lessened with a trailer in tow. Spend time adjusting to the different feel and maneuverability of the tow vehicle with a trailer.

3.7 TOWING GUIDELINES

- Before towing, check coupling, safety chain, safety brake, tires, wheels and lights.
- Check the lug nuts or bolts for tightness.
- Check coupler tightness after towing 50 miles (80.5 km).
- If equipped with electric brakes, adjust the brake controller to engage the trailer brakes before the tow vehicle brakes.
- Be aware of the width of the trailer. This is important when turning, passing, and pulling next to a curb.
- Be aware of the height of the trailer, especially when approaching roofed areas and around trees.

- Be sure your rear view mirrors are adjusted properly. Use your mirrors to verify that you have room to change lanes or pull into traffic.
- Use your turn signals well in advance.
- Increase speed slowly when starting the tow. Carefully watch the trailer and if you observe any trailer sway, stop and reposition the load.
- Allow plenty of stopping space for your trailer and tow vehicle.
- Do not drive so fast that the trailer begins to sway due to speed. Never drive faster than 65 m.p.h. (105 kph).
- Allow plenty of room for passing. Passing distance with a trailer is 4 times the passing distance without a trailer.
- Shift your automatic transmission into a lower gear for city driving.
- Use lower gears for climbing and descending grades.
- Do not ride the brakes while descending grades.
- Slow down for bumps in the road. Take your foot off the brake when crossing the bump.
- Do not apply the brakes to correct extreme trailer swaying. Continued pulling of the trailer, and even slight acceleration, will provide a stabilizing force.
- Make regular stops after every 50 miles (80.5 km) or about once each hour. Confirm that:
  - **a.** The coupler is secure to the hitch and is locked
  - **b.** Electrical connectors are connected
  - **c.** There is appropriate slack in the safety chains
  - **d.** There is appropriate slack in the breakaway switch cable
  - **e.** The tires are not visibly low on pressure

3.8 PRE-TOW INSPECTION

See Figure 3-1. and Figure 3-2.

Prior to each tow, a Pre-Tow Inspection must be performed. Check each item as specified in the checklist below.

⚠ WARNING

TO AVOID POSSIBLE INJURY, BE SURE MACHINE POWER IS OFF.

DO NOT TOW MACHINE UNTIL ALL MALFUNCTIONS HAVE BEEN CORRECTED.

***INSPECTION NOTE**: On all components, make sure there are no loose or missing parts, that they are securely fastened, and no visible damage, leaks or excessive wear exists in addition to any other criteria mentioned.*

1. Brakes - Reservoir level full (hydraulic brakes only). Proper operation and adjustment.
2. Wheel and Tires - Properly secured, no missing lug nuts, proper inflation. Refer to Section 7.4, Tires & Wheels. Inspect wheels for damage and corrosion.
3. Trailer Coupler - Secured, locked, and in proper operating condition.
4. Tow Vehicle Coupler Ball (Not Shown) - Secured and in proper operating condition. Rock the hitch ball in all directions to make sure it is tight to the hitch, and visually check that the hitch ball nut is solid against the lock washer and hitch frame.
5. Safety Chains - Check that the chains are properly rigged to tow vehicle, not to detachable hitch components.
6. Emergency Breakaway Cables - Check that the cables are properly rigged to tow vehicle, not to detachable hitch components.
7. Lights and Signals - Check clearance lights, tail lights, stop lights, turn signals, and backup lights for proper operation. Replace or repair inoperative lights.
8. Tongue Jack - Retracted and stowed.
9. License Plate - Secured to mounting
10. Leveling Jacks - See inspection note.
11. Stow Latch - Properly secured.
12. Parking Brake - released.

NOTICE

OBSERVE ALL LOCAL AND NATIONAL MOTOR VEHICLE REGULATIONS PERTAINING TO THE OPERATION OF TRAILERS.

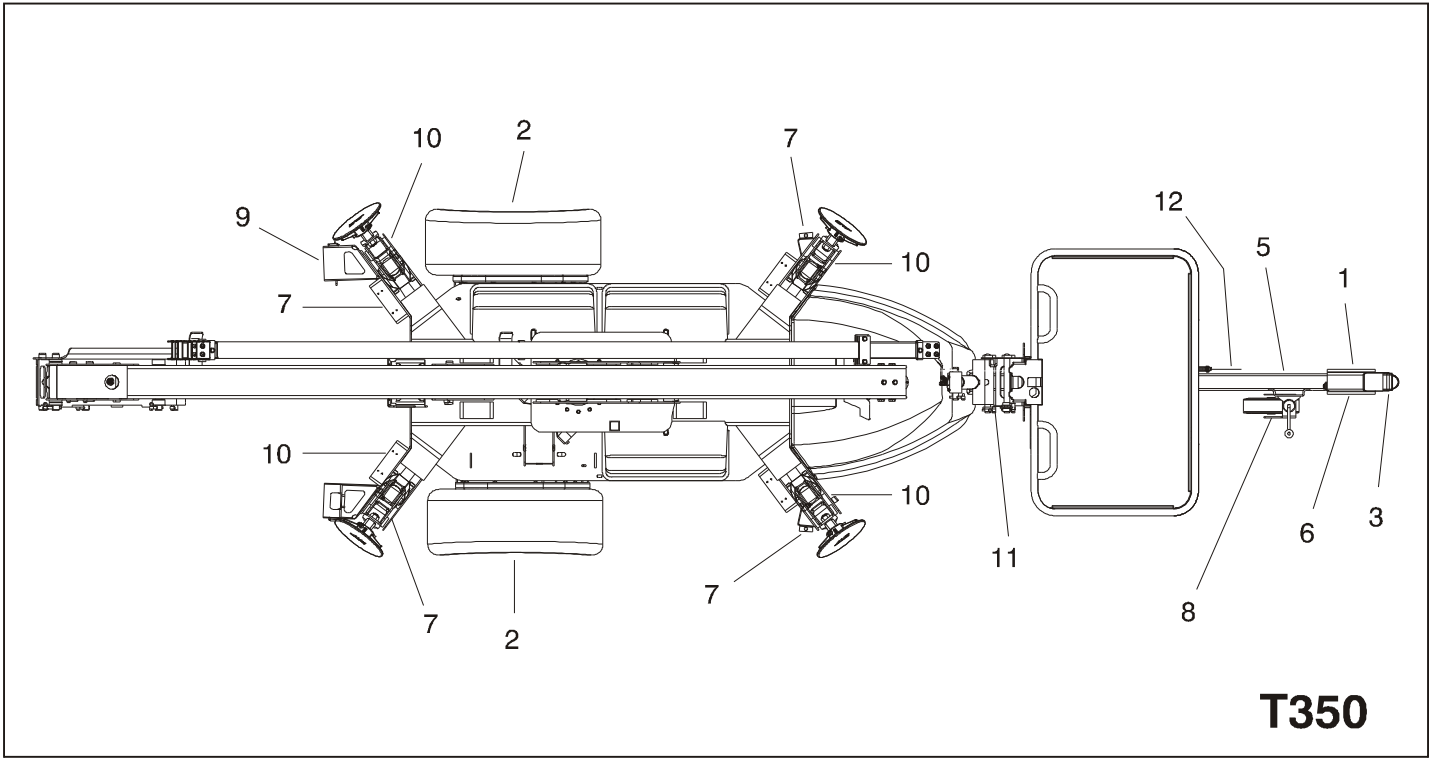

Figure 3-1. Pre-Tow Inspection - Sheet 1 of 2

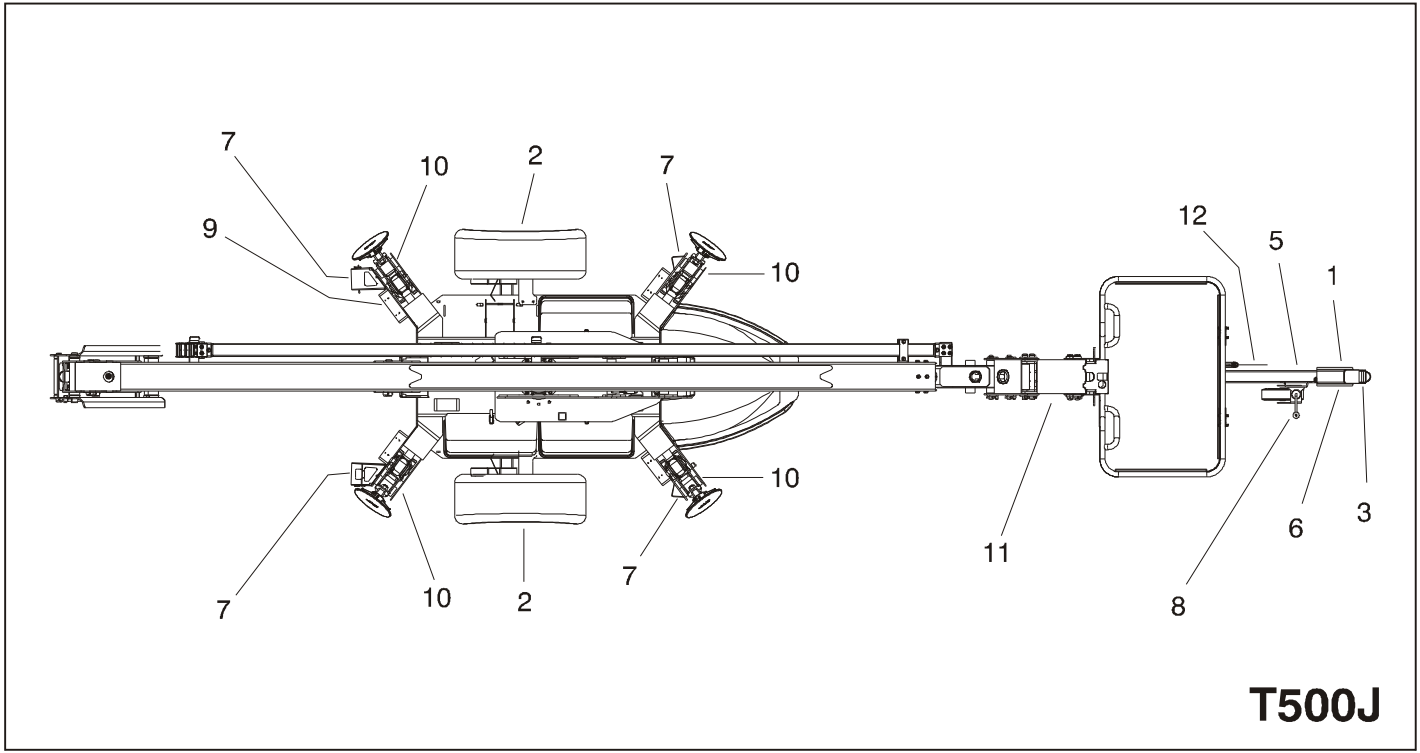

Figure 3-2. Pre-Tow Inspection - Sheet 2 of 2

SECTION 4. MACHINE CONTROLS AND INDICATORS

4.1 GENERAL

NOTICE

THE MANUFACTURER HAS NO DIRECT CONTROL OVER MACHINE APPLICATION AND OPERATION. THE USER AND OPERATOR ARE RESPONSIBLE FOR CONFORMING WITH GOOD SAFETY PRACTICES.

NOTE: *On all battery powered machines:*
If at any time during operation the machine is idle for a period exceeding 30 minutes, the emergency stop switch(es) must be recycled to start the machine again.

This section provides the necessary information needed to understand control functions.

4.2 CONTROLS AND INDICATORS

NOTE: *The indicator panels use different shaped symbols to alert the operator to different types of operational situations that could arise. The meaning of those symbols are explained below.*

Indicates a potentially hazardous situation, which if not corrected, could result in serious injury or death. This indicator will be red.

Indicates an abnormal operating condition, which if not corrected, may result in machine interruption or damage. This indicator will be yellow.

Indicates important information regarding the operating condition, i.e. procedures essential for safe operation. This indicator will be green with the exception of the capacity indicator which will be green or yellow depending upon platform position.

WARNING

TO AVOID SERIOUS INJURY, DO NOT OPERATE MACHINE IF ANY CONTROL LEVERS OR TOGGLE SWITCHES CONTROLLING PLATFORM MOVEMENT DO NOT RETURN TO THE OFF POSITION WHEN RELEASED.

Ground Control Station

See Figure 4-1., Ground Control Station

NOTE: *The Function Enable switch must be held down in order to operate Boom Telescope, Lift, Swing, Jib Lift, and Platform Level Override.*

1. Engine Start (if equipped)

   To start the engine, the start switch must be pushed in until the engine starts.

2. Engine Choke (if equipped)

   When starting a cold engine, the choke switch must be pushed in (along with the engine start switch) until the engine starts.

NOTE: *When Power/Emergency Stop switch is in the "ON" position and engine is not running, an alarm will sound, indicating Ignition is "ON".*

CAUTION

WHEN THE MACHINE IS SHUT DOWN THE MASTER/EMERGENCY STOP SWITCH MUST BE POSITIONED TO THE "OFF" POSITION TO PREVENT DRAINING THE BATTERY.

3. Power/Emergency Stop Switch

   A two-position red mushroom shaped switch supplies power to PLATFORM/GROUND SELECT switch when pulled out (on). When pushed in (off), power is shut off to the PLATFORM/GROUND SELECT switch.

4. Boom Telescope Control

   Provides extension and retraction of the boom.

5. Lift Control

   Provides raising and lowering of the boom.

6. Jib Lift (if equipped)

   Provides raising and lowering of the jib.

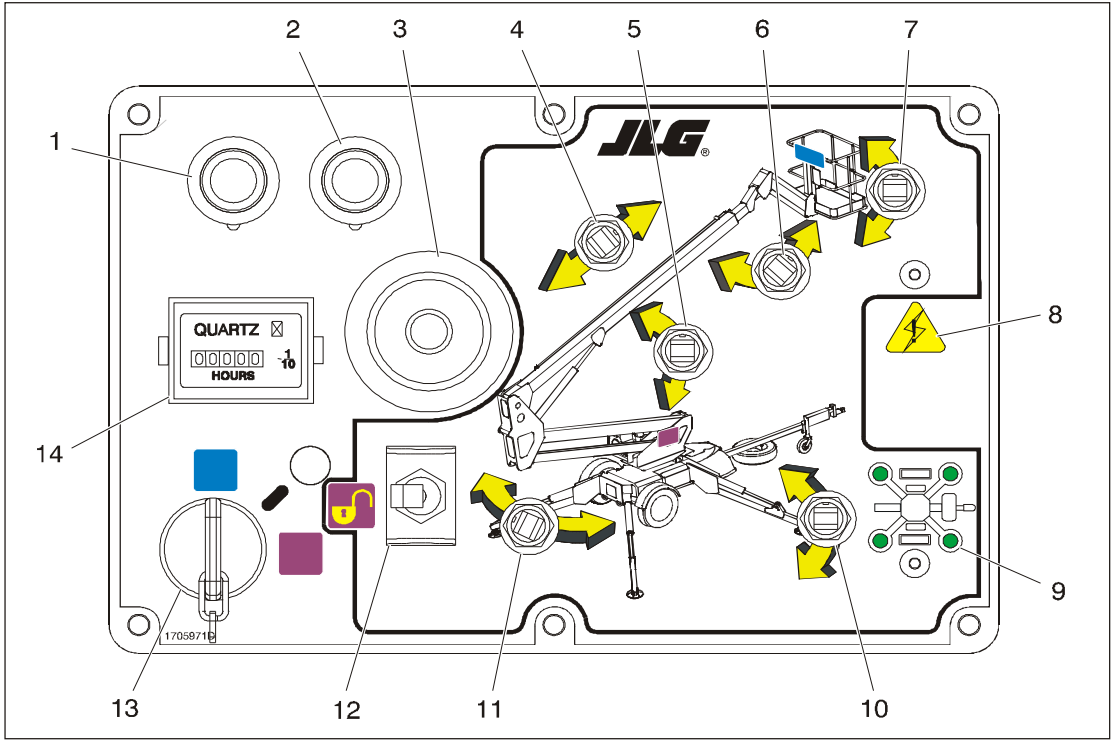

1. Start
2. Choke
3. Power/Emergency Stop
4. Telescope
5. Lift
6. Jib Lift
7. Platform Level
8. System Distress
9. Outrigger Indicator
10. Outrigger Control
11. Swing
12. Function Enable
13. Platform Ground Select
14. Hourmeter

Figure 4-1. Ground Control Station

WARNING

ONLY USE THE PLATFORM LEVELING OVERRIDE FUNCTION FOR SLIGHT LEVELING OF THE PLATFORM. INCORRECT USE COULD CAUSE THE LOAD/OCCUPANT TO SHIFT OR FALL. FAILURE TO DO SO COULD RESULT IN DEATH OR SERIOUS INJURY.

7. Platform Leveling Override

A three position switch allows the operator to adjust the automatic self leveling system. This switch is used to adjust platform level in situations such as ascending/descending a grade.

8. System Distress Indicator

The light indicates that the JLG Control System has detected a malfunction and a Diagnostic Trouble Code has been set in the system memory. Refer to the Service Manual for instructions concerning the trouble codes and trouble code retrieval.

The malfunction indicator light will illuminate for 2-3 seconds when the key is positioned to the on position to act as a self test.

9. Outrigger Indicators

Each individual outrigger indicator will illuminate to show its' respective outrigger is properly deployed.

10. Outrigger Control

Allows the operator to raise or lower the outriggers.

11. Swing Control

Provides 410° non-continuous turntable rotation.

12. Function Enable.

The switch must be held to the right to enable all boom controls.

13. Platform/Ground Select Switch

A three position, key operated switch supplies power to the platform control console when positioned to PLATFORM. With the switch key in the GROUND position, power is shut off to platform and only ground controls are operable.

NOTE: *With PLATFORM/GROUND SELECT switch in the center position, power is shut off to controls at both operating stations.*

14. Hourmeter

Registers the amount of time the machine has been in use. On electric machines, all functions when motion is commanded are recorded. On engine powered machines, by connecting into the oil pressure circuit of the engine, only engine run hours are recorded.

Platform Station

See Figure 4-2., Platform Control Console - Standard Machine and Figure 4-3., Platform Control Console w/Drive & Set Option

⚠ WARNING

TO AVOID SERIOUS INJURY, DO NOT OPERATE MACHINE IF ANY CONTROL LEVERS OR TOGGLE SWITCHES CONTROLLING PLATFORM MOVEMENT DO NOT RETURN TO THE OFF OR NEUTRAL POSITION WHEN RELEASED.

1. Power/Emergency Stop

A two-position red mushroom shaped switch supplies power to PLATFORM Controls when pulled out (on). **The switch must be twisted clockwise to pull it out.**

When pushed in (off), power is shut off to the platform controls.

Within about 2 seconds of pulling the switch out, the machine will perform a diagnostic check of the various electrical circuits, and if everything is functioning correctly, the platform alarm will beep once. During this time the lights on the indicator panel will also blink once as a bulb check.

2. Engine Choke (if equipped)

Engages engine choke.

3. Function Selector

Selects the function (Platform Level, Lift, Swing, Jib Lift, Telescope) that is controlled by the function controller.

4. Enable Indicator

The enable indicator shows that the controls are enabled. If a function is not selected within seven seconds, or a seven second lapse between ending one function and beginning the next function occurs, the enable light will go out.

5. Outrigger Set Indicator

Indicates the outriggers are properly set.

6. System Distress Indicator

The light indicates that the JLG Control System has detected a malfunction and a Diagnostic Trouble Code has been set in the system memory. Refer to Section 5.8, User Fault Codes or the Service Manual for instructions concerning the trouble codes and trouble code retrieval.

The malfunction indicator light will illuminate for 2-3 seconds when the key is positioned to the on position to act as a self test.

7. Battery Level Indicator (Electric Machines Only)

Indicates the charge level of the battery.

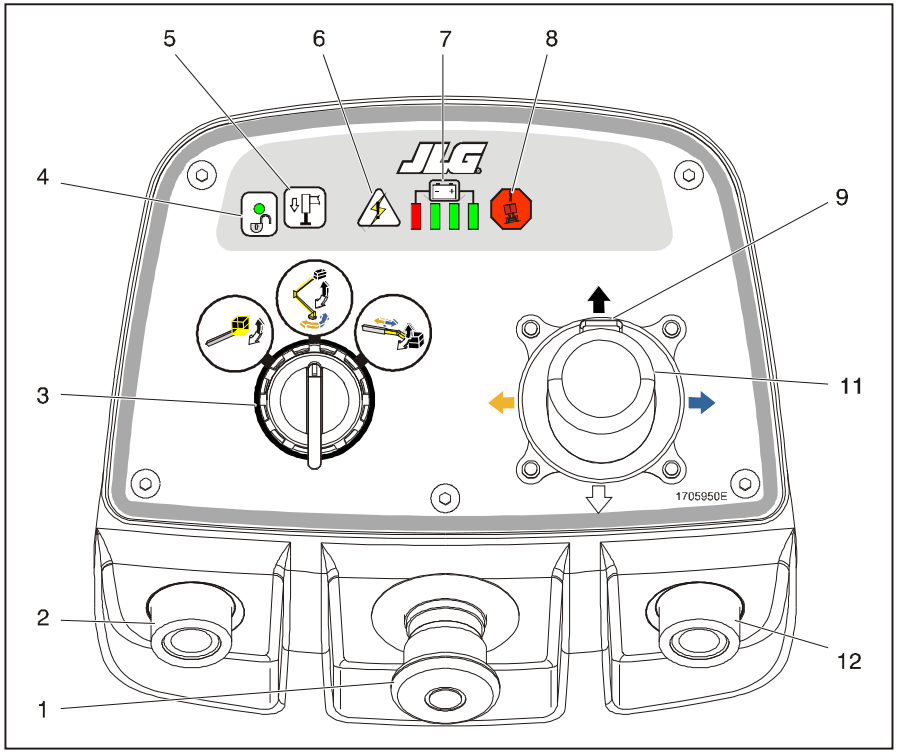

1. Power/Emergency Stop
2. Choke (Engine Powered)
3. Function Selector
4. Enable Indicator
5. Outrigger Set Indicator
6. System Distress Indicator
7. Battery Level Indicator
8. Tilt Alarm Warning Light
9. Function Enable
10. Not Used
11. Function Controller
12. Start

Figure 4-2. Platform Control Console - Standard Machine

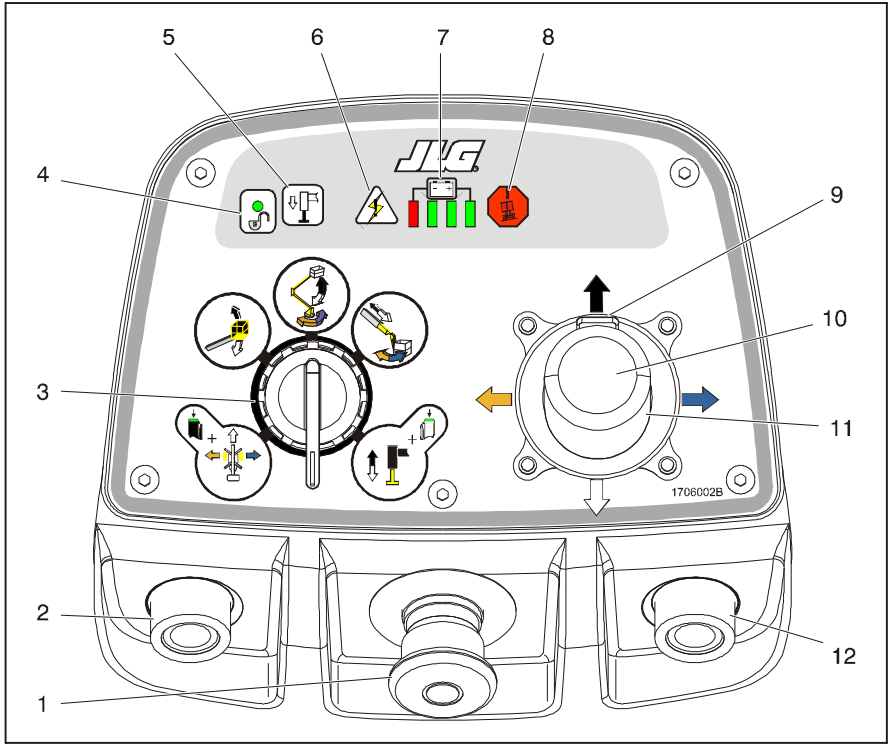

1. Power/Emergency Stop
2. Choke (Engine Powered)
3. Function Selector
4. Enable Indicator
5. Outrigger Set Indicator
6. System Distress Indicator
7. Battery Level Indicator
8. Tilt Alarm Warning Light
9. Function Enable
10. Drive & Set /Outrigger Enable Button
11. Function Controller
12. Start

Figure 4-3. Platform Control Console w/Drive & Set Option

8. Tilt Alarm Warning Indicator

WARNING

IF ILLUMINATED WHEN BOOM IS RAISED OR EXTENDED, RETRACT AND LOWER TO BELOW HORIZONTAL THEN REPOSITION MACHINE SO THAT IT IS LEVEL BEFORE EXTENDING BOOM OR RAISING BOOM FROM THE TRANSPORT POSITION.

Indicates that the chassis is out of level (2.5° on ANSI spec machines). If the boom is out of the stowed position and the chassis is out of level, an audible alarm will sound.

9. Function Enable

To operate any function, the enable switch must be activated and the function selected within seven seconds. If a function is not selected within seven seconds, or if a seven second lapse between ending one function and beginning the next function, the enable light will go out and the enable switch must be released and depressed again to enable the controls.

Releasing the enable switch removes power from all controls.

10. Drive & Set/Outrigger Enable Button

Pushing the button enables the Drive & Set or Outrigger function depending upon the position of the Function Selector.

11. Function Controller

Controls boom functions (Platform Level, Lift, Swing, Jib Lift, Telescope, Outriggers, Drive, and Steer) depending upon the position of the Function Selector Switch.

12. Engine Start (if equipped).

To start the engine, the switch must be pushed in until the engine starts.

SECTION 5. MACHINE OPERATION

5.1 DESCRIPTION

This machine is a towable hydraulic personnel lift equipped with a work platform on the end of an elevating and rotating boom.

The primary operator control station is in the platform. The operator can raise or lower the main or tower boom or swing the boom to the left or right. Standard boom swing is 410° non-continuous left and right of the stowed position. The machine has a Ground Control Station which will override the Platform Control Station. Ground Controls operate Boom Lift and Swing, and are to be used in an emergency to lower the platform to the ground should the operator in the platform be unable to do so.

5.2 BOOM OPERATING CHARACTERISTICS AND LIMITATIONS

Capacities

The boom can be raised from the transport position with or without any load in platform, if:

1. Machine is positioned on a firm surface and outriggers are set properly.
2. Machine is not coupled to tow vehicle.
3. Load is within manufacturer's rated capacity.
4. All machine systems are functioning properly.
5. Machine is as originally equipped from JLG.

Stability

Machine stability is based on two (2) conditions which are called FORWARD and BACKWARD stability. The machine's position of least FORWARD stability is shown in (See Figure 5-1.), and its position of least BACKWARD stability is shown in (See Figure 5-2.)

⚠ WARNING

TO AVOID FORWARD OR BACKWARD TIPPING, DO NOT OVERLOAD MACHINE OR OPERATE THE MACHINE ON AN OUT-OF-LEVEL SURFACE.

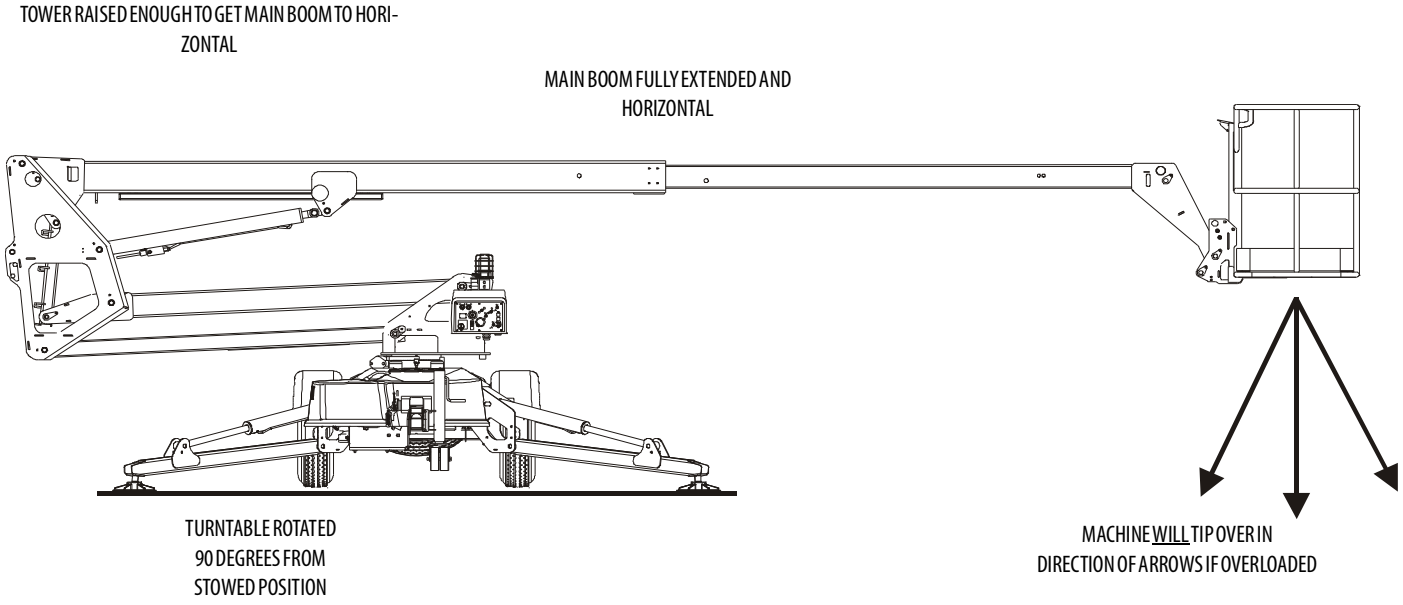

Figure 5-1. Position of Least Forward Stability (T350)

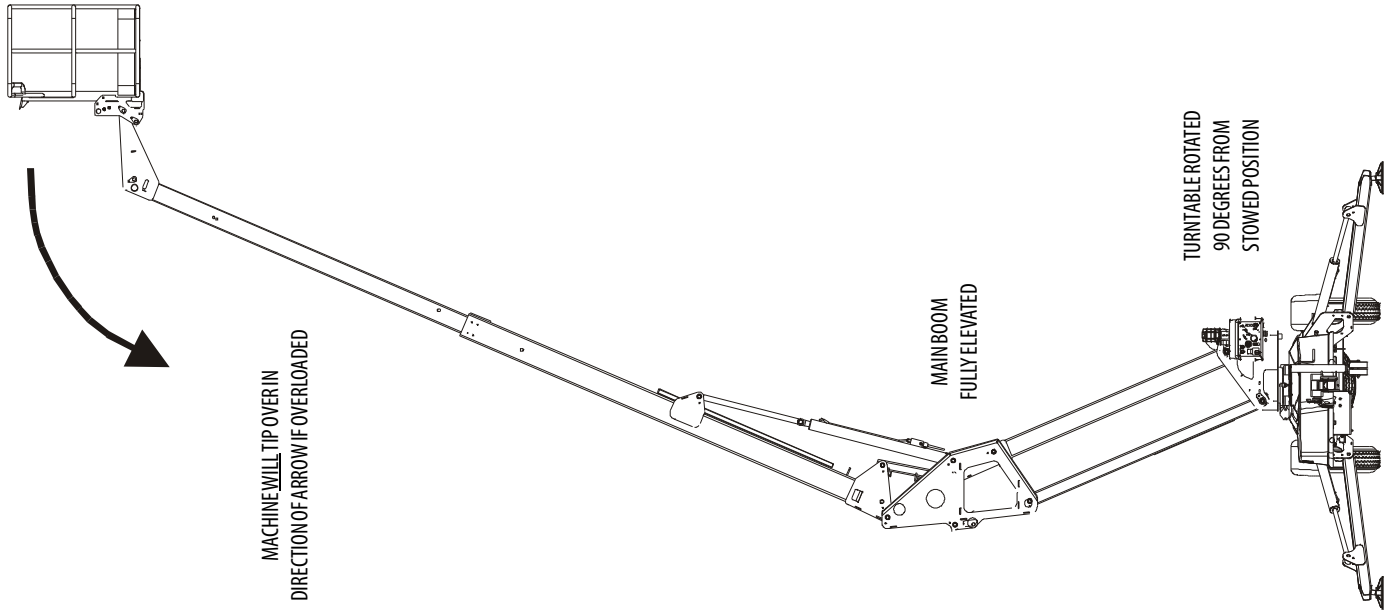

Figure 5-2. Position of Least Backward Stability (T350)

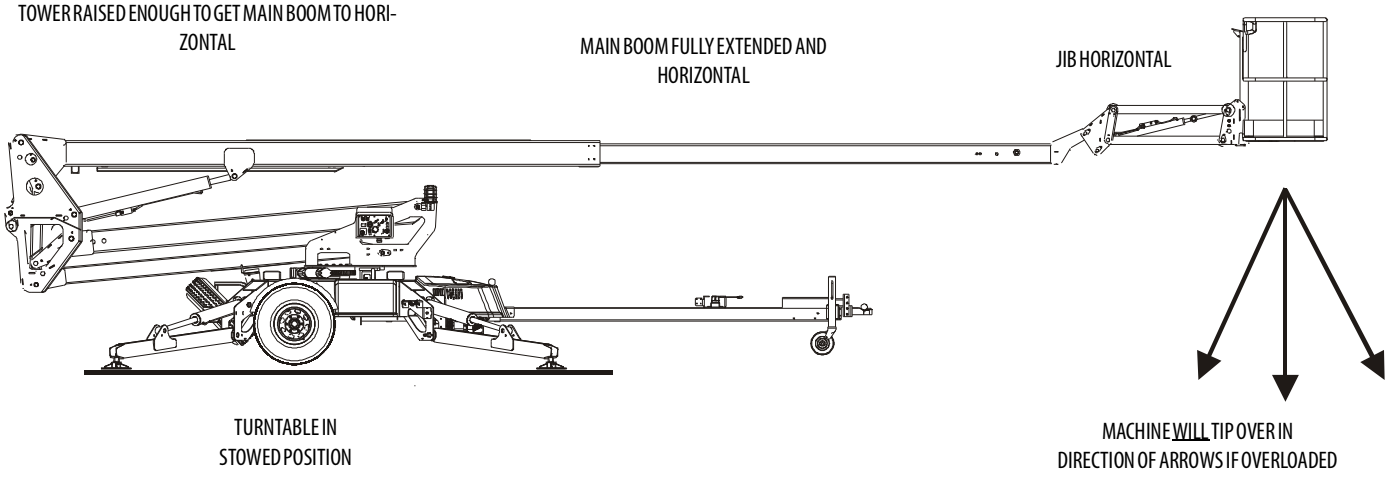

Figure 5-3. Position of Least Forward Stability (T500J)

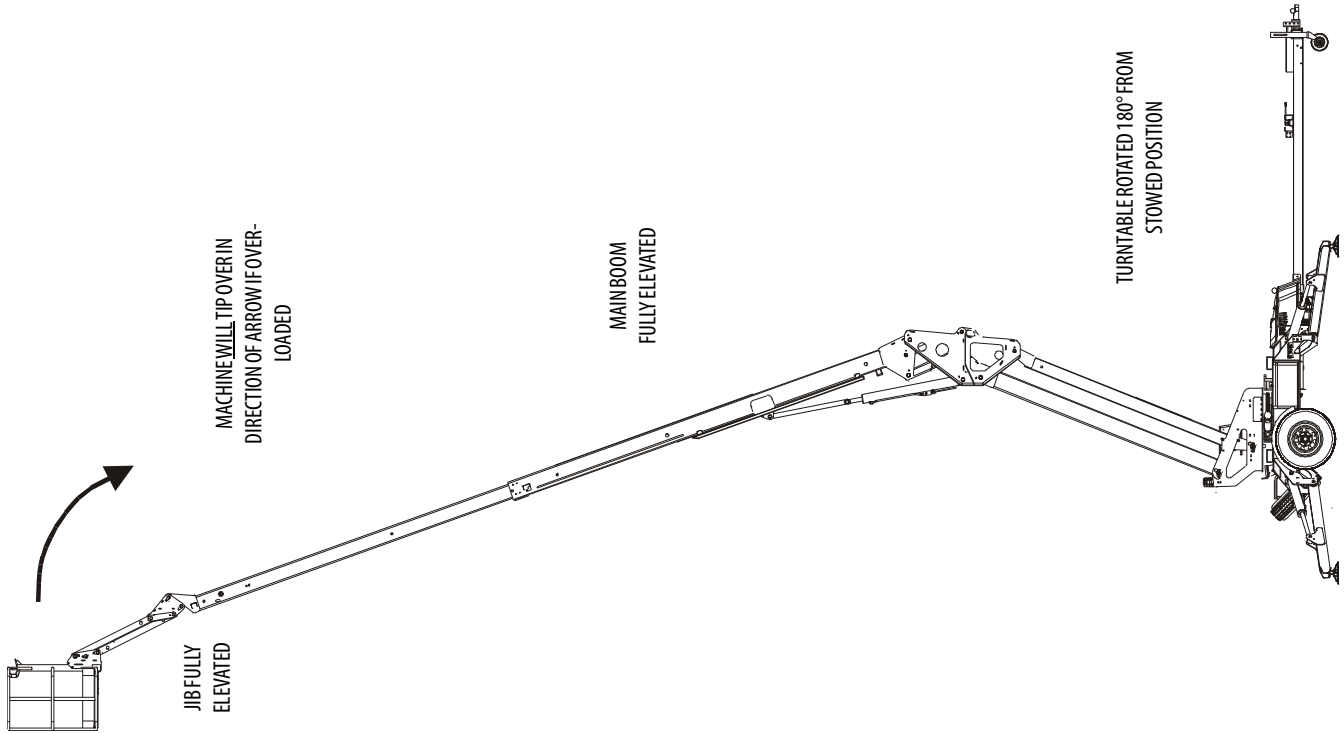

Figure 5-4. Position of Least Backward Stability (T500J)

5.3 ENGINE OPERATION (IF EQUIPPED)

NOTE: *Initial starting should always be performed from the Ground Control console.*

Starting Procedure

⚠ CAUTION

IF ENGINE FAILS TO START PROMPTLY, DO NOT CRANK FOR AN EXTENDED TIME. SHOULD ENGINE FAIL TO START AGAIN, ALLOW STARTER TO "COOL OFF" FOR 2-3 MINUTES. IF ENGINE FAILS AFTER SEVERAL ATTEMPTS, REFER TO ENGINE MAINTENANCE MANUAL.

1. Turn key of SELECT switch to GROUND. Position POWER/EMERGENCY STOP switch to ON, then push the ENGINE START switch until engine starts.

   When starting a cold engine, the choke switch must be pushed in (along with the engine start switch) until the engine starts.

⚠ CAUTION

ALLOW ENGINE TO WARM-UP FOR A FEW MINUTES AT LOW SPEED BEFORE APPLYING ANY LOAD.

2. After engine has had sufficient time to warm up, shut engine off.
3. Turn SELECT switch to PLATFORM.
4. From Platform, pull POWER/EMERGENCY STOP switch out, then push the ENGINE START switch until engine starts.

Shutdown Procedure

1. Remove all load and allow engine to operate at low speed for 3-5 minutes; this allows further reduction of internal engine temperature.
2. Push POWER/EMERGENCY STOP switch in.
3. Turn MASTER switch to Off.

Refer to Engine Manufacturer's manual for detailed information.

Fuel Valve Lever

NOTE: *The fuel valve is turned off upon delivery and must be turned on prior to use. The fuel valve should be turned off when machine is not being used.*

The fuel valve lever must be in the ON position for the engine to run. When the engine is not in use, leave the fuel valve lever in the OFF position to prevent carburetor flooding and to reduce the possibility of fuel leakage.

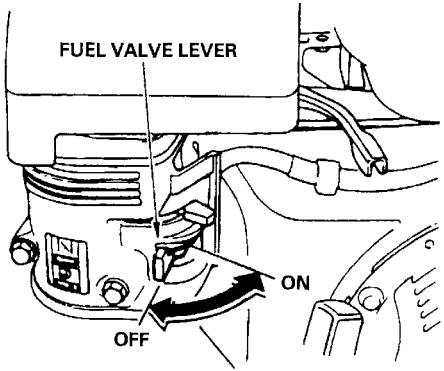

5.4 OUTRIGGERS

NOTICE

THE OUTRIGGERS MUST BE SET BEFORE LIFTING CAN BEGIN.

⚠ CAUTION

ALWAYS UNHITCH FROM TOW VEHICLE PRIOR TO OPERATING OUTRIGGERS.

From the Ground Console

1. Position the Platform/Ground Select switch to ground control.
2. Engage and hold the function enable switch together with the outrigger control switch.
3. The lift is equipped with auto-level. When the lift reaches level an alarm will sound with three short beeps indicating that the lift is level. If the auto-level system does not operate properly, DO NOT operate the machine; have the system repaired by a qualified service technician.

From the Platform Console (Drive & Set Only)

1. Turn and hold select switch to outrigger position, push and hold the Drive & Set/Outrigger Enable button, squeeze the enable trigger and then move controller in the desired direction to set all the outriggers.
2. The lift is equipped with auto-level. When the lift reaches level an alarm will sound with three short beeps indicating that the lift is level. If the auto-level system does not operate properly, DO NOT operate the machine; have the system repaired by a qualified service technician.

5.5 PLATFORM

Platform Level Adjustment

NOTE: *During normal operation of the machine, the platform will automatically maintain it's position.*

1. To manually Level Up, turn and hold select switch to basket level position, squeeze the enable switch and then move controller forward until desired position is reached.
2. To manually Level Down, turn and hold select switch to basket level position, squeeze the enable switch and then move controller backward until desired position is reached.

⚠ WARNING

ONLY USE THE PLATFORM LEVELING OVERRIDE FUNCTION FOR SLIGHT LEVELING OF THE PLATFORM. INCORRECT USE COULD CAUSE THE LOAD/OCCUPANT TO SHIFT OR FALL. FAILURE TO DO SO COULD RESULT IN DEATH OR SERIOUS INJURY.

Platform Rotation (If Equipped)

To rotate the platform to the left or right, use the manually actuated Platform Rotator until desired position is reached.

5.6 BOOM

⚠ WARNING

TO AVOID SERIOUS INJURY, DO NOT OPERATE MACHINE IF ANY CONTROL LEVER OR TOGGLE SWITCH CONTROLLING PLATFORM MOVEMENT DOES NOT RETURN TO THE 'OFF' OR NEUTRAL POSITION WHEN RELEASED.

IF THE PLATFORM DOES NOT STOP WHEN A CONTROL SWITCH OR LEVER IS RELEASED, USE EMERGENCY STOP SWITCH TO STOP THE MACHINE.

Swinging the Boom

To swing boom, use Swing control to select Right or Left direction.

NOTICE

WHEN SWINGING THE BOOM MAKE SURE THERE IS AMPLE ROOM FOR THE BOOM AND UPRIGHT TO CLEAR SURROUNDING WALLS, PARTITIONS AND EQUIPMENT.

Raising and Lowering the Boom

1. To raise the boom select the Boom Control on the select switch, squeeze the enable switch and then move the controller forward.
2. To lower the boom select the Boom Control on the select switch, squeeze the enable switch and then move the controller backward.

Telescoping the Boom

1. To extend the boom select the Telescope Control on the select switch, squeeze the enable switch and then move the controller backward.
2. To retract the boom select the Telescope Control on the select switch, squeeze the enable switch and then move the controller forward.

5.7 JIB LIFT

1. To raise the jib select the Jib Control on the select switch, squeeze the enable switch and then move the controller to the right.
2. To lower the jib select the Jib Control on the select switch, squeeze the enable switch and then move the controller to the left.

5.8 USER FAULT CODES

A single digit fault code blinks on the Platform and the Ground control panel to signal the operator of a procedure fault. Refer to Table 5-1, User Fault Codes.

Table 5-1. User Fault Codes

Code	Message
0	Chassis Tilt Sensor Out Of Range Running At Creep - Material Hook Mode
1	Function Locked Out - Joystick Not Centered At Startup Function Locked Out - Trigger Permanently Closed Function Problem - Engine Choke Permanently Selected Function Problem - Engine Start Permanently Selected Function Problem - Jib Down Permanently Selected Function Problem - Jib Up Permanently Selected Function Problem - Level Down Permanently Selected Function Problem - Level Up Permanently Selected Function Problem - Lift Down Permanently Selected Function Problem - Lift Up Permanently Selected Function Problem - Outrigger Set Permanently Selected Function Problem - Outrigger Stow Permanently Selected Function Problem - Swing Left Permanently Selected Function Problem - Swing Right Permanently Selected Function Problem - Telescope In Permanently Selected Function Problem - Telescope Out Permanently Selected Joystick Moved But Trigger Switch Open Trigger Closed Too Long While In Neutral

Table 5-1. User Fault Codes

Code	Message
2*	Drive & O/R Prevented - Operate From Platform Drive & O/R Prevented - Place Boom On Rest Drive & O/R Prevented - Set Hand Brake Drive Prevented - Lift Down Drive Prevented - Stow Outriggers Drive Prevented - Telescope In Lift Down Prevented - Tele In First Lift Up & Tele Out Prevented - Tilted & Above Elevation "Lift Up & Tele Out Prevented - Tilted, Unset,& Above Elevation " Lift Up & Tele Out Prevented - Unset & Above Elevation Lift Up Prevented - Check Outriggers Lift Up Prevented - Lift Down Then Set Outriggers Lift Up Prevented - Tilted Model Changed - Hydraulics Suspended - Cycle EMS Outrigger Stow Prevented - Tele In First Outriggers Prevented - Elevated Running At Creep - Tilted & Above Elevation Running At Creep - Unset & Above Elevation Tele Out Prevented - Set Outriggers Tele Out Prevented - Tilted

Table 5-1. User Fault Codes

Code	Message
* A 2 user flash code indicates a problem with the machine set up, such as an outrigger not properly set. If this occurs while the boom is elevated, all functions will operate at a reduced speed. Immediately return the platform to the stowed position and reposition the machine or reset the outriggers, as required. If the problem still exists, troubleshoot with a JLG analyzer. A 2 user flash code and tilt alarm warning indicator activated at the same time indicates a potential tipping condition. If this occurs while boom is elevated, the lift up and telescope out functions will not operate. Telescope in, lift down and swing functions will operate at reduced speed. THE BOOM MUST BE FULLY RETRACTED BEFORE LOWERING. Immediately return the platform to the stowed position and reposition the machine or reset the outriggers, as required. If the problem still exists, troubleshoot with a JLG analyzer.	
3	Battery Voltage Too High - System Shutdown Battery Voltage Too Low - System Shutdown No Charge System Output
4	Functions At Cutback - Power Module Current Limit Power Module Too Hot - Please Wait
5	Battery Voltage Too High - System Shutdown Battery Voltage Too Low - System Shutdown Engine Not Running
9	Vehicle Requires Service

5.9 BATTERY CHARGING

NOTE: *Be sure that machine is parked in a well ventilated area before charging.*

⚠ DANGER

ONLY PLUG THE CHARGER INTO A PROPERLY GROUNDED OUTLET. DO NOT USE GROUND ADAPTORS OR MODIFY PLUG. DO NOT TOUCH NON-INSULATED PORTION OF OUTPUT CONNECTOR OR NON-INSULATED BATTERY TERMINAL.

ALWAYS DISCONNECT THE AC SUPPLY BEFORE MAKING OR BREAKING THE CONNECTIONS TO THE BATTERY.

DO NOT OPEN OR DISASSEMBLE CHARGER.

DO NOT OPERATE CHARGER IF THE AC SUPPLY CORD IS DAMAGED OR IF THE CHARGER HAS BEEN DAMAGED IN ANY WAY.

1. The battery charger **AC input plug** is located **at the rear of the machine**. Connect the charger **AC input plug** to a grounded outlet.

   If the machine is equipped with an optional generator, the battery charger can be plugged into the generator outlet. See Figure 5-5.

2. When powered up the charger will go through a short self-test. The battery charger lights on the Ground Control Station will flash in sequence for two seconds.

3. The batteries are fully charged when the green light on the battery charger status panel is illuminated.

NOTE: *If the charger is left plugged in, the charger will automatically restart a complete charge cycle if the batteries voltage drops below a minimum voltage or 30 days has elapsed.*

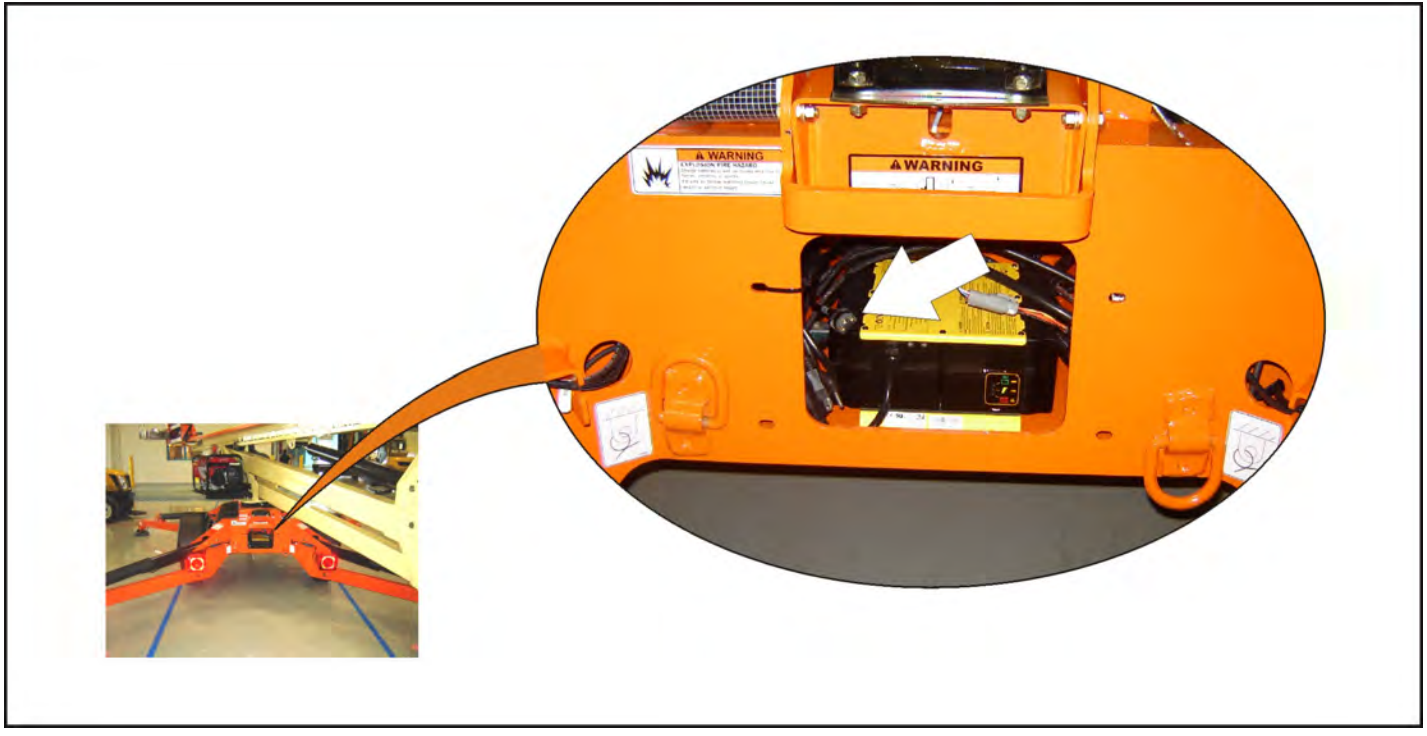

Figure 5-5. Generator Plug Location

Battery Charger Fault Codes

If a fault occurred during charging, the red "Fault" LED will flash with a code corresponding to the error. Refer to the table following for the flash codes and their removal.

Table 5-10. Battery Charger Fault Codes (Delta-Q)

Flash(s)	Fault	Fault Removal
1	Battery voltage high	Auto-recover - Indicates a high battery pack voltage
2	Battery voltage low	Auto-recover - Indicates either a battery pack failure, battery pack not connected to charger or battery volts per cell is less than 0.5 VDC. Check the battery pack and connections
3	Charge time-out	Indicates the batteries did not charge in the allowed time. This could occur if the batteries are a larger capacity than the algorithm is intended for or if the batteries are damaged old or in poor condition.
4	Check battery	Indicates the batteries could not be trickle charged up to the minimum voltage per cell level required for the charge to be started.
5	Over-temperature	Auto-recover - Indicates charger has shut down due to high internal temperature
6	QuiQ fault	Indicates that the battery will not accept charge current, or an internal fault has been detected in the charger. This fault will nearly always be set within the first 30 seconds of operation. Once it has been determined that the batteries and connections are not faulty and fault 6 is again displayed after interrupting AC power for at least 10 seconds, the charger must be brought to a qualified service depot.

5.11 PLATFORM REMOVAL & INSTALLATION

1. Disconnect the platform control box harness at the platform support.

NOTE: *The standard platform assembly weighs approximately 75 lbs. (34 kg). If equipped with the optional rotator, the platform assembly weighs approximately 150 lbs. (68 kg).*

2. Remove the hitch pin and gravity pin securing the platform assembly to the platform support and remove the platform.

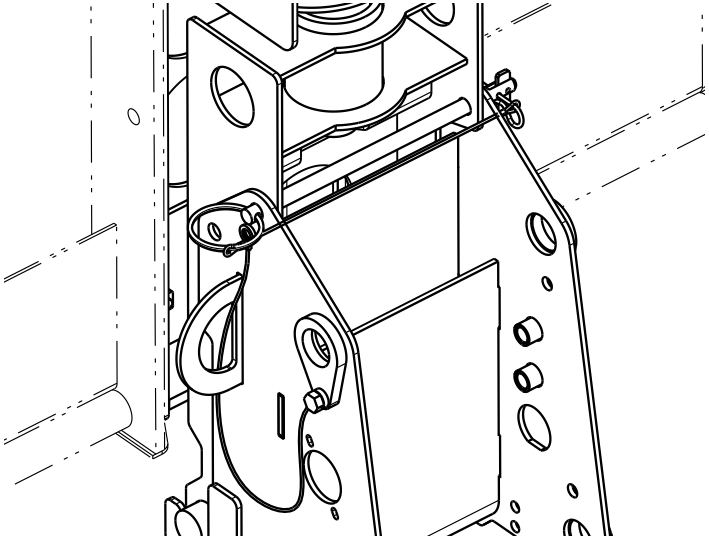

3. To install the platform, repeat steps 1 and 2 in reverse order.

5.12 MATERIAL HOOK INSTALLATION

NOTICE

OPERATE THE MATERIAL HOOK FROM THE REMOTE CONSOLE ONLY, DO NOT USE THE GROUND CONTROLS.

1. Disconnect the platform control box harness at the platform support.

2. Remove the hitch pin and gravity pin securing the platform assembly to the platform support and remove the platform.
3. Remove the material hook from the storage position on the turntable.
4. Place the hook in position on the platform support.

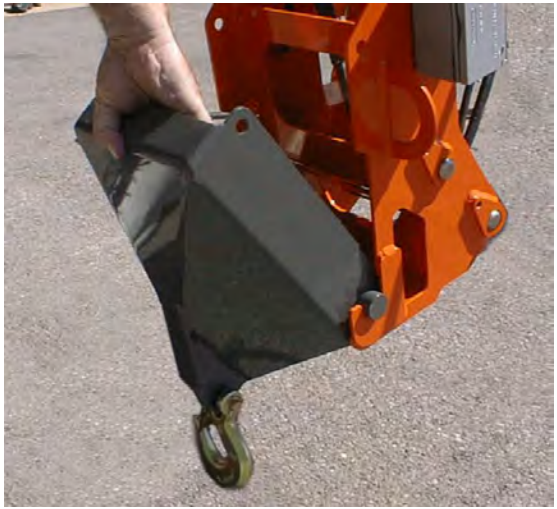

5. Secure the hook in place with the gravity pin and hitch pin.

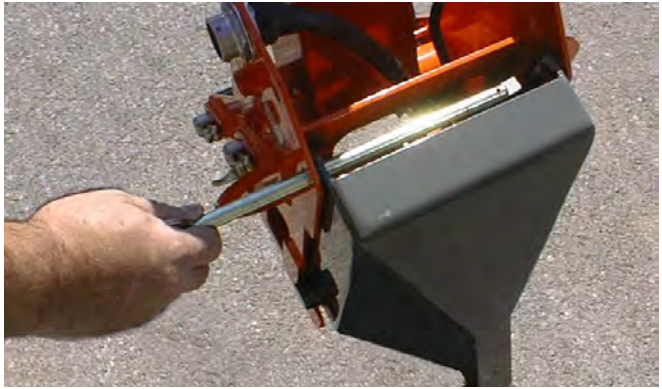

6. Remove the platform console from the platform and connect the console harness to the receptacle at the hook storage area on the turntable.

5.13 MATERIAL HOOK OPERATING PRECAUTIONS

When utilizing a JLG lift equipped with a material hook the following additional precautions must be observed.

The combined weight of material and rigging equipment must not exceed the maximum load capacity of the material hook.

Be aware of clearances above, below, and around the machine when handling material with the material hook.

Attach a line to restrict movement of the load.

Keep slings and chains as short as possible. Excessively long slings and chains allow the load the swing and could cause the machine to overturn.

Do not operate the machine when wind conditions exceed 28 mph (12.5 m/s).

⚠ DANGER

REMEMBER, THE MACHINE IS NOT INSULATED AND DOES NOT PROVIDE PROTECTION FROM CONTACT WITH OR PROXIMITY TO ELECTRICAL CURRENT. MAINTAIN A SAFE DISTANCE AND CLEARANCE FROM ELECTRICAL LINES, APPARATUS OR ANY ENERGIZED PARTS. ALLOW FOR MACHINE MOVEMENT AND ELECTRICAL LINE SWAYING.

Never drag any part of the material on the ground or use the boom to pull sideways. The load must be freely suspended.

Keep the material hook and tethered remote control cable stowed in the proper location when not in use.

5.14 ACCESSORY TRAY

CAUTION

ANY TOOL PLACED ON THE ACCESSORY TRAY MUST BE PROPERLY SECURED AND NOT LOOSE.

The accessory tray is intended to hold tools such as a compressor, generator, or pressure washer. Capacity of the tray is 250 lbs. (114 kg) or a weight which does not exceed the axle rating or GVW rating, whichever is less.

5.15 PANEL TRAY

WARNING

WITH THE PANEL TRAY INSTALLED, THE ORIGINAL PLATFORM CAPACITY RATINGS ARE REDUCED AS SPECIFIED IN TABLE 7-1. DO NOT EXCEED THE NEW PLATFORM CAPACITY RATING. REFER TO THE CAPACITY DECAL LOCATED IN THE TRAY.

DANGER

AN INCREASE OF THE AREA EXPOSED TO THE WIND WILL DECREASE STABILITY. LIMIT PANEL AREA TO 32 SQ. FT. (3 SQ. M.)

1. Check for cracked welds and damage to the tray. Make sure the tray is properly secured to the platform.
2. Check for loose nuts and bolts.
3. Check to ensure the strap is not torn or frayed.
4. Replace torn or frayed straps, bent or crushed tray parts, missing or illegible decals.
5. When operating, make sure no personnel are beneath the platform.
6. Remove the tray when not in use.

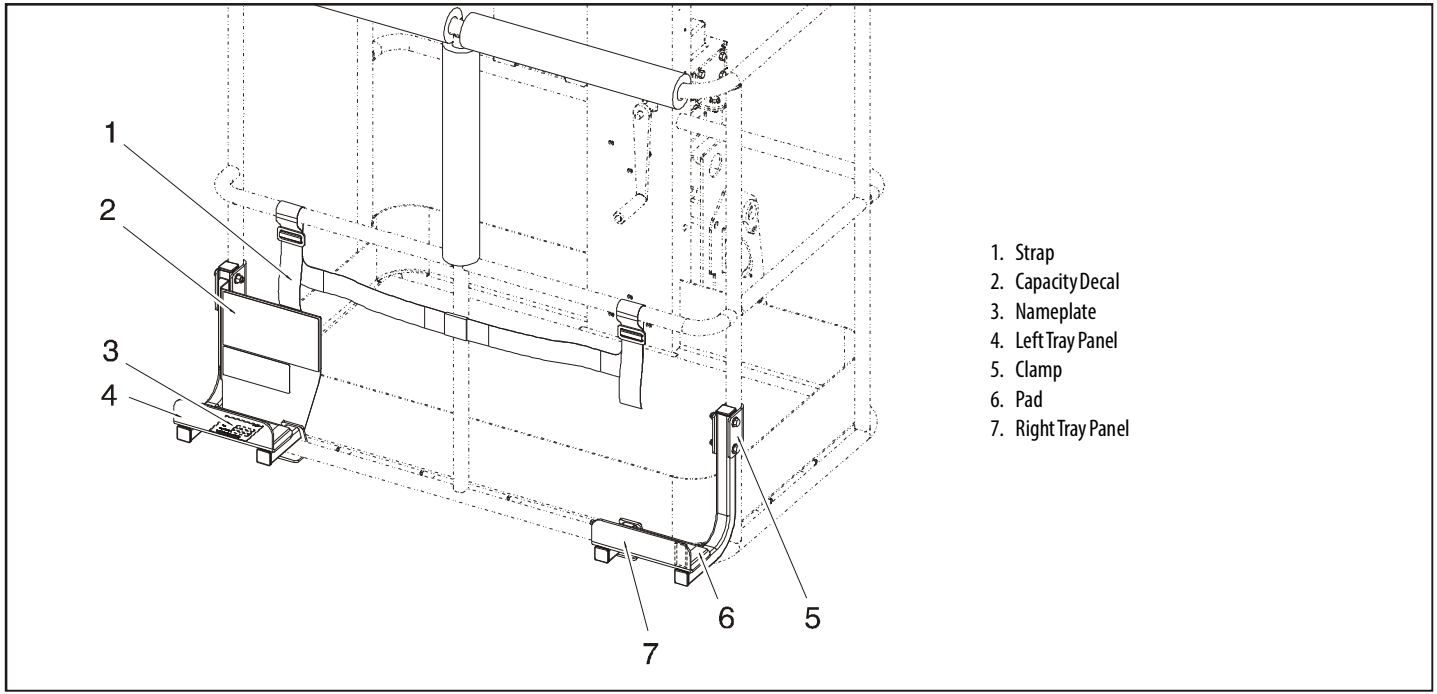

Figure 5-6. Panel Tray

5.16 DRIVE & SET

⚠ WARNING

DO NOT DRIVE THE MACHINE ON GRADES OR SIDESLOPES EXCEEDING THOSE LISTED IN TABLE 7-1.

NOTE: *When the boom is raised out of the stowed position, drive will be cut out.*

To Set Up The Machine for Drive & Set Operation:

1. Place the boom in the stowed position (fully retracted, fully lowered, over the trailer tongue).
2. Set the parking brake (ANSI brake shown). Refer to the parking brake decal on the tongue.

3. Release the boom latch.
4. Make sure the tongue jack is extended enough to allow installation of the jockey wheel.
5. Remove the pin securing the jockey wheel in the stowed position and swing the wheel down into the drive position. Secure the wheel in place with the retaining pin.

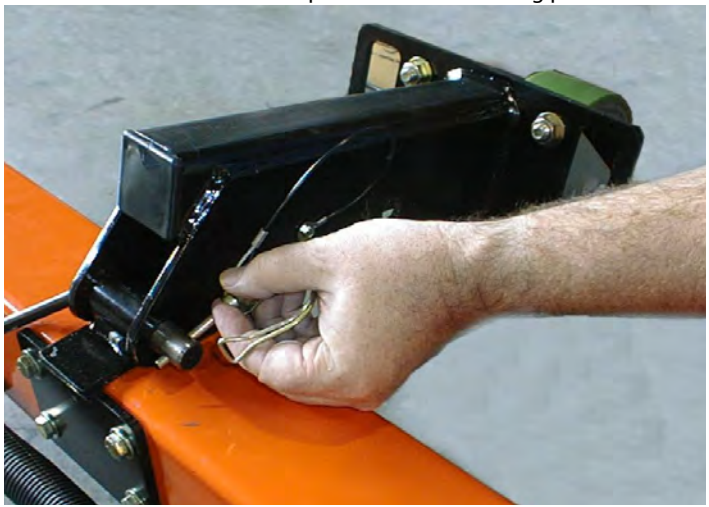

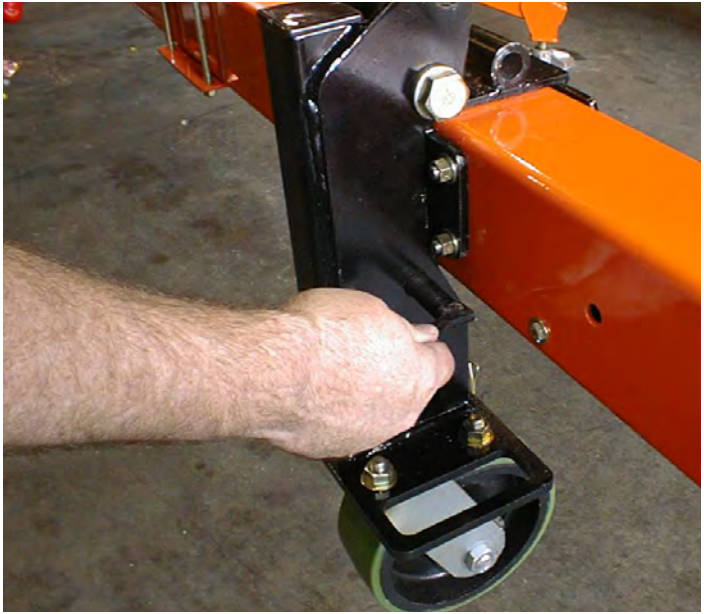

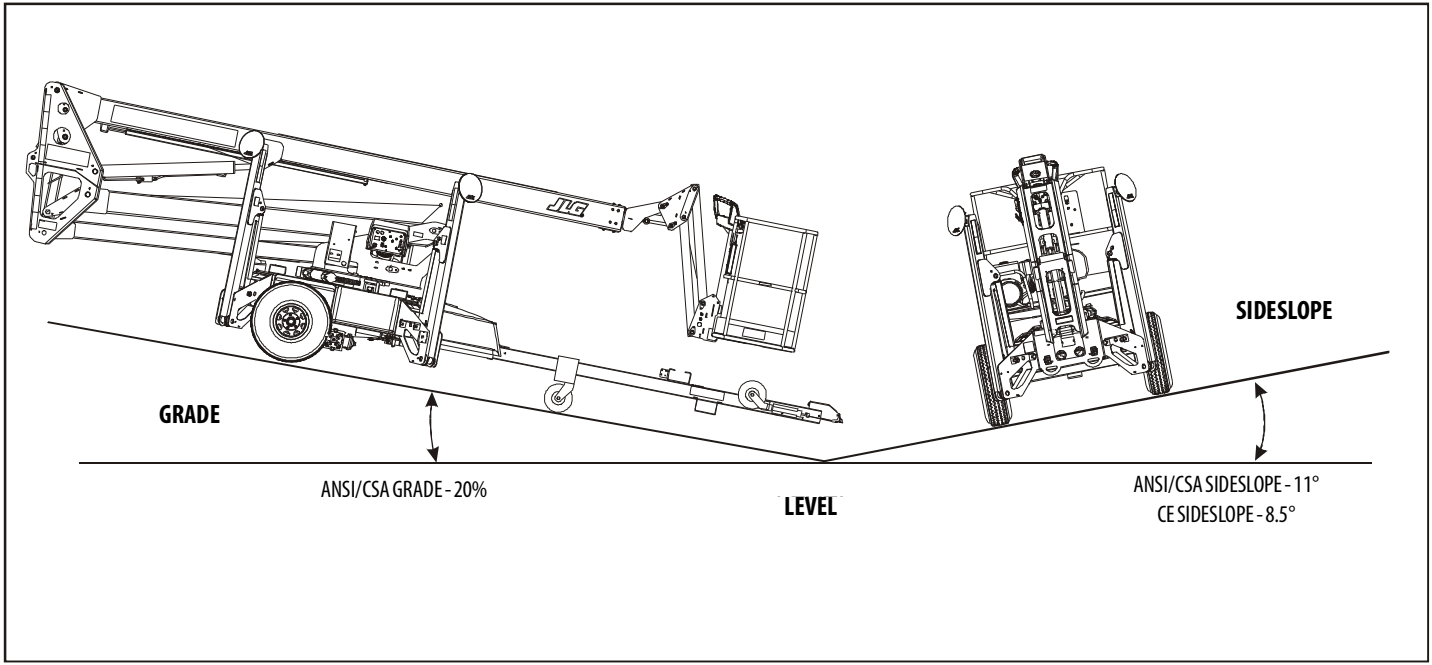

Figure 5-7. Grade and Sideslope

6. Retract the tongue jack and swing it up into the stowed position.

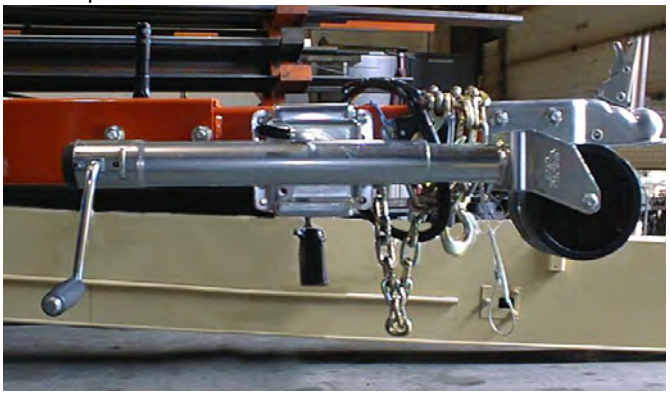

7. Properly enter the platform and start the engine.
8. Turn the function selector switch in the platform to the Drive position.
9. Push the green Drive & Set/Outrigger Enable button at the top of the function controller, then squeeze the function enable trigger, then move the function controller in the desired direction and release the green enable button.
10. Point the function controller in the desired direction of travel to move the machine. The friction drive wheels engage automatically when the drive function is initiated.
11. When the machine is in the desired location, set the outriggers and operate the machine.

To Prepare the Machine For Towing After Drive & Set Operation:

1. Place the boom in the stowed position.
2. Stow the outriggers.
3. Drive the machine to a firm, level, and smooth surface.

4. Lower the tongue jack and extend it enough to raise the jockey wheel off of the ground.

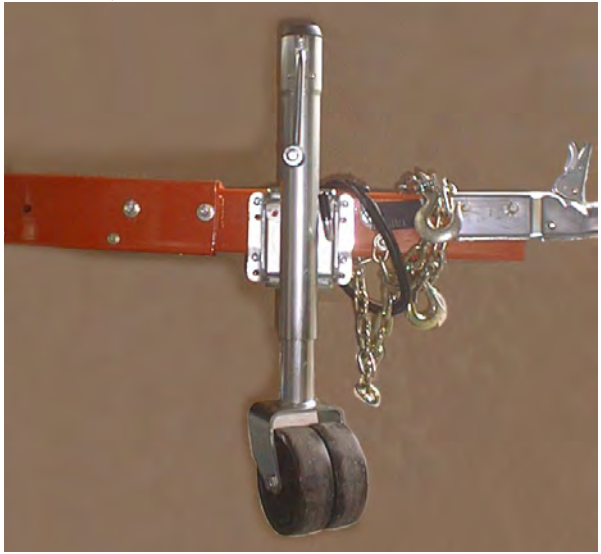

5. Remove the pin securing the jockey wheel in the drive position and swing the wheel up into the stowed position. Secure the wheel in place with the retaining pin.

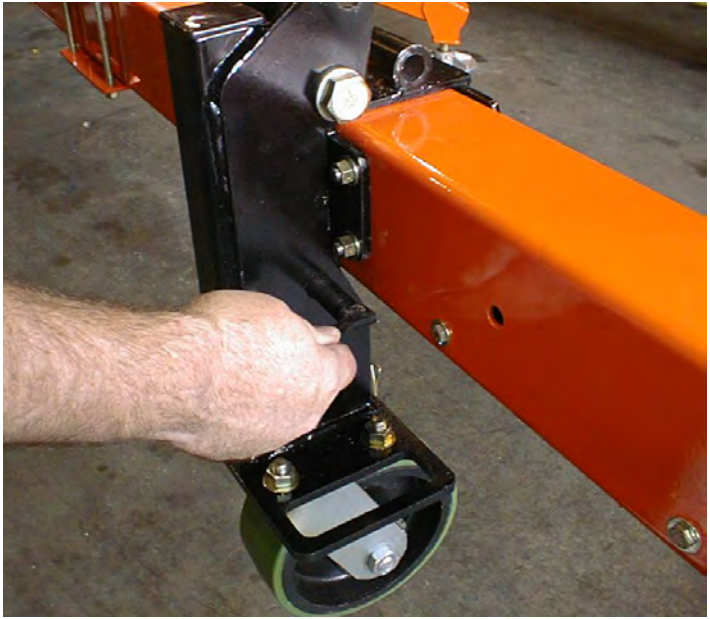

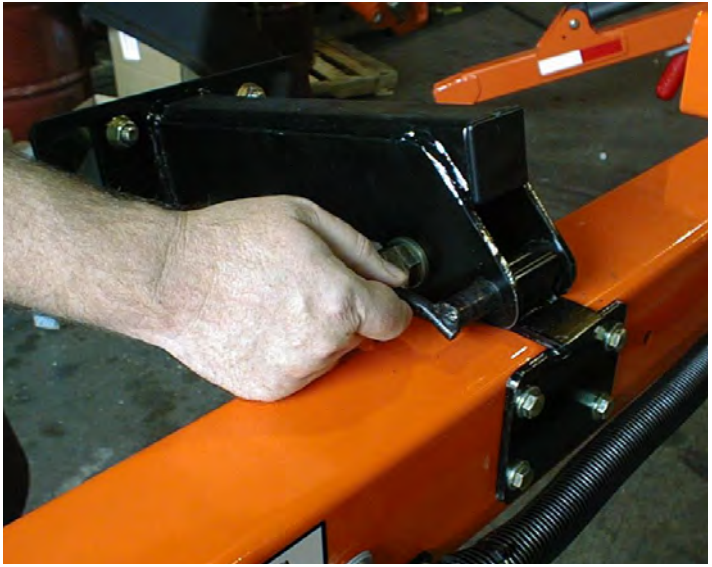

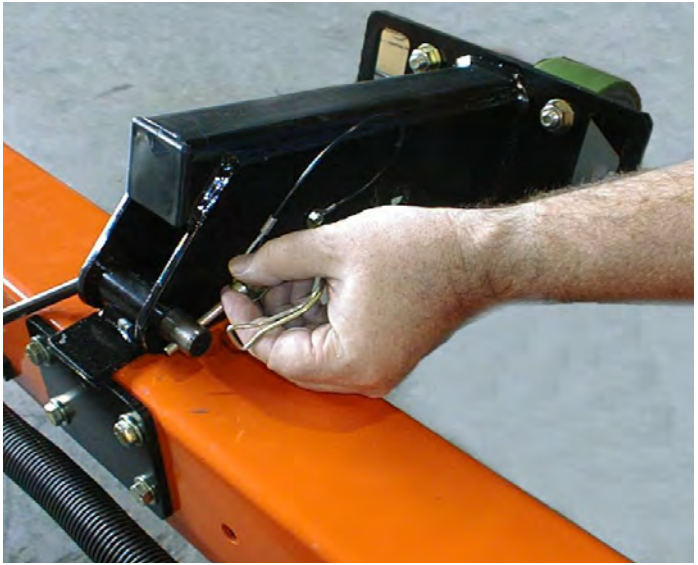

6. Pull out on the drive & set control valve knob. Ensure friction wheels are disengaged from tires.

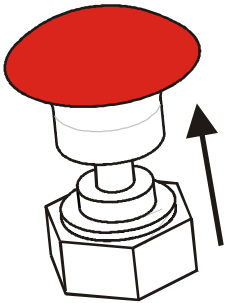

7. The machine is now ready for towing. Refer to Section 3, TOWING.

5.17 SHUT DOWN AND PARK

To shut down and park the machine, the procedures are as follows:

1. Transport the machine to a reasonably well protected area.
2. Ensure boom is stowed with platform over hitch. Secure the boom with the transport latch.
3. Push in the Emergency Stop at Platform Controls.
4. Push in the Emergency Stop at Ground Controls. Position Platform/Ground Select switch to center OFF.
5. If necessary, cover Platform Controls to protect instruction placards, warning decals and operating controls from hostile environment.
6. Set parking brake and uncouple from towing vehicle.

5.18 TIE DOWN

NOTICE

WHEN TRANSPORTING THE MACHINE, THE BOOM MUST BE FULLY LOWERED INTO THE BOOM REST AND TRANSPORT LATCH SECURED.

1. Place the boom in the stowed position and secure with the transport latch. (See Figure 5-8.)
2. Remove all loose items from the machine.
3. Secure the chassis and the platform using straps or chains of adequate strength and attached to the designated tie down points. (See Figure 5-8.)

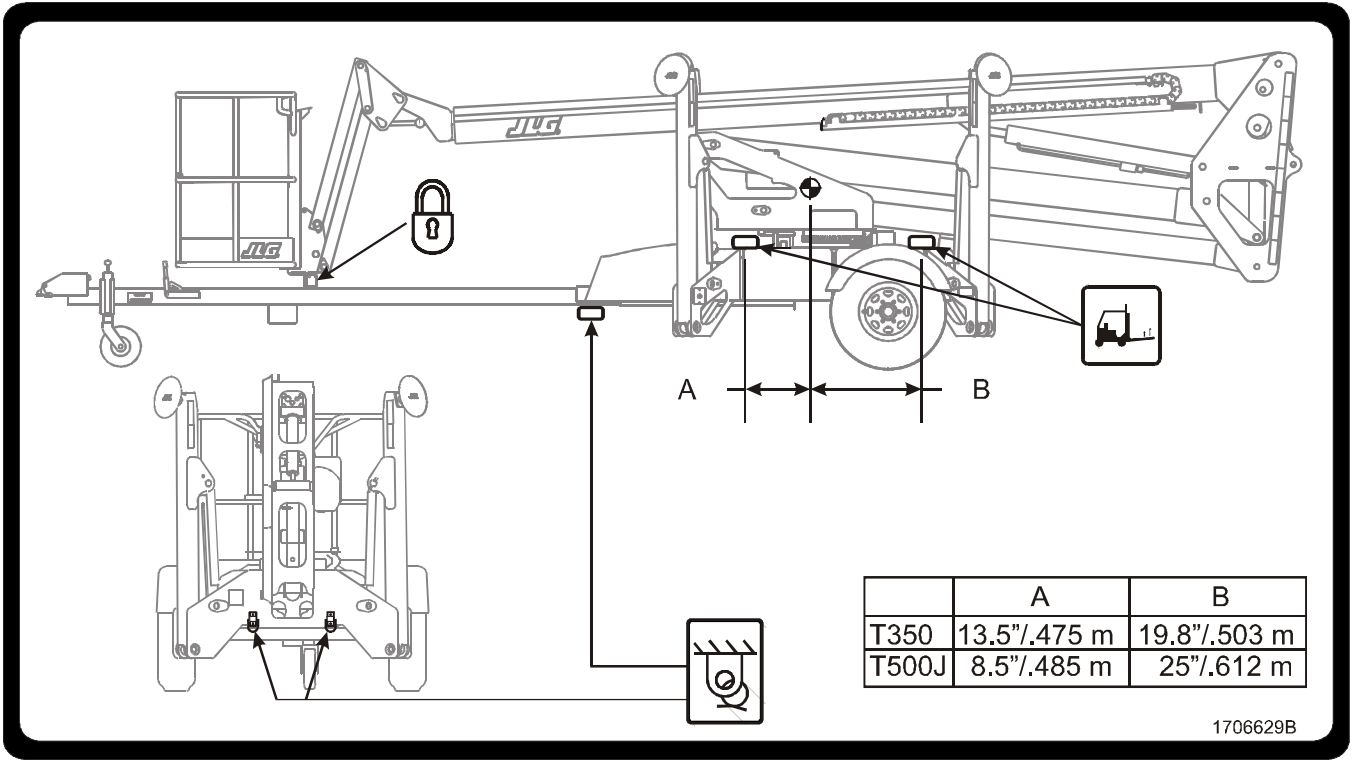

	A	B
T350	13.5”/.475 m	19.8”/.503 m
T500J	8.5”/.485 m	25”/.612 m

Figure 5-8. Lifting and Tie Down Chart

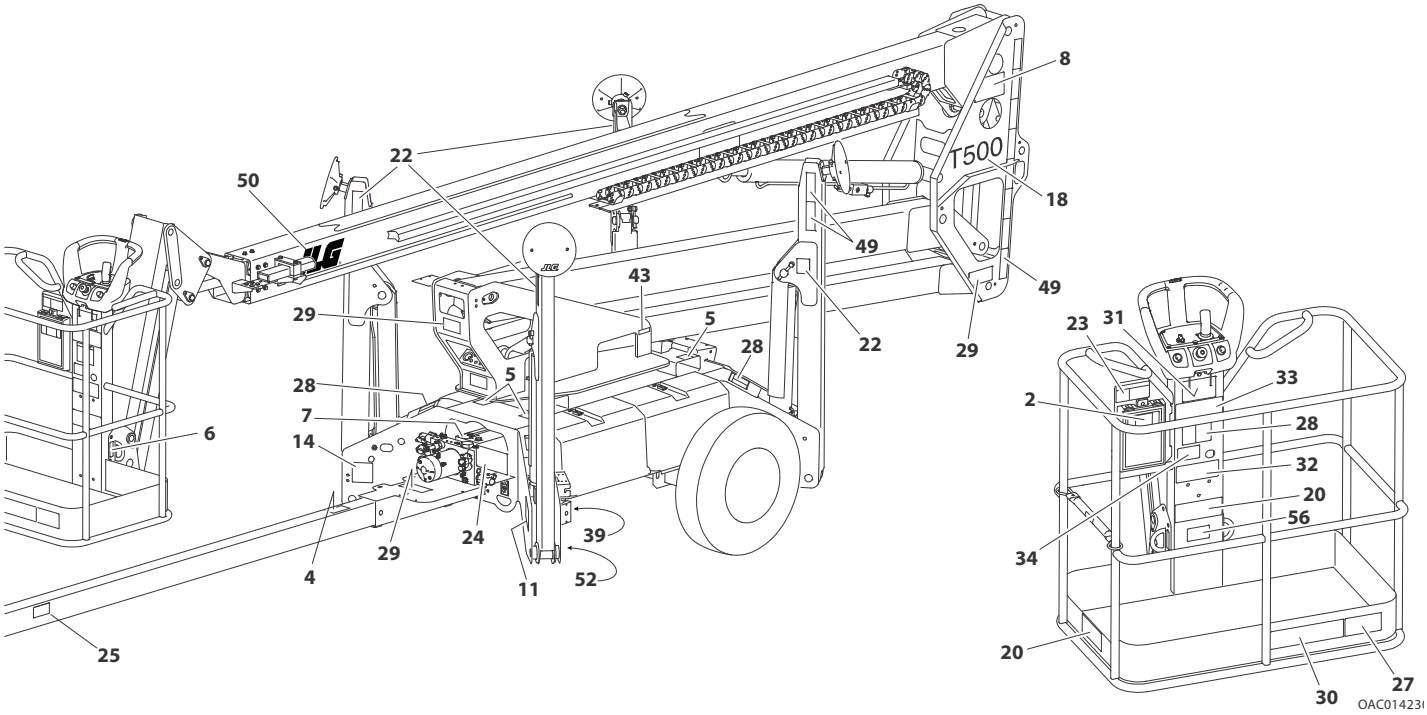

Figure 5-9. Decal Location - ANSI (Sheet 1 of 2)

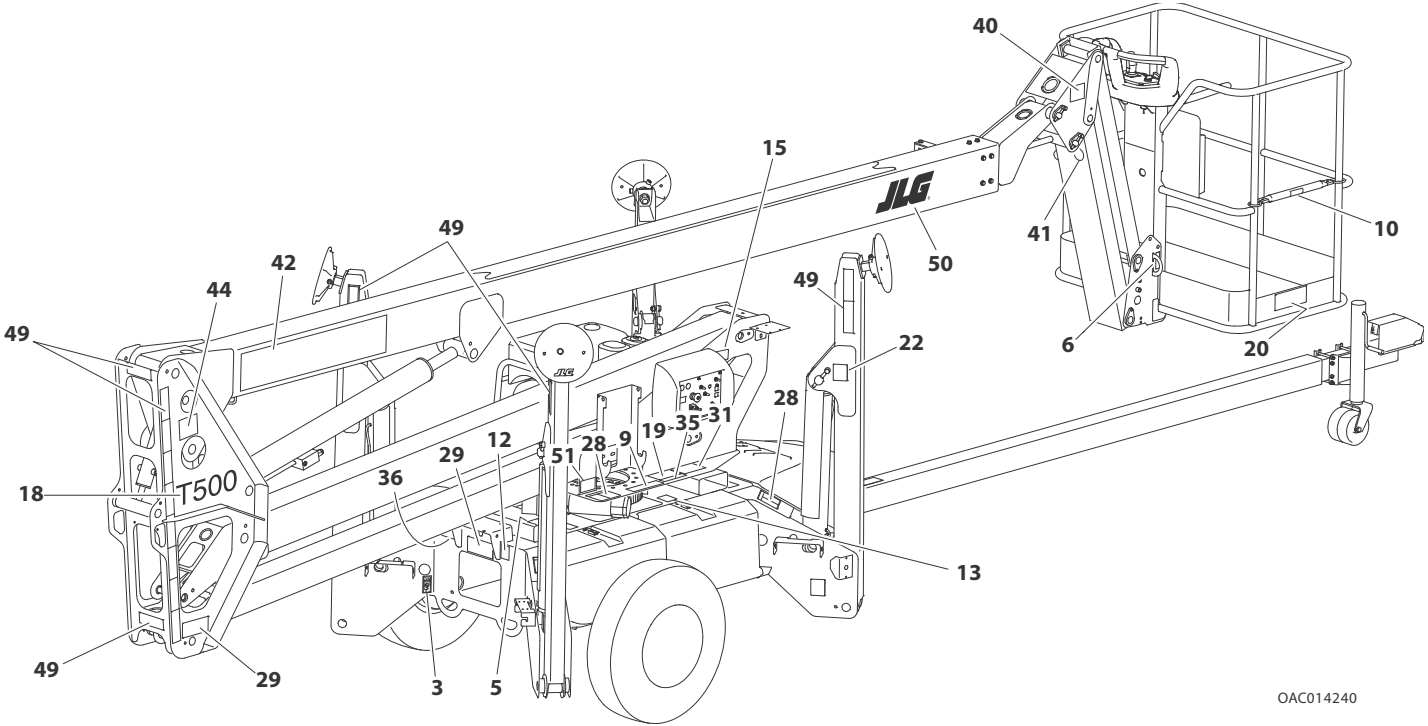

Figure 5-10. Decal Location - ANSI (Sheet 2 of 2)

Table 5-2. Decal Legend (ANSI)

Item #	0274522-S
1	- -
2	1701640
3	1703814
4	1706384
5	1703817
6	1704277
7	1704412
8	1706629
9	1706372
10	1706385
11	1001131269
12	1701644
13 - 17	- -
18	1706080 - T350 1706081 - T500J
19	1706106
20	1706107
21	- -

Table 5-2. (Continued)Decal Legend (ANSI)

Item #	0274522-S
22	1706121 - T350 1706264 - T500J
23	1706127 1706133 w/Drive
24	1706139
25	1706263
26	- -
27	1706112
28	1706128
29	1706099
30	1706111
31	1706135
32	1706386
33	1706387
34	1706108
35	1706109
36	1703813
37 - 38	- -
39	1706318
40	1706337

Table 5-2. (Continued)Decal Legend (ANSI)

Item #	0274522-S
41	1706349
42	1705754
43	- -
44 - 48	- -
49	1705817
50	1702773
51	1705304 - 8 hour 1706922 - 24 hour
52	1001112470 - T350 1001112471 - T500
53	1001214673
54	1001223055
55	1001228370 - Battery-Powered 1001223453 - Engine-Powered
56	1001231801

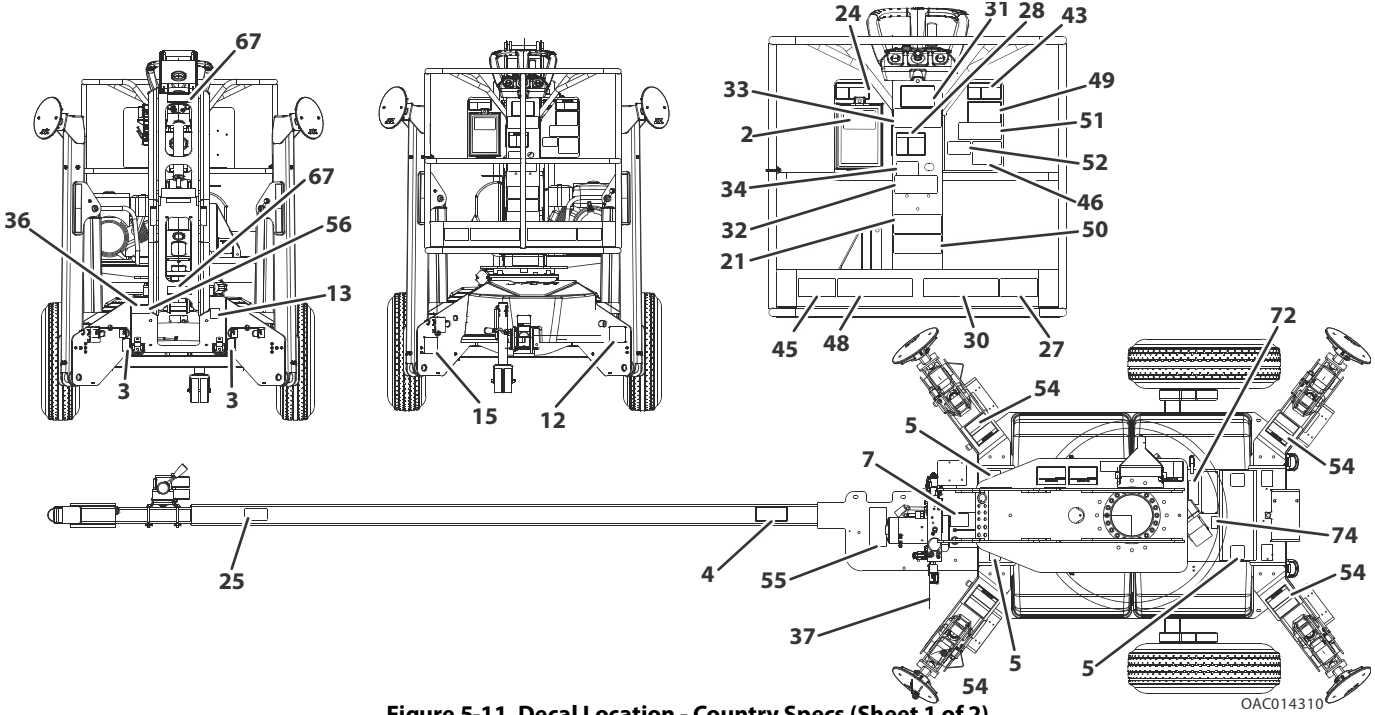

Figure 5-11. Decal Location - Country Specs (Sheet 1 of 2)

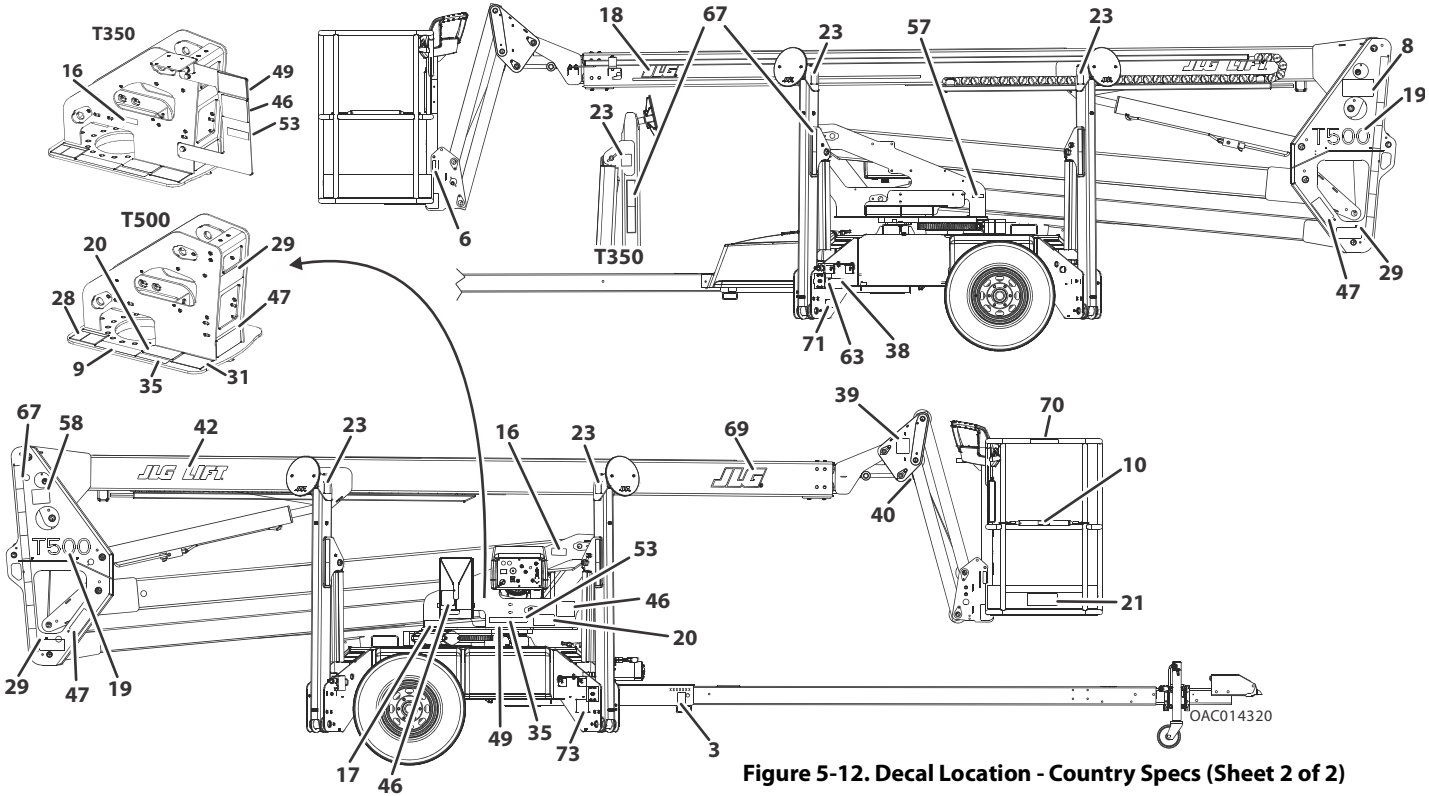

Figure 5-12. Decal Location - Country Specs (Sheet 2 of 2)

Table 5-3. Decal Legend - Country Specs

Item #	ANSI Export French/English 0273641-M	ANSI Export Portuguese/ English 0273644-L	ANSI Export Spanish/English 0273640-H	ANSI Export S. Africa 0274942-H	ANSI Export Spanish 0274482-I
1	- -	- -	- -	- -	- -
2	1701640	1701640	1701640	1701640	1701640
3	1703814	1703814	1703814	1703814	1703814
4	1706384	1706384	1706384	1706384	1706384
5	1703817	1703817	1703817	1703817	1703817
6	1704277	1704277	1704277	1704277	1704277
7	1704412	1704412	1704412	1704412	1704412
8	1706629	1706629	1706629	1706629	1706629
9	1706372	1706372	1706372	1706372	1706372
10	1706385	1706385	1706385	1706385	1706494
11 - 12	--	--	--	--	--
13	1701644	1701644	1701644	1701644	1701644
14 - 16	--	--	--	--	--
17	1705304 (8 hour) 1706922 (24 hour)	1705304 (8 hour) 1706922 (24 hour)	1705304 (8 hour) 1706922 (24 hour)	1705304 (8 hour) 1706922 (24 hour)	1705304 (8 hour) 1706922 (24 hour)
18	1705754	1705754	1705754	1705754	1705754

Table 5-3. Decal Legend - Country Specs

Item #	ANSI Export French/English 0273641-M	ANSI Export Portuguese/ English 0273644-L	ANSI Export Spanish/English 0273640-H	ANSI Export S. Africa 0274942-H	ANSI Export Spanish 0274482-I
19	1706080 (T350) 1706081 (T500)	1706080 - T350 1706081 - T500J	1706080 - T350 1706081 - T500J	1706080 - T350 1706081 - T500J	1706080 - T350 1706081 - T500J
20	1706106	1706106	1706106	1706106	1706106
21	1706107	1706107	1706107	1706107	1706107
22	- -	- -	- -	- -	- -
23	1706121 - T350 1706264 - T500	1706121 - T350 1706264 - T500	1706121 - T350 1706264 - T500	1706121 - T350 1706264 - T500	1706121 - T350 1706264 - T500
24	- -	- -	- -	- -	- -
25	1706263	1706263	1706263	1706263	1706263
26	- -	- -	- -	- -	- -
27	1706112	1706112	1706112	1706961	1706427
28	1706128	1706128	1706128	1706128	1706430
29	1706099	1706099	1706099	1706099	1706431
30	1706111	1706111	1706111	1706111	1706432
31	1706135	1706135	1706135	1706135	1706433
32	1706386	1706386	1706386	1706386	1706434
33	1706387	1706387	1706387	1706387	1706435

Table 5-3. Decal Legend - Country Specs

Item #	ANSI Export French/English 0273641-M	ANSI Export Portuguese/ English 0273644-L	ANSI Export Spanish/English 0273640-H	ANSI Export S. Africa 0274942-H	ANSI Export Spanish 0274482-I
34	1706108	1706108	1706108	1706108	1706436
35	1706109	1706109	1706109	1706109	1706437
36	1703813	1703813	1703813	1703813	1703840
37	1706139	1706139	1706139	1706139	1706139
38	1706318	1706318	1706318	1706861	1706318
39	1706337	1706337	1706337	1706337	1706337
40	1706349	1706349	1706349	1706349	1706349
41	- -	- -	- -	- -	- -
42	1702774	1702774	1702774	1702774	1702774
43 W/O Drive Option: With Drive Option:	1706127 1706515	1706525 1706526	1706428 1706429	- - - -	1706428 1706429
44	- -	- -	- -	- -	- -
45	1706513	1706524	1706427	1706961	1706427
46	1706516	1706527	1706430	1706128	1706430
47	1706517	1706528	1706431	1706099	1706431

Table 5-3. Decal Legend - Country Specs

Item #	ANSI Export French/English 0273641-M	ANSI Export Portuguese/ English 0273644-L	ANSI Export Spanish/English 0273640-H	ANSI Export S. Africa 0274942-H	ANSI Export Spanish 0274482-I
48	1706518	1706529	1706432	1706111	1706432
49	1706519	1706530	1706433	1706135	1706433
50	1706520	1706531	1706434	1706386	1706434
51	1706521	1706532	1706435	1706387	1706435
52	1706522	1706533	1706436	1706108	1706436
53	1706523	1706534	1706437	1706109	1706437
54	1706565	1706657	1706664	- -	1706430
55	1706569	1706658	1706665	- -	1706431
56	1703864	1703832	1703840	1703813	1703840
57 - 66	- -	- -	- -	- -	- -
67	1705817	1705817	1705817	- -	1705817
68	- -	- -	- -	- -	- -
69	1702773	1702773	1702773	1702773	1702773
70	1706495	1706496	1706494	- -	1706494
71	1001112470 - T350 1001112471 - T500	1001112470 - T350 1001112471 - T500	1001112470 - T350 1001112471 - T500	1001112470 - T350 1001112471 - T500	1001112110
72	1001214673	1001214673	1001214673	1001214673	1001214673

Table 5-3. Decal Legend - Country Specs

Item #	ANSI Export French/English 0273641-M	ANSI Export Portuguese/ English 0273644-L	ANSI Export Spanish/English 0273640-H	ANSI Export S. Africa 0274942-H	ANSI Export Spanish 0274482-I
73	1001223971	1001224052	1001224049	- -	1001224049
74	1001228370 - Battery-Powered 1001223453 - Engine-Powered	- -	- -	- -	- -

SECTION 6. EMERGENCY PROCEDURES

6.1 GENERAL

This section explains the steps to be taken in case of an emergency situation while operating.

6.2 INCIDENT NOTIFICATION

JLG Industries, Inc. must be notified immediately of any incident involving a JLG product. Even if no injury or property damage is evident, JLG must be contacted by telephone and provided with all necessary details.

- USA: 877-JLG-SAFE (554-7233)
- EUROPE: (44) 1 698 811005
- E-mail: productsafety@jlg.com

Failure to notify the manufacturer of an incident involving a JLG Industries product within 48 hours of such an occurrence may void any warranty consideration on that particular machine.

NOTICE

FOLLOWING ANY ACCIDENT, THOROUGHLY INSPECT THE MACHINE AND TEST ALL FUNCTIONS FIRST FROM THE GROUND CONTROLS, THEN FROM THE PLATFORM CONTROLS. DO NOT LIFT ABOVE 3 M (10 FT.) UNTIL YOU ARE SURE THAT ALL DAMAGE HAS BEEN REPAIRED, IF REQUIRED, AND THAT ALL CONTROLS ARE OPERATING CORRECTLY.

6.3 EMERGENCY OPERATION

Operator Unable to Control Machine

IF THE PLATFORM OPERATOR IS PINNED, TRAPPED OR UNABLE TO OPERATE OR CONTROL MACHINE:

1. Other personnel should operate the machine from ground controls only as required.
2. Other qualified personnel on the platform may use the platform controls. DO NOT CONTINUE OPERATION IF CONTROLS DO NOT FUNCTION PROPERLY.
3. Cranes, forklift trucks or other equipment can be used to remove platform occupants and stabilize motion of the machine.

Platform or Boom Caught Overhead

If the platform becomes jammed or snagged in overhead structures or equipment, do the following:

1. Shut off the machine.
2. Rescue all people in the platform before freeing the machine. Personnel must be out of the platform before operating any controls on the machine.
3. Use cranes, forklifts or other equipment to stabilize motion of the machine to prevent a tip over as required.
4. From the ground controls, carefully free the platform from the object.
5. Once clear, restart the machine and return the platform to a safe position.
6. Inspect the machine for damage. If the machine is damaged or does not operate properly, turn off the machine immediately. Report the problem to the proper maintenance personnel. Do not operate the machine until it is declared safe for operation.

6.4 MANUAL DESCENT

The manual descent system is provided as an emergency means to lower personnel from the platform.

NOTE: *The main valve cover must be removed to access Lift and Telescope manual controls.*

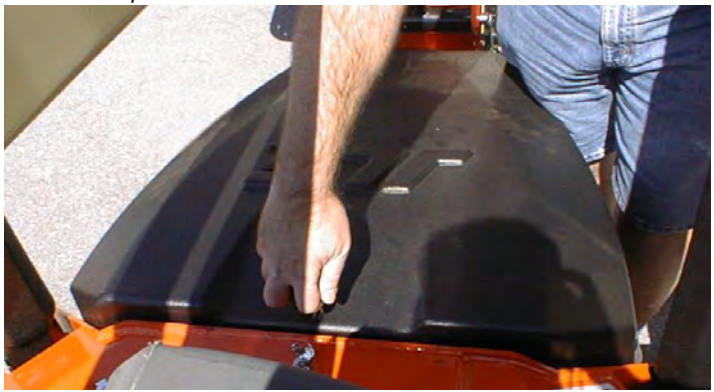

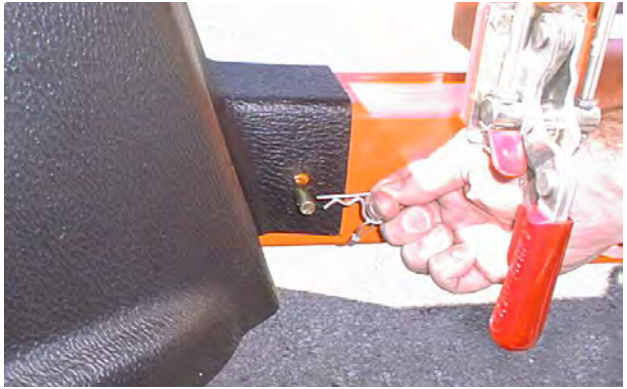

Lift Down

1. Locate the valve stem with the black rubber boot on the front face of the valve block. Pushing in on the boot activates the valve.

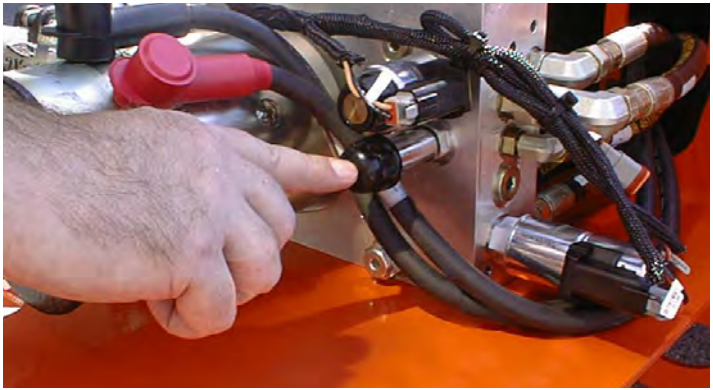

2. Locate the hand pump located on the front face of the valve block, the handle is loose mounted to the valve mounting plate.

3. To lift down; push in on the valve stem with the rubber boot and hold. At the same time, using the handle, work the hand pump until tight.

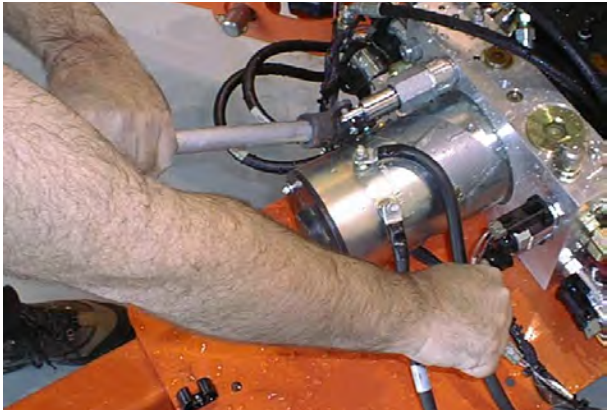

WARNING

DO NOT STAND UNDER THE BOOM WHEN USING MANUAL DESCENT. THE BOOM WILL LOWER RAPIDLY.

4. The boom will descend by itself. To stop the boom from descending, release the button on the valve with the rubber boot.

Telescope In

Pull out on the small button and hold. Using the handle, work the hand pump. The boom will retract with each stroke.

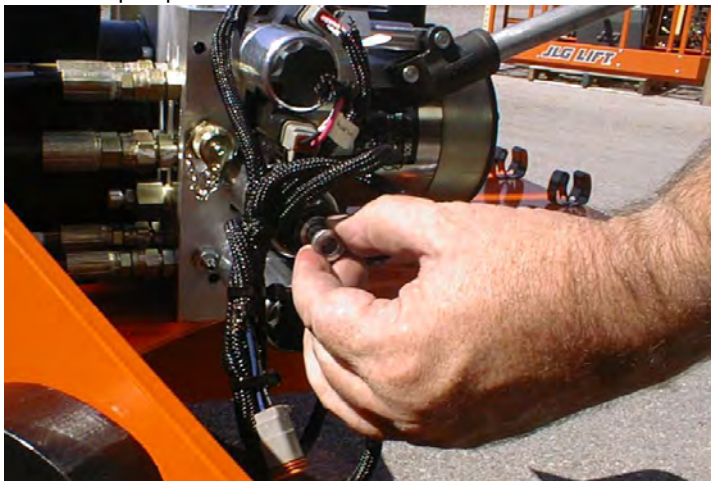

Telescope Out

Rotate the button clockwise, push in and hold. Using the handle, work the hand pump. The boom will extend with each stroke.

Swing

The manual swing override is used to manually swing the boom and turntable. Using a 7/8" socket and ratchet wrench, locate the nut on the swing worm gear. Install the wrench on the nut and ratchet in the desired direction.

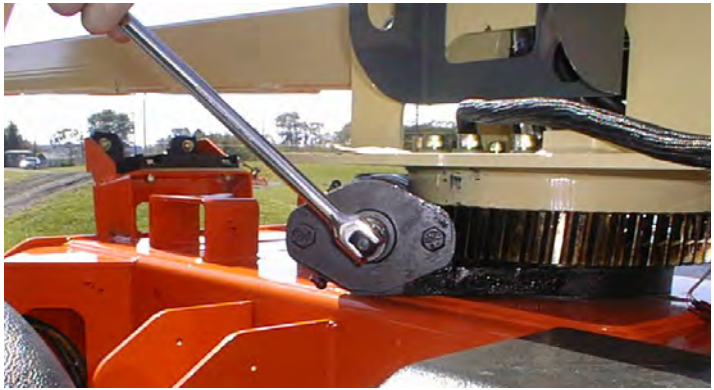

Platform Jib

The main boom must be down to complete this operation. Locate a valve with a black knob on the Jib cylinder port block. Turn slowly counterclockwise to lower the Jib. After this operation has been completed, turn the knob clockwise until tight.

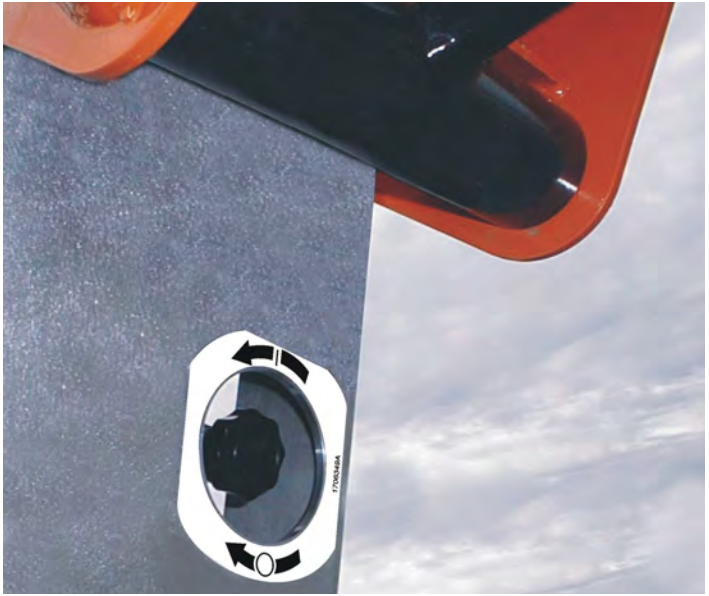

SECTION 7. GENERAL SPECIFICATIONS & OPERATOR MAINTENANCE

7.1 INTRODUCTION

This section of the manual provides additional necessary information to the operator for proper operation and maintenance of this machine.

The maintenance portion of this section is intended as information to assist the machine operator to perform daily maintenance tasks only, and does not replace the more thorough Preventive Maintenance and Inspection Schedule included in the Service and Maintenance Manual.

Other Publications Available:

T350 Service and Maintenance Manual 31217421

T500J Service and Maintenance Manual 31217422

T350 & T500J Illustrated Parts Manual 31215072

7.2 OPERATING SPECIFICATIONS

Table 7-1. Operating & Towing Specifications

MODEL	T350	T500J
Tongue Weight (ANSI): Note: Tongue weight may increase with options.	250 lbs. (114 kg)	350 lbs. (154 kg)
Maximum Allowable Tow Speed: (Do NOT exceed legal speed limit)	65 mph (105 kph)	65 mph (105 kph)
Maximum Work Load (Capacity) w/Rotator	440 lbs. (200 kg)	440 lbs. (200 kg)
Maximum Work Load (Capacity) w/o Rotator	500 lbs. (227 kg)	500 lbs. (227 kg)
Maximum Work Load (Capacity) w/Rotator & Panel Tray	320 lbs. (145 kg)	320 lbs. (145 kg)
Maximum Work Load (Capacity) w/o Rotator & w/Panel Tray	350 lbs. (158 kg)	350 lbs. (158 kg)
Material Hook Capacity (Optional)	500 lbs. (230 kg)	500 lbs. (230 kg)
Accessory Tray Capacity	250 lbs.* (114 kg)	250 lbs.* (114 kg)
	* DO NOT exceed axle rating or GVW rating.	

Table 7-1. Operating & Towing Specifications

MODEL	T350	T500J
Panel Tray Capacity (w/Rotator)	70 lbs. (32 kg)	70 lbs. (32 kg)
Panel Tray Capacity (w/o Rotator)	100 lbs. (45 kg)	100 lbs. (45 kg)
Swing	410° non-continuous	410° non-continuous
Max. Vertical Platform Height (Unrestricted)	35 ft. (10.6 m)	50 ft. (15.2 m)
Vertical Reach (unrestricted)	35 ft. (10.4 m)	50 ft. (15.2 m)
Horizontal Reach (from centerline of machine) (from outrigger pad edge)	 20 ft. (6.1 m) 14 ft. (4.27 m)	 31 ft. (9.45 m) 25 ft. (7.62 m)
Up and Over Clearance	15 ft. (4.57 m)	18 ft. (5.49 m)
Maximum Outrigger Pad Load	1950 lbs. (885 kg)	2740 (1243 kg)
Maximum Ground Bearing Pressure	22.5 psi (1.58 kg/cm^2)	30.7 psi (2.15 kg/cm^2)
Maximum Travel Gradeability - ANSI, CSA (see Figure 5-7.)	20%	20%
Maximum Sideslope - ANSI, CSA (see Figure 5-7.)	11°	11°
Max. Hydraulic System Pressure	2700 psi (186 Bar)	2950 psi (203 Bar)

Table 7-1. Operating & Towing Specifications

MODEL	T350	T500J
Maximum Operating Wind Speed	28 mph (12.5 m/s)	28 mph (12.5 m/s)
Maximum Horizontal Manual Force	90 lb. force (400 N)	90 lb. force (400 N)
Electrical System Voltage - Electric Machine	24 volts	24 Volts
Electrical System Voltage - Gas Machine	12 volts	12 Volts
Gross Machine Weight (Platform Empty) ANSI/CSA Machines Note: Machine weight may increase with options.	3400 lbs. (1542 kg)	4750 lbs. (2155 kg)

Dimensional Data

Table 7-2. Dimensional Data

	T350	T500J
Overall Length		
Surge Brake, 2" ball	20 ft 5 in (6.2 m)	26 ft 9.75 in (8.2 m)
Surge Brake, 2" ball w/rotator	20 ft 11 in (6.4 m)	
Electric brake,2" ball	20 ft 3 in (6.2 m)	26 ft 8 in (8.1 m)
Electric brake,2" ball w/ rotator	20 ft 9 in (6.3 m)	
Surge Brake Combination, 2"ball	20 ft 11 in (6.4m)	26 ft 10.25 in (8.2 m)
Overall Height (ANSI/CSA)	6 ft 6.25 in (2 m)	6 ft 7.25 in (2 m)
Overall Width (outriggers up)	4 ft 11.25 in (1.5 m)	5ft 10.25 in (1.8 m)
Overall Width (outriggers down - ANSI)	10 ft 5.5 in (3.2 m)	12 ft 7.75 in (3.9 m)

Fluid Capacities

Table 7-3. Capacities

Fuel Tank	1.6 Gal. (6.0 L)
Hydraulic Tank	
Filling Volume	4.4 Gallon (16.65 Liters)
Usable Volume	4.0 Gallon (15.1 Liters)
Engine Crankcase	1.16 qt. (1.0 Liter)

Electric Power Unit

Table 7-4. Electric Power Unit Specifications

		@ 740PSI (51 Bar)	@1500PSI (103 Bar)	@ 3000PSI (207 Bar)
Motor	Power	3.0 kW	3.0 kW	3.0 kW
	Voltage	24 VDC	24 VDC	24 VDC
	Amperage	90	140	230
	Speed	4000 rpm	3600 rpm	2900 rpm
Pump	Flow Rate	3.0 gpm (11.3 lpm)	2.7 gpm (10.2 lpm)	2.2 gpm (8.3 lpm)
	Displacement	0.192 cu.in. (3.15 cc)		

Taillight and Marker Light Bulb Information (ANSI Machines)

Table 7-5. Taillight and Marker Light Bulb Information

Bulb	JLG Part #
Stop/Turn/Taillight - ANSI	7026341
Side Marker - ANSI	7026342
Side Marker/Reflector - ANSI	7027717
Boom Taillight - ANSI	7016626

Tires

Table 7-6. Tire Specifications

	T350	T500J
	(ANSI)	(ANSI)
Size	ST 215/75-R14	ST 225-75-R15
Load Rating	1870 lbs. @ 50 psi (848 kg @ 350 kPa)	2540 lbs. @ 60 psi (1152 kg @ 414 kPa)
Ply Rating/ Load Range	6/C	6/D
Weight	36 lbs. (16 kg)	46 lbs. (21 kg)
Speed Category	--	--
Inflation Pressure	50 psi (350 kPa)	65 psi (448 kPa)
Wheel Nut Torque	90-120 ft. lbs. (122-164 Nm)	90-120 ft. lbs. (122-164 Nm)

Engine

Table 7-7. Engine Specifications

Type	4-stroke, overhead valve, single cylinder
Displacement	16.5 cu.in. (270 cm^3)
Bore x Stroke	3.0 x 2.3 in. (77 x 58 mm)
Max. Output	9 bhp (6.6 kW) at 3,600 rpm
Max. Torque	14.1 ft.lbs. (19.1 Nm) at 2,500 rpm
Fuel Consumption	0.51 lb/hph (313 g/kWh, 230 g/PSh)
Fuel Type	Unleaded gasoline with a pump octane rating of 86 or higher
Spark Plug	NGK: BPR6ES DENSO: W20EPR-U
Spark Plug Gap	0.028 - 0.031 in. (0.70 - 0.80 mm)

Table 7-8. Engine Battery Specifications

BCI Group Size	51R
Cranking Performance	550 amps @ 32°F (0°C) 450 amps @ 0°F (-18°C)
Reserve Capacity	80 minutes @ 32°F (0°C)

Batteries (Electric Machines)

Table 7-9. Battery Specifications

Voltage	6-Volt
Amp Hour Rating	@ 20 hour rate - 220
Reserve Capacity @ 75 Amps	110 Minutes
AT -40° F (-40° C) Open Circuit Voltage	Greater or Equal to 6 Volts
Life Cycle Rating	600 Cycles
Internal Resistance	No more than 2.5 mOhms @ 70° F (21° C) / 4.0 m Ohms @ 0° F (-18°C)
Battery Weight (minimum allowable)	61 lbs. (27.7 kg)

Component Weights

Table 7-10. Component Weights - T350

Component	Pounds (Kg)	Kilograms
Frame (bare)	592	269
Turntable (bare)	127	58
Booms & Cylinders Assy.	1130	513
Main Boom	626	284
Engine Assy. (Incl. Tray)	116	53
Engine (bare)	57	26
Master Cylinder	18	8
Axle	140	64
Platform w/Rotator	143	65
Platform w/o Rotator	73	33

Table 7-11. Component Weights - T500J

Component	Pounds	Kilograms
Frame (bare)	597	271
Turntable (bare)	262	119
Booms & Cylinders Assy.	1891	859
Main Boom	957	435
Engine Assy. (Incl. Tray)	116	53
Engine (bare)	57	26
Axle	221	100
Platform w/Rotator	143	65
Platform w/o Rotator	73	33

Lubrication

HYDRAULIC OIL

Table 7-12. Hydraulic Oil Temperature Range

Hydraulic System Operating Temperature Range	SAE Viscosity Grade
+0° to +180° F (-18° to +83° C)	10W
+0° to +210° F (-18° to +99° C)	10W-20, 10W-30
+50° to +210° F (+10° to +99° C	20W-20

NOTE: *Hydraulic oils must have anti-wear qualities at least to API Service Classification GL-3, and sufficient chemical stability for mobile hydraulic system service.*

NOTE: *Aside from JLG recommendations, it is not advisable to mix oils of different brands or types, as they may not contain the same required additives or be of comparable viscosities.*

Table 7-13. Hydraulic Oil Specifications

	Shell Spirax S4 TXM (Recommended)	Mobilfluid 424 (Optional)
SAE Grade	10W-30	10W-30
Specific Gravity	.882	.880
Pour Point, Max	-46°F (-42°C)	-46°F (-43°C)
Flash Point, Min.	442°F (220°C)	442°F (228°C)
Viscosity Information		
ISO VG	68	68
Brookfield, cP at -20°C	-	4300
at 40° C	66.93 cSt	60.21 cSt
at 100° C	10.53 cSt	9.26 cSt
Viscosity Index	146	134

NOTE: *Refer to Section 7.3, Operator Maintenance for specific lubrication procedures.*

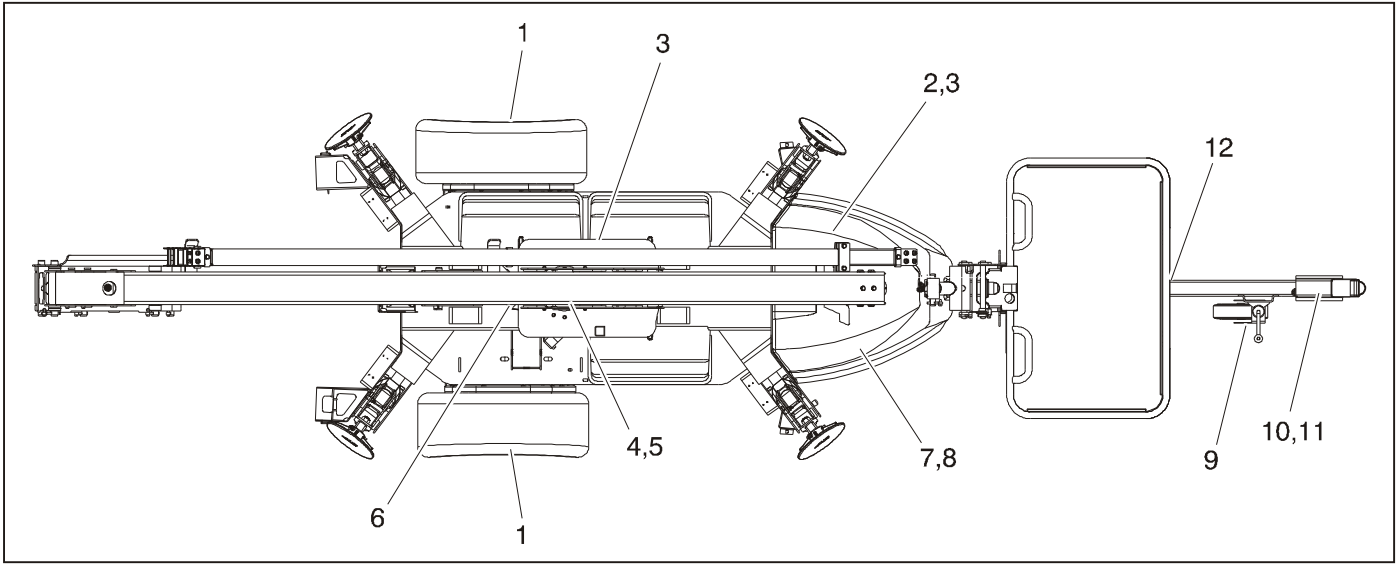

1. Wheel Bearings
2. Hydraulic Oil
3. Hydraulic Filter & Breather
4. Swing Bearing
5. Swing Bearing Teeth
6. Swing Drive
7. Engine
8. Fuel Tank
9. Trailer Jack
10. Surge Brake
11. Coupler & Hitch Ball
12. Jockey Wheel Bearing

Figure 7-1. Operator Maintenance & Lubrication Diagram

7.3 OPERATOR MAINTENANCE

NOTE: *The following numbers correspond to those in Figure 7-1., Operator Maintenance & Lubrication Diagram.*

Table 7-14. Lubrication Specifications

KEY	SPECIFICATIONS
MPG	Multipurpose Grease having a minimum dripping point of 350 °F Excellent water resistance and adhesive qualities; and being of extreme pressure type (Timken OK 40 pounds minimum).
EPGL	Extreme Pressure Gear Lube (oil) meeting API Service Classification GL-5 or Mil-Spec Mil-L-2105.
HO	Hydraulic Oil. API Service Classification GL-3, SAE 10W-30, ISO VG 68, e.g. Shell Spirax S4 TXM or Mobilfluid 424.
EO	Engine (crankcase) Oil. Gas - API SF/SG class, MIL-L-2104. Diesel - API CC/CD class, MIL-L-2104B/MIL-L-2104C.
OGL	Open Gear Lubricant - Mobiltac 375 or equivalent.

1. Wheel Bearings

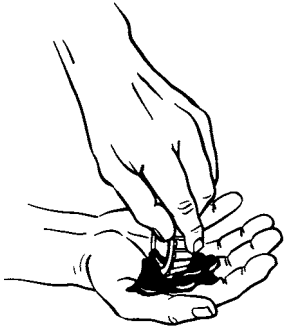

Lube - MPG
Interval - every 12 months or 12,000 miles
Comments - Refer to the Service Manual for procedure

2. Hydraulic Oil

Lube Point(s) - Fill Cap
Capacity - 4 gal. (15.1 L)
Lube - HO
Interval - Check oil daily, change after every 1200 hours of operation.

3. Hydraulic Filter & Breather

NOTE: *The cap securing the filter must be torqued 154 to 170 ft.lbs. (209 to 230.5 Nm).*

Interval - 100 hours
Comments - Change after the first 20 hours, then every 100 hours of operation.

4. Swing Bearing

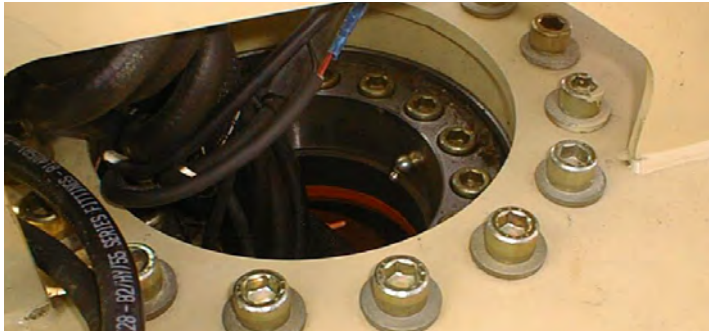

Lube Point(s) - 1 Grease Fitting
Capacity - As Required
Lube - MPG
Interval - Every month or 50 hours
Comments - Rotate the bearing back and forth to ensure grease is distributed evenly the whole way around the bearing.

5. Swing Bearing Teeth

Lube Point(s) - Spray On
Capacity - As Required
Lube - OGL
Interval - Every month or 50 hours
Comments - More frequent lubrication intervals may be required.

6. Swing Drive

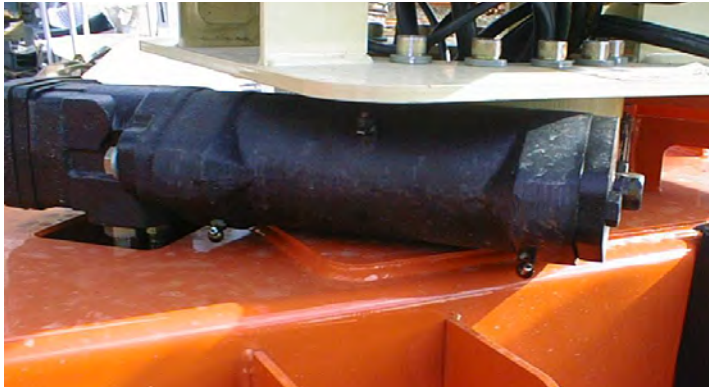

Lube Point(s) - 2 Grease Fittings
Capacity - As Required
Lube - MPG
Interval - As Required

⚠ CAUTION

DO NOT OVERGREASE BEARINGS. OVERGREASING BEARINGS WILL RESULT IN BLOWING OUTER SEALS IN HOUSING.

7. Engine

Capacity - See Engine Manual.
Lube - EO, 10W-30 API SJ
Interval - Check level daily; change per manufacturer's engine manual.
Comments - Adjust final oil level by mark on dipstick

8. Fuel Tank

Capacity - 1.6 Gal. (6.0 L)
Fuel - Gasoline
Interval - Check periodically during each shift

9. Trailer Jack

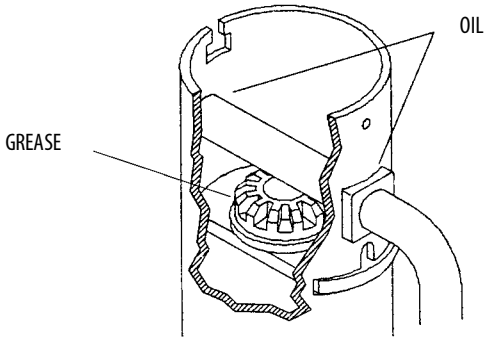

Capacity - As necessary
Lube - MPG & EO
Interval - As necessary

10. Surge Brake

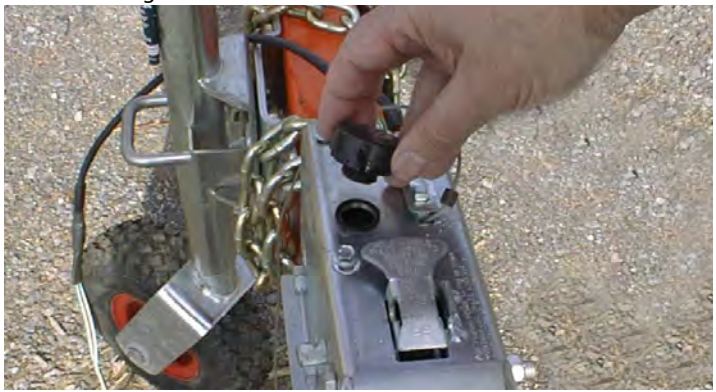

Lube Point(s) - Fill Cap
Capacity - No more than 1/2" (13 mm) from top of reservoir
Lube - DOT 3 or 4 Brake Fluid
Interval - Check before each tow. Flush the system yearly or when system is known to be contaminated

11. Coupler & Hitch Ball

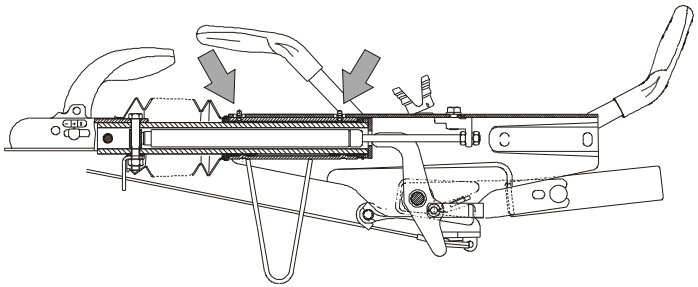

Capacity - Coupler 2 Grease Fittings (South Africa Only); Hitch Ball
As necessary
Lube - MPG
Interval - As necessary

12. Jockey Wheel Bearing (Drive and Set Option Only)

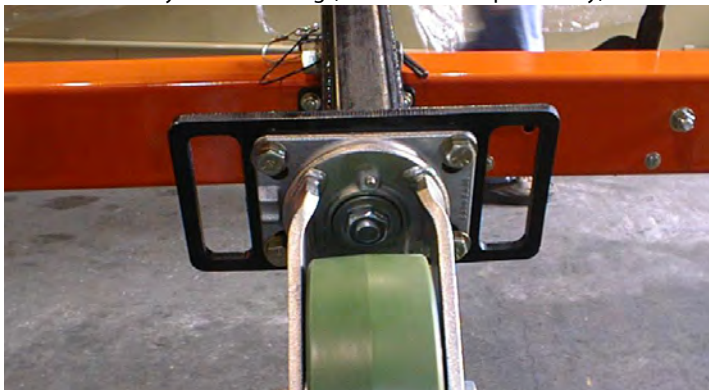

Lube Point(s) - 1 Grease Fittings
Capacity - As Required
Lube - MPG
Interval - As Required

7.4 TIRES & WHEELS

Glossary of Tire and Loading Terminology

1. **Cold Inflation Pressure -** The pressure in the tire before you drive.The term cold does not relate to the outside temperature. Rather, a cold tire is one that has not been driven on for at least three hours.
2. **Gross Axle Weight Rating/Maximum Axle Road Mass -** The maximum weight that any axle can support, as published on the VIN label on the front left side of the trailer. Actual weight determined by weighing each axle on a public scale, with the trailer attached to the towing vehicle.
3. **Gross Vehicle Weight Rating/Maximum Laden Mass/ Aggregate Trailer Mass -** The maximum weight of the fully loaded trailer, as published on the VIN label. Actual weight determined by weighing trailer on a scale, without being attached to the towing vehicle.
4. **Maximum Permissible Inflation Pressure** - The maximum cold inflation pressure to which a tire may be inflated.
5. **Production Options or Accessory Weight -** Weight of options or accessories not included in the base weight of the trailer. Reference section 2.
6. **Recommended Inflation Pressure -** This is the inflation pressure provided by the vehicle manufacturer on the VIN Label.
7. **Vehicle Capacity Weight -** The maximum cargo weight the trailer is designed to carry.

Basic Tire Maintenance

Properly maintained tires improve the stopping, traction, and load-carrying capability of your vehicle. Under inflated tires and overloaded vehicles are a major cause of tire failure. Therefore, to avoid flat tires and other types of tire failure, you should maintain proper tire pressure, observe tire and vehicle load limits, avoid road hazards, and regularly inspect your tires.

Tire Inflation

Check inflation pressure weekly during use to insure the maximum tire life and tread wear. It is important to check your vehicle's tire pressure at least once a month for the following reasons:

- Most tires may naturally lose air over time.
- Tires can lose air suddenly if you drive over a pothole or other object or if you strike the curb when parking.
- With radial tires, it is usually not possible to determine under inflation by visual inspection.

The recommended tire inflation pressure that vehicle manufacturers provide reflects the proper psi when a tire is cold. When you drive, your tires get warmer, causing the air pressure within them to increase. Therefore, to get an accurate tire pressure reading, you must measure tire pressure when the tires are cold or compensate for the extra pressure in warm tires.

Tire Wear

Inspect tires periodically for wear or damage. Tires with less than 1/16" (2 mm) tread depth or visible wear bands require replacement.

A bubble, cut or bulge in a sidewall can result in a tire blowout. Inspect both sidewalls of each tire for any bubble, cut or bulge; and replace a damaged tire before towing the trailer.

⚠ WARNING

WORN, DAMAGED OR UNDER-INFLATED TIRES CAN CAUSE LOSS OF CONTROL, RESULTING IN DAMAGE, SERIOUS INJURY OR DEATH. INSPECT TIRES BEFORE EACH TOW.

The following tire wear diagnostic chart will help you pinpoint the causes and solution of tire wear problems.

Table 7-15. Tire Wear

Wear Pattern		Cause	Action
	Center Wear	Over Inflation	Adjust Pressure to value specified in Section 7
	Edge Wear	Under Inflation	Adjust Pressure to value specified in Section 7
	Cupping	Out of balance	Check bearing adjustment and balance tires
	Flat Spots	Wheel lockup and tire skidding	Avoid sudden stops when possible and adjust brakes.

Tire Repair

The proper repair of a punctured tire requires a plug for the hole and a patch for the area inside the tire that surrounds the puncture hole. Punctures through the tread can be repaired if they are not too large, but tires with punctures to the sidewall must be replaced. Tires must be removed from the rim to be properly inspected before being plugged and patched.

Tire Replacement

A replacement tire must be the same size, ply rating and load range as originally installed on the trailer.

Please refer to the JLG Parts Manual for the part number of the approved tires for a particular machine model.

Due to size variations between tire brands, both tires on the same axle should be the same.

Tire Fundamentals

See Figure 7-2. and Figure 7-3.

Tire manufacturers are required to place standardized information on the sidewall of all tires. This information identifies and describes the fundamental characteristics of the tire and also provides a tire identification number for safety standard certification and in case of a recall.

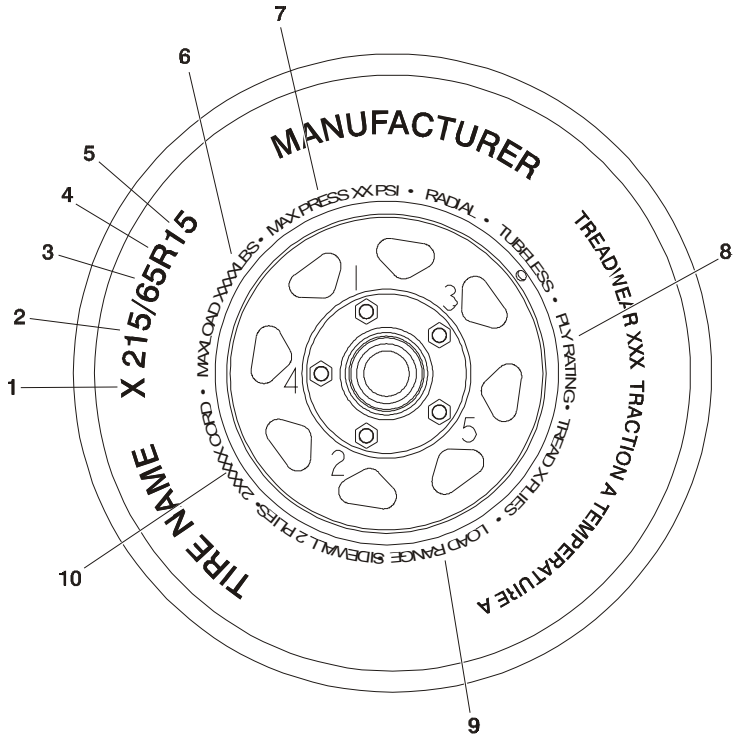

Figure 7-2. Information on Tires - Sheet 1 of 2

1. **Tire Application** - This letter identifies the tire by application.

- LT = Light Trucks or Trailers
- ST = Trailer use only

2. **Tire Width -** This three-digit number gives the width in millimeters of the tire from sidewall edge to sidewall edge. In general, the larger the number, the wider the tire.
3. **Aspect Ratio -** This two-digit number, known as the aspect ratio, gives the tire's ratio of height to width. Numbers of 70 or lower indicate a short sidewall for improved steering response and better overall handling on dry pavement.
4. **Radial -** The "R" stands for radial. Radial ply construction of tires has been the industry standard for the past 20 years.
5. **Wheel Diameter -** This two-digit number is the wheel or rim diameter in inches. If you change your wheel size, you will have to purchase new tires to match the new wheel diameter.
6. **Maximum Load Rating -** This number indicates the maximum load in kilograms and pounds that can be carried by the tire.
7. **Maximum Permissible Inflation Pressure -** This number is the greatest amount of air pressure that shall ever be put in the tire under normal driving conditions.
8. **Ply Rating -** The term "Ply Rating" is used to identify a given tire with its maximum load when used in a specific type of service. It is an index of tire strength and does not necessarily represent the number of cord plies in the tire.
9. **Load Range** - A letter (A,B,C etc.) used to identify a given size tire with its load and inflation limits when used in a specific type of service.
10. **Tire Ply Composition and Materials Used -** The number of plies indicates the number of layers of rubber-coated fabric in the tire. In general, the greater the number of plies, the more weight a tire can support. Tire manufacturers also must indicate the materials in the tire, which include steel, nylon, polyester, and others..

Figure 7-3. Information on Tires - Sheet 2 of 2

Wheel Replacement

If the trailer has been struck, or impacted, on or near the wheels, or if the trailer has struck a curb, inspect for damage (i.e. being out of round); and replace any damaged wheel. Inspect the wheels for damage every year, even if no obvious impact has occurred.

Replacement wheels must have the same diameter, width, and profile as the original. Replacement tires must be the same size, ply rating, and load range as the tire being replaced. Refer to the Vehicle Identification plate on the chassis for wheel and tire specifications.

Wheel Installation

It is extremely important to apply and maintain proper wheel mounting torque.

⚠ WARNING

WHEEL NUTS MUST BE INSTALLED AND MAINTAINED AT THE PROPER TORQUE TO PREVENT LOOSE WHEELS, BROKEN STUDS, AND POSSIBLE DANGEROUS SEPARATION OF WHEEL FROM THE AXLE. BE SURE TO USE ONLY THE NUTS MATCHED TO THE CONE ANGLE OF THE WHEEL.

Tighten the lug nuts to the proper torque for the axle size on your trailer, to prevent wheels from coming loose. Use a torque wrench to tighten the fasteners. If you do not have a torque wrench, tighten the fasteners with a lug wrench, then immediately have a service garage or dealer tighten the lug nuts to the proper torque. Over-tightening will result in breaking the studs or permanently deforming the mounting stud holes in the wheels. The proper procedure for attaching wheels is as follows:

1. Start all nuts by hand to prevent cross threading. DO NOT use a lubricant on threads or nuts.
2. Tighten nuts in the following sequence:

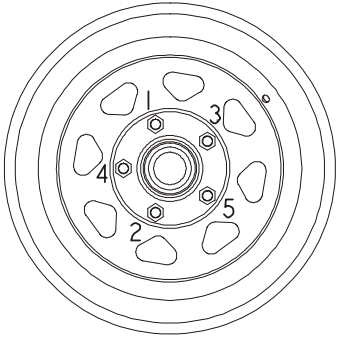

T350

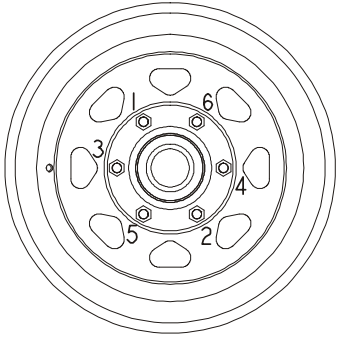

T500J

3. The tightening of the nuts should be done in stages. Following the recommended sequence, tighten nuts per wheel torque chart.

Table 7-16. Wheel Torque Chart - ANSI

TORQUE SEQUENCE -ft lbs (Nm)		
1st Stage	2nd Stage	3rd Stage
20-25 (25-35)	50-60 (70-80)	90-120 (120-163)

4. Wheel nuts should be torqued before first road use and after each wheel removal. Check and torque after the first 10 miles, 25 miles, and again at 50 miles. Check periodically thereafter.

Lug Nuts (Bolts)

Lug nuts are prone to loosen right after a wheel is mounted to a hub. When driving on a remounted wheel, check to see if the lug nuts are tight after the first 10, 25 and 50 miles of driving and before each tow thereafter.

⚠ WARNING

CHECK LUG NUTS FOR TIGHTNESS ON A NEW TRAILER OR WHEN WHEEL(S) HAVE BEEN REMOUNTED AFTER THE FIRST 10, 25 AND 50 MILES OF DRIVING.

METAL CREEP BETWEEN THE WHEEL RIM AND LUG NUTS WILL RESULT IN A WHEEL COMING OFF, LEADING TO DEATH OR SERIOUS INJURY. TIGHTEN LUG NUTS BEFORE EACH TOW.

Unsealed Wheel Bearings (Hubs)

If your trailer has unsealed axle bearings, they must be inspected and lubricated once a year or 12,000 miles to insure safe operation of your trailer.

If a trailer wheel bearing is immersed in water, it must be replaced.

If your trailer has not been used for an extended amount of time, have the bearings inspected and packed more frequently, at least every six months and prior to use.

SECTION 8. INSPECTION AND REPAIR LOG

Machine Serial Number _____

Table 8-1. Inspection and Repair Log

Date	Comments

Table 8-1. Inspection and Repair Log

Date	Comments

An Oshkosh Corporation Company

Corporate Office
JLG Industries, Inc.
1 JLG Drive
McConnellsburg, PA 17233-9533 USA
(717) 485-5161 (Corporate)
(877) 554-5438 (Customer Support)
(717) 485-6417

Visit our website for JLG Worldwide Locations
www.jlg.com