Operation & Safety Manual

Original Instructions -
Keep this manual with the machine at all times.

Model
EC450AJ, EC520AJ

SN C300000700 to Present

31219187

October 25, 2023 - Rev E

ANSI
AS/NZS

An Oshkosh Corporation Company

⚠ WARNING

Operating, servicing and maintaining this vehicle or equipment can expose you to chemicals including engine exhaust, carbon monoxide, phthalates, and lead, which are known to the State of California to cause cancer and birth defects or other reproductive harm. To minimize exposure, avoid breathing exhaust, do not idle the engine except as necessary, service your vehicle or equipment in a well-ventilated area and wear gloves or wash your hands frequently when servicing. For more information go to www.P65Warnings.ca.gov.

FOREWORD

The Mobile Elevating Work Platform (MEWP) models covered in this manual are designed and tested to meet or exceed various compliance standards. Please refer to the manufacturer's nameplate affixed to the subject MEWP for specific standard compliance information.

This manual is a very important tool! Keep it with the machine at all times.

The purpose of this manual is to provide owners, users, operators, lessors, and lessees with the precautions and operating procedures essential for the safe and proper machine operation for its intended purpose.

Due to continuous product improvements, JLG Industries, Inc. reserves the right to make specification changes without prior notification. Contact JLG Industries, Inc. for updated information.

Refer to www.JLG.com for Warranty, Product Registration, and other machine-related documentation.

SAFETY ALERT SYMBOLS AND SAFETY SIGNAL WORDS

This is the Safety Alert Symbol. It is used to alert you to the potential personal injury hazards. Obey all safety messages that follow this symbol to avoid possible injury or death.

⚠ DANGER

Indicates an imminently hazardous situation. If not avoided, will result in serious injury or death. This decal will have a red background.

⚠ WARNING

Indicates a potentially hazardous situation. If not avoided, could result in serious injury or death. This decal will have an orange background.

⚠ CAUTION

Indicates a potentially hazardous situation. If not avoided, may result in minor or moderate injury. It may also alert against unsafe practices. This decal will have a yellow background.

NOTICE

Indicates information or a company policy that relates directly or indirectly to the safety of personnel or protection of property.

⚠ WARNING

This product must comply with all safety related bulletins. Contact JLG Industries, Inc. or the local authorized JLG representative for information regarding safety related bulletins which may have been issued for this product.

NOTICE

JLG Industries, Inc. sends safety related bulletins to the owner of record of this machine. Contact JLG Industries, Inc. to ensure that the current owner records are updated and accurate.

NOTICE

JLG Industries, Inc. must be notified immediately in all instances where JLG products have been involved in an accident involving bodily injury or death or when substantial damage has occurred to personal property or the JLG product.

For:

- Accident Reporting
- Product Safety Publications
- Current Owner Updates
- Questions Regarding Product Safety
- Standards and Regulations Compliance Information
- Questions Regarding Special Product Applications
- Questions Regarding Product Modifications

Contact:

Product Safety and Reliability Department

JLG Industries, Inc.

13224 Fountainhead Plaza

Hagerstown, MD 21742

USA

or Visit www.jlg.com to find your local JLG office.

In USA:

Toll Free: 877-JLG-SAFE (877-554-7233)

Outside USA:

Phone: 240-420-2661

Fax: 301-745-3713

E-mail: ProductSafety@JLG.com

REVISION LOG

Date	Revision	Description
July 5, 2022	A	Original Issue
September 1, 2022	B	Revision
February 1, 2023	C	Revision
June 29, 2023	D	Revision
October 25, 2023	E	Revision

Other Publications Available

Publication	Publication Number
Service & Maintenance Manual	31217104
Illustrated Parts Manual	31219189

This Page is intentionally left blank

SECTION CONTENTS

Section	Subject	Page
FOREWORD		**3**
REVISION LOG		**7**
SECTION 1 SAFETY PRECAUTIONS		**13**
1.1	General	13
1.2	Pre-Operation	13
1.3	Operation	15
1.4	Towing, Lifting, and Hauling	21
1.5	Maintenance	21
SECTION 2 USER RESPONSIBILITIES, MACHINE PREPARATION, AND INSPECTION		**25**
2.1	Personnel Training	25
2.2	Preparation, Inspection, and Maintenance	26
2.3	Machine Components	28
2.4	Pre-Start Inspection	28
2.5	Walk-Around Inspection	30
2.6	Function Check	31
2.7	Oscillating Axle Lockout Test	33
2.8	SkyGuard® Function Test	35
SECTION 3 MACHINE CONTROLS AND INDICATORS		**37**
3.1	General	37
3.2	Controls and Indicators	38
3.3	Ground Control Station	39
3.4	Multifunction Display	43
3.5	Platform Control Station	47
3.6	Platform Control Indicator Panel	50

SECTION 4
MACHINE OPERATION 53

4.1 General 53
4.2 Operating Characteristics and Limitations 53
4.3 Stability 54
4.4 Motor Operation 55
4.5 Traveling (Driving) 56
4.6 Traveling (Grade/Side Slope) 58
4.7 Steering 60
4.8 Platform 60
4.9 Boom 61
4.10 Function Speed Control 62
4.11 USB Charging Port 62
4.12 Machine Safety System Override (MSSO) (If Equipped) 63
4.13 SkyGuard Operation 63
4.14 Battery Charging 66
4.15 Battery Charging — Lithium-Ion Machine 69
4.16 Charging the Battery Pack 73
4.17 Charging in Cold Temperatures 76
4.18 Shut Down and Park 76
4.19 Lifting and Tie Down 77
4.20 Lifting and Tie Down Chart 78
4.21 Safety Decals 79

SECTION 5
EMERGENCY PROCEDURES 83

5.1 General 83
5.2 Incident Notification 83
5.3 Emergency Operation 84
5.4 Manual Swing Override 84
5.5 Emergency Towing Procedures 85
5.6 Machine Safety System Override (MSSO) (If Equipped) 87

SECTION 6
ACCESSORIES 89

6.1 Available Accessories and Relationship Table 89
6.2 Pipe Racks 91
6.3 Platform Work Lights 93
6.4 SkyGlazier® 94

SECTION 7
GENERAL SPECIFICATIONS AND OPERATOR MAINTENANCE 97

7.1 General 97
7.2 Operating Specifications 97
7.3 Operator Maintenance and Lubrication Diagram 101
7.4 Operator Maintenance 101
7.5 Tires and Wheels 107
7.6 Supplemental Information Only Applicable to CE/UKCA Machines 109
7.7 EC Declaration of Conformity 110
7.8 UKCA Declaration of Conformity 111

This Page is intentionally left blank

SECTION 1
Safety Precautions

1.1 GENERAL

This section outlines the necessary precautions for proper and safe machine usage and maintenance. It is mandatory that a daily routine is established based on the content of this manual to promote proper machine usage. A maintenance program, using the information provided in this manual and the Service & Maintenance Manual, must also be established by a qualified person and must be followed to ensure that the machine is safe to operate.

The owner/user/operator/lessor/lessee of the machine must not accept operating responsibility until this manual has been read, training is accomplished, and operation of the machine has been completed under the supervision of an experienced and qualified operator.

This section contains the responsibilities of the owner, user, operator, lessor, and lessee concerning safety, training, inspection, maintenance, application, and operation. If there are any questions with regard to safety, training, inspection, maintenance, application, and operation, please contact JLG Industries, Inc. ("JLG").

⚠ WARNING

Failure to comply with the safety precautions listed in this manual could result in machine damage, property damage, personal injury or death.

1.2 PRE-OPERATION

1.2.1 Operator Training and Knowledge

- Read, understand, and study the Operation and Safety Manual in its entirety before operating the machine. For clarification, questions, or additional information regarding any portions of this manual, contact JLG Industries, Inc.

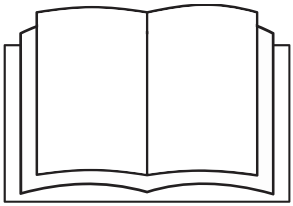

- Only personnel who have received proper training regarding the inspection, application and operation of MEWPs (including recognizing and avoiding hazards associated with their operation) shall be authorized to operate a MEWP.

- Only properly trained personnel who have received unit-specific familiarization shall operate a MEWP. The user shall determine if personnel are qualified to operate the MEWP prior to operation.
- Read, understand, and obey all DANGERS, WARNINGS, CAUTIONS, and operating instructions on the machine and in this manual.
- Ensure that the machine is to be used in a manner which is within the scope of its intended application as determined by JLG.
- All operating personnel must have a thorough understanding of the intended purpose and function of the MEWP controls, including platform, ground and emergency descent controls.
- Read, understand, and obey all applicable employer, local, and governmental regulations as they pertain to your utilization and application of the machine.

1.2.2 Workplace Inspection

- Precautions to avoid all hazards in the work area must be taken by the user before and during operation of the machine.
- Do not operate or raise the platform from a position on trucks, trailers, railway cars, floating vessels, scaffolds or other equipment unless the application is approved in writing by JLG.
- Before operation, check work area for overhead hazards such as electric lines, bridge cranes, and other potential overhead obstructions.
- Check operating surfaces for holes, bumps, drop-offs, obstructions, debris, concealed holes, and other potential hazards.
- Check the work area for hazardous locations. Do not operate the machine in hazardous environments unless approved for that purpose by JLG.
- Ensure that the ground conditions are adequate to support the maximum tire load indicated on the tire load decals located on the chassis adjacent to each wheel. Do not travel on unsupported surfaces.

1.2.3 Machine Inspection

- Do not operate this machine until the inspections and functional checks as specified in the User Responsibilities, Machine Preparation, and Inspection Section of this manual have been performed.
- Do not operate this machine until it has been serviced and maintained according to the maintenance and inspection requirements as specified in the machine’s Service Manual.
- Ensure all safety devices are operating properly. Modification of these devices is a safety violation.

⚠ WARNING

Modification or alteration of a MEWP shall be made only with prior written permission from the manufacturer.

- Do not operate any machine on which the safety or instruction placards or decals are missing or illegible.
- Check the machine for modifications to original components. Ensure that any modifications have been approved by JLG.
- Avoid accumulation of debris on platform floor. Keep mud, oil, grease, and other slippery substances from footwear and platform floor.

1.3 OPERATION

1.3.1 General

- Machine operation requires your full attention. Bring the machine to a full stop before using any device, i.e. cell phones, two-way radios, etc. that will distract your attention from safely operating the machine.
- Do not use the machine for any purpose other than positioning personnel, their tools, and equipment.
- Before operation, the user must be familiar with the machine capabilities and operating characteristics of all functions.
- Never operate a malfunctioning machine. If a malfunction occurs, shut down the machine. Remove the unit from service and notify the proper authorities.
- Do not remove, modify, or disable any safety devices.
- Never slam a control switch or lever through neutral to an opposite direction. Always return switch to neutral and stop before moving the switch to the next function. Operate controls with slow and even pressure.
- Do not allow personnel to tamper with or operate the machine from the ground with personnel in the platform, except in an emergency.
- Do not carry materials directly on platform railing unless approved by JLG.
- When two or more persons are in the platform, the operator shall be responsible for all machine operations.
- Always ensure that power tools are properly stowed and never left hanging by their cord from the platform work area.
- When driving, always position boom over rear axle in line with the direction of travel. Remember, if boom is over the front axle, steer and drive functions will be reversed.

- Do not assist a stuck or disabled machine by pushing or pulling except by pulling at the chassis tie-down lugs.
- Fully lower platform and shut off all power before leaving machine.
- Remove all rings, watches, and jewelry when operating machine. Do not wear loose fitting clothing or long hair unrestrained which may become caught or entangled in equipment.
- Persons under the influence of drugs or alcohol or who are subject to seizures, dizziness or loss of physical control must not operate this machine.
- Hydraulic cylinders are subject to thermal expansion and contraction. This may result in changes to the platform position while the machine is stationary. Factors affecting thermal movement can include the length of time the machine will remain stationary, hydraulic oil temperature, ambient air temperature, and platform position.

1.3.2 Trip and Fall Hazards

- Before operating the machine, ensure all gates are closed and fastened in their proper position.

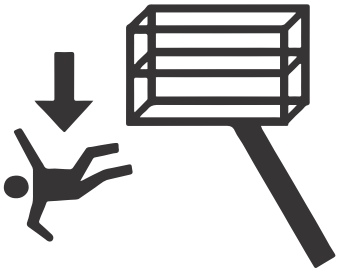

- During operation, occupants in the platform must wear a full body harness with a lanyard attached to an authorized lanyard anchorage point. Attach only one (1) lanyard per lanyard anchorage point.

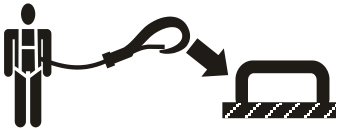

- Enter and exit only through gate area. Use extreme caution when entering or leaving platform. Ensure that the platform assembly is fully lowered. Face the platform when entering or leaving the platform. Always maintain “three point contact” with the machine, using two hands and one foot or two feet and one hand at all times during entry and exit.

- Keep both feet firmly positioned on the platform floor at all times. Never position ladders, boxes, steps, planks, or similar items on unit to provide additional reach for any purpose.
- Keep oil, mud, and slippery substances cleaned from footwear and the platform floor.

1.3.3 Electrocution Hazards

- This machine is not insulated and does not provide protection from contact with or proximity to electrical current.
- It is not recommended to use the machine during lightning. To prevent injury or machine damage if lightning occurs during operation, lower the boom and shut down the machine in a safe and secure location.

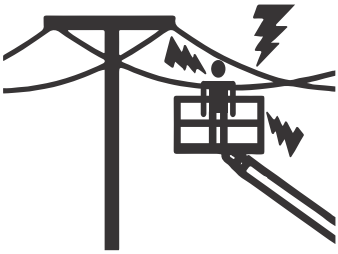

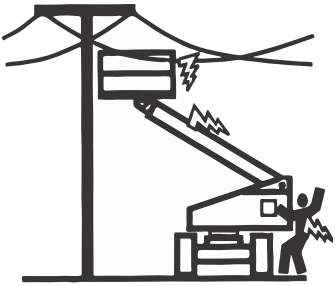

- Maintain distance from electrical lines, apparatus, or any energized (exposed or insulated) parts according to the Minimum Approach Distance (MAD) as shown in *Table — Minimum Approach Distances (MAD), page 17*.
- Allow for machine movement and electrical line swaying.

Table 1. Minimum Approach Distances (MAD)

Voltage Range (Phase to Phase)	Minimum Approach Distance in Feet (Meters)
0 to 50 KV	10 (3)
Over 50K V to 200 KV	15 (5)
Over 200 KV to 350 KV	20 (6)
Over 350 KV to 500 KV	25 (8)
Over 500 KV to 750 KV	35 (11)

Table 1. Minimum Approach Distances (MAD) (continued)

Voltage Range (Phase to Phase)	Minimum Approach Distance in Feet (Meters)
Over 750 KV to 1000 KV	45 (14)
Note: This requirement shall apply except where employer, local or governmental regulations are more stringent.	

- Maintain a clearance of at least 10 ft (3m) between any part of the machine and its occupants, their tools, and their equipment from any electrical line or apparatus carrying up to 50,000 volts. One foot additional clearance is required for every additional 30,000 volts or less.
- The MAD may be reduced if insulating barriers are installed to prevent contact, and the barriers are rated for the voltage of the line being guarded. These barriers shall not be part of (or attached to) the machine.
- The MAD shall be reduced to a distance within the designed working dimensions of the insulating barrier. This determination shall be made by a qualified person with respect to electrical transmission and distribution in accordance with the employer, local, or governmental requirements for work practices near energized equipment.

⚠ DANGER

Do not maneuver machine or personnel inside prohibited zone (MAD). Assume all electrical parts and wiring are energized unless known otherwise.

1.3.4 Tipping Hazards

- Ensure that the ground conditions are adequate to support the maximum tire load indicated on the tire load decals located on the chassis adjacent to each wheel. Do not travel on unsupported surfaces.
- The user must be familiar with the operating surface before driving. Do not exceed the allowable side slope and grade while driving.

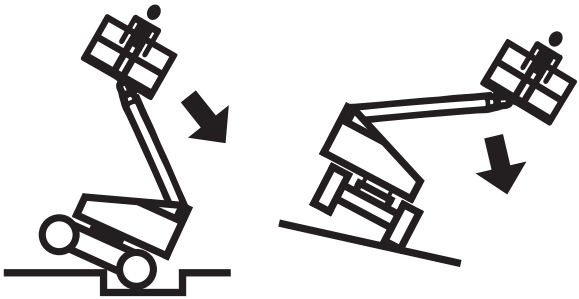

- Do not elevate platform or drive with platform elevated while on or near a sloping, uneven, or soft surface.

- Ensure machine is positioned on a smooth, firm surface within the limits of the maximum operating slope before elevating platform or driving with the platform in the elevated position.
- Before driving on floors, bridges, trucks, and other surfaces, check allowable capacity of the surfaces.
- Never exceed the maximum platform capacity as specified on the platform. Keep all loads within the confines of the platform, unless authorized by JLG.
- Keep the chassis of the machine a minimum of 2 ft (0.6m) from holes, bumps, drop-offs, obstructions, debris, concealed holes, and other potential hazards at the ground level.
- Do not push or pull any object with the boom.
- Never attempt to use the machine as a crane. Do not tie-off machine to any adjacent structure. Never attach wire, cable, or any similar items to platform.
- If boom assembly or platform is in a position that one or more wheels are off the ground, all persons must be removed before attempting to stabilize the machine. Use cranes, forklift trucks, or other appropriate equipment to stabilize machine.
- Do not operate the machine when wind conditions, including gusts, exceed 28 mph (12.5 m/s). Refer to *Table — Beaufort Scale (For Reference Only), page 20*. Factors affecting wind speed are; platform elevation, surrounding structures, local weather events, and approaching storms.
- Wind speed can be significantly greater at height than at ground level.
- Wind speed can change rapidly. Always consider approaching weather events, the time required to lower the platform, and methods to monitor current and potential wind conditions.
- Do not cover or increase surface area of the platform or the load. Do not carry large surface area items in the platform when operating outdoors. The addition of such items increases the exposed wind area of the machine. Increased areas exposed to wind will decrease stability.
- Do not increase the platform size with unauthorized modifications or attachments.

⚠ WARNING

Do not operate the machine when wind conditions exceed specifications shown in the General Specifications section of this manual or as shown on the capacity placard on the platform billboard.

Table 2. Beaufort Scale (For Reference Only)

Beaufort Number	Wind Speed		Description	Land Conditions
	mph	m/s		
0	0	0-0.2	Calm	Calm. Smoke rises vertically
1	1-3	0.3-1.5	Light air	Wind motion visible in smoke
2	4-7	1.6-3.3	Light breeze	Wind felt on exposed skin. Leaves rustle
3	8-12	3.4-5.4	Gentle breeze	Leaves and smaller twigs in constant motion
4	13-18	5.5-7.9	Moderate breeze	Dust and loose paper raised. Small branches begin to move.
5	19-24	8.0-10.7	Fresh breeze	Smaller trees sway.
6	25-31	10.8-13.8	Strong breeze	Large branches in motion. Flags waving near horizontal. Umbrella use becomes difficult.
7	32-38	13.9-17.1	Near Gale/Moderate Gale	Whole trees in motion. Effort needed to walk against the wind.
8	39-46	17.2-20.7	Fresh Gale	Twigs broken from trees. Cars veer on road.
9	47-54	20.8-24.4	Strong Gale	Light structure damage.

1.3.5 Crushing and Collision Hazards

- Approved head gear must be worn by all operating and ground personnel.
- Watch for obstructions around machine and overhead when driving. Check clearances above, on sides, and bottom of platform during all operations.

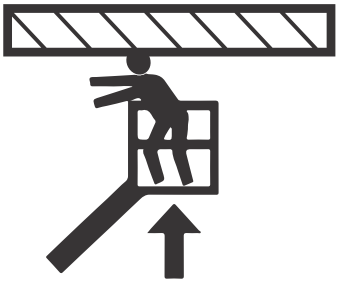

- During operation, keep all body parts inside platform railing.
- Use the boom functions, not the drive function, to position the platform close to obstacles.
- Always post a lookout when driving in areas where vision is obstructed.
- Keep non-operating personnel at least 6 ft (1.8 m) away from machine during all operations.

- Under all travel conditions, the operator must limit travel speed according to conditions of ground surface, congestion, visibility, slope, location of personnel, and other factors.
- Be aware of stopping distances in all drive speeds. When driving in high speed, reduce drive speed before stopping. Travel grades in low speed only.
- Do not use high speed drive in restricted or close quarters or when driving in reverse.
- Exercise extreme caution at all times to prevent obstacles from striking or interfering with operating controls and persons in the platform.
- Ensure that operators of other overhead and floor level machines are aware of the MEWP's presence. Disconnect power to overhead cranes. Barricade floor area if necessary.
- Do not operate over ground personnel. Warn personnel not to work, stand, or walk under a raised boom or platform. Position barricades on floor if necessary.

1.4 TOWING, LIFTING, AND HAULING

- Never allow personnel in platform while towing, lifting, or hauling.
- This machine should not be towed, except in the event of emergency, malfunction, power failure, or loading/unloading. Refer to the Emergency Procedures section of this manual for emergency towing procedures.
- Ensure boom is in the stowed position and, if equipped, the turntable locked prior to towing, lifting or hauling. The platform must be completely empty of tools.
- When lifting machine, lift only at designated areas of the machine. Lift the unit with equipment of adequate capacity.
- Refer to the Machine Operation section of this manual for lifting information.

1.5 MAINTENANCE

This sub-section contains general safety precautions which must be observed during maintenance of this machine. Additional precautions to be observed during machine maintenance are inserted at the appropriate points in this manual and in the Service and Maintenance Manual. It is of utmost importance that maintenance personnel pay strict attention to these precautions to avoid possible injury to personnel or damage to the machine or property. A maintenance program must be established by a qualified person and must be followed to ensure that the machine is safe.

1.5.1 Maintenance Hazards

- Shut off power to all controls and ensure that all moving parts are secured from inadvertent motion prior to performing any adjustments or repairs.

- Never work under an elevated platform until it has been fully lowered to the full down position, if possible, or otherwise supported and restrained from movement with appropriate safety props, blocking, or overhead supports.
- DO NOT attempt to repair or tighten any hydraulic hoses or fittings while the machine is powered on or when the hydraulic system is under pressure.
- Always relieve hydraulic pressure from all hydraulic circuits before loosening or removing hydraulic components.
- DO NOT use your hand to check for leaks. Use a piece of cardboard or paper to search for leaks. Wear gloves to help protect hands from spraying fluid.

- Use only replacement parts or components that are approved by JLG. To be considered approved, replacement parts or components must be identical or equivalent to original parts or components.
- Never attempt to move heavy parts without the aid of a mechanical device. Do not allow heavy objects to rest in an unstable position. Ensure adequate support is provided when raising components of the machine.
- Do not use machine as a ground for welding.
- When performing welding or metal cutting operations, precautions must be taken to protect the chassis from direct exposure to weld and metal cutting spatter.
- Do not refuel combustion engine-powered machines with the engine running.
- Use only approved non-flammable cleaning solvents.
- Do not replace items critical to stability, such as batteries or solid tires, with items of different weight or specification. Do not modify the MEWP in any way to affect stability.
- Refer to the Service & Maintenance Manual for the weights of critical stability items.

⚠ WARNING

Modification or alteration of a MEWP shall be made only with prior written permission from the manufacturer.

1.5.2 Battery Hazards

- Always disconnect batteries when servicing electrical components or when performing welding on the machine.
- Do not allow smoking, open flame, or sparks near battery during charging or servicing.
- Do not contact tools or other metal objects across the battery terminals.
- Always wear hand, eye, and face protection when servicing batteries. Ensure that battery acid does not come in contact with skin or clothing.

⚠ CAUTION

Battery fluid is highly corrosive. Avoid contact with skin and clothing at all times. Immediately rinse any contacted area with clean water and seek medical attention.

- Charge batteries only in a well ventilated area.
- Avoid overfilling the battery fluid level. Add distilled water to batteries only after the batteries are fully charged.

This Page is intentionally left blank

SECTION 2
User Responsibilities, Machine Preparation, and Inspection

2.1 PERSONNEL TRAINING

The Mobile Elevating Work Platform (MEWP) is a personnel handling device, so it is necessary that it be operated and maintained only by trained personnel.

2.1.1 Operator Training

Operator training must cover:

1. Reading and understanding the Operation and Safety Manual.
2. Thorough understanding of the intended purpose and function of the MEWP controls, including platform, ground, and emergency descent controls.
3. Control labels, instructions, and warnings on the machine.
4. Applicable regulations, standards, and safety rules.
5. Use of approved fall protection equipment.
6. Enough knowledge of the mechanical operation of the machine to recognize a malfunction or potential malfunction.
7. The safest means to operate the machine where overhead obstructions, other moving equipment, and obstacles, depressions, holes, and drop-offs exist.
8. Means to avoid the hazards of unprotected electrical conductors.
9. Selection of the appropriate MEWP and available options for the work to be performed considering specific job requirements, with involvement from the MEWP owner, user, and/ or supervisor.
10. The responsibility of the operator to ensure all platform occupants have a basic level of knowledge to work safely on the MEWP, and to inform them of applicable regulations, standards, and safety rules.
11. The requirement for familiarization in addition to training.

2.1.2 Training Supervision

Training must be delivered by a qualified person in an open area free of hazards until the trainee has demonstrated the ability to safely control and operate the machine.

2.1.3 Operator Responsibility

The operator must be instructed that they have the responsibility and authority to shut down the machine in case of a malfunction or other unsafe condition of either the machine or the job site.

2.1.4 Machine Familiarization

Note: Responsibilities for familiarization may vary by region.

Only properly trained personnel who have received unit-specific familiarization shall operate a MEWP. The user shall determine if personnel are qualified to operate the MEWP prior to operation. The user shall ensure that after familiarization, the operator operates the MEWP for a sufficient period of time to achieve proficiency. When authorized by the user, self-familiarization can be achieved, if authorized, by a properly trained operator reading, understanding and following the manufacturer's operator's manual.

Prior to user's authorization of an operator to use a specific model of MEWP, the user shall ensure the operator is familiarized on the following:

1. Location of the manual storage compartment and the requirement to ensure the required manual(s) are present on the MEWP;
2. Purpose and function of the machine controls and indicators at the platform and ground control stations;
3. Purpose, location, and function of the emergency controls;
4. Operating characteristics and limitations;
5. Features and devices;
6. Accessories and optional equipment.

2.2 PREPARATION, INSPECTION, AND MAINTENANCE

The following table covers machine inspections and maintenance required by JLG Industries, Inc. Consult local regulations for further requirements for MEWPs. The frequency of inspections and maintenance must be increased as necessary when the machine is used in a harsh or hostile environment, if the machine is used with increased frequency, or if the machine is used in a severe manner.

Table 3. Inspection and Maintenance Table

Type	Frequency	Primary Responsibility	Service Qualification	Reference
Pre-Start Inspection	Before using each day; or whenever there is an Operator change	User or Operator	User or Operator	Operation & Safety Manual
Pre-Delivery Inspection (See Note)	Before each sale, lease, or rental delivery	Owner, Dealer, or User	Qualified JLG Mechanic	Service & Maintenance Manual and applicable JLG inspection form
Frequent Inspection (See Note)	In service for 3 months or 150 hours, whichever comes first or Out of service for a period of more than 3 months or Purchased used	Owner, Dealer, or User	Qualified JLG Mechanic	Service & Maintenance Manual and applicable JLG inspection form
Annual Machine Inspection (See Note)	Annually, no later than 13 months from the date of prior inspection	Owner, Dealer, or User	Factory Trained Service Technician (Recommended)	Service & Maintenance Manual and applicable JLG inspection form
Preventive Maintenance	At intervals as specified in the Service & Maintenance Manual	Owner, Dealer, or User	Qualified JLG Mechanic	Service & Maintenance Manual
Note: Inspection forms are available from JLG. Use the Service & Maintenance Manual to perform inspections.				

NOTICE

JLG Industries, Inc. recognizes a factory trained service technician as a person who has successfully completed the JLG Service Training School for the specified JLG product model.

2.3 MACHINE COMPONENTS

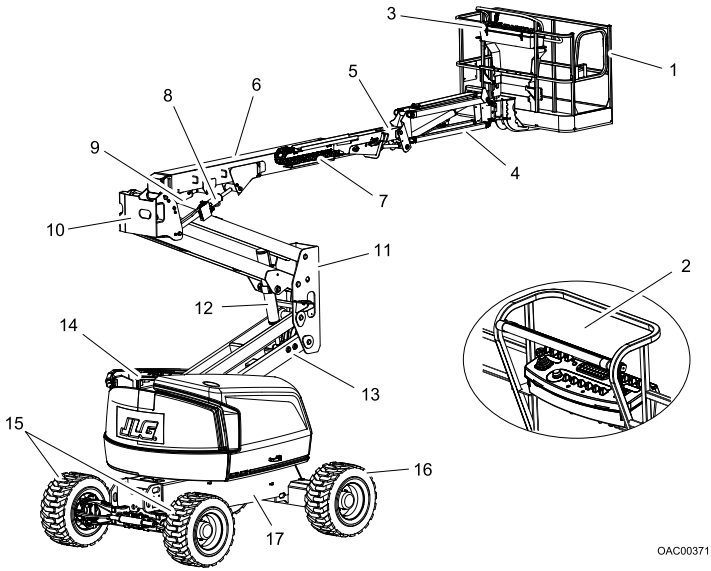

1. Platform
2. SkyGuard
3. Platform Control Console
4. Jib
5. Jib Cylinder
6. Base Boom Section
7. Fly Boom Section
8. Master Cylinder
9. Main Lift Cylinder
10. Upper Upright
11. Lower Upright
12. Tower Lift Cylinder
13. Tower Boom
14. Turntable
15. Front Steering Wheels
16. Rear Drive Wheels
17. Frame

2.4 PRE-START INSPECTION

The Pre-Start Inspection should include each of the following:

1. **Cleanliness** — Check all surfaces for leakage (oil or battery fluid) or foreign objects. Report any leakage to the proper maintenance personnel.

2. **Structure** — Inspect the machine structure for dents, damage, weld or parent metal cracks or other discrepancies.

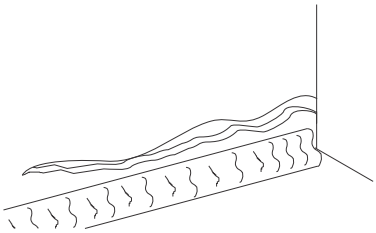

Figure 1. Parent Metal Crack

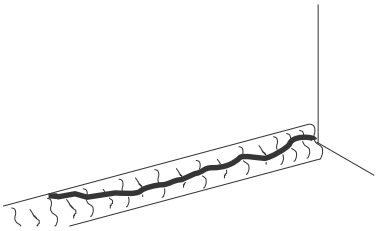

Figure 2. Weld Crack

3. **Decals and Placards** — Check all for cleanliness and legibility. Make sure none of the decals and placards are missing. Make sure all illegible decals and placards are cleaned or replaced.

4. **Operation and Safety Manuals** — Make sure a copy of the Operation and Safety Manual, AEM Safety Manual (ANSI markets only), and ANSI Manual of Responsibilities (ANSI markets only) is enclosed in the weather resistant storage container.

5. **Walk-Around Inspection** — Perform as instructed.

6. **Battery** — Charge as required.

7. **Hydraulic Oil** — Check the hydraulic oil level. Ensure hydraulic oil is added as required.

8. **Accessories/Attachments** — Refer to the Accessories section in this manual or accessory installed upon the machine for specific inspection, operation, and maintenance instructions.

9. **Function Check** — Once the Walk-Around Inspection is complete, perform a functional check of all systems in an area free of overhead and ground level obstructions. Refer to Section 4, Machine Operation for more specific instructions.

10. **Platform Gate** — Keep gate and surrounding area clean and unobstructed. Verify the gate closes properly and is not bent or damaged. Keep gate closed at all times except when entering/exiting the platform and loading/unloading materials.

11. **Lanyard Attach Points** — During operation, occupants in the platform must wear a full body harness with a lanyard attached to an authorized lanyard anchorage point. Attach only one (1) lanyard per lanyard anchorage point.

⚠ WARNING

If the machine does not operate properly, turn off the machine immediately! Report the problem to the proper maintenance personnel. Do not operate the machine until it is declared safe for operation.

2.5 WALK-AROUND INSPECTION

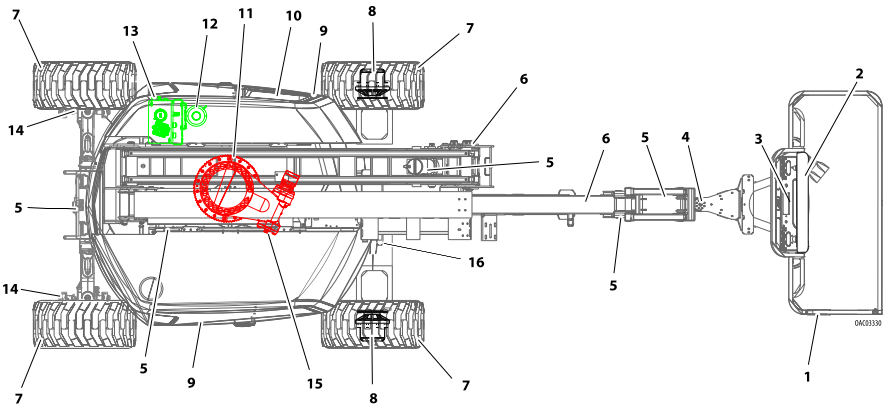

Begin the Walk-Around Inspection at Item 1, as noted on the diagram. Continue checking each item in sequence for the conditions listed in the following checklist.

⚠ WARNING

To avoid possible injury be sure machine power is off during Walk-Around Inspection. Do not operate machine until all malfunctions have been corrected.

NOTICE

Do not overlook visual inspection of chassis underside. Checking this area may result in discovery of conditions which could cause extensive machine damage.

INSPECTION NOTE: On all components, make sure there are no loose or missing parts, that they are securely fastened, and no visible damage, leaks or excessive wear exists in addition to any other criteria mentioned.

1. **Platform Assembly and Gate** - Footswitch works properly, not modified, disabled or blocked. Gate latches and hinges in working condition.

2. **SkyGuard** - See Inspection Note.

3. **Platform Control Console** - Switches and levers return to neutral when activated and released, decals/placards secure and legible, control markings legible.
4. **Platform Rotator** - See Inspection Note.
5. **All Hydraulic Cylinders** - No visible damage; pivot pins and hydraulic hoses undamaged, not leaking.
6. **Boom Sections/Uprights/Turntable** - See Inspection Note.
7. **Wheel/Tire Assemblies** - Properly secured, no missing lug nuts. Inspect for worn tread, cuts, tears or other discrepancies. Inspect wheels for damage and corrosion.
8. **Drive Motor, Brake, and Hub** - No evidence of leakage.
9. **Hood Assemblies** - See Inspection Note.
10. **Ground Control Console** - Switches and levers return to neutral when activated and released, decals/placards secure and legible, control markings legible.
11. **Turntable Bearing** - Evidence of proper lubrication. No evidence of loose bolts or looseness between bearing and machine.
12. **Hydraulic Pump** - See Inspection Note.
13. **Hydraulic Reservoir** - See Inspection Note.
14. **Tie Rod Ends and Steering Spindles** - See Inspection Note.
15. **Swing Motor and Worm Gear** - No evidence of damage.
16. **Battery** - Batteries should not be damaged; cables tight; no visible damage or corrosion.

2.6 FUNCTION CHECK

⚠ WARNING

To avoid serious injury, do not operate machine if any control levers or toggle switches controlling platform movements do not return to the off position when released.

⚠ WARNING

To avoid a collision and injury if platform does not stop when a control switch or lever is released, remove foot from footswitch or use emergency stop to stop machine.

2.6.1 Prior to Function Check

Prior to performing the function check, verify the battery disconnect on the side of the frame works properly by doing the following.

1. Position the Platform/Ground Select switch to the ground position.

2. Pull out the Power/Emergency Stop Switch on the ground console to power up the machine.

3. Turn the Battery Disconnect Switch to the Off position.

4. Watch the Display Gauge on the Ground Control Console to verify the power is disconnected.

Note: If the Platform/Ground Select switch is in the Platform position, it will take approximately 10 seconds for the Control System power to be shut down.

5. If the power shuts down properly, turn the Battery Disconnect Switch back to the On position. Look at the display to verify the power has been turned back on and resume the Function Check. If the power did not shut down or turn on properly, Report the problem to the proper maintenance personnel. Do not operate the machine until it is declared safe for operation.

2.6.2 Function check Steps

Perform the Function Check as follows:

1. From the ground control console with no load in the platform:
   a. Ensure that all machine functions are disabled when the Emergency Stop Button is pushed in.
   b. Ensure all functions stop when the function switch is released.
   c. Operate all functions and ensure proper operation;
   d. Ensure proper operation of the manual descent controls, as described in *Section — Machine Operation* of this manual.
2. From the platform control console:
   a. Ensure that the control console is firmly secured in the proper location
   b. Check that all guards protecting the switches or locks are in place.
   c. Ensure that all machine functions are disabled when the Emergency Stop Button is pushed in.
   d. Ensure that all machine functions stop when the footswitch is released.
   e. Operate all functions and ensure proper operation.
3. With the platform in the stowed position:
   a. Drive the machine on a grade, not to exceed the rated gradeability, and stop to ensure the brakes hold.
   b. Ensure the tilt indicator is illuminated to ensure proper operation.
4. Swing the boom over either of the rear tires and ensure that the Drive Orientation indicator illuminates and that the Drive Orientation Override switch must be used for the drive function to operate.
5. With the machine positioned on a smooth, firm surface within the limits of the maximum operating slope, elevate the boom 5 degrees or greater above horizontal. Select high speed drive mode. Carefully attempt to drive and ensure the drive speed is reduced.

2.7 OSCILLATING AXLE LOCKOUT TEST

NOTICE

Lockout system test must be performed quarterly, any time a system component is replaced, or when improper system operation is suspected.

Note: Ensure boom is fully retracted, lowered, and centered between drive wheels prior to beginning lockout cylinder test.

1. Place a 6 in (15.2 cm) high block with ascension ramp in front of left front wheel.

2. From platform control station, start machine.
3. Place Drive control lever to the forward position and carefully drive machine up ascension ramp until left front wheel is on top of block.
4. Carefully activate Swing control lever and position boom over right side of machine or raise the main boom enough to get it out of the transport position.
5. Place Drive control lever to Reverse and drive machine off of block and ramp.
6. Have an assistant check to see that left front or right rear wheel remains elevated in position off of ground.
7. Carefully activate Swing control lever and return boom to stowed position (centered between drive wheels). When boom reaches center, stowed position, lockout cylinders should release and allow wheel to rest on ground. It may be necessary to activate Drive to release cylinders.
8. Place the 6 in (15.2 cm) high block with ascension ramp in front of right front wheel.
9. Place Drive control lever to Forward and carefully drive machine up ascension ramp until right front wheel is on top of block.
10. Carefully activate Swing control lever and return boom to stowed position (centered between rear wheels). When boom reaches center, stowed position, lockout cylinders should release and allow wheel to rest on ground, it may be necessary activate Drive to release cylinders.
11. Repeat steps 4 - 7 to check the opposite side of the oscillating axle.
12. If lockout cylinders do not function properly, have qualified personnel correct the malfunction prior to any further operation.

2.8 SKYGUARD® FUNCTION TEST

Note: Refer to *Section — SkyGuard Operation* for additional information on SkyGuard operation.

From the Platform Console in an area free from obstructions:

1. Operate the telescope out function.
2. Activate the SkyGuard sensor:
   a. **SkyGuard** — Apply approximately 50 lb (222 Nm) of force to yellow bar.
   b. **SkyGuard SkyLine®** — Press rod to break connection between the rod and the right bracket.
   c. **SkyGuard SkyEye®** — Put arm or hand in path of sensor beam.
3. Once the sensor has been activated, verify the following conditions:
   a. Telescope out function stops and telescope in function operates for a short duration.
   b. The horn sounds.
   c. If equipped with SkyGuard beacon, the beacon illuminates.

Note: If SkyGuard is enabled with the Soft Touch system, functions will cut out instead of reversing.

4. Disengage the SkyGuard sensor, release controls, then recycle the foot switch. Ensure normal operation is available.

Note: On machines equipped with SkyLine, reattach the rod to the right bracket.

If SkyGuard remains activated after function reversal or cutout, press and hold the SkyGuard Override Switch to allow normal use of machine functions until the sensor is disengaged.

This Page is intentionally left blank

SECTION 3
Machine Controls and Indicators

3.1 GENERAL

NOTICE

The manufacturer has no direct control over machine application and operation. The user and operator are responsible for conforming with good safety practices.

This section provides the necessary information needed to understand control functions.

3.2 CONTROLS AND INDICATORS

Note: The indicator panels use different shaped symbols to alert the operator to different types of operational situations that could arise. The meaning of those symbols are explained below.

Indicates a potentially hazardous situation, which if not corrected, could result in serious injury or death. This indicator will be red.

Indicates an abnormal operating condition, which if not corrected, may result in machine interruption or damage. This indicator will be yellow.

Indicates important information regarding the operating condition, i.e. procedures essential for safe operation. This indicator will be green with the exception of the capacity indicator which will be yellow.

3.3 GROUND CONTROL STATION

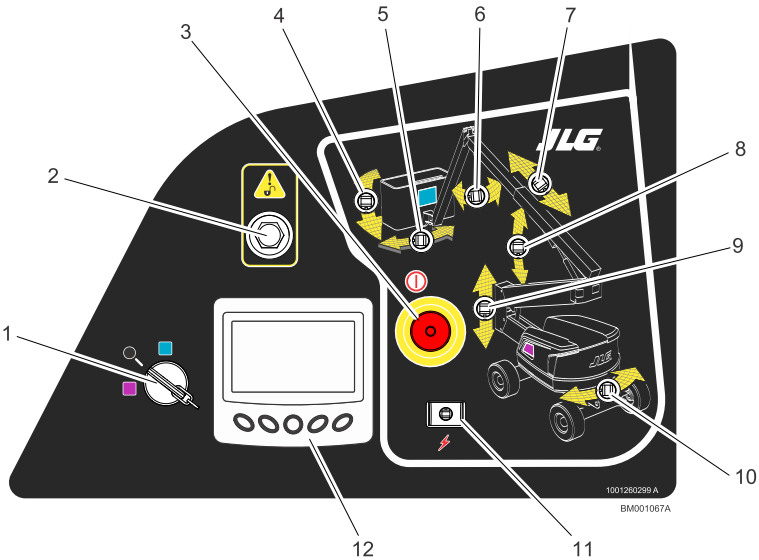

Ground Control Station with MSSO and Multifunction Display

1. Platform / Ground Select Switch
2. Machine Safety System Override (MSSO)
3. Power / Emergency Stop
4. Platform Level
5. Platform Rotate
6. Jib Lift
7. Main Boom Telescope
8. Main Boom Lift
9. Tower Boom Lift
10. Swing
11. Auxiliary Descent Enable
12. Multifunction Display

3.3.1 Ground Control Station Functions

⚠ WARNING

When operating the boom ensure there are no personnel around or under platform.

⚠ WARNING

To avoid serious injury, do not operate machine if any control levers or toggle switches controlling platform movement do not return to the off or neutral position when released.

⚠ CAUTION

When the machine is shut down the power / emergency stop switch must be positioned to the off position to prevent draining the batteries.

Note: When machine is shut down the Platform / Ground Select switch and Emergency Stop must be positioned to Off.
To operate machine from the platform, the Platform / Ground Select switch must be turned to the blue square.
To operate the machine from the ground, the Platform / Ground Select switch must be turned to the purple square.

Auxiliary Descent Enable
To use auxiliary descent enable, the switch must be held down for the duration of function use.

Jib Lift
Provides raising and lowering of the jib.

Machine Safety System Override (MSSO) (If Equipped)
Provides emergency override of function controls that are locked out in the event of Load Sense System activation.

Main Boom Lift
Provides raising and lowering of the main boom.

Main Boom Telescope
Provides extension and retraction of the main boom.

Multifunction Display
Displays multiple functions depending on the options chosen. Provides information on battery charge status, time left on battery charge, history of battery charge, and displays fault codes.

Platform Leveling Override
A three position switch allows the operator to adjust the automatic self leveling system. This switch is used to adjust platform level in situations such as ascending / descending a grade.

⚠ WARNING

Only use the platform leveling override function for slight leveling of the platform. Incorrect use could cause the load/occupant to shift or fall. Failure to do so could result in death or serious injury.

Platform Rotate
Provides rotation of the platform.

Platform / Ground Select Switch
The three position, key operated switch supplies power to the platform control console when positioned to Platform. With the switch key turned to the Ground position only ground controls are operable.

Note: When the Platform/Ground Select Switch is in the center position, power is shut off to the controls at both operating stations. Remove the key to prevent the controls from being actuated.

Power / Emergency Stop Switch
A two-position red mushroom shaped switch supplies power to Platform/ Ground Select switch when pulled out (On position). When pushed in (Off position), power is shut off to the Platform / Ground Select switch.

Note: When the Platform / Ground Select Switch is in the center position, power is shut off to the controls at both operating consoles. Remove the key to prevent the controls from being actuated.

NOTICE

Always position emergency stop switch to the Off position (pushed in) when machine is not in use.

Swing
Provides 355 degrees non-continuous turntable rotation.

Tower Boom Lift
This switch provides raising and lowering of the tower boom.

3.4 MULTIFUNCTION DISPLAY

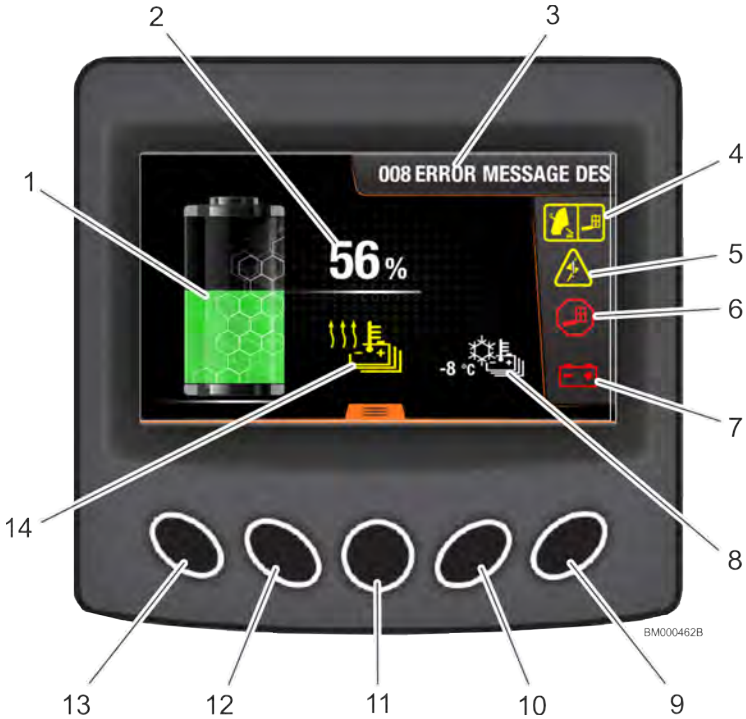

1. Battery Charge
2. State of Charge Percentage
3. Scrolling DTC Messages
4. Capacity Zone Indicator
5. System Distress
6. Platform Overload
7. Low Voltage Warning
8. Battery Temperature
9. Scroll Page Right Button
10. Right Navigation Button
11. Menu Select Button
12. Left Navigation Button
13. Scroll Page Left Button
14. Battery Heater

3.4.1 Multifunction Display Functions

Battery Charge
Indicates the current state-of-charge of the battery pack

Note: While charging, white hexagons will sequence up the indicator.

Battery Heater
The indicator will illuminate when the battery heater is active.

Battery Temperature
Indicates the current temperature of the battery pack in Fahrenheit or Celsius.

Battery Timer
Displays the remaining battery capacity left on current state of charge.

Note: If machine is in charging phase, displays time remaining until bulk and equalization charge phases are complete

Capacity Zone Indicator
Indicates the platform capacity zone for the current position of the platform.

Low Voltage Warning
This indicator will illuminate when the 12V system voltage is low.

Menu Select Button
Allows the operator to open the menu screen.

Navigation Buttons

Left Navigation Button: Allows the operator to scroll down or left according to the available option on the screen.

Right Navigation Button: Allows the operator to scroll up or right according to the available option on the screen.

Platform Overload
Indicates the platform has been overloaded.

Scroll Page Buttons
If available, will allow operator to scroll the screen left or scroll right to the next screen.

Scrolling DTC Messages
If DTCs are present, they will scroll across the top right of the display from left to right.

State of Charge Percentage
Displays the current state of charge of the battery pack in a percentage.

System Distress
The light indicates that the JLG Control System has detected an abnormal condition and a Diagnostic Trouble Code has been set in the system memory. Refer to the Service Manual for instructions concerning trouble codes and trouble code retrieval.
The system distress indicator light will illuminate for 2-3 seconds when the key is positioned to the on position to act as a self test.

3.4.2 Navigating the Multifunction Display

BM000463B

1. At machine start up a display reminding the user to engage the main contactor will be displayed.

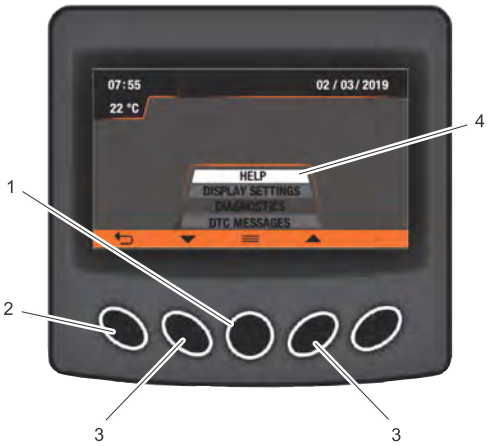

BM00046

2. To view the menu, press the Menu Select button (**1**) which will bring up the Menu Screen.

3. Use the Right and Left Navigation buttons (**3**) to move through the menu items. When the option you wish to view is highlighted (**4**), press the Menu Select button (**1**).

4. To return to the Home Screen, press the Left Scroll Page button (**2**).

5. Use the Scroll Page Left and Right Navigation buttons (**3**) to cycle through the different pages of your selection.

6. The page icon (**5**) will inform what page is currently being viewed.

7. To return to the Home Screen, press the Left Scroll Page button (**2**).

3.5 PLATFORM CONTROL STATION

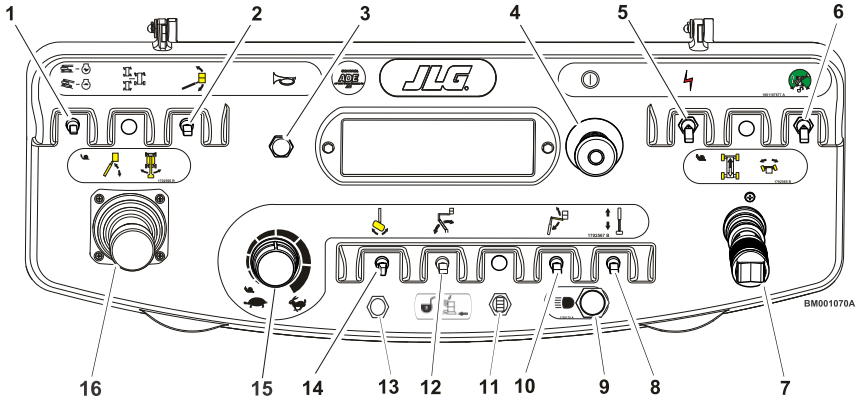

1. Maximum Speed / Reduced Speed
2. Platform Leveling Override
3. Horn
4. Power / Emergency Stop
5. Auxiliary Descent
6. Drive Orientation Override
7. Drive / Steer
8. Telescope
9. Lights
10. Jib Lift
11. SkyGuard Override
12. Tower Boom Lift
13. SkyGuard Indicator
14. Platform Rotate
15. Function Speed Control
16. Main Lift / Swing Controller

3.5.1 Platform Control Station Functions

⚠ WARNING

To avoid serious injury, do not operate machine if any control levers or toggle switches controlling platform movement do not return to the off or neutral position when released.

⚠ WARNING

Only use the platform leveling override function for slight leveling of the platform. Incorrect use could cause the load/occupants to shift or fall. Failure to do so could result in death or serious injury.

Auxiliary Descent Enable
To use auxiliary descent enable, the switch must be held down for the duration of function use.

Drive Orientation Override
When the boom is swung over the rear tires or further in either direction, the Drive Orientation indicator will illuminate when the drive function is selected. Push and release the switch, and within 3 seconds move the Drive/ Steer control to activate drive or steer. Before driving, locate the black/ white orientation arrows on both the chassis and the platform controls and match the control direction arrow to the intended direction of travel.

Note: To operate the Drive joystick, pull up on the locking ring below the handle.

Note: The Drive joystick is spring loaded and will automatically return to neutral (Off) position when released.

Drive / Steer
Push forward to drive forward, pull back to drive in reverse. Steering is accomplished via a thumb-activated rocker switch on the end of the Drive joystick.

Function Speed Control
This control affects the speed of telescope, tower lift and jib lift. Turning the knob all the way counterclockwise until it clicks puts drive, main lift, and swing into creep mode.

Note: During platform rotation, a speed difference may not be noticeable to the operator.

Turning the knob all the way counterclockwise until it clicks puts the machine into Creep Mode. Creep Mode puts the functions listed above, as well as Drive/Steer and Main Lift/ Swing functions into the slowest speed setting.

Note: To operate the Main Boom Lift/Swing joystick, pull up on the locking ring below the handle.

Note: The Main Boom Lift/Swing joystick is spring loaded and will automatically return to neutral (Off) position when released.

Horn
A push-type Horn switch supplies electrical power to an audible warning device when pressed.

Jib Lift
Provides for raising and lowering of the jib.

Lights (If Equipped)
This switch operates the accessory lights package if the machine is so equipped.

Main Lift / Swing Controller
Provides main lift and swing. Push forward to lift up, pull backward to boom down. Move right to swing right, move left to swing left.

Maximum Speed / Reduced Speed
The machine has a two position switch — The forward position gives maximum drive speed. The back position gives maximum torque for rough terrain and climbing grades.

Platform Level Override
A three position switch allows the operator to adjust the automatic self leveling system. This switch is used to adjust platform level in situations such as ascending/descending a grade.

Platform Rotate
Provides rotation of the platform.

Power / Emergency Stop
A two-position red mushroom shaped switch furnishes power to Platform Controls when pulled out (On). When pushed in (Off), power is shut off to the platform functions.

SkyGuard Indicator
Indicates the SkyGuard sensor has been activated. All controls are cut out until the override button is pushed.

SkyGuard Override
The SkyGuard override switch enables functions cut out by the SkyGuard system to be operated again, allowing the operator to resume use of machine functions.

Telescope
Provides extension and retraction of the main boom.

Tower Boom Lift
Provides for raising and lowering of the tower boom.

3.6 PLATFORM CONTROL INDICATOR PANEL

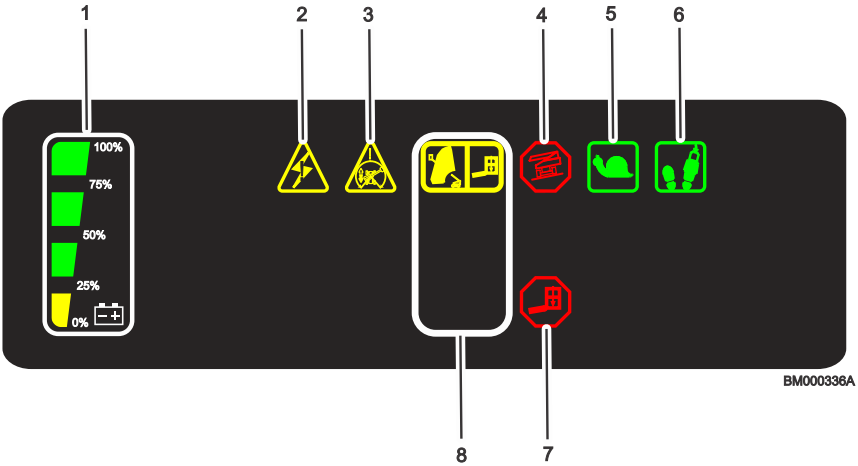

1. Battery Charge Level
2. System Distress
3. Drive Orientation
4. Tilt alarm / Warning
5. Creep Speed
6. Footswitch Enable
7. Platform Overload
8. Capacity Zone Indicator

3.6.1 Platform Control Indicator Panel Functions

Battery Charge Level
Indicates the state-of-charge of the battery pack.

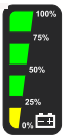

Capacity Zone Indicator
Indicates the maximum platform capacity zone for the current position of the platform. Restricted capacities are permitted at restricted platform positions (shorter boom lengths and higher boom angles).

Creep Speed
When the Function Speed Control is turned to the creep position, the indicator acts as a reminder that all functions are set to the slowest speed.

Drive Orientation
When the boom is swung beyond the rear drive tires or further in either direction, the Drive Orientation indicator will illuminate when the drive function is selected. This is a signal for the operator to verify that the drive control is being operated in the proper direction (i.e., controls reversed situations).

Footswitch Enable
To operate any function, the footswitch must be pressed down and the function selected within seven seconds. The enable indicator shows that the controls are enabled. If a function is not selected within seven seconds, or if a seven second lapse between ending one function and beginning the next function, the enable light will go out and the footswitch must be released and pressed again to enable the controls.
Releasing the footswitch removes power from all controls and stops all functions.

⚠ WARNING

To avoid serious injury, do not remove, modify, or disable the footswitch by blocking or any other means.

Platform Overload
Indicates the platform has been overloaded.

System Distress
The light indicates that the JLG Control System has detected an abnormal condition and a Diagnostic Trouble Code has been set in the system memory. Refer to the Service Manual for instructions concerning the trouble codes and trouble code retrieval.
The system distress indicator light will illuminate for 2-3 seconds when the key is positioned to the On position to act as a self test.

Tilt Warning Light and Alarm
This red illuminator indicates that the chassis is on a slope. If the boom is above horizontal and the machine is on a slope, the tilt alarm warning light will illuminate, an alarm will sound, available functions are placed in Creep speed, and drive is cut out in direction of travel. Drive in the opposite direction may be allowed under certain conditions.

Tilt Angle	Market
5°	All Markets

⚠ WARNING

If tilt warning light is illuminated when boom is raised or extended, retract and lower to below horizontal then reposition machine so that it is within the limits of the maximum operating slope before extending boom or raising boom above horizontal.

SECTION 4
Machine Operation

4.1 GENERAL

This machine is a Mobile Elevating Work Platform (MEWP) used to position personnel, along with their necessary tools and materials at work locations.

The primary operator control station is in the platform. From this control station, the operator can drive and steer the machine in both forward and reverse directions. The operator can raise or lower the main or tower boom or swing the boom to the left or right.

Standard boom swing is 355° non-continuous left and right of the stowed position. The machine has a Ground Control Station which will override the Platform Control Station. Ground Controls operate all functions except drive and steer. Except for performing inspections and the Function Check, the ground controls are to be used in an emergency to lower the platform to the ground should the operator in the platform be unable to do so.

4.2 OPERATING CHARACTERISTICS AND LIMITATIONS

4.2.1 Operating Conditions

The boom can be raised above horizontal with or without any load in platform, if:

1. Machine is positioned on a smooth, firm surface within the limits of the maximum operating slope.
2. Load is within manufacturer's rated capacity.
3. All machine systems are functioning properly.
4. Machine is as originally equipped from JLG.

4.2.2 Platform Load Sensing System (LSS)

The Platform Load Sensing System (LSS) measures platform load from a sensor in the platform support.

If the LSS senses an overload condition, the overload alarm will sound, the overload indicator will light up at both the platform control and the ground control stations, and all boom functions will be disabled. To regain boom control, reduce the load in the platform to not exceed the rated workload indicated on the capacity decal. If unable to resolve the overload condition, auxiliary power may be used to return the platform to a safe working condition. See Emergency Operation section.

4.3 STABILITY

Machine stability is based on two (2) conditions which are called Forward and Backward stability. The machine's position of least Forward stability and its position of least Backward stability are shown below.

⚠ WARNING

To avoid forward or backward tipping, do not overload machine or operate the machine beyond the limit of the maximum operating slope.

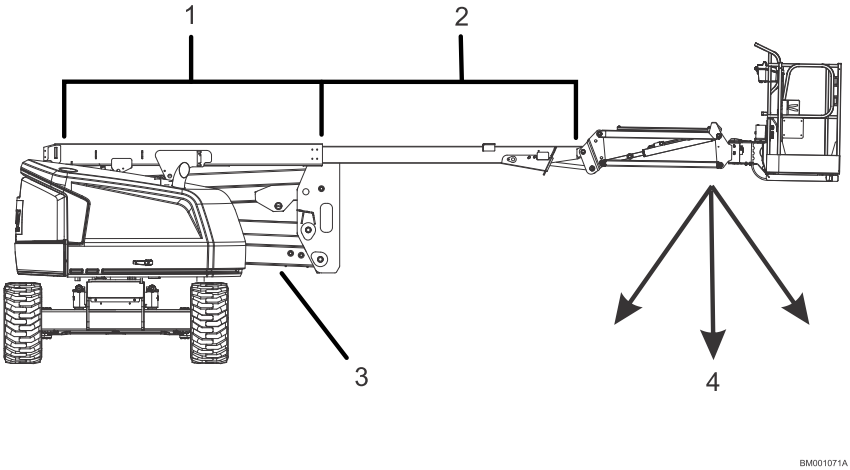

Figure 3. Position of Least Forward Stability

1. Main boom is horizontal.
2. Telescope is fully extended.
3. Tower boom in the stowed position.
4. Machine will tip over in the direction if overloaded or operated beyond the limits of the maximum operating slope.

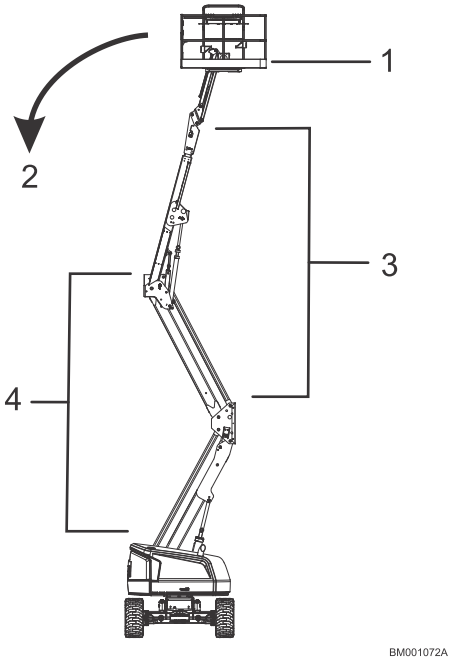

Figure 4. Position of Least Backward Stability

1. Platform rotated 90°.

2. Machine will tip over in the direction if overloaded or operated beyond the limits of the maximum operating slope.

3. Main boom fully elevated and telescope fully retracted.

3. Tower boom fully elevated.

4.4 MOTOR OPERATION

4.4.1 Power/Emergency Stop

This red mushroom-shaped switch provides battery power to the Platform/Ground Select switch when pulled out (On) for all machine functions. The switch should be pushed in (Off) when recharging the batteries or parking the machine overnight.

4.4.2 Platform/Ground Select Switch

The Platform/Ground Select switch functions to direct battery power to the desired control station when the Power/Emergency Stop switch is pulled out (On). With the switch in the Ground position, battery power is supplied to the ground control station. When the switch is in the Platform position, battery power is supplied to the platform control station.

4.4.3 Motor Activation

NOTICE

Footswitch must be depressed prior to activating any function, otherwise function will not operate.

The motor becomes activated and operates the desired function when the Emergency Stop switch is pulled out (On), the Platform/ Ground select switch is in the appropriate position and the footswitch is depressed.

⚠ CAUTION

If a motor malfunction necessitates unscheduled shutdown, determine and correct cause before resuming any operation.

NOTICE

Always position emergency stop switch to the Off position (pushed in) when machine is not in use.

4.5 TRAVELING (DRIVING)

Note: When the main boom is raised approximately 5 degrees above horizontal, the high drive function will automatically be in low drive.

⚠ WARNING

Do not drive with boom above horizontal except on a smooth, firm surface within the limits of the maximum operating slope.

⚠ WARNING

Do not drive on side slopes which exceed 5 degrees.

To avoid loss of travel control or tip over, do not drive machine on grades exceeding those specified in the operating specifications section of this manual.

⚠ WARNING

Use extreme caution when driving in reverse and at all times when the platform is elevated.

Before driving, locate the black/white orientation arrows on both the chassis and the platform controls. Move the drive controls in a direction matching the directional arrows for the intended direction of travel.

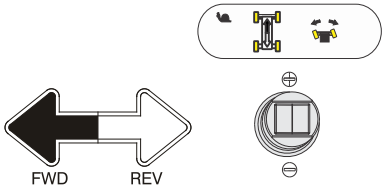

4.5.1 Traveling Forward and Reverse

1. At Platform Controls, pull out Emergency Stop switch, start the machine, and activate footswitch.

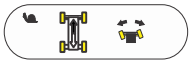

2. Position Drive controller to Forward or Reverse as desired.

This machine is equipped with a Drive Orientation Indicator. The yellow light on the platform control console indicates the boom is swung beyond the rear drive tires and the machine may Drive/Steer in the opposite direction from the movement of the controls. If the indicator is illuminated, operate the Drive function in the following manner:

1. Match the black and white direction arrows on both platform control panel and the chassis to determine the direction the machine will travel.

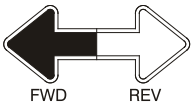

2. Push and release the Drive Orientation Override switch. Within 3 seconds, slowly move the Drive control toward the arrow matching the intended direction of machine travel. The indicator light will flash during the 3 second interval until the drive function is selected.

4.6 TRAVELING (GRADE/SIDE SLOPE)

Note: Refer to the Operating Specifications table for gradeability and side slope ratings.

All ratings for gradeability and side slope are based upon the machine's boom being in the stowed position, fully lowered, and retracted.

Traveling is limited by two factors:

1. Gradeability, which is the percent of grade of the incline the machine can climb.
2. Side slope, which is the angle of the slope the machine can be driven across.

4.6.1 Traveling on a Grade

When traveling a grade, maximum braking and traction are obtained with the boom stowed, in position over the rear (drive) axle, and in line with the direction of travel. Drive the machine forward when climbing a grade, and in reverse when descending a grade. Do not exceed the machine's maximum rated gradeability.

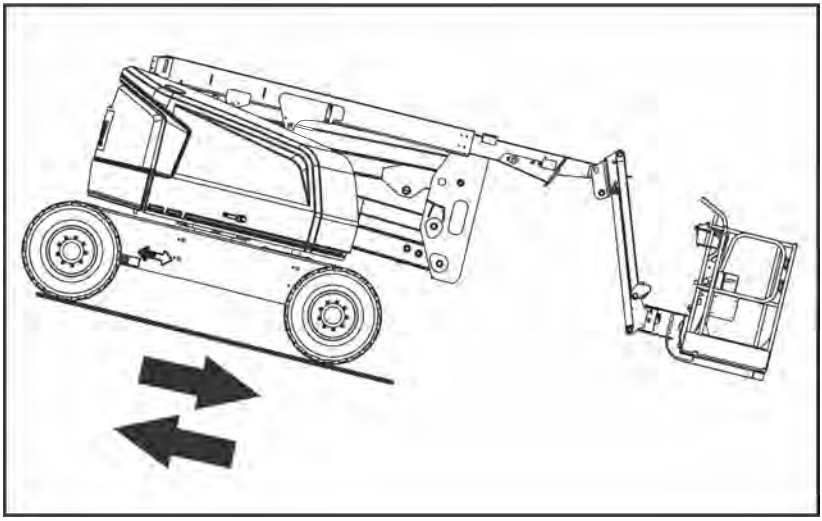

Figure 5. Traveling on a Grade

NOTICE

If the boom is over the front (steer) axle, direction of steer and drive movement will be opposite from the movement of the controls.

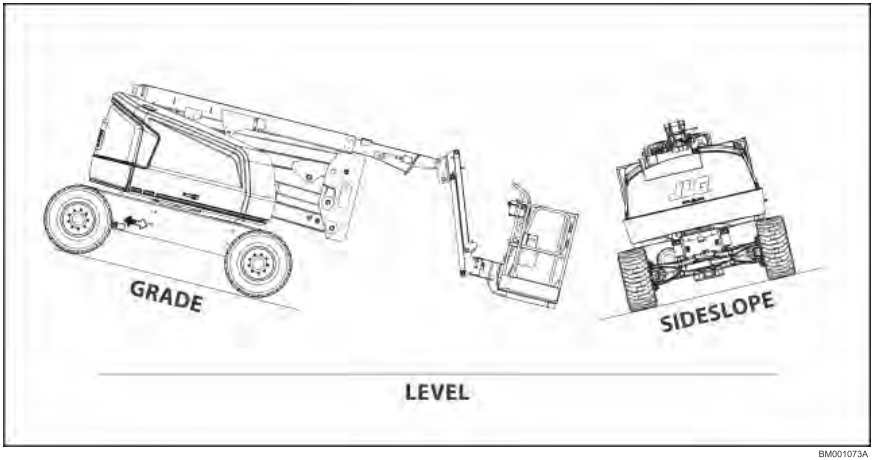

Figure 6. Grade and Side Slope

4.7 STEERING

Press footswitch. Position thumb switch on Drive/Steer controller to Right for steering right, or to Left for steering left.

4.8 PLATFORM

4.8.1 Platform Level Adjustment

⚠ WARNING

Only use the platform leveling override function for slight leveling of the platform. Incorrect use could cause the load/occupants to shift or fall. Failure to do so could result in death or serious injury.

To Level Up or Down - Position the Platform/Level control switch Up or Down and hold until the platform is level.

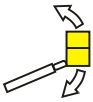

4.8.2 Platform Rotation

To rotate the platform to the left or right, use the Platform Rotate control switch to select the direction.

4.9 BOOM

⚠ WARNING

A red tilt warning light is located on the platform control indicator panel which lights when the chassis is on an excessive slope. Do not swing or raise boom above horizontal when indicator is lit.

Do not depend on the tilt warning light as a level indicator for the chassis. Tilt alarm indicates chassis is on an excessive slope (5 degrees or greater). Chassis must be positioned within the allowable operating slope before swinging or raising boom above horizontal or driving with the boom elevated.

To avoid tip over, if red tilt warning indicator lights when the boom is raised above horizontal, lower platform to ground level. Then reposition machine so that chassis is within the allowable operating slope before raising boom.

If the platform does not stop when a control switch or lever is released, remove foot from footswitch or use emergency stop switch to stop the machine.

Traveling with the boom below horizontal is permitted on grades and side slopes specified in the operating specifications section of this manual.

To avoid serious injury, do not operate machinery if any control lever or toggle switch controlling platform movement does not return to the Off or Neutral position when released.

⚠ CAUTION

To avoid a collision and injury if platform does not stop when a control switch or lever is released, remove foot from footswitch or use emergency stop switch to stop the machine.

4.9.1 Swinging the Boom

To swing boom, use Swing control to select Right or Left direction.

NOTICE

When swinging the boom make sure there is ample room for the boom to clear surrounding walls, partitions and equipment.

4.9.2 Raising and Lowering the Tower Boom

To raise or lower the Tower Boom, with footswitch activated, position Tower Boom Lift switch to Up or Down until the desired height is reached.

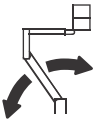

4.9.3 Raising and Lowering the Main Boom

To raise or lower the Main Boom, position the Main Boom Lift switch to Up or Down until the desired height is reached.

4.9.4 Telescoping the Main Boom

To extend or retract the main boom, use the Main Telescope Control Switch to select In or Out movement.

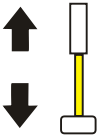

4.10 FUNCTION SPEED CONTROL

This control affects the speed of Telescope, Tower Boom Lift, Jib Lift, and Platform Rotate functions.

Note: During platform rotation, a speed difference may not be noticeable to the operator.

Turning the knob all the way counterclockwise until it clicks puts the machine into Creep Mode. Creep Mode puts the functions listed above, as well as the Drive/Steer and Main Lift/Swing functions into the slowest speed setting.

4.11 USB CHARGING PORT

The machine is equipped with a USB charging port for the operator.

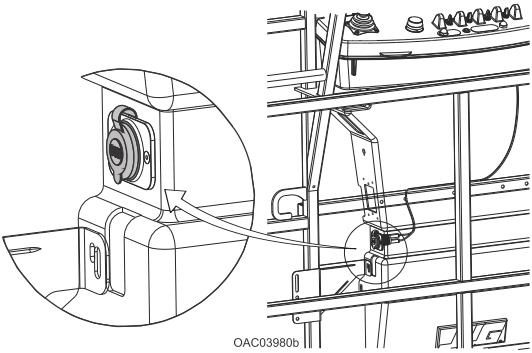

4.12 MACHINE SAFETY SYSTEM OVERRIDE (MSSO) (IF EQUIPPED)

The Machine Safety System Override (MSSO) is used to override function controls for Emergency Platform Retrieval only. Refer to Emergency Procedures Section for Machine Safety System Override operating procedures (if equipped).

4.13 SKYGUARD OPERATION

SkyGuard provides enhanced control panel protection. When the SkyGuard sensor is activated, functions in use at the time of actuation will reverse or cutout. The SkyGuard Function Table provides more details on these functions.

During activation, the horn will sound and the SkyGuard beacon (if equipped) will illuminate until sensor and footswitch are disengaged.

If the SkyGuard sensor remains activated after function reversal or cutout, press and hold the SkyGuard Override Switch to allow normal functions until the sensor is disengaged.

Consult the following illustrations to determine which type of SkyGuard the machine has and how it is activated. Regardless of type, SkyGuard function according to the SkyGuard Function Table does not change.

4.13.1 SkyGuard

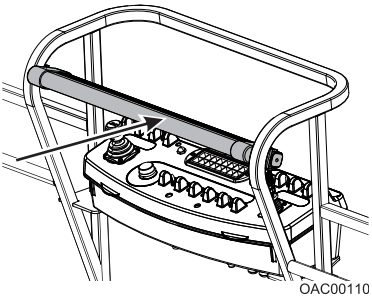

Approximately 50 lb (222 Nm) of force is applied to yellow bar.

4.13.2 SkyGuard - SkyLine

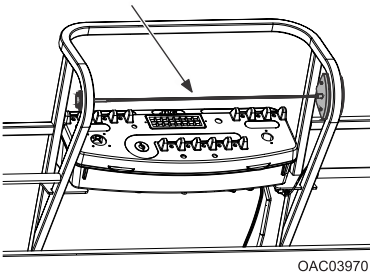

Rod is pressed, breaking the connection between the rod and right bracket.

4.13.3 SkyGuard - SkyEye

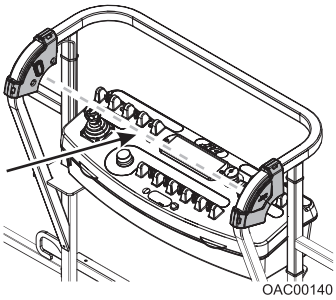

Operator passes through path of sensor beam.

4.13.4 SkyGuard Function Table

Drive Forward	Drive Reverse	Steer	Swing	Tower Lift Up	Tower Tele Out	Tower Lift Down	Tower Tele In	Boom Lift Up	Boom Lift Down	Boom Tele Out	Boom Tele In	Jib Lift	Basket Level	Basket Rotate
R * / C **	R	C	R	R	C	C	C	R	R	R	C	C	C	C

R = Indicates Reversal is Activated

C = Indicates Cutout is Activated

* DOS (Drive Orientation System) Enabled

* * DOS Not Enabled, machine is driving straight without steering, and any other hydraulic function is active

Note: If SkyGuard is enabled with the Soft Touch system, functions will cut out instead of reversing.

4.14 BATTERY CHARGING

4.14.1 General Battery Charging Information

- Only plug the charger into a properly grounded outlet.
- Do not use ground adapters or modify plug. Do not touch non-insulated portion of output connector or non-insulated battery terminal.
- Always disconnect the AC supply before making or breaking the connections to the battery.
- Do not open or disassemble charger.
- Do not operate charger if the AC supply cord is damaged or if the charger has been damaged in any way.
- Do not puncture of physically damage the battery casing, circuit boards, battery cells, or any other part of the battery mechanism.

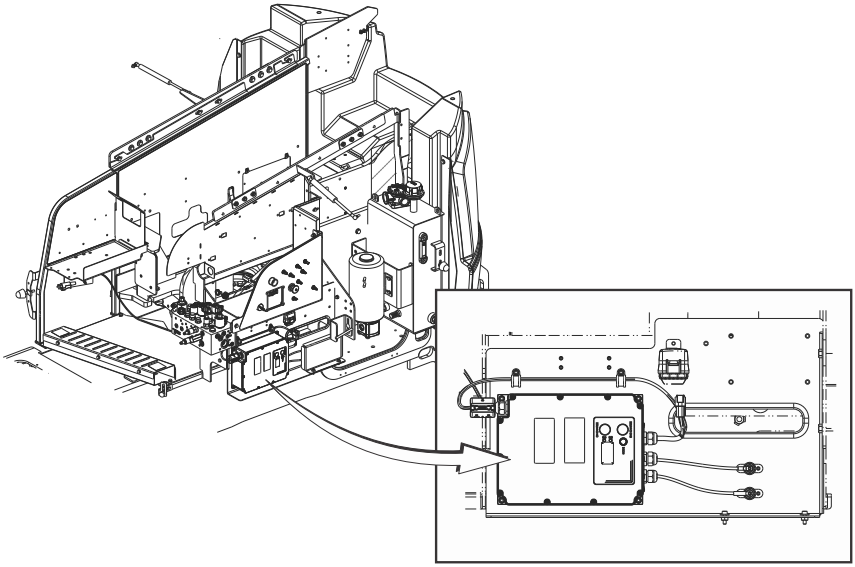

BM001075B

4.14.2 Battery Charging — Daily

The machine has a built-in battery charger. To activate this feature connect the machine to an appropriately grounded AC receptacle. Verify the battery disconnect switch is on. The charger will start automatically.

There is a second external LED indicator which mirrors the LEDs on the main charger unit.

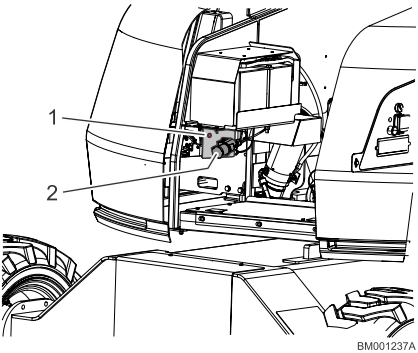

Figure 7. External LED Charger Indicator

1. LED Charger Indicator
2. AC Charge Socket

4.14.3 Battery Locations

The machine has 2 battery options available. It may be outfitted with a 10 kWh and 20 kWh capacity battery option.

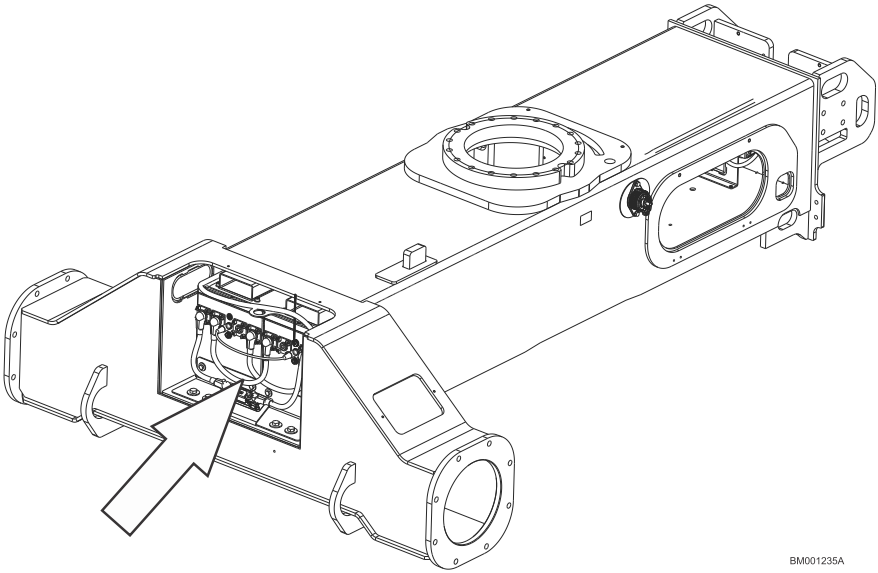

Figure 8. Batteries Location

Batteries are located in the battery assembly located in the frame. The images below show the layout of the 10 kWh and 20 kWh capacity battery options.

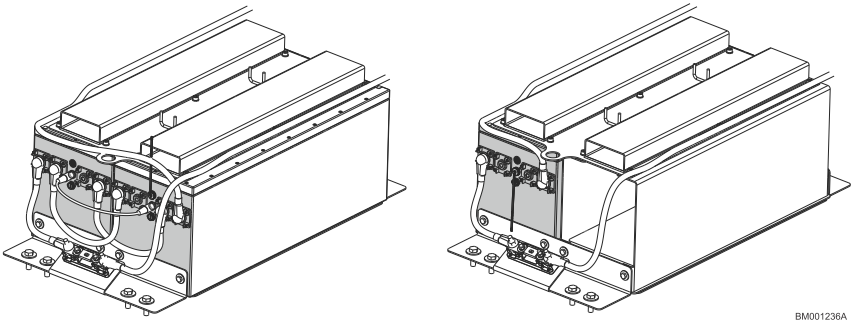

4.15 BATTERY CHARGING — LITHIUM-ION MACHINE

4.15.1 Multifunction Display

BM001239A

To check the battery condition on the Lithium Ion equipped machine with a multifunction display, power up the machine and refer to the multifunction display on the ground control console.

- Green Battery Cell: Battery capacity between 25% and 100%

- Amber Battery Cell: Battery capacity between 10% and 25%

- Red Battery Cell: Battery capacity below 10%

• State of Charge (SOC) Percentage

• Hour Glass Indicator: Remaining time of the current battery capacity based on the last 30 minutes of usage (configurable by the operator).

4.15.2 Multifunction Display Charging

BM001240A

- Clock: Time remaining until bulk phase and equalization charge phase have completed
- Power: How much charge current the batteries are receiving
- State of Charge (SOC) Percentage
- 12V System Low Voltage Warning: Indicates the 12V system has low voltage..

When the batteries are charging, the white hexagons will move in sequence from bottom to the top.

The hexagons light up in an irregular pattern when the SOC os 100%.

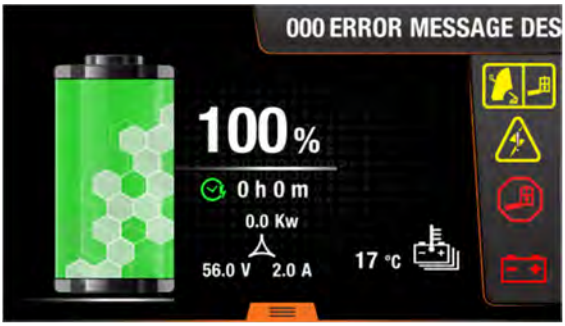

BM001241A

Once the battery balancing phase is complete, all hexagons will remain illuminated and the clock icon turns green.

4.15.3 Digital Battery Charger Display

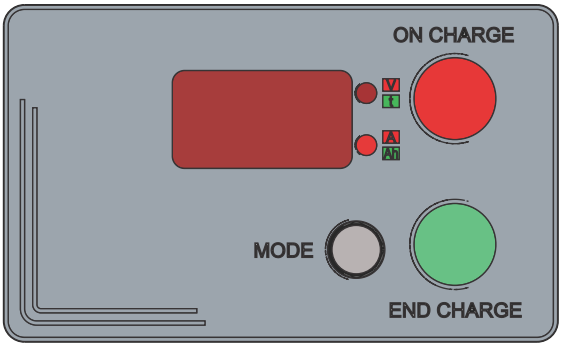

BM001031B

When starting, the digital display will show the following information:

- Battery Voltage
- State of Charge (SOC) Percentage
- Current provided by the charger
- Time in hours until the end of charge
- Ampere Hours (Ah) supplied

Pressing the Mode button keeps the last value displayed. Pressing the Mode button again the information sequence restarts.

4.15.4 Battery Charger Indicators and Display

Table 4. Battery Charger LED Indicators

Status	Charger Unit LEDs Red/Green	External Indicator LEDs Red/ Green/Amber
On Charge: Less than 80% SOC	Red LED Solid	Red LED Solid
On Charge: 80% - 99% SOC	Red LED Solid / Green LED Blinking	Green LED Blinking
Balancing Active	Red LED Solid / Green LED Fast Blinking	Green LED Fast Blinking
Balancing Complete + Charge Complete (Final Charge State)	Red LED Fast Blinking	Red LED Fast Blinking (Amber once Charge is Complete)
Charge Complete	Green LED Solid	Green LED Solid
Battery Heating Mode	Red LED Blinking	Red LED Blinking
Fault Alarm (Any Charger Related Fault)	Red LED and Green LED Alternate Blinking	Red LED and Green LED Alternate Blinking

Table 5. Battery Charger Display

Status	Display
Waiting to Charge (Idle - charge current and voltage are 0)	IdL
Battery Heater	htr
Charging Active	XXX%
Charging Active	Charge Voltage
Charging Active	Charge Current
Charging Active	AHr Charge
Charging Active	Charge Time Elapsed
Charging Complete	100%
Fault	Err

Table 5. Battery Charger Display (continued)

Status	Display
Heater Time Out	hto
Charger Time Out	cto

4.16 CHARGING THE BATTERY PACK

⚠ WARNING

Remember, the charge works even if the electronic board of the machine is turned off. Charge the machine using only the battery charger installed on it. The use of a charger other than the one provided, voids any kind of warranty on batteries.

Approximate time required to fully recharge the battery pack:

- Full Recharge - 4 to 4.5 hours - 220V AC
- 20% to 80% Recharge - 2.5 hours - 220V AC
- 0% to 80% Recharge - 3.5 hours - 220V AC
- The batteries can be charged during machine operation, however drive is disabled during charging.

Note: To operate in subzero temperatures, the AC supply to the charger must be disconnected.

- The batteries can be charged when they are not fully depleted.
- If the charge is less than 20% an audible warning signal will be activated whenever the electric motor is started, to alert the user to charge the machine.
- If the charge is less than 10%, in addition to the audible warning signal, reduced speed is activated and an icon comes on in position 6 on the ground control indicator panel.

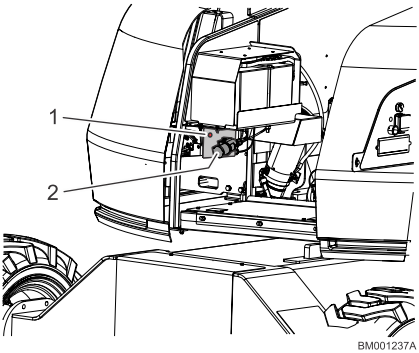

1. LED Charger Indicator
2. AC Charge Socket

To start charging the battery connect the main AC power supply to the AC socket (**2**) located on the left rear of the machine.

⚠ WARNING

The battery charger supplied with the MEWP was designed to ensure safe and reliable performance. It is already fitted on the machine and does not need any adjustment or configuration by the user; nonetheless, to avoid injury and damage to the battery charger, the following essential precautions must be observed:

- Carefully read installation instructions contained in this manual. For future reference, keep manual in a safe place.
- Do not place battery pack near heat sources.
- Be certain type of power supply available corresponds to voltage specified and indicated on the battery charger rating plate or in this Operation and Safety Manual. If any questions, contact your local JLG Service Center or the local electrical company.
- An AC class circuit breaker can be used as a protection device for the battery charger power supply, however it is recommended to use a class A or even better class B device.
- In regard to safety and electromagnetic compatibility, the battery charger features a three pin plug with ground, which can only be plugged into an grounded socket. If the plug does not go into the socket, the socket is likely old and not grounded. In this case, contact an electrician to have the socket replaced. Do not use adapters to resolve ungrounded circuit plug problems.
- Ensure power cable is undamaged. If cable is worn or damaged, replace it immediately.
- If extensions or multiple sockets are used, make sure these support total rated current.

- Do not use the battery charger to charge the batteries of other vehicles; the battery charger installed was specially designed to charge the type of lithium batteries used on this machine. Do not attempt to charge any other type of batteries.
- Do not attempt to repair the battery charger. Opening the cover may expose the user to the risk of electric shock.
- Do not open battery charger, opening it may affect the index of protection (IP) even after it has been closed again.
- If battery charger is not working correctly or is damaged, disconnect it immediately from power outlet and the battery socket and contact a qualified JLG equipment mechanic.

4.16.1 Charging Phases

The battery charger features four charging phases, designed specifically for charging the lithium-ion battery pack on this machine.

- **Bulk Charge Phase** - 0% charge to 90-95% charge. First phase of charging a depleted battery. Provides constant current and constant voltage.
- **Equalization Phase** - 95% charge to 100% charge. Towards the end of the charging process the BMS detects which cells are fully charged and switches to constant voltage. The BMS then controls the charge current to cells which need charging until the charge level is equal across the full system.
- **Balancing Phase** - Required to maintain the maximum available capacity. Provides maximum capacity in the total battery pack, otherwise the capacity will be restricted by the lowest cell on discharge.

Note: Recommended to be completed every time or at minimum after 20 charging cycles.

- **Float Phase** - Trickle charge the batteries. Helps further finely balance the cells.

4.17 CHARGING IN COLD TEMPERATURES

4.17.1 Multifunction Display

When the heater is active, the heater symbol (**1**) will appear.

The battery symbol (**2**) will not display the white hexagons to indicate charging.

Once the battery temperature rises above 10° C (50° F), the white hexagons will begin to sequence again.

4.18 SHUT DOWN AND PARK

Note: When parking battery powered units overnight, batteries should be charged properly to ensure readiness for following workday.

The preferred procedures to shut down and park the machine are as follows:

1. Drive machine to a reasonably well protected area.
2. Ensure boom is fully retracted and lowered over rear axle.
3. Shut down Emergency Stop at Platform Controls.
4. Shut down Emergency Stop at Ground Controls. Position Platform/Ground Select switch to center position Off.
5. Turn the Master Battery switch to the Off position.

6. If necessary, cover Platform Controls to protect instruction placards, warning decals and operating controls from hostile environment.

NOTICE

If parking a MEWP with the boom elevated in an effort to conserve space, booms may be elevated, but shall not be extended. It is the operator's responsibility to ensure all safety precautions in section 1 of this manual are followed for each unique situation.

4.19 LIFTING AND TIE DOWN

4.19.1 Lifting

1. Refer to the Machine Serial Number Plate, refer to the Specifications section of this manual, or weigh the individual unit to find out the Gross Vehicle Weight.
2. Place the boom in the stowed position.
3. Remove all loose items from the machine.
4. Properly adjust the rigging to prevent damage to the machine and so the machine remains level.

4.19.2 Tie Down

NOTICE

When transporting the machine, the boom must be fully lowered into the boom rest.

1. Place the boom in the stowed position or storage position.
2. Remove all loose items from the machine.
3. Ensure the platform is lowered so the wear pad on the bottom rests on the surface of the transportation vehicle.
4. Secure the chassis using straps or chains of adequate strength.

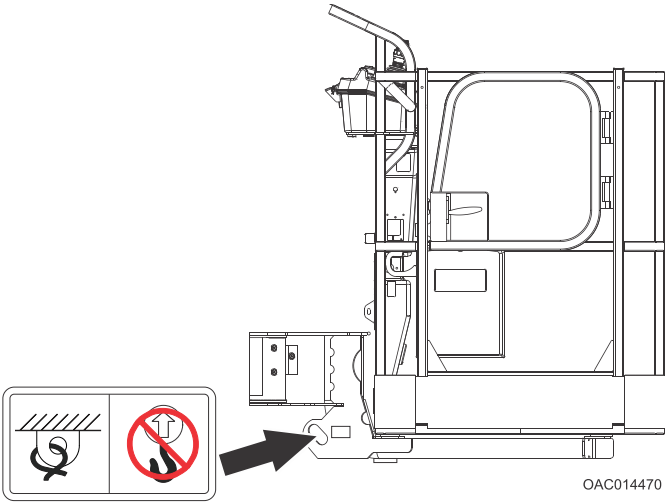

4.20 LIFTING AND TIE DOWN CHART

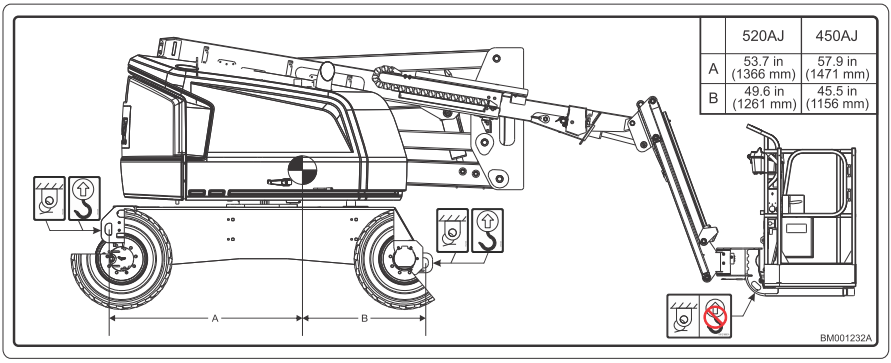

	520AJ	450AJ
A	53.7 in (1366 mm)	57.9 in (1471 mm)
B	49.6 in (1261 mm)	45.5 in (1156 mm)

4.21 SAFETY DECALS

4.21.1 Safety Decals Locations

Figure 9. Decals — Left Side

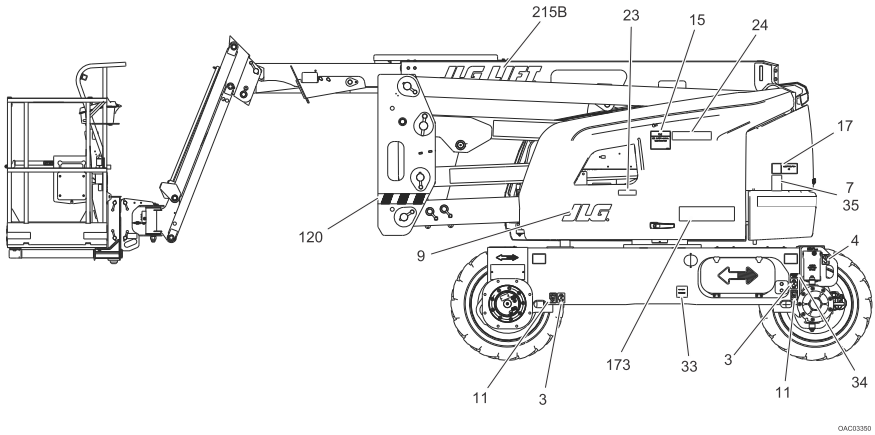

Figure 10. Decals — Right Side

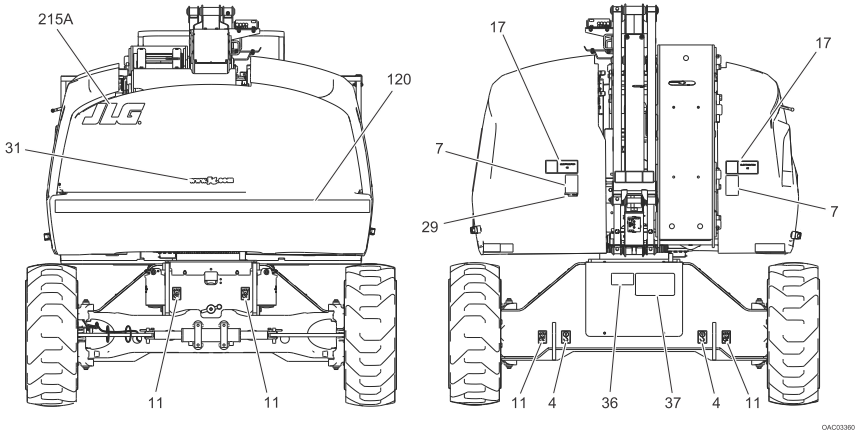

Figure 11. Decals — Front and Rear

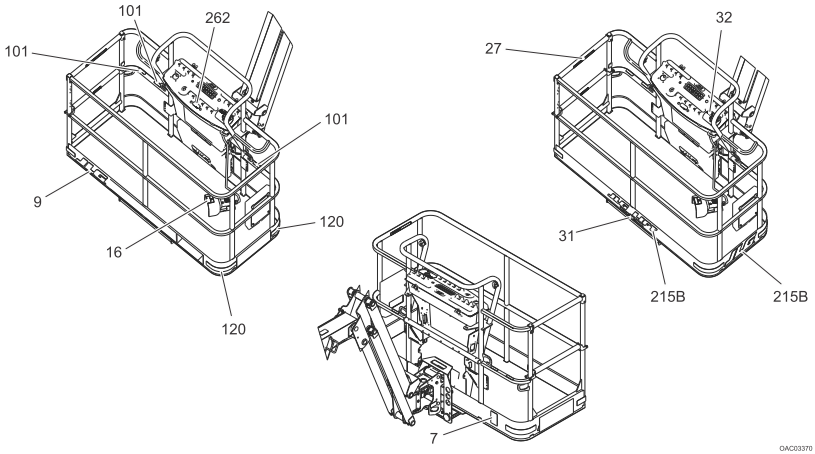

Figure 12. Decals — Platform

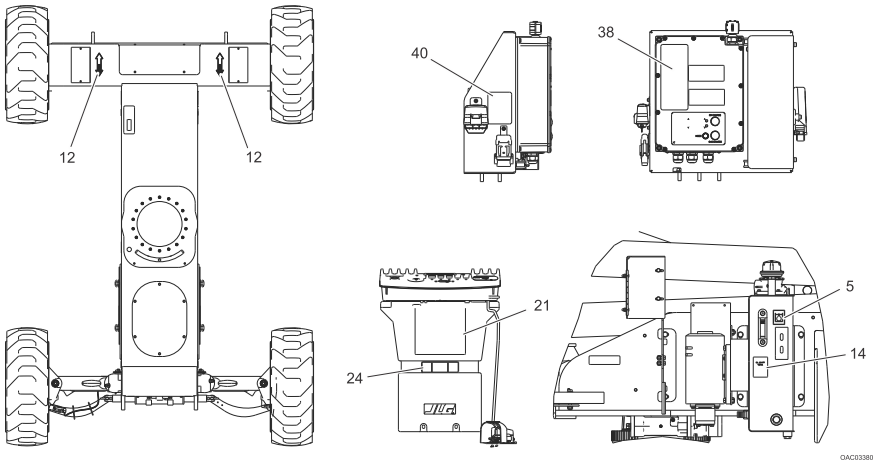

Figure 13. Decals — Frame

Item	ANSI	CE / UKCA	AUS	CSA
2	0860520	0860520	0860520	0860520
3	1701499	1701499	1701499	1701499
4	1701500	1701500	1701500	1701500
5	1701504	1701504	1701504	1701504
6	1701509	1701509	1701509	1701509
7	1703804	1701518	1701518	1703948
8	1701529	1701529	1701529	1701529
9	- -	1702773	- -	- -
10	1702631	1702631	1702631	1702631
11	1702300	1702300	1702300	1702300
12	1703687	1703687	1703687	1703687
14	1704412	1704412	1704412	1704412
15	1705336	1705822	1705822	1705347
16	3252347	1705828	1705828	1703984
17	1703805	1705961	1705961	1703936
18	2080057	2080057	2080057	2080057
21	1703797	1001162429	1001162429	1703924
22	1001172217	1001172217	1001172217	1001172217
23	- -	1001189882	1001112551	- -
24	1001255511	1001190913	1001190913	1001255512
27	1702868	- -	- -	1704000
28	1001131269	- -	- -	1001131269
29	3251243	- -	- -	3251243
30	1704885	- -	- -	- -
31	1705351	- -	1704885	1704885
32	1705351	- -	- -	1705429
33	1001223055	- -	- -	1001223971
34	1001223453	- -	- -	1001223453
35	1703953	- -	- -	1703942
36	1001260941	1001260939	1001260939	1001260941
37	1001260941	1001260941	1001260941	1001260941
38	1001262795	1001262795	1001262795	1001262795

Item	ANSI	CE / UKCA	AUS	CSA
40	1001263924	1001263924	1001263924	1001263924
100	1001232026	1001232026	1001232026	1001232026
101	1704277	1704277	1704277	1704277
120	1001188883	1001188883	1001188883	1001188883
173 — EC450AJ	1704752	1704752	1704752	1704752
173 — EC520AJ	1705669	1705669	1705669	1705669
174 — EC450AJ	1001258490	1001258490	1001258490	1001258490
174 — EC520AJ	1001258491	1001258491	1001258491	1001258491
215A	1001243697	1001243697	1001243697	1001243697
215B	1001243698	1001243698	1001243698	1001243698
215C	1001166085	1001166085	1001166085	1001166085
262	1001141300	1001141300	1001141300	1001141300

SECTION 5
Emergency Procedures

5.1 GENERAL

This section explains the steps to be taken in case of an emergency situation during operation.

5.2 INCIDENT NOTIFICATION

JLG Industries, Inc. must be notified immediately of any incident involving a JLG product. Even if no injury or property damage is evident, the factory should be contacted by telephone and provided with all necessary details.

- USA: 877-JLG-SAFE (554-7233)
- EUROPE: (32) 0 89 84 82 20
- AUSTRALIA: (61) 2 65 811111
- E-mail: ProductSafety@JLG.com

Failure to notify the manufacturer of an incident involving a JLG Industries product within 48 hours of such an occurrence may void any warranty consideration on that particular machine.

NOTICE

Following any incident, thoroughly inspect the machine and test all functions first from the ground controls, then from the platform controls. Do not lift above 3 m (10 ft.) until you are sure that all damage has been repaired, if required, and that all controls are operating correctly.

5.3 EMERGENCY OPERATION

5.3.1 Operator Unable to Control Machine

If the platform operator is pinned, trapped or unable to operate or control machine, do the following:

1. Other personnel should operate the machine from ground controls only as required.
2. Other qualified personnel on the platform may use the platform controls.

⚠ WARNING

Do not continue operation if controls do not function properly.

3. Cranes, forklift trucks or other equipment can be used to remove platform occupants and stabilize motion of the machine.

5.3.2 Platform or Boom Caught Overhead

If the platform or boom becomes jammed or snagged in overhead structures or equipment, do the following:

1. Shut off the machine.
2. Rescue all people in the platform before freeing the machine. Personnel must be out of the platform before operating any controls on the machine.
3. Use cranes, forklifts, or other equipment to stabilize motion of the machine to prevent a tip over as required.
4. From the ground controls, use the Auxiliary Power System (if equipped) to carefully free the platform or boom from the object.
5. Once clear, restart the machine and return the platform to a safe position.
6. Inspect the machine for damage. If the machine is damaged or does not operate properly, turn off the machine immediately. Report the problem to the proper maintenance personnel. Do not operate the machine until it is declared safe for operation.

5.4 MANUAL SWING OVERRIDE

The manual swing override is used to manually swing the boom and turntable assembly in the event of a total power failure when the platform is positioned over a structure or obstacle. To operate the manual swing override, proceed as follows:

1. Using a 7/8 inch socket and ratchet wrench, locate nut on swing worm gear on left side of machine.
2. Install wrench on nut and ratchet in the direction desired.

5.5 EMERGENCY TOWING PROCEDURES

Towing this machine is prohibited, unless properly equipped. However, provisions for moving the machine, in case of a malfunction or power failure, have been incorporated. The following procedures are to be used ONLY for emergency movement to a suitable maintenance area.

NOTICE

The allowable towing speed is 1.9 mph (3 km/h). The maximum allowable towing distance is 0.6 miles (1 km).

1. Chock wheels securely.
2. Using a 3/16 inch allen wrench, remove the cap retaining screw from the hub.

3. Locate the brake release bolts in front of the hydraulic pump and remove them. Install the cap retaining screws in the turntable in place of the brake release screws so they are not lost.

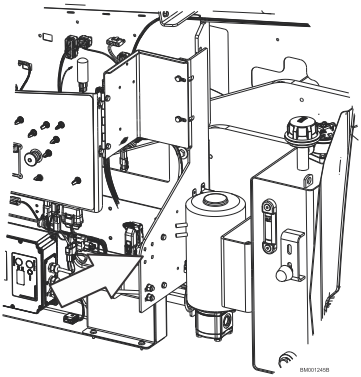

4. Using a 5/16 inch allen wrench, install the brake release screw into the hub.

5. Repeat steps 2 - 4 for the remaining drive hubs.
6. Connect suitable equipment, remove chocks, and move machine.

After moving machine, complete the following procedure:

1. Position machine on a firm level surface.
2. Chock wheels securely.
3. Using a 5/16 inch allen wrench, remove the brake release screw from each hub.
4. Replace each brake release screw with the corresponding cap retaining screw and return the brake release screws to the turntable.
5. Remove chocks from wheels as desired.

5.6 MACHINE SAFETY SYSTEM OVERRIDE (MSSO) (IF EQUIPPED)

The Machine Safety System Override (MSSO) is only to be used to retrieve an operator that is pinned, trapped, or unable to operate the machine. The MSSO will override function controls that are locked out from the platform and ground consoles. An example of this would be in the case of Load Sense System activation.

Note: If the MSSO functionality is used, a fault indicator is set with a fault code in the JLG Control System which must be reset by a qualified JLG Service Technician.

Note: No functional checks of the MSSO system are necessary. The JLG Control System will set a Diagnostic Trouble Code if the control switch is faulty.

Note: If the engine is not running, MSSO will function through the Auxiliary Power system.

To operate the MSSO, perform the following:

1. From the Ground Control Console, place the Platform/Ground Select switch into the Ground position.
2. Pull out the Power/Emergency Stop control switch.
3. Start the engine.
4. Press and hold the MSSO switch and the control switch for the desired function.

This Page is intentionally left blank

SECTION 6
Accessories

6.1 AVAILABLE ACCESSORIES AND RELATIONSHIP TABLE

Table 6. Available Accessories Table

Accessory	Market		
	ANSI	AUS	CE/UKCA
Pipe Racks	√	√	√
Platform Work Lights	√	√	√
SkyGlazier®	√	√	√

Table 7. Accessories/Options Relationship Table

Accessory	Required Item	Compatible With (Note 1)	Incompatible With	Interchangeable With (Note 2)
Pipe Racks			SkyGlazier	SkyGlazier
Platform Work Lights				
SkyGlazier			4 ' Platform, Pipe Racks	

Note: 1. Any non - "Sky" accessory not listed under "Incompatible With" is assumed to be compatible.

Note: 2. Can be used on the same unit but not simultaneously.

6.2 PIPE RACKS

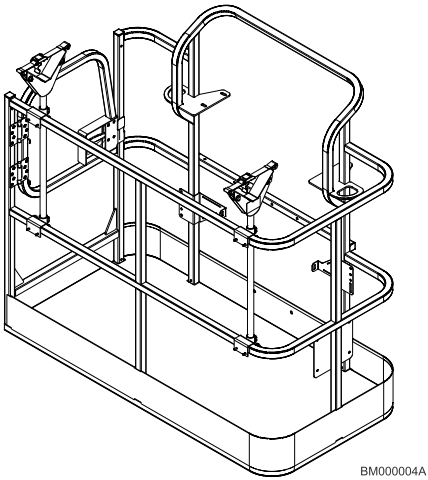

Figure 14. Pipe Racks

Pipe Racks provide a way to store pipe or conduit inside the platform in order to prevent rail damage and optimize platform utility. This accessory consists of two racks with adjustable straps to secure the load in place.

6.2.1 Capacity Specifications (Australia Only)

Max. Capacity in Racks	Max. Platform Capacity (With Max. Weight in Racks)
80 kg	184 kg
Max. Length of Material in Racks: 6.0 m **Min. Length of Material in Racks**: 2.4 m	

6.2.2 Safety Precautions

⚠ WARNING

Reduce platform capacity by 100 lb (45.5 kg) when installed.

⚠ WARNING

Weight in racks plus weight in platform must not exceed rated capacity.

NOTICE

The maximum load in the racks is 180 lb (80 kg) evenly distributed between the two racks.

NOTICE

The maximum length of material in racks is 20 ft (6.1 m).

- Ensure no personnel are beneath the platform.
- Do not exit platform over rails or stand on rails.
- Do not drive machine without material secured.
- Return racks to the stowed position when not in use.
- Use this option only on approved models.

6.2.3 Preparation and Inspection

- Ensure racks are secured to the platform rails.
- Replace torn or frayed tie-down straps.

6.2.4 Operation

1. To prepare racks for loading, remove locking pins, rotate each rack 90 degrees from stowed to working position, then secure with locking pins.
2. Loosen and remove tie-down straps. Place material on racks with weight evenly distributed between both racks.
3. Route the tie-down straps at each end across loaded material and tighten.
4. To remove material, loosen and remove tie-down straps, then carefully remove material from racks.

Note: Reinstall tie-down straps across any remaining material before continuing machine operations.

6.3 PLATFORM WORK LIGHTS

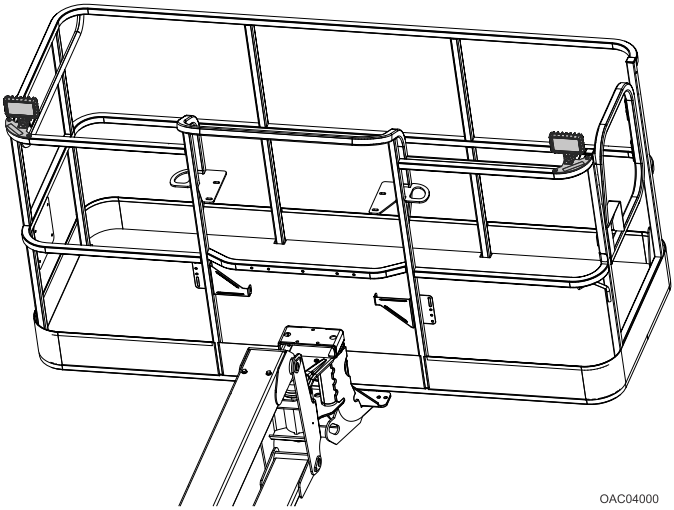

Figure 15. Platform Work Lights

The Platform Work Lights accessory consists of two 12V lights mounted to the platform railing.

6.4 SKYGLAZIER®

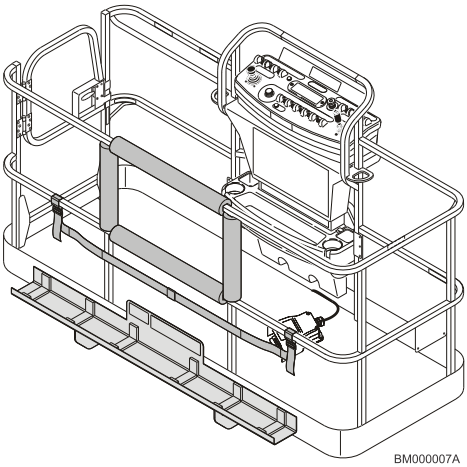

Figure 16. SkyGlazier System

SkyGlazier allows glaziers to position panels efficiently. The glazier package consists of a tray that attaches to the bottom of the platform. The panel rests on the tray and against top-rail of the platform, which is padded to prevent damage. SkyGlazier includes a strap to secure the panel to the platform rail.

6.4.1 Capacity Specifications

Capacity Zone *	Max. Tray Capacity	Max. Platform Capacity With Max. Weight in Tray
500 lb (227 kg/230 kg)	150 lb (68 kg)	250 lb (113 kg)
550 lb (249 kg/250 kg)	150 lb (68 kg)	250 lb (113 kg)
600 lb (270 kg/272 kg)	150 lb (68 kg)	250 lb (113 kg)
660 lb (299 kg/300 kg)	150 lb (68 kg)	350 lb (160 kg)
750 lb (340 kg)	150 lb (68 kg)	440 lb (200 kg)
1000 lb (450 kg/454 kg)	250 lb (113 kg)	500 lb (227 kg)
* Refer to the capacity decals installed on the machine for capacity zone information.		
Required Platform Type: Side-Entry		

Capacity Zone *	Max. Tray Capacity	Max. Platform Capacity With Max. Weight in Tray
Maximum Dimensions of Panel: 32 sq ft (3 sq m)		
Maximum Wind Speed: 20 mph (32 kph)		

6.4.2 Safety Precautions

⚠ WARNING

Ensure panel is secured with strap.

⚠ WARNING

Do not overload tray or platform. Total machine capacity is reduced when tray is installed.

⚠ WARNING

With SkyGlazier installed, the original platform capacity ratings are reduced as specified in the specifications table above. Do not exceed the new platform capacity rating. Refer to capacity decal located on tray.

⚠ WARNING

An increase of the area exposed to the wind will decrease stability. Limit panel area to 32 sq ft (3 sq m). Maximum allowable wind speed is 20 mph (32 kph).

- Ensure no personnel are beneath platform.
- Do not exit platform over rails or stand on rails.
- Remove tray when not in use.
- Use this option only on approved models.

6.4.3 Preparation and Inspection

- Check for cracked welds and damage to tray.
- Ensure tray is properly secured to platform.
- Ensure strap is not torn or frayed.

6.4.4 Operation

1. Load SkyGlazier tray with panel.

2. Position panel to its desired location on the tray.
3. Route the adjustable strap around the panel and tighten until secure.

SECTION 7
General Specifications and Operator Maintenance

7.1 GENERAL

This section of the manual provides additional necessary information to the operator for proper operation and maintenance of this machine.

The maintenance portion of this section is intended as information to assist the machine operator to perform daily maintenance tasks only and does not replace the more thorough Preventive Maintenance and Inspection Schedule included in the Service & Maintenance Manual.

7.2 OPERATING SPECIFICATIONS

	2WD	4WD
Maximum Work Load (Capacity) — Unrestricted	550 lb (250 kg)	
Maximum Operating Slope	5°	
Maximum Travel Grade (Gradeability)	30%	
Maximum Travel Grade (Side Slope)	5°	
Travel Speed — Stowed	2.98 mph (4.8 km/h)	
Maximum Gross Machine Weight — Approximate	EC450AJ – 13,800 lb (6260 kg) EC520AJ – 16, 954 lb (7690 kg)	EC450AJ – 14,211 lb (6446 kg) EC520AJ – 17,364 lb (7876 kg)
Maximum Ground Bearing Pressure	EC450AJ — 83.5 psi (5.86 kg/cm^2) EC520AJ — 95.0 psi (6.67 kg/cm^2)	
Maximum Tire Load	EC450AJ – 13,800 lb (6260 kg) EC520AJ – 16, 954 lb (7690 kg)	EC450AJ – 14,211 lb (6446 kg) EC520AJ – 17,364 lb (7876 kg)

	2WD	4WD
System Voltage	48V Main Battery 12V for UGM and System Power	
Maximum Main Relief Hydraulic Pressure	3,000 psi (207 bar)	

7.2.1 Capacities

Hydraulic System	14.2 gal (53.9 L)
Hydraulic Oil Tank (to full level)	7.9 gal (30.0 L)
Drive Hub	24 oz. (0.7 L)

7.2.2 Tires

Size	315/55 D20	315/55 D20
Type	Foam-Filled	Foam-Filled — Non-Marking
Pressure	N/A	N/A
Weight	286 lb (130 kg)	286 lb (130 kg)

7.2.3 Dimensional Data — EC450AJ

Turning Radius (Inside)	6 ft 9 in (2.06 m)
Turning Radius (Outside)	15 ft 8 in (4.78 m)
Machine Height (Stowed)	89.3 in (2269 mm)
Machine Length (Stowed)	258.9 in (6576 mm)
Up and Over Platform Height	24 ft (7.3 m)
Horizontal Reach	25 ft (7.62 in)
Machine Width	92.6 in (2353 m)
Wheel Base	93.0 in (2362 mm)
Platform Height	45 ft (13.72 m)
Ground Clearance	16.4 in (419 mm)

7.2.4 Dimensional Data — EC520AJ

Turning Radius (Inside)	6 ft 9 in (2.06 m)
Turning Radius (Outside)	15 ft 8 in (4.78 m)
Machine Height (Stowed)	89.3 in (2269 mm)

Machine Length (Stowed)	305.8 in (7768 mm)
Up and Over Platform Height	24 ft (7.3 m)
Horizontal Reach	32.8 ft (10 m)
Machine Width	92.6 in (2353 m)
Wheel Base	93 in (2362 m)
Platform Height	52.5 ft (16 m)
Ground Clearance	16.5 in (419 mm)

7.2.5 Hydraulic Oil

Hydraulic System Operating Temperature Range	S.A.E. Viscosity Grade
+0° to + 180° F (-18° to +83° C)	10W
+0° to + 210° F (-18° to +99° C)	10W-20, 10W-30
+50° to + 210° F (+10° to +99° C)	20W-20

Note: Hydraulic oils must have anti-wear qualities at least to API Service Classification GL-3, and sufficient chemical stability for mobile hydraulic system service. JLG Industries recommends the use of standard UTTO.

Note: Machines may be quipped with biodegradable and non-toxic hydraulic oil. This is a fully synthetic hydraulic oil that possesses the same anti-wear and rust protection characteristics as mineral oils, but will not adversely affect the ground water or the environment when spilled or leaked in small amounts.

Note: Aside from JLG recommendations, it is not advisable to mix oils of different brands or types, as they may not contain the same required additives or be of comparable viscosities. If use of hydraulic oil other than standard UTTO is desired, contact JLG Industries for proper recommendations.

	Shell Naturelle HF-E32 bio (Recommended)	Mobil™ EAL Envirosyn H32 (Optional)	**Shell Tellus S2 VX15** (Recommended)	Mobil™ DTE 10 Excel 15 (Optional)
SAE Grade	**–**	-	**-**	-
Specific Gravity	**.918**	.869	**.872**	.837
Pour Point, Max	**–38° F (–39° C)**	–38° F (-39° C)	**-44°F (-42°C)**	-65°F (-54°C)
Flash Point, Min.	**475° F (246° C)**	514° F (268° C)	**392°F (200°C)**	360°F (182°C)
Viscosity Information				
ISO VG	**32**	32	**15**	15
at 40° C	**30.78 cSt**	33.59 cSt	**15.14 cSt**	15.60 cSt
at 100° C	**6.85 cSt**	6.41 cSt	**3.70 cSt**	4.04 cSt
Viscosity Index	**192**	146	**135**	169

7.2.6 Critical Stability Weights

⚠ WARNING

Do not replace items critical to stability with items of different weight or specification (for example: batteries, filled tires, platform) do not modify unit in any way to affect stability.

Component	LB	KG
Upper Counterweight EC450AJ EC520AJ	 2817 ±84.4 5353±107	 1278±38.3 2428±48.6
Lower Counterweight	617±18.5	280±8.4
Tire and Wheel — 20x9 Foam-Filled	220	99.8
Platform and Console — 30x60	242.5	110

Component	LB	KG
Platform and Console — 30x48	216	98
Battery Install (one or two batteries)	463	210

7.3 OPERATOR MAINTENANCE AND LUBRICATION DIAGRAM

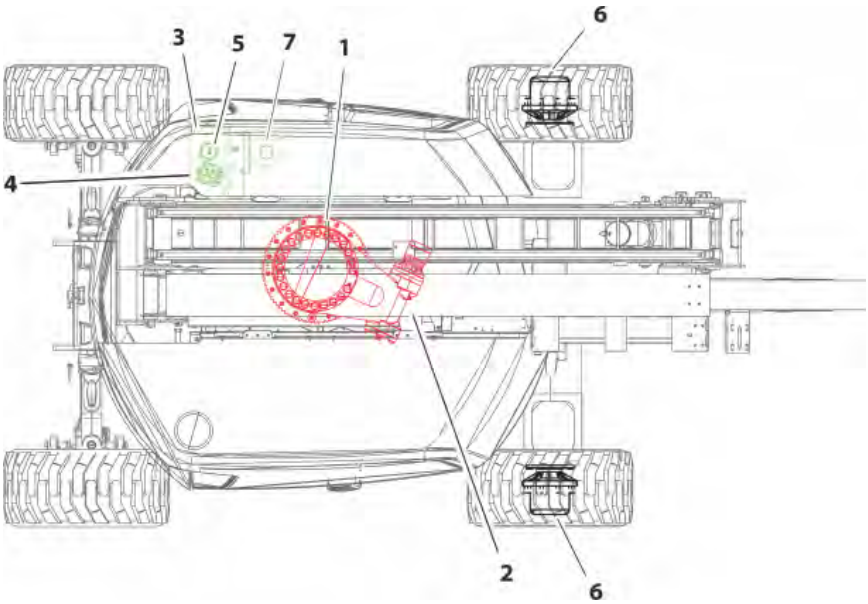

BM001080A

7.4 OPERATOR MAINTENANCE

Note: The following numbers correspond to those in the Operator Maintenance and Lubrication diagram.

Table 8. Lubrication Specifications.

KEY	SPECIFICATIONS
BG*	Bearing Grease (JLG Part No. 3020029) Mobilith SHC 460.
HO	Hydraulic Oil. API service classification GL-4, e.g. Standard UTTO.
EPGL	Extreme Pressure Gear Lube (oil) meeting API Service Classification GL-5 or Mil-Spec Mil-L-2105.

Table 8. Lubrication Specifications. (continued)

KEY	SPECIFICATIONS
MPG	Multipurpose Grease having a minimum dripping point of 350° F (177° C). Excellent water resistance and adhesive qualities, and being of extreme pressure type. (Timken OK 40 pounds minimum.)
EO	Engine (crankcase). Gas (5W30)- API SN, -Arctic ACEA AI/BI, A5/B5 - API SM, SL, SJ, EC, CF, CD - ILSAC GF-4. Diesel (15W40, 5W30 Arctic) - API CJ-4.
*MPG may be substituted for these lubricants, if necessary, but service intervals will be reduced.	

NOTICE

Lubrication intervals are based on machine operation under normal conditions. For machines used in multi-shift operations and/or exposed to hostile environments or conditions, lubrication frequencies must be increased accordingly.

1. **Swing Bearing**

   - Lube Point(s) - Fitting
   - Capacity - A/R
   - Lube - BG
   - Interval - Every 3 months or 150 hours of operation
   - Comments - Apply grease and rotate in 90 degree intervals until bearing is completely lubricated

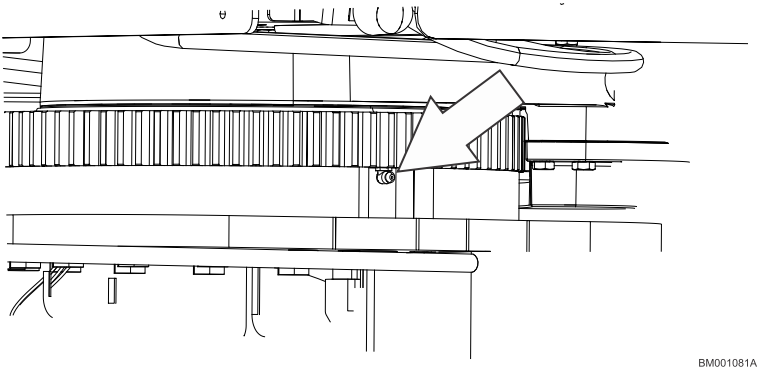

2. **Swing Bearing / Worm Gear Teeth**

- Lube Point(s) - Grease Fitting
- Capacity - A/R
- Lube - Lubriplate 930-AAA
- Interval - A/R

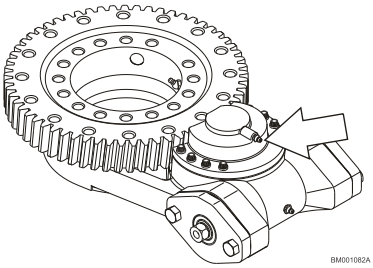

- Lube Point(s) - Grease Fitting
- Capacity - A/R
- Lube - Mobil SHC 007
- Interval - A/R

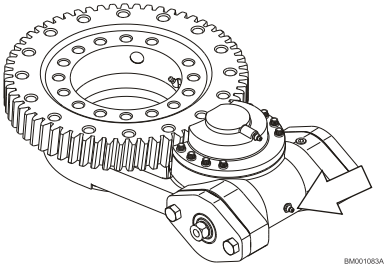

⚠ CAUTION

Do not over grease bearings. Excessive grease in bearings will result in damage to outer seal in housing.

3. **Hydraulic Tank**

- Lube Point(s) - Fill Cap
- Capacity - 10 gal (37.8 L), 8.2 gal (31 L) to Full Level; 6.7 gal (25.3 L) to Low Level
- Lube - HO
- Interval - Check Level daily; Change every 2 years or 1200 hours of operation.
- Comments - On new machines, those recently overhauled, or after changing hydraulic oil, operate all systems a minimum of two complete cycles and recheck oil level in reservoir.

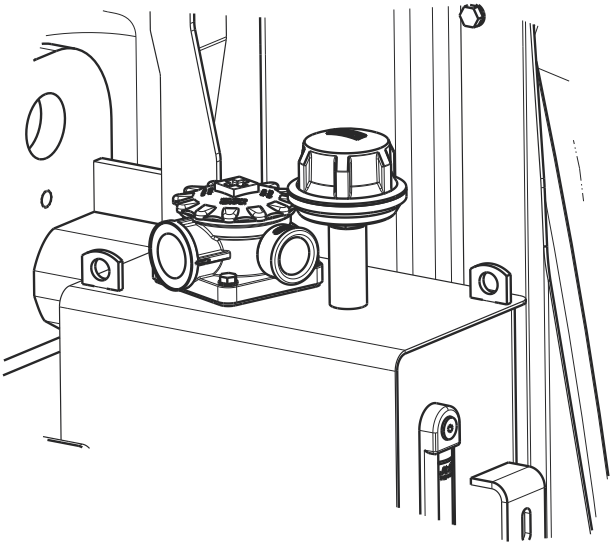

4. **Hydraulic Return Filter**

- Lube Point(s) - Replaceable Element
- Interval - Change after first 50 hours and every 6 months or 300 hours thereafter.
- Comments – Filter blockage indicator should be checked while operating a high flow function (telescope in or tower boom down).

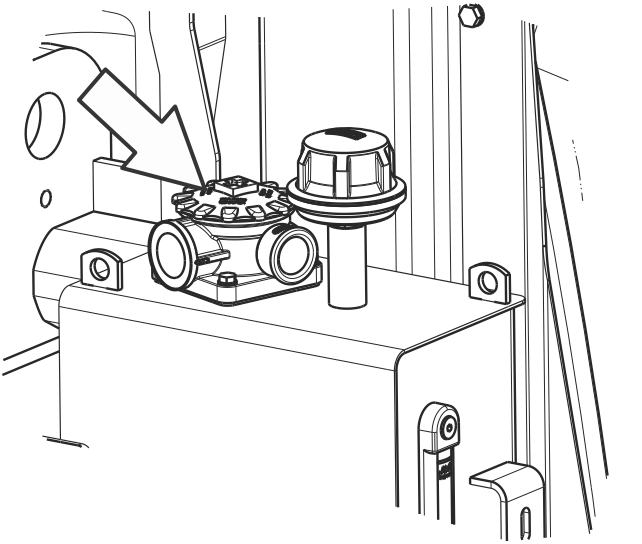

5. **Hydraulic Tank Breather**

- Interval - Change after first 50 hours. and every 6 months or 300 hours thereafter.
- Comments - Under certain conditions, it may be necessary to replace on a more frequent basis.

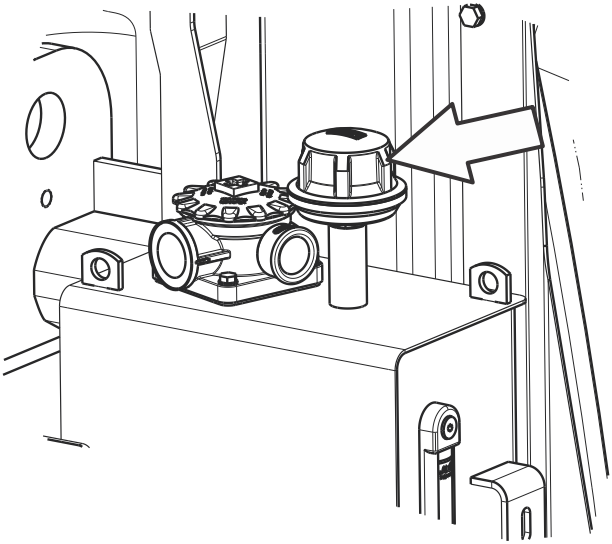

BM001086B

6. **Wheel Drive Hub**
   - Lube Point(s) - Level/Fill Plug
   - Capacity (1/2 Full) - 24 oz. (0.8 L)
   - Lube - EPGL
   - Interval - Check level every 3 months or 150 hours of operation; change every 2 years or 1200 hours of operation

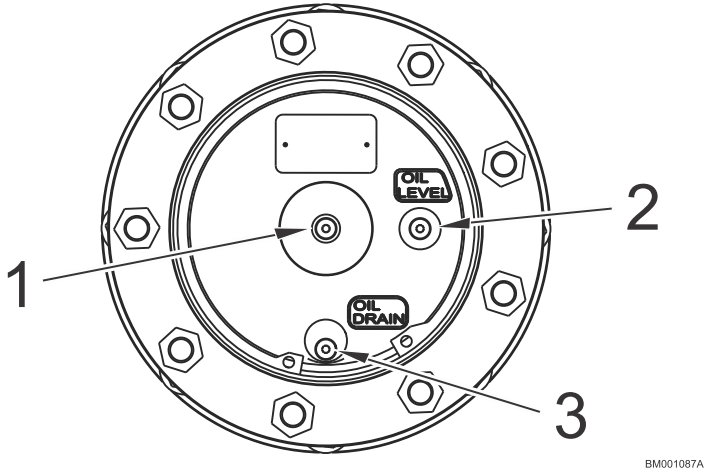

1. Disengage Screw 2. Oil Level Check 3. Oil Drain Plug

7.5 TIRES AND WHEELS

7.5.1 Tire Damage

For polyurethane foam filled tires, JLG Industries, Inc. recommends that when any of the following are discovered, measures must be taken to remove the JLG product from service immediately and arrangements must be made for replacement of the tire or tire assembly.

- a smooth, even cut through the cord plies which exceeds 3 inches (7.5 cm) in total length
- any tears or rips (ragged edges) in the cord plies which exceed 1 inch (2.5 cm) in any direction
- any punctures which exceed 1 inch in diameter
- any damage to the bead area cords of the tire

If a tire is damaged but is within the above noted criteria, the tire must be inspected on a daily basis to insure the damage has not propagated beyond the allowable criteria.

7.5.2 Tire Replacement

JLG recommends a replacement tire be the same size, ply and brand as originally installed on the machine. Please refer to the JLG Parts Manual for the part number of the approved tires for a particular machine model. If not using a JLG approved replacement tire, we recommend that replacement tires have the following characteristics:

- Equal or greater ply/load rating and size of original
- Tire tread contact width equal or greater than original
- Wheel diameter, width, and offset dimensions equal to the original
- Approved for the application by the tire manufacturer (including inflation pressure and maximum tire load)

Unless specifically approved by JLG Industries Inc. do not replace a foam filled or ballast filled tire assembly with a pneumatic tire. When selecting and installing a replacement tire, ensure that all tires are inflated to the pressure recommended by JLG. Due to size variations between tire brands, both tires on the same axle should be the same.

7.5.3 Wheel Replacement

The rims installed on each product model have been designed for stability requirements which consist of track width and load capacity. Size changes such as rim width, center piece location, larger or smaller diameter, etc., without written factory recommendations, may result in an unsafe condition regarding stability.

7.5.4 Wheel Installation

It is extremely important to apply and maintain proper wheel mounting torque.

⚠ WARNING

Wheel nuts must be installed and maintained at the proper torque to prevent loose wheels, broken studs, and possible dangerous separation of wheel from the axle. Be sure to use only the nuts matched to the cone angle of the wheel.

Tighten the lug nuts to the proper torque to prevent wheels from coming loose. Use a torque wrench to tighten the fasteners. If you do not have a torque wrench, tighten the fasteners with a lug wrench, then immediately have a service garage or dealer tighten the lug nuts to the proper torque. Over-tightening will result in breaking the studs or permanently deforming the mounting stud holes in the wheels. The proper procedure for attaching wheels is as follows:

1. Start all nuts by hand to prevent cross threading. DO NOT use a lubricant on threads or nuts.

2. Tighten nuts in the following sequence:

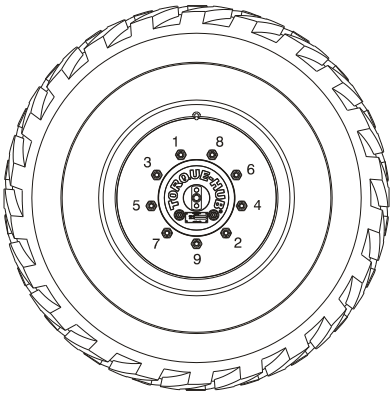

3. The tightening of the nuts should be done in stages. Following the recommended sequence, tighten nuts per wheel torque chart.

4. Wheel nuts should be torqued after first 50 hours of operation and after each wheel removal. Check torque every 3 months or 150 hours of operation.

Table 9. Wheel Torque Chart

TORQUE SEQUENCE		
1st Stage	2nd Stage	3rd Stage
40 ft. lbs. (55 Nm)	95 ft. lbs. (130 Nm)	170 ft. lbs. (230 Nm)

7.6 SUPPLEMENTAL INFORMATION ONLY APPLICABLE TO CE/UKCA MACHINES

The following information is provided in accordance with the requirements of the European Machinery Directive 2006/42/EC or Supply of Machinery (Safety) Regulations 2008 No. 1597.

The A-Weighted emission sound pressure level at the work platform is less than 70dB(A).

The vibration total value to which the hand-arm system is subjected does not exceed 2,5 m/s^2. The highest root mean square value of weighted acceleration to which the whole body is subjected does not exceed 0,5 m/s^2.

7.7 EC DECLARATION OF CONFORMITY

Manufacturer
JLG Industries, Inc.

Address
1 JLG Drive
McConnellsburg, PA 17233 USA

Technical File
JLG EMEA B.V.
Polaris avenue 63,
2132 JH Hoofddorp
The Netherlands

Contact/Position
Senior Manager — Product Safety & Reliability

Date/Place
Hoofddorp, Netherlands

Machine Type
Mobile Elevating Work Platform

Model Type
EC450AJ, EC520AJ

EC-Number
2842

Certificate Number
KCEC4362

Notified Body
Kuiper Certificering b.v.

Address
Van Slingelandtstsraat 75, 7331 NM
Apeldoorn, The Netherlands

Reference Standards

- EN55011:2016+A2:2021
- EN61000-6:2:2019
- EN 60204-1:2018
- EN 280:2013+ A1:2015
- EN ISO 12100:2010
- EN13849-1:2015
- IEC 62061:2021

JLG Industries, Inc. hereby declares that the above mentioned machine conforms with the requirements of:

- 2006/42/EC — Machinery Directive
- 2014/30/EU — EMC Directive
- 2014/53/EU — RED Directive (If fitted with optional equipment)

Note: This declaration conforms with the requirements of annex II-A of the council directive 2006/42/EC. Any modification of the above described machine violates the validity of this declaration.

7.8 UKCA DECLARATION OF CONFORMITY

Manufacturer
JLG Industries, Inc.

Address
1 JLG Drive
McConnellsburg, PA 17233 USA

Technical File
JLG Industries UK Ltd
Braunstone Frith Industrial Estate
Unit 3 Sunningdale Road
Leicester, LE3 1UX
United Kingdom

Contact/Position
Director of Engineering — Europe

Date/Place
Leicester, United Kingdom

Machine Type
Mobile Elevating Work Platform

Model Type
EC450AJ, EC520AJ

AB-Number
0463

Certificate Number
AVUK4362

Approved Body
Amtri Veritas

Address
Pierce Street, Macclesfield, SK11 6ER, England

Reference Standards

- EN55011:2016+A2:2021
- EN61000-6:2:2019
- EN 60204-1:2018
- EN 280:2013+ A1:2015
- EN ISO 12100:2010
- EN13849-1:2015
- IEC 62061:2021

JLG Industries, Inc. hereby declares that the above mentioned machine conforms with the requirements of:

- 2008 No. 1597 - Supply of Machinery (Safety) Regulations 2008
- 2016 No. 1091 - Electromagnetic Compatibility Regulations 20165
- 2017 No. 1206 - Radio Equipment Regulations 2017 (if fitted with optional equipment)

Note: This declaration conforms with the requirements of annex II-A of the Regulations 2008 No. 1597. Any modification of the above described machine violates the validity of this declaration.

This Page is intentionally left blank

Serial Number ____

Date	Comments

Corporate Office
JLG Industries, Inc.
1 JLG Drive
McConnellsburg, PA 17233-9533 USA
(717) 485-5161 (Corporate)
(877) 554-5438 (Customer Support)
(717) 485-6417

Visit our website for JLG Worldwide Locations.
www.jlg.com