Illustrated Parts Manual

Models
800S
860SJ

Prior to
SN 0300140000

3121842

August 31, 2018 - Rev AJ

CE

An Oshkosh Corporation Company

REVISION LOG

NOTES:

GROUND MODULE IDENTIFICATION

MODULE ON MACHINES "WITHOUT UGM" (UNIVERSAL GROUND MODULE)

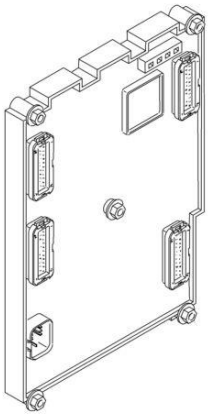

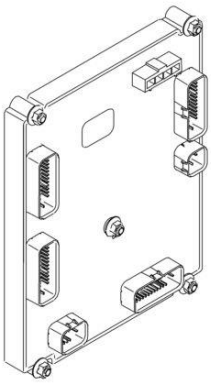

MODULE ON MACHINES "WITH UGM" (UNIVERSAL GROUND MODULE)

Note: The 800S & 860SJ Boom Lifts are manufactured by JLG Industries in the following countries: USA and China. Refer to the Serial Number Tag to identify the country of manufacture. The country of manufacture may be determined by the Serial Number. Machines manufactured in the USA will have a serial number prefix of 03 (i.e. 03XXXXXXXX). Machines manufactured in the China will have a serial number prefix of B3 (i.e. B3XXXXXXXX).

REVISION LOG:

December 15, 2001 - A - Original Issue Of Manual (Edited to B/M 0010575 Revision 7)
April 25, 2002 - B - Revised Manual (Edited to B/M 0010575 Revision 14)
November 19, 2002 - C - Revised Manual (Edited to B/M 0010575 Revision 22)
April 9, 2003 - D - Revised Manual (Edited to B/M 0010575 Revision 23)
September 5, 2003 - E - Revised Manual (Edited to B/M 0010575 Revision 36)
December 18, 2003 - F - Revised Manual (Edited to B/M 0010575 Revision 37)
March 5, 2004 - G - Revised Manual (Edited to B/M 0010575 Revision 37)
August 2, 2004 - H - Revised Manual (Edited to B/M 00101575 Revision 42)
November 1, 2004 - I - Revised Manual (Edited to B/M 00101575 Revision 42)
March 15, 2005 - J - Revised Manual (Edited to B/M 0010575 Revision 50)
September 16, 2005 - K - Revised Manual (Edited to B/M 0010575 Revision 61)
March 10, 2006 - L - Revised Manual (Edited to B/M 0010575 Revision 67)

REVISION LOG

October 5, 2006 - M - Revised Manual (Edited to B/M 0010575 Revision 70)
March 1, 2007 - N - Revised Manual (Edited to B/M 0010575 Revision 73)
June 14, 2007 - O - Revised Manual (Edited to B/M 0010575 Revision 79)
October 5, 2007 - P - Revised Manual (Edited to B/M 0010575 Revision 81)
March 1, 2008 - Q - Revised Manual (Edited to B/M 0010575 Revision 82)
August 22, 2008 - R - Revised Manual (Edited to B/M 0010575 Revision 96)
January 1, 2009 - S - Revised Manual (Edited to B/M 0010575 Revision 96)
June 15, 2009 - T - Revised Manual (Edited to B/M 0010575 Revision 104)
November 4, 2009 - U - Revised Manual (Edited to B/M 0010575 Revision 104)
May 3, 2010 - V - Revised Manual (Edited to B/M 0010575 Revision 110)
November 30, 2010 - W - Revised Manual (Edited to B/M 0010575 Revision 119)
April 21, 2011 - X - Revised Manual
July 22, 2011 - Y - Revised Manual
October 14, 2011 - Z - Revised Manual
January 10, 2012 - AA - Revised Manual
June 15, 2012 - AB - Revised Manual
August 2, 2012 - AC - Revised Manual
January 4, 2013 - AD - Revised Manual
March 2, 2013 - AE - Revised Manual
June 28, 2013 - AF - Revised Manual
September 23, 2013 - AG - Revised Manual
January 17, 2014 - AH - Revised Manual
December 15, 2015 - AI - Revised Manual (Revision 3)
August 31, 2018 - AJ - Revised Manual (Revision 1)

GENERAL INFORMATION

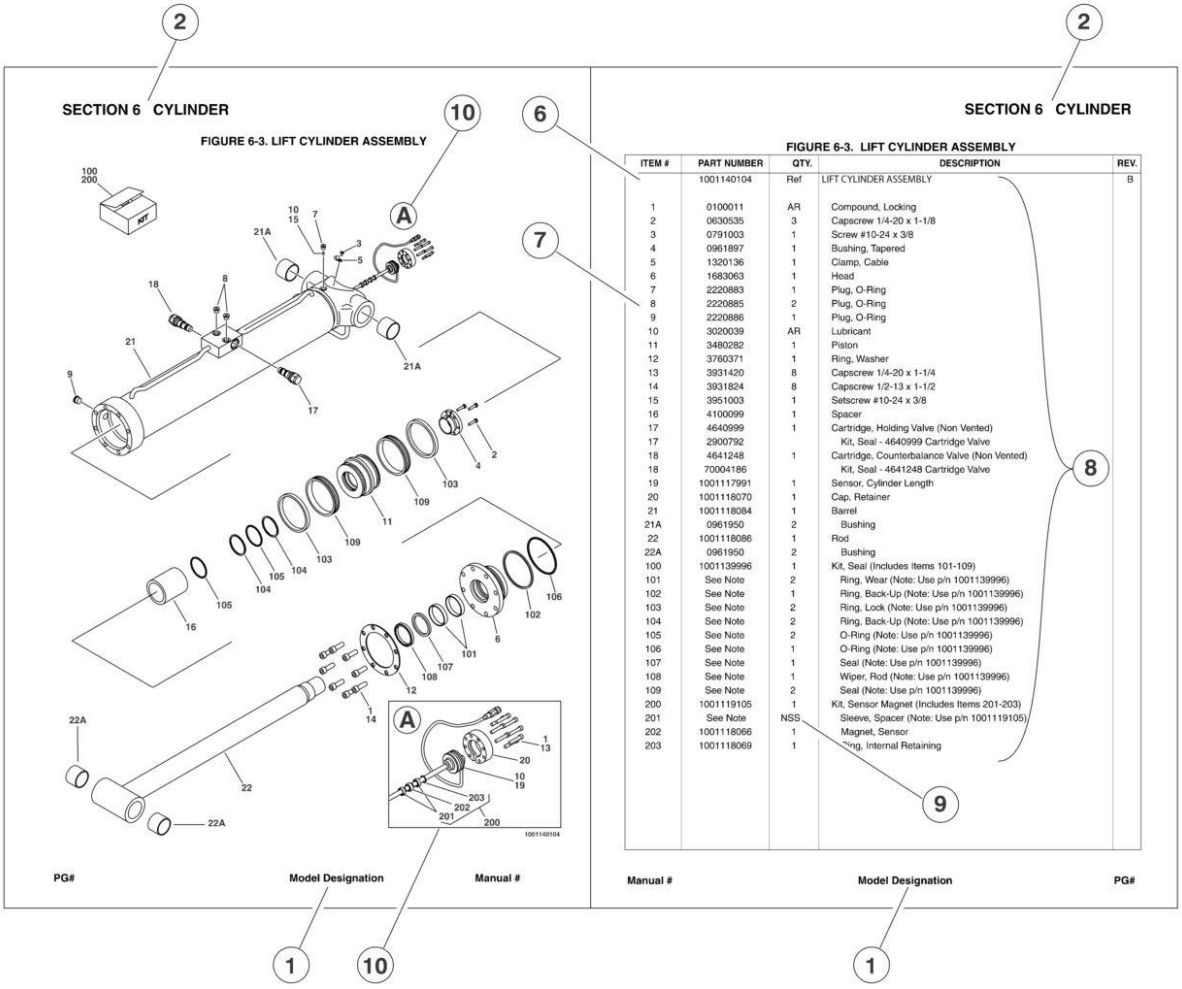

1) MACHINE IDENTIFICATION
Machines are identified by model and in some cases a combination of models, serial number (SN) or regional standard (i.e ANSI, CE,CSA). Components may also be identified by SN or manufacturer. common components that may be identified by these characteristics are engines and hydraulic components.

2) PARTS MANUAL ORGANIZATION
Product information in this manual is organized under section titles. Frame, Cylinder, Hydraulic and Electrical are a few examples. Each section is organized by figure and page number. The information within the Figure is then organized by item number, part number, description and corresponding illustration (s).

3) TABLE OF CONTENTS
A table of contents is found toward the beginning of the manual. Figure number, description and page number are provided for quick reference to the page containing the related information.

4) RECOMMENDED SPARE PARTS
The Recommended Spare Parts, located near the end of the manual, referance most frequently used maintenance parts.

5) PART NUMBER INDEX
A numerical index listing all part numbers and the corresponding page number(s) appears at the back of the manual.

GENERAL INFORMATION

6) NON-SERVICED PARTS

In some instances, it is necessary to display non-serviced parts, assemblies or installations. In the case of assemblies and installations there will be a Ref in the Qty column. In case of parts that are not available for service within assemblies or components, there will be a NSS (Not Sold Separately) or NLA (No Longer Available) listed in the Qty. column of the manual.

7) PARTS LIST ITEM NUMBERS

Numbers shown in the item# column correspond to numbers used in the associated illustration (s). Item numbers which are missing from the sequence in the parts list are not used on that page

8) INDENTED PARTS DESCRIPTION

An indented part description is included in the item under which it is indented.

9) ABB REVIATION AND SYMBOLS

AC ..... Alternating Current
ADE. ..... .Advanced Design Electronics
ANSI ..... .American National Standards Institute
AR.. ....As Required
ASSY ..... Assembly
AUX... ....Auxiliary
AWG ....American WireGauge
B/M. ..... Bill of Material
CE.. ....European Conformity
CCW ..... .Counter Clockwise
cm. ..... Centimeter
CW ..... .Clockwise
CSA. ....Canadian Standards Association
CYL... ..... .Cylinder
DIA. ..... .Diameter
DC ..... .Direct Current
EMS ..... Emergency Stop
ENG ..... .Engine
FT(ft).. ..... .Feet
GA(Ga).. ..... .Gauge
HYD ..... Hydraulic
Hz.. ..... Hertz
ID.. ..... .Inside Diameter
in... ..... .inches
ISO ....International Organization for Standards
JIC ..... .Joint Industry Council
KG ..... .Kilogram
L.. ....Liter
LB ....Pounds

LCD ..... Liquid Crystal Display
LED ..... Light Emitting Diodes
LH... ..... Left Hand
LSS ..... .Load Sensing System
M(m)... ..... Metric/Meter
MM (mm) ....Milimeter
mA. ..... Miliamps
NLA..... .....No Longer Available
NPT ..... National Pipe Threads
NSS ....Not Sold Separately
OD.. ....Outside Diameter
ORB ..... O-Ring Boss
ORFS ..... O-Ring Face Seal
OZ (oz). ..... .Ounces
PG ..... .Page
P/N. ....Part Number
qt. ....Quarts
QTY. ..... .Quantity
REF ..... .Reference
REV ....Revision Level
RH... ..... Right Hand
SAE..... ..... Society of Automotive Engineers
SN.. ....Serial Number
SPEC(S)..... .....Specifications
T/T. ....Turntable
UGM ....Universal Ground Module
V. ....Volts
W... ..... Watts
#... ..... Number

10) ILLUSTRATION REFERANCE LETTERS

When necessary, illustrations may contain referance letters that are intended to track information (i. e. hoses, harnesses) from one point to another or to track visual enlargement of components to show details that may be located in another area on the illustration.

Note: Due to continuous product improvements, JLG Industries, Inc. reserves the right to make specification changes without prior notification. Contact JLG Industries, Inc. for updated information.

TABLE OF CONTENTS

SECTION 1 - FRAME 9

FIGURE 1-1. AXLE AND STEERING INSTALLATION WITHOUT TOW PACKAGE 10
FIGURE 1-2. AXLE AND STEERING INSTALLATION WITH TOW PACKAGE 14
FIGURE 1-3. TIRE AND WHEEL DRIVE INSTALLATIONS 18
FIGURE 1-4. DRIVE HUB ASSEMBLY (2WD) (Prior to SN 0300083331) 22
FIGURE 1-5. DRIVE HUB/BRAKE ASSEMBLY (4WD) (Prior to SN 0300083331) 24
FIGURE 1-6. DRIVE HUB/BRAKE ASSEMBLY (SN 0300083331 through 0300140000) 28
FIGURE 1-7. DRIVE MOTOR ASSEMBLY (2WD) (Prior to SN 0300083331) 32
FIGURE 1-8. DRIVE MOTOR ASSEMBLY (2WD AND ALL 4WD MACHINES) (4 BOLT ASSEMBLY) (SN 0300083331 through 0300140000) 34
FIGURE 1-9. DRIVE MOTOR ASSEMBLY (5 BOLT ASSEMBLY) 38
FIGURE 1-10. FRAME VALVES AND SHIELDS INSTALLATIONS (Prior to SN 0300083331) 42
FIGURE 1-11. FRAME VALVES AND SHIELDS INSTALLATIONS (SN 0300083331 through 0300140000) 44
FIGURE 1-12. TOW PACKAGE INSTALLATION 46

SECTION 2 - TURNTABLE 49

FIGURE 2-1. CONTROL VALVES INSTALLATIONS 50
FIGURE 2-2. MAIN CONTROL VALVE ASSEMBLY 54
FIGURE 2-3. TURNTABLE BEARING AND SWING DRIVE INSTALLATION 58
FIGURE 2-4. SWING HUB ASSEMBLY (Prior to SN 0300066417) 62
FIGURE 2-5. SWING MOTOR ASSEMBLY (Prior to SN 0300066417) 64
FIGURE 2-6. SWING MOTOR/HUB ASSEMBLY (SN 0300066417 through 0300134351) 66
FIGURE 2-7. SWING MOTOR/HUB ASSEMBLY (SN 0300134352 through 0300140000) 72
FIGURE 2-8. CATERPILLAR ENGINE INSTALLATION (Prior to SN 0300139398) 76
FIGURE 2-9. CATERPILLAR ENGINE INSTALLATION (SN 0300139398 through 0300140000) 84
FIGURE 2-10. GENERATOR INSTALLATION - CATERPILLAR MACHINES (OPTIONAL) 92
FIGURE 2-11. DEUTZ ENGINE INSTALLATION (Prior to SN 0300077586) 96
FIGURE 2-12. DEUTZ ENGINE INSTALLATION (SN 0300077586 through 0300140000) 102
FIGURE 2-13. GENERATOR INSTALLATION - DEUTZ MACHINES (OPTIONAL) 112
FIGURE 2-14. PISTON PUMP ASSEMBLY 116
FIGURE 2-15. LOAD SENSING PUMP ASSEMBLY 120
FIGURE 2-16. TANK INSTALLATIONS 124
FIGURE 2-17. ROTARY COUPLING INSTALLATION (Prior to SN 0300083331) 128
FIGURE 2-18. ROTARY COUPLING INSTALLATION (SN 0300083331 through 0300140000) 130
FIGURE 2-19. GROUND CONTROL BOX ASSEMBLY (WITHOUT UGM) 134
FIGURE 2-20. GROUND CONTROL BOX ASSEMBLY (WITH UGM) 140
FIGURE 2-21. LIMIT SWITCHES, LIGHTS AND ALARM INSTALLATIONS 144
FIGURE 2-22. HOODS INSTALLATION (Prior to SN 0300089982) 148
FIGURE 2-23. HOODS INSTALLATION (SN 0300089982 through 0300140000) 154
FIGURE 2-24. ENGINE TRAY JACK INSTALLATION (OPTIONAL) 160

SECTION 3 - BOOM 163

FIGURE 3-1. TOWER BOOM, UPRIGHT AND CYLINDERS INSTALLATION 164
FIGURE 3-2. MAIN BOOM INSTALLATION - 800S 166
FIGURE 3-3. MAIN BOOM INSTALLATION - 860SJ 170
FIGURE 3-4. MAIN BOOM ASSEMBLIES 174
FIGURE 3-5. ROTATOR ASSEMBLY 178
FIGURE 3-6. PLATFORM SUPPORT AND CONTROL VALVES INSTALLATIONS 180
FIGURE 3-7. BOOM CABLE CLAMPS INSTALLATIONS 184

SECTION 4 - PLATFORM 187

FIGURE 4-1. PLATFORM ASSEMBLIES (FRONT ENTRY PLATFORM) 188
FIGURE 4-2. PLATFORM ASSEMBLIES - SIDE ENTRY (SN 0300067916 through 0300140000) 192
FIGURE 4-3. PLATFORM COMPONENTS INSTALLATION (FALL ARREST PLATFORM) 196
FIGURE 4-4. PLATFORM CONSOLE ASSEMBLY 198
FIGURE 4-5. CONTROLLER ASSEMBLY (LIFT AND SWING) 204
FIGURE 4-6. CONTROLLER ASSEMBLY (LIFT AND SWING) 206
FIGURE 4-7. CONTROLLER ASSEMBLY (LIFT AND SWING) 208
FIGURE 4-8. CONTROLLER ASSEMBLY (DRIVE AND STEER) 212
FIGURE 4-9. CONTROLLER ASSEMBLY (DRIVE AND STEER) 214
FIGURE 4-10. CONTROLLER ASSEMBLY (DRIVE AND STEER) 216
FIGURE 4-11. SOFT TOUCH INSTALLATION (FRONT ENTRY PLATFORM) (OPTIONAL) 218

TABLE OF CONTENTS

FIGURE 4-12. SOFT TOUCH SYSTEM INSTALLATION (SIDE ENTRY PLATFORM) (OPTIONAL) 222
FIGURE 4-13. PLATFORM PADDING INSTALLATION (SIDE ENTRY PLATFORM) (OPTIONAL) 224

SECTION 5 - CYLINDER 227

FIGURE 5-1. AXLE LOCKOUT CYLINDER ASSEMBLY 228
FIGURE 5-2. LEVEL CYLINDER ASSEMBLY - PLATFORM SLAVE 230
FIGURE 5-3. LEVEL CYLINDER ASSEMBLY - PLATFORM SLAVE (800S) (SERVICE REPLACEMENT) 232
FIGURE 5-4. LEVEL CYLINDER ASSEMBLY - PLATFORM SLAVE (860SJ) (SERVICE REPLACEMENT) 234
FIGURE 5-5. LIFT CYLINDER ASSEMBLY - JIB (860SJ ONLY) (ORIGINAL EQUIPMENT) 236
FIGURE 5-6. LIFT CYLINDER ASSEMBLY - JIB (860SJ ONLY) (USAGE MAY VARY) (SERVICE REPLACEMENT) 238
FIGURE 5-7. LIFT CYLINDER ASSEMBLY - JIB (860SJ ONLY) (USAGE MAY VARY) (SERVICE REPLACEMENT) 240
FIGURE 5-8. LIFT CYLINDER ASSEMBLY - MAIN BOOM 242
FIGURE 5-9. LIFT CYLINDER ASSEMBLY - MAIN BOOM (800S) (SERVICE REPLACEMENT) 246
FIGURE 5-10. LIFT CYLINDER ASSEMBLY - MAIN BOOM (860SJ) (SERVICE REPLACEMENT) 248
FIGURE 5-11. STEER CYLINDER ASSEMBLY 250
FIGURE 5-12. TELESCOPE CYLINDER ASSEMBLY 252
FIGURE 5-13. TELESCOPE CYLINDER ASSEMBLY (800S) (SERVICE REPLACEMENT) 256
FIGURE 5-14. TELESCOPE CYLINDER ASSEMBLY (860SJ) (SERVICE REPLACEMENT) 258

SECTION 6 - HYDRAULIC 261

FIGURE 6-1. AXLE LOCKOUT HYDRAULIC DIAGRAM 262
FIGURE 6-2. DRIVE HYDRAULIC DIAGRAM - 2WD (Prior to SN 0300083331) 264
FIGURE 6-3. DRIVE HYDRAULIC DIAGRAM - 2WD (SN 0300083331 through 0300140000) 268
FIGURE 6-4. DRIVE HYDRAULIC DIAGRAM - 4WD (Prior to SN 0300083331) 272
FIGURE 6-5. DRIVE HYDRAULIC DIAGRAM - 4WD (SN 0300083331 through 0300140000) 276
FIGURE 6-6. MANUAL DESCENT HYDRAULIC DIAGRAM (OPTIONAL) 280
FIGURE 6-7. STANDARD HYDRAULIC DIAGRAM 282
FIGURE 6-8. HYDRAULIC DIAGRAM LIST 286

SECTION 7 - ELECTRICAL 289

FIGURE 7-1. ELECTRICAL DIAGRAM LIST 290
FIGURE 7-2. HARNESS COMPONENTS INSTALLATION (WITHOUT UGM) (Prior to SN 0300085332) 292
FIGURE 7-3. HARNESS COMPONENTS INSTALLATION (WITHOUT UGM) (SN 0300085332 through 0300140000) 302
FIGURE 7-4. HARNESS COMPONENTS INSTALLATION (WITH UGM) 318

SECTION 8 - DECALS 333

FIGURE 8-1. DECAL INSTALLATION (Prior to SN 0300074431) 334
FIGURE 8-2. DECAL INSTALLATION (SN 0300074431 through 0300088932) 340
FIGURE 8-3. DECAL INSTALLATION (SN 0300088933 through 0300140000) 344

SECTION 9 - RECOMMENDED SERVICE PARTS STOCK 347

FIGURE 9-1. MODEL 800S/860SJ STANDARD PARTS 348
FIGURE 9-2. MODEL 800S/860SJ VARIABLE PARTS 350

SECTION 10 - SPECIAL OPTIONS 351

FIGURE 10-1. SPECIAL OPTIONS LIST 352
FIGURE 10-2. SKY WELDER INSTALLATION 358

PART NUMBER INDEX 362

SECTION 1 - FRAME

FIGURE 1-1. AXLE AND STEERING INSTALLATION WITHOUT TOW PACKAGE

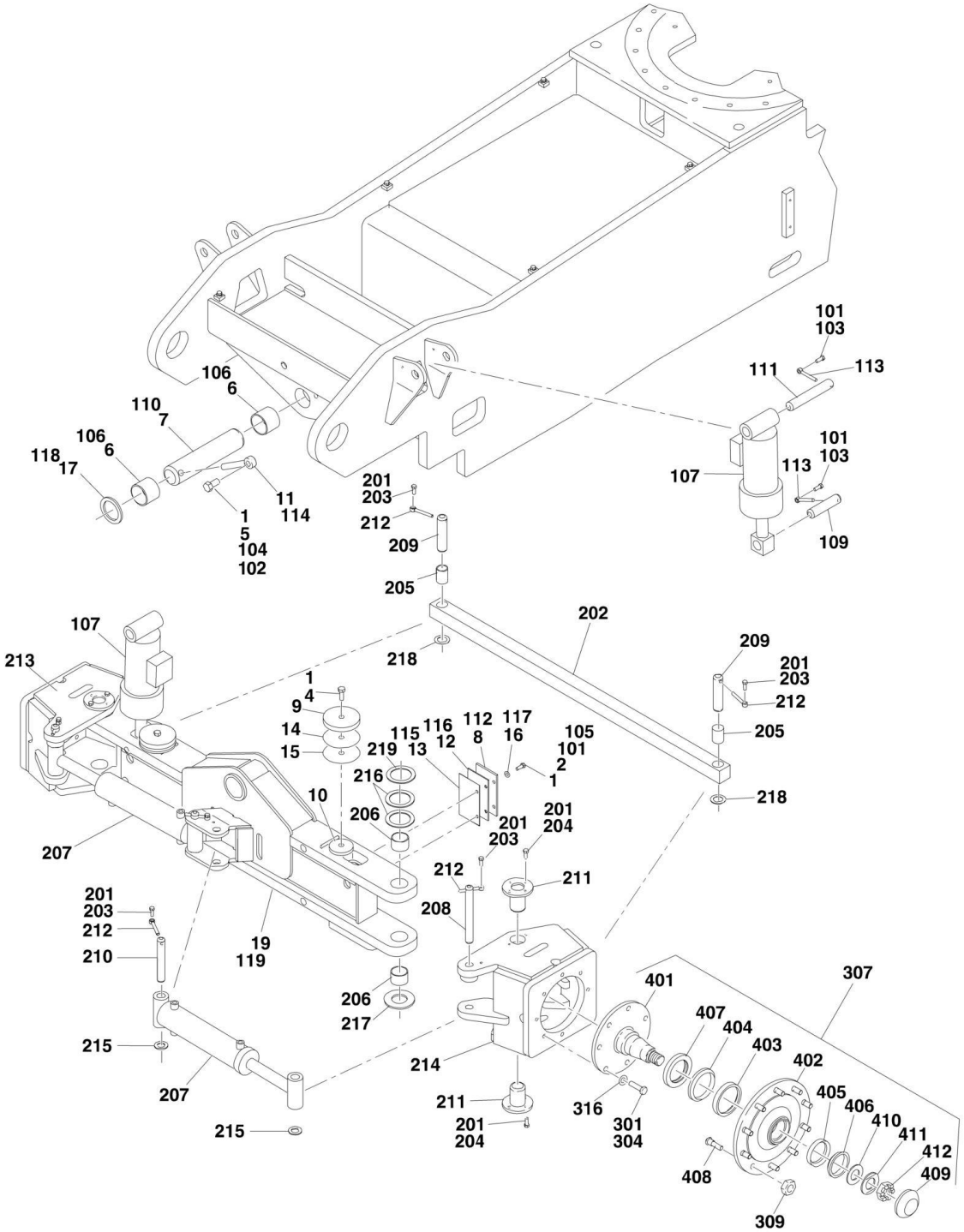

FIGURE 1-1. AXLE AND STEERING INSTALLATION WITHOUT TOW PACKAGE

ITEM	PART NUMBER	QTY	DESCRIPTION	REV
	0258286	Ref	**FIXED AXLE INSTALLATION**	C
1	0100011	AR	Compound, Locking	
2	0681608	4	Bolt 3/8in-16NC x 1in (Grade 8)	
4	0641820	2	Bolt 1/2in-13NC x 2-1/2in	
5	0642212	1	Bolt 3/4in-10NC x 1-1/2in	
6	0962102	2	Bushing, Garmax	
7	3422703	1	Pin, Axle Pivot	
8	3538047	2	Shim, Wear	
9	3539877	2	Plate, Stop	
10	3539878	2	Plate, Stop	
11	3841287	1	Keeper, Pin	
12	4070878	AR	Shim 1/16in	
13	4070879	AR	Shim 1/8in	
14	4070944	AR	Shim 1/16in	
15	4070945	AR	Shim 1/4in	
16	4711600	4	Flatwasher 3/8in Thin	
17	4740472	1	Washer, Special	
19	4845658	1	Axle Weldment	
		Ref	**OSCILLATING AXLE INSTALLATION**	
	0271135	Ref	**Oscillating Axle Installation (Prior to SN 0300083331)**	B
	0274571	Ref	**Oscillating Axle Installation (SN 0300083331 through 0300140000)**	A
101	0100011	AR	Compound, Locking	
102	0100019	AR	Compound, Locking	
103	0641608	4	Bolt 3/8in-16NC x 1in	
104	0642212	1	Bolt 3/4in-10NC x 1-1/2in	
105	0681608	4	Bolt 3/8in-16NC x 1in (Grade 8)	
106	0962102	2	Bushing, Garmax	
107	1683078	2	Lockout Cylinder Assembly (See CYLINDER SECTION for Breakdown)	
109	3422702	2	Pin	
110	3422703	1	Pin, Main Pivot	
111	3422755	2	Pin	
112	3538047	2	Shim, Axle Wear	
113	3841143	4	Shaft, Keeper 3/8in Dia x 3in	
114	3841287	1	Shaft, Keeper 3/8in Dia x 6in	
115	4070878	2	Shim, Axle Wear	
116	4070879	2	Shim, Axle Wear	
117	4711600	4	Flatwasher 3/8in Thin	
118	4740472	1	Washer, Special	
119	4845658	1	Axle Weldment	
	0272003	Ref	**STEERING INSTALLATIONS (2WS)**	B
		Ref	**Note: Before ordering king pin kit, verify that machines is equipped with king pin with 4 bolt holes (OEN) or king pin with 8 bolt holes (Service Kit) - If the king pin hole in the axle measurement exceeds 2.252in OD or is elongated, use King Pin Kit p/n 1001137261.**	
201	0100011	AR	Compound, Locking	
202	0362726	1	Tie-Rod	
203	0641608	6	Bolt 3/8in-16NC x 1in	
204	0641810	16	Bolt 1/2in-13NC x 1-1/4in	

SECTION 1 - FRAME

ITEM	PART NUMBER	QTY	DESCRIPTION	REV
205	0962152	2	Bearing	
206	0962448	4	Bearing	
207	1683740	2	Steer Cylinder Assembly (See CYLINDER SECTION for Breakdown)	
208	3422701	2	Pin, Steer, Spindle Attach	
209	3422702	2	Pin, Tie-Rod	
210	3422754	2	Pin, Attach	
211	3422849	4	Kingpin	
212	3841143	6	Shaft, Keeper 3/8in x 3in	
213	4130389	1	Spindle Weldment (RH)	
214	4130390	1	Spindle Weldment (LH)	
215	4740111	4	Washer, Special	
216	4740256	AR	Thrustwasher	
217	4740463	2	Washer, Special	
218	4740473	2	Thrustwasher	
219	1001103810	2	Thrustwasher **(SN 0300134352 through 0300140000)**	
		Ref	**HUB INSTALLATION (2WD ONLY)**	
	0271341	Ref	**Hub Installation (Prior to SN 0300083331)**	E
	0273378	Ref	**Hub Installation (SN 0300083331 through 0300140000)**	E
301	0100011	AR	Compound, Locking	
304	0682016	16	Bolt 5/8in-16NC x 2in (Grade 8)	
307	2780229	2	Hub Assembly (See Items 401-412 for Breakdown)	
309	3300007	20	Lugnut	
316	4892000	16	Flatwasher, Hardened 5/8in	
	2780229	Ref	**HUB ASSEMBLY (2WD ONLY)**	A
401	7017052	2	Spindle (1 per Assembly)	
402	7017053	2	Housing (1 per Assembly)	
403	7010404	2	Cup, Bearing - Inner (1 per Assembly)	
404	7010405	2	Cone, Bearing - Inner (1 per Assembly)	
405	7017056	2	Cup, Bearing - Outer (1 per Assembly)	
406	7017055	2	Cone, Bearing - Outer (1 per Assembly)	
407	7010406	2	Seal, Lip (1 per Assembly)	
408	7000265	20	Stud (10 per Assembly)	
409	7017054	2	Dust Cap (1 per Assembly)	
410	7017051	2	Washer, Special (1 per Assembly)	
411	7017057	2	Washer, Tanged (1 per Assembly)	
412	7017058	2	Nut, Bearing (1 per Assembly)	

FIGURE 1-2. AXLE AND STEERING INSTALLATION WITH TOW PACKAGE

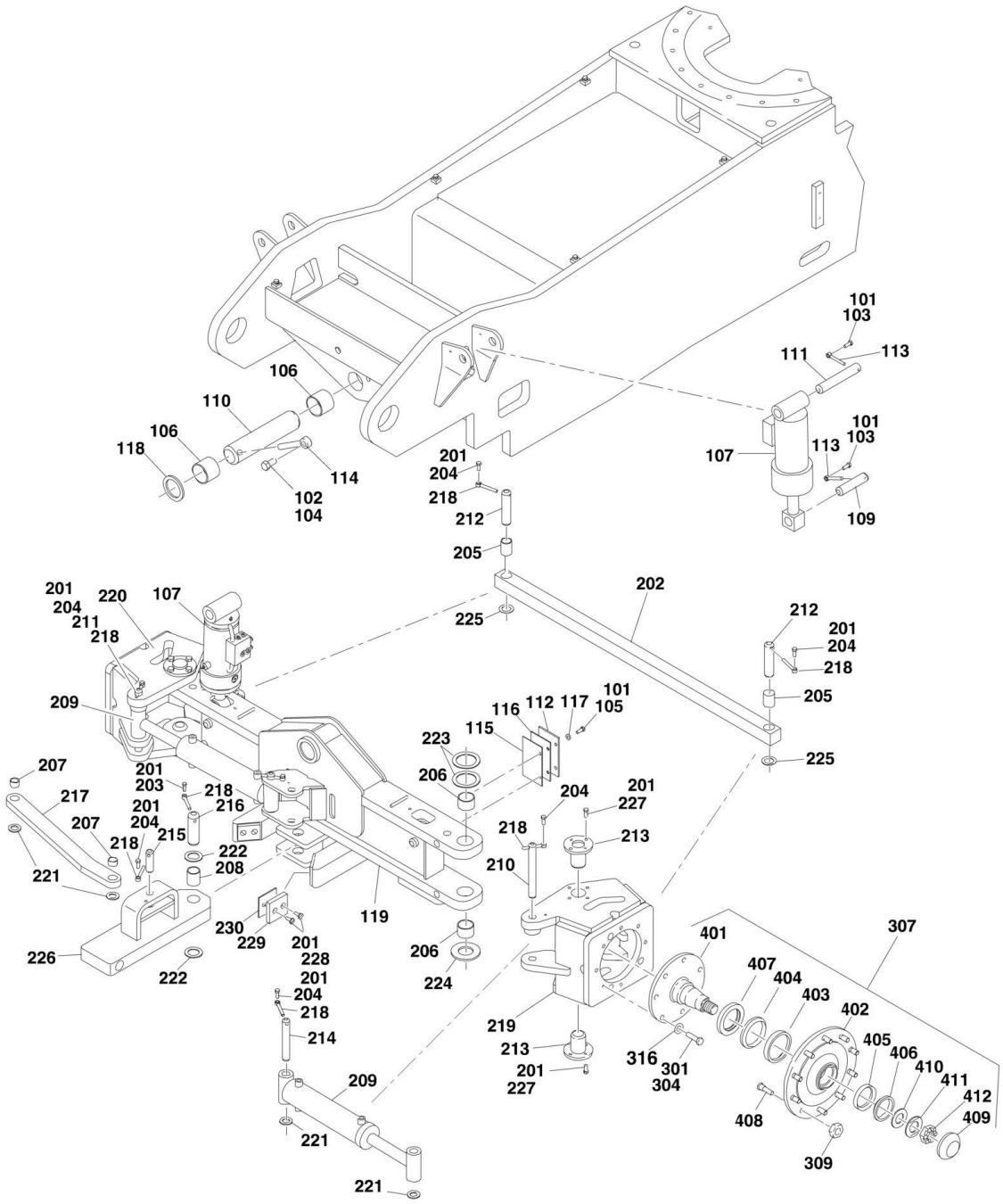

FIGURE 1-2. AXLE AND STEERING INSTALLATION WITH TOW PACKAGE

ITEM	PART NUMBER	QTY	DESCRIPTION	REV
		Ref	**OSCILLATING AXLE INSTALLATION**	
	0271353	Ref	**Oscillating Axle Installation (Prior to SN 0300083331)**	A
	0274572	Ref	**Oscillating Axle Installation (SN 0300083331 through 0300140000)**	A
101	0100011	AR	Compound, Locking	
102	0100019	AR	Compound, Locking	
103	0641608	4	Bolt 3/8in-16NC x 1in	
104	0642212	1	Bolt 3/4in-10NC x 1-1/2in	
105	0681608	4	Bolt 3/8in-16NC x 1in (Grade 8)	
106	0962102	2	Bushing, Garmax	
107	1683078	2	Lockout Cylinder Assembly (See CYLINDER SECTION for Breakdown)	
109	3422702	2	Pin	
110	3422703	1	Pin, Main Pivot	
111	3422755	2	Pin	
112	3538047	2	Shim, Axle Wear	
113	3841143	4	Shaft, Keeper 3/8in Dia x 3in	
114	3841287	1	Shaft, Keeper 3/8in Dia x 6in	
115	4070878	2	Shim, Axle Wear	
116	4070879	2	Shim, Axle Wear	
117	4711600	4	Flatwasher 3/8in Thin	
118	4740472	1	Washer, Special	
119	4846413	1	Axle Weldment	
	0271352	Ref	**STEERING INSTALLATION**	E
		Ref	**Note: Before ordering king pin kit, verify that machines is equipped with king pin with 4 bolt holes (OEN) or king pin with 8 bolt holes (Service Kit) - If the king pin hole in the axle measurement exceeds 2.252in OD or is elongated, use King Pin Kit p/n 1001137261.**	
201	0100011	AR	Compound, Locking	
202	0362726	1	Tie-Rod	
203	0641508	1	Bolt 5/16in- 18NC x 1in	
204	0641608	7	Bolt 3/8in-16NC x 1in	
205	0962152	2	Bearing, Garmax	
206	0962448	4	Bearing, Garmax	
207	0962292	2	Bearing, Garmax	
208	0962348	1	Bearing, Garmax	
209	1683740	2	Steer Cylinder Assembly (See CYLINDER SECTION for Breakdown)	
210	3422567	1	Pin, Steer Spindle Attach (RH)	
211	3422701	1	Pin, Steer Spindle Attach (LH)	
212	3422702	2	Pin, Tie-Rod	
213	3422972	4	Kingpin	
214	3422754	2	Pin, Attach	
215	3422813	1	Pin	
216	3422848	1	Pin, Hitch	
217	2573001	1	Link, Connecting	
218	3841143	8	Shaft, Keeper 3/8in x 3in	
219	4130390	1	Spindle Weldment (LH)	
220	4130388	1	Spindle Weldment (RH)	
221	4740111	6	Washer, Special	

SECTION 1 - FRAME

ITEM	PART NUMBER	QTY	DESCRIPTION	REV
222	4740155	2	Thrustwasher	
223	4740256	4	Thrustwasher	
224	4740463	2	Thrustwasher	
225	4740473	2	Washer, Special	
226		Ref	Bar, Pivot Options:	
226	4846414	1	Bar, Pivot **(Prior to SN 0300074135)**	
226	4846935	1	Bar, Pivot **(SN 0300074135 through 0300140000)**	
227	0641810	16	Bolt 1/2in-13NC x 1-1/4in	
228		Ref	Screw Options:	
228	0741607	4	Screw 3/8in-16NC x 3/4in **(SN 0300070782 through 0300074134)**	
228	0741609	4	Screw 3/8in-16NC x 1-1/4in **(SN 0300074135 through 0300140000)**	
229	3340966	2	Pad, Stop **(SN 0300070782 through 0300140000)**	
230	4071059	4	Shim **(SN 0300070782 through 0300140000)**	
		Ref	**HUB INSTALLATION (2WD ONLY)**	
	0271341	Ref	**Hub Installation (Prior to SN 0300083331)**	E
	0273378	Ref	**Hub Installation (SN 0300083331 through 0300140000)**	E
301	0100011	AR	Compound, Locking	
304	0682016	16	Bolt 5/8in-16NC x 2in (Grade 8)	
307	2780229	2	Hub Assembly (See Items 401-412 for Breakdown)	
309	3300007	20	Lugnut	
316	4892000	16	Flatwasher, 5/8in Hardened	
	2780229	Ref	**HUB ASSEMBLY (2WD ONLY)**	A
401	7017052	2	Spindle (1 per Assembly)	
402	7017053	2	Housing (1 per Assembly)	
403	7010404	2	Cup, Bearing - Inner (1 per Assembly)	
404	7010405	2	Cone, Bearing - Inner (1 per Assembly)	
405	7017056	2	Cup, Bearing - Outer (1 per Assembly)	
406	7017055	2	Cone, Bearing - Outer (1 per Assembly)	
407	7010406	2	Seal, Lip (1 per Assembly)	
408	7000265	20	Stud (10 per Assembly)	
409	7017054	2	Dust Cap (1 per Assembly)	
410	7017051	2	Washer, Special (1 per Assembly)	
411	7017057	2	Washer, Tanged (1 per Assembly)	
412	7017058	2	Nut, Bearing (1 per Assembly)	

FIGURE 1-3. TIRE AND WHEEL DRIVE INSTALLATIONS

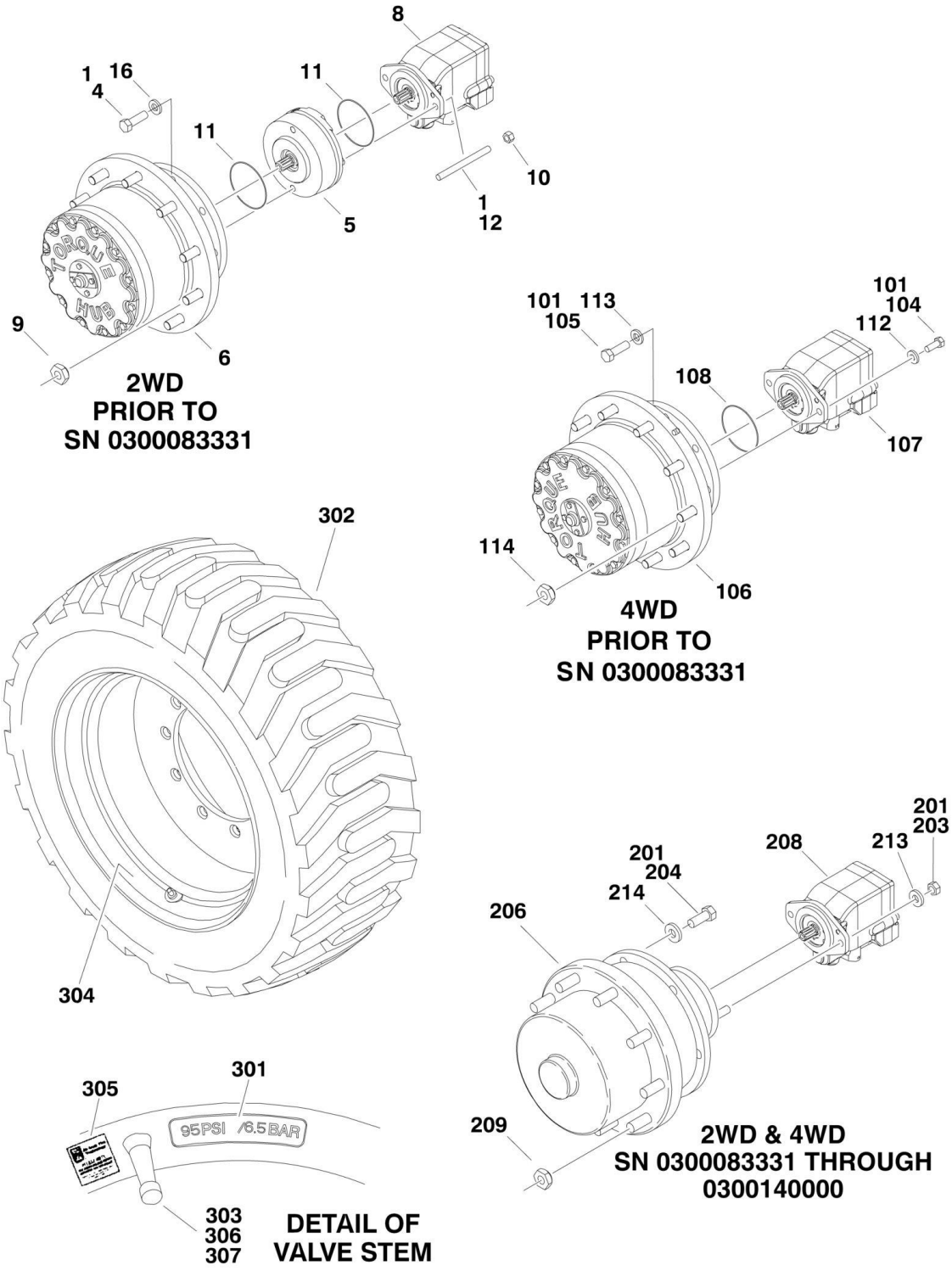

FIGURE 1-3. TIRE AND WHEEL DRIVE INSTALLATIONS

ITEM	PART NUMBER	QTY	DESCRIPTION	REV
		Ref	**WHEEL DRIVE INSTALLATION**	
	0271341	Ref	**2WD (Prior to SN 0300083331)**	E
1	0100011	AR	Compound, Locking	
4	0682016	16	Bolt 5/8in-11NC x 2in (Grade 8)	
5	0920117	NLA	Drive Brake Assembly (Use p/n 0920119)	
5	7018612	1	Kit, Repair	
5	7000731	2	Gasket (Between Components)	
6	2780227	2	Drive Hub Assembly (See DRIVE HUB ASSEMBLY for Breakdown)	
8	3160268	2	Drive Motor Assembly (See DRIVE MOTOR ASSEMBLY for Breakdown)	
9	3300007	20	Nut, Wheel	
10	3311801	4	Nut 1/2in - 13 NC	
11	3790045	4	O-Ring	
12	4300097	4	Stud	
16	4892000	16	Flatwasher 5/8in Hardened	
	0271349	Ref	**4WD (Prior to SN 0300083331)**	E
101	0100011	AR	Compound, Locking	
104	0681810	8	Bolt 1/2in-13NC x 1-1/4in (Grade 8)	
105	0682016	32	Bolt 5/8in-11NC x 2in (Grade 8)	
106	2780259	4	Drive Hub/Brake Assembly (See DRIVE HUB/BRAKE ASSEMBLY for Breakdown)	
107	3160266	4	Drive Motor Assembly (See DRIVE MOTOR ASSEMBLY for Breakdown)	
108	3790045	4	O-Ring	
112	4891800	4	Flatwasher 1/2in Hardened	
113	4892000	32	Flatwasher 5/8in Hardened	
114	3300007	40	Nut, Wheel	
		Ref	**WHEEL DRIVE INSTALLATION (SN 0300083331 through 0300140000)**	
	0273378	Ref	**Wheel Drive Installation 2WD**	E
	0273704	Ref	**Wheel Drive Installation 4WD**	D
		Ref	**Note: 2WD Qty Shown. For 4WD, Double Qty Shown.**	
201	0100011	AR	Compound, Locking	
203	3311801	4	Nut 1/2in-13 NC	
204	0682016	16	Bolt 5/8in-11NC x 2in (Grade 8)	
205	2300016	AR	Fluid, Hydraulic (Not Shown)	
206	2780272	2	Drive Hub Assembly (See DRIVE HUB/BRAKE ASSEMBLY for Breakdown)	
207	3020008	AR	Lubricant (Not Shown)	
208		Ref	Drive Motor Assembly Options (See DRIVE MOTOR ASSEMBLY for Breakdown):	
208	3160308	2	2WD Rear **(Prior to SN 0300098924)**	
208	3160347	2	2WD Rear **(SN 0300098924 through 0300140000)**	
208	3160266	4	4WD Front and Rear **(Prior to SN 0300098641)**	
208	3160348	4	4WD Front and Rear **(SN 0300098641 through 0300140000)**	
209	3300007	20	Nut, Wheel	
213	4891800	4	Flatwasher, 1/2in Hardened	
214	4892000	16	Flatwasher 5/8in Hardened	
		Ref	**TIRE AND WHEEL INSTALLATIONS**	
	0270886	Ref	**15-625 NHS Foam-Filled**	A

SECTION 1 - FRAME

ITEM	PART NUMBER	QTY	DESCRIPTION	REV
	0270888	Ref	**18-625 NHS Foam-Filled**	A
	0271419	Ref	**41/18LL x 22.5 Sand and Turf Foam-Filled**	B
	0271085	2	15-625 NHS Foam-Filled Left Side	
	0271086	2	15-625 NHS Foam-Filled Right Side	
	0271090	2	18-625 NHS Foam-Filled Left Side	
	0271091	2	18-625 NHS Foam-Filled Right Side	
	0271419	4	41/18LL x 22.5 Sand and Turf Foam-Filled	
		Ref	**Note: Assemblies may require ballast/foam filling to manufacturer's specifications prior to installing on a machine. Refer to Operation and Safety or Service and Maintenance Manuals. Purchase individual tire and/or rim only if able to foam fill tire and wheel assembly, otherwise, purchase complete assembly.**	
301	Not Required	0	Decal	
302		Ref	Tire Options:	
302	4520252	1	15-625 Tire	
302	4520253	1	18-625 Tire	
302	4520256	1	41/18LL x 22.5 Sand and Turf Tire	
303	Not Required	0	Valve, Air	
304		Ref	Rim, Wheel Options:	
304	4860224	1	13 x 24.5 Rim (Use with 15-625 Tires)	
304	4860225	1	15 x 24.5 Rim (Use with 18-625 Tires)	
304	4860230	1	22.5 x 14 (41/18LL x 22.5 Sand and Turf Tires)	
305 to 307	Not Required	0	Not Required	

FIGURE 1-4. DRIVE HUB ASSEMBLY (2WD) (Prior to SN 0300083331)

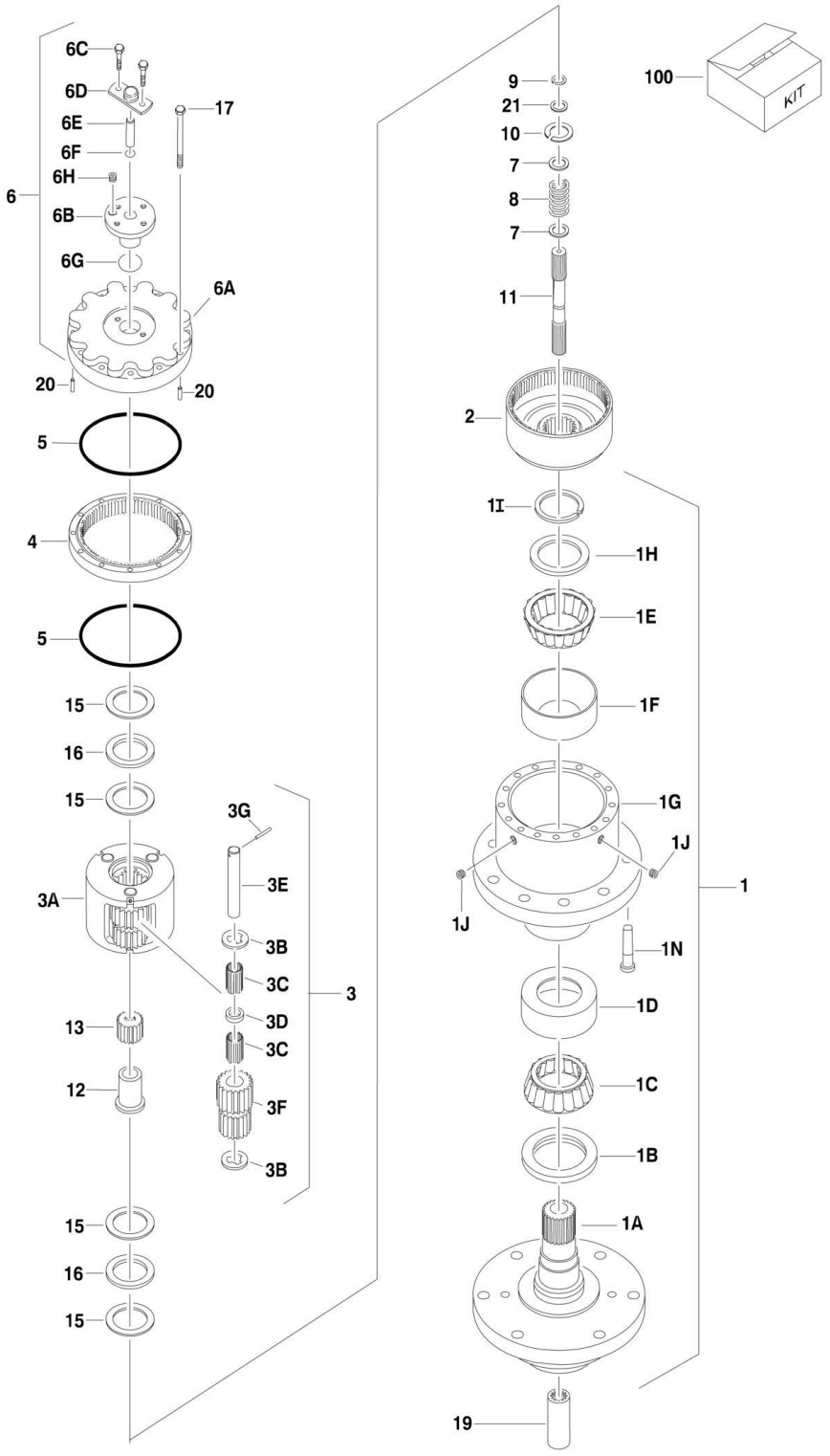

FIGURE 1-4. DRIVE HUB ASSEMBLY (2WD) (Prior to SN 0300083331)

ITEM	PART NUMBER	QTY	DESCRIPTION	REV
	2780227	Ref	**DRIVE HUB ASSEMBLY (2WD)**	A
1	See Note	NSS	Spindle/Housing Assembly (Note: Not Available - Purchase Individual Components)	
1A	7010464	1	Spindle	
1B	7000236	1	Seal	
1C	7000273	1	Cone, Bearing	
1D	7000272	1	Cup, Bearing	
1E	7000275	1	Cone, Bearing	
1F	7000274	1	Cup, Bearing	
1G	7017033	1	Housing	
1H	7000239	1	Thrustwasher	
1I	7000240	1	Ring, Retaining	
1J	7001928	1	Plug, Pipe	
1N	7000265	10	Stud, Wheel	
2	7017034	1	Gear, Ring	
3	See Note	NLA	Carrier Assembly (Note: Not Available - Use p/n 7024145)	
3A	7017036	NLA	Carrier (use p/n 7024145)	
3B	7001901	6	Thrustwasher, Tanged	
3C	7001902	96	Bearing, Needle	
3D	7001903	3	Spacer, Thrust	
3E	7017040	3	Shaft, Planet	
3F	7017037	3	Gear, Cluster	
3G	7001906	3	Rollpin	
4	7017035	1	Gear, Internal	
5	7000224	1	O-Ring	
6	See Note	NSS	Cover Assembly (Note: Not Available - Purchase Individual Components)	
6A	7024155	1	Cover	
6B	7017042	1	Cap	
6C	7000220	4	Bolt 1/4in-20NC x 3/4in	
6D	7000231	1	Cap, Disengage	
6E	7000235	1	Rod, Disengage	
6F	7000213	1	O-Ring	
6G	7000238	1	O-Ring	
6H	7017048	1	Plug, Pipe	
7	7000282	2	Thrustwasher	
8	7000283	1	O-Ring	
9	7000284	1	Ring, Retaining	
10	7017027	1	Ring, Retaining	
11	7017039	1	Shaft, Input	
12	7017041	1	Spacer, Input	
13	7017038	1	Gear, Sun	
15	7000287	4	Thrustwasher	
16	7000288	2	Thrustwasher	
17	7000289	12	Bolt 3/8in-16NC x 2-1/2in (Grade 8)	
19	7000290	1	Coupling	
20	7017047	2	Pin, Dowel	
21	7017050	AR	Thrustwasher	
		Ref	**KIT OPTIONS:**	
100	7017068	1	Seal Kit - Hub (Includes Items 1B, 1I, 5, 6F, 6G, 15 & 16)	

FIGURE 1-5. DRIVE HUB/BRAKE ASSEMBLY (4WD) (Prior to SN 0300083331)

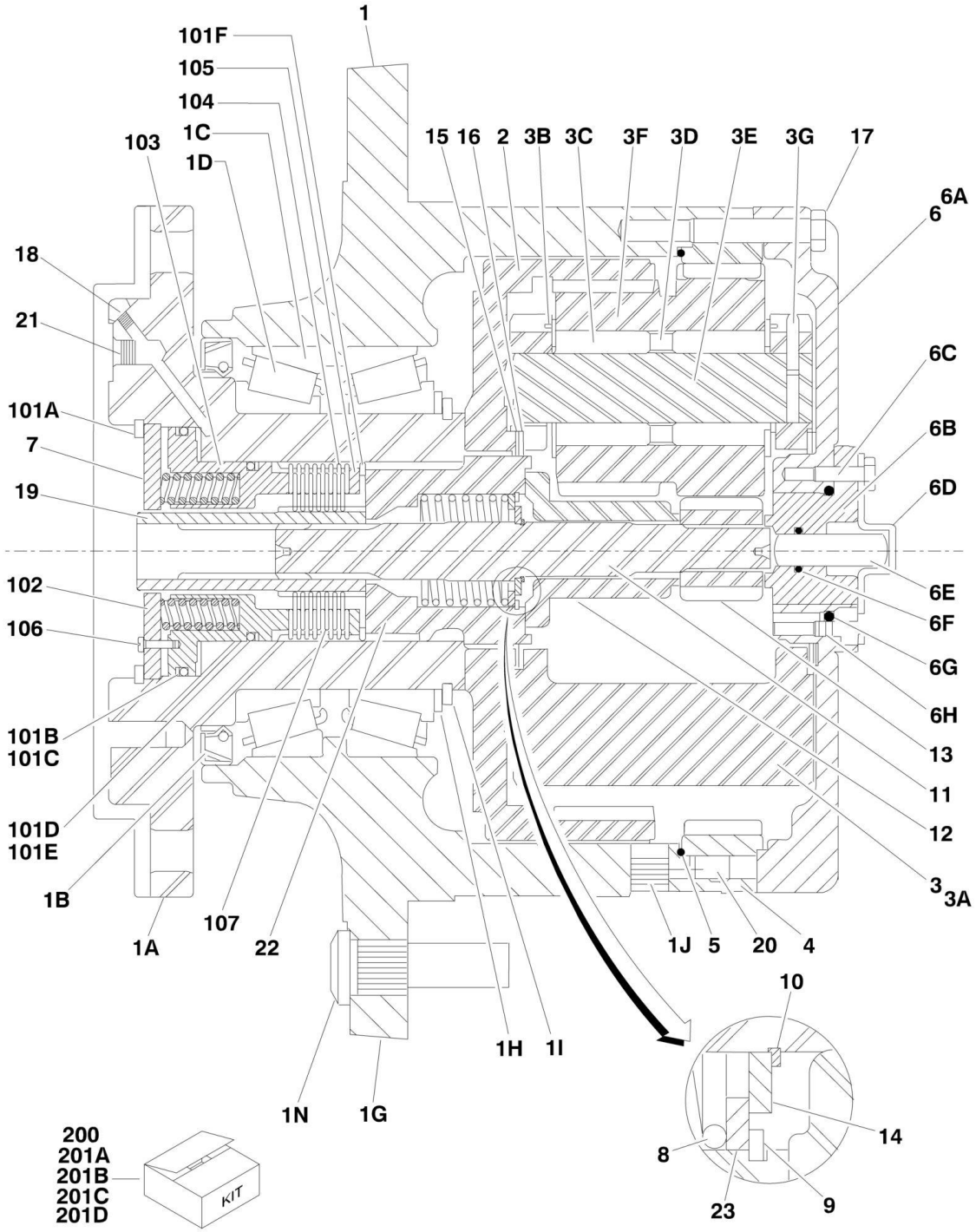

FIGURE 1-5. DRIVE HUB/BRAKE ASSEMBLY (4WD) (Prior to SN 0300083331)

ITEM	PART NUMBER	QTY	DESCRIPTION	REV
	2780259	Ref	**DRIVE HUB ASSEMBLY (2WD)**	A
1	See Note	NSS	Spindle/Housing Assembly (Note: Not Available - Purchase Individual Components)	
1A	7024139	1	Spindle	
1B	7024140	1	Seal	
1C	7024144	2	Cone, Bearing	
1D	7024143	2	Cup, Bearing	
1G	7024142	1	Housing	
1H	7024137	1	Thrustwasher	
1I	7024141	1	Ring, Retaining	
1J	7001928	1	Plug, Pipe	
1N	7000265	10	Stud, Wheel	
2	7024150	1	Gear, Internal	
3	7024145	1	Carrier Assembly	
3A	7024147	NLA	Carrier (use p/n 7024145)	
3B	7001901	6	Thrustwasher, Tanged	
3C	7001902	84	Bearing, Needle	
3D	7001903	3	Spacer, Thrust	
3E	7024146	3	Shaft, Planet	
3F	7024148	3	Gear, Cluster	
3G	7001906	3	Rollpin	
4	7024151	1	Gear, Ring	
5	7000224	2	O-Ring	
6	See Note	NSS	Cover Assembly (Note: Not Available - Purchase Individual Components)	
6A	7024155	1	Cover	
6B	7024156	1	Cap	
6C	7000220	4	Bolt 1/4in-20NC x 3/4in	
6D	7000231	1	Cap, Disengage	
6E	7000235	1	Rod, Disengage	
6F	7000213	1	O-Ring	
6G	7000238	1	O-Ring	
6H	7017048	1	Plug, Pipe	
7	7024106	1	Brake Assembly (See Items 101A-108 for Breakdown)	
8	7000283	1	Spring	
9	7000284	1	Ring, Retaining	
10	7017027	1	Ring, Retaining	
11	7024152	1	Shaft, Input	
12	7024154	1	Spacer, Input	
13	7024149	1	Gear, Sun	
14	7017050	1	Thrustwasher	
15	7000287	4	Thrustwasher	
16	7000288	2	Thrustwasher	
17	7000289	12	Bolt 3/8in-16NC x 2-1/2in (Grade 8)	
18	7024108	1	Plug, Pressure	
19	7024153	1	Coupling	
20	7017047	2	Pin, Dowel	
21	7017082	1	Plug, O-Ring	
22	7024138	1	Coupling	
23	7000282	1	Thrustwasher	

SECTION 1 - FRAME

ITEM	PART NUMBER	QTY	DESCRIPTION	REV
	7024106	Ref	**BRAKE ASSEMBLY**	
101A	See Note	NSS	Internal Circlip (Note: Use Item 201A)	
101B	See Note	NSS	O-Ring (Note: Use Item 201C)	
101C	See Note	NSS	Back-up Ring (Note: Use Item 201C)	
101D	See Note	NSS	O-Ring (Note: Use Item 201C)	
101E	See Note	NSS	Back-up Ring (Note: Use Item 201C)	
101F	See Note	NSS	Internal Circlip (Note: Use Item 201A)	
102	See Note	NSS	Plate, End (Note: Use Item 201A)	
103	See Note	NSS	Piston (Note: Use p/n 7024106)	
104	See Note	NSS	Plate, Outer (Note: Use Item 201B)	
105	See Note	NSS	Spacer (Note: Use Item 201A)	
106	See Note	NSS	Screw (Note: Not Available for Purchase. Use for shipping only)	
107	See Note	NSS	Plate, Inner (Note: Use Item 201B)	
108	See Note	NSS	Spring, Compression (Note: Use Item 201D)	
		Ref	**KIT OPTIONS:**	
200	7024720	1	Seal Kit - Hub (Includes Items 1B, 1I & 5)	
201		Ref	Repair Kit Options:	
201A	7024719	1	Hardware Kit (Includes Items 101A, 101F, 102 & 105)	
201B	7024710	1	Lining Kit (Includes Items 104 & 107)	
201C	7024709	1	O-Ring Kit (Includes Items 101B, 101C, 101D & 101E)	
201D	7024711	1	Spring Kit (Includes Item 108)	

FIGURE 1-6. DRIVE HUB/BRAKE ASSEMBLY (SN 0300083331 through 0300140000)

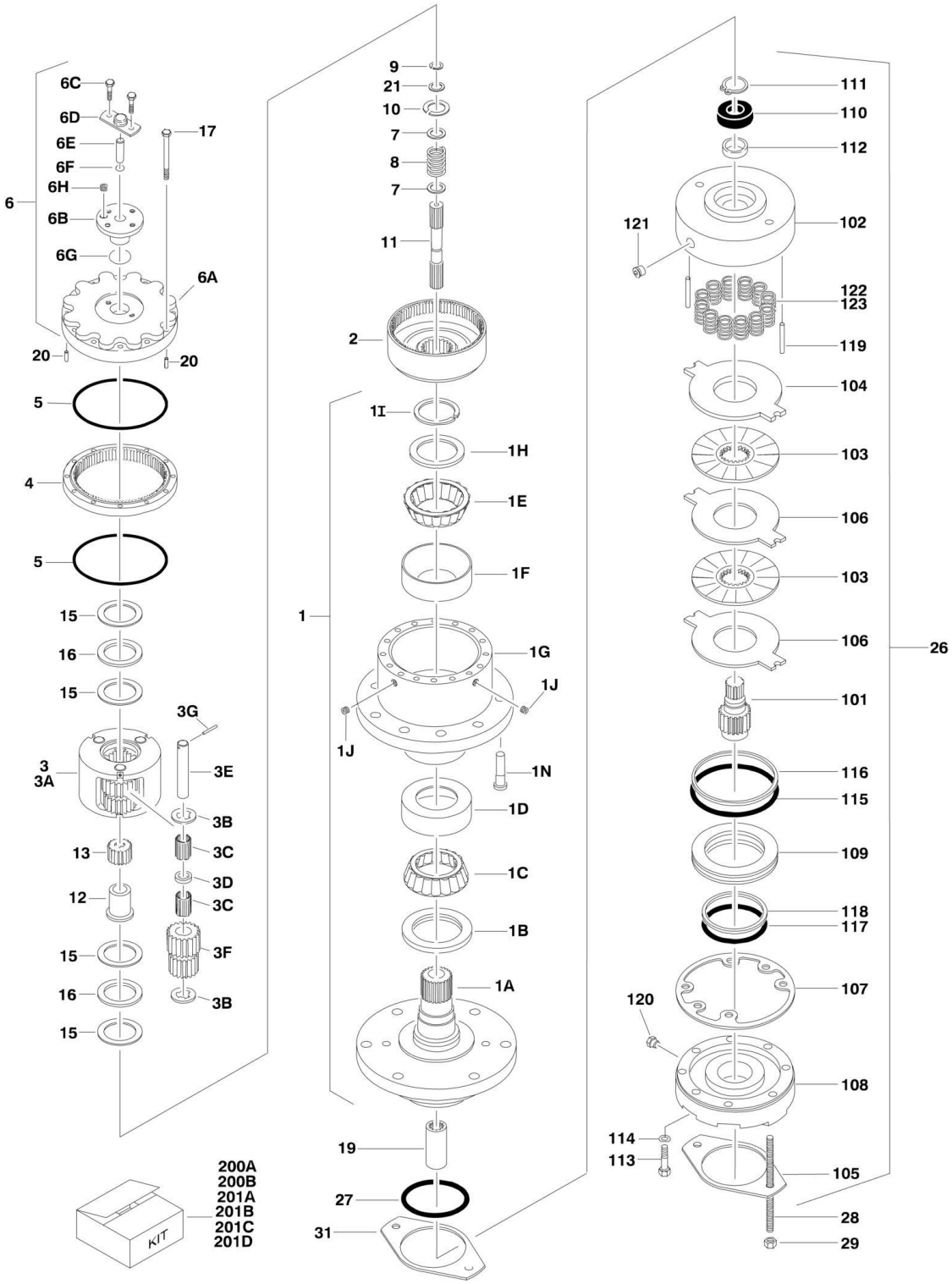

FIGURE 1-6. DRIVE HUB/BRAKE ASSEMBLY (SN 0300083331 through 0300140000)

ITEM	PART NUMBER	QTY	DESCRIPTION	REV
	2780272	Ref	**DRIVE HUB/BRAKE ASSEMBLY**	B
	2780227	Ref	Hub Assembly	B
1	See Note	NSS	Spindle/Housing Assembly (Note: Not Available - Purchase Individual Components)	
1A	7010464	1	Spindle	
1B	7000236	1	Seal	
1C	7000273	1	Cone, Bearing	
1D	7000272	1	Cup, Bearing	
1E	7000275	1	Cone, Bearing	
1F	7000274	1	Cup, Bearing	
1G	7017033	1	Housing	
1H	7000239	1	Thrustwasher	
1I	7000240	1	Ring, Retaining	
1J	7001928	1	Plug, Pipe	
1N	7000265	10	Stud, Wheel	
2	7024782	1	Gear, Ring	
3	7024145	1	Carrier Assembly	
3A	7024147	NLA	Carrier (use p/n 7024145)	
3B	7001901	6	Thrustwasher, Tanged	
3C	7001902	96	Bearing, Needle	
3D	7001903	3	Spacer, Thrust	
3E	7024146	3	Shaft, Planet	
3F	7024148	3	Gear, Cluster	
3G	7001906	3	Rollpin	
4	7024151	1	Gear, Internal	
5	7000224	1	O-Ring	
6	See Note	NSS	Cover Assembly (Note: Not Available - Purchase Individual Components)	
6A	7024155	1	Cover	
6B	7024783	1	Cap	
6C	7000220	4	Bolt 1/4in-20NC x 3/4in	
6D	7000231	1	Cap, Disengage	
6E	7000235	1	Rod, Disengage	
6F	7000213	1	O-Ring	
6G	7000238	1	O-Ring	
6H	7017048	1	Plug, Pipe	
7	7000282	2	Thrustwasher	
8	7000283	1	Spring	
9	7000284	1	Ring, Retaining	
10	7017027	1	Ring, Retaining	
11	7024781	1	Shaft, Input	
12	7024154	1	Spacer, Input	
13	7024149	1	Gear, Sun	
15	7000287	4	Thrustwasher	
16	7000288	2	Thrustwasher	
17	7000289	12	Bolt 3/8in-16NC x 2-1/2in (Grade 8)	
19	7000290	1	Coupling	
20	7017047	2	Pin, Dowel	
21	7017050	1	Thrustwasher	
26	7024182	1	Brake Assembly (Includes Items 101-123)	

SECTION 1 - FRAME

ITEM	PART NUMBER	QTY	DESCRIPTION	REV
27	7024763	2	O-Ring	
28	7024717	2	Stud 1/2in-13NC x 4-5/8in	
29	7024718	2	Nut 1/2in-13NC	
31	7000731	1	Gasket	
	7024182	Ref	**BRAKE ASSEMBLY**	
101	7024189	1	Shaft	
102	See Note	NSS	Housing (Note: Use p/n 7024182)	
103	See Note	NSS	Plate, Friction (Note: Use Item 201C)	
104	See Note	NSS	Plate, Pressure (Note: Use Item 201C)	
105	7000731	1	Gasket	
106	See Note	NSS	Plate, Outer (Note: Use Item 201C)	
107	See Note	NSS	Gasket (Note: Use Item 200B, 201C or 201D)	
108	7024191	1	Cylinder	
109	7024192	1	Piston	
110	See Note	NSS	Bearing, Ball (Note: Use Item 201D)	
111	See Note	NSS	Ring, Retaining (Note: Use Item 201D)	
112	See Note	NSS	Seal, Shaft (Note: Use Item 201D)	
113	See Note	NSS	Capscrew (Note: Not Available for Purchase)	
114	See Note	NSS	Lockwasher (Note: Not Available for Purchase)	
115	See Note	NSS	O-Ring (Note: Use Item 200B)	
116	See Note	NSS	Ring, Back-up (Note: Use Item 200B)	
117	See Note	NSS	O-Ring (Note: Use Item 200B)	
118	See Note	NSS	Ring, Back-up (Note: Use Item 200B)	
119	7024190	2	Pin, Dowel	
120	See Note	NSS	Plug (Note: Not Available for Purchase)	
121	See Note	NSS	Plug (Note: Not Available for Purchase)	
122	See Note	NSS	Spring Kit (Natural) (Note: Use Item 201B)	
123	See Note	NSS	Spring Kit (Blue) (Note: Use Item 201B)	
		Ref	**KIT OPTIONS:**	
200		Ref	Seal Kit Options:	
200A	7017068	1	Seal Kit - Hub (Includes Items 1B, 5, 6F, 6G & 8)	
200B	7024194	1	Seal Kit - 7024182 Brake (Includes Items 105, 107 & 115-118)	
201		Ref	Repair Kit Options:	
201A	7024195	NLA	Spring Kit - 7024182 Brake (Includes 12 Natural Colored Springs) (Use p/n 7024196)	
201B	7024196	1	Spring Kit - 7024182 Brake (Includes 12 Natural and 2 Blue Colored Springs)	
201C	7024193	1	Friction Disc Kit - 7024182 Brake (Includes Items 103, 104, 106 & 107)	
201D	7024197	1	Bearing Kit - 7024182 Brake (Includes Items 107 & 110-112)	

FIGURE 1-7. DRIVE MOTOR ASSEMBLY (2WD) (Prior to SN 0300083331)

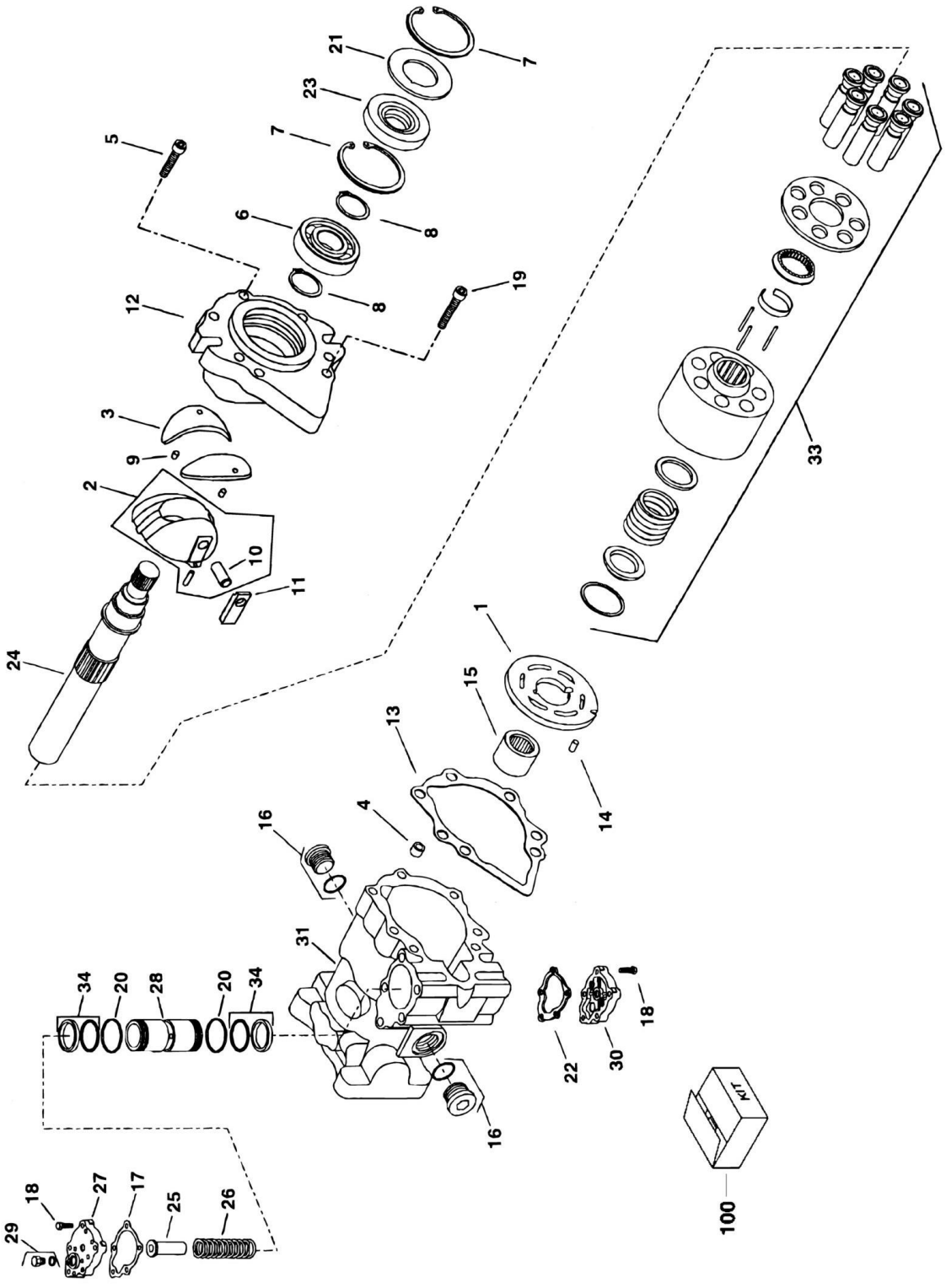

FIGURE 1-7. DRIVE MOTOR ASSEMBLY (2WD) (Prior to SN 0300083331)

ITEM	PART NUMBER	QTY	DESCRIPTION	REV
	3160268	Ref	**DRIVE MOTOR ASSEMBLY**	B
1	7023938	1	Plate, Motor Valve	
2	7023939	1	Swash Plate Assembly (Includes Item 10)	
3	7023940	2	Bearing, Journal	
4	7007435	1	Pin, Spring	
5	7021202	1	Screw	
6	7007437	1	Bearing, Ball	
7	7007438	2	Ring	
8	7007439	2	Ring	
9	7021203	2	Pin, Spring	
10	7007441	1	Pin	
11	7007442	1	Bearing, Sleeve	
12	7023941	1	Cover, Front	
13	See Note	NSS	Gasket, Front Cover (Note: Use Item 100)	
14	7007446	1	Pin	
15	7007425	1	Bearing, Needle	
16	7007419	2	Plug (Includes O-Ring)	
17	See Note	NSS	Gasket, Servo (Note: Use Item 100)	
18	7021223	10	Screw	
19	7021207	6	Screw	
20	See Note	NSS	Ring, Bearing (Note: Use Item 100)	
21	7022371	1	Washer, Support	
22	See Note	NSS	Gasket, Servo (Note: Use Item 100)	
23	See Note	NSS	Seal, Lip (Note: Use Item 100)	
24	7023942	1	Shaft, 13 Tooth	
25	7023943	1	Stop	
26	7023944	1	Spring, Servo	
27	7021219	1	Cover, Servo	
28	7023945	1	Piston, Servo	
29	7007470	1	Plug, (Includes O-Ring)	
30	7021219	1	Cover, Servo	
31	See Note	1	Housing (Note: Not Available - Purchase Complete Assembly)	
32	7010114	2	Plug (Includes O-Ring) (Not Shown)	
33	7010116	1	Cylinder Block Kit	
34	See Note	NSS	Piston Ring and O-Ring Kit (Note: Use Item 100)	
		Ref	**KIT OPTIONS:**	
100	7023946	1	Seal Kit (Includes Items 13, 17, 20, 22, 23, 34 & O-Rings on 16, 29 & 32)	

FIGURE 1-8. DRIVE MOTOR ASSEMBLY (2WD AND ALL 4WD MACHINES) (4 BOLT ASSEMBLY) (SN 0300083331 through 0300140000)

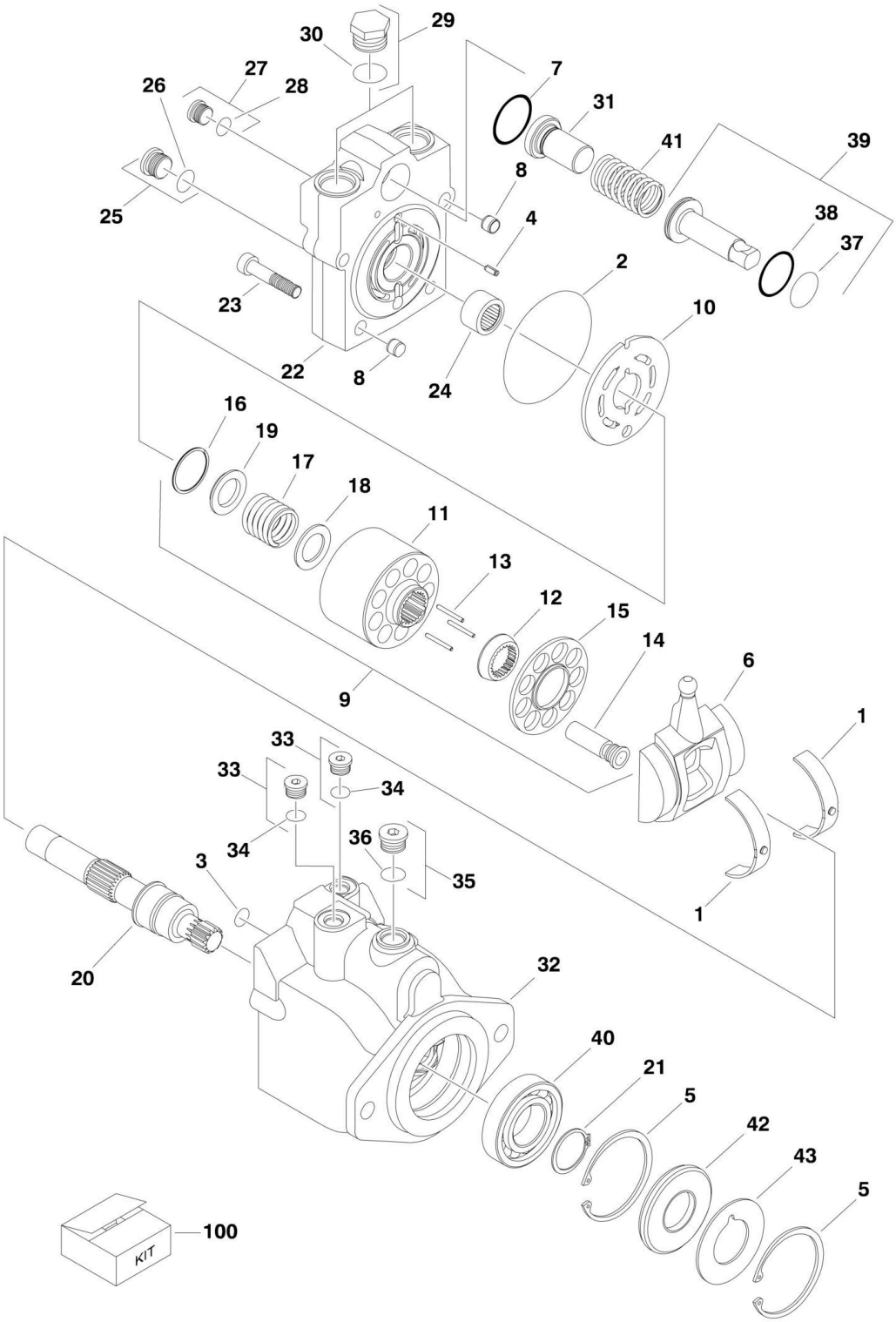

FIGURE 1-8. DRIVE MOTOR ASSEMBLY (2WD AND ALL 4WD MACHINES) (4 BOLT ASSEMBLY) (SN 0300083331 through 0300140000)

ITEM	PART NUMBER	QTY	DESCRIPTION	REV
		Ref	**DRIVE MOTOR ASSEMBLY**	
	3160308	Ref	**Drive Motor Assembly 2WD**	C
	3160266	Ref	**Drive Motor Assembly 4WD**	D
1	7022302	2	Bearing, Journal	
2	See Note	NSS	O-Ring (Note: Use Item 100)	
3	See Note	NSS	O-Ring (Note: Use Item 100)	
4	7007446	1	Pin	
5	7007438	2	Ring, Retaining	
6		Ref	Swash Plate Options:	
6	7024861	1	Swash Plate 2WD	
6	7022305	1	Swash Plate 4WD	
7	See Note	NSS	O-Ring (Note: Use Item 100)	
8		Ref	Pin Options:	
8	7027435	2	Pin 2WD	
8	Not Required	0	Pin 4WD	
9		Ref	Cylinder Block Kit (Includes Items 11-19) Options:	
9	7027740	1	Cylinder Block Kit 2WD	
9	7023907	1	Cylinder Block Kit 4WD	
10		Ref	Plate, Valve Options:	
10	7024862	1	Plate, Valve 2WD	
10	7023908	1	Plate, Valve 4WD	
11	See Note	NSS	Block, Cylinder (Note: Use Item 9)	
12		Ref	Guide, Slipper Retainer Options:	
12	See Note	NSS	Guide, Slipper Retainer 2WD (Note: Use Item 9)	
12	7021277	1	Guide, Slipper Retainer 4WD	
13	7021275	3	Pin, Slipper Hold Down	
14		Ref	Piston Assembly Options:	
14	7024865	9	Piston Assembly 2WD	
14	See Note	NSS	Piston Assembly 4WD (Note: Use Item 9)	
15		Ref	Retainer, Slipper Options:	
15	See Note	NSS	Retainer, Slipper 2WD (Note: Use Item 9)	
15	7022310	1	Retainer, Slipper 4WD	
16	7022311	1	Ring, Retaining	
17		Ref	Spring Options:	
17	7024867	1	Spring 2WD	
17	7022312	1	Spring 4WD	
18		Ref	Washer	
18	7022313	1	Washer 2WD	
18	See Note	NSS	Washer 4WD (Note: Use Item 9)	
19	7022314	1	Retainer, Spring	
20	7023910	1	Shaft	
21	7007439	1	Ring, Retaining	
22		Ref	Cap, End - Axial Options:	
22	See Note	NSS	Cap, End - Axial 2WD (Note: Not Available - Purchase Complete Assembly)	
22	7022367	1	Cap, End - Axial 4WD	
23	7022368	4	Screw	
24	7021249	1	Bearing, Needle	
25	7022321	1	Plug (Includes Item 26)	

SECTION 1 - FRAME

ITEM	PART NUMBER	QTY	DESCRIPTION	REV
26	See Note	NSS	O-Ring (Note: Use Item 25 or 100)	
27	7007420	1	Plug (Includes Item 28)	
28	See Note	NSS	O-Ring (Note: Use Item 27 or 100)	
29	7007419	2	Plug (Includes Item 30)	
30	See Note	NSS	O-Ring (Note: Use Item 29 or 100)	
31		Ref	Seat, Spring Options:	
31	7027741	1	Seat, Spring 2WD	
31	7022372	1	Seat, Spring 4WD	
32		Ref	Housing Options:	
32	7024870	1	Housing 2WD	
32	7022370	1	Housing 4WD	
33	7007419	2	Plug (Includes Item 34)	
34	See Note	NSS	O-Ring (Note: Use Item 33 or 100)	
35	7022321	1	Plug (Includes Item 36)	
36	See Note	NSS	O-Ring (Note: Use Item 35 or 100)	
37	See Note	NSS	O-Ring (Note: Use Item 39 or 100)	
38	See Note	NSS	Ring, Seal (Note: Use Item 39 or 100)	
39		Ref	Piston, Servo Options:	
39	7024871	1	2WD (Includes Items 37 & 38)	
39	7022323	1	4WD (Piston Only - Does not include Items 37 & 38)	
40	7007437	1	Bearing	
41	7022326	1	Spring	
42	See Note	NSS	Seal, Lip (Note: Use Item 100)	
43	7022371	1	Washer, Support	
		Ref	**KIT OPTIONS:**	
100	7022328	1	Seal Kit (Includes Items 2, 3, 7, 26, 28, 30, 34, 36, 37, 38 & 42)	

FIGURE 1-9. DRIVE MOTOR ASSEMBLY (5 BOLT ASSEMBLY)

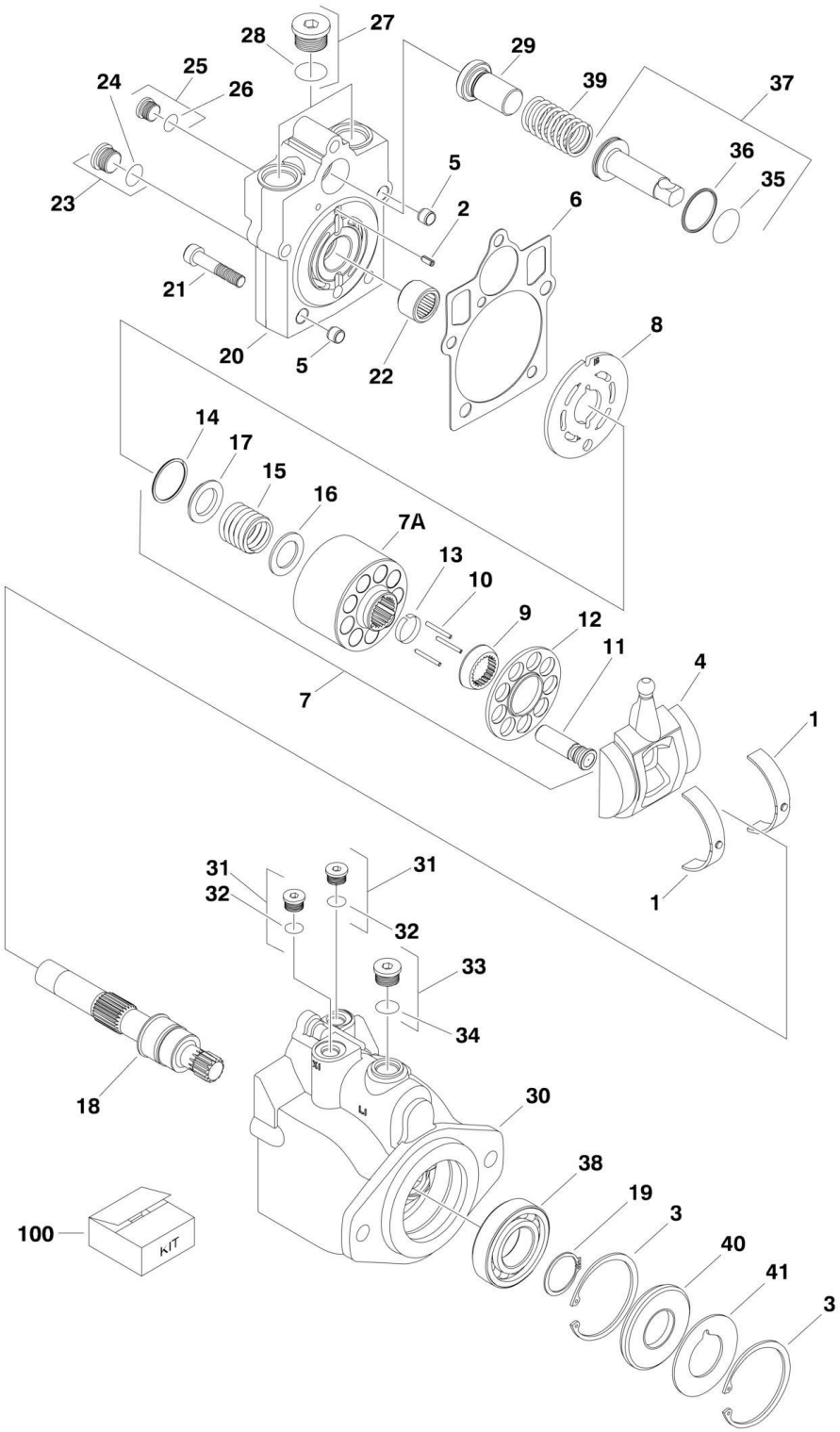

FIGURE 1-9. DRIVE MOTOR ASSEMBLY (5 BOLT ASSEMBLY)

ITEM	PART NUMBER	QTY	DESCRIPTION	REV
		Ref	**DRIVE MOTOR ASSEMBLIES**	
	3160347	Ref	**Drive Motor Assemblies 2WD**	B
	3160348	Ref	**Drive Motor Assemblies 4WD**	B
1	7022302	2	Bearing, Journal	
2	7007446	1	Pin	
3	7007438	2	Ring, Retaining	
4		Ref	Swash Plate Options:	
4	70000794	1	Swash Plate 2WD	
4	7022305	1	Swash Plate 4WD	
5	See Note	NSS	Pin (Note: Not Available for Purchase)	
6	See Note	NSS	Gasket (Note: Use Item 100)	
7		Ref	Cylinder Block Kit (Includes Items 7A & 9-17)	
7	7027740	1	Cylinder Block Kit 2WD	
7	7023907	1	Cylinder Block Kit 4WD	
7A	See Note	NSS	Block, Cylinder (Note: Use Item 7)	
8		Ref	Plate, Valve Options:	
8	7024862	1	Plate, Valve 2WD	
8	7023908	1	Plate, Valve 4WD	
9		Ref	Guide, Slipper Retainer Options:	
9	See Note	NSS	Guide, Slipper Retainer 2WD (Note: Use Item 7)	
9	7021277	1	Guide, Slipper Retainer 4WD	
10	7021275	3	Pin, Slipper Hold Down	
11	See Note	NSS	Piston Assembly (Note: Use Item 7)	
12		Ref	Retainer, Slipper Options:	
12	See Note	NSS	Retainer, Slipper 2WD (Note: Use Item 7)	
12	7022310	1	Retainer, Slipper 4WD	
13		Ref	Retainer, Holddown Pin Options:	
13	Not Required	0	Retainer, Holddown Pin 2WD	
13	7021276	1	Retainer, Holddown Pin 4WD	
14	7022311	1	Ring, Retaining	
15		Ref	Spring Options:	
15	7024867	1	Spring 2WD	
15	7022312	1	Spring 4WD	
16		Ref	Washer Options:	
16	7022313	1	Washer 2WD	
16	7024868	1	Washer 4WD	
17	7022314	1	Retainer, Spring	
18	7023910	1	Shaft	
19	7007439	1	Ring, Retaining	
20		Ref	Cap, End - Axial Options:	
20	70000795	1	Cap, End - Axial 2WD	
20	70000797	1	Cap, End - Axial 4WD	
21	7022368	5	Screw	
22	7021249	1	Bearing, Needle	
23	2220886	1	Plug (Includes Item 24)	
24	See Note	NSS	O-Ring (Note: Use Item 23 or 100)	
25	2220883	1	Plug (Includes Item 26)	
26	See Note	NSS	O-Ring (Note: Use Item 25 or 100)	
27	2220888	2	Plug (Includes Item 28)	
28	See Note	NSS	O-Ring (Note: Use Item 27 or 100)	

SECTION 1 - FRAME

ITEM	PART NUMBER	QTY	DESCRIPTION	REV
29		Ref	Seat, Spring Options:	
29	7027741	1	Seat, Spring 2WD	
29	7022372	1	Seat, Spring 4WD	
30	See Note	NSS	Housing (Note: Not Available - Purchase Complete Assembly)	
31	2220883	2	Plug (Includes Item 32)	
32	See Note	NSS	O-Ring (Note: Use Item 31 or 100)	
33	2220886	1	Plug (Includes Item 34)	
34	See Note	NSS	O-Ring (Note: Use Item 33 or 100)	
35	See Note	NSS	O-Ring (Note: Use Item 37 or 100)	
36	See Note	NSS	Ring, Seal (Note: Use Item 37 or 100)	
37		Ref	Piston, Servo Options (Includes Items 35 & 36):	
37	7024871	1	Piston, Servo 2WD	
37	7024854	1	Piston, Servo 4WD	
38	7007437	1	Bearing	
39	7022326	1	Spring	
40	7022328	1	Seal, Lip	
41	7022371	1	Washer, Support	
		Ref	**KIT OPTIONS:**	
100	7022328	1	Seal Kit (Includes Items 6, 24, 26, 28, 32, 34, 35, 36 & 40)	

FIGURE 1-10. FRAME VALVES AND SHIELDS INSTALLATIONS (Prior to SN 0300083331)

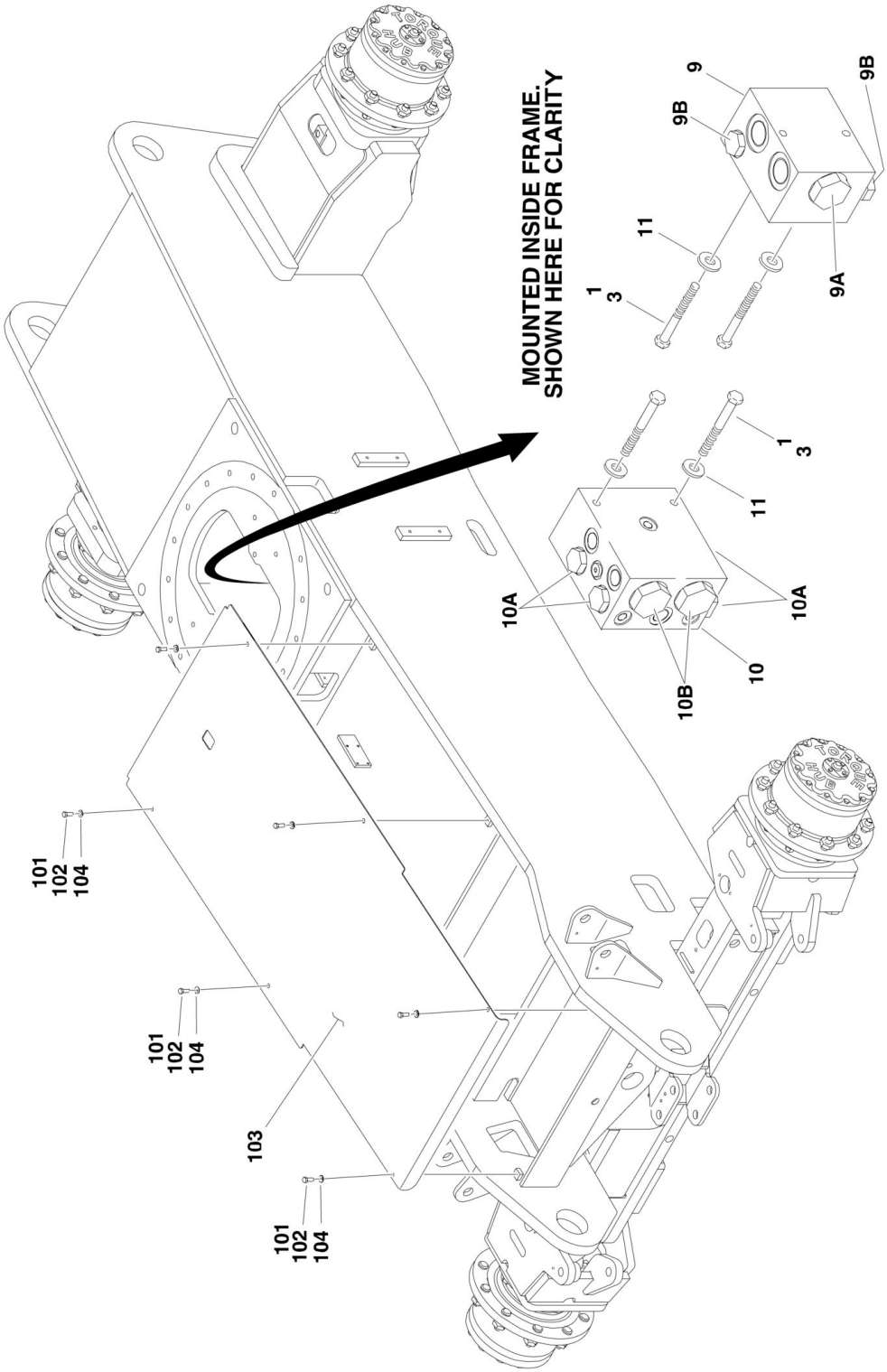

FIGURE 1-10. FRAME VALVES AND SHIELDS INSTALLATIONS (Prior to SN 0300083331)

ITEM	PART NUMBER	QTY	DESCRIPTION	REV
		Ref	**WHEEL DRIVE VALVES INSTALLATION**	
	0271341	Ref	**Wheel Drive Valves Installation 2WD**	E
	0271349	Ref	**Wheel Drive Valves Installation 4WD**	E
1	0100011	AR	Compound, Locking	
3	0641628	AR	Bolt 3/8in-16NC x 3-1/2in	
9	4641209	1	Flow Divider Valve Assembly	
9A	7023933	1	Cartridge, Flow Divider	
9A	7021625	1	Seal Kit - 7022396 Cartridge	
9B	7022397	2	Cartridge, Check Valves	
9B	7022399	2	Seal Kit - 7022397 Cartridge	
10		Ref	Dual Flow Divider Options:	
10	Not Required	0	Dual Flow Divider 2WD	
10	4641183	1	Dual Flow Divider 4WD	
10A	7012930	4	Cartridge, Check Valves	
10A	2900708	4	Seal Kit - 7012930 Cartridge	
10B	7023917	2	Cartridge, Flow Divider	
10B	7021625	2	Seal Kit - 7023917 Cartridge	
11	4751600	AR	Flatwasher 3/8in	
	0271316	Ref	**FRAME COVERS INSTALLATION**	A
101	0100011	AR	Compound, Locking	
102	0641608	6	Bolt, 3/8in - 16NC x 1in	
103	3570686	1	Plate, Cover Front	
104	4751600	6	Flatwasher, 3/8in	

FIGURE 1-11. FRAME VALVES AND SHIELDS INSTALLATIONS (SN 0300083331 through 0300140000)

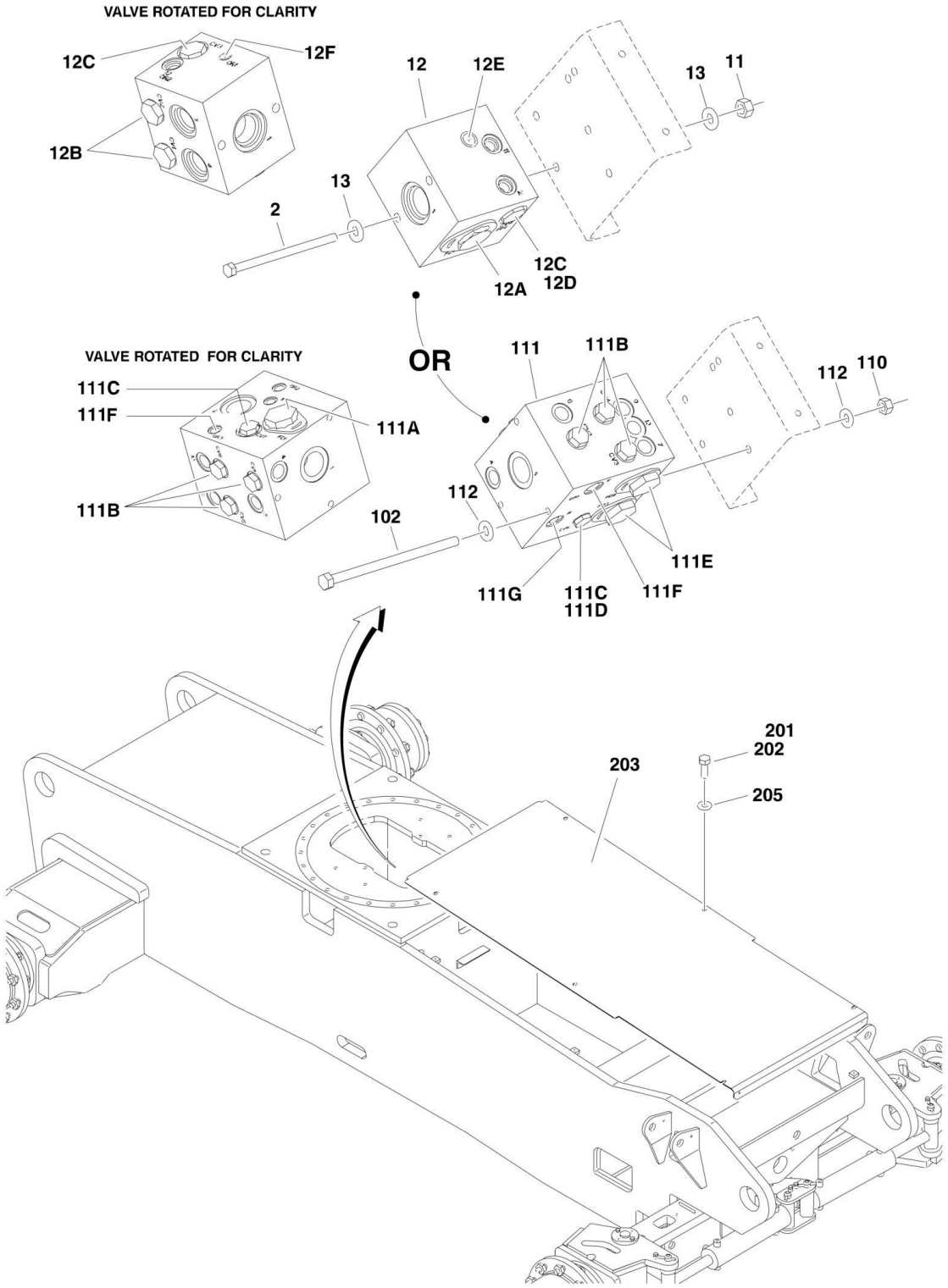

FIGURE 1-11. FRAME VALVES AND SHIELDS INSTALLATIONS (SN 0300083331 through 0300140000)

ITEM	PART NUMBER	QTY	DESCRIPTION	REV
	0273378	Ref	**DRIVE VALVES INSTALLATION - 2WD**	E
2	0641542	2	Bolt 5/16in-18NC x 5-1/4in	
11	3311505	2	Locknut 5/16in-18NC	
12		Ref	Flow Divider Valve Assembly Options:	
12	4641300	NLA	Valve (Use p/n 1001099870) **(SN 0300083331 through 0300139495)**	B
12	1001099870	1	Valve **(SN 0300139496 through 0300140000)**	A
12A	7023933	1	Cartridge, Flow Divider	
12A	7021625	1	Seal Kit - 7023933 Cartridge	
12A	70000781	1	Lockdown Kit	
12B	7022397	2	Cartridge, Check	
12B	7022399	2	Seal Kit - 7022397 Cartridge	
12C		Ref	Cartridge, Check Options:	
12C	7021639	2	Cartridge in 4641300 Valve	
12C	2900756	2	Seal Kit - 7022398 Cartridge	
12C	70002390	2	Cartridge in 1001099870 Valve	
12C	7022399	2	Seal Kit - 70002390 Cartridge	
12D	7024881	1	Piston, Pilot	
12E	7017406	1	Plug (Used on 1001099870 Valve)	
12F	7024844	1	Plug (Used on 1001099870 Valve)	
12F	7017492	1	Orifice (Used on 1001099870 Valve)	
13	4711500	4	Flatwasher 5/16in Narrow	
	0273704	Ref	**DRIVE VALVES INSTALLATION - 4WD**	D
102	0641560	3	Bolt 5/16in-18NC x 7-1/2in	
110	3311505	3	Locknut 5/16in-18NC	
111	4641303	1	Flow Divider Valve Assembly	
111A	7023933	1	Cartridge, Flow Divider	
111A	7021625	1	Seal Kit - 7023933 Cartridge	
111B	7022397	6	Cartridge, Check	
111B	7022399	6	Seal Kit - 7022397 Cartridge	
111C	7021639	2	Cartridge, Check Valves	
111C	2900756	2	Seal Kit - 7021639 Cartridge	
111D	7024881	1	Piston, Pilot	
111E	7023917	2	Cartridge, Flow Divider	
111E	7021625	2	Seal Kit - 7023917 Cartridge	
111F	70003935	2	Orifice	
111G	70003936	1	Orifice	
112	4711500	6	Flatwasher 5/16in Narrow	
	0274267	Ref	**FRAME SHIELDS INSTALLATIONS**	A
201	0100011	6	Compound, Locking	
202	0641608	6	Bolt, 3/8in - 16NC x 1in	
203	3575718	1	Plate, Cover Front	
205	4751600	6	Flatwasher 3/8in	

FIGURE 1-12. TOW PACKAGE INSTALLATION

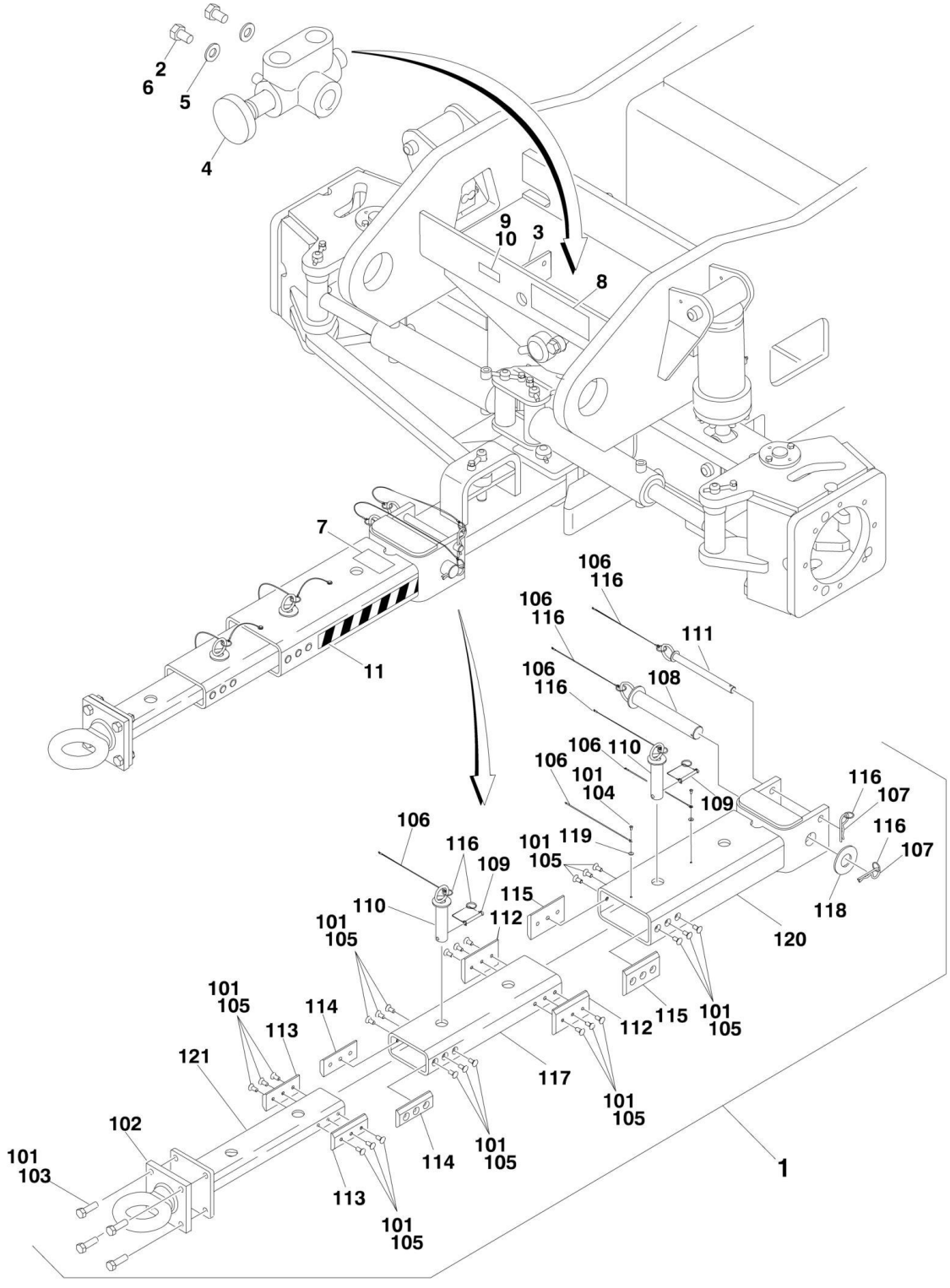

FIGURE 1-12. TOW PACKAGE INSTALLATION

ITEM	PART NUMBER	QTY	DESCRIPTION	REV
	0271354	Ref	**TOW BAR INSTALLATION**	E
1	0250528	1	Tow Bar Assembly (See Items 101-121 for Breakdown)	
2	0641504	2	Bolt 5/16in-18NC x 1/2in	
3	3539662	1	Plate, Valve Mounting	
4	4640261	1	Valve, Select	
5	4711500	2	Flatwasher 5/16in	
6	0100011	AR	Compound, Locking	
7	1704578	2	Decal - Crushing	
8	1705090	1	Decal - Towing Instructions	
9	3250872	1	Nameplate - Steer/Tow Select Valve	
10	3820001	4	Rivet	
11	4420051	AR	Tape, Safety	
	0270528	Ref	**TOW BAR ASSEMBLY**	A
101	0100011	AR	Compound, Locking	
102	0362910	1	Pintle, Draw Eye	
103	0642010	4	Bolt 5/8in-11NC x 1-1/4in	
104	0721004	2	Screw, Hex Machine	
105	0741607	24	Screw, Countersunk 3/8in-16NC x 7/8in	
106	1060584	6	Cable, Lanyard	
107	3420372	2	Pin, Cotter	
108	3420447	1	Pin, Towing	
109	3421565	2	Pin, Snap	
110	3422841	2	Pin	
111	3422847	1	Pin	
112	3572009	2	Plate, Slide Stop	
113	3572010	2	Plate, Slide Stop	
114	3572011	2	Plate, Slide Stop	
115	3572012	2	Plate, Slide Stop	
116	3760170	8	Ring, Split	
117	4568133	1	Tube, Tow Bar	
118	4740036	1	Flatwasher	
119	4751000	2	Flatwasher #10	
120	4846295	1	Tow Bar Attach Weldment	
121	4846296	1	Pintle Attach Weldment	

SECTION 2 - TURNTABLE

FIGURE 2-1. CONTROL VALVES INSTALLATIONS

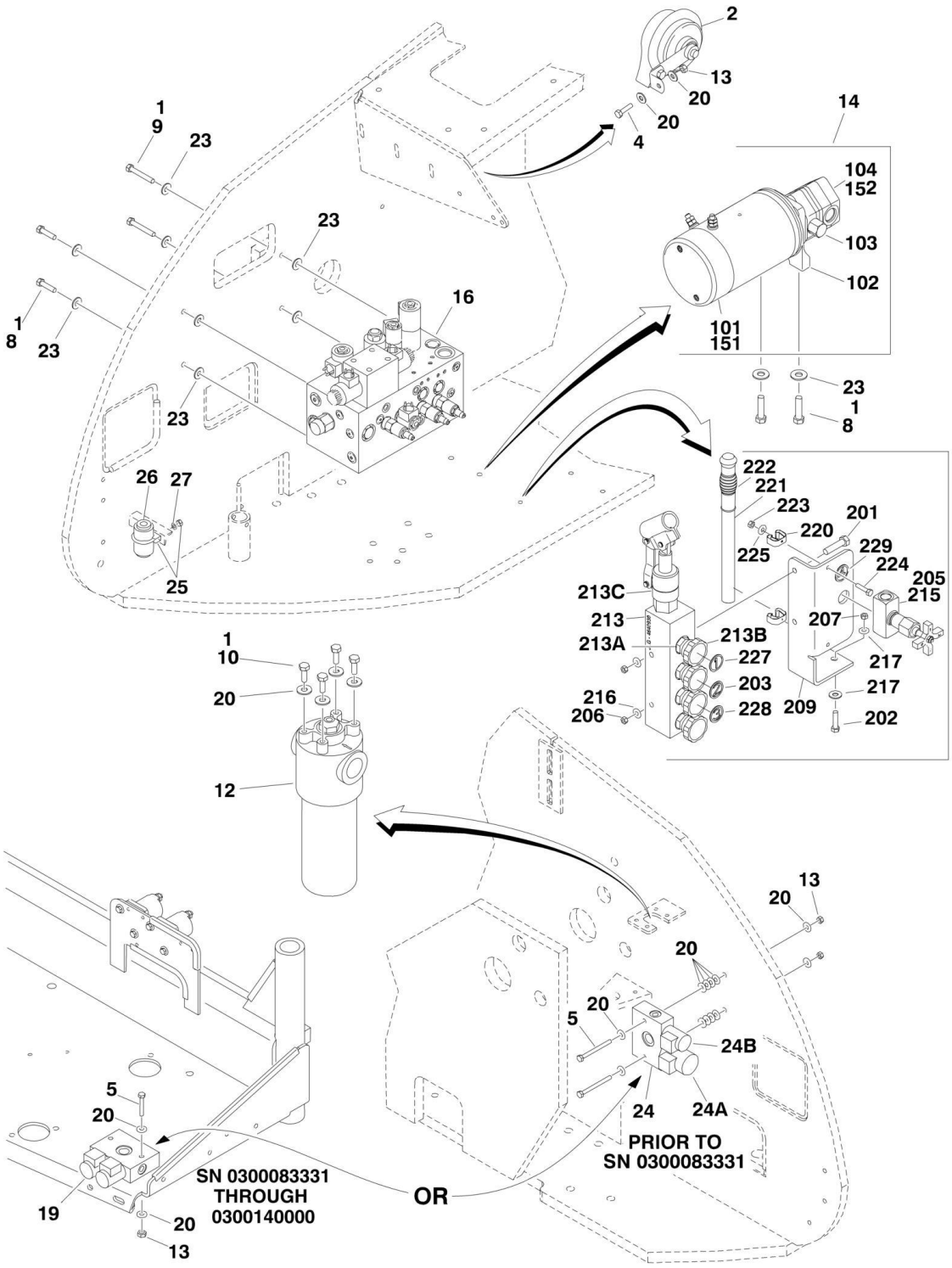

FIGURE 2-1. CONTROL VALVES INSTALLATIONS

ITEM	PART NUMBER	QTY	DESCRIPTION	REV
		Ref	**VALVES INSTALLATIONS**	
	0270901	Ref	**Valves Installations 800S (Prior to SN 0300083331)**	G
	0274173	Ref	**Valves Installations 800S (SN 0300083331 through 0300087261)**	B
	0274644	Ref	**Valves Installations 800S (SN 0300087262 through 0300140000)**	D
	0270902	Ref	**Valves Installations 860SJ (Prior to SN 0300083331)**	F
	0274174	Ref	**Valves Installations 860SJ (SN 0300083331 through 0300087261)**	B
	0274645	Ref	**Valves Installations 860SJ (SN 0300087262 through 0300140000)**	D
1	0100011	AR	Compound, Locking	
2	0140001	1	Horn	
4	0641408	1	Bolt 1/4in-20NC x 1in	
5		Ref	Bolt Options:	
5	0641424	2	Bolt 1/4in-20NC x 3in 800S **(Prior to SN 0300083331)**	
5	0641418	2	Bolt1/4in-20NC x 2-1/4in 800S **(SN 0300083331 through 0300140000)**	
5	0641416	2	Bolt1/4in-20NC x 2in 860SJ **(SN 0300083331 through 0300117223)**	
5	0641418	2	Bolt1/4in-20NC x 2-1/4in 860SJ **(SN 0300117224 through 0300140000)**	
8	0641612	4	Bolt 3/8in-16NC x 1-1/2in	
9		Ref	Bolt Options:	
9	0641620	2	Bolt 3/8in-16NC x 2-1/2in **(Prior to SN 0300087262)**	
9	0641612	2	Bolt 3/8in-16NC x 1-1/2in **(SN 0300087262 through 0300140000)**	
10	0651406	AR	Bolt 1/4in-28NF x 3/4in	
12		Ref	Hydraulic Pressure Filter Assembly Options:	
12	2120163	1	Pressure Filter **(Prior to SN 0300087262)**	
12	2120150	1	Element (P/N 2120163 Filter)	
12	7020020	1	Indicator, Clog (P/N 2120163 Filter)	
12	7023206	1	O-Ring (P/N 2120163 Filter)	
12	7023207	1	Ring, Back-up (P/N 2120163 Filter)	
12	2120209	1	Pressure Filter **(SN 0300087262 through 0300140000)**	
12	2120210	1	Element, Filter (P/N 2120209 Filter)	
12	7020020	1	Manual Indicator (P/N 2120209 Filter)	
12	70000934	1	O-Ring Filter Bowl (P/N 2120209 Filter)	
13	3311405	3	Locknut 1/4in-20NC	
14		Ref	Auxiliary Pump Assembly Options:	
14	3600342	NLA	Auxiliary Pump Assembly (Use p/n 3600424 - See Items 101-105 for Breakdown) **(Prior to SN 0300103854)**	
14	3600424	1	Auxiliary Pump Assembly (See Items 151-152 for Breakdown) **(SN 0300103854 through 0300140000)**	
16		Ref	Main Control Assembly Options (See MAIN CONTROL VALVE ASSEMBLY for Breakdown):	
16	4641184	1	Main Control Assembly **(Prior to SN 0300089328)**	
16	4641432	1	Main Control Assembly **(SN 0300089328 through 0300140000)**	
19	4641317	1	Dual Select Valve Assembly	C
19	7012944	2	Coil	
19	7012941	2	Cartridge Less Coil	

SECTION 2 - TURNTABLE

ITEM	PART NUMBER	QTY	DESCRIPTION	REV
19	7010543	2	Seal Kit - 7012941 Valve (1 Per Cartridge)	
20	4711400	AR	Flatwasher 1/4in Thin	
20	4751400	AR	Flatwasher 1/4in Regular	
23	4751600	10	Flatwasher 3/8in Regular	
24	4641108	1	Dual Select Valve Assembly **(Prior to SN 0300083331)**	B
24A	7012943	1	Coil	
24A	7012995	1	Cartridge Less Coil	
24A	7012518	1	Seal Kit - 7012995 Valve	
24B	7012944	1	Coil	
24B	7012974	1	Cartridge Less Coil	
24B	7010543	1	Seal Kit - 7012974 Valve	
25	1320019	1	Clamp **(Prior to SN 0300069206)**	
26	2120182	1	Filter, High Pressure **(Prior to SN 0300069206)**	
26	7024373	1	Element	
27	4751500	2	Flatwasher 5/16in Regular **(Prior to SN 0300069206)**	
	3600342	Ref	**AUXILIARY PUMP ASSEMBLY (FENNER FLUID POWER BRAND) (Prior to SN 0300103854)**	B
101	7022207	1	Motor	
101	7013753	1	Brush Kit	
102	7016769	1	Bracket, Motor/Pump	
102	7013711	1	Coupling	
103	7013715	1	Ball	
103	7022227	1	Spring	
103	7022228	1	Screw, Valve Adjustment	
103	7022230	1	Cap	
104	7022215	1	Pump	
104	7013716	1	Seal, Shaft	
105	7022231	1	Ball and Spring Assembly (Not Shown - Located on far side of pump)	
105	7022229		Plug	
	3600424	Ref	**AUXILIARY PUMP ASSEMBLY (HALDEX BRAND) (SN 0300103854 through 0300140000)**	B
151	70001056	1	Motor Kit	
151	7011062	1	Bracket, Motor/Pump	
151	7011016	1	Coupling	
151	7029592	2	Setscrew	
152	7029593	1	Pump Kit	
152	7011016	1	Coupling	
152	7011044	1	Gasket	
152	7011048	4	Flatwasher	
152	7011043	4	Screw	
	0272750	Ref	**MANUAL DESCENT INSTALLATION (OPTIONAL) (SN 0300068651 through 0300140000)**	A
201	0641420	2	Bolt 1/4in-20NC x 2-1/2in	
202	0641514	2	Bolt 5/16in-18NC x 1-3/4in	
203	1702927	1	Decal - #2	
204	1705589	1	Decal - Manual Descent (Not Shown - Located on Hydraulic Tank)	
205	2900062	1	Kit, Valve Mounting	
206	3311405	2	Locknut 1/4in-20NC	
207	3311505	2	Locknut 5/16in-18NC	
209	3574179	1	Plate, Valve Mounting	
213	4640930	1	Manifold, Manual Descent Assembly	

ITEM	PART NUMBER	QTY	DESCRIPTION	REV
213A		Ref	Cartridge, Needle Options:	
213A	4640902	4	Cartridge, Needle (was p/n 7012954) (Original Equipment)	
213A	7012953	4	Seal, Kit - 7012954 Cartridge	
213A	4640902	4	Cartridge, Needle (Service Replacement)	
213A	7012953	4	Seal, Kit - 4640902 Cartridge	
213B	7012961	4	Knob	
213C		Ref	Cartridge, Pump Options:	
213C	70004019	1	Cartridge, Pump (was p/n 7012694) (Original Equipment)	
213C	7012699	1	Seal, Kit - 7012694 Cartridge	
213C	70004019	1	Cartridge, Pump (Service Replacement)	
213C	2900756	1	Seal, Kit - 70004019 Cartridge	
215	4641263	1	Valve, Metering	
216	4751400	2	Flatwasher 1/4in Regular	
217	4751500	4	Flatwasher 5/16in Regular	
220	1380136	2	Clip, Gripper	
221	2560122	1	Handle	
222	2560123	1	Handle, Grip	
223	3311005	2	Locknut #10-24NC	
224	3911008	2	Screw	
225	4751000	2	Flatwasher #10 Regular	
226	1702901	1	Decal - Manual Descent (Not Shown - Located on hood)	
227	1702903	1	Decal - #1	
228	1702924	1	Decal - #3	
229	1702925	1	Decal - #4	

FIGURE 2-2. MAIN CONTROL VALVE ASSEMBLY

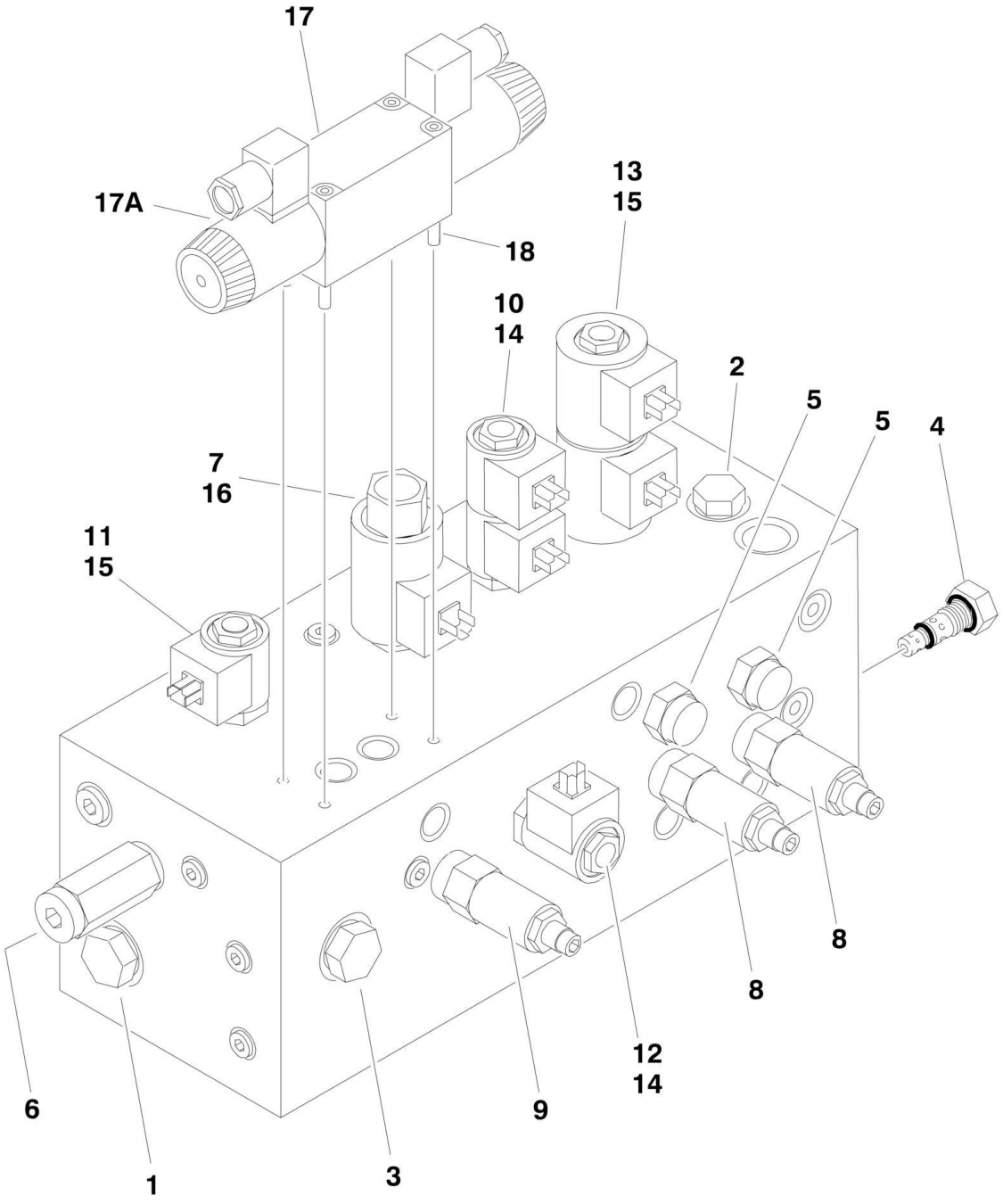

FIGURE 2-2. MAIN CONTROL VALVE ASSEMBLY

ITEM	PART NUMBER	QTY	DESCRIPTION	REV
		Ref	**MAIN CONTROL VALVE ASSEMBLY**	
	4641184	Ref	**Main Control Valve Assembly (Prior to SN 0300089328)**	D
	4641432	Ref	**Main Control Valve Assembly (SN 0300089328 through 0300140000)**	A
1	7023918	1	Cartridge, Check Valve	
1	7023919	1	Seal Kit - 7023918 Cartridge	
2	7012975	1	Cartridge, Check Valve	
2	7012967	1	Seal Kit - 7012975 Cartridge (was p/n 7012540)	
3	7023985	1	Cartridge, Check Valve	
3	7017496	1	Seal Kit - 7023985 Cartridge	
4	7023986	1	Cartridge, Flow Regulator (Steer)	
4	7010545	1	Seal Kit - 7023986 Cartridge	
5	10837580	2	Cartridge, Load Sensing (Steer and Swing) (was p/n 7010542)	
5	7010543	2	Seal Kit - Cartridge	
6	7023987	1	Cartridge, Pilot	
6	7012942	1	Seal Kit - 7023987 Cartridge	
7	7023921	1	Cartridge, Proportional Flow (Tele)	
7	7012925	1	Seal Kit - 7023921 Cartridge	
8	7017422	2	Cartridge, Relief Valve (Steer and Swing)	
8	7012998	2	Seal Kit - 7017422 Cartridge	
9	7017489	1	Cartridge, Relief Valve (Tele Out Relief)	
9	7012998	1	Seal Kit - 7017489 Cartridge	
10	7023922	1	Cartridge, Solenoid (Swing)	
10	7017402	1	Seal Kit - 7023922 Cartridge	
11	7023923	1	Cartridge, Solenoid (Main Dump)	
11	7023919	1	Seal Kit - 7023923 Cartridge	
12	7021612	1	Cartridge, Solenoid (Lift Up Dump)	
12	7010543	1	Seal Kit - 7021612 Cartridge (was p/n 7012907)	
13	7023925	1	Cartridge, Solenoid (Steer Direction)	
13	7012903	1	Seal Kit - 7023925 Cartridge	
14	7012944	3	Coil	
15	7012943	3	Coil	
15	70003024	1	Spacer, Coil	
16	7017451	1	Coil	
17		Ref	Control Valve Assembly Options (Tele Direction):	
17	70000579	1	Control Valve Assembly (was p/n 7012766) **(Prior to SN 0300089328)**	
17	70000579	1	Control Valve Assembly **(SN 0300089328 through 0300140000)**	
		Ref	**Note: Refer to Vendor P/N on Valve Nameplate before ordering Parts. P/N 7012766 is RR00567495 or R900567495. P/N 70000579 is R900930080.**	
17		Ref	Seal Kit Options:	
17	7012769	1	7012766 Valve	
17	70000583	1	70000579 Valve	
17A		Ref	Coil Options:	
17A	7012772	1	7012766 Valve (was p/n 7012768)	
17A	70000582	1	70000579 Valve	
17A		Ref	Nut, Coil Options:	
17A	7018912	1	7012766 Valve	
17A	70000580	1	70000579 Valve	

SECTION 2 - TURNTABLE

ITEM	PART NUMBER	QTY	DESCRIPTION	REV
18	See Note	4	Capscrew (Note: Not Available for Purchase)	

FIGURE 2-3. TURNTABLE BEARING AND SWING DRIVE INSTALLATION

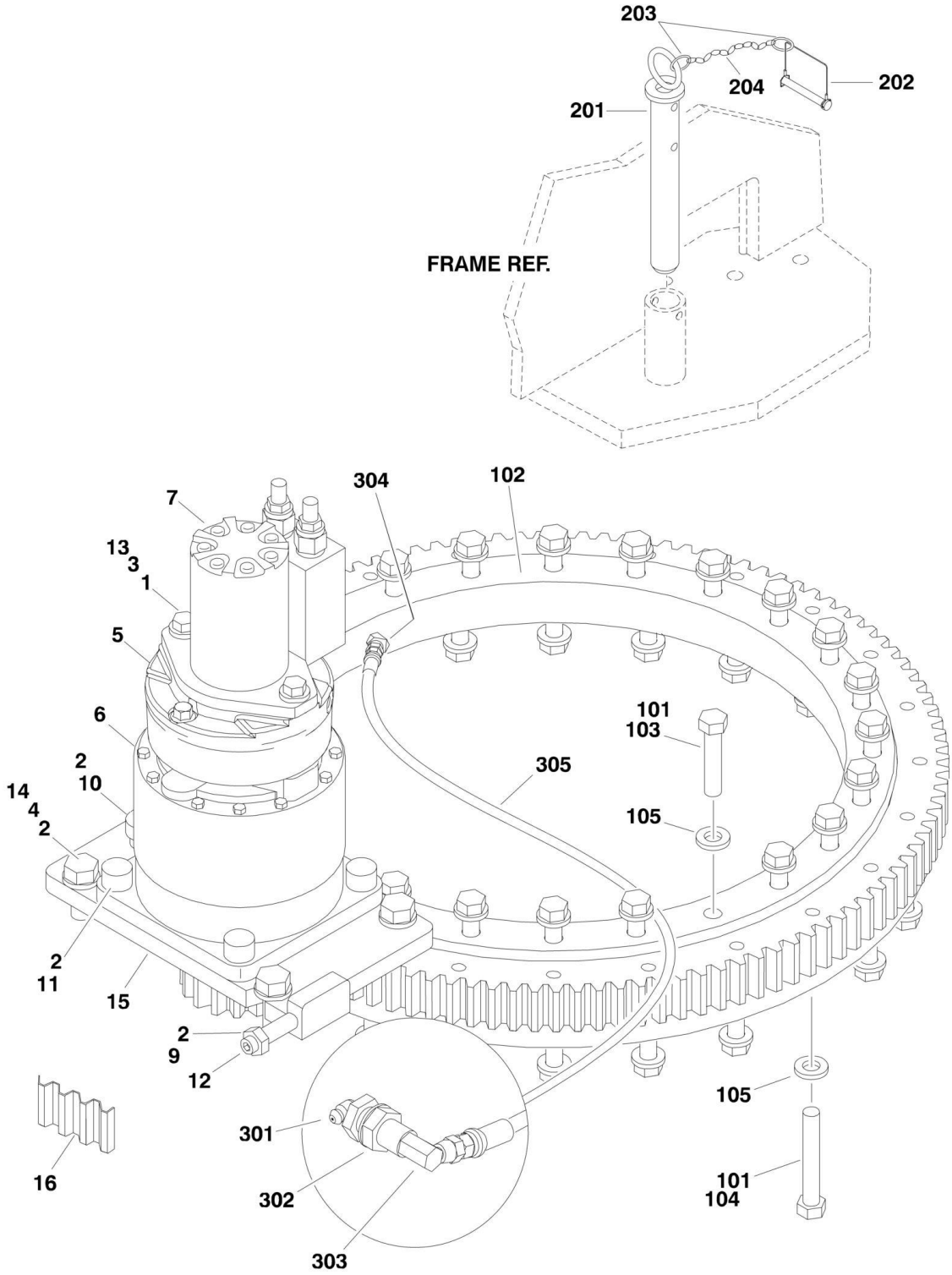

FIGURE 2-3. TURNTABLE BEARING AND SWING DRIVE INSTALLATION

ITEM	PART NUMBER	QTY	DESCRIPTION	REV
		Ref	**SWING DRIVE INSTALLATION OPTIONS:**	
	0271013	Ref	**Swing Drive Installation (Prior to SN 0300066417)**	E
	0272188	Ref	**Swing Drive Installation (SN 0300066417 through 0300134351)**	E
	1001094899	Ref	**Swing Drive Installation (SN 0300134352 through 0300140000)**	B
1	0100011	AR	Compound, Locking **(Prior to SN 0300074382)**	
2	0100019	AR	Compound, Locking	
3	0681832	2	Bolt 1/2in - 13NC x 4in (Grade 8) **(Prior to SN 0300066417)**	
4		Ref	Bolt Options:	
4	0682214	4	Bolt 3/4in-10NC x 1-3/4in (Grade 8) **(Prior to SN 0300077735)**	
4	0682216	4	Bolt 3/4in-10NC x 2in (Grade 8) **(SN 0300077735 through 0300140000)**	
5	0920117	NLA	Swing Brake Assembly (Use p/n 0920119) **(Prior to SN 0300066417)**	
5	7018612	1	Repair Kit - 0920117 & 0920119 Brake	
5	7000731	2	Gasket (Between Components)	
6	2780205	1	Swing Hub Assembly (See SWING HUB ASSEMBLY for Breakdown) **(Prior to SN 0300066417)**	
7		Ref	Swing Motor Assembly Options (See SWING MOTOR ASSEMBLY for Breakdown):	
7	3160280	1	Swing Motor Assembly **(Prior to SN 0300066417)**	
7	3160286	1	Swing Motor/Swing Hub Assembly **(SN 0300066417 through 0300074381)**	
7	3160294	1	Swing Motor/Swing Hub Assembly **(SN 0300074382 through 0300134351)**	
7	1001101060	1	Swing Motor/Swing Hub Assembly **(SN 0300134352 through 0300140000)**	
9	3312002	1	Nut, Jam 3/4in-10NC	
10	3900293	1	Bolt, Shoulder	
11	3932224	4	Bolt 1/2in - 13NC x 1-1/2in **(Prior to SN 0300074382)**	
12	3952020	2	Setscrew 5/8in-11NC x 2-1/2in	
13	4891800	2	Flatwasher 1/2in Hardened	
14		Ref	Flatwasher 3/4in Hardened Options:	
14	4892200	4	Flatwasher 3/4in Hardened **(Prior to SN 0300066417)**	
14	4740057	4	Flatwasher 3/4in Hardened **(SN 0300066417 through 0300140000)**	
15	4846430	1	Plate, Mounting **(Prior to SN 0300074382)**	
16	4071009	1	Shim	
	0271002	Ref	**SWING BEARING INSTALLATION**	E
101	0100019	AR	Compound, Locking	
102	0440244	1	Bearing, Turntable	
103	0682023	24	Bolt 5/8in - 11NC x 2-7/8in (Grade 8)	
104	0682032	24	Bolt 5/8in - 11NC x 4in (Grade 8)	
105	4892000	48	Flatwasher 5/8in Hardened	
	0259147	Ref	**TURNTABLE LOCK INSTALLATION**	B
201	4844958	1	Pin	
202	3421565	1	Pin, Snap	
203	3760170	2	Ring, Quick Release	
204	1260017	9 in/23cm	Chain	
	0271496	Ref	**REMOTE BEARING LUBE INSTALLATION**	B
301	2160001	1	Fitting, Grease	
302	2180344	1	Fitting, Bulkhead	

SECTION 2 - TURNTABLE

ITEM	PART NUMBER	QTY	DESCRIPTION	REV
303	2220063	1	Fitting, Elbow	
304	2220124	1	Fitting, Elbow **(Prior to SN 0300111097)**	
305	2751032	1	Hose, Grease	

FIGURE 2-4. SWING HUB ASSEMBLY (Prior to SN 0300066417)

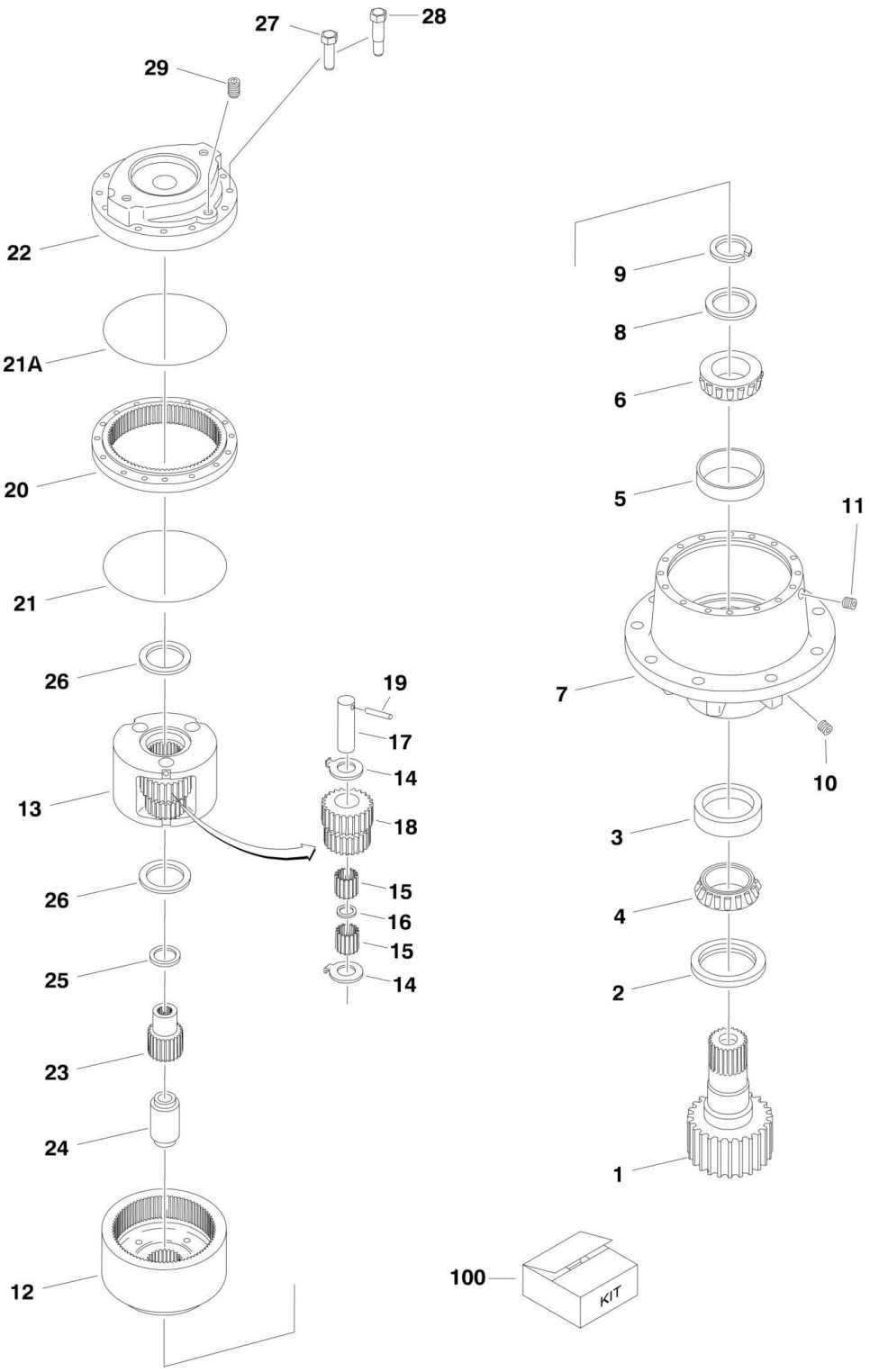

FIGURE 2-4. SWING HUB ASSEMBLY (Prior to SN 0300066417)

ITEM	PART NUMBER	QTY	DESCRIPTION	REV
	2780205	Ref	**SWING HUB ASSEMBLY**	-
		Ref	**Housing Assembly**	
1	7010492	1	Shaft, Output	
2	7000228	1	Seal, Lip	
3	7000255	1	Cup, Bearing	
4	7000256	1	Cone, Bearing	
5	7000257	1	Cup, Bearing	
6	7000258	1	Cone, Bearing	
7	7017089	1	Housing	
8	7007633	1	Thrustwasher	
9	7000229	1	Ring, Retaining	
10	7010494	2	Pipe, Plug	
11	7001928	2	Pipe, Plug	
12	7000246	2	Gear, In O-Ring	
		Ref	**Carrier Assembly**	
13	7001931	1	Carrier	
14	7001985	6	Thrustwasher, Tanged	
15	7001909	96	Bearing, Needle	
16	7000263	3	Spacer, Thrust	
17	7001911	3	Shaft, Planet	
18	7001987	3	Gear, Cluster	
19	7010474	3	Rollpin	
20	7001988	1	Ring Gear	
21	7000230	1	O-Ring (Black)	
21A	7017070	1	O-Ring (White)	
22	7000209	1	Cover, Input	
23	7010488	1	Gear, Sun	
24	7000269	1	Spacer, Input	
25	7000270	1	Thrustwasher	
26	7000253	2	Thrustwasher	
27	7000217	8	Bolt	
28	7000214	4	Bolt, Shoulder	
29	2200222	1	Pipe, Plug	
		Ref	**KIT OPTIONS:**	
100	7024100	1	Kit, Seal (Includes Items 2, 9, 21, 21A & 26)	

FIGURE 2-5. SWING MOTOR ASSEMBLY (Prior to SN 0300066417)

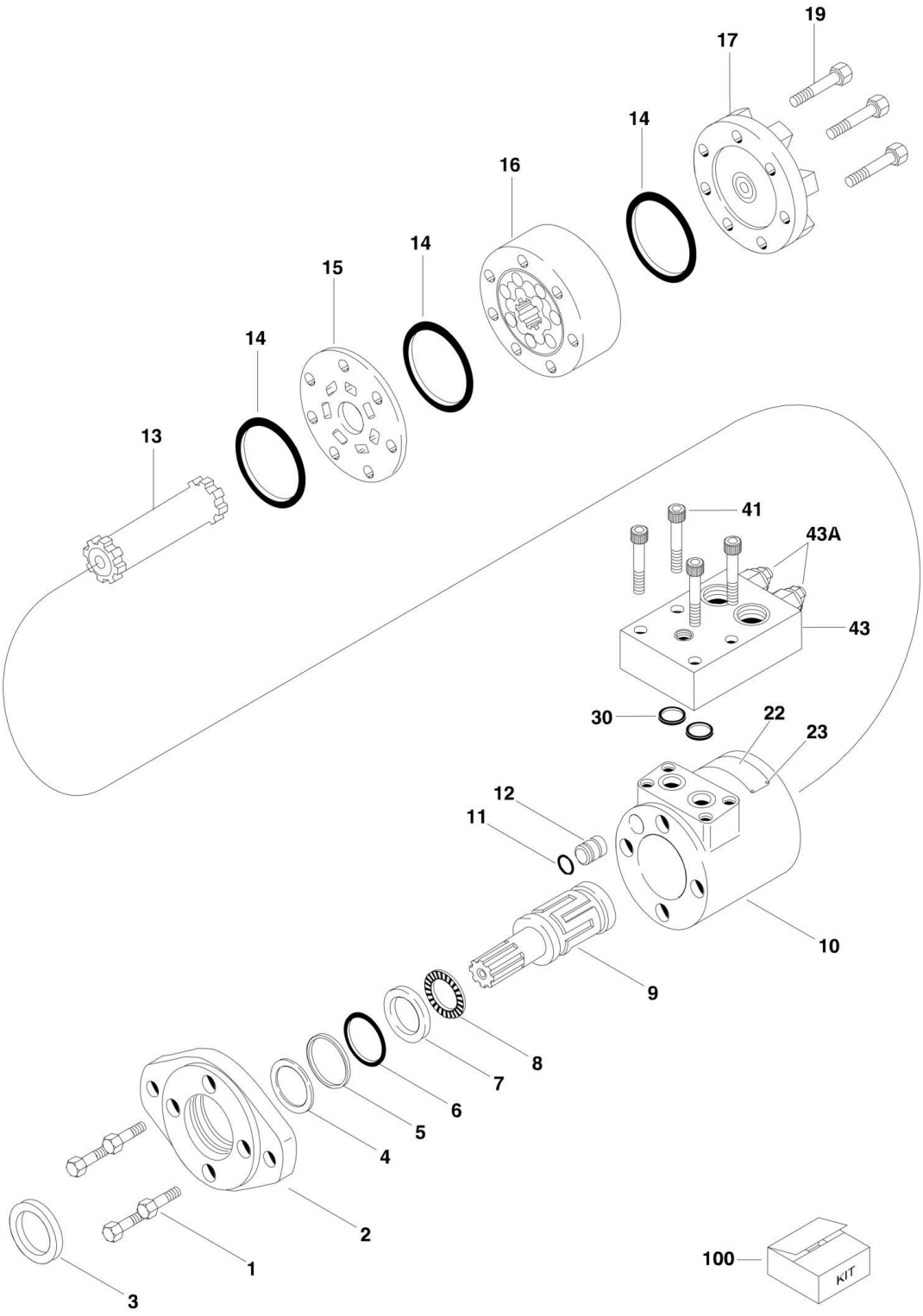

FIGURE 2-5. SWING MOTOR ASSEMBLY (Prior to SN 0300066417)

ITEM	PART NUMBER	QTY	DESCRIPTION	REV
	3160280	Ref	**SWING MOTOR ASSEMBLY**	B
1	7020357	4	Capscrew	
2	7009996	1	Flange, Mounting	
3	See Note	NSS	Seal, Exclusion (Note: Use Item 100)	
4	See Note	NSS	Washer, Back-up (Note: Use Item 100)	
5	See Note	NSS	Seal, Pressure (Note: Use Item 100)	
6	See Note	NSS	Seal (Note: Use Item 100)	
7	7002117	1	Race, Bearing	
8	7002111	1	Bearing, Thrust Needle	
9	7009998	1	Shaft, Output	
10	7020352	1	Housing	
11	See Note	NSS	O-Ring (Note: Use Item 100)	
12	7009992	1	Plug, Housing	
13	7002112	1	Drive	
14	See Note	NSS	Seal (Note: Use Item 100)	
15	7002110	1	Plate, Spacer	
16	7002125	1	Gerotor Sub-Assembly	
17	7002107	1	Cap, End	
19	7014900	7	Capscrew	
22	See Note	NSS	Nameplate (Note: Not Available for Purchase)	
23	See Note	NSS	Rivet (Note: Not Available for Purchase)	
30	See Note	NSS	O-Ring (Note: Use Item 100)	
41	7020353	4	Capscrew	
43	7020359	1	Cartridge, Counterbalance Valve	
43A	7020362	2	Cartridge	
43A	7020363	2	O-Ring for 7020362 Cartridge	
		Ref	**KIT OPTIONS:**	
100	2900733	1	Seal Kit - Includes Items 3-6, 11, 14 & 30	

FIGURE 2-6. SWING MOTOR/HUB ASSEMBLY (SN 0300066417 through 0300134351)

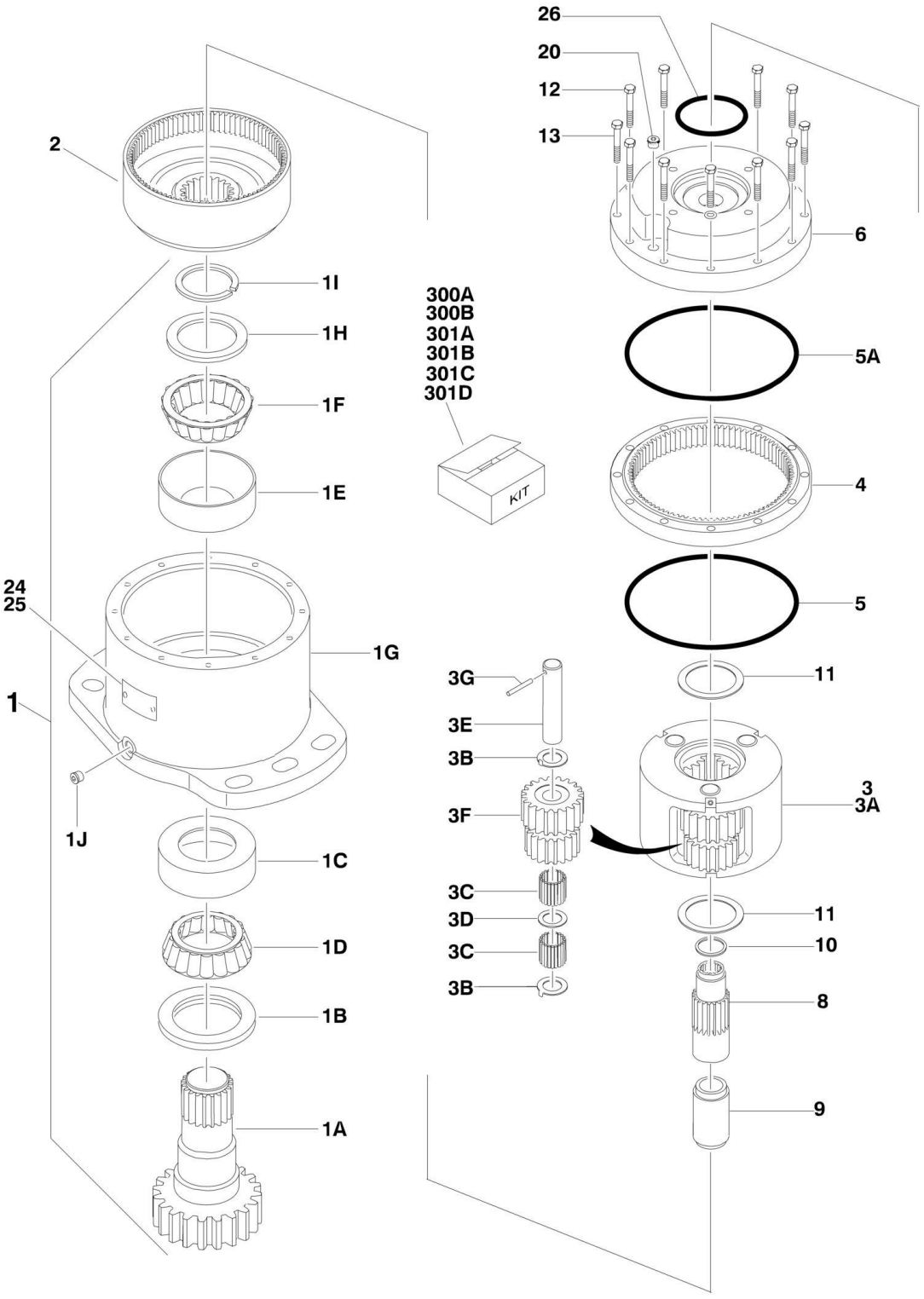

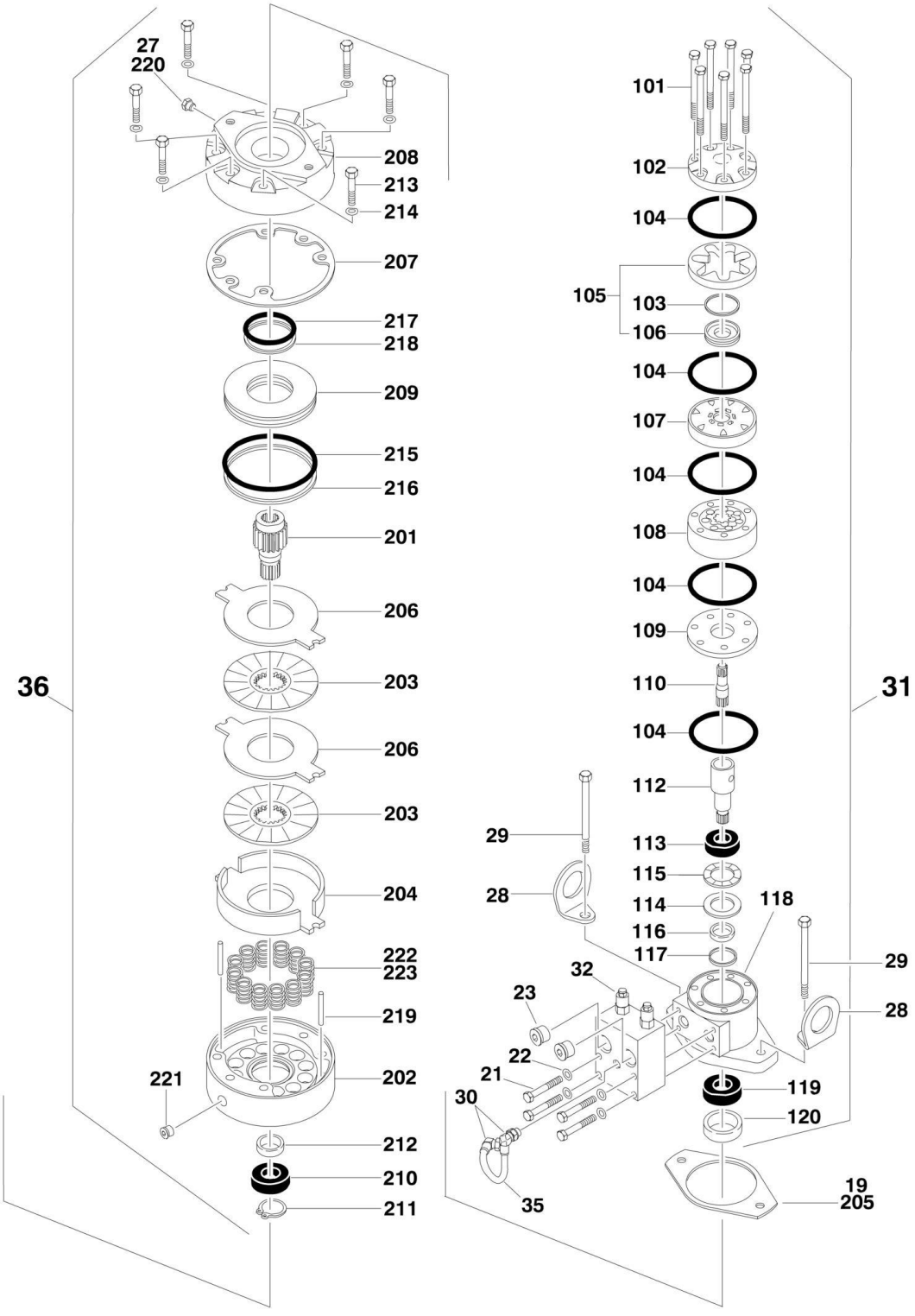
27
220
208
213
214
207
217
218
209
215
216
201
206
203
206
203
204
222
223
219
202
221
212
210
211
36
101
102
104
105
103
106
104
107
104
108
104
109
110
104
112
113
115
114
116
117
118
29
28
32
23
22
21
30
35
119
120
19
205
31

FIGURE 2-6. SWING MOTOR/HUB ASSEMBLY (SN 0300066417 through 0300134351)

ITEM	PART NUMBER	QTY	DESCRIPTION	REV
	3160286	Ref	**SWING MOTOR/HUB ASSEMBLY (SN 0300066417 through 0300074381)**	B
	3160294	Ref	**SWING MOTOR/HUB ASSEMBLY (SN 0300074382 through 0300134352)**	B
1	See Note	NSS	Housing/Shaft Assembly (Note: Not Available - Purchase Individual Components)	
1A	7010492	1	Shaft, Out put	
1B	7000228	1	Seal, Lip	
1C	7000255	1	Cup, Bearing	
1D	7000255	1	Cone, Bearing (was p/n 7000256)	
1E	7000257	1	Cup, Bearing	
1F	7000257	1	Cone, Bearing (was p/n 7000258)	
1G		Ref	Housing Options:	
1G	7017089	1	Housing (Used on p/n 3160286)	
1G	7024762	1	Housing (Used on p/n 3160294)	
1H	7007633	1	Thrustwasher	
1I	7000229	1	Ring, Retaining	
1J	7001928	1	Plug, Pipe	
2	7000246	1	Gear, Internal	
3	80424002	1	Carrier Assembly	
3A	7001931	1	Carrier	
3B	7001985	6	Washer, Tanged	
3C	7001909	84	Bearing, Needle	
3D	7000263	3	Thrustwasher	
3E	7001911	3	Shaft, Planet	
3F	7001912	3	Gear, Cluster	
3G	7010474	3	Rollpin	
4	7000248	1	Gear, Ring	
5	7000230	1	O-Ring	
5A	7017070	1	O-Ring	
6	7000209	1	Cover, Input	
8	7010461	1	Gear, Sun	
9	7000269	1	Spacer, Input	
10	7000270	1	Thrustwasher	
11	7000253	2	Thrustwasher	
12	7000217	8	Bolt 3/8in-16NC x 2-1/4in (Grade 8)	
13	7000214	4	Bolt, Shoulder 3/8in-16NC x 1-7/8in (Grade 8)	
19	7024703	1	Gasket	
20	2200222	1	Plug, Pipe	
21	7024704	4	Bolt 5/16in-18NC x 2in (Grade 8)	
22	See Note	NSS	Lockwasher (Note: Not Available for Purchase)	
23	7017023	2	Plug, Pipe	
24	See Note	NSS	Plate, ID (Note: Not Available for Purchase)	
25	7000281	2	Screw, Drive	
26	7024705	1	O-Ring	
27	7017082	1	Plug, Pipe	
28	See Note	NSS	Lug, Lifting (Note: Not Available for Purchase)	
29	7024185	2	Bolt 1/2in-13NC x 5in (Grade 8)	
30	7017085	2	Elbow	
31	7024707	1	Motor Assembly (See Items 101-120 for Breakdown)	

ITEM	PART NUMBER	QTY	DESCRIPTION	REV
32	7024784	1	Valve Assembly - Complete (No Serviceable Parts)	
35	7024706	1	Tube	
36	7024702	1	Brake Assembly (See Items 201-223 for Breakdown)	
	7024707	Ref	**MOTOR ASSEMBLY**	
101	7024454	5	Bolt	
102	7024459	1	Cover, End	
103	See Note	NSS	Seal, Commutator (Note: Use Item 300A)	
104	See Note	NSS	Seal, Ring (Note: Use Item 300A)	
105	7024453	1	Commutator and Ring Assembly	
106	7024453	1	Ring	
107	7024379	1	Manifold	
108	7024455	1	Rotor Set	
109	7024380	1	Plate, Wear	
110	7024456	1	Link, Drive	
112	7024458	1	Shaft, Coupling	
113	7004042	1	Bearing, Inner	
114	7004043	1	Thrustwasher	
115	7004044	1	Bearing, Thrust	
116	See Note	NSS	Seal, Inner (Note: Use Item 300A)	
117	See Note	NSS	Washer, Back-up (Note: Use Item 300A)	
118	7024457	1	Housing	
119	80424042	1	Bearing, Outer (was p/n 7004046)	
120	See Note	NSS	Seal (Note: Use Item 300A)	
	7024702	Ref	**BRAKE ASSEMBLY**	
201	7024189	1	Shaft	
202	7024702	1	Housing (Note: Not Available for Purchase)	
203	See Note	NSS	Plate, Friction (Note: Use Item 301C)	
204	See Note	NSS	Plate, Pressure (Note: Use Item 301C)	
205	See Note	NSS	Gasket (Note: Use Item 300B)	
206	See Note	NSS	Plate, Outer (Note: Use Item 301C)	
207	See Note	NSS	Gasket (Note: Use Item 300B, 301C or 301D)	
208	7024191	1	Cylinder	
209	7024192	1	Piston	
210	See Note	NSS	Bearing, Ball (Note: Use Item 301D)	
211	See Note	NSS	Ring, Retaining (Note: Use Item 301D)	
212	See Note	NSS	Seal, Shaft (Note: Use Item 301D)	
213	See Note	NSS	Capscrew (Note: Not Available for Purchase)	
214	See Note	NSS	Lockwasher (Note: Not Available for Purchase)	
215	See Note	NSS	O-Ring (Note: Use Item 300B)	
216	See Note	NSS	Ring, Back-up (Note: Use Item 300B)	
217	See Note	NSS	O-Ring (Note: Use Item 300B)	
218	See Note	NSS	Ring, Back-up (Note: Use Item 300B)	
219	7024190	2	Pin, Dowel	
220	See Note	NSS	Plug (Note: Not Available - Purchase Locally)	
221	See Note	NSS	Plug (Note: Not Available - Purchase Locally)	
222	See Note	NSS	Spring (Natural) (Note: Use Item 301B)	
223	See Note	NSS	Spring (Blue) (Note: Use Item 301B)	
		Ref	**KIT OPTIONS:**	
300		Ref	Seal Kit Options:	
300A	7024389	1	Seal Kit - 7024707 Motor (Includes Items 103, 104, 116, 117 & 120) (was p/n 7024396)	
300B	7024194	1	Seal Kit - 7024702 Brake (Includes Items 205, 207 & 215-218)	

SECTION 2 - TURNTABLE

ITEM	PART NUMBER	QTY	DESCRIPTION	REV
301		Ref	Repair Kit Options:	
301A	7024195	NLA	Spring Kit - 7024182 Brake (Includes 12 Natural Colored Springs) (Use p/n 7024196)	
301B	7024196	1	Spring Kit - 7024182 Brake (Includes 12 Natural & 2 Blue Colored Springs)	
301C	7024193	1	Friction Disc Kit - 7024702 Brake (Includes Items 203, 204, 206 & 207)	
301D	7024197	1	Bearing Kit - 7024702 Brake (Includes Items 207 & 210-212)	

FIGURE 2-7. SWING MOTOR/HUB ASSEMBLY (SN 0300134352 through 0300140000)

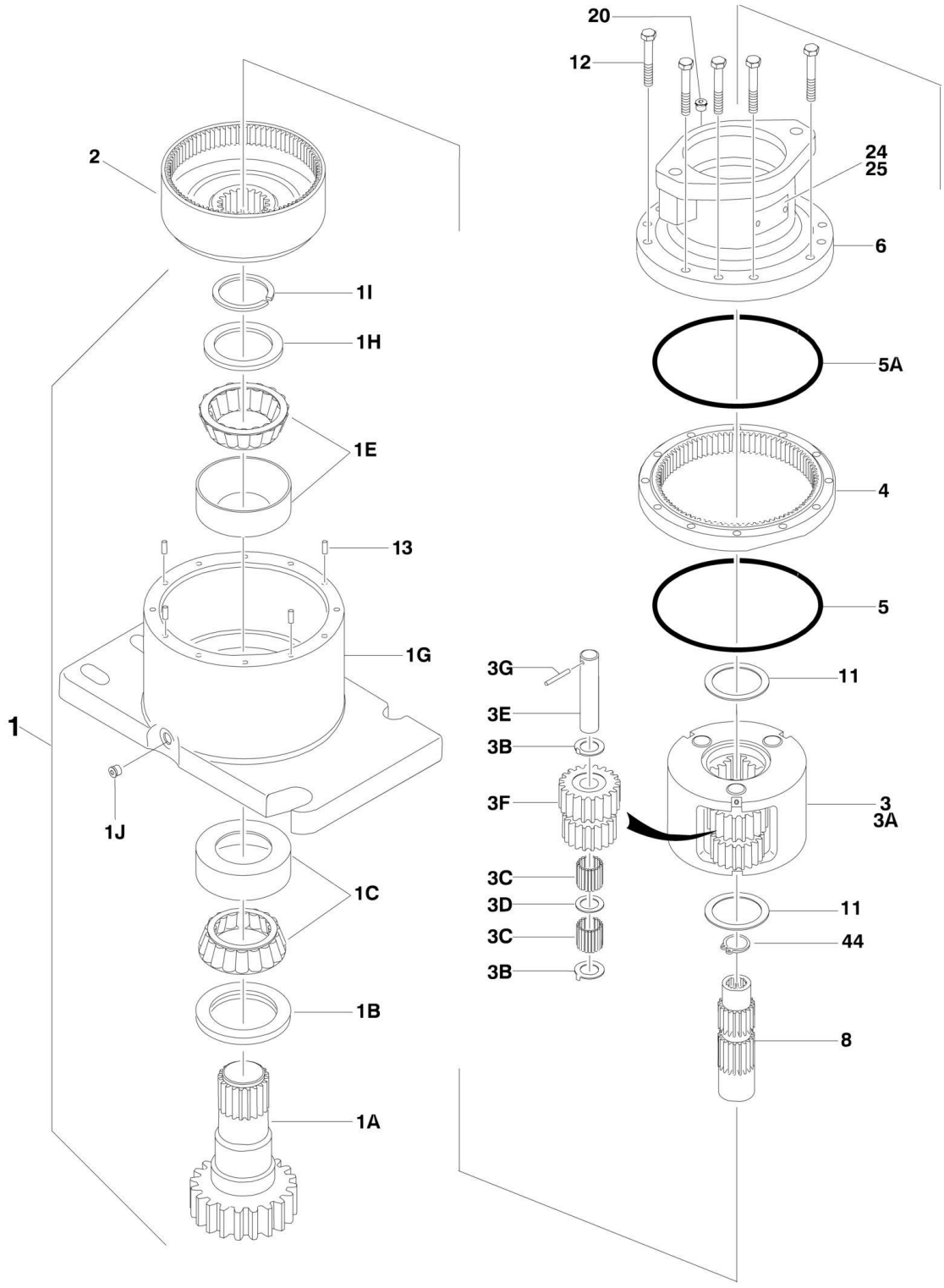

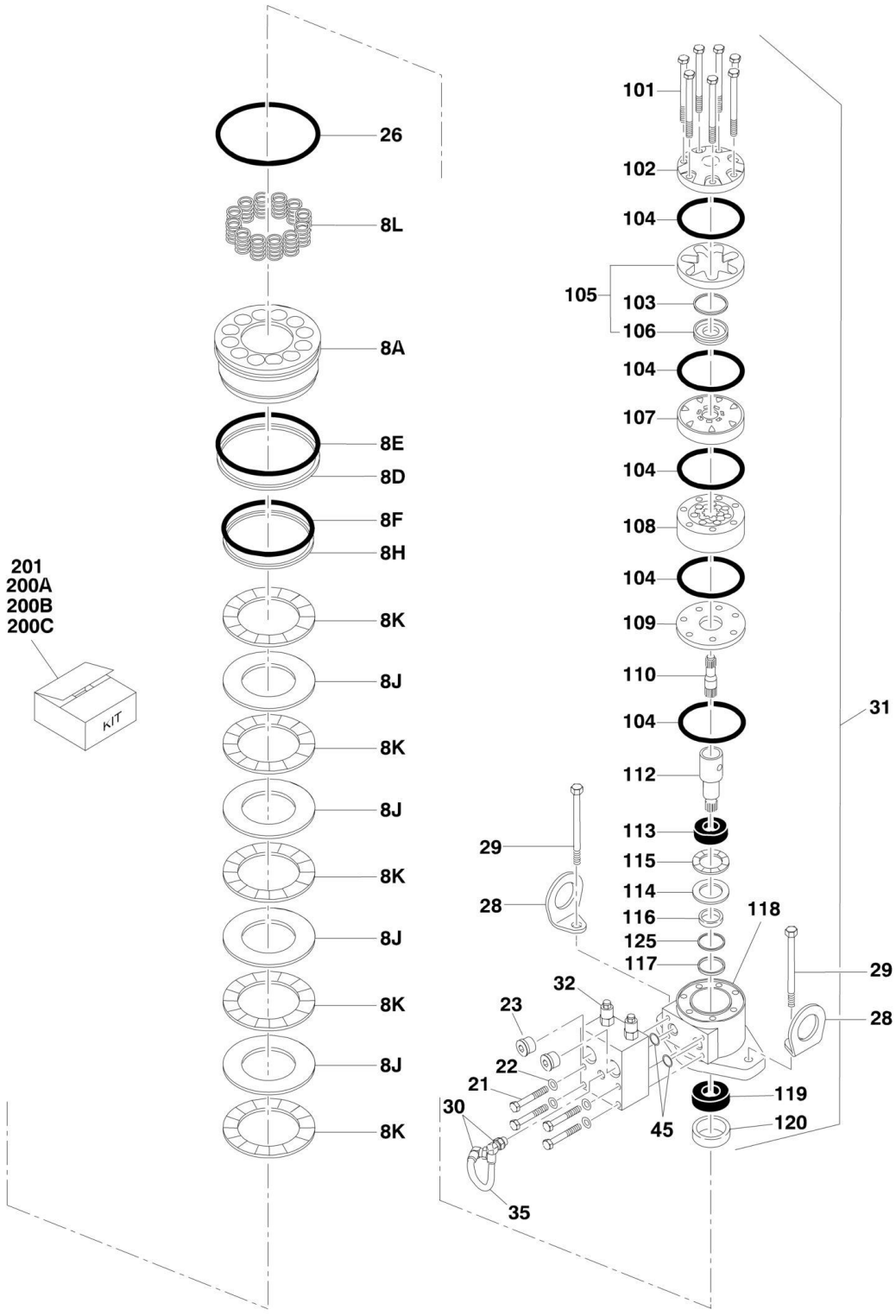
26
8L
8A
8E
8D
8F
8H
8K
8J
8K
8J
8K
8J
8K
8J
8K
201
200A
200B
200C
KIT
101
102
104
105
103
106
104
107
104
108
104
109
110
104
112
113
115
114
116
125
117
118
31
29
28
29
28
32
23
22
21
30
35
45
119
120

FIGURE 2-7. SWING MOTOR/HUB ASSEMBLY (SN 0300134352 through 0300140000)

ITEM	PART NUMBER	QTY	DESCRIPTION	REV
	1001101060	Ref	**SWING MOTOR/HUB ASSEMBLY**	A
1	See Note	NSS	Housing/Shaft Assembly (Note: Not Available - Purchase Individual Components)	
1A	7010492	1	Shaft, Output	
1B	7000228	1	Seal, Lip	
1C	7000255	1	Bearing Kit (Includes Cup and Cone)	
1E	7000257	1	Bearing Kit (Includes Cup and Cone)	
1G	7024762	1	Housing	
1H	7007633	1	Thrustwasher	
1I	7000229	1	Ring, Retaining	
1J	7017072	1	Plug, Pipe	
2	7000246	1	Gear, Internal	
3	80424002	1	Carrier Assembly	
3A	7001931	1	Carrier	
3B	7001985	6	Washer, Tanged	
3C	7001909	84	Bearing, Needle	
3D	7000263	3	Thrustwasher	
3E	7001911	3	Shaft, Planet	
3F	7001912	3	Gear, Cluster	
3G	7010474	3	Rollpin	
4	7000248	1	Gear, Ring	
5	7000230	1	O-Ring	
5A	7017070	1	O-Ring	
6	1001101060	NSS	Housing, Brake (Note: Not Available - Purchase Complete Assembly)	
8	70002065	1	Gear, Sun	
8A	70000782	1	Piston	
8D	70002070	1	O-Ring	
8E	70002071	1	Ring, Back-up	
8F	70002073	1	O-Ring	
8H	70002072	1	Ring, Back-up	
8J	70002067	4	Disc, Rotor	
8K	70002068	5	Disc, Stator	
8L	70002066	14	Spring	
11	7000253	2	Thrustwasher	
12	7000217	12	Bolt 3/8in-16NC x 2-1/4in (Grade 8)	
13	7017080	4	Pin, Dowel	
20	7017072	1	Plug, Pipe	
21	7024704	4	Bolt 5/16in-18NC x 2in (Grade 8)	
22	See Note	NSS	Lockwasher (Note: Not Available for Purchase)	
23	7017023	2	Plug, Pipe	
24	See Note	1	Plate, ID (Note: Not Available for Purchase)	
25	7000281	2	Screw, Drive	
26	7024763	1	O-Ring	
28	See Note	NSS	Lug, Lifting (Note: Not Available for Purchase)	
29	70002069	2	Bolt 1/2in-13NC x 2in (Grade 8)	
30	7017085	2	Elbow	
31	70002075	1	Motor Assembly (See Items 101-125 for Breakdown)	
32	7024784	1	Valve Assembly - Complete (No Serviceable Parts)	
35	70002074	1	Tube	

ITEM	PART NUMBER	QTY	DESCRIPTION	REV
44	7017028	1	Ring, Internal Retaining	
45	7000213	2	O-Ring	
	70002075	Ref	**MOTOR ASSEMBLY**	
101	7024454	5	Bolt	
102	7004035	1	Cover, End	
103	7023318	1	Seal, Commutator	
104	7004036	5	Seal, Ring	
105	7024453	1	Commutator and Ring Assembly	
106	7024453	1	Ring	
107	7024379	1	Manifold	
108	7024455	1	Rotor Set	
109	7024380	1	Plate, Wear	
110	7024456	1	Link, Drive	
112	7024458	1	Shaft, Coupling	
113	7024381	1	Bearing, Inner	
114	7004043	1	Thrustwasher	
115	7004044	1	Bearing, Thrust	
116	7004049	1	Seal, Inner	
117	7004045	1	Washer, Back-up	
118	7024457	1	Housing	
119	7024390	1	Bearing, Outer	
120	7004047	1	Seal	
125	80424043	1	Washer, Back-up	
		Ref	**KIT OPTIONS:**	
200		Ref	Seal Kit Options:	
200A	7024100	1	Swing Hub (Includes Items 1B, 1I, 5, 5A & 11)	
200B	70002086	1	Swing Brake (Includes Items 8D, 8E, 8F, 8H & 26)	
200C	7024396	1	Swing Motor (Includes Items 103, 104, 116, 117, 120 & 125)	
201	70002085	1	Disc Kit - Swing Brake (Includes Items 8J & 8K)	

FIGURE 2-8. CATERPILLAR ENGINE INSTALLATION (Prior to SN 0300139398)

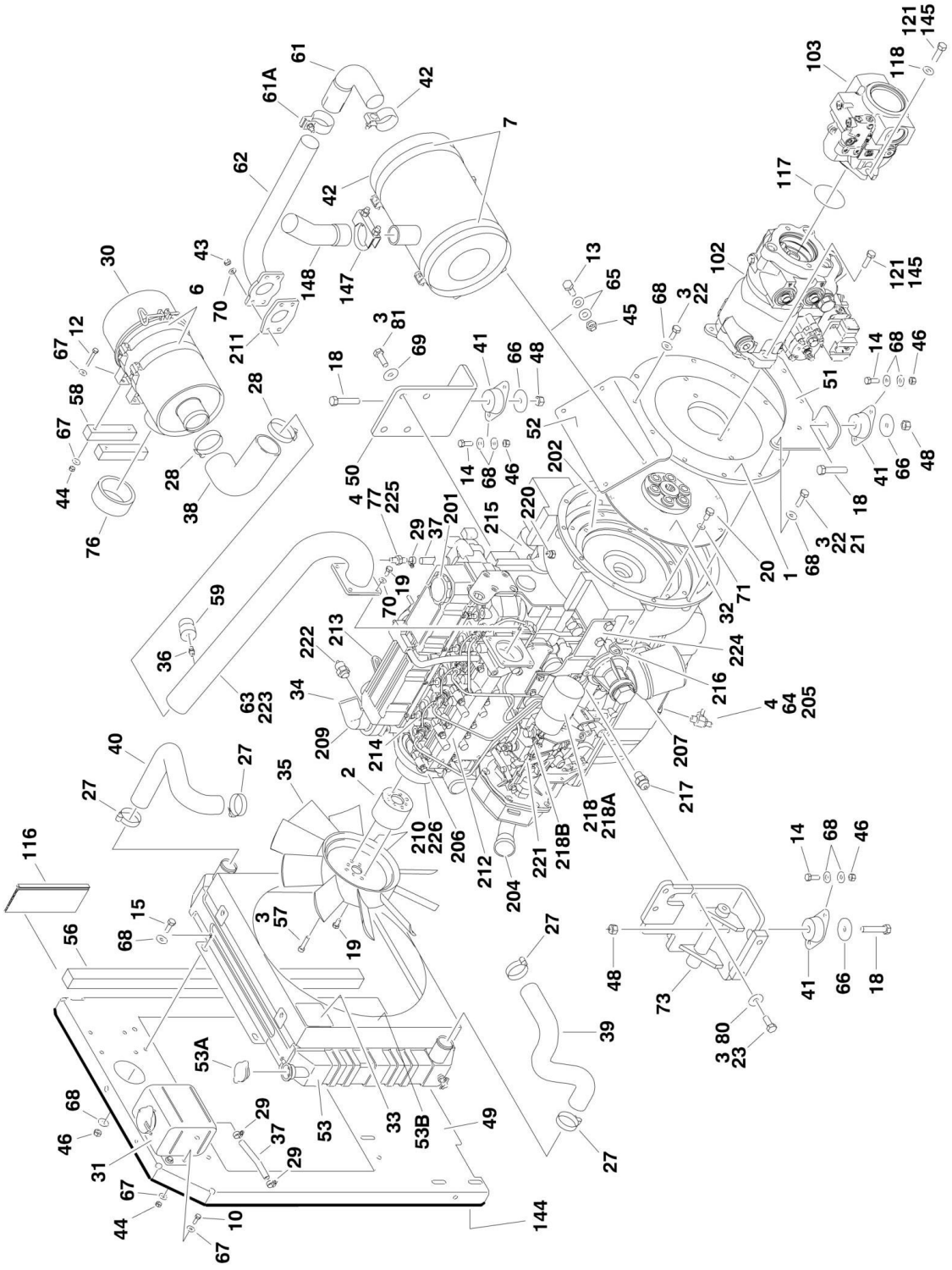

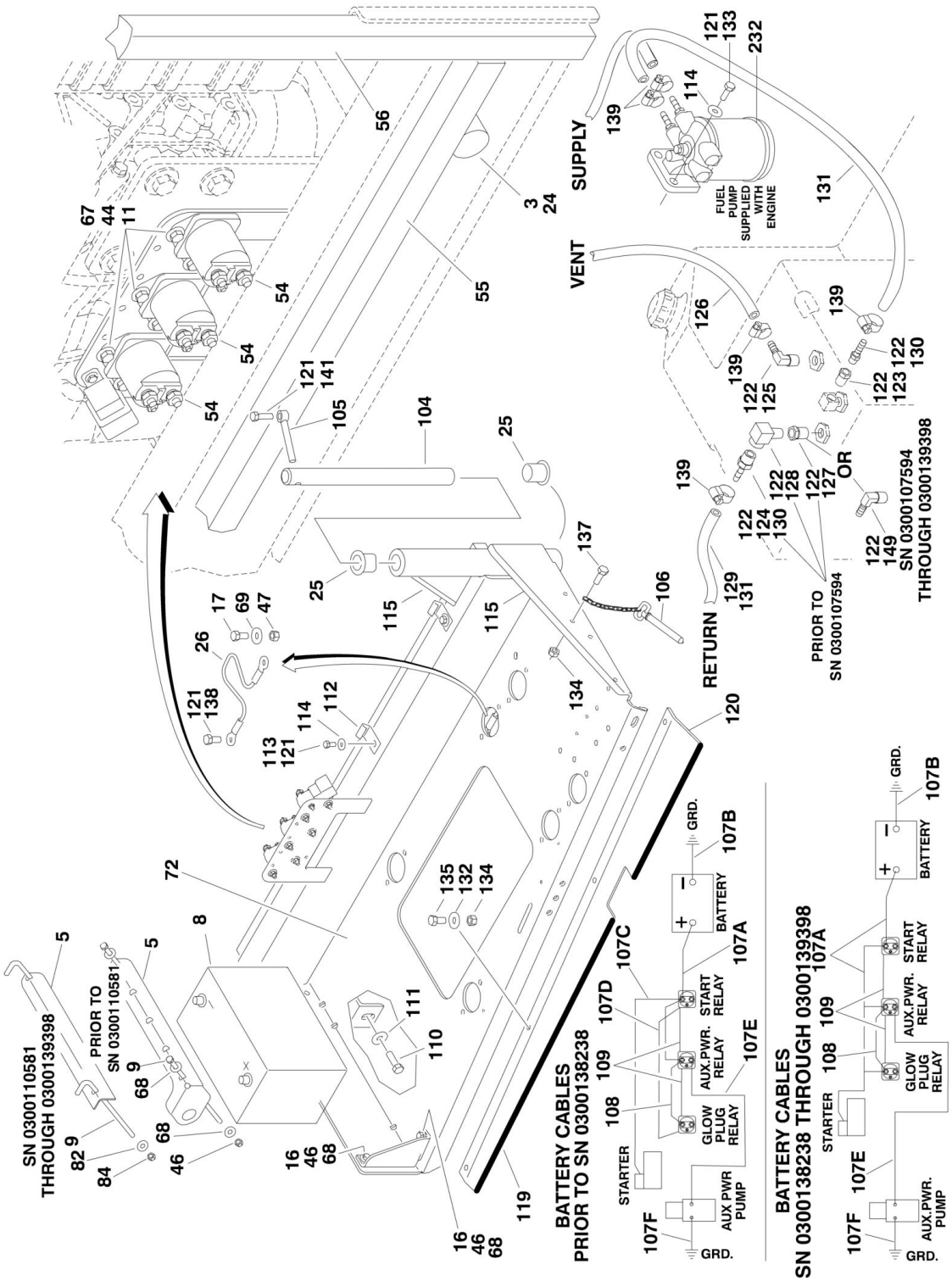
SUPPLY
VENT
RETURN
FUEL PUMP SUPPLIED WITH ENGINE
PRIOR TO SN 0300107594
OR
SN 0300107594 THROUGH 0300139398
SN 0300110581 THROUGH 0300139398
PRIOR TO SN 0300110581
BATTERY CABLES PRIOR TO SN 0300138238
BATTERY CABLES SN 0300138238 THROUGH 0300139398
STARTER
AUX PWR PUMP
GLOW PLUG RELAY
AUX.PWR. RELAY
START RELAY
BATTERY
GRD.

FIGURE 2-8. CATERPILLAR ENGINE INSTALLATION (Prior to SN 0300139398)

ITEM	PART NUMBER	QTY	DESCRIPTION	REV
		Ref	**CATERPILLAR ENGINE ASSEMBLIES**	
	0272796	Ref	**Tier II Engines (Prior to SN 0300087262)**	F
	0274491	Ref	**Tier II Engines (SN 0300087262 through 0300134725)**	L
	1001105993	Ref	**Tier III Engines (SN 0300134726 through 0300139398)**	D
1	0080181	1	Adaptor, Pump Mounting Plate	
2	0080243	1	Adaptor, Fan Spacer	
3	0100011	AR	Compound, Locking	
4	0100020	AR	Sealant, Thread	
5		Ref	Hold-Down, Battery Options:	
5	0181727	1	Hold-down, Battery **(Prior to SN 0300110581)**	
5	91401281	1	Hold-down, Battery **(SN 0300110581 through 0300139398)**	
6	0340041	2	Band, Mounting	
7	0340046	2	Band, Muffler	
8	0400075	1	Battery	
9		Ref	Bolt, Battery Hold-down Options:	
9	0630498	2	Bolt, Battery Hold-down **(Prior to SN 0300110581)**	
9	1001093382	2	Bolt, Battery Hold-down **(SN 0300110581 through 0300139398)**	
10	0641406	4	Bolt 1/4in-20NC x 3/4in	
11	0641407	6	Bolt 1/4in-20NC x 7/8in	
12	0701414	4	Bolt 1/4in-20NC x 3/4in	
13	0641507	4	Bolt 5/16in-18NC x 7/8in	
14	0641608	8	Bolt 3/8in-16NC x 1in	
15	0641609	4	Bolt 3/8in-16NC x 1-1/8in	
16	0641610	4	Bolt 3/8in-16NC x 1-1/4in	
17	0641808	1	Bolt 1/2in-13NC x 1in	
18	0641828	4	Bolt 1/2in-13NC x 2-1/2in	
19	0700808	8	Bolt M8 x 16mm	
20	0701010	8	Bolt M10 x 20mm	
21	0701012	4	Bolt M10 x 25mm	
22	0701015	8	Bolt M10 x 35mm	
23		Ref	Bolt Options:	
23	0701214	4	Bolt M12 x 30mm **(Prior to SN 0300098894)**	
23	0711214	4	Bolt M12 x 30mm **(SN 0300098894 through 0300139398)**	
24	0940070	1	Bumper, Rubber	
25	0961986	2	Bearing, Flange	
26	1060637	1	Lanyard	
27		Ref	Clamp, Hose Options:	
27	1320012	4	Clamp, Hose **(Prior to SN 0300087262)**	
27	8405104	4	Clamp, Hose **(SN 0300087262 through 0300139398)**	
28	1320016	2	Clamp, Hose	
29		Ref	Clamp, Hose Options:	
29	1320022	3	Clamp, Hose **(Prior to SN 0300087262)**	
29	8405009	3	Clamp, Hose **(SN 0300087262 through 0300139398)**	
30	1340060	1	Air Cleaner Assembly	
30	7012664	1	Element, Air Cleaner	
31	1580011	1	Container, Coolant Overflow	
32	1660239	1	Coupling, Pump	
33	1703162	2	Decal - Fan Blade	
34		Ref	Caterpillar Engine Assembly Options:	

ITEM	PART NUMBER	QTY	DESCRIPTION	REV
34	2000194	1	Tier II Engines **(Prior to SN 0300104771)**	
34	2000386	1	Tier II Engines **(SN 0300104771 through 0300134725)**	
34	1001100313	1	Tier III Engines **(SN 0300134726 through 0300139398)**	
35	2060025	1	Fan	
36	2180798	1	Fitting **(Prior to SN 0300104771)**	
37	2720058	0.33 ft /0.1m	Hose	
38	2720434	1	Elbow, Rubber	
39	2720509	1	Hose, Radiator (Bottom)	
40		Ref	Hose, Radiator (Top) Options:	
40	2720510	1	Tier II Engines **(Prior to SN 0300134726)**	
40	1001107705	1	Tier III Engines **(SN 0300134726 through 0300139398)**	
41	3200406	4	Mount, Engine	
42		Ref	Muffler Options:	
42	3220113	1	Spark Arresting Muffler	
42	70001017	1	Clamp	
42	1001107116	1	Catalytic Muffler	
42	70002705	1	Clamp	
42	70002706	1	Plug, Brass	
43	3290801	4	Nut M8 x 1.25	
44	3311405	14	Locknut 1/4in-20NC	
45	3311505	AR	Locknut 5/16in-18NC	
46	3311605	AR	Locknut 3/8in-16NC	
47	3311801	1	Nut 1/2in-13NC	
48	3311805	4	Locknut 1/2in-13NC	
49	3539872	1	Plate, Radiator Mounting	
50	3574206	1	Plate, Motor Mount	
51	3574207	1	Plate, Engine Mount (Rear)	
52	3574208	1	Bracket, Muffler	
53	3620047	1	Radiator	
53A	7027412	1	Cap	
53B	70004182	1	Shroud, Fan	
54	3740067	3	Relay, Solenoid Assembly	
55	3960468	1	Seal, Foam Gasket	
56	3960469	1	Seal, Foam Gasket	
57	4031911	4	Bolt M8 x 35mm	
58	4220191	2	Block, Spacer	
59	4360392	1	Switch, Restriction Indicator **(Prior to SN 0300104771)**	
61	4567073	1	Tube, Exhaust	
61A	70001017	1	Clamp	
62	4568721	1	Exhaust Tube Weldment	
63		Ref	Tube, Air Intake Weldment Options:	
63	4568788	1	Tube, Air Intake Weldment **(Prior to SN 0300087262)**	
63	4569177	1	Tube, Air Intake Weldment (Note: See Engine Components for Air Intake Tube p/n) **(SN 0300087262 through 0300104771)**	
64		Ref	Valve, Oil Drain Options:	
64	4640750	1	Valve, Oil Drain **(Prior to SN 0300134726)**	
64	1001105833	NLA	Valve, Oil Drain (Use p/n 4640750) **(SN 0300134726 through 0300139398)**	
65	4711500	8	Flatwasher 5/16in Thin	
66	4740274	4	Washer, Snubbing	
67	4751400	28	Flatwasher 1/4in Regular	

ITEM	PART NUMBER	QTY	DESCRIPTION	REV
68	4751600	AR	Flatwasher 3/8in Regular	
69		Ref	Flatwasher Options:	
69	4751800	8	Flatwasher 1/2in Regular **(Prior to SN 0300098894)**	
69	4812100	8	Flatwasher M12 **(SN 0300098894 through 0300139398)**	
70	4811900	8	Flatwasher M8	
71	4832000	8	Lockwasher M10	
72	4846790	1	Tray Engine	
73	4846805	1	Mount, Engine/Generator - Left	
74	4922737	1	Harness, Relay Ground	
75	0721006	1	Bolt #10-24NC x 3/4in **(Prior to SN 0300098894)**	
76	2720515	1	Seal, Air Cleaner	
77	2220767	1	Fitting **(SN 0300075603 through 0300104771)**	
78	2300004	2.63 gal /9.96L	Coolant (Not Shown)	
79	3020016	2.5 gal /9.4L	Motor Oil (Not Shown)	
80	4751500	2	Flatwasher 5/16in Regular **(SN 0300110581 through 0300139398)**	
81		Ref	Bolt Options:	
81	0711214	4	Bolt M12 x 30mm **(Prior to SN 0300111029)**	
81	0711212	4	Bolt M12 x 25mm **(SN 0300111029 through 0300139398)**	
82	88521205	2	Locknut, Nylon Insert 5/16in-18NC	
		Ref	**CATERPILLAR ENGINE INSTALLATIONS**	
	0273527	Ref	**Tier II Engines (Prior to SN 0300087262)**	4-D
	0274626	Ref	**Tier II Engines (SN 0300087262 through 0300134725)**	5-E
	1001106698	Ref	**Tier III Engines (SN 0300134726 through 0300139398)**	4-B
102		Ref	Piston Pump Assembly Options (See PISTON PUMP ASSEMBLY for Breakdown):	
102	3600295	1	Piston Pump Assembly **(Prior to SN 0300135831)**	
102	3600410	1	Piston Pump Assembly **(SN 0300135831 through 0300139398)**	
103		Ref	Load Sensing Pump Assembly Options (See LOAD SENSING PUMP ASSEMBLY for Breakdown):	
103	3600324	1	Load Sensing Pump Assembly **(Prior to SN 0300135831)**	
103	3600411	1	Load Sensing Pump Assembly **(SN 0300135831 through 0300139398)**	
104	3422446	1	Pin, Pivot	
105	3841143	1	Keeper, Pin	
106	3422532	1	Pin, Hitch	
107		Ref	Battery Cable Kit Options:	
107	2901609	1	Battery Cable Kit **(Prior to SN 0300078364)**	
107	2902401	1	Battery Cable Kit (Note: 2902401 Rev A version is no longer available. Verify whether machine is equipped with 2 or 3 relays on the engine tray. If there are 3 relays, purchase latest revision of 2902401 kit. If there are 2 relays, purchase individual items as replacement) **(SN 0300078364 through 0300138237)**	A
107	2902401	1	Battery Cable Kit **(SN 0300138238 through 0300139398)**	B
107A	7016800	1	Cable, Battery (Red) **(Prior to SN 0300078364)**	
107A	7016813	1	Cable, Battery (Red) **(SN 0300078364 through 0300138237)**	
107A	1001116288	1	Cable, Battery (Red) (Machines with 2 Relays on Engine Tray) (was p/n 7027027) **(SN 0300138238 through 0300139398)**	
107A	1001116287	1	Cable, Battery (Red) (Machines with 3 Relays on Engine Tray) (was p/n 7027027) **(SN 0300138238 through 0300139398)**	
107B	7016809	1	Cable, Battery (Black) **(Prior to SN 0300078364)**	

ITEM	PART NUMBER	QTY	DESCRIPTION	REV
107B	7027012	1	Cable, Battery **(SN 0300078364 through 03000138237)**	
107B	7027004	1	Cable, Battery (Black) **(SN 0300138238 through 0300139398)**	
107C	7016802	1	Cable (Red) **(Prior to SN 0300078364)**	
107C	Not Required	0	Cable (Red) (Part of Item 107A) **(SN 0300078364 through 0300139398)**	
107D	7016803	1	Cable (Red) **(Prior to SN 0300138238)**	
107D	Not Required	0	Cable (Red) **(SN 0300138238 through 0000139398)**	
107E	7016824	1	Cable (Red)	
107F	7016825	1	Cable (Black)	
108	1060904	1	Cable, Battery (Glowplug)	
109	4922737	1	Harness, Relay Ground	
110	0642010	1	Bolt 5/8in-11NC x 1-1/4in	
111	4752000	1	Flatwasher 5/8in Regular	
112	1320223	AR	J-Clip 1/2in	
113	0641606	2	Bolt 3/8in-16NC x 3/4in	
114	4711600	4	Flatwasher 3/8in Thin	
115	4060805	2 ft /0.7mm	Flex-Trim 1/4in	
116	3960549	1 ft /0.3mm	Seal	
117	3790044	1	O-Ring	
118	4891800	2	Flatwasher 1/2in Hardened	
119	3960464	42 in/1m	Seal, Hood **(Prior to SN 0300087262)**	
120	3539934	1	Plate, Seal **(Prior to SN 0300087262)**	
121	0100011	AR	Compound, Locking	
122	0100020	AR	Sealant, Thread	
123	2220273	1	Fitting, Reducer **(Prior to SN 0300107594)**	
124	2180536	1	Fitting, Straight **(Prior to SN 0300075346)**	
125	2220313	1	Fitting, Elbow	
126	2750532	7 ft/2.2m	Hose 3/8in	
127	2220250	1	Fitting, Reducer **(Prior to SN 0300107594)**	
128		Ref	Fitting, Elbow **(Prior to SN 0300107594)**	
128	2220459		Fitting, Elbow **(Prior to SN 03000107594)**	
128	2221176		Fitting, Elbow **(SN 0300134726 through 0300139398)**	
129	2720271	15 ft/4.6m	Hose 3/16in **(Prior to SN 0300075346)**	
130		Ref	Fitting, Barbed Options:	
130	2220794	2	Fitting, Barbed **(Prior to SN 0300107594)**	
130	2220794	1	Fitting, Barbed **(SN 0300107594 through 0300134726)**	
131		Ref	Hose Options:	
131	2720058	16 ft/4.9m	Hose **(Prior to SN 0300075346)**	
131	2720058	30 ft/9.1m	Hose **(SN 0300075346 through 0300139398)**	
132	4751400	AR	Flatwasher 1/4in Regular	
133	0641608	AR	Bolt 3/8-16NC x 1in	
134	3311405	AR	Locknut 1/4in-20NC	
135	0641406	4	Bolt 1/4in-20NC x 3/4in **(Prior to SN 0300087262)**	
136	3311505	8	Locknut 5/16in-18NC **(Prior to SN 0300075346)**	
137	0641407	1	Bolt 1/4in-20NC x 7/8in	
138	0641808	1	Bolt 1/2in-13NC x 1in	
139	1320022	7	Clamp, Hose	
140	1701505	1	Decal - Diesel (Not Shown - Located on Hood)	
141	0641610	1	Bolt 3/8in-16NC x 1-1/4in	

SECTION 2 - TURNTABLE

ITEM	PART NUMBER	QTY	DESCRIPTION	REV
142	0641514	3	Bolt 5/16in-18NC x 1-3/4in **(Prior to SN 0300075346)**	
143	4751500	3	Flatwasher 5/16in **(Prior to SN 0300075346)**	
144	3960548	42 in/1m	Seal, Hood	
145	0641812	4	Bolt 1/2in-13NC x 1-1/2in	
146	2200222	1	Plug, Pipe (Not Shown - Located in Bottom of Fuel Tank)	
147	1320176	1	Clamp **(SN 0300093812 through 0300139398)**	
148	3460544	1	Pipe, Exhaust **(SN 0300093812 through 0300139398)**	
149	2221176	1	Fitting, Elbow **(SN 0300107594 through 0300139398)**	
		Ref	**ENGINE COMPONENTS**	
	2000194	Ref	**Caterpillar 3044 Tier III (Prior to SN 0300104771)**	E
	2000386	Ref	**Caterpillar 3044 Tier III (SN 0300104771 through 0300134725)**	B
	1001100313	Ref	**Caterpillar C3.4 Tier IVi (SN 0300134726 through 0300139398)**	C
201	7026800	1	Cap Oil Filler	
202	7026802	1	Flywheel	
202	7026803	1	Gear, Flywheel	
203	7026804	1	Gasket (Not Shown - Between Flywheel Housing and Engine Block)	
203	7026805	1	Seal (Not Shown - Rear of Flywheel Housing)	
204	7026806	1	Cap, Filler	
204	7026807	1	Seal, Oil (Located in Front Housing)	
205	7026808	1	Plug, Oil Pan	
205	7026809	1	Gasket, Oil Plug	
206	7026810	1	V-Belt	
207	7026811	1	Filter, Oil (Note: Machines with SkyPower use Remote Mounted Oil Filter - See SPECIAL OPTIONS SECTION. The same oil filter is used for all applications)	
207	7026812	1	O-Ring (Between Bolt and Oil Filter Bracket)	
207	7026813	1	O-Ring (Between Oil Filter Bracket and Engine Block)	
208	7026819	1	Engine Cooler Assembly (Not Shown)	
208	7026816	2	O-Ring (Between Cover and Cooler)	
208	7026817	4	O-Ring (Between Cover and Cooler)	
208	7026818	1	Gasket (Between Cover and Engine Block)	
209	7026822	1	Thermostat	
209	7026821	1	Gasket (Between Regulator and Thermostat Housing)	
209	7026820	1	Gasket (Between Regulator and Engine Head)	
210		Ref	Pump, Water Options:	
210		Ref	Caterpillar Engine p/n 2000194	
210	7026823	1	Caterpillar Engine Prior to SN 3440833 (Not Machine SN)	
210	70001120	1	Caterpillar Engine SN 3440833 to Present (Not Machine SN)	
210	70001120	1	Caterpillar Engine p/ns 2000386 & 1001100313	
210	7026824	1	Gasket, Water Pump Cover (Use with p/n 7026823 Pump)	
210	7026825	1	Gasket, Water Pump (Use with p/n 7026823 Pump)	
210	70002765	1	Hose, By-Pass (Not Shown)	
211	7026827	1	Gasket, Exhaust	
211	70002852	4	Stud, Exhaust Manifold	
212	7026829	1	Gasket, Intake Manifold	
212	7026828	1	Gasket, Intake	
213	7026831	1	Alternator	
214	7026832	4	Plug, Glow	
215	7026833	1	Starter	
216		Ref	Dipstick Oil Level Options:	
216	7026834	1	Dipstick for 2000194 Engines	

ITEM	PART NUMBER	QTY	DESCRIPTION	REV
216	7026888	1	Dipstick for 2000386 Engines	
216	70002844	1	Dipstick for 1001100313 Engines	
216	70002843	1	Seal, Dipstick Tube	
217	7026814	1	Relief Valve, Oil Pressure	
217	7026815		Gasket, Relief Valve	
217	1001097554		Sensor, Oil Pressure (Not Shown)	
218	1600361	1	Actuator/Linkage Assembly - Throttle	
218A	1600361	1	Actuator and Electrical Connector Kit (was p/n 7026842)	
218A	7026835	1	Connector, Actuator	
218B	7026843	1	Linkage Kit	
220	7026841	1	Sensor, Speed Sensor	
220	7026836	1	Connector, Speed Sensor	
221	70002849	1	Pump, Fuel Injection	
221	70002847	1	O-Ring, Fuel Injection Pump Flange	
221	70002848	1	Gasket, Fuel Injection Pump	
221	70002850	1	Solenoid, Fuel Shut-Off	
222	7026840	1	Sensor, Water Temperature	
222	7026882	1	Seal, Sensor	
223	4569371	1	Tube, Air Intake Weldment (2000386 & 1001100313 Engines)	
224	7026887	1	Mounting Bracket, Actuator (was p/n 0902910 & 0903220)	
225	70001051	1	Valve, Air Intake Check	
226	70001742	1	Pulley, Water Pump	
227	2580055	1	Block Heater Kit (Not Shown) (was p/n 7026845)	
227	7026838	1	Gasket, Block Heater (Not Shown)	
227	70002841	1	Cord, Electrical (Not Shown)	
228	70002766	1	Head, Cylinder (Not Shown)	
228	7026801	1	Gasket, Valve Cover (Not Shown)	
228	70002764	1	Gasket, Rear Head (Not Shown)	
228	70002767	1	Gasket, Head (Not Shown)	
228	70002761	AR	Bolt, Head (Not Shown)	
228	70002762	AR	Seat, Valve (Not Shown)	
229	70002845	1	Pump, Oil (Not Shown)	
229	70002846	1	O-Ring, Oil Pump (Not Shown)	
231	70002851	1	Gasket Kit - Complete (Not Shown)	
232	7026839	1	Pump, Fuel Supply	
232	70002763	1	Gasket, Fuel Line (Not Shown)	
232	7026830	1	Element, Fuel Filter	
232	70002834	1	Bowl, Water Collection	
232	70002835	1	Seal Kit - Water Separator	
232	70002833	1	Ring, Fuel Pump Retaining	

FIGURE 2-9. CATERPILLAR ENGINE INSTALLATION (SN 0300139398 through 0300140000)

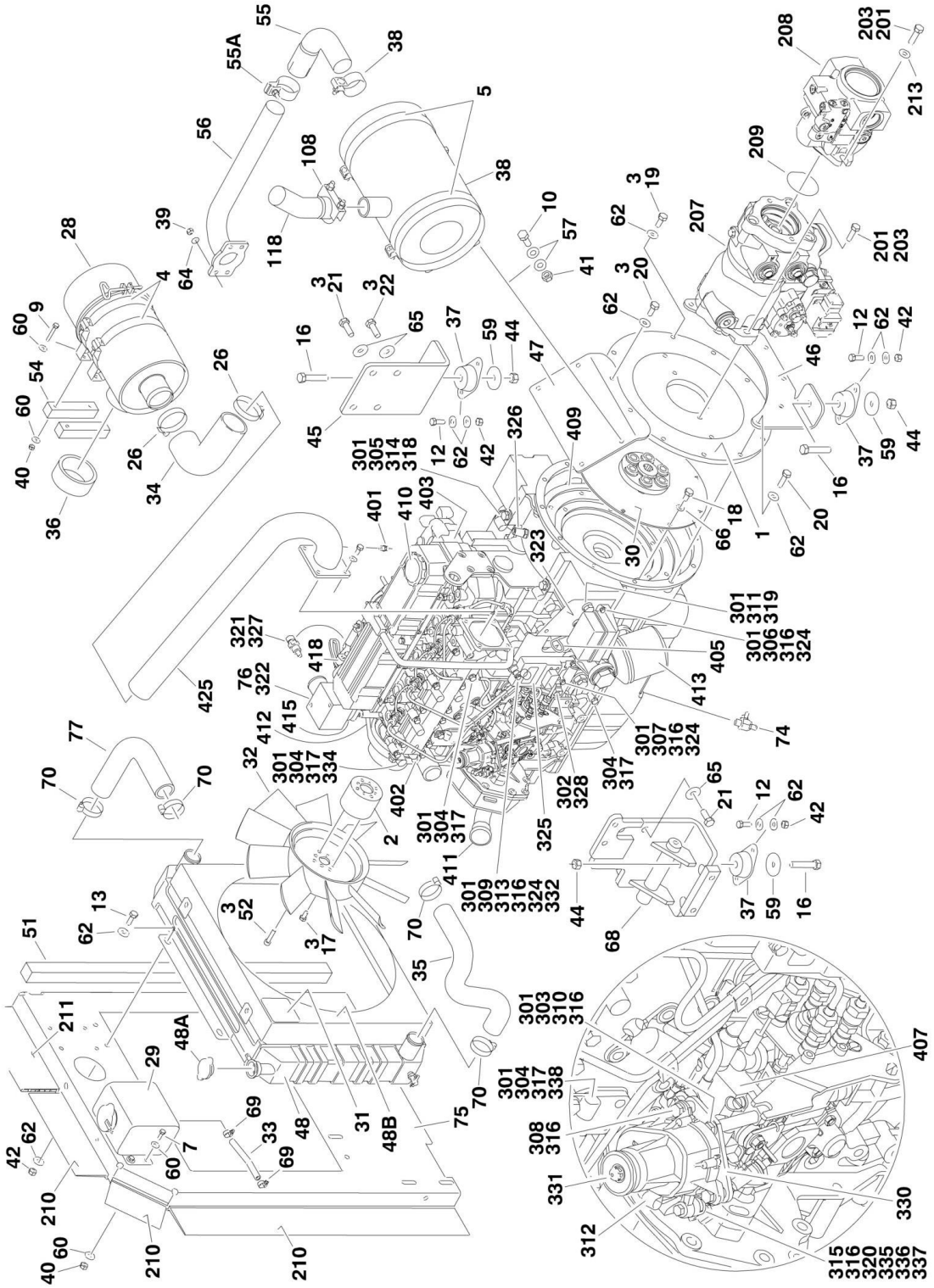

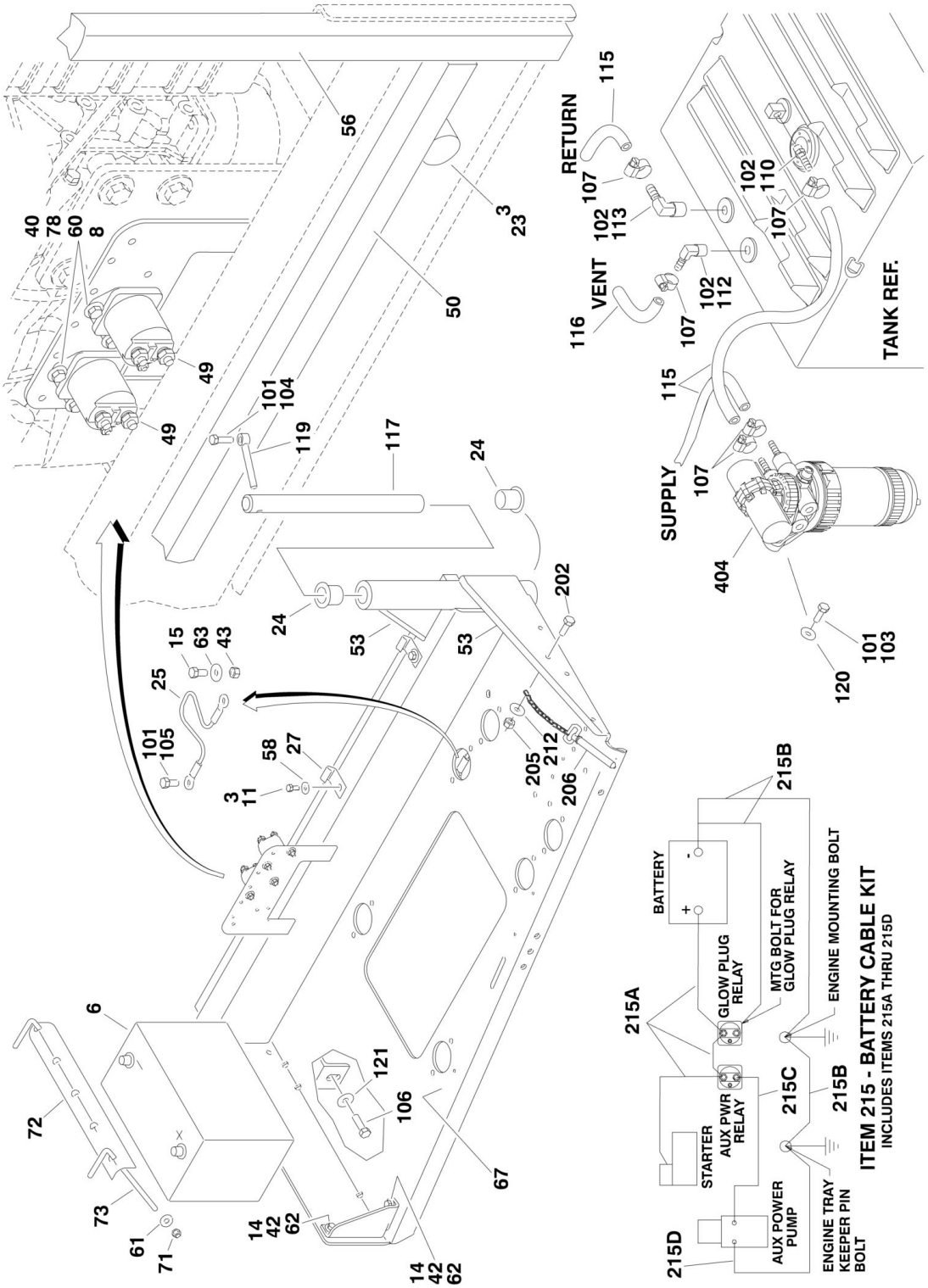
RETURN
VENT
SUPPLY
TANK REF.
ITEM 215 - BATTERY CABLE KIT
INCLUDES ITEMS 215A THRU 215D
BATTERY
GLOW PLUG RELAY
MTG BOLT FOR GLOW PLUG RELAY
ENGINE MOUNTING BOLT
STARTER AUX PWR RELAY
AUX POWER PUMP
ENGINE TRAY KEEPER PIN BOLT

FIGURE 2-9. CATERPILLAR ENGINE INSTALLATION (SN 0300139398 through 0300140000)

ITEM	PART NUMBER	QTY	DESCRIPTION	REV
	1001109065	Ref	**CATERPILLAR TIER IVi ENGINE ASSEMBLY**	C
1	0080181	1	Adaptor, Pump Mounting Plate	
2	0080243	1	Adaptor, Fan Spacer	
3	0100011	AR	Compound, Locking	
4	0340041	2	Band, Mounting	
5	0340046	2	Band, Muffler	
6	0400075	1	Battery	
7	0641406	4	Bolt 1/4in-20NC x 3/4in	
8	0641407	4	Bolt 1/4in-20NC x 7/8in	
9	0701414	4	Bolt 1/4in-20NC x 3/4in	
10	0641507	4	Bolt 5/16in-18NC x 7/8in	
11	0641606	2	Bolt 3/8in-16NC x 3/4in	
12	0641608	8	Bolt 3/8in-16NC x 1in	
13	0641609	4	Bolt 3/8in-16NC x 1-1/8in	
14	0641610	4	Bolt 3/8in-16NC x 1-1/4in	
15	0641808	1	Bolt 1/2in-13NC x 1in	
16	0641820	4	Bolt 1/2in-13NC x 2-1/2in	
17	0700808	4	Bolt M8 x 16mm	
18	0701010	8	Bolt M10 x 20mm	
19	0701012	4	Bolt M10 x 25mm	
20	0701015	8	Bolt M10 x 35mm	
21	0711214	5	Bolt M12 x 30mm	
22	0771212	3	Bolt M12 x 25mm	
23	0940070	1	Bumper, Rubber	
24	0961986	2	Bearing, Flange	
25	1060637	1	Lanyard	
26	1320016	2	Clamp, Hose	
27	1320223	4	J-Clip 1/2in	
28	1340060	1	Air Cleaner Assembly	
28	7012664	1	Element, Air Cleaner	
29	1580011	1	Container, Coolant Overflow	
30	1660239	1	Coupling, Pump	
31	1703162	2	Decal - Fan Blade	
32	2060025	1	Fan	
33	2720058	0.33 ft /0.1m	Hose	
34	2720434	1	Elbow, Rubber	
35	2720509	1	Hose, Radiator (Bottom)	
36	2720515	1	Seal, Air Cleaner	
37	3200406	4	Mount, Engine	
38		Ref	Muffler Options:	
38	3220113	1	Spark Arresting Muffler	
38	70001017	1	Clamp	
38	1001107116	1	Catalytic Muffler	
38	70002705	1	Clamp	
38	70002706	1	Plug, Brass	
39	3290801	4	Nut M8 x 1.25	
40	3311405	12	Locknut 1/4in-20NC	
41	3311505	4	Locknut 5/16in-18NC	
42	3311605	AR	Locknut 3/8in-16NC	

ITEM	PART NUMBER	QTY	DESCRIPTION	REV
43	3311801	1	Nut 1/2in-13NC	
44	3311805	4	Locknut 1/2in-13NC	
45	3574206	1	Plate, Motor Mount	
46	3574207	1	Plate, Engine Mount (Rear)	
47	3574208	1	Bracket, Muffler	
48	3620047	1	Radiator	
48A	7027412	1	Cap	
48B	70004182	1	Shroud, Fan	
49	3740067	3	Relay, Solenoid Assembly	
50	3960468	1	Seal, Foam Gasket	
51	3960469	1	Seal, Foam Gasket	
52	4031911	4	Bolt M8 x 35mm	
53	4060805	2 ft /0.7mm	Flex-Trim 1/4in	
54	4220191	2	Block, Spacer	
55	4567073	1	Tube, Exhaust	
55A	70001017	1	Clamp	
56	4568721	1	Exhaust Tube Weldment	
57	4711500	8	Flatwasher 5/16in Thin	
58	4711600	2	Flatwasher 3/8in Thin	
59	4740274	4	Washer, Snubbing	
60	4751400	24	Flatwasher 1/4in Regular	
61	4751500	2	Flatwasher 5/16in Regular	
62	4751600	44	Flatwasher 3/8in Regular	
63	4751800	1	Flatwasher 1/2in Regular	
64	4811900	4	Flatwasher M8	
65	4812100	8	Flatwasher M12	
66	4832000	8	Lockwasher M10	
67	4846790	1	Tray Engine	
68	4846805	1	Mount, Engine/Generator - Left	
69	8405009	2	Clamp, Hose	
70	8405104	4	Clamp, Hose	
71	88521205	2	Locknut, Nylon Insert 5/16in-18NC	
72	91401281	1	Hold-down, Battery	
73	1001093382	2	Bolt, Battery Hold-down	
74	1001105833	1	Valve, Oil Drain	
75	1001109595	1	Plate, Radiator Mounting	
76	1001112077	1	Caterpillar Tier IVi Engine Assembly	
77	1001107705	1	Hose, Radiator (Top)	
78	4791400	4	Starwasher 1/4in	
	1001110212	Ref	**CATERPILLAR TIER IVi ENGINE INSTALLATION**	D
101	0100011	AR	Compound, Locking	
102	0100020	AR	Sealant, Thread	
103	0641608	2	Bolt 3/8in-16NC x 1in	
104	0641610	1	Bolt 3/8in-16NC x 1-1/4in	
105	0641808	1	Bolt 1/2in-13NC x 1in	
106	0642010	1	Bolt 5/8in-11NC x 1-1/4in	
107	1320022	7	Clamp, Hose	
108	1320176	1	Clamp	
109	1701505	1	Decal - Diesel (Not Shown - Located on Hood)	
110	2180348	1	Fitting, Barbed	
111	2200222	1	Plug, Pipe (Not Shown - Located in Bottom of Fuel Tank)	

SECTION 2 - TURNTABLE

ITEM	PART NUMBER	QTY	DESCRIPTION	REV
112	2220313	1	Fitting, Elbow	
113	2221176	1	Fitting, Elbow	
114	2300004	2.63 gal /9.96L	Coolant (Not Shown)	
115	2720058	30 ft/9.1m	Hose	
116	2750532	7 ft/2.2m	Hose 3/8in	
117	3422446	1	Pin, Pivot	
118	3460544	1	Pipe, Exhaust	
119	3841143	1	Keeper, Pin	
120	4711600	2	Flatwasher 3/8in Thin	
121	4752000	1	Flatwasher 5/8in Regular	
	1001110206	Ref	**CATERPILLAR TIER IVi ENGINE WITH PUMPS ASSEMBLY**	B
201	0100011	AR	Compound, Locking	
202	0641407	1	Bolt 1/4in-20NC x 7/8in	
203	0641812	4	Bolt 1/2in-13NC x 1-1/2in	
204	3020016	2.5 gal /9.4L	Motor Oil 15W-40 (Not Shown)	
205	3311405	1	Locknut 1/4in-20NC	
206	3422532	1	Pin, Hitch	
207	3600410	1	Piston Pump Assembly (See PISTON PUMP ASSEMBLY for Breakdown)	
208	3600411	1	Load Sensing Pump Assembly with Fittings (See LOAD SENSING PUMP ASSEMBLY for Breakdown)	
209	3790044	1	O-Ring	
210	3960548	42 in/1m	Seal, Hood	
211	3960549	1 ft /0.3mm	Seal	
212	4751400	1	Flatwasher 1/4in Regular	
213	4891800	2	Flatwasher 1/2in Hardened	
215	1001112762	1	Battery Cable Kit	B
215A	7027028	1	Cable, Battery (Red)	
215B	7027029	1	Cable, Battery (Black)	
215C	7027030	1	Cable (Red)	
215D	7027031	1	Cable (Black)	
	1001112077	Ref	**CATERPILLAR TIER IVi ENGINE WITH ECM ASSEMBLY**	D
301	0100011	AR	Compound, Locking	
302	0100020	AR	Sealant, Thread	
303	0700620	1	Bolt M6 x 60mm	
304	0700808	5	Bolt M8 x 16mm	
305	0701010	2	Bolt M10 x 20mm	
306	0760606	2	Bolt M6 x 12mm	
307	0760610	2	Bolt M6 x 20mm	
308	0760612	3	Bolt M6 x 25mm	
309	8303541	1	Screw M6 x 35mm	
310	0700616	2	Bolt M6 x 40mm	
311	0761210	2	Bolt M12 x 20mm	
312	8406009	1	Clamp, Cable	
313	1320224	1	Clamp, Cable	
314	8406105	2	Clip, Tube	
315	3290507	1	Locknut M5	
316	4811700	12	Flatwasher M6	
317	4811900	5	Flatwasher M8	

ITEM	PART NUMBER	QTY	DESCRIPTION	REV
318	4812000	2	Flatwasher M10	
319	4812100	2	Flatwasher M12	
320	4811600	1	Flatwasher M5	
321	1001097553	1	Washer, Coolant Sensor	
322	1001109064	1	Caterpillar Tier IVi Engine Assembly	
323	1001112057	1	Bracket	
324	1001112059	5	Bumper	
325	1001112067	1	Module, ECM	
326	1001112068	1	Sensor, Speed	
327	1001112069	1	Sensor, Temperature	
328	1001112070	1	Switch, Oil Pressure	
329	1001112071	1	Harness, Engine (Not Shown - See ELECTRICAL SECTION for Breakdown)	
330	1001112072	1	Bracket	
331	1001112073	1	Actuator	
331	1001112849	1	Linkage Assembly	
332	1001112570	1	Spacer	
334	1320263	1	Clamp, Cable	
335	1001112075	1	Bolt	
336	1001112592	1	Bearing	
337	1001116595	1	Spacer	
338	8406109	1	Clip, Tube	
	1001109064	Ref	**ENGINE COMPONENTS**	B
401	70001051	1	Valve, Crankcase Actuator Shut-Off	
402	70001120	1	Pump, Water	
402	70001742	1	Pulley, Water Pump	
402	70002765	1	Hose, By-Pass (Not Shown)	
403	See Note		Head, Cylinder (Note: Not Available for Purchase)	
403	7026801	1	Gasket, Valve Cover	
403	70002764	1	Gasket, Rear Head	
403	70002762	15	Seat, Valve	
403	70002761	17	Bolt, Head	
404	7026839	1	Pump, Fuel Supply	
404	7026830	1	Element, Fuel Filter	
404	70002834	1	Bowl, Water Collection	
404	70002835	1	Seal Kit - Water Separator	
404	70002833	1	Ring, Fuel Pump Retaining	
405	70002844	1	Dipstick Oil Level	
405	70002843	1	Seal, Dipstick Tube	
406	70002845	1	Pump, Oil (Not Shown)	
406	70002846	1	O-Ring, Oil Pump (Not Shown)	
407	70002849	1	Pump, Fuel Injection	
407	70002847	1	O-Ring, Fuel Injection Pump Flange	
407	70002848	1	Gasket, Fuel Injection Pump	
407	70002850	1	Solenoid, Fuel Shut-Off	
409	7026802	1	Flywheel	
409	7026803	1	Gear, Flywheel	
409	7026804	1	Gasket (Not Shown - Between Flywheel Housing and Engine Block)	
409	7026805	1	Seal, Rear Main (Not Shown - Rear of Flywheel Housing)	
409	7026807	1	Seal, Front Main (Located in Front Housing)	
410	7026800	1	Cap Oil Filler (Top of Valve Cover)	

ITEM	PART NUMBER	QTY	DESCRIPTION	REV
411	7026806	1	Cap, Filler (Front Side of Engine)	
412	7026810	1	V-Belt	
413	7026811	1	Filter, Oil (Note: Machines with SkyPower use Remote Mounted Oil Filter - See SPECIAL OPTIONS SECTION. The same oil filter is used for all applications)	
413	7026812	1	O-Ring (Between Bolt and Oil Filter Bracket)	
413	7026813	1	O-Ring (Between Oil Filter Bracket and Engine Block)	
414	7026819	1	Engine Cooler Assembly (Not Shown)	
414	7026816	2	O-Ring (Between Cover and Cooler)	
414	7026817	4	O-Ring (Between Cover and Cooler)	
415	7026822	1	Thermostat	
415	7026821	1	Gasket (Between Regulator and Thermostat Housing)	
415	7026820	1	Gasket (Between Regulator and Engine Head)	
416	7026814	1	Relief Valve, Oil Pressure (Not Shown)	
416	7026815		Gasket, Relief Valve	
417	See Note	4	Injector, Fuel (Not Shown) (Note: Not Available for Purchase)	
417	70002763	4	Gasket, Fuel Line (Not Shown)	
418	7026831	1	Alternator	
419	7026832	1	Plug, Glow (Not Shown)	
420	7026833	1	Starter (Not Shown - Located on other side of engine)	
421	7026826	1	Gasket, Exhaust Manifold to Cylinder Head (Not Shown)	
421	7026827	1	Gasket, Exhaust Manifold to Exhaust Pipe (Not Shown)	
421	70002852	4	Stud, Exhaust Manifold (Not Shown)	
422	7026829	1	Gasket, Intake Manifold to Cylinder Head (Not Shown)	
422	7026828	1	Gasket, Intake Manifold to Intake Tube (Not Shown)	
423	7026808	1	Plug, Oil Pan (Not Shown)	
423	7026809	1	Gasket, Oil Plug	
424	70002851	1	Gasket Kit (Not Shown)	
425	4569371	1	Tube, Intake	

FIGURE 2-10. GENERATOR INSTALLATION - CATERPILLAR MACHINES (OPTIONAL)

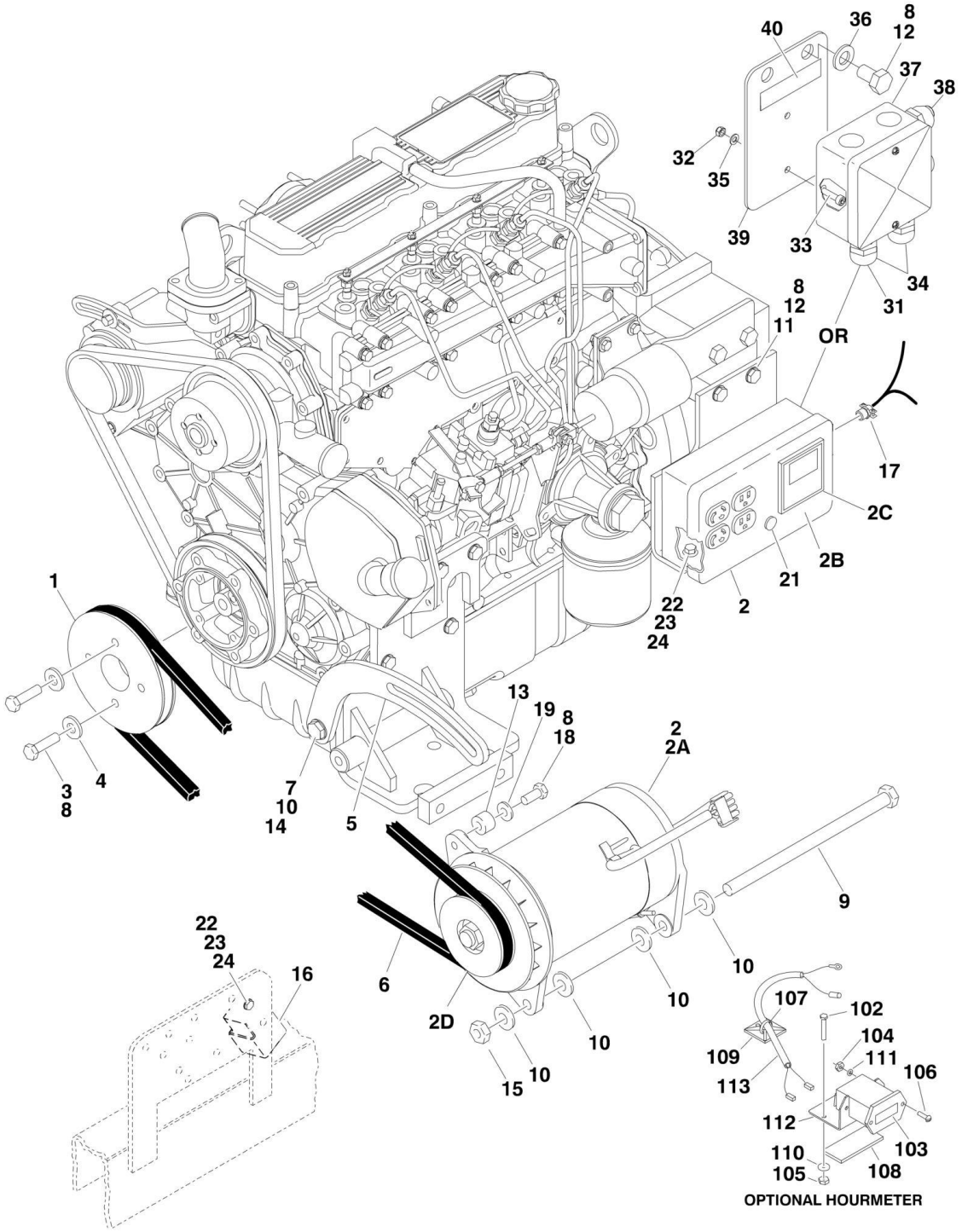

FIGURE 2-10. GENERATOR INSTALLATION - CATERPILLAR MACHINES (OPTIONAL)

ITEM	PART NUMBER	QTY	DESCRIPTION	REV
		Ref	**GENERATOR INSTALLATION OPTIONS:**	
	0273538	Ref	**110V/50Hz (Prior to SN 0300079612)**	3-C
	0274091	Ref	**110V/50Hz (SN 0300079612 through 0300132892)**	3-B
	1001102547	Ref	**110V/50Hz (SN 0300132893 through 0300139397)**	B
	1001115413	Ref	**110V/50Hz (SN 0300039398 through 0300140000)**	A
	0273539	Ref	**220V/50Hz (Prior to SN 0300079612)**	3-C
	0274087	Ref	**220V/50Hz (SN 0300079612 through 0300132892)**	3-B
	1001102548	Ref	**220V/50Hz (SN 0300132893 through 0300139397)**	B
	1001115414	Ref	**220V/50Hz (SN 0300139398 through 0300140000)**	A
1	3580322	1	Pulley	
2		Ref	Generator and Control Box Assembly Options:	
2	2460039	1	110V/50Hz **(Prior to SN 0300079612)**	
2	2460057	1	110V/50Hz **(SN 0300079612 through 0300132892)**	
2	2460049	1	110V/50Hz Generator Only **(SN 0300132893 through 0300140000)**	
2	2460013	1	220V/50Hz **(Prior to SN 0300079612)**	
2	2460056	1	220V/50Hz **(SN 0300079612 through 0300132892)**	
2	1001100321	1	220V/50Hz Generator Only **(SN 0300132893 through 0300140000)**	
2A		Ref	Generator Options:	
2A	2460049	1	110V/50Hz	
2A	1001100321	1	220V/50Hz	
2A	70000122	1	110V/50Hz Generator Armature with Slip Rings	
2A	70000123	1	220V/50Hz Generator Armature with Slip Rings	
2A	7012513	4	Cap, Brush Holder	
2A	7020108	4	Brush	
2A	7020109	4	Holder, Brush	
2A	7012514	1	Fan	
2A	7020190	2	Bearing	
2A	7020110	1	End Bell, Front	
2A	7020111	1	End Bell, Rear	
2B		Ref	Box, Control Options:	
2B	70002239	1	110V/50Hz **(Prior to SN 0300079612)**	
2B	7019680	1	110V/50Hz **(SN 0300079612 through 0300132893)**	
2B	70002235	1	220V/50Hz **(Prior to SN 0300079612)**	
2B	70000127	1	220V/50Hz **(SN 0300079612 through 0300132893)**	
2B		Ref	Breaker, Circuit Options:	
2B	70002240	1	110V/50Hz **(Prior to SN 0300079612)**	
2B	4360542	1	110V/50Hz **(SN 0300079612 through 0300132893)**	
2B	70000126	1	220V/50Hz	
2B	4460190	AR	Receptacle, Double (110V Box)	
2B	4460027	AR	Receptacle, Double Twist Lock (110V Box)	
2B	70000124	1	Receptacle, Double (220V Box)	
2B	70000125	1	Receptacle, Single Twist Lock (220V Box)	
2B	2920162	1	Lamp Assembly **(Prior to SN 0300079612)**	
2B	7020191	1	Switch, Toggle **(Prior to SN 0300079612)**	
2C		Ref	Voltmeter Options:	
2C	2420203	1	110V/50Hz	
2C	7020192	1	220V/50Hz	
2D	3580134	1	Pulley	

SECTION 2 - TURNTABLE

ITEM	PART NUMBER	QTY	DESCRIPTION	REV
2D	7027887	1	Key, Woodruff	
3	0700816	4	Bolt M8 x 40mm	
4	4751900	4	Flatwasher 9/16in	
4	4811900	4	Flatwasher M8 (1001102547 & 1001102548 Installations Only)	
5	0200742	NLA	Arm, Adjusting (Use p/n 0200819)	
6	0480120	1	V-Belt	
7	0641610	1	Bolt 3/8in-16NC x 1-1/4in	
8	0100011	AR	Compound, Locking	
9	0641772	1	Bolt 7/16in-14NC x 9in	
10	4751600	6	Flatwasher 3/8in	
11	3574684	1	Plate, Box Mounting	
12	0701210	2	Bolt M12 x 20mm	
13	0962653	NLA	Bushing, Spacer (Use p/n 0962563)	
14	3311605	1	Locknut 3/8in-16NC	
15	3311705	1	Locknut 7/16in-14NC	
16	3740080	1	Relay	
17	4460023	1	Connector, Strain Relief **(Prior to SN 0300079612)**	
18	0641508	1	Bolt 5/16in-18NC x 1in	
19	4751500	1	Flatwasher 5/16in	
21	3520028	1	Plug, Hole	
22	0721006	AR	Bolt #10-24NC x 3/4in	
23	3311005	AR	Locknut #10-24NC	
24	4751000	AR	Flatwasher #10	
25	4360336	1	Switch, Toggle (Not Shown - Located at Platform)	
26	4740397	1	Bushing (Not Shown - Located at Platform) **(Prior to SN 0300074859)**	
27	4060802	1	Guard, Switch (Not Shown - Located at Platform)	
28		Ref	Decal - Voltage Options (Not Shown - Located at Platform):	
28	1705325	1	110V/50Hz	
28	3252507	1	220V/50Hz	
29	2820031	4 in/10cm	Heat Shrink (Not Shown - Located at Platform)	
30	3251102	1	Decal (Not Shown - Located at Platform)	
		Ref	**Note: Items 31 thru 40 Used with 1001102547, 1001102548, 1001115413 & 1001115414 Installations Only.**	
31	0962449	1	Bushing, Silicone	
32	3290505	1	Locknut M5	
33	4031608	2	Capscrew M5 x 20mm	
34	4460968	3	Bushing, Strain Relief	
35	4811600	2	Flatwasher M5	
36	4812100	2	Flatwasher M12	
37	1001099869	1	Box, Junction	
38		Ref	Light, Red Options:	
38	1001100233	1	110V/50Hz	
38	1001100234	1	220V/50Hz	
39	1001102644	1	Bracket, AC Junction Box	
40		Ref	Decal - Voltage Options:	
40	1705325	1	110V/50Hz	
40	3252507	1	220V/50Hz	
	1001094475	Ref	**HOURMETER INSTALLATION (OPTIONAL)**	B
102	0720808	1	Screw #8-32 x 1in	
103	2420165	1	Hourmeter	
104	3310601	2	Nut #6-32	

ITEM	PART NUMBER	QTY	DESCRIPTION	REV
105	3310805	1	Locknut #8-32	
106	3910608	2	Screw #6-32 x 1/2in	
107	4240032	4	Strap, Tie	
108	4420060	3 in/7cm	Tape, Double-Sided	
109	4460234	3	Mount, Tie Strap	
110	4750800	1	Washer #8	
111	4760600	2	Lockwasher #6	
112	1001094375	1	Bracket, Hourmeter	
113	1001094509	1	Harness, Hourmeter	
114	4460018	1	Connector, Butt Splice (Not Shown)	

FIGURE 2-11. DEUTZ ENGINE INSTALLATION (Prior to SN 0300077586)

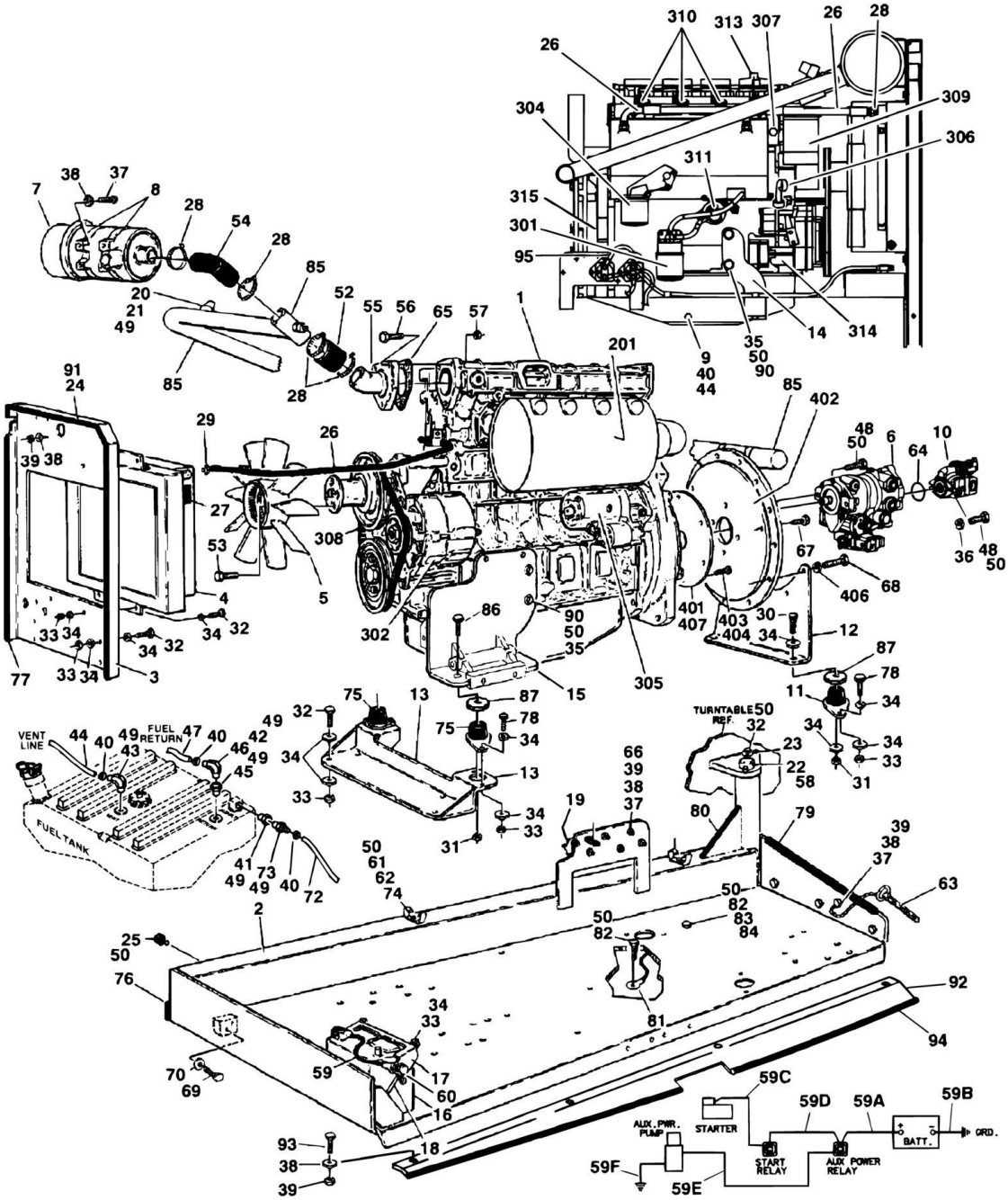

FIGURE 2-11. DEUTZ ENGINE INSTALLATION (Prior to SN 0300077586)

ITEM	PART NUMBER	QTY	DESCRIPTION	REV
	0270878	Ref	**DEUTZ ENGINE INSTALLATIONS**	12-K
1	2000178	1	Engine - Deutz F4M2011F Diesel (See Items 301-318 for Service Parts Offered by JLG)	
2	4845404	1	Tray Engine	
3	3539872	1	Plate, Radiator Mounting	
4	3620033	1	Cooler, Oil	
5	2060025	1	Fan	
6	3600295	1	Piston Pump Assembly (See PISTON PUMP ASSEMBLY for Breakdown)	
7	1340060	1	Air Cleaner Assembly	
7	7012664	1	Element, Air Cleaner	
8	0340041	2	Band, Mounting	
9	4640751	1	Valve, Oil Drain	
10	3600324	1	Load Sensing Pump Assembly (See LOAD SENSING PUMP ASSEMBLY for Breakdown)	
11	3200406	2	Mount, Rubber Engine (Rear)	
12	3537420	1	Bracket, Engine Mounting - Rear	
13	3539971	1	Bracket, Engine Mounting - Front	
14	3537416	1	Support, Engine - Right	
15		Ref	Support, Engine - Left Options:	
15	4846479	1	Support, Engine - Left **(Prior to SN 0300068270)**	
15	4846566	1	Support, Engine - Left **(SN 0300068270 through 0300077586)**	
16	0400075	1	Battery	
17	0181727	1	Hold-Down, Battery	
18	0630498	2	Rod, Hold-Down	
19	3740067	2	Relay	
20	4360392	1	Switch, Restrictor Indicator	
21	2180798	1	Fitting	
22	3422446	1	Pin, Pivot	
23	3841143	1	Keeper, Pin	
24	3960549	4 ft/1.2m	Seal	
25	0940070	1	Bumper, Rubber	
26	2720398	2	Hose, Oil Cooler	
27	1703162	2	Nameplate - Fan Caution	
28	1320016	4	Clamp, Hose	
29	2220451	2	Fitting, Straight	
30	0641818	2	Bolt 1/2in-13NC x 2-1/4in	
31	3311805	4	Locknut 1/2in-13NC	
32	0641610	13	Bolt 3/8in-16NC x 1-1/4in	
33	3311605	22	Locknut 3/8in-16NC	
34	4751600	44	Flatwasher 3/8in Regular	
35	0701414	6	Bolt 1/4in-20NC x 3/4in	
36	4891800	2	Flatwasher 1/2in Hardened	
37	0641407	9	Bolt 1/4in-20NC x 7/8in	
38	4751400	22	Flatwasher 1/4in Regular	
39	3311405	13	Locknut 1/4in-20NC	
40	1320022	5	Clamp, Hose	
41	2220273	1	Fitting, Reducer	
42	2180536	1	Fitting, Straight	
43	2220313	1	Fitting, Elbow	

SECTION 2 - TURNTABLE

ITEM	PART NUMBER	QTY	DESCRIPTION	REV
44	2750532	7 ft/2.2m	Hose 3/8in	
45	2220250	1	Fitting, Reducer	
46	2220459	1	Fitting, Elbow	
47	2720271	15 ft/4.6m	Hose 3/16in	
48	0641812	4	Bolt 1/2in-13NC x 1-1/2in	
49	0100020	AR	Sealant, Thread	
50	0100011	AR	Compound, Locking	
52		Ref	Coupling, Rubber Intake Options:	
52	2720351	3 in/8cm	Coupling, Rubber Intake **(Prior to SN 0300067971)**	
52	2720449	1	Coupling, Rubber Intake **(SN 0300067971 through 0300077586)**	
53	0700808	4	Bolt M8 x 16mm	
54	2720434	1	Elbow, Rubber	
55	4845395	1	Air Intake Adapter Weldment	
56	0641510	3	Bolt 5/16in-18NC x 1-1/4in	
57	3311505	3	Locknut 5/16in-18NC	
58	0961986	2	Bushing, Flanged	
59	2901609	1	Battery Cable Kit	
59A	7016800	1	Cable, Battery (Red)	
59B	7016809	1	Cable, Battery (Black)	
59C	7016802	1	Cable (Red)	
59D	7016803	1	Cable (Red)	
59E	7016824	1	Cable (Red)	
59F	7016825	1	Cable (Black)	
60	4460611	1	Terminal, Battery Jumper Post	
61	1320223	3	J-Clip 1/2in	
62	0641606	3	Bolt 3/8in-16NC x 3/4in	
63	3422532	1	Pin, Hitch	
64	3790044	1	O-Ring	
65	3960407	1	Gasket	
66	4791400	4	Starwasher 1/4in	
67	0701012	4	Bolt M10 x 25mm	
68	0701015	4	Bolt M10 x 35mm	
69	0642010	1	Bolt 5/8in-11NC x 1-1/4in	
70	4752000	1	Flatwasher 5/8in Regular	
71	1701505	1	Decal - Diesel (Not Shown - Located on Hood)	
72	2720058	16 ft/4.9m	Hose	
73	2220794	1	Fitting, Barbed	
74	4711600	3	Flatwasher 3/8in Thin	
75	3200362	2	Mount, Rubber Engine (Front)	
76	3960468	1	Seal, Foam Gasket	
77	3960469	1	Seal, Foam Gasket	
78	0641608	14	Bolt 3/8in-16NC x 1in	
79	4060805	7 in/18cm	Flex-Trim 1/4in	
80	4060804	16 in /40cm	Flex-Trim 3/16in	
81	1060637	1	Lanyard	
82	0641808	2	Bolt 1/2in-13NC x 1in	
83	3311801	1	Nut 1/2in-13NC	
84	4751800	1	Flatwasher 1/2in Regular	
85	4567815	1	Tuning Tube Weldment	
86	0641826	2	Bolt 1/2in-13NC x 3-1/4in	
87	4740274	4	Washer, Snubbing	

ITEM	PART NUMBER	QTY	DESCRIPTION	REV
88	2200222	1	Plug, Pipe (Not Shown - Located in Bottom of Fuel Tank)	
89	1320223	1	J-Clip (Not Shown - Located above Fuel Tank)	
90	4711900	6	Flatwasher 9/16in Thin	
91	3960549	11 in /28cm	Seal, Hood	
92	3539934	1	Plate, Seal	
93	0641406	4	Bolt 1/4in-20NC x 3/4in	
94	3960464	42 in/1m	Seal, Hood	
95	4922737	1	Harness, Relay Ground	
		Ref	**MUFFLER INSTALLATIONS**	
	0256689	Ref	**Standard Equipment (Spark Arresting)**	-
	0256690	Ref	**Optional Equipment (Catalytic)**	-
201		Ref	Muffler Options:	
201	3220103	1	Spark Arresting	
201	3220104	1	Catalytic	
201		Ref	Clamp Options:	
201	1320176	1	Saddle Clamp Used on Spark Arresting	
201	70001017	1	Band Clamp Used on Catalytic	
201	7024398	1	Tube, Exhaust	
201	7024560	1	Plug, Brass	
	2000178	Ref	**ENGINE COMPONENTS**	
301	7016328	1	Filter, Fuel	
302	7000663	1	Alternator (was p/n 7020410)	
302	7020464	1	Regulator, Voltage	
302	70002234	1	Bracket, Adjustable	
303	7020168	1	Switch, Engine Temperature (Not Shown - Located Beside #1 Injector)	
303	7020480	1	Ring, Seal (Not Shown - Used with Temperature Switch)	
304	7016331	1	Filter, Oil	
305	7020479	1	Starter	
306	7026631	1	Dipstick Oil Level	
307	7020461	1	Switch, Oil Pressure	
308	7020408	1	V-Belt	
309	7020458	1	Actuator, Throttle (was p/n 7020478)	
310	7024318	4	Pump, Fuel Injection (was p/n 7023488)	
311	7020463	1	Pump, Fuel Supply	
311	7020411	1	Seal - Supply Pump to Engine Block	
312	7020449	4	Gasket, Exhaust Manifold to Engine Block (Not Shown)	
313	7020465	1	Cap, Oil Filter	
314	70000045	1	Pump, Oil (was p/n 7020484)	
314	7020468	1	Seal - Oil Pump to Engine Block	
315	7024565	1	Sensor, Speed (was p/n 7020481)	
315	70003931	1	Bolt	
315	70003931	1	Spacer	
316	See Note	1	Flywheel (Not Shown) (Note: Not Available for Purchase)	
316	7024579	1	Ring Gear	
317	7020471	4	Gasket, Exhaust Manifold to Engine Block (Not Shown)	
318		Ref	Gasket, Cylinder Head Options (Not Shown):	
318	70002415	1	1 Notch	
318	70002416	1	2 Notches	
318	70002417	1	3 Notches	
	0256847	Ref	**PUMP COUPLING INSTALLATION**	2

SECTION 2 - TURNTABLE

ITEM	PART NUMBER	QTY	DESCRIPTION	REV
401	1660234	1	Coupling, Hayes	
402	0080163	1	Plate, Pump Adapter	
403	0700810	6	Bolt M8 x 20mm	
404	4831900	6	Lockwasher M8	
406	4832000	8	Lockwasher M10 **(Prior to SN 0300084703)**	
407	3020021	AR	Grease, Coupling	

FIGURE 2-12. DEUTZ ENGINE INSTALLATION (SN 0300077586 through 0300140000)

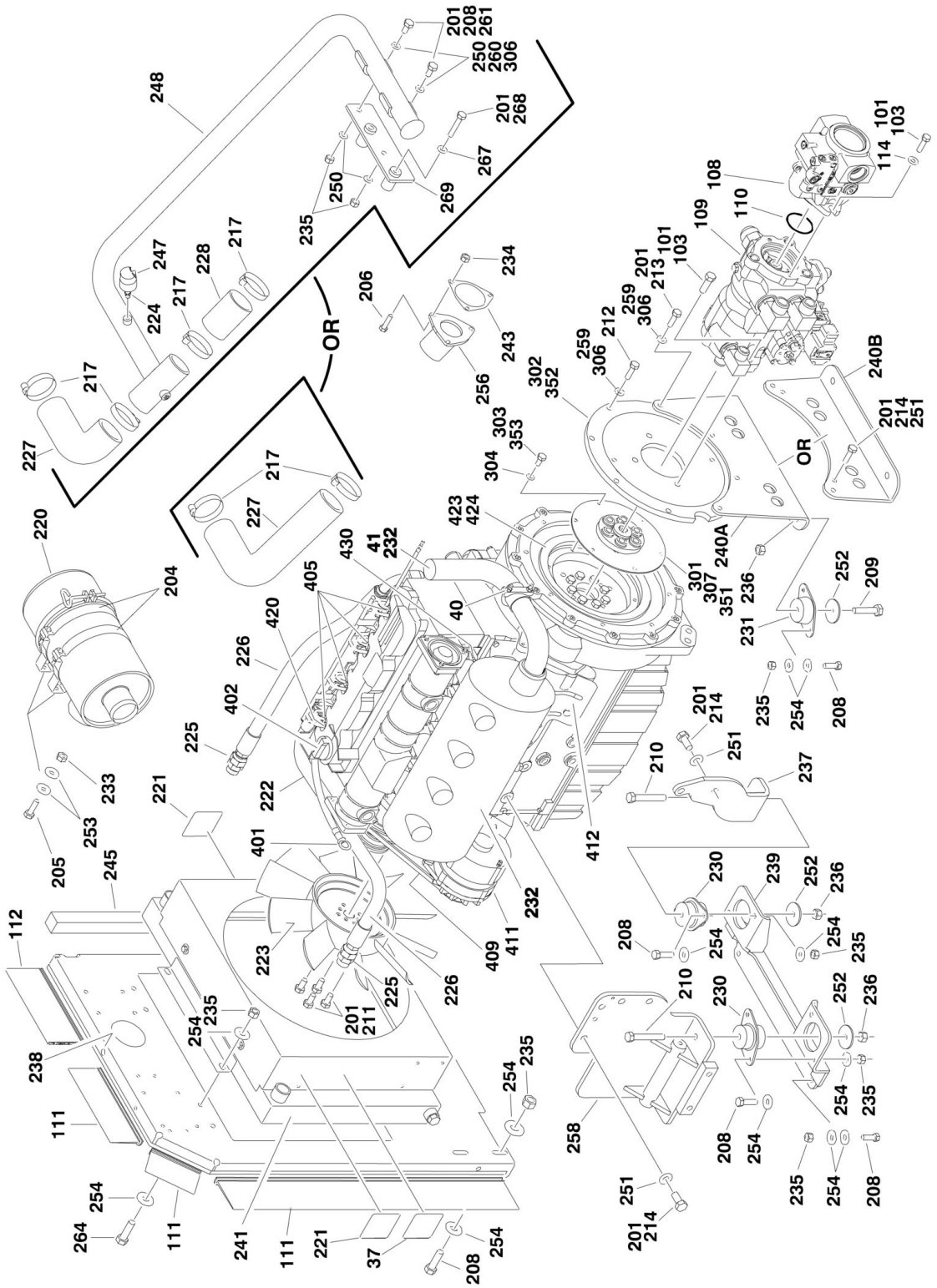

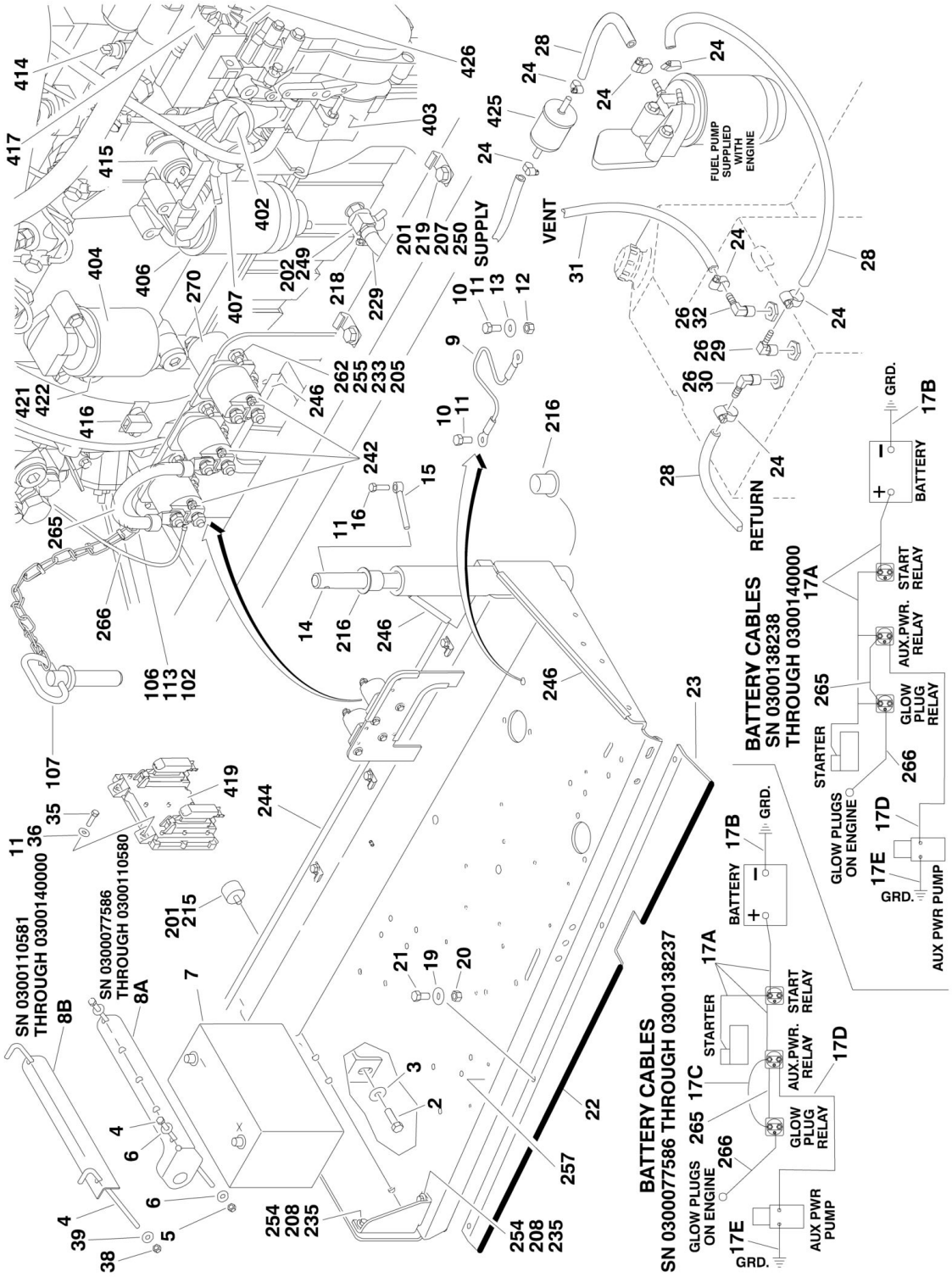
SN 0300110581 THROUGH 0300140000
SN 0300077586 THROUGH 0300110580
BATTERY CABLES SN 0300077586 THROUGH 0300138237
BATTERY CABLES SN 0300138238 THROUGH 0300140000
FUEL PUMP SUPPLIED WITH ENGINE
SUPPLY
VENT
RETURN
BATTERY
START RELAY
AUX.PWR. RELAY
GLOW PLUG RELAY
STARTER
GLOW PLUGS ON ENGINE
AUX PWR PUMP
GRD.

FIGURE 2-12. DEUTZ ENGINE INSTALLATION (SN 0300077586 through 0300140000)

ITEM	PART NUMBER	QTY	DESCRIPTION	REV
		Ref	**DEUTZ ENGINE INSTALLATION**	
	0273800	Ref	**Tier II Engines (SN 0300077586 through 0300085331)**	3-B
	0274302	Ref	**Tier II Engines (SN 0300085332 through 0300129453)**	G
	1001099829	Ref	**Tier III Engines (SN 0300129454 through 0300140000)**	A
2	0642010	1	Bolt 5/8in-11NC x 1-1/4in	
3	4752000	1	Flatwasher 5/8in Regular	
4		Ref	Bolt, Battery Hold-down Options:	
4	0630498	2	Bolt, Battery Hold-down **(SN 0300077586 through 0300110580)**	
4	1001093382	2	Bolt, Battery Hold-down **(SN 0300110581 through 0300140000)**	
5	3311605	2	Locknut 3/8in-16NC **(SN 0300077586 through 0300110581)**	
6	4751600	4	Flatwasher 3/8in Regular **(SN 0300077586 through 0300110581)**	
7	0400075	1	Battery	
8		Ref	Hold-Down, Battery Options:	
8A	0181727	1	Hold-down, Battery **(SN 0300077586 through 0300110580)**	
8B	91401281	1	Hold-down, Battery **(SN 0300110581 through 0300140000)**	
9	1060637	1	Cable, Lanyard	
10	0641808	2	Bolt 1/2in-13NC x 1in	
11	0100011	AR	Compound, Locking	
12	3311801	1	Nut 1/2in-13NC	
13	4751800	1	Flatwasher 1/2in Regular	
14	3422446	1	Pin, Pivot	
15	3841143	1	Pin, Keeper	
16	0641610	1	Bolt 3/8in-16NC x 1-1/4in	
17		Ref	Battery Cable Kit Options:	
17	2902401	1	Battery Cable Kit (Note: 2902401 Rev A version is no longer available. Verify whether machine is equipped with 2 or 3 relays on the engine tray. If there are 3 relays, purchase latest revision of 2902401 kit. If there are 2 relays, purchase individual items as replacement) **(SN 0300077586 through 0300138237)**	A
17	2902401	1	Battery Cable Kit **(SN 0300138238 through 0300140000)**	B
17A	7016813	1	Cable, Battery (Red) **(SN 0300077586 through 0300138237)**	
17A	1001116288	1	Cable, Battery (Red) (Machines with 2 Relays on Engine Tray) (was p/n 7027027) **(SN 0300138238 through 0300140000)**	
17A	1001116287	1	Cable, Battery (Red) (Machines with 3 Relays on Engine Tray) (was p/n 7027027) **(SN 0300138238 through 0300140000)**	
17B	7027012	1	Cable, Battery **(SN 0300077586 through 0300138237)**	
17B	7027004	1	Cable, Battery (Black) **(SN 0300138238 through 0300140000)**	
17C	7016803	1	Cable, Battery (Red) **(SN 0300077586 through 0300138237)**	
17C	Not Required	0	Cable, Battery (Red - Part of 17A) **(SN 0300138238 through 0300140000)**	
17D	7016824	1	Cable (Red)	
17E	7016825	1	Cable (Black)	
18	4922737	1	Harness, Engine Grounding (Not Shown)	
19	4751400	4	Flatwasher 1/4in Regular **(SN 0300077586 through 0300089980)**	
20	3311405	4	Locknut 1/4in-20NC **(SN 0300077586 through 0300089980)**	
21	0641406	4	Bolt 1/4in-20NC x 3/4in **(SN 0300077586 through 0300089980)**	
22	3960464	3.5 ft	Seal **(SN 0300077586 through 0300089980)**	

ITEM	PART NUMBER	QTY	DESCRIPTION	REV
		/1.1m		
23	3539934	1	Plate **(SN 0300077586 through 0300089980)**	
24	1320022	5	Clamp, Hose	
25	1320223	1	Clamp (Not Shown - Located on Turntable to clamp fuel line)	
26	0100020	AR	Sealant, Pipe	
27	2200222	1	Fitting, Plug (Not Shown - Located on Fuel Tank for Drain)	
28	2720058	30 ft/9.2m	Hose	
29	2180348	1	Fitting, Straight Barbed	
30	2221176	1	Fitting, Elbow Barbed	
31	2750532	7 ft/2.1m	Hose	
32	2220313	1	Fitting, Elbow	
33	1701505	1	Decal - Diesel (Not Shown - Located on Hood)	
34	4922978	1	Harness, Start Assist Solenoid **(SN 0300077586 through 0300085331)**	
35	0641412	4	Bolt 1/4in-20NC x 1-1/2in **(SN 0300085332 through 0300140000)**	
36	4711400	4	Flatwasher 1/4in Thin **(SN 0300085332 through 0300140000)**	
37	1706098	1	Decal - Warning Explosion/Fire **(SN 0300092776 through 0300140000)**	
38	88521205	2	Locknut, Nylon Insert 5/16in-18NC **(SN 0300110581 through 0300140000)**	
39	4751500	2	Flatwasher 5/16in Regular **(SN 0300110581 through 0300140000)**	
40	1320176	1	Clamp (Tier III Engines Only - For Tier-II Engines Purchase Item 232: 1320176) **(SN 0300129454 through 0300140000)**	
41	1001101948	1	Tube, Exhaust Only (Tier III Engines Only - For Tier-II Engines Purchase Item 232: 7024398) **(SN 0300129454 through 0300140000)**	
		Ref	**ENGINE AND PUMP ASSEMBLIES**	
	2000233	Ref	**Tier II Engines (SN 0300077586 through 0300085331)**	B
	2000285	Ref	**Tier II Engines (SN 0300085332 through 0300129453)**	D
	1001099828	Ref	**Tier III Engines (SN 0300129454 through 0300140000)**	B
101	0100011	AR	Compound, Locking	
102	0641407	1	Bolt 1/4in-20NC x 7/8in	
103	0641812	2	Bolt 1/2in-13NC x 1-1/2in	
105	3020016	3.75 gal /14.19L	Oil, Motor (Not Shown) **(SN 0300077586 through 0300092776)**	
106	3311405	1	Locknut 1/4in-20NC	
107	3422532	1	Pin, Hitch	
108	3600411	1	Load Sensing Pump Assembly with Fittings Options (See LOAD SENSING PUMP ASSEMBLY for Breakdown)	
109	3600410	1	Piston Pump Assembly with Fittings Options (See PISTON PUMP ASSEMBLY for Breakdown)	
110		Ref	O-Ring Options:	
110	3790152	1	O-Ring **(SN 0300077586 through 0300138159)**	
110	3790044	1	O-Ring **(SN 0300138160 through 0300140000)**	
111	3960548	3.66 ft /1.1m	Seal, Hood	
112	3960549	1 ft/0.3m	Seal, Hood	
113	4751400	2	Flatwasher 1/4in Regular	
114	4891800	2	Flatwasher 1/2in Hardened	
		Ref	**ENGINE AND PUMP ASSEMBLIES**	
	2000219	Ref	**Tier II Engines (SN 0300077586 through 0300085331)**	F
	2000279	Ref	**Tier II Engines (SN 0300085332 through 0300092775)**	E

SECTION 2 - TURNTABLE

ITEM	PART NUMBER	QTY	DESCRIPTION	REV
	2000342	Ref	**Tier II Engines (SN 0300092776 through 0300129453)**	B
	1001098508	Ref	**Tier III Engines (SN 0300129454 through 0300140000)**	E
	0256689	Ref	**MUFFLER INSTALLATION - SPARK ARRESTING (SN 0300077586 through 0300129454)**	-
	0256690	Ref	**MUFFLER INSTALLATION - CATALYTIC (SN 0300079610 through 0300129454)**	-
201	0100011	AR	Compound, Locking	
202	0100020	AR	Sealant, Pipe **(SN 0300077586 through 0300136498)**	
204	0340041	2	Band, Air Cleaner	
205	0641407	AR	Bolt 1/4in-20NC x 7/8in	
206	0641510	3	Bolt 5/16in-18NC x 1-1/4in	
207	0641606	3	Bolt 3/8in-16NC x 3/4in	
208	0641610	AR	Bolt 3/8in-16NC x 1-1/4in	
209	0641818	2	Bolt 1/2in-13NC x 2-1/4in	
210	0641826	2	Bolt 1/2in-13NC x 3-1/4in	
211	0700808	4	Bolt M8 x 16mm	
212	0701012	2	Bolt M10 x 25mm **(SN 0300077586 through 0300129454)**	
213		Ref	Bolt Options:	
213	0701015	4	Bolt M10 x 35mm **(SN 0300077586 through 0300085331)**	
213	0701014	4	Bolt M10 x 30mm **(SN 0300085332 through 0300092775)**	
213	0701015	4	Bolt M10 x 35mm **(SN 0300092776 through 0300129454)**	
214	0701414	AR	Bolt M14 x 130mm	
215	0940070	1	Bumper	
216	0961986	2	Bushing, Flanged	
217	1320016	4	Clamp	
218	1320022	1	Clamp, Hose **(SN 0300077586 through 0300136498)**	
219	1320223	AR	J-Clip	
220	1340060	1	Air Cleaner Assembly Filter Element	
220	7012664	1	Element, Filter (Not Shown)	
221	1703162	2	Decal - Caution Fan Blade	
222		Ref	Engine, Deutz - F4M2011 Options:	
222	2000216	1	Engine, Deutz - F4M2011 (Tier II) **(SN 0300077586 through 0300085331)**	
222	2000274	1	Engine, Deutz - F4M2011 (Tier II) **(SN 0300085332 through 0300092775)**	
222	2000339	1	Engine, Deutz - F4M2011 (Tier II) **(SN 0300092776 through 0300129453)**	
222	1001094101	1	Engine, Deutz - F4M2011 (Tier III) **(SN 0300129454 through 0300140000)**	
223	2060025	1	Fan	
224	2180798	1	Fitting **(SN 0300077586 through 0300085332)**	
225	2220451	2	Fitting, Straight	
226	2720398	2	Hose, Oil Cooler	
227		Ref	Elbow, Rubber Options:	
227	2720434	1	Elbow, Rubber **(SN 0300077586 through 0300136497)**	
227	1001091179	1	Elbow, Rubber **(SN 0300136498 through 0300140000)**	
228	2720449	1	Hose, Air Cleaner **(SN 0300077586 through 0300136498)**	
229		Ref	Hose, Oil Drain Options:	
229	2750532	1 ft/30cm	Hose, Oil Drain **(SN 0300077586 through 0300136497)**	
229	1001091892	6 in/15cm	Hose, Oil Drain **(SN 0300136498 through 0300140000)**	
230	3200362	2	Mount, Motor	
231	3200406	2	Mount, Motor	
232		Ref	Muffler Options:	

ITEM	PART NUMBER	QTY	DESCRIPTION	REV
232		Ref	Spark Arresting (Standard)	
232	3220103	1	Spark Arresting (Tier II) **(SN 0300077586 through 0300129453)**	
232	1001099051	1	Spark Arresting (Tier III) **(SN 0300129454 through 0300140000)**	
232		Ref	Catalytic (Optional)	
232	3220104	1	Catalytic (Tier II) **(SN 0300077586 through 0300129453)**	
232	1001101241	1	Catalytic (Tier III) **(SN 0300129454 through 0300140000)**	
232		Ref	Muffler Components:	
232		Ref	Clamp Options Only (Tier II) **(SN 0300077586 through 0300129454)**	
232	1320176	1	Saddle Clamp Used on Spark Arresting	
232	70001017	1	Band Clamp Used on Catalytic	
232	7024398	1	Tube, Exhaust Only (Tier II) **(SN 0300077586 through 0300129454)**	
232	7024560	1	Plug, Brass	
233	3311405	AR	Locknut 1/4in-20NC	
234	3311505	3	Locknut 5/16in-18NC	
235	3311605	AR	Locknut 3/8in-16NC	
236	3311805	4	Locknut 1/2in-13NC	
237	3537416	1	Plate, Engine Mounting (Front Right Side)	
238	3539872	1	Plate, Radiator Mounting	
239	3539971	1	Plate, Engine Mounting (Front Bottom)	
240		Ref	Plate, Engine Mounting (Rear) Options:	
240A	3574978	1	Tier II Engines **(SN 0300077586 through 0300129453)**	
240B	1001093943	1	Tier III Engines **(SN 0300129454 through 0300140000)**	
241	3620033	1	Radiator	
242	3740067	Ref	Relay Options:	
242	3740067	2	Relay **(SN 0300077586 through 0300092775)**	
242	3740067	3	Relay **(SN 0300092776 through 0300140000)**	
243	3960407	1	Gasket, Air Intake	
244	3960468	1	Seal	
245	3960469	1	Seal	
246	4060805	37 in/1m	Flex-Trim	
247	4360392	1	Indicator, Restriction **(SN 0300077586 through 0300085332)**	
248		Ref	Tube, Tuning Options:	
248	4567815	1	Tube, Tuning **(SN 0300077586 through 0300085331)**	
248	4569171	1	Tube, Tuning **(SN 0300085332 through 0300129453)**	
248	1001099686	1	Tube, Tuning **(SN 0300129454 through 0300136498)**	
249		Ref	Valve, Oil Drain Options:	
249	4640751	1	Valve, Oil Drain **(SN 0300077586 through 0300136497)**	
249	1001104308	1	Valve, Oil Drain **(SN 0300136498 through 0300140000)**	
250	4711600	AR	Flatwasher 3/8in (Thin)	
251		Ref	Flatwasher Options:	
251	4711900	AR	Flatwasher 9/16in Thin **(SN 0300077586 through 0300092775)**	
251	4812200	AR	Flatwasher M14 **(SN 0300092776 through 0300140000)**	
252	4740274	4	Washer, Snubbing	
253	4751400	AR	Flatwasher 1/4in Regular	
254	4751600	AR	Flatwasher 3/8in Regular	
255	4791400	AR	Starwasher 1/4in	
256	4845395	1	Adapter, Air Intake	
257		Ref	Tray, Engine Options:	

ITEM	PART NUMBER	QTY	DESCRIPTION	REV
257	4845404	1	Tier II Engines **(SN 0300077586 through 0300129453)**	
257	1001094321	1	Tier III Engines **(SN 0300129454 through 0300140000)**	
258	4846566	1	Plate, Engine Mounting (Front Left Side)	
259	4711700	6	Flatwasher 7/16in Thin **(SN 0300084703 through 0300129454)**	
260	4751700	2	Flatwasher 7/16in Regular **(SN 0300084703 through 0300129454)**	
261		Ref	Bolt M10 Options:	
261	0701012	2	Bolt M10 x 25mm **(SN 0300077586 through 0300085331)**	
261	0701015	2	Bolt M10 x 35mm **(SN 0300085332 through 0300129454)**	
262		Ref	Flatwasher Options:	
262	4751400	4	Flatwasher 1/4in Regular **(SN 0300077586 through 0300092775)**	
262	4711400	6	Flatwasher 1/4in Thin **(SN 0300092776 through 0300140000)**	
263	3020016	3.75 gal /14.19L	Oil, Motor (Not Shown)	
264		Ref	Bolt Options:	
264	0641610	6	Bolt 3/8in-16NC x 1-1/4in **(SN 0300077586 through 0300092775)**	
264	0641609	6	Bolt 3/8in-16NC x 1-1/8in **(SN 0300092776 through 0300140000)**	
265	1060904	1	Cable, Jumper **(SN 0300092776 through 0300140000)**	
266	4923379	1	Harness, Glowplug	
267	4891600	2	Flatwasher 3/8in Hardened **(SN 0300129454 through 0300136498)**	
268	0711025	2	Bolt M10 x 85mm **(SN 0300129454 through 0300136498)**	
269	1001098916	1	Support, Resonator **(SN 0300129454 through 0300136498)**	
270	3740080	1	Relay **(SN 0300129454 through 0300140000)**	
	0256847	Ref	**PUMP COUPLING INSTALLATION - TIER II ENGINES (SN 0300077586 through 0300129454)**	2
301	1660234	1	Coupling, Hayes	
302	0080163	1	Plate, Pump Adapter	
303	0700810	63	Bolt M8 x 20mm	
304	4831900	6	Lockwasher M8	
306	4832000	8	Lockwasher M10 **(SN 0300077586 through 0300084703)**	
307	3020021	AR	Grease, Coupling	
	2902065	Ref	**PUMP COUPLING INSTALLATION - TIER III ENGINES (SN 0300129454 through 0300140000)**	C
351	70000793	1	Coupling	
352	See Note	NSS	Plate, Pump Adapter (Not Shown) (Note: Not Available - Purchase Complete Coupling)	
353	See Note	NSS	Capscrew M10 (Note: Not Available for Purchase)	
		Ref	**ENGINE COMPONENTS**	
	2000216	Ref	**Tier II Engines (SN 0300077586 through 0300085331)**	D
	2000274	Ref	**Tier II Engines (SN 0300085332 through 0300092775)**	B
	2000339	Ref	**Tier II Engines (SN 0300092776 through 0300129453)**	B
	1001094101	Ref	**Tier III Engines (SN 0300129454 through 0300140000)**	B
401	7026631	1	Dipstick (2000216, 2000274 & 2000339 Engines)	
401	7020487	1	O-Ring, Dipstick	
401	70001002	1	Dipstick (1001094101 Engine)	
402	7020465	1	Cap, Filler	
403	70001850	1	Pump, Oil Lube (was p/ns 7020484 & 70000045)	
403	7020468	1	Seal Between Oil Pump and Engine Block (Not Shown)	
404	7016331	1	Filter, Oil (was p/n 7016641)	

ITEM	PART NUMBER	QTY	DESCRIPTION	REV
404	70001423	1	Bracket, Oil Filter	
404	70001848	1	Sensor at Oil Filter (1001094101 Engine Only)	
404	70001132	1	Seal, Sensor at Oil Filter (1001094101 Engine Only)	
405		Ref	Pump, Injector Options:	
405		Ref	Tier II Engines	
405	7027246	4	Series A Injector	
405	7027608	4	Series B Injector	
405	7027609	4	Series C Injector	
405	7027610	4	Series D Injector	
405		Ref	Tier III Engines	
405	70000912	4	Series A Injector	
405	70000913	4	Series B Injector	
405	70000914	4	Series C Injector	
405	70000915	4	Series D Injector	
405		Ref	Gasket Options (1 Per Injector):	
405	7020447	4	Tier II Engines **(SN 0300077586 through 0300129453)**	
405	See Note	NSS	Tier III Engines (Note: Not Available for Purchase) **(SN 0300129454 through 0300140000)**	
406	7016328	1	Filter, Fuel	
407	70000916	1	Pump, Fuel Supply (was p/n 7027238)	
407	70001435	1	Kit, Repair for 70000916 Pump	
407	70000919	1	Hand Pump for 70000916 Pump	
407	70000918	1	Seal, Hand Pump for 70000916 Pump	
407		Ref	O-Seal Between Fuel Pump and Engine Block Options (Not Shown):	
407	7020411	1	7027238 Pump **(SN 0300077586 through 0300129453)**	
407	70000917	1	70000916 Pump **(SN 0300129454 through 0300140000)**	
408	7020449	4	Gasket, Intake Manifold (Not Shown)	
409	7020408	1	V-Belt	
410	7020471	4	Gasket, Exhaust Manifold to Engine Block (Not Shown)	
410	See Note	1	Gasket, Exhaust Manifold to Exhaust Pipe (Not Shown) (Note: Not Available for Purchase)	
410	70001836	1	Gasket, Exhaust (Engine Head to Header) (Not Shown) **(SN 0300129454 through 0300140000)**	
410	70001835	1	Gasket, Exhaust (Header to EGR Valve Block) (Not Shown) **(SN 0300129454 through 0300140000)**	
410	70001841	1	Valve, EGR (Not Shown) **(SN 0300129454 through 0300140000)**	
410	70001838	2	Gasket, Exhaust (EGR Valve Block to Exhaust Tube) (Not Shown) **(SN 0300129454 through 0300140000)**	
410	70001874	1	Plate Choke (Between 70001838 Gaskets) (Not Shown) **(SN 0300129454 through 0300140000)**	
410	70001837	1	Gasket, Exhaust (Exhaust Tube to Muffler) (Not Shown) **(SN 0300129454 through 0300140000)**	
410	70001839	1	Flange, Sealing (Near Front of Header) (includes Seal and Pin) (Not Shown) **(SN 0300129454 through 0300140000)**	
411	7000663	1	Alternator (was p/n 7020410 & 7016329)	
411		Ref	Regulator, Voltage Options (Not Shown):	
411	7020464	1	Regulator, Voltage **(SN 0300077586 through 0300129453)**	
411	70001868	1	Regulator, Voltage **(SN 0300129454 through 0300140000)**	
411	70001866	1	Gasket, Regulator (Not Shown) **(SN 0300129456 through 0300140000)**	
411	70002234	1	Bracket, Adjusting (Not Shown)	
412	7020479	1	Starter	

ITEM	PART NUMBER	QTY	DESCRIPTION	REV
412	7026608	1	Solenoid	
412	70001498	1	Shield, Starter Heat	
413	See Note	2	Plug- In Connector (Not Shown) (Note: Not Available for Purchase)	
414	7027241	1	Transmitter, Temperature **(SN 0300077586 through 0300085331)**	
414	7027791	1	Transmitter, Temperature **(SN 0300085332 through 0300140000)**	
414	See Note	NSS	Ring, Sealing (Note: Not Available for Purchase)	
415	7020461	1	Sensor, Oil Pressure **(SN 0300077586 through 0300085331)**	
415	7027790	1	Sensor, Oil Pressure **(SN 0300085332 through 0300140000)**	
416	7024565	1	Sensor, Speed	
417	7020458	1	Actuator, Throttle **(SN 0300077586 through 0300085331)**	
417	7027792	1	Actuator, Throttle **(SN 0300085332 through 0300140000)**	
417	7026607	2	Spring, Actuator (was p/n 7027276)	
418		Ref	Sensor, Temperature Options (Not Shown):	
418	7027236	1	Tier II Engines **(SN 0300077586 through 0300129453)**	
418	See Note	NSS	Tier III Engines (Note: Not Available for Purchase) **(SN 0300129454 through 0300140000)**	
419	7027795	1	Module, EMR2 Controller **(SN 0300085332 through 0300140000)**	
419	7027796	1	Harness, EMR2 Module **(SN 0300085332 through 0300140000)**	
420	70000345	4	Plug, Glow **(SN 0300092776 through 0300140000)**	
421	7020459	1	Thermostat	
422	7020460	1	Spring, Compression	
423		Ref	Flywheel Options:	
423	70000264	1	Tier II Engines **(SN 0300077586 through 0300129453)**	
423	70001870	1	Tier III Engines **(SN 0300129454 through 0300140000)**	
424	7024579	1	Rim, Gear	
425	7027245	1	Filter, Fuel In-line (2000216 Engine Only)	
426		Ref	Start Solenoid Options:	
426	7027239	1	Tier II Engines **(SN 0300077586 through 0300129453)**	
426	See Note	NSS	Tier III Engines (Note: Not Available for Purchase) **(SN 0300129454 through 0300140000)**	
427	70001847	1	Breather Valve (Not Shown)	
427	70001126	1	Seal, Breather Valve (Not Shown)	
428		Ref	Gasket, Cylinder Head Options (Not Shown):	
428		Ref	Gasket (2000216, 2000274 & 2000339 Engines):	
428	70003001	1	1 Notch	
428	70003002	1	2 Notches	
428	70003003	1	3 Notches	
428		Ref	Gasket (1001094101 Engine):	
428	70002415	1	1 Notch	
428	70002416	1	2 Notches	
428	70002417	1	3 Notches	
429		Ref	Timing Belt/Idler Kit Options (Not Shown):	
429	70000800	1	Timing Belt/Idler Kit **(SN 0300077586 through 0300085331)**	
429	See Note	NSS	Timing Belt/Idler Kit (Note: Not Available for Purchase) **(SN 0300085332 through 0300140000)**	
430	70002200	8	Stud (Used to attach muffler)	
431		Ref	Harness, Engine Options (Not Shown):	
431	See Note	NSS	Harness, Engine (Note: Not Available for Purchase) **(SN 0300077586 through 0300085331)**	

ITEM	PART NUMBER	QTY	DESCRIPTION	REV
431	7027794	1	Harness, Engine **(SN 0300085332 through 0300129453)**	
431	70001872	1	Harness, Engine **(SN 0300129454 through 0300140000)**	
431	7027793	1	Plug, Connector	
432	70001847	1	Breather, Valve (Not Shown - Located On Front Cover) **(SN 0300129454 through 0300140000)**	
432	70001126	1	Seal, Breather **(SN 0300129454 through 0300140000)**	

FIGURE 2-13. GENERATOR INSTALLATION - DEUTZ MACHINES (OPTIONAL)

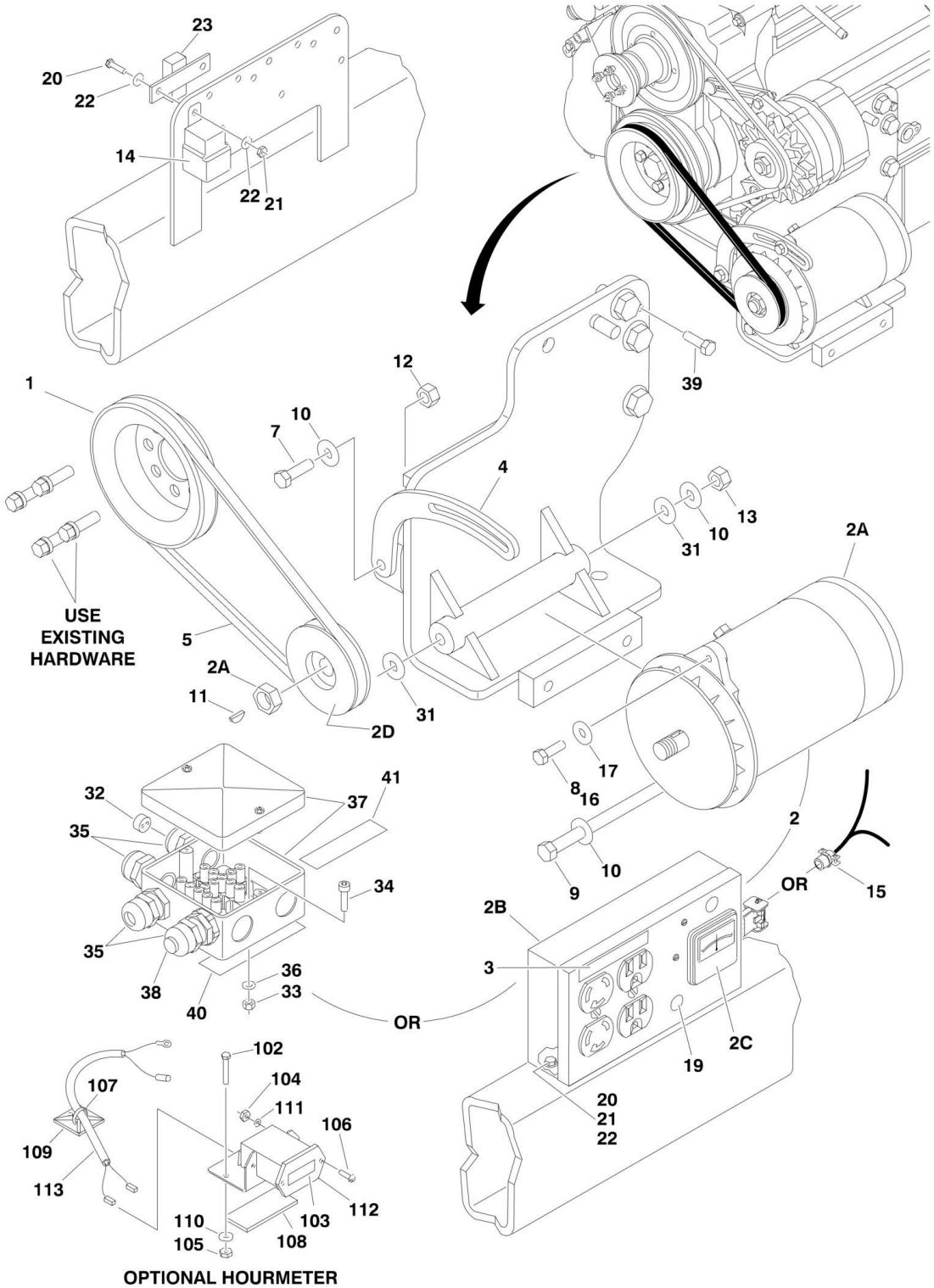

FIGURE 2-13. GENERATOR INSTALLATION - DEUTZ MACHINES (OPTIONAL)

ITEM	PART NUMBER	QTY	DESCRIPTION	REV
		Ref	**GENERATOR INSTALLATION OPTIONS:**	
		Ref	**110V/60Hz Generator**	
	0271544	Ref	**Generator Installation (Prior to SN 0300069570)**	3-B
	0272480	Ref	**Generator Installation (SN 0300068570 through 0300079611)**	3-B
	0274082	Ref	**Generator Installation (SN 0300079612 through 0300139079)**	3-C
	1001115405	Ref	**Generator Installation (SN 0300139080 through 0300140000)**	A
		Ref	**110V/50Hz Generator**	
	0272482	Ref	**Generator Installation (Prior to SN 0300079612)**	3-B
	0274090	Ref	**Generator Installation (SN 0300079612 through 0300136858)**	1-A
	1001100308	Ref	**Generator Installation (SN 0300136859 through 0300139079)**	D
	1001115410	Ref	**Generator Installation (SN 0300139080 through 0300140000)**	A
		Ref	**220V/50Hz Generator**	
	0271547	Ref	**Generator Installation (Prior to SN 0300069570)**	5-C
	0272481	Ref	**Generator Installation (SN 0300068570 through 0300079611)**	2-A
	0274086	Ref	**Generator Installation (SN 0300079612 through 0300122914)**	1-A
	1001099868	Ref	**Generator Installation (SN 0300122915 through 0300139079)**	D
	1001115409	Ref	**Generator Installation (SN 0300139080 through 0300140000)**	A
1	3580158	1	Pulley	
2		Ref	Generator and Control Box Assembly Options:	
2	2460011	1	110V/60Hz **(Prior to SN 0300066054)**	
2	2460032	1	110V/60Hz **(SN 0300066054 through 0300079611)**	
2	2460055	1	110V/60Hz **(SN 0300079612 through 0300140000)**	
2	2460039	1	110V/50Hz **(Prior to SN 0300079612)**	
2	2460057	1	110V/50Hz **(SN 0300079612 through 0300136858)**	
2	2460049	1	110V/50Hz Generator Only **(SN 0300136859 through 0300140000)**	
2	2460013	1	220V/50Hz **(Prior to SN 0300066054)**	
2	2460034	1	220V/50Hz **(SN 0300066054 through 0300066740)**	
2	2460013	1	220V/50Hz **(SN 0300066741 through 0300079611)**	
2	2460056	1	220V/50Hz **(SN 0300079612 through 0300122914)**	
2	1001100321	1	220V/50Hz Generator Only **(SN 0300122915 through 0300140000)**	
2A		Ref	Generator Options:	
2A	7012558	1	110V/60Hz	
2A	2460049	1	110V/50Hz	
2A	1001100321	1	220V/50Hz	
		Ref	**Note: Replacement Generators come standard with p/n 3580134 pulley. This pulley may not be correct for all applications. Refer to pulley options below.**	
2A	7026199	1	110V/60Hz Armature with Slip Rings	
2A	70000122	1	110V/50Hz Armature with Slip Rings	
2A	70000123	1	220V/50Hz Armature with Slip Rings	
2A	7012513	4	Cap, Brush Holder	
2A	7020108	4	Brush	
2A	7020109	4	Holder, Brush	
2A	7012514	1	Fan	
2A	7020190	2	Bearing	
2A	7020110	1	End Bell, Front	
2A	7020111	1	End Bell, Rear	
2B		Ref	Box, Control Options:	

SECTION 2 - TURNTABLE

ITEM	PART NUMBER	QTY	DESCRIPTION	REV
2B	7003657	1	110V/60Hz **(Prior to SN 0300079612)**	
2B	7019680	1	110V/60Hz **(SN 0300079612 through 0300140000)**	
2B	70002240	1	110V/50Hz **(Prior to SN 0300079612)**	
2B	7019680	1	110V/50Hz **(SN 0300079612 through 0300136859)**	
2B	70002235	1	220V/50Hz **(Prior to SN 0300079612)**	
2B	70000127	1	220V/50Hz **(SN 0300079612 through 0300122915)**	
2B		Ref	Breaker, Circuit Options:	
2B	4360542	1	110V/60Hz	
2B	70002240	1	110V/50Hz **(Prior to SN 0300079612)**	
2B	4360542	1	110V/50Hz **(SN 0300079612 through 0300136859)**	
2B	70000126	1	220V/50Hz	
2B	4460190	AR	Receptacle, Double (110V Box)	
2B	4460027	AR	Receptacle, Double Twist Lock (110V Box)	
2B	70000124	1	Receptacle, Double (220V Box)	
2B	70000125	1	Receptacle, Single Twist Lock (220V Box)	
2B	2920162	1	Lamp Assembly **(Prior to SN 0300079612)**	
2B	7020191	1	Switch, Toggle **(Prior to SN 0300079612)**	
2C		Ref	Voltmeter Options:	
2C	2420203	1	110V	
2C	7020192	1	220V	
2D		Ref	Pulley Options:	
2D	3580134	1	110V/60Hz **(Prior to SN 0300066054)**	
2D	3580276	1	110V/60Hz **(SN 0300066054 through 0300140000)**	
2D	3580134	1	110V/50Hz	
2D	3580134	1	220V/50Hz **(Prior to SN 0300066054)**	
2D	3580276	1	220V/50Hz **(SN 0300066054 through 0300066740)**	
2D	3580134	1	220V/50Hz **(SN 0300066741 through 0300140000)**	
2D	7027887	1	Key, Woodruff	
3	3251243	1	Decal - 120V - 60Hz **(SN 0300094410 through 0300140000)**	
4		Ref	Arm, Adjusting Options:	
4	0200741	1	Arm, Adjusting **(Prior to SN 0300069570)**	
4	0200742	1	Arm, Adjusting **(SN 0300069570 through 0300140000)**	
5		Ref	V-Belt Options:	
5		Ref	110V/60Hz	
5	0480119	1	V-Belt **(Prior to SN 0300066054)**	
5	0480111	1	V-Belt **(SN 0300066054 through 0300069569)**	
5	0480121	1	V-Belt **(SN 0300069570 through 0300140000)**	
5		Ref	110V/50Hz	
5	0480120	1	V-Belt **(Prior to SN 0300069570)**	
5	0480121	1	V-Belt **(SN 0300069570 through 0300140000)**	
5		Ref	220V/50Hz	
5	0480119	1	V-Belt **(Prior to SN 0300066054)**	
5	0480050	1	V-Belt **(SN 0300066054 through 0300066740)**	
5	0480119	1	V-Belt **(SN 0300066741 through 0300069569)**	
5	0480121	1	V-Belt **(SN 0300069570 through 0300140000)**	
7	0641610	1	Bolt 3/8in-16NC x 1-1/4in	
8	0100011	AR	Compound, Locking	
9	0641772	1	Bolt 7/16in-14NC x 9in	
10	4751600	6	Flatwasher 3/8in	
11	2860012	1	Key, Woodruff	
12	3311605	1	Locknut 3/8in-16NC	

ITEM	PART NUMBER	QTY	DESCRIPTION	REV
13	3311705	1	Locknut 7/16in-14NC	
14	3740080	1	Relay	
15	4460023	1	Connector, Strain Relief **(Prior to SN 0300079612)**	
16	0641508	1	Bolt 5/16in-18NC x 1in	
17	4751500	1	Flatwasher 5/16in	
19	3520028	1	Plug, Hole	
20	0721006	AR	Bolt #10-24NC x 3/4in	
21	3311005	AR	Locknut #10-24NC	
22	4751000	AR	Flatwasher #10	
23	4360294	1	Breaker, Circuit - 30Amp **(Prior to SN 0300079612)**	
25	4360336	1	Switch, Toggle (Not Shown - Located at Platform)	
26	4740397	1	Bushing (Not Shown - Located at Platform)	
27	4060802	1	Guard, Switch (Not Shown - Located at Platform)	
28	3252507	1	Decal - 220V-50/60Hz (Not Shown - Located at Turntable) (220V/50Hz Generator Only)	
28	1705325	1	Decal - 120V-50Hz (Not Shown - Located at Turntable) (110V/50Hz Generator Only) **(Prior to SN 0300079612)**	
29	2820031	4 in/10cm	Heat Shrink (Not Shown - Located at Platform)	
30	3251102	1	Decal (Not Shown - Located at Platform)	
31	4070585	AR	Shim **(SN 0300094410 through 0300140000)**	
		Ref	Note: Items 32 thru 41 Used with 1001100308, 1001115410, 1001099868 & 1001115409 Installations Only.	
32	0962449	1	Bushing, Silicone	
33	3290505	1	Locknut M5	
34	4031608	1	Capscrew M5 x 20mm	
35	4460968	4	Bushing, Strain Relief	
36	4811600	1	Flatwasher M5	
37	1001099869	1	Box, Junction	
38		Ref	Light, Red Options:	
38	1001100233	1	110V/50Hz	
38	1001100234	1	220V/50Hz	
39	0641404	1	Bolt 1/4in-20NC x 1/2in	
40	4420060	AR	Tape, Double Sided	
41		Ref	Decal Options:	
41	3252507	1	Decal - 220V-50/60Hz	
41	1705325	1	Decal - 120V-50Hz	
	1001094475	Ref	**HOURMETER INSTALLATION (OPTIONAL)**	B
102	0720808	1	Screw #8-32 x 1in	
103	2420165	1	Hourmeter	
104	3310601	2	Nut #6-32	
105	3310805	1	Locknut #8-32	
106	3910608	2	Screw #6-32 x 1/2in	
107	4240032	4	Strap, Tie	
108	4420060	3 in/7cm	Tape, Double-Sided	
109	4460234	3	Mount, Tie Strap	
110	4750800	1	Washer #8	
111	4760600	2	Lockwasher #6	
112	1001094375	1	Bracket, Hourmeter	
113	1001094509	1	Harness, Hourmeter	
114	4460018	1	Connector, Butt Splice (Not Shown)	

FIGURE 2-14. PISTON PUMP ASSEMBLY

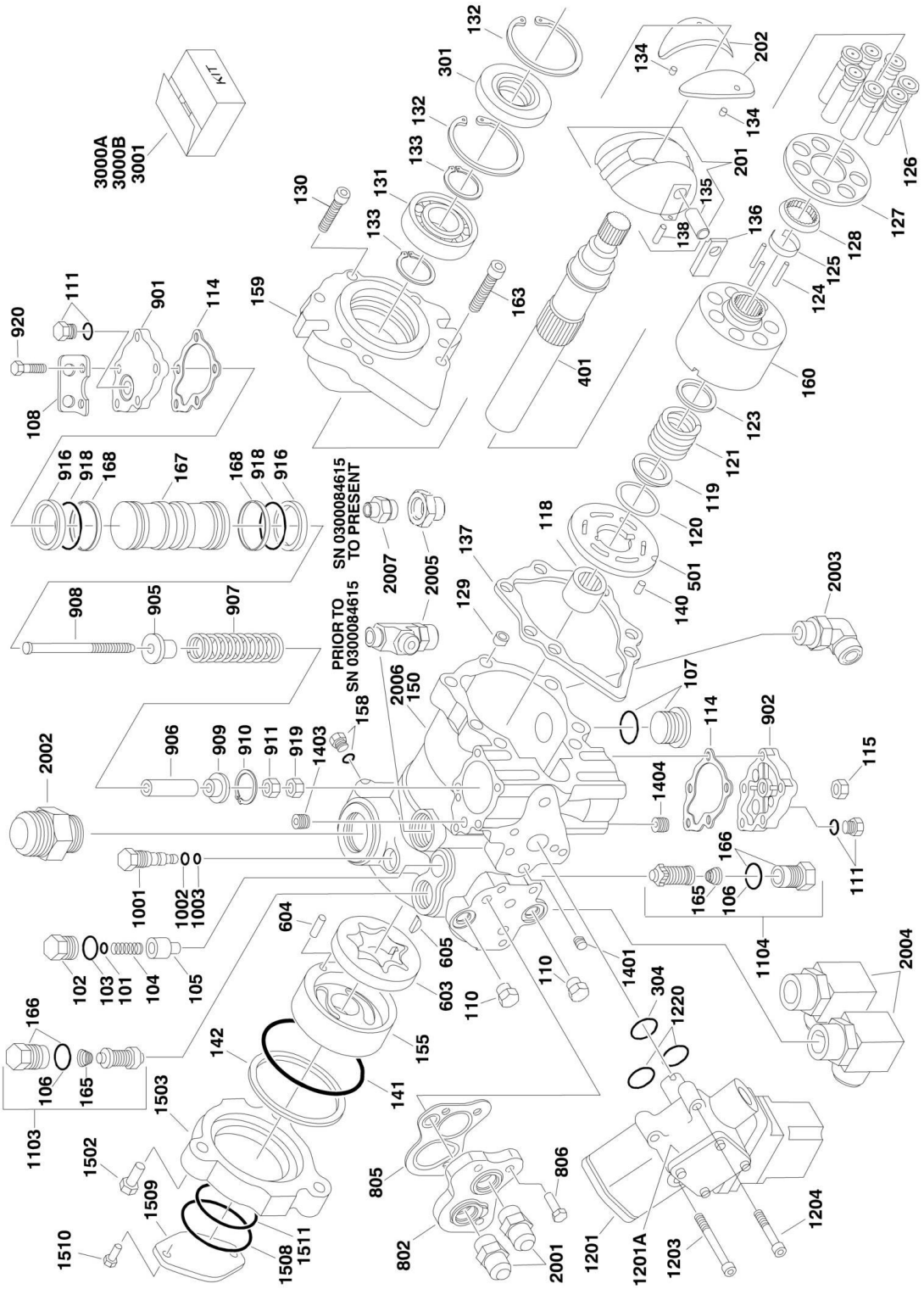

FIGURE 2-14. PISTON PUMP ASSEMBLY

ITEM	PART NUMBER	QTY	DESCRIPTION	REV
	3600295	Ref	**PISTON PUMP ASSEMBLY**	A
101	7007413	1	Shim Kit	
102	7007414	1	Plug	
103	See Note	NSS	O-Ring (Note: Use Item 3000A)	
104	7021200	1	Spring, Relief Valve	
105	7007417	1	Valve, Relief	
106	See Note	NSS	O-Ring (Note: Use Item 1103, 1104 or 3000A)	
107	7007419	2	Plug	
108	7021201	1	Bracket, Lifting	
110	7007470	2	Plug	
111	7007470	2	Plug	
114	See Note	NSS	Gasket, Servo Cover (Note: Use Item 3000A)	
115	7007423	1	Nut, Special	
118	7007425	1	Bearing, Needle	
119	See Note	NSS	Ring, Retaining (Note: Use Item 3001)	
120	See Note	NSS	Washer (Note: Use Item 3001)	
121	See Note	NSS	Spring (Note: Use Item 3001)	
123	See Note	NSS	Washer (Note: Use Item 3001)	
124	See Note	NSS	Retainer (Note: Use Item 3001)	
125	See Note	NSS	Pin, Slipper Holddown (Note: Use Item 3001)	
126	See Note	NSS	Piston Assembly (Note: Use Item 3001)	
127	See Note	NSS	Retainer, Slipper (Note: Use Item 3001)	
128	See Note	NSS	Guide, Retainer (Note: Use Item 3001)	
129	7007435	1	Pin, Spring	
130	7021202	1	Screw, 12 Point Head	
131	7007437	1	Bearing, Ball	
132	7007438	2	Ring, Retainer	
133	7007439	2	Ring	
134	7021203	2	Pin, Spring	
135	7007441	1	Handle, Pin (Part of Item 201)	
136	7007442	1	Sleeve, Bearing	
137	See Note	NSS	Gasket, Front Cover (Note: Use Item 3000A)	
138	7021205	1	Pin (Part of Item 201)	
140	7007446	1	Pin	
141	See Note	NSS	O-Ring (Note: Use Item 3000A)	
142	See Note	NSS	Ring, Load Temper (Note: Use Item 3000A)	
150	7023977	1	Housing, Pump	
155	7007452	1	Cover, Gerotor	
158	7007208	1	Plug	
159	7007454	1	Cover, Front	
163	7021207	6	Screw	
165	7021208	2	Spring (Part of Items 1103 & 1104)	
166	7021209	2	Plug, SCR (Part of Items 1103 & 1104)	
167	7007494	1	Piston, Servo	
168	See Note	NSS	Bearing (Note: Use Item 3000A)	
201	7007457	1	Swash Plate Assembly (Includes Items 135 & 138)	
202	7021212	2	Journal, Bearing	
301	See Note	NSS	Seal, Lip (Note: Use Item 3000A)	
304	See Note	NSS	O-Ring (Note: Use Item 3000A)	
401	7021213	1	Shaft, Main Pump	

SECTION 2 - TURNTABLE

ITEM	PART NUMBER	QTY	DESCRIPTION	REV
501	7021214	1	Plate, Valve	
603	7007463	1	Gerotor Assembly	
604	7007464	1	Pin	
605	7007465	1	Key, Woodruff	
802	7007466	1	Adaptor, Remote Filtration	
805	See Note	NSS	Seal, Filter Adapter (Note: Use Item 3000A)	
806	7021218	3	Screw	
901	7021219	1	Cover, Servo	
902	7021220	1	Cover, Servo	
905	7007483	1	Guide, Spring	
906	7007484	1	Stop, Servo	
907	7007485	1	Spring	
908	7021221	1	Screw	
909	7007487	1	Guide, Spring	
910	7007488	1	Ring, Retaining	
911	7021222	1	Nut	
916	See Note	NSS	Ring, Piston (Note: Use Items 3000A & 3000B)	
918	See Note	NSS	O-Ring (Note: Use Items 3000A & 3000B)	
919	7021206	1	Nut	
920	7021223	10	Screw	
1001	7007472	1	Valve, Bypass	
1002	See Note	NSS	Ring, Back-up (Note: Use Item 3000A)	
1003	See Note	NSS	O-Ring (Note: Use Item 3000A)	
1103	7010122	1	SCR Kit (Includes Items 166, 106 & 165)	
1104	7010122	1	SCR Kit (Includes Items 166, 106 & 165)	
1201	7007474	1	Control, Dual Oil-Filled	
1201	7007496	1	Coil Assembly (Pilot)	
1201	7007497	1	Plug (Pump)	
1201	7007498	1	Plug (Valve Harness)	
1201A	7024828	1	Gasket	
1203	7007478	2	Screw	
1204	7001498	2	Screw	
1220	See Note	NSS	O-Ring (Note: Use Item 3000A)	
1401	7007475	1	Plug, Orifice/Screen (.156)	
1403	7021226	1	Plug, Orifice	
1404	7021226	1	Plug, Orifice	
1502	7007453	3	Screw	
1503	7021227	1	Adapter, Flange	
1508	7021228	1	O-Ring	
1509	7021229	1	Plate, Cover	
1510	7021230	2	Screw	
1511	7021231	1	O-Ring	
	3600410	Ref	**PISTON PUMP AND FITTING ASSEMBLY**	B
2001	2111010	2	Fitting, Straight	
2002	2111616	1	Fitting, Straight	
2003	2131212	1	Fitting, Elbow	
2004	2131616	1	Fitting, Elbow	
2005		Ref	Fitting Options:	
2005	2221084	1	Fitting, Tee **(Prior to SN 0300084615)**	
2005	2110408	1	Fitting, Straight **(SN 0300084615 through 0300140000)**	
2006	3600295	1	Pump Options (Includes Items 101-1511)	

ITEM	PART NUMBER	QTY	DESCRIPTION	REV
2007	2220811	1	Fitting, Reducer **(SN 0300084615 through 0300140000)**	
		Ref	**KIT OPTIONS:**	
3000		Ref	Seal Kit Options:	
3000A	7021232	1	Seal Kit - Complete (Includes Items 103, 106, 114, 137, 141, 142, 168, 301, 304, 805, 916, 918, 1002, 1003 & 1220)	
3000B	7007412	1	Seal Kit - Servo Piston (Includes Items 916 & 918)	
3001	7010116	1	Cylinder Block Kit (Includes Items 119-128)	

FIGURE 2-15. LOAD SENSING PUMP ASSEMBLY

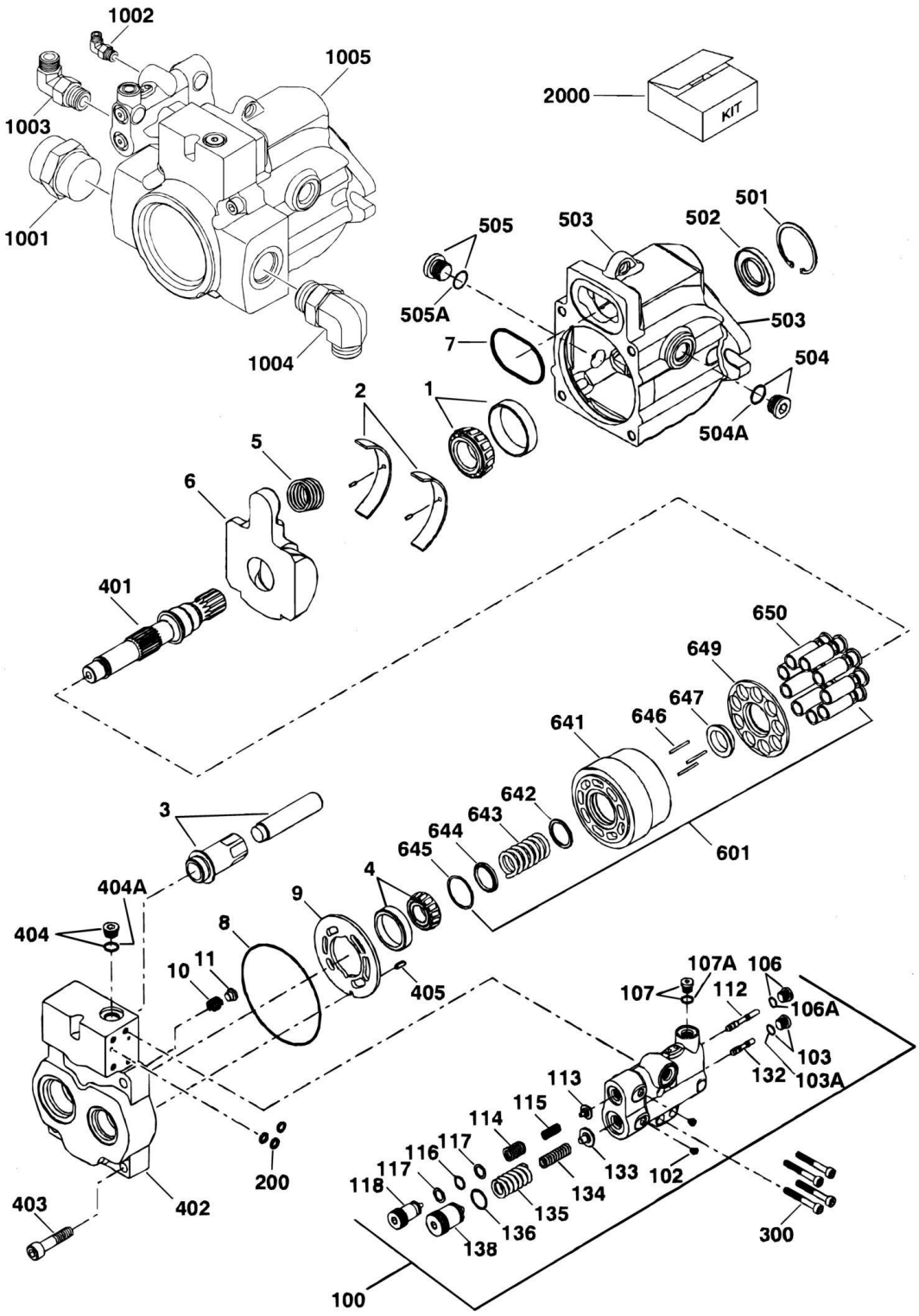

FIGURE 2-15. LOAD SENSING PUMP ASSEMBLY

ITEM	PART NUMBER	QTY	DESCRIPTION	REV
	3600324	Ref	**LOAD SENSING PUMP ASSEMBLY**	D
1	7023947	1	Bearing, Front (Includes Cup and Cone)	
2	7023948	1	Bearings, Swash Plate (Includes Both Sides and Pins)	
3	7023949	1	Servo Piston Assembly	
4	7023950	1	Bearing, Rear (Includes Cup and Cone)	
5	7023951	1	Spring, Bias	
6	7023952	1	Swash Plate	
7	See Note	NSS	O-Ring (Note: Use Item 2000)	
8	See Note	NSS	O-Ring (Note: Use Item 2000)	
9	7023953	1	Plate, Valve	
10	7023954	1	Spring, Check Valve	
11	7023955	1	Poppet, Check Valve	
100	7023956	1	Control Assembly	
102	See Note	2	Setscrew (Note: Not Available for Purchase)	
103	See Note	1	Plug (Note: Not Available for Purchase)	
103A	See Note	NSS	O-Ring (Note: Use Item 100 or 2000)	
106	See Note	1	Plug (Note: Not Available for Purchase)	
106A	See Note	NSS	O-Ring (Note: Use Item 100 or 2000)	
107	See Note	1	Plug (Note: Not Available for Purchase)	
107A	See Note	NSS	O-Ring (Note: Use Item 100 or 2000)	
112	See Note	NSS	Spool, Control (Note: Use Item 100)	
113	See Note	NSS	Guide, Spring (Note: Use Item 100)	
114	See Note	NSS	Spring (Note: Use Item 100)	
115	See Note	NSS	Spring (Note: Use Item 100)	
116	See Note	NSS	O-Ring (Note: Use Item 100 or 2000)	
117	See Note	NSS	Ring, Back-up (Note: Use Item 100 or 2000)	
118	See Note	NSS	Plug, Adjusting (Note: Use Item 100)	
132	See Note	NSS	Spool, Control (Note: Use Item 100)	
133	See Note	NSS	Guide, Spring (Note: Use Item 100)	
134	See Note	NSS	Spring (Note: Use Item 100)	
135	See Note	NSS	Spring (Note: Use Item 100)	
136	See Note	NSS	O-Ring (Note: Use Item 100 or 2000)	
138	See Note	NSS	Plug, PC Adjusting (Note: Use Item 100)	
200	See Note	NSS	Ring, Seal (Note: Use Item 2000)	
300	7023957	4	Screw	
401	7023958	1	Shaft	
402	7023959	1	Cap, End	
403	7023960	4	Screw	
404	7022318	1	Plug	
404A	See Note	NSS	O-Ring (Note: Use Item 404 or 2000)	
405	7023961	1	Pin	
501	7023962	1	Ring, Retaining	
502	7023967	1	Seal, Lip	
503	7023963	1	Housing	
504	7023964	1	Plug	
504A	7007415	1	O-Ring	
505	7023964	1	Plug	
505A	7007415	1	O-Ring	
601	7023965	1	Cylinder Block Assembly	
641	See Note	NSS	Block, Cylinder (Note: Use Item 601)	

SECTION 2 - TURNTABLE

ITEM	PART NUMBER	QTY	DESCRIPTION	REV
642	See Note	NSS	Washer (Note: Use Item 601)	
643	See Note	NSS	Spring (Note: Use Item 601)	
644	See Note	NSS	Retainer, Spring (Note: Use Item 601)	
645	See Note	NSS	Ring, Retaining (Note: Use Item 601)	
646	7021275	3	Pin, Slipper	
647	See Note	NSS	Guide, Slipper (Note: Use Item 601)	
649	See Note	NSS	Retainer, Slipper (Note: Use Item 601)	
650	7023966	9	Piston Assembly	
	3600411	Ref	**LOAD SENSING PUMP AND FITTING ASSEMBLY**	B
1001	2112424	1	Fitting, Straight	
1002	2130404	1	Fitting, Elbow	
1003	2130810	1	Fitting, Elbow	
1004	2131216	1	Fitting, Elbow	
1005	3600324	1	Pump Assembly (Includes Items 1-650)	
		Ref	**KIT OPTIONS:**	
2000	7023967	1	Seal Kit - Complete (Includes Items 7, 8, 103A, 106A, 107A, 116, 117, 136, 200, 404A & 502)	

FIGURE 2-16. TANK INSTALLATIONS

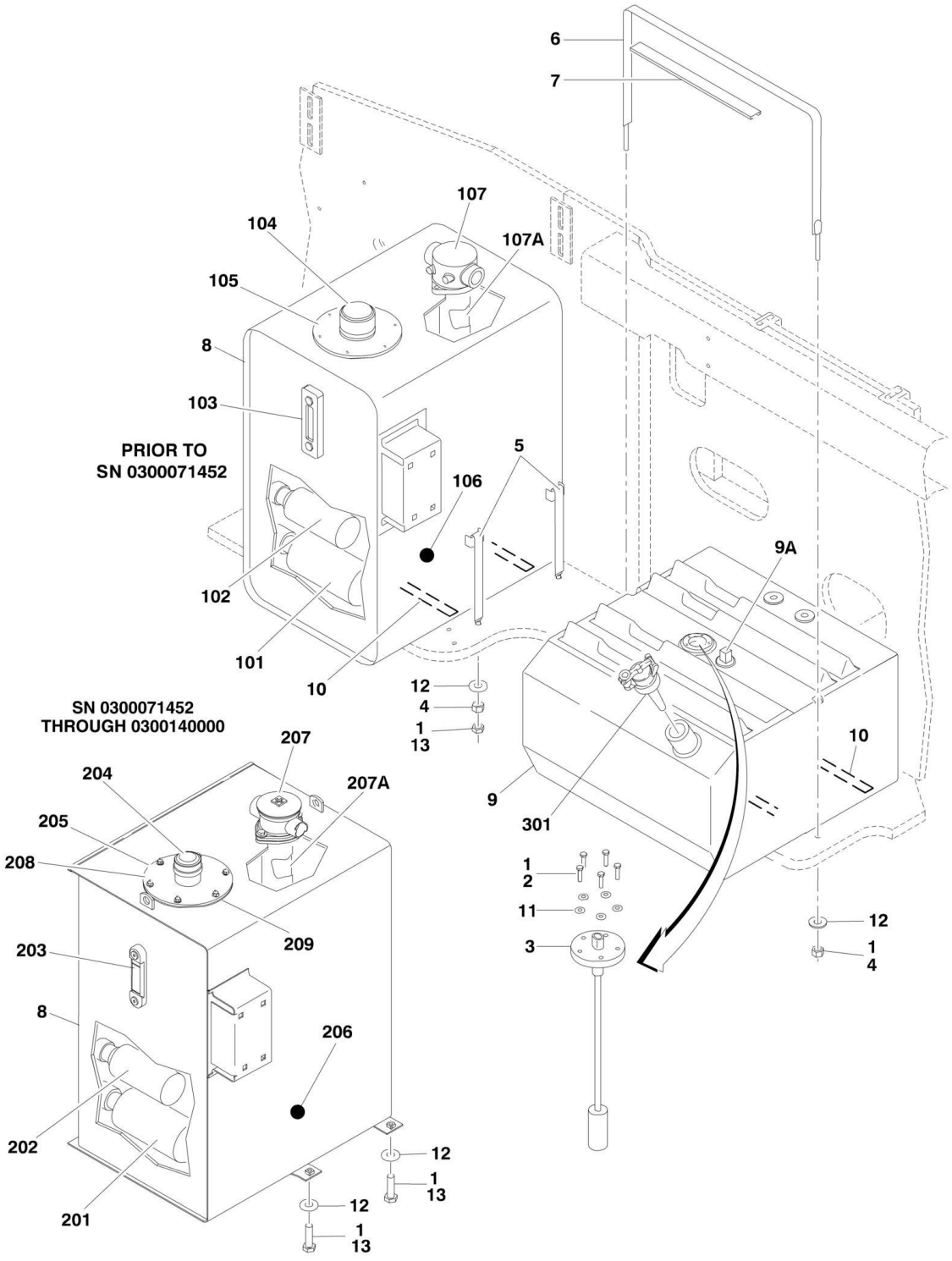

FIGURE 2-16. TANK INSTALLATIONS

ITEM	PART NUMBER	QTY	DESCRIPTION	REV
	0270881	Ref	**TANKS INSTALLATION**	E
1	0100011	AR	Compound, Locking	
2	0731007	5	Capscrew #10-32NF x 7/8in	
3	2420191	1	Gauge, Fuel Level	
3	3960525	1	Gasket	
4	3311601	AR	Nut 3/8in-16NC	
5	4240112	4	Strap, Tank Mounting **(Prior to SN 0300071452)**	
6	4240139	1	Strap, Tank Mounting	
7	4280295	30 in /76cm	Strip, Protector	
8	4400437	1	Hydraulic Oil Tank Assembly (See Items 101-107 for Breakdown) **(Prior to SN 0300071452)**	
8	4400453	1	Hydraulic Oil Tank Assembly (See Items 201-209 for Breakdown) **(SN 0300071452 through 0300140000)**	
9	4400439	1	Fuel Tank Assembly	
9A	7020043	1	Tube, Fuel Pickup	
10	4420038	6.5 ft/2m	Tape, Rubber	
11	4751000	5	Flatwasher #10 Regular	
12	4751600	6	Flatwasher 3/8in Regular	
13		Ref	Hardware Options:	
13	3311602	4	Nut, Jam 3/8in-16NC **(Prior to SN 0300071452)**	
13	0641614	4	Bolt 3/8in-16NC x 1-3/4in **(SN 0300071452 through 0300140000)**	
	4400437	Ref	**HYDRAULIC TANK ASSEMBLY (Prior to SN 0300071452)**	C
101	7014818	1	Strainer 1-1/2inNPT	
102	7014801	1	Strainer 1-1/4inNPT	
103	7014802	1	Gauge, Sight	
104	7014811	1	Breather/Fill Cap	
105	7020256	1	Neck, Fill	
105	7014816	1	Screen	
106	7014813	1	Plug, Magnetic	
107	7024374	1	Filter Assembly (was p/n 7024409)	
107	7023306	1	Seal	
107	7023347	1	Gasket (Located Between Flange of Filter and Tank)	
107A	7024375	1	Element, Filter (was p/n 7024408)	
	4400453	Ref	**HYDRAULIC TANK ASSEMBLY (SN 0300071452 through 0300140000)**	E
201	7024481	1	Strainer 1-1/2inNPT	
202	7024442	1	Strainer 1-1/4inNPT	
203	7024441	1	Gauge, Sight	
204	7024444	1	Breather/Fill Cap	
205	7024443	1	Neck, Fill	
205	7024445	1	Screen	
206	7024446	1	Plug, Magnetic	
207	7024374	1	Filter Assembly	
207A	7024375	1	Element, Filter	
208	7024439	1	Cover	
209	7024440	1	Gasket	
		Ref	**FUEL TANK CAP INSTALLATION**	
301		Ref	Cap Options:	
301	7016314	1	Standard Non-Locking (Part of Item 3)	

SECTION 2 - TURNTABLE

ITEM	PART NUMBER	QTY	DESCRIPTION	REV
301	1120487	1	Optional Lockable (Diesel Machines) (Note: Lock not Included)	

FIGURE 2-17. ROTARY COUPLING INSTALLATION (Prior to SN 0300083331)

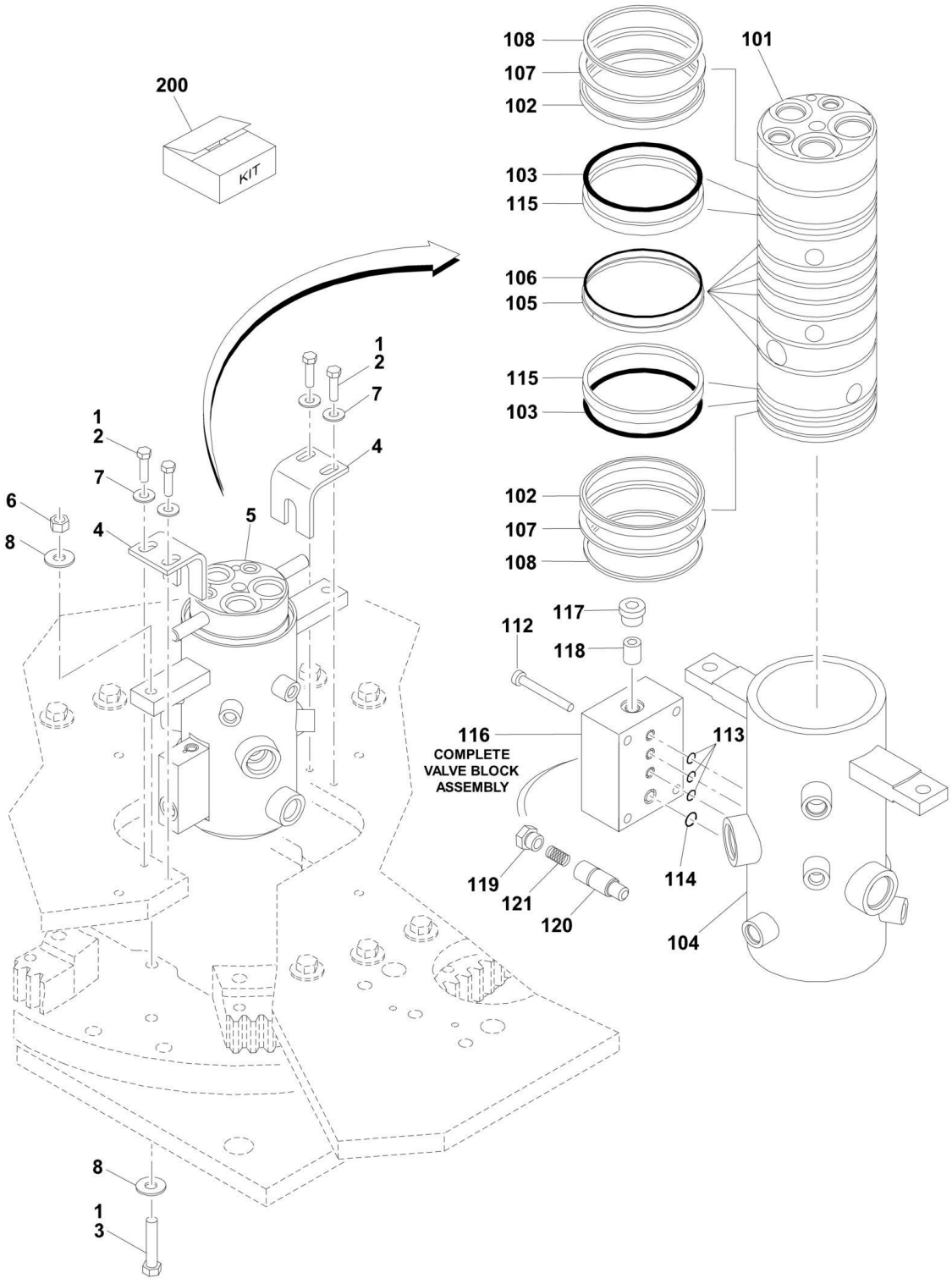

FIGURE 2-17. ROTARY COUPLING INSTALLATION (Prior to SN 0300083331)

ITEM	PART NUMBER	QTY	DESCRIPTION	REV
	0271312	Ref	**ROTARY COUPLING INSTALLATION**	B
1	0100011	AR	Compound, Locking	
2	0641611	4	Bolt 3/8in-16NC x 1-3/8in	
3	0641820	2	Bolt 1/2in-13NC x 2-1/2in	
4	0902520	2	Bracket	
5	1660246	1	Coupling, Rotary (See Items 101-121 for Breakdown)	
5	1660246RR	1	Rebuilt 1660246 Coupling	
6	3271805	2	Locknut 1/2in-13NC	
7	4891600	4	Flatwasher 3/8in Hardened	
8	4751800	4	Flatwasher 1/2in Regular	
	1660246	Ref	**ROTARY COUPLING ASSEMBLY**	E
101	See Note	NSS	Body (Note: Not Available - Purchase Complete Rotary Coupling Assembly)	
102	7026189	2	Seal	
103	See Note	NSS	O-Ring/Seal (Note: Use Item 200)	
104	See Note	NSS	Housing (Note: Not Available - Purchase Complete Rotary Coupling Assembly)	
105	See Note	NSS	Seal, Cap (Note: Use Item 200)	
106	See Note	NSS	O-Ring (Note: Use Item 200)	
107	7026503	2	Ring	
108	7026504	2	Ring, Retaining	
109	See Note	NSS	Plug (Note: Not Available - Purchase Locally)	
112	7026197	4	Capscrew	
113	See Note	NSS	O-Ring (Note: Use Item 200)	
114	See Note	NSS	O-Ring (Note: Use Item 200)	
115	See Note	NSS	Bearing (Note: Not Available - Purchase Locally)	
116	7024404	1	Block Valve Assembly	
117	7026505	1	Plug	
118	7026506	1	Valve, Check	
119	7026507	1	Plug	
120	7026508	1	Plunger, Valve	
121	7026509	1	Spring	
		Ref	**KIT OPTIONS:**	
200	7024400	1	Seal Kit (Includes Items 103, 105, 106, 113 & 114) (Item 102 must be purchased separately)	

FIGURE 2-18. ROTARY COUPLING INSTALLATION (SN 0300083331 through 0300140000)

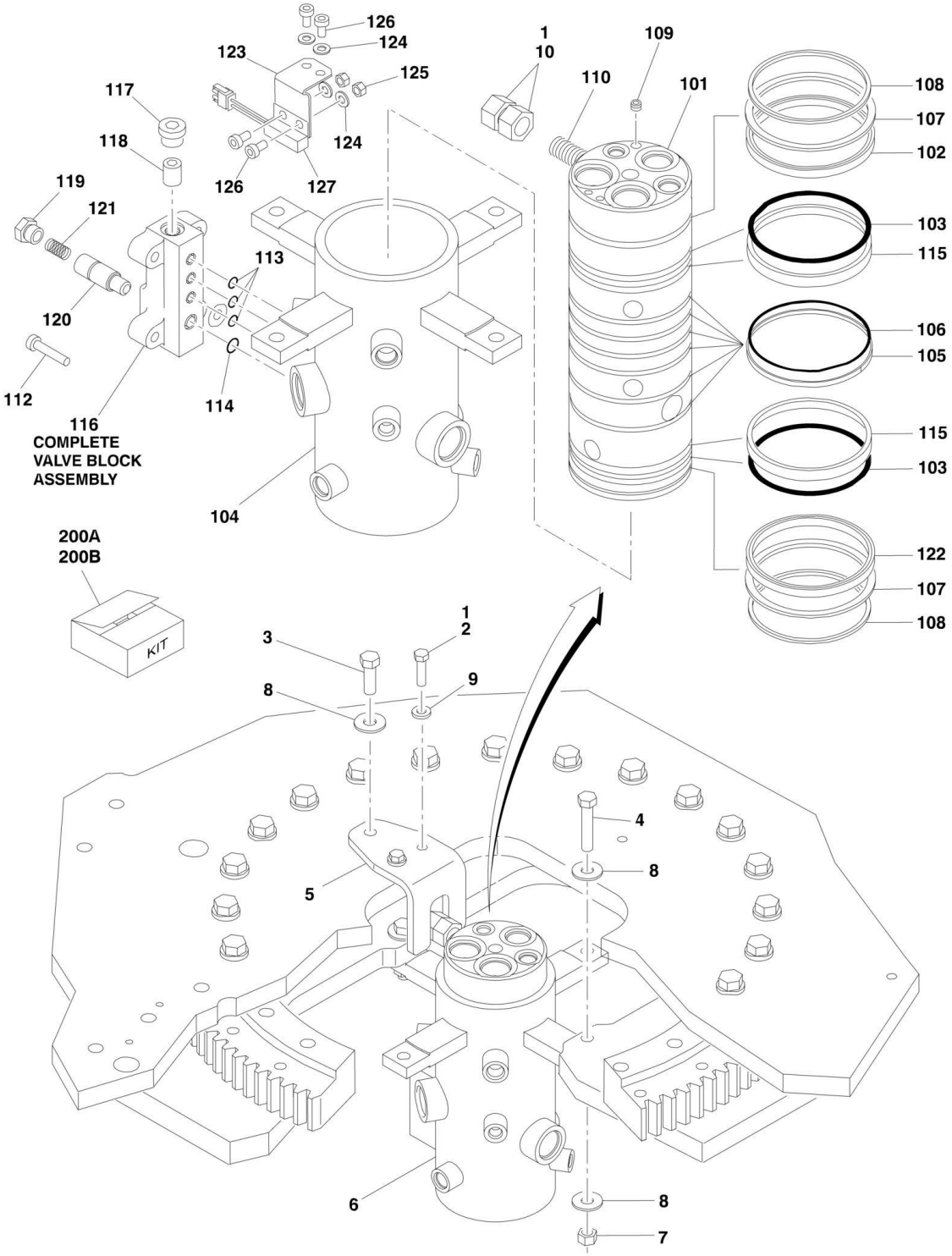

FIGURE 2-18. ROTARY COUPLING INSTALLATION (SN 0300083331 through 0300140000)

ITEM	PART NUMBER	QTY	DESCRIPTION	REV
		Ref	**ROTARY COUPLING INSTALLATION**	
	0274583	Ref	**Rotary Coupling Installation (SN 0300083331 through 0300137912)**	C
	1001107531	Ref	**Rotary Coupling Installation (SN 0300137913 through 0300140000)**	A
		Ref	**Note: P/N 0273393 also designed but superseded by p/n 0274583 before going into production.**	
1	0100011	AR	Compound, Locking	
2	0641611	2	Bolt 3/8in-16NC x 1-3/8in	
3	0641812	1	Bolt 1/2in-13NC x 1-1/2in	
4	0641820	2	Bolt 1/2in-13NC x 2-1/2in	
5	0903242	1	Bracket	
6		Ref	Coupling, Rotary Options (See Items 101-123 for Breakdown):	
6	1660257	NLA	Coupling, Rotary (Use p/n 1660303) **(SN 0300083331 through 0300114015)**	
6	1660303	1	Coupling, Rotary **(SN 0300114016 through 0300137912)**	
6	1001106974	1	Coupling, Rotary **(SN 0300137913 through 0300140000)**	
7	3271805	2	Locknut 1/2in-13NC	
8	4751800	5	Flatwasher 1/2in Regular	
9	4891600	2	Flatwasher 3/8in Hardened	
10	3322201	2	Locknut 3/4in x 16NF	
		Ref	**ROTARY COUPLING ASSEMBLIES**	
	1660257	Ref	**Rotary Coupling Assemblies (SN 0300083331 through 0300114015))**	D
	1660303	Ref	**Rotary Coupling Assemblies (SN 0300114016 through 0300137912)**	B
	1001106974	Ref	**Rotary Coupling Assemblies (SN 0300137913 through 0300140000)**	B
		Ref	**Note: Original Equipment p/n 1660257 component may have been replaced by Service Replacement p/n 1660303 component. Identify p/n on coupling before ordering parts.**	
101	See Note	NSS	Body (Note: Not Available - Purchase Complete Rotary Coupling Assembly)	
102		Ref	Seal Options:	
102	7026189	1	Seal, Oil (p/n 1660257)	
102	70001248	1	Seal, Poly (p/n 1660303 & 1001106974)	
103	See Note	NSS	O-Ring/Seal (Note: Use Item 200A or 200B)	
104	See Note	NSS	Housing (Note: Not Available - Purchase Complete Rotary Coupling Assembly)	
105	See Note	NSS	Seal, Cap (Note: Use Item 200A or 200B)	
106	See Note	NSS	O-Ring (Note: Use Item 200A or 200B)	
107	7026503	2	Ring, Thrust	
108	7026504	2	Ring, Retaining	
109		Ref	Plug Options:	
109	See Note	2	Plug p/n 1660257 (Note: Not Available - Purchase Locally)	
109	80934561	2	Plug p/n 1660303 & 1001106974	
110	See Note	1	Lug, Torque (Note: Not Available for Purchase)	
112	7026197	4	Capscrew	
113	See Note	NSS	O-Ring (Note: Use Item 200A or 200B)	
114	See Note	NSS	O-Ring (Note: Use Item 200A or 200B)	
115		Ref	Bearing Options:	
115	See Note	NLA	Bearing p/n 1660257 (Note: No Longer Available)	

SECTION 2 - TURNTABLE

ITEM	PART NUMBER	QTY	DESCRIPTION	REV
115	See Note	NSS	Bearing p/n 1660303 & 1001106974 (Note: Use Item 200B)	
116	7024404	1	Block Valve Assembly	
117	7026505	1	Plug	
118	7026506	1	Valve, Check	
119	7026507	1	Plug	
120		Ref	Plunger, Valve Options:	
120	7026508	1	Plunger, Valve p/n 1660257	
120	7024404	1	Plunger, Valve p/n 1660303 & 1001106974 (Note: Not Available for Purchase)	
121	7026509	1	Spring	
122		Ref	Seal, Oil Options:	
122	7026189	1	Seal, Oil p/n 1660257	
122	See Note	NSS	Seal, Oil p/n 1660303 & 1001106974 (Note: Use Item 200B)	
123	70003454	1	Bracket, Switch Mounting **(SN 0300137913 through 0300140000)**	
124	4711000	4	Flatwasher #10 Thin **(SN 0300137913 through 0300140000)**	
125	See Note	2	Locknut 1/4in-24NF (Note: Not Available for Purchase) **(SN 0300137913 through 0300140000)**	
126	See Note	4	Capscrew 1/4in-24NF (Note: Not Available for Purchase) **(SN 0300137913 through 0300140000)**	
127	4360517	1	Switch, Proximity **(SN 0300137913 through 0300140000)**	
128	See Note	AR	Protective Netting (Not Shown) (p/n 1660303 & 1001106974) (Note: Not Available for Purchase)	
		Ref	**KIT OPTIONS:**	
200		Ref	Seal Kit Options:	
200A	7026510	1	Seal Kit for 1660257 (Includes Items 103, 105, 106, 113 & 114) (Items 102, 115 & 123 must be purchased separately)	
200B	70001248	1	Seal Kit for 1660303 & 1001106974 (Includes Items 102, 103, 105, 106, 113, 114, 115 & 122)	

FIGURE 2-19. GROUND CONTROL BOX ASSEMBLY (WITHOUT UGM)

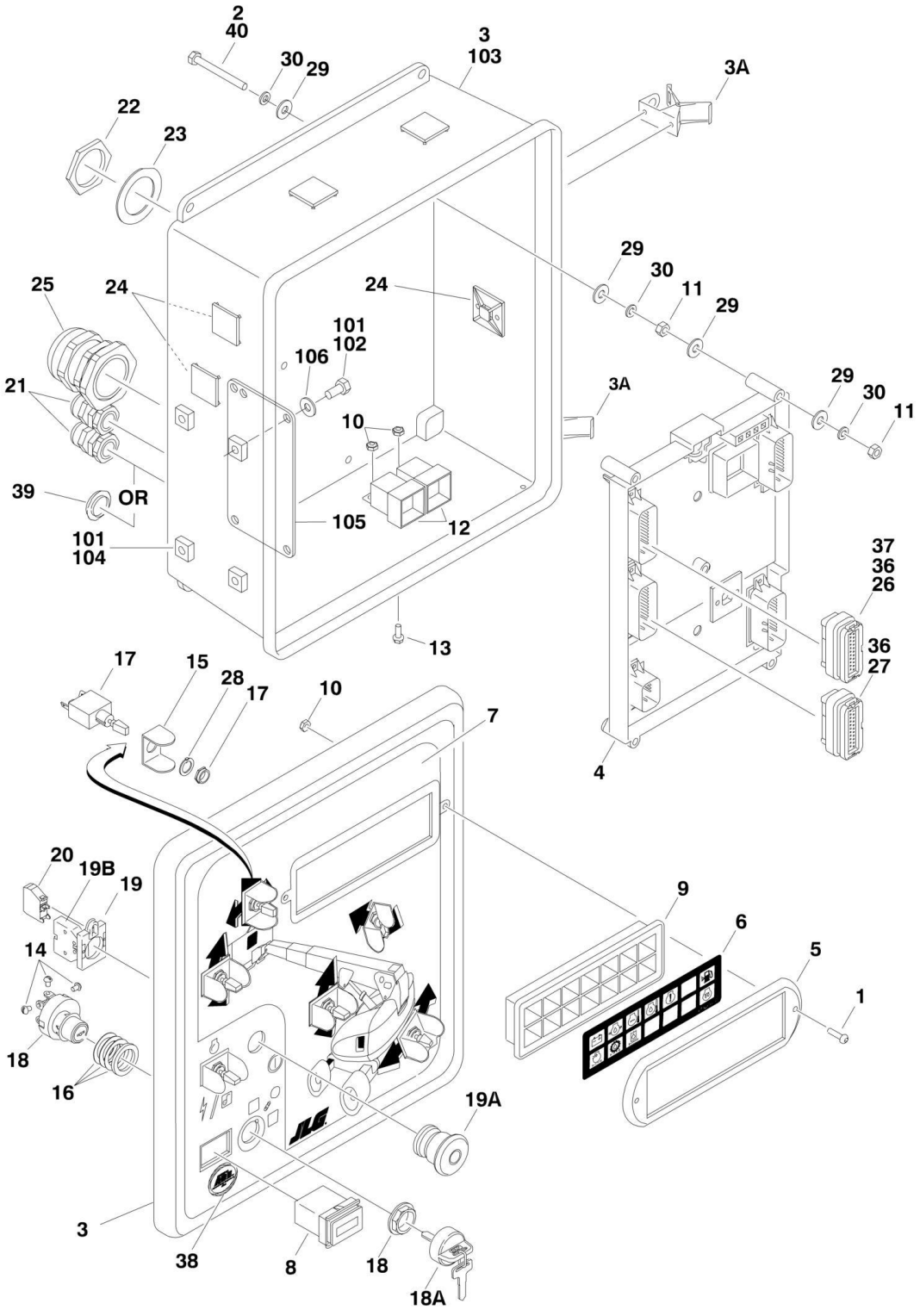

FIGURE 2-19. GROUND CONTROL BOX ASSEMBLY (WITHOUT UGM)

ITEM	PART NUMBER	QTY	DESCRIPTION	REV
		Ref	**GROUND CONTROL BOX ASSEMBLIES**	
		Ref	**Caterpillar Engine:**	
	0861615	Ref	**Caterpillar Engine 800S (Prior to SN 0300087262)**	C
	0861755	Ref	**Caterpillar Engine 800S (SN 0300087262 through 0300099881)**	B
	1810102	Ref	**Caterpillar Engine 800S (SN 0300099882 through 0300140000)**	C
	0861614	Ref	**Caterpillar Engine 860SJ (Prior to SN 0300087262)**	C
	0861756	Ref	**Caterpillar Engine 860SJ (SN 0300087262 through 0300099881)**	B
	1810107	Ref	**Caterpillar Engine 860SJ (SN 0300099882 through 0300140000)**	C
		Ref	**Deutz Engine:**	
	0861458	Ref	**Deutz Engine 800S (Prior to SN 0300085332)**	H
	0861720	Ref	**Deutz Engine 800S (SN 0300085332 through 0300099881)**	B
	1810100	Ref	**Deutz Engine 800S (SN 0300099882 through 0300129453)**	B
	1001102250	Ref	**Deutz Engine 800S (SN 0300129454 through 0300140000)**	C
	0861459	Ref	**Deutz Engine 860SJ (Prior to SN 0300085332)**	H
	0861721	Ref	**Deutz Engine 860SJ (SN 0300085332 through 0300099881)**	B
	1810105	Ref	**Deutz Engine 860SJ (SN 0300099882 through 0300129453)**	B
	1001102251	Ref	**Deutz Engine 860SJ (SN 0300129454 through 0300140000)**	C
1	0630518	2	Capscrew, Button Head	
2	0630548	5	Tap, Bolt 2-1/2in	
3	0861389	1	Box, Fiberglass	
3A	7020246	2	Latch	
4		Ref	Module, Ground Control Options:	
		Ref	Note: Re-calibration Required when Replaced.	
4		Ref	Caterpillar Engine	
4	1600327	NLA	Caterpillar Engine (Use p/n 2915014) **(Prior to SN 0300079612)**	
4	1600364	1	Caterpillar Engine **(SN 0300079612 through 0300099881)**	
4	1600411	1	Caterpillar Engine **(SN 0300099882 through 0300140000)**	
4		Ref	Deutz Engine	
4	1600327	NLA	Deutz Engine (Use p/n 2915014) **(Prior to SN 0300079612)**	
4	1600364	1	Deutz Engine **(SN 0300079612 through 0300085331)**	
4	1600411	1	Deutz Engine **(SN 0300085332 through 0300140000)**	
5	1670829	1	Bezel	
6		Ref	Decal - Ground Control Display Options:	
6	1702610	1	Decal - Ground Control Display **(Prior to SN 0300072353)**	
6	1705752	1	Decal - Ground Control Display **(SN 0300072353 through 0300085331)**	
6	1705753	1	Decal - Ground Control Display **(SN 0300085332 through 0300099881)**	
6	1706712	1	Decal - Ground Control Display **(SN 0300099882 through 0300140000)**	
7		Ref	Decal - Faceplate Options:	
7	1703465	1	Decal - Faceplate 800S **(Prior to SN 0300099882)**	
7	1706914	1	Decal - Faceplate 800S **(SN 0300099882 through 0300134725)**	
7	1001102601	1	Decal - Faceplate 800S **(SN 0300134726 through 0300140000)**	
7	1703466	1	Decal - Faceplate 800SJ **(Prior to SN 0300099882)**	

ITEM	PART NUMBER	QTY	DESCRIPTION	REV
7	1706915	1	Decal - Faceplate 860SJ **(SN 0300099882 through 0300134725)**	
7	1001102602	1	Decal - Faceplate 860SJ **(SN 0300134726 through 0300140000)**	
8	2420172	1	Gauge, Hourmeter	
9	2760105	1	Housing, Display Light	
10	3300408	AR	Locknut, Plastic Insert	
11	3311401	10	Nut 1/4in-20NC	
12	3740049	AR	Relay Options:	
12		Ref	Caterpillar Engine	
12		Ref	Deutz and GM Engine	
13	3900268	AR	Screw, Flange #10 x 1/2in	
14	3910804	6	Screw #8-32NC x 1/4in	
15	4060906	AR	Shield, Toggle Switch	
16	4070987	1	Shim (.015in)	
17	4360328	AR	Switch, Toggle	
17		Ref	Switch, Toggle 800S	
17		Ref	Switch, Toggle 860SJ	
18	4360470	1	Switch, Key	
18A	2860030	1	Key Replacement	
19	4360475	1	Switch, Emergency Stop	
19A	7020175	1	Cap, Mushroom Head	
19B	7020176	1	Block, Contact	
20	4360476	1	Switch, Contact Block	
21	4460426	AR	Connector, Strain Relief	
22	4460470	1	Nut, Terminal	
23	4460471	1	Lockwasher, Terminal	
24	4460488	7	Mounting Base, Terminal	
25	4460526	1	Connector, Strain Relief	
26	4460874	1	Connector, Natural	
27	4460875	1	Connector, Gray	
28	4740444	AR	Washer, Special	
29	4751400	20	Flatwasher 1/4in Regular	
30	4761400	15	Lockwasher 1/4in	
31	4922666	1	Harness, Analyzer Cable (Not Shown - See ELECTRICAL SECTION for Breakdown) **(Prior to SN 0300085332)**	
32		Ref	Harness, Engine Options (Not Shown - See ELECTRICAL SECTION for Breakdown):	
32		Ref	Caterpillar Engine Machines	
32	4922922	1	Caterpillar Engine Machines **(Prior to SN 0300087262)**	
32	4923278	1	Caterpillar Engine Machines **(SN 0300085332 through 0300099881)**	
32	4923585	1	Caterpillar Engine Machines **(SN 0300099882 through 0300140000)**	
32		Ref	Deutz Engine Machines	
32	4922654	1	Deutz Engine Machines **(Prior to SN 0300085332)**	
32	4923239	1	Deutz Engine Machines **(SN 0300085332 through 0300129453)**	
32	1001102160	1	Deutz Engine Machines **(SN 0300129454 through 0300140000)**	
33	4922594	1	Harness, Valve (Not Shown - See ELECTRICAL SECTION for Breakdown)	
34		Ref	Harness, Ground Control Box Options (Not Shown - See ELECTRICAL SECTION for Breakdown):	

ITEM	PART NUMBER	QTY	DESCRIPTION	REV
34		Ref	Caterpillar Engine Machines	
34	4922619	1	Caterpillar Engine Machines **(Prior to SN 0300087262)**	
34	4923279	1	Caterpillar Engine Machines **(SN 0300087262 through 0300099881)**	
34	4923577	1	Caterpillar Engine Machines **(SN 0300099882 through 0300140000)**	
34		Ref	Deutz Engine Machines	
34	4922619	1	Deutz Engine Machines **(Prior to SN 0300085332)**	
34	4923213	1	Deutz Engine Machines **(SN 0300085332 through 0300099881)**	
34	4923577	1	Deutz Engine Machines **(SN 0300099882 through 0300140000)**	
36	0100048	AR	Grease, Dialectic	
37	4460905	AR	Plug	
38	1705132	1	Decal - Control ADE **(SN 0300066054 through 0300099882)**	
39	3520035	1	Plug, Cap **(SN 0300068126 through 0300140000)**	
40	0100011	AR	Compound, Locking	
		Ref	**GROUND CONTROL BOX INSTALLATION**	
		Ref	**Caterpillar Engine:**	
	0273218	Ref	**Caterpillar Engine 800S (Prior to SN 0300087262)**	B
	0861755	Ref	**Caterpillar Engine 800S (SN 0300087262 through 0300099881)**	B
	1810102	Ref	**800S Caterpillar Engine (SN 0300099882 through 0300140000)**	C
	0273219	Ref	**Caterpillar Engine 860SJ (Prior to SN 0300087262)**	B
	0861756	Ref	**Caterpillar Engine 860SJ (SN 0300087262 through 0300099881)**	B
	1810107	Ref	**Caterpillar Engine 860SJ (SN 0300099882 through 0300140000)**	C
		Ref	**Deutz Engine:**	
	0270895	Ref	**Deutz Engine 800S (Prior to SN 0300085332)**	B
	0861720	Ref	**Deutz Engine 800S (SN 0300085332 through 0300099881)**	B
	1810100	Ref	**Deutz Engine 800S (SN 0300099882 through 0300129453)**	B
	1001102250	Ref	**Deutz Engine 800S (SN 0300129454 through 0300140000)**	C
	0270896	Ref	**Deutz Engine 860SJ (Prior to SN 0300085332)**	B
	0861721	Ref	**Deutz Engine 860SJ (SN 0300085332 through 0300099881)**	B
	1810105	Ref	**Deutz Engine 860SJ (SN 0300099882 through 0300129453)**	B
	1001102251	Ref	**Deutz Engine 860SJ (SN 0300129454 through 0300140000)**	C
101	0100011	AR	Compound, Locking	
102	0641506	4	Bolt 5/16in-18NC x 3/4in	
103		Ref	Ground Control Box Assemblies (Includes Items 1-40)	
103		Ref	Caterpillar Engine Machines	
103	0861615	1	Caterpillar Engine Machines 800S **(Prior to SN 0300087262)**	
103	0861755	1	Caterpillar Engine Machines 800S **(SN 0300087262 through 0300099881)**	
103	1810102	1	Caterpillar Engine Machines 800S **(SN 0300099882 through 0300140000)**	
103	0861614	1	Caterpillar Engine Machines 860SJ **(Prior to SN 0300087262)**	
103	0861756	1	Caterpillar Engine Machines 860SJ **(SN 0300087262 through 0300099881)**	
103	1810107	1	Caterpillar Engine Machines 860SJ **(SN 0300099882 through 0300140000)**	

SECTION 2 - TURNTABLE

ITEM	PART NUMBER	QTY	DESCRIPTION	REV
103		Ref	Deutz Engine Machines	
103	0861458	1	Deutz Engine Machines 800S **(Prior to SN 0300087262)**	
103	0861720	1	Deutz Engine Machines 800S **(SN 0300087262 through 0300099881)**	
103	1810100	1	Deutz Engine Machines 800S **(SN 0300099882 through 0300129453)**	
103	1001102250	1	Deutz Engine Machines 800S **(SN 0300129454 through 0300140000)**	
103	0861459	1	Deutz Engine Machines 860SJ **(Including 0300087262)**	
103	0861721	1	Deutz Engine Machines 860SJ **(SN 0300087262 through 0300099881)**	
103	1810105	1	Deutz Engine Machines 860SJ **(SN 0300099882 through 0300129453)**	
103	1001102251	1	Deutz Engine Machines 860SJ **(SN 0300129454 through 0300140000)**	
104	3300205	4	Nut, Retainer	
105	3539219	1	Plate, Reinforcement	
106	4751500	4	Flatwasher 5/16in Regular	

FIGURE 2-20. GROUND CONTROL BOX ASSEMBLY (WITH UGM)

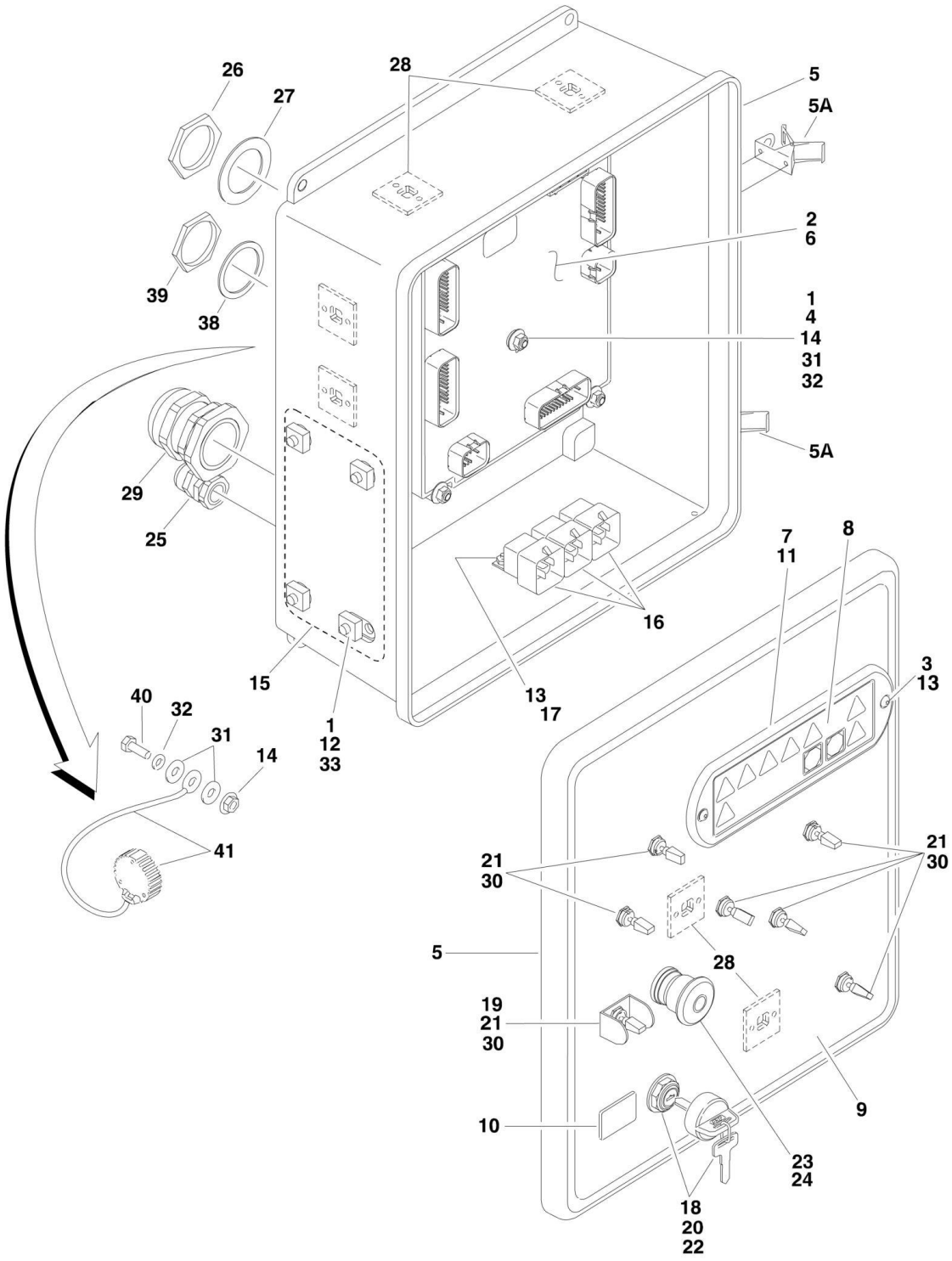

FIGURE 2-20. GROUND CONTROL BOX ASSEMBLY (WITH UGM)

ITEM	PART NUMBER	QTY	DESCRIPTION	REV
		Ref	**GROUND CONTROL BOX ASSEMBLIES**	
	1001110335	Ref	**Ground Control Box Assemblies 800S with Caterpillar Engine**	A
	1001110336	Ref	**Ground Control Box Assemblies 860SJ with Caterpillar Engine**	A
	1001110331	Ref	**Ground Control Box Assemblies 800S with Deutz Engine**	B
	1001110332	Ref	**Ground Control Box Assemblies 860SJ with Deutz Engine**	B
1	0100011	AR	Compound, Locking	
2	0100048	AR	Grease, Dielectric	
3	0630518	2	Capscrew, Button Head	
4	0630548	5	Bolt, 2-1/2in Tap	
5	1001111017	1	Box, Fiberglass	
5A	7020246	2	Latch	
6	1001103667	1	Module, Ground Control (Note: Re-calibration Required when Replaced)	
7	1670829	1	Bezel	
8	1706712	1	Decal - Ground Control Display	
9		Ref	Decal - Faceplate Options:	
9	1001102601	1	Decal - Faceplate 800S	
9	1001102602	1	Decal - Faceplate 860SJ	
10	2420172	1	Gauge, Hourmeter	
11	2760105	1	Housing, Display Light	
12	3300205	4	Nut, Retainer	
13	3300408	AR	Locknut, Plastic Insert	
14	77143013	11	Nut 1/4in-20NC	
15	3539219	1	Plate, Reinforcement	
16	3740049	AR	Relay Options:	
16	3740049	3	Caterpillar Engine Machines	
16	3740049	2	Deutz Engine Machines	
17	3900268	3	Screw, Flange #10 x 1/2in	
18	3910804	6	Screw #8-32NC x 1/4in	
19	4060906	1	Shield, Toggle Switch	
20	4070987	1	Shim (.015in)	
21	4360328	AR	Switch, Toggle	
21	4360328	6	Switch, Toggle 800S	
21	4360328	7	Switch, Toggle 860SJ	
22	4360470	1	Switch, Key	
22	2860030	1	Key Replacement	
23	4360475	1	Switch, Emergency Stop	
23	7020175	1	Cap, Mushroom	
23	7020176	1	Block, Contact	
24	4360476	1	Switch, Contact Block	
25	4460426	1	Connector, Strain Relief	
26	4460470	1	Nut, Terminal	
27	4460471	1	Lockwasher, Terminal	
28	4460488	6	Mounting Base, Terminal	
29	4460526	1	Connector, Strain Relief	
30	4740444	6	Washer, Special	
31	4751400	12	Flatwasher 1/4in Regular	
32	4761400	6	Lockwasher 1/4in	
33	0641506	4	Bolt 5/16in-18NC x 3/4in	

ITEM	PART NUMBER	QTY	DESCRIPTION	REV
34	4922594	1	Harness, Valve (Not Shown - See ELECTRICAL SECTION for Breakdown)	
35		Ref	Harness, Engine Options (Not Shown - See ELECTRICAL SECTION for Breakdown):	
35	1001110341	1	Caterpillar Engine Machines	
35	1001110340	1	Deutz Engine Machines	
36	1001110339	1	Harness, Ground Control Box Options (Not Shown - See ELECTRICAL SECTION for Breakdown)	
37		Ref	Ground Control Box Wiring Diagram (Not Shown - See ELECTRICAL SECTION for Breakdown)	
37	1001110344	1	Caterpillar Engine Machines	
37	1001110343	1	Deutz Engine Machines	
38	4460496	1	Lockwasher, Terminal	
39	4460497	1	Nut, Terminal	
40	0641407	1	Bolt 1/4in-20NC x 7/8in	
41	1001106736	1	Cap, Dust	

FIGURE 2-21. LIMIT SWITCHES, LIGHTS AND ALARM INSTALLATIONS

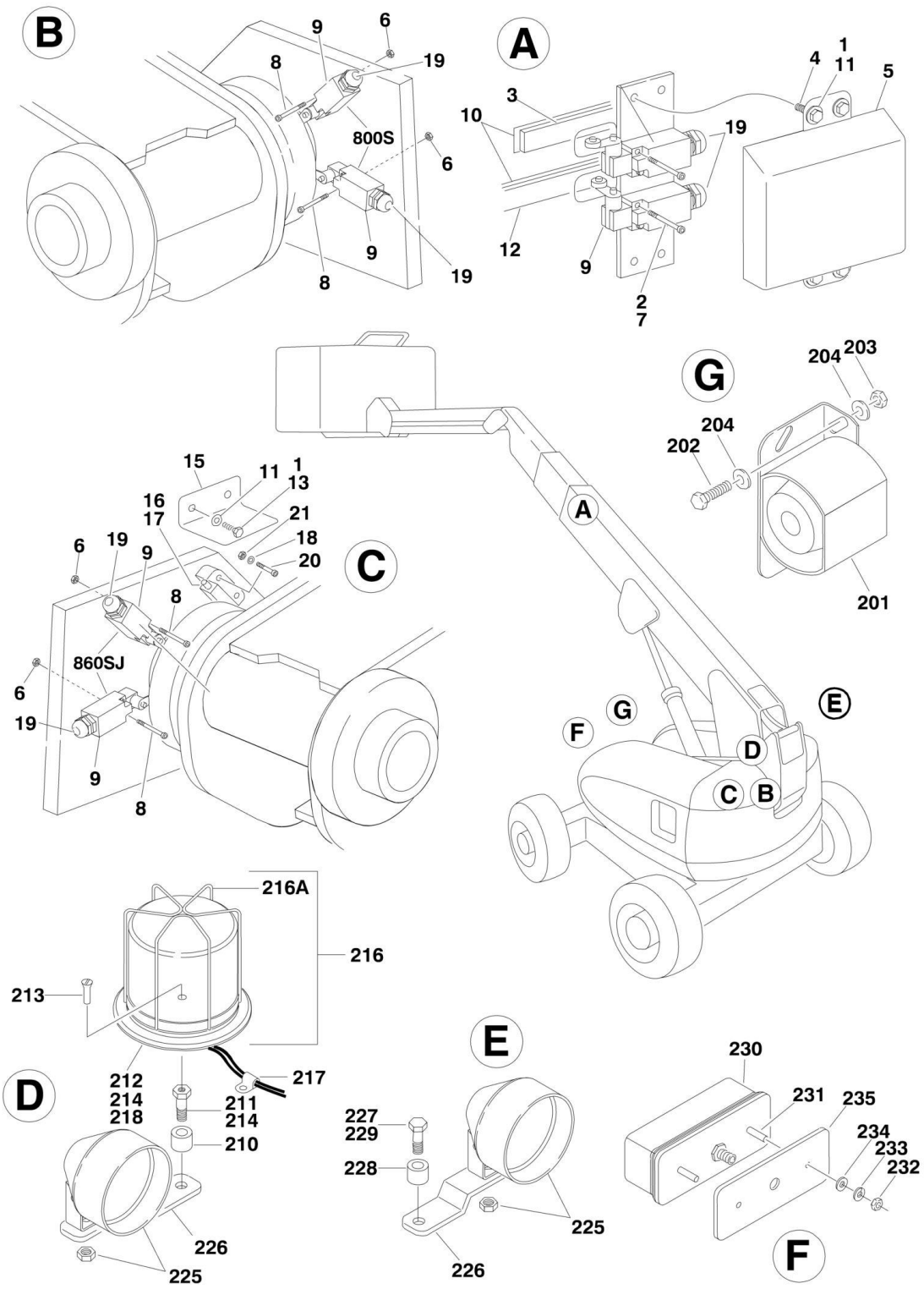

FIGURE 2-21. LIMIT SWITCHES, LIGHTS AND ALARM INSTALLATIONS

ITEM	PART NUMBER	QTY	DESCRIPTION	REV
		Ref	**ELECTRICAL OPTIONS INSTALLATIONS (TURNTABLE MOUNTED)**	
		Ref	**LIMIT SWITCHES INSTALLATION**	
	0271360	Ref	**Limit Switches Installation 800S (Prior to SN 0300103969)**	H
	1001091187	Ref	**Limit Switches Installation 800S (SN 0300103969 through 0300140000)**	D
	0271362	Ref	**Limit Switches Installation 860SJ (Prior to SN 0300103969)**	H
	1001091188	Ref	**Limit Switches Installation 800SJ (SN 0300103969 through 0300140000)**	D
1	0100011	AR	Compound, Locking	
2	0100035	AR	Compound, Locking	
3	0362529	NLA	Bar, Fiberglass (Top) (Use p/n 1001106480) **(Prior to SN 0300103969)**	
3	1001106480	1	Bar, Fiberglass (Top) **(SN 0300103969 through 0300140000)**	
4	0641403	4	Bolt 1/4in-20NC x 3/8in	
5	1671022	1	Cover, Limit Switch	
6	3310805	AR	Locknut #8-32NC	
7	3930816	AR	Capscrew, Socket Head #8-32NC x 1in	
8	3930828	AR	Capscrew, Socket Head #8-32NC x 1-3/4in	
9		Ref	Switch, Limit Options: (Note: P/N 4360549 & P/N 4360578 does not include #19 Connector - Purchase Separately)	
9	4360322	NLA	Switch, Limit (Use p/n 4360578) **(Prior to SN 0300074425)**	
9	4360579	NLA	Switch, Limit (Use p/n 4360578) **(SN 0300074425 through 0300080869)**	
9	4360578	4	Switch, Limit **(SN 0300080870 through 0300103968)**	
9	4360578	2	Switch, Limit **(SN 0300103969 through 0300140000)**	
10	4420060	Ref	Tape, Double Sided Options:	
10	4420060	31.2 ft /9.5m	Tape, Double Sided **(Prior to SN 0300103969)**	
10	4420060	12.3 ft /3.8m	Tape, Double Sided **(SN 0300103969 through 0300140000)**	
11	4751400	6	Flatwasher 1/4in Regular	
12	0363010	NLA	Bar, Fiberglass (Bottom) (Use p/n 1001106449) **(Prior to SN 0300103969)**	
12	1001106449	1	Bar, Fiberglass (Bottom) **(SN 0300103969 through 0300140000)**	
13	0641406	2	Bolt 1/4in-20NC x 3/4in	
15	1671059	1	Cover, Proximity Switch	
16	4071043	1	Shim	
17	4360517	1	Switch, Proximity	
18		Ref	Flatwasher #8 Options:	
18	4750800	4	Flatwasher #8 **(Prior to SN 0300116348)**	
18	1001097942	4	Flatwasher #8 **(SN 0300116348 through 0300140000)**	
19	4460968	AR	Connector, Strain Relief **(SN 0300074425 through 0300140000)**	
20		Ref	Capscrew, Socket Head #8-32NC x 1-3/4in Options:	
20	3930828	2	Capscrew, Socket Head #8-32NC x 1-3/4in **(Prior to SN 0300116348)**	
20	1001097939	2	Capscrew, Socket Head #8-32NC x 1-3/4in **(SN 0300116348 through 0300140000)**	
21		Ref	Locknut #8-32NC Options:	
21	3310805	2	Locknut #8-32NC **(Prior to SN 0300116348)**	

ITEM	PART NUMBER	QTY	DESCRIPTION	REV
21	1001097945	2	Locknut #8-32NC **(SN 0300116348 through 0300140000)**	
	0271999	Ref	**ALARM INSTALLATION**	1
201	0257887	1	Alarm/Harness Assembly	
201	0140032	1	Alarm	
201	2820035	6 in/15cm	Loom	
201	4460424	1	Plug	
201	4460268	2	Socket	
202	0641410	2	Bolt 1/4in-20NC x 1-1/4in	
203	3311405	2	Locknut 1/4in-20NC	
204	4711400	4	Flatwasher 1/4in Thin	
	0270805	Ref	**STROBE LIGHT INSTALLATION (AMBER) (OPTIONAL)**	C
210	4220162	1	Spacer, Stop (Used with ECCO Model 6640 Only)	
211		Ref	Adapter Options:	
211	0630491	1	Adapter used with ECCO Model 6640	
211	0080241	1	Adapter used with ECCO Model 6650	
212	3539281	1	Plate, Mounting (Used with ECCO Model 6640 Only)	
213	0741606	1	Screw, Flathead Countersunk 3/8in-16NC x 3/4in (Used with ECCO Model 6640 Only)	
214	0100011	AR	Compound, Locking	
215	4240032	1	Wire-Tie (Not Shown)	
216	0255917	NLA	Strobe Light/Guard/Harness Assembly (Use p/n 0272507)	
216		Ref	Bulb, Replacement	
216	7016380	1	Bulb for ECCO Model 6640	
216	70001941	1	Bulb for ECCO Model 6650	
216A		Ref	Guard Options:	
216A	4060907	1	Guard used with ECCO Model 6640	
216A	2920215	1	Guard used with ECCO Model 6650	
217	4460234	1	Clamp	
218	0100048	AR	Sealant, Silicone	
		Ref	**LIGHTS INSTALLATIONS (OPTIONAL)**	
	0271552	Ref	**Headlights and Taillights**	C
	0272057	Ref	**Floodlights (Not Shown)**	B
225		Ref	Light Options:	
225	2920110	2	Headlight	
225	2920157	2	Floodlight (Not Shown)	
226	0902206	2	Bracket, Mounting	
227	0642612	1	Bolt 1in-8NC x 1-1/2in	
228	4220162	2	Spacer	
229	0100011	AR	Compound, Locking	
230		Ref	Light Options:	
230	2920113	2	Taillight	
230	2920157	2	Floodlight (Not Shown)	
231	3911040	4	Screw, Machine #10-24NC x 2-1/2in (0271552 Installation Only)	
232	3311005	4	Nut #10-24NC (0271552 Installation Only)	
233	4751000	4	Flatwasher #10 Regular (0271552 Installation Only)	
234	4740362	4	Washer, Fender (0271552 Installation Only)	
235	3960461	2	Gasket (0271552 Installation Only)	
237	4240032	AR	Tie-Strap (Not Shown)	
238	4460234	AR	Mount, Tie-Strap (Not Shown)	
239		Ref	Switch, Toggle Options (Not Shown - Located on Console):	
239	4360336	1	Switch, Toggle	
239	4360522	1	Switch, Push Button	

ITEM	PART NUMBER	QTY	DESCRIPTION	REV
240	3790012	1	O-Ring (Used with Toggle Switch) (Not Shown - Located on Console)	
241	3820001	11	Rivet, Pop (Not Shown)	
242	1705170	1	Decal - Lights (Used with Push Button Switch) (Not Shown - Located on Console)	

FIGURE 2-22. HOODS INSTALLATION (Prior to SN 0300089982)

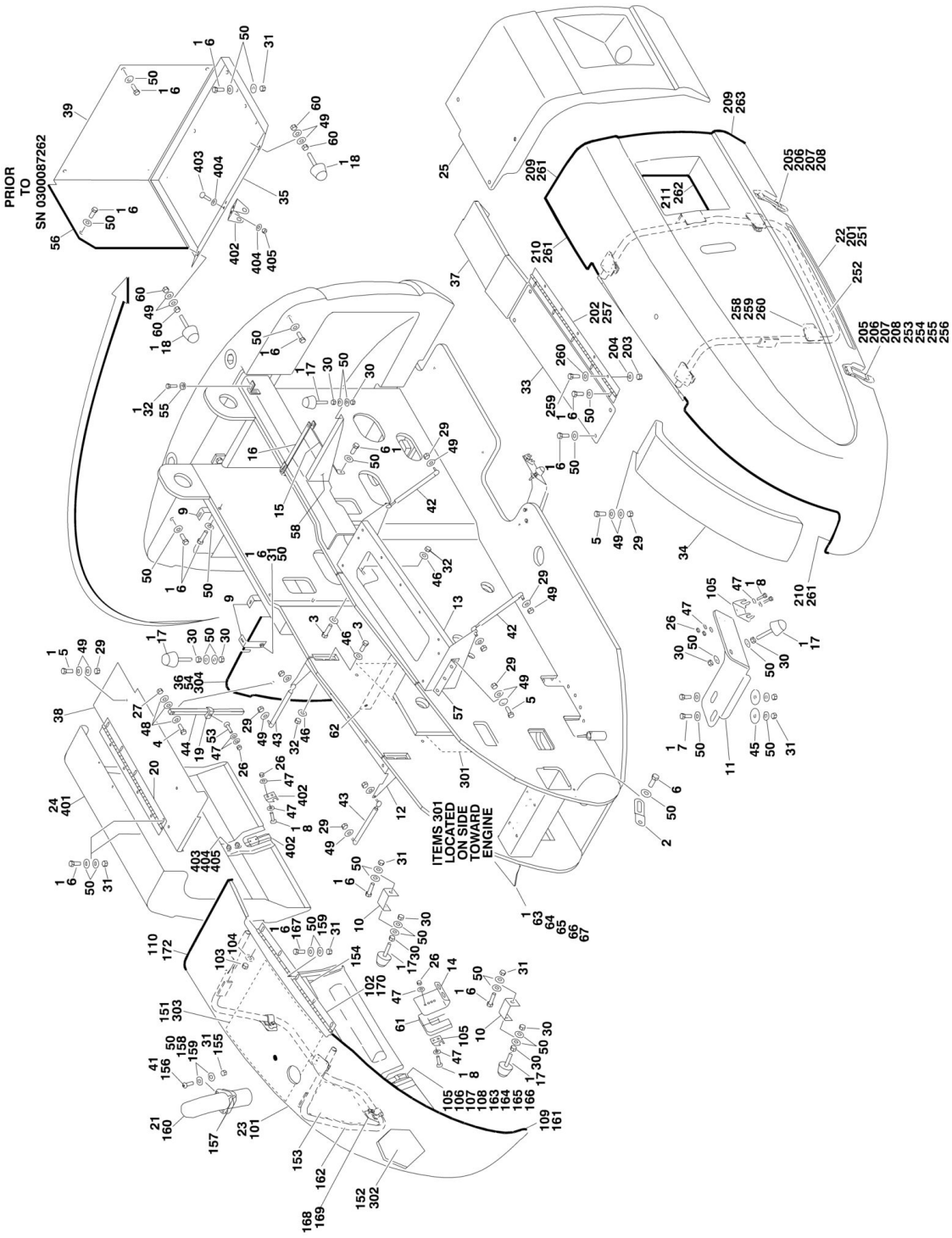

FIGURE 2-22. HOODS INSTALLATION (Prior to SN 0300089982)

ITEM	PART NUMBER	QTY	DESCRIPTION	REV
	0270880	Ref	**HOODS INSTALLATION (Prior to SN 0300089980)**	K
	0274762	Ref	**HOODS INSTALLATION (SN 0300089980 through 0300089982)**	A
1	0100011	AR	Compound, Locking	
2	0362770	1	Bar, Panel Mounting	
3	0630507	8	Bolt, Carriage 1/2in-13NC x 1-1/4in	
4	0641414	1	Bolt 1/4in-20NC x 1-3/4in **(Prior to SN 0300087262)**	
5	0641508	9	Bolt 5/16in-18NC x 1in	
6	0641608	AR	Bolt 3/8in-16NC x 1in	
7	0641616	AR	Bolt 3/8in-16NC x 2in	
8	0721006	AR	Screw #10-24NC x 3/4in	
9	0901921	3	Bracket, Hood Mounting	
10	0902219	2	Bracket, Bumper	
11	0902223	2	Bracket, Latch	
12	0902351	1	Bracket, Hood Mounting	
13	0902412	1	Bracket, Hood Mounting	
14	0902491	1	Bracket, Latch	
15	0902673	1	Bracket, Support (Front Cover)	
16	0902674	1	Bracket, Support (Front Cover)	
17	0940071	AR	Bumper	
18	0940088	2	Bumper **(Prior to SN 0300087262)**	
19	1380132	1	Clip, Gripper **(Prior to SN 0300087262)**	
20	2600209	1	Hinge **(Prior to SN 0300087262)**	
21	4845411	NLA	Tube, Exhaust (Use p/n 4846588) **(Prior to SN 0300089980)**	
21	4846588	1	Tube, Exhaust **(SN 0300089980 through 0300089982)**	
22		Ref	Hood Assembly Options:	
22	2680492	1	Hood Assembly (See Items 201-211 for Breakdown) **(Prior to SN 0300089980)**	
22	1671228	1	Hood Assembly (See Items 251-263 for Breakdown) **(SN 0300089980 through 0300089982)**	
23		Ref	Hood Assembly Options:	
23	2680451	1	Hood Assembly (See Items 101-110 for Breakdown) **(Prior to SN 0300089980)**	
23	1671248	1	Hood Assembly (See Items 151-172 for Breakdown) **(SN 0300089980 through 0300089982)**	
24		Ref	Cover Options:	
24	2680488	1	Cover, Storage Box **(Prior to SN 0300087262)**	
24	1671201	1	Cover **(SN 0300087262 through 0300089982)**	
25	2680490	1	Hood, Right Cover	
26	3311005	AR	Locknut #10-24NC	
27	3311405	1	Locknut 1/4in-20NC **(Prior to SN 0300087262)**	
29	3311505	13	Locknut 5/16in-18NC	
30	3311601	AR	Nut 3/8in-16NC	
31	3311605	AR	Locknut 3/8in-16NC	
32	3311805	8	Locknut 1/2in-13NC	
33	3380443	1	Cover/Bracket Weldment (Tank Side) **(Prior to SN 0300087262)**	
34	3380444	1	Panel, Adapter	
35	3380458	1	Panel, Storage Box (Bottom) **(Prior to SN 0300087262)**	
36		Ref	Panel Options:	
36	3380459	1	Panel, Storage Box (Top) **(Prior to SN 0300087262)**	
36	3380580	1	Panel, Hood Support (Top) **(SN 0300087262 through 0300089982)**	

SECTION 2 - TURNTABLE

ITEM	PART NUMBER	QTY	DESCRIPTION	REV
37	3380461	1	Cover, Top (Tank Side)	
38		Ref	Panel, Cover Options:	
38	3380462	1	Panel, Cover **(Prior to SN 0300087262)**	
38	3380575	1	Panel, Cover **(SN 0300087262 through 0300089982)**	
39	3380463	1	Panel, Storage Box (Front) **(Prior to SN 0300087262)**	
41	3900232	3	Screw, Button Head 3/8in-16NC x 1-1/4in	
42	4160139	2	Spring, Gas (Tank Side)	
43	4160143	2	Spring, Gas (Engine Side)	
44	4567627	1	Tube, Hood Prop **(Prior to SN 0300087262)**	
45	4740076	4	Washer, Fender	
46	4740171	8	Washer, Hardened	
47	4751000	AR	Flatwasher #10 Regular	
48	4751400	3	Flatwasher 1/4in Regular **(Prior to SN 0300087262)**	
49	4751500	AR	Flatwasher 5/16in Regular	
50	4751600	AR	Flatwasher 3/8in Regular	
52	0641610	3	Bolt 3/8in-16NC x 1-1/4in	
53	0721004	1	Screw #10-24NC x 1/2in **(Prior to SN 0300087262)**	
54	3960389	52 in/1.3m	Seal **(Prior to SN 0300087262)**	
55	2540035	3	Grommet	
56	3960438	22 in/1m	Seal	
57	2600244	1	Hinge, Adapter Panel	
58	0902769	1	Bracket, Bumper Support	
59	0902465	1	Bracket, Lock Hasp **(Prior to SN 0300087262)**	
60	3321501	4	Nut 5/16in-24NF **(Prior to SN 0300087262)**	
61	3960470	1	Seal, Latch	
62	0182077	1	Angle, Hood Support **(SN 0300087262 through 0300089982)**	
63	0641406	4	Bolt 1/4in-20NC x 3/4in **(SN 0300089980 through 0300089982)**	
64	3311405	4	Locknut 1/4in-20NC **(SN 0300089980 through 0300089982)**	
65	3571712	1	Plate, Seal **(SN 0300089980 through 0300089982)**	
66	3960389	3.5 ft /1.1m	Seal **(SN 0300089980 through 0300089982)**	
67	4751400	4	Flatwasher 1/4in Regular **(SN 0300089980 through 0300089982)**	
	2680451	Ref	**HOOD ASSEMBLY (ENGINE SIDE) (Prior to SN 0300089980)**	B
		Ref	**Note: Replacement Decals Must be Ordered Separately - See DECALS SECTION.**	
101	2680451	1	Hood	
102	2600209	1	Hinge	
103	3311605	4	Locknut 3/8in-16NC	
104	4751600	4	Flatwasher 3/8in Regular	
105	2940088	1	Latch	
106	0721008	2	Screw, Machine #10-24NC x 1in	
107	4751000	2	Flatwasher #10 Regular	
108	3311005	2	Locknut #10-24NC	
109	3960464	65 in /1.67m	Seal	
110	3960462	61 in /1.55m	Seal	
	1671248	Ref	**HOOD ASSEMBLY (ENGINE SIDE) (SN 0300089980 through 0300089982)**	A
		Ref	**Note: Replacement Decals Must be Ordered Separately - See DECALS SECTION.**	
151	2820080	1	Foam	
152	2820233	1	Insulation, Rear Sound	

ITEM	PART NUMBER	QTY	DESCRIPTION	REV
153	2820234	1	Insulation, Center Sound	
154	2820235	1	Insulation, Rear Sound	
155	3311605	3	Locknut 3/8in x 16NC	
156	3900232	3	Screw, Button Head 3/8in-16NC x 1-1/4in	
157	4061010	1	Shield, Heat Gasket	
158	4740500	3	Washer (Special)	
159	4751600	AR	Flatwasher 3/8in Regular	
160	4846588	1	Exhaust Tube Weldment	
161	1671237	1	Hood	
162	1671230	1	Frame, Tubular	
163	2940088	1	Latch	
164	0721008	2	Screw, Machine #10-24NC x 1in	
165	4751000	2	Flatwasher #10 Regular	
166	3311005	2	Locknut #10-24NC	
167	0641608	4	Bolt 3/8in-16NC x 1in	
168	1321384	4	Hold Down	
169	0641606	4	Bolt 3/8in-16NC x 3/4in	
170	2600209	1	Hinge	
171	3960464	65 in /1.67m	Seal	
172	3960462	61 in /1.55m	Seal	
	2680492	Ref	**HOOD ASSEMBLY (TANK SIDE) (Prior to SN 0300089980)**	C
		Ref	**Note: Replacement Decals Must be Ordered Separately - See DECALS SECTION.**	
201	2680492	1	Hood	
202	2600233	1	Hinge	
203	3311605	5	Locknut 3/8in-16NC	
204	4711600	5	Flatwasher 3/8in Thin	
205	2940088	2	Latch	
206	0721008	4	Screw, Machine #10-24NC x 1in	
207	4751000	4	Flatwasher #10 Regular	
208	3311005	4	Locknut #10-24NC	
209	3960462	53 in /1.35m	Seal	
210	3960464	83 in /2.11m	Seal	
211	3960438	55 in/1.4m	Seal	
	1671228	Ref	**HOOD ASSEMBLY (TANK SIDE) (SN 0300089980 through 0300089982)**	A
		Ref	**Note: Replacement Decals Must be Ordered Separately - See DECALS SECTION.**	
251	1671231	1	Hood	
252	1671232	1	Frame, Tubular	
253	2940088	2	Latch	
254	0721008	4	Screw, Machine #10-24NC x 1in	
255	4751000	4	Flatwasher #10 Regular	
256	3311005	4	Locknut #10-24NC	
257	2600233	1	Hinge	
258	1321384	4	Hold Down	
259	0641606	9	Bolt 3/8in-16NC x 3/4in	
260	4711600	9	Flatwasher 3/8in Thin	
261	3960464	83 in	Seal	

SECTION 2 - TURNTABLE

ITEM	PART NUMBER	QTY	DESCRIPTION	REV
		/2.11m		
262	3960438	55 in/1.4m	Seal	
263	3960462	53 in /1.35m	Seal	
	0272081	Ref	**NOISE REDUCTION INSTALLATION (DEUTZ/CATERPILLAR ENGINE MACHINES)**	4
301	2820078	1	Foam, Acoustical (Turntable Side)	
302	2820079	1	Foam, Acoustical (Hood Side) **(Prior to SN 0300089980)**	
303	2820080	1	Foam, Acoustical (Hood Top) **(Prior to SN 0300089980)**	
304	2820081	1	Foam, Acoustical (Located on #36) **(Prior to SN 0300076781)**	
	2680488	Ref	**HOOD ASSEMBLY (STORAGE COMPARTMENT) (Prior to SN 0300087262)**	E
401	2680488	1	Hood	
402	2940088	1	Latch	
403	0721008	2	Screw, Machine #10-24NC x 1in	
404	4751000	2	Flatwasher #10 Regular	
405	3311005	2	Locknut #10-24NC	

FIGURE 2-23. HOODS INSTALLATION (SN 0300089982 through 0300140000)

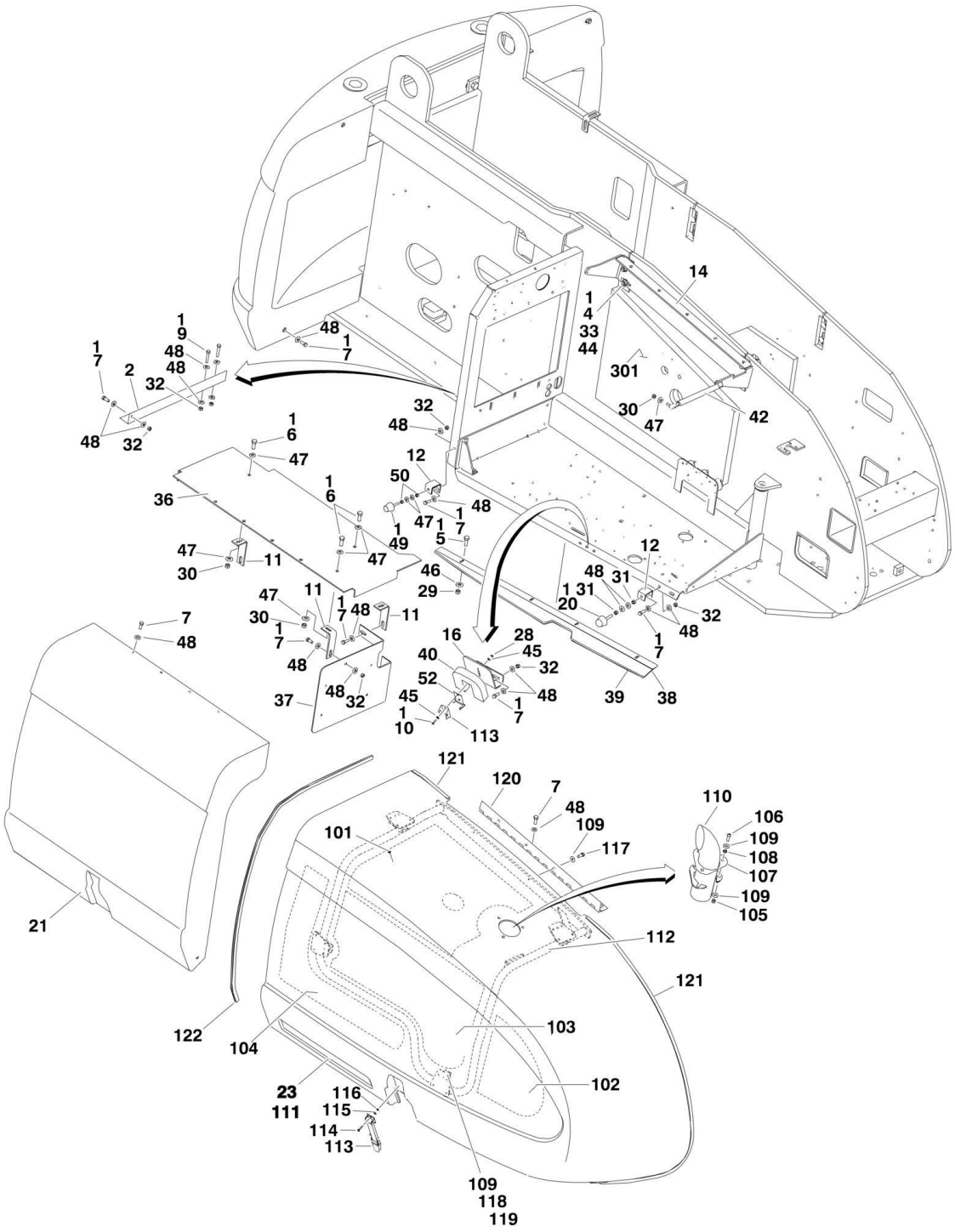

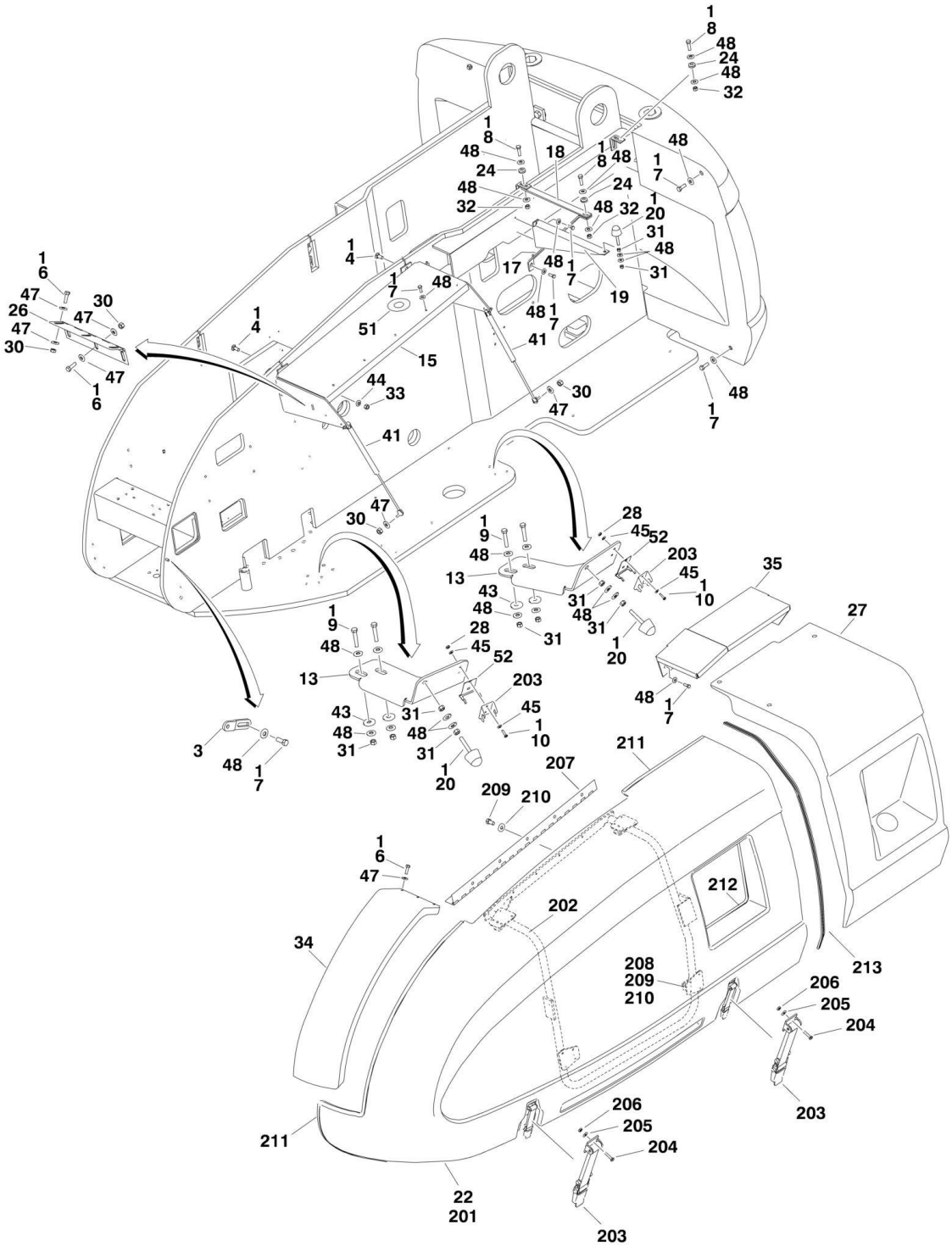
1
8
48
24
48
32
1
8
48
18
1
8
48
1
7
48
24
24
48
32
48
32
1
20
31
48
1
4
17
48
1
7
31
1
7
48
19
1
6
47
30
26
47
47
30
1
4
51
48
1
7
41
15
47
1
6
44
33
30
47
48
1
7
41
47
30
28
45
52
1
9
48
203
45
13
1
10
35
43
31
48
48
31
31
27
1
9
28
48
45
52
1
20
13
203
48
1
7
43
31
45
48
48
1
10
3
31
31
48
1
7
1
20
211
207
209
210
1
6
47
212
202
34
213
208
209
210
206
205
204
203
206
205
204
211
22
201
203

FIGURE 2-23. HOODS INSTALLATION (SN 0300089982 through 0300140000)

ITEM	PART NUMBER	QTY	DESCRIPTION	REV
		Ref	**HOODS INSTALLATIONS**	
	0274762	Ref	**Caterpillar Engines**	E
	0274762	Ref	**Deutz Engines (Prior to SN 0300129454)**	E
	1001100386	Ref	**Deutz Engines (SN 0300129454 through 0300140000)**	A
1	0100011	AR	Compound, Locking	
2	0182077	1	Angle, Hood Support	
3	0362770	1	Bar, Panel Mounting	
4	0630507	8	Bolt, Carriage 1/2in-13NC x 1-1/4in	
5	0641406	4	Bolt 1/4in-20NC x 3/4in	
6	0641508	9	Bolt 5/16in-18NC x 1in	
7	0641608	33	Bolt 3/8in-16NC x 1in	
8	0641610	3	Bolt 3/8in-16NC x 1-1/4in	
9	0641616	6	Bolt 3/8in-16NC x 2in	
10	0721006	6	Screw #10-24NC x 3/4in	
11	0901921	3	Bracket, Hood Mounting	
12	0902219	2	Bracket, Bumper	
13	0902223	2	Bracket, Latch	
14	0902351	1	Bracket, Hood Mounting	
15	0902412	1	Bracket, Hood Mounting	
16	0902491	1	Bracket, Latch	
17	0902673	1	Bracket, Support (Front Cover)	
18	0902674	1	Bracket, Support (Front Cover)	
19	0902769	1	Bracket, Bumper Support	
20	0940071	4	Bumper	
21	1671201	1	Cover	
22	1671228	1	Hood Assembly (See Items 201-213 for Breakdown)	
23		Ref	Hood Assembly (See Items 101-122 for Breakdown)	
23	1671248	1	Caterpillar Engines	
23	1671248	1	Deutz Engines **(SN 0300089982 through 0300129453)**	
23	1001099138	1	Deutz Engines **(SN 0300129454 through 0300140000)**	
24	2540035	3	Grommet	
26	2600244	1	Hinge, Adapter Panel	
27	2680490	1	Hood, Right Cover	
28	3311005	6	Locknut #10-24NC	
29	3311405	4	Locknut 1/4in-20NC	
30	3311505	12	Locknut 5/16in-18NC	
31	3311601	8	Nut 3/8in-16NC	
32	3311605	15	Locknut 3/8in-16NC	
33	3311805	8	Locknut 1/2in-13NC	
34	3380444	1	Panel, Adapter	
35	3380461	1	Cover, Top (Tank Side)	
36	3380575	1	Panel, Cover	
37	3380580	1	Panel, Storage Box (Top)	
38	3571712	1	Plate, Seal	
39	3960389	3.5 ft /1.1m	Seal	
40	3960470	1	Seal, Latch	
41	4160139	2	Spring, Gas (Tank Side)	
42	4160143	1	Spring, Gas (Engine Side)	
43	4740076	4	Washer, Fender	

ITEM	PART NUMBER	QTY	DESCRIPTION	REV
44	4740171	8	Washer, Hardened	
45	4751000	12	Flatwasher #10 Regular	
46	4751400	4	Flatwasher 1/4in Regular	
47	4751500	23	Flatwasher 5/16in Regular	
48	4751600	67	Flatwasher 3/8in Regular	
49	0940088	1	Bumper	
50	3321501	2	Nut 5/16in-24NF	
51	1120601	1	Plug, Cap **(SN 0300098641 through 0300140000)**	
52	2940188	3	Latch, Spring Clip **(SN 0300098641 through 0300140000)**	
		Ref	**HOOD ASSEMBLIES (ENGINE SIDE)**	
	1671248	Ref	**Caterpillar Engines**	D
		Ref	**Deutz Engines**	
	1671248	Ref	**Deutz Engines (SN 0300089982 through 0300129453)**	D
	1001099138	Ref	**Deutz Engines (SN 0300129454 through 0300140000)**	B
101		Ref	Foam Options:	
101		Ref	Caterpillar Engine Machines	
101	2820080	1	Caterpillar Engine Machines **(SN 0300089982 through 0300124623)**	
101	1001101391	1	Caterpillar Engine Machines **(SN 0300124624 through 0300140000)**	
101		Ref	Deutz Engine Machines	
101	2820080	1	Deutz Engine Machines **(SN 0300089982 through 0300124623)**	
101	1001101391	1	Deutz Engine Machines **(SN 0300124624 through 0300129453)**	
101	1001101673	1	Deutz Engine Machines **(SN 0300129454 through 0300140000)**	
102	2820233	1	Insulation, Rear Sound	
103	2820234	1	Insulation, Center Sound	
104	2820235	1	Insulation, Rear Sound	
105	3311605	AR	Locknut 3/8in x 16NC	
106	3900232	AR	Screw, Button Head 3/8in-16NC x 1-1/4in	
107		Ref	Shield, Heat Gasket Options:	
107	4061010	1	Shield, Heat Gasket **(SN 0300089982 through 0300124623)**	
107	1001101392	1	Shield, Heat Gasket **(SN 0300124624 through 0300129453)**	
107		Ref	Shield, Heat Gasket **(SN 0300129454 through 0300140000)**	
107	1001101392	1	Caterpillar Engine Machines	
107	1001101623	1	Deutz Engine Machines	
108	4740500	AR	Washer (Special)	
109	4751600	AR	Flatwasher 3/8in Regular	
110		Ref	Exhaust Tube Weldment Options:	
110	4846588	1	Caterpillar Engine Machines	
110		Ref	Deutz Engine Machines	
110	4846588	1	Deutz Engine Machines **(SN 0300089982 through 0300129453)**	
110	1001099121	1	Deutz Engine Machines **(SN 0300129454 through 0300140000)**	
111		Ref	Hood Kit Options:	
111	1001097966	1	Caterpillar Engine Machines (Includes Items 101, 102, 103, 104, 107 & 108)	
111		Ref	Deutz Engine Machines	
111	1001097966	1	Deutz Engine Machines (Includes Items 101, 102, 103, 104, 107 & 108) **(SN 0300089982 through 0300129453)**	

SECTION 2 - TURNTABLE

ITEM	PART NUMBER	QTY	DESCRIPTION	REV
111	1001099139	1	Deutz Engine Machines (Must also purchase Items 101, 102, 103, 104, 107 & 108) **(SN 0300129454 through 0300140000)**	
		Ref	**Note: Replacement Decals Must be Ordered Separately - See DECALS SECTION.**	
112	1671230	1	Frame, Tubular	
113	2940088	1	Latch	
114	0721008	2	Screw, Machine #10-24NC x 1in	
115	4751000	2	Flatwasher #10 Regular	
116	3311005	2	Locknut #10-24NC	
117	0641608	6	Bolt 3/8in-16NC x 1in	
118	1321384	4	Hold Down	
119	0641606	4	Bolt 3/8in-16NC x 3/4in	
120	2600209	1	Hinge	
121	3960464	65 in /1.67m	Seal	
122	3960462	61 in /1.55m	Seal	
	1671228	Ref	**HOOD ASSEMBLY (TANK SIDE)**	A
		Ref	**Note: Replacement Decals Must be Ordered Separately - See DECALS SECTION.**	
201	1671231	1	Hood	
202	1671232	1	Frame, Tubular	
203	2940088	2	Latch	
204	0721008	4	Screw, Machine #10-24NC x 1in	
205	4751000	4	Flatwasher #10 Regular	
206	3311005	4	Locknut #10-24NC	
207	2600233	1	Hinge	
208	1321384	4	Hold Down	
209	0641606	9	Bolt 3/8in-16NC x 3/4in	
210	4711600	9	Flatwasher 3/8in Thin	
211	3960464	83 in /2.11m	Seal	
212	3960438	55 in/1.4m	Seal	
213	3960462	53 in /1.35m	Seal	
	0272081	Ref	**NOISE REDUCTION INSTALLATION (OPTIONAL)**	4
301	2820078	1	Foam, Acoustical (Turntable Side)	

FIGURE 2-24. ENGINE TRAY JACK INSTALLATION (OPTIONAL)

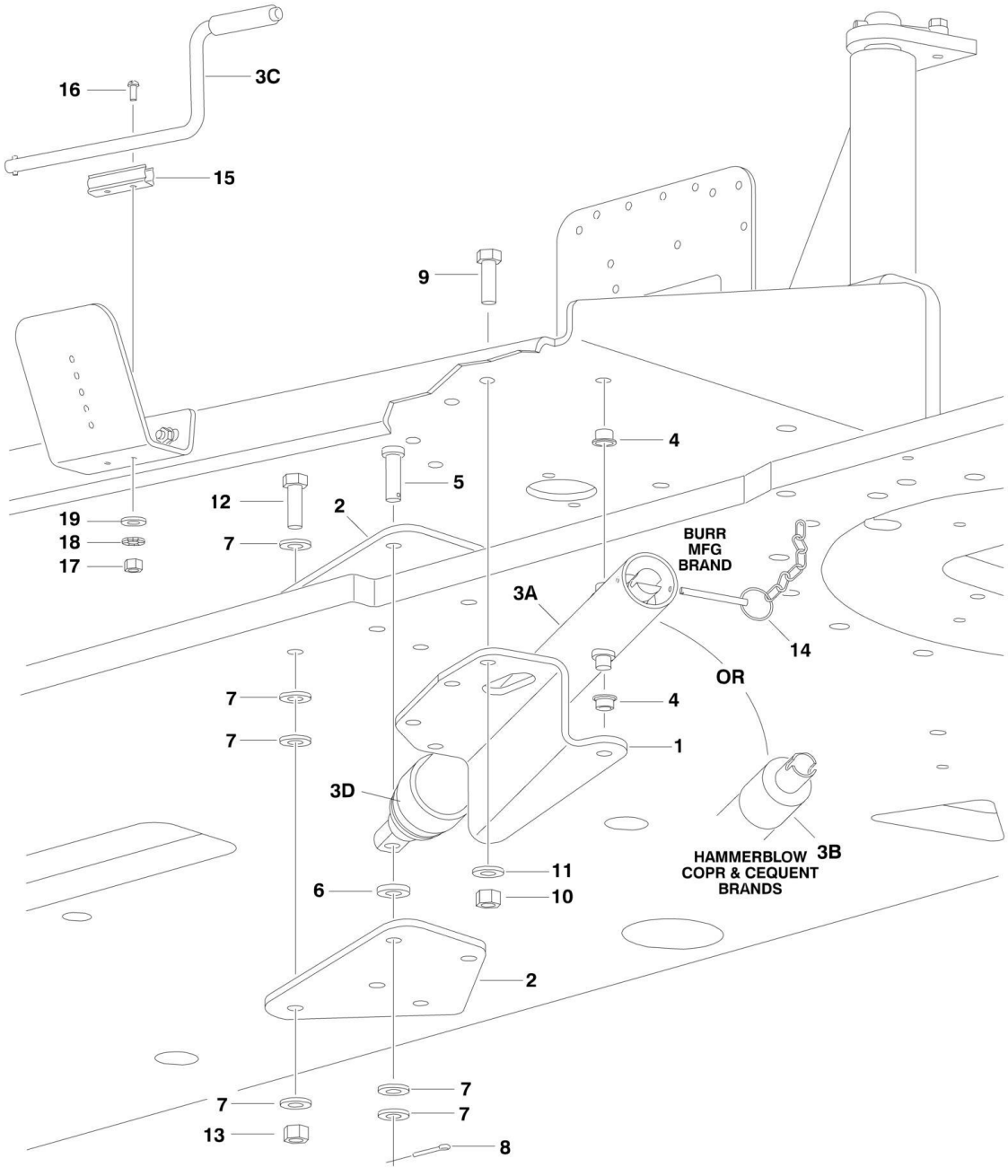

FIGURE 2-24. ENGINE TRAY JACK INSTALLATION (OPTIONAL)

ITEM	PART NUMBER	QTY	DESCRIPTION	REV
	0258728	Ref	**ENGINE TRAY JACK INSTALLATION**	2-C
1	3537445	1	Bracket	
2	3537446	2	Bracket	
3	2840016	1	Jack and Handle Assembly Options:	F
3A		Ref	Burr Manufacturing Brand	
3B		Ref	Hammerblow Corp Brand	
3C		Ref	Handle Options:	
3C	7016374	1	Burr Manufacturing Brand	
3C	7024598	1	Hammerblow Corp Brand	
3D	7016322	1	Wiper (Burr Manufacturing Brand Only)	
4	0962051	2	Bearing, Flange	
5	3430816	1	Pin, Clevis	
6	4891800	1	Flatwasher 1/2in Hardened	
7	4711800	6	Flatwasher 1/2in Thin	
8	3450404	1	Pin, Cotter 1/8in x 1in	
9	0641609	4	Bolt 3/8in-16NC x 1-1/8in	
10	3311605	4	Locknut 3/8in-16NC	
11	4891600	4	Flatwasher 3/8in Hardened	
12	0641818	4	Bolt 1/2in-13NC x 2-1/4in	
13	3311805	4	Locknut 1/2in-13NC	
14	3422530	1	Pin, Hitch **(Prior to SN 0300070676)**	
15	1380147	1	Clip, Spring	
16	3910608	2	Screw, Round Head #6-32NC x 1in	
17	3310601	2	Nut #6-32NC	
18	4770600	2	Starwasher #6	
19	4740119	2	Washer, Aluminum	

SECTION 3 - BOOM

FIGURE 3-1. TOWER BOOM, UPRIGHT AND CYLINDERS INSTALLATION

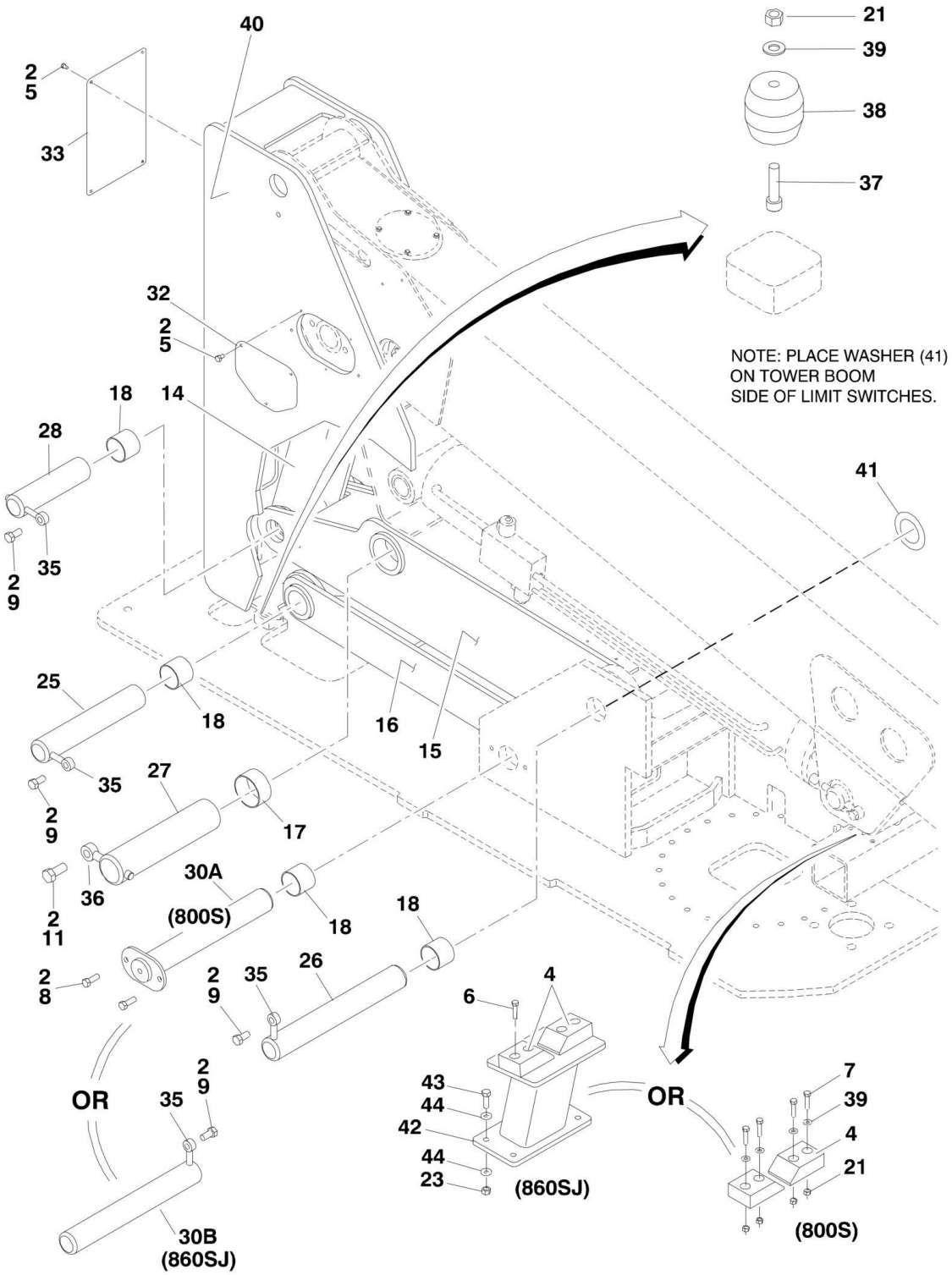

FIGURE 3-1. TOWER BOOM, UPRIGHT AND CYLINDERS INSTALLATION

ITEM	PART NUMBER	QTY	DESCRIPTION	REV
		Ref	**TOWER BOOM, UPRIGHT AND CYLINDERS INSTALLATIONS**	
	0270876	Ref	**Tower Boom, Upright and Cylinders Installations 800S**	J
	0270877	Ref	**Tower Boom, Upright and Cylinders Installations 860SJ**	I
2	0100011	AR	Compound, Locking	
4	0561380	1	Block, Boom Rest	
5	0641504	10	Bolt 5/16in-18NC x 5/8in	
6	0641612	4	Bolt 3/8in-16NC x 1-1/2in (860SJ Only)	
7	0641613	4	Bolt 3/8in-16NC x 1-1/2in (800S Only)	
8	0642014	AR	Bolt 5/8in-11NC x 1-3/4in	
9	0642212	AR	Bolt 3/4in-10NC x 1-1/2in	
11	0642618	1	Bolt 1in-8NC x 2-1/4in	
14		Ref	Power Link Weldment Options:	
14	0801278	NLA	Power Link Weldment 800S (Use p/n 1001117804) (Includes Qty 4 of Item 18)	
14	0801310	NLA	Power Link Weldment 860SJ (Use p/n 1001117805) (Includes Qty 4 of Item 18)	
15		Ref	Tower Weldment Options:	
15	0801279	1	Tower Weldment 800S	
15	0801306	1	Tower Weldment 860SJ	
16		Ref	Link (Tower) Weldment Options:	
16	0801280	1	Link (Tower) Weldment 800S	
16	0801307	1	Link (Tower) Weldment 860SJ	
17	0962122	2	Bushing	
18	0962297	10	Bushing	
21	3311605	6	Locknut 3/8in-16NC	
23	3311805	4	Locknut 1/2in-13NC (860SJ Only)	
25	3422908	1	Pin	
26	3422909	1	Pin	
27	3422910	1	Pin	
28	3422920	1	Pin	
30		Ref	Pin Options:	
30A	3422930	1	Pin 800S	
30B	3422909	1	Pin 860SJ	
32	3573049	2	Cover, Upright Side	
33	3573050	1	Cover, Upright Rear	
35	3841287	AR	Keeper, Pin	
36	3841356	1	Keeper, Pin	
37	3931624	2	Capscrew, Socket Head 3/8in-16NC x 1-1/2in	
38	4160187	2	Spring, Rubber	
39	4711600	AR	Flatwasher 3/8in Narrow	
40	4846355	NLA	Upright (Use p/n 1001157180)	
41	4740492	1	Washer, Thrust	
42	4846427	1	Rest, Boom (860SJ Only)	
43	0641812	4	Bolt 1/2in-13NC x 1-1/2in (860SJ Only)	
44	4711800	8	Flatwasher 1/2in Narrow (860SJ Only)	

FIGURE 3-2. MAIN BOOM INSTALLATION - 800S

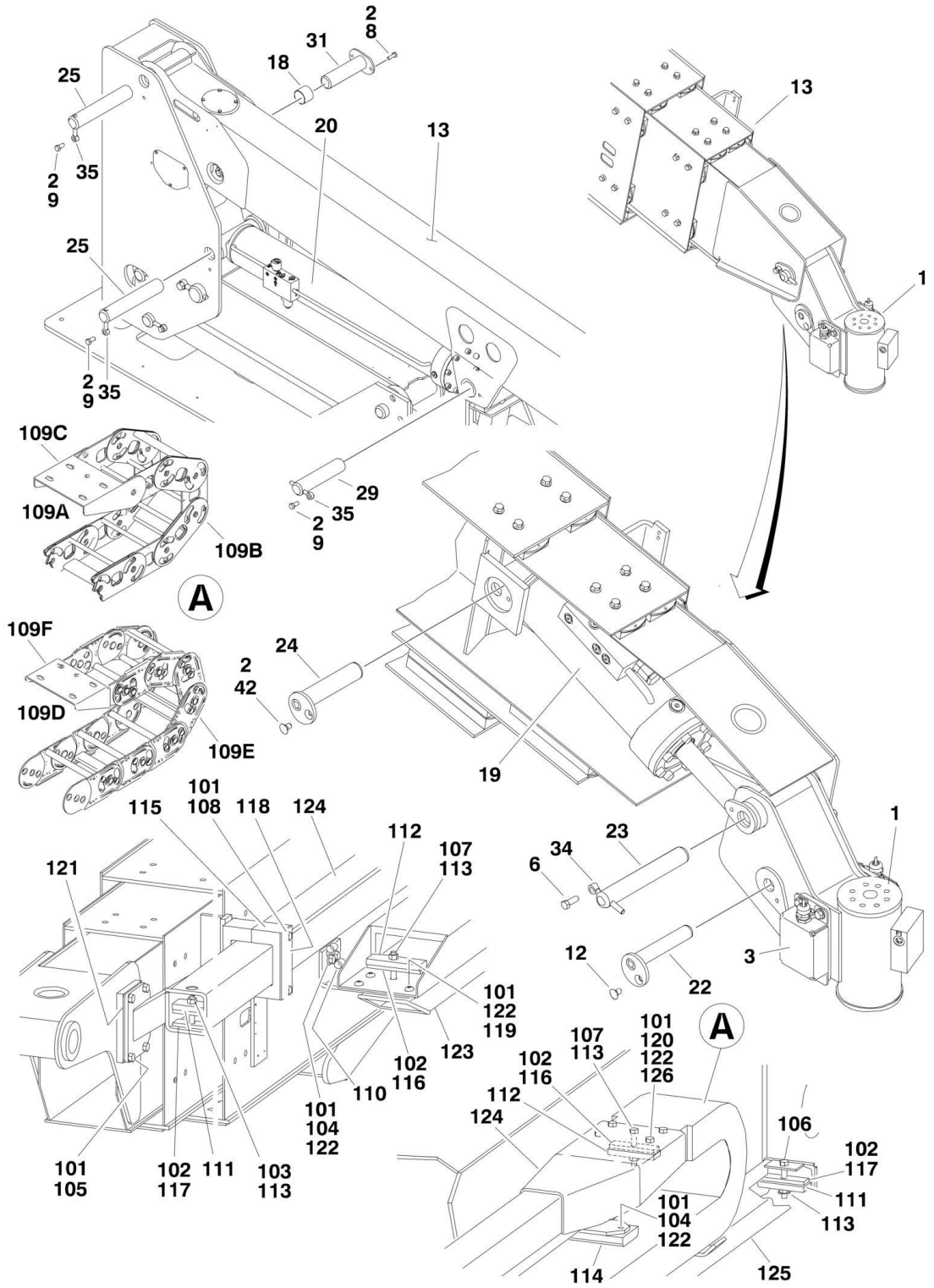

FIGURE 3-2. MAIN BOOM INSTALLATION - 800S

ITEM	PART NUMBER	QTY	DESCRIPTION	REV
	0270876	Ref	**BOOM AND CYLINDERS INSTALLATION - 800S**	
1	0060061	1	Rotator Assembly (See ROTATOR ASSEMBLY for Breakdown)	
2	0100011	AR	Compound, Locking	
3		Ref	Platform Level Sensor Switch Assembly Options (See PLATFORM SUPPORT AND CONTROL VALVES INSTALLATION for Breakdown):	
3	0271381	1	Platform Level Sensor Switch Assembly **(Prior to SN 0300075873)**	
3	0273695	1	Platform Level Sensor Switch Assembly **(SN 0300075873 through 0300140000)**	
6	0641608	1	Bolt 3/8in-16NC x 1in	
8	0642014	2	Bolt 5/8in-11NC x 1-3/4in	
9	0642212	3	Bolt 3/4in-10NC x 1-1/2in	
12	0741605	1	Bolt 3/8in-16NC x 5/8in	
13	0801274	1	Main Boom Assembly (See MAIN BOOM ASSEMBLY for Breakdown)	
18	0962297	2	Bushing	
19	1684189	NLA	Platform Level Cylinder Assembly (Use p/n 1001228027) (See CYLINDER SECTION for Breakdown) (Original Eqipment)	
19	1001228027	1	Platform Level Cylinder Assembly (See CYLINDER SECTION for Breakdown) (Service Replacemet)	
20		Ref	Main Lift Cylinder Assembly Options (See CYLINDER SECTION for Breakdown):	
20	1684042	1	Main Lift Cylinder Assembly **(Prior to SN 0300066889)**	
20	1684199	NLA	Main Lift Cylinder Assembly (Use p/n 1001228028) (Original Equipment) **(SN 0300066889 through 0300140000)**	
20	1001228028	1	Main Lift Cylinder Assembly (Service Replacement)	
22	3422580	1	Pin	
23	3422562	1	Pin	
24	3422569	1	Pin	
25	3422908	2	Pin	
29	3422922	1	Pin	
31	3422931	1	Pin	
34	3841143	1	Keeper, Pin	
35	3841287	3	Keeper, Pin	
42		Ref	Bolt Options:	
42	0741605	1	Bolt 3/8in-16NC x 5/8in **(Prior to SN 0300129790)**	
42	3900192	1	Screw 3/8in-16NC x 1/2in **(SN 0300129790 through 0300140000)**	
100		Ref	**POWER TRACK INSTALLATION**	
100		Ref	**Note: These SNs also use the 0271254 Installation: SNs 0300065567, 0300065568, 0300065582, 0300065595, 0300065596 , 0300065614, 0300065615, 0300065617, 0300065624, 0300065625, 0300065628 & 0300065635**	
100	0271254	Ref	**Power Track Installation (Prior to SN 0300065541)**	D
100	0271990	Ref	**Power Track Installation (SN 0300065541 through 0300140000)**	C
101	0100011	AR	Compound, Locking	
102	0100081	AR	Adhesive	
103	0630539	1	Bolt 3/8in-16NC x 3-1/2in	
104	0641606	12	Bolt 3/8in-16NC x 3/4in	
105	0641608	4	Bolt 3/8in-16NC x 1in	
106	0641620	1	Bolt 3/8in-16NC x 2-1/2in	

ITEM	PART NUMBER	QTY	DESCRIPTION	REV
107	0641622	2	Bolt 3/8in-16NC x 2-3/4in	
108	0641652	2	Bolt 3/8in-16NC x 6-1/2in	
109		Ref	Power Track Assembly Options: (Original Equipment)	
		Ref	**Note: Original Equipment Power Track may have been replaced with a Service Replacement. Visually identify the power track before ordering parts.**	
109A	1180373	NLA	Power Track Assembly (Original Equipment) (Use p/n 1001131731) (See Note at Item 100 Power Track Installation) **(Prior to SN 0300065541)**	
109A	1180375	NLA	Power Track Assembly (Original Equipment) (Use p/n 1001131731) (See Note at Item 100 Power Track Installation) **(SN 0300065541 through 0300140000)**	
109B	7024369	AR	Repair Section for 1180373 & 1180375 (Includes Inner & Outer Links, Joining Bars and Rollers and Assembling Hardware)	
109C	7024370	1	Mounting Feet for 1180373 & 1180375 (Includes Mounting Brackets for Both Ends, 1 Roller Assembly and Assembling Hardware)	
109D	1001131731	1	Power Track Assembly (Service Replacement)	
109E	70003921	AR	Repair Section for 1001131731 (Includes 1 Pin Assembly for each end)	
109F	70003922	1	Mounting Feet for 1001131731 (Includes Both Pair of Feet)	
110	1320263	2	Clamp, Cable	
111	1320289	2	Clamp, Hose	
112	1320294	2	Bar, Clamping	
113	3311605	4	Locknut 3/8in-16NC	
114	3340787	1	Pad, Wear	
115	3340936	2	Pad, Push Tube	
116	3340942	2	Pad, Rubber	
117	3340943	4	Pad, Rubber	
118	3573418	1	Plate, Backing	
119	3900283	4	Screw, Button Head 3/8in-16NC x 3/4in	
120	3900316	4	Screw, Button Head 3/8in-16NC x 1in	
121	4070969	2	Shim	
122	4711600	20	Flatwasher 3/8in Thin	
123		Ref	Support, Push Tube Options:	
123	Not Required	0	Support, Push Tube (See Note at Item 100 Power Track Installation) **(Prior to SN 0300065541)**	
123	4846553	2	Support, Push Tube (See Note at Item 100 Power Track Installation) **(SN 0300065541 through 0300140000)**	
124		Ref	Tube, Push Options:	
124	4846402	1	Tube, Push (See Note at Item 100 Power Track Installation) **(Prior to SN 0300065541)**	
124	4846554	1	Tube, Push (See Note at Item 100 Power Track Installation) **(SN 0300065541 through 0300140000)**	
125		Ref	Support, Track Options:	
125	4846403	1	Support, Track (See Note at Item 100 Power Track Installation) **(Prior to SN 0300065541)**	
125	4846558	1	Support, Track (See Note at Item 100 Power Track Installation) **(SN 0300065541 through 0300140000)**	
126	3311608	4	Locknut 3/8in-16NC	

FIGURE 3-3. MAIN BOOM INSTALLATION - 860SJ

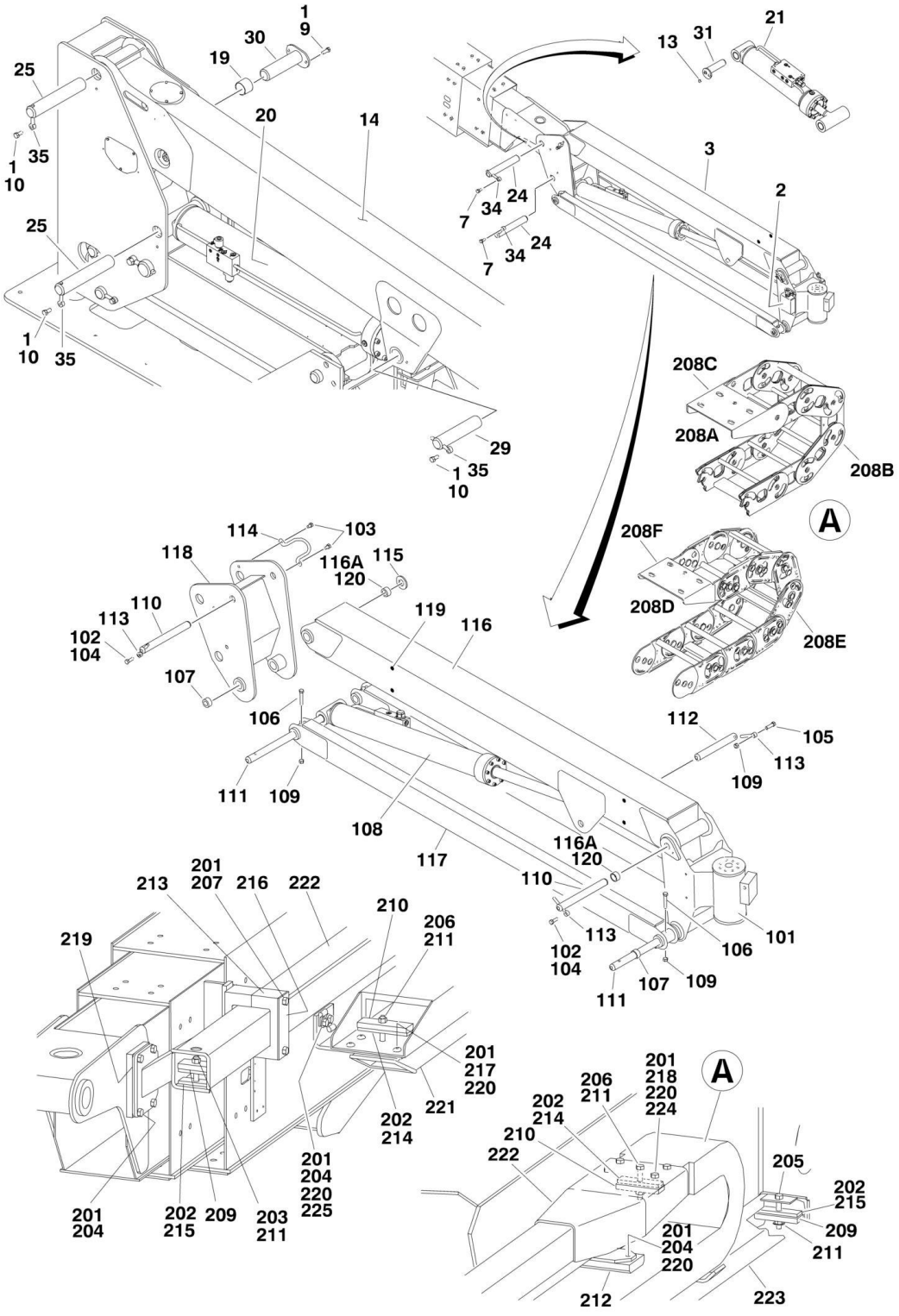

FIGURE 3-3. MAIN BOOM INSTALLATION - 860SJ

ITEM	PART NUMBER	QTY	DESCRIPTION	REV
	0270877	Ref	**BOOM AND CYLINDERS INSTALLATION - 860SJ**	I
1	0100011	AR	Compound, Locking	
2		Ref	Platform Level Sensor Switch Assembly Options (See PLATFORM SUPPORT AND CONTROL VALVES INSTALLATION for Breakdown):	
2	0271381	1	Platform Level Sensor Switch Assembly **(Prior to SN 0300075873)**	
2	0273695	1	Platform Level Sensor Switch Assembly **(SN 0300075873 through 0300140000)**	
3	0271444	1	Jib Assembly (See Items 101-118 for Breakdown)	
7	0641808	2	Bolt 1/2in-13NC x 1in	
9	0642014	2	Bolt 5/8in-11NC x 1-3/4in	
10	0642212	3	Bolt 3/4in-10NC x 1-1/2in	
13	0741605	2	Bolt 3/8in-16NC x 5/8in	
14	0801281	1	Main Boom Assembly (See MAIN BOOM ASSEMBLY for Breakdown)	
19	0962297	2	Bushing	
20		Ref	Main Lift Cylinder Assembly Options (See CYLINDER SECTION for Breakdown):	
20	1684124	1	Main Lift Cylinder Assembly **(Prior to SN 0300066889)**	
20	1684202	NLA	Main Lift Cylinder Assembly (Use p/n 1001228029) (Original Equipment) **(SN 0300066889 through 0300140000)**	
20	1001228029	1	Main Lift Cylinder Assembly (Service Replacement)	
21	1684136	NLA	Platform Level Cylinder Assembly (Use p/n 1001228022) (See CYLINDER SECTION for Breakdown) (Original Equipment)	
21	1001228022	1	Platform Level Cylinder Assembly (See CYLINDER SECTION for Breakdown) (Service Replacement)	
24	3422793	2	Pin	
25	3422908	2	Pin	
29	3422922	1	Pin	
30	3422931	1	Pin	
31	3422932	1	Pin	
34	3841203	3	Keeper, Pin	
35	3841287	3	Keeper, Pin	
	0271444	Ref	**JIB ASSEMBLY**	F
101	0060048	1	Rotator Assembly (See ROTATOR ASSEMBLY for Breakdown)	
102	0100011	AR	Compound, Locking	
103	0641604	2	Bolt 3/8in-16NC x 1/2in	
104	0641608	2	Bolt 3/8in-16NC x 1in	
105	0641610	1	Bolt 3/8in-16NC x 1-1/4in	
106	0641618	4	Bolt 3/8in-16NC x 2-1/4in	
107	0961947	AR	Bushing	
108	1683609	NLA	Jib Lift Cylinder Assembly (Use p/n 1001248012) (See CYLINDER SECTION for Breakdown) (Original Equipment)	
108	1001228012	NLA	Jib Lift Cylinder Assembly (Use p/n 1001248012) (See CYLINDER SECTION for Breakdown) (Service Replacement)	
108	1001248012	1	Jib Lift Cylinder Assembly (See CYLINDER SECTION for Breakdown) (Service Replacemenr)	
109	3311605	5	Locknut 3/8in-16NC	
110	3422860	2	Pin	
111	3422861	2	Pin	
112	3422867	1	Pin	

ITEM	PART NUMBER	QTY	DESCRIPTION	REV
113	3841143	3	Keeper, Pin	
114	3841340	1	Loop, Hose	
115	4740439	2	Thrustwasher	
116	4844816	1	Link, Jib (Upper)	
116A	0962335	4	Bushing **(SN 0300096971 through 0300140000)**	
117	4844817	2	Link, Jib (Lower)	
118	4846435	1	Pivot, Jib	
119	3520034	4	Plug, Hole	
120	0962335	4	Bushing **(Prior to SN 0300096971)**	
200		Ref	**POWER TRACK INSTALLATION**	
200		Ref	**Note: These SNs also use the 0271255 Installation: SNs 0300065567, 0300065568, 0300065582, 0300065595, 0300065596 , 0300065614, 0300065615, 0300065617, 0300065624, 0300065625, 0300065628, & 0300065635**	
200	0271255	Ref	**Power Track Installation (Prior to SN 0300065541)**	D
200	0271991	Ref	**Power Track Installation (SN 0300065541 through 0300140000)**	D
201	0100011	AR	Compound, Locking	
202	0100081	AR	Adhesive	
203	0630539	1	Bolt 3/8in-16NC x 3-1/2in	
204	0641606	16	Bolt 3/8in-16NC x 3/4in	
205	0641620	1	Bolt 3/8in-16NC x 2-1/2in	
206	0641622	2	Bolt 3/8in-16NC x 2-3/4in	
207	0641652	2	Bolt 3/8in-16NC x 6-1/2in	
208		Ref	Power Track Assembly Options: (Original Equipment)	
		Ref	**Note: Original Equipment Power Track may have been replaced with a Service Replacement. Visually identify the power track before ordering parts.**	
208A	1180373	NLA	Power Track Assembly (Original Equipment) (Use p/n 1001131731) (See Note at Item 200 Power Track Installation) **(Prior to SN 0300065541)**	
208A	1180375	NLA	Power Track Assembly (Original Equipment) (Use p/n 1001131731) (See Note at Item 200 Power Track Installation) **(SN 0300065541 through 0300140000)**	
208B	7024369	AR	Repair Section for 1180373 & 1180375 (Includes Inner and Outer Links, Joining Bars and Rollers and Assembling Hardware)	
208C	7024370	1	Mounting Feet for 1180373 & 1180375 (Includes Mounting Brackets for Both Ends, 1 Roller Assembly and Assembling Hardware)	
208D	1001131731	1	Power Track Assembly (Service Replacement)	
208E	70003921	AR	Repair Section for 1001131731 (Includes 1 Pin Assembly for each end)	
208F	70003922	1	Mounting Feet for 1001131731 (Includes Both Pair of Feet)	
209	1320289	2	Clamp, Hose	
210	1320294	2	Bar, Clamping	
211	3311605	4	Locknut 3/8in-16NC	
212	3340787	1	Pad, Wear	
213	3340936	2	Pad, Push Tube	
214	3340942	2	Pad, Rubber	
215	3340943	4	Pad, Rubber	
216	3573418	1	Plate, Backing	
217	3900283	4	Screw, Button Head 3/8in-16NC x 3/4in	
218	3900316	4	Screw, Button Head 3/8in-16NC x 1in	
219	4070969	2	Shim	

ITEM	PART NUMBER	QTY	DESCRIPTION	REV
220	4711600	20	Flatwasher 3/8in Thin	
221		Ref	Support, Push Tube Options:	
221	Not Required	0	Support, Push Tube (See Note at Item 200 Power Track Installation) **(Prior to SN 0300065541)**	
221	4846553	1	Support, Push Tube (See Note at Item 200 Power Track Installation) **(SN 0300065541 through 0300140000)**	
222		Ref	Tube, Push Options:	
222	4846420	1	Tube, Push (See Note at Item 200 Power Track Installation) **(Prior to SN 0300065541)**	
222	4846555	1	Tube, Push (See Note at Item 200 Power Track Installation) **(SN 0300065541 through 0300140000)**	
223		Ref	Support, Track Options:	
223	4846421	1	Support, Track (See Note at Item 200 Power Track Installation) **(Prior to SN 0300065541)**	
223	4846558	1	Support, Track (See Note at Item 200 Power Track Installation) **(SN 0300065541 through 0300140000)**	
224	3311608	4	Locknut 3/8in-16NC	
225	1320263	2	Clamp, Cable	

FIGURE 3-4. MAIN BOOM ASSEMBLIES

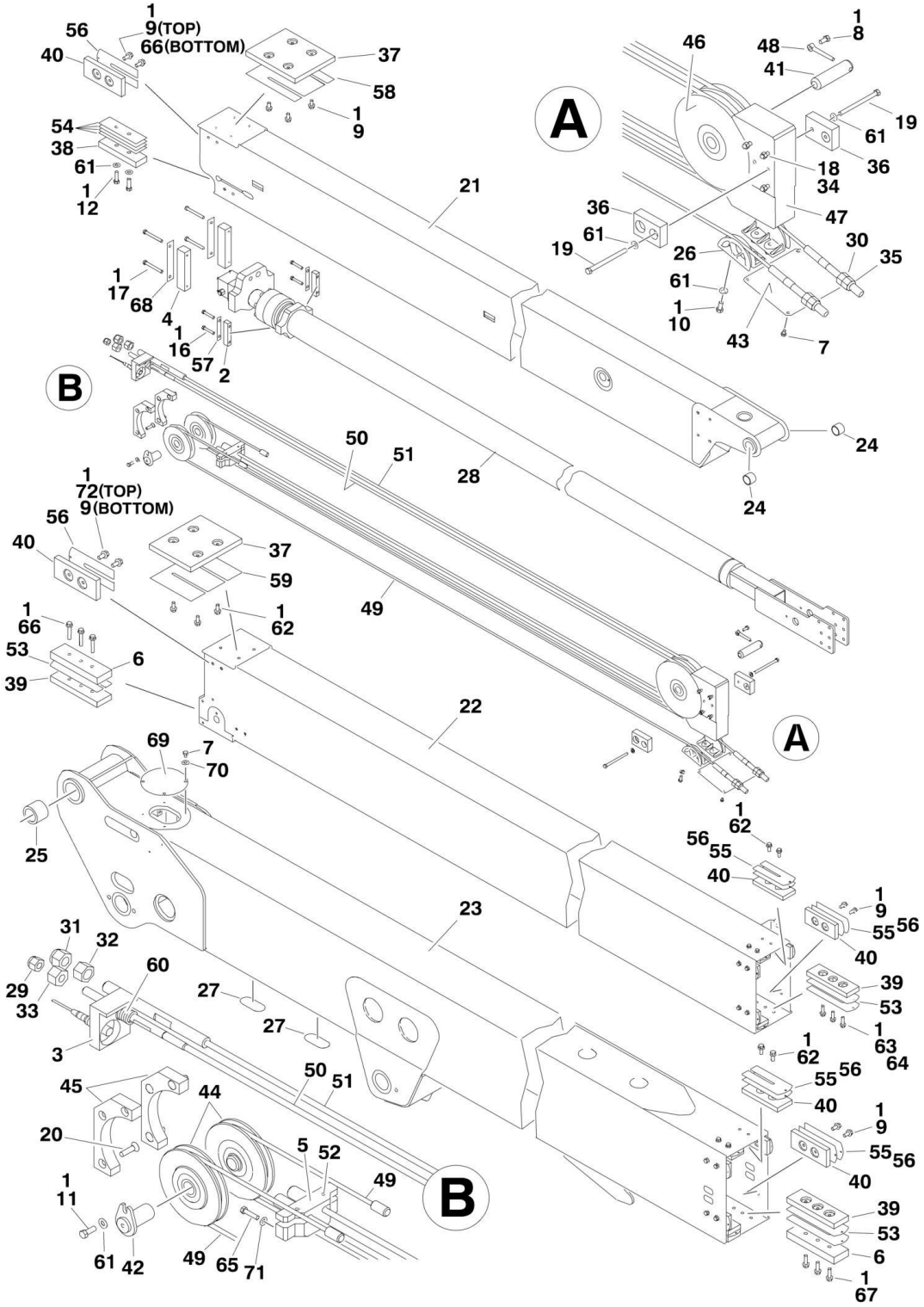

FIGURE 3-4. MAIN BOOM ASSEMBLIES

ITEM	PART NUMBER	QTY	DESCRIPTION	REV
		Ref	**MAIN BOOM ASSEMBLY OPTIONS:**	
	0801274	Ref	**Main Boom Assembly 800S**	J
	0801281	Ref	**Main Boom Assembly 860SJ**	K
1	0100011	AR	Compound, Locking	
2	0561185	2	Block, Telescope Attach	
3	0561445	1	Block, Spring Mounting	
4	0561446	2	Block, Tele Mount	
5	0561447	1	Block, Cable Mount	
6	0561449	3	Block, Spacer	
7	0641403	8	Bolt 1/4in-20NC x 3/8in	
8	0641606	1	Bolt 3/8in-16NC x 3/4in	
9		Ref	Screw 3/8in-16NC x 3/4in Options:	
9	0791606	28	Screw 3/8in-16NC x 3/4in **(Prior to SN 0300074431)**	
9	0811606	28	Screw 3/8in-16NC x 3/4in **(SN 0300074431 through 0300140000)**	
10	0641607	4	Bolt 3/8in-16NC x 3/4in	
11	0641608	2	Bolt 3/8in-16NC x 1in	
12	0641610	4	Bolt 3/8in-16NC x 1-1/4in	
16	0641616	4	Bolt 3/8in-16NC x 2in	
17	0641626	4	Bolt 3/8in-16NC x 3-1/4in	
18	0641634	4	Bolt 3/8in-16NC x 4-1/4in	
19	0641640	2	Bolt 3/8in-16NC x 5in	
20	0741612	6	Screw, Flathead 3/8in-16NC x 1-1/2in	
21		Ref	Fly Weldment Options:	
21	0801275	1	Fly Weldment 800S	
21	0801282	1	Fly Weldment 860SJ	
22		Ref	Mid Weldment Options:	
22	0801276	NLA	Mid Weldment (Use p/n 0801649) 800S **(Prior to SN 0300105391)**	
22	0801649	1	Mid Weldment 800S **(SN 0300105391 through 0300140000)**	
22	0801283	NLA	Mid Weldment 860SJ (Use p/n 0801647) **(Prior to SN 0300105391)**	
22	0801647	1	Mid Weldment 860SJ **(SN 0300105391 through 0300140000)**	
23		Ref	Base Weldment Options:	
23	0801325	1	Base Weldment 800S	
23	0801326	1	Base Weldment 860SJ	
24	0961948	2	Bearing (860SJ Only)	
25	0962297	2	Bearing	
26	1220078	2	Sheave, Block	
27	1670836	8	Cover, Boom Only **(Prior to SN 0300120844)**	
28		Ref	Telescope Cylinder Assembly Options (See CYLINDER SECTION for Breakdown):	
28	1684041	NLA	Telescope Cylinder Assembly (Use p/n 1001228081) (800S) (Original Equipment)	
28	1001177317	NLA	Telescope Cylinder Assembly (Use p/n 1001228081) (800S) (Service Replacement)	
28	1001228081	1	Telescope Cylinder Assembly (800S) (Service Replacement)	
28	1684043	NLA	Telescope Cylinder Assembly (Use p/n 1001228083) (860SJ) (Original Equipment)	
28	1001181588	NLA	Telescope Cylinder Assembly (Use p/n 1001228083) (860SJ) (Service Replacement)	

ITEM	PART NUMBER	QTY	DESCRIPTION	REV
28	1001228083	1	Telescope Cylinder Assembly (860SJ) (Service Replacement)	
29	3300240	1	Nut	
30	3300241	2	Locknut 3/4in-10NC	
31	3300242	1	Locknut 7/8in-9NC	
32	3272401	1	Nut 7/8in-9NC	
33	3272001	1	Nut 5/8in-11NC	
34	3311605	4	Locknut 3/8in-16NC	
35	3312201	2	Nut 3/4in-10NC	
36	3340755	2	Pad, Wear	
37	3340757	2	Pad, Wear	
38	3340758	2	Pad, Rubber	
39	3340871	2	Pad, Wear	
40	3340881	5	Pad, Rubber	
41	3422417	1	Pin, Extend Sheave	
42	3422424	2	Pin	
43	3539622	1	Plate, Cover	
44	3580243	2	Sheave, Retract	
44	0961951	1	Bushing	
45	3580249	2	Guard, Sheave	
46	3580288	1	Sheave, Extend	
46	0961951	2	Bushing	
47	3580289	1	Guard, Sheave	
48	3841143	1	Keeper, Pin	
49		Ref	Cable, Wire Rope	
49	3890013	2	Cable, Wire Rope 800S	
49	3890016	2	Cable, Wire Rope 860SJ	
50		Ref	Cable, Wire Rope	
50	3890014	1	Cable, Wire Rope 800S	
50	3890017	1	Cable, Wire Rope 860SJ	
51		Ref	Cable, Wire Rope	
51	3890015	1	Cable, Wire Rope 800S	
51	3890018	1	Cable, Wire Rope 860SJ	
52	3951608	2	Setscrew 3/8in-16NC x 1in	
53	4070863	5	Shim (#11 Gauge)	
54	4070895	8	Shim (#16 Gauge)	
55	4070897	10	Shim (#18 Gauge)	
56	4070898	22	Shim (#11 Gauge)	
57	4070929	2	Shim (#16 Gauge)	
58	4070939	1	Shim (#16 Gauge)	
59	4070940	1	Shim (#16 Gauge)	
60	4160149	1	Spring, Torsion	
61	4711600	12	Flatwasher 3/8in Thin	
62		Ref	Screw 3/8in-16NC x 7/8in Options:	
62	0791607	8	Screw 3/8in-16NC x 7/8in **(Prior to SN 0300074431)**	
62	0811607	8	Screw 3/8in-16NC x 7/8in **(SN 0300074431 through 0300140000)**	
63		Ref	Screw 3/8in-16NC x 1in Options:	
63	0791608	6	Screw 3/8in-16NC x 1in **(Prior to SN 0300074431)**	
63	0811608	6	Screw 3/8in-16NC x 1in **(SN 0300074431 through 0300140000)**	
64		Ref	Screw 3/8in-16NC x 1-1/4in Options:	
64	0791610	6	Screw 3/8in-16NC x 1-1/4in **(Prior to SN 0300074431)**	

ITEM	PART NUMBER	QTY	DESCRIPTION	REV
64	0811610	6	Screw 3/8in-16NC x 1-1/4in **(SN 0300074431 through 0300085466)**	
65		Ref	Screw Options:	
65	0791612	2	Screw 3/8in-16NC x 1-1/2in **(Prior to SN 0300130875)**	
65	0641613	2	Screw 3/8in-16NC x 1-5/8in **(SN 0300130875 through 0300140000)**	
66		Ref	Screw 3/8in-16NC x 1-3/4in Options:	
66	0791614	6	Screw 3/8in-16NC x 1-3/4in **(Prior to SN 0300074431)**	
66	0811614	6	Screw 3/8in-16NC x 1-3/4in **(SN 0300074431 through 0300140000)**	
67		Ref	Screw 3/8in-16NC x 2in Options:	
67	0791616	6	Screw 3/8in-16NC x 2in **(Prior to SN 0300074431)**	
67	0811616	6	Screw 3/8in-16NC x 2in **(SN 0300074431 through 0300140000)**	
68	4071020	2	Shim (#16 Gauge)	
69	1120510	1	Cover, Pin	
70	4751400	4	Flatwasher 1/4in Regular	
71	4891600	2	Flatwasher 3/8in Hardened	
72	0641613	4	Screw 3/8in-16NC x 1-5/8in	

FIGURE 3-5. ROTATOR ASSEMBLY

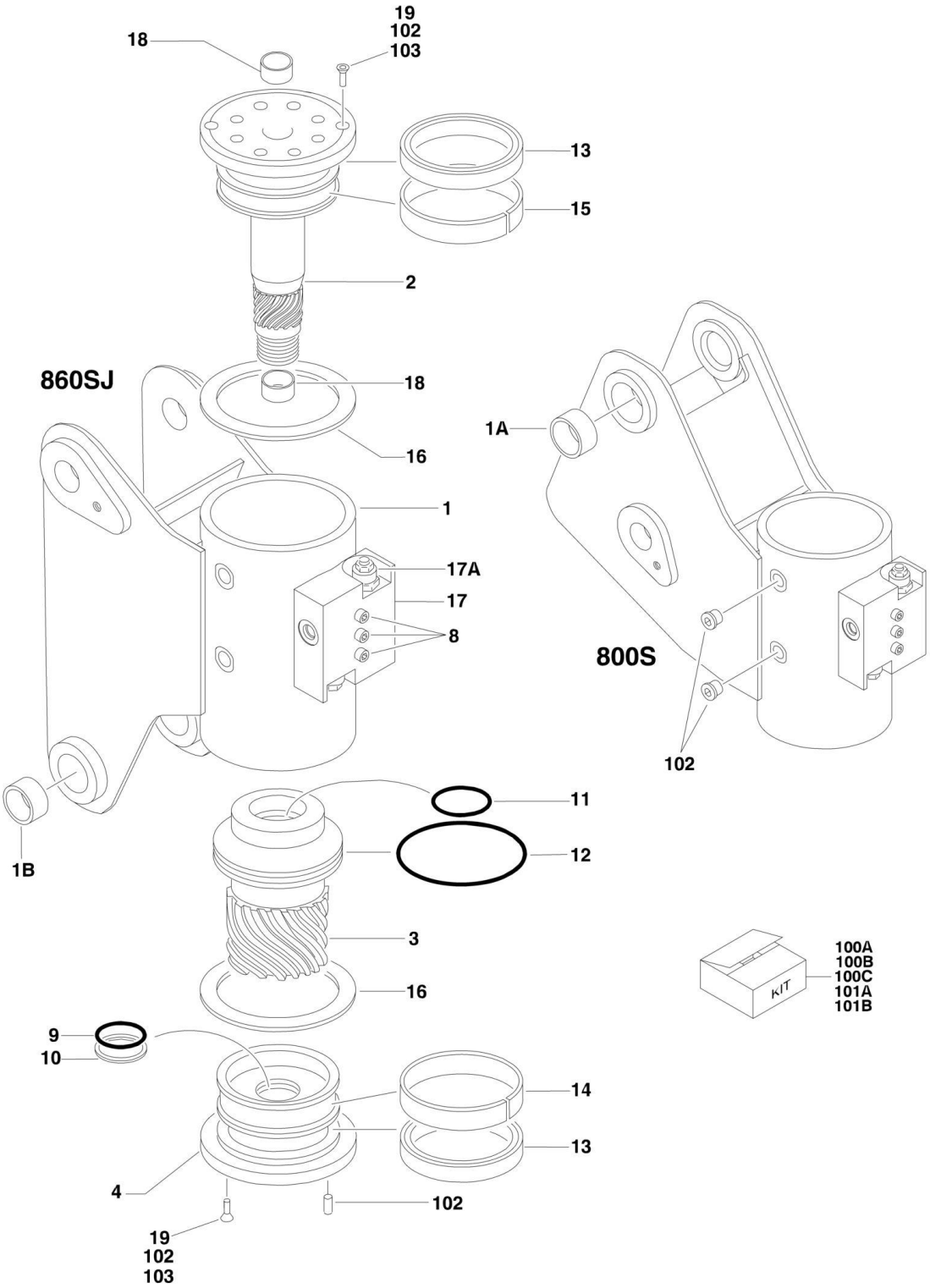

FIGURE 3-5. ROTATOR ASSEMBLY

ITEM	PART NUMBER	QTY	DESCRIPTION	REV
		Ref	**ROTATOR ASSEMBLY**	
	0060061	Ref	**Rotator Assembly 800S**	I
	0060048	Ref	**Rotator Assembly 860SJ**	H
1		Ref	Case/Bracket Weldment	
1	7017175	1	0060061 Rotator	
1	7017141	1	0060048 Rotator	
1A		Ref	Bushing Options: (Top)	
1A	0961951	2	0060061 Rotator	
1A	Not Required	0	0060048 Rotator	
1B		Ref	Bushing Options: (Bottom)	
1B	Not Required	0	0060061 Rotator	
1B	0961947	2	0060048 Rotator	
2		Ref	Shaft Options:	
2	7017162	1	0060061 Rotator	
2	7017140	1	0060048 Rotator	
3		Ref	Sleeve, Piston Options:	
3	7017163	1	0060061 Rotator	
3	7017139	1	0060048 Rotator	
4	7017164	1	Cap, End	
8	See Note	NSS	Bolt 1/4in-20NC x 1-1/2in (Grade 8) (Note: Not Available for Purchase)	
9	See Note	NSS	Seal, Cap (Note: Use Items 100A, 100B & 100C)	
10	See Note	NSS	Ring, Back-up Cap (Note: Use Items 100A, 100B & 100C)	
11	See Note	NSS	Seal, Rod (Note: Use Items 100A, 100B & 100C)	
12	See Note	NSS	Seal, Piston (Note: Use Items 100A, 100B & 100C)	
13	See Note	NSS	Packing, Bearing (Note: Use Items 100A, 100B & 100C)	
14	See Note	NSS	Bearing, Cap (Note: Use Items 101A & 101B)	
15	See Note	NSS	Bearing, Shaft (Note: Use Items 101A & 101B)	
16	See Note	NSS	Thrustwasher (Note: Use Items 101A & 101B)	
17		Ref	Counterbalance Valve Assembly Options:	
17	7017172	1	0060061 Rotator	
17	7017125	1	0060048 Rotator	
17A		Ref	Valve, Cartridge Options:	
17A	7017192	2	0060061 Rotator	
17A	7011323	2	0060048 Rotator	
17A		Ref	Seal Kit (1 Per Assembly)	
17A	See Note	NSS	7017192 Cartridge (Note: Use p/n 7017192)	
17A	2900770	2	7011323 Cartridge	
18	7017136	2	Bushing	
19	70001697	6	Screw, Countersunk (0060048 Rotator)	
		Ref	**KIT OPTIONS:**	
100		Ref	Seal Kit Options: (Includes Items 9-13 & 102)	
100A	7017158	1	0060061 Rotators (Standard)	
100B	70000342	1	0060061 Rotators (Low Temperature)	
100C	7017137	1	0060048 Rotator	
101		Ref	Bearing Kit Options: (Includes Items 14-16)	
101A	7017159	1	0060061 Rotators	
101B	7017138	1	0060048 Rotator	
102	7017142	1	Hardware Kit (Includes End Cap Dowel Pins, Plugs and 103)	
103	70001697	4	Screw, Countersunk 1/4in-20NC x 3/8in (Grade 8)	

FIGURE 3-6. PLATFORM SUPPORT AND CONTROL VALVES INSTALLATIONS

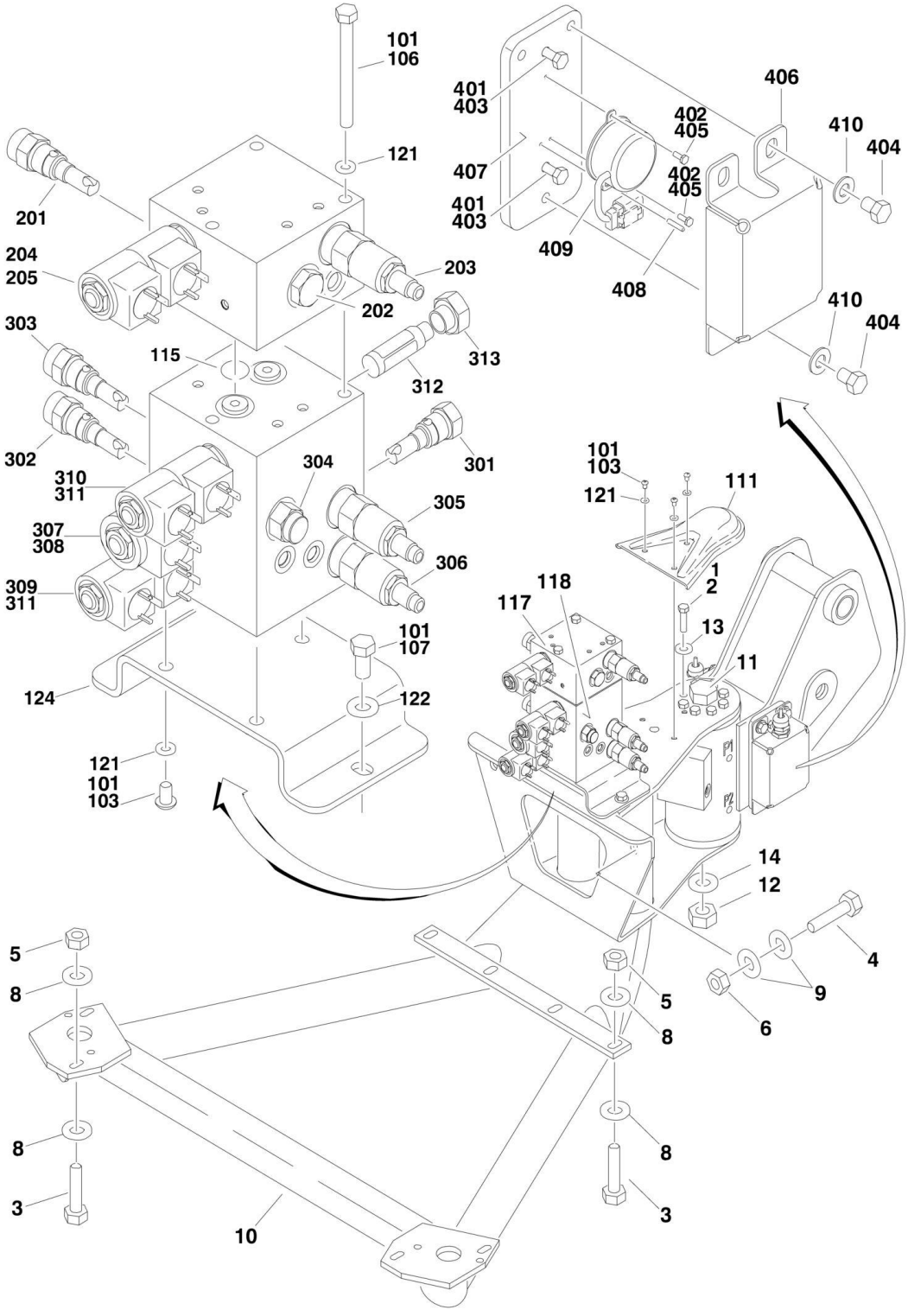

FIGURE 3-6. PLATFORM SUPPORT AND CONTROL VALVES INSTALLATIONS

ITEM	PART NUMBER	QTY	DESCRIPTION	REV
		Ref	**PLATFORM SUPPORT INSTALLATION**	
	0270015	Ref	**Front Entry Platform Machines (Australian Spec)**	C
	0270532	Ref	**Front Entry Platform Machines (CE Spec)**	B
	0272070	Ref	**Side Entry Platform Machines without Load Sensing and without SkyGlazier**	E
	See Note	Ref	**Side Entry Platform Machines without Load Sensing and with SkyGlazier (Note: For Replacement Parts, Contact JLG Customer Service and Request Manual p/n 3124242)**	
	See Note	Ref	**Side Entry Platform Machines with Load Sensing and without SkyGlazier (Note: For Replacement Parts, Contact JLG Customer Service and Request Manual p/n 3124287)**	
	See Note	Ref	**Side Entry Platform Machines with Load Sensing and with SkyGlazier (Note: For Replacement Parts, Contact JLG Customer Service and Request Manual p/n 3124287)**	
1	0100011	AR	Compound, Locking	
2	0641606	8	Bolt 3/8in-16NC x 3/4in (Use with p/n 0270015/0270532)	
2	0681608	8	Bolt 3/8in-16NC x 1in (Grade 8) (Use with p/n 0272070)	
3	0681610	6	Bolt 3/8in-16NC x 1-1/4in (Grade 8) (Use with p/n 0270015/ 0270532)	
3	0641812	8	Bolt 1/2in-13NC x 1-1/2in (Use with p/n 0272070)	
4	0641820	2	Bolt 1/2in-13NC x 2-1/2in (Use with p/n 0270015/0270532 Only)	
5	3311605	AR	Locknut 3/8in-16NC	
6	3311805	2	Locknut 1/2in-13NC (Use with p/n 0270015/0270532 Only)	
8	4751600	12	Flatwasher 3/8in Regular (Use with p/n 0270015/0270532)	
8	4891800	8	Flatwasher 1/2in Hardened (Use with p/n 0272070)	
9	4751800	4	Flatwasher 1/2in Regular (Use with p/n 0270015/0270532 Only)	
10		Ref	Support Weldment Options:	
10	4846158	1	Australian Spec with Front Entry Platform	
10	4846573	1	Australian Spec with Side Entry Platform	
10	4846298	1	CE Spec with Front Entry Platform	
10	See Note Above	1	CE Spec with Side Entry Platform	
11	0642684	1	Bolt 1in-8NC x 10 1/2in (Use with p/n 0272070 Only)	
12		Ref	Locknut 1in-8NC Options (Use with p/n 0272070 Only):	
12	3272605	1	Locknut 1in-8NC **(Prior to SN 0300119693)**	
12	3300243	1	Locknut 1in-8NC **(SN 0300119693 through 0300140000)**	
13	4891600	8	Flatwasher 3/8in Hardened (Use with p/n 0272070 Only)	
14	4892600	1	Flatwasher 1in Hardened (Use with p/n 0272070 Only)	
		Ref	**CONTROL VALVE INSTALLATIONS**	
	0270901	Ref	**Control Valve Installations 800S (Prior to SN 0300083331)**	G
	0274173	Ref	**Control Valve Installations 800S (SN 0300083331 through 0300087261)**	B
	0274644	Ref	**Control Valve Installations 800S (SN 0300087262 through 0300140000)**	D
	0270902	Ref	**Control Valve Installations 860SJ (Prior to SN 0300083331)**	F
	0274174	Ref	**Control Valve Installations 860SJ (SN 0300083331 through 0300087261)**	B
	0274645	Ref	**Control Valve Installations 860SJ (SN 0300087262 through 0300140000)**	D
101	0100011	AR	Compound, Locking	
103	0630467	6	Screw, Button Head	
106	0641526	3	Bolt 5/16in-18NC x 3-1/4in (860SJ Only)	
107	0641606	2	Bolt 3/8in-16NC x 3/4in	

ITEM	PART NUMBER	QTY	DESCRIPTION	REV
111	1670964	1	Cover	
115	3780117	2	O-Ring (860SJ Only)	
117		Ref	Valve, Jib (See Items 201-205 for Breakdown)	
117	Not Required	0	Valve, Jib 800S	
117	4641186	1	Valve, Jib 860SJ	
118		Ref	Valve, Level/Rotate Options (See Items 301-313 for Breakdown):	
118	4641185	1	Valve, Level/Rotate **(Prior to SN 0300069206)**	
118	4641251	1	Valve, Level/Rotate **(SN 0300069206 through 0300140000)**	
121	4711500	AR	Flatwasher 5/16in Thin	
122	4711600	2	Flatwasher 3/8in Thin	
124	4846218	1	Plate, Valve Mounting	
	4641186	Ref	**JIB VALVE ASSEMBLY (860SJ ONLY)**	B
201	7012965	1	Valve, Cartridge	
201	7012953	1	Seal Kit - 7012965 Valve	
202	7010542	1	Valve, Load Shuttle	
202	7010543	1	Seal Kit - 7010542 Valve	
203	7023915	1	Valve, Relief	
203	7012967	1	Seal Kit - 7023915 Valve	
204	7023922	1	Valve, Solenoid	
204	7017402	1	Seal Kit - 7017452 Valve	
205	7012944	2	Coil	
		Ref	**LEVEL/ROTATE VALVE ASSEMBLIES**	
	4641185	Ref	**Level/Rotate Valve Assemblies (Prior to SN 0300069206)**	C
	4641251	Ref	**Level/Rotate Valve Assemblies (SN 0300069206 through 0300140000)**	A
301	7012955	1	Valve, Check	
301	7012967	1	Seal Kit - 7012955 Valve	
302	7012965	1	Valve, Flow Regulator (Valve 4641185)	
302	7023984	1	Valve, Flow Regulator (Valve 4641251)	
302	7012953	1	Seal Kit - 7012965/7023984 Valves	
303	7012989	1	Valve, Flow Regulator	
303	7012953	1	Seal Kit - 7012989 Valve	
304	7023924	1	Valve, Flow Regulator (Valve 4641185)	
304	7012965	1	Valve, Flow Regulator (Valve 4641251)	
304	7012953	1	Seal Kit - 7023924/7012965 Valves	
305	7023983	1	Valve, Relief (Level Up)	
305	7012967	1	Seal Kit - 7023983 Valve	
306	7023911	1	Valve, Relief (Level Down)	
306	7012967	1	Seal Kit - 7023911 Valve	
307	7017479	1	Valve, Solenoid (Pressure)	
307	7012518	1	Seal Kit - 7017479 Valve	
308	7012943	1	Coil	
309	7023922	1	Valve, Solenoid (Platform Level)	
309	7017402	1	Seal Kit - 7023922 Valve	
310	7017452	1	Valve, Solenoid (Rotator)	
310	7017402	2	Seal Kit - 7017452 Valve	
311	7012944	4	Coil	
312	7021616	1	Filter (Valve 4641251)	
313	7024832	1	Plug (Valve 4641251)	
		Ref	**LEVEL SENSOR SWITCH INSTALLATION OPTIONS:**	
	0271381	Ref	**Level Sensor Switch Installation (Prior to SN 0300075873)**	F
	0273695	Ref	**Level Sensor Switch Installation (SN 0300075873 through**	A

ITEM	PART NUMBER	QTY	DESCRIPTION	REV
			0300140000)	
401	0100011	AR	Compound, Locking	
402	0100035	AR	Compound, Locking	
403	0641406	4	Bolt 1/4in-20NC x 3/4in	
404	0641604	6	Bolt 3/8in-16NC x 1/2in	
405		Ref	Screw #6-32NC x 3/8in Options:	
405	0720603	4	Screw #6-32NC x 3/8in **(Prior to SN 0300075873)**	
405	0720606	4	Screw #6-32NC x 3/8in **(SN 0300075873 through 0300140000)**	
406	1671044	2	Cover, Sensor	
407		Ref	Mount, Sensor Options:	
407	3200436	2	Mount, Sensor **(Prior to SN 0300066741)**	
407	3200449	2	Mount, Sensor **(SN 0300066741 through 0300140000)**	
408	3440410	2	Rollpin	
409		Ref	Switch, Tilt Sensor Options:	
409	4360503	NLA	Switch, Tilt Sensor (Use p/n 4360544) **(Prior to SN 0300066741)**	
409	4360528	NLA	Switch, Tilt Sensor (Use p/n 4360544) **(SN 0300066741 through 0300075872)**	
409	4360544	2	Switch, Tilt Sensor **(SN 0300075873 through 0300140000)**	
410	4711600	6	Flatwasher 3/8in Thin	

FIGURE 3-7. BOOM CABLE CLAMPS INSTALLATIONS

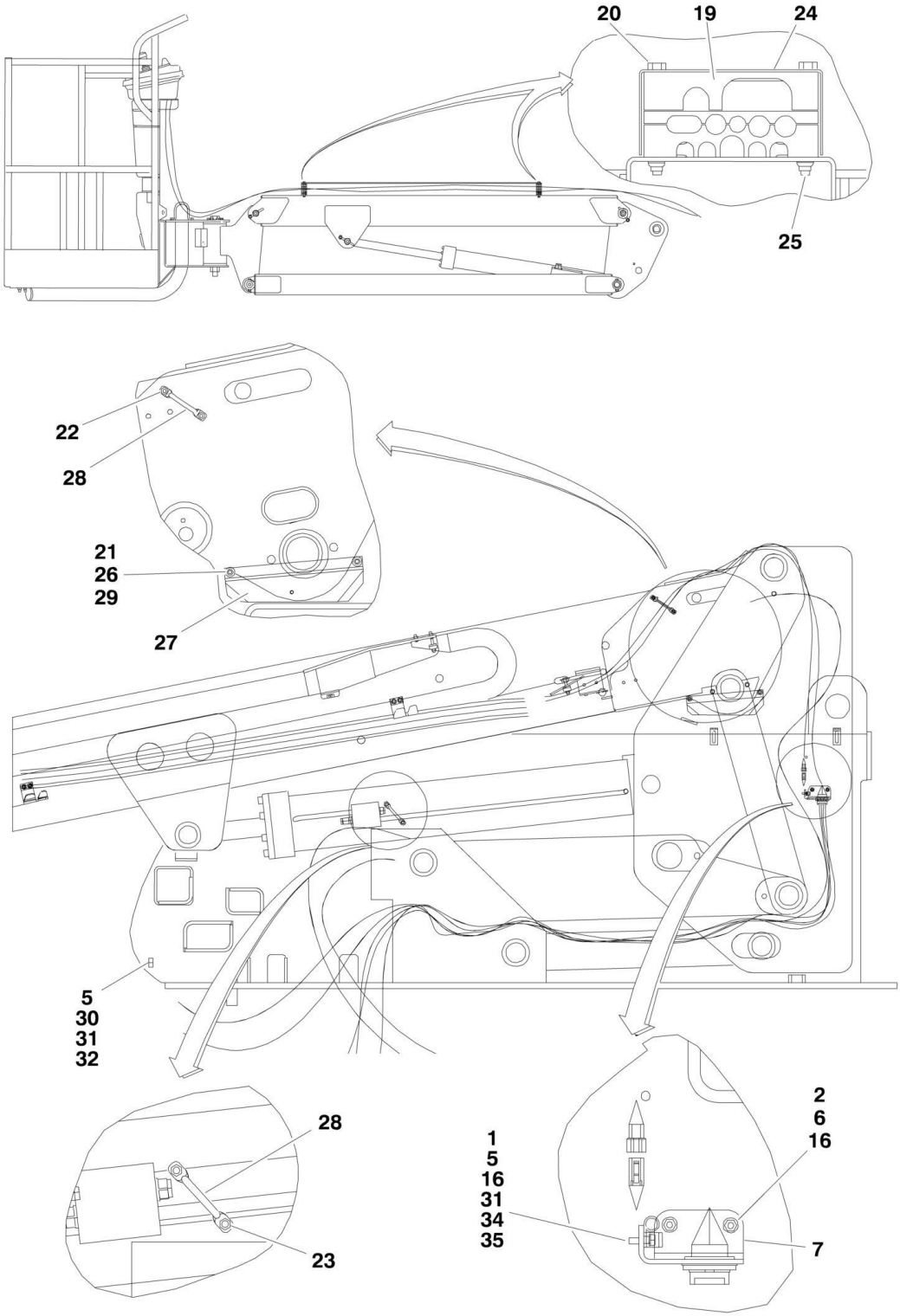

FIGURE 3-7. BOOM CABLE CLAMPS INSTALLATIONS

ITEM	PART NUMBER	QTY	DESCRIPTION	REV
		Ref	**BOOM CABLE CLAMPS INSTALLATION**	
	0271323	Ref	**Boom Cable Clamps Installation 800S**	I
	0272388	Ref	**Boom Cable Clamps Installation 800S (SkyWelder)**	F
	0271325	Ref	**Boom Cable Clamps Installation 860SJ**	K
	0272389	Ref	**Boom Cable Clamps Installation 860SJ (SkyWelder)**	E
1	0641408	1	Bolt 1/4in-20NC x 1in	
2	0641412	2	Bolt 1/4in-20NC x 1-1/2in	
5	1320223	2	Clamp	
7	3573047	1	Plate, Terminal Mounting	
16	4711400	5	Flatwasher 1/4in Narrow	
19	0561484	2	Block, Clamp (860SJ Only)	
20	0641424	4	Bolt 1/4in-20NC x 3in (860SJ Only)	
21	0641511	2	Bolt 5/16in-18NC x 1-3/8in	
22	0641604	2	Bolt 3/8in-16NC x 1/2in	
23	0641607	2	Bolt 3/8in-16NC x 7/8in	
24	1671034	1	Cover, Jib (860SJ Only)	
25	2080044	4	Rivnut (860SJ Only)	
26	3311505	2	Locknut 5/16in-18NC	
27	3573296	1	Plate, Hose Cover	
28	3841340	2	Loop, Hose	
29	4751500	4	Flatwasher 5/16in	
30	0641410	1	Bolt 1/4in-20NC x 1-1/4in	
31	3311405	4	Locknut 1/4in-20NC	
32	4751400	1	Flatwasher 1/4in	
34	1320061	1	Clamp	
35	1320169	NLA	Clamp (Use p/n 1320041) (SkyWelder Only)	

SECTION 4 - PLATFORM

FIGURE 4-1. PLATFORM ASSEMBLIES (FRONT ENTRY PLATFORM)

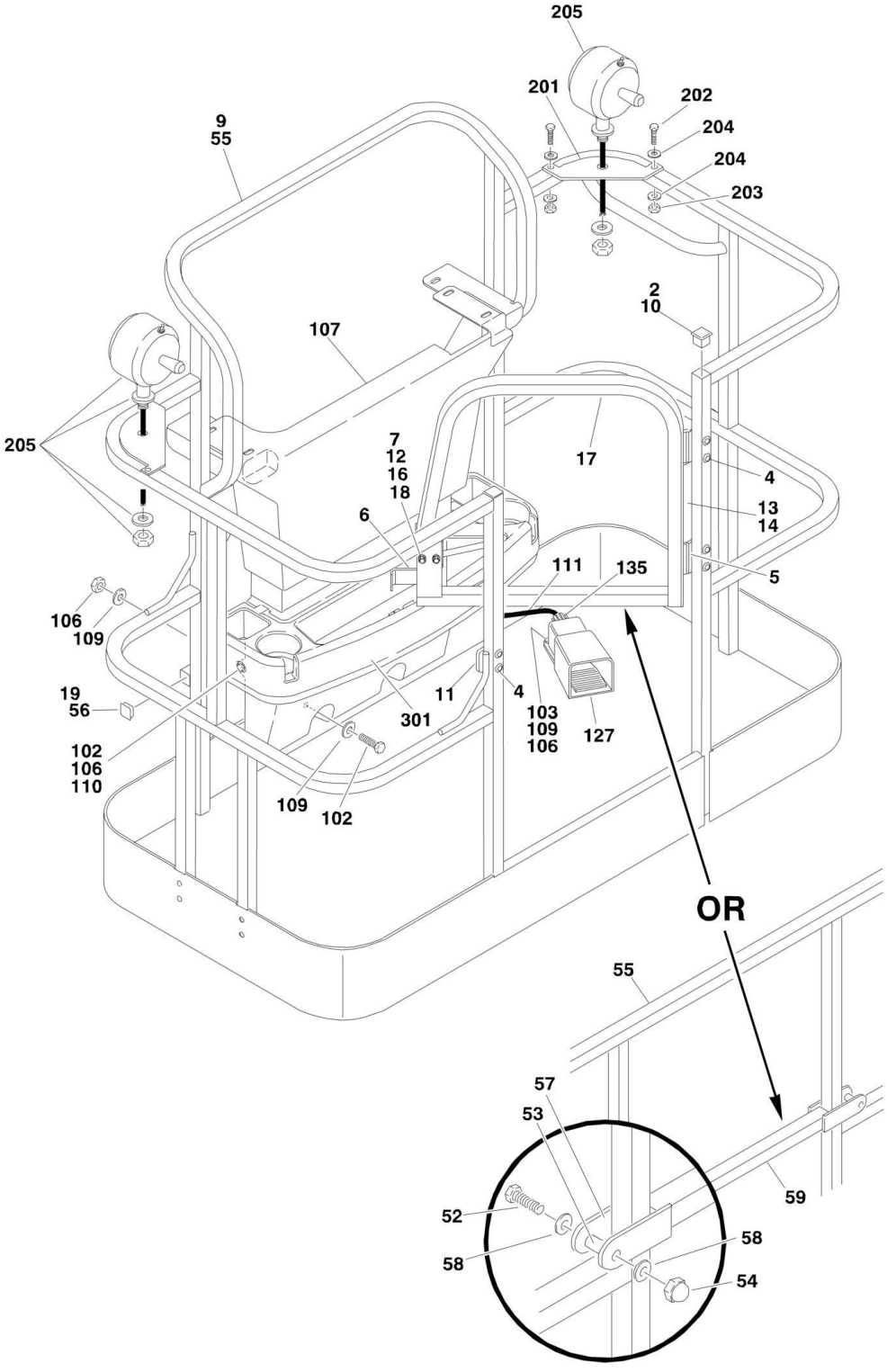

FIGURE 4-1. PLATFORM ASSEMBLIES (FRONT ENTRY PLATFORM)

ITEM	PART NUMBER	QTY	DESCRIPTION	REV
		Ref	**PLATFORM ASSEMBLIES:**	
		Ref	**Australian Specs**	
	3510816	Ref	**8ft (2.44m) with Self-Closing Gate/No Mesh**	A
	3510837	Ref	**8ft (2.44m) with Self-Closing Gate/Mesh to Top Rail**	B
	3510821	Ref	**6ft (1.83m) with Self-Closing Gate/No Mesh**	A
		Ref	**Note: Replacement Decals Must be Ordered Separately - See DECAL SECTION.**	
2	0100074	AR	Sealant, RTV Silicone	
4	2080040	13	Fastener, Huck	
5		Ref	Hinge Options:	
5	2600216	2	Standard Gate	
5	2600219	2	Self-Closing Gate **(Prior to SN 0300068577)**	
5	2600287	2	Self-Closing Gate **(SN 0300068577 through 0300140000)**	
6	2940074	1	Latch	
7	3311001	4	Nut #10-24NC	
9	See Note	NSS	Platform (Note: Not Available - Purchase Complete Platform Assembly)	
10	3520072	3	Cap-Plug	
11	3539685	1	Plate, Latch	
12	3911008	4	Screw #10-24NC x 1in	
13	4060803	6 in/15cm	Trim	
14	4220165	1	Stop, Gate	
16	4751000	8	Flatwasher #10 Regular	
17		Ref	Gate Options:	
17	4845327	1	Standard Gate	
17	4845426	1	Self-Closing Gate	
17	4845951	1	Self-Closing Gate/Mesh to Top Rail	
18	4761000	4	Lockwasher #10	
19	3520172	2	Plug	
19	0100010	AR	Adhesive	
		Ref	**CE Specs**	
	3510774	Ref	**8ft (2.44m) with Drop Bar**	A
	3510819	Ref	**6ft (1.83m) with Drop Bar**	A
		Ref	**Note: Replacement Decals Must be Ordered Separately - See DECAL SECTION.**	
52	0641418	2	Bolt 1/4in-20NC x 2-1/4in	
53	0961845	2	Bushing	
54	3300151	2	Nut, Acorn 1/4in-20NC	
55	See Note	NSS	Platform (Note: Not Available - Purchase Complete Platform Assembly)	
56	3520172	2	Cap-Plug	
56	0100010	AR	Adhesive	
57	4420055	AR	Tape	
58	4740411	4	Washer, Nylon	
59	4845288	1	Bar, Slide	
	0270889	Ref	**FOOTSWITCH AND COVERS INSTALLATION**	C
102	0641406	AR	Bolt 1/4in-20NC x 3/4in	
103	0641408	3	Bolt 1/4in-20NC x 1in	
106	3311405	AR	Locknut 1/4in-20NC	
107	3380434	1	Panel, Molded	

SECTION 4 - PLATFORM

ITEM	PART NUMBER	QTY	DESCRIPTION	REV
109	4740362	7	Washer, Fender	
110	4751400	4	Flatwasher 1/4in Regular **(Prior to SN 0300096735)**	
111	1060918	7 ft/2.14m	Cable, Electrical - 18/3	
127	See Note	Ref	Footswitch (Note: See PLATFORM ASSEMBLIES - SIDE ENTRY PLATFORM for Service Parts)	
135	4460071	1	Connector, Strain Relief	
	0270814	Ref	**WORKLIGHTS INSTALLATION (OPTIONAL)**	3-E
201	3536089	2	Plate, Mounting	
202	0641414	4	Bolt 1/4in-20NC x 1-3/4in	
203	3311405	4	Locknut 1/4in-20NC	
204	4711400	8	Flatwasher 1/4in Thin	
205	2920140	2	Worklight Assembly	
205	7016399	2	Bulb, Replacement (1 per Assembly)	
206	4240099	10	Tie-Strap (Not Shown)	
207	2820035	9 ft/2.75m	Loom, Vinyl (Not Shown)	
209	4460598	1	Connector, Strain Relief (Not Shown - Located at Console Box)	
		Ref	**TRAY INSTALLATIONS (OPTIONAL)**	
301	1580012	1	Tray, Storage (Center)	
302	1580013	1	Tray, Storage (Rail Mounted - Not Shown)	

SECTION 4 - PLATFORM

FIGURE 4-2. PLATFORM ASSEMBLIES - SIDE ENTRY (SN 0300067916 through 0300140000)

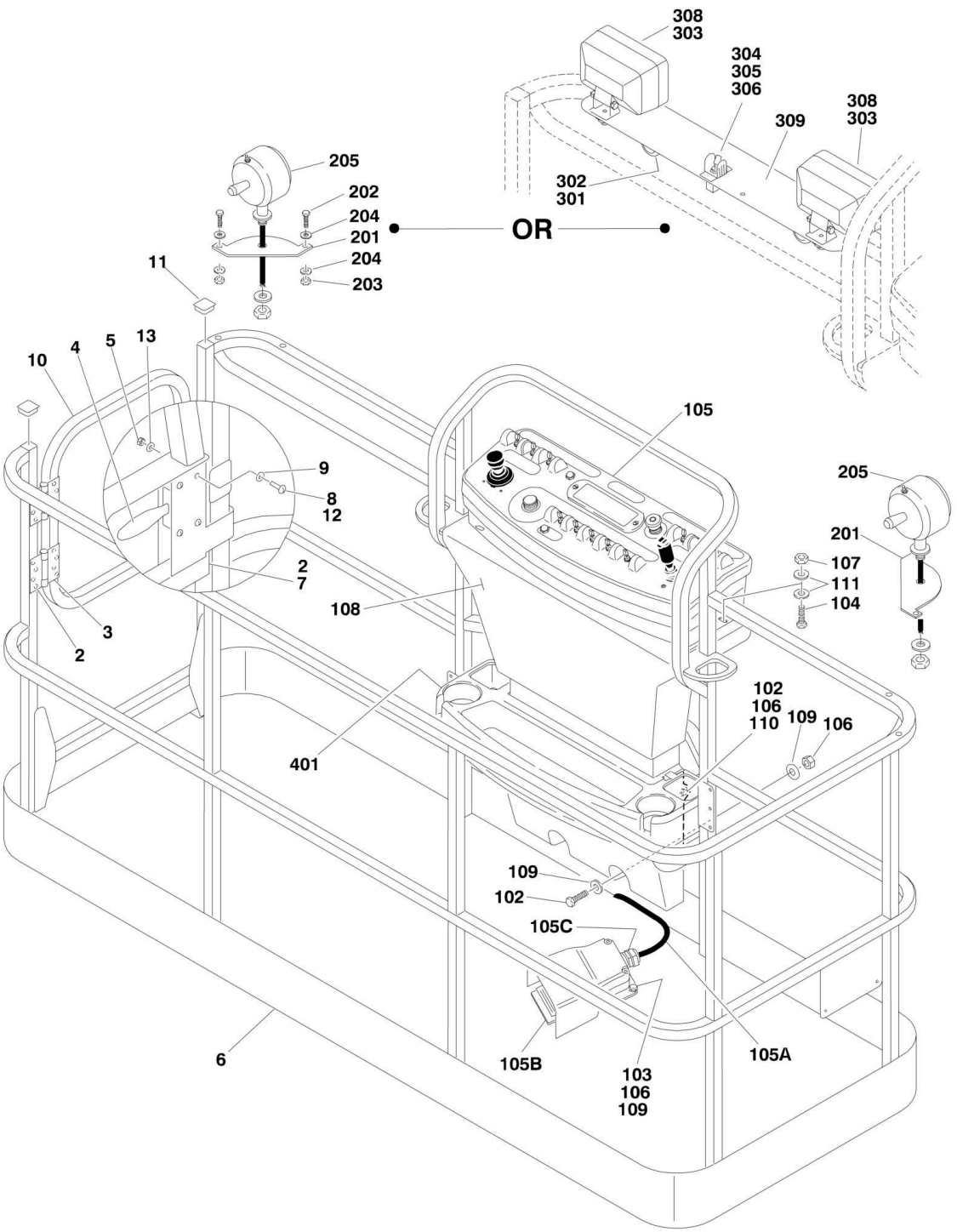

FIGURE 4-2. PLATFORM ASSEMBLIES - SIDE ENTRY (SN 0300067916 through 0300140000)

ITEM	PART NUMBER	QTY	DESCRIPTION	REV
		Ref	**PLATFORM ASSEMBLIES:**	
	3510830	Ref	**Platform 30in x 4ft (76cm x 1.22m) with No Mesh (Use p/n 1001144027)**	B-M
	3510831	Ref	**Platform 30in x 5ft (76cm x 1.5m) with No Mesh (Use p/n 1001144026)**	B-L
	3510833	Ref	**Platform 36in x 6ft (91.5cm x 1.83m) with No Mesh (Use p/n 1001144024)**	B-I
	3510822	Ref	**Platform 36in x 8ft (91.5cm x 2.44m) with No Mesh (Use p/n 1001144023)**	B-J
		Ref	**Note: Original Equipment platform may have been replaced with Service Replacement platform. Identify platform before ordering parts.**	
		Ref	**Note: Replacement Decals Must be Ordered Separately - See DECAL SECTION.**	
1	0100040	AR	Sealant, Adhesive **(SN 0300067916 through 0300073442)**	
2	2080040	16	Fastener, Huck	
3	2600281	2	Hinge, Self-Closing	
4	2940074	1	Latch	
5	3311001	4	Nut #10-24NC **(SN 0300067916 through 0300077329)**	
6	See Note	NSS	Platform (Note: Not Available - Purchase Complete Platform Assembly)	
7	3520072	1	Cap-Plug	
8		Ref	Screw Options:	
8	3911008	4	Screw #10-24NC x 1in **(SN 0300067916 through 0300076321)**	
8	3900205	4	Screw #10-24NC x 5/8in **(SN 0300076322 through 0300077328)**	
8	3820020	4	Rivet, Pop **(SN 0300077329 through 0300140000)**	
9	4751000	4	Flatwasher #10 **(SN 0300067916 through 0300077329)**	
10		Ref	Gate Options:	
10	4846452	1	Gate for Platform p/ns 3510822, 3120830, 3510831 & 3510833	
10	1001144629	1	Gate for Platform p/ns 1001144023, 1001144024, 1001144026 & 1001144027	
11	3520198	2	Cap-Plug **(SN 0300073442 through 0300140000)**	
12	0100011	AR	Compound, Locking **(SN 0300073442 through 0300077329)**	
13	4761000	4	Lockwasher #10 **(SN 0300073442 through 0300077329)**	
		Ref	**FOOTSWITCH AND COVERS INSTALLATION**	
	0270889	Ref	**Footswitch and Covers Installation (SN 0300067916 through 0300137912)**	D
	1001108867	Ref	**Footswitch and Covers Installation (SN 0300137913 through 0300139079)**	B
	1001114897	Ref	**Footswitch and Covers Installation (SN 0300139080 through 0300140000)**	B
102	0641406	AR	Bolt 1/4in-20NC x 3/4in	
103	0641408	3	Bolt 1/4in-20NC x 1in	
104	0641610	4	Bolt 3/8in-16NC x 1-1/4in	
105		Ref	Platform Console Assembly Options (See PLATFORM CONSOLE ASSEMBLY for Breakdown):	
105	0861416	1	Console Assembly **(SN 0300067916 through 0300137912)**	
105	1001108866	1	Console Assembly **(SN 0300137913 through 0300139079)**	
105	1001114896	1	Console Assembly **(SN 0300139080 through 0300140000)**	
105A	1060918	7 ft/2.14m	Cable, Electrical - 18/3	

ITEM	PART NUMBER	QTY	DESCRIPTION	REV
105B	0272970	1	Footswitch Assembly (Includes Footswitch and Items 105A & 105C) (See ELECTRICAL SECTION for Further Breakdown)	A
		Ref	**Note: Assembly p/n 0272970 may use either p/n 4360031 or p/n 1001117320. If Original Equipment was replaced as an "assembly," p/n 1001117320 may have been used as part of the Service Replacement. Identify component before ordering parts.**	
105B		Ref	Footswitch Less Cable Options:	
105B	4360031	1	Original Equipment	
105B	1001117320	1	Service Replacement	
105B		Ref	Block, Contact Options (See Note Above):	
105B	7000625	2	Contact Block for 4360031 Footswitch	
105B	70003483	1	Contact Block for 1001117320 Footswitch	
105C	4460071	1	Connector, Strain Relief	
106	3311405	AR	Locknut 1/4in-20NC	
107	3311605	4	Locknut 3/8in-16NC	
108	3380434	1	Panel, Molded	
109	4740362	7	Washer, Fender	
110	4751400	4	Flatwasher 1/4in Regular **(SN 0300067916 through 0300096735)**	
111	4751600	8	Flatwasher 3/8in Regular	
		Ref	**WORKLIGHTS INSTALLATIONS (OPTIONAL)**	
	0270814	Ref	**Worklights Installations 800S/860SJ (SN 0300067916 through 0300074424)**	3-E
	0273472	Ref	**Worklights Installations 800S (SN 0300074425 through 0300140000)**	D
	0273483	Ref	**Worklights Installations 860SJ (SN 0300074425 through 0300140000)**	D
201	3536089	2	Plate, Mounting	
202		Ref	Hardware Options:	
202	0641414	4	Bolt 1/4in-20NC x 1-3/4in **(SN 0300067916 through 0300112473)**	
202	2080040	4	Huck Fastener **(SN 0300112474 through 0300140000)**	
203	3311405	4	Locknut 1/4in-20NC **(SN 0300067916 through 0300112474)**	
204	4711400	8	Flatwasher 1/4in Thin **(SN 0300067916 through 0300112474)**	
205	2920140	2	Worklight	
205	7016399	2	Bulb, Replacement (1 Per Worklight)	
206	4240099	10	Tie-Strap (Not Shown)	
207	2820035	9	Loom, Vinyl (Not Shown)	
209		Ref	Connector, Strain Relief Options (Not Shown - Located at Console Box):	
209	4460598	1	Connector, Strain Relief **(SN 0300067916 through 0300074424)**	
209	4460426	1	Connector, Strain Relief **(SN 0300074425 through 0300140000)**	
	0272058	Ref	**FLOODLIGHTS INSTALLATION**	B
301	0641518	2	Bolt 5/16in-18NC x 2-1/4in	
302	2560173	2	Handle, Star Knob	
303	2920157	2	Floodlight	
303	7024452	2	Bulb, Replacement (1 Per Light)	
304	3250585	1	Nameplate - Lights On	
305	4060802	1	Guard, Switch	
306	4360336	1	Switch, Toggle	
307	4420037	AR	Tape, Insulation (Not Shown)	

ITEM	PART NUMBER	QTY	DESCRIPTION	REV
308	4751800	2	Flatwasher 1/2in Regular	
309	4846561	1	Mount, Light	
		Ref	**TRAY INSTALLATIONS (OPTIONAL)**	
401	1580012	1	Tray, Storage (Center)	
402	1580013	1	Tray, Storage (Rail Mounted - Not Shown)	

FIGURE 4-3. PLATFORM COMPONENTS INSTALLATION (FALL ARREST PLATFORM)

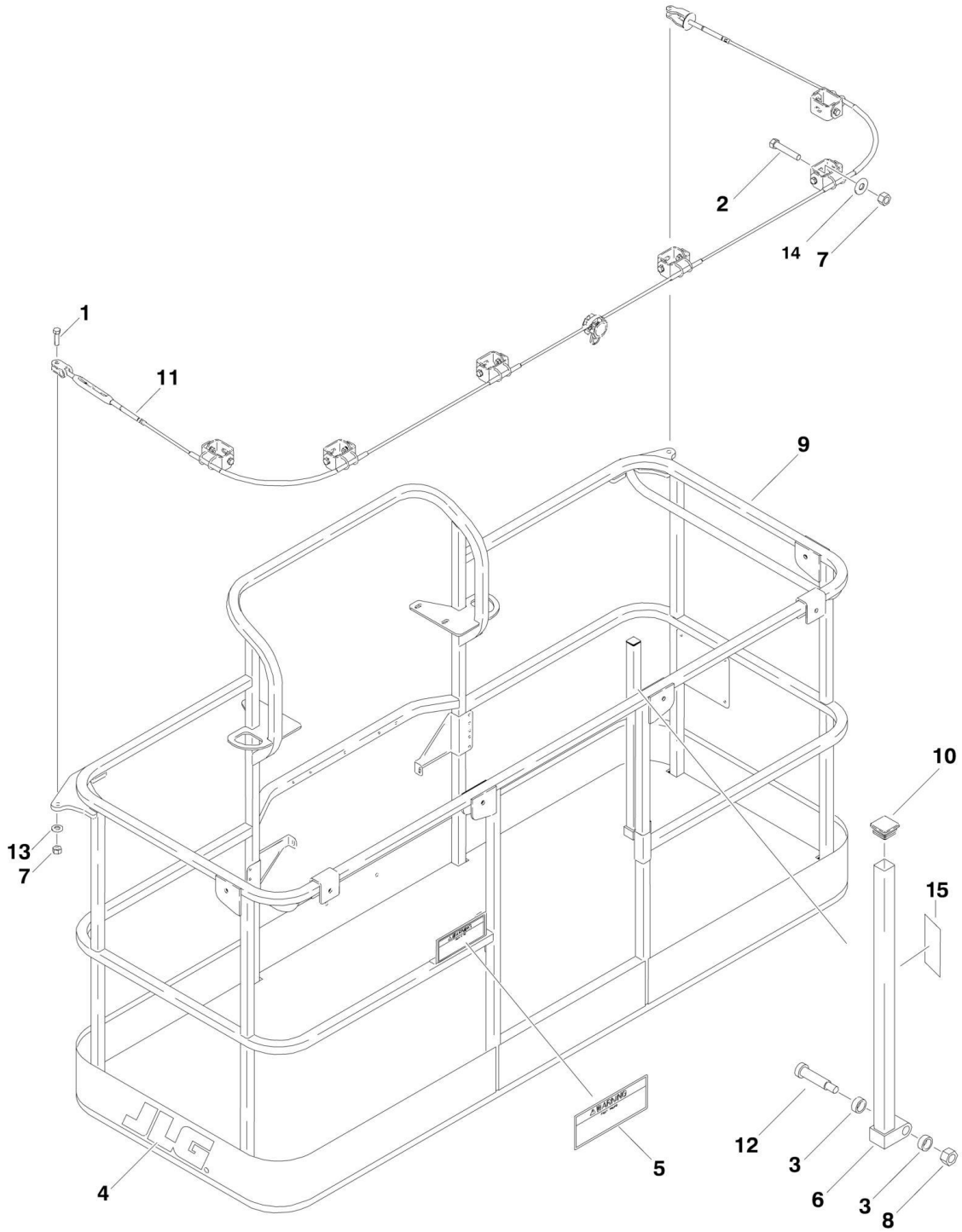

FIGURE 4-3. PLATFORM COMPONENTS INSTALLATION (FALL ARREST PLATFORM)

ITEM	PART NUMBER	QTY	DESCRIPTION	REV
	3510877	Ref	**PLATFORM ASSEMBLY (FALL ARREST)**	C
		Ref	**Note: Not Available on CE Specs.**	
		Ref	**Note: Replacement Decals Must be Ordered Separately - See DECAL SECTION.**	
1	0681814	2	Bolt 1/2in-13NC x 1-3/4in	
2	0681822	6	Bolt 1/2in-13NC x 2-3/4in	
3	0962270	2	Bearing, Oilite	
4	1702773	1	Decal - JLG	
5	1706501	1	Decal - Safety	
6	2410014	1	Gate	
7	3271805	8	Locknut 1/2in-13NC	
8	3311605	1	Locknut 3/8in-16NC	
9	See Note	NSS	Platform (Note: Not Available - Purchase Complete Platform Assembly)	
10	3520072	1	Cap-Plug	
11	3890040	1	Cable, Fall Arrest	
12	3900054	1	Bolt 1/2in-13NC x 1-3/4in	
13	4711800	2	Flatwasher 1/2in Thin	
14	4751800	6	Flatwasher 1/2in Regular	
15	1706493	1	Decal - Drop Bar	

FIGURE 4-4. PLATFORM CONSOLE ASSEMBLY

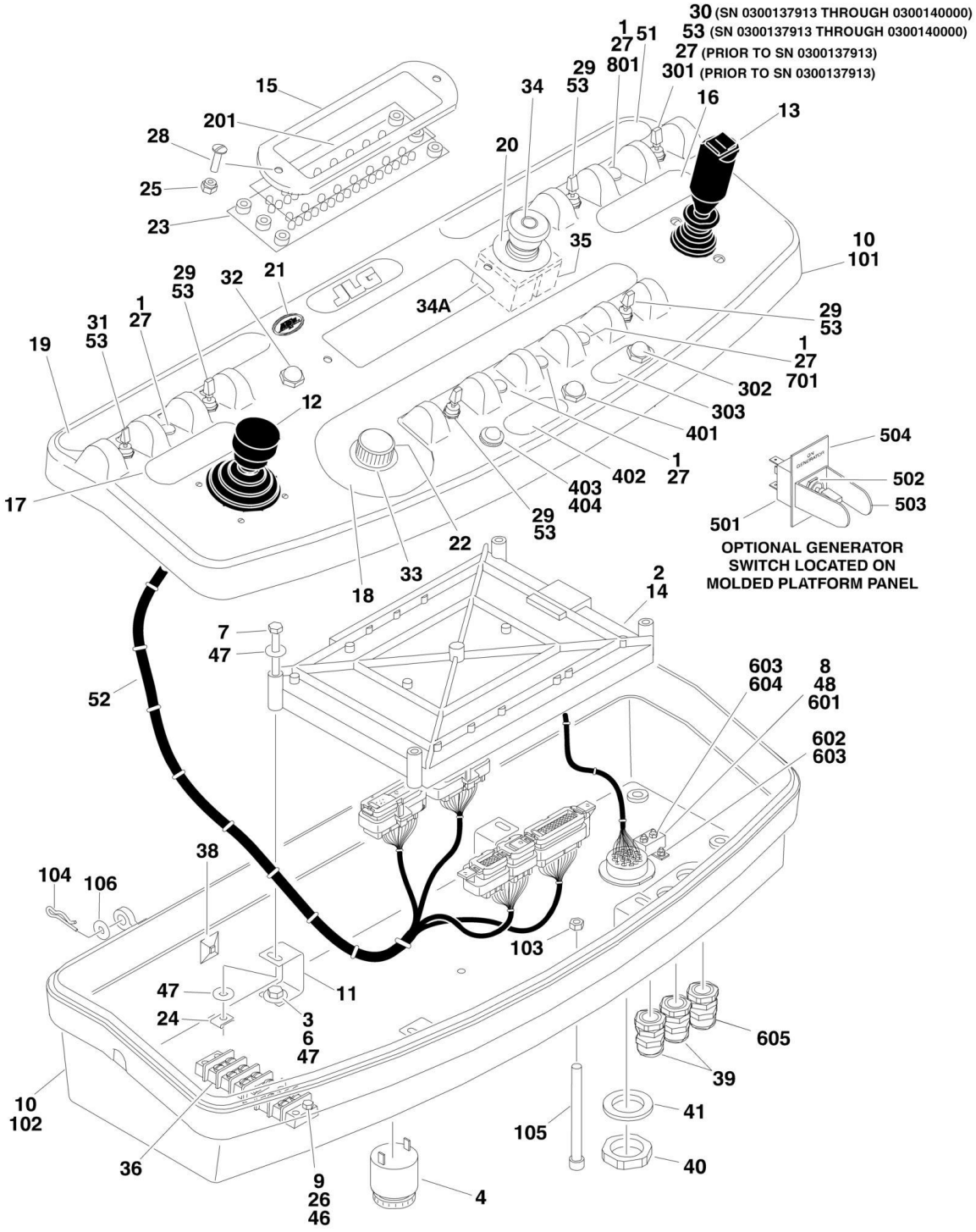

FIGURE 4-4. PLATFORM CONSOLE ASSEMBLY

ITEM	PART NUMBER	QTY	DESCRIPTION	REV
		Ref	**PLATFORM CONSOLE ASSEMBLY**	
	0861416	Ref	**Platform Console Assembly (Prior to SN 0300137913)**	J
	1001108866	Ref	**Platform Console Assembly (SN 0300137913 through 0300139079)**	B
	1001114896	Ref	**Platform Console Assembly (SN 0300139080 through 0300140000)**	B
1	0100009	AR	Sealant	
2	0100048	AR	Grease, Dielectric	
3	0100081	AR	Loctite #454	
4	0140011	1	Alarm	
6	0641406	4	Bolt 1/4in-20NC x 3/4in	
7		Ref	Bolt Options:	
7	0641416	4	Bolt 1/4in-20NC x 2in **(Prior to SN 0300079612)**	
7	0641414	4	Bolt 1/4in-20NC x 1-3/4in **(SN 0300079612 through 0300140000)**	
8	0721003	2	Bolt #10-24NC x 3/8in	
9		Ref	Screw Options:	
9	0721008	1	Screw #10-24NC x 1in **(Prior to SN 0300113581)**	
9	0721006	2	Screw #10-24NC x 3/4in **(SN 0300113581 through 0300140000)**	
10	0861441	1	Box, Console (See Items 101-106 for Breakdown)	
11	0902751	4	Bracket, Support	
12	1600317	NLA	Controller Assembly (Lift and Swing) (See CONTROLLER ASSEMBLY (LIFT AND SWING) for Breakdown) (Use p/n 1001129555)	
13	1600318	NLA	Controller Assembly (Drive and Steer) (See CONTROLLER ASSEMBLY (DROVE AND STEER) for Breakdown) (Use p/n 1001212415)	
14		Ref	Controller, Module Options:	
14		Ref	Note: Re-calibration Required when Replaced.	
14	1600324	1	Controller, Module **(Prior to SN 0300079612)**	
14	1600377	1	Controller, Module **(SN 0300079612 through 0300139079)**	
14	1001110701	1	Controller, Module **(SN 0300139080 through 0300140000)**	
15		Ref	Bezel Options:	
15	1670829	1	Bezel **(Prior to SN 0300081225)**	
15	1671176	1	Bezel **(SN 0300081225 through 0300140000)**	
16	1702565	1	Decal (Drive and Steer)	
17	1702566	1	Decal (Lift and Swing)	
18	1702567	1	Decal (Function Speed)	
19	1702676	1	Decal (Horn)	
20	1704260	1	Decal - EMS	
21	1705132	1	Decal - Control ADE	
22	2560136	1	Handle, Knob	
23	2920154	1	Panel, LED Light	
24	3300353	4	Nut, Tinnerman	
25	3300408	2	Insert, Nylon	
26	3311005	2	Locknut #10-24NC	
27	3520028	AR	Plug, Hole 1/2in	
28	3911018	2	Screw, Round Head #10	
29	4360328	4	Switch, Toggle	
30	4360330	1	Switch, Toggle **(SN 0300137913 through 0300140000)**	

ITEM	PART NUMBER	QTY	DESCRIPTION	REV
31	4360331	1	Switch, Toggle	
32	4360387	1	Switch, Pushbutton	
33	4360407	1	Controller, Speed	
33	See Note	1	Gasket "Top Hat" (Included with Switch) (Note: Not Available - Purchase Complete Controller)	
33	70003784	1	Seal	
34	4360475	1	Switch, Emergency Stop	
34	7020175	1	Cap, Red	
34A	7020176	1	Contact Block	
35	4360476	1	Block, Contact	
36	4460007	1	Bar, Buss - Ground	
37	4460225	1	Plug, Male - 6 Position (Not Shown - See ELECTRICAL SECTION for Location) **(Prior to SN 0300139080)**	
38		Ref	Base, Mounting	
38	4460488	1	Base, Mounting **(Prior to SN 0300137913)**	
38	4460234	3	Base, Mounting **(SN 0300137913 through 0300140000)**	
39	4460428	2	Connector, Strain Relief	
40	4460470	1	Nut, Terminal	
41	4460471	1	Lockwasher, Terminal	
42	4460496	1	Nut, Terminal (Not Shown - See ELECTRICAL SECTION for Location)	
43	4460497	1	Lockwasher, Terminal (Not Shown - See ELECTRICAL SECTION for Location)	
44	4460708	2	Connector, Female - 15 Position (Not Shown - See ELECTRICAL SECTION for Location)	
45	4460905	5	Seal, Plug (Not Shown - See ELECTRICAL SECTION for Location)	
46	4751000	2	Flatwasher #10 Regular **(SN 0300113581 through 0300140000)**	
47	4751400	8	Flatwasher 1/4in Regular	
48	4761000	2	Lockwasher #10	
49	4922666	1	Harness, Analyzer Cable (Not Shown - See ELECTRICAL SECTION for Breakdown)	
50		Ref	Harness, Upper Valve Options (Not Shown - See ELECTRICAL SECTION for Breakdown):	
50	4922620	1	Harness, Upper Valve **(Prior to SN 0300066741)**	
50	4922749	1	Harness, Upper Valve **(SN 0300066741 through 0300140000)**	
51		Ref	Decal (Stop) Options:	
51	1704997	1	Decal (Stop) **(Prior to SN 0300137335)**	
51	1001107527	NLA	Decal (Stop) (Use p/n 1704997) **(SN 0300137335 through 0300137912)**	
51	1001107677	1	Decal (Stop) **(SN 0300137913 through 0300140000)**	
52		Ref	Harness, Platform Box (See ELECTRICAL SECTION for Breakdown)	
52	4922595	1	Harness, Platform Box **(Prior to SN 0300137913)**	
52	1001107796	1	Harness, Platform Box **(SN 0300137913 through 0300140000)**	
53	3790012	AR	O-Ring	
	0861441	Ref	**CONSOLE BOX ASSEMBLY**	F
101	See Note	1	Console Top (Note: Not Available for Purchase)	
102	See Note	1	Console Bottom (Note: Not Available for Purchase)	
103	3311601	1	Nut 3/8in-16NC	
104		Ref	Pin, Cotter Options:	
104	3450304	2	Pin, Cotter **(Prior to SN 0300073729)**	
104	3420156	2	Pin, Cotter **(SN 0300073729 through 0300088131)**	
104	3470003	2	Pin, Cotter **(SN 0300088132 through 0300140000)**	

ITEM	PART NUMBER	QTY	DESCRIPTION	REV
105		Ref	Screw 3/8in-16NC x 4-1/2in Options:	
105	3931672	1	Screw 3/8in-16NC x 4-1/2in **(Prior to SN 0300073667)**	
105	0630568	1	Screw 3/8in-16NC x 4-1/2in **(SN 0300073667 through 0300140000)**	
106	4711500	2	Flatwasher 5/16in Thin	
		Ref	**LIGHT PANEL DECAL INSTALLATION**	
		Ref	**Australian Specs**	
	0271410	Ref	**Australian Specs 800S (Prior to SN 0300137913)**	B
	1001108993	Ref	**Australian Specs 800S (SN 0300137913 through 0300140000)**	A
	0271420	Ref	**Australian Specs 860SJ (Prior to SN 0300137913)**	B
	1001108991	Ref	**Australian Specs 860SJ (SN 0300137913 through 0300140000)**	A
		Ref	**CE Specs**	
	0271417	Ref	**CE Specs 800S (Prior to SN 0300137913)**	B
	1001108992	Ref	**CE Specs 800S (SN 0300137913 through 0300140000)**	A
	0271421	Ref	**CE Specs 860SJ (Prior to SN 0030065628)**	1-A
	0271417	Ref	**CE Specs 860SJ (SN 0300065628 through 0300137912)**	B
	1001108992	Ref	**CE Specs 860SJ (SN 0300137913 through 0300140000)**	A
201		Ref	Decal - Display	
201		Ref	Australian Specs:	
201	1704952	1	Australian Specs 800S **(Prior to SN 0300137913)**	
201	1001107954	1	Australian Specs 800S **(SN 0300137913 through 0300140000)**	
201	1704993	1	Australian Specs 860SJ **(Prior to SN 0300137913)**	
201	1001107953	1	Australian Specs 860SJ **(SN 0300137913 through 0300140000)**	
201		Ref	CE Specs:	
201	1704984	1	CE Specs 800S **(Prior to SN 0300137913)**	
201	1001107952	1	CE Specs 800S **(SN 0300137913 through 0300140000)**	
201	1704994	1	CE Specs 860SJ **(Prior to SN 0300065628)**	
201	1704984	1	CE Specs 860SJ **(SN 0300065628 through 0300137912)**	
201	1001107952	1	CE Specs 860SJ **(SN 0300137913 through 0300140000)**	
	0271552	Ref	**HEAD AND TAIL LIGHTS INSTALLATION (OPTIONAL)**	C
301	4360336	1	Switch, Toggle **(Prior to SN 0300137913)**	
301	3790012	1	O-Ring **(Prior to SN 0300137913)**	
302	4360522	1	Switch, Push Button **(SN 0300137913 through 0300140000)**	
303	1705170	1	Decal - Lights **(SN 0300137913 through 0300140000)**	
		Ref	**SOFT TOUCH SYSTEM INSTALLATION (OPTIONAL)**	
401	4360387	1	Switch, Pushbutton	
402	1702938	1	Decal - Soft Touch Override	
403	2920028	1	Light, Indicator Only **(SN 0300137913 through 0300140000)**	
404	2920028	1	Bulb, Light Only **(SN 0300137913 through 0300140000)**	
		Ref	**GENERATOR INSTALLATION (OPTIONAL)**	
501	4360336	1	Switch, Toggle	
502	4740397	1	Bushing	
503	4060802	1	Guard, Switch	
504	3251102	1	Decal - Generator ON/OFF	
		Ref	**PLATFORM WORKLIGHT INSTALLATION (OPTIONAL)**	
601	4360232	1	Breaker, Circuit - 15Amp **(Prior to SN 0300074425)**	
602	0721003	2	Bolt #10-24NC x 3/8in **(Prior to SN 0300074425)**	
603	4761000	4	Lockwasher #10 **(Prior to SN 0300074425)**	
604	3311001	2	Nut #10-24NC **(Prior to SN 0300074425)**	

ITEM	PART NUMBER	QTY	DESCRIPTION	REV
605		Ref	Connector, Strain Relief Options:	
605	4460598	1	Connector, Strain Relief **(Prior to SN 0300074425)**	
605	4460426	1	Connector, Strain Relief **(SN 0300074425 through 0300140000)**	
	0258608	Ref	**JIB SWITCH INSTALLATION (860SJ ONLY)**	B
701		Ref	Switch, Toggle Options:	
701	4360314	1	Switch, Toggle **(Prior to SN 0300070914)**	
701	4360328	1	Switch, Toggle **(SN 0300070914 through 0300140000)**	
701	3790012	1	O-Ring **(Prior to SN 030070914)**	

FIGURE 4-5. CONTROLLER ASSEMBLY (LIFT AND SWING)

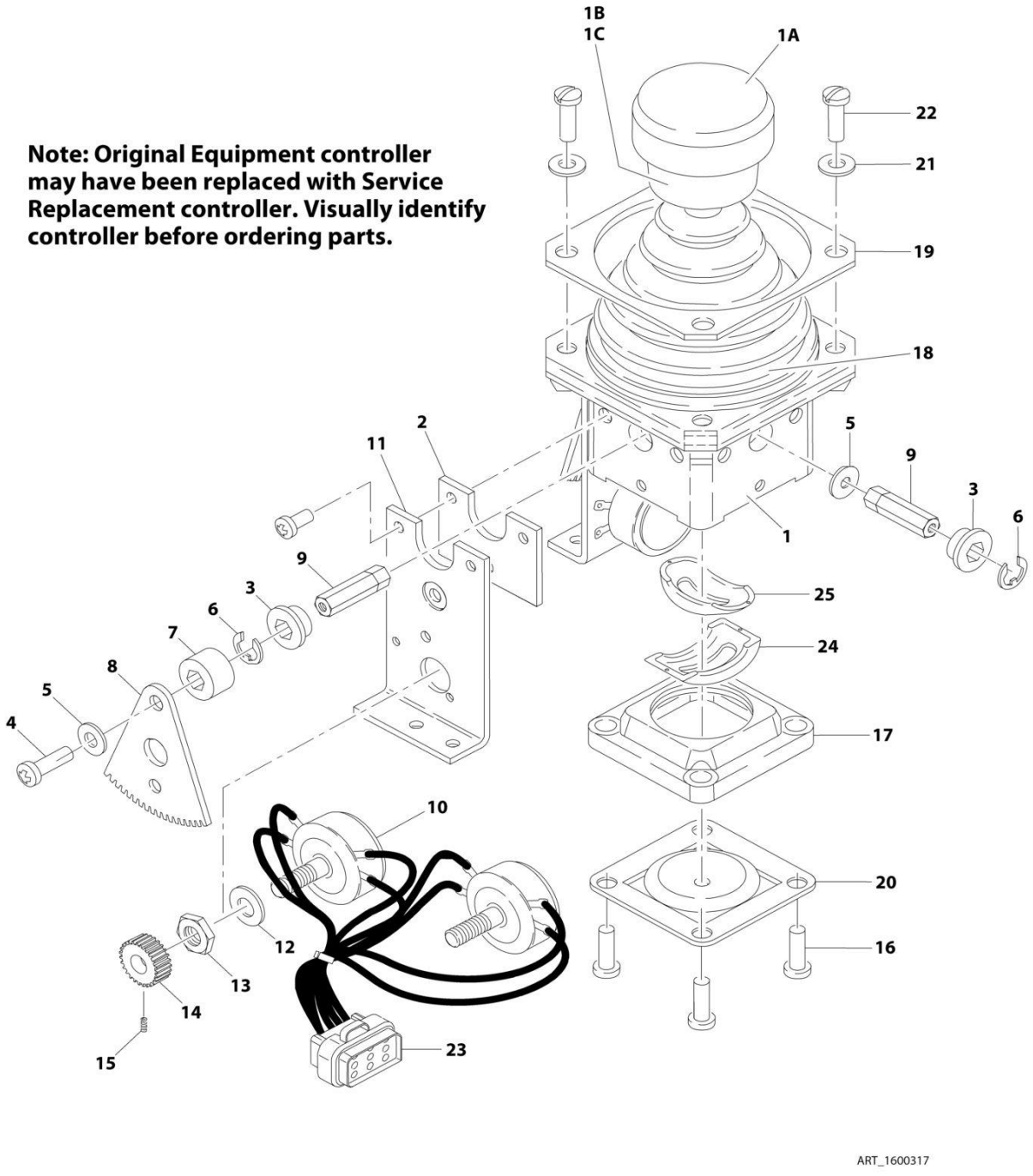

FIGURE 4-5. CONTROLLER ASSEMBLY (LIFT AND SWING)

ITEM	PART NUMBER	QTY	DESCRIPTION	REV
		Ref	**Note: Original Equipment controller may have been replaced with Service Replacement controller. Visually identify controller before ordering parts.**	
	1600317	Ref	**CONTROLLER ASSEMBLY (LIFT & SWING)**	C
		Ref	**Note: Use p/n 1001129555 Kit as Replacement.**	
1	7019141	1	Mechanical Assembly (Includes Base, Handle Stem and Items 1A, 1B, 1C & 18)	
1A	7019197	1	Handle Cap and Rod	
1B	7003928	1	Spring	
1C	7022808	1	Cap, Lift	
2	7019171	2	Plate	
3	7019111	4	Bearing, Gear	
4	7019143	2	Screw	
5	7019144	2	Spacer, Cam	
6	7019145	4	E-Clip	
7	7019174	2	Spacer	
8	7003977	2	Gear, Drive	
9		Ref	Shaft Options:	
9	7019147	2	Shaft, Short	
9	7019177	2	Shaft, Long	
10	7022818	2	Potentiometer	
11	7019142	2	Plate	
12	7003992	2	Washer	
13	7003993	2	Nut	
14	7003976	2	Gear, Slave	
15	7019149	2	Setscrew	
16	7022816	4	Screw	
17	7019150	1	Gate	
18	7022814	1	Boot	
19	7022815	1	Bezel	
20	See Note	NSS	Detent, Center (Note: Use p/n 1001129555)	
21	7003953	4	Washer	
22	7022817	4	Screw	
23	7022819	1	Plug, Male - 8 Position (Natural)	
23	4460871	8	Socket, Female	
24	7019122	1	Gimble, Outer	
25	7019123	1	Gimble, Inner	

FIGURE 4-6. CONTROLLER ASSEMBLY (LIFT AND SWING)

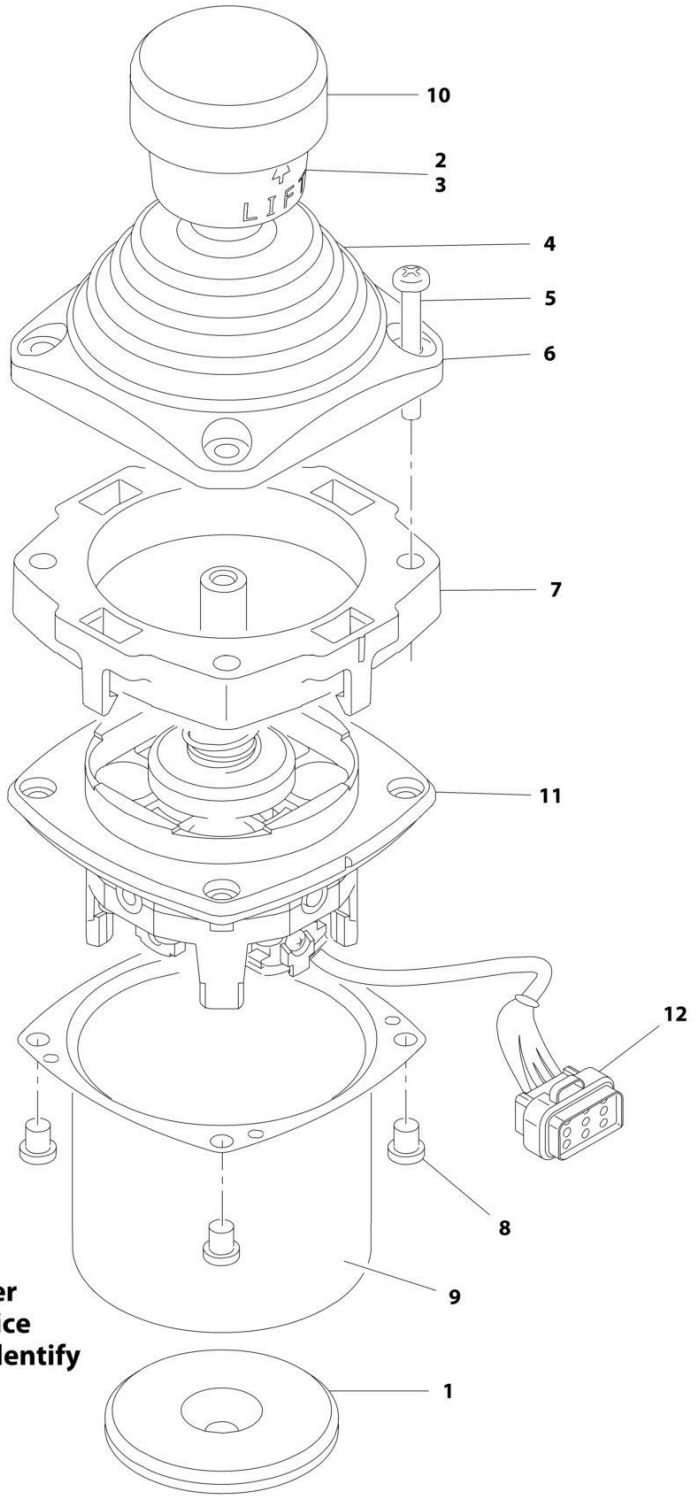

Note: Original Equipment controller may have been replaced with Service Replacement controller. Visually identify controller before ordering parts.

FIGURE 4-6. CONTROLLER ASSEMBLY (LIFT AND SWING)

ITEM	PART NUMBER	QTY	DESCRIPTION	REV
		Ref	**Note: Original Equipment controller may have been replaced with Service Replacement controller. Visually identify controller before ordering parts.**	
	1001118417	Ref	**CONTROLLER ASSEMBLY (LIFT AND SWING)**	E
		Ref	**Note: Use p/n 1001129555 as Replacement.**	
1	70002730	1	Gasket	
2	7003928	1	Spring	
3	7022808	1	Cap, Lift	
4	70002731	1	Boot	
5	70002732	4	Screw	
6	7022815	1	Bezel	
7	70002733	1	Adapter	
8	70002734	4	Screw	
9	70002735	1	Can, Enclosure	
10	70002906	1	Cap	
11	See Note	NSS	Mechanical Assembly (Note: Use p/n 1001129555)	
12	7022819	1	Connector - 8 Position	
12	4460871	6	Socket, Female	

FIGURE 4-7. CONTROLLER ASSEMBLY (LIFT AND SWING)

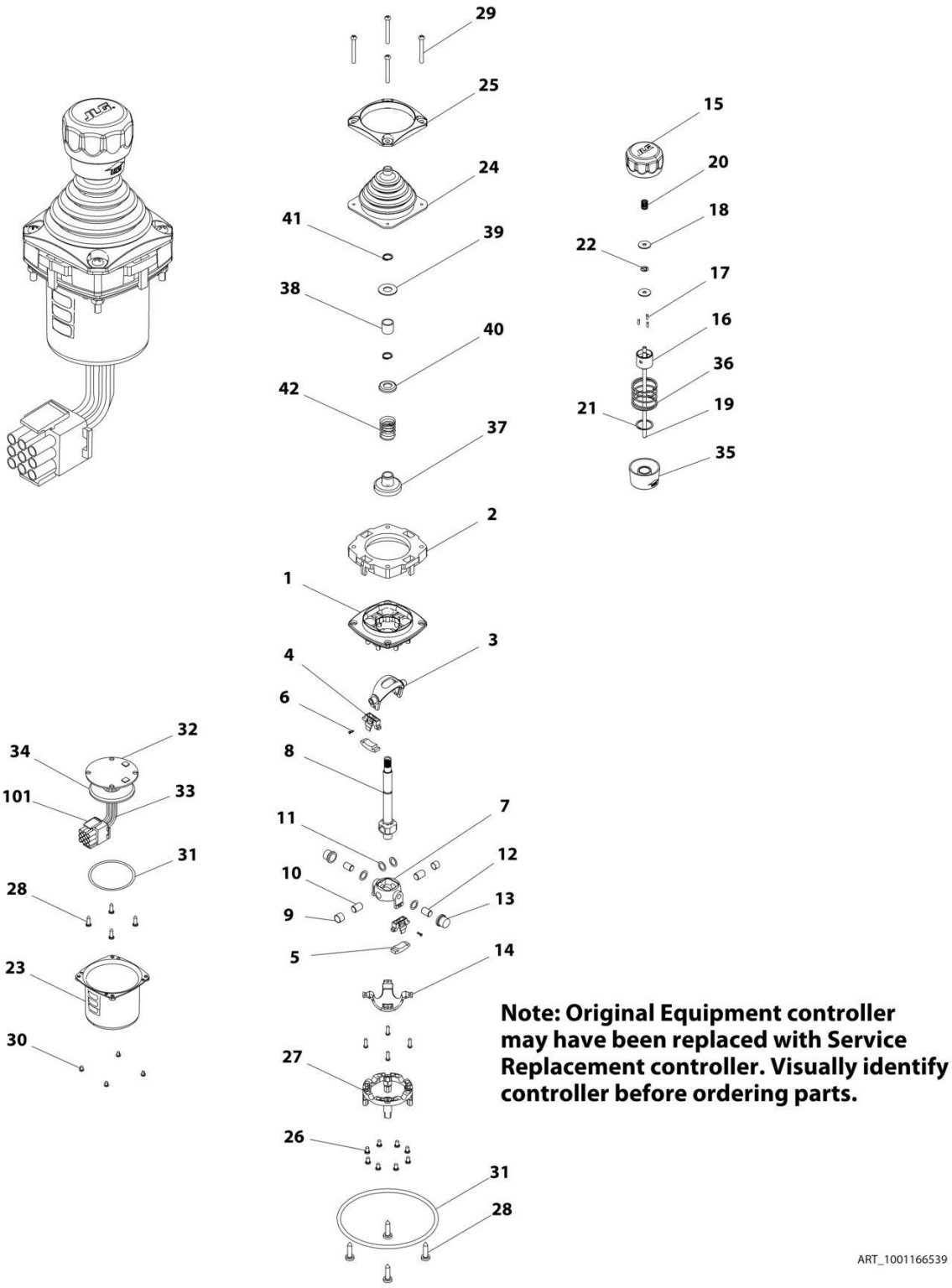

FIGURE 4-7. CONTROLLER ASSEMBLY (LIFT AND SWING)

ITEM	PART NUMBER	QTY	DESCRIPTION	REV
		Ref	**Note: Original Equipment controller may have been replaced with Service Replacement controller. Visually identify controller before ordering parts.**	
	1001166539	Ref	**CONTROLLER ASSEMBLY (LIFT AND SWING)**	D
		Ref	**Note: Use p/n 1001129555 as Replacement.**	
1	See Note	NSS	Main Cast Body (Note: Available - Purchase Complete Assembly)	
2	70004752	1	Adapter	
3	See Note	NSS	Pivot Arm, Plastic (Note: Not Available - Purchase Complete Assembly)	
4	See Note	NSS	Holder, Magnet (Note: Not Available - Purchase Complete Assembly)	
5	See Note	NSS	Arc, Magnet (Note: Not Available - Purchase Complete Assembly)	
6	See Note	NSS	Screw (Note: Not Available for Purchase)	
7	See Note	NSS	Pivot Arm, Cast (Note: Not Available - Purchase Complete Assembly)	
8	See Note	NSS	Shaft, Main (Note: Not Available - Purchase Complete Assembly)	
9	See Note	NSS	Bearing (Note: Not Available - Purchase Complete Assembly)	
10	See Note	NSS	Pin (Note: Not Available - Purchase Complete Assembly)	
11	See Note	NSS	Shim (Note: Not Available - Purchase Complete Assembly)	
12	See Note	NSS	Pin (Note: Not Available - Purchase Complete Assembly)	
13	See Note	NSS	Bearing (Note: Not Available - Purchase Complete Assembly)	
14	See Note	NSS	Dome, Centering (Note: Not Available - Purchase Complete Assembly)	
15	70004753	1	Cap	
16	70004754	1	Insert, Cap	
17	70004755	3	Pin	
18	70004756	2	Washer	
19	70004757	1	Pin, Centering	
20	70004758	1	Spring	
21	70004759	1	Ring, Retaining	
22	70004760	1	E-Ring	
23	70004761	1	Can, Enclosure	
24	70004762	1	Boot	
25	70004763	1	Bezel	
26	See Note	NSS	Screw (Note: Not Available for Purchase)	
27	See Note	NSS	Base, Mounting (Note: Not Available - Purchase Complete Assembly)	
28	See Note	NSS	Screw (Note: Not Available for Purchase)	
29	70004764	4	Screw	
30	70004765	4	Screw	
31	70004766	1	O-Ring	
32	See Note	NSS	Plate (Note: Not Available - Purchase Complete Assembly)	
33	See Note	NSS	Harness (Note: Not Available - Purchase Complete Assembly)	
34	70004767	1	Grommet, Rubber	
35	70004768	1	Housing	
36	70004769	1	Spring	
37	70004770	1	Stopper	
38	70004771	1	Spacer	
39	70004772	1	Washer	
40	70004773	1	Disc	
41	70004774	2	Ring, Retaining	

SECTION 4 - PLATFORM

ITEM	PART NUMBER	QTY	DESCRIPTION	REV
42	70004775	1	Spring	
101	4460265	1	Connector - 9 Position	
101	4460226	6	Socket, Female	

FIGURE 4-8. CONTROLLER ASSEMBLY (DRIVE AND STEER)

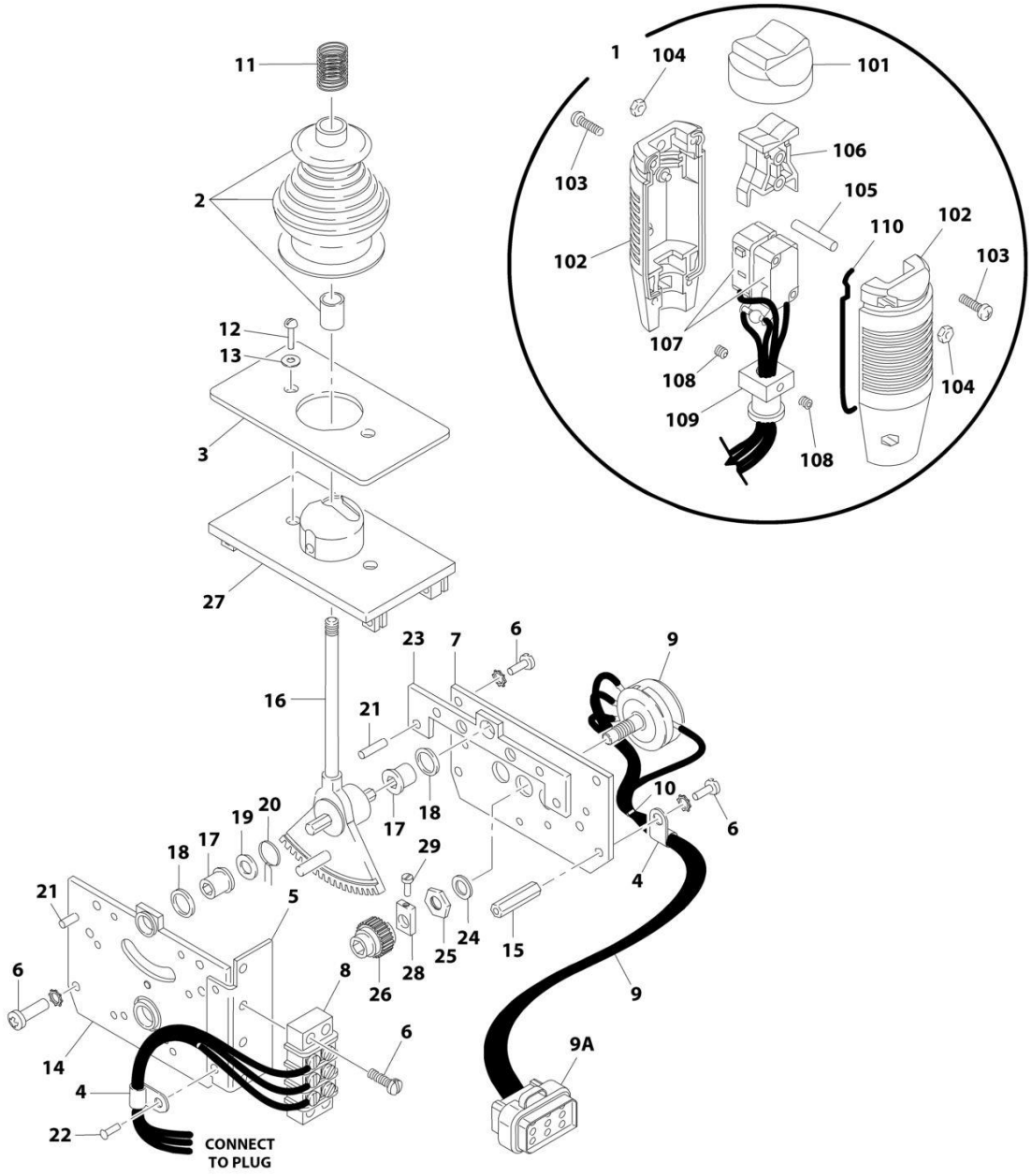

Note: Original Equipment controller may have been replaced with Service Replacement controller. Visually identify controller before ordering parts.

ART_1600318

FIGURE 4-8. CONTROLLER ASSEMBLY (DRIVE AND STEER)

ITEM	PART NUMBER	QTY	DESCRIPTION	REV
		Ref	**Note: Original Equipment controller may have been replaced with Service Replacement controller. Visually identify controller before ordering parts.**	
	1600318	Ref	**CONTROLLER ASSEMBLY (DRIVE & STEER)**	C
		Ref	**Note: Use p/n 1001212415 as Replacement.**	
1	7022812	1	Handle Assembly (See Items 101-110 for Breakdown)	
2	7019161	1	Boot and Sleeve	
3	7003933	1	Gasket	
4	7019154	2	Clamp, Wire	
5	7022823	1	Bracket, Mounting	
6	7003994	1	Screw	
7	7022822	1	Plate, Pot Mounting	
8	7003986	1	Strip, Terminal - 3 Position	
9	7022824	1	Electric Assembly	
9A	1001113961	1	Plug, Male - 8 Position (Black) (was p/n 7022825)	
9A	4460871	7	Socket, Female	
10	7019151	AR	Tie-Strap	
11	7019162	1	Spring	
12	7003969	2	Screw	
13	7003941	2	Washer	
14	See Note	NSS	Plate, Mounting (Left Side) (Note: Use p/n 1001166538)	
15	7019115	2	Stand-Off	
16	7019155	1	Shaft 8mm	
17	7019111	2	Bearing	
18	7019110	2	Spacer, Head Gear	
19	7019112	1	Washer	
20	7003946	1	Spring, Return	
21	7019103	4	Pin	
22	See Note	NSS	Rivet (Note: Not Available - Purchase Locally)	
23	7019168	1	Plate, Mounting (Right Side)	
24	7003992	1	Washer	
25	7003993	1	Nut	
26	7003935	1	Gear, Slave	
27	7019160	1	Plate, Base	
28	7019114	1	Coupling, Potentiometer	
29	See Note	NSS	Cup Point Screw (Note: Not Available for Purchase)	
	7022812	Ref	**HANDLE ASSEMBLY**	
101	7003972	1	Boot, Switch	
102	7003973	2	Half, Handle	
103	7003980	4	Screw	
104	7019167	4	Nut	
105	7019164	1	Axle	
106	7019165	1	Rocker	
107	See Note	NSS	Wiring for Controller Assembly p/n 1600318 (Note: Use p/n 1001166538)	
107	7019166	2	Switch, Micro	
108	7003983	2	Setscrew	
109	7019194	1	Coupling	
110	7003989	2	Gasket	

FIGURE 4-9. CONTROLLER ASSEMBLY (DRIVE AND STEER)

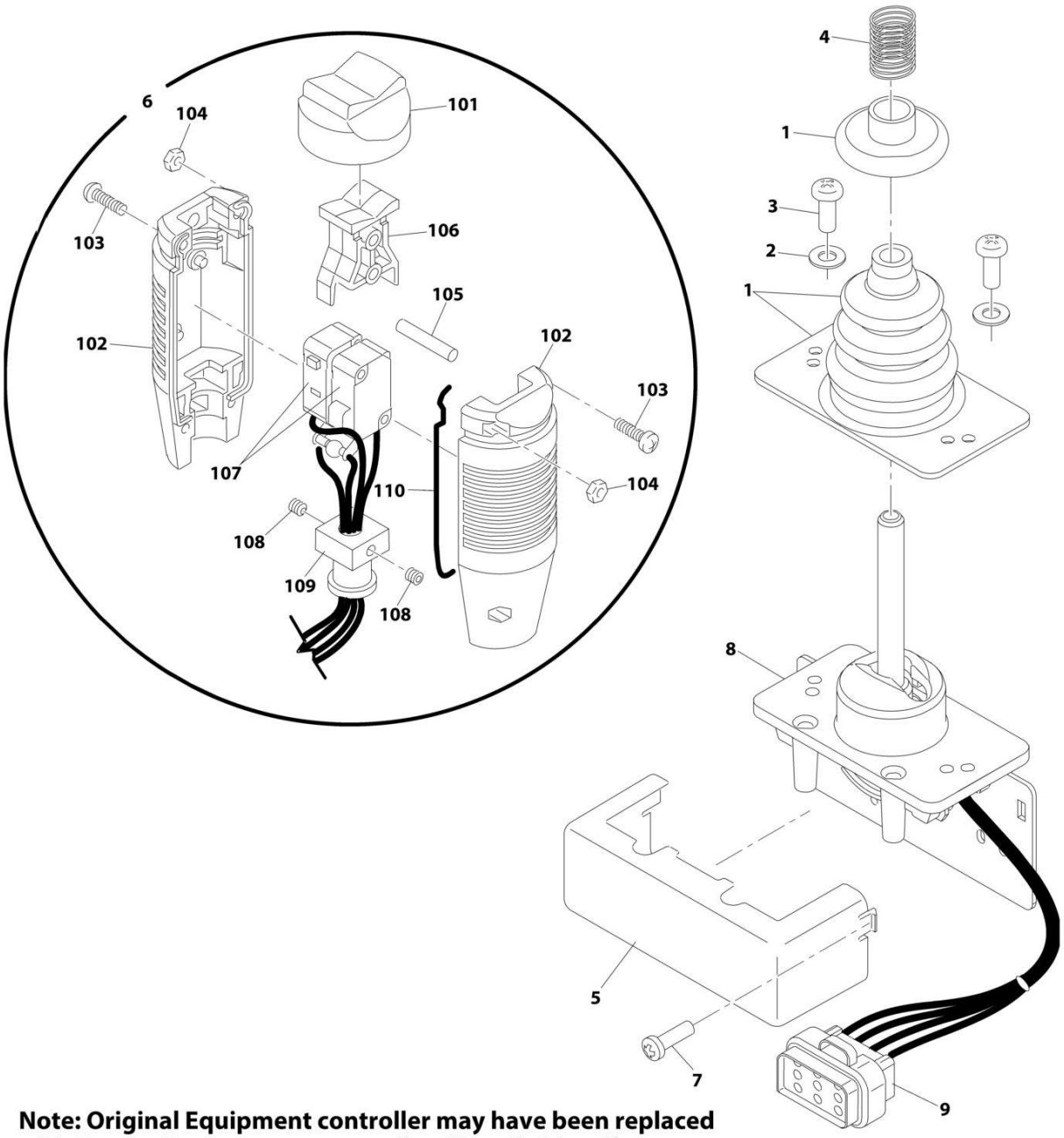

Note: Original Equipment controller may have been replaced with Service Replacement controller. Visually identify controller before ordering parts.

FIGURE 4-9. CONTROLLER ASSEMBLY (DRIVE AND STEER)

ITEM	PART NUMBER	QTY	DESCRIPTION	REV
		Ref	**Note: Original Equipment controller may have been replaced with Service Replacement controller. Visually identify controller before ordering parts.**	
	1001118416	Ref	**CONTROLLER ASSEMBLY (DRIVE AND STEER)**	D
		Ref	**Note: Use p/n 1001212415 as Replacement.**	
1	70002724	1	Boot and Control Lock Assembly	
2	7003941	2	Washer	
3	70002725	2	Screw	
4	7019162	1	Spring	
5	70002726	1	Enclosure	
6	70002727	1	Handle Assembly (See Items 101-110 for Breakdown)	
7	70002728	1	Screw	
8	See Note	NSS	Mechanical Assembly (Note: Use p/n 1001166538)	
9	1001113961	1	Plug, Male - 8 Position (Black) (was p/n 7022825)	
9	4460871	7	Socket, Female	
	70002727	Ref	**HANDLE ASSEMBLY**	
101	7003972	1	Boot, Switch	
102	7003973	2	Half, Handle	
103	7003980	4	Screw	
104	7019167	4	Nut	
105	7019164	1	Axle	
106	7019165	1	Rocker	
107	70002729	1	Wiring Assembly	
107	7003982	2	Switch, Micro	
108	7003983	2	Set Screw	
109	7019194	1	Coupling	
110	7003989	2	Gasket	

FIGURE 4-10. CONTROLLER ASSEMBLY (DRIVE AND STEER)

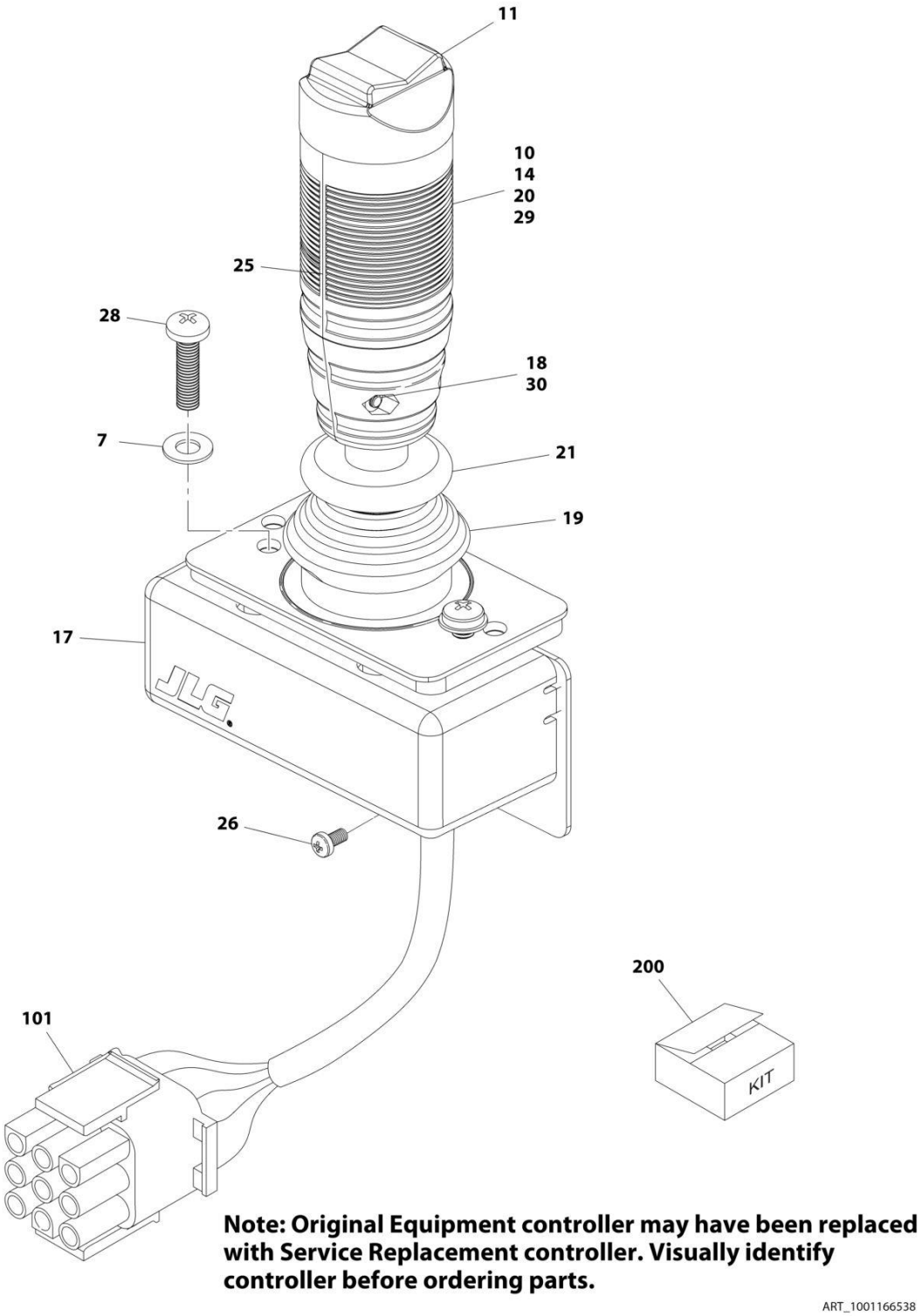

FIGURE 4-10. CONTROLLER ASSEMBLY (DRIVE AND STEER)

ITEM	PART NUMBER	QTY	DESCRIPTION	REV
		Ref	**Note: Original Equipment controller may have been replaced with Service Replacement controller. Visually identify controller before ordering parts.**	
	1001166538	Ref	**CONTROLLER ASSEMBLY (DRIVE AND STEER)**	E
		Ref	**Note: Use p/n 1001212415 as Replacement.**	
7	70004738	2	Washer	
10	70004739	1	Roller	
11	70004740	1	Boot, Switch	
14	70004741	2	Half, Handle	
17	70004742	1	Enclosure	
18	70004743	4	Nut	
19	70004744	NLA	Boot, Controller (Note: Use Item 200)	
20	70004745	NLA	Tube, Locking (Note: Use Item 200)	
21	70004746	NLA	Disc, Locking (Note: Use Item 200)	
25	70004747	2	Seal, Rope	
26	70004748	1	Screw, M3 x 6	
28	70004749	2	Screw, M5 x 20	
29	70004750	1	Pin, Dowel	
30	70004751	4	Screw, M3 x 16	
101	4460265	1	Connector - 9 Position	
101	4460226	7	Socket, Female	
200	70005230	1	Boot Kit (Includes Items 19-21)	

FIGURE 4-11. SOFT TOUCH INSTALLATION (FRONT ENTRY PLATFORM) (OPTIONAL)

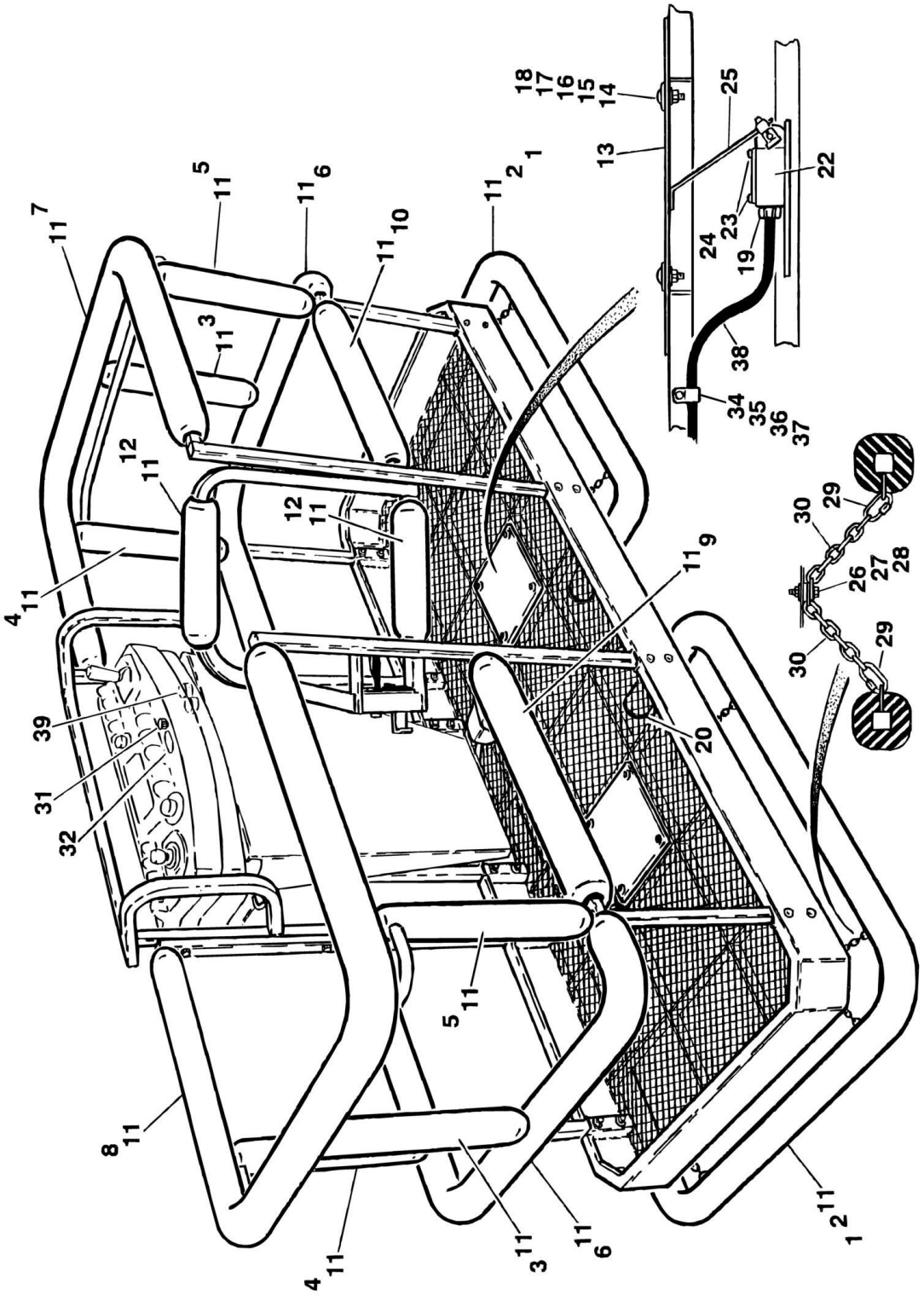

FIGURE 4-11. SOFT TOUCH INSTALLATION (FRONT ENTRY PLATFORM) (OPTIONAL)

ITEM	PART NUMBER	QTY	DESCRIPTION	REV
		Ref	**SOFT TOUCH SYSTEM INSTALLATIONS OPTIONS:**	
	0270795	Ref	**6ft/1.8m Platforms (Prior to SN 0300066909)**	3
	0271550	Ref	**6ft/1.8m Platforms (SN 0300066909 through 0300140000)**	1
	0270796	Ref	**8ft/2.4m Platforms (Prior to SN 0300066909)**	2
	0271551	Ref	**8ft/2.4m Platforms (SN 0300066909 through 0300140000)**	1
1		Ref	Rail Weldment Options:	
1	4845308	2	6ft/1.8m Platforms	
1	4845309	2	8ft/2.4m Platforms	
2		Ref	Cover, Rail Options:	
2	1670804	2	6ft/1.8m Platforms	
2	1670803	2	8ft/2.4m Platforms	
3	1670787	2	Cover, End Post	
4	1670785	2	Cover, Front Right Post	
5	1670786	2	Cover, Front Left Post	
6	1670793	2	Cover, End Mid Rail	
7		Ref	Cover, Right End Top Options:	
7	1670798	1	6ft/1.8m Platforms	
7	1670796	1	8ft/2.4m Platforms	
8		Ref	Cover, Left End Top Options:	
8	1670797	1	6ft/1.8m Platforms	
8	1670795	1	8ft/2.4m Platforms	
9		Ref	Cover, Left End Mid Options:	
9	1670799	1	6ft/1.8m Platforms	
9	1670789	1	8ft/2.4m Platforms	
10		Ref	Cover, Right End Mid Options:	
10	1670801	1	6ft/1.8m Platforms	
10	1670791	1	8ft/2.4m Platforms	
11	0940038	Ref	Padding, Bumper Options:	
11	0940038	70 ft /21.4m	6ft/1.8m Platforms	
11	0940038	80 ft /24.4m	8ft/2.4m Platforms	
12	1670788	2	Cover, Gate	
13	3539719	2	Plate, Switch Strike	
14	0630462	8	Bolt, Carriage	
15	4761500	8	Lockwasher 5/16in	
16	4751800	8	Flatwasher 1/2in Regular	
17	3311501	8	Nut 5/16in-18NC	
18	4751500	8	Flatwasher 5/16in Regular	
19	4460049	2	Connector, Strain Relief	
20	3530072	4	Plug, Cap	
22	4360057	2	Switch, Limit	
23	0731005	4	Bolt #10-32NC x 5/8in	
24	4751000	4	Lockwasher #10	
25	0200550	2	Arm, Switch	
26	0641612	8	Bolt 3/8in-16NC x 1-1/2in	
27	4751600	40	Flatwasher 3/8in Regular	
28	3311605	8	Locknut 3/8in-16NC	
29	3010088	16	Link, Quick	
30	1260136	10 ft/3m	Chain	

SECTION 4 - PLATFORM

ITEM	PART NUMBER	QTY	DESCRIPTION	REV
31	4360387	1	Switch, Push Button	
32	1702938	1	Decal - Soft Touch Override	
34	1320040	4	Clamp	
35	0641406	4	Bolt 1/4in-20NC x 3/4in	
36	4711400	8	Flatwasher 1/4in Thin	
37	3311405	4	Locknut 1/4in-20NC	
38	1060341	16 ft/4.9m	Cable, Electrical (16/2)	
39	4460425	1	Connector, Strain Relief	

FIGURE 4-12. SOFT TOUCH SYSTEM INSTALLATION (SIDE ENTRY PLATFORM) (OPTIONAL)

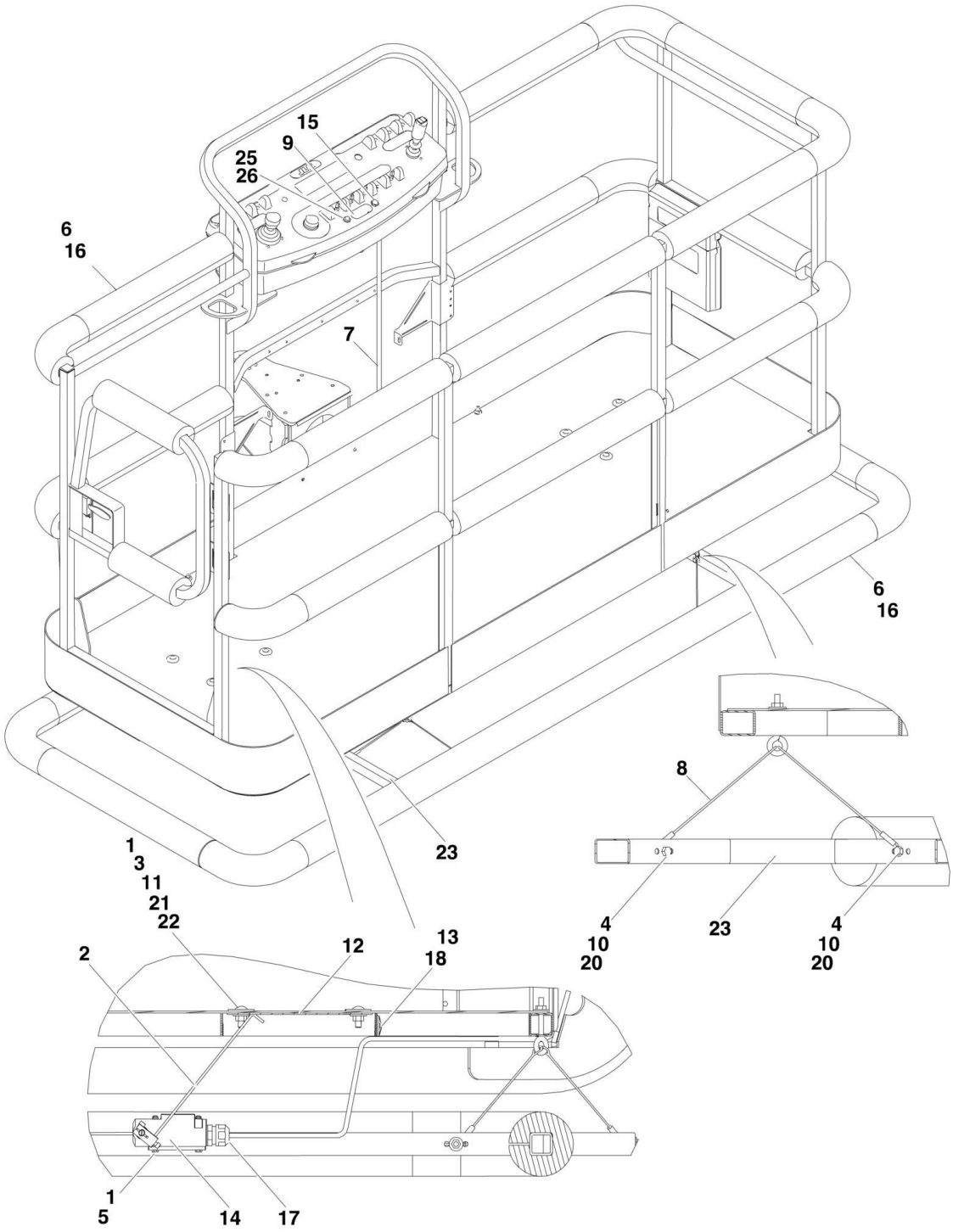

FIGURE 4-12. SOFT TOUCH SYSTEM INSTALLATION (SIDE ENTRY PLATFORM) (OPTIONAL)

ITEM	PART NUMBER	QTY	DESCRIPTION	REV
		Ref	**SOFT TOUCH SYSTEM INSTALLATIONS**	
	0273824	Ref	**6ft Platforms (Side Entry Platform)**	B
	0272427	Ref	**8ft Platforms (Side Entry Platform)**	D
1	0100011	AR	Compound, Locking	
2	0200048	2	Arm, Switch	
3	0630462	8	Bolt, Carriage	
4	0641414	8	Bolt 1/4in-20NC x 1-3/4in	
5	0721005	4	Bolt #10-24NC x 5/8in	
6		Ref	Bumper Kits (Includes Corners and Enough Straight Material for One Platform)	
6	0940134	1	6ft Platform	
6	0940103	1	8ft Platform	
6	0940133	1	8ft/2.4m Platforms with Fall Arrest	
6	0940092	12	Bumper (Corner)	
6	0940094	AR	Bumper (12ft Length)	
7	1060341	Ref	Cable, Electrical - 16/2 Options:	
7	1060341	22 ft /6.7m	6ft Platform	
7	1060341	23 ft /7m	8ft Platform	
8	1060903	4	Wire Rope and Eyebolt Assembly	
9	1702938	1	Decal - Soft Touch Override	
10	3311401	8	Nut 1/4in-20NC	
11	3311501	8	Nut 5/16in-18NC	
12		Ref	Plate, Switch Strike Options:	
12	3575359	2	6ft Platform	
12	3574091	2	8ft Platform	
13	4240099	7	Tie-Strap	
14	4360057	2	Switch, Limit	
15	4360387	1	Switch, Push Button	
16	4420068	1	Tape, Adhesive	
17	4460049	2	Connector, Strain Relief	
18	4460234	7	Tie-Strap	
19	4460425	1	Connector, Strain Relief	
20	4751400	8	Flatwasher 1/4in Regular	
21	4751500	12	Flatwasher 5/16in Regular	
22	4751800	8	Flatwasher 1/2in Regular	
23		Ref	Rail, Soft Touch Options:	
23	3641569	1	6ft Platform	
23	4846673	1	8ft Platform	
25	2920028	1	Light, Indicator **(SN 0300137913 through 0300140000)**	
26	2920028	1	Bulb, Light **(SN 0300137913 through 0300140000)**	

FIGURE 4-13. PLATFORM PADDING INSTALLATION (SIDE ENTRY PLATFORM) (OPTIONAL)

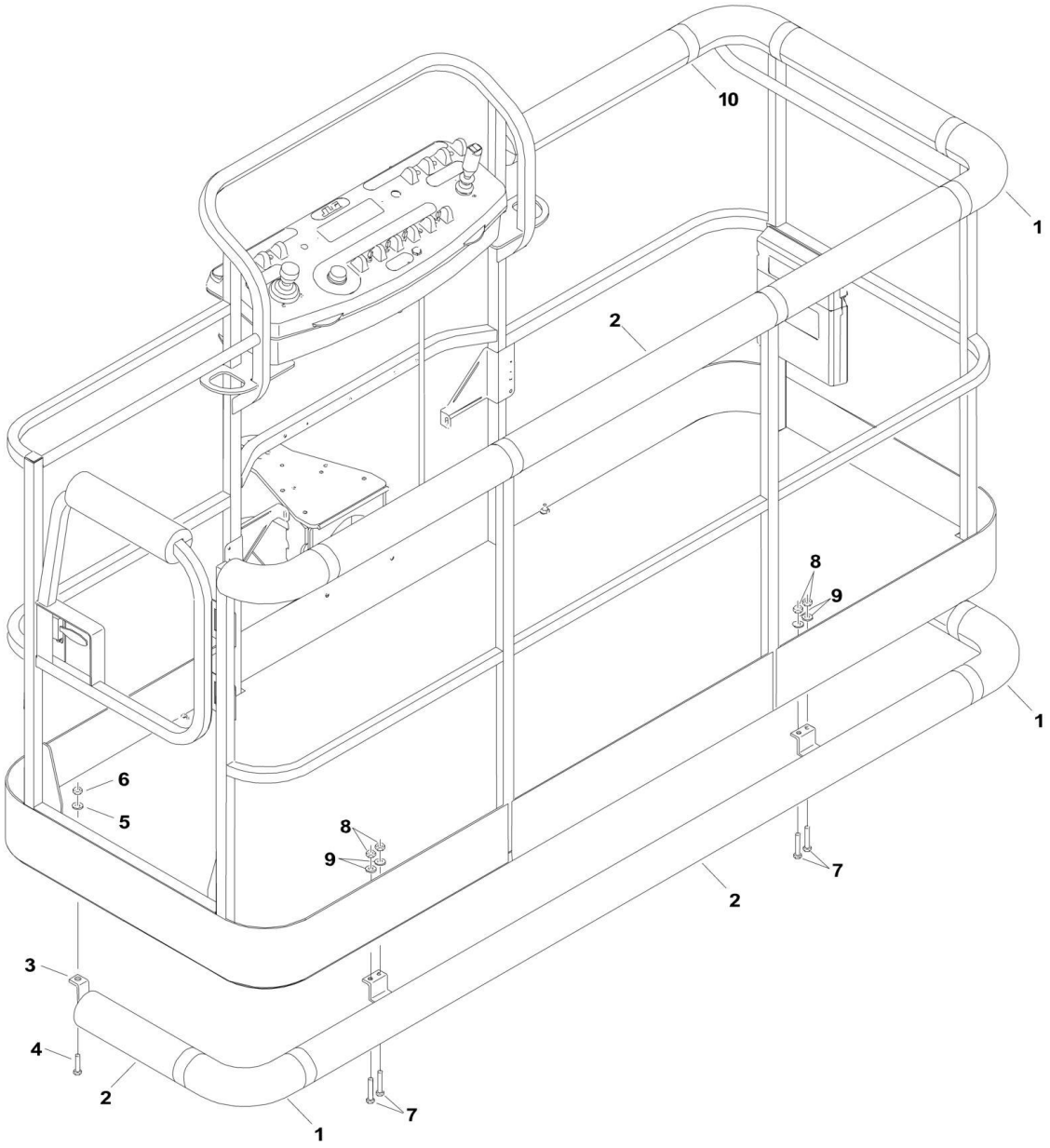

FIGURE 4-13. PLATFORM PADDING INSTALLATION (SIDE ENTRY PLATFORM) (OPTIONAL)

ITEM	PART NUMBER	QTY	DESCRIPTION	REV
	0273542	Ref	**PADDING INSTALLATION (30 X 48 SIDE ENTRY PLATFORM)**	A
1	0940092	4	Bumper, Pad (Corner)	
2	0940094	9 ft/2.7m	Bumper, Pad (Square Tubing)	
3	0940131	1	Bumper, Rail	
4	0641516	2	Bolt 5/16in-18NC x 2in	
5	4751500	2	Flatwasher 5/16in Regular	
6	3311505	2	Locknut 5/16in-18NC	
7	0641813	4	Bolt 1/2in-13NC x 1-5/8in	
8	3311805	4	Locknut 1/2in-13NC	
9	4891800	4	Flatwasher 1/2in (Hardened)	
10	4420068	30 ft/9.1m	Tape	

SECTION 5 - CYLINDER

FIGURE 5-1. AXLE LOCKOUT CYLINDER ASSEMBLY

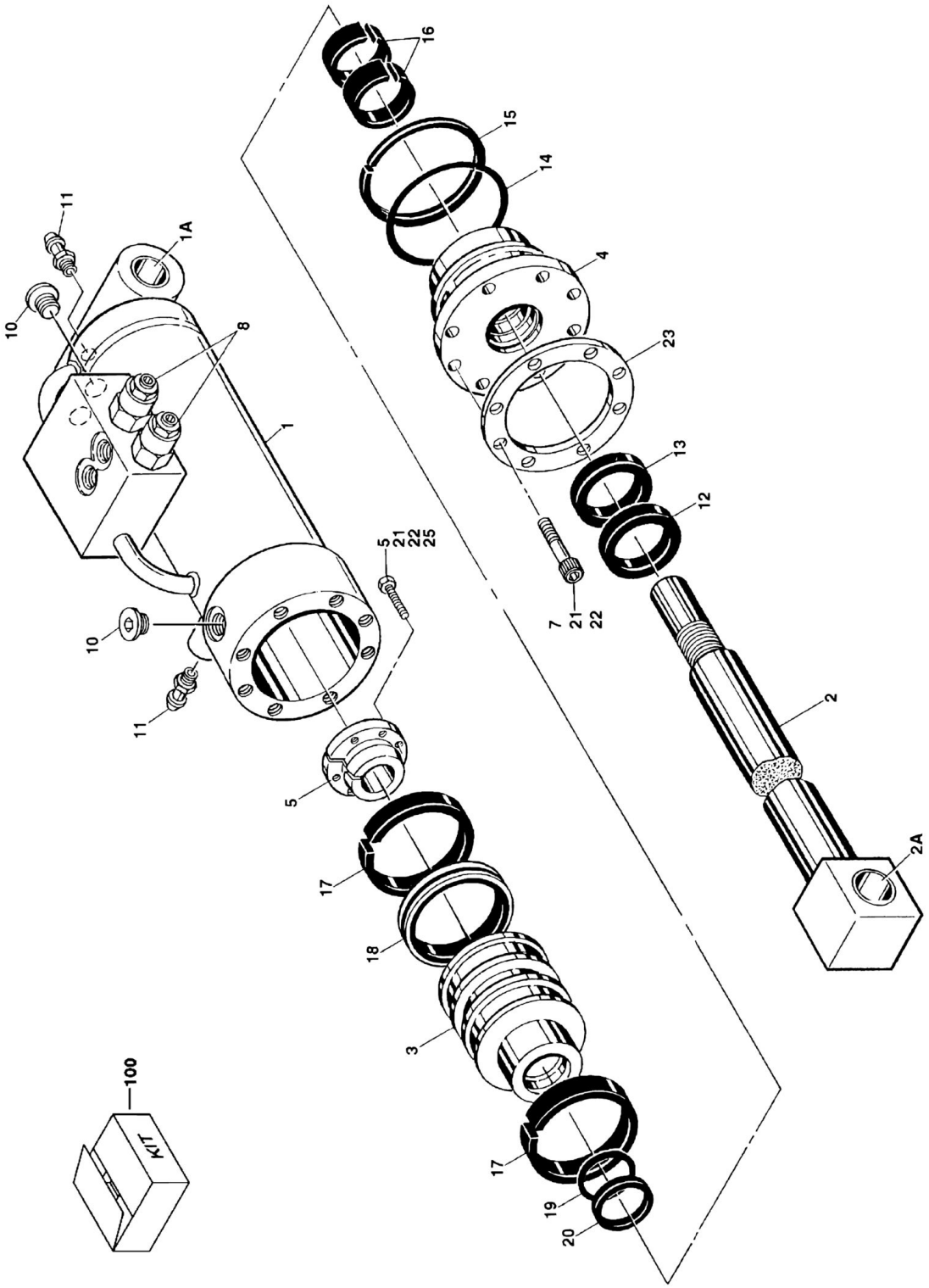

FIGURE 5-1. AXLE LOCKOUT CYLINDER ASSEMBLY

ITEM	PART NUMBER	QTY	DESCRIPTION	REV
	1683078	Ref	**AXLE LOCKOUT CYLINDER ASSEMBLY**	L
1	1684191	1	Barrel Weldment (Note: Includes Item 1A)	
1A	0961816	2	Bushing **(Prior to SN 0300070437)**	
1A	0962496	2	Bushing **(SN 0300070437 through 0300140000)**	
2	1683986	1	Rod Weldment (Note: Includes Item 2A)	
2A	0961816	2	Bushing **(Prior to SN 0300070437)**	
2A	0962496	2	Bushing **(SN 0300070437 through 0300140000)**	
3	3480176	1	Piston	
4	1683059	1	Head	
5	0961895	1	Bushing	
7	3931720	8	Bolt, Socket Head 7/16in-14NC x 1-1/4in	
8	4641162	2	Cartridge, Valve (Counterbalance)	
8	2900770	2	Seal Kit - 4641162 Valve (1 Per Assembly)	
9	2220886	1	Plug, O-Ring	
10	2220885	2	Plug, O-Ring	
11	4640858	3	Valve, Bleeder	
12	See Note	NSS	Wiper (Note: Use Item 100)	
13	See Note	NSS	Seal, Rod (Note: Use Item 100)	
14	See Note	NSS	O-Ring (Note: Use Item 100)	
15	See Note	NSS	Ring, Back-up (Note: Use Item 100)	
16	See Note	NSS	Ring, Wear (Note: Use Item 100)	
17	See Note	NSS	Ring, Wear (Note: Use Item 100)	
18	See Note	NSS	T-Seal (Note: Use Item 100)	
19	See Note	NSS	O-Ring (Note: Use Item 100)	
20	See Note	NSS	Ring, Back-up (Note: Use Item 100)	
21	0100011	AR	Compound, Locking	
22	0100038	AR	Primer, Locking	
23	3760370	1	Ring, Washer	
25	0630535	3	Bolt 1/4in-20NC x 1-1/8in	
100	2901271	1	Seal Kit (Includes Items 12-20)	

FIGURE 5-2. LEVEL CYLINDER ASSEMBLY - PLATFORM SLAVE

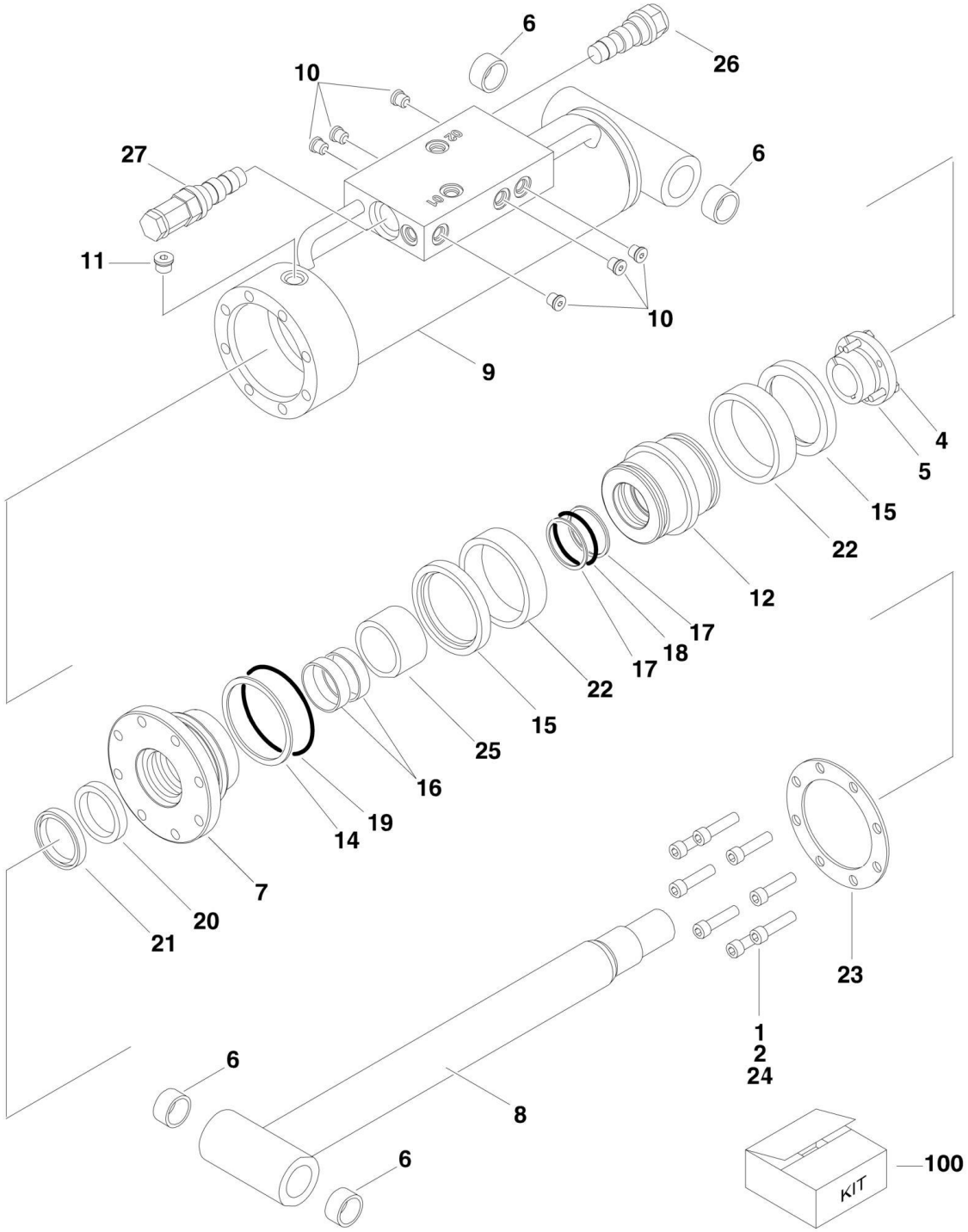

FIGURE 5-2. LEVEL CYLINDER ASSEMBLY - PLATFORM SLAVE

ITEM	PART NUMBER	QTY	DESCRIPTION	REV
		Ref	**SLAVE CYLINDER ASSEMBLIES:**	
	1684189	Ref	**Slave Cylinder Assemblies 800S (Original Equipment)**	C
	1684136	Ref	**Slave Cylinder Assemblies 860SJ (Original Equipment)**	D
		Ref	Note: Original Cylinder may have been replaced with Service Replacement. Identify PN Stamped on Cylinder Before Ordering Parts.	
1	0100011	AR	Compound, Locking	
2	0100038	AR	Primer, Locking	
3	0100063	AR	Loctite #RC 609	
4	0630535	3	Capscrew, Socket Head 1/4in-20NC x 1in	
5	0961894	1	Bushing, Tapered	
6		Ref	Bushing Options:	
6	0961947	4	Bushing 800S - Garmax	
6	0961948	4	Bushing 860SJ - Composite	
7	1683059	1	Head	
8		Ref	Rod Options:	
8	1683976	1	Rod 800S (Note: Includes Item 6)	
8	1684133	1	Rod 860SJ (Note: Item 6 not included - Purchase Separately)	
9		Ref	Barrel Options:	
9	1684188	1	Barrel 800S (Note: Includes Item 6)	
9	1684135	1	Barrel 860SJ (Note: Item 6 not included - Purchase Separately)	
10	2220883	10	Plug	
11	2220885	1	Plug	
12	3480267	1	Piston	
14	See Note	NSS	Ring, Back-up (Note: Use Item 100)	
15	See Note	NSS	Ring, Lock (Note: Use Item 100)	
16	See Note	NSS	Ring, Wear (Note: Use Item 100)	
17	See Note	NSS	Ring, Back-up (Note: Use Item 100)	
18	See Note	NSS	O-Ring (Note: Use Item 100)	
19	See Note	NSS	O-Ring (Note: Use Item 100)	
20	See Note	NSS	Seal (Note: Use Item 100)	
21	See Note	NSS	Wiper (Note: Use Item 100)	
22	See Note	NSS	Seal (Note: Use Item 100)	
23	3760370	1	Ring, Washer	
24	3931620	8	Capscrew 3/8in-16NC x 1-1/4in	
25		Ref	Spacer, Tube Options:	
25	4568402	1	Spacer, Tube 800S	
25	4566468	1	Spacer, Tube 860SJ	
26	4641232	1	Valve, Cartridge	
26	7011112	1	Seal Kit - 4641232 Valve	
27	4640932	1	Valve, Cartridge	
27	7011112	1	Seal Kit - 4640932 Valve	
100	2902061	1	Seal Kit (Includes Items 14-22)	

SECTION 5 - CYLINDER

FIGURE 5-3. LEVEL CYLINDER ASSEMBLY - PLATFORM SLAVE (800S) (SERVICE REPLACEMENT)

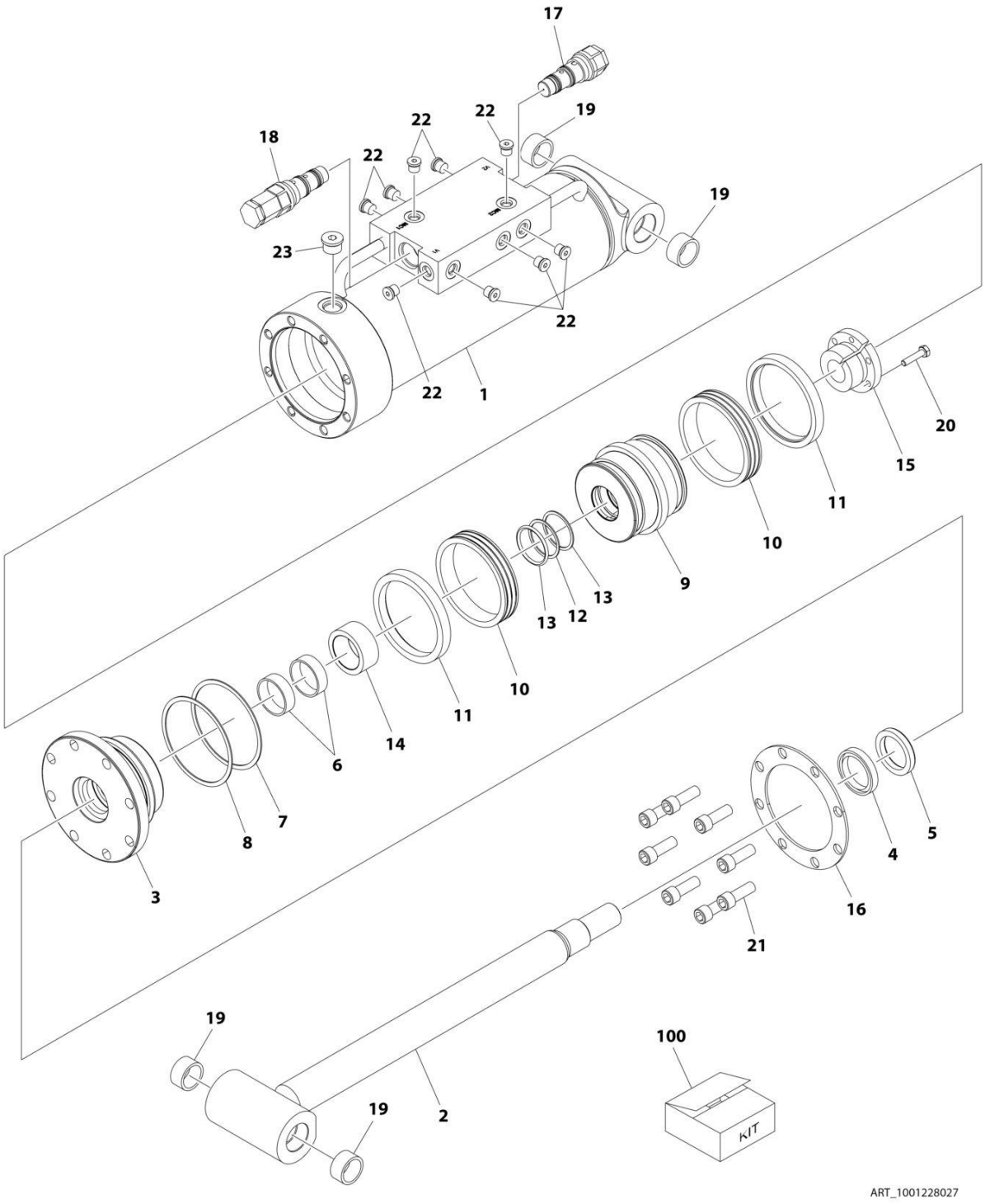

FIGURE 5-3. LEVEL CYLINDER ASSEMBLY - PLATFORM SLAVE (800S) (SERVICE REPLACEMENT)

ITEM	PART NUMBER	QTY	DESCRIPTION	REV
	1001228027	Ref	LEVEL CYLINDER ASSEMBLY - PLATFORM SLAVE	B
		Ref	Note: Original Cylinder may have been replaced with Service Replacement. Identify PN Stamped on Cylinder Before Ordering Parts.	
1	See Note	NSS	Barrel (Note: Not Available for Purchase)	
2	70006648	1	Rod	
3	70006699	1	Head	
4	See Note	NSS	Wiper (Note: Use Item 100)	
5	See Note	NSS	Seal, Rod (Note: Use Item 100)	
6	See Note	NSS	Ring, Wear (Note: Use Item 100)	
7	See Note	NSS	O-Ring (Note: Use Item 100)	
8	See Note	NSS	Ring, Back-up (Note: Use Item 100)	
9	70006700	1	Piston	
10	See Note	NSS	T-Seal (Note: Use Item 100)	
11	See Note	NSS	Ring, Wear (Note: Use Item 100)	
12	See Note	NSS	O-Ring (Note: Use Item 100)	
13	See Note	NSS	Ring, Back-up (Note: Use Item 100)	
14	70006701	1	Spacer, Tube	
15	0961894	1	Bushing, Tapered	
16	3760370	1	Washer	
17	4641232	1	Valve, Cartridge	
17	7011112	1	Seal Kit - 4641232 Valve	
18	4640932	1	Valve, Cartridge	
18	7011112	1	Seal Kit - 4640932 Valve	
19	0961947	4	Bushing	
20	0630535	3	Capscrew 1/4 x 1	
21	3931720	8	Capscrew 7/16 x 1-1/4	
22	2220883	10	Plug	
23	2220886	1	Plug	
100	2902061	1	Seal Kit (Includes Items 4-8 & 10-13)	

SECTION 5 - CYLINDER

FIGURE 5-4. LEVEL CYLINDER ASSEMBLY - PLATFORM SLAVE (860SJ) (SERVICE REPLACEMENT)

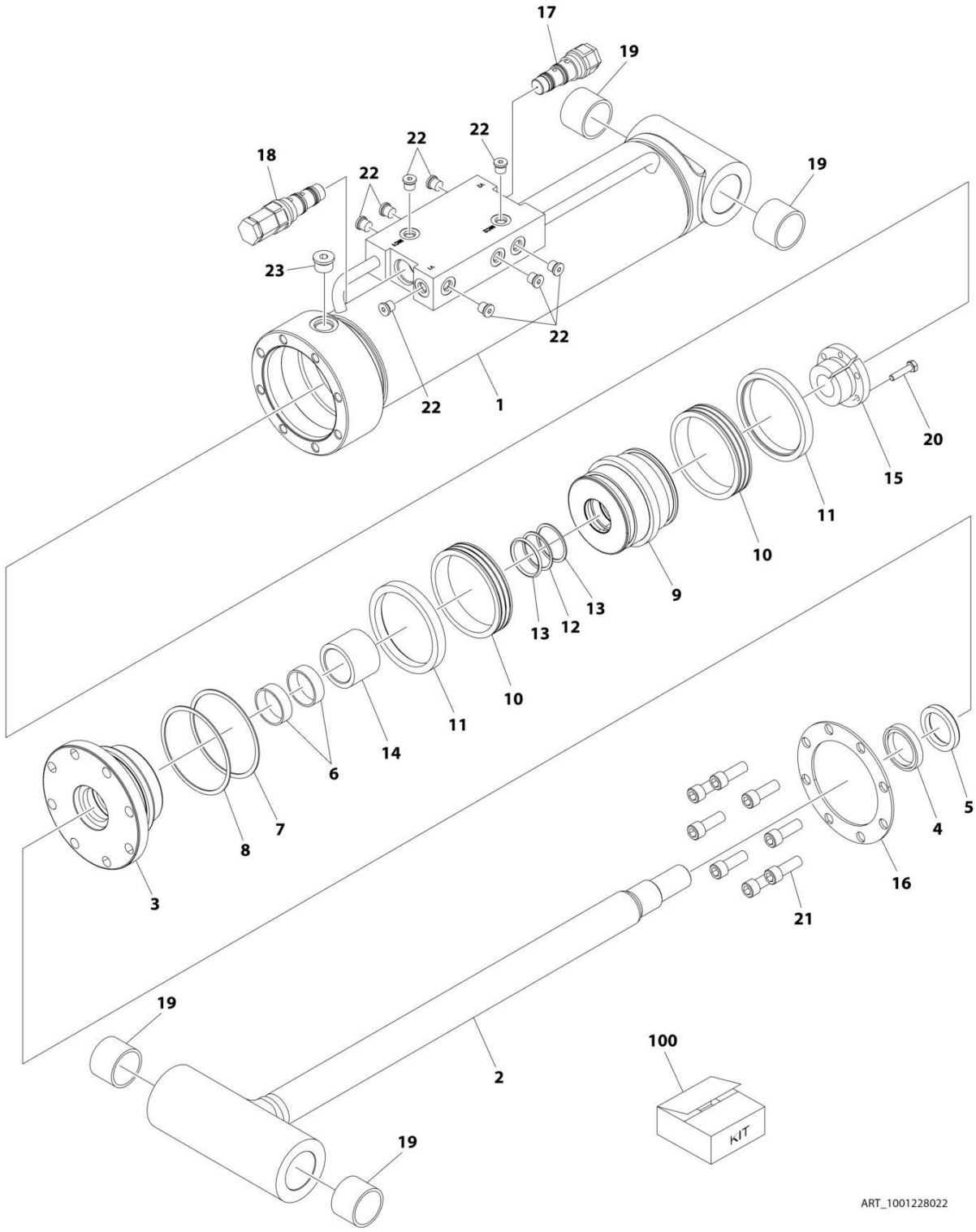

FIGURE 5-4. LEVEL CYLINDER ASSEMBLY - PLATFORM SLAVE (860SJ) (SERVICE REPLACEMENT)

ITEM	PART NUMBER	QTY	DESCRIPTION	REV
	1001228022	Ref	LEVEL CYLINDER ASSEMBLY - PLATFORM SLAVE	B
		Ref	Note: Original Cylinder may have been replaced with Service Replacement. Identify PN Stamped on Cylinder Before Ordering Parts.	
1	See Note	NSS	Barrel (Note: Not Available for Purchase)	
2	70006726	1	Rod	
3	70006699	1	Head	
4	See Note	NSS	Wiper (Note: Use Item 100)	
5	See Note	NSS	Seal, Rod (Note: Use Item 100)	
6	See Note	NSS	Ring, Wear (Note: Use Item 100)	
7	See Note	NSS	O-Ring (Note: Use Item 100)	
8	See Note	NSS	Ring, Back-up (Note: Use Item 100)	
9	70006700	1	Piston	
10	See Note	NSS	T-Seal (Note: Use Item 100)	
11	See Note	NSS	Ring, Wear (Note: Use Item 100)	
12	See Note	NSS	O-Ring (Note: Use Item 100)	
13	See Note	NSS	Ring, Back-up (Note: Use Item 100)	
14	70006645	1	Spacer, Tube	
15	0961894	1	Bushing, Tapered	
16	70006727	2	Washer	
17	4641232	1	Valve, Cartridge	
17	7011112	1	Seal Kit - 4641232 Valve	
18	4640932	1	Valve, Cartridge	
18	7011112	1	Seal Kit - 4640932 Valve	
19	0961948	4	Bushing	
20	0630535	3	Capscrew 1/4 x 1	
21	70006728	8	Bolt	
22	2220883	10	Plug	
23	2220886	1	Plug	
100	2902061	1	Seal Kit (Includes Items 4-8 & 10-13)	

FIGURE 5-5. LIFT CYLINDER ASSEMBLY - JIB (860SJ ONLY) (ORIGINAL EQUIPMENT)

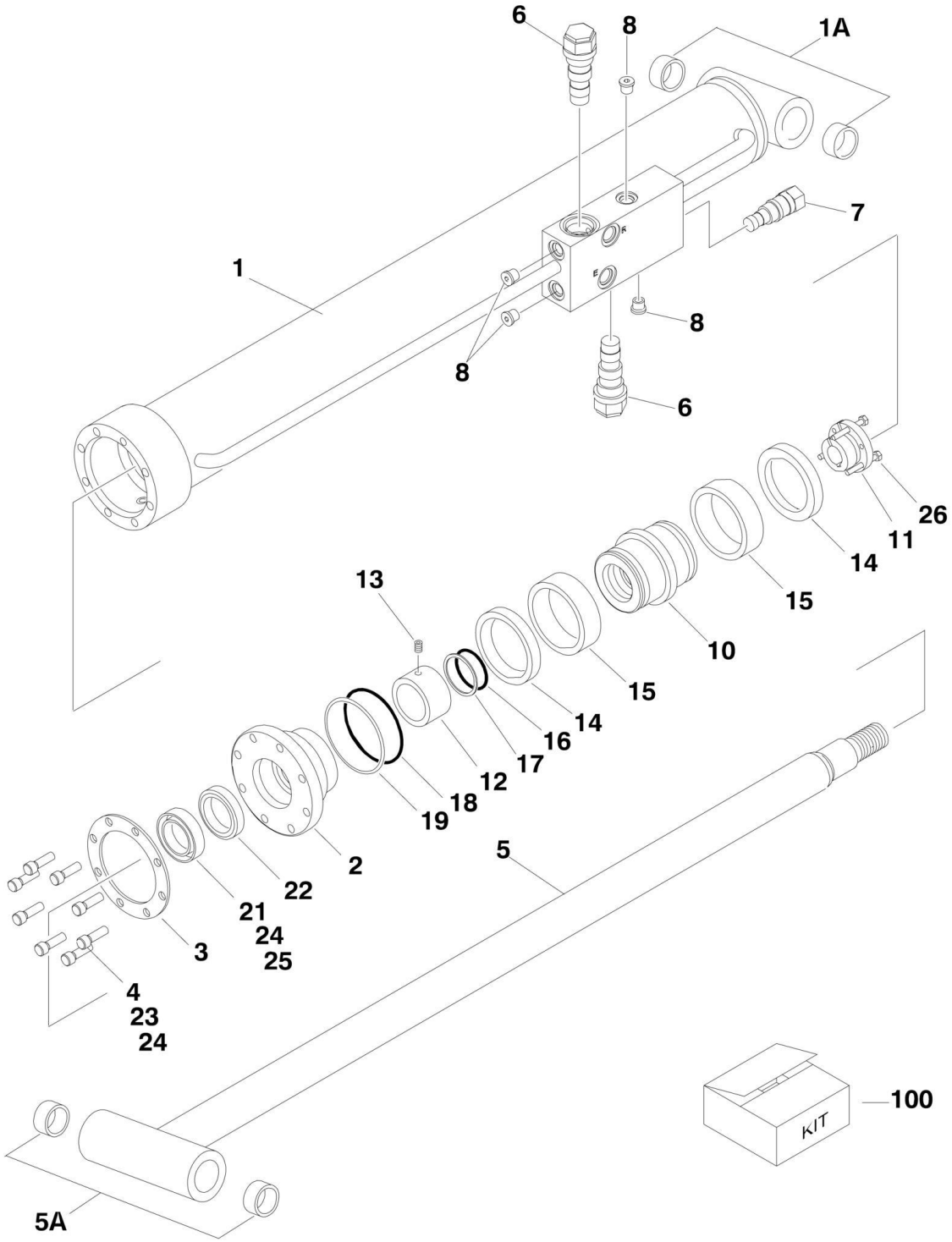

FIGURE 5-5. LIFT CYLINDER ASSEMBLY - JIB (860SJ ONLY) (ORIGINAL EQUIPMENT)

ITEM	PART NUMBER	QTY	DESCRIPTION	REV
	1683609	Ref	**JIB LIFT CYLINDER ASSEMBLY - JIB (860SJ ONLY)**	I
		Ref	Note: Original Cylinder may have been replaced with Service Replacement. Identify PM Stamped on Cylinder Before Ordering Parts.	
1	1684089	1	Barrel Weldment (Note: Includes Item 1A)	
1A	0962336	2	Bushing	
2	1683053	1	Head	
3	3760368	1	Washer, Ring	
4	3931516	8	Bolt, Socket Head 5/16in-18NC x 2in	
5	1684090	1	Rod Weldment (Note: Includes Item 5A)	
5A	0962336	2	Bushing	
6	4640509	2	Cartridge, Valve (Counterbalance Non-Vented)	
6	2900792	2	Seal Kit - 4640509 Valve	
7	4641062	1	Plug, P.O. Check **(Prior to SN 0300069570)**	
8	2220883	4	Plug, O-Ring	
9	2220885	1	Plug, O-Ring	
10	3480210	1	Piston	
11	0961893	1	Bushing, Tapered	
12		Ref	Spacer, Tube Options:	
12	4566471	1	Spacer, Tube **(Prior to SN 0300079610)**	
12	4100100	1	Spacer, Tube **(SN 0300079610 through 0300140000)**	
13	3900141	1	Setscrew 1/4in-20NC x 1/4in **(Prior to SN 0300079610)**	
14	See Note	NSS	Ring, Lock (Note: Use Item 100)	
15	See Note	NSS	Seal, Piston (Note: Use Item 100)	
16	See Note	NSS	O-Ring (Note: Use Item 100)	
17	See Note	NSS	Ring, Back-up (Note: Use Item 100)	
18	See Note	NSS	O-Ring (Note: Use Item 100)	
19	See Note	NSS	Ring, Back-up (Note: Use Item 100)	
20	See Note	NSS	Seal (Note: Use Item 100)	
21	See Note	NSS	Wiper (Note: Use Item 100)	
22	See Note	NSS	Ring, Wear (Note: Use Item 100)	
23	0100011	AR	Compound, Locking	
24	0100038	AR	Primer, Locking	
25	0100063	AR	Loctite #RC609 **(Prior to SN 0300079610)**	
26	0630534	3	Capscrew, Socket Head #10-24NC x 1in	
100	2901303	1	Seal Kit (Includes Items 14-22)	

FIGURE 5-6. LIFT CYLINDER ASSEMBLY - JIB (860SJ ONLY) (USAGE MAY VARY) (SERVICE REPLACEMENT)

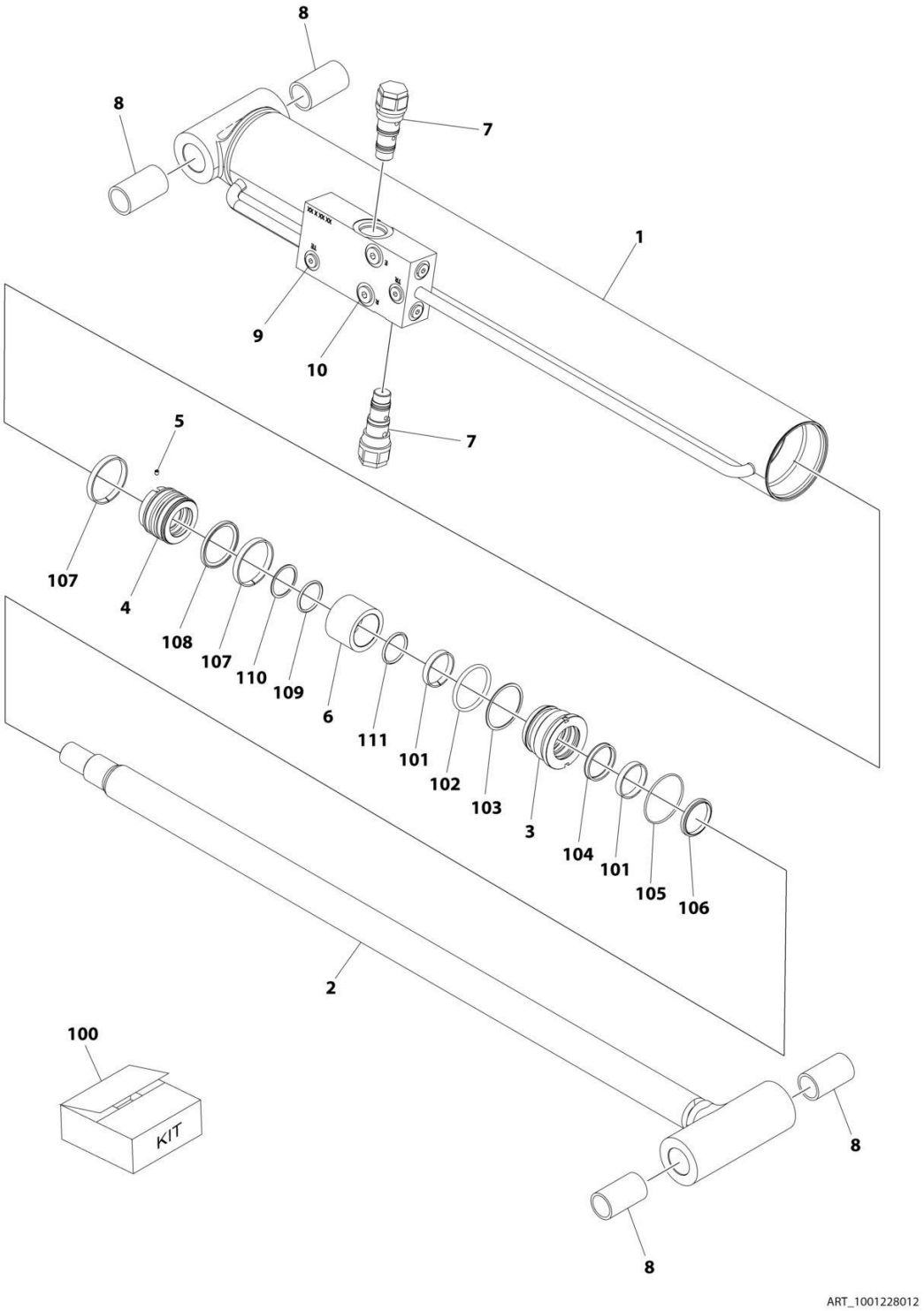

FIGURE 5-6. LIFT CYLINDER ASSEMBLY - JIB (860SJ ONLY) (USAGE MAY VARY) (SERVICE REPLACEMENT)

ITEM	PART NUMBER	QTY	DESCRIPTION	REV
	1001228012	Ref	LIFT CYLINDER ASSEMBLY - JIB	C
		Ref	Note: Original Cylinder May Have Been Replaced with Service Replacement. Identify PN Stamped on Cylinder Before Ordering Parts.	
1	See Note	NSS	Barrel (Note: Not Available for Purchase)	
2	70006572	1	Rod	
3	70006571	1	Head	
4	70006570	1	Piston	
5	70023915	1	Screw	
6	70006569	1	Spacer	
7	4640509	2	Cartridge, Valve	
7	2900792	2	Seal Kit - 4640509 Valve	
8	0962336	4	Bushing	
9	2220883	6	Plug, O-Ring	
10	2220885	2	Plug, O-Ring	
100	70006568	1	Seal Kit (Includes Items 101-111)	
101	See Note	NSS	Ring, Wear (Note: Use Item 100)	
102	See Note	NSS	O-Ring (Note: Use Item 100)	
103	See Note	NSS	Ring, Back-up (Note: Use Item 100)	
104	See Note	NSS	Seal, Rod (Note: Use Item 100)	
105	See Note	NSS	O-Ring (Note: Use Item 100)	
106	See Note	NSS	Wiper (Note: Use Item 100)	
107	See Note	NSS	Ring, Wear (Note: Use Item 100)	
108	See Note	NSS	Seal (Note: Use Item 100)	
109	See Note	NSS	O-Ring (Note: Use Item 100)	
110	See Note	NSS	Ring, Back-up (Note: Use Item 100)	
111	See Note	NSS	O-Ring (Note: Use Item 100)	

FIGURE 5-7. LIFT CYLINDER ASSEMBLY - JIB (860SJ ONLY) (USAGE MAY VARY) (SERVICE REPLACEMENT)

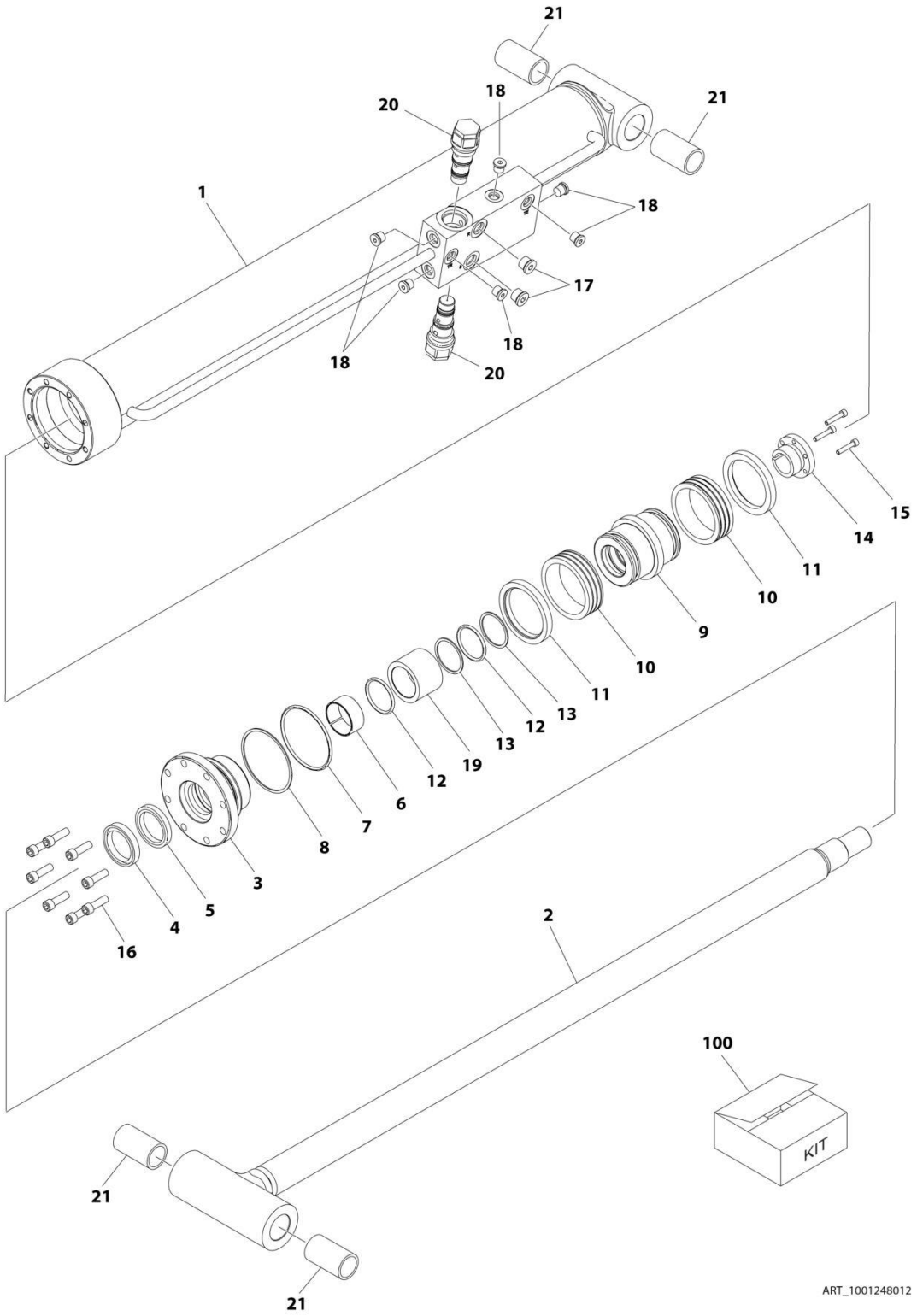

FIGURE 5-7. LIFT CYLINDER ASSEMBLY - JIB (860SJ ONLY) (USAGE MAY VARY) (SERVICE REPLACEMENT)

ITEM	PART NUMBER	QTY	DESCRIPTION	REV
	1001248012	Ref	LIFT CYLINDER ASSEMBLY - JIB	C
		Ref	Note: Original Cylinder May Have Been Replaced with Service Replacement. Identify PN Stamped on Cylinder Before Ordering Parts.	
1	See Note	NSS	Barrel (Note: Not Available for Purchase)	
2	70006734	1	Rod	
3	70006649	1	Head	
4	See Note	NSS	Wiper (Note: Use Item 100)	
5	See Note	NSS	Seal, Rod (Note: Use Item 100)	
6	See Note	NSS	Ring, Wear (Note: Use Item 100)	
7	See Note	NSS	O-Ring (Note: Use Item 100)	
8	See Note	NSS	Ring, Back-up (Note: Use Item 100)	
9	70006650	1	Piston	
10	See Note	NSS	Seal (Note: Use Item 100)	
11	See Note	NSS	Ring, Lock (Note: Use Item 100)	
12	See Note	NSS	O-Ring (Note: Use Item 100)	
13	See Note	NSS	Ring, Back-up (Note: Use Item 100)	
14	0961893	1	Bushing, Tapered	
15	0630534	3	Capscrew, Socket Head #10 x 1	
16	70006735	8	Capscrew 5/16	
17	2220885	2	Plug, O-Ring	
18	2220883	6	Plug, O-Ring	
19	70006736	1	Spacer	
20	4640509	2	Cartridge, Valve	
20	2900792	2	Seal Kit - 4640509 Valve	
21	0962336	4	Bushing	
100	1001138795	1	Seal Kit (Includes Items 4-8 & 10-13)	

FIGURE 5-8. LIFT CYLINDER ASSEMBLY - MAIN BOOM

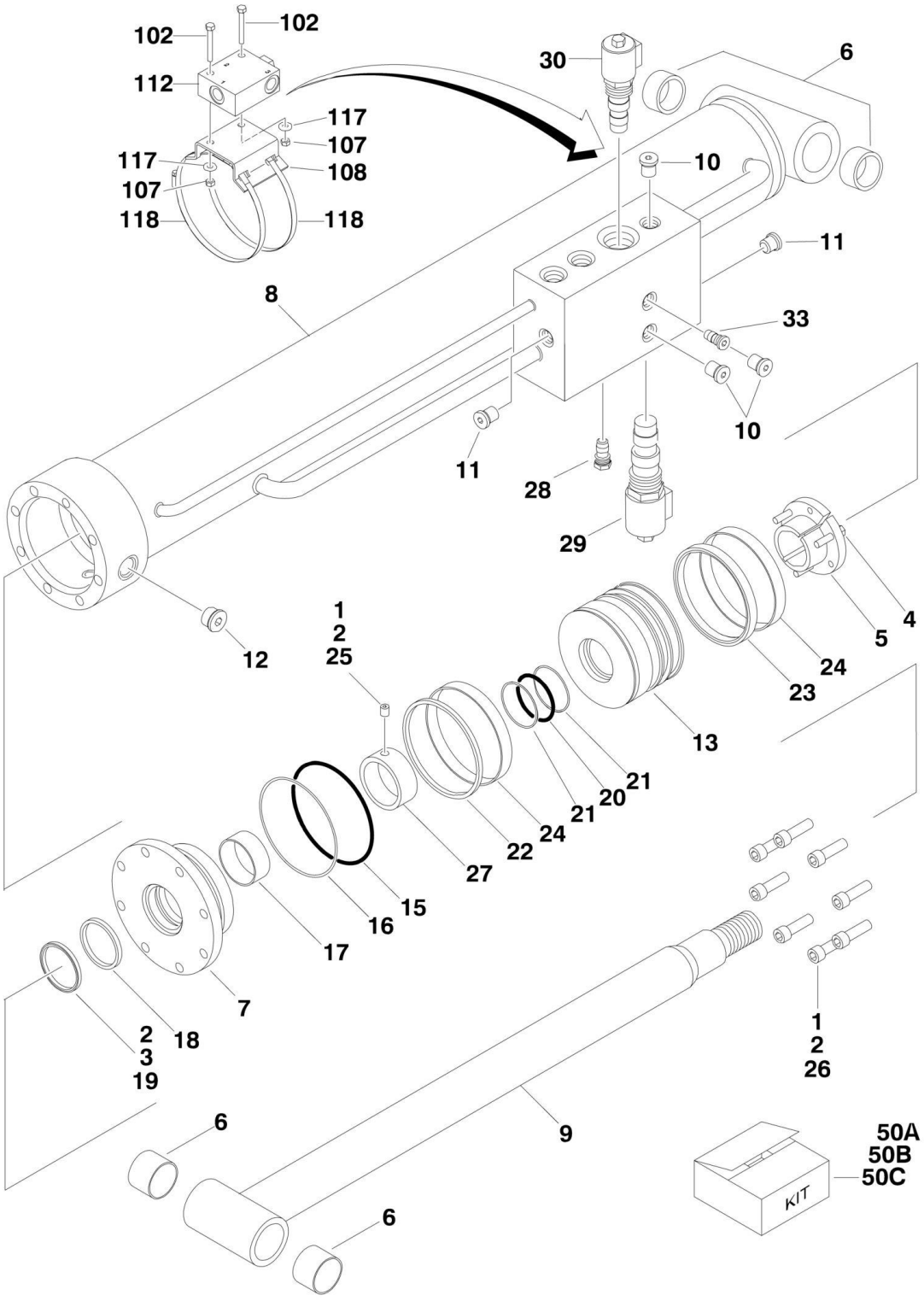

FIGURE 5-8. LIFT CYLINDER ASSEMBLY - MAIN BOOM

ITEM	PART NUMBER	QTY	DESCRIPTION	REV
		Ref	**MAIN LIFT CYLINDER ASSEMBLY**	
	1684042	Ref	**Main Lift Cylinder Assembly 800S (Prior to SN 0300066889)**	F
	1684199	Ref	**Main Lift Cylinder Assembly 800S (Original Equipement) (SN 0300066889 through 0300140000)**	E
	1684124	Ref	**Main Lift Cylinder Assembly 860SJ (Prior to SN 0300066889)**	D
	1684202	Ref	**Main Lift Cylinder Assembly 860SJ (Original Equipement) (SN 0300066889 through 0300140000)**	F
		Ref	Note: Original Cylinder may have been replaced with Service Replacement. Identify PM Stamped on Cylinder Before Ordering Parts.	
1	0100011	AR	Compound, Locking	
2	0100038	AR	Primer, Locking	
3	0100063	AR	Loctite #RC 609 **(Prior to SN 0300110961)**	
4	0630536	3	Bolt	
5	0961898	1	Bushing, Tapered	
6	0962033	4	Bushing	
7	1683818	1	Head	
8		Ref	Barrel Weldment Options:	
8	1684078	1	1684042 Cylinder	
8	1684198	1	1684199/1684202 Cylinder	
8	1684184	1	1684124 Cylinder	
9		Ref	Rod Weldment Options:	
9	1684080	1	1684042/1684199 Cylinder	
9	1684123	1	1684124/1684202 Cylinder	
10	2220883	5	Plug, O-Ring	
11	2220885	2	Plug, O-Ring	
12	2220888	1	Plug, O-Ring	
13		Ref	Piston Options:	
13	3480265	1	1684042/1684124 Cylinder	
13	3480275	1	1684199/1684202 Cylinder	
15	See Note	NSS	O-Ring (Note: Use Item 50A, 50B or 50C)	
16	See Note	NSS	Ring, Back-up (Note: Use Item 50A, 50B or 50C)	
17	See Note	NSS	Ring, Wear (Note: Use Item 50A, 50B or 50C)	
18	See Note	NSS	Seal, Rod (Note: Use Item 50A, 50B or 50C)	
19	See Note	NSS	Wiper (Note: Use Item 50A, 50B or 50C)	
20	See Note	NSS	O-Ring (Note: Use Item 50A, 50B or 50C)	
21	See Note	NSS	Ring, Back-up (Note: Use Item 50A, 50B or 50C)	
22		Ref	Seal/Ring Options:	
22	See Note	NSS	Seal - 1684042/1684124 Cylinder (Note: Use Item 50A)	
22	See Note	NSS	Ring, Guidelock - 1684199/1684202 Cylinder (Note: Use Item 50B or 50C)	
23	See Note	AR	Seal (Note: Use Item 50A, 50B or 50C)	
24		Ref	Ring Options:	
24	See Note	NSS	Ring, Wear - 1684042/1684124 Cylinder (Note: Use Item 50A)	
24	See Note	NSS	Ring, Guidelock - 1684199/1684202 Cylinder (Note: Use Item 50B or 50C)	
25	3900310	1	Setscrew	
26	3932240	6	Capscrew 3/4in-10NC x 2-1/2in	
27		Ref	Spacer, Tube Options:	
27	4568240	1	1684042/1684199 Cylinder	
27	4568273	1	1684124/1684202 Cylinder	

SECTION 5 - CYLINDER

ITEM	PART NUMBER	QTY	DESCRIPTION	REV
28	4641144	1	Cartridge, Restrictor/Check Valve	
28	7012967	1	Seal Kit - 4641144 Valve	
29	4641234	1	Cartridge, Lift Dump Proportional Solenoid	
29	7023982	1	Cartridge - 4641234 Valve	
29	7012925	1	Seal Kit - 4641234 Valve	
29	7017451	1	Coil - 4641234 Valve	
30	4641188	1	Cartridge, Lift Holding Solenoid	
30	7023923	1	Cartridge - 4641188 Valve	
30	7023919	1	Seal Kit - 4641188 Valve	
30	7012943	1	Coil - 4641188 Valve	
33	4641194	1	Cartridge, Relief Valve	
33	7023927	1	Seal Kit - 4641194 Valve	
50		Ref	Seal Kit Options (Includes Items 15-24):	
50A	2902050	1	Seal Kit - Main Boom Lift Cylinder 1684042/1684124	
50B	2902134	1	Seal Kit - Main Boom Lift Cylinder 1684199/1684202 **(Prior to SN 0300079435)**	
50C	2901537	1	Seal Kit - Main Boom Lift Cylinder 1684199/1684202 **(SN 0300079435 through 0300140000)**	
	0272750	Ref	**MANUAL DESCENT INSTALLATION (OPTIONAL) (SN 0300068651 through 0300140000)**	A
102	0641514	2	Bolt 5/16in-18NC x 1-3/4in	
107	3311505	2	Locknut 5/16in-18NC	
108	3574172	1	Plate, Valve Mounting	
112	4640673	1	Valve, Check	
112	7011325	1	Cartridge, Valve Check	
117	4751500	2	Flatwasher 5/16in Regular	
118	1320315	2	Clamp	

FIGURE 5-9. LIFT CYLINDER ASSEMBLY - MAIN BOOM (800S) (SERVICE REPLACEMENT)

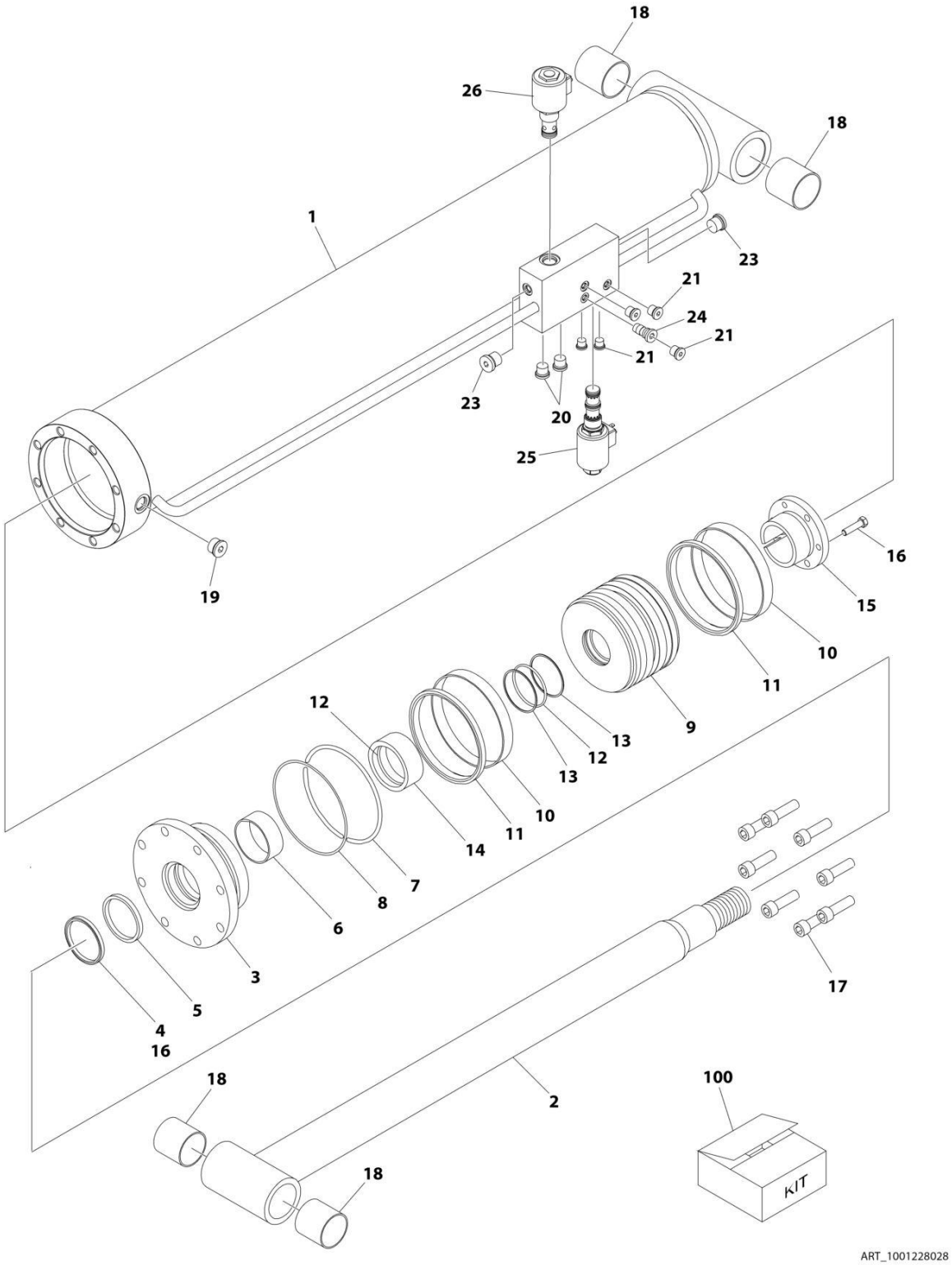

FIGURE 5-9. LIFT CYLINDER ASSEMBLY - MAIN BOOM (800S) (SERVICE REPLACEMENT)

ITEM	PART NUMBER	QTY	DESCRIPTION	REV
	1001228028	Ref	LIFT CYLINDER ASSEMBLY - MAIN BOOM	C
		Ref	Note: Original Cylinder may have been replaced with Service Replacement. Identify PN Stamped on Cylinder Before Ordering Parts.	
1	See Note	NSS	Barrel (Note: Not Available for Purchase)	
2	70006506	1	Rod	
3	70006505	1	Head	
4	See Note	NSS	Wiper (Note: Use Item 100)	
5	See Note	NSS	Seal, Rod (Note: Use Item 100)	
6	See Note	NSS	Ring, Wear (Note: Use Item 100)	
7	See Note	NSS	O-Ring (Note: Use Item 100)	
8	See Note	NSS	Ring, Back-up (Note: Use Item 100)	
9	70006504	1	Piston	
10	See Note	NSS	Ring, Guidelock (Note: Use Item 100)	
11	See Note	NSS	Ring, Guidelock (Note: Use Item 100)	
12	See Note	NSS	O-Ring (Note: Use Item 100)	
13	See Note	NSS	Ring, Back-up (Note: Use Item 100)	
14	70006503	1	Spacer, Tube	
15	0961898	1	Bushing, Tapered	
16	0630536	3	Bolt	
16	0100011	AR	Compound, Locking	
16	0100038	AR	Primer, Locking	
17	3932240	8	Capscrew 3/4 x 2-1/2	
17	0100011	AR	Compound, Locking	
17	0100038	AR	Primer, Locking	
18	0962033	4	Bushing	
19	2220888	3	Plug	
20	2220887	2	Plug	
21	2220883	4	Plug	
23	2220885	2	Plug	
24	4641194	1	Cartridge, Relief Valve	
24	7023927	1	Seal Kit - 4641194 Valve	
25	4641188	1	Cartridge, Lift Holding Solenoid **(SN 0300257003 through 0300272492, SN B300003768 through B300005730, Except SN 0300272449 through 0300272454, Excluding B300005568)**	
25	7023923	1	Cartridge - 4641188 Valve	
25	7023919	1	Seal Kit - 4641188 Valve	
25	7012943	1	Coil - 4641188 Valve	
26	4641234	1	Cartridge, Lift Relief Proportional Solenoid **(SN 0300257003 through 0300272492, SN B300003768 through B300005730, Except SN 0300272449 through 0300272454, Excluding B300005568)**	
26	7023982	1	Cartridge - 4641234 Valve	
26	7012925	1	Seal Kit - 4641234 Valve	
26	7017451	1	Coil - 4641234 Valve	
100	2901537	1	Seal Kit (Includes Items 5-8 & 10-13)	

FIGURE 5-10. LIFT CYLINDER ASSEMBLY - MAIN BOOM (860SJ) (SERVICE REPLACEMENT)

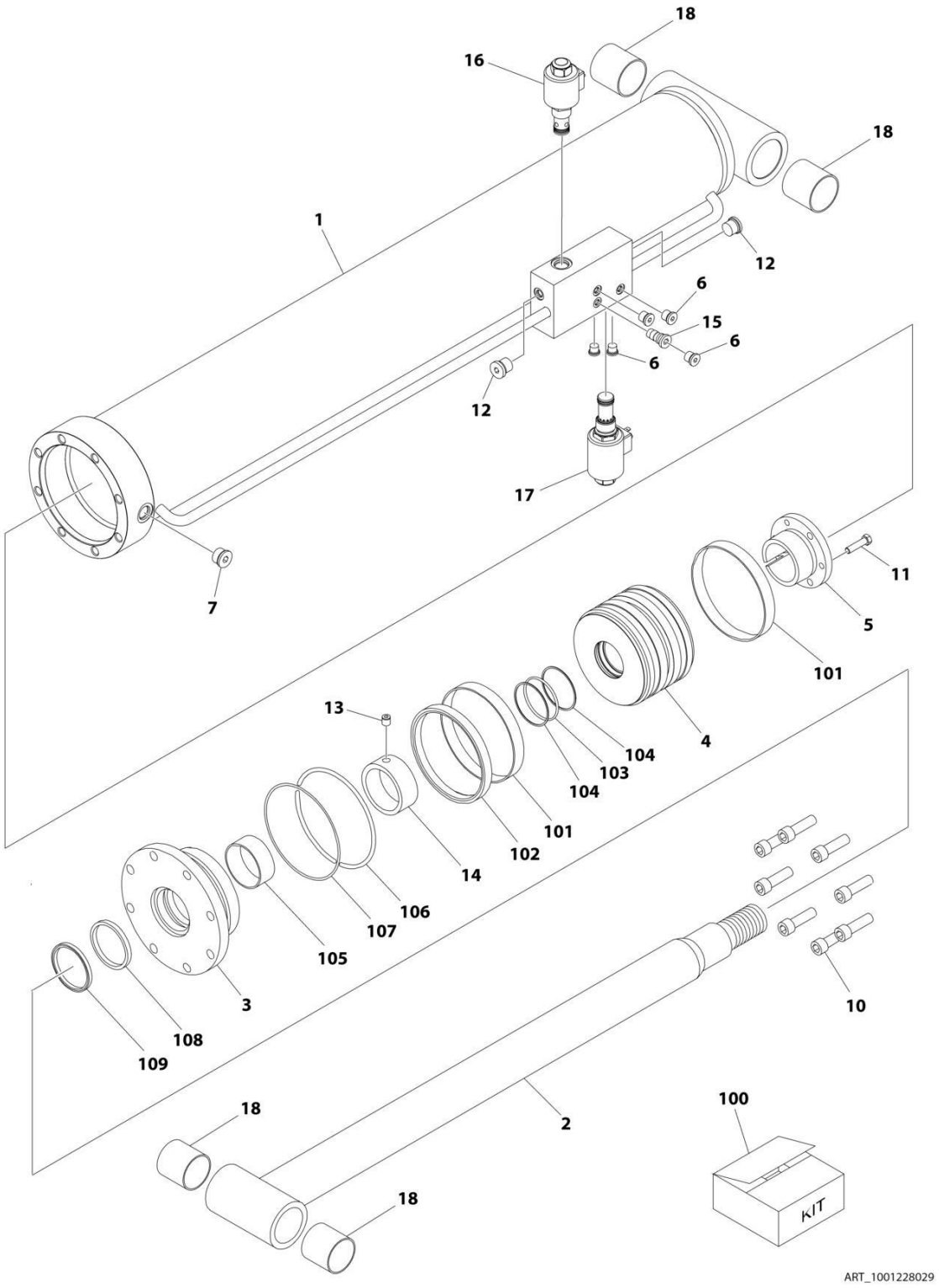

FIGURE 5-10. LIFT CYLINDER ASSEMBLY - MAIN BOOM (860SJ) (SERVICE REPLACEMENT)

ITEM	PART NUMBER	QTY	DESCRIPTION	REV
	1001228029	Ref	LIFT CYLINDER ASSEMBLY - MAIN BOOM	B
		Ref	Note: Original Cylinder may have been replaced with Service Replacement. Identify PN Stamped on Cylinder Before Ordering Parts.	
1	See Note	NSS	Barrel (Note: Not Available for Purchase)	
2	70006395	1	Rod	
3	70006377	1	Head	
4	70006394	1	Piston	
5	70006365	1	Bushing, Tapered	
6	2220883	5	Plug	
7	See Note	NSS	Plug (Note: Not Available for Purchase)	
10	3932240	8	Capscrew 3/4 x 2-1/2	
11	0630536	3	Bolt	
12	2220885	2	Plug	
13	3900310	1	Setscrew	
14	70006393	1	Spacer, Tube	
15	4641194	1	Cartridge, Relief Valve	
15	7023927	1	Seal Kit - 4641194 Valve	
16	4641234	1	Cartridge, Relief Valve	
16	7023982	1	Cartridge Less Coil	
16	7012925	1	Seal Kit - 7023982/4641234 Valve	
16	7017451	1	Coil	
17	4641188	1	Cartridge, Holding Valve	
17	7023923	1	Cartridge Less Coil	
17	7023919	1	Seal Kit - 7023923/4641188 Valve	
17	7012943	1	Coil	
18	0962033	4	Bushing	
100	70006392	1	Seal Kit (Includes Items 101-109)	
101	See Note	NSS	Ring, Guidelock (Note: Use Item 100)	
102	See Note	NSS	Seal (Note: Use Item 100)	
103	See Note	NSS	O-Ring (Note: Use Item 100)	
104	See Note	NSS	Ring, Back-up (Note: Use Item 100)	
105	See Note	NSS	Ring, Wear (Note: Use Item 100)	
106	See Note	NSS	O-Ring (Note: Use Item 100)	
107	See Note	NSS	Ring, Back-up (Note: Use Item 100)	
108	See Note	NSS	Seal, Rod (Note: Use Item 100)	
109	See Note	NSS	Wiper (Note: Use Item 100)	

FIGURE 5-11. STEER CYLINDER ASSEMBLY

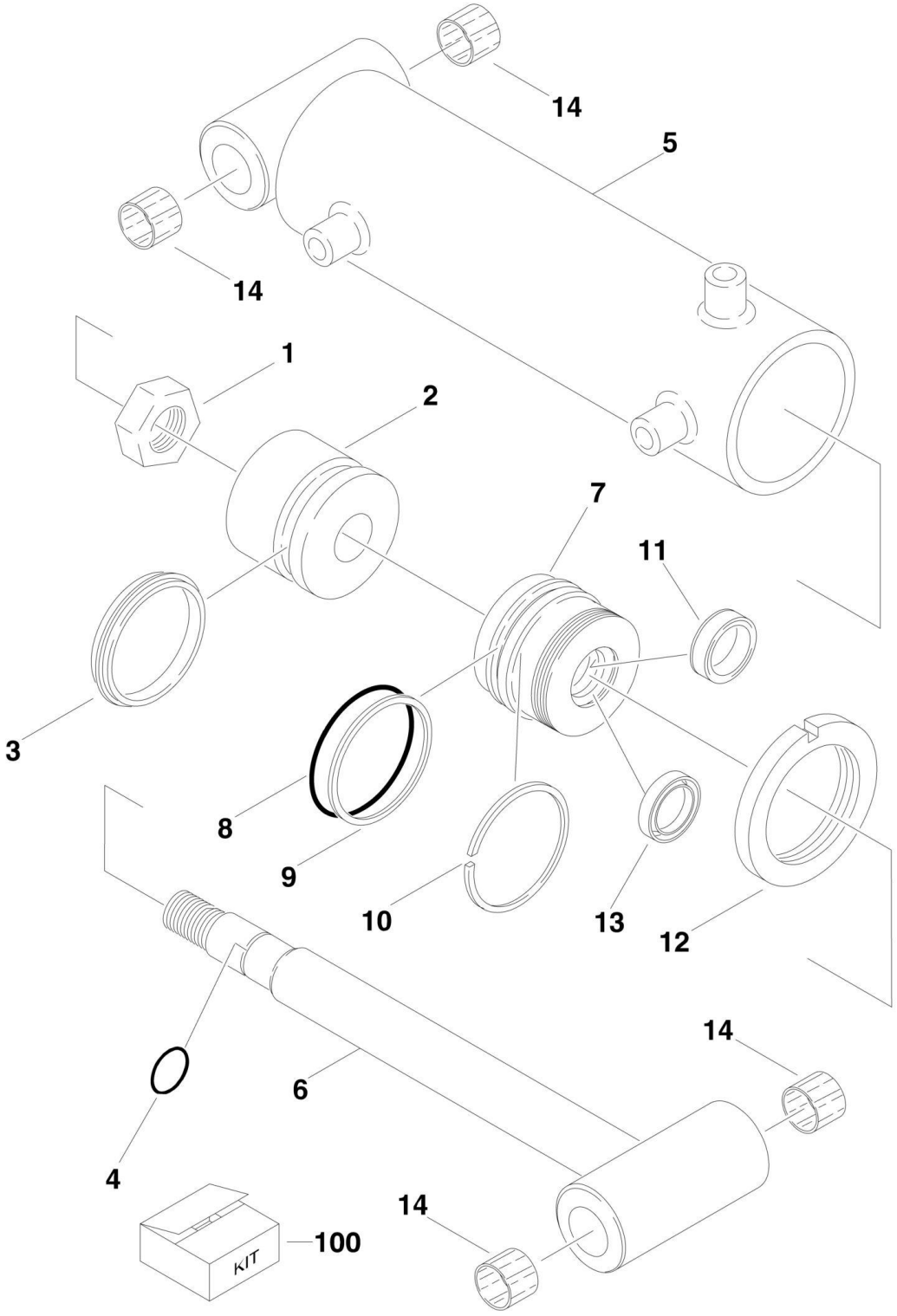

FIGURE 5-11. STEER CYLINDER ASSEMBLY

ITEM	PART NUMBER	QTY	DESCRIPTION	REV
	1683740	Ref	**STEER CYLINDER ASSEMBLY**	C
1	7017210	1	Locknut	
2	7017211	1	Piston	
3	See Note	NSS	Seal (Note: Use Item 100)	
4	See Note	NSS	O-Ring (Note: Use Item 100)	
5	7023023	1	Barrel Weldment	
6	7017236	1	Rod Weldment	
7	7017213	1	Head	
8	See Note	NSS	O-Ring (Note: Use Item 100)	
9	See Note	NSS	Ring, Back-up (Note: Use Item 100)	
10	See Note	NSS	Ring, Retainer (Note: Use Item 100)	
11	See Note	NSS	Seal (Note: Use Item 100)	
12	7017214	1	Nut, Spanner	
13	See Note	NSS	Wiper (Note: Use Item 100)	
14	0961977	4	Bushings	
100	7017215	1	Seal Kit (Includes Items 3, 4, 8-11 & 13)	

FIGURE 5-12. TELESCOPE CYLINDER ASSEMBLY

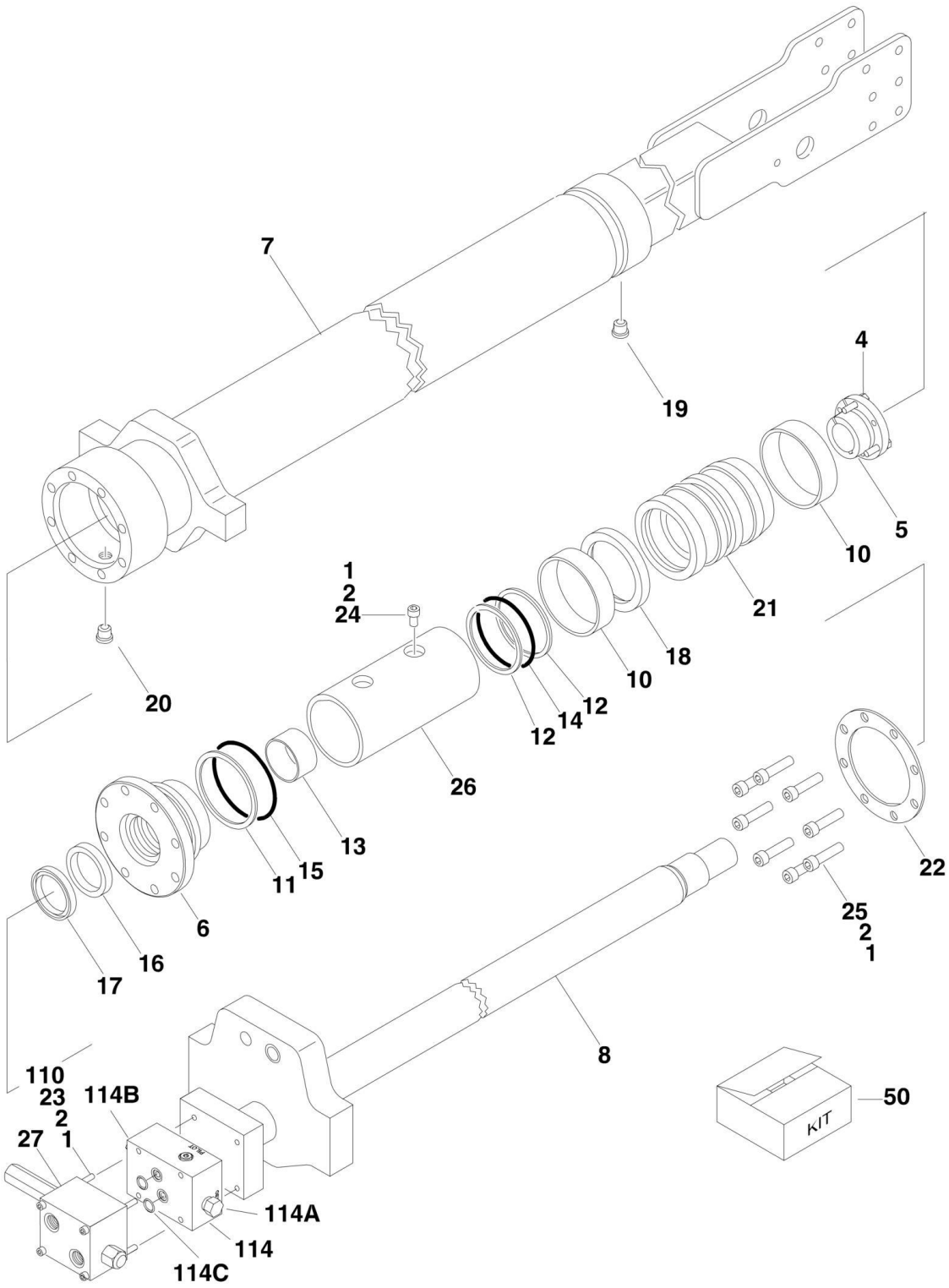

FIGURE 5-12. TELESCOPE CYLINDER ASSEMBLY

ITEM	PART NUMBER	QTY	DESCRIPTION	REV
		Ref	**TELESCOPE CYLINDER ASSEMBLY**	
	1684041	Ref	**Telescope Cylinder Assembly 800S (Original Equipment)**	E
	1001177317	Ref	**Telescope Cylinder Assembly 800S (Service Replacement)**	B
	1684043	Ref	**Telescope Cylinder Assembly 860SJ (Original Equipment)**	F
	1001181588	Ref	**Telescope Cylinder Assembly 860SJ (Service Replacement)**	C
		Ref	Note: Original Cylinder may have been replaced with Service Replacement. Identify PM Stamped on Cylinder Before Ordering Parts.	
1	0100011	AR	Compound, Locking	
2	0100038	AR	Primer, Locking	
4	0630535	3	Bolt 1/4in-20NC x 1-1/8in	
5	0961897	1	Bushing, Tapered	
6		Ref	Head Options:	
6	1683077	1	Head (1684041 & 1684043 Cylinders)	
6	1001175884	1	Head (1001177317 & 1001181588 Cylinders)	
7		Ref	Barrel Options:	
7	1684049	1	Barrel 800S	
7	1684045	1	Barrel 860SJ	
8		Ref	Rod Options:	
8	1684050	1	Rod 800S (1684041 Cylinder) **(Prior to SN 0300071018)**	
8	1684267	1	Rod 800S (1684041 Cylinder) **(SN 0300071018 through 0300140000)**	
8	1001115631	1	Rod 800S (1001177317 Cylinder)	
8	1684046	1	Rod 860SJ (1684043Cylinder) **(Prior to SN 0300071018)**	
8	1684269	1	Rod 860SJ (1684043Cylinder) **(SN 0300071018 through 0300140000)**	
8	1001115465	1	Rod 860SJ (1001181588 Cylinder)	
10	See Note	NSS	Ring, Wear (Note: Use Item 50)	
11	See Note	NSS	Ring, Back-up (Note: Use Item 50)	
12	See Note	NSS	Ring, Back-up (Note: Use Item 50)	
13	See Note	NSS	Ring, Wear (Note: Use Item 50)	
14	See Note	NSS	O-Ring (Note: Use Item 50)	
15	See Note	NSS	O-Ring (Note: Use Item 50)	
16	See Note	NSS	Seal, Rod (Note: Use Item 50)	
17	See Note	NSS	Wiper (Note: Use Item 50)	
18	See Note	NSS	T-Seal (Note: Use Item 50)	
19	2220885	1	Plug, O-Ring	
20	2220886	2	Plug, O-Ring	
21		Ref	Piston Options:	
21	3480266	1	Piston (1684041 & 1684043 Cylinders)	
21	1001115504	1	Piston (1001177317 & 1001181588 Cylinders)	
22		Ref	Ring, Washer Options:	
22	3760370	1	Ring, Washer **(Prior to SN 0300137483)**	
22	1001108958	1	Ring, Washer **(SN 0300137483 through 0300140000)**	
23	3931448	4	Capscrew 1/4in-20NC x 3in	
24	3931508	1	Capscrew 5/16in-18NC x 1/2in	
25		Ref	Capscrew Options:	
25	3931724	8	Capscrew 7/16in-14NC x 1-1/2in (1684041 & 1684043 Cylinders)	
25	3931740	8	Capscrew 7/16in-14NC x 1-1/2in (1001177317 & 1001181588 Cylinders)	

SECTION 5 - CYLINDER

ITEM	PART NUMBER	QTY	DESCRIPTION	REV
26		Ref	Spacer, Tube	
26	4568264	1	Spacer, Tube 800S (1684041 Cylinder)	
26	1001115633	1	Spacer, Tube 800S (1001177317 Cylinder)	
26	4568282	1	Spacer, Tube 860SJ (1684043 Cylinder)	
26	1001115469	1	Spacer, Tube 860SJ (1001181588 Cylinder)	
27	4641033	1	Valve Assembly Options: (No serviceable parts - sold as assembly only)	
27	7024508	2	O-Ring (Not Shown - Located between valve and cylinder)	
50		Ref	Seal Kit Options (Includes Items 10-18):	
50	2901554	1	Seal Kit (1684041 & 1684043 Cylinders)	
50	1001181694	1	Seal Kit (1001177317 & 1001181588 Cylinders)	
	0272750	Ref	**MANUAL DESCENT INSTALLATION (SN 0300068651 through 0300140000)**	A
110	3931480	4	Capscrew 1/4in-20NC x 5in	
114	4641262	1	Valve, Assembly (Manual Descent)	
114A	7026015	1	Cartridge	
114A	7026004	1	Seal Kit - 7026015 Cartridge	
114B	7026016	1	Cartridge	
114B	7011346	1	Seal Kit - 7026016 Cartridge	
114C	3790112	2	O-Ring	

FIGURE 5-13. TELESCOPE CYLINDER ASSEMBLY (800S) (SERVICE REPLACEMENT)

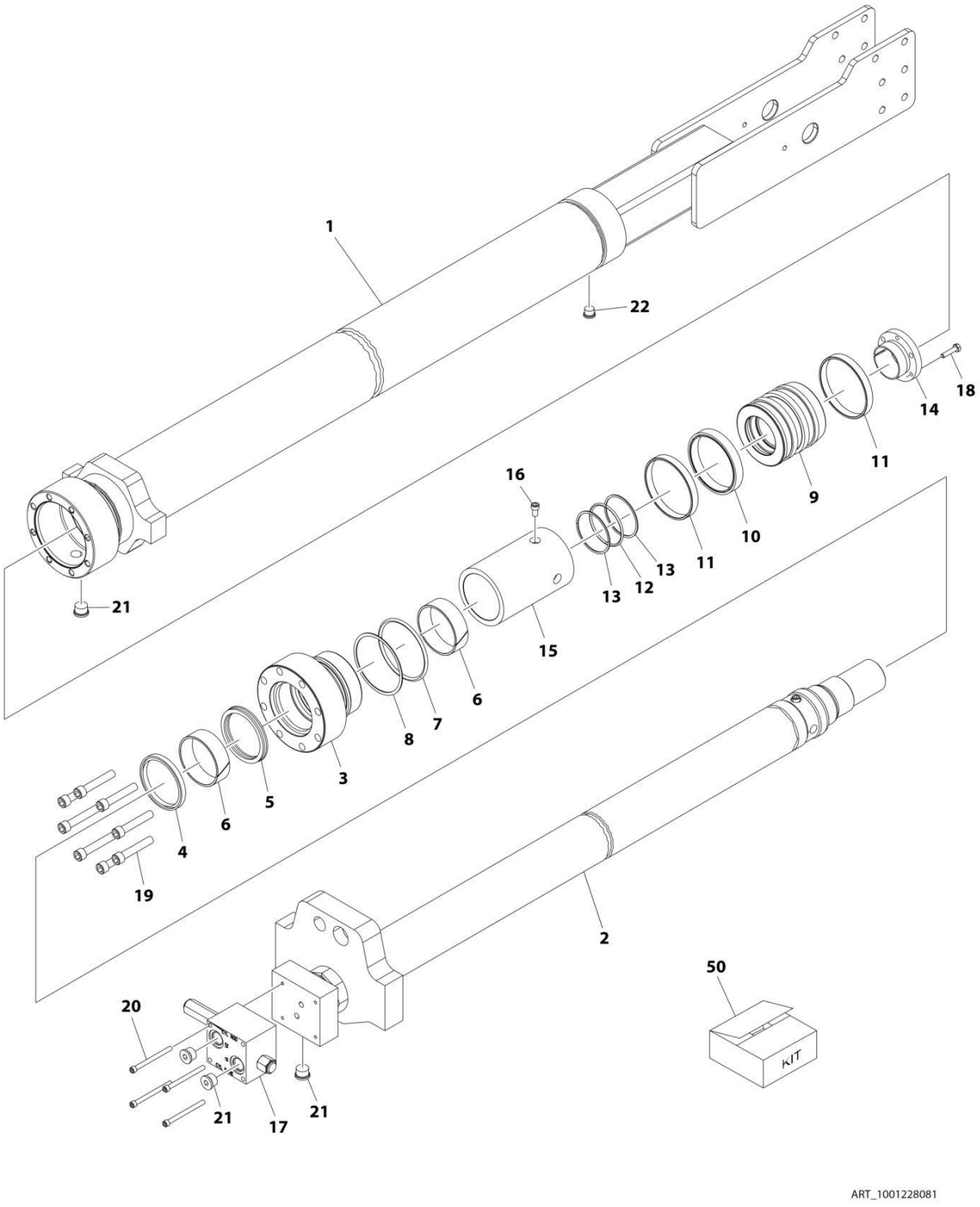

FIGURE 5-13. TELESCOPE CYLINDER ASSEMBLY (800S) (SERVICE REPLACEMENT)

ITEM	PART NUMBER	QTY	DESCRIPTION	REV
	1001228081	Ref	TELESCOPE CYLINDER ASSEMBLY	B
		Ref	Note: Original Cylinder may have been replaced with Service Replacement. Identify PN Stamped on Cylinder Before Ordering Parts.	
1	See Note	NSS	Barrel (Note: Not Available for Purchase)	
2	70006719	1	Rod	
3	70006694	1	Head	
4	See Note	NSS	Wiper (Note: Use Item 50)	
5	See Note	NSS	Seal, Rod (Note: Use Item 50)	
6	See Note	NSS	Ring, Wear (Note: Use Item 50)	
7	See Note	NSS	O-Ring (Note: Use Item 50)	
8	See Note	NSS	Ring, Back-up (Note: Use Item 50)	
9	70006720	1	Piston	
10	See Note	NSS	T-Seal (Note: Use Item 50)	
11	See Note	NSS	Ring, Wear (Note: Use Item 50)	
12	See Note	NSS	O-Ring (Note: Use Item 50)	
13	See Note	NSS	Ring, Back-up (Note: Use Item 50)	
14	0961897	1	Bushing, Tapered	
15	70006721	1	Spacer, Tube	
16	3931508	1	Capscrew 5/16 x 1/2	
17	4641033	1	Valve Assembly (No serviceable parts - sold as assembly only)	
17	7024508	2	O-Ring (Not Shown - Located between valve and cylinder)	
18	0630535	3	Bolt 1/4 x 1-1/8	
19	3931740	8	Capscrew 7/16 x 2-1/2	
20	3931448	4	Capscrew 1/4 x 3	
21	2220886	2	Plug, O-Ring	
22	2220885	1	Plug, O-Ring	
50	1001181694	1	Seal Kit Options (Includes Items 4-8 & 10-13)	

FIGURE 5-14. TELESCOPE CYLINDER ASSEMBLY (860SJ) (SERVICE REPLACEMENT)

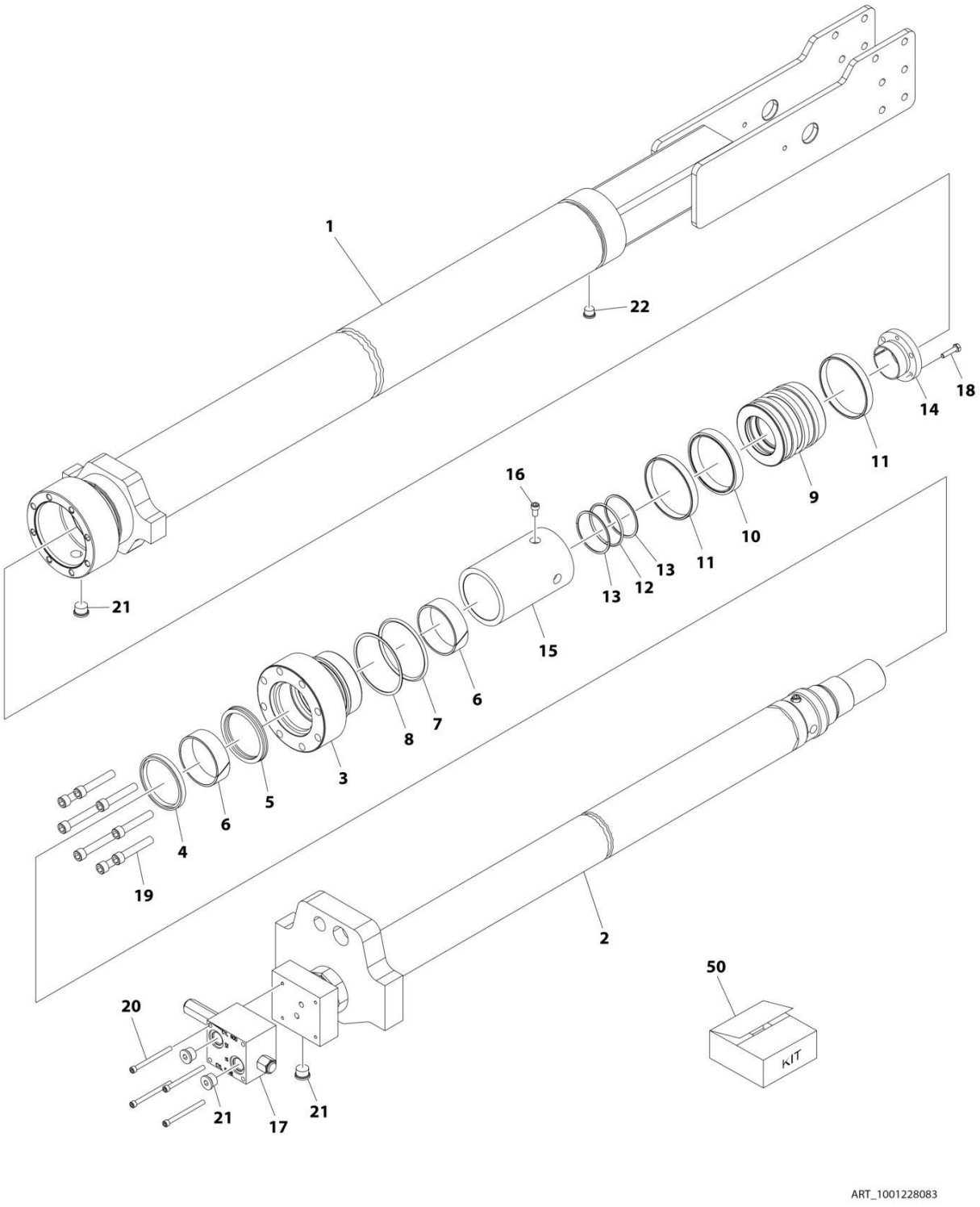

FIGURE 5-14. TELESCOPE CYLINDER ASSEMBLY (860SJ) (SERVICE REPLACEMENT)

ITEM	PART NUMBER	QTY	DESCRIPTION	REV
	1001228083	Ref	TELESCOPE CYLINDER ASSEMBLY	B
		Ref	Note: Original Cylinder may have been replaced with Service Replacement. Identify PN Stamped on Cylinder Before Ordering Parts.	
1	See Note	NSS	Barrel (Note: Not Available for Purchase)	
2	70006729	1	Rod	
3	70006694	1	Head	
4	See Note	NSS	Wiper (Note: Use Item 50)	
5	See Note	NSS	Seal, Rod (Note: Use Item 50)	
6	See Note	NSS	Ring, Wear (Note: Use Item 50)	
7	See Note	NSS	O-Ring (Note: Use Item 50)	
8	See Note	NSS	Ring, Back-up (Note: Use Item 50)	
9	70006720	1	Piston	
10	See Note	NSS	T-Seal (Note: Use Item 50)	
11	See Note	NSS	Ring, Wear (Note: Use Item 50)	
12	See Note	NSS	O-Ring (Note: Use Item 50)	
13	See Note	NSS	Ring, Back-up (Note: Use Item 50)	
14	0961897	1	Bushing, Tapered	
15	70006730	1	Spacer, Tube	
16	70006731	1	Bolt	
17	4641033	1	Valve Assembly (No serviceable parts - sold as assembly only)	
17	7024508	2	O-Ring (Not Shown - Located between valve and cylinder)	
18	0630535	3	Bolt 1/4 x 1-1/8	
19	70006732	8	Bolt	
20	70006733	4	Bolt	
21	2220886	4	Plug, O-Ring	
22	2220885	1	Plug, O-Ring	
50	1001181694	1	Seal Kit Options (Includes Items 4-8 & 10-13)	

SECTION 6 - HYDRAULIC

FIGURE 6-1. AXLE LOCKOUT HYDRAULIC DIAGRAM

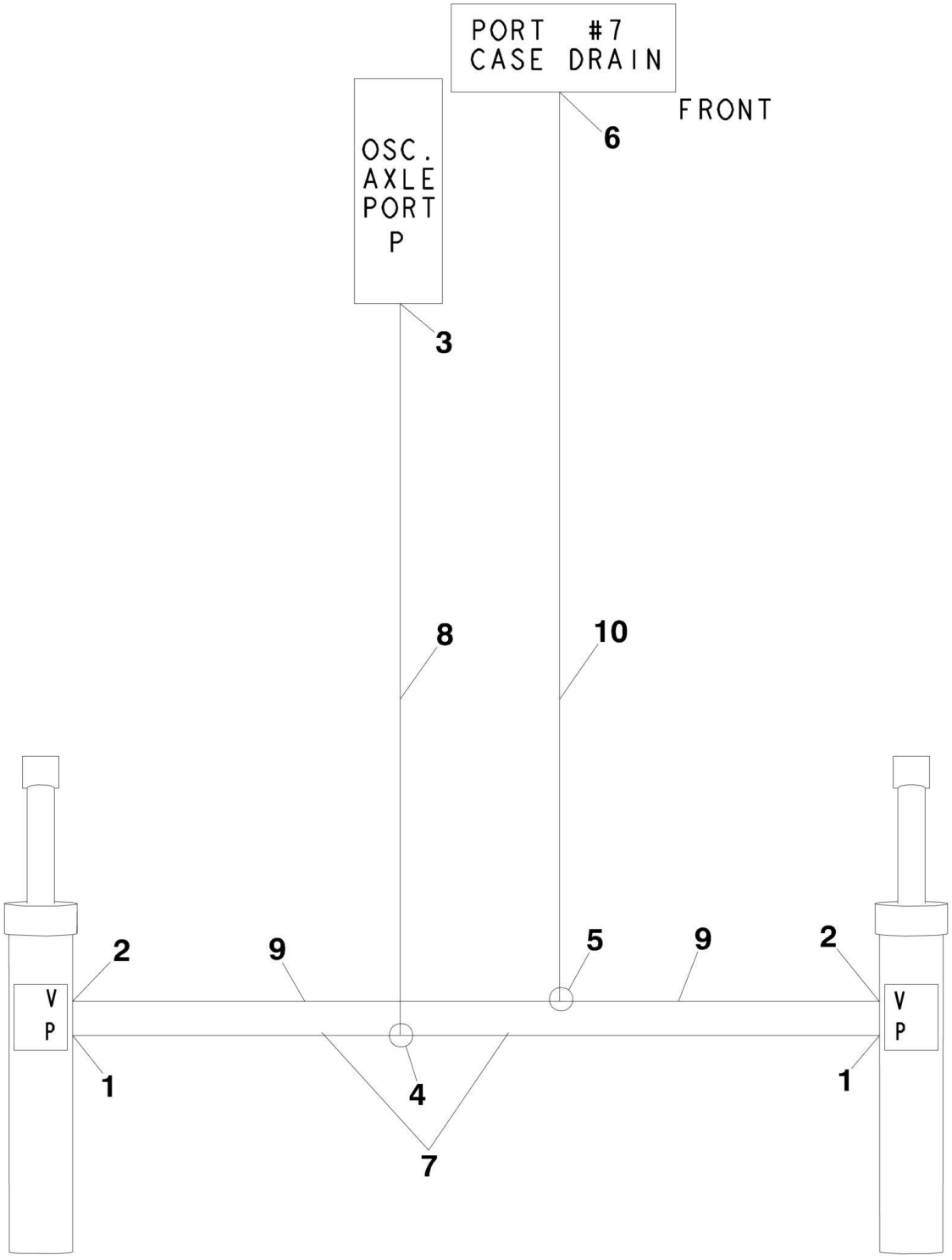

FIGURE 6-1. AXLE LOCKOUT HYDRAULIC DIAGRAM

ITEM	PART NUMBER	QTY	DESCRIPTION	REV
		Ref	**AXLE LOCKOUT HYDRAULIC DIAGRAM**	
	2792502	Ref	**Axle Lockout Hydraulic Diagram (Prior to SN 0300083331)**	3-J
	2792648	Ref	**Axle Lockout Hydraulic Diagram (SN 0300083331 through 0300140000)**	3-K
1		Ref	Fitting, Straight Options:	
1	2110404	2	Fitting, Straight **(Prior to SN 0300083331)**	
1	2110406	2	Fitting, Straight **(SN 0300083331 through 0300140000)**	
2	2110606	2	Fitting, Straight	
3	2110408	1	Fitting, Straight	
4	2170504	1	Fitting, Tee	
5	2170506	1	Fitting, Tee	
6		Ref	Fitting Options:	
6	2110404	1	Straight Fitting **(Prior to SN 0300083331)**	
6	2170406	1	Tee Fitting **(SN 0300083331 through 0300097959)**	
7	2753629	2	Hose	
8	2753630	1	Hose	
9	2753624	2	Hose	
10	2753627	1	Hose	

FIGURE 6-2. DRIVE HYDRAULIC DIAGRAM - 2WD (Prior to SN 0300083331)

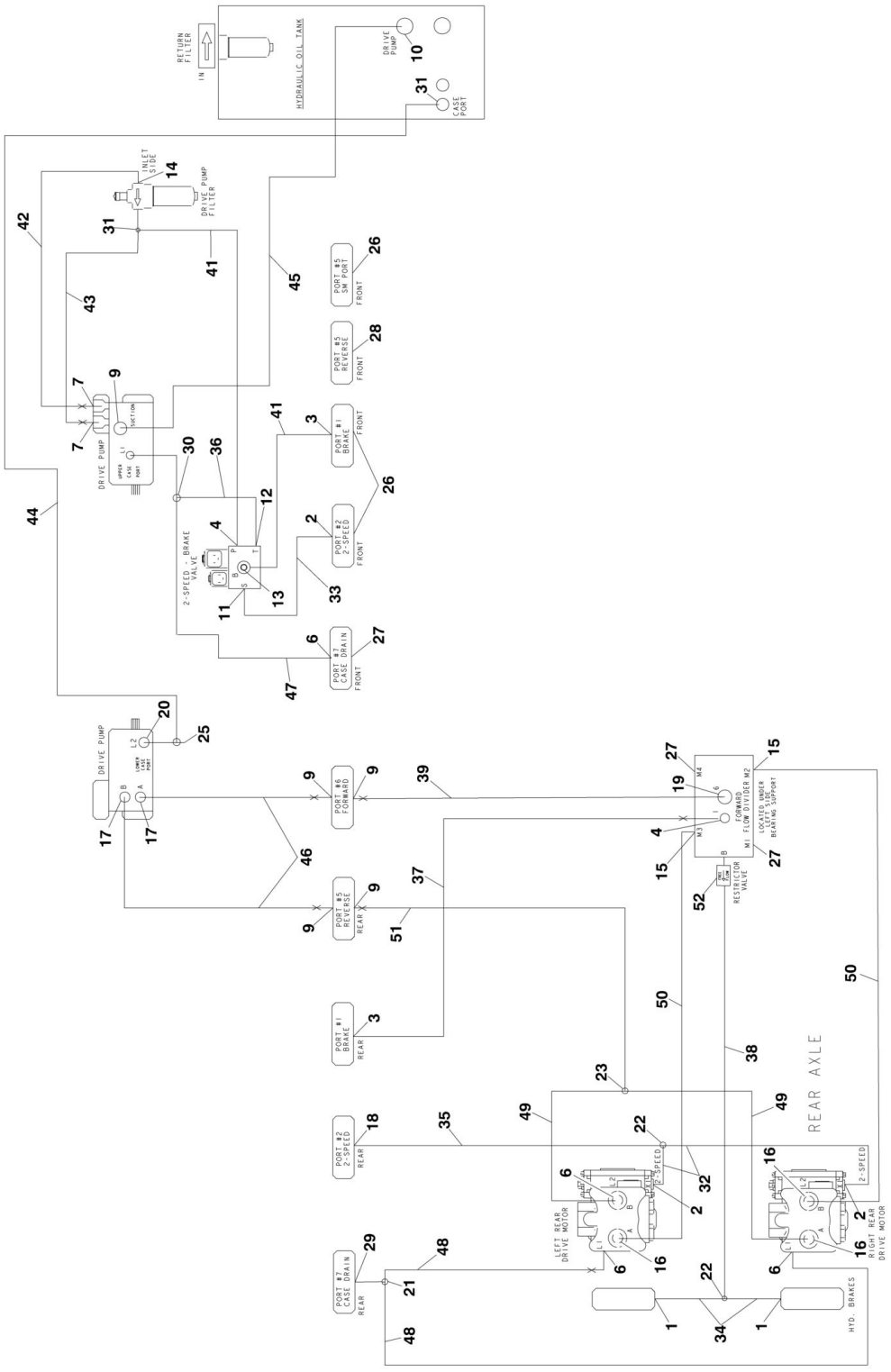

FIGURE 6-2. DRIVE HYDRAULIC DIAGRAM - 2WD (Prior to SN 0300083331)

ITEM	PART NUMBER	QTY	DESCRIPTION	REV
	2792465	Ref	**DRIVE HYDRAULIC DIAGRAM - 2WD**	6-J
1	2110404	2	Fitting, Straight	
2	2110406	3	Fitting, Straight	
3	2110806	2	Fitting, Straight	
4	2110808	2	Fitting, Straight	
6	2110812	3	Fitting, Straight	
7	2111010	2	Fitting, Straight	
9	2111616	5	Fitting, Straight	
10	2111620	1	Fitting, Straight	
11	2130404	1	Fitting, Elbow	
12	2130604	1	Fitting, Elbow	
13	2130808	1	Fitting, Elbow	
14	2131012	1	Fitting, Elbow	
15	2131212	2	Fitting, Elbow	
16	2131216	4	Fitting, Elbow	
17	2131616	2	Fitting, Elbow	
18	2150406	1	Fitting, Elbow	
19	2151616	1	Fitting, Elbow	
20	2170312	1	Fitting, Tee	
21	2170408	1	Fitting, Tee	
22	2170504	2	Fitting, Tee	
23	2170516	1	Fitting, Tee	
25	2170912	1	Fitting, Cap	
26	2220237	3	Fitting, Plug	
27	2220240	3	Fitting, Plug	
28	2220242	1	Fitting, Plug	
29	2220811	1	Fitting, Reducer	
30	2221084	1	Fitting, Tee	
31	2221088	2	Fitting, Tee	
32	2753709	2	Hose	
33	2753540	1	Hose	
34	2753725	2	Hose	
35	3753550	1	Hose	
36	2753575	1	Hose	
37	2753582	1	Hose	
38	2753621	1	Hose	
39	2753635	1	Hose	
41	2753659	2	Hose	
42	2753660	1	Hose	
43	2753661	1	Hose	
44	2753664	1	Hose	
45		Ref	Hose Options:	
45	2753666	1	Hose **(Prior to SN 0300066054)**	
45	2753807	1	Hose **(SN 0300066054 through 0300083331)**	
46	2753667	2	Hose	
47	2753685	1	Hose	
48	2753652	2	Hose	
49	2753687	2	Hose	
50	2753688	2	Hose	
51	2753689	1	Hose	

ITEM	PART NUMBER	QTY	DESCRIPTION	REV
52	4641198	1	Valve, Check	

FIGURE 6-3. DRIVE HYDRAULIC DIAGRAM - 2WD (SN 0300083331 through 0300140000)

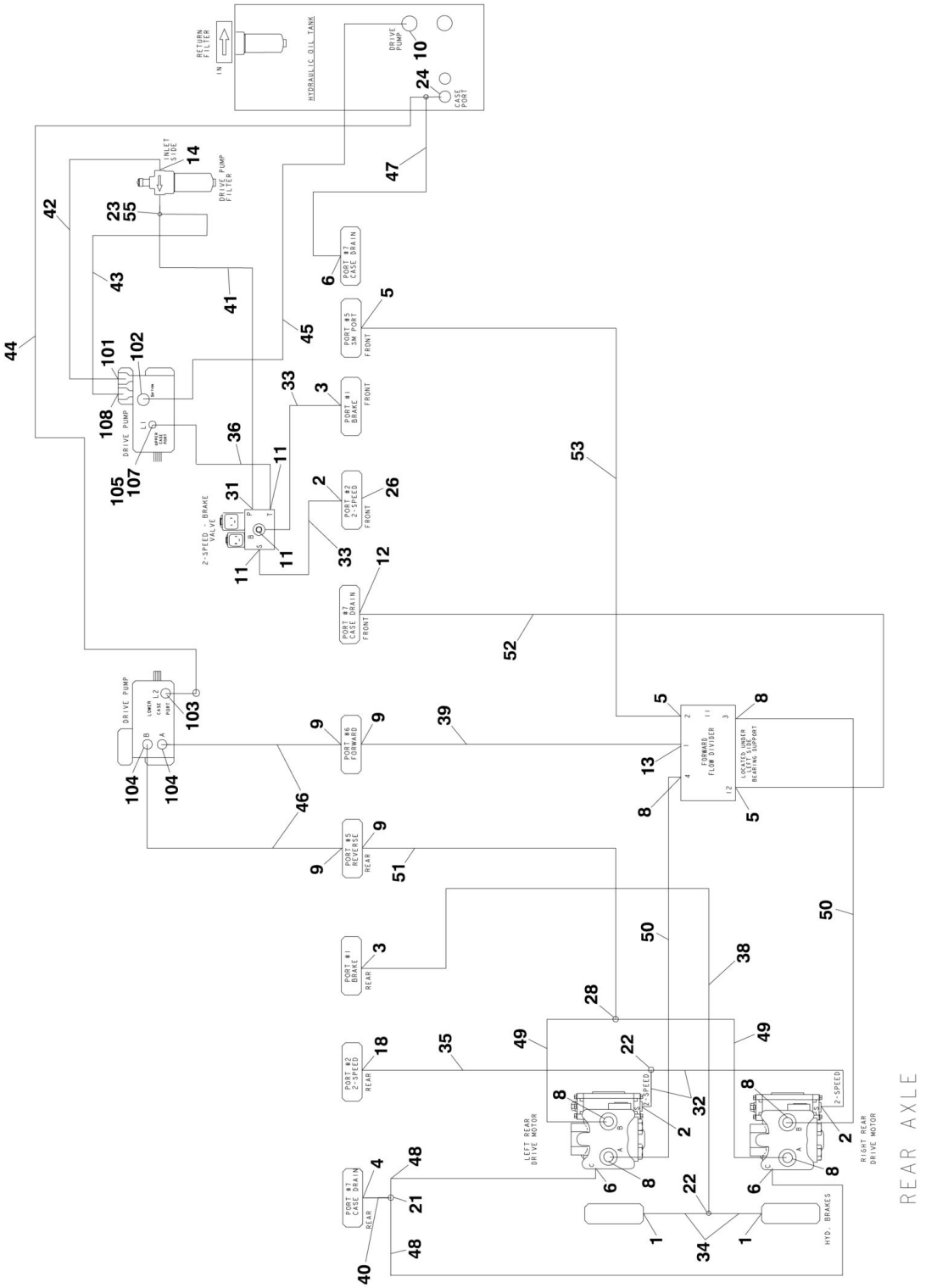

FIGURE 6-3. DRIVE HYDRAULIC DIAGRAM - 2WD (SN 0300083331 through 0300140000)

ITEM	PART NUMBER	QTY	DESCRIPTION	REV
		Ref	**DRIVE HYDRAULIC DIAGRAM - 2WD**	
	2792651	Ref	**Drive Hydraulic Diagram - 2WD (SN 0300083331 through 0300087261)**	3-D
	2792714	Ref	**Drive Hydraulic Diagram - 2WD (SN 0300087262 through 0300140000)**	6-K
1	2110404	2	Fitting, Straight	
2	2110406	3	Fitting, Straight	
3	2110408	2	Fitting, Straight	
4	2110808	1	Fitting, Straight	
5	2110606	3	Fitting, Straight	
6	2110812	3	Fitting, Straight	
8	2111212	6	Fitting, Straight	
9	2111616	4	Fitting, Straight	
10	2111620	1	Fitting, Straight	
11	2130404	3	Fitting, Elbow	
12		Ref	Fitting Options:	
12	2130606	1	Fitting, Elbow **(SN 0300085466 through 0300097958)**	
12	2170406	1	Fitting, Tee **(SN 0300097959 through 0300140000)**	
13		Ref	Fitting Options:	
13	2111616	1	Fitting, Straight **(SN 0300083331 through 0300087261)**	
13	2151616	1	Fitting, Elbow **(SN 0300087262 through 0300140000)**	
14		Ref	Fitting, Elbow Options:	
14	2131012	1	Fitting, Elbow **(SN 0300083331 through 0300087261)**	
14	2131008	1	Fitting, Elbow **(SN 0300087262 through 0300140000)**	
18	2150406	1	Fitting, Elbow	
21	2170508	1	Fitting, Tee	
22	2170504	2	Fitting, Tee	
23	2221183	1	Fitting, Reducer	
24	2221088	2	Fitting, Tee	
26	2220237	1	Fitting, Plug	
28	2170516	1	Fitting, Tee	
30	2221084	1	Fitting, Tee **(SN 0300083331 through 0300085466)**	
31	2170204	1	Fitting, Elbow	
32		Ref	Hose Options:	
32	2753709	2	Hose **(SN 0300083331 through 0300085465)**	
32	2754401	2	Hose **(SN 0300085466 through 0300140000)**	
33	2753540	2	Hose	
34	2753725	2	Hose	
35	3753550	1	Hose	
36	2753935	1	Hose	
38	2753622	1	Hose	
39	2753635	1	Hose	
40		Ref	Hose Options:	
40	2754245	1	Hose **(SN 0300083331 through 0300085465)**	
40	2753685	1	Hose **(SN 0300085466 through 0300140000)**	
41		Ref	Hose Options:	
41	2753555	1	Hose **(SN 0300083331 through 0300109492)**	
41	1001095307	1	Hose **(SN 0300109493 through 0300140000)**	
42		Ref	Hose Options:	
42	2753582	1	Hose **(SN 0300083331 through 0300109492)**	

ITEM	PART NUMBER	QTY	DESCRIPTION	REV
42	1001095308	1	Hose **(SN 0300109493 through 0300140000)**	
43		Ref	Hose Options:	
43	2753661	1	Hose **(SN 0300083331 through 0300097958)**	
43	2753661	1	Hose **(SN 0300097959 through 0300140000)**	
44	2753664	1	Hose	
45	2753807	1	Hose	
46	2753667	2	Hose	
47	2754242	1	Hose	
48	2754240	2	Hose	
49	2754238	2	Hose	
50		Ref	Hose Options:	
50	2754238	2	Hose **(SN 0300083331 through 0300085465)**	
50	2753688	2	Hose **(SN 0300085466 through 0300140000)**	
51		Ref	Hose Options:	
51	2754239	1	Hose **(SN 0300083331 through 0300085465)**	
51	2754402	1	Hose **(SN 0300085466 through 0300140000)**	
52	2754242	1	Hose	
53	2754243	1	Hose	
55	2170308	1	Fitting, Straight **(SN 0300097959 through 0300140000)**	
	3600410	Ref	**PISTON PUMP ASSEMBLY**	C
101	2111010	1	Fitting, Straight	
102	2111616	1	Fitting, Straight	
103	2131212	1	Fitting, Elbow	
104	2131616	2	Fitting, Elbow	
105	2110408	1	Fitting, Straight	
107	2220811	1	Fitting, Reducer	
108	2110810	1	Fitting, Straight	

FIGURE 6-4. DRIVE HYDRAULIC DIAGRAM - 4WD (Prior to SN 0300083331)

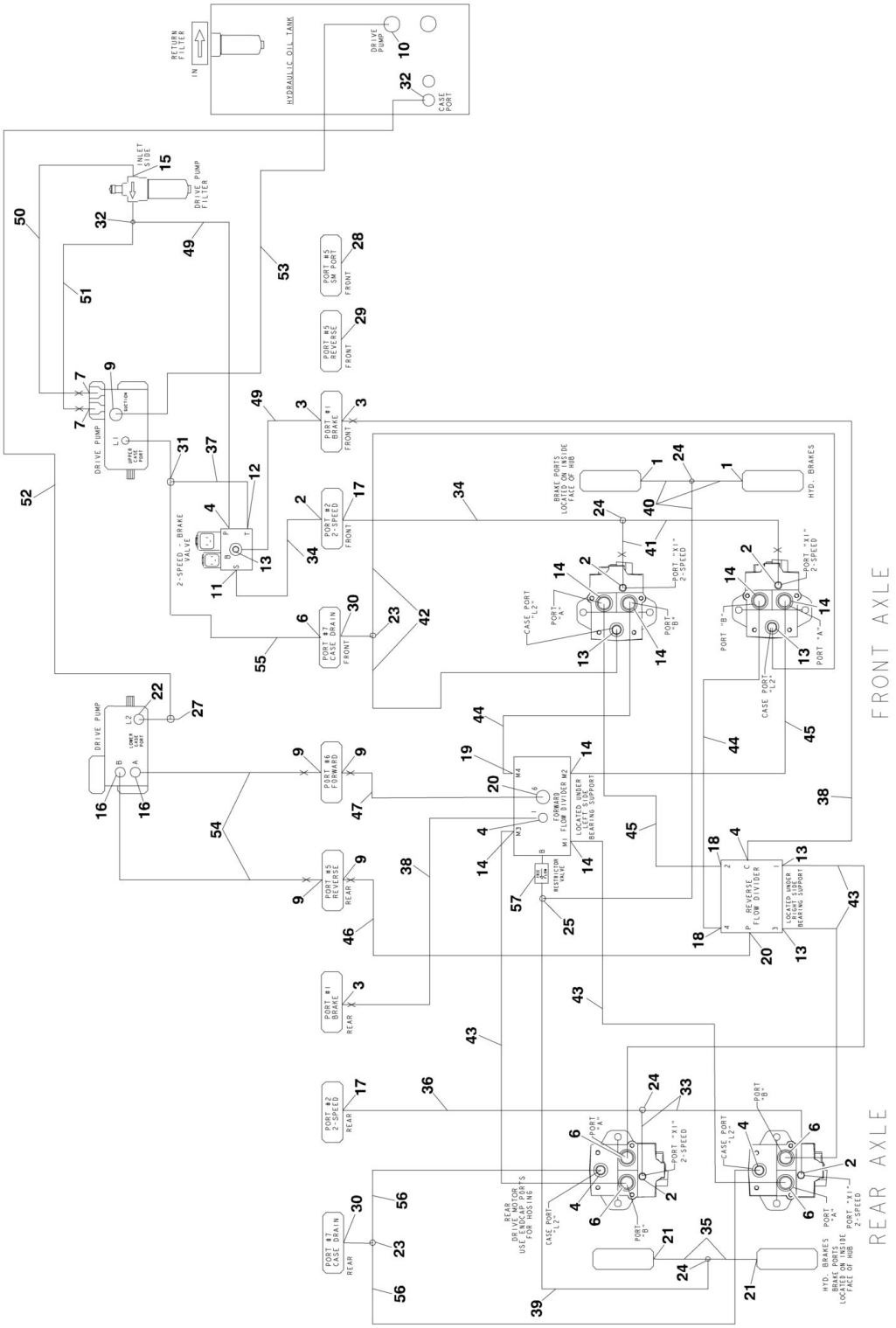

FIGURE 6-4. DRIVE HYDRAULIC DIAGRAM - 4WD (Prior to SN 0300083331)

ITEM	PART NUMBER	QTY	DESCRIPTION	REV
	2792466	Ref	**DRIVE HYDRAULIC DIAGRAM - 4WD**	8-K
1	2110404	2	Fitting, Straight	
2	2110406	5	Fitting, Straight	
3	2110806	3	Fitting, Straight	
4	2110808	5	Fitting, Straight	
6	2110812	5	Fitting, Straight	
7	2111010	2	Fitting, Straight	
9	2111616	5	Fitting, Straight	
10	2111620	1	Fitting, Straight	
11	2130404	1	Fitting, Elbow	
12	2130604	1	Fitting, Elbow	
13	2130808	5	Fitting, Elbow	
14	2130812	7	Fitting, Elbow	
15	2131012	1	Fitting, Elbow	
16	2131616	2	Fitting, Elbow	
17	2150406	2	Fitting, Elbow	
18	2150808	2	Fitting, Elbow	
19	2150812	1	Fitting, Elbow	
20	2151616	2	Fitting, Elbow	
21	2170104	2	Fitting, Long Straight	
22	2170312	1	Fitting, Tee	
23	2170408	2	Fitting, Tee	
24	2170504	4	Fitting, Tee	
25	2170704	1	Fitting, Tee	
27	2170912	1	Fitting, Cap	
28	2220237	1	Fitting, Plug	
29	2220242	1	Fitting, Plug	
30	2220811	2	Fitting, Reducer	
31	2221084	1	Fitting, Tee	
32	2221088	2	Fitting, Tee	
33		Ref	Hose Options:	
33	2753537	2	Hose **(Prior to SN 0300099882)**	
33	2754401	2	Hose **(SN 0300099882 through 0300140000)**	
34	2753540	2	Hose	
35	2753546	2	Hose	
36	2753550	1	Hose	
37	2753575	1	Hose	
38	2753582	2	Hose	
39	2753621	1	Hose	
40	2753622	3	Hose	
41	2753623	2	Hose	
42	2753628	2	Hose	
43	2753631	4	Hose	
44	2753632	2	Hose	
45	2753633	NLA	Hose (Use p/n 2754040)	
46	2753634	1	Hose	
47	2753635	1	Hose	
49	2753659	2	Hose	
50	2753660	1	Hose	
51	2753661	1	Hose	

ITEM	PART NUMBER	QTY	DESCRIPTION	REV
52	2753664	1	Hose	
53		Ref	Hose Options:	
53	2753666	1	Hose **(Prior to SN 0300066054)**	
53	2753807	1	Hose **(SN 0300066054 through 0300083331)**	
54	2753667	2	Hose	
55	2753685	1	Hose	
56	2753686	2	Hose	
57	4641198	1	Valve, Check	

FIGURE 6-5. DRIVE HYDRAULIC DIAGRAM - 4WD (SN 0300083331 through 0300140000)

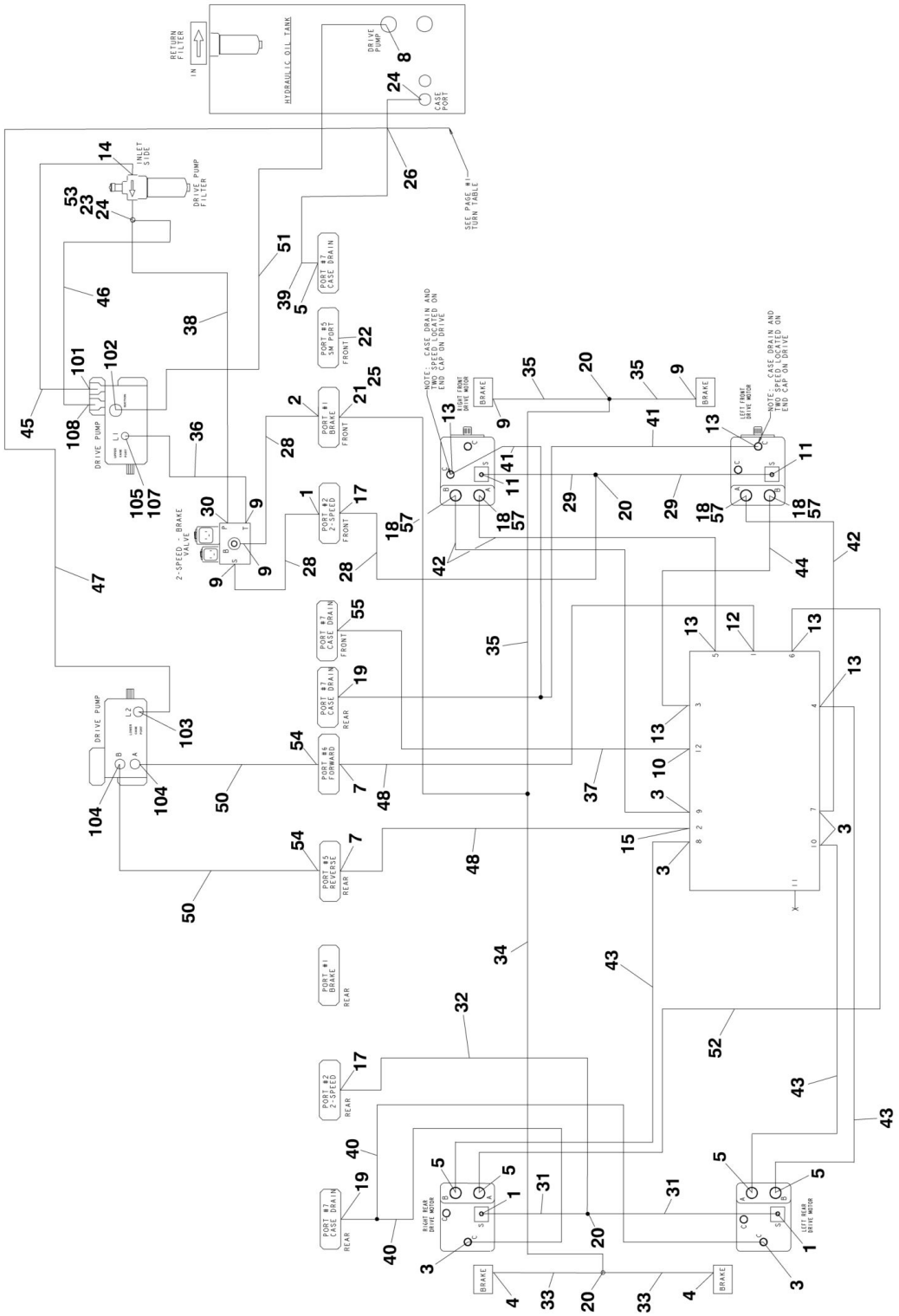

FIGURE 6-5. DRIVE HYDRAULIC DIAGRAM - 4WD (SN 0300083331 through 0300140000)

ITEM	PART NUMBER	QTY	DESCRIPTION	REV
		Ref	**DRIVE HYDRAULIC DIAGRAM - 4WD**	
	2792652	Ref	**Drive Hydraulic Diagram (SN 0300083331 through 0300087261)**	4-C
	2792713	Ref	**Drive Hydraulic Diagram (SN 0300087262 through 0300140000)**	7-K
1	2110406	3	Fitting, Straight	
2	2110408	1	Fitting, Straight	
3	2110808	6	Fitting, Straight	
4	2110404	2	Fitting, Straight	
5	2110812	5	Fitting, Straight	
7	2111616	AR	Fitting, Straight	
8	2111620	1	Fitting, Straight	
9	2130404	5	Fitting, Elbow	
10	2130604	1	Fitting, Elbow	
11	2130406	2	Fitting, Elbow	
12	2151616	1	Fitting, Elbow	
13	2130808	6	Fitting, Elbow	
14		Ref	Fitting, Elbow Options:	
14	2131012	1	Fitting, Elbow **(SN 0300083331 through 0300087261)**	
14	2131008	1	Fitting, Elbow **(SN 0300087262 through 0300140000)**	
15	2131616	1	Fitting, Elbow	
17	2150406	2	Fitting, Elbow	
18		Ref	Fitting, Elbow Options:	
18	2150812	4	Fitting, Elbow **(Prior to SN 0300138515)**	
18	2150808	4	Fitting, Elbow **(SN 0300138515 through 0300140000)**	
19	2170408	2	Fitting, Tee	
20	2170504	4	Fitting, Tee	
21	2170350	1	Fitting, Tee	
22	2220237	1	Fitting, Plug	
23	2221183	1	Fitting, Reducer	
24	2221088	AR	Fitting, Tee	
25	2220591	1	Fitting, Reducer	
26	2170708	1	Fitting, Tee	
28	2753540	3	Hose	
29		Ref	Hose Options:	
29	2753546	2	Hose **(SN 0300083331 through 0300087261)**	
29	2753549	2	Hose **(SN 0300087262 through 0300140000)**	
30	2130204	1	Fitting, Elbow	
31	2754401	2	Hose	
32	2753550	1	Hose	
33	2754337	2	Hose	
34	2754044	1	Hose	
35	2753622	3	Hose	
36	2753935	1	Hose	
37	2753626	1	Hose	
38		Ref	Hose Options:	
38	2753555	1	Hose **(SN 0300083331 through 0300109492)**	
38	1001095307	1	Hose **(SN 0300109493 through 0300140000)**	
39	2753685	1	Hose	
40	2753686	2	Hose	

ITEM	PART NUMBER	QTY	DESCRIPTION	REV
41	2753628	2	Hose	
42	2753970	3	Hose	
43	2753971	3	Hose	
44	2754040	1	Hose	
45	2753660	1	Hose	
46		Ref	Hose Options:	
46	2753661	1	Hose **(SN 0300083331 through 0300097958)**	
46	2753582	1	Hose **(SN 0300097959 through 0300109492)**	
46	1001095308	1	Hose **(SN 0300109493 through 0300140000)**	
47	2753664	1	Hose	
48	2753634	2	Hose	
50	2753667	2	Hose	
51	2753807	1	Hose	
52	2754338	1	Hose	
53		Ref	Fitting Options:	
53	2221216	1	Fitting, Straight **(SN 0300087262 through 0300097958)**	
53	2170308	1	Tee Fitting **(SN 0300097959 through 0300140000)**	
54		Ref	Fitting Options:	
54	2131616	2	Fitting, Elbow **(SN 0300083331 through 0300097958)**	
54	2111616	2	Fitting, Straight **(SN 0300097959 through 0300140000)**	
55		Ref	Fitting Options:	
55	2110408	1	Fitting, Straight **(SN 0300083331 through 0300097958)**	
55	2170406	1	Tee Fitting **(SN 0300097959 through 0300140000)**	
57	2220811	4	Fitting, Reducer **(SN 0300138515 through 0300140000)**	
	3600410	Ref	**PISTON PUMP ASSEMBLY**	C
101	2111010	1	Fitting, Straight	
102	2111616	1	Fitting, Straight	
103	2131212	1	Fitting, Elbow	
104	2131616	2	Fitting, Elbow	
105	2110408	1	Fitting, Straight	
107	2220811	1	Fitting, Reducer	
108	2110810	1	Fitting, Straight	

FIGURE 6-6. MANUAL DESCENT HYDRAULIC DIAGRAM (OPTIONAL)

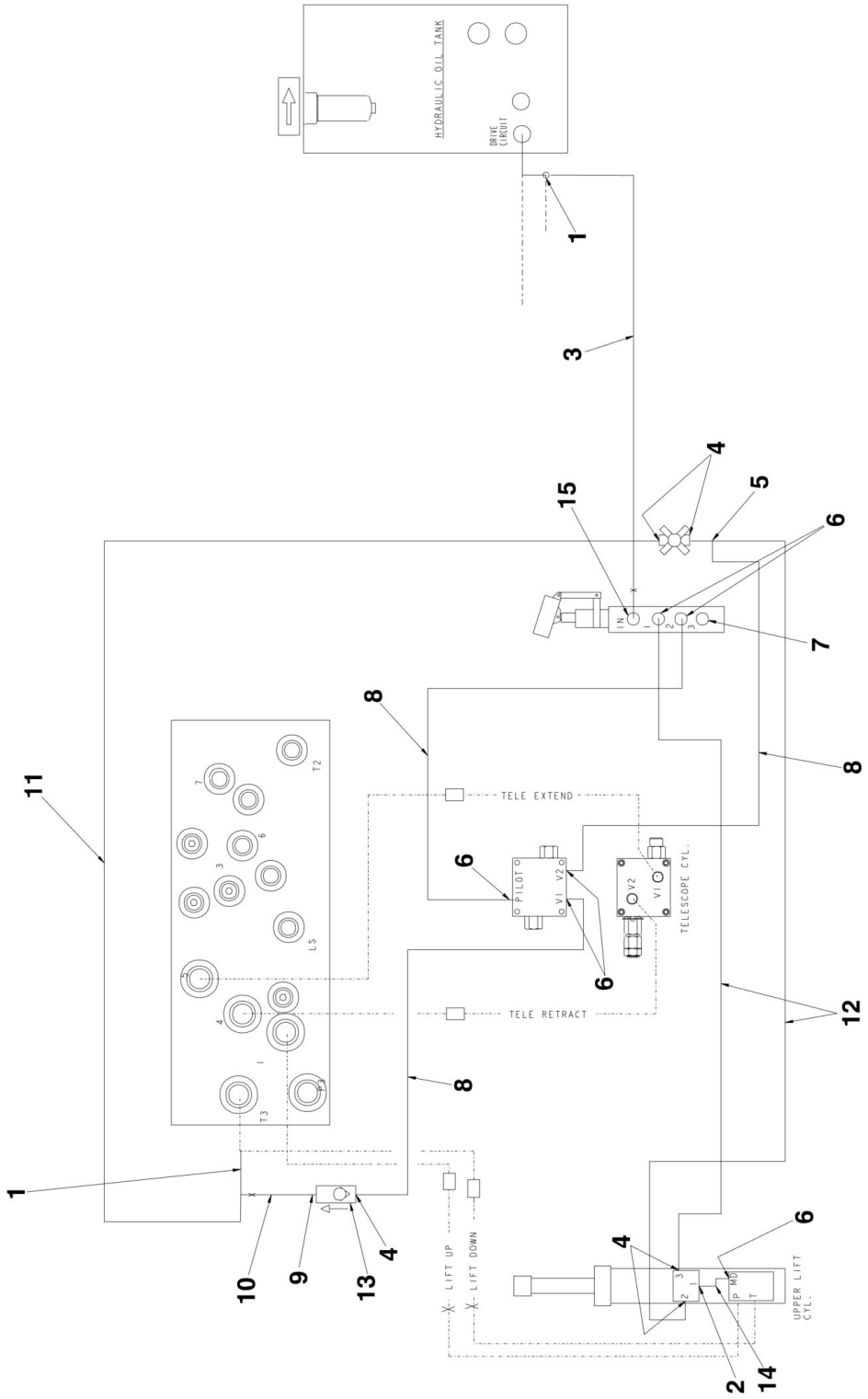

FIGURE 6-6. MANUAL DESCENT HYDRAULIC DIAGRAM (OPTIONAL)

ITEM	PART NUMBER	QTY	DESCRIPTION	REV
	2792597	Ref	**MANUAL DESCENT HYDRAULIC DIAGRAM**	A
1	2170708	2	Fitting, Tee	
2	2110406	1	Fitting	
3	2753578	1	Hose	
4	2130406	5	Fitting, Elbow	
5	2170804	1	Fitting, Tee	
6	2130404	6	Fitting, Elbow	
7	2220235	1	Fitting, Plug	
8	2753678	3	Hose	
9	2170306	1	Fitting, Tee	
10	2753895	1	Hose	
11	2753896	1	Hose	
12	2753897	2	Hose	
13	4640774	1	Valve, Check	
14	4568708	1	Tube	
15	2110604	1	Fitting	

FIGURE 6-7. STANDARD HYDRAULIC DIAGRAM

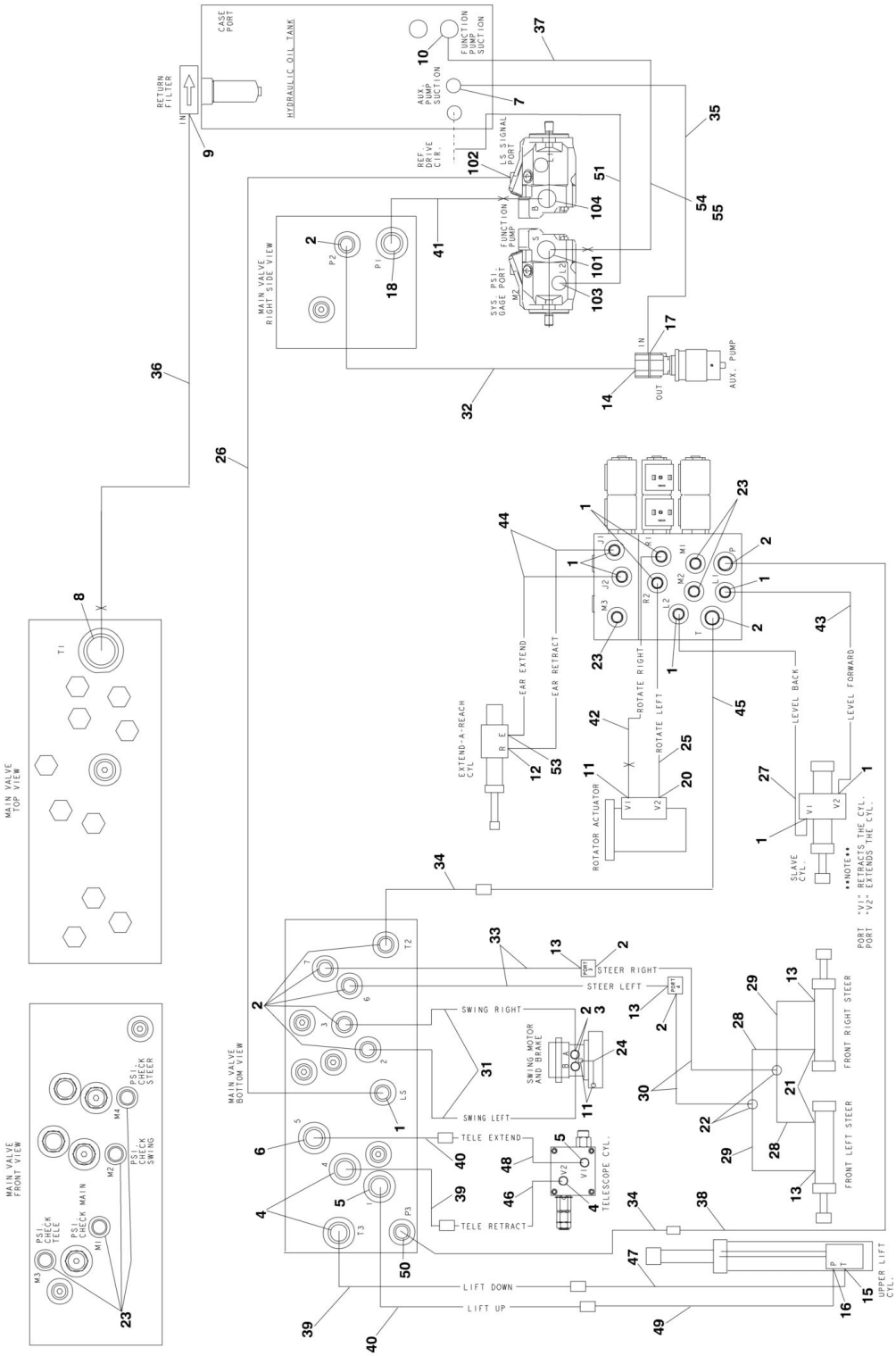

FIGURE 6-7. STANDARD HYDRAULIC DIAGRAM

ITEM	PART NUMBER	QTY	DESCRIPTION	REV
		Ref	**STANDARD HYDRAULIC DIAGRAM**	
	2792463	Ref	**Standard Hydraulic Diagram 800S (Prior to SN 0300083331)**	8-J
	2792649	Ref	**Standard Hydraulic Diagram 800S (SN 0300083331 through 0300140000)**	3-K
	2792464	Ref	**Standard Hydraulic Diagram 860SJ (Prior to SN 0300083331)**	9-J
	2792650	Ref	**Standard Hydraulic Diagram 860SJ (SN 0300083331 through 0300140000)**	3-K
1	2110404	AR	Fitting, Straight	
2	2110606	12	Fitting, Straight	
3	2110610	2	Fitting, Straight **(Prior to SN 0300066054)**	
4	2110808	3	Fitting, Straight	
5	2111008	2	Fitting, Straight	
6	2111010	1	Fitting, Straight	
7	2111212	1	Fitting, Straight	
8	2111612	1	Fitting, Straight	
9	2111616	1	Fitting, Straight	
10	2112424	1	Fitting, Straight	
11	2130404	1	Fitting, Elbow	
12		Ref	Fitting, Elbow Options:	
12	Not Required	0	Fitting, Elbow 800S	
12	2130406	1	Fitting, Elbow 860SJ	
13	2130606	4	Fitting, Elbow	
14	2130608	1	Fitting, Elbow	
15	2130810	1	Fitting, Elbow	
16	2131010	1	Fitting, Elbow	
17	2131210	1	Fitting, Elbow	
18	2131212	1	Fitting, Elbow	
20	2150404	1	Fitting, Elbow	
21	2150606	2	Fitting, Elbow	
22	2170506	2	Fitting, Tee	
23	2221086	AR	Fitting, Pressure Check	
24	2753538	1	Hose **(Prior to SN 0300066054)**	
25	2753545	1	Hose	
26	2753622	1	Hose	
27		Ref	Hose Options:	
27	2753622	1	Hose 800S	
27	2753677	1	Hose 860SJ	
28	2753625	2	Hose	
29	2753626	2	Hose	
30	2753627	2	Hose	
31	2753653	2	Hose	
32	2753654	1	Hose	
33	2753656	2	Hose	
34	2753657	2	Hose	
35	2753662	1	Hose	
36	2753665	1	Hose	
37		Ref	Hose Options:	
37	2753668	1	Hose **(Prior to SN 0300066054)**	
37	2753808	1	Hose **(SN 0300066054 through 0300140000)**	
38		Ref	Hose Options:	

ITEM	PART NUMBER	QTY	DESCRIPTION	REV
38	2753693	1	Hose 800S	
38	2753692	1	Hose 860SJ	
39	2753670	2	Hose	
40	2753671	2	Hose	
41	2753672	1	Hose	
42	2753674	1	Hose	
43		Ref	Hose Options:	
43	2753675	1	Hose 800S	
43	2753678	1	Hose 860SJ	
44		Ref	Hose Options:	
44	Not Required	0	Hose 800S	
44	2753676	2	Hose 860SJ	
45		Ref	Hose Options:	
45	2753679	1	Hose 800S	
45	2753680	1	Hose 860SJ	
46	2753681	1	Hose	
47	2753682	1	Hose	
48	2753683	1	Hose	
49	2753684	1	Hose	
50	2110608	1	Fitting, Straight	
51		Ref	Hose Options:	
51	2753658	1	Hose **(Prior to SN 0300066054)**	
51	2753590	1	Hose **(SN 0300066054 through 0300140000)**	
52	2753576	1	Hose **(Prior to SN 0300069206)**	
53		Ref	Fitting, Elbow Options:	
53	Not Required	0	Fitting, Elbow 800S	
53	2180829	1	Fitting, Elbow 860SJ **(SN 0300066054 through 0300140000)**	
54	4061032	1	Hose Guard **(SN 0300067077 through 0300140000)**	
55	4240018	3	Tie Strap **(SN 0300067077 through 0300140000)**	
	2902460	1	Hose Kit - 800S (Includes Items 26, 38, 42, 43 & 45)	
	2902461	1	Hose Kit - 800S/860SJ (Includes Items 34, 39, 40, 47 & 49)	
	2902462	1	Hose Kit - 860SJ (Includes Items 27, 38 & 42-45)	
	3600411	Ref	**LOAD SENSING PUMP AND FITTING ASSEMBLY**	A
101	2112424	1	Fitting, Straight	
102	2130404	1	Fitting, Elbow	
103	2130810	1	Fitting, Elbow	
104	2131216	1	Fitting, Elbow	

FIGURE 6-8. HYDRAULIC DIAGRAM LIST

ITEM	PART NUMBER	QTY	DESCRIPTION	REV
		Ref	**Note: Diagrams not shown are available from JLG Service/Parts Departments.**	
		Ref	**Axle Lockout Hydraulic Diagram**	
	2792502	Ref	**Axle Lockout Hydraulic Diagram (Prior to SN 0300083331)**	
	1283242	Ref	**Axle Lockout Hydraulic Diagram (Prior to SN 0300083331)**	
	2792648	Ref	**Axle Lockout Hydraulic Diagram (SN 0300083331 through 0300140000)**	
	1283387	Ref	**Axle Lockout Hydraulic Diagram (SN 0300083331 through 0300140000)**	
		Ref	**Drive Hydraulic Diagrams:**	
	2792465	Ref	**2WD Machines (Prior to SN 0300083331)**	
	1283242	Ref	**2WD Machines (Prior to SN 0300083331)**	
	2792651	Ref	**2WD Machines (SN 0300083331 through 0300087262)**	
	1283387	Ref	**2WD Machines (SN 0300083331 through 0300087261)**	
	2792714	Ref	**2WD Machines (SN 0300087262 through 0300140000)**	
	1283387	Ref	**2WD Machines (SN 0300087262 through 0300140000)**	
	2792466	Ref	**4WD Machines (Prior to SN 0300083331)**	
	1283242	Ref	**4WD Machines (Prior to SN 0300083331)**	
	2792652	Ref	**4WD Machines (SN 0300083331 through 0300087262)**	
	1283387	Ref	**4WD Machines (SN 0300083331 through 0300087261)**	
	2792713	Ref	**4WD Machines (SN 0300087262 through 0300140000)**	
	1283387	Ref	**4WD Machines (SN 0300087262 through 0300140000)**	
	2792597	Ref	**Manual Descent Hydraulic Diagram (Optional)**	
	2792497	Ref	**Hydraulic Welder Schematic**	
	1283242	Ref	**Hydraulic Welder Schematic**	
	4641237	Ref	Valve, Check	
		Ref	**Oil Cooler Hydraulic Diagrams:**	
		Ref	**Deutz Engine Machines**	
	0271938	Ref	**Deutz Engine Machines (Prior to SN 0300137667)**	
	1282665	Ref	**Deutz Engine Machines (Prior to SN 0300137667)**	
	1001108703	Ref	**Deutz Engine Machines (SN 0300137667 through 0300140000)**	
		Ref	**Standard Hydraulic Diagrams:**	
	2792463	Ref	**Standard Hydraulic Diagrams 800S (Prior to SN 0300083331)**	
	1283242	Ref	**Standard Hydraulic Diagrams 800S (Prior to SN 0300083331)**	
	2792649	Ref	**Standard Hydraulic Diagrams 800S (SN 0300083331 through 0300140000)**	
	1283387	Ref	**Standard Hydraulic Diagrams 800S (SN 0300083331 through 0300140000)**	
	2792464	Ref	**Standard Hydraulic Diagrams 860SJ (Prior to SN 0300083331)**	
	1283242	Ref	**Standard Hydraulic Diagrams 860SJ (Prior to SN 0300083331)**	
	2792650	Ref	**Standard Hydraulic Diagrams 860SJ (SN 0300083331 through 0300140000)**	
	1283387	Ref	**Standard Hydraulic Diagrams 860SJ (SN 0300083331 through 0300140000)**	
		Ref	**Standard Hydraulic Schematic**	
	2792495	Ref	**Standard Hydraulic Schematic (Prior to SN 0300083331)**	
	2792678	Ref	**Standard Hydraulic Schematic (SN 0300083331 through 0300140000)**	

ITEM	PART NUMBER	QTY	DESCRIPTION	REV
		Ref	**Tow Hydraulic Diagram**	
	2792503	Ref	**Tow Hydraulic Diagram (Prior to SN 0300083331)**	
	1283242	Ref	**Tow Hydraulic Diagram (Prior to SN 0300083331)**	
	2792653	Ref	**Tow Hydraulic Diagram (SN 0300083331 through 0300140000)**	
	1283387	Ref	**Tow Hydraulic Diagram (SN 0300083331 through 0300140000)**	

SECTION 7 - ELECTRICAL

FIGURE 7-1. ELECTRICAL DIAGRAM LIST

ITEM	PART NUMBER	QTY	DESCRIPTION	REV
		Ref	**Note: Diagrams not shown in manual are available from the JLG Service/Parts Department.**	
	4933243	Ref	**ADE SYSTEM POWER-DOWN ELECTRICAL DIAGRAM**	
	0257157	Ref	**ETHER START ELECTRICAL DIAGRAM**	
	1282571	Ref	**ETHER START ELECTRICAL DIAGRAM**	
		Ref	**GENERATOR ELECTRICAL DIAGRAM**	
		Ref	**2500W Generators**	
	4933215	Ref	**110V (Prior to SN 0300079612)**	
	4933216	Ref	**220V (Prior to SN 0300079612)**	
	4933300	Ref	**Generator Electrical Diagram (SN 0300079612 through 0300122914)**	
	1001100027	Ref	**Generator Electrical Diagram (SN 0300122915 through 0300129397)**	
	1001112743	Ref	**Generator Electrical Diagram (SN 0300129398 through 0300140000)**	
		Ref	**7500W Generators**	
	4933264	Ref	**All Machines (Prior to SN 0300139080)**	
	1001112586	Ref	**All Machines (SN 0300139080 through 0300140000)**	
		Ref	**GLOW PLUG ELECTRICAL DIAGRAM (DEUTZ MACHINES)**	
	4933189	Ref	**Glow Plug Electrical Diagram (Deutz Machines) (Prior to SN 0300073336)**	
	4933217	Ref	**Glow Plug Electrical Diagram (Deutz Machines) (SN 0300073336 through 0300140000)**	
	4933193	Ref	**HYDRAULIC WELDER ELECTRICAL DIAGRAM**	
		Ref	**LIGHTS ELECTRICAL DIAGRAM**	
	4933231	Ref	**Chassis Flood Lights**	
	4933219	Ref	**Head and Tail Lights**	
	4933249	Ref	**Platform Flood Lights**	
	See Note	Ref	**PLATFORM ELECTRICAL DIAGRAM (Note: Not Available)**	
		Ref	**PLATFORM WORKLIGHTS ELECTRICAL DIAGRAM**	
	0270814	Ref	**Platform Worklights Electrical Diagram 800S/860SJ (Prior to SN 0300074425)**	
	0273472	Ref	**Platform Worklights Electrical Diagram 800S (SN 0300074425 through 0300140000)**	
	0273483	Ref	**Platform Worklights Electrical Diagram 860SJ (SN 0300074425 through 0300140000)**	
	4933218	Ref	**SOFT TOUCH ELECTRICAL DIAGRAM**	
		Ref	**STANDARD ELECTRICAL DIAGRAMS**	
	4933292	Ref	**Caterpillar Machines (Prior to SN 0300085332)**	
	4933337	Ref	**Caterpillar Machines (SN 0300085332 through 0300099881)**	
	4933376	Ref	**Caterpillar Machines (SN 0300099882 through 0300139209)**	
	1001110344	Ref	**Caterpillar Machines (SN 0300139210 through 0300140000)**	
	4933201	Ref	**Deutz Machines (Prior to SN 0300085332)**	
	4933323	Ref	**Deutz Machines (SN 0300085332 through 0300099881)**	
	4933375	Ref	**Deutz Machines (SN 0300099882 through 0300139209)**	
	1001110343	Ref	**Deutz Machines (SN 0300139210 through 0300140000)**	
		Ref	**STANDARD ELECTRICAL SCHEMATICS**	
	1870133	Ref	**Caterpillar/Ford/Deutz**	
	1870195	Ref	**Deutz EMR2 and GM (SN 0300085332 through 0300099881)**	
	1870221	Ref	**Caterpillar, Deutz EMR2 and GM (SN 0300099882 through 0300139079)**	

ITEM	PART NUMBER	QTY	DESCRIPTION	REV
	1001110325	Ref	**Caterpillar, Deutz EMR2 and GM (SN 0300139080 through 0300140000)**	

FIGURE 7-2. HARNESS COMPONENTS INSTALLATION (WITHOUT UGM) (Prior to SN 0300085332)

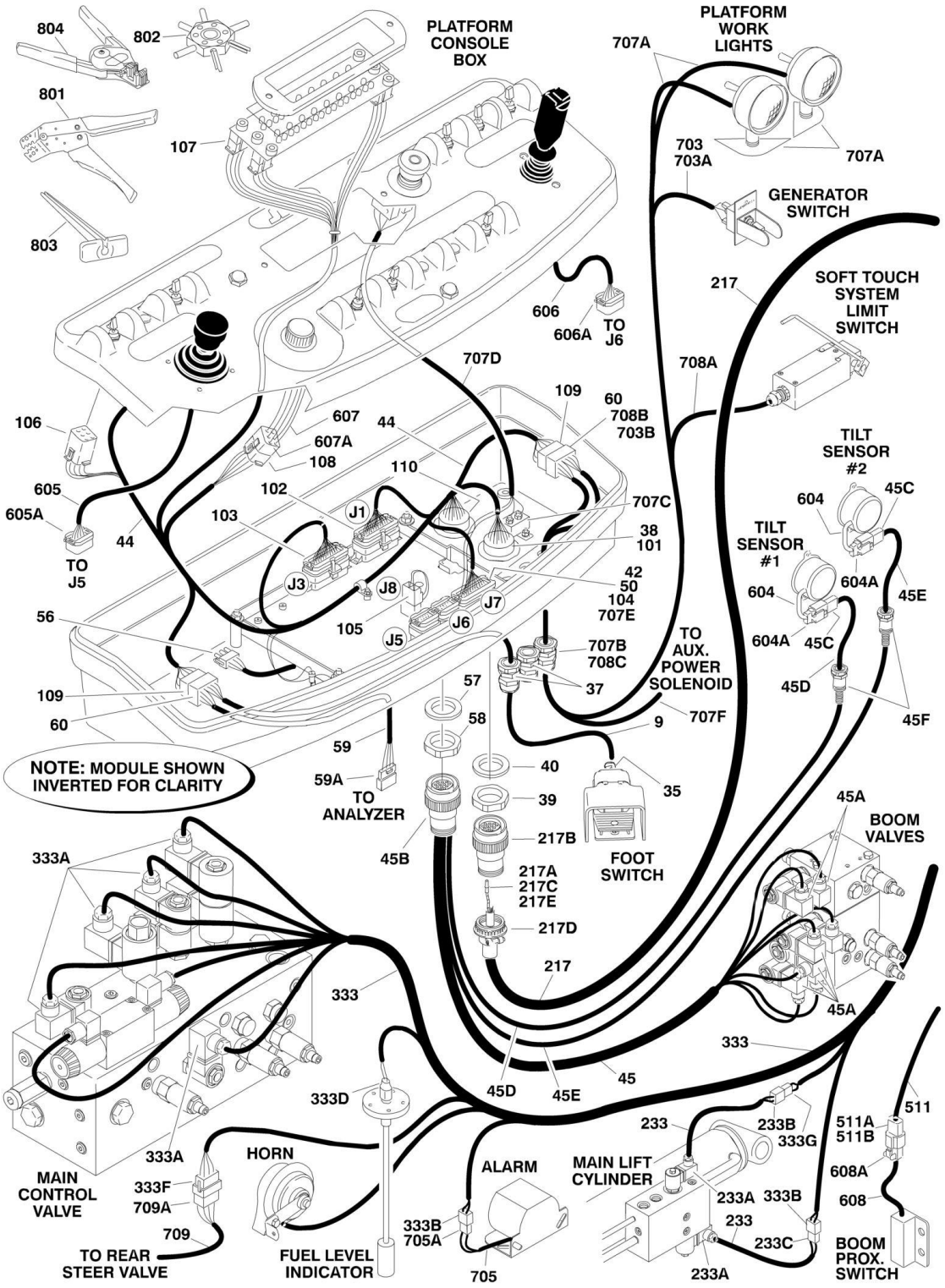

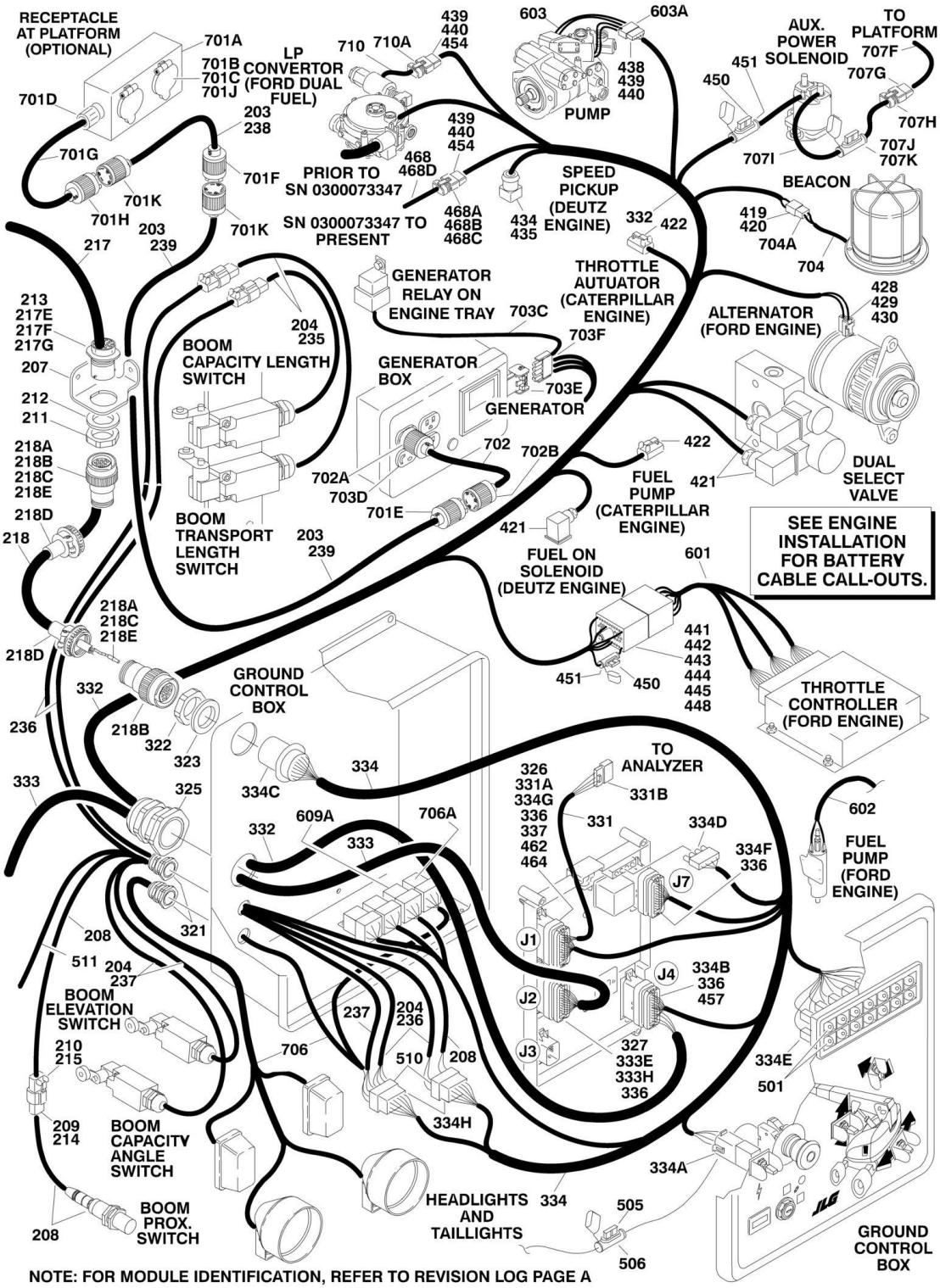

NOTE: FOR MODULE IDENTIFICATION, REFER TO REVISION LOG PAGE A

FIGURE 7-2. HARNESS COMPONENTS INSTALLATION (WITHOUT UGM) (Prior to SN 0300085332)

ITEM	PART NUMBER	QTY	DESCRIPTION	REV
		Ref	**HARNESS COMPONENTS INSTALLATION**	
		Ref	**NOTE: FOR MODULE IDENTIFICATION, REFER TO REVISION LOG PAGE A.**	
	0861416	Ref	**PLATFORM CONSOLE BOX COMPONENTS**	E
9	1060918	7 ft/2.14m	Cable, Electrical - 18/3	
35	4460071	1	Connector, Strain Relief	
37	4460428	2	Connector, Strain Relief	
38	4460464	1	Pin, Male Deutsch	
39	4460470	1	Nut, Terminal	
40	4460471	1	Lockwasher, Terminal	
42	4460226	2	Socket, Female	
44	4922595	1	Harness, Platform Box (See Items 101-110 for Breakdown)	
45		Ref	Harness, Upper Valve Options:	
45	4922620	NLA	Harness, Upper Valve (Use p/n 4922749) **(Prior to SN 0300066741)**	6-F
45	4922749	1	Harness, Upper Valve **(SN 0300066741 through 0300085332)**	2-A
45A	4460880	7	Connector, DIN	
45B	4460928	8	Socket, Female	
45B	4460918	8	Socket, Female	
45B	4460926	1	Connector, Deutsch - 21 Position	
45C	4460913	2	Lock Wedge - 3 Position	
45C	4460910	2	Connector, Female Deutsch - 3 Position	
45C	4460917	6	Pin, Male	
45D		Ref	Cable, Electrical - 18/3 Options:	
45D	1060937	5 ft/1.5m	Cable, Electrical - 18/3 **(Prior to SN 0300066741)**	
45D	1060975	5 ft/1.5m	Cable, Electrical - 18/3 **(SN 0300066741 through 0300070286)**	
45D	1060981	5 ft/1.5m	Cable, Electrical - 18/3 **(SN 0300070287 through 0300085332)**	
45E		Ref	Cable, Electrical - 18/3 Options:	
45E	1060938	7 ft/2.2m	Cable, Electrical - 18/3 **(Prior to SN 0300066741)**	
45E	1060976	7 ft/2.2m	Cable, Electrical - 18/3 **(SN 0300066741 through 0300070286)**	
45E	1060982	7 ft/2.2m	Cable, Electrical - 18/3 **(SN 0300070287 through 0300085332)**	
45F		Ref	Connector, Strain Relief Options:	
45F	4460428	2	Connector, Strain Relief **(Prior to SN 0300066360)**	
45F	1560012	2	Connector, Strain Relief **(SN 0300066360 through 0300085332)**	
50	4460905	5	Seal, Plug	
56	4460225	1	Plug, Male - 6 Position	
57	4460496	1	Lockwasher, Terminal	
58	4460497	1	Nut, Terminal	
59	4922666	1	Harness, Analyzer Cable	2-B
59	4460226	4	Socket, Female (Not Shown - Located at J2)	
59A	4460761	1	Connector, Female - 4 Position	
59A	4460227	4	Pin, Male	
60	4460708	2	Receptacle - 15 Position	
	4922595	Ref	**PLATFORM BOX HARNESS ASSEMBLY**	8-G
101	4460866	1	Connector - 19 Pin	
101	4460929	10	Pin, Male Deutsch 16Ga	

ITEM	PART NUMBER	QTY	DESCRIPTION	REV
101	4460508	3	Pin, Male Deutsch 12Ga	
102	4460874	1	Connector - 35 Position (Natural)	
102	4460871	23	Socket, Female	
103	4460875	1	Connector - 35 Position (Gray) **(Prior to SN 0300068375)**	
103	4460871	22	Socket, Female	
103	4460876	1	Connector - 35 Position (Blue) **(SN 0300068375 through 0300085332)**	
103	4460871	23	Socket, Female	
104	4460873	1	Connector - 35 Position (Black)	
104	4460871	28	Socket, Female	
105	4460879	1	Connector, Male 2 Position	
105	4460887	2	Terminal (12 Gauge)	
106	4460418	8	Connector, Female - 6 Position	
106	4460419	18	Socket, Female	
107	4460225	4	Plug, Male - 6 Position	
107	4460226	18	Terminal (16 Gauge)	
108	4460225	1	Plug, Male - 6 Position	
108	4460227	5	Pin, Male	
109	4460434	2	Plug, Male - 15 Position	
109	4460227	AR	Pin, Male	
110	4460925	1	Connector - 21 Pin	
110	4460929	8	Pin, Male Deutsch 16Ga	
110	4460917	8	Pin, Male Deutsch 12Ga	
		Ref	**BOOM CABLES INSTALLATION**	
	0271323	Ref	**Boom Cables Installation 800S**	H
	0272388	Ref	**Boom Cables Installation 800S (SkyWelder)**	C
	0271325	Ref	**Boom Cables Installation 860SJ**	H
	0272389	Ref	**Boom Cables Installation 860SJ (SkyWelder)**	C
203	1060708	Ref	Cable, Electrical - 10/3 **(Prior to SN 0300071452)**	
203	1060708	96 ft /29.3m	Cable, Electrical - 10/3, 800S	
203	1060708	103 ft /31.4m	Cable, Electrical - 10/3, 860SJ	
203	1060545	Ref	Cable, Electrical - 8/5	
203	1060545	103 ft /31.4m	Cable, Electrical - 8/5, 800S (SkyWelder)	
203	1060545	1 ft/34.1m	Cable, Electrical - 8/5, 860SJ (SkyWelder)	
203	1060545	11 ft/3.4m	GC Box To Boom Connector Item 213	
203	1060545	83 ft /25.3m	Boom Connector Item 213 to Platform (800S)	
203	1060545	88 ft/27m	Boom Connector Item 213 to Platform (860SJ)	
204	1060902	Ref	Cable, Electrical - 18/2 **(Prior to SN 0300071452)**	
204	1060902	134 ft /41m	Cable, Electrical - 18/2, 800S	
204	1060902	138 ft /42m	Cable, Electrical - 18/2, 860SJ	
204	1060902	Ref	To Boom Capacity Length Switch	
204	1060902	20 ft/6m	Turntable to Bulkhead	
204	1060902	34 ft /10.4m	Bulkhead to Switch	
204	1060902	Ref	To Boom Transport Length Limit Switch	
204	1060902	20 ft/6m	Turntable to Bulkhead	
204	1060902	34 ft	Bulkhead to Switch	

ITEM	PART NUMBER	QTY	DESCRIPTION	REV
		/10.4m		
204	1060902	Ref	To Boom Elevation Switch	
204	1060902	13 ft/4m	To Boom Elevation Switch 800S	
204	1060902	15 ft/4.6m	To Boom Elevation Switch 860SJ	
204	1060902	Ref	To Boom Capacity Angle Switch	
204	1060902	13 ft/4m	To Boom Capacity Angle Switch 800S	
204	1060902	15 ft/4.6m	To Boom Capacity Angle Switch 860SJ	
204	1060902	20 ft/6m	To Bulkhead (For Lift Holding Valve)	
204	1060902	20 ft/6m	To Bulkhead (For Lift Dump Valve)	
207	3573047	1	Plate, Receptacle Mounting	
208	4360506	1	Proximity Switch and Harness Assembly	
209	4460464	4	Pin, Male **(Prior to SN 0300071452)**	
210	4460465	4	Socket, Female **(Prior to SN 0300071452)**	
211	4460470	1	Nut, Terminal	
212	4460471	1	Lockwasher, Terminal	
213	4460866	1	Connector - 19 Position	
214	4460891	2	Plug, Male - 2 Position **(Prior to SN 0300071452)**	
215	4460897	2	Receptacle, Female - 2 Position **(Prior to SN 0300071452)**	
217		Ref	Harness Assembly - Main Boom (12/4 - 18/8) Options:	
217	4922566	1	Harness Assembly - Main Boom (12/4 -18/8) 800S	2-B
217	4922567	1	Harness Assembly - Main Boom (12/4 -18/8) 860SJ	3-C
217	1060896	Ref	Cable, Electrical - 12/4 & 18/8	
217	1060896	85 ft/26m	Cable, Electrical - 12/4 & 18/8, 800S	
217	1060896	95 ft/29m	Cable, Electrical - 12/4 & 18/8, 860SJ	
217	2820031	4 in/9cm	Heat Shrink	
217A	4460465	11	Socket, Female 18 Gauge	
217B	4460865	1	Connector - 19 Position	
217C	4460509	4	Socket, Female 12 Gauge	
217D	4460473	1	Clamp, Cable	
217E	4460466	8	Seal, Plug	
217F	4460464	11	Pin, Male 18 Gauge	
217G	4460508	4	Pin, Male 12 Gauge	
218	4922569	1	Harness Assembly - Tower Boom (12/4 - 18/8)	1-A
218	1060896	20 ft/6.1m	Cable, Electrical - 12/4 & 18/8	
218A	4460465	22	Socket, Female 18 Gauge	
218B	4460865	2	Connector - 19 Position	
218C	4460509	8	Socket, Female 12 Gauge	
218D	4460473	2	Clamp, Cable	
218E	4460466	8	Seal, Plug	
233	4922660	1	Holding Valve/Lift Dump Harness Assembly (Note: This is actually to separate harnesses under the same p/n)	2-D
233A	4460880	2	Connector, DIN	
233B	4460320	1	Plug, Male - 2 Position	
233B	4460226	2	Socket, Female	
233C	4460424	1	Connector, Female - 2 Position	
233C	4460267	2	Pin, Male	
235	4922871	2	Harness, Limit Switch Upper **(SN 0300071452 through 0300085332)**	
235		Ref	To Boom Capacity Angle Switch	
235	1060902	34 ft /10.4m	Cable, Electrical - 18/2	
235	4460464	2	Pin, Male	

ITEM	PART NUMBER	QTY	DESCRIPTION	REV
235	4460897	1	Receptacle, Female - 2 Position	
235		Ref	To Boom Transport Length Limit Switch	
235	1060902	34 ft /10.4m	Cable, Electrical - 18/2	
235	4460464	2	Pin, Male	
235	4460897	1	Receptacle, Female - 2 Position	
236	4922872	2	Harness, Limit Switch Lower **(SN 0300071452 through 0300085332)**	
236		Ref	To Boom Capacity Length Switch	
236	1060902	20 ft/6m	Cable, Electrical - 18/2	
236	4460465	2	Socket, Female	
236	4460891	1	Plug, Male - 2 Position	
236		Ref	To Boom Transport Length Limit Switch	
236	1060902	20 ft/6m	Cable, Electrical - 18/2	
236	4460465	2	Socket, Female	
236	4460891	1	Plug, Male - 2 Position	
237		Ref	Cable, Electrical - 18/2 **(SN 0300071452 through 0300085332)**	
237	1061018	2	Cable, Electrical - 18/2, 800S	
237	1061019	2	Cable, Electrical - 18/2, 860SJ	
238		Ref	Harness Options (To Bulkhead): **(SN 0300071452 through 0300085332)**	
238	4922875	1	Harness, 110V A/C - 800S (Standard)	
238	4922790	1	Harness, 8/5 Cable - 800S (SkyWelder)	
238	4922878	1	Harness, 110V A/C - 860SJ (Standard)	
238	4922808	1	Harness, 8/5 Cable - 860SJ (SkyWelder)	
239		Ref	Harness Options (To Generator Box): **(SN 0300071452 through 0300085332)**	
239	4922876	1	Harness, 110V A/C (Standard)	
239	4922809	1	Harness, 8/5 Cable (SkyWelder)	
		Ref	**GROUND CONTROL BOX COMPONENTS**	
321	4460426	AR	Connector, Strain Relief	
322	4460470	1	Nut, Terminal	
323	4460471	1	Locknut, Terminal	
325	4460526	1	Connector, Strain Relief	
326	4460874	1	Connector (Natural)	
327	4460875	1	Connector (Gray)	
331	4922666	1	Harness, Analyzer Cable	2-B
331A	4460226	4	Socket, Female (Not Shown - Located at J2)	
331B	4460761	1	Connector, Female - 4 Position	
331B	4460227	4	Pin, Male	
332		Ref	Engine Harness Assembly (See Items 401-464 for Breakdown)	
332	4922654	1	Deutz Engine Machines	
332	4922655	1	Ford Engine Machines	
332	4922922	1	Caterpillar Engine Machines	
333	4922594	1	Valve Harness Assembly	6-J
333A	4460880	7	DIN Connector	
333B	4460320	2	Plug, Male - 2 Position	
333B	4460267	4	Pin, Male	
333D	4460834	1	Connector, Female - 2 Position	
333D	4460842	2	Terminal, Female	
333E	4460871	22	Socket, Female	
333F	4460225	1	Plug, Male - 6 Position	

ITEM	PART NUMBER	QTY	DESCRIPTION	REV
333F	4460267	6	Pin, Male	
333G	4460424	1	Connector, Female - 2 Position	
333G	4460267	2	Pin, Male	
333H	4460226	1	Socket, Female	
334	4922619	1	Ground Control Box Harness Assembly	6-E
334	3990010	2	Diode - 6Amp (Not Shown - Located at Power Down Relay)	
334A	4460418	7	Connector, Female - 6 Position	
334A	4460419	21	Socket, Female	
334B	4460876	1	Connector - 35 Position (Blue)	
334B	4460871	23	Socket, Female	
334C	4460866	1	Connector - 19 Pin	
334C	4460464	10	Pin, Male Deutsch 16Ga	
334C	4460508	3	Pin, Male Deutsch 12Ga	
334D	4460878	1	Housing, Terminal - 4 Position	
334D	4460887	3	Terminal (12 Gauge)	
334E	4120035	4	Base, Light	
334E	4460634	5	Terminal (16 Gauge)	
334E	4460635	3	Terminal (12 Gauge)	
334F	4460873	1	Connector - 35 Position (Black)	
334F	4460871	19	Socket, Female	
334G	4460871	9	Socket, Female	
334H	4460434	2	Plug, Male - 15 Position	
334H	4460227	22	Pin, Male	
335		Ref	Ground Control Box Wiring Diagram (Not Shown - See Items 501-510 for Breakdown)	
335	4933201	1	Deutz Engine Machines	
335	4923292	1	Caterpillar Engine Machines	
336	0100048	AR	Grease, Diaelectric	
337	4460905	4	Plug, Seal	
		Ref	**ENGINE HARNESS ASSEMBLY**	
	4922654	Ref	**Deutz Engine**	5-E
	4922922	Ref	**Caterpillar Engine**	3-C
419	4460424	1	Receptacle, Female - 2 Position	
420	4460268	2	Socket, Female	
421	4460880	AR	DIN Connector without Diode	
422	4460891	2	Connector, Male - 2 Position (Caterpillar Engine Only)	
422	4460465	7	Socket, Female	
428 to 430	Not Required	0	Not Required	
434	4460890	1	Housing - 2 Position (Deutz Engine Only)	
435	4460889	2	Terminal (Deutz Engine Only)	
438	4460460	AR	Connector, Male - 4 Position	
439	4460457	AR	Terminal, Female	
440	4460458	AR	Seal, Terminal	
441 to 445	Not Required	0	Not Required	
448	Not Required	0	Not Required	
450 to 451	Not Required	0	Not Required	
454	4460742	1	Receptacle, Female - 2 Position	
457	4460871	AR	Socket, Female	
462	4460464	1	Pin, Male	
464	4460887	1	Terminal, Molex	
		Ref	**GROUND CONTROL BOX WIRING DIAGRAM**	
	4933201	Ref	**Deutz Engine**	6-I

ITEM	PART NUMBER	QTY	DESCRIPTION	REV
	4933292	Ref	**Caterpillar Engine**	2-C
501	2920129	AR	Bulb, Light	
505	2400065	1	Fuse, 30Amp	
506	2400066	1	Fuse, Holder	
510	4460708	2	Receptacle, Female - 15 Position	
510	4460226	13	Socket, Female	
511	4922771	1	Harness, Angle Sensor	
511	1060902	9.5 ft /2.9m	Cable - 18/2	
511A	4460226	4	Socket, Female	
511B	4460424	1	Receptacle, Female - 2 Position	
		Ref	**STANDARD HARNESS COMPONENTS**	
601 to 602	Not Required	0	Not Required	
603	See Note	NSS	Pump Harness (Note: Not Available for Purchase)	
603	7007497	2	Plug (Pump)	
603A	7007498	1	Plug (Valve Harness)	
604		Ref	Switch, Tilt Sensor Options (Includes Tilt Sensor):	
604	4360503	NLA	Switch, Tilt Sensor (Use p/n 4360544) **(Prior to SN 0300066741)**	
604	4360528	NLA	Switch, Tilt Sensor (Use p/n 4360544) **(SN 0300066741 through 0300075872)**	
604	4360544	2	Switch, Tilt Sensor **(SN 0300075873 through 0300085332)**	
604A	4460911	2	Plug, Male Deutsch - 3 Position	
604A	4460918	6	Socket, Female	
604A	4460912	2	Lock, Wedge	
605	See Note	NSS	Controller Harness Assembly (Lift and Swing) (Note: Purchase Complete Controller)	
605A	7022819	1	Connector, Male - 9 Position	
605A	7022820	8	Socket, Female	
606	7022824	1	Controller Harness/Circuit Board Assembly (Drive and Steer)	
606A	7022825	1	Connector, Female - 9 Position	
606A	7022820	7	Socket, Female	
607	See Note	NSS	Speed Control Harness (Note: Purchase Complete Controller)	
607A	4460224	1	Connector, Female - 6 Position	
607A	4460226	5	Socket, Female	
608	See Note	NSS	Proximity Switch and Harness (Note: Not Available for Purchase)	
608A	4460320	1	Plug, Male - 2 Position	
608A	4460227	2	Pin, Male	
609	4922690	1	ADE System Power-Down Harness	
609A	3740049	1	Relay	
609A	3990010	2	Diode - 6Amp (Not Shown)	
		Ref	**OPTIONAL HARNESS COMPONENTS**	
701	0256202	5	AC to Platform Receptacle Components Options:	
701A	See Note	NLA	Box, Switch (Note: Not Available - Purchase Locally)	
701B	See Note	NLA	Receptacle (Note: Not Available - Purchase Locally)	
701C	See Note	NLA	Shield, Cover (Note: Not Available - Purchase Locally)	
701D	See Note	NLA	Connector, Strain Relief (Note: Not Available - Purchase Locally)	
701E	See Note	NLA	Plug, Male (Note: Not Available - Purchase Locally)	
701F	4460709	1	Plug, Male	
701G	4921820	1	Platform Receptacle Harness	
701G	1060461	30 in /76cm	Cable, Electrical - 12/3	

ITEM	PART NUMBER	QTY	DESCRIPTION	REV
701H	4460709	1	Plug, Male	
701J	See Note	1	Gasket, Cover (Note: Not Available - Purchase Locally)	
701K	4460710	1	Connector, Female	
702	4922743	1	Generator to Rear of Boom Harness	
		Ref	**Note: Harness used to connect AC at platform harness to generator receptacle to power platform receptacle.**	
702	1060545	6 ft/1.8m	Cable, Electrical - 10/3	
702A	See Note	NLA	Plug, Male (Note: Not Available - Purchase Locally)	
702B	See Note	NLA	Receptacle, Female (Note: Not Available - Purchase Locally)	
703		Ref	Generator Electrical Components Options:	
703	4933215	AR	220V **(Prior to SN 0300079612)**	1-B
703	4933300	AR	110V/220V **(SN 0300079612 through 0300085332)**	1-A
703	3990010	1	Diode - 6Amp (Not Shown)	
703A	4922641	1	Harness - On/Off Switch	
703B	4460226	2	Socket, Female	
703C		Ref	Powermite Control Box to Relay Options:	
703C	4922482	1	Powermite Control Box to Relay **(Prior to SN 0300079612)**	
703C	4922970	1	Powermite Control Box to Relay **(SN 0300079612 through 0300085332)**	
703D	See Note	1	Receptacle, Twist Lock (Note: Not Available - Purchase Locally)	
703E	4460961	1	Connector, Female - 4 Position **(SN 0300079612 through 0300085332)**	
703E	4460705	4	Pin, Male	
703F	4460321	1	Connector, Male - 4 Position **(SN 0300079612 through 0300085332)**	
703F	4460906	4	Socket, Female	
704		Ref	Strobe Light Harness (Includes Strobe Light) Options:	
704	0255917	1	Strobe Light Harness (Includes Strobe Light) **(Prior to SN 0300069716)**	
704	0272507	1	Strobe Light Harness (Includes Strobe Light) **(SN 0300069716 through 0300085332)**	
704A	4460320	1	Connector, Female - 2 Position	
704A	4460267	2	Pin, Male	
705	0257887	1	Alarm Harness (Includes Alarm)	
705A	4460424	1	Plug, Male - 2 Position	
705A	4460268	2	Socket, Female	
706	See Note	1	Lights Harness (Note: Not Available for Purchase)	
706	1060341	37 ft /11.3m	Cable, Electrical - 16/2	
706A	3740049	1	Relay	
706A	4922643	1	Harness, Bag (Located at Ground Control Box) (Not Shown)	
707		Ref	Platform Worklights/Floodlights Components	
707A		Ref	Platform Worklights/Floodlights External Harness (Includes Light and Wire Only)	
707A	2920140	2	Platform Worklights External Harness	
707A	2920157	2	Platform Floodlights External Harness (Light to Switch)	
707A	4460320	2	Connector, Female - 2 Position (Part of 4933249 Wiring Diagram)	
707A	4460227	4	Pin, Male (Part of 4933249 Wiring Diagram)	
707A	4922764	2	Platform Floodlights External Harness (Switch to Platform Box) (Part of 4933249 Wiring Diagram)	1-A
707A	4460424	2	Receptacle, Female - 2 Position	
707A	4460226	4	Socket, Female	

ITEM	PART NUMBER	QTY	DESCRIPTION	REV
707B		Ref	Connector, Strain Relief Options:	
707B	4460598	1	Platform Worklights	
707B	4460425	1	Platform Floodlights	
707C		Ref	Circuit Breaker, 15Amp Options:	
707C	4360232	1	Platform Worklights **(Prior to SN 0300074425)**	
707C	Not Required	0	Platform Worklights **(SN 0300074425 through 0300085332)**	
707C	4360232	1	Platform Floodlights	
707D	4922498	1	Platform Worklights Internal Harness **(Prior to SN 0300074425)**	
707E	4460871	3	Socket, Female **(Prior to SN 0300074425)**	
		Ref	**Note: Items 707F-707K. (SN 0300074425 through 0300085332)**	
707F		Ref	Platform Worklights Harness Options:	
707F	4922873	1	Platform Worklights Harness 800S with Platform Worklights	
707F	1060708	85 ft/26cm	Cable, Electrical - 10/3	
707F	4922877	1	Platform Worklights Harness 860SJ with Platform Worklights	
707F	1060708	92 ft/28cm	Cable, Electrical - 10/3	
707F	4922883	1	Platform Worklights Harness 800S/860SJ with Platform Floodlights	
707F	1060708	120 ft /37cm	Cable, Electrical - 10/3	
707G	4460459	1	Connector, Female - 3 Position (Platform Worklights Only)	
707G	4460789	3	Terminal, Seal	
707G	4460790	3	Socket, Female	
707H	4460476	1	Connector, Male - 3 Position (Platform Worklights Only)	
707H	4460789	3	Terminal, Seal	
707H	4460850	3	Pin, Male	
707I	4922874	1	Worklights Harness to Aux. Power Solenoid (Platform Worklights Only)	
707I	1060708	11 ft /3.4mm	Cable, Electrical - 10/3	
707J	2400070	1	Fuse (Platform Worklights Only)	
707K	2400066	1	Holder, Fuse (Platform Worklights Only)	
708	See Note	1	Soft Touch System Harness (Note: Not Available for Purchase)	
708A	1060341	22 ft/6.7m	Cable, Electrical - 16/2	
708B	4460226	2	Socket, Female	
708C	4460425	1	Connector, Strain Relief	
709	See Note	1	Rear Steer Valves Harness (Note: Not Available for Purchase)	
709A	4460224	1	Connector, Female - 6 Position	
709A	4460226	6	Socket, Female	
710 to 710	Not Required	0	Not Required	
		Ref	**TOOLS**	
801	7002821	1	Crimper (For Wire to Pin/Socket Connections)	
802	7002823	1	Extractor (For Removal of Pin/Socket from Connectors)	
803	4460467	1	Extractor, Pin (Blue 16-18 Gauge) (For Removal of Pin/Socket from Connectors)	
803	4460510	1	Extractor, Pin (Yellow 12-14 Gauge) (For Removal of Pin/Socket from Connectors)	
804	7002828	1	Stripper, Wire	

FIGURE 7-3. HARNESS COMPONENTS INSTALLATION (WITHOUT UGM) (SN 0300085332 through 0300140000)

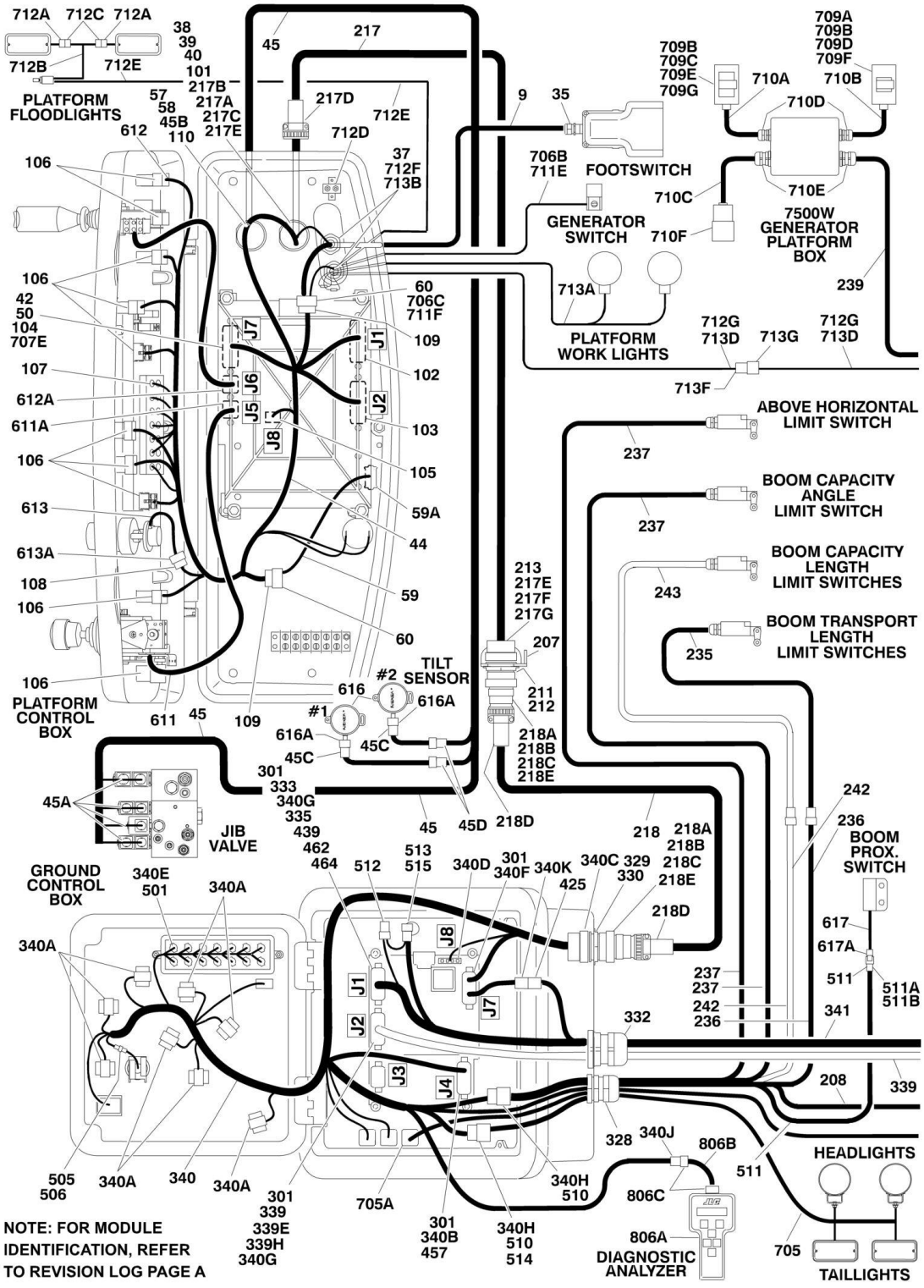

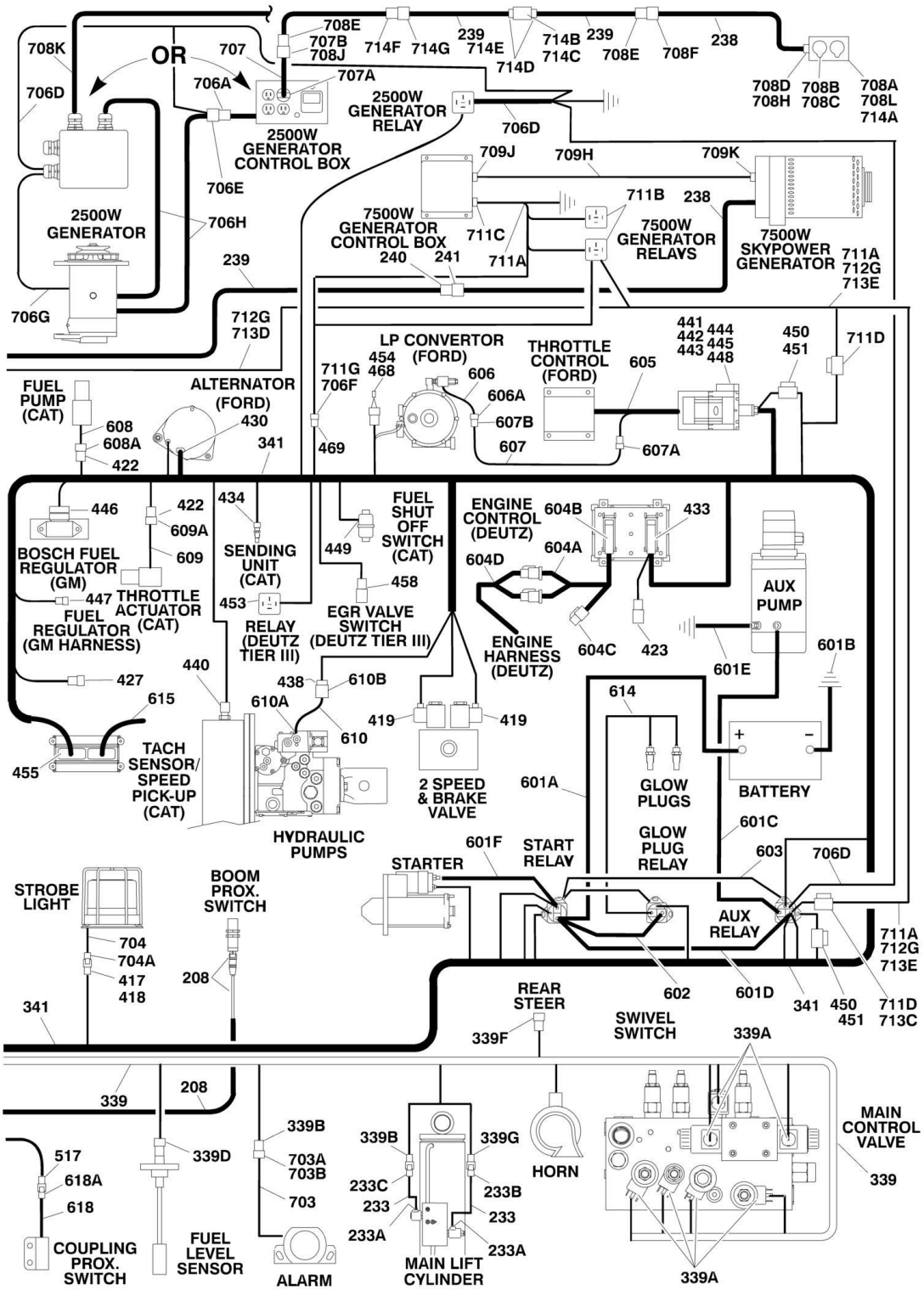
708E
707B
708J
714F
714G
239
714E
714B
714C
239
708E
708F
238
708D
708H
708B
708C
708A
708L
714A
708K
OR
707
706A
707A
706D
2500W GENERATOR RELAY
706D
2500W GENERATOR CONTROL BOX
706E
709J
709H
709K
711B
238
2500W GENERATOR
706H
7500W GENERATOR CONTROL BOX
711C
711A
240
241
7500W GENERATOR RELAYS
7500W SKYPOWER GENERATOR
711A
712G
713E
239
706G
712G
713D
441
442
443
444
445
448
450
451
711D
LP CONVERTOR (FORD)
THROTTLE CONTROL (FORD)
605
711G
706F
454
468
606
606A
607B
607
607A
FUEL PUMP (CAT)
608
608A
422
ALTERNATOR (FORD)
430
341
469
446
422
609A
609
434
FUEL SHUT OFF SWITCH (CAT)
449
458
ENGINE CONTROL (DEUTZ)
604B
433
604A
604D
BOSCH FUEL REGULATOR (GM)
447
THROTTLE ACTUATOR (CAT)
FUEL REGULATOR (GM HARNESS)
SENDING UNIT (CAT)
453
RELAY (DEUTZ TIER III)
EGR VALVE SWITCH (DEUTZ TIER III)
ENGINE HARNESS (DEUTZ)
604C
423
AUX PUMP
601E
601B
427
615
440
438
610B
610A
610
419
419
614
455
TACH SENSOR/ SPEED PICK-UP (CAT)
HYDRAULIC PUMPS
2 SPEED & BRAKE VALVE
601A
GLOW PLUGS
BATTERY
601C
GLOW PLUG RELAY
603
706D
STARTER
601F
START RELAY
STROBE LIGHT
BOOM PROX. SWITCH
704
704A
417
418
208
AUX RELAY
711A
712G
713E
341
REAR STEER
602
601D
341
450
451
711D
713C
339F
SWIVEL SWITCH
339A
339
208
339B
339G
HORN
MAIN CONTROL VALVE
517
618A
618
339D
703A
703B
703
233C
233
233A
233B
233
233A
339
COUPLING PROX. SWITCH
FUEL LEVEL SENSOR
ALARM
MAIN LIFT CYLINDER
339A

FIGURE 7-3. HARNESS COMPONENTS INSTALLATION (WITHOUT UGM) (SN 0300085332 through 0300140000)

ITEM	PART NUMBER	QTY	DESCRIPTION	REV
		Ref	**NOTE: FOR MODULE IDENTIFICATION, REFER TO REVISION LOG PAGE A.**	
		Ref	**PLATFORM CONSOLE BOX COMPONENTS**	
	0861416	Ref	**Platform Console Box Components (SN 0300085332 through 0300137912)**	J
	1001108866	Ref	**Platform Console Box Components (SN 0300137913 through 0300140000)**	B
9	1060918	7 ft/2.14m	Cable, Electrical - 18/3	
35	4460071	1	Connector, Strain Relief	
37	4460428	2	Connector, Strain Relief	
38	4460464	1	Pin, Male Deutsch	
39	4460470	1	Nut, Terminal	
40	4460471	1	Lockwasher, Terminal	
42	4460226	2	Socket, Female	
44		Ref	Harness, Platform Box Options (See Items 101-110 for Breakdown)	
44	4922595	1	Harness, Platform Box **(SN 0300085332 through 0300137912)**	
44	1001107796	1	Harness, Platform Box **(SN 0300137913 through 0300140000)**	
45	4922749	1	Harness, Upper Valve	2-A
45A	4460880	7	Connector, DIN	
45B	4460928	8	Socket, Female	
45B	4460918	8	Socket, Female	
45B	4460926	1	Connector, Deutsch - 21 Position	
45C	4460913	2	Lock Wedge - 3 Position	
45C	4460910	2	Connector, Female Deutsch - 3 Position	
45C	4460917	6	Pin, Male	
45D	1560012	2	Connector, Strain Relief	
50	4460905	5	Seal, Plug	
56	4460225	1	Plug, Male - 6 Position	
57	4460496	1	Lockwasher, Terminal	
58	4460497	1	Nut, Terminal	
59	4922666	1	Harness, Analyzer Cable	2-B
59	4460226	4	Socket, Female (Not Shown - Located at J2)	
59A	4460761	1	Connector, Female - 4 Position	
59A	4460227	4	Pin, Male	
60	4460708	2	Receptacle - 15 Position	
		Ref	**PLATFORM BOX HARNESS ASSEMBLY**	
	4922595	Ref	**Platform Box Harness Assembly (SN 0300085332 through 0300137912)**	10-I
	1001107796	Ref	**Platform Box Harness Assembly (SN 0300137913 through 0300140000)**	C
101	4460866	1	Connector - 19 Pin	
101	4460929	10	Pin, Male Deutsch 16Ga	
101	4460508	3	Pin, Male Deutsch 12Ga	
102	4460874	1	Connector - 35 Position (Natural)	
102	4460871	23	Socket, Female	
103	4460876	1	Connector - 35 Position (Blue)	
103	4460871	23	Socket, Female	
104	4460873	1	Connector - 35 Position (Black)	
104	4460871	28	Socket, Female	

ITEM	PART NUMBER	QTY	DESCRIPTION	REV
105	4460879	1	Connector, Male 2 Position	
105	4460887	2	Terminal (12 Gauge)	
106	4460418	7	Connector, Female - 6 Position	
106	4460419	21	Socket, Female	
107	4460225	4	Plug, Male - 6 Position	
107	4460226	18	Terminal (16 Gauge)	
108	4460225	1	Plug, Male - 6 Position	
108	4460227	5	Pin, Male	
109	4460434	2	Plug, Male - 15 Position	
109	4460227	AR	Pin, Male	
110	4460925	1	Connector - 21 Pin	
110	4460929	8	Pin, Male Deutsch 16Ga	
110	4460917	8	Pin, Male Deutsch 12Ga	
		Ref	**BOOM CABLES INSTALLATION**	
	0271323	Ref	**Boom Cables Installation 800S**	I
	0272388	Ref	**Boom Cables Installation 800S (With 7500W Generator)**	F
	0271325	Ref	**Boom Cables Installation 860SJ**	K
	0272389	Ref	**Boom Cables Installation 860SJ (With 7500W Generator)**	E
207	3573047	1	Plate, Receptacle Mounting	
208	4360506	1	Proximity Switch and Harness Assembly	
211	4460470	1	Nut, Terminal	
212	4460471	1	Lockwasher, Terminal	
213	4460866	1	Connector - 19 Position	
217		Ref	Harness Assembly - Main Boom (12/4 -18/8) Options:	
217	4922566	1	Harness Assembly - Main Boom (12/4 -18/8) 800S	2-B
217	4922567	1	Harness Assembly - Main Boom (12/4 -18/8) 860SJ	3-C
217	1060896	Ref	Cable, Electrical - 12/4 & 18/8	
217	1060896	85 ft/26m	Cable, Electrical - 12/4 & 18/8, 800S	
217	1060896	95 ft/29m	Cable, Electrical - 12/4 & 18/8, 860SJ	
217	2820031	4 in/9cm	Heat Shrink	
217A	4460465	11	Socket, Female 18 Gauge	
217B	4460865	1	Connector - 19 Position	
217C	4460509	4	Socket, Female 12 Gauge	
217D	4460473	1	Clamp, Cable	
217E	4460466	8	Seal, Plug	
217F	4460464	11	Pin, Male 18 Gauge	
217G	4460508	4	Pin, Male 12 Gauge	
218	4922569	1	Harness Assembly - Tower Boom (12/4 - 18/8)	1-A
218	1060896	20 ft/6.1m	Cable, Electrical - 12/4 & 18/8	
218A	4460465	22	Socket, Female 18 Gauge	
218B	4460865	2	Connector - 19 Position	
218C	4460509	8	Socket, Female 12 Gauge	
218D	4460473	2	Clamp. Cable	
218E	4460466	8	Seal, Plug	
233	4922660	1	Holding Valve/Lift Dump Harness Assembly (Note: This is actually two separate harnesses under the same p/n)	2-D
233A	4460880	2	Connector, DIN	
233B	4460320	1	Plug, Male - 2 Position	
233B	4460226	2	Socket, Female	
233C	4460424	1	Connector, Female - 2 Position	
233C	4460267	2	Pin, Male	
235	4922871	1	Harness, Limit Switch Upper (To Boom Transport Length Limit	

ITEM	PART NUMBER	QTY	DESCRIPTION	REV
			Switch)	
235		Ref	Without 7500W Generator	
235		Ref	With 7500W Generator	
235	1060902	34 ft /10.4m	Cable, Electrical - 18/2	
235	4460464	2	Pin, Male	
235	4460897	1	Receptacle, Female - 2 Position	
236	4922872	1	Harness, Limit Switch Lower (To Boom Transport Length Limit Switch)	
236		Ref	Without 7500W Generator	
236		Ref	With 7500W Generator	
236	1060902	20 ft/6m	Cable, Electrical - 18/2	
236	4460465	2	Socket, Female	
236	4460891	1	Plug, Male - 2 Position	
237	1061018	Ref	Cable, Electrical - 18/2, 800S:	
237	1061018	2	Without 7500W Generator **(SN 0300085332 through 0300103968)**	
237	1061018	1	Without 7500W Generator **(SN 0300103969 through 0300140000)**	
237	1061018	2	With 7500W Generator	
237	1061019	Ref	Cable, Electrical - 18/2, 860SJ:	
237	1061019	2	Without 7500W Generator **(SN 0300085332 through 0300103968)**	
237	1061019	1	Without 7500W Generator **(SN 0300103969 through 0300140000)**	
237	1061019	2	With 7500W Generator	
238		Ref	Harness Options (To Bulkhead):	
238	4922875	1	Harness, 110V A/C - 800S (Without 7500W Generator)	
238	4922790	1	Harness, 8/5 Cable - 800S (With 7500W Generator)	
238	4922878	1	Harness, 110V A/C - 860SJ (Without 7500W Generator)	
238	4922808	1	Harness, 8/5 Cable - 860SJ (With 7500W Generator)	
239		Ref	Harness Options (To Generator Box): **(SN 0300085332 through 0300140000)**	
239	4922876	1	Harness, 110V A/C (Without 7500W Generator)	
239	4922809	1	Harness, 8/5 Cable (With 7500W Generator)	
240	4460959	1	Terminal, Turnlock Plug (With 7500W Generator)	
241	4460960	1	Terminal, Turnlock Connector (With 7500W Generator)	
242		Ref	Harness, Limit Switch Lower (To Boom Capacity Length Switch)	
242	4922872	1	Without 7500W Generator **(SN 0300085332 through 0300103968)**	
242	4922872	1	Without 7500W Generator **(SN 0300103969 through 0300140000)**	
242	4922872	1	With 7500W Generator **(SN 0300085332 through 0300120843)**	
242	1001098908	1	With 7500W Generator **(SN 0300120844 through 0300140000)**	
242	1060902	20 ft/6m	Cable, Electrical - 18/2	
242		Ref	Terminal Options:	
242	4460465	2	Socket, Female **(SN 0300085332 through 0300120843)**	
242	4460464	2	Pin, Male **(SN 0300120844 through 0300140000)**	
242		Ref	Connector Options:	
242	4460891	1	Receptacle, Female - 2 Position **(SN 0300085332 through 0300120843)**	
242	4460897	1	Plug, Male - 2 Position **(SN 0300120844 through 0300140000)**	
243		Ref	Harness, Limit Switch Upper (To Boom Capacity Length Switch)	

ITEM	PART NUMBER	QTY	DESCRIPTION	REV
243	4922871	1	Without 7500W Generator **(SN 0300085332 through 0300103968)**	
243	4922871	1	Without 7500W Generator **(SN 0300103969 through 0300140000)**	
243	4922871	1	With 7500W Generator **(SN 0300085332 through 0300120843)**	
243	1001098909	1	With 7500W Generator **(SN 0300120844 through 0300140000)**	
243	1060902	34 ft /10.4m	Cable, Electrical - 18/2	
243		Ref	Terminal Options:	
243	4460464	2	Pin, Male **(SN 0300085332 through 0300120843)**	
243	4460465	2	Socket, Female **(SN 0300120844 through 0300140000)**	
243		Ref	Connector Options:	
243	4460897	1	Receptacle, Female - 2 Position **(SN 0300085332 through 0300120843)**	
243	4460891	1	Plug, Male - 2 Position **(SN 0300120844 through 0300140000)**	
		Ref	**GROUND CONTROL BOX COMPONENTS**	
301	0100048	AR	Grease, Dielectric	
328	4460426	1	Connector, Strain Relief	
329	4460470	1	Nut, Terminal	
330	4460471	1	Locknut, Terminal	
332	4460526	1	Connector, Strain Relief	
333	4460874	1	Connector (Natural)	
334	4460875	1	Connector (Gray)	
335	4460905	4	Plug, Seal	
339	4922594	1	Valve Harness Assembly	7-K
339A	4460880	7	DIN Connector	
339B	4460320	2	Plug, Male - 2 Position	
339B	4460267	4	Pin, Male	
339D	4460834	1	Connector, Female - 2 Position	
339D	4460842	2	Terminal, Female	
339E	4460871	22	Socket, Female	
339F	4460225	1	Plug, Male - 6 Position	
339F	4460267	6	Pin, Male	
339G	4460424	1	Connector, Female - 2 Position	
339G	4460267	2	Pin, Male	
339H	4460226	1	Socket, Female **(SN 0300085332 through 0300087262)**	
340		Ref	Ground Control Box Harness Assembly	
340	4923213	1	Deutz and GM Engine **(SN 0300085332 through 0300099881)**	E
340	4923279	1	Caterpillar and Ford Engine **(SN 0300085332 through 0300099881)**	2-B
340	4923577	1	Caterpillar, Deutz and GM Engine **(SN 0300099882 through 0300140000)**	D
340	3990010	2	Diode - 6Amp (Not Shown - Located at Power Down Relay)	
340A	4460418	7	Connector, Female - 6 Position	
340A	4460419	21	Socket, Female	
340B	4460876	1	Connector - 35 Position (Blue)	
340B	4460871	AR	Socket, Female	
340B	4460905	1	Seal, Plug	
340C	4460866	1	Connector - 19 Pin	
340C	4460464	AR	Pin, Male Deutsch 16Ga	
340C	4460508	3	Pin, Male Deutsch 12Ga	
340D	4460878	1	Housing, Terminal - 4 Position	

ITEM	PART NUMBER	QTY	DESCRIPTION	REV
340D	4460887	3	Terminal (12 Gauge)	
340E	4120035	5	Base, Light	
340E	4460634	6	Terminal (16 Gauge)	
340E	4460635	4	Terminal (12 Gauge)	
340F	4460873	1	Connector - 35 Position (Black)	
340F	4460871	19	Socket, Female	
340F	4460905	2	Seal, Plug	
340G	4460871	AR	Socket, Female	
340H	4460434	2	Plug, Male - 15 Position	
340H	4460227	AR	Pin, Male	
340J	4460761	1	Connector, Female 4 - Position	
340J	4460227	4	Pin, Male	
340K	4460536	1	Connector, Female 3- Position	
340K	4460943	3	Pin, Male	
341		Ref	Engine Harness Assembly (See Items 401-469 for Breakdown)	
341	4923239	1	Deutz Engine Machines **(SN 0300085332 through 0300129453)**	
341	1001102160	1	Deutz Engine Machines **(SN 0300129454 through 0300140000)**	
341	4923278	1	Caterpillar Engine Machines	
342		Ref	Ground Control Box Wiring Diagram (Not Shown - See Items 501 to 517 for Breakdown)	
342	4933337	1	Caterpillar Engine **(SN 0300085332 through 0300099881)**	
342	4933376	1	Caterpillar Engine **(SN 0300099882 through 0300140000)**	
342	4933323	1	Deutz Engine Machines **(SN 0300085332 through 0300099881)**	
342	4933375	1	Deutz Engine Machines **(SN 0300099882 through 0300140000)**	
		Ref	**ENGINE HARNESS ASSEMBLY**	
	4923278	Ref	**Caterpillar Engine (SN 0300085332 through 0300099881)**	4-C
	4923585	Ref	**Caterpillar Engine (SN 0300099882 through 0300140000)**	B
	4923239	Ref	**Deutz Engine (SN 0300085332 through 0300129453)**	E
	1001102160	Ref	**Deutz Engine (SN 0300129454 through 0300140000)**	B
417	4460424	1	Receptacle, Female - 2 Position	
418	4460268	2	Socket, Female	
419	4460880	2	DIN Connector without Diode	
422	4460891	2	Connector, Male - 2 Position (Caterpillar Engine Only)	
422	4460465	7	Socket, Female	
423	4461070	1	Receptacle, Female with Resistor (3 Position) (Deutz Engine Only)	
423	4461095	1	Plug, Male - 3 Position (Deutz Engine Only)	
423	4460944	3	Socket, Female (Deutz Engine Only)	
425	4460539	1	Connector, Male - 3 Position (Deutz Engine Only)	
425	4460944	3	Socket, Female (Deutz Engine Only)	
426 to 427	Not Required	0	Not Required	
430	4460582	3	Terminal (Ford Engine Only)	
430	4460580	1	Lock, Terminal (Ford Engine Only)	
430	4460579	1	Housing - 3 Position (Ford Engine Only)	
431	Not Required	0	Not Required	
433	4461052	1	Connector, Receptacle - 25 Position (Deutz Engine Only)	
433	4461005	5	Terminal (Gold) (Deutz Engine Only)	
433	4461006	5	Seal, Terminal (Deutz Engine Only)	
433	4461060	2	Terminal (Tin) (Deutz Engine Only)	
433	4461054	2	Seal, Terminal (Deutz Engine Only)	
433	4461053	1	Cover, Plug (Deutz Engine Only)	
434	4460996	1	Connector, Female - 3 Position (Caterpillar Engines Only)	

ITEM	PART NUMBER	QTY	DESCRIPTION	REV
434	4460995	2	Terminal, Spade (Caterpillar Engines Only)	
438	4460460	1	Connector, Male - 4 Position	
438	4460457	AR	Terminal, Female	
438	4460458	AR	Seal, Terminal	
439	4460871	AR	Socket, Female	
440	4460539	1	Plug, Male - 3 Position (Caterpillar Engines Only)	
440	4460465	3	Socket, Female (Caterpillar Engines Only)	
441 to 448	Not Required	0	Not Required	
449	4460792	1	Plug, Male - 1 Position (Caterpillar Engines Only)	
449	4460339	3	Terminal (Caterpillar Engines Only)	
450 to 451	Not Required	0	Not Required	
453	4460374	1	Plug, Sealed Relay (Deutz Engine Tier III) **(SN 0300129454 through 0300140000)**	
453	4460375	4	Terminal (Deutz Engine Tier III) **(SN 0300129454 through 0300140000)**	
450 to 455	Not Required	0	Not Required	
458	1001102290	1	Connector, 2 Position (Deutz Engine Tier III) **(SN 0300129454 through 0300140000)**	
458	1001102304	2	Seal (Deutz Engine Tier III) **(SN 0300129454 through 0300140000)**	
458	1001102291	2	Terminal, Receptacle (Deutz Engine Tier III) **(SN 0300129454 through 0300140000)**	
462	4460464	1	Pin, Male	
464	4460887	1	Terminal, Molex	
465 to 469	Not Required	0	Not Required	
		Ref	**GROUND CONTROL BOX WIRING DIAGRAM**	
	4933337	Ref	**Caterpillar Engine (SN 0300085332 through 0300099881)**	3-C
	4933376	Ref	**Caterpillar Engine (SN 0300099882 through 0300140000)**	D
	4933323	Ref	**Deutz Engine (SN 0300085332 through 0300099881)**	F
	4933375	Ref	**Deutz Engine (SN 0300099882 through 0300140000)**	D
501	2920129	AR	Bulb, Light	
505	2400065	1	Fuse, 30Amp	
506	2400066	1	Fuse, Holder	
510	4460708	2	Receptacle, Female - 15 Position	
510	4460226	13	Socket, Female	
511	4922771	1	Harness, Angle Sensor	
511	1060902	9.5 ft /2.9m	Cable - 18/2	
511A	4460226	2	Socket, Female	
511B	4460424	1	Receptacle, Female - 2 Position	
512	4460894	1	Plug, Male - 6 Position (Deutz and GM Engines - Caterpillar Engines) **(SN 0300099882 through 0300140000)**	
512	4460892	1	Connector, Bussbar - 6 Position (Deutz and GM Engines - Caterpillar Engines) **(SN 0300099882 through 0300140000)**	
513	2902443	1	Receptacle Kit (Deutz Only)	
513	4461071	8	Socket, Female	
513	4461072	1	Receptacle	
513	4461073	1	Cap, Dust	
513	4461074	1	Shell, Black	
514	4922636	1	Harness, Jumper	
514	4460226	2	Socket, Female	
515	4460539	1	Plug, Male - 3 Position (Caterpillar Only) **(SN 0300099884 through 0300140000)**	

ITEM	PART NUMBER	QTY	DESCRIPTION	REV
516	4923591	1	Harness, Jumper (Not Shown - Located on Module J7-6 to J7-17 Caterpillar Only)	
517	4460424	1	Receptacle, Female - 2 Position **(SN 0300136458 through 0300140000)**	
517	4460226	2	Socket, Female **(SN 0300136458 through 0300140000)**	
		Ref	**STANDARD HARNESS COMPONENTS**	
601	2902401	1	Battery Cable Kit	B
601A		Ref	Cable, Battery (Red) Options:	
601A	7016813	1	Cable, Battery (Red) (Starter Cable terminates at the Start Relay) **(SN 0300085332 through 0300138237)**	
601A	7027027	1	Cable, Battery (Red) (Starter Cable terminates at the Glow Plug Relay) (Not Shown) **(SN 0300138238 through 0300140000)**	
601B		Ref	Cable, Battery (Black) Options:	
601B	7027012	1	Cable, Battery **(SN 0300085332 through 0300138237)**	
601B	7027004	1	Cable, Battery (Black) **(SN 0300138238 through 0300140000)**	
601C	7016824	1	Cable (Red)	
601D		Ref	Cable (Red) Options:	
601D	7016803	1	Cable (Red) **(SN 0300085332 through 0300138237)**	
601D	Not Required	0	Cable (Red) (Part of Item 601A p/n 7027027) **(SN 0300138238 through 0300140000)**	
601E	7016825	1	Cable (Black)	
601F	Not Required	0	Not Required	
602	1060904	1	Cable, Battery (Caterpillar Engine Machines Only)	
603	14922737	1	Harness, Relay Ground (Caterpillar Engine Machines Only)	
604		Ref	Deutz Engine Harness Components (Deutz Engine Machines Only)	
604A	7027796	1	Deutz Engine Harness	
604B	4461052	1	Receptacle, Female - 25 Position	
604B	4461053	1	Cover, Receptacle	
604B	4461005	5	Terminal	
604B	4461006	5	Seal (Used with p/n 4461005)	
604B	4461060	2	Terminal	
604B	4461054	2	Seal (Used with p/n 4461060)	
604B	4461008	18	Plug, Hole	
604C	7027793	1	Plug-In, Connector	
604D		Ref	Deutz Engine Harness Options (For other replacement parts refer to Deutz engine dealer):	
604D	7027794	1	Tier II Engines **(SN 0300085332 through 0300129453)**	
604D	70001872	1	Tier III Engines **(SN 0300129454 through 0300140000)**	
605 to 607	Not Required	0	Not Required	
608	See Note	1	Fuel Pump Harness (Caterpillar Engines Only) (Note: Not Available for Purchase)	
608	4460897	1	Receptacle, Female -2 Position (Caterpillar Engines Only)	
608	4460464	2	Pin, Male (Caterpillar Engines Only)	
609	See Note	NSS	Throttle Actuator Harness (Caterpillar Engines Only) (Note: Not Available for Purchase)	
609	4460897	1	Receptacle, Female -2 Position (Caterpillar Engines Only)	
609	4460464	2	Pin, Male (Caterpillar Engines Only)	
610	See Note	1	Pump Harness (Note: Not Available for Purchase)	
610A	7007497	1	Plug (Pump End)	
610B	7007498	1	Plug (Engine Harness End)	
611	See Note	NSS	Controller Harness Assembly (Lift and Swing) (Note: Purchase Complete Controller)	
611A	7022819	1	Plug, Male - 8 Position (Natural)	

ITEM	PART NUMBER	QTY	DESCRIPTION	REV
611A	4460871	8	Socket, Female	
612	See Note	NSS	Controller Harness/Circuit Board Assembly (Drive and Steer) (Note: Purchase Complete Controller)	
612A	7022825	1	Plug, Male - 8 Position (Black)	
612A	4460871	7	Socket, Female	
613	See Note	NSS	Controller Harness (Speed Control) (Note: Purchase Complete Controller)	
613A	4460224	1	Receptacle, Female - 6 Position	
613A	4460226	6	Socket, Female	
614	4923379	1	Harness, Glowplug **(SN 0300092776 through 0300140000)**	
615	Not Required	0	Not Required	
616	4360544	2	Switch, Tilt Sensor (Includes Tilt Sensor)	
616A	4460911	2	Plug, Male Deutsch - 3 Position	
616A	4460918	6	Socket, Female	
616A	4460912	2	Lock, Wedge	
617	4360517	1	Harness, Boom Proximity Sensor (Includes Sensor)	
617A	4460320	1	Plug, Male - 2 Position	
617A	4460227	2	Pin, Male	
618	4360517	1	Harness, Swivel Coupling Sensor (Includes Sensor)	
618A	4460320	1	Plug, Male - 2 Position	
618A	4460227	2	Pin, Male	
		Ref	**OPTIONAL HARNESS COMPONENTS**	
703	0257887	1	Alarm Harness (Includes Alarm)	
703	0140032	1	Alarm	
703	2820035	6 in/15cm	Loom	
703A	4460424	1	Plug, Male - 2 Position	
703B	4460268	2	Socket, Female	
704	0272507	1	Strobe Light Harness Options (Includes Strobe Light):	
704A	4460320	1	Connector, Female - 2 Position	
704B	4460267	2	Pin, Male	
705	See Note	NSS	Headlight and Taillight/Chassis Illumination Harness (Note: Not Available for Purchase)	
705	1060341	AR	Cable, Electrical 16/2 Options:	
705	1060341	37 ft /11.3m	Headlights and Taillights	
705	1060341	40 ft /12.2m	Chassis Illumination Lights	
705A	3740049	1	Relay	
705A	4460259	3	Terminal	
705A	4460260	4	Housing, Terminal	
705A	4460297	1	Terminal	
705A	4922643	1	Lights Harness for Ground Control Box	1-A
705A	4460226	2	Socket, Female	
706		Ref	2500W Generator Electrical Components	
706	4933300	AR	Caterpillar/Deutz **(SN 0300085332 through 0300122914)**	2-A
706	1001100027	AR	Caterpillar/Deutz **(SN 0300122915 through 0300140000)**	3-C
706A	4460321	1	Connector, Male - 4 Position **(SN 0300085332 through 0300122915)**	
706A	4460906	4	Socket, Female	
706B	4922641	1	Harness - On/Off Switch	
706C	4460226	2	Socket, Female	
706E	4460961	1	Connector, Female - 4 Position **(SN 0300085332 through 0300122915)**	

ITEM	PART NUMBER	QTY	DESCRIPTION	REV
706E	4460705	4	Pin, Male	
706F	Not Required	0	Not Required	
706G	1001100305	1	Harness, Generator Ground Only **(SN 0300122915 through 0300136123)**	
706H	7020193	1	Harness, Generator Power	
707	4922743	1	Generator to Rear of Boom Harness	A
		Ref	**Note: Harness used to connect AC at platform harness to Powermite Generator Control Box receptacle.**	
707	1060545	6 ft/1.8m	Cable, Electrical - 10/3	
707A	See Note	1	Plug, Male (Note: Not Available - Purchase Locally)	
707B		Ref	Receptacle, Female Options:	
707B	See Note	NLA	Australian Spec (Note: Not Available - Purchase Locally)	
707B	See Note	NLA	CE Spec without Generator Option (Note: Not Available - Purchase Locally)	
707B	See Note	NSS	CE Spec with Generator Option (Note: Use Item 708J)	
708		Ref	AC to Platform Receptacle Components Options:	
708	0256202	Ref	Australian Spec	5
708		Ref	CE Specs without Powermite Generator Options:	
708	0256202	Ref	110/220V Receptacle (Locally Supplied Box and Receptacle)	5
708	1001091969	Ref	110V with IEC Yellow Receptacle and Plug and Circuit Breaker	B
708	1001091970	Ref	220V with IEC Blue Receptacle and Plug and Circuit Breaker	B
708	1001091971	Ref	220V with CEE7 Post Ground Receptacle and Plug and Circuit Breaker (70mm x 70mm Box)	B
708	1001091972	Ref	220V with CEE7 Side Ground Receptacle and Plug and Circuit Breaker (70mm x 70mm Box)	B
708	1001091973	Ref	220V with CEE7 Post Ground Receptacle and Plug and Circuit Breaker (2x4 Box)	C
708	1001091974	Ref	220V with CEE7 Side Ground Receptacle and Plug and Circuit Breaker (2x4 Box)	C
708	1001091975	Ref	220V with AFSINT 107 Keyed Ground Receptacle and Plug and Circuit Breaker (2x4 Box)	C
708		Ref	CE Specs with Powermite Generator Options:	
708	1001100326	Ref	110V with IEC Yellow Receptacle and Plug and Circuit Breaker	C
708	1001100327	Ref	220V with IEC Blue Receptacle and Plug and Circuit Breaker	C
708	1001100328	Ref	220V with CEE7 Post Ground Receptacle and Plug and Circuit Breaker (70mm x 70mm Box)	C
708	1001100329	Ref	220V with CEE7 Side Ground Receptacle and Plug and Circuit Breaker (70mm x 70mm Box)	C
708	1001100331	Ref	220V with CEE7 Post Ground Receptacle and Plug and Circuit Breaker (2x4 Box)	C
708	1001100333	Ref	220V with CEE7 Side Ground Receptacle and Plug and Circuit Breaker (2x4 Box)	C
708	1001100337	Ref	220V with AFSINT 107 Keyed Ground Receptacle and Plug and Circuit Breaker (2x4 Box)	C
708A		Ref	Box, Switch Options:	
708A	See Note	NLA	0256202 Installation (Note: Not Available - Purchase Locally)	
708A	0861781	1	1001091969, 1001091970, 1001100326, 1001100327 Installations	
708A	0861782	NLA	1001091971, 1001100328, 1001091972, 1001100329 Installations. (Note: Use p/n 1001141970 CEE7 Side Ground Service Kit or p/n 1001141971 CEE7 Post Ground Service Kit. Kits includes Box p/n 1001141967 and items 708B, 708C, 708E & 708J)	

ITEM	PART NUMBER	QTY	DESCRIPTION	REV
708A	0861731	1	1001091973, 1001100331, 1001091974, 1001100333, 1001091975 & 1001100337 Installations	
708A	1001141967	1	1001100343, 1001100344, 1001141970 & 1001141971 Kits	
708B		Ref	Receptacle Options:	
708B	See Note	NLA	0256202 Installation (Note: Not Available - Purchase Locally)	
708B	1001141968	1	1001141971 Service Kit	
708B	1001141969	1	1001141970 Service Kit	
708B	4461198	1	1001091969, 1001100326 Installations	
708B	4461201	1	1001091970, 1001100327 Installations	
708B	4461204	NLA	1001091971, 1001100328 Installations (Use p/n 1001100343)	
708B	4461207	NLA	1001091972, 1001100329 Installations (Use p/n 1001100344)	
708B	4461244	1	1001091973, 1001100331 Installations	
708B	4461245	1	1001091974, 1001100333 Installations	
708B	4461246	1	1001091975, 1001100337 Installations	
708B	1001141968	1	1001100343 & 1001141971 Kits	
708B	1001141969	1	1001100344 & 1001141970 Kits	
708C		Ref	Shield, Cover Options:	
708C	See Note	NLA	0256202 Installation (Note: Not Available - Purchase Locally)	
708C	See Note	NSS	1001091973, 1001091974, 1001091975, 1001091969, 1001091970, 1001091971, 1001091972, 1001100331, 1001100333, 1001100337, 1001100326, 1001100327, 1001100328 & 1001100329 Installations (Note: Use Item 708B)	
708D		Ref	Connector, Strain Relief Options:	
708D	See Note	NLA	0256202 Installation (Note: Not Available - Purchase Locally)	
708D	4460968	1	1001091969, 1001100326, 1001091970, 1001100327 1001091971, 1001100328, 1001091972, 1001100329 Installations **(SN 0300085332 through 0300127289)**	
708D	1001101191	1	1001091969, 1001100326, 1001091970, 1001100327 1001091971, 1001100328, 1001091972, 1001100329 Installations **(SN 0300127290 through 0300140000)**	
708D	4460968	1	1001091973, 1001091974 & 1001091975 Installations **(SN 0300085332 through 0300108683)**	
708D	4460662	1	1001091973, 1001100331, 1001091974, 1001100333, 1001091975 & 1001100337 Installations **(SN 0300108684 through 0300127289)**	
708D	1001101191	1	1001091973, 1001100331, 1001091974, 1001100333, 1001091975 & 1001100337 Installations **(SN 0300127290 through 0300140000)**	
708E		Ref	Plug, Male Options:	
708E	See Note	NLA	0256202 Installation (Note: Not Available - Purchase Locally)	
708E	4461196	1	1001091969 Installation	
708E	4461199	1	1001091970 Installation	
708E	4461202	1	1001091971, 1001091973 Installations and 1001100343 & 1001141971 Kits	
708E	4461205	1	1001091972, 1001091974 Installations and 1001100344 & 1001141970 Kits	
708E	4461249	1	1001091975 Installation	
708E	Not Required	0	1001100326, 1001100327, 1001100328, 1001100329, 1001100331, 1001100333 & 1001100337 Installations	

ITEM	PART NUMBER	QTY	DESCRIPTION	REV
708F	4460709	1	Plug, Male	
708G	4460710	1	Connector, Female	
708H		Ref	Connector, Adapter Options:	
708H	See Note	1	0256202 Installation (Note: Not Available - Purchase Locally) **(SN 0300127290 through 0300140000)**	
708H	1001101196	1	1001091969, 1001100326, 1001091970, 1001100327, 1001091971, 1001100328, 1001091972, 1001100329 Installations	
708H	1001101197	1	1001091973, 1001100331, 1001091974, 1001091975 & 1001100337 Installations	
708J		Ref	Receptacle, Female Options (With Powermite Generator Control Box Only):	
708J	4461197	1	1001100326 Installation	
708J	4461200	1	1001100327 Installation	
708J	4461203	1	1001100328 & 1001100331 Installations and 1001100343 & 1001141971 Kits	
708J	4461206	1	1001100329 & 1001100333 Installations and 1001100344 & 1001141970 Kits	
708J	4461250	1	1001100337 Installation	
708K	1060908	10 ft/3.1m	Cable, Electrical - 12/3 (With Powermite Generator Control Box Only)	1
708L		Ref	Receptacle Box Kit Options:	1
708L		Ref	**Without Powermite Generator (Includes Items 708A, 708B, 708C & 708E):**	
708L	0275216	1	Kit for 110V IEC Yellow (1001091969 Installation)	1
708L	0275217	1	Kit for 220V IEC Blue (1001091970 Installation)	1
708L	0275218	NLA	Kit for 220V CEE7 Post Ground (1001091971 Installation) (Use p/n 1001100343)	B-B
708L	0275219	NLA	Kit for 220V CEE7 Side Ground (1001091972 Installation) (Use p/n 1001100344)	B-B
708L	0275452	1	Kit for 220V CEE7 Post Ground (1001091973 Installation)	1
708L	0275453	1	Kit for 220V CEE7 Side Ground (1001091974 Installation)	1
708L	0275454	1	Kit for 220V AFSINT 107 Keyed Ground (1001091975 Installation)	1
708L		Ref	**With Powermite Generator (Includes Items 708A, 708B, 708C, 708E & 708J):**	
708L	1001100341	1	Kit for 110V IEC Yellow (1001100326 Installation)	2
708L	1001100342	1	Kit for 220V IEC Blue (1001100327 Installation)	2
708L	1001091971	NLA	Kit for 220V CEE7 Post Ground (1001100328 Installation) (Use p/n 1001100343 Kit)	B
708L	1001091970	NLA	Kit for 220V CEE7 Side Ground (1001100329 Installation) (Use p/n 1001100344 Kit)	B
708L	1001100345	1	Kit for 220V CEE7 Post Ground (1001100331 Installation)	2
708L	1001100347	1	Kit for 220V CEE7 Side Ground (1001100333 Installation)	2
708L	1001100346	1	Kit for 220V AFSINT 107 Keyed Ground (1001100337 Installation)	2
709		Ref	7500W SkyPower Generator Installation	
709	0272643	Ref	50Hz Spec and Deutz Engine	F
709	0273541	Ref	50Hz Spec and Caterpillar Engine	I
709A	See Note	1	Receptacle, Female Twist-Lock (Note: Not Available - Purchase Locally)	
709B	See Note	2	Gasket (Note: Not Available - Purchase Locally)	
709C	See Note	1	Cover, Receptacle (Note: Not Available - Purchase Locally)	
709D	See Note	1	Cover, Receptacle (Note: Not Available - Purchase Locally)	
709E	See Note	1	Receptacle (Note: Not Available - Purchase Locally)	

ITEM	PART NUMBER	QTY	DESCRIPTION	REV
709F	4460051	1	Connector, Strain Relief	
709G	4460071	1	Connector, Strain Relief	
709H	4922925	1	Harness, Generator	
709J	See Note	1	Plug, Male - 6 Position (Note: Not Available for Purchase)	
709J	See Note	6	Socket, Female (Note: Not Available for Purchase)	
709K	4460225	1	Plug, Male - 6 Position	
709K	4460226	6	Socket, Female	
710	0861567	Ref	7500W SkyPower Generator Junction Box Components	B
710A	See Note	2 ft/.6m	Cable, Electrical 12/3 (Note: Not Available - Purchase Locally)	
710B	See Note	2.5 ft /.76m	Cable, Electrical 10/3 (Note: Not Available - Purchase Locally)	
710D	4460425	2	Connector, Strain Relief	
710E	4460426	1	Component	
710E	3520189	1	Plug	
710F	Not Required	0	Not Required	
711	4933264	Ref	7500W Generator Electrical Diagram Components	C
711A	4922757	1	Generator Harness	3-C
711B	4460374	2	Plug, Sealed Relay	
711B	4460375	7	Terminal	
711C	4460967	1	Plug, Male - 3 Position	
711C	4460465	3	Socket, Female	
711D	2400060	1	Fuseholder	
711D	2400064	1	Fuse - 5Amp	
711E	4922641	1	Switch Harness	
711F	4460226	2	Socket, Female	
712	4933249	1	Floodlights Harness Components	2-A
712A	4460320	2	Plug, Male - 2 Position	
712A	4460227	4	Pin, Male	
712B	4922764	1	Floodlight Harness (Lights to Switch)	1-A
712C	4460424	2	Connector, Female - 2 Position	
712C	4460226	4	Socket, Female	
712D	4360232	1	Circuit Breaker - 15Amp	
712E	1060977	1	Cord, 2 Wire Coiled (Console Box Circuit Breaker to Switch)	
712F	4460425	1	Connector, Strain Relief	
712G	4922883	1	Harness, Console Box to Aux Relay	
712G	1060708	120 ft /36.6m	10/3 Cable	
713		Ref	Platform Worklights Components	
713A	2920140	2	Platform Worklights External Harness (Includes Light and Wire Only)	
713B	4460426	1	Connector, Strain Relief	
713C	2400070	1	Fuse	
713C	2400066	1	Holder, Fuse	
713D		Ref	Harness, Console Box to Connector Options:	
713D	4922873	1	Harness, Console Box to Connector 800S Harness (85ft/25.9m of 10/3 Cable P/N 1060708)	
713D	4922877	1	Harness, Console Box to Connector 860SJ Harness (92ft/28m of 10/3 Cable P/N 1060708)	
713E	4922874	1	Harness, Connector to Aux Relay	
713E	1060708	11 ft/3.4m	10/3 Cable	
713F		Ref	Connector, Female - 3 Position Options (Platform Worklights Only):	
713F	4460459	1	Connector, Male - 3 Position Options (Platform Worklights	

ITEM	PART NUMBER	QTY	DESCRIPTION	REV
			Only) **(SN 0300085332 through 0300117585)**	
713F	4460789	3	Terminal, Seal **(SN 0300085332 through 0300117585)**	
713F	4460790	3	Socket, Female **(SN 0300085332 through 0300117585)**	
713F	1001098234	1	Connector, Female - 3 Position Options (Platform Worklights Only) **(SN 0300117586 through 0300140000)**	
713G		Ref	Connector, Male - 3 Position Options (Platform Worklights Only):	
713G	4460476	1	Connector, Male - 3 Position Options (Platform Worklights Only) **(SN 0300085332 through 0300117585)**	
713G	4460789	3	Terminal, Seal	
713G	4460790	3	Socket, Female	
713G	1001098349	1	Connector, Male - 3 Position Options (Platform Worklights Only) **(SN 0300117586 through 0300140000)**	
714		Ref	AC Cable with Breaker (Required Only on CE Spec Installations)	
714	1001091790	Ref	Without Powermite Generator	D
714	1001109559	Ref	With Powermite Generator	A
714A	0903484	1	Bracket, Receptacle Box Mounting	
714A	0641416	2	Bolt 1/4in-20NC x 2in	
714A	3311405	2	Locknut 1/4in-20NC	
714A	4711400	4	Flatwasher 1/4in Thin	
714B	0903697	1	Bracket, Circuit Breaker Mounting	
714B	0641412	2	Bolt 1/4in-20NC x 1-1/2in	
714B	3311405	2	Locknut 1/4in-20NC	
714B	4711400	4	Flatwasher 1/4in Thin	
714C		Ref	Kit, Box and Breaker (Required on CE Spec Installations):	
714C	2902549	NLA	Machines without Powermite Generator Control Box (Use p/n 1001096070) **(SN 0300085332 through 0300127289)**	D
714C	1001096070	AR	Machines without Powermite Generator Control Box **(SN 0300127290 through 0300137610)**	D
714C	1001109654	AR	Machines without Powermite Generator Control Box **(SN 0300137611 through 0300140000)**	A
714C	1001109648	AR	Machines with Powermite Generator Control Box	A
714C		Ref	Circuit Breaker Options:	
714C	2400093	NLA	Circuit Breaker (Use p/n 1001181046 - 10A/30mA or p/n 1001181045 - 16A/30mA) **(SN 0300069000 through 0300136457)**	
714C	1001109477	NLA	Circuit Breaker 10A (Use p/n 1001181046)	
714C	1001109475	NLA	Circuit Breaker 16A (Use p/n 1001181045)	
714C	1001109482	NLA	Circuit Breaker 30mA (Use p/n 1001181046 - 10A/30mA or p/n 1001181045 - 16A/30mA)	
714C	0861880	1	Breaker Box	
714C	4460956	1	Terminal, Block End Barrier	
714C	1060908	6 ft/1.8m	Cable, Extension	
714C	4460957	1	Terminal Block	
714D		Ref	Connector, Strain Relief Options:	
714D	4460633	2	Connector, Strain Relief **(SN 0300085332 through 0300117585)**	
714D	1001097150	2	Connector, Strain Relief **(SN 0300117586 through 0300127289)**	
714D	1001101191	1	Connector, Strain Relief (Top) **(SN 0300127290 through 0300140000)**	
714D	1001097150	1	Connector, Strain Relief (Bottom) **(SN 0300127290 through 0300140000)**	
714D	0641406	2	Bolt 1/4in-20NC x 3/4in	

ITEM	PART NUMBER	QTY	DESCRIPTION	REV
714D	3311405	2	Locknut 1/4in-20NC	
714D	4711400	4	Flatwasher 1/4in Thin	
714E	1060908	12 ft/3.6m	Cable, Electrical 12/3	
714F	4460709	1	Plug, Male	
714G	4460710	1	Connector, Female	
		Ref	**TOOLS**	
801	7002821	1	Crimper (For Wire to Pin/Socket Connections) (Not Shown)	
802	7002823	1	Extractor (For Removal of Pin/Socket from Connectors) (Not Shown)	
803	4460467	1	Extractor, Pin (Blue 16-18 Gauge) (For Removal of Pin/Socket from Connectors) (Not Shown)	
804	4460510	1	Extractor, Pin (Yellow 12-14 Gauge) (For Removal of Pin/Socket from Connectors) (Not Shown)	
805	7002828	1	Stripper, Wire (Not Shown)	
806	2901443	1	Analyzer Kit (Not Shown)	
806A	1600244	1	Analyzer	
806B	1060633	1	Cable, Analyzer	1-A
806C	4460321	2	Plug, Male	
806C	4460226	8	Socket, Female	

FIGURE 7-4. HARNESS COMPONENTS INSTALLATION (WITH UGM)

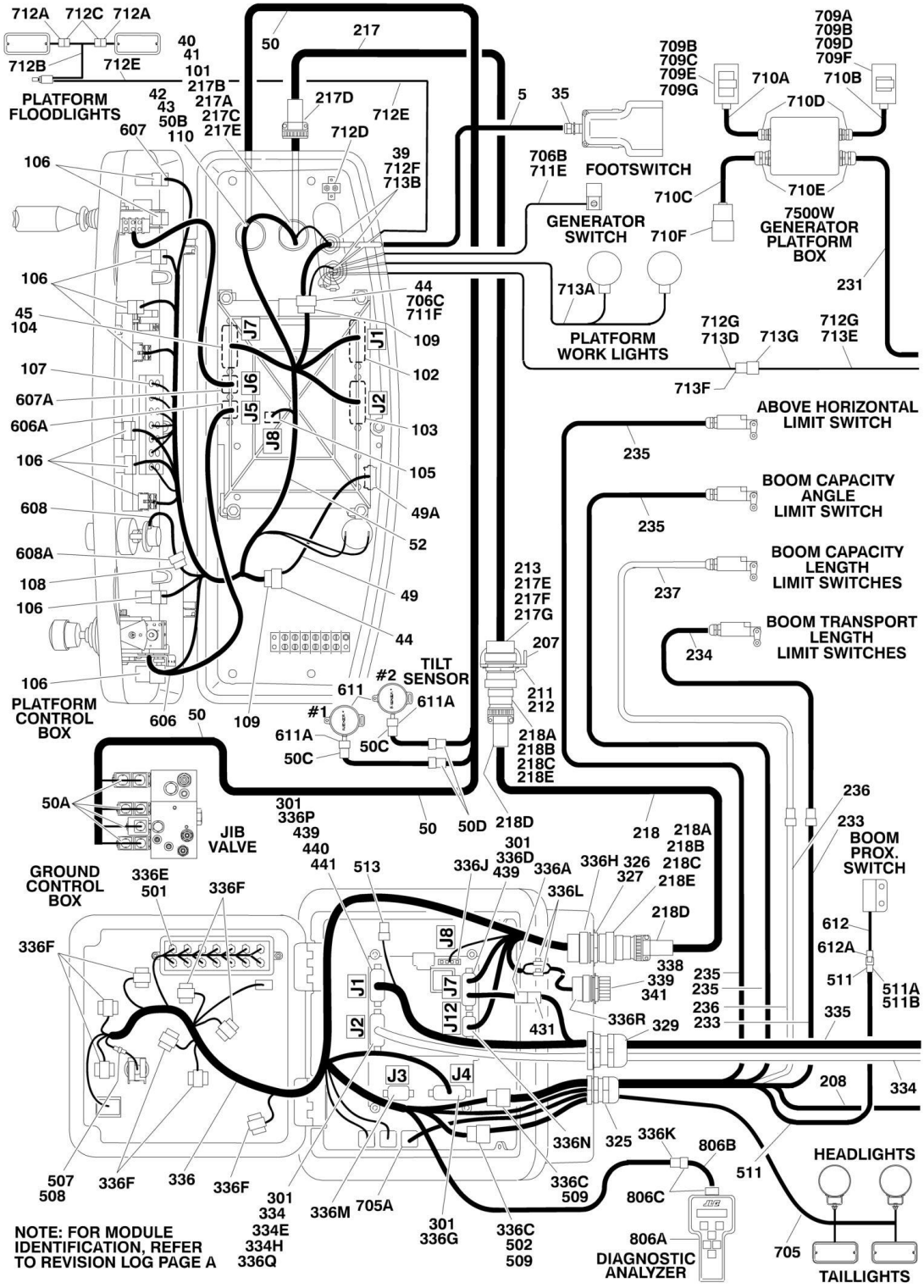

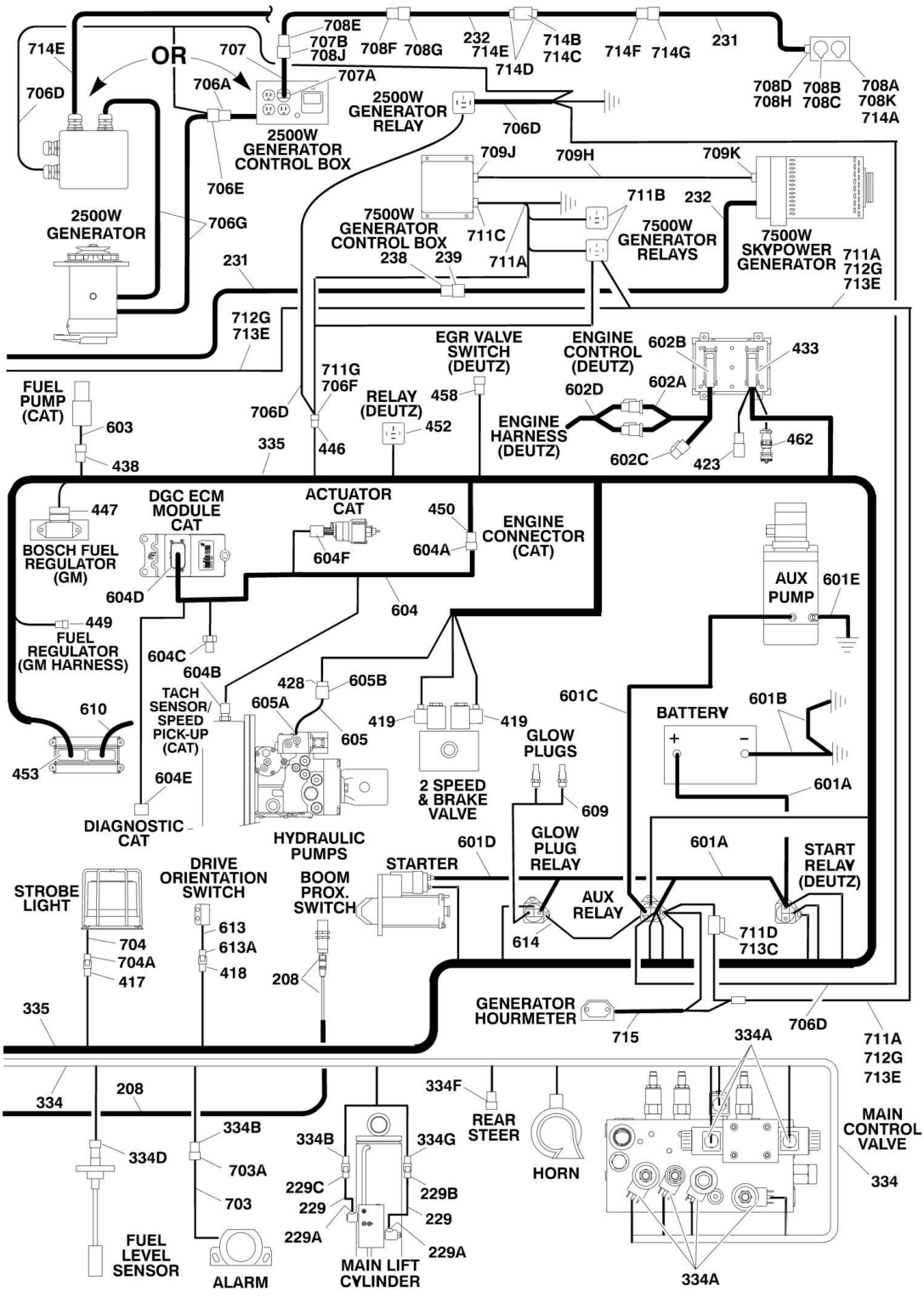
OR
714E
706D
707
706A
708E
707B
708J
708F
708G
232
714E
714B
714C
714D
714F
714G
231
708D
708H
708B
708C
708A
708K
714A
707A
2500W GENERATOR CONTROL BOX
2500W GENERATOR RELAY
706D
709J
709H
709K
711B
232
706E
2500W GENERATOR
706G
7500W GENERATOR CONTROL BOX
711C
711A
238
239
7500W GENERATOR RELAYS
7500W SKYPOWER GENERATOR
711A
712G
713E
231
712G
713E
EGR VALVE SWITCH (DEUTZ)
ENGINE CONTROL (DEUTZ)
602B
433
711G
706F
706D
RELAY (DEUTZ)
458
602D
602A
FUEL PUMP (CAT)
603
452
ENGINE HARNESS (DEUTZ)
462
438
335
446
602C
423
447
DGC ECM MODULE CAT
ACTUATOR CAT
450
ENGINE CONNECTOR (CAT)
BOSCH FUEL REGULATOR (GM)
604F
604A
AUX PUMP
601E
604D
604
449
FUEL REGULATOR (GM HARNESS)
604C
604B
428
605B
TACH SENSOR/ SPEED PICK-UP (CAT)
605A
601C
BATTERY
601B
610
419
419
GLOW PLUGS
605
453
601A
604E
2 SPEED & BRAKE VALVE
609
DIAGNOSTIC CAT
HYDRAULIC PUMPS
601D
GLOW PLUG RELAY
601A
START RELAY (DEUTZ)
STARTER
STROBE LIGHT
DRIVE ORIENTATION SWITCH
BOOM PROX. SWITCH
AUX RELAY
704
613
711D
713C
704A
613A
614
417
418
208
335
GENERATOR HOURMETER
715
706D
334A
711A
712G
713E
334
208
334F
REAR STEER
MAIN CONTROL VALVE
334B
334G
334D
703A
HORN
334
229C
229B
703
229
229
229A
229A
FUEL LEVEL SENSOR
ALARM
MAIN LIFT CYLINDER
334A

FIGURE 7-4. HARNESS COMPONENTS INSTALLATION (WITH UGM)

ITEM	PART NUMBER	QTY	DESCRIPTION	REV
		Ref	**NOTE: FOR MODULE IDENTIFICATION, REFER TO REVISION LOG PAGE A.**	
	1001114896	Ref	**PLATFORM CONSOLE BOX COMPONENTS**	B
5	1060918	7 ft/2.14m	Cable, Electrical - 18/3	
35	4460071	1	Connector, Strain Relief	
39	4460428	2	Connector, Strain Relief	
40	4460470	1	Nut, Terminal	
41	4460471	1	Lockwasher, Terminal	
42	4460496	1	Lockwasher, Terminal	
43	4460497	1	Nut, Terminal	
44	4460708	2	Receptacle - 15 Position	
45	4460905	5	Seal, Plug	
49	4922666	1	Harness, Analyzer Cable	2-B
49	4460226	4	Socket, Female (Not Shown - Located at J2)	
49A	4460761	1	Connector, Female - 4 Position	
49A	4460227	4	Pin, Male	
50	4922749	1	Harness, Upper Valve	2-A
50A	4460880	7	Connector, DIN	
50B	4460928	8	Socket, Female	
50B	4460918	8	Socket, Female	
50B	4460926	1	Connector, Deutsch - 21 Position	
50C	4460913	2	Lock Wedge - 3 Position	
50C	4460910	2	Connector, Female Deutsch - 3 Position	
50C	4460917	6	Pin, Male	
50D	1560012	2	Connector, Strain Relief	
52	1001107796	1	Harness, Platform Box (See Items 101-110 for Breakdown)	
	1001107796	Ref	**PLATFORM BOX HARNESS ASSEMBLY**	C
101	4460866	1	Connector - 19 Pin	
101	4460929	10	Pin, Male Deutsch 16Ga	
101	4460508	3	Pin, Male Deutsch 12Ga	
102	4460874	1	Connector - 35 Position (Natural)	
102	4460871	23	Socket, Female	
103	4460876	1	Connector - 35 Position (Blue)	
103	4460871	23	Socket, Female	
104	4460873	1	Connector - 35 Position (Black)	
104	4460871	28	Socket, Female	
105	4460879	1	Connector, Male 2 Position	
105	4460887	2	Terminal (12 Gauge)	
106	4460418	7	Connector, Female - 6 Position	
106	4460419	21	Socket, Female	
107	4460225	4	Plug, Male - 6 Position	
107	4460226	18	Terminal (16 Gauge)	
108	4460225	1	Plug, Male - 6 Position	
108	4460227	5	Pin, Male	
109	4460434	2	Plug, Male - 15 Position	
109	4460227	AR	Pin, Male	
110	4460925	1	Connector - 21 Pin	
110	4460929	8	Pin, Male Deutsch 16Ga	
110	4460917	8	Pin, Male Deutsch 12Ga	
		Ref	**BOOM CABLES INSTALLATION**	

ITEM	PART NUMBER	QTY	DESCRIPTION	REV
	0271323	Ref	**Boom Cables Installation 800S**	I
	1001117399	Ref	**Boom Cables Installation 800S (With 7500W Generator)**	A
	0271325	Ref	**Boom Cables Installation 860SJ**	K
	1001117400	Ref	**Boom Cables Installation 860SJ (With 7500W Generator)**	A
207	3573047	1	Plate, Receptacle Mounting	
208	4360506	1	Proximity Switch and Harness Assembly	
211	4460470	1	Nut, Terminal	
212	4460471	1	Lockwasher, Terminal	
213	4460866	1	Connector - 19 Position	
217		Ref	Harness Assembly - Main Boom (12/4 - 18/8) Options:	
217	4922566	1	Harness Assembly - Main Boom 800S	2-B
217	4922567	1	Harness Assembly - Main Boom 860SJ	3-C
217	1060896	Ref	Cable, Electrical - 12/4 & 18/8	
217	1060896	85 ft/26m	Cable, Electrical 800S	
217	1060896	95 ft/29m	Cable, Electrical 860SJ	
217	2820031	4 in/9cm	Heat Shrink	
217A	4460465	11	Socket, Female 18 Gauge	
217B	4460865	1	Connector - 19 Position	
217C	4460509	4	Socket, Female 12 Gauge	
217D	4460473	1	Clamp, Cable	
217E	4460466	8	Seal, Plug	
217F	4460464	11	Pin, Male 18 Gauge	
217G	4460508	4	Pin, Male 12 Gauge	
218	4922569	1	Harness Assembly - Tower Boom (12/4 - 18/8)	1-A
218	1060896	20 ft/6.1m	Cable, Electrical - 12/4 & 18/8	
218A	4460465	22	Socket, Female 18 Gauge	
218B	4460865	2	Connector - 19 Position	
218C	4460509	8	Socket, Female 12 Gauge	
218D	4460473	2	Clamp, Cable	
218E	4460466	8	Seal, Plug	
229	4922660	1	Holding Valve/Lift Dump Harness Assembly (Note: This is actually two separate harnesses under the same p/n)	2-D
229A	4460880	2	Connector, DIN	
229B	4460320	1	Plug, Male - 2 Position	
229B	4460226	2	Socket, Female	
229C	4460424	1	Connector, Female - 2 Position	
229C	4460267	2	Pin, Male	
231		Ref	Harness Options (To Bulkhead):	
231	4922875	1	Harness, 110V A/C - 800S (Without SkyWelder)	
231	4922790	1	Harness, 8/5 Cable - 800S (With SkyWelder)	
231	4922878	1	Harness, 110V A/C - 860SJ (Without SkyWelder)	
231	4922808	1	Harness, 8/5 Cable - 860SJ (With SkyWelder)	
232		Ref	Harness Options (To Generator Box):	
232	4922876	1	Harness, 110V A/C (Without SkyWelder)	
232	4922809	1	Harness, 8/5 Cable (With SkyWelder)	
233	4922872	1	Harness, Limit Switch Lower (To Boom Transport Length Limit Switch)	
233		Ref	Without SkyWelder	
233		Ref	With SkyWelder	
233	1060902	20 ft/6m	Cable, Electrical - 18/2	
233	4460465	2	Socket, Female	
233	4460891	1	Plug, Male - 2 Position	

ITEM	PART NUMBER	QTY	DESCRIPTION	REV
234	4922871	1	Harness, Limit Switch Upper (To Boom Transport Length Limit Switch)	
234		Ref	Without SkyWelder	
234		Ref	With SkyWelder	
234	1060902	34 ft /10.4m	Cable, Electrical - 18/2	
234	4460464	2	Pin, Male	
234	4460897	1	Receptacle, Female - 2 Position	
235		Ref	Cable, Electrical - 18/2	
235	1061018	AR	Cable, Electrical 800S	
235		Ref	Without SkyWelder	
235		Ref	With SkyWelder	
235	1061019	AR	Cable, Electrical 860SJ	
235		Ref	Without SkyWelder	
235		Ref	With SkyWelder	
236 to 237	Not Required	0	Not Required	
238	4460959	1	Terminal, Turnlock Plug (With SkyWelder)	
239	4460960	1	Terminal, Turnlock Connector (With SkyWelder)	
		Ref	**GROUND CONTROL BOX COMPONENTS**	
301	0100048	AR	Grease, Dielectric	
325	4460426	1	Connector, Strain Relief	
326	4460470	1	Nut, Terminal	
327	4460471	1	Locknut, Terminal	
329	4460526	1	Connector, Strain Relief	
334	4922594	1	Valve Harness Assembly	7-K
334A	4460880	7	DIN Connector	
334B	4460320	2	Plug, Male - 2 Position	
334B	4460267	4	Pin, Male	
334D	4460834	1	Connector, Female - 2 Position	
334D	4460842	2	Terminal, Female	
334E	4460871	22	Socket, Female	
334F	4460225	1	Plug, Male - 6 Position	
334F	4460267	6	Pin, Male	
334G	4460424	1	Connector, Female - 2 Position	
334G	4460267	2	Pin, Male	
334H	4460226	1	Socket, Female	
335		Ref	Engine Harness Assembly (See Items 401-462 for Breakdown)	
335	1001110341	1	Caterpillar Engine Machines	
335	1001110340	1	Deutz Engine Machines	
336	1001110339	1	Ground Control Box Harness Assembly	B
336A	4460536	1	Connector, Female 3- Position	
336A	4460943	3	Pin, Male	
336B	3990010	2	Diode - 6Amp (Not Shown - Located at Power Down Relay)	
336C	4460434	2	Plug, Male - 15 Position	
336C	4460227	21	Pin, Male	
336D	4460873	1	Connector - 35 Position (Black)	
336D	4460871	19	Socket, Female	
336D	4460905	1	Seal, Plug	
336E	4120035	6	Base, Light	
336E	4460634	7	Terminal (16 Gauge)	
336E	4460635	5	Terminal (12 Gauge)	
336F	4460418	7	Connector, Female - 6 Position	

ITEM	PART NUMBER	QTY	DESCRIPTION	REV
336F	4460419	21	Socket, Female	
336G	4460876	1	Connector - 35 Position (Blue)	
336G	4460871	24	Socket, Female	
336G	4460905	1	Seal, Plug	
336H	4460866	1	Connector - 19 Pin	
336H	4460464	10	Pin, Male Deutsch 16Ga	
336H	4460508	3	Pin, Male Deutsch 12Ga	
336J	4460878	1	Housing, Terminal - 4 Position	
336J	4460887	3	Terminal (12 Gauge)	
336K	4460761	1	Connector, Female 4 - Position	
336K	4460227	4	Pin, Male	
336L	8229242	2	Fuse 5A	
336L	2400060	2	Holder, Fuse	
336M	1001106339	1	Connector, Male - 14 Position	
336M	4460871	2	Socket, Female	
336N	1001106340	1	Connector, Male - 14 Position	
336N	4460871	5	Socket, Female	
336P	4460874	1	Connector, Natural	
336P	4460871	10	Socket, Female	
336Q	4460875	1	Connector, Gray	
336Q	4460871	5	Socket, Female	
336R	1001112612	1	Connector - 9 Position	
336R	4460943	4	Pin, Male	
337		Ref	Ground Control Box Wiring Diagram (Not Shown - See Items 501-513 for Breakdown)	
337	1001110344	1	Caterpillar Engine	
337	1001110343	1	Deutz Engine Machines	
338	4460496	1	Lockwasher, Terminal	
339	4460497	1	Nut, Terminal	
341	1001106736	1	Cap, Dust	
		Ref	**ENGINE HARNESS ASSEMBLY**	
	1001110341	Ref	**Caterpillar Engine**	B
	1001110340	Ref	**Deutz Engine**	A
417	4460424	1	Receptacle, Female - 2 Position	
417	4460268	2	Socket, Female	
418	4460424	1	Receptacle, Female - 2 Position	
418	4460226	2	Socket, Female	
419	4460880	2	DIN Connector without Diode	
423	4461070	1	Receptacle, Female with Resistor (3 Position) (Deutz Engine Only)	
423	4461095	1	Plug, Male - 3 Position (Deutz Engine Only)	
423	4460944	3	Socket, Female (Deutz Engine Only)	
428	4460460	1	Connector, Male - 4 Position	
428	4460457	4	Terminal, Female	
428	4460458	4	Seal, Terminal	
431	4460539	1	Plug, Male - 3 Position	
431	4460944	3	Socket, Female	
433	4461052	1	Connector, Receptacle - 25 Position (Deutz Engine Only)	
433	4461005	5	Terminal (Gold) (Deutz Engine Only)	
433	4461006	5	Seal, Terminal (Deutz Engine Only)	
433	4461060	2	Terminal (Tin) (Deutz Engine Only)	
433	4461054	2	Seal, Terminal (Deutz Engine Only)	

ITEM	PART NUMBER	QTY	DESCRIPTION	REV
433	4461053	1	Cover, Plug (Deutz Engine Only)	
433	4461008	18	Plug, Hole (Deutz Engine Only)	
438	4460891	2	Connector, Male - 2 Position (Caterpillar Engine Only)	
438	4460465	7	Socket, Female	
439	4460871	AR	Socket, Female	
440	4460464	1	Pin, Male	
441	4460887	1	Terminal, Molex	
446	4461157	1	Receptacle, Female - 2 Position	
446	4460979	2	Pin, Male	
446	4460458	2	Seal, Terminal	
450	4460899	1	Connector - 6 Position (Caterpillar Engines Only)	
450	4460464	5	Pin, Male (Caterpillar Engines Only)	
450	4460466	1	Seal, Plug (Caterpillar Engines Only)	
452	4460374	1	Plug, Sealed Relay (Deutz Engine)	
452	4460375	4	Terminal (Deutz Engine)	
458	1001102290	1	Connector, 2 Position (Deutz Engine)	
458	1001102304	2	Seal (Deutz Engine)	
458	1001102291	2	Terminal, Receptacle (Deutz Engine)	
462	2902443	1	Kit, Receptacle (Deutz Engine Only)	
462	4461071	8	Terminal, Female (Gold) (Deutz Engine Only)	
462	4461072	1	Connector, Flange Mount (Deutz Engine Only)	
462	4461073	1	Connector, Dust Cap (Deutz Engine Only)	
462	4461074	1	Connector, Shell (Deutz Engine Only)	
		Ref	**GROUND CONTROL BOX WIRING DIAGRAM**	
	1001110344	Ref	**Caterpillar Engine**	A
	1001110343	Ref	**Deutz Engine**	A
501	2920129	AR	Bulb, Light	
502	4922636	1	Harness, Jumper	
502	4460226	2	Socket, Female	
507	2400065	1	Fuse, 30Amp	
508	2400066	1	Fuse, Holder	
509	4460708	2	Receptacle, Female - 15 Position	
509	4460226	13	Socket, Female	
511	4922771	1	Harness, Angle Sensor (Boom Proximity Sensor)	
511	1060902	9.5 ft /2.9m	Cable - 18/2	
511A	4460226	2	Socket, Female	
511B	4460424	1	Receptacle, Female - 2 Position	
513	4460894	1	Plug, Male - 6 Position	
513	4460892	1	Connector, Bussbar - 6 Position	
		Ref	**STANDARD HARNESS COMPONENTS**	
601		Ref	Battery Cable Kit Options:	
601	1001112762	1	Caterpillar Engines Machines	B
601	2902401	1	Deutz Engines Machines	B
601A		Ref	Cable, Battery (Red) Options:	
601A	7027028	1	Caterpillar Engines Machines (Battery to Glow Plug Relay to Aux Relay to Starter)	
601A	7027027	1	Deutz Engines Machines (Battery to Start Relay to Aux Relay to Glow Plug Relay to Starter)	
601B		Ref	Cable, Battery (Black) Options:	
601B	7027029	1	Caterpillar Engines Machines	
601B	7027004	1	Deutz Engines Machines	

ITEM	PART NUMBER	QTY	DESCRIPTION	REV
601C		Ref	Cable (Red) Options:	
601C	7027030	1	Caterpillar Engines Machines	
601C	7016824	1	Deutz Engines Machines	
601D	Not Required	0	Not Required	
601E		Ref	Cable (Black) Options:	
601E	7027031	1	Caterpillar Engines Machines	
601E	7016825	1	Deutz Engine Machines	
602		Ref	Deutz Engine Harness Components (Deutz Engine Machines Only) (Note: Not Available - Purchase Individual Components)	
602A	7027796	1	Deutz Engine Harness	
602B	4461052	1	Receptacle, Female - 25 Position	
602B	4461053	1	Cover, Receptacle	
602B	4461005	5	Terminal	
602B	4461006	5	Seal (Used with p/n 4461005)	
602B	4461060	2	Terminal	
602B	4461054	2	Seal (Used with p/n 4461060)	
602B	4461008	18	Plug, Hole	
602C	7027793	1	Plug-In, Connector	
602D		Ref	Deutz Engine Harness Options (For other replacement parts refer to Deutz engine dealer):	
602D	7027794	1	Tier II Engines **(SN 0300085332 through 0300129453)**	
602D	70001872	1	Tier III Engines **(SN 0300129454 through 0300140000)**	
603	See Note	NSS	Fuel Pump Harness (Caterpillar Engines Only) (Note: Not Available for Purchase)	
603	4460897	1	Receptacle, Female -2 Position (Caterpillar Engines Only)	
603	4460464	2	Pin, Male (Caterpillar Engines Only)	
604	1001112071	1	Caterpillar Engine Harness Components (Caterpillar Engine Machines Only)	B
604A	4460894	1	Plug, Male - 6 Position	
604A	4460465	5	Socket, Female	
604A	4460466	1	Seal, Plug	
604B	4460891	1	Plug, Male - 2 Position	
604B	4460465	2	Socket, Female	
604C	4460891	1	Plug, Male - 2 Position	
604C	4460465	2	Socket, Female	
604D	70020808	1	Plug, Male - 23 Position	
604D	70020809	16	Socket, Female	
604E	See Note	NSS	Connector - 8 Position (Note: Not Available for Purchase)	
604F	See Note	NSS	Connector - 5 Position (Note: Not Available for Purchase)	
605	See Note	NSS	Pump Harness (Note: Not Available for Purchase)	
605A	7007497	1	Plug (Pump End)	
605B	7007498	1	Plug (Engine Harness End)	
606	See Note	NSS	Controller Harness Assembly (Lift and Swing) (Note: Purchase Complete Controller)	
606A	7022819	1	Plug, Male - 8 Position (Natural)	
606A	4460871	8	Socket, Female	
607	See Note	NSS	Controller Harness/Circuit Board Assembly (Drive and Steer) (Note: Purchase Complete Controller)	
607A	7022825	1	Plug, Male - 8 Position (Black)	
607A	4460871	7	Socket, Female	
608	See Note	NSS	Controller Harness (Speed Control) (Note: Purchase Complete Controller)	
608A	4460224	1	Receptacle, Female - 6 Position	

ITEM	PART NUMBER	QTY	DESCRIPTION	REV
608A	4460226	6	Socket, Female	
609	4923379	1	Harness, Glowplug	
610	Not Required	0	Not Required	
611	4360544	2	Switch, Tilt Sensor (Includes Tilt Sensor)	
611A	4460911	2	Plug, Male Deutsch - 3 Position	
611A	4460918	6	Socket, Female	
611A	4460912	2	Lock, Wedge	
612	4360517	1	Harness, Boom Proximity Sensor (Includes Sensor)	
612A	4460320	1	Plug, Male - 2 Position	
612A	4460227	2	Pin, Male	
613	4360517	1	Harness, Swivel Coupling Sensor (Includes Sensor)	
613A	4460320	1	Plug, Male - 2 Position	
613A	4460227	2	Pin, Male	
614	1060904	1	Cable, Battery (Deutz Engine Only) **(SN 0300092776 through 0300140000)**	
		Ref	**OPTIONAL HARNESS COMPONENTS**	
703	0257887	1	Alarm Harness (Includes Alarm)	
703	0140032	1	Alarm	
703	2820035	6 in/15cm	Loom	
703A	4460424	1	Plug, Male - 2 Position	
703A	4460268	2	Socket, Female	
704	0272507	1	Strobe Light Harness Options (Includes Strobe Light):	
704A	4460320	1	Connector, Female - 2 Position	
704A	4460267	2	Pin, Male	
705	See Note	NSS	Headlight and Taillight/Chassis Illumination Harness (Note: Not Available for Purchase)	
705	1060341	Ref	Cable, Electrical 16/2 Options:	
705	1060341	37 ft /11.3m	Headlights and Taillights	
705	1060341	40 ft /12.2m	Chassis Illumination Lights	
705A	3740049	1	Relay	
705A	4460259	3	Terminal	
705A	4460260	4	Housing, Terminal	
705A	4460297	1	Terminal	
705A	4922643	1	Lights Harness for Ground Control Box	1-A
705A	4460226	2	Socket, Female	
706	1001112743	1	2500W Generator Electrical Components	A
706A	Not Required	0	Not Required	
706B	4922641	1	Harness - On/Off Switch	
706C	4460226	2	Socket, Female	
706D	1001112589	1	Powermite Control Box to Relay	
706D	4460374	1	Plug, Sealed Relay	
706D	4460375	3	Terminal	
706D	4460742	1	Plug, Male - 2 Position	
706D	4460743	1	Socket, Female	
706D	4460458	1	Seal, Terminal	
706 Eto 706	Not Required	0	Not Required	
706G	7020193	1	Harness, Generator Power	
707	Not Required	0	Not Required	A
707A	Not Required	0	Not Required	
707B	Not Required	0	Not Required	

ITEM	PART NUMBER	QTY	DESCRIPTION	REV
708		Ref	AC to Platform Receptacle Components Options:	
708	0256202	Ref	Australian Spec	5
708		Ref	CE Specs without Powermite Generator Options:	
708	0256202	Ref	110/220V Receptacle (Locally Supplied Box and Receptacle)	5
708	1001091969	Ref	110V with IEC Yellow Receptacle and Plug and Circuit Breaker	B
708	1001091970	Ref	220V with IEC Blue Receptacle and Plug and Circuit Breaker	B
708	1001091971	Ref	220V with CEE7 Post Ground Receptacle and Plug and Circuit Breaker (70mm x 70mm Box)	B
708	1001091972	Ref	220V with CEE7 Side Ground Receptacle and Plug and Circuit Breaker (70mm x 70mm Box)	B
708	1001091973	Ref	220V with CEE7 Post Ground Receptacle and Plug and Circuit Breaker (2x4 Box)	C
708	1001091974	Ref	220V with CEE7 Side Ground Receptacle and Plug and Circuit Breaker (2x4 Box)	C
708	1001091975	Ref	220V with AFSINT 107 Keyed Ground Receptacle and Plug and Circuit Breaker (2x4 Box)	C
708		Ref	CE Specs with Powermite Generator Options:	
708	1001100326	Ref	110V with IEC Yellow Receptacle and Plug and Circuit Breaker	C
708	1001100327	Ref	220V with IEC Blue Receptacle and Plug and Circuit Breaker	C
708	1001100328	Ref	220V with CEE7 Post Ground Receptacle and Plug and Circuit Breaker (70mm x 70mm Box)	C
708	1001100329	Ref	220V with CEE7 Side Ground Receptacle and Plug and Circuit Breaker (70mm x 70mm Box)	C
708	1001100331	Ref	220V with CEE7 Post Ground Receptacle and Plug and Circuit Breaker (2x4 Box)	C
708	1001100333	Ref	220V with CEE7 Side Ground Receptacle and Plug and Circuit Breaker (2x4 Box)	C
708	1001100337	Ref	220V with AFSINT 107 Keyed Ground Receptacle and Plug and Circuit Breaker (2x4 Box)	C
708A		Ref	Box, Switch Options:	
708A	See Note	1	0256202 Installation (Note: Not Available - Purchase Locally)	
708A	0861781	1	1001091969, 1001091970, 1001100326, 1001100327 Installations	
708A	0861782	NLA	1001091971, 1001100328, 1001091972, 1001100329 Installations (Note: Use p/n 1001141970 CEE7 Side Ground Service Kit or p/n 1001141971 CEE7 Post Ground Service Kit. Kits includes Box p/n 1001141967 and items 708B, 708E & 708J)	
708A	0861731	1	1001091973, 1001100331, 1001091974, 1001100333, 1001091975 & 1001100337 Installations	
708B		Ref	Receptacle Options:	
708B	See Note	NLA	0256202 Installation (Note: Not Available - Purchase Locally)	
708B	1001141968	1	1001141971 Service Kit	
708B	1001141969	1	1001141970 Service Kit	
708B	4461198	1	1001091969, 1001100326 Installations	
708B	4461201	1	1001091970, 1001100327 Installations	
708B	4461204	1	1001091971, 1001100328 Installations	
708B	4461207	1	1001091972, 1001100329 Installations	
708B	4461244	1	1001091973, 1001100331 Installations	
708B	4461245	1	1001091974, 1001100333 Installations	
708B	4461246	1	1001091975, 1001100337 Installations	
708C		Ref	Shield, Cover Options:	

ITEM	PART NUMBER	QTY	DESCRIPTION	REV
708C	See Note	1	0256202 Installation (Note: Not Available - Purchase Locally)	
708C	See Note	NSS	1001091973, 1001091974, 1001091975, 1001091969, 1001091970, 1001091971, 1001091972, 1001100331, 1001100333, 1001100337, 1001100326, 1001100327, 1001100328 & 1001100329 Installations (Note: Use Item 708B)	
708D		Ref	Connector, Strain Relief Options:	
708D	See Note	NLA	0256202 Installation (Note: Not Available - Purchase Locally)	
708D	4460968	1	1001091969, 1001100326, 1001091970, 1001100327 1001091971, 1001100328, 1001091972, 1001100329 Installations **(SN 0300085332 through 0300127289)**	
708D	1001101191	1	1001091969, 1001100326, 1001091970, 1001100327 1001091971, 1001100328, 1001091972, 1001100329 Installations **(SN 0300127290 through 0300140000)**	
708D	4460968	1	1001091973, 1001091974 & 1001091975 Installations **(SN 0300085332 through 0300108683)**	
708D	4460662	1	1001091973, 1001100331, 1001091974, 1001100333, 1001091975 & 1001100337 Installations **(SN 0300108684 through 0300127289)**	
708D	1001101191	1	1001091973, 1001100331, 1001091974, 1001100333, 1001091975 & 1001100337 Installations **(SN 0300127290 through 0300140000)**	
708E		Ref	Plug, Male Options:	
708E	See Note	NLA	0256202 Installation (Note: Not Available - Purchase Locally)	
708E	4461196	1	1001091969 Installation	
708E	4461199	1	1001091970 Installation	
708E	4461202	1	1001091971, 1001091973 Installations	
708E	4461205	1	1001091972, 1001091974 Installations	
708E	4461249	1	1001091975 Installation	
708E	Not Required	0	1001100326, 1001100327, 1001100328, 1001100329, 1001100331, 1001100333 & 1001100337 Installations	
708F	4460709	1	Plug, Male	
708G	4460710	1	Connector, Female	
708H		Ref	Connector, Adapter Options:	
708H	See Note	NLA	0256202 Installation (Note: Not Available - Purchase Locally) **(SN 0300127290 through 0300140000)**	
708H	1001101196	1	1001091969, 1001100326, 1001091970, 1001100327, 1001091971, 1001100328, 1001091972, 1001100329 Installations	
708H	1001101197	1	1001091973, 1001100331, 1001091974, 1001091975 & 1001100337 Installations	
708J		Ref	Receptacle, Female Options (With Powermite Generator Control Box Only):	
708J	4461197	1	1001100326 Installation	
708J	4461200	1	1001100327 Installation	
708J	4461203	1	1001100328 & 1001100331 Installations	
708J	4461206	1	1001100329 & 1001100333 Installations	
708J	4461250	1	1001100337 Installation	
708K	1060908	10 ft/3.1m	Cable, Electrical - 12/3 (With Powermite Generator Control Box Only)	1
708L		Ref	Receptacle Box Kit Options:	1
708L		Ref	**Without Powermite Generator (Includes Items 708A, 708B, 708C & 708E):**	
708L	0275216	1	Kit for 110V IEC Yellow (1001091969 Installation)	1

ITEM	PART NUMBER	QTY	DESCRIPTION	REV
708L	0275217	1	Kit for 220V IEC Blue (1001091970 Installation)	1
708L	0275218	1	Kit for 220V CEE7 Post Ground (1001091971 Installation)	1
708L	0275219	1	Kit for 220V CEE7 Side Ground (1001091972 Installation)	1
708L	0275452	1	Kit for 220V CEE7 Post Ground (1001091973 Installation)	1
708L	0275453	1	Kit for 220V CEE7 Side Ground (1001091974 Installation)	1
708L	0275454	1	Kit for 220V AFSINT 107 Keyed Ground (1001091975 Installation)	1
708L		Ref	**With Powermite Generator (Includes Items 708A, 708B, 708C, 708E & 708J):**	
708L	1001100341	1	Kit for 110V IEC Yellow (1001100326 Installation)	2
708L	1001100342	1	Kit for 220V IEC Blue (1001100327 Installation)	2
708L	1001091971	NLA	Kit for 220V CEE7 Post Ground (1001100328 Installation) (Use p/n 1001100343 Kit)	B
708L	1001091970	NLA	Kit for 220V CEE7 Side Ground (1001100329 Installation) (Use p/n 1001100344 Kit)	B
708L	1001100345	1	Kit for 220V CEE7 Post Ground (1001100331 Installation)	2
708L	1001100347	1	Kit for 220V CEE7 Side Ground (1001100333 Installation)	2
708L	1001100346	1	Kit for 220V AFSINT 107 Keyed Ground (1001100337 Installation)	2
709		Ref	7500W SkyPower Generator Installation	
709	1001115394	Ref	50Hz Spec and Deutz Engine	F
709	1001115400	Ref	50Hz Spec and Caterpillar Engine	I
709A	See Note	NLA	Receptacle, Female Twist-Lock (Note: Not Available - Purchase Locally)	
709B	See Note	NLA	Gasket (Note: Not Available - Purchase Locally)	
709C	See Note	NLA	Cover, Receptacle (Note: Not Available - Purchase Locally)	
709D	See Note	NLA	Cover, Receptacle (Note: Not Available - Purchase Locally)	
709E	See Note	NLA	Receptacle (Note: Not Available - Purchase Locally)	
709F	See Note	NLA	Connector, Strain Relief (Note: Not Available - Purchase Locally)	
709G	See Note	NLA	Connector, Strain Relief (Note: Not Available - Purchase Locally)	
709H	4922925	1	Harness, Generator	
709J	See Note	NLA	Plug, Male - 6 Position (Note: Not Available - Purchase Locally)	
709J	See Note	NLA	Socket, Female (Note: Not Available - Purchase Locally)	
709K	4460225	1	Plug, Male - 6 Position	
709K	4460226	6	Socket, Female	
710	0861567	Ref	7500W SkyPower Generator Junction Box Components	B
710A	See Note	2 ft/.6m	Cable, Electrical 12/3 (Note: Not Available - Purchase Locally)	
710B	See Note	2.5 ft /.76m	Cable, Electrical 10/3 (Note: Not Available - Purchase Locally)	
710D	4460425	2	Connector, Strain Relief	
710E	4460426	1	Component	
710E	3520189	1	Plug	
710F	Not Required	0	Not Required	
711	1001112586	Ref	7500W Generator Electrical Diagram Components	C
711A	1001112587	1	Generator Harness	3-C
711B	4460374	2	Plug, Sealed Relay	
711B	4460375	7	Terminal	
711C	4460967	1	Plug, Male - 3 Position	
711C	4460465	3	Socket, Female	
711D	2400060	1	Fuseholder	
711D	2400064	1	Fuse - 5Amp	

ITEM	PART NUMBER	QTY	DESCRIPTION	REV
711E	4922641	1	Switch Harness	
711F	4460226	2	Socket, Female	
712	4933249	1	Floodlights Harness Components	2-A
712A	4460320	2	Plug, Male - 2 Position	
712A	4460227	4	Pin, Male	
712B	4922764	1	Floodlight Harness (Lights to Switch)	1-A
712C	4460424	2	Connector, Female - 2 Position	
712C	4460226	4	Socket, Female	
712D	4360232	1	Circuit Breaker - 15Amp	
712E	1060977	1	Cord, 2 Wire Coiled (Console Box Circuit Breaker to Switch)	
712F	4460425	1	Connector, Strain Relief	
712G	4922883	1	Harness, Console Box to Aux Relay	
712G	1060708	120 ft /36.6m	10/3 Cable	
713		Ref	Platform Worklights Components	
713A	2920140	2	Platform Worklights External Harness (Includes Light and Wire Only)	
713B	4460426	1	Connector, Strain Relief	
713C	2400070	1	Fuse	
713C	2400066	1	Holder, Fuse	
713D		Ref	Harness, Console Box to Connector Options:	
713D	4922873	1	Harness, Console Box to Connector 800S Harness (85ft/25.9m of 10/3 Cable P/N 1060708)	
713D	4922877	1	Harness, Console Box to Connector 860SJ Harness (92ft/28m of 10/3 Cable P/N 1060708)	
713E	4922874	1	Harness, Connector to Aux Relay	
713E	1060708	11 ft/3.4m	10/3 Cable	
713F	1001098234	1	Connector, Female - 3 Position (Platform Worklights Only)	
713G	1001098349	1	Connector, Male - 3 Position (Platform Worklights Only)	
714		Ref	AC Cable with Breaker (Required Only on CE Spec Installations)	
714	1001091790	Ref	Without Powermite Generator	D
714	1001109559	Ref	With Powermite Generator	A
714A	0903484	1	Bracket, Receptacle Box Mounting	
714A	0641416	2	Bolt 1/4in-20NC x 2in	
714A	3311405	2	Locknut 1/4in-20NC	
714A	4711400	4	Flatwasher 1/4in Thin	
714B	0903697	1	Bracket, Circuit Breaker Mounting	
714B	0641412	2	Bolt 1/4in-20NC x 1-1/2in	
714B	3311405	2	Locknut 1/4in-20NC	
714B	4711400	4	Flatwasher 1/4in Thin	
714C		Ref	Kit, Box and Breaker (Required on CE Spec Installations):	
714C	1001109654	AR	Machines without Powermite Generator Control Box	A
714C	1001109648	AR	Machines with Powermite Generator Control Box	A
714C		Ref	Circuit Breaker	
714C	1001109477	NLA	Breaker 10A (Use p/n 1001181046)	
714C	1001109475	NLA	Breaker 16A (Use p/n 1001181045)	
714C	1001109482	NLA	Breaker 30mA (Use p/n 1001181046 - 10A/30mA or p/n 1001181045 - 16A/30mA)	
714C	0861880	1	Breaker Box	
714C	4460956	1	Terminal, Block End Barrier	
714C	1060908	6 ft/1.8m	Cable, Extension	
714C	4460957	1	Terminal Block	

ITEM	PART NUMBER	QTY	DESCRIPTION	REV
714D		Ref	Connector, Strain Relief Options:	
714D	1001101191	1	Top	
714D	1001097150	1	Bottom	
714D	0641406	2	Bolt 1/4in-20NC x 3/4in	
714D	3311405	2	Locknut 1/4in-20NC	
714D	4711400	4	Flatwasher 1/4in Thin	
714E	1060908	12 ft/3.6m	Cable, Electrical 12/3	
714F	4460709	1	Plug, Male	
714G	4460710	1	Connector, Female	
715	1001094509	1	Generator Hourmeter Harness	A
		Ref	**TOOLS**	
801	7002821	1	Crimper (For Wire to Pin/Socket Connections) (Not Shown)	
802	7002823	1	Extractor (For Removal of Pin/Socket from Connectors) (Not Shown)	
803	4460467	1	Extractor, Pin (Blue 16-18 Gauge) (For Removal of Pin/Socket from Connectors) (Not Shown)	
804	4460510	1	Extractor, Pin (Yellow 12-14 Gauge) (For Removal of Pin/Socket from Connectors) (Not Shown)	
805	7002828	1	Stripper, Wire (Not Shown)	
806	2901443	1	Analyzer Kit (Not Shown)	
806A	1600244	1	Analyzer	
806B	1060633	1	Cable, Analyzer	1-A
806C	4460321	2	Plug, Male	
806C	4460226	8	Socket, Female	

SECTION 8 - DECALS

SECTION 8 - DECALS

FIGURE 8-1. DECAL INSTALLATION (Prior to SN 0300074431)

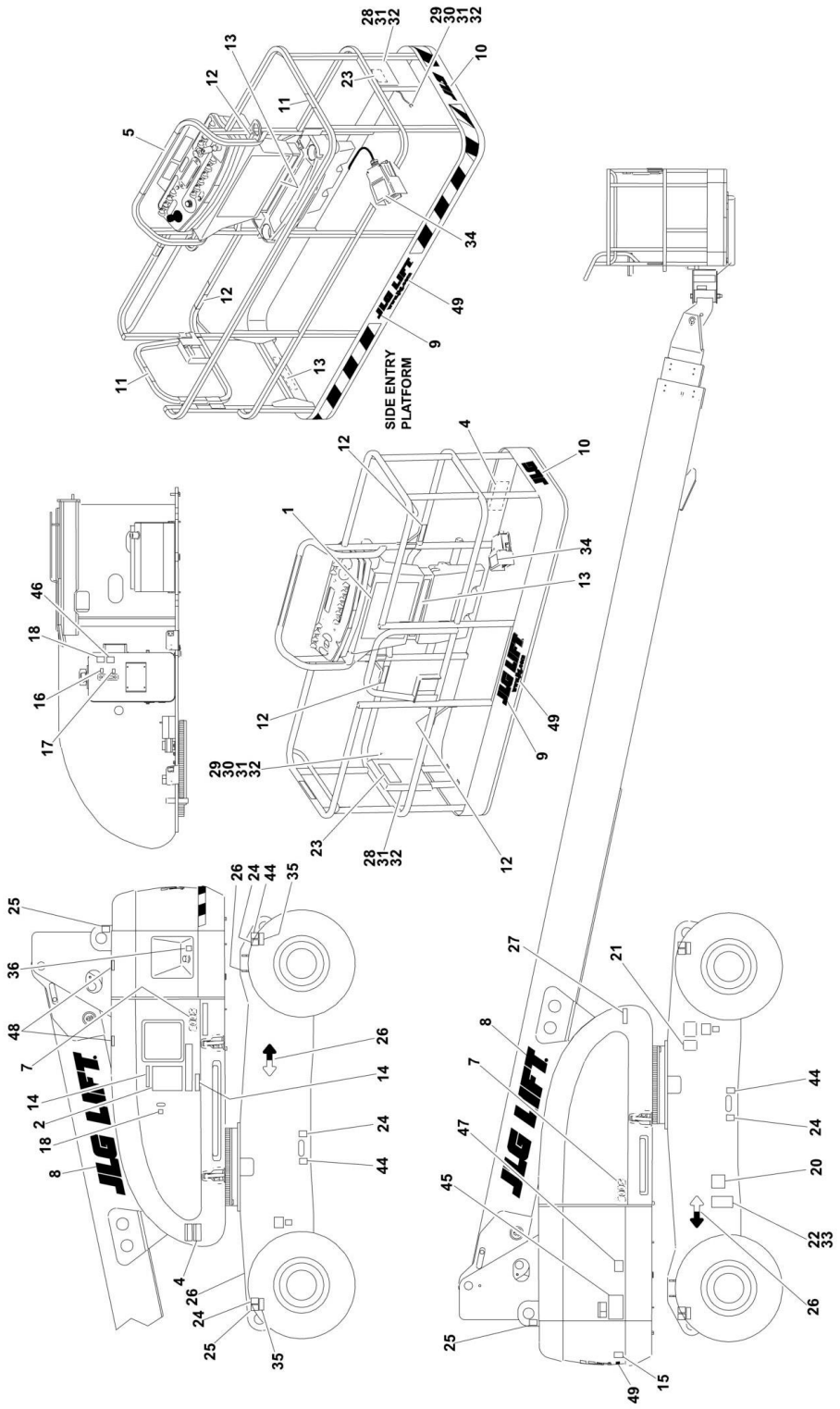

FIGURE 8-1. DECAL INSTALLATION (Prior to SN 0300074431)

ITEM	PART NUMBER	QTY	DESCRIPTION	REV
		Ref	**DECAL INSTALLATIONS**	
	0270909	Ref	**Decal Installations 800S Australian Spec (Prior to SN 0300067916)**	2
	0272534	Ref	**Decal Installations 800S Australian Spec (SN 0300067916 through 0300074431)**	1
	0270915	Ref	**Decal Installations 800S Dutch Spec (Prior to SN 0300067916)**	2
	0272537	Ref	**Decal Installations 800S Dutch Spec (SN 0300067916 through 0300074431)**	2
	0271830	Ref	**Decal Installations 800S Finnish Spec (Prior to SN 0300067916)**	2
	0272543	Ref	**Decal Installations 800S Finnish Spec (SN 0300067916 through 0300074431)**	1
	0270919	Ref	**Decal Installations 800S French Spec**	3
	0270913	Ref	**Decal Installations 800S German Spec (Prior to SN 0300067916)**	2
	0272536	Ref	**Decal Installations 800S German Spec (SN 0300067916 through 0300074431)**	1
	0270917	Ref	**Decal Installations 800S Italian Spec (Prior to SN 0300067916)**	2
	0272538	Ref	**Decal Installations 800S Italian Spec (SN 0300067916 through 0300074431)**	1
	0273192	Ref	**Decal Installations 800S Norwegian Spec**	2
	0271392	Ref	**Decal Installations 800S Portuguese Spec (Prior to SN 0300067916)**	2
	0272542	Ref	**Decal Installations 800S Portuguese Spec (SN 0300067916 through 0300074431)**	1
	0270921	Ref	**Decal Installations 800S Spanish Spec (Prior to SN 0300067916)**	2
	0272539	Ref	**Decal Installations 800S Spanish Spec (SN 0300067916 through 0300074431)**	1
	0271832	Ref	**Decal Installations 800S Swedish Spec (Prior to SN 0300067916)**	2
	0272544	Ref	**Decal Installations 800S Swedish Spec (SN 0300067916 through 0300074431)**	1
	0270911	Ref	**Decal Installations 800S UK English Spec (Prior to SN 0300067916)**	2
	0272535	Ref	**Decal Installations 800S UK English Spec (SN 0300067916 through 0300074431)**	1
	0270910	Ref	**Decal Installations 860SJ Australian Spec (Prior to SN 0300067916)**	2
	0272555	Ref	**Decal Installations 860SJ Australian Spec (SN 0300067916 through 0300074431)**	1
	0270916	Ref	**Decal Installations 860SJ Dutch Spec (Prior to SN 0300067916)**	2
	0272558	Ref	**Decal Installations 860SJ Dutch Spec (SN 0300067916 through 0300074431)**	2
	0271831	Ref	**Decal Installations 860SJ Finnish Spec (Prior to SN 0300067916)**	1
	0272564	Ref	**Decal Installations 860SJ Finnish Spec (SN 0300067916 through 0300074431)**	1
	0270920	Ref	**Decal Installations 860SJ French Spec**	3
	0270914	Ref	**Decal Installations 860SJ German Spec (Prior to SN 0300067916)**	2
	0272557	Ref	**Decal Installations 860SJ German Spec (SN 0300067916 through 0300074431)**	1
	0270918	Ref	**Decal Installations 860SJ Italian Spec (Prior to SN**	2

SECTION 8 - DECALS

ITEM	PART NUMBER	QTY	DESCRIPTION	REV
			0300067916)	
	0272559	Ref	**Decal Installations 860SJ Italian Spec (SN 0300067916 through 0300074431)**	1
	0273193	Ref	**Decal Installations 860SJ Norwegian Spec**	3
	0271393	Ref	**Decal Installations 860SJ Portuguese Spec (Prior to SN 0300067916)**	2
	0272563	Ref	**Decal Installations 860SJ Portuguese Spec (SN 0300067916 through 0300074431)**	1
	0270922	Ref	**Decal Installations 860SJ Spanish Spec (Prior to SN 0300067916)**	2
	0272560	Ref	**Decal Installations 860SJ Spanish Spec (SN 0300067916 through 0300074431)**	1
	0271833	Ref	**Decal Installations 860SJ Swedish Spec (Prior to SN 0300067916)**	2
	0272565	Ref	**Decal Installations 860SJ Swedish Spec (SN 0300067916 through 0300074431)**	1
	0270912	Ref	**Decal Installations 860SJ UK English Spec (Prior to SN 0300067916)**	2
	0272556	Ref	**Decal Installations 860SJ UK English Spec (SN 0300067916 through 0300074431)**	1
	0271386	Ref	**JLG Logo Decals**	3
1		Ref	Decal - Danger/Caution Options:	
1	1703992	1	Australian Spec	
1	1704809	1	Dutch Spec	
1	1705053	1	Finnish Spec	
1	1704811	1	French Spec	
1	1704767	1	German Spec	
1	1704810	1	Italian Spec	
1	1705270	1	Norwegian Spec	
1	1704985	1	Portuguese Spec	
1	1704812	1	Spanish Spec	
1	1705054	1	Swedish Spec	
1	1704808	1	UK English Spec	
2		Ref	Decal - Danger/Caution Options:	
2	1704819	1	Australian Spec	
2	1704821	1	Dutch Spec **(Prior to SN 0300071158)**	
2	1705410	1	Dutch Spec **(SN 0300071158 through 0300074431)**	
2	1705055	1	Finnish Spec	
2	1704823	1	French Spec	
2	1704820	1	German Spec	
2	1704822	1	Italian Spec	
2	1705272	1	Norwegian Spec	
2	1704986	1	Portuguese Spec	
2	1704824	1	Spanish Spec	
2	1705056	1	Swedish Spec	
2	1704819	1	UK English Spec	
4	1701518	3	Decal - Warning/Crushing	
7		Ref	Decal - Model Options:	
7	1704906	2	Decal - Model 800S	
7	1704907	2	Decal - Model 860SJ	
8	1702861	2	Decal - JLG Lift (8in)	
9	1702774	1	Decal - JLG Lift (3 1/2in)	
10	1702773	1	Decal - JLG (5in)	

ITEM	PART NUMBER	QTY	DESCRIPTION	REV
12	1704277	3	Decal - Attach Lanyard	
13		Ref	Decal - CE Options:	
13	1705088	1	Decal - CE 800S - Australian Spec	
13	1704995	1	Decal - CE 860SJ - Australian Spec	
13	Not Required	0	All Other Specs	
14		Ref	Decal - Capacity Options:	
14	1705089	1	Decal - Capacity 800S - Australian Spec	
14	1704996	1	Decal - Capacity 860SJ - Australian Spec	
14	Not Required	0	All Other Specs	
15		Ref	Decal Options:	
15	Not Required	0	Australian Spec	
15	1702928	1	Decal - Capacity - All Other Specs **(Prior to SN 0300065628)**	
15	1705084	1	Decal - Sound Power Level - All Other Specs **(SN 0300065628 through 0300074431)**	
16	1701502	1	Decal - High Oil Level	
17	1701503	1	Decal - Low Oil Level	
18	1701504	2	Decal - Hydraulic Oil	
20	See Note	NSS	Decal - Bar Code (Note: Not Available for Purchase)	
21	1700584	1	Decal - Patent	
22	See Note	NSS	Nameplate - Serial Number (Note: Not Available for Purchase)	
23	1701509	1	Decal - Manual	
24	1702300	6	Decal - Tie Down/Lift	
25	1701500	4	Decal - Tie Down/Lift	
26	1701501	4	Decal - Arrow	
27		Ref	Decal Options:	
27	3251242	1	240V-50Hz	
27	3252507	1	220V-50/60Hz	
28	0860520	1	Box, Manual Storage	
29	1060279	1	Cable, Lanyard	
30	0641408	1	Bolt 1/4in-20NC x 1in	
31	4751400	6	Flatwasher 1/4in	
32	3311405	5	Locknut 1/4in-20NC	
33	3820001	4	Rivet	
34		Ref	Decal - Footswitch Options:	
34	3252347	1	Australian Spec	
34	1703518	1	Dutch Spec	
34	1701600	1	Finnish Spec	
34	1693292	1	French Spec	
34	1693294	1	German Spec	
34	1701600	1	Italian Spec	
34	1705275	1	Norwegian Spec	
34	1701600	1	Portuguese Spec	
34	1701791	1	Spanish Spec	
34	1701600	1	Swedish Spec	
34	3252347	1	UK English Spec	
35		Ref	Decal - Max Tire Load Options:	
35	1703475	4	Decal - Max Tire Load 800S	
35	1703482	4	Decal - Max Tire Load 860SJ	
36	1701505	1	Decal - Fuel	
44	1701499	4	Decal - No Lift	
45	3252781	1	Decal - Lift Capacity	
46	1704412	1	Decal - Hydraulic Oil Chart	

SECTION 8 - DECALS

ITEM	PART NUMBER	QTY	DESCRIPTION	REV
47	1704540	1	Decal - Storage Capacity	
48	1701691	4	Decal - No Step	
49	1704885	2	Decal - Website	

SECTION 8 - DECALS

FIGURE 8-2. DECAL INSTALLATION (SN 0300074431 through 0300088932)

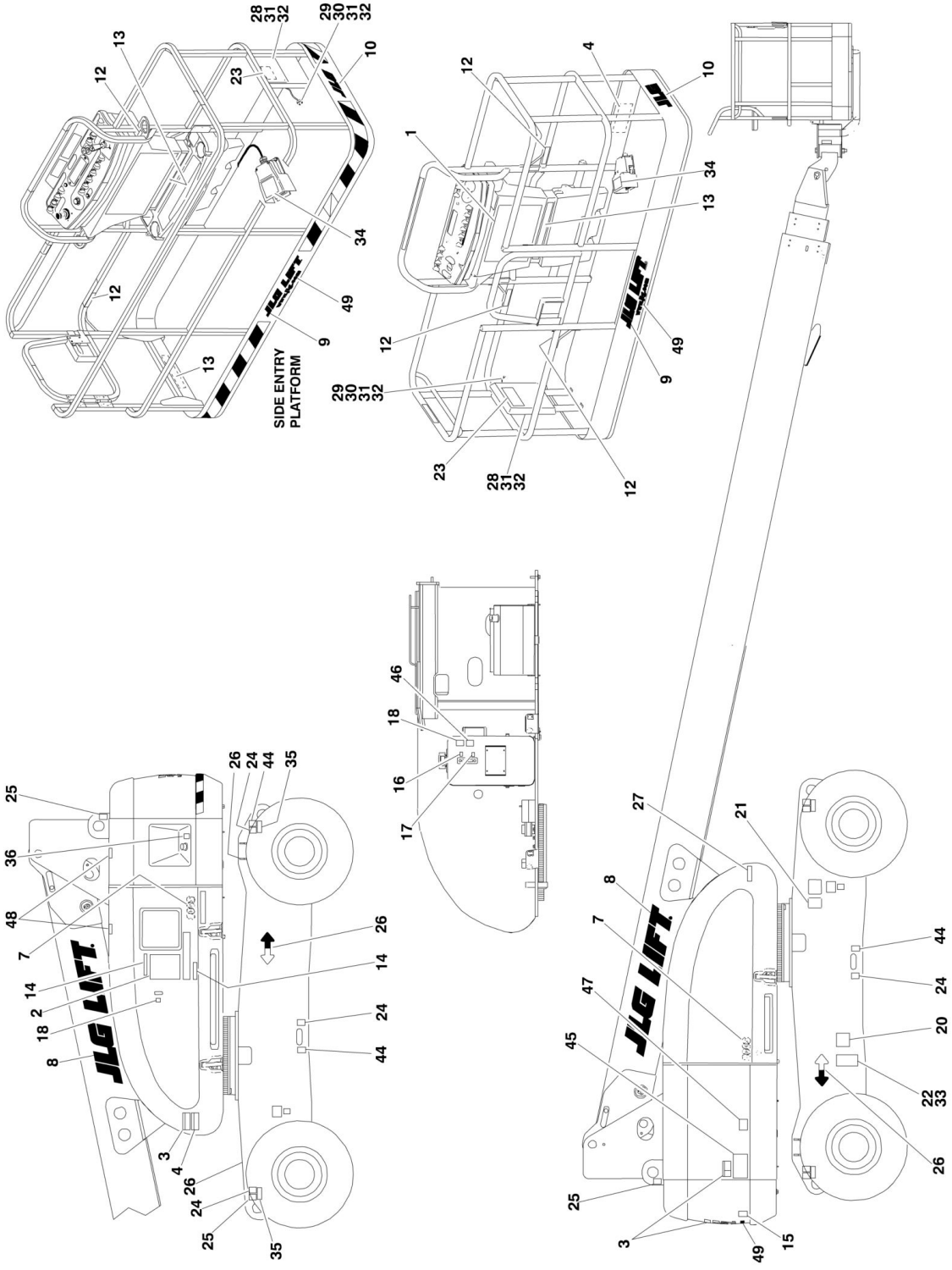

FIGURE 8-2. DECAL INSTALLATION (SN 0300074431 through 0300088932)

ITEM	PART NUMBER	QTY	DESCRIPTION	REV
		Ref	**DECAL INSTALLATIONS**	
	0272534	Ref	**Decal Installations 800S Australian Spec**	1
	0273516	Ref	**Decal Installations 800S CE Spec**	2
	0272555	Ref	**Decal Installations 860SJ Australian Spec**	1
	0273515	Ref	**Decal Installations 860SJ CE Spec**	2
	0271386	Ref	**JLG Logo Decals**	3
1		Ref	Decal - Danger/Caution Options:	
1	1703992	1	Australian Spec	
1	1705821	1	CE Spec	
2		Ref	Decal - Danger/Caution Options:	
2	1704819	1	Australian Spec	
2	1705822	1	CE English Spec	
3		Ref	Decal - Electrocution Options:	
3	Not Required	0	Australian Spec	
3	1705961	3	CE Specs	
4	1701518	3	Decal - Warning/Crushing	
7		Ref	Decal - Model Options:	
7	1704906	2	Decal - Model 800S	
7	1704907	2	Decal - Model 860SJ	
8	1702861	2	Decal - JLG Lift (8in)	
9	1702774	1	Decal - JLG Lift (3-1/2in)	
10	1702773	1	Decal - JLG (5in)	
12	1704277	3	Decal - Attach Lanyard	
13		Ref	Decal - CE Options:	
13	1705088	2	Decal - CE 800S - Australian Spec	
13	1704995	2	Decal - CE 860SJ - Australian Spec	
13	Not Required	0	All Other Specs	
14		Ref	Decal - Capacity Options:	
14	1705089	1	Decal - Capacity 800S - Australian Spec	
14	1704996	1	Decal - Capacity 860SJ - Australian Spec	
14	Not Required	0	All Other Specs	
15		Ref	Decal Options:	
15	Not Required	0	Australian Spec	
15	1705084	1	Decal - Sound Power Level - CE Specs	
16	1701502	1	Decal - High Oil Level	
17	1701503	1	Decal - Low Oil Level	
18	1701504	2	Decal - Hydraulic Oil	
20	See Note	NSS	Decal - Bar Code (Note: Not Available for Purchase)	
21	1700584	1	Decal - Patent	
22	See Note	NSS	Nameplate - Serial Number (Note: Not Available for Purchase)	
23	1701509	1	Decal - Manual	
24	1702300	6	Decal - Tie Down/Lift	
25	1701500	4	Decal - Tie Down/Lift	
26	1701501	4	Decal - Arrow	
27		Ref	Decal Options:	
27	3251242	1	240V-50Hz	
27	3252507	1	220V-50/60Hz	
28	0860520	1	Box, Manual Storage	
29	1060279	1	Cable, Lanyard	
30	0641408	1	Bolt 1/4in-20NC x 1in	

SECTION 8 - DECALS

ITEM	PART NUMBER	QTY	DESCRIPTION	REV
31	4751400	6	Flatwasher 1/4in	
32	3311405	5	Locknut 1/4in-20NC	
33	3820001	4	Rivet	
34		Ref	Decal - Footswitch Options:	
34	Not Required	0	Australian Spec	
34	1705828	1	CE Spec	
35		Ref	Decal - Max Tire Load Options:	
35	1703475	4	Decal - Max Tire Load 800S	
35	1703482	4	Decal - Max Tire Load 860SJ	
36	1701505	1	Decal - Fuel	
44	1701499	4	Decal - No Lift	
45	3252781	1	Decal - Lift Capacity	
46	1704412	1	Decal - Hydraulic Oil Chart	
47	1704540	1	Decal - Storage Capacity	
48	1701691	4	Decal - No Step	
49	1704885	2	Decal - Website	

SECTION 8 - DECALS

FIGURE 8-3. DECAL INSTALLATION (SN 0300088933 through 0300140000)

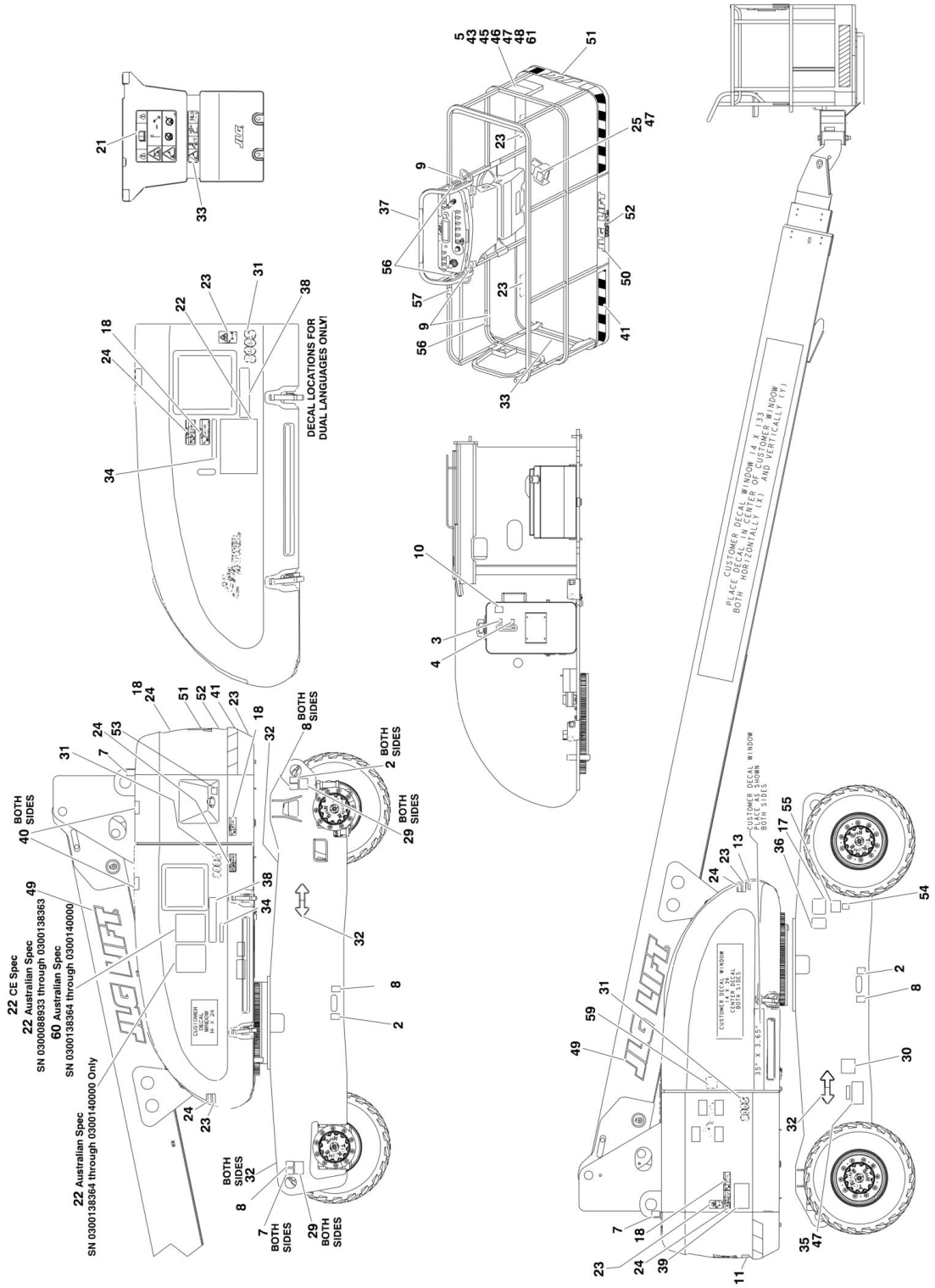

FIGURE 8-3. DECAL INSTALLATION (SN 0300088933 through 0300140000)

ITEM	PART NUMBER	QTY	DESCRIPTION	REV
		Ref	**DECAL INSTALLATIONS**	
	0274509	Ref	**Decal Installations 800S Australian Spec (SN 0300088933 through 0300138363)**	4
	1001114371	Ref	**Decal Installations 800S Australian Spec (SN 0300138364 through 0300140000)**	1
	0274509	Ref	**Decal Installations 800S CE Spec**	4
	0274510	Ref	**Decal Installations 860SJ Australian Spec (SN 0300088933 through 0300138363)**	4
	1001114372	Ref	**Decal Installations 860SJ Australian Spec (SN 0300138364 through 0300140000)**	1
	0274510	Ref	**Decal Installations 860SJ CE Spec**	4
	0274518	Ref	**JLG Logo Decals**	1
2	1701499	4	Decal - No Lift	
3	1701502	1	Decal - High Oil Level **(SN 0300088933 through 0300134563)**	
4	1701503	1	Decal - Low Oil Level **(SN 0300088933 through 0300134563)**	
5	1701509	1	Decal - Manual	
7	1703811	4	Decal - Lift	
8	1703814	6	Decal - Tie Down	
9	1704277	4	Decal - Attach Lanyard Here	
10	1704412	1	Decal - Hydraulic Oil Chart	
11	1705084	1	Decal - Sound Power Level	
21	1705921	1	Decal - Tipping/Electric (PLF)	
22	1705822	1	Decal - Electric/Safety Manual	
23	1701518	10	Decal - Warning Crushing	
24	1705961	5	Decal - Danger Electrocution	
25	1705828	1	Decal - Footswitch	
28	1703475	4	Decal - Max Tire Load (800S)	
28	1703482	4	Decal - Max Tire Load (860SJ)	
30	See Note	NSS	Decal - Bar Code (Note: Not Available for Purchase)	
31		Ref	Decal Options:	
31	1704906	2	Decal - 800S	
31	1704907	2	Decal - 860SJ	
32	1701501	4	Decal- Arrow	
33	1705978	1	Decal - 230kg Capacity	
34	1705978	1	Decal - 230kg Capacity	
35	See Note	NSS	Nameplate, Manufacturers (Note: Not Available for Purchase)	
36	1700584	1	Decal - Patent	
37 to 38	Not Required	0	Not Required	
39	3252781	1	Decal - Lift Diagram	
40	1701691	4	Decal - No Step	
41	4420051	23.1 ft/7m	Stripes, Warning	
42	3251242	1	Decal - 240V-50Hz	
43	0641408	1	Bolt 1/4in-20NC x 1in	
44	0860520	1	Box, Manual Storage	
45	1060279	1	Cable, Lanyard	
46	3311405	5	Locknut 1/4in	
47	3820001	2	Rivet	
48	4751400	10	Flatwasher 1/4in	
49	1702861	2	Decal - JLG Lift (8in Height)	
50	1702774	1	Decal - JLG Lift (3-1/2in Height)	

SECTION 8 - DECALS

ITEM	PART NUMBER	QTY	DESCRIPTION	REV
51	1702773	1	Decal - JLG (5in Height)	
52	1704885	2	Decal - Website	
53	1701505	1	Decal - Fuel	
59	1706098	1	Decal - Warning Explosion/Fire	
60	1001112551	1	Decal - Emergency Control (Australian Spec) **(SN 0300138364 through 0300140000 Only)**	
61	0641406	1	Bolt 1/4in-20NC x 3/4in **(SN 0300099882 through 0300140000)**	

SECTION 9 - RECOMMENDED SERVICE PARTS STOCK

SECTION 9 - RECOMMENDED SERVICE PARTS STOCK

FIGURE 9-1. MODEL 800S/860SJ STANDARD PARTS

ITEM	PART NUMBER	QTY	DESCRIPTION	REV
		Ref	**Note: The following list will service one machine (built to current production per date on the front cover) with emergency repair parts which can be installed in the field. Parts from the list should be replaced when inventory is depleted to keep service parts stock supplied. For further information, contact your JLG dealer or the JLG Industries Parts Department.**	
		Ref	**STANDARD PARTS**	
	2120210	12	Element, Filter	
	7012944	1	Coil	
	7017451	1	Coil	
	7012943	1	Coil	
	70000582	1	Coil	
	7012664	1 doz	Element, Air Cleaner	
	3740067	1	Relay	
	3740080	1	Relay	
	7007496	1	Coil	
	7024444	3	Breather, Hydraulic Tank	
	3740049	1	Relay	
	4360328	1	Switch, Toggle	
	4360470	1	Switch, Key	
	2860030	1	Key, Replacement	
	4360475	1	Switch, Mushroom	
	4360476	1	Contact, Switch Block	
	7024369	1	Boom Powertrack 24in Section Repair Kit	
	7024370	1	Boom Powertrack Mounting Bracket Kit	
	4360544	1	Switch, Level Sensor	
	2940074	1	Latch	
	4360031	1	Footswitch	
	4360331	1	Switch, Toggle	
	4360387	1	Switch, Push Button	
	4360330	1	Switch, Toggle	
	4360407	1	Controller, Speed	
	1001129555	1	Controller (Lift and Swing)	
	1001212415	1	Controller (Drive and Steer)	
	4360506	1	Switch, Proximity	
	2400065	2	Fuse - 30Amp	
	3990010	2	Diode	

FIGURE 9-2. MODEL 800S/860SJ VARIABLE PARTS

ITEM	PART NUMBER	QTY	DESCRIPTION	REV
		Ref	**Note: The following list will service one machine (built to current production per date on the front cover) with emergency repair parts which can be installed in the field. Parts from the list should be replaced when inventory is depleted to keep service parts stock supplied. For further information, contact your JLG dealer or the JLG Industries Parts Department.**	
		Ref	**VARIABLE PARTS**	
	7026811	1 doz	Filter, Oil (Caterpillar Engine Machines)	
	7026830	1	Filter, Fuel (Caterpillar Engine Machines)	
	1001112067	1	Module, Engine Control (Caterpillar Engine Machines)	
	7016331	1 doz	Filter, Oil (Deutz Engine Machines)	
	7016328	1 doz	Filter, Fuel (Deutz Engine Machines)	
	7027795	1	Module, Engine Control (Deutz Engine Machines)	
	3740080	1	Relay (Machine with Generator Option)	
	1001103667	1	Module, Ground Control (Caterpillar and Deutz Engines)	
	4360578	1	Switch, Limit	
	4360517	1	Switch, Proximity	
	4360336	1	Switch, Toggle (Machines with Floodlight Option)	
	4360336	1	Switch, Toggle (Machines with Generator Option)	
	4360522	1	Switch, Push Button (Machines with Headlights Option)	
	4360387	1	Switch, Toggle (Machines with Soft Touch System Option)	
	4360328	1	Switch, Toggle (860SJ Only)	
	4360232	1	Breaker, Circuit (Machines with Platform Worklights)	
	1001110701	1	Module, Controller	
	4360057	1	Switch, Limit	
	2400070	2	Fuse (Machines with Platform Worklights)	

SECTION 10 - SPECIAL OPTIONS

SECTION 10 - SPECIAL OPTIONS

FIGURE 10-1. SPECIAL OPTIONS LIST

ITEM	PART NUMBER	QTY	DESCRIPTION	REV
		Ref	**Note: This list is to accommodate machines ordered with special equipment. Options may not be applicable to all models. For more specific parts information contact JLG Parts Department**	
		Ref	**MISCELLANEOUS SPECIAL OPTIONS**	
	1340061	Ref	**Air Cleaner with Dust Evacuator Valve**	
	0271472	Ref	**Air Line at Platform Installation - 800S**	
	0271473	Ref	**Air Line at Platform Installation - 860SJ**	
		Ref	**Bellows Installations**	
	0271476	Ref	Bellows Installations 800S Boom Bellows	
	0271477	Ref	Bellows Installations 860SJ Boom Bellows	
	0258757	Ref	Fixed Axle with 2WS Frame Bellows	
	0258759	Ref	Fixed Axle with 4WS Frame Bellows	
	0258387	Ref	Oscillating Axle with 2WS Frame Bellows	
	0258758	Ref	Oscillating Axle with 4WS Frame Bellows	
		Ref	**Boom Rope Service Kits**	
	1001111231	Ref	Boom Rope Service Kit (800S)	
	1001197240	Ref	Boom Rope Service Kit (860SJ)	
	2910888	Ref	**Boom Wear Pad Kit**	
	0271448	Ref	**Boom Wiper Installation**	
	0256789	Ref	**Camera Mount Assembly**	
	0272057	Ref	**Chassis Flood Lights Installation**	
		Ref	**ClearSky (Telematic) Installation (Factory Installed)**	
		Ref	**Note: Refer to Manual Supplement p/n 3128499 for available replacement parts.**	
		Ref	ADE Machines	
	1001102842	Ref	Australian and CE Specs	
		Ref	ADE/UGM Machines	
	1001112991	Ref	Australian and CE Specs	
		Ref	**ClearSky (Telematic) Kit (Dealer Installed)**	
		Ref	Australian Spec	
	1001139132	Ref	Pre-UGM	
	1001139151	Ref	UGM	
		Ref	**Cold Weather Start Kits**	
	0273575	Ref	Caterpillar Engine Machines	
	0256060	Ref	Deutz Engine Machines (Ether)	
		Ref	Deutz Engine Machines (Glow Plugs) Options:	
	0271333	Ref	Deutz Engine Machines (Glow Plugs) **(Prior to SN 0300073336)**	
	0271912	Ref	Deutz Engine Machines (Glow Plugs) **(SN 0300073336 through 0300140000)**	
		Ref	**Decal Installations**	
	0272607	Ref	Decal - SkyCutter	
	0272589	Ref	Decal - SkyPower	
	0272588	Ref	Decal - SkyWelder	
	4420051	Ref	Decal - Warning Stripes	
		Ref	**Decal Kits Options:**	
	2902329	Ref	Decal Kit - Country Spec (Australian and CE)	
	2902303	Ref	Decal Kit - Master **(SN 0300088933 through 0300137912)**	
	1001109029	Ref	Decal Kit - Master **(SN 0300137913 through 0300140000)**	

ITEM	PART NUMBER	QTY	DESCRIPTION	REV
	1001193640	Ref	Decal Kit - Machine	
	1001108722	Ref	Decal Kit - Platform (800S)	
	1001108723	Ref	Decal Kit - Platform (860SJ)	
	2910871	Ref	Decal kit - Platform Console Box **(Prior to SN 0300137913)**	
	1001119564	Ref	Decal Kit - Platform Console Box **(SN 0300137913 through 0300140000)**	
	2902354	Ref	Decal Kit - Tire Load (800S)	
	2902429	Ref	Decal Kit - Tire Load (860SJ)	
	2902203	Ref	**Drive/Steer Cutout Kit**	
		Ref	**Electrical Connector Kits**	
	1001148902	Ref	Amp Electrical Connector Kit	
	1001148903	Ref	Deutsch DT Electrical Connector Kit	
	1001148904	Ref	Deutsch HD Electrical Connector Kit	
	1001148905	Ref	Packard Electrical Connector Kit	
	1001148906	Ref	Various Electrical Connectors Kit	
	0257157	Ref	**Ether Start Installation (Deutz Engine Machines)**	
	1001093389	Ref	**Fan Cover Installation (Deutz D2011 Engine Machines)**	
	1001185078	Ref	**Fan Cover Add-on Kit (Deutz D2011 Engine Machines)**	
	1001204149	Ref	**Fuel/Water Separator (WIF) Filter Add-on Kit (Deutz D2011 Engines)**	
		Ref	**Footswitch Shield Installation**	
	4060959	1	Shield, Footswitch	
		Ref	**Glow Plug Installations (Deutz Engine Machines)**	
	0271326	Ref	Glow Plug Installations (Deutz Engine Machines) **(Prior to SN 0300073336)**	
	0271548	Ref	Glow Plug Installations (Deutz Engine Machines) **(SN 0300073336 through 0300140000)**	
		Ref	**Filter Kits:**	
		Ref	Combined Filter Kit Options (Hydraulic/Air and Fuel/Engine Oil):	
		Ref	Caterpillar Engine Machines	
	2915140	1	Caterpillar Engine Machines **(Prior to SN 0300069206)**	
	1001114053	1	Caterpillar Engine Machines **(SN 0300069206 through 0300087261)**	
	1001114054	1	Caterpillar Engine Machines **(SN 0300087262 through 03000140000)**	
		Ref	Deutz Engine Machines	
	2910928	1	Deutz Engine Machines **(Prior to SN 0300069206)**	
	2910799	1	Deutz Engine Machines **(SN 0300069206 through 0300077585)**	
	1001111006	1	Deutz Engine Machines **(SN 0300077586 through 0300087261)**	
	1001114048	1	Deutz Engine Machines **(SN 0300087262 through 0300092775)**	
	1001111004	1	Deutz Engine Machines **(SN 0300092776 through 0300140000)**	
		Ref	Hydraulic/Air Filter Options:	
	See Note	NLA	Caterpillar Engine Machines (Note: Not Available for Purchase)	
		Ref	Deutz Engine Machines	
	1001114047	NLA	Deutz Engine Machines (Use p/n 1001109707) **(Prior to SN 0300087262)**	
	1001109702	1	Deutz Engine Machines **(SN 0300087262 through 0300140000)**	
		Ref	Engine - Fuel/Engine Oil Filter Options:	
	See Note	NLA	Caterpillar Engine Machines (Note: Not Available for Purchase)	

SECTION 10 - SPECIAL OPTIONS

ITEM	PART NUMBER	QTY	DESCRIPTION	REV
		Ref	Deutz Engine Machines	
	1001110133	1	Deutz Engine Machines **(SN 0300071452 through 03000140000)**	
		Ref	**Fluids:**	
	3020016	Ref	Engine Oil, (15W-40)	
		Ref	Hydraulic Fluids Options:	
	2300014	Ref	Mobil 424	
	2300027	Ref	Mobil 224H Bio	
	2300029	Ref	Mobil EAL ISO 46 Bio	
	2300016	Ref	Mobil DTE 10 Excel 32	
	2300021	Ref	Union Carbide Ucon HP5046 Fire Resistant	
		Ref	**Hood (ABS to Steel) Replacement Kits**	
	1001121708	Ref	Hood Kit (800S with Deutz Engine)	
	1001121709	Ref	Hood Kit (800S with GM/Caterpillar Engines)	
	1001121710	Ref	Hood Kit (860SJ with Deutz Engine)	
	1001121711	Ref	Hood Kit (860SJ with GM/Caterpillar Engines)	
		Ref	**Hose Kits**	
	1001187509	Ref	Hose Kit - Boom (Upper) (800S)	
	1001187500	Ref	Hose Kit - Boom (Upper) (860SJ)	
	1001209634	Ref	Hose Kit - Platform Valve (800S)	
	1001209635	Ref	Hose Kit - Platform Valve (860SJ)	
	1001204929	Ref	**Hostile Environment Add-on Kit (800S)**	
	1001241416	Ref	**Hostile Environment Add-on Kit (860SJ)**	
		Ref	**Hydraulic Welder Assemblies**	
	0271577	1	110/220V-50Hz (800S)	
	0271578	1	110/220V-50Hz (860SJ)	
	1001148971	Ref	**Lanyard (Bolt-on) Kit Installation**	
		Ref	**Oil Cooler Installation**	
	0271938	1	Deutz Powered Machines **(Prior to SN 0300137667)**	
	1001108703	1	Deutz Powered Machines **(Prior to SN 0300137667)**	
	0271439	Ref	**Pinion Shield Installations**	
	0274661	Ref	**Pipe Jacks Installations (Australian 860SJ Only)**	
		Ref	**Platform Console Cover Installations**	
	0255398	1	Platform Console Cover Installations **(Prior to SN 0300128731)**	
	0258703	1	Platform Console Cover Installations **(SN 0300128731 through 0300140000)**	
	1001205175	1	Platform Console Cover Add-on Kit	
		Ref	**Platform Entry Kits**	
	1001142504	Ref	Drop Bar (Replacing Swing Gate with Drop Bar)	
	1001142505	Ref	Swing Gate (Replacing Drop Bar with Swing Gate)	
		Ref	**Platform Mesh To Mid Rail Installation (Side Entry Platform) (Australian Specs)**	
	1001140318	Ref	Platform Mesh To Mid Rail Installation 800S/860SJ - 2.5ft x 4ft Platforms	
	1001140315	Ref	Platform Mesh To Mid Rail Installation 800S/860SJ - 2.5ft x 5ft Platforms	
	1001138772	Ref	Platform Mesh To Mid Rail Installation 800S/860SJ - 3ft x 6ft Platforms	
	1001138773	Ref	Platform Mesh To Mid Rail Installation 800S/860SJ - 3ft x 8ft Platforms	
		Ref	**Platform Mesh To Top Rail Installation (Side Entry Platform) (Australian Specs)**	
	0273147	Ref	Platform Mesh To Top Rail Installation 800S/860SJ - 2.5ft x 4ft	

ITEM	PART NUMBER	QTY	DESCRIPTION	REV
			Platforms	
	0273146	Ref	Platform Mesh To Top Rail Installation 800S/860SJ - 2.5ft x 5ft Platforms	
	0273149	Ref	Platform Mesh To Top Rail Installation 800S/860SJ - 3ft x 6ft Platforms	
	0273145	Ref	Platform Mesh To Top Rail Installation 800S/860SJ - 3ft x 8ft Platforms	
	1001120532	Ref	Platform Mesh To Top Rail Installation 800S - 3ft x 8ft Platforms (With Fall Arrest) (ANSI Export Specs)	
	1001149730	Ref	**Platform Mid Rail Repair Kit**	
		Ref	**Platform Top Rail Extension Installations**	
	0272396	1	Platform 6ft (1.83m)	
	0272397	1	Platform 8ft (2.44m)	
	0272733	1	Side Entry Platform 6ft (1.83m)	
	0272725	1	Side Entry Platform 8ft (2.44m)	
	1001177328	Ref	**Power Track Mounting Block Repair Kit**	
	1001100121	Ref	**Programmable Security Lock Installation**	
	1001162546	Ref	**Pump Coupling Service Kit (Deutz D2011 Engines)**	
	2902300	Ref	**Remote Oil Filter Kit - Required on Caterpillar Engine to Allow SkyPower 7500 Watt Generator to Fit (SN 0300069000 through 0300078177)**	
		Ref	**Sky Accessory:**	
	0273541	Ref	SkyPower - Caterpillar Engine	
	0272643	Ref	SkyPower - Deutz Engine	
	0272254	Ref	SkyWelder - Stick, 250A (Australian Spec)	
	0272521	Ref	SkyWelder - Stick, 250A (CE Spec)	
	0272606	NLA	SkyCutter Plasma Cutter	
	0275528	NLA	SkyCutter/SkyWelder Combo	
	1001101422	Ref	SkyGlazier (Australian Spec 800S/860SJ Only)	
	1001102647	Ref	SkyGlazier with LSS (Australian Spec 800S/860SJ Only)	
		Ref	**Note: For Breakdown of Sky Accessories Refer to Accessory Manual p/n 3124242**	
		Ref	**SkyGuard Component Options:**	
	1001149560	NLA	SkyGuard Complete Add-on Kit (Blue Beacon) (Non-UGM Machines) (Use p/n 1001206478)	
	1001206478	Ref	SkyGuard Complete Add-on Kit (Blue Beacon) (Non-UGM Machines)	
	1001210026	Ref	SkyGuard Complete Add-on Kit (Red Beacon) (Non-UGM Machines)	
	1001143669	NLA	SkyGuard Complete Add-on Kit (Blue Beacon) (UGM Machines) (Use p/n 1001206477)	
	1001206477	Ref	SkyGuard Complete Add-on Kit (Blue Beacon) (UGM Machines)	
	1001137672	Ref	SkyGuard Platform Sensor Kit (UGM Machines)	
	1001137440	1	SkyGuard Sensor Harness	
	1001186431	2	Relay	
	1001143256	NLA	SkyGuard Blue Beacon Kit (Use p/n 1001206311)	
	1001206311	Ref	SkyGuard Blue Beacon Kit	
	1001210025	Ref	SkyGuard Red Beacon Kit	
	1001228357	Ref	**Telematics Retrofit Harness Kit (Machines with UGM)**	
	1001184931	Ref	**Telescope Cylinder Service Kit**	
		Ref	**Tools for Service**	
	2901443	1	Analyzer Kit **(SN 0300062045 through 0300140000)**	
	8896941	1	Wire Stripper	
	7002821	1	Wire Crimper (To install wire ends to wires)	

SECTION 10 - SPECIAL OPTIONS

ITEM	PART NUMBER	QTY	DESCRIPTION	REV
	7002823	1	Pin/Socket Extractor - Universal (To Remove Pins/Sockets from Connectors)	
	4460467	1	Extractor - 16-18 Gauge (For Removal of Pin/Sockets from Deutsch Connectors)	
	4460510	1	Extractor - 12-14 Gauge (For Removal of Pin/Sockets from Deutsch Connectors)	
	7002822	1	Screwdriver, Potentiometer (To Adjust Drive Controllers)	
	7016654	1	Screwdriver, Magnetic	
	7004275	1	Seal Installation Tool - 1in	
	7004276	1	Seal Installation Tool - 1-1/2in	
	7002826	1	Seal Installation Tool - 2in	
	7016655	1	Wire Rope Sheave Gauge	
	7016652	1	Huck Fastener Tool	
	2915094	Ref	**Turntable Bearing Kit**	
	0258918	Ref	**Utility Rack Installation**	
		Ref	**Weld Leads at Platform Installations**	
	0271487	Ref	Weld Leads at Platform Installations 800S	
	0271488	Ref	Weld Leads at Platform Installations 860SJ	

FIGURE 10-2. SKY WELDER INSTALLATION

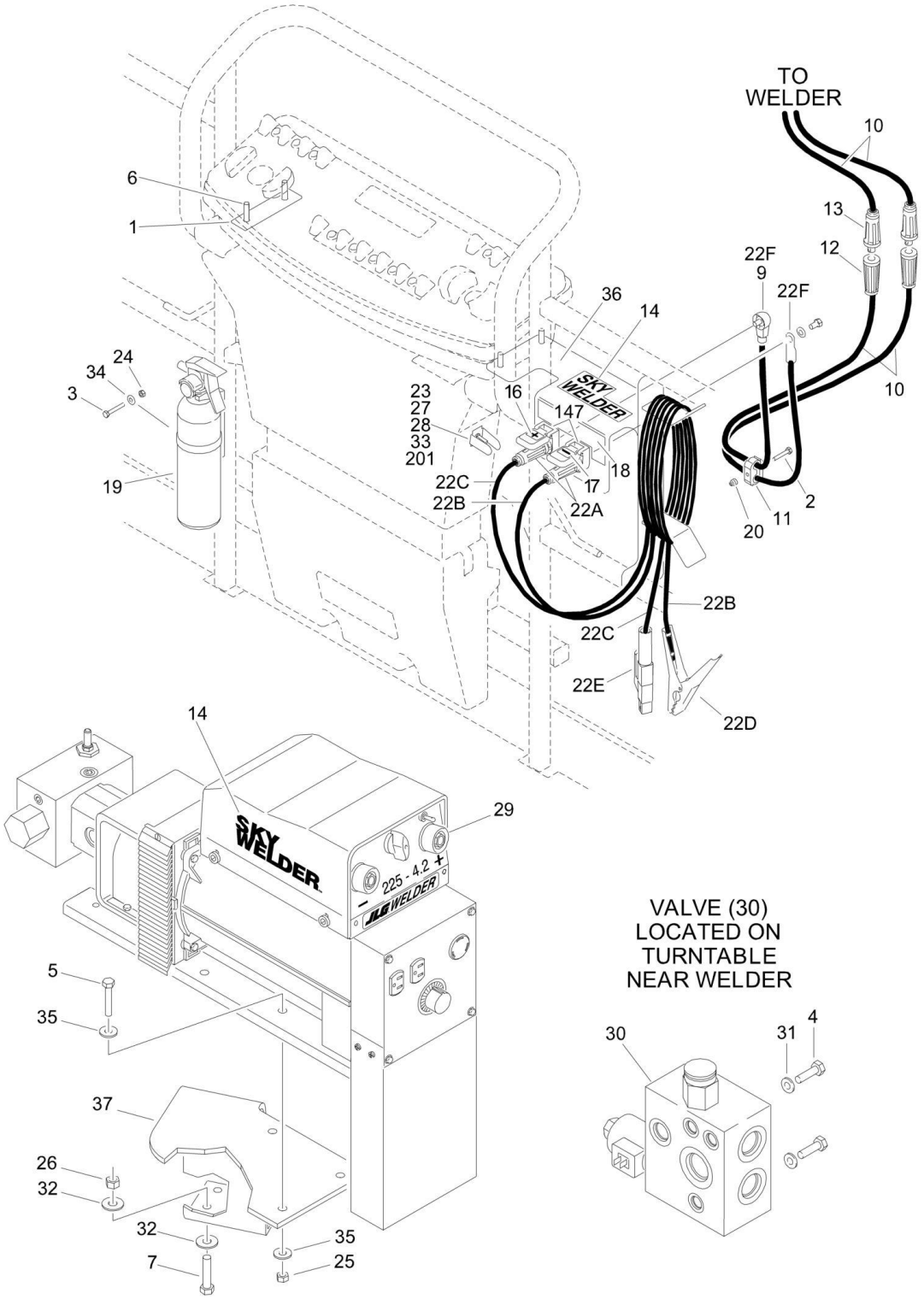

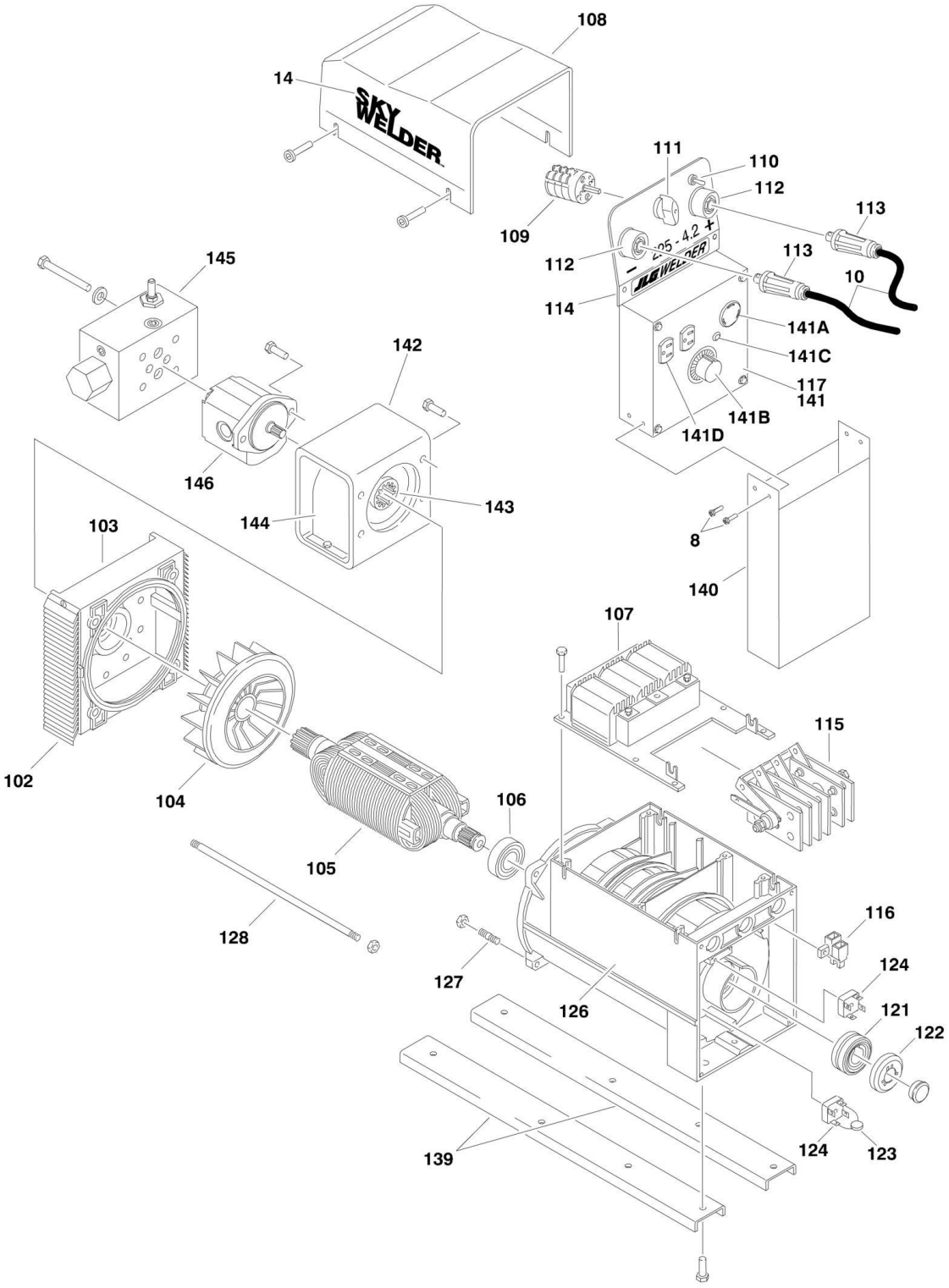
108
14
SKY WELDER
111
110
112
109
112
113
113
10
114
141A
141C
117
141
141B
141D
145
142
146
144
143
103
8
140
107
115
102
104
106
105
128
127
126
116
124
121
122
139
124
123

FIGURE 10-2. SKY WELDER INSTALLATION

ITEM	PART NUMBER	QTY	DESCRIPTION	REV
		Ref	**SKY WELDER INSTALLATIONS**	
	0271577	Ref	**110/220V-50Hz (ANSI Export Spec 800S)**	A
	0271578	Ref	**110/220V-50Hz (ANSI Export Spec 860SJ)**	A
1	0362949	1	Bar, Spacer	
2	0641412	1	Bolt 1/4in-20NC x 1-1/2in	
3	0641414	2	Bolt 1/4in-20NC x 1-3/4in	
4	0641511	2	Bolt 5/16in-18NC x 1-3/8in	
5	0641514	4	Bolt 5/16in-18NC x 1-3/4in	
6	0641611	4	Bolt 3/8in-16NC x 1-3/8in	
7	0641818	4	Bolt 1/2in-13NC x 2-1/4in	
8	0750605	4	Screw	
9	0840041	1	Boot, Cable	
10		Ref	Cable, Weld	
10	1060921	200 ft /61m	110/220V-50Hz (800S)	
10	1060921	212 ft /64.6m	110/220V-50Hz (860SJ)	
11	1320146	1	Clamp, Hose	
12	1660241	2	Terminal, Female Weld Cable Attach	
13	1660242	2	Terminal, Male Weld Cable Attach	
14	1704895	2	Decal - SkyWelder	
15	1704896	1	Decal - SkyWelder (Not Shown - Located on Hood)	
16	1704919	1	Decal - Positive	
17	1704920	1	Decal - Negative	
18	1705000	1	Decal - Platform Controls	
19	2030010	1	Extinguisher, Fire	
20	2080044	1	Rivnut, Fastener	
22	2901971	1	Platform Weld Leads Kit	B
22A	7023413	2	Connector, Cable	
22B	7023414	1	Cable, #1 Weld - Black (12ft Length)	
22C	7023418	1	Cable, #1 Weld - Red (12ft Length)	
22D	7023415	1	Clamp, Ground	
22E	7023416	1	Holder, Electrode	
22F	7023417	2	Lugs, Cable	
23	3252764	1	Nameplate - Welding Leads	
24	3311405	2	Locknut 1/4in-20NC	
25	3311505	4	Locknut 5/16in-18NC	
26	3311805	4	Locknut 1/2in-13NC	
27	4060802	1	Guard, Switch	
28	4360336	1	Switch, Toggle	
29	4530020	1	Hydraulic Welder Assembly (See 101 to 147 for Breakdown)	
30	4641201	1	Diverter Valve Assembly	
31	4711500	4	Flatwasher 5/16in Thin	
32	4711800	8	Flatwasher 1/2in Thin	
33	4740397	1	Spacer, Washer	
34	4751400	2	Flatwasher 1/4in Regular	
35	4751500	8	Flatwasher 5/16in Regular	
36	4846231	1	Support, Weld Lead	
37	4846477	1	Support, Welder	
	4530020	Ref	**HYDRAULIC WELDER ASSEMBLY**	

ITEM	PART NUMBER	QTY	DESCRIPTION	REV
102	7023444	2	Grid - Front	
103	7023445	1	Shield Front	
104	7023446	1	Fan	
105	7023251	1	Rotor	
106	7023252	1	Bearing	
107	7024313	1	Impedance, Weld	
108	7023447	1	Cover	
109	7023254	1	Switch, Step	
110	7023255	1	Selector, Range	
111	7023256	1	Knob, Switch	
112	7023257	2	Terminal, Female Weld Cable Attach	
113	7023258	2	Terminal, Male Weld Cable Attach	
114	7024314	1	Panel, Front	
115	7023259	1	Bridge, Rectifier	
116	7023260	1	Brushes and Holder	
117	7024315	1	Panel, Receptacle (Panel Only)	
121	7023261	1	Ring, Slip	
122	7023262	1	Cover, Slip Ring	
123	7022363	1	Varistor	
124	7023264	2	Bridge, Single Phase Rectifier	
126	7024316	1	Housing and Stator	
127	7023266	4	Bolt, Stay M8 x 30mm	
128	7023267	4	Bolt, Stay	
139	7023448	1	Rail Set	
140	7023449	1	Duct	
141	See Note	NSS	Panel Assembly (Complete) (Note: Not Available for Purchase)	
141A	See Note	NSS	Receptacle, Twistlock (Note: Not Available for Purchase)	
141B	7023422	1	Control, Fine	
141C	7023423	1	Light - AC	
141D	See Note	NSS	Receptacle (Note: Not Available for Purchase)	
141E	7023425	1	Harness (Not Shown)	
142	See Note	NSS	Mount, Motor (Note: Not Available for Purchase)	
143	7023426	1	Coupling	
144	See Note	NSS	Guard, Coupling (Note: Not Available for Purchase)	
145	7023427	1	Valve Assembly	
146	7024317	1	Motor Assembly	
147	7024559	2	Receptacle with Cover	
	4933193	Ref	**ELECTRICAL COMPONENTS**	
201	4922641	1	Harness - On/Off Switch	
202	4922570	1	Harness - Welder (Not Shown - Relay in Ground Control Box to Welder)	
203	3740047	1	Relay (Not Shown - Located in Ground Control Box)	

PART NUMBER INDEX

0060048 ..... 171, 179
0060061 ..... 167, 179
0080163 ..... 100, 108
0080181 ..... 78, 86
0080241 146
0080243 ..... 78, 86
0100009 199
0100010 189
0100011 ... 11, 12, 15, 16, 19, 43, 45, 47, 51, 59, 78, 81, 86, 87, 88, 94, 98, 104, 105, 106, 114, 125, 129, 131, 137, 141, 145, 146, 149, 156, 165, 167, 171, 172, 175, 181, 183, 193, 223, 229, 231, 237, 243, 247, 253
0100019 ..... 11, 15, 59
0100020 ... 78, 81, 87, 88, 98, 105, 106
0100035 ..... 145, 183
0100038 ... 229, 231, 237, 243, 247, 253
0100040 193
0100048 ... 137, 141, 146, 199, 298, 307, 322
0100063 .... 231, 237, 243
0100074 189
0100081 .... 167, 172, 199
0140001 51
0140011 199
0140032 .... 146, 311, 326
0181727 ..... 78, 97, 104
0182077 ..... 150, 156
0200048 223
0200550 219
0200741 114
0200742 ..... 94, 114
0250528 47
0255398 354
0255917 ..... 146, 300
0256060 352
0256202 .... 299, 312, 327
0256689 ..... 99, 106
0256690 ..... 99, 106
0256789 352
0256847 ..... 99, 108
0257157 ..... 290, 353
0257887 ... 146, 300, 311, 326
0258286 11
0258387 352
0258608 202
0258703 354
0258728 161
0258757 352
0258758 352
0258759 352
0258918 356
0259147 59
0270015 181
0270528 47
0270532 181
0270795 219
0270796 219
0270805 146
0270814 ..... 190, 194, 290
0270876 ..... 165, 167
0270877 ..... 165, 171
0270878 97
0270880 149
0270881 125
0270886 19
0270888 20
0270889 ..... 189, 193
0270895 137
0270896 137
0270901 ..... 51, 181
0270902 ..... 51, 181
0270909 335
0270910 335
0270911 335
0270912 336
0270913 335
0270914 335
0270915 335
0270916 335
0270917 335
0270918 335
0270919 335
0270920 335
0270921 335
0270922 336
0271002 59
0271013 59
0271085 20
0271086 20
0271090 20
0271091 20
0271135 11
0271254 167
0271255 172
0271312 129
0271316 43
0271323 .... 185, 295, 305, 321
0271325 .... 185, 295, 305, 321
0271326 353
0271333 352
0271341 ..... 12, 16, 19, 43
0271349 ..... 19, 43
0271352 15
0271353 15
0271354 47
0271360 145
0271362 145
0271381 ..... 167, 171, 182
0271386 ..... 336, 341
0271392 335
0271393 336
0271410 201
0271417 201
0271419 20
0271420 201
0271421 201
0271439 354
0271444 171
0271448 352
0271472 352
0271473 352
0271476 352
0271477 352
0271487 356
0271488 356
0271496 59
0271544 113
0271547 113
0271548 353
0271550 219
0271551 219
0271552 ..... 146, 201
0271577 ..... 354, 360
0271578 ..... 354, 360
0271830 335
0271831 335
0271832 335
0271833 336
0271912 352
0271938 ..... 286, 354
0271990 167
0271991 172
0271999 146
0272003 11
0272057 ..... 146, 352
0272058 194
0272070 181
0272081 ..... 152, 158
0272188 59
0272254 355
0272388 ..... 185, 295, 305
0272389 ..... 185, 295, 305
0272396 355
0272397 355
0272427 223
0272480 113
0272481 113
0272482 113
0272507 ..... 300, 311, 326
0272521 355
0272534 ..... 335, 341
0272535 335
0272536 335
0272537 335
0272538 335
0272539 335
0272542 335
0272543 335
0272544 335
0272555 ..... 335, 341
0272556 336
0272557 335
0272558 335
0272559 336
0272560 336
0272563 336
0272564 335
0272565 336
0272588 352
0272589 352
0272606 355
0272607 352
0272643 ..... 314, 355
0272725 355
0272733 355
0272750 ..... 52, 244, 254
0272796 78
0272970 194
0273145 355
0273146 355
0273147 354
0273149 355
0273192 335
0273193 336
0273218 137
0273219 137
0273378 ..... 12, 16, 19, 45
0273472 ..... 194, 290
0273483 ..... 194, 290
0273515 341
0273516 341
0273527 80
0273538 93
0273539 93
0273541 ..... 314, 355
0273542 225
0273575 352
0273695 ..... 167, 171, 182
0273704 ..... 19, 45
0273800 104
0273824 223
0274082 113
0274086 113
0274087 93
0274090 113
0274091 93
0274173 ..... 51, 181
0274174 ..... 51, 181
0274267 45
0274302 104
0274491 78
0274509 345
0274510 345
0274518 345
0274571 11
0274572 15
0274583 131
0274626 80
0274644 ..... 51, 181
0274645 ..... 51, 181
0274661 354
0274762 ..... 149, 156
0275216 ..... 314, 328
0275217 ..... 314, 329
0275218 ..... 314, 329
0275219 ..... 314, 329
0275452 ..... 314, 329
0275453 ..... 314, 329
0275454 ..... 314, 329
0275528 355
0340041 ... 78, 86, 97, 106
0340046 ..... 78, 86
0362529 145
0362726 ..... 11, 15
0362770 ..... 149, 156
0362910 47
0362949 360
0363010 145
0400075 ... 78, 86, 97, 104
0440244 59
0480050 114
0480111 114
0480119 114

SECTION 10 - SPECIAL OPTIONS

0480120.....94, 114
0480121.....114
0561185.....175
0561380.....165
0561445.....175
0561446.....175
0561447.....175
0561449.....175
0561484.....185
0630462.....219, 223
0630467.....181
0630491.....146
0630498.....78, 97, 104
0630507.....149, 156
0630518.....135, 141
0630534.....237, 241
0630535....229, 231, 233, 235, 253, 257, 259
0630536.....243, 247, 249
0630539.....167, 172
0630548.....135, 141
0630568.....201
0641403.....145, 175
0641404.....115
0641406....78, 81, 86, 99, 104, 145, 150, 156, 183, 189, 193, 199, 220, 316, 331, 346
0641407....78, 81, 86, 88, 97, 105, 106, 142
0641408.....51, 185, 189, 193, 337, 341, 345
0641410.....146, 185
0641412....105, 185, 316, 330, 360
0641414....149, 190, 194, 199, 223, 360
0641416.....51, 199, 316, 330
0641418.....51, 189
0641420.....52
0641424.....51, 185
0641504.....47, 165
0641506.....137, 141
0641507.....78, 86
064150815, 94, 115, 149, 156
0641510.....98, 106
0641511.....185, 360
0641514.52, 82, 244, 360
0641516.....225
0641518.....194
0641526.....181
0641542.....45
0641560.....45
0641604.....171, 183, 185
0641606..81, 86, 98, 106, 151, 158, 167, 172, 175, 181
0641607.....175, 185
0641608....11, 15, 43, 45, 78, 81, 86, 87, 98, 149, 151, 156, 158, 167, 171, 175
0641609.78, 86, 108, 161
0641610....78, 81, 86, 87, 94, 97, 104, 106, 108, 114, 150, 156, 171, 175, 193
0641611.....129, 131, 360
0641612.....51, 165, 219
0641613.....165, 177
0641614..... 125
0641616.....149, 156, 175
0641618..... 171
0641620.....51, 167, 172
0641622.....168, 172
0641626..... 175
0641628..... 43
0641634..... 175
0641640..... 175
0641652.....168, 172
0641772.....94, 114
0641808... 78, 81, 86, 87, 98, 104, 171
0641810.....11, 16
0641812. 82, 88, 98, 105, 131, 165, 181
0641813..... 225
0641818..... 97, 106, 161, 360
064182011, 86, 129, 131, 181
0641826.....98, 106
0641828..... 78
0642010... 47, 81, 87, 98, 104
0642014.....165, 167, 171
064221211, 15, 165, 167, 171
0642612..... 146
0642618..... 165
0642684..... 181
0651406..... 51
0681608.....11, 15, 181
0681610..... 181
0681810..... 19
0681814..... 197
0681822..... 197
0681832..... 59
0682016.....12, 16, 19
0682023..... 59
0682032..... 59
0682214..... 59
0682216..... 59
0700616..... 88
0700620..... 88
0700808... 78, 86, 88, 98, 106
0700810.....100, 108
0700816..... 94
0701010.....78, 86, 88
0701012. 78, 86, 98, 106, 108
0701014..... 106
0701015. 78, 86, 98, 106, 108
0701210..... 94
0701214..... 78
0701414...78, 86, 97, 106
0711025..... 108
0711212..... 80
0711214.....78, 80, 86
0720603..... 183
0720606..... 183
0720808..... 94, 115
0721003..... 199, 201
0721004..... 47, 150
0721005..... 223
072100680, 94, 115, 149, 156, 199
0721008 ... 150, 151, 152, 158, 199
0731005..... 219
0731007..... 125
0741605..... 167, 171
0741606..... 146
0741607..... 16, 47
0741609..... 16
0741612..... 175
0750605..... 360
0760606..... 88
0760610..... 88
0760612..... 88
0761210..... 88
0771212..... 86
0791606..... 175
0791607..... 176
0791608..... 176
0791610..... 176
0791612..... 177
0791614..... 177
0791616..... 177
0801274..... 167, 175
0801275..... 175
0801276..... 175
0801278..... 165
0801279..... 165
0801280..... 165
0801281..... 171, 175
0801282..... 175
0801283..... 175
0801306..... 165
0801307..... 165
0801310..... 165
0801325..... 175
0801326..... 175
0801647..... 175
0801649..... 175
0811606..... 175
0811607..... 176
0811608..... 176
0811610..... 177
0811614..... 177
0811616..... 177
0840041..... 360
0860520.... 337, 341, 345
0861389..... 135
0861416... 193, 199, 294, 304
0861441..... 199, 200
0861458..... 135, 138
0861459..... 135, 138
0861567..... 315, 329
0861614..... 135, 137
0861615..... 135, 137
0861720.... 135, 137, 138
0861721.... 135, 137, 138
0861731..... 313, 327
0861755..... 135, 137
0861756..... 135, 137
0861781.....312, 327
0861782.....312, 327
0861880.....316, 330
0901921.....149, 156
0902206.....146
0902219.....149, 156
0902223.....149, 156
0902351.....149, 156
0902412.....149, 156
0902465.....150
0902491.....149, 156
0902520.....129
0902673.....149, 156
0902674.....149, 156
0902751.....199
0902769.....150, 156
0903242.....131
0903484.....316, 330
0903697.....316, 330
0920117.....19, 59
0940038.....219
0940070...78, 86, 97, 106
0940071.....149, 156
0940088.....149, 157
0940092.....223, 225
0940094.....223, 225
0940103.....223
0940131.....225
0940133.....223
0940134.....223
0961816.....229
0961845.....189
0961893.....237, 241
0961894.....231, 233, 235
0961895.....229
0961897.....253, 257, 259
0961898.....243, 247
0961947....171, 179, 231, 233
0961948.....175, 231, 235
0961951.....176, 179
0961977.....251
0961986...78, 86, 98, 106
0962033.....243, 247, 249
0962051.....161
0962102.....11, 15
0962122.....165
0962152.....12, 15
0962270.....197
0962292.....15
0962297....165, 167, 171, 175
0962335.....172
0962336.....237, 239, 241
0962348.....15
0962448.....12, 15
0962449.....94, 115
0962496.....229
0962653.....94
1001091179.....106
1001091187.....145
1001091188.....145
1001091790.....316, 330
1001091892.....106
1001091969.....312, 327
1001091970.....312, 314, 327, 329

1001091971 ..... 312, 314, 327, 329
1001091972 ..... 312, 327
1001091973 ..... 312, 327
1001091974 ..... 312, 327
1001091975 ..... 312, 327
1001093382 .. 78, 87, 104
1001093389 353
1001093943 107
1001094101 ..... 106, 108
1001094321 108
1001094375 ..... 95, 115
1001094475 ..... 94, 115
1001094509 95, 115, 331
1001094899 59
1001095307 ..... 269, 277
1001095308 ..... 270, 278
1001096070 316
1001097150 ..... 316, 331
1001097553 89
1001097554 83
1001097939 145
1001097942 145
1001097945 146
1001097966 157
1001098234 ..... 316, 330
1001098349 ..... 316, 330
1001098508 106
1001098908 306
1001098909 307
1001098916 108
1001099051 107
1001099121 157
1001099138 ..... 156, 157
1001099139 158
1001099686 107
1001099828 105
1001099829 104
1001099868 113
1001099869 ..... 94, 115
1001099870 45
1001100027 ..... 290, 311
1001100121 355
1001100233 ..... 94, 115
1001100234 ..... 94, 115
1001100305 312
1001100308 113
1001100313 ..... 79, 82
1001100321 ..... 93, 113
1001100326 ..... 312, 327
1001100327 ..... 312, 327
1001100328 ..... 312, 327
1001100329 ..... 312, 327
1001100331 ..... 312, 327
1001100333 ..... 312, 327
1001100337 ..... 312, 327
1001100341 ..... 314, 329
1001100342 ..... 314, 329
1001100345 ..... 314, 329
1001100346 ..... 314, 329
1001100347 ..... 314, 329
1001100386 156
1001101060 ..... 59, 74
1001101191 ..... 313, 316, 328, 331
1001101196 ..... 314, 328
1001101197 ..... 314, 328
1001101241 107
1001101391 157
1001101392 157
1001101422 355
1001101623 157
1001101673 157
1001101948 105
1001102160 ..... 136, 308
1001102250 ..... 135, 137, 138
1001102251 ..... 135, 137, 138
1001102290 ..... 309, 324
1001102291 ..... 309, 324
1001102304 ..... 309, 324
1001102547 93
1001102548 93
1001102601 ..... 135, 141
1001102602 ..... 136, 141
1001102644 94
1001102647 355
1001102842 352
1001103667 ..... 141, 350
1001103810 12
1001104308 107
1001105833 ..... 79, 87
1001105993 78
1001106339 323
1001106340 323
1001106449 145
1001106480 145
1001106698 80
1001106736 ..... 142, 323
1001106974 131
1001107116 ..... 79, 86
1001107527 200
1001107531 131
1001107677 200
1001107705 ..... 79, 87
1001107796 ..... 200, 304, 320
1001107952 201
1001107953 201
1001107954 201
1001108703 ..... 286, 354
1001108722 353
1001108723 353
1001108866 ..... 193, 199, 304
1001108867 193
1001108958 253
1001108991 201
1001108992 201
1001108993 201
1001109029 352
1001109064 89
1001109065 86
1001109475 ..... 316, 330
1001109477 ..... 316, 330
1001109482 ..... 316, 330
1001109559 ..... 316, 330
1001109595 87
1001109648 ..... 316, 330
1001109654 ..... 316, 330
1001109702 353
1001110133 354
1001110206 88
1001110212 87
1001110325 291
1001110331 141
1001110332 141
1001110335 141
1001110336 141
1001110339 ..... 142, 322
1001110340 ..... 142, 322, 323
1001110341 ..... 142, 322, 323
1001110343 ..... 142, 290, 323, 324
1001110344 ..... 142, 290, 323, 324
1001110701 ..... 199, 350
1001111004 353
1001111006 353
1001111017 141
1001111231 352
1001112057 89
1001112059 89
1001112067 ..... 89, 350
1001112068 89
1001112069 89
1001112070 89
1001112071 ..... 89, 325
1001112072 89
1001112073 89
1001112075 89
1001112077 ..... 87, 88
1001112551 346
1001112570 89
1001112586 ..... 290, 329
1001112587 329
1001112589 326
1001112592 89
1001112612 323
1001112743 ..... 290, 326
1001112762 ..... 88, 324
1001112849 89
1001112991 352
1001113961 ..... 213, 215
1001114047 353
1001114048 353
1001114053 353
1001114054 353
1001114371 345
1001114372 345
1001114896 ..... 193, 199, 320
1001114897 193
1001115394 329
1001115400 329
1001115405 113
1001115409 113
1001115410 113
1001115413 93
1001115414 93
1001115465 253
1001115469 254
1001115504 253
1001115631 253
1001115633 254
1001116287 ..... 80, 104
1001116288 ..... 80, 104
1001116595 89
1001117320 194
1001117399 321
1001117400 321
1001118416 215
1001118417 207
1001119564 353
1001120532 355
1001121708 354
1001121709 354
1001121710 354
1001121711 354
1001129555 348
1001131731 ..... 168, 172
1001137440 355
1001137672 355
1001138772 354
1001138773 354
1001138795 241
1001139132 352
1001139151 352
1001140315 354
1001140318 354
1001141967 313
1001141968 ..... 313, 327
1001141969 ..... 313, 327
1001142504 354
1001142505 354
1001143256 355
1001143669 355
1001144629 193
1001148902 353
1001148903 353
1001148904 353
1001148905 353
1001148906 353
1001148971 354
1001149560 355
1001149730 355
1001162546 355
1001166538 217
1001166539 209
1001175884 253
1001177317 ..... 175, 253
1001177328 355
1001181588 ..... 175, 253
1001181694 ..... 254, 257, 259
1001184931 355
1001185078 353
1001186431 355
1001187500 354
1001187509 354
1001193640 353
1001197240 352
1001204149 353
1001204929 354
1001205175 354
1001206311 355
1001206477 355
1001206478 355
1001209634 354
1001209635 354
1001210025 355
1001210026 355
1001212415 348
1001228012 ..... 171, 239
1001228022 ..... 171, 235

SECTION 10 - SPECIAL OPTIONS

1001228027.....167, 233
1001228028.....167, 247
1001228029.....171, 249
1001228081.....175, 257
1001228083.....176, 259
1001228357.....355
1001241416.....354
1001248012.....171, 241
1060279.....337, 341, 345
1060341....220, 223, 300, 301, 311, 326
1060461.....299
1060545.....295, 300, 312
1060584.....47
1060633.....317, 331
1060637...78, 86, 98, 104
1060708....295, 301, 315, 330
1060896.....296, 305, 321
1060902....295, 296, 297, 299, 306, 307, 309, 321, 322, 324
1060903.....223
1060904.....81, 108, 310, 326
1060908....314, 316, 317, 328, 330, 331
1060918....190, 193, 294, 304, 320
1060921.....360
1060937.....294
1060938.....294
1060975.....294
1060976.....294
1060977.....315, 330
1060981.....294
1060982.....294
1061018.....297, 306, 322
1061019.....297, 306, 322
10837580.....55
1120487.....126
1120510.....177
1120601.....157
1180373.....168, 172
1180375.....168, 172
1220078.....175
1260017.....59
1260136.....219
1282571.....290
1282665.....286
1283242.....286, 287
1283387.....286, 287
1320012.....78
1320016...78, 86, 97, 106
1320019.....52
1320022....78, 81, 87, 97, 105, 106
1320040.....220
1320061.....185
1320146.....360
1320169.....185
1320176..82, 87, 99, 105, 107
1320223....81, 86, 98, 99, 105, 106, 185
1320224.....88
1320263.....89, 168, 173
1320289.....168, 172
1320294.....168, 172
1320315..... 244
1321384.....151, 158
1340060...78, 86, 97, 106
1340061..... 352
1380132..... 149
1380136..... 53
1380147..... 161
14922737..... 310
1560012.....294, 304, 320
1580011.....78, 86
1580012.....190, 195
1580013.....190, 195
1600244.....317, 331
1600317.....199, 205
1600318.....199, 213
1600324..... 199
1600327..... 135
1600361..... 83
1600364..... 135
1600377..... 199
1600411..... 135
1660234.....100, 108
1660239.....78, 86
1660241..... 360
1660242..... 360
1660246..... 129
1660246RR..... 129
1660257..... 131
1660303..... 131
1670785..... 219
1670786..... 219
1670787..... 219
1670788..... 219
1670789..... 219
1670791..... 219
1670793..... 219
1670795..... 219
1670796..... 219
1670797..... 219
1670798..... 219
1670799..... 219
1670801..... 219
1670803..... 219
1670804..... 219
1670829.....135, 141, 199
1670836..... 175
1670964..... 182
1671022..... 145
1671034..... 185
1671044..... 183
1671059..... 145
1671176..... 199
1671201.....149, 156
1671228... 149, 151, 156, 158
1671230.....151, 158
1671231.....151, 158
1671232.....151, 158
1671237..... 151
1671248... 149, 150, 156, 157
1683053..... 237
1683059.....229, 231
1683077..... 253
1683078.....11, 15, 229
1683609..... 171, 237
1683740..... 12, 15, 251
1683818..... 243
1683976..... 231
1683986..... 229
1684041..... 175, 253
1684042..... 167, 243
1684043..... 175, 253
1684045..... 253
1684046..... 253
1684049..... 253
1684050..... 253
1684078..... 243
1684080..... 243
1684089..... 237
1684090..... 237
1684123..... 243
1684124..... 171, 243
1684133..... 231
1684135..... 231
1684136..... 171, 231
1684184..... 243
1684188..... 231
1684189..... 167, 231
1684191..... 229
1684198..... 243
1684199..... 167, 243
1684202..... 171, 243
1684267..... 253
1684269..... 253
1693292..... 337
1693294..... 337
1700584.... 337, 341, 345
1701499.... 337, 342, 345
1701500..... 337, 341
1701501.... 337, 341, 345
1701502.... 337, 341, 345
1701503.... 337, 341, 345
1701504..... 337, 341
1701505 . 81, 87, 98, 105, 337, 342, 346
1701509.... 337, 341, 345
1701518.... 336, 341, 345
1701600..... 337
1701691.... 338, 342, 345
1701791..... 337
1702300..... 337, 341
1702565..... 199
1702566..... 199
1702567..... 199
1702610..... 135
1702676..... 199
1702773 ... 197, 336, 341, 346
1702774.... 336, 341, 345
1702861.... 336, 341, 345
1702901..... 53
1702903..... 53
1702924..... 53
1702925..... 53
1702927..... 52
1702928..... 337
1702938.... 201, 220, 223
1703162 .. 78, 86, 97, 106
1703465..... 135
1703466..... 135
1703475.... 337, 342, 345
1703482.....337, 342, 345
1703518.....337
1703811.....345
1703814.....345
1703992.....336, 341
1704260.....199
1704277.....337, 341, 345
1704412.....337, 342, 345
1704540.....338, 342
1704578.....47
1704767.....336
1704808.....336
1704809.....336
1704810.....336
1704811.....336
1704812.....336
1704819.....336, 341
1704820.....336
1704821.....336
1704822.....336
1704823.....336
1704824.....336
1704885.....338, 342, 346
1704895.....360
1704896.....360
1704906.....336, 341, 345
1704907.....336, 341, 345
1704919.....360
1704920.....360
1704952.....201
1704984.....201
1704985.....336
1704986.....336
1704993.....201
1704994.....201
1704995.....337, 341
1704996.....337, 341
1704997.....200
1705000.....360
1705053.....336
1705054.....336
1705055.....336
1705056.....336
1705084.....337, 341, 345
1705088.....337, 341
1705089.....337, 341
1705090.....47
1705132.....137, 199
1705170.....147, 201
1705270.....336
1705272.....336
1705275.....337
1705325.....94, 115
1705410.....336
1705589.....52
1705752.....135
1705753.....135
1705821.....341
1705822.....341, 345
1705828.....342, 345
1705921.....345
1705961.....341, 345
1705978.....345
1706098.....105, 346
1706493.....197
1706501.....197
1706712.....135, 141

1706914 135
1706915 136
1810100 .... 135, 137, 138
1810102 ..... 135, 137
1810105 .... 135, 137, 138
1810107 ..... 135, 137
1870133 290
1870195 290
1870221 290
2000178 ..... 97, 99
2000194 ..... 79, 82
2000216 ..... 106, 108
2000219 105
2000233 105
2000274 ..... 106, 108
2000279 105
2000285 105
2000339 ..... 106, 108
2000342 106
2000386 ..... 79, 82
2030010 360
2060025 .. 79, 86, 97, 106
2080040 .... 189, 193, 194
2080044 ..... 185, 360
2110404 ... 263, 265, 269, 273, 277, 283
2110406 ... 263, 265, 269, 273, 277, 281
2110408 ... 118, 263, 269, 270, 277, 278
2110604 281
2110606 .... 263, 269, 283
2110608 284
2110610 283
2110806 ..... 265, 273
2110808 ... 265, 269, 273, 277, 283
2110810 ..... 270, 278
2110812 ... 265, 269, 273, 277
2111008 283
2111010 ... 118, 265, 270, 273, 278, 283
2111212 ..... 269, 283
2111612 283
2111616 ... 118, 265, 269, 270, 273, 277, 278, 283
2111620 ... 265, 269, 273, 277
2112424 .... 122, 283, 284
2120150 51
2120163 51
2120182 52
2120209 51
2120210 ..... 51, 348
2130204 277
2130404 ... 122, 265, 269, 273, 277, 281, 283, 284
2130406 .... 277, 281, 283
2130604 .... 265, 273, 277
2130606 ..... 269, 283
2130608 283
2130808 .... 265, 273, 277
2130810 .... 122, 283, 284
2130812 273
2131008 ..... 269, 277
2131010 283
2131012 .... 265, 269, 273, 277
2131210 283
2131212 .... 118, 265, 270, 278, 283
2131216 ..... 122, 265, 284
2131616 .... 118, 265, 270, 273, 277, 278
2150404 283
2150406 .... 265, 269, 273, 277
2150606 283
2150808 ..... 273, 277
2150812 ..... 273, 277
2151616 .... 265, 269, 273, 277
2160001 59
2170104 273
2170204 269
2170306 281
2170308 ..... 270, 278
2170312 ..... 265, 273
2170350 277
2170406 ..... 263, 269, 278
2170408 ..... 265, 273, 277
2170504 .... 263, 265, 269, 273, 277
2170506 ..... 263, 283
2170508 269
2170516 ..... 265, 269
2170704 273
2170708 ..... 277, 281
2170804 281
2170912 ..... 265, 273
2180344 59
2180348 ..... 87, 105
2180536 ..... 81, 97
2180798 ..... 79, 97, 106
2180829 284
2200222 .... 63, 68, 82, 87, 99, 105
2220063 60
2220124 60
2220235 281
2220237 .... 265, 269, 273, 277
2220240 265
2220242 ..... 265, 273
2220250 ..... 81, 98
2220273 ..... 81, 97
2220313 ... 81, 88, 97, 105
2220451 ..... 97, 106
2220459 ..... 81, 98
2220591 277
2220767 80
2220794 ..... 81, 98
2220811 .... 119, 265, 270, 273, 278
2220883 39, 40, 231, 233, 235, 237, 239, 241, 243, 247, 249
2220885 .... 229, 231, 237, 239, 241, 243, 247, 249, 253, 257, 259
2220886 39, 40, 229, 233, 235, 253, 257, 259
2220887 247
2220888 ..... 39, 243, 247
2221084 .... 118, 265, 269, 273
2221086 283
2221088 .... 265, 269, 273, 277
2221176 ... 81, 82, 88, 105
2221183 ..... 269, 277
2221216 278
2300004 ..... 80, 88
2300014 354
2300016 ..... 19, 354
2300021 354
2300027 354
2300029 354
2400060 ..... 315, 323, 329
2400064 ..... 315, 329
2400065 .... 299, 309, 324, 348
2400066 .... 299, 301, 309, 315, 324, 330
2400070 .... 301, 315, 330, 350
2400093 316
2410014 197
2420165 ..... 94, 115
2420172 ..... 136, 141
2420191 125
2420203 ..... 93, 114
2460011 113
2460013 ..... 93, 113
2460032 113
2460034 113
2460039 ..... 93, 113
2460049 ..... 93, 113
2460055 113
2460056 ..... 93, 113
2460057 ..... 93, 113
2540035 ..... 150, 156
2560122 53
2560123 53
2560136 199
2560173 194
2573001 15
2580055 83
2600209 .... 149, 150, 151, 158
2600216 189
2600219 189
2600233 ..... 151, 158
2600244 ..... 150, 156
2600281 193
2600287 189
2680451 ..... 149, 150
2680488 ..... 149, 152
2680490 ..... 149, 156
2680492 ..... 149, 151
2720058 .... 79, 81, 86, 88, 98, 105
2720271 ..... 81, 98
2720351 98
2720398 ..... 97, 106
2720434 ... 79, 86, 98, 106
2720449 ..... 98, 106
2720509 ..... 79, 86
2720510 79
2720515 ..... 80, 86
2750532 . 81, 88, 98, 105, 106
2751032 60
2753537 273
2753538 283
2753540 ... 265, 269, 273, 277
2753545 283
2753546 ..... 273, 277
2753549 277
2753550 ..... 273, 277
2753555 ..... 269, 277
2753575 ..... 265, 273
2753576 284
2753578 281
2753582 ... 265, 269, 273, 278
2753590 284
2753621 ..... 265, 273
2753622 ... 269, 273, 277, 283
2753623 273
2753624 263
2753625 283
2753626 ..... 277, 283
2753627 ..... 263, 283
2753628 ..... 273, 278
2753629 263
2753630 263
2753631 273
2753632 273
2753633 273
2753634 ..... 273, 278
2753635 ..... 265, 269, 273
2753652 265
2753653 283
2753654 283
2753656 283
2753657 283
2753658 284
2753659 ..... 265, 273
2753660 ..... 265, 273, 278
2753661 ... 265, 270, 273, 278
2753662 283
2753664 ... 265, 270, 274, 278
2753665 283
2753666 ..... 265, 274
2753667 ... 265, 270, 274, 278
2753668 283
2753670 284
2753671 284
2753672 284
2753674 284
2753675 284
2753676 284
2753677 283
2753678 ..... 281, 284
2753679 284
2753680 284
2753681 284
2753682 284
2753683 284
2753684 284

SECTION 10 - SPECIAL OPTIONS

2753685....265, 269, 274, 277
2753686.....274, 277
2753687.....265
2753688.....265, 270
2753689.....265
2753692.....284
2753693.....284
2753709.....265, 269
2753725.....265, 269
2753807....265, 270, 274, 278
2753808.....283
2753895.....281
2753896.....281
2753897.....281
2753935.....269, 277
2753970.....278
2753971.....278
2754040.....278
2754044.....277
2754238.....270
2754239.....270
2754240.....270
2754242.....270
2754243.....270
2754245.....269
2754337.....277
2754338.....278
2754401.....269, 273, 277
2754402.....270
2760105.....136, 141
2780205.....59, 63
2780227.....19, 23, 29
2780229.....12, 16
2780259.....19, 25
2780272.....19, 29
2792463.....283, 286
2792464.....283, 286
2792465.....265, 286
2792466.....273, 286
2792495.....286
2792497.....286
2792502.....263, 286
2792503.....287
2792597.....281, 286
2792648.....263, 286
2792649.....283, 286
2792650.....283, 286
2792651.....269, 286
2792652.....277, 286
2792653.....287
2792678.....286
2792713.....277, 286
2792714.....269, 286
2820031.....94, 115, 296, 305, 321
2820035....146, 190, 194, 311, 326
2820078.....152, 158
2820079.....152
2820080.....150, 152, 157
2820081.....152
2820233.....150, 157
2820234.....151, 157
2820235.....151, 157
2840016.....161
2860012..... 114
2860030.....136, 141, 348
2900062..... 52
2900708..... 43
2900733..... 65
2900756.....45, 53
2900770.....179, 229
2900792.....237, 239, 241
2901271..... 229
2901303..... 237
2901443.....317, 331, 355
2901537.....244, 247
2901554..... 254
2901609.....80, 98
2901971..... 360
2902050..... 244
2902061.....231, 233, 235
2902065..... 108
2902134..... 244
2902203..... 353
2902300..... 355
2902303..... 352
2902329..... 352
2902354..... 353
2902401..... 80, 104, 310, 324
2902429..... 353
2902443.....309, 324
2902460..... 284
2902461..... 284
2902462..... 284
2902549..... 316
2910799..... 353
2910871..... 353
2910888..... 352
2910928..... 353
2915094..... 356
2915140..... 353
2920028.....201, 223
2920110..... 146
2920113..... 146
2920129.....299, 309, 324
2920140... 190, 194, 300, 315, 330
2920154..... 199
2920157.....146, 194, 300
2920162.....93, 114
2920215..... 146
2940074.....189, 193, 348
2940088... 150, 151, 152, 158
2940188..... 157
3010088..... 219
3020008..... 19
3020016....80, 88, 105, 108, 354
3020021.....100, 108
3160266.....19, 35
3160268.....19, 33
3160280.....59, 65
3160286.....59, 68
3160294.....59, 68
3160308.....19, 35
3160347.....19, 39
3160348.....19, 39
3200362.....98, 106
3200406...79, 86, 97, 106
3200436..... 183
3200449..... 183
3220103..... 99, 107
3220104..... 99, 107
3220113..... 79, 86
3250585..... 194
3250872..... 47
3251102..... 94, 115, 201
3251242.... 337, 341, 345
3251243..... 114
3252347..... 337
3252507..... 94, 115, 337, 341
3252764..... 360
3252781.... 337, 342, 345
3271805.... 129, 131, 197
3272001..... 176
3272401..... 176
3272605..... 181
3290505..... 94, 115
3290507..... 88
3290801..... 79, 86
3300007..... 12, 16, 19
3300151..... 189
3300205..... 138, 141
3300240..... 176
3300241..... 176
3300242..... 176
3300243..... 181
3300353..... 199
3300408.... 136, 141, 199
3310601..... 94, 115, 161
3310805..... 95, 115, 145
3311001.... 189, 193, 201
3311005....53, 94, 115, 146, 149, 150, 151, 152, 156, 158, 199
3311401..... 136, 223
3311405... 51, 52, 79, 81, 86, 88, 97, 104, 105, 107, 146, 149, 150, 156, 185, 189, 190, 194, 220, 316, 317, 330, 331, 337, 342, 345, 360
3311501..... 219, 223
3311505... 45, 52, 79, 81, 86, 98, 107, 149, 156, 185, 225, 244, 360
3311601... 125, 149, 156, 200
3311602..... 125
3311605... 79, 86, 94, 97, 104, 107, 114, 149, 150, 151, 156, 157, 161, 165, 168, 171, 172, 176, 181, 194, 197, 219
3311608..... 168, 173
3311705..... 94, 115
3311801... 19, 79, 87, 98, 104
3311805 . 79, 87, 97, 107, 149, 156, 161, 165, 181, 225, 360
3312002..... 59
3312201..... 176
3321501.....150, 157
3322201.....131
3340755.....176
3340757.....176
3340758.....176
3340787.....168, 172
3340871.....176
3340881.....176
3340936.....168, 172
3340942.....168, 172
3340943.....168, 172
3340966.....16
3380434.....189, 194
3380443.....149
3380444.....149, 156
3380458.....149
3380459.....149
3380461.....150, 156
3380462.....150
3380463.....150
3380575.....150, 156
3380580.....149, 156
3420156.....200
3420372.....47
3420447.....47
3421565.....47, 59
3422417.....176
3422424.....176
3422446...80, 88, 97, 104
3422530.....161
3422532...80, 88, 98, 105
3422562.....167
3422567.....15
3422569.....167
3422580.....167
3422701.....12, 15
3422702.....11, 12, 15
3422703.....11, 15
3422754.....12, 15
3422755.....11, 15
3422793.....171
3422813.....15
3422841.....47
3422847.....47
3422848.....15
3422849.....12
3422860.....171
3422861.....171
3422867.....171
3422908.....165, 167, 171
3422909.....165
3422910.....165
3422920.....165
3422922.....167, 171
3422930.....165
3422931.....167, 171
3422932.....171
3422972.....15
3430816.....161
3440410.....183
3450304.....200
3450404.....161
3460544.....82, 88
3470003.....200
3480176.....229
3480210.....237
3480265.....243

3480266 253
3480267 231
3480275 243
3510774 189
3510816 189
3510819 189
3510821 189
3510822 193
3510830 193
3510831 193
3510833 193
3510837 189
3510877 197
3520028 ..... 94, 115, 199
3520034 172
3520035 137
3520072 .... 189, 193, 197
3520172 189
3520189 ..... 315, 329
3520198 193
3530072 219
3536089 ..... 190, 194
3537416 ..... 97, 107
3537420 97
3537445 161
3537446 161
3538047 ..... 11, 15
3539219 ..... 138, 141
3539281 146
3539622 176
3539662 47
3539685 189
3539719 219
3539872 ..... 79, 97, 107
3539877 11
3539878 11
3539934 ..... 81, 99, 105
3539971 ..... 97, 107
3570686 43
3571712 ..... 150, 156
3572009 47
3572010 47
3572011 47
3572012 47
3573047 ... 185, 296, 305, 321
3573049 165
3573050 165
3573296 185
3573418 ..... 168, 172
3574091 223
3574172 244
3574179 52
3574206 ..... 79, 87
3574207 ..... 79, 87
3574208 ..... 79, 87
3574684 94
3574978 107
3575359 223
3575718 45
3580134 ..... 93, 114
3580158 113
3580243 176
3580249 176
3580276 114
3580288 176
3580289 176
3580322 93
3600295 . 80, 97, 117, 118
3600324 . 80, 97, 121, 122
3600342 ..... 51, 52
3600410 80, 88, 105, 118, 270, 278
3600411 80, 88, 105, 122, 284
3600424 ..... 51, 52
3620033 ..... 97, 107
3620047 ..... 79, 87
3641569 223
3740047 361
3740049 .... 136, 141, 299, 300, 311, 326, 348
3740067 .. 79, 87, 97, 107, 348
3740080 ..... 94, 108, 115, 348, 350
3753550 ..... 265, 269
3760170 ..... 47, 59
3760368 237
3760370 .... 229, 231, 233, 253
3780117 182
3790012 .... 147, 200, 201, 202
3790044 ... 81, 88, 98, 105
3790045 19
3790112 254
3790152 105
3820001 ..... 47, 147, 337, 342, 345
3820020 193
3841143 .... 11, 12, 15, 80, 88, 97, 104, 167, 172, 176
3841203 171
3841287 11, 15, 165, 167, 171
3841340 ..... 172, 185
3841356 165
3890013 176
3890014 176
3890015 176
3890016 176
3890017 176
3890018 176
3890040 197
3900054 197
3900141 237
3900192 167
3900205 193
3900232 ..... 150, 151, 157
3900268 ..... 136, 141
3900283 ..... 168, 172
3900293 59
3900310 ..... 243, 249
3900316 ..... 168, 172
3910608 ..... 95, 115, 161
3910804 ..... 136, 141
3911008 ..... 53, 189, 193
3911018 199
3911040 146
3930816 145
3930828 145
3931448 ..... 253, 257
3931480 254
3931508 ..... 253, 257
3931516 237
3931620 231
3931624 165
3931672 201
3931720 ..... 229, 233
3931724 253
3931740 ..... 253, 257
3932224 59
3932240 ..... 243, 247, 249
3951608 176
3952020 59
3960389 ..... 150, 156
3960407 ..... 98, 107
3960438 .... 150, 151, 152, 158
3960461 146
3960462 .... 150, 151, 152, 158
3960464 81, 99, 104, 150, 151, 158
3960468 ... 79, 87, 98, 107
3960469 ... 79, 87, 98, 107
3960470 ..... 150, 156
3960525 125
3960548 ..... 82, 88, 105
3960549 .... 81, 88, 97, 99, 105
3990010 .... 298, 299, 300, 307, 322, 348
4031608 ..... 94, 115
4031911 ..... 79, 87
4060802 ..... 94, 115, 194, 201, 360
4060803 189
4060804 98
4060805 ... 81, 87, 98, 107
4060906 ..... 136, 141
4060907 146
4060959 353
4061010 ..... 151, 157
4061032 284
4070585 115
4070863 176
4070878 ..... 11, 15
4070879 ..... 11, 15
4070895 176
4070897 176
4070898 176
4070929 176
4070939 176
4070940 176
4070944 11
4070945 11
4070969 ..... 168, 172
4070987 ..... 136, 141
4071009 59
4071020 177
4071043 145
4071059 16
4100100 237
4120035 ..... 298, 308, 322
4130388 15
4130389 12
4130390 ..... 12, 15
4160139 ..... 150, 156
4160143 ..... 150, 156
4160149 176
4160187 165
4220162 146
4220165 189
4220191 ..... 79, 87
4240018 284
4240032 ..... 95, 115, 146
4240099 ..... 190, 194, 223
4240112 125
4240139 125
4280295 125
4300097 19
4360031 ..... 194, 348
4360057 ..... 219, 223, 350
4360232 ... 201, 301, 315, 330, 350
4360294 115
4360314 202
4360322 145
4360328 ... 136, 141, 199, 202, 348, 350
4360330 ..... 199, 348
4360331 ..... 200, 348
4360336 ..... 94, 115, 146, 194, 201, 350, 360
4360387 ... 200, 201, 220, 223, 348, 350
4360392 ..... 79, 97, 107
4360407 ..... 200, 348
4360470 ..... 136, 141, 348
4360475 ... 136, 141, 200, 348
4360476 ... 136, 141, 200, 348
4360503 ..... 183, 299
4360506 ... 296, 305, 321, 348
4360517 ... 132, 145, 311, 326, 350
4360522 ..... 146, 201, 350
4360528 ..... 183, 299
4360542 ..... 93, 114
4360544 ... 183, 299, 311, 326, 348
4360578 ..... 145, 350
4360579 145
4400437 125
4400439 125
4400453 125
4420037 194
4420038 125
4420051 ..... 47, 345, 352
4420055 189
4420060 ..... 95, 115, 145
4420068 ..... 223, 225
4460007 200
4460018 ..... 95, 115
4460023 ..... 94, 115
4460027 ..... 93, 114
4460049 ..... 219, 223
4460051 315
4460071 ... 190, 194, 294, 304, 315, 320
4460190 ..... 93, 114
4460224 ... 299, 301, 311, 325

SECTION 10 - SPECIAL OPTIONS

4460225....200, 294, 295, 297, 304, 305, 307, 315, 320, 322, 329
4460226....210, 217, 294, 295, 296, 297, 298, 299, 300, 301, 304, 305, 307, 309, 310, 311, 315, 317, 320, 321, 322, 323, 324, 326, 329, 330, 331
4460227....294, 295, 297, 298, 299, 300, 304, 305, 308, 311, 315, 320, 322, 323, 326, 330
4460234.....95, 115, 146, 200, 223
4460259.....311, 326
4460260.....311, 326
4460265.....210, 217
4460267....296, 297, 298, 300, 305, 307, 311, 321, 322, 326
4460268....146, 298, 300, 308, 311, 323, 326
4460297.....311, 326
4460320....296, 297, 299, 300, 305, 307, 311, 315, 321, 322, 326, 330
4460321....300, 311, 317, 331
4460339.....309
4460374....309, 315, 324, 326, 329
4460375....309, 315, 324, 326, 329
4460418....295, 298, 305, 307, 320, 322
4460419....295, 298, 305, 307, 320, 323
4460424....146, 296, 298, 299, 300, 305, 307, 308, 309, 310, 311, 315, 321, 322, 323, 324, 326, 330
4460425....220, 223, 301, 315, 329, 330
4460426....136, 141, 194, 202, 297, 307, 315, 322, 329, 330
4460428....200, 294, 304, 320
4460434....295, 298, 305, 308, 320, 322
4460457.....298, 309, 323
4460458....298, 309, 323, 324, 326
4460459.....301, 315
4460460.....298, 309, 323
4460464....294, 296, 297, 298, 304, 305, 306, 307, 309, 310, 321, 322, 323, 324, 325
4460465....296, 297, 298, 305, 306, 307, 308, 309, 315, 321, 324, 325, 329
4460466... 296, 305, 321, 324, 325
4460467... 301, 317, 331, 356
4460470... 136, 141, 200, 294, 296, 297, 304, 305, 307, 320, 321, 322
4460471... 136, 141, 200, 294, 296, 297, 304, 305, 307, 320, 321, 322
4460473.....296, 305, 321
4460476.....301, 316
4460488.....136, 141, 200
4460496... 142, 200, 294, 304, 320, 323
4460497... 142, 200, 294, 304, 320, 323
4460508... 295, 296, 298, 304, 305, 307, 320, 321, 323
4460509.....296, 305, 321
4460510... 301, 317, 331, 356
4460526... 136, 141, 297, 307, 322
4460536.....308, 322
4460539.....308, 309, 323
4460579..... 308
4460580..... 308
4460582..... 308
4460598... 190, 194, 202, 301
4460611..... 98
4460633..... 316
4460634.....298, 308, 322
4460635.....298, 308, 322
4460662.....313, 328
4460705.....300, 312
4460708... 200, 294, 299, 304, 309, 320, 324
4460709... 299, 300, 314, 317, 328, 331
4460710... 300, 314, 317, 328, 331
4460742.....298, 326
4460743..... 326
4460761... 294, 297, 304, 308, 320, 323
4460789.....301, 316
4460790.....301, 316
4460792..... 309
4460834.....297, 307, 322
4460842.....297, 307, 322
4460850..... 301
4460865.....296, 305, 321
4460866... 294, 296, 298, 304, 305, 307, 320, 321, 323
4460871... 205, 207, 213, 215, 295, 297, 298, 301, 304, 307, 308, 309, 311, 320, 322, 323, 324, 325
4460873... 295, 298, 304, 308, 320, 322
4460874... 136, 295, 297, 304, 307, 320, 323
4460875... 136, 295, 297, 307, 323
4460876... 295, 298, 304, 307, 320, 323
4460878.... 298, 307, 323
4460879.... 295, 305, 320
4460880... 294, 296, 297, 298, 304, 305, 307, 308, 320, 321, 322, 323
4460887... 295, 298, 305, 308, 309, 320, 323, 324
4460889..... 298
4460890..... 298
4460891... 296, 297, 298, 306, 307, 308, 321, 324, 325
4460892..... 309, 324
4460894.... 309, 324, 325
4460897... 296, 297, 306, 307, 310, 322, 325
4460899..... 324
4460905... 137, 200, 294, 298, 304, 307, 308, 320, 322, 323
4460906..... 300, 311
4460910.... 294, 304, 320
4460911.... 299, 311, 326
4460912.... 299, 311, 326
4460913.... 294, 304, 320
4460917... 294, 295, 304, 305, 320
4460918... 294, 299, 304, 311, 320, 326
4460925.... 295, 305, 320
4460926.... 294, 304, 320
4460928.... 294, 304, 320
4460929... 294, 295, 304, 305, 320
4460943.... 308, 322, 323
4460944..... 308, 323
4460956..... 316, 330
4460957..... 316, 330
4460959..... 306, 322
4460960..... 306, 322
4460961..... 300, 311
4460967..... 315, 329
4460968..... 94, 115, 145, 313, 328
4460979..... 324
4460995..... 309
4460996..... 308
4461005... 308, 310, 323, 325
4461006... 308, 310, 323, 325
4461008.... 310, 324, 325
4461052... 308, 310, 323, 325
4461053... 308, 310, 324, 325
4461054... 308, 310, 323, 325
4461060... 308, 310, 323, 325
4461070..... 308, 323
4461071..... 309, 324
4461072..... 309, 324
4461073.....309, 324
4461074.....309, 324
4461095.....308, 323
4461157.....324
4461196.....313, 328
4461197.....314, 328
4461198.....313, 327
4461199.....313, 328
4461200.....314, 328
4461201.....313, 327
4461202.....313, 328
4461203.....314, 328
4461204.....313, 327
4461205.....313, 328
4461206.....314, 328
4461207.....313, 327
4461244.....313, 327
4461245.....313, 327
4461246.....313, 327
4461249.....313, 328
4461250.....314, 328
4520252.....20
4520253.....20
4520256.....20
4530020.....360
4566468.....231
4566471.....237
4567073.....79, 87
4567627.....150
4567815.....98, 107
4568133.....47
4568240.....243
4568264.....254
4568273.....243
4568282.....254
4568402.....231
4568708.....281
4568721.....79, 87
4568788.....79
4569171.....107
4569177.....79
4569371.....83, 90
4640261.....47
4640509.....237, 239, 241
4640673.....244
4640750.....79
4640751.....97, 107
4640774.....281
4640858.....229
4640902.....53
4640930.....52
4640932.....231, 233, 235
4641033.....254, 257, 259
4641062.....237
4641108.....52
4641144.....244
4641162.....229
4641183.....43
4641184.....51, 55
4641185.....182
4641186.....182
4641188.....244, 247, 249
4641194.....244, 247, 249
4641198.....266, 274
4641201.....360
4641209.....43
4641232.....231, 233, 235

4641234 .... 244, 247, 249
4641237 286
4641251 182
4641262 254
4641263 53
4641300 45
4641303 45
4641317 51
4641432 ..... 51, 55
4711000 132
4711400 ..... 52, 105, 108, 146, 185, 190, 194, 220, 316, 317, 330, 331
4711500 ... 45, 47, 79, 87, 182, 201, 360
4711600 ... 11, 15, 81, 87, 88, 98, 107, 151, 158, 165, 168, 173, 176, 182, 183
4711700 108
4711800 ... 161, 165, 197, 360
4711900 ..... 99, 107
4740036 47
4740057 59
4740076 ..... 150, 156
4740111 ..... 12, 15
4740119 161
4740155 16
4740171 ..... 150, 157
4740256 ..... 12, 16
4740274 .. 79, 87, 98, 107
4740362 .... 146, 190, 194
4740397 ..... 94, 115, 201, 360
4740411 189
4740439 172
4740444 ..... 136, 141
4740463 ..... 12, 16
4740472 ..... 11, 15
4740473 ..... 12, 16
4740492 165
4740500 ..... 151, 157
4750800 ..... 95, 115, 145
4751000 . 47, 53, 94, 115, 125, 146, 150, 151, 152, 157, 158, 189, 193, 200, 219
4751400 ... 52, 53, 79, 81, 87, 88, 97, 104, 105, 107, 108, 136, 141, 145, 150, 157, 177, 185, 190, 194, 200, 223, 337, 342, 345, 360
4751500 ... 52, 53, 80, 82, 87, 94, 105, 115, 138, 150, 157, 185, 219, 223, 225, 244, 360
4751600 ... 43, 45, 52, 80, 87, 94, 97, 104, 107, 114, 125, 150, 151, 157, 181, 194, 219
4751700 108
4751800 . 80, 87, 98, 104, 129, 131, 181, 195, 197, 219, 223
4751900 94
4752000 ... 81, 88, 98, 104
4760600 ..... 95, 115
4761000 .... 189, 193, 200, 201
4761400 ..... 136, 141
4761500 219
4770600 161
4791400 ..... 87, 98, 107
4811600 ..... 89, 94, 115
4811700 88
4811900 ..... 80, 87, 88, 94
4812000 89
4812100 ..... 80, 87, 89, 94
4812200 107
4831900 ..... 100, 108
4832000 . 80, 87, 100, 108
4844816 172
4844817 172
4844958 59
4845288 189
4845308 219
4845309 219
4845327 189
4845395 ..... 98, 107
4845404 ..... 97, 108
4845411 149
4845426 189
4845658 11
4845951 189
4846158 181
4846218 182
4846231 360
4846295 47
4846296 47
4846298 181
4846355 165
4846402 168
4846403 168
4846413 15
4846414 16
4846420 173
4846421 173
4846427 165
4846430 59
4846435 172
4846452 193
4846477 360
4846479 97
4846553 ..... 168, 173
4846554 168
4846555 173
4846558 ..... 168, 173
4846561 195
4846566 ..... 97, 108
4846573 181
4846588 ..... 149, 151, 157
4846673 223
4846790 ..... 80, 87
4846805 ..... 80, 87
4846935 16
4860224 20
4860225 20
4860230 20
4891600 .... 108, 129, 131, 161, 177, 181
4891800 .... 19, 59, 81, 88, 97, 105, 161, 181, 225
4892000 ..... 12, 16, 19, 59
4892200 59
4892600 181
4921820 299
4922482 300
4922498 301
4922566 ..... 296, 305, 321
4922567 ..... 296, 305, 321
4922569 ..... 296, 305, 321
4922570 361
4922594 .... 136, 142, 297, 307, 322
4922595 ..... 200, 294, 304
4922619 ..... 137, 298
4922620 ..... 200, 294
4922636 ..... 309, 324
4922641 .... 300, 311, 315, 326, 330, 361
4922643 ..... 300, 311, 326
4922654 ..... 136, 297, 298
4922655 297
4922660 ..... 296, 305, 321
4922666 .... 136, 200, 294, 297, 304, 320
4922690 299
4922737 ... 80, 81, 99, 104
4922743 ..... 300, 312
4922749 .... 200, 294, 304, 320
4922757 315
4922764 ..... 300, 315, 330
4922771 ..... 299, 309, 324
4922790 ..... 297, 306, 321
4922808 ..... 297, 306, 321
4922809 ..... 297, 306, 321
4922871 .... 296, 305, 307, 322
4922872 ..... 297, 306, 321
4922873 ..... 301, 315, 330
4922874 ..... 301, 315, 330
4922875 ..... 297, 306, 321
4922876 ..... 297, 306, 321
4922877 ..... 301, 315, 330
4922878 ..... 297, 306, 321
4922883 ..... 301, 315, 330
4922922 ..... 136, 297, 298
4922925 ..... 315, 329
4922970 300
4922978 105
4923213 ..... 137, 307
4923239 ..... 136, 308
4923278 ..... 136, 308
4923279 ..... 137, 307
4923292 298
4923379 ..... 108, 311, 326
4923577 ..... 137, 307
4923585 ..... 136, 308
4923591 310
4933189 290
4933193 ..... 290, 361
4933201 ..... 290, 298
4933215 ..... 290, 300
4933216 290
4933217 290
4933218 290
4933219 290
4933231 290
4933243 290
4933249 ..... 290, 315, 330
4933264 ..... 290, 315
4933292 ..... 290, 299
4933300 ..... 290, 300, 311
4933323 ..... 290, 308, 309
4933337 ..... 290, 308, 309
4933375 ..... 290, 308, 309
4933376 ..... 290, 308, 309
70000045 99
70000122 ..... 93, 113
70000123 ..... 93, 113
70000124 ..... 93, 114
70000125 ..... 93, 114
70000126 ..... 93, 114
70000127 ..... 93, 114
70000264 110
70000342 179
70000345 110
70000579 55
70000580 55
70000582 ..... 55, 348
70000583 55
70000781 45
70000782 74
70000793 108
70000794 39
70000795 39
70000797 39
70000800 110
70000912 109
70000913 109
70000914 109
70000915 109
70000916 109
70000917 109
70000918 109
70000919 109
70000934 51
70001002 108
70001017 . 79, 86, 87, 99, 107
70001051 ..... 83, 89
70001056 52
70001120 ..... 82, 89
70001126 ..... 110, 111
70001132 109
70001248 ..... 131, 132
70001423 109
70001435 109
70001498 110
70001697 179
70001742 ..... 83, 89
70001835 109
70001836 109
70001837 109
70001838 109
70001839 109
70001841 109
70001847 ..... 110, 111
70001848 109
70001850 108
70001866 109
70001868 109
70001870 110
70001872 ... 111, 310, 325
70001874 109

SECTION 10 - SPECIAL OPTIONS

70001941.....146
70002065.....74
70002066.....74
70002067.....74
70002068.....74
70002069.....74
70002070.....74
70002071.....74
70002072.....74
70002073.....74
70002074.....74
70002075.....74, 75
70002085.....75
70002086.....75
7000209.....63, 68
7000213.....23, 25, 29, 75
7000214.....63, 68
7000217.....63, 68, 74
7000220.....23, 25, 29
70002200.....110
70002234.....99, 109
70002235.....93, 114
70002239.....93
7000224.....23, 25, 29
70002240.....93, 114
7000228.....63, 68, 74
7000229.....63, 68, 74
7000230.....63, 68, 74
7000231.....23, 25, 29
7000235.....23, 25, 29
7000236.....23, 29
7000238.....23, 25, 29
7000239.....23, 29
70002390.....45
7000240.....23, 29
70002415.....99, 110
70002416.....99, 110
70002417.....99, 110
7000246.....63, 68, 74
7000248.....68, 74
7000253.....63, 68, 74
7000255.....63, 68, 74
7000256.....63
7000257.....63, 68, 74
7000258.....63
7000263.....63, 68, 74
7000265.....12, 16, 23, 25, 29
7000269.....63, 68
7000270.....63, 68
70002705.....79, 86
70002706.....79, 86
7000272.....23, 29
70002724.....215
70002725.....215
70002726.....215
70002727.....215
70002728.....215
70002729.....215
7000273.....23, 29
70002730.....207
70002731.....207
70002732.....207
70002733.....207
70002734.....207
70002735.....207
7000274.....23, 29
7000275.....23, 29
70002761.....83, 89
70002762.....83, 89
70002763.....83, 90
70002764.....83, 89
70002765.....82, 89
70002766..... 83
70002767..... 83
7000281.....68, 74
7000282.....23, 25, 29
7000283.....23, 25, 29
70002833.....83, 89
70002834.....83, 89
70002835.....83, 89
7000284.....23, 25, 29
70002841..... 83
70002843.....83, 89
70002844.....83, 89
70002845.....83, 89
70002846.....83, 89
70002847.....83, 89
70002848.....83, 89
70002849.....83, 89
70002850.....83, 89
70002851.....83, 90
70002852.....82, 90
7000287.....23, 25, 29
7000288.....23, 25, 29
7000289.....23, 25, 29
7000290.....23, 29
70002906..... 207
70003001..... 110
70003002..... 110
70003003..... 110
70003024..... 55
70003454..... 132
70003483..... 194
70003784..... 200
70003921.....168, 172
70003922.....168, 172
70003931..... 99
70003935..... 45
70003936..... 45
70004019..... 53
70004182.....79, 87
70004738..... 217
70004739..... 217
70004740..... 217
70004741..... 217
70004742..... 217
70004743..... 217
70004744..... 217
70004745..... 217
70004746..... 217
70004747..... 217
70004748..... 217
70004749..... 217
70004750..... 217
70004751..... 217
70004752..... 209
70004753..... 209
70004754..... 209
70004755..... 209
70004756..... 209
70004757..... 209
70004758..... 209
70004759..... 209
70004760..... 209
70004761..... 209
70004762..... 209
70004763..... 209
70004764..... 209
70004765..... 209
70004766..... 209
70004767..... 209
70004768..... 209
70004769..... 209
70004770..... 209
70004771..... 209
70004772..... 209
70004773..... 209
70004774..... 209
70004775..... 210
70005230..... 217
7000625..... 194
70006365..... 249
70006377..... 249
70006392..... 249
70006393..... 249
70006394..... 249
70006395..... 249
70006503..... 247
70006504..... 247
70006505..... 247
70006506..... 247
70006568..... 239
70006569..... 239
70006570..... 239
70006571..... 239
70006572..... 239
7000663..... 99, 109
70006645..... 235
70006648..... 233
70006649..... 241
70006650..... 241
70006694..... 257, 259
70006699..... 233, 235
70006700..... 233, 235
70006701..... 233
70006719..... 257
70006720..... 257, 259
70006721..... 257
70006726..... 235
70006727..... 235
70006728..... 235
70006729..... 259
70006730..... 259
70006731..... 259
70006732..... 259
70006733..... 259
70006734..... 241
70006735..... 241
70006736..... 241
7000731..... 19, 30, 59
7001498..... 118
7001901..... 23, 25, 29
7001902..... 23, 25, 29
7001903..... 23, 25, 29
7001906..... 23, 25, 29
7001909..... 63, 68, 74
7001911..... 63, 68, 74
7001912..... 68, 74
7001928..... 23, 25, 29, 63, 68
7001931.....63, 68, 74
7001985.....63, 68, 74
7001987.....63
7001988.....63
70020808.....325
70020809.....325
7002107.....65
7002110.....65
7002111.....65
7002112.....65
7002117.....65
7002125.....65
70023915.....239
7002821.....301, 317, 331, 355
7002822.....356
7002823.....301, 317, 331, 356
7002826.....356
7002828.....301, 317, 331
7003657.....114
7003928.....205, 207
7003933.....213
7003935.....213
7003941.....213, 215
7003946.....213
7003953.....205
7003969.....213
7003972.....213, 215
7003973.....213, 215
7003976.....205
7003977.....205
7003980.....213, 215
7003982.....215
7003983.....213, 215
7003986.....213
7003989.....213, 215
7003992.....205, 213
7003993.....205, 213
7003994.....213
7004035.....75
7004036.....75
7004042.....69
7004043.....69, 75
7004044.....69, 75
7004045.....75
7004047.....75
7004049.....75
7004275.....356
7004276.....356
7007208.....117
7007412.....119
7007413.....117
7007414.....117
7007415.....121
7007417.....117
7007419.....33, 36, 117
7007420.....36
7007423.....117
7007425.....33, 117
7007435.....33, 117
7007437.....33, 36, 40, 117
7007438.....33, 35, 39, 117
7007439.....33, 35, 39, 117
7007441.....33, 117
7007442.....33, 117
7007446.....33, 35, 39, 117

7007452 117
7007453 118
7007454 117
7007457 117
7007463 118
7007464 118
7007465 118
7007466 118
7007470 ..... 33, 117
7007472 118
7007474 118
7007475 118
7007478 118
7007483 118
7007484 118
7007485 118
7007487 118
7007488 118
7007494 117
7007496 ..... 118, 348
7007497 ... 118, 299, 310, 325
7007498 ... 118, 299, 310, 325
7007633 ..... 63, 68, 74
7009992 65
7009996 65
7009998 65
7010114 33
7010116 ..... 33, 119
7010122 118
7010404 ..... 12, 16
7010405 ..... 12, 16
7010406 ..... 12, 16
7010461 68
7010464 ..... 23, 29
7010474 ..... 63, 68, 74
7010488 63
7010492 ..... 63, 68, 74
7010494 63
7010542 182
7010543 ..... 52, 55, 182
7010545 55
7011016 52
7011043 52
7011044 52
7011048 52
7011062 52
7011112 .... 231, 233, 235
7011323 179
7011325 244
7011346 254
7012513 ..... 93, 113
7012514 ..... 93, 113
7012518 ..... 52, 182
7012558 113
7012664 . 78, 86, 97, 106, 348
7012699 53
7012769 55
7012772 55
7012903 55
7012925 ..... 55, 244, 247, 249
7012930 43
7012941 51
7012942 55
701294352, 55, 182, 244, 247, 249, 348
7012944.. 51, 52, 55, 182, 348
7012953..... 53, 182
7012955..... 182
7012961..... 53
7012965..... 182
7012967..... 55, 182, 244
7012974..... 52
7012975..... 55
7012989..... 182
7012995..... 52
7012998..... 55
7013711..... 52
7013715..... 52
7013716..... 52
7013753..... 52
7014801..... 125
7014802..... 125
7014811..... 125
7014813..... 125
7014816..... 125
7014818..... 125
7014900..... 65
7016314..... 125
7016322..... 161
7016328..... 99, 109, 350
7016331..... 99, 108, 350
7016374..... 161
7016380..... 146
7016399..... 190, 194
7016652..... 356
7016654..... 356
7016655..... 356
7016769..... 52
7016800..... 80, 98
7016802..... 81, 98
7016803. 81, 98, 104, 310
7016809..... 80, 98
7016813..... 80, 104, 310
701682481, 98, 104, 310, 325
701682581, 98, 104, 310, 325
7017023..... 68, 74
7017027..... 23, 25, 29
7017028..... 75
7017033..... 23, 29
7017034..... 23
7017035..... 23
7017036..... 23
7017037..... 23
7017038..... 23
7017039..... 23
7017040..... 23
7017041..... 23
7017042..... 23
7017047..... 23, 25, 29
7017048..... 23, 25, 29
7017050..... 23, 25, 29
7017051..... 12, 16
7017052..... 12, 16
7017053..... 12, 16
7017054..... 12, 16
7017055..... 12, 16
7017056..... 12, 16
7017057..... 12, 16
7017058..... 12, 16
7017068..... 23, 30
7017070..... 63, 68, 74
7017072..... 74
7017080..... 74
7017082..... 25, 68
7017085..... 68, 74
7017089..... 63, 68
7017125..... 179
7017136..... 179
7017137..... 179
7017138..... 179
7017139..... 179
7017140..... 179
7017141..... 179
7017142..... 179
7017158..... 179
7017159..... 179
7017162..... 179
7017163..... 179
7017164..... 179
7017172..... 179
7017175..... 179
7017192..... 179
7017210..... 251
7017211..... 251
7017213..... 251
7017214..... 251
7017215..... 251
7017236..... 251
7017402..... 55, 182
7017406..... 45
7017422..... 55
7017451..... 55, 244, 247, 249, 348
7017452..... 182
7017479..... 182
7017489..... 55
7017492..... 45
7017496..... 55
7018612..... 19, 59
7018912..... 55
7019103..... 213
7019110..... 213
7019111..... 205, 213
7019112..... 213
7019114..... 213
7019115..... 213
7019122..... 205
7019123..... 205
7019141..... 205
7019142..... 205
7019143..... 205
7019144..... 205
7019145..... 205
7019147..... 205
7019149..... 205
7019150..... 205
7019151..... 213
7019154..... 213
7019155..... 213
7019160..... 213
7019161..... 213
7019162..... 213, 215
7019164..... 213, 215
7019165..... 213, 215
7019166..... 213
7019167..... 213, 215
7019168..... 213
7019171..... 205
7019174..... 205
7019177..... 205
7019194..... 213, 215
7019197..... 205
7019680..... 93, 114
7020020..... 51
7020043..... 125
7020108..... 93, 113
7020109..... 93, 113
7020110..... 93, 113
7020111..... 93, 113
7020168..... 99
7020175..... 136, 141, 200
7020176..... 136, 141, 200
7020190..... 93, 113
7020191..... 93, 114
7020192..... 93, 114
7020193..... 312, 326
7020246..... 135, 141
7020256..... 125
7020352..... 65
7020353..... 65
7020357..... 65
7020359..... 65
7020362..... 65
7020363..... 65
7020408..... 99, 109
7020411..... 99, 109
7020447..... 109
7020449..... 99, 109
7020458..... 99, 110
7020459..... 110
7020460..... 110
7020461..... 99, 110
7020463..... 99
7020464..... 99, 109
7020465..... 99, 108
7020468..... 99, 108
7020471..... 99, 109
7020479..... 99, 109
7020480..... 99
7020487..... 108
7021200..... 117
7021201..... 117
7021202..... 33, 117
7021203..... 33, 117
7021205..... 117
7021206..... 118
7021207..... 33, 117
7021208..... 117
7021209..... 117
7021212..... 117
7021213..... 117
7021214..... 118
7021218..... 118
7021219..... 33, 118
7021220..... 118
7021221..... 118
7021222..... 118
7021223..... 33, 118
7021226..... 118
7021227..... 118
7021228..... 118

7021229.....118
7021230.....118
7021231.....118
7021232.....119
7021249.....35, 39
7021275.....35, 39, 122
7021276.....39
7021277.....35, 39
7021612.....55
7021616.....182
7021625.....43, 45
7021639.....45
7022207.....52
7022215.....52
7022227.....52
7022228.....52
7022229.....52
7022230.....52
7022231.....52
7022302.....35, 39
7022305.....35, 39
7022310.....35, 39
7022311.....35, 39
7022312.....35, 39
7022313.....35, 39
7022314.....35, 39
7022318.....121
7022321.....35, 36
7022323.....36
7022326.....36, 40
7022328.....36, 40
7022363.....361
7022367.....35
7022368.....35, 39
7022370.....36
7022371.....33, 36, 40
7022372.....36, 40
7022397.....43, 45
7022399.....43, 45
7022808.....205, 207
7022812.....213
7022814.....205
7022815.....205, 207
7022816.....205
7022817.....205
7022818.....205
7022819....205, 207, 299, 310, 325
7022820.....299
7022822.....213
7022823.....213
7022824.....213, 299
7022825.....299, 311, 325
7023023.....251
7023206.....51
7023207.....51
7023251.....361
7023252.....361
7023254.....361
7023255.....361
7023256.....361
7023257.....361
7023258.....361
7023259.....361
7023260.....361
7023261.....361
7023262.....361
7023264..... 361
7023266..... 361
7023267..... 361
7023306..... 125
7023318..... 75
7023347..... 125
7023413..... 360
7023414..... 360
7023415..... 360
7023416..... 360
7023417..... 360
7023418..... 360
7023422..... 361
7023423..... 361
7023425..... 361
7023426..... 361
7023427..... 361
7023444..... 361
7023445..... 361
7023446..... 361
7023447..... 361
7023448..... 361
7023449..... 361
7023907.....35, 39
7023908.....35, 39
7023910.....35, 39
7023911..... 182
7023915..... 182
7023917.....43, 45
7023918..... 55
7023919..... 55, 244, 247, 249
7023921..... 55
7023922.....55, 182
7023923..... 55, 244, 247, 249
7023924..... 182
7023925..... 55
7023927.....244, 247, 249
7023933.....43, 45
7023938..... 33
7023939..... 33
7023940..... 33
7023941..... 33
7023942..... 33
7023943..... 33
7023944..... 33
7023945..... 33
7023946..... 33
7023947..... 121
7023948..... 121
7023949..... 121
7023950..... 121
7023951..... 121
7023952..... 121
7023953..... 121
7023954..... 121
7023955..... 121
7023956..... 121
7023957..... 121
7023958..... 121
7023959..... 121
7023960..... 121
7023961..... 121
7023962..... 121
7023963..... 121
7023964..... 121
7023965..... 121
7023966..... 122
7023967..... 121, 122
7023977..... 117
7023982.... 244, 247, 249
7023983..... 182
7023984..... 182
7023985..... 55
7023986..... 55
7023987..... 55
7024100..... 63, 75
7024106..... 25, 26
7024108..... 25
7024137..... 25
7024138..... 25
7024139..... 25
7024140..... 25
7024141..... 25
7024142..... 25
7024143..... 25
7024144..... 25
7024145..... 25, 29
7024146..... 25, 29
7024147..... 25, 29
7024148..... 25, 29
7024149..... 25, 29
7024150..... 25
7024151..... 25, 29
7024152..... 25
7024153..... 25
7024154..... 25, 29
7024155..... 23, 25, 29
7024156..... 25
7024182..... 29, 30
7024185..... 68
7024189..... 30, 69
7024190..... 30, 69
7024191..... 30, 69
7024192..... 30, 69
7024193..... 30, 70
7024194..... 30, 69
7024195..... 30, 70
7024196..... 30, 70
7024197..... 30, 70
7024313..... 361
7024314..... 361
7024315..... 361
7024316..... 361
7024317..... 361
7024318..... 99
7024369.... 168, 172, 348
7024370.... 168, 172, 348
7024373..... 52
7024374..... 125
7024375..... 125
7024379..... 69, 75
7024380..... 69, 75
7024381..... 75
7024389..... 69
7024390..... 75
7024396..... 75
7024398..... 99, 107
7024400..... 129
7024404..... 129, 132
7024439..... 125
7024440..... 125
7024441..... 125
7024442.....125
7024443.....125
7024444.....125, 348
7024445.....125
7024446.....125
7024452.....194
7024453.....69, 75
7024454.....69, 75
7024455.....69, 75
7024456.....69, 75
7024457.....69, 75
7024458.....69, 75
7024459.....69
7024481.....125
7024508.....254, 257, 259
7024559.....361
7024560.....99, 107
7024565.....99, 110
7024579.....99, 110
7024598.....161
7024702.....69
7024703.....68
7024704.....68, 74
7024705.....68
7024706.....69
7024707.....68, 69
7024709.....26
7024710.....26
7024711.....26
7024717.....30
7024718.....30
7024719.....26
7024720.....26
7024762.....68, 74
7024763.....30, 74
7024781.....29
7024782.....29
7024783.....29
7024784.....69, 74
7024828.....118
7024832.....182
7024844.....45
7024854.....40
7024861.....35
7024862.....35, 39
7024865.....35
7024867.....35, 39
7024868.....39
7024870.....36
7024871.....36, 40
7024881.....45
7026004.....254
7026015.....254
7026016.....254
7026189.....129, 131, 132
7026197.....129, 131
7026199.....113
7026503.....129, 131
7026504.....129, 131
7026505.....129, 132
7026506.....129, 132
7026507.....129, 132
7026508.....129, 132
7026509.....129, 132
7026510.....132
7026607.....110
7026608.....110

7026631 ..... 99, 108
7026800 ..... 82, 89
7026801 ..... 83, 89
7026802 ..... 82, 89
7026803 ..... 82, 89
7026804 ..... 82, 89
7026805 ..... 82, 89
7026806 ..... 82, 90
7026807 ..... 82, 89
7026808 ..... 82, 90
7026809 ..... 82, 90
7026810 ..... 82, 90
7026811 ..... 82, 90, 350
7026812 ..... 82, 90
7026813 ..... 82, 90
7026814 ..... 83, 90
7026815 ..... 83, 90
7026816 ..... 82, 90
7026817 ..... 82, 90
7026818 82
7026819 ..... 82, 90
7026820 ..... 82, 90
7026821 ..... 82, 90
7026822 ..... 82, 90
7026823 82
7026824 82
7026825 82
7026826 90
7026827 ..... 82, 90
7026828 ..... 82, 90
7026829 ..... 82, 90
7026830 ..... 83, 89, 350
7026831 ..... 82, 90
7026832 ..... 82, 90
7026833 ..... 82, 90
7026834 82
7026835 83
7026836 83
7026838 83
7026839 ..... 83, 89
7026840 83
7026841 83
7026843 83
7026882 83
7026887 83
7026888 83
7027004 ..... 81, 104, 310, 324
7027012 ..... 81, 104, 310
7027027 ..... 310, 324
7027028 ..... 88, 324
7027029 ..... 88, 324
7027030 ..... 88, 325
7027031 ..... 88, 325
7027236 110
7027239 110
7027241 110
7027245 110
7027246 109
7027412 ..... 79, 87
7027435 35
7027608 109
7027609 109
7027610 109
7027740 ..... 35, 39
7027741 ..... 36, 40
7027790 110
7027791 110
7027792 110
7027793 ..... 111, 310, 325
7027794 ..... 111, 310, 325
7027795 ..... 110, 350
7027796 ..... 110, 310, 325
7027887 ..... 94, 114
7029592 52
7029593 52
77143013 141
80424002 ..... 68, 74
80424042 69
80424043 75
80934561 131
8229242 323
8303541 88
8405009 ..... 78, 87
8405104 ..... 78, 87
8406009 88
8406105 88
8406109 89
88521205 ..... 80, 87, 105
8896941 355
91401281 ..... 78, 87, 104



3121842



An Oshkosh Corporation Company

Corporate Office
JLG Industries, Inc.
1 JLG Drive
McConnellsburg, PA 17233-9533 USA
(717) 485-5161 (Corporate)
(877) 554-5438 (Customer Support)
(717) 485-6417

Visit our website for JLG Worldwide Locations.
www.jlg.com