Illustrated Parts Manual

Models
800S
860SJ

Prior to
SN 0300140000

3121140

August 31, 2018 - Rev AL

ANSI

An Oshkosh Corporation Company

REVISION LOG

NOTES:

GROUND MODULE IDENTIFICATION

MODULE ON MACHINES "WITHOUT UGM" (UNIVERSAL GROUND MODULE)

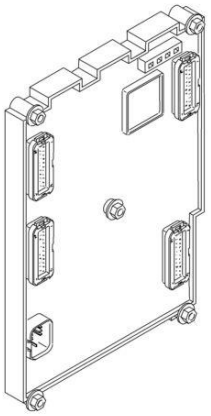

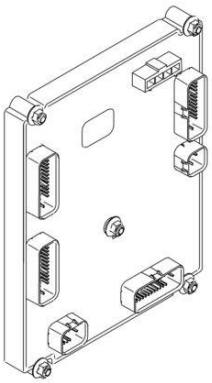

MODULE ON MACHINES "WITH UGM" (UNIVERSAL GROUND MODULE)

Note: The 800S & 860SJ Boom Lifts are manufactured by JLG Industries in the following countries: USA and China. Refer to the Serial Number Tag to identify the country of manufacture. The country of manufacture may be determined by the Serial Number. Machines manufactured in the USA will have a serial number prefix of 03 (i.e. 03XXXXXXXX). Machines manufactured in the China will have a serial number prefix of B3 (i.e. B3XXXXXXXX).

REVISION LOG:

October 15, 2001 - A - Original Issue Of Manual (Edited to B/M 0010575 Revision 3)
December 15, 2001 - B - Revised Manual (Edited to B/M 0010575 Revision 7)
April 25, 2002 - C - Revised Manual (Edited to B/M 0010575 Revision 14)
November 19, 2002 - D - Revised Manual (Edited to B/M 0010575 Revision 22)
April 9, 2003 - E - Revised Manual (Edited to B/M 0010575 Revision 23)
September 5, 2003 - F - Revised Manual (Edited to B/M 0010575 Revision 36)
December 18, 2003 - G - Revised Manual (Edited to B/M 0010575 Revision 37)
March 5, 2004 - H - Revised Manual (Edited to B/M 0010575 Revision 37)
August 2, 2004 - I - Revised Manual (Edited to B/M 00101575 Revision 42)
November 1, 2004 - J - Revised Manual (Edited to B/M 00101575 Revision 42)
March 15, 2005 - K - Revised Manual (Edited to B/M 0010575 Revision 50)
September 16, 2005 - L - Revised Manual (Edited to B/M 0010575 Revision 61)
March 10, 2006 - M - Revised Manual (Edited to B/M 0010575 Revision 67)

REVISION LOG

June 5, 2006 - N - Revised Manual (Edited to B/M 0010575 Revision 67)
October 5, 2006 - O - Revised Manual (Edited to B/M 0010575 Revision 70)
March 1, 2007 - P - Revised Manual (Edited to B/M 0010575 Revision 73)
June 14, 2007 - Q - Revised Manual (Edited to B/M 0010575 Revision 79)
October 5, 2007 - R - Revised Manual (Edited to B/M 0010575 Revision 81)
March 1, 2008 - S - Revised Manual (Edited to B/M 0010575 Revision 81)
August 22, 2008 - T - Revised Manual (Edited to B/M 0010575 Revision 96)
January 1, 2009 - U - Revised Manual (Edited to B/M 0010575 Revision 96)
June 15, 2009 - V - Revised Manual (Edited to B/M 0010575 Revision 104)
November 4, 2009 - W - Revised Manual (Edited to B/M 0010575 Revision 104)
May 3, 2010 - X - Revised Manual (Edited to B/M 0010575 Revision 110)
November 30, 2010 - Y - Revised Manual (Edited to B/M 0010575 Revision 119)
April 21, 2011 - Z - Revised Manual
July 22, 2011 - AA - Revised Manual
October 14, 2011 - AB - Revised Manual
January 10, 2012 - AC - Revised Manual
June 15, 2012 - AD - Revised Manual
August 2, 2012 - AE - Revised Manual
January 4, 2013 - AF - Revised Manual
April 2, 2013 - AG - Revised Manual
June 28, 2013 - AH - Revised Manual
September 23, 2013 - AI - Revised Manual
January 17, 2014 - AJ - Revised Manual
December 15, 2015 - AK - Revised Manual (Revision 3)
August 31, 2018 - AL - Revised Manual (Revision 1)

GENERAL INFORMATION

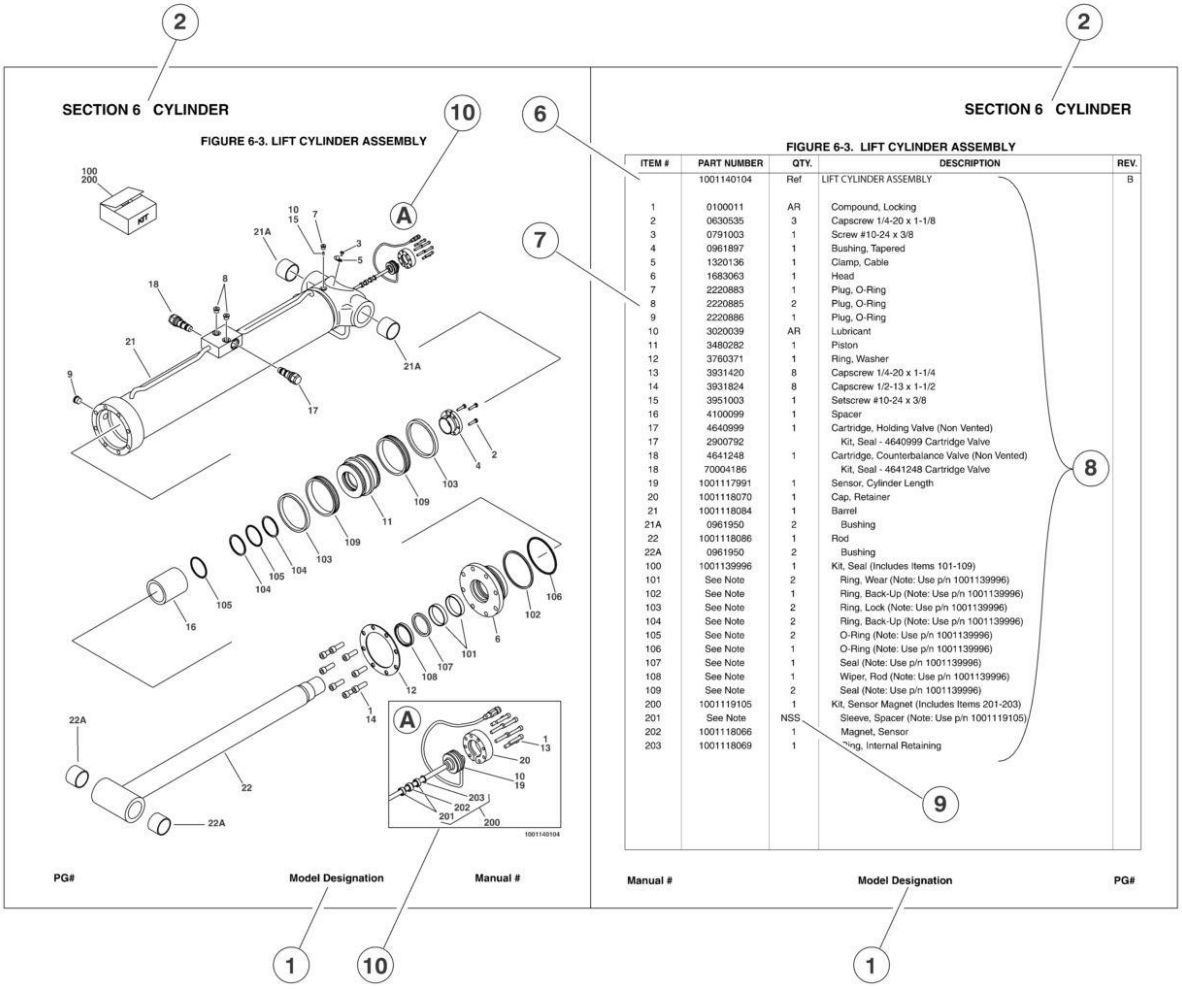

1) MACHINE IDENTIFICATION
Machines are identified by model and in some cases a combination of models, serial number (SN) or regional standard (i.e ANSI, CE,CSA). Components may also be identified by SN or manufacturer. common components that may be identified by these characteristics are engines and hydraulic components.

2) PARTS MANUAL ORGANIZATION
Product information in this manual is organized under section titles. Frame, Cylinder, Hydraulic and Electrical are a few examples. Each section is organized by figure and page number. The information within the Figure is then organized by item number, part number, description and corresponding illustration (s).

3) TABLE OF CONTENTS
A table of contents is found toward the beginning of the manual. Figure number, description and page number are provided for quick reference to the page containing the related information.

4) RECOMMENDED SPARE PARTS
The Recommended Spare Parts, located near the end of the manual, referance most frequently used maintenance parts.

5) PART NUMBER INDEX
A numerical index listing all part numbers and the corresponding page number(s) appears at the back of the manual.

GENERAL INFORMATION

6) NON-SERVICED PARTS
In some instances, it is necessary to display non-serviced parts, assemblies or installations. In the case of assemblies and installations there will be a Ref in the Qty column. In case of parts that are not available for service within assemblies or components, there will be a NSS (Not Sold Separately) or NLA (No Longer Available) listed in the Qty. column of the manual.

7) PARTS LIST ITEM NUMBERS
Numbers shown in the item# column correspond to numbers used in the associated illustration (s). Item numbers which are missing from the sequence in the parts list are not used on that page

8) INDENTED PARTS DESCRIPTION
An indented part description is included in the item under which it is indented.

9) ABB REVIATION AND SYMBOLS

AC ..... Alternating Current
ADE. ..... .Advanced Design Electronics
ANSI ..... .American National Standards Institute
AR.. ....As Required
ASSY ..... Assembly
AUX... ....Auxiliary
AWG ....American WireGauge
B/M. ..... Bill of Material
CE.. ....European Conformity
CCW ..... .Counter Clockwise
cm. ..... Centimeter
CW ..... .Clockwise
CSA. ....Canadian Standards Association
CYL... ..... .Cylinder
DIA. ..... .Diameter
DC ..... .Direct Current
EMS ..... Emergency Stop
ENG ..... .Engine
FT(ft).. ..... .Feet
GA(Ga).. ..... .Gauge
HYD ..... Hydraulic
Hz.. ..... Hertz
ID.. ..... .Inside Diameter
in... ..... .inches
ISO ....International Organization for Standards
JIC ..... .Joint Industry Council
KG ..... .Kilogram
L.. ....Liter
LB ....Pounds

LCD ..... Liquid Crystal Display
LED ..... Light Emitting Diodes
LH... ..... Left Hand
LSS ..... .Load Sensing System
M(m)... ..... Metric/Meter
MM (mm) ....Milimeter
mA. ..... Miliamps
NLA..... .....No Longer Available
NPT ..... National Pipe Threads
NSS ....Not Sold Separately
OD.. ....Outside Diameter
ORB ..... O-Ring Boss
ORFS ..... O-Ring Face Seal
OZ (oz). ..... .Ounces
PG ..... .Page
P/N. ....Part Number
qt..... ..Quarts
QTY..... .Quantity
REF ..... .Reference
REV ....Revision Level
RH... ..... Right Hand
SAE..... ..... Society of Automotive Engineers
SN.. ....Serial Number
SPEC(S)..... .....Specifications
T/T..... .....Turntable
UGM ....Universal Ground Module
V..... ..Volts
W... ..... Watts
#... ..... Number

10) ILLUSTRATION REFERANCE LETTERS
When necessary, illustrations may contain referance letters that are intended to track information (i. e. hoses, harnesses) from one point to another or to track visual enlargement of components to show details that may be located in another area on the illustration.

Note: Due to continuous product improvements, JLG Industries, Inc. reserves the right to make specification changes without prior notification. Contact JLG Industries, Inc. for updated information.

TABLE OF CONTENTS

SECTION 1 - FRAME 9

FIGURE 1-1. AXLE AND STEERING INSTALLATION WITHOUT TOW PACKAGE 10
FIGURE 1-2. AXLE AND STEERING INSTALLATION WITH TOW PACKAGE 14
FIGURE 1-3. TIRE AND WHEEL DRIVE INSTALLATIONS 18
FIGURE 1-4. DRIVE HUB ASSEMBLY (2WD) (Prior to SN 0300083331) 22
FIGURE 1-5. DRIVE HUB/BRAKE ASSEMBLY (4WD) (Prior to SN 0300083331) 24
FIGURE 1-6. DRIVE HUB/BRAKE ASSEMBLY (SN 0300083331 through 0300140000) 28
FIGURE 1-7. DRIVE MOTOR ASSEMBLY (2WD) (Prior to SN 0300083331) 32
FIGURE 1-8. DRIVE MOTOR ASSEMBLY (2WD AND ALL 4WD MACHINES) (4 BOLT ASSEMBLY) (SN 0300083331 through 0300098641) 34
FIGURE 1-9. DRIVE MOTOR ASSEMBLY (5 BOLT ASSEMBLY) 38
FIGURE 1-10. FRAME VALVES AND SHIELDS INSTALLATIONS (Prior to SN 0300083331) 42
FIGURE 1-11. FRAME VALVES AND SHIELDS INSTALLATIONS (SN 0300083331 through 0300140000) 44
FIGURE 1-12. TOW PACKAGE INSTALLATION 46

SECTION 2 - TURNTABLE 49

FIGURE 2-1. CONTROL VALVES INSTALLATIONS 50
FIGURE 2-2. MAIN CONTROL VALVE ASSEMBLY 54
FIGURE 2-3. TURNTABLE BEARING AND SWING DRIVE INSTALLATION 58
FIGURE 2-4. SWING HUB ASSEMBLY (Prior to SN 0300066417) 62
FIGURE 2-5. SWING MOTOR ASSEMBLY (Prior to SN 0300066417) 64
FIGURE 2-6. SWING MOTOR/HUB ASSEMBLY (SN 0300066417 through 0300134351) 66
FIGURE 2-7. SWING MOTOR/HUB ASSEMBLY (SN 0300134352 through 0300140000) 72
FIGURE 2-8. CATERPILLAR ENGINE INSTALLATION (Prior to SN 0300139398) 76
FIGURE 2-9. CATERPILLAR ENGINE INSTALLATION (SN 0300139398 through 0300140000) 86
FIGURE 2-10. DEUTZ ENGINE INSTALLATION (Prior to SN 0300077586) 94
FIGURE 2-11. DEUTZ ENGINE INSTALLATION (SN 0300077586 through 0300140000) 100
FIGURE 2-12. FORD ENGINE INSTALLATION (Prior to SN 0300079612) 110
FIGURE 2-13. FORD ENGINE INSTALLATION (SN 0300079612 through 0300140000) 116
FIGURE 2-14. DUAL FUEL INSTALLATIONS 122
FIGURE 2-15. GM ENGINE INSTALLATION (Prior to SN 0300139210) 126
FIGURE 2-16. GM ENGINE INSTALLATION (SN 0300139210 through 0300140000) 132
FIGURE 2-17. PISTON PUMP ASSEMBLY 138
FIGURE 2-18. LOAD SENSING PUMP ASSEMBLY 142
FIGURE 2-19. TANK INSTALLATIONS 146
FIGURE 2-20. ROTARY COUPLING INSTALLATION (Prior to SN 0300083331) 150
FIGURE 2-21. ROTARY COUPLING INSTALLATION (SN 0300083331 through 0300140000) 152
FIGURE 2-22. GROUND CONTROL BOX ASSEMBLY (WITHOUT UGM) 156
FIGURE 2-23. GROUND CONTROL BOX ASSEMBLY (WITH UGM) 162
FIGURE 2-24. LIMIT SWITCHES, LIGHTS AND ALARM INSTALLATIONS 166
FIGURE 2-25. HOODS INSTALLATION (Prior to SN 0300089982) 170
FIGURE 2-26. HOODS INSTALLATION (SN 0300089982 through 0300140000) 176
FIGURE 2-27. ENGINE TRAY JACK INSTALLATION (OPTIONAL) 182
FIGURE 2-28. 2500W GENERATOR INSTALLATION - CATERPILLAR MACHINES (OPTIONAL) 184
FIGURE 2-29. 2500W GENERATOR INSTALLATION - DEUTZ MACHINES (OPTIONAL) 188
FIGURE 2-30. 2500W GENERATOR INSTALLATION - FORD MACHINES (OPTIONAL) (Prior to SN 0300079612) 192
FIGURE 2-31. 2500W GENERATOR INSTALLATION - FORD MACHINES (OPTIONAL) (SN 0300079612 through 0300140000) 196
FIGURE 2-32. 2500W GENERATOR INSTALLATION - GM MACHINES (OPTIONAL) 200
FIGURE 2-33. 7500W SKYPOWER GENERATOR INSTALLATION - CATERPILLAR AND DEUTZ ENGINES 204
FIGURE 2-34. 7500W SKYPOWER GENERATOR INSTALLATION - FORD ENGINES 210
FIGURE 2-35. 7500W SKYPOWER GENERATOR INSTALLATION - GM ENGINES 214

SECTION 3 - BOOM 219

FIGURE 3-1. TOWER BOOM, UPRIGHT AND CYLINDERS INSTALLATION 220
FIGURE 3-2. MAIN BOOM INSTALLATION - 800S 222
FIGURE 3-3. MAIN BOOM INSTALLATION - 860SJ 226
FIGURE 3-4. MAIN BOOM ASSEMBLY 230
FIGURE 3-5. ROTATOR ASSEMBLY 234
FIGURE 3-6. PLATFORM SUPPORT AND CONTROL VALVES INSTALLATIONS 236
FIGURE 3-7. BOOM CABLE CLAMPS INSTALLATIONS 240

SECTION 4 - PLATFORM 243

TABLE OF CONTENTS

FIGURE 4-1. PLATFORM ASSEMBLIES (FRONT ENTRY PLATFORM) 244
FIGURE 4-2. PLATFORM ASSEMBLIES - SIDE ENTRY (SN 0300067916 through 0300140000)....248
FIGURE 4-3. PLATFORM COMPONENTS INSTALLATION (FALL ARREST PLATFORM) 252
FIGURE 4-4. PLATFORM CONSOLE ASSEMBLY 254
FIGURE 4-5. CONTROLLER ASSEMBLY (LIFT AND SWING)....258
FIGURE 4-6. CONTROLLER ASSEMBLY (LIFT AND SWING)....260
FIGURE 4-7. CONTROLLER ASSEMBLY (LIFT AND SWING)....262
FIGURE 4-8. CONTROLLER ASSEMBLY (DRIVE AND STEER) 266
FIGURE 4-9. CONTROLLER ASSEMBLY (DRIVE AND STEER) 268
FIGURE 4-10. CONTROLLER ASSEMBLY (DRIVE AND STEER) 270
FIGURE 4-11. SOFT TOUCH INSTALLATION (FRONT ENTRY PLATFORM) (OPTIONAL) 272
FIGURE 4-12. SOFT TOUCH SYSTEM INSTALLATION (SIDE ENTRY PLATFORM) (OPTIONAL)....276
FIGURE 4-13. PLATFORM PADDING INSTALLATION (SIDE ENTRY PLATFORM) (OPTIONAL)....278

SECTION 5 - CYLINDER....281

FIGURE 5-1. AXLE LOCKOUT CYLINDER ASSEMBLY....282
FIGURE 5-2. LEVEL CYLINDER ASSEMBLY - PLATFORM SLAVE....284
FIGURE 5-3. LEVEL CYLINDER ASSEMBLY - PLATFORM SLAVE (800S) (SERVICE REPLACEMENT)....286
FIGURE 5-4. LEVEL CYLINDER ASSEMBLY - PLATFORM SLAVE (860SJ) (SERVICE REPLACEMENT)....288
FIGURE 5-5. LIFT CYLINDER ASSEMBLY - JIB (860SJ ONLY) (ORIGINAL EQUIPMENT)....290
FIGURE 5-6. LIFT CYLINDER ASSEMBLY - JIB (860SJ ONLY) (USAGE MAY VARY) (SERVICE REPLACEMENT) 292
FIGURE 5-7. LEVEL CYLINDER ASSEMBLY - JIB (860SJ ONLY) (USAGE MAY VARY) (SERVICE REPLACEMENT) 294
FIGURE 5-8. LIFT CYLINDER ASSEMBLY - MAIN BOOM....296
FIGURE 5-9. LIFT CYLINDER ASSEMBLY - MAIN BOOM (800S) (SERVICE REPLACEMENT) 300
FIGURE 5-10. LIFT CYLINDER ASSEMBLY - MAIN BOOM (860SJ) (SERVICE REPLACEMENT)....302
FIGURE 5-11. STEER CYLINDER ASSEMBLY 304
FIGURE 5-12. TELESCOPE CYLINDER ASSEMBLY....306
FIGURE 5-13. TELESCOPE CYLINDER ASSEMBLY (800S) (SERVICE REPLACEMENT) 310
FIGURE 5-14. TELESCOPE CYLINDER ASSEMBLY (860SJ) (SERVICE REPLACEMENT) 312

SECTION 6 - HYDRAULIC....315

FIGURE 6-1. AXLE LOCKOUT HYDRAULIC DIAGRAM....316
FIGURE 6-2. DRIVE HYDRAULIC DIAGRAM - 2WD (Prior to SN 0300083331)....318
FIGURE 6-3. DRIVE HYDRAULIC DIAGRAM - 2WD (SN 0300083331 through 0300140000) 322
FIGURE 6-4. DRIVE HYDRAULIC DIAGRAM - 4WD (Prior to SN 0300083331)....326
FIGURE 6-5. DRIVE HYDRAULIC DIAGRAM - 4WD (SN 0300083331 through 0300140000) 330
FIGURE 6-6. MANUAL DESCENT HYDRAULIC DIAGRAM (OPTIONAL)....334
FIGURE 6-7. STANDARD HYDRAULIC DIAGRAM....336
FIGURE 6-8. HYDRAULIC DIAGRAM LIST....340

SECTION 7 - ELECTRICAL....343

FIGURE 7-1. ELECTRICAL DIAGRAM LIST 344
FIGURE 7-2. HARNESS COMPONENTS INSTALLATION (WITHOUT UGM) (Prior to SN 0300085332) 346
FIGURE 7-3. HARNESS COMPONENTS INSTALLATION (WITHOUT UGM) (SN 0300085332 through 0300140000)....358
FIGURE 7-4. HARNESS COMPONENTS INSTALLATION (WITH UGM) 376

SECTION 8 - DECALS 391

FIGURE 8-1. DECAL INSTALLATION (ANSI SPEC) (Prior to SN 0300088933) 392
FIGURE 8-2. DECAL INSTALLATION (ANSI SPEC) (SN 0300088933 through 0300140000)....396
FIGURE 8-3. DECAL INSTALLATION (COUNTRY SPEC) (Prior to SN 0300088933)....400
FIGURE 8-4. DECAL INSTALLATION (COUNTRY SPEC) (SN 0300088933 through 0300140000) 406

SECTION 9 - RECOMMENDED SERVICE PARTS STOCK....413

FIGURE 9-1. MODEL 800S/860SJ STANDARD PARTS....414
FIGURE 9-2. MODEL 800S/860SJ VARIABLE PARTS....416

SECTION 10 - SPECIAL OPTIONS....417

FIGURE 10-1. SPECIAL OPTIONS 418
FIGURE 10-2. SKY WELDER INSTALLATION....426

PART NUMBER INDEX....431

SECTION 1 - FRAME

SECTION 1 - FRAME

FIGURE 1-1. AXLE AND STEERING INSTALLATION WITHOUT TOW PACKAGE

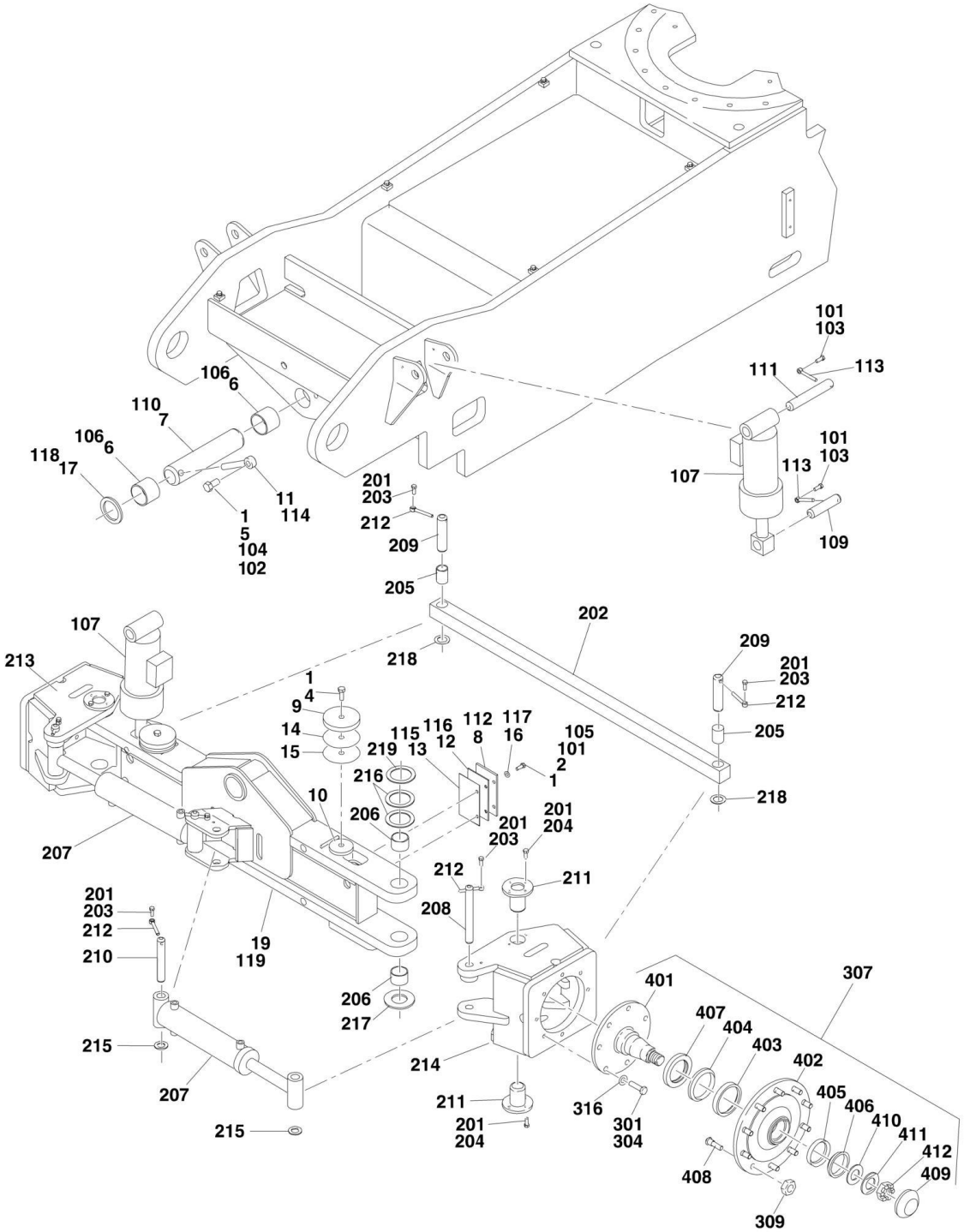

FIGURE 1-1. AXLE AND STEERING INSTALLATION WITHOUT TOW PACKAGE

ITEM	PART NUMBER	QTY	DESCRIPTION	REV
	0258286	Ref	**FIXED AXLE INSTALLATION**	C
1	0100011	AR	Compound, Locking	
2	0681608	4	Bolt 3/8in-16NC x 1in (Grade 8)	
4	0641820	2	Bolt 1/2in-13NC x 2-1/2in	
5	0642212	1	Bolt 3/4in-10NC x 1-1/2in	
6	0962102	2	Bushing, Garmax	
7	3422703	1	Pin, Axle Pivot	
8	3538047	2	Shim, Wear	
9	3539877	2	Plate, Stop	
10	3539878	2	Plate, Stop	
11	3841287	1	Keeper, Pin	
12	4070878	AR	Shim 1/16in	
13	4070879	AR	Shim 1/8in	
14	4070944	AR	Shim 1/16in	
15	4070945	AR	Shim 1/4in	
16	4711600	4	Flatwasher 3/8in Thin	
17	4740472	1	Washer, Special	
19	4845658	1	Axle Weldment	
		Ref	**OSCILLATING AXLE INSTALLATION**	
	0271135	Ref	**Oscillating Axle Installation (Prior to SN 0300083331)**	B
	0274571	Ref	**Oscillating Axle Installation (SN 0300083331 through 0300140000)**	A
101	0100011	AR	Compound, Locking	
102	0100019	AR	Compound, Locking	
103	0641608	4	Bolt 3/8in-16NC x 1in	
104	0642212	1	Bolt 3/4in-10NC x 1-1/2in	
105	0681608	4	Bolt 3/8in-16NC x 1in (Grade 8)	
106	0962102	2	Bushing, Garmax	
107	1683078	2	Lockout Cylinder Assembly (See CYLINDER SECTION for Breakdown)	
109	3422702	2	Pin	
110	3422703	1	Pin, Main Pivot	
111	3422755	2	Pin	
112	3538047	2	Shim, Axle Wear	
113	3841143	4	Shaft, Keeper 3/8in Dia x 3in	
114	3841287	1	Shaft, Keeper 3/8in Dia x 6in	
115	4070878	2	Shim, Axle Wear	
116	4070879	2	Shim, Axle Wear	
117	4711600	4	Flatwasher 3/8in Thin	
118	4740472	1	Washer, Special	
119	4845658	1	Axle Weldment	
	0272003	Ref	**STEERING INSTALLATIONS (2WS)**	B
		Ref	**Note: Before ordering king pin kit, verify that machines is equipped with king pin with 4 bolt holes (OEN) or king pin with 8 bolt holes (Service Kit) - If the king pin hole in the axle measurement exceeds 2.252in OD or is elongated, use King Pin Kit p/n 1001137261.**	
201	0100011	AR	Compound, Locking	
202	0362726	1	Tie-Rod	
203	0641608	6	Bolt 3/8in-16NC x 1in	
204	0641810	16	Bolt 1/2in-13NC x 1-1/4in	

SECTION 1 - FRAME

ITEM	PART NUMBER	QTY	DESCRIPTION	REV
205	0962152	2	Bearing	
206	0962448	4	Bearing	
207	1683740	2	Steer Cylinder Assembly (See CYLINDER SECTION for Breakdown)	
208	3422701	2	Pin, Steer, Spindle Attach	
209	3422702	2	Pin, Tie-Rod	
210	3422754	2	Pin, Attach	
211	3422849	4	Kingpin	
212	3841143	6	Shaft, Keeper 3/8in x 3in	
213	4130389	1	Spindle Weldment (RH)	
214	4130390	1	Spindle Weldment (LH)	
215	4740111	4	Washer, Special	
216	4740256	AR	Thrustwasher	
217	4740463	2	Washer, Special	
218	4740473	2	Thrustwasher	
219	1001103810	2	Thrustwasher **(SN 0300134352 through 0300140000)**	
		Ref	**HUB INSTALLATION (2WD ONLY)**	
	0271341	Ref	**Hub Installation (Prior to SN 0300083331)**	E
	0273378	Ref	**Hub Installation (SN 0300083331 through 0300140000)**	E
301	0100011	AR	Compound, Locking	
304	0682016	16	Bolt 5/8in-16NC x 2in (Grade 8)	
307	2780229	2	Hub Assembly (See Items 401-412 for Breakdown)	
309	3300007	20	Lugnut	
316	4892000	16	Flatwasher 5/8in Hardened	
	2780229	Ref	**HUB ASSEMBLY (2WD ONLY)**	A
401	7017052	2	Spindle (1 per Assembly)	
402	7017053	2	Housing (1 per Assembly)	
403	7010404	2	Cup, Bearing - Inner (1 per Assembly)	
404	7010405	2	Cone, Bearing - Inner (1 per Assembly)	
405	7017056	2	Cup, Bearing - Outer (1 per Assembly)	
406	7017055	2	Cone, Bearing - Outer (1 per Assembly)	
407	7010406	2	Seal, Lip (1 per Assembly)	
408	7000265	20	Stud (10 per Assembly)	
409	7017054	2	Dust Cap (1 per Assembly)	
410	7017051	2	Washer, Special (1 per Assembly)	
411	7017057	2	Washer, Tanged (1 per Assembly)	
412	7017058	2	Nut, Bearing (1 per Assembly)	

FIGURE 1-2. AXLE AND STEERING INSTALLATION WITH TOW PACKAGE

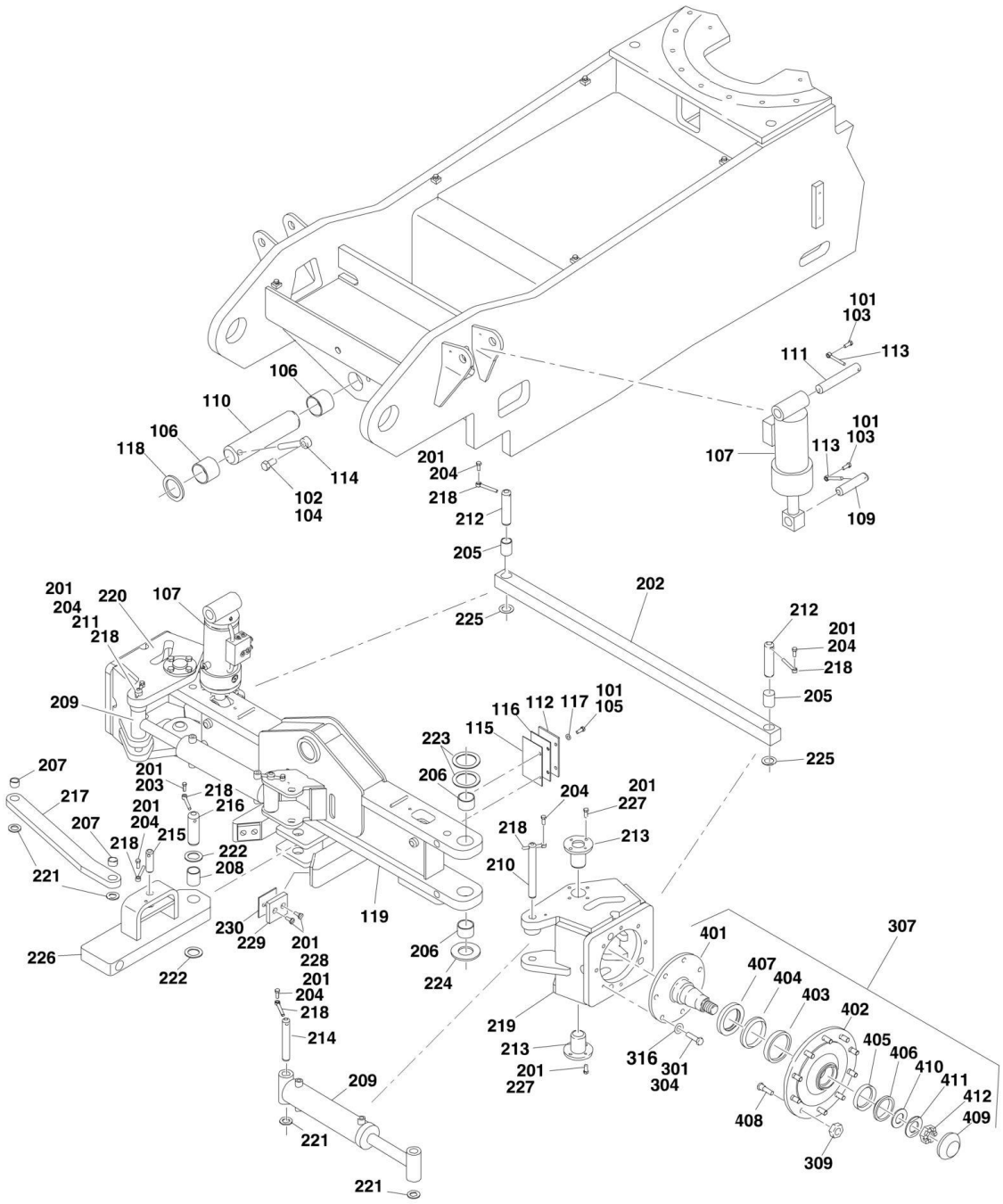

FIGURE 1-2. AXLE AND STEERING INSTALLATION WITH TOW PACKAGE

ITEM	PART NUMBER	QTY	DESCRIPTION	REV
		Ref	**OSCILLATING AXLE INSTALLATION**	
	0271353	Ref	**Oscillating Axle Installation (Prior to SN 0300083331)**	A
	0274572	Ref	**Oscillating Axle Installation (SN 0300083331 through 0300140000)**	A
101	0100011	AR	Compound, Locking	
102	0100019	AR	Compound, Locking	
103	0641608	4	Bolt 3/8in-16NC x 1in	
104	0642212	1	Bolt 3/4in-10NC x 1-1/2in	
105	0681608	4	Bolt 3/8in-16NC x 1in (Grade 8)	
106	0962102	2	Bushing, Garmax	
107	1683078	2	Lockout Cylinder Assembly (See CYLINDER SECTION for Breakdown)	
109	3422702	2	Pin	
110	3422703	1	Pin, Main Pivot	
111	3422755	2	Pin	
112	3538047	2	Shim, Axle Wear	
113	3841143	4	Shaft, Keeper 3/8in Dia x 3in	
114	3841287	1	Shaft, Keeper 3/8in Dia x 6in	
115	4070878	2	Shim, Axle Wear	
116	4070879	2	Shim, Axle Wear	
117	4711600	4	Flatwasher 3/8in Thin	
118	4740472	1	Washer, Special	
119	4846413	1	Axle Weldment	
	0271352	Ref	**STEERING INSTALLATION**	E
		Ref	**Note: Before ordering king pin kit, verify that machines is equipped with king pin with 4 bolt holes (OEN) or king pin with 8 bolt holes (Service Kit) - If the king pin hole in the axle measurement exceeds 2.252in OD or is elongated, use King Pin Kit p/n 1001137261.**	
201	0100011	AR	Compound, Locking	
202	0362726	1	Tie-Rod	
203	0641508	1	Bolt 5/16in- 18NC x 1in	
204	0641608	7	Bolt 3/8in-16NC x 1in	
205	0962152	2	Bearing, Garmax	
206	0962448	4	Bearing, Garmax	
207	0962292	2	Bearing, Garmax	
208	0962348	1	Bearing, Garmax	
209	1683740	2	Steer Cylinder Assembly (See CYLINDER SECTION for Breakdown)	
210	3422567	1	Pin, Steer Spindle Attach (RH)	
211	3422701	1	Pin, Steer Spindle Attach (LH)	
212	3422702	2	Pin, Tie-Rod	
213	3422972	4	Kingpin	
214	3422754	2	Pin, Attach	
215	3422813	1	Pin	
216	3422848	1	Pin, Hitch	
217	2573001	1	Link, Connecting	
218	3841143	8	Shaft, Keeper 3/8in x 3in	
219	4130390	1	Spindle Weldment (LH)	
220	4130388	1	Spindle Weldment (RH)	
221	4740111	6	Washer, Special	

SECTION 1 - FRAME

ITEM	PART NUMBER	QTY	DESCRIPTION	REV
222	4740155	2	Thrustwasher	
223	4740256	4	Thrustwasher	
224	4740463	2	Thrustwasher	
225	4740473	2	Washer, Special	
226		Ref	Bar, Pivot Options:	
226	4846414	1	Bar, Pivot **(Prior to SN 0300074135)**	
226	4846935	1	Bar, Pivot **(SN 0300074135 through 0300140000)**	
227	0641810	16	Bolt 1/2in-13NC x 1-1/4in	
228		Ref	Screw Options:	
228	0741607	4	Screw 3/8in-16NC x 3/4in **(SN 0300070782 through 0300074134)**	
228	0741609	4	Screw 3/8in-16NC x 1-1/4in **(SN 0300074135 through 0300140000)**	
229	3340966	2	Pad, Stop **(SN 0300070782 through 0300140000)**	
230	4071059	4	Shim **(SN 0300070782 through 0300140000)**	
		Ref	**HUB INSTALLATION (2WD ONLY)**	
	0271341	Ref	**Hub Installation (Prior to SN 0300083331)**	E
	0273378	Ref	**Hub Installation (SN 0300083331 through 0300140000)**	E
301	0100011	AR	Compound, Locking	
304	0682016	16	Bolt 5/8in-16NC x 2in (Grade 8)	
307	2780229	2	Hub Assembly (See Items 401-412 for Breakdown)	
309	3300007	20	Lugnut	
316	4892000	16	Flatwasher 5/8in Hardened	
	2780229	Ref	**HUB ASSEMBLY (2WD ONLY)**	A
401	7017052	2	Spindle (1 per Assembly)	
402	7017053	2	Housing (1 per Assembly)	
403	7010404	2	Cup, Bearing - Inner (1 per Assembly)	
404	7010405	2	Cone, Bearing - Inner (1 per Assembly)	
405	7017056	2	Cup, Bearing - Outer (1 per Assembly)	
406	7017055	2	Cone, Bearing - Outer (1 per Assembly)	
407	7010406	2	Seal, Lip (1 per Assembly)	
408	7000265	20	Stud (10 per Assembly)	
409	7017054	2	Dust Cap (1 per Assembly)	
410	7017051	2	Washer, Special (1 per Assembly)	
411	7017057	2	Washer, Tanged (1 per Assembly)	
412	7017058	2	Nut, Bearing (1 per Assembly)	

FIGURE 1-3. TIRE AND WHEEL DRIVE INSTALLATIONS

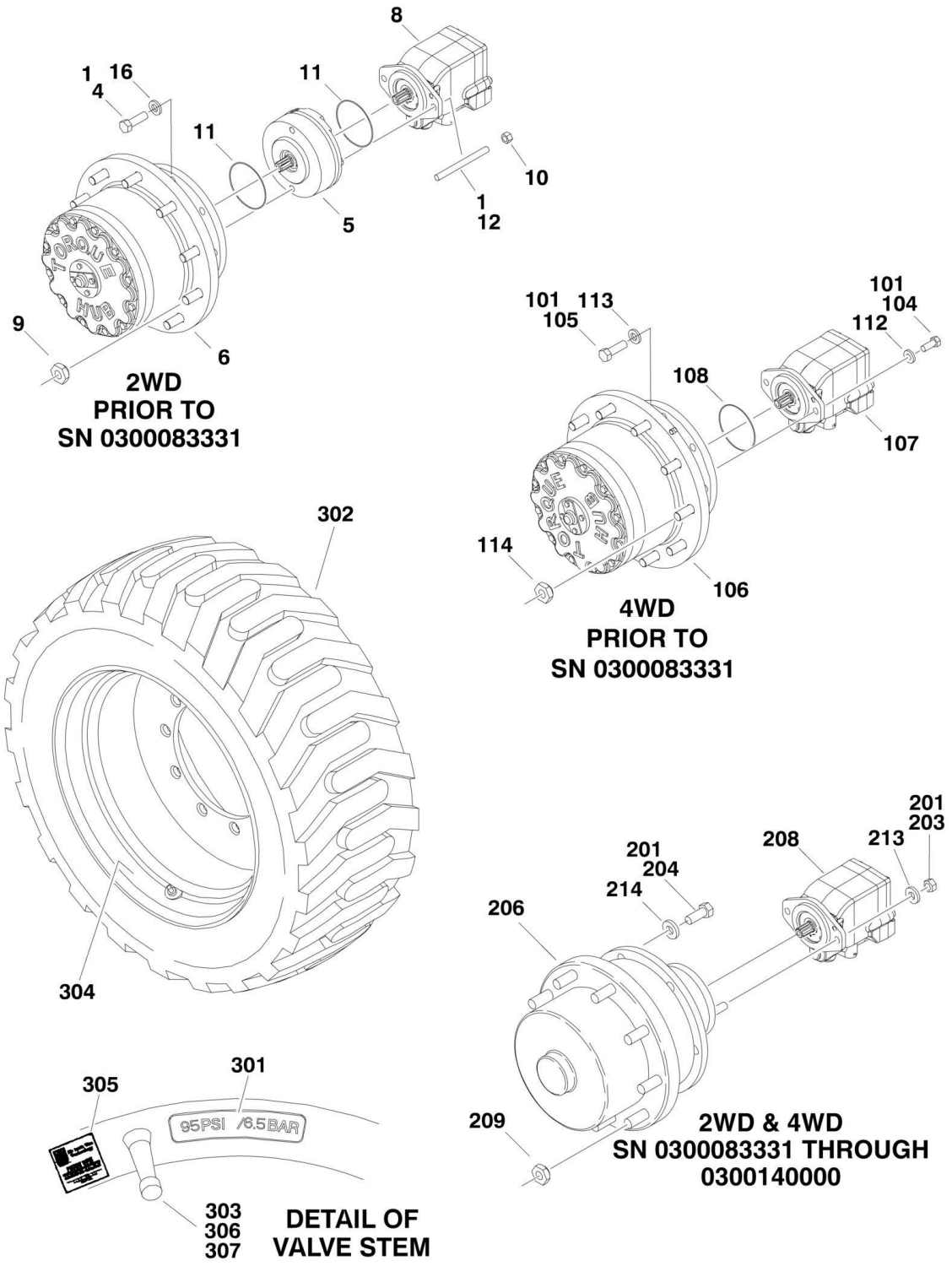

FIGURE 1-3. TIRE AND WHEEL DRIVE INSTALLATIONS

ITEM	PART NUMBER	QTY	DESCRIPTION	REV
		Ref	**WHEEL DRIVE INSTALLATIONS**	
	0271341	Ref	**2WD (Prior to SN 0300083331)**	E
1	0100011	AR	Compound, Locking	
4	0682016	16	Bolt 5/8in-11NC x 2in (Grade 8)	
5	0920117	NLA	Drive Brake Assembly (Use p/n 0920119)	
5	7018612	1	Kit, Repair	
5	7000731	2	Gasket (Between Components)	
6	2780227	2	Drive Hub Assembly (See DRIVE HUB ASSEMBLY for Breakdown)	
8	3160268	2	Drive Motor Assembly (See DRIVE MOTOR ASSEMBLY for Breakdown)	
9	3300007	20	Nut, Wheel	
10	3311801	4	Nut 1/2in - 13 NC	
11	3790045	4	O-Ring	
12	4300097	4	Stud	
16	4892000	16	Flatwasher 5/8in Hardened	
	0271349	Ref	**4WD (Prior to SN 0300083331)**	E
101	0100011	AR	Compound, Locking	
104	0681810	8	Bolt 1/2in-13NC x 1-1/4in (Grade 8)	
105	0682016	32	Bolt 5/8in-11NC x 2in (Grade 8)	
106	2780259	4	Drive Hub/Brake Assembly (See DRIVE HUB/BRAKE ASSEMBLY for Breakdown)	
107	3160266	4	Drive Motor Assembly (See DRIVE MOTOR ASSEMBLY for Breakdown)	
108	3790045	4	O-Ring	
112	4891800	4	Flatwasher 1/2in Hardened	
113	4892000	32	Flatwasher 5/8in Hardened	
114	3300007	40	Nut, Wheel	
		Ref	**WHEEL DRIVE INSTALLATION (SN 0300083331 through 0300140000)**	
	0273378	Ref	**Wheel Drive Installation 2WD**	E
	0273704	Ref	**Wheel Drive Installation 4WD**	D
		Ref	**Note: 2WD Qty Shown. For 4WD, Double Qty Shown.**	
201	0100011	AR	Compound, Locking	
203	3311801	4	Nut 1/2in-13 NC	
204	0682016	16	Bolt 5/8in-11NC x 2in (Grade 8)	
205	2300016	AR	Fluid, Hydraulic (Not Shown)	
206	2780272	2	Drive Hub Assembly (See DRIVE HUB/BRAKE ASSEMBLY for Breakdown)	
207	3020008	AR	Lubricant (Not Shown)	
208		Ref	Drive Motor Assembly Options (See DRIVE MOTOR ASSEMBLY for Breakdown)	
208	3160308	2	Drive Motor Assembly 2WD Rear **(Prior to SN 0300098924)**	
208	3160347	2	Drive Motor Assembly 2WD Rear **(SN 0300098924 through 0300140000)**	
208	3160266	4	Drive Motor Assembly 4WD Front and Rear **(Prior to SN 0300098641)**	
208	3160348	4	Drive Motor Assembly 4WD Front and Rear **(SN 0300098641 through 0300140000)**	
209	3300007	20	Nut, Wheel	
213	4891800	4	Flatwasher, 1/2in Hardened	
214	4892000	16	Flatwasher 5/8in Hardened	

SECTION 1 - FRAME

ITEM	PART NUMBER	QTY	DESCRIPTION	REV
		Ref	**TIRE AND WHEEL INSTALLATIONS**	
	0270885	Ref	**15-625 NHS Pneumatic**	A
	0272322	Ref	**15-625 NHS Pneumatic with Sealant**	1
	0270886	Ref	**15-625 NHS Foam-Filled**	A
	0270888	Ref	**18-625 NHS Foam-Filled**	A
	0271419	Ref	**41/18LL x 22.5 Sand and Turf Foam-Filled**	B
	0271083	2	15-625 NHS Pneumatic Left Side	
	0271084	2	15-625 NHS Pneumatic Right Side	
	0272334	2	15-625 NHS Pneumatic with Sealant Left Side	
	0272333	2	15-625 NHS Pneumatic with Sealant Right Side	
	0271085	2	15-625 NHS Foam-Filled Left Side	
	0271086	2	15-625 NHS Foam-Filled Right Side	
	0271090	2	18-625 NHS Foam-Filled Left Side	
	0271091	2	18-625 NHS Foam-Filled Right Side	
	0271419	4	41/18LL x 22.5 Sand and Turf Foam-Filled	
		Ref	**Note: Assemblies may require ballast/foam filling to manufacturer's specifications prior to installing on a machine. Refer to Operation and Safety or Service and Maintenance Manuals. Purchase individual tire and/or rim only if able to foam fill tire and wheel assembly, otherwise, purchase complete assembly.**	
301		Ref	Decal Options (Pneumatic Only):	
301	1702701	1	95 PSI/6.5 Bar (15-625 Tires)	
302		Ref	Tire Options:	
302	4520252	1	15-625 Tire	
302	4520253	1	18-625 Tire	
302	4520256	1	41/18LL x 22.5 Sand and Turf Tire	
303	4640113	1	Valve, Air	
304		Ref	Rim, Wheel Options:	
304	4860224	1	13 x 24.5 Rim (Use with 15-625 Tires)	
304	4860225	1	15 x 24.5 Rim (Use with 18-625 Tires)	
304	4860230	1	22.5 x 14 (41/18LL x 22.5 Sand and Turf Tires)	
305	1705364	AR	Decal - Tire Sealant (With Sealant Only)	
306	1300019	AR	Chemical, Tire Sealant (Green) (With Sealant Only)	
307	1120552	AR	Cap, Valve Stem (Green) (With Sealant Only)	

FIGURE 1-4. DRIVE HUB ASSEMBLY (2WD) (Prior to SN 0300083331)

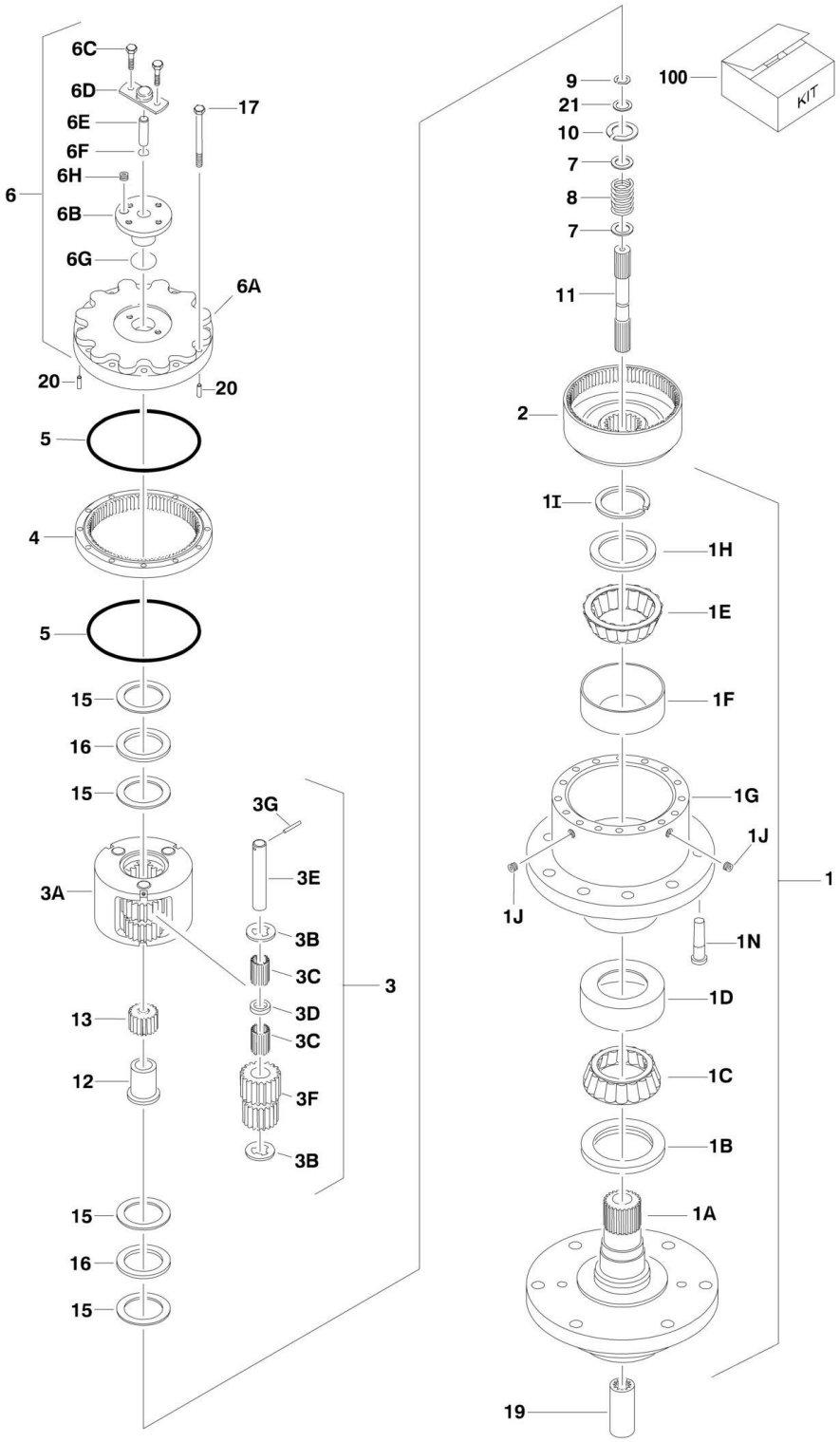

FIGURE 1-4. DRIVE HUB ASSEMBLY (2WD) (Prior to SN 0300083331)

ITEM	PART NUMBER	QTY	DESCRIPTION	REV
	2780227	Ref	**DRIVE HUB ASSEMBLY (2WD)**	A
1	See Note	1	Spindle/Housing Assembly (Note: Not Available - Purchase Individual Components)	
1A	7010464	1	Spindle	
1B	7000236	1	Seal	
1C	7000273	1	Cone, Bearing	
1D	7000272	1	Cup, Bearing	
1E	7000275	1	Cone, Bearing	
1F	7000274	1	Cup, Bearing	
1G	7017033	1	Housing	
1H	7000239	1	Thrustwasher	
1I	7000240	1	Ring, Retaining	
1J	7001928	1	Plug, Pipe	
1N	7000265	10	Stud, Wheel	
2	7017034	1	Gear, Ring	
3	See Note	NLA	Carrier Assembly (Note: Not Available - Use p/n 7024145)	
3A	7017036	NLA	Carrier (use p/n 7024145)	
3B	7001901	6	Thrustwasher, Tanged	
3C	7001902	96	Bearing, Needle	
3D	7001903	3	Spacer, Thrust	
3E	7017040	3	Shaft, Planet	
3F	7017037	3	Gear, Cluster	
3G	7001906	3	Rollpin	
4	7017035	1	Gear, Internal	
5	7000224	1	O-Ring	
6	See Note	NSS	Cover Assembly (Note: Not Available - Purchase Individual Components)	
6A	7024155	1	Cover	
6B	7017042	1	Cap	
6C	7000220	4	Bolt 1/4in-20NC x 3/4in	
6D	7000231	1	Cap, Disengage	
6E	7000235	1	Rod, Disengage	
6F	7000213	1	O-Ring	
6G	7000238	1	O-Ring	
6H	7017048	1	Plug, Pipe	
7	7000282	2	Thrustwasher	
8	7000283	1	O-Ring	
9	7000284	1	Ring, Retaining	
10	7017027	1	Ring, Retaining	
11	7017039	1	Shaft, Input	
12	7017041	1	Spacer, Input	
13	7017038	1	Gear, Sun	
15	7000287	4	Thrustwasher	
16	7000288	2	Thrustwasher	
17	7000289	12	Bolt 3/8in-16NC x 2-1/2in (Grade 8)	
19	7000290	1	Coupling	
20	7017047	2	Pin, Dowel	
21	7017050	AR	Thrustwasher	
		Ref	**KIT OPTIONS:**	
100	7017068	1	Seal Kit - Hub (Includes Items 1B, 1I, 5, 6F, 6G, 15 & 16)	

FIGURE 1-5. DRIVE HUB/BRAKE ASSEMBLY (4WD) (Prior to SN 0300083331)

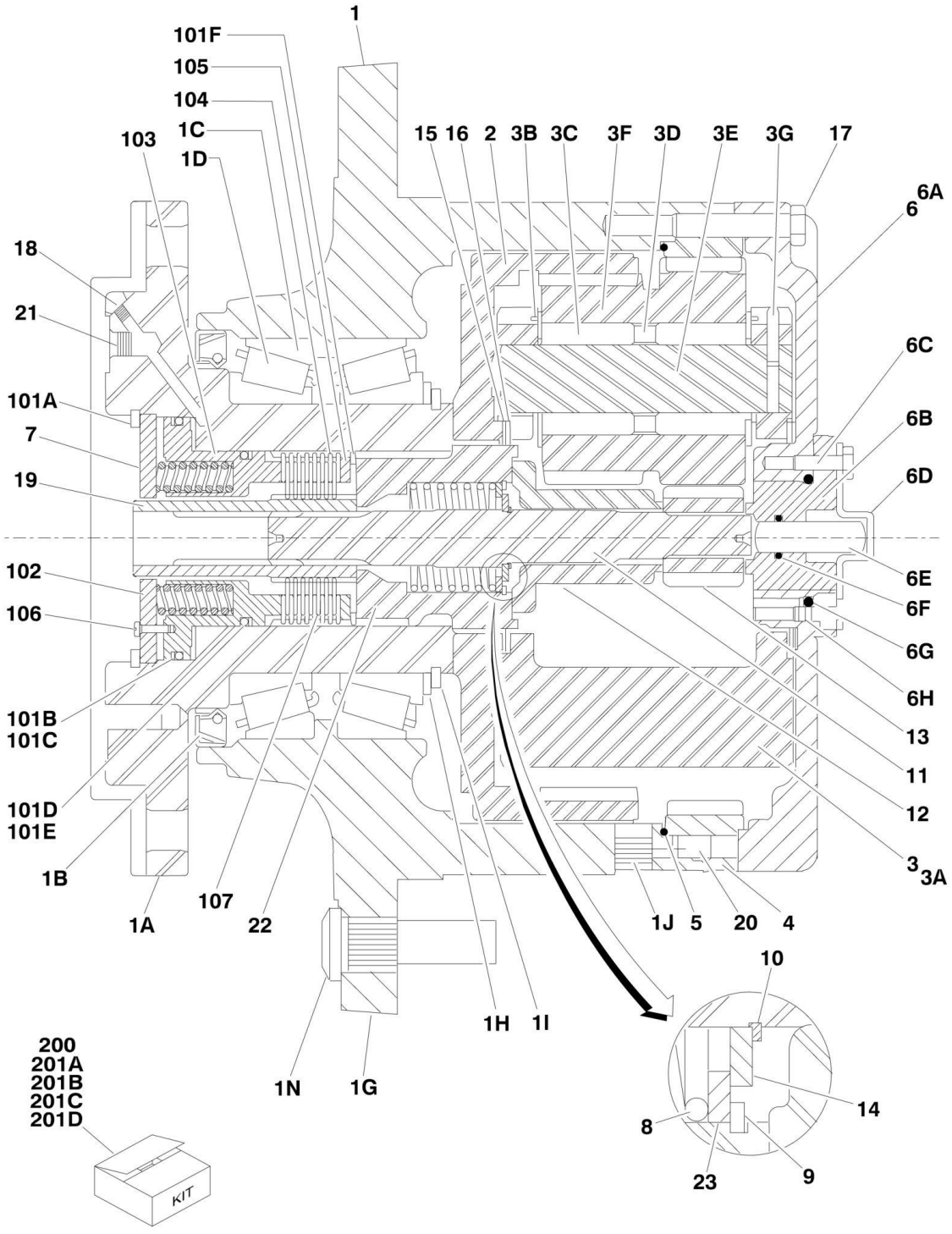

FIGURE 1-5. DRIVE HUB/BRAKE ASSEMBLY (4WD) (Prior to SN 0300083331)

ITEM	PART NUMBER	QTY	DESCRIPTION	REV
	2780259	Ref	**DRIVE HUB ASSEMBLY (2WD)**	A
1	See Note	NSS	Spindle/Housing Assembly (Note: Not Available - Purchase Individual Components)	
1A	7024139	1	Spindle	
1B	7024140	1	Seal	
1C	7024144	2	Cone, Bearing	
1D	7024143	2	Cup, Bearing	
1G	7024142	1	Housing	
1H	7024137	1	Thrustwasher	
1I	7024141	1	Ring, Retaining	
1J	7001928	1	Plug, Pipe	
1N	7000265	10	Stud, Wheel	
2	7024150	1	Gear, Internal	
3	7024145	1	Carrier Assembly	
3A	7024147	NLA	Carrier (use p/n 7024145)	
3B	7001901	6	Thrustwasher, Tanged	
3C	7001902	84	Bearing, Needle	
3D	7001903	3	Spacer, Thrust	
3E	7024146	3	Shaft, Planet	
3F	7024148	3	Gear, Cluster	
3G	7001906	3	Rollpin	
4	7024151	1	Gear, Ring	
5	7000224	2	O-Ring	
6	See Note	NSS	Cover Assembly (Note: Not Available - Purchase Individual Components)	
6A	7024155	1	Cover	
6B	7024156	1	Cap	
6C	7000220	4	Bolt 1/4in-20NC x 3/4in	
6D	7000231	1	Cap, Disengage	
6E	7000235	1	Rod, Disengage	
6F	7000213	1	O-Ring	
6G	7000238	1	O-Ring	
6H	7017048	1	Plug, Pipe	
7	7024106	1	Brake Assembly (See Items 101A-108 for Breakdown)	
8	7000283	1	Spring	
9	7000284	1	Ring, Retaining	
10	7017027	1	Ring, Retaining	
11	7024152	1	Shaft, Input	
12	7024154	1	Spacer, Input	
13	7024149	1	Gear, Sun	
14	7017050	1	Thrustwasher	
15	7000287	4	Thrustwasher	
16	7000288	2	Thrustwasher	
17	7000289	12	Bolt 3/8in-16NC x 2-1/2in (Grade 8)	
18	7024108	1	Plug, Pressure	
19	7024153	1	Coupling	
20	7017047	2	Pin, Dowel	
21	7017082	1	Plug, O-Ring	
22	7024138	1	Coupling	
23	7000282	1	Thrustwasher	

SECTION 1 - FRAME

ITEM	PART NUMBER	QTY	DESCRIPTION	REV
	7024106	Ref	**BRAKE ASSEMBLY**	
101A	See Note	NSS	Internal Circlip (Note: Use Item 201A)	
101B	See Note	NSS	O-Ring (Note: Use Item 201C)	
101C	See Note	NSS	Back-up Ring (Note: Use Item 201C)	
101D	See Note	NSS	O-Ring (Note: Use Item 201C)	
101E	See Note	NSS	Back-up Ring (Note: Use Item 201C)	
101F	See Note	NSS	Internal Circlip (Note: Use Item 201A)	
102	See Note	NSS	Plate, End (Note: Use Item 201A)	
103	See Note	NSS	Piston (Note: Use p/n 7024106)	
104	See Note	NSS	Plate, Outer (Note: Use Item 201B)	
105	See Note	NSS	Spacer (Note: Use Item 201A)	
106	See Note	NSS	Screw (Note: Not Available for Purchase. Use for shipping only)	
107	See Note	NSS	Plate, Inner (Note: Use Item 201B)	
108	See Note	NSS	Spring, Compression (Note: Use Item 201D)	
		Ref	**KIT OPTIONS:**	
200	7024720	1	Seal Kit - Hub (Includes Items 1B, 1I & 5)	
201		Ref	Repair Kit Options:	
201A	7024719	1	Hardware Kit (Includes Items 101A, 101F, 102 & 105)	
201B	7024710	1	Lining Kit (Includes Items 104 & 107)	
201C	7024709	1	O-Ring Kit (Includes Items 101B, 101C, 101D & 101E)	
201D	7024711	1	Spring Kit (Includes Item 108)	

FIGURE 1-6. DRIVE HUB/BRAKE ASSEMBLY (SN 0300083331 through 0300140000)

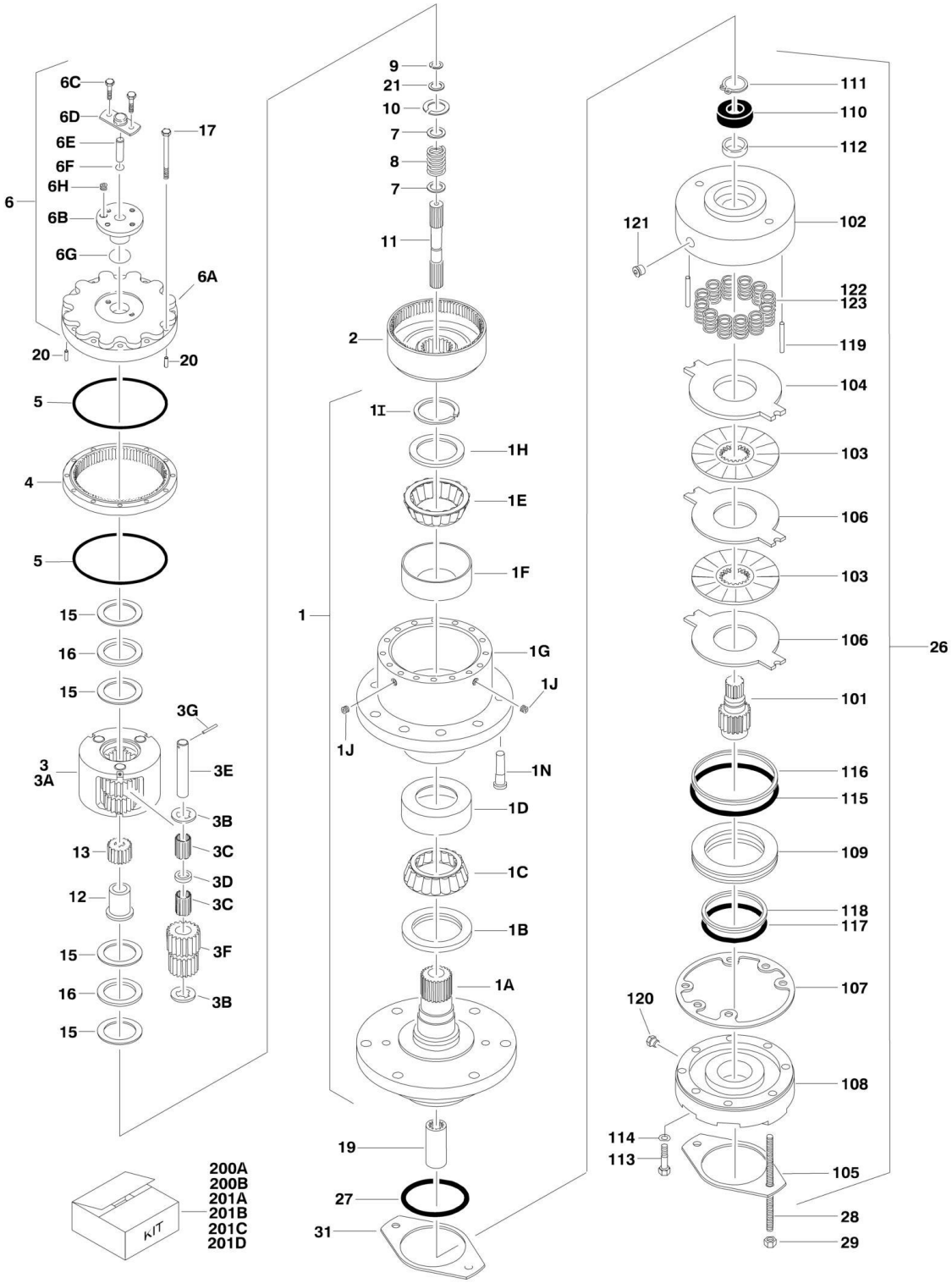

FIGURE 1-6. DRIVE HUB/BRAKE ASSEMBLY (SN 0300083331 through 0300140000)

ITEM	PART NUMBER	QTY	DESCRIPTION	REV
	2780272	Ref	**DRIVE HUB/BRAKE ASSEMBLY**	B
	2780227	Ref	Hub Assembly	B
1	See Note	NSS	Spindle/Housing Assembly (Note: Not Available - Purchase Individual Components)	
1A	7010464	1	Spindle	
1B	7000236	1	Seal	
1C	7000273	1	Cone, Bearing	
1D	7000272	1	Cup, Bearing	
1E	7000275	1	Cone, Bearing	
1F	7000274	1	Cup, Bearing	
1G	7017033	1	Housing	
1H	7000239	1	Thrustwasher	
1I	7000240	1	Ring, Retaining	
1J	7001928	1	Plug, Pipe	
1N	7000265	10	Stud, Wheel	
2	7024782	1	Gear, Ring	
3	7024145	1	Carrier Assembly	
3A	7024147	NLA	Carrier (use p/n 7024145)	
3B	7001901	6	Thrustwasher, Tanged	
3C	7001902	96	Bearing, Needle	
3D	7001903	3	Spacer, Thrust	
3E	7024146	3	Shaft, Planet	
3F	7024148	3	Gear, Cluster	
3G	7001906	3	Rollpin	
4	7024151	1	Gear, Internal	
5	7000224	1	O-Ring	
6	See Note	NSS	Cover Assembly (Note: Not Available - Purchase Individual Components)	
6A	7024155	1	Cover	
6B	7024783	1	Cap	
6C	7000220	4	Bolt 1/4in-20NC x 3/4in	
6D	7000231	1	Cap, Disengage	
6E	7000235	1	Rod, Disengage	
6F	7000213	1	O-Ring	
6G	7000238	1	O-Ring	
6H	7017048	1	Plug, Pipe	
7	7000282	2	Thrustwasher	
8	7000283	1	Spring	
9	7000284	1	Ring, Retaining	
10	7017027	1	Ring, Retaining	
11	7024781	1	Shaft, Input	
12	7024154	1	Spacer, Input	
13	7024149	1	Gear, Sun	
15	7000287	4	Thrustwasher	
16	7000288	2	Thrustwasher	
17	7000289	12	Bolt 3/8in-16NC x 2-1/2in (Grade 8)	
19	7000290	1	Coupling	
20	7017047	2	Pin, Dowel	
21	7017050	1	Thrustwasher	
26	7024182	1	Brake Assembly (Includes Items 101-123)	

SECTION 1 - FRAME

ITEM	PART NUMBER	QTY	DESCRIPTION	REV
27	7024763	2	O-Ring	
28	7024717	2	Stud 1/2in-13NC x 4-5/8in	
29	7024718	2	Nut 1/2in-13NC	
31	7000731	1	Gasket	
	7024182	Ref	**BRAKE ASSEMBLY**	
101	7024189	1	Shaft	
102	See Note	NSS	Housing (Note: Use p/n 7024182)	
103	See Note	NSS	Plate, Friction (Note: Use Item 201C)	
104	See Note	NSS	Plate, Pressure (Note: Use Item 201C)	
105	7000731	1	Gasket	
106	See Note	NSS	Plate, Outer (Note: Use Item 201C)	
107	See Note	NSS	Gasket (Note: Use Item 200B, 201C or 201D)	
108	7024191	1	Cylinder	
109	7024192	1	Piston	
110	See Note	NSS	Bearing, Ball (Note: Use Item 201D)	
111	See Note	NSS	Ring, Retaining (Note: Use Item 201D)	
112	See Note	NSS	Seal, Shaft (Note: Use Item 201D)	
113	See Note	NSS	Capscrew (Note: Not Available for Purchase)	
114	See Note	NSS	Lockwasher (Note: Not Available for Purchase)	
115	See Note	NSS	O-Ring (Note: Use Item 200B)	
116	See Note	NSS	Ring, Back-up (Note: Use Item 200B)	
117	See Note	NSS	O-Ring (Note: Use Item 200B)	
118	See Note	NSS	Ring, Back-up (Note: Use Item 200B)	
119	7024190	2	Pin, Dowel	
120	See Note	NSS	Plug (Note: Not Available for Purchase)	
121	See Note	NSS	Plug (Note: Not Available for Purchase)	
122	See Note	NSS	Spring Kit (Natural) (Note: Use Item 201B)	
123	See Note	NSS	Spring Kit (Blue) (Note: Use Item 201B)	
		Ref	**KIT OPTIONS:**	
200		Ref	Seal Kit Options:	
200A	7017068	1	Seal Kit - Hub (Includes Items 1B, 5, 6F, 6G & 8)	
200B	7024194	1	Seal Kit - 7024182 Brake (Includes Items 105, 107 & 115-118)	
201		Ref	Repair Kit Options:	
201A	7024195	NLA	Spring Kit - 7024182 Brake (Includes 12 Natural Colored Springs) (Use p/n 7024196)	
201B	7024196	1	Spring Kit - 7024182 Brake (Includes 12 Natural and 2 Blue Colored Springs)	
201C	7024193	1	Friction Disc Kit - 7024182 Brake (Includes Items 103, 104, 106 & 107)	
201D	7024197	1	Bearing Kit - 7024182 Brake (Includes Items 107 & 110-112)	

FIGURE 1-7. DRIVE MOTOR ASSEMBLY (2WD) (Prior to SN 0300083331)

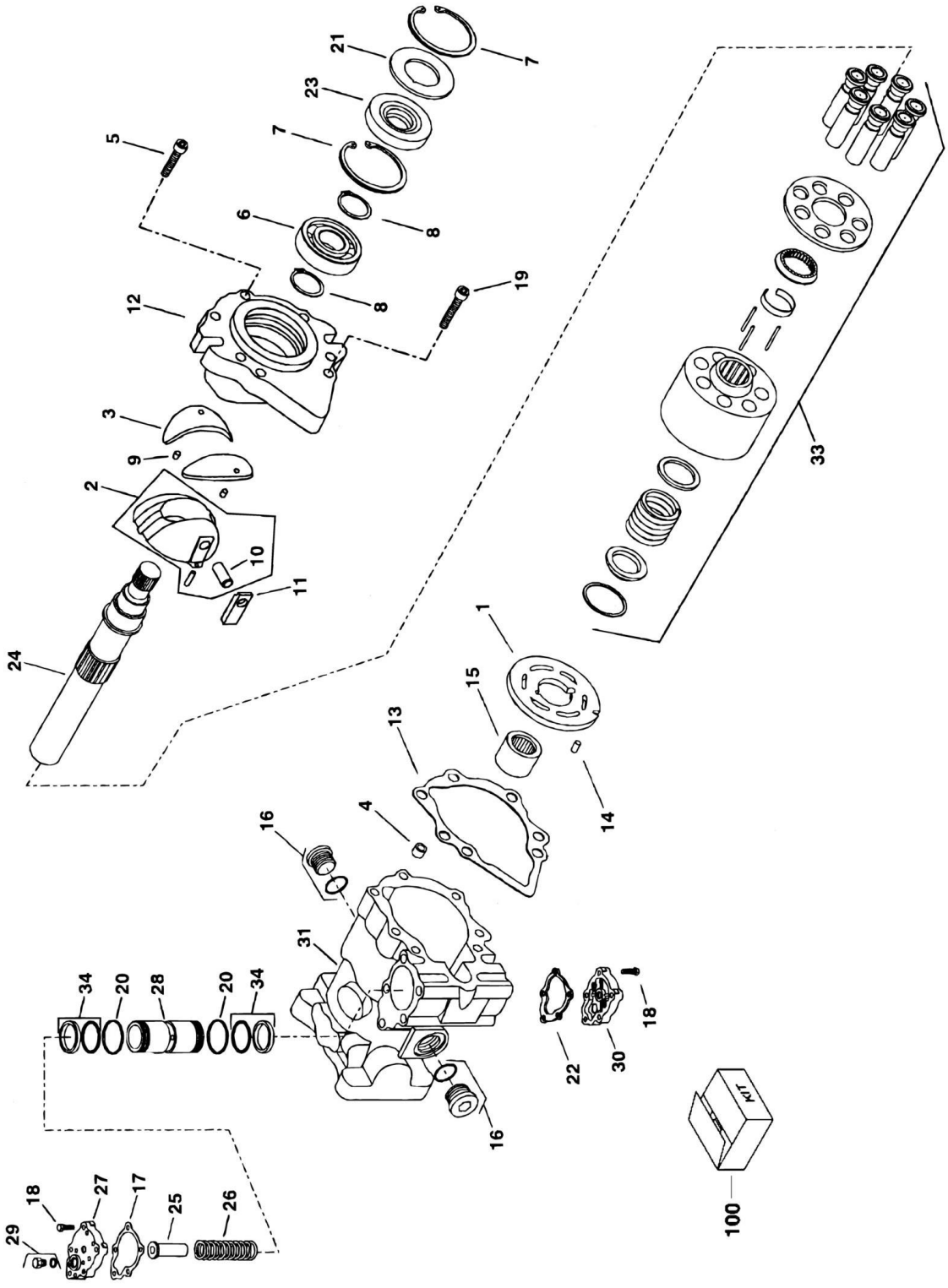

FIGURE 1-7. DRIVE MOTOR ASSEMBLY (2WD) (Prior to SN 0300083331)

ITEM	PART NUMBER	QTY	DESCRIPTION	REV
	3160268	Ref	**DRIVE MOTOR ASSEMBLY**	B
1	7023938	1	Plate, Motor Valve	
2	7023939	1	Swash Plate Assembly (Includes Item 10)	
3	7023940	2	Bearing, Journal	
4	7007435	1	Pin, Spring	
5	7021202	1	Screw	
6	7007437	1	Bearing, Ball	
7	7007438	2	Ring	
8	7007439	2	Ring	
9	7021203	2	Pin, Spring	
10	7007441	1	Pin	
11	7007442	1	Bearing, Sleeve	
12	7023941	1	Cover, Front	
13	See Note	NSS	Gasket, Front Cover (Note: Use Item 100)	
14	7007446	1	Pin	
15	7007425	1	Bearing, Needle	
16	7007419	2	Plug (Includes O-Ring)	
17	See Note	NSS	Gasket, Servo (Note: Use Item 100)	
18	7021223	10	Screw	
19	7021207	6	Screw	
20	See Note	NSS	Ring, Bearing (Note: Use Item 100)	
21	7022371	1	Washer, Support	
22	See Note	NSS	Gasket, Servo (Note: Use Item 100)	
23	See Note	NSS	Seal, Lip (Note: Use Item 100)	
24	7023942	1	Shaft, 13 Tooth	
25	7023943	1	Stop	
26	7023944	1	Spring, Servo	
27	7021219	1	Cover, Servo	
28	7023945	1	Piston, Servo	
29	7007470	1	Plug, (Includes O-Ring)	
30	7021219	1	Cover, Servo	
31	See Note	1	Housing (Note: Not Available - Purchase Complete Assembly)	
32	7010114	2	Plug (Includes O-Ring) (Not Shown)	
33	7010116	1	Cylinder Block Kit	
34	See Note	NSS	Piston Ring and O-Ring Kit (Note: Use Item 100)	
		Ref	**KIT OPTIONS:**	
100	7023946	1	Seal Kit (Includes Items 13, 17, 20, 22, 23, 34 & O-Rings on 16, 29 & 32)	

FIGURE 1-8. DRIVE MOTOR ASSEMBLY (2WD AND ALL 4WD MACHINES) (4 BOLT ASSEMBLY) (SN 0300083331 through 0300098641)

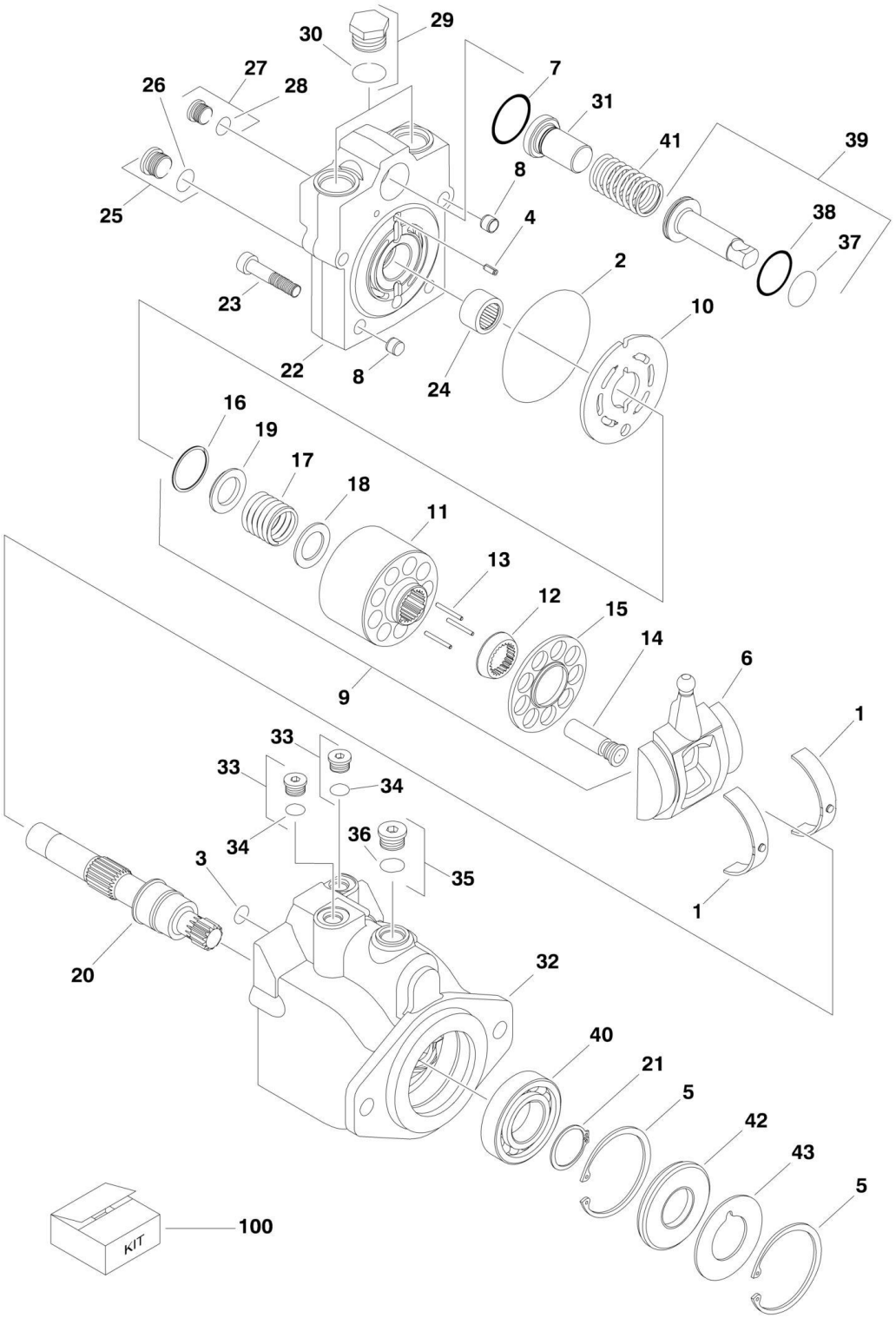

FIGURE 1-8. DRIVE MOTOR ASSEMBLY (2WD AND ALL 4WD MACHINES) (4 BOLT ASSEMBLY) (SN 0300083331 through 0300098641)

ITEM	PART NUMBER	QTY	DESCRIPTION	REV
		Ref	**DRIVE MOTOR ASSEMBLY**	
	3160308	Ref	**Drive Motor Assembly 2WD**	C
	3160266	Ref	**Drive Motor Assembly 4WD**	D
1	7022302	2	Bearing, Journal	
2	See Note	NSS	O-Ring (Note: Use Item 100)	
3	See Note	NSS	O-Ring (Note: Use Item 100)	
4	7007446	1	Pin	
5	7007438	2	Ring, Retaining	
6		Ref	Swash Plate Options:	
6	7024861	1	Swash Plate 2WD	
6	7022305	1	Swash Plate 4WD	
7	See Note	NSS	O-Ring (Note: Use Item 100)	
8		Ref	Pin Options:	
8	7027435	2	Pin 2WD	
8	Not Required	0	Pin 4WD	
9		Ref	Cylinder Block Kit (Includes Items 11-19) Options:	
9	7027740	1	Cylinder Block Kit 2WD	
9	7023907	1	Cylinder Block Kit 4WD	
10		Ref	Plate, Valve Options:	
10	7024862	1	Plate, Valve 2WD	
10	7023908	1	Plate, Valve 4WD	
11	See Note	NSS	Block, Cylinder (Note: Use Item 9)	
12		Ref	Guide, Slipper Retainer Options:	
12	See Note	NSS	Guide, Slipper Retainer 2WD (Note: Use Item 9)	
12	7021277	1	Guide, Slipper Retainer 4WD	
13	7021275	3	Pin, Slipper Hold Down	
14		Ref	Piston Assembly Options:	
14	7024865	9	Piston Assembly 2WD	
14	See Note	NSS	Piston Assembly 4WD (Note: Use Item 9)	
15		Ref	Retainer, Slipper Options:	
15	See Note	NSS	Retainer, Slipper 2WD (Note: Use Item 9)	
15	7022310	1	Retainer, Slipper 4WD	
16	7022311	1	Ring, Retaining	
17		Ref	Spring Options:	
17	7024867	1	Spring 2WD	
17	7022312	1	Spring 4WD	
18		Ref	Washer	
18	7022313	1	Washer 2WD	
18	See Note	NSS	Washer 4WD (Note: Use Item 9)	
19	7022314	1	Retainer, Spring	
20	7023910	1	Shaft	
21	7007439	1	Ring, Retaining	
22		Ref	Cap, End - Axial Options:	
22	See Note	NSS	Cap, End - Axial 2WD (Note: Not Available - Purchase Complete Assembly)	
22	7022367	1	Cap, End - Axial 4WD	
23	7022368	4	Screw	
24	7021249	1	Bearing, Needle	
25	7022321	1	Plug (Includes Item 26)	

SECTION 1 - FRAME

ITEM	PART NUMBER	QTY	DESCRIPTION	REV
26	See Note	NSS	O-Ring (Note: Use Item 25 or 100)	
27	7007420	1	Plug (Includes Item 28)	
28	See Note	NSS	O-Ring (Note: Use Item 27 or 100)	
29	7007419	2	Plug (Includes Item 30)	
30	See Note	NSS	O-Ring (Note: Use Item 29 or 100)	
31		Ref	Seat, Spring Options:	
31	7027741	1	Seat, Spring 2WD	
31	7022372	1	Seat, Spring 4WD	
32		Ref	Housing Options:	
32	7024870	1	Housing 2WD	
32	7022370	1	Housing 4WD	
33	7007419	2	Plug (Includes Item 34)	
34	See Note	NSS	O-Ring (Note: Use Item 33 or 100)	
35	7022321	1	Plug (Includes Item 36)	
36	See Note	NSS	O-Ring (Note: Use Item 35 or 100)	
37	See Note	NSS	O-Ring (Note: Use Item 39 or 100)	
38	See Note	NSS	Ring, Seal (Note: Use Item 39 or 100)	
39		Ref	Piston, Servo Options:	
39	7024871	1	2WD (Includes Items 37 & 38)	
39	7022323	1	4WD (Piston Only - Does not Include Items 37 & 38)	
40	7007437	1	Bearing	
41	7022326	1	Spring	
42	See Note	NSS	Seal, Lip (Note: Use Item 100)	
43	7022371	1	Washer, Support	
		Ref	**KIT OPTIONS:**	
100	7022328	1	Seal Kit (Includes Items 2, 3, 7, 26, 28, 30, 34, 36, 37, 38 & 42)	

FIGURE 1-9. DRIVE MOTOR ASSEMBLY (5 BOLT ASSEMBLY)

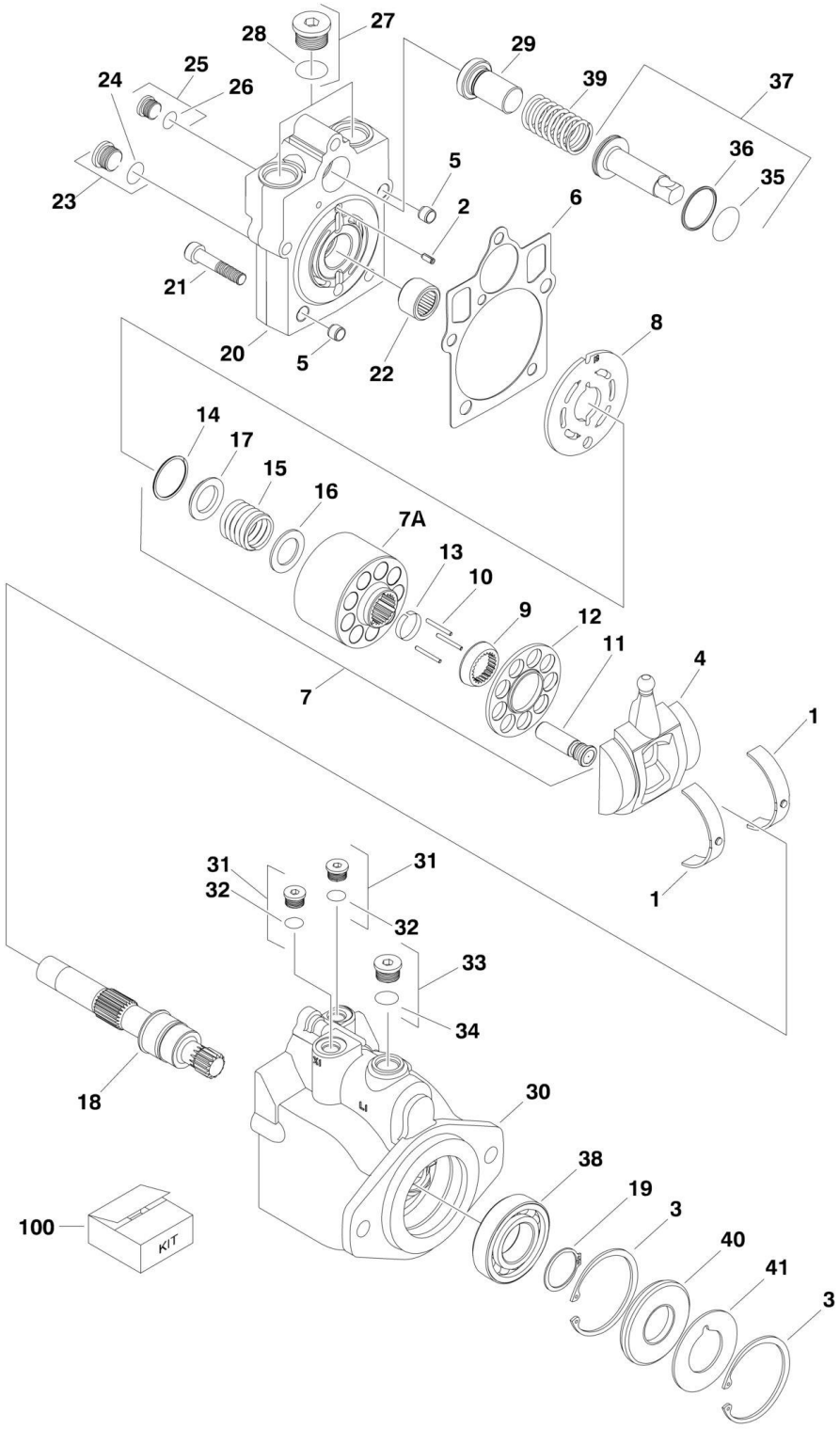

FIGURE 1-9. DRIVE MOTOR ASSEMBLY (5 BOLT ASSEMBLY)

ITEM	PART NUMBER	QTY	DESCRIPTION	REV
		Ref	**DRIVE MOTOR ASSEMBLIES:**	
	3160347	Ref	**Drive Motor Assemblies 2WD**	B
	3160348	Ref	**Drive Motor Assemblies 4WD**	B
1	7022302	2	Bearing, Journal	
2	7007446	1	Pin	
3	7007438	2	Ring, Retaining	
4		Ref	Swash Plate Options:	
4	70000794	1	Swash Plate 2WD	
4	7022305	1	Swash Plate 4WD	
5	See Note	NSS	Pin (Note: Not Available for Purchase)	
6	See Note	NSS	Gasket (Note: Use Item 100)	
7		Ref	Cylinder Block Kit (Includes Items 7A & 9-17)	
7	7027740	1	Cylinder Block Kit 2WD	
7	7023907	1	Cylinder Block Kit 4WD	
7A	See Note	NSS	Block, Cylinder (Note: Use Item 7)	
8		Ref	Plate, Valve Options:	
8	7024862	1	Plate, Valve 2WD	
8	7023908	1	Plate, Valve 4WD	
9		Ref	Guide, Slipper Retainer Options:	
9	See Note	NSS	Guide, Slipper Retainer 2WD (Note: Use Item 7)	
9	7021277	1	Guide, Slipper Retainer 4WD	
10	7021275	3	Pin, Slipper Hold Down	
11	See Note	NSS	Piston Assembly (Note: Use Item 7)	
12		Ref	Retainer, Slipper Options:	
12	See Note	NSS	Retainer, Slipper 2WD (Note: Use Item 7)	
12	7022310	1	Retainer, Slipper 4WD	
13		Ref	Retainer, Holddown Pin Options:	
13	Not Required	0	Retainer, Holddown Pin 2WD	
13	7021276	1	Retainer, Holddown Pin 4WD	
14	7022311	1	Ring, Retaining	
15		Ref	Spring Options:	
15	7024867	1	Spring 2WD	
15	7022312	1	Spring 4WD	
16		Ref	Washer Options:	
16	7022313	1	Washer 2WD	
16	7024868	1	Washer 4WD	
17	7022314	1	Retainer, Spring	
18	7023910	1	Shaft	
19	7007439	1	Ring, Retaining	
20		Ref	Cap, End - Axial Options:	
20	70000795	1	Cap, End - Axial 2WD	
20	70000797	1	Cap, End - Axial 4WD	
21	7022368	5	Screw	
22	7021249	1	Bearing, Needle	
23	2220886	1	Plug (Includes Item 24)	
24	See Note	NSS	O-Ring (Note: Use Item 23 or 100)	
25	2220883	1	Plug (Includes Item 26)	
26	See Note	NSS	O-Ring (Note: Use Item 25 or 100)	
27	2220888	2	Plug (Includes Item 28)	
28	See Note	NSS	O-Ring (Note: Use Item 27 or 100)	

SECTION 1 - FRAME

ITEM	PART NUMBER	QTY	DESCRIPTION	REV
29		Ref	Seat, Spring Options:	
29	7027741	1	Seat, Spring 2WD	
29	7022372	1	Seat, Spring 4WD	
30	See Note	NSS	Housing (Note: Not Available - Purchase Complete Assembly)	
31	2220883	2	Plug (Includes Item 32)	
32	See Note	NSS	O-Ring (Note: Use Item 31 or 100)	
33	2220886	1	Plug (Includes Item 34)	
34	See Note	NSS	O-Ring (Note: Use Item 33 or 100)	
35	See Note	NSS	O-Ring (Note: Use Item 37 or 100)	
36	See Note	NSS	Ring, Seal (Note: Use Item 37 or 100)	
37		Ref	Piston, Servo Options (Includes Items 35 & 36):	
37	7024871	1	Piston, Servo 2WD	
37	7024854	1	Piston, Servo 4WD	
38	7007437	1	Bearing	
39	7022326	1	Spring	
40	7022328	1	Seal, Lip	
41	7022371	1	Washer, Support	
		Ref	**KIT OPTIONS:**	
100	7022328	1	Seal Kit (Includes Items 6, 24, 26, 28, 32, 34, 35, 36 & 40)	

FIGURE 1-10. FRAME VALVES AND SHIELDS INSTALLATIONS (Prior to SN 0300083331)

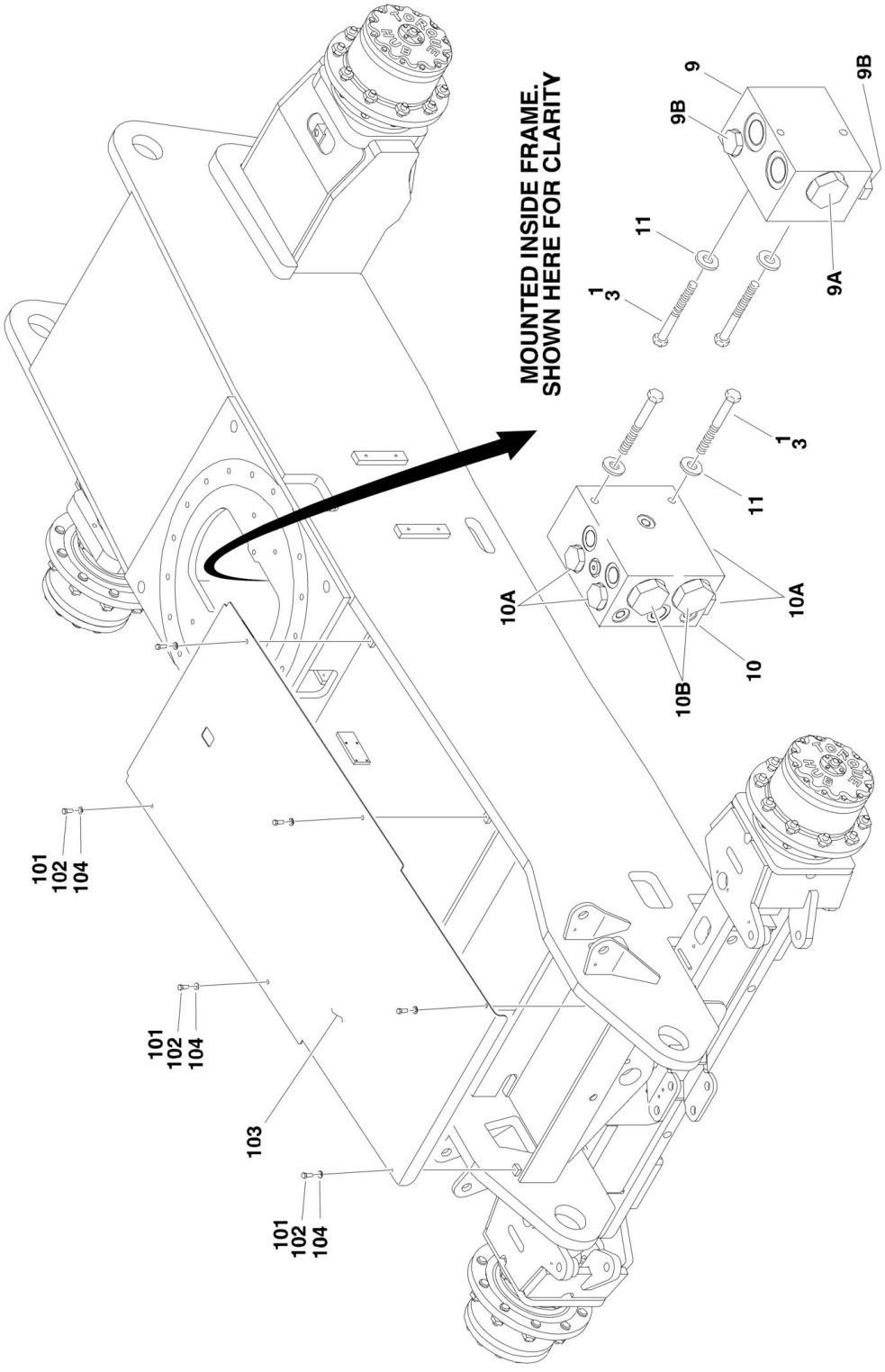

FIGURE 1-10. FRAME VALVES AND SHIELDS INSTALLATIONS (Prior to SN 0300083331)

ITEM	PART NUMBER	QTY	DESCRIPTION	REV
		Ref	**WHEEL DRIVE VALVES INSTALLATION**	
	0271341	Ref	**Wheel Drive Valves Installation 2WD**	E
	0271349	Ref	**Wheel Drive Valves Installation 4WD**	E
1	0100011	AR	Compound, Locking	
3	0641628	AR	Bolt 3/8in-16NC x 3-1/2in	
9	4641209	1	Flow Divider Valve Assembly	
9A	7023933	1	Cartridge, Flow Divider	
9A	7021625	1	Seal Kit - 7022396 Cartridge	
9B	7022397	2	Cartridge, Check Valves	
9B	7022399	2	Seal Kit - 7022397 Cartridge	
10		Ref	Dual Flow Divider Options:	
10	Not Required	0	Dual Flow Divider 2WD	
10	4641183	1	Dual Flow Divider 4WD	
10A	7012930	4	Cartridge, Check Valves	
10A	2900708	4	Seal Kit - 7012930 Cartridge	
10B	7023917	2	Cartridge, Flow Divider	
10B	7021625	2	Seal Kit - 7023917 Cartridge	
11	4751600	AR	Flatwasher 3/8in	
	0271316	Ref	**FRAME COVERS INSTALLATION**	A
101	0100011	AR	Compound, Locking	
102	0641608	6	Bolt, 3/8in - 16NC x 1in	
103	3570686	1	Plate, Cover Front	
104	4751600	6	Flatwasher, 3/8in	

FIGURE 1-11. FRAME VALVES AND SHIELDS INSTALLATIONS (SN 0300083331 through 0300140000)

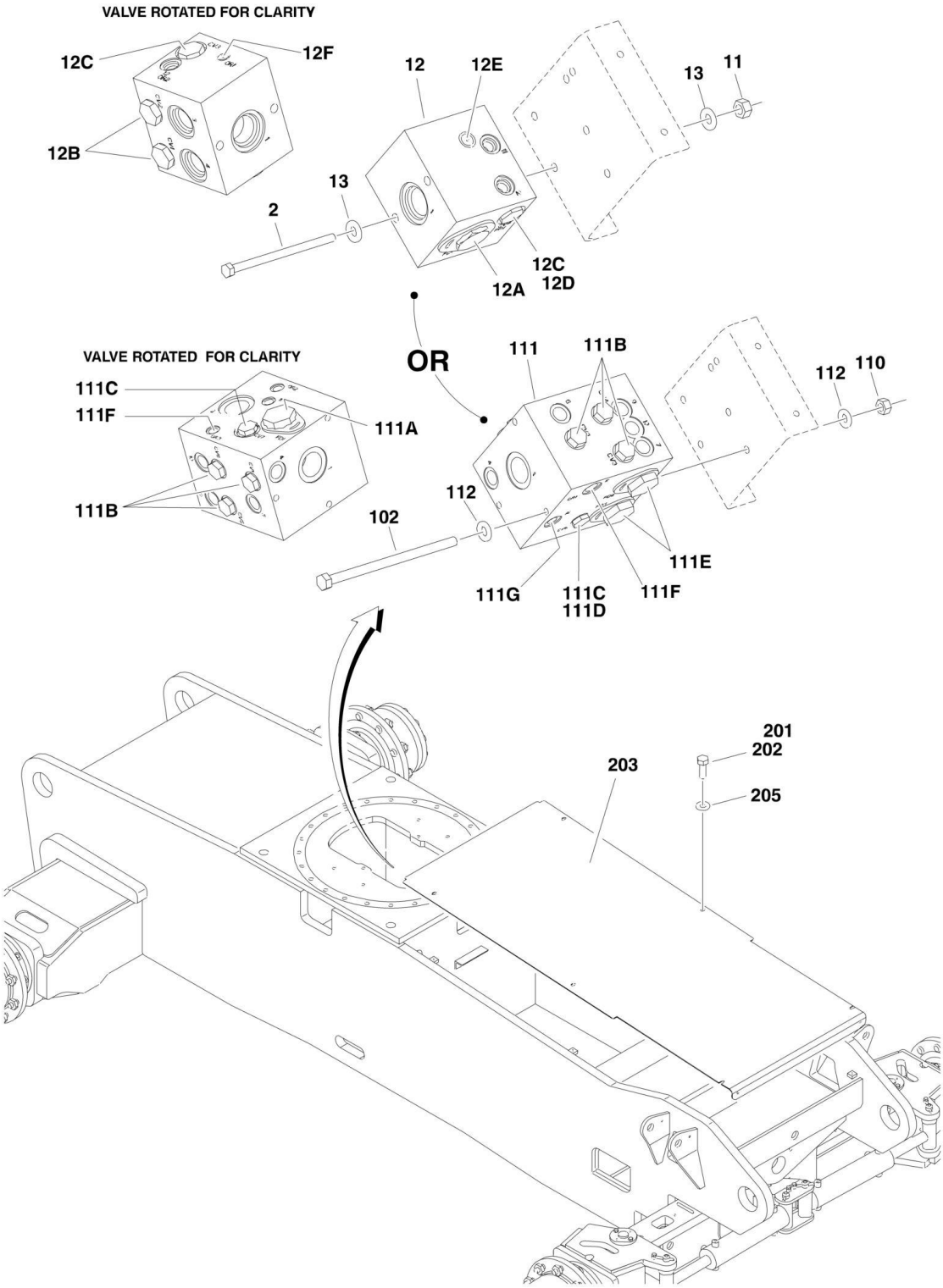

FIGURE 1-11. FRAME VALVES AND SHIELDS INSTALLATIONS (SN 0300083331 through 0300140000)

ITEM	PART NUMBER	QTY	DESCRIPTION	REV
	0273378	Ref	**DRIVE VALVES INSTALLATION - 2WD**	E
2	0641542	2	Bolt 5/16in-18NC x 5-1/4in	
11	3311505	2	Locknut 5/16in-18NC	
12		Ref	Flow Divider Valve Assembly Options:	
12	4641300	NLA	Valve (Use p/n 1001099870) **(SN 0300083331 through 0300139495)**	B
12	1001099870	1	Valve **(SN 0300139496 through 0300140000)**	A
12A	7023933	1	Cartridge, Flow Divider	
12A	7021625	1	Seal Kit - 7023933 Cartridge	
12A	70000781	1	Lockdown Kit	
12B	7022397	2	Cartridge, Check	
12B	7022399	2	Seal Kit - 7022397 Cartridge	
12C		Ref	Cartridge, Check Options:	
12C	7021639	2	Cartridge in 4641300 Valve	
12C	2900756	2	Seal Kit - 7021639 Cartridge	
12C	70002390	2	Cartridge in 1001099870 Valve	
12C	7022399	2	Seal Kit - 70002390 Cartridge	
12D	7024881	1	Piston, Pilot	
12E	7017406	1	Plug (Used on 1001099870 Valve)	
12F	7024844	1	Plug (Used on 1001099870 Valve)	
12F	7017492	1	Orifice (Used on 1001099870 Valve)	
13	4711500	4	Flatwasher 5/16in Narrow	
	0273704	Ref	**DRIVE VALVES INSTALLATION - 4WD**	D
102	0641560	3	Bolt 5/16in-18NC x 7-1/2in	
110	3311505	3	Locknut 5/16in-18NC	
111	4641303	1	Flow Divider Valve Assembly	
111A	7023933	1	Cartridge, Flow Divider	
111A	7021625	1	Seal Kit - 7023933 Cartridge	
111B	7022397	6	Cartridge, Check	
111B	7022399	6	Seal Kit - 7022397 Cartridge	
111C	7021639	2	Cartridge, Check Valves	
111C	2900756	2	Seal Kit - 7021639 Cartridge	
111D	7024881	1	Piston, Pilot	
111E	7023917	2	Cartridge, Flow Divider	
111E	7021625	2	Seal Kit - 7023917 Cartridge	
111F	70003935	2	Orifice	
111G	70003936	1	Orifice	
112	4711500	6	Flatwasher 5/16in Narrow	
	0274267	Ref	**FRAME SHIELDS INSTALLATIONS**	A
201	0100011	6	Compound, Locking	
202	0641608	6	Bolt, 3/8in - 16NC x 1in	
203	3575718	1	Plate, Cover Front	
205	4751600	6	Flatwasher 3/8in	

FIGURE 1-12. TOW PACKAGE INSTALLATION

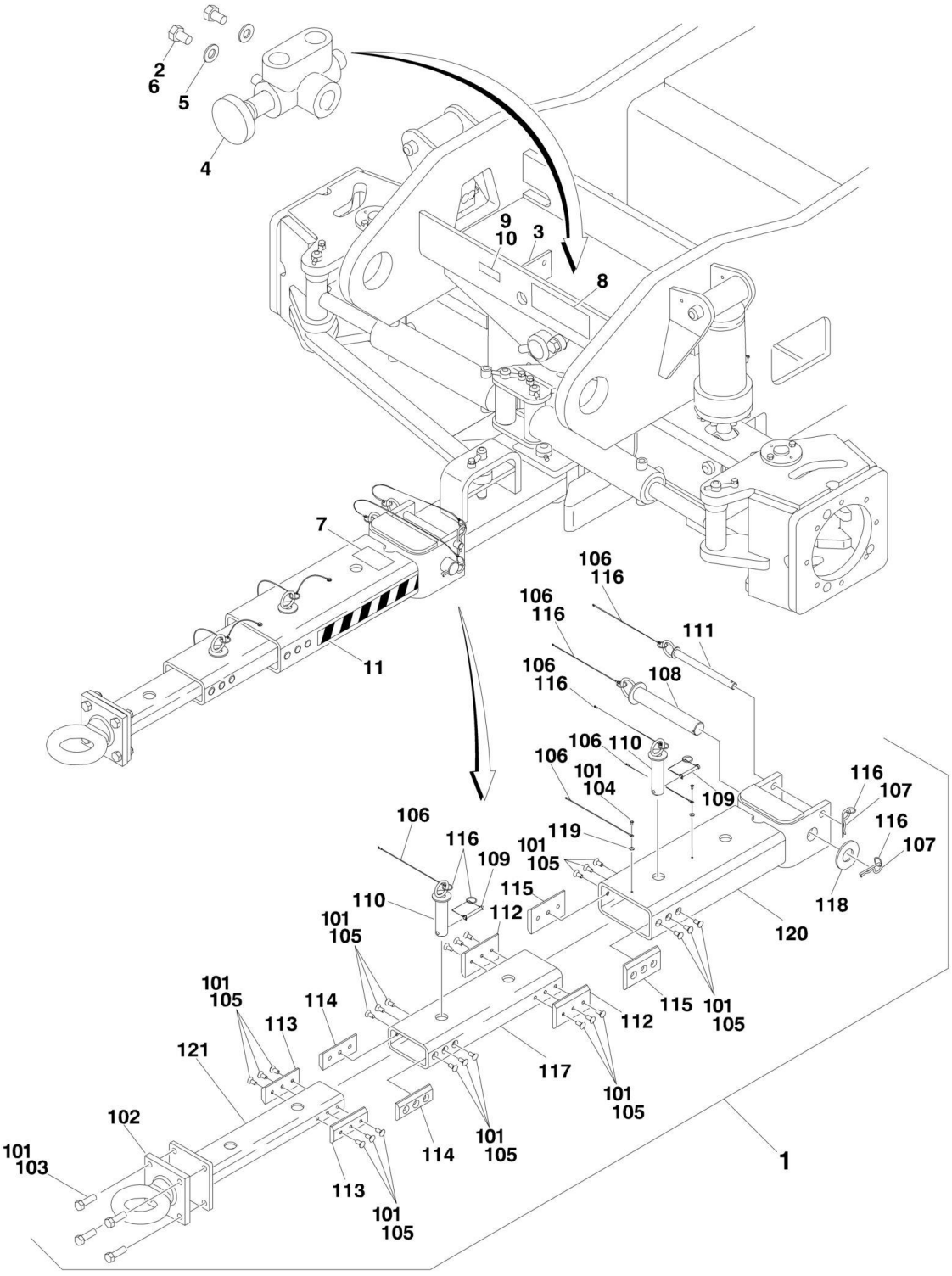

FIGURE 1-12. TOW PACKAGE INSTALLATION

ITEM	PART NUMBER	QTY	DESCRIPTION	REV
	0271354	Ref	**TOW BAR INSTALLATION**	E
1	0250528	1	Tow Bar Assembly (See Items 101-121 for Breakdown)	
2	0641504	2	Bolt 5/16in-18NC x 1/2in	
3	3539662	1	Plate, Valve Mounting	
4	4640261	1	Valve, Select	
5	4711500	2	Flatwasher 5/16in	
6	0100011	AR	Compound, Locking	
7	1704578	2	Decal - Crushing	
8	1705090	1	Decal - Towing Instructions	
9	3250872	1	Nameplate - Steer/Tow Select Valve	
10	3820001	4	Rivet	
11	4420051	AR	Tape, Safety	
	0270528	Ref	**TOW BAR ASSEMBLY**	A
101	0100011	AR	Compound, Locking	
102	0362910	1	Pintle, Draw Eye	
103	0642010	4	Bolt 5/8in-11NC x 1-1/4in	
104	0721004	2	Screw, Hex Machine	
105	0741607	24	Screw, Countersunk 3/8in-16NC x 7/8in	
106	1060584	6	Cable, Lanyard	
107	3420372	2	Pin, Cotter	
108	3420447	1	Pin, Towing	
109	3421565	2	Pin, Snap	
110	3422841	2	Pin	
111	3422847	1	Pin	
112	3572009	2	Plate, Slide Stop	
113	3572010	2	Plate, Slide Stop	
114	3572011	2	Plate, Slide Stop	
115	3572012	2	Plate, Slide Stop	
116	3760170	8	Ring, Split	
117	4568133	1	Tube, Tow Bar	
118	4740036	1	Flatwasher	
119	4751000	2	Flatwasher #10	
120	4846295	1	Tow Bar Attach Weldment	
121	4846296	1	Pintle Attach Weldment	

SECTION 2 - TURNTABLE

FIGURE 2-1. CONTROL VALVES INSTALLATIONS

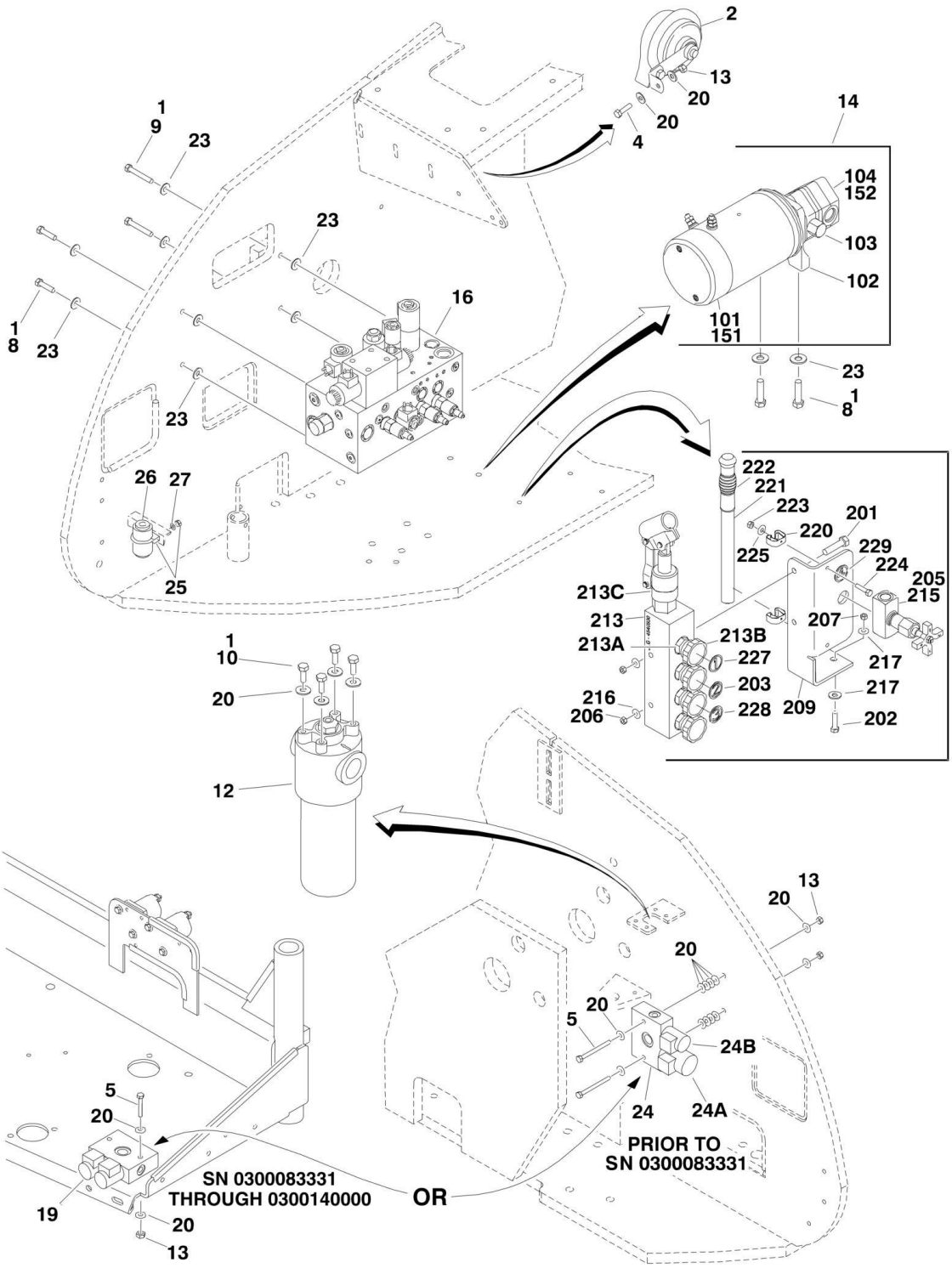

FIGURE 2-1. CONTROL VALVES INSTALLATIONS

ITEM	PART NUMBER	QTY	DESCRIPTION	REV
		Ref	**VALVES INSTALLATIONS**	
	0270901	Ref	**Valves Installations 800S (Prior to SN 0300083331)**	G
	0274173	Ref	**Valves Installations 800S (SN 0300083331 through 0300087261)**	B
	0274644	Ref	**Valves Installations 800S (SN 0300087262 through 0300140000)**	D
	0270902	Ref	**Valves Installations 860SJ (Prior to SN 0300083331)**	F
	0274174	Ref	**Valves Installations 860SJ (SN 0300083331 through 0300087261)**	B
	0274645	Ref	**Valves Installations 860SJ (SN 0300087262 through 0300140000)**	D
1	0100011	AR	Compound, Locking	
2	0140001	1	Horn	
4	0641408	1	Bolt 1/4in-20NC x 1in	
5		Ref	Bolt Options:	
5	0641424	2	Bolt 1/4in-20NC x 3in **(Prior to SN 0300083331)**	
5	0641418	2	Bolt 1/4in-20NC x 2-1/4in **(SN 0300083331 through 0300140000)**	
5	0641416	2	Bolt 1/4in-20NC x 2in **(SN 0300083331 through 0300117223)**	
5	0641418	2	Bolt 1/4in-20NC x 2-1/4in **(SN 0300117224 through 0300140000)**	
8	0641612	4	Bolt 3/8in-16NC x 1-1/2in	
9		Ref	Bolt Options:	
9	0641620	2	Bolt 3/8in-16NC x 2-1/2in **(Prior to SN 0300087262)**	
9	0641612	2	Bolt 3/8in-16NC x 1-1/2in **(SN 0300087262 through 0300140000)**	
10	0651406	AR	Bolt 1/4in-28NF x 3/4in	
12		Ref	Hydraulic Pressure Filter Assembly Options:	
12	2120163	1	Pressure Filter **(Prior to SN 0300087262)**	
12	2120150	1	Element (P/N 2120163 Filter)	
12	7020020	1	Indicator, Clog (P/N 2120163 Filter)	
12	7023206	1	O-Ring (P/N 2120163 Filter)	
12	7023207	1	Ring, Back-up (P/N 2120163 Filter)	
12	2120209	1	Pressure Filter **(SN 0300087262 through 0300140000)**	
12	2120210	1	Element, Filter (P/N 2120209 Filter)	
12	7020020	1	Manual Indicator (P/N 2120209 Filter)	
12	70000934	1	O-Ring Filter Bowl (P/N 2120209 Filter)	
13	3311405	3	Locknut 1/4in-20NC	
14		Ref	Auxiliary Pump Assembly Options:	
14	3600342	NLA	Auxiliary Pump Assembly (Use p/n 3600424) (See Items 101-105 for Breakdown) **(Prior to SN 0300103854)**	
14	3600424	1	Auxiliary Pump Assembly (See Items 151-152 for Breakdown) **(SN 0300103854 through 0300140000)**	
16		Ref	Main Control Valve Assembly Options (See MAIN CONTROL VALVE ASSEMBLY for Breakdown):	
16	4641184	1	Main Control Valve Assembly **(Prior to SN 0300089328)**	
16	4641432	1	Main Control Valve Assembly **(SN 0300089328 through 0300140000)**	
19	4641317	1	Dual Select Valve Assembly	C
19	7012944	2	Coil	
19	7012941	2	Cartridge Less Coil	
19	7010543	2	Seal Kit - 7012941 Valve (1 Per Cartridge)	

SECTION 2 - TURNTABLE

ITEM	PART NUMBER	QTY	DESCRIPTION	REV
20	4711400	AR	Flatwasher 1/4in Thin	
20	4751400	AR	Flatwasher 1/4in Regular	
23	4751600	10	Flatwasher 3/8in Regular	
24	4641108	1	Dual Select Valve Assembly **(Prior to SN 0300083331)**	B
24A	7012943	1	Coil	
24A	7012995	1	Cartridge Less Coil	
24A	7012518	1	Seal Kit - 7012995 Valve	
24B	7012944	1	Coil	
24B	7012974	1	Cartridge Less Coil	
24B	7010543	1	Seal Kit - 7012974 Valve	
25	1320019	1	Clamp **(Prior to SN 0300069206)**	
26	2120182	1	Filter, High Pressure **(Prior to SN 0300069206)**	
26	7024373	1	Element	
27	4751500	2	Flatwasher 5/16in Regular **(Prior to SN 0300069206)**	
	3600342	Ref	**AUXILIARY PUMP ASSEMBLY (FENNER FLUID POWER BRAND) (Prior to SN 0300103854)**	B
101	7022207	1	Motor	
101	7013753	1	Brush Kit	
102	7016769	1	Bracket, Motor/Pump	
102	7013711	1	Coupling	
103	7013715	1	Ball	
103	7022227	1	Spring	
103	7022228	1	Screw, Valve Adjustment	
103	7022230	1	Cap	
104	7022215	1	Pump	
104	7013716	1	Seal, Shaft	
105	7022231	1	Ball and Spring Assembly (Not Shown - Located on far side of pump)	
105	7022229		Plug	
	3600424	Ref	**AUXILIARY PUMP ASSEMBLY (HALDEX BRAND) (SN 0300103854 through 0300140000)**	B
151	70001056	1	Motor Kit	
151	7011062	1	Bracket, Motor/Pump	
151	7011016	1	Coupling	
151	7029592	2	Setscrew	
152	7029593	1	Pump Kit	
152	7011016	1	Coupling	
152	7011044	1	Gasket	
152	7011048	4	Flatwasher	
152	7011043	4	Screw	
	0272750	Ref	**MANUAL DESCENT INSTALLATION (OPTIONAL) (SN 0300068651 through 0300140000)**	A
201	0641420	2	Bolt 1/4in-20NC x 2-1/2in	
202	0641514	2	Bolt 5/16in-18NC x 1-3/4in	
203	1702927	1	Decal - #2	
204	1705589	1	Decal - Manual Descent (Not Shown - Located on Hydraulic Tank)	
205	2900062	1	Kit, Valve Mounting	
206	3311405	2	Locknut 1/4in-20NC	
207	3311505	2	Locknut 5/16in-18NC	
209	3574179	1	Plate, Valve Mounting	
213	4640930	1	Manifold, Manual Descent Assembly	
213A		Ref	Cartridge, Needle Options:	

ITEM	PART NUMBER	QTY	DESCRIPTION	REV
213A	4640902	4	Cartridge, Needle (was p/n 7012954) (Original Equipment)	
213A	7012953	4	Seal, Kit - Cartridge	
213A	4640902	4	Cartridge, Needle (Service Replacement)	
213A	7012953	4	Seal, Kit - 4640902 Cartridge	
213B	7012961	4	Knob	
213C		Ref	Cartridge, Pump Options:	
213C	70004019	1	Cartridge, Pump (was p/n 7012694) (Original Equipment)	
213C	7012699	1	Seal, Kit - Cartridge	
213C	70004019	1	Cartridge, Pump (Service Replacement)	
213C	2900756	1	Seal, Kit - 70004019 Cartridge	
215	4641263	1	Valve, Metering	
216	4751400	2	Flatwasher 1/4in Regular	
217	4751500	4	Flatwasher 5/16in Regular	
220	1380136	2	Clip, Gripper	
221	2560122	1	Handle	
222	2560123	1	Handle, Grip	
223	3311005	2	Locknut #10-24NC	
224	3911008	2	Screw	
225	4751000	2	Flatwasher #10 Regular	
226	1702901	1	Decal - Manual Descent (Not Shown - Located on hood)	
227	1702903	1	Decal - #1	
228	1702924	1	Decal - #3	
229	1702925	1	Decal - #4	

FIGURE 2-2. MAIN CONTROL VALVE ASSEMBLY

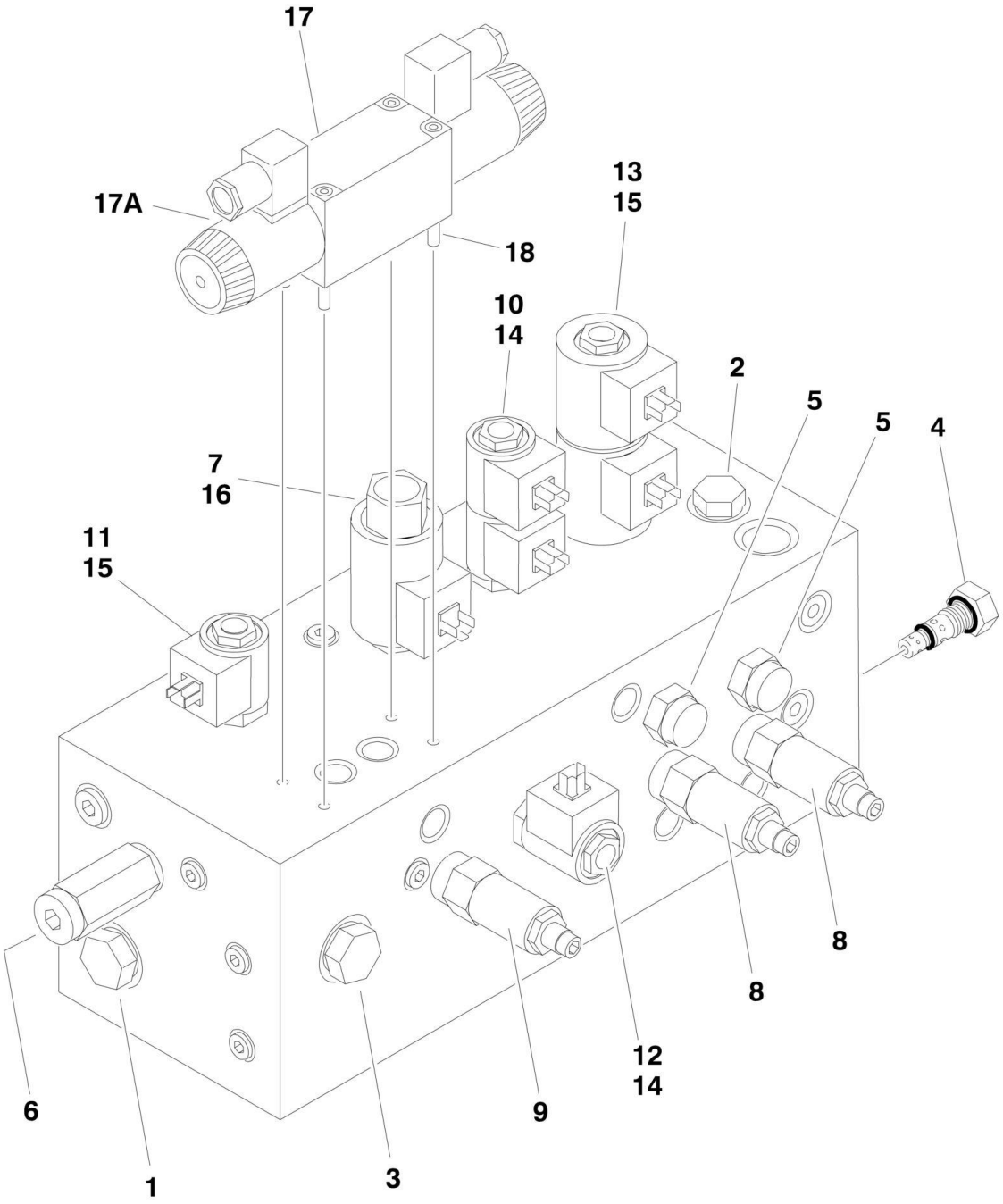

FIGURE 2-2. MAIN CONTROL VALVE ASSEMBLY

ITEM	PART NUMBER	QTY	DESCRIPTION	REV
		Ref	**MAIN CONTROL VALVE ASSEMBLY**	
	4641184	Ref	**Main Control Valve Assembly (Prior to SN 0300089328)**	D
	4641432	Ref	**Main Control Valve Assembly (SN 0300089328 through 0300140000)**	A
1	7023918	1	Cartridge, Check Valve	
1	7023919	1	Seal Kit - 7023918 Cartridge	
2	7012975	1	Cartridge, Check Valve	
2	7012967	1	Seal Kit - 7012975 Cartridge (was p/n 7012540)	
3	7023985	1	Cartridge, Check Valve	
3	7017496	1	Seal Kit - 7023985 Cartridge	
4	7023986	1	Cartridge, Flow Regulator (Steer)	
4	7010545	1	Seal Kit - 7023986 Cartridge	
5	10837580	2	Cartridge, Load Sensing (Steer and Swing) (was p/n 7010542)	
5	7010543	2	Seal Kit - Cartridge	
6	7023987	1	Cartridge, Pilot	
6	7012942	1	Seal Kit - 7023987 Cartridge	
7	7023921	1	Cartridge, Proportional Flow (Tele)	
7	7012925	1	Seal Kit - 7023921 Cartridge	
8	7017422	2	Cartridge, Relief Valve (Steer and Swing)	
8	7012998	2	Seal Kit - 7017422 Cartridge	
9	7017489	1	Cartridge, Relief Valve (Tele Out Relief)	
9	7012998	1	Seal Kit - 7017489 Cartridge	
10	7023922	1	Cartridge, Solenoid (Swing)	
10	7017402	1	Seal Kit - 7023922 Cartridge	
11	7023923	1	Cartridge, Solenoid (Main Dump)	
11	7023919	1	Seal Kit - 7023923 Cartridge	
12	7021612	1	Cartridge, Solenoid (Lift Up Dump)	
12	7010543	1	Seal Kit - 7021612 Cartridge (was p/n 7012907)	
13	7023925	1	Cartridge, Solenoid (Steer Direction)	
13	7012903	1	Seal Kit - 7023925 Cartridge	
14	7012944	3	Coil	
15	7012943	3	Coil	
15	70003024	1	Spacer, Coil	
16	7017451	1	Coil	
17		Ref	Control Valve Assembly Options (Tele Direction):	
17	70000579	1	Control Valve Assembly (was p/n 7012766) **(Prior to SN 0300089328)**	
17	70000579	1	Control Valve Assembly **(SN 0300089328 through 0300140000)**	
		Ref	**Note: Refer to Vendor P/N on Valve Nameplate before ordering Parts. P/N 7012766 is RR00567495 or R900567495. P/N 70000579 is R900930080.**	
17		Ref	Seal Kit Options:	
17	7012769	1	7012766 Valve	
17	70000583	1	70000579 Valve	
17A		Ref	Coil Options:	
17A	7012772	1	7012766 Valve (was p/n 7012768)	
17A	70000582	1	70000579 Valve	
17A		Ref	Nut, Coil Options:	
17A	7018912	1	7012766 Valve	
17A	70000580	1	70000579 Valve	

SECTION 2 - TURNTABLE

ITEM	PART NUMBER	QTY	DESCRIPTION	REV
18	See Note	4	Capscrew (Note: Not Available for Purchase)	

FIGURE 2-3. TURNTABLE BEARING AND SWING DRIVE INSTALLATION

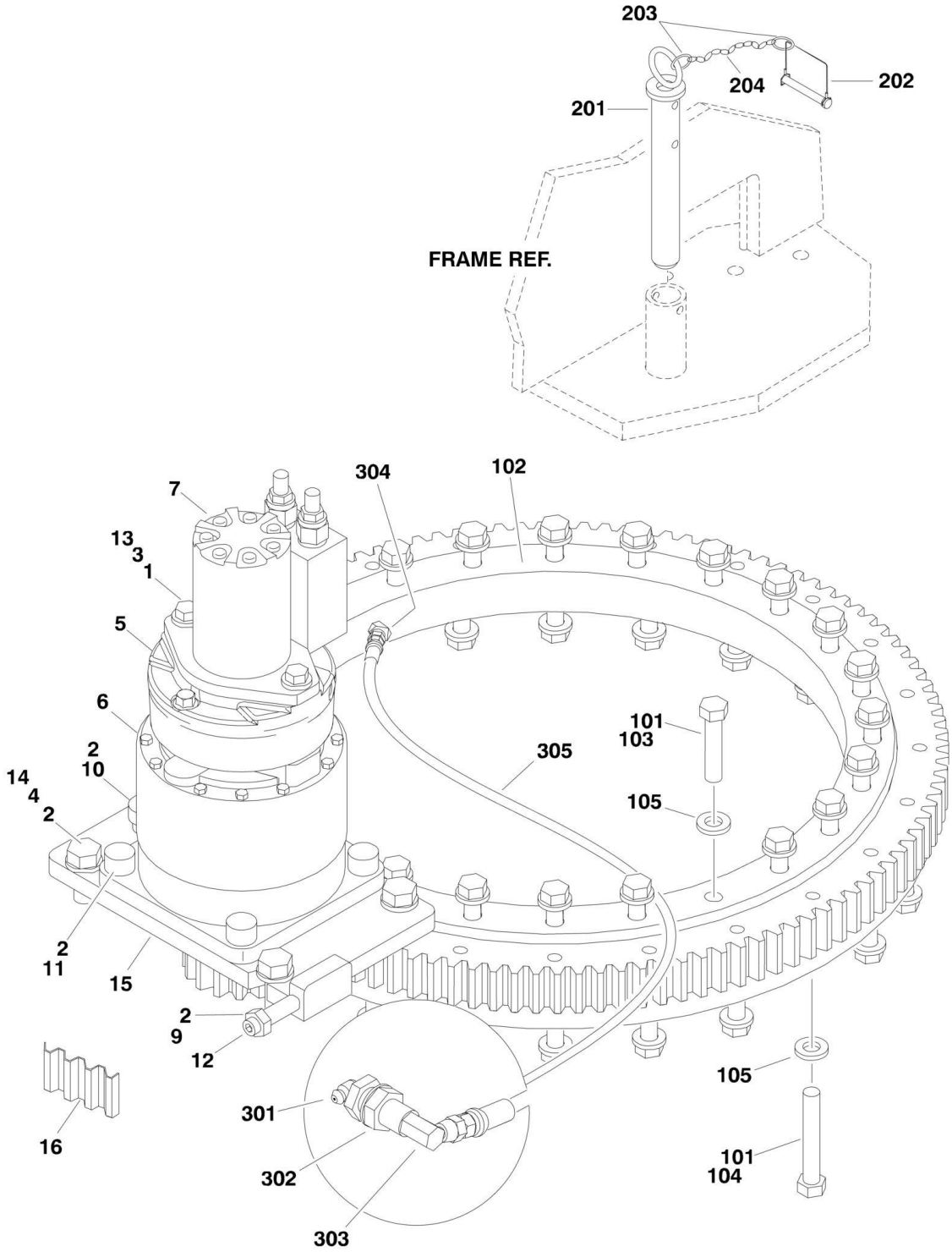

FIGURE 2-3. TURNTABLE BEARING AND SWING DRIVE INSTALLATION

ITEM	PART NUMBER	QTY	DESCRIPTION	REV
		Ref	**SWING DRIVE INSTALLATION OPTIONS:**	
	0271013	Ref	**Swing Drive Installation (Prior to SN 0300066417)**	E
	0272188	Ref	**Swing Drive Installation (SN 0300066417 through 0300134351)**	E
	1001094899	Ref	**Swing Drive Installation (SN 0300134352 through 0300140000)**	B
1	0100011	AR	Compound, Locking **(Prior to SN 0300074382)**	
2	0100019	AR	Compound, Locking	
3	0681832	2	Bolt 1/2in - 13NC x 4in (Grade 8) **(Prior to SN 0300066417)**	
4		Ref	Bolt Options:	
4	0682214	4	Bolt 3/4in-10NC x 1-3/4in (Grade 8) **(Prior to SN 0300077735)**	
4	0682216	4	Bolt 3/4in-10NC x 2in (Grade 8) **(SN 0300077735 through 0300140000)**	
5	0920117	NLA	Drive Brake Assembly (Use p/n 0920119)	
5	7018612	1	Repair Kit - 0920117 & 0920119 Brake	
5	7000731	2	Gasket (Between Components)	
6	2780205	1	Swing Hub Assembly (See SWING HUB ASSEMBLY for Breakdown) **(Prior to SN 0300066417)**	
7		Ref	Swing Motor Assembly Options (See SWING MOTOR ASSEMBLY for Breakdown):	
7	3160280	1	Swing Motor Assembly **(Prior to SN 0300066417)**	
7	3160286	1	Swing Motor/Swing Hub Assembly **(SN 0300066417 through 0300074381)**	
7	3160294	1	Swing Motor/Swing Hub Assembly **(SN 0300074382 through 0300134351)**	
7	1001101060	1	Swing Motor/Swing Hub Assembly **(SN 0300134352 through 0300140000)**	
9	3312002	1	Nut, Jam 3/4in-10NC	
10	3900293	1	Bolt, Shoulder	
11	3932224	4	Bolt 1/2in - 13NC x 1-1/2in **(Prior to SN 0300074382)**	
12	3952020	2	Setscrew 5/8in-11NC x 2-1/2in	
13	4891800	2	Flatwasher 1/2in Hardened	
14		Ref	Flatwasher 3/4in Hardened Options::	
14	4892200	4	Flatwasher 3/4in Hardened **(Prior to SN 0300066417)**	
14	4740057	4	Flatwasher 3/4in Hardened **(SN 0300066417 through 0300140000)**	
15	4846430	1	Plate, Mounting **(Prior to SN 0300074382)**	
16	4071009	1	Shim	
	0271002	Ref	**SWING BEARING INSTALLATION**	E
101	0100019	AR	Compound, Locking	
102	0440244	1	Bearing, Turntable	
103	0682023	24	Bolt 5/8in - 11NC X 2-7/8in (Grade 8)	
104	0682032	24	Bolt 5/8in - 11NC x 4in (Grade 8)	
105	4892000	48	Flatwasher 5/8in Hardened	
	0259147	Ref	**TURNTABLE LOCK INSTALLATION**	B
201	4844958	1	Pin	
202	3421565	1	Pin, Snap	
203	3760170	2	Ring, Quick Release	
204	1260017	9 in/23cm	Chain	
	0271496	Ref	**REMOTE BEARING LUBE INSTALLATION**	B
301	2160001	1	Fitting, Grease	
302	2180344	1	Fitting, Bulkhead	
303	2220063	1	Fitting, Elbow	

SECTION 2 - TURNTABLE

ITEM	PART NUMBER	QTY	DESCRIPTION	REV
304	2220124	1	Fitting, Elbow **(Prior to SN 0300111097)**	
305	2751032	1	Hose, Grease	

FIGURE 2-4. SWING HUB ASSEMBLY (Prior to SN 0300066417)

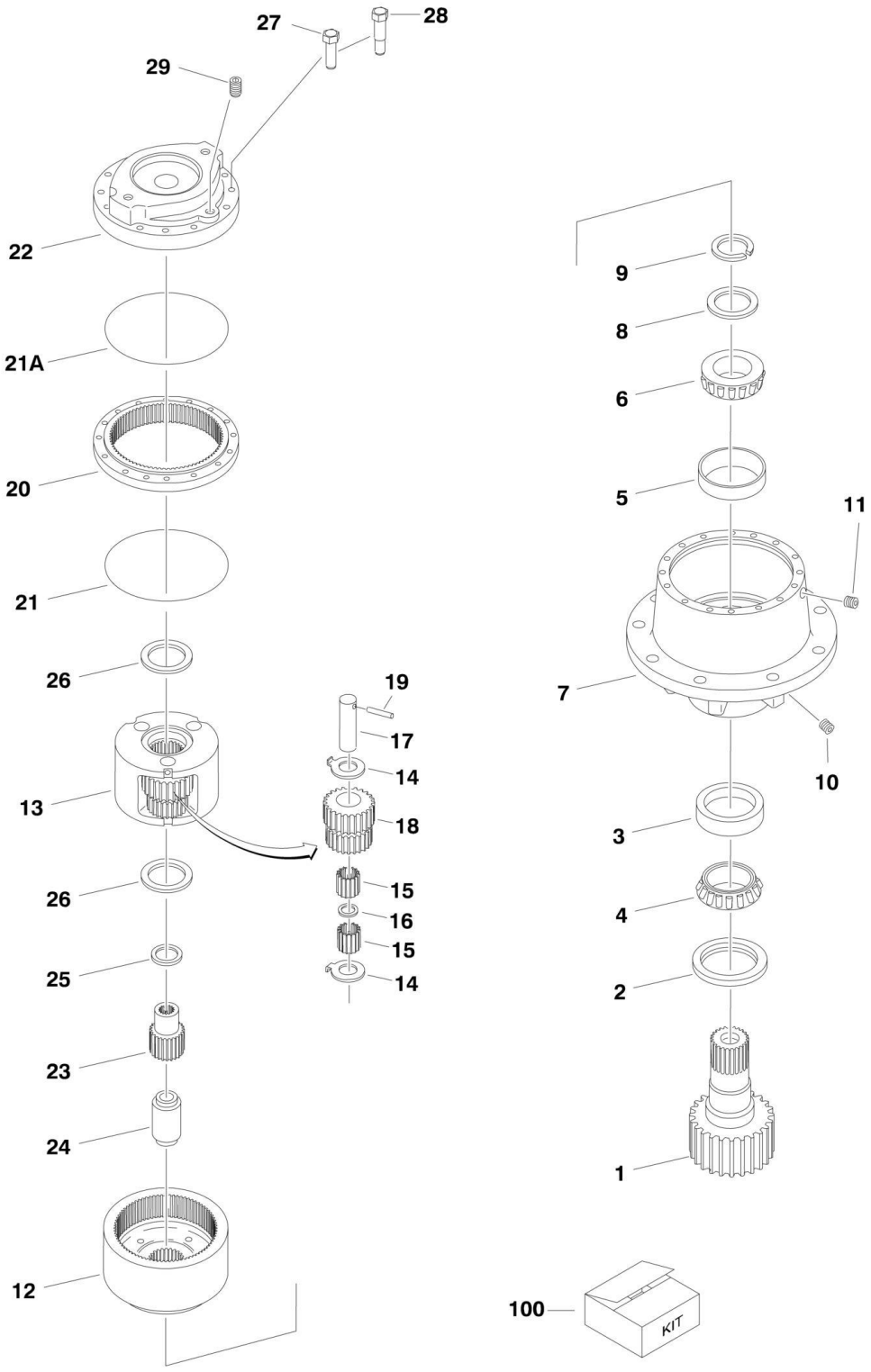

FIGURE 2-4. SWING HUB ASSEMBLY (Prior to SN 0300066417)

ITEM	PART NUMBER	QTY	DESCRIPTION	REV
	2780205	Ref	**SWING HUB ASSEMBLY**	-
		Ref	**Housing Assembly**	
1	7010492	1	Shaft, Output	
2	7000228	1	Seal, Lip	
3	7000255	1	Cup, Bearing	
4	7000256	1	Cone, Bearing	
5	7000257	1	Cup, Bearing	
6	7000258	1	Cone, Bearing	
7	7017089	1	Housing	
8	7007633	1	Thrustwasher	
9	7000229	1	Ring, Retaining	
10	7010494	2	Pipe, Plug	
11	7001928	2	Pipe, Plug	
12	7000246	2	Gear, In O-Ring	
		Ref	**Carrier Assembly**	
13	7001931	1	Carrier	
14	7001985	6	Thrustwasher, Tanged	
15	7001909	96	Bearing, Needle	
16	7000263	3	Spacer, Thrust	
17	7001911	3	Shaft, Planet	
18	7001987	3	Gear, Cluster	
19	7010474	3	Rollpin	
20	7001988	1	Ring Gear	
21	7000230	1	O-Ring (Black)	
21A	7017070	1	O-Ring (White)	
22	7000209	1	Cover, Input	
23	7010488	1	Gear, Sun	
24	7000269	1	Spacer, Input	
25	7000270	1	Thrustwasher	
26	7000253	2	Thrustwasher	
27	7000217	8	Bolt	
28	7000214	4	Bolt, Shoulder	
29	2200222	1	Pipe, Plug	
		Ref	**KIT OPTIONS:**	
100	7024100	1	Kit, Seal (Includes Items 2, 9, 21, 21A & 26)	

FIGURE 2-5. SWING MOTOR ASSEMBLY (Prior to SN 0300066417)

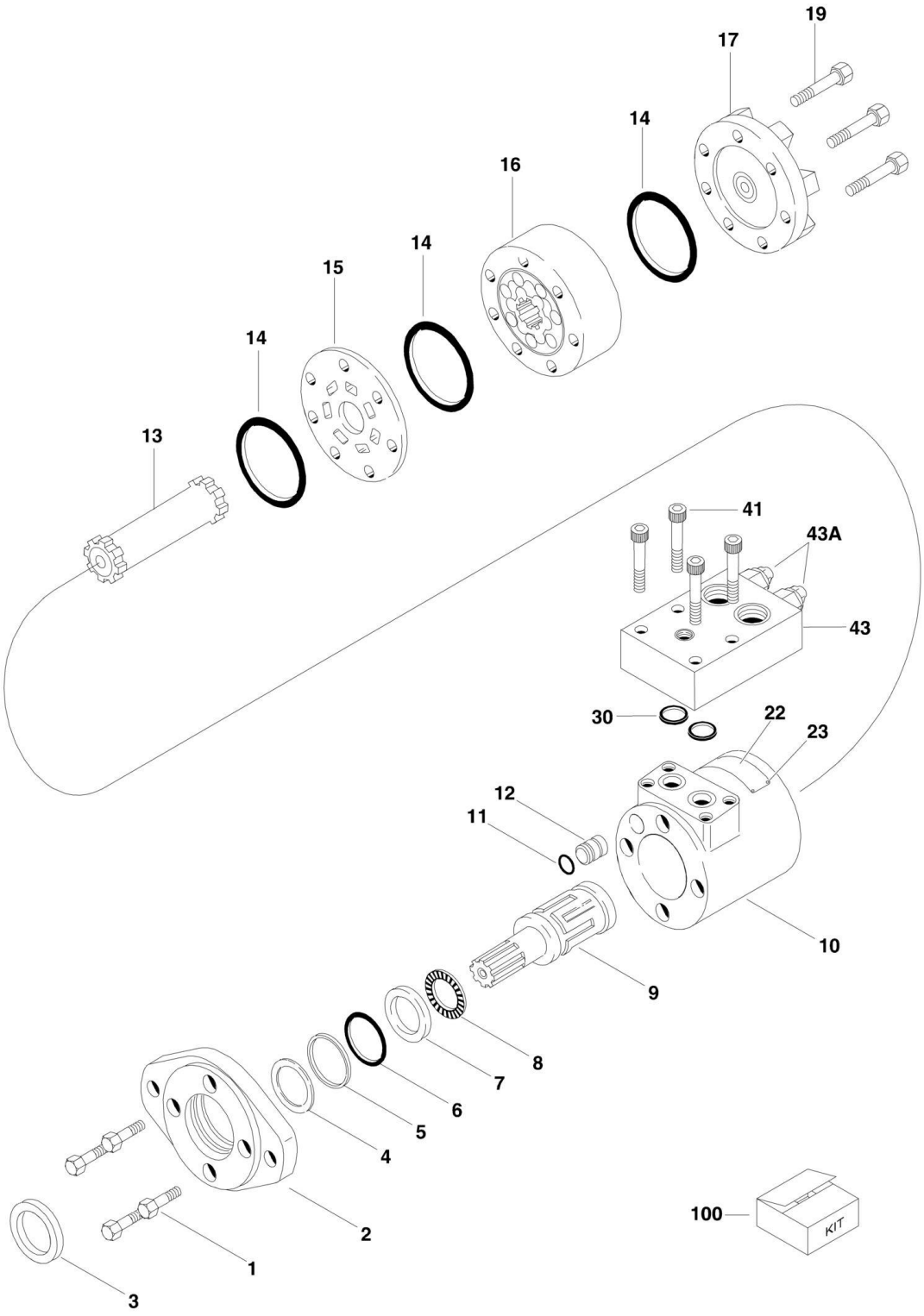

FIGURE 2-5. SWING MOTOR ASSEMBLY (Prior to SN 0300066417)

ITEM	PART NUMBER	QTY	DESCRIPTION	REV
	3160280	Ref	**SWING MOTOR ASSEMBLY**	B
1	7020357	4	Capscrew	
2	7009996	1	Flange, Mounting	
3	See Note	NSS	Seal, Exclusion (Note: Use Item 100)	
4	See Note	NSS	Washer, Back-up (Note: Use Item 100)	
5	See Note	NSS	Seal, Pressure (Note: Use Item 100)	
6	See Note	NSS	Seal (Note: Use Item 100)	
7	7002117	1	Race, Bearing	
8	7002111	1	Bearing, Thrust Needle	
9	7009998	1	Shaft, Output	
10	7020352	1	Housing	
11	See Note	NSS	O-Ring (Note: Use Item 100)	
12	7009992	1	Plug, Housing	
13	7002112	1	Drive	
14	See Note	NSS	Seal (Note: Use Item 100)	
15	7002110	1	Plate, Spacer	
16	7002125	1	Gerotor Sub-Assembly	
17	7002107	1	Cap, End	
19	7014900	7	Capscrew	
22	See Note	NSS	Nameplate (Note: Not Available for Purchase)	
23	See Note	NSS	Rivet (Note: Not Available for Purchase)	
30	See Note	NSS	O-Ring (Note: Use Item 100)	
41	7020353	4	Capscrew	
43	7020359	1	Cartridge, Counterbalance Valve	
43A	7020362	2	Cartridge	
43A	7020363	2	O-Ring for 7020362 Cartridge	
		Ref	**KIT OPTIONS:**	
100	2900733	1	Seal Kit - Includes Items 3-6, 11, 14 & 30	

FIGURE 2-6. SWING MOTOR/HUB ASSEMBLY (SN 0300066417 through 0300134351)

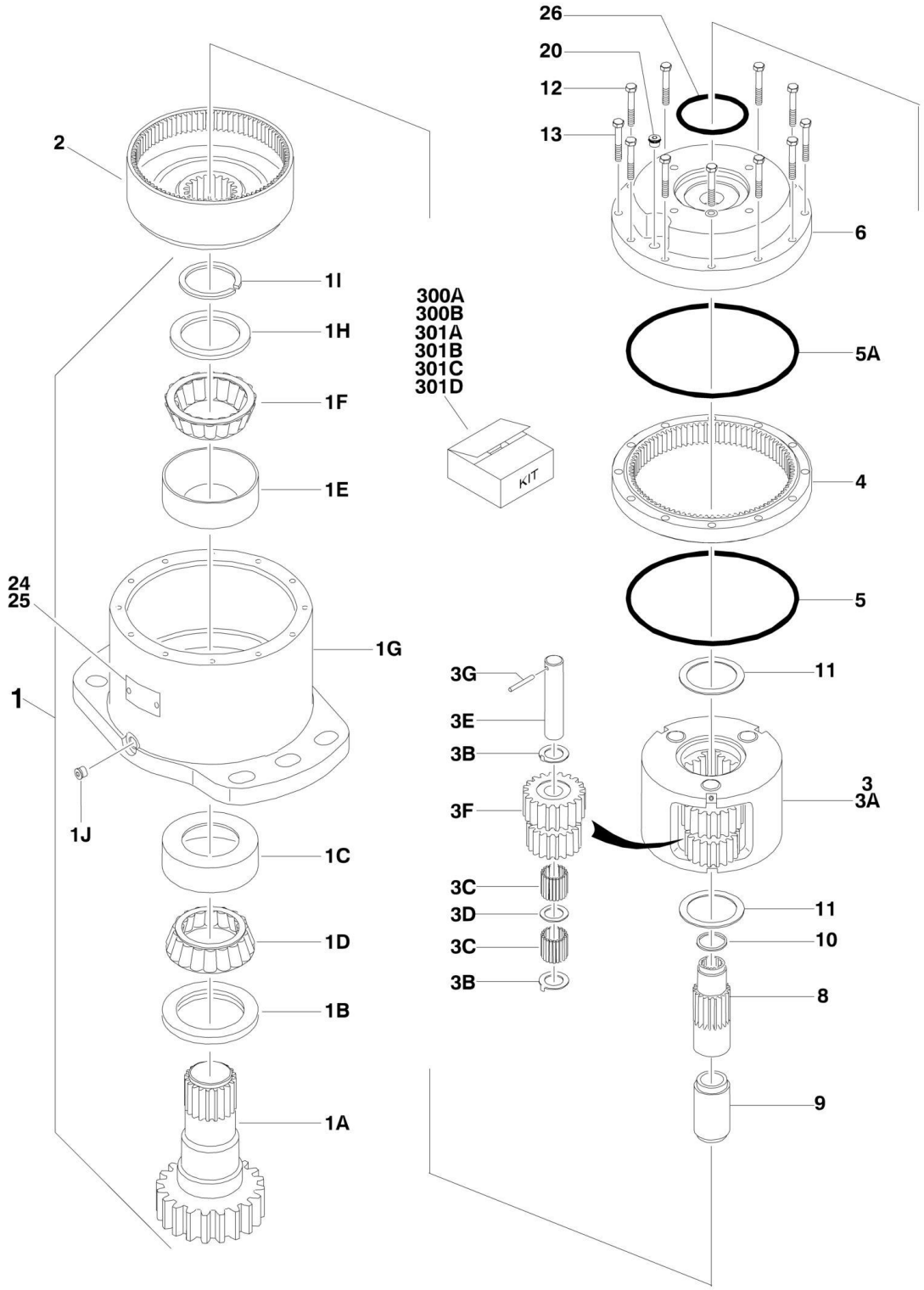

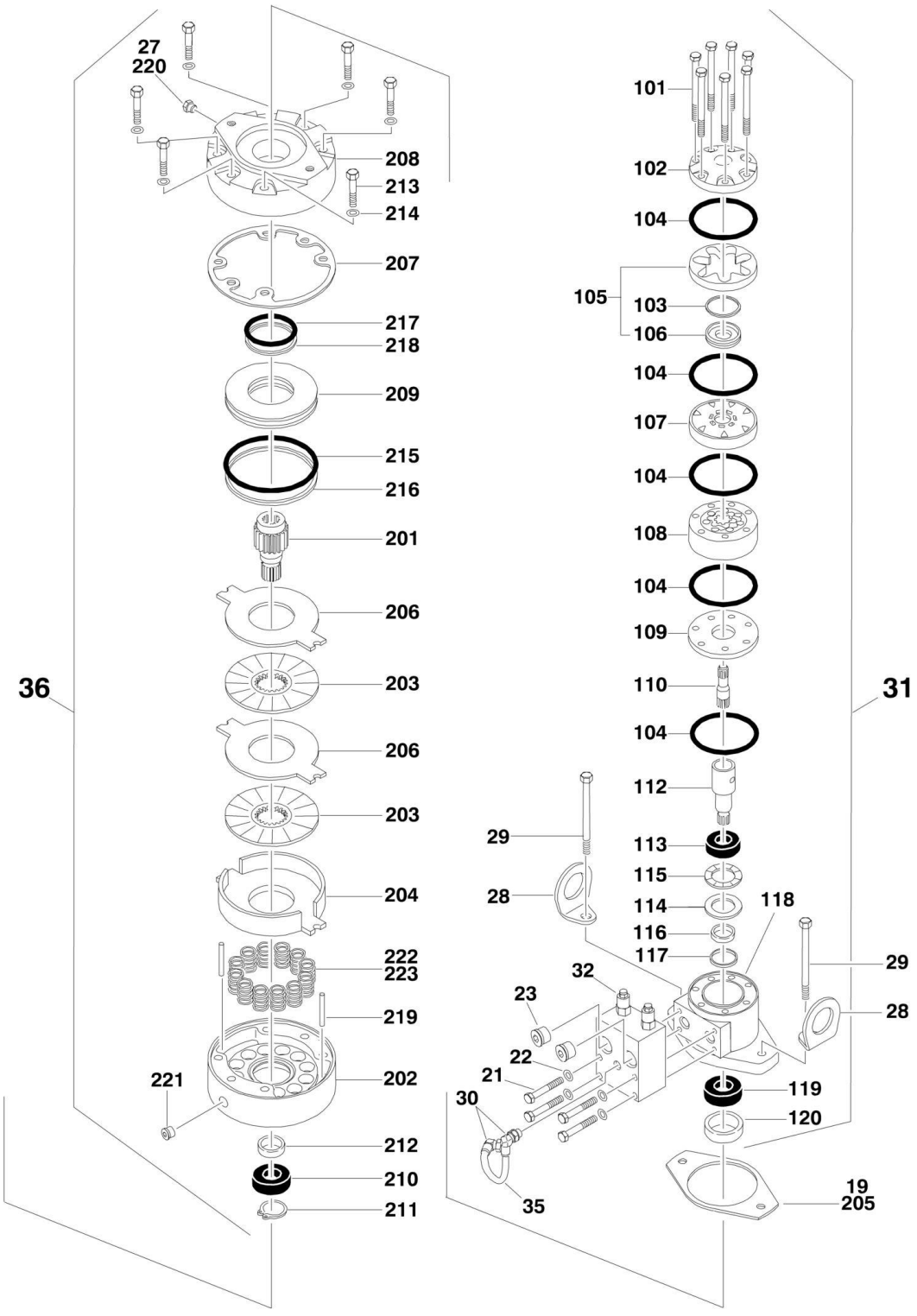
27
220
208
213
214
207
217
218
209
215
216
201
206
203
206
203
204
222
223
219
221
202
212
210
211
36
101
102
104
105
103
106
104
107
104
108
104
109
110
104
112
113
115
114
116
117
118
29
28
32
23
22
21
30
35
119
120
19
205
31

FIGURE 2-6. SWING MOTOR/HUB ASSEMBLY (SN 0300066417 through 0300134351)

ITEM	PART NUMBER	QTY	DESCRIPTION	REV
		Ref	**SWING MOTOR/HUB ASSEMBLIES**	
	3160286	Ref	**Swing Motor/Hub Assemblies (SN 0300066417 through 0300074381)**	B
	3160294	Ref	**Swing Motor/Hub Assemblies (SN 0300074382 through 0300134352)**	B
1	See Note	NSS	Housing/Shaft Assembly (Note: Not Available - Purchase Individual Components)	
1A	7010492	1	Shaft, Out put	
1B	7000228	1	Seal, Lip	
1C	7000255	1	Cup, Bearing	
1D	7000255	1	Cone, Bearing (was p/n 7000256)	
1E	7000257	1	Cup, Bearing	
1F	7000257	1	Cone, Bearing (was p/n 7000258)	
1G	7017089	1	Housing	
1H	7007633	1	Thrustwasher	
1I	7000229	1	Ring, Retaining	
1J	7001928	1	Plug, Pipe	
2	7000246	1	Gear, Internal	
3	80424002	1	Carrier Assembly	
3A	7001931	1	Carrier	
3B	7001985	6	Washer, Tanged	
3C	7001909	84	Bearing, Needle	
3D	7000263	3	Thrustwasher	
3E	7001911	3	Shaft, Planet	
3F	7001912	3	Gear, Cluster	
3G	7010474	3	Rollpin	
4	7000248	1	Gear, Ring	
5	7000230	1	O-Ring	
5A	7017070	1	O-Ring	
6	7000209	1	Cover, Input	
8	7010461	1	Gear, Sun	
9	7000269	1	Spacer, Input	
10	7000270	1	Thrustwasher	
11	7000253	2	Thrustwasher	
12	7000217	8	Bolt 3/8in-16NC x 2-1/4in (Grade 8)	
13	7000214	4	Bolt, Shoulder 3/8in-16NC x 1-7/8in (Grade 8)	
19	7024703	1	Gasket	
20	2200222	1	Plug, Pipe	
21	7024704	4	Bolt 5/16in-18NC x 2in (Grade 8)	
22	See Note	NSS	Lockwasher (Note: Not Available for Purchase)	
23	7017023	2	Plug, Pipe	
24	See Note	NSS	Plate, ID (Note: Not Available for Purchase)	
25	7000281	2	Screw, Drive	
26	7024705	1	O-Ring	
27	7017082	1	Plug, Pipe	
28	See Note	NSS	Lug, Lifting (Note: Not Available for Purchase)	
29	7024185	2	Bolt 1/2in-13NC x 5in (Grade 8)	
30	7017085	2	Elbow	
31	7024707	1	Motor Assembly (See Items 101-120 for Breakdown)	
32	7024784	1	Valve Assembly - Complete (No Serviceable Parts)	

ITEM	PART NUMBER	QTY	DESCRIPTION	REV
35	7024706	1	Tube	
36	7024702	1	Brake Assembly (See Items 201-223 for Breakdown)	
	7024707	Ref	**MOTOR ASSEMBLY**	
101	7024454	5	Bolt	
102	7024459	1	Cover, End	
103	See Note	NSS	Seal, Commutator (Note: Use Item 300A)	
104	See Note	NSS	Seal, Ring (Note: Use Item 300A)	
105	7024453	1	Commutator and Ring Assembly	
106	7024453	1	Ring	
107	7024379	1	Manifold	
108	7024455	1	Rotor Set	
109	7024380	1	Plate, Wear	
110	7024456	1	Link, Drive	
112	7024458	1	Shaft, Coupling	
113	7004042	1	Bearing, Inner	
114	7004043	1	Thrustwasher	
115	7004044	1	Bearing, Thrust	
116	See Note	NSS	Seal, Inner (Note: Use Item 300A)	
117	See Note	NSS	Washer, Back-up (Note: Use Item 300A)	
118	7024457	1	Housing	
119	80424042	1	Bearing, Outer (was p/n 7004046)	
120	See Note	NSS	Seal (Note: Use Item 300A)	
	7024702	Ref	**BRAKE ASSEMBLY**	
201	7024189	1	Shaft	
202	7024702	1	Housing (Note: Not Available for Purchase)	
203	See Note	NSS	Plate, Friction (Note: Use Item 301C)	
204	See Note	NSS	Plate, Pressure (Note: Use Item 301C)	
205	See Note	NSS	Gasket (Note: Use Item 300B)	
206	See Note	NSS	Plate, Outer (Note: Use Item 301C)	
207	See Note	NSS	Gasket (Note: Use Items 300B, 301C or 301D)	
208	7024191	1	Cylinder	
209	7024192	1	Piston	
210	See Note	NSS	Bearing, Ball (Note: Use Item 301D)	
211	See Note	NSS	Ring, Retaining (Note: Use Item 301D)	
212	See Note	NSS	Seal, Shaft (Note: Use Item 301D)	
213	See Note	NSS	Capscrew (Note: Not Available for Purchase)	
214	See Note	NSS	Lockwasher (Note: Not Available for Purchase)	
215	See Note	NSS	O-Ring (Note: Use Item 300B)	
216	See Note	NSS	Ring, Back-up (Note: Use Item 300B)	
217	See Note	NSS	O-Ring (Note: Use Item 300B)	
218	See Note	NSS	Ring, Back-up (Note: Use Item 300B)	
219	7024190	2	Pin, Dowel	
220	See Note	NSS	Plug (Note: Not Available - Purchase Locally)	
221	See Note	NSS	Plug (Note: Not Available - Purchase Locally)	
222	See Note	NSS	Spring (Natural) (Note: Use Item 301B)	
223	See Note	NSS	Spring (Blue) (Note: Use Item 301B)	
		Ref	**KIT OPTIONS:**	
300		Ref	Seal Kit Options:	
300A	7024389	1	Seal Kit - 7024707 Motor (Includes Items 103, 104, 116, 117 & 120) (was p/n 7024396)	
300B	7024194	1	Seal Kit - 7024702 Brake (Includes Items 205, 207 & 215-218)	
301		Ref	Repair Kit Options:	

SECTION 2 - TURNTABLE

ITEM	PART NUMBER	QTY	DESCRIPTION	REV
301A	7024195	NLA	Spring Kit - 7024182 Brake (Includes 12 Natural Colored Springs) (Use p/n 7024196)	
301B	7024196	1	Spring Kit - 7024182 Brake (Includes 12 Natural and 2 Blue Colored Springs)	
301C	7024193	1	Friction Disc Kit - 7024702 Brake (Includes Items 203, 204, 206 & 207)	
301D	7024197	1	Bearing Kit - 7024702 Brake (Includes Items 207 & 210-212)	

FIGURE 2-7. SWING MOTOR/HUB ASSEMBLY (SN 0300134352 through 0300140000)

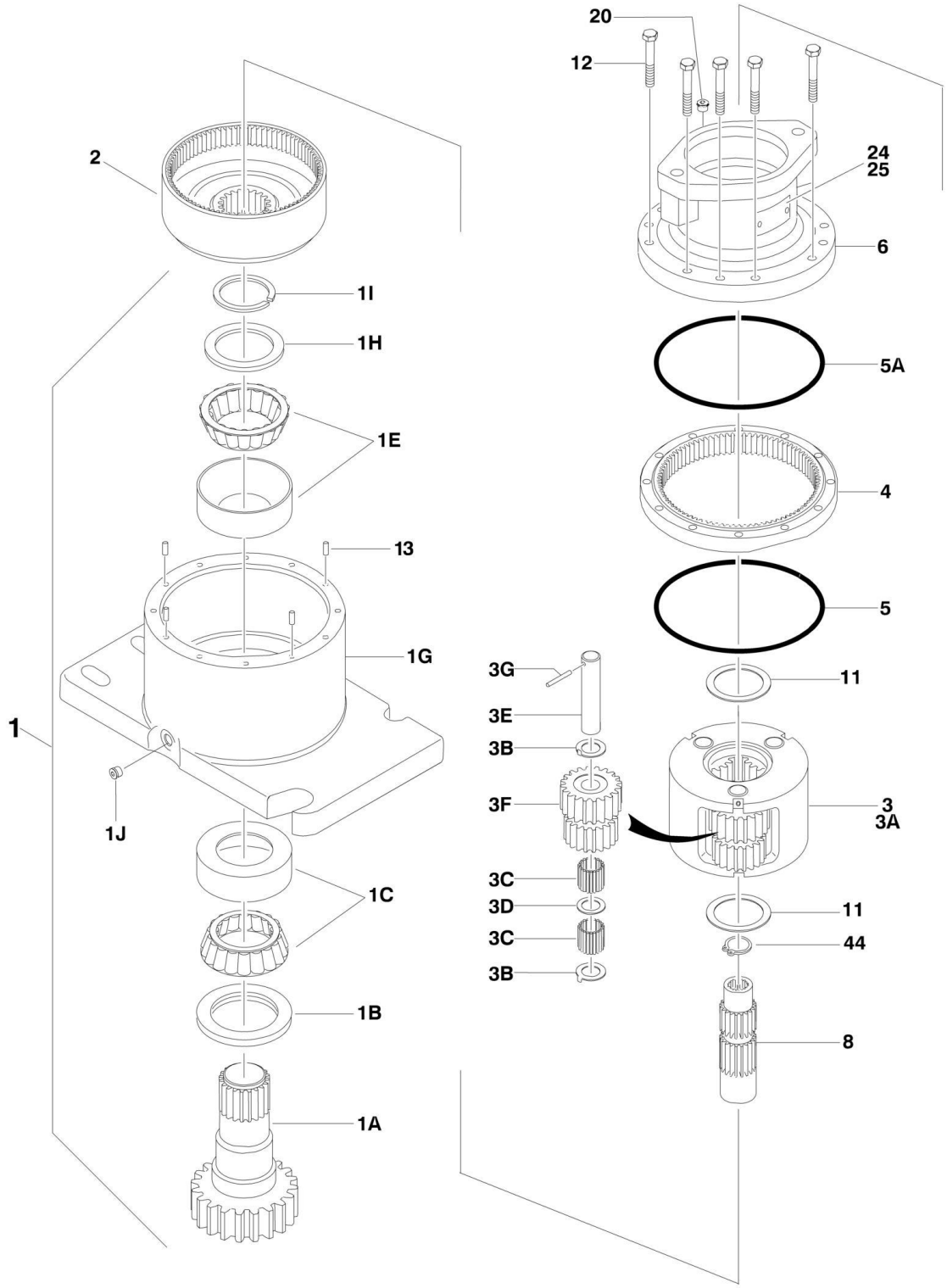

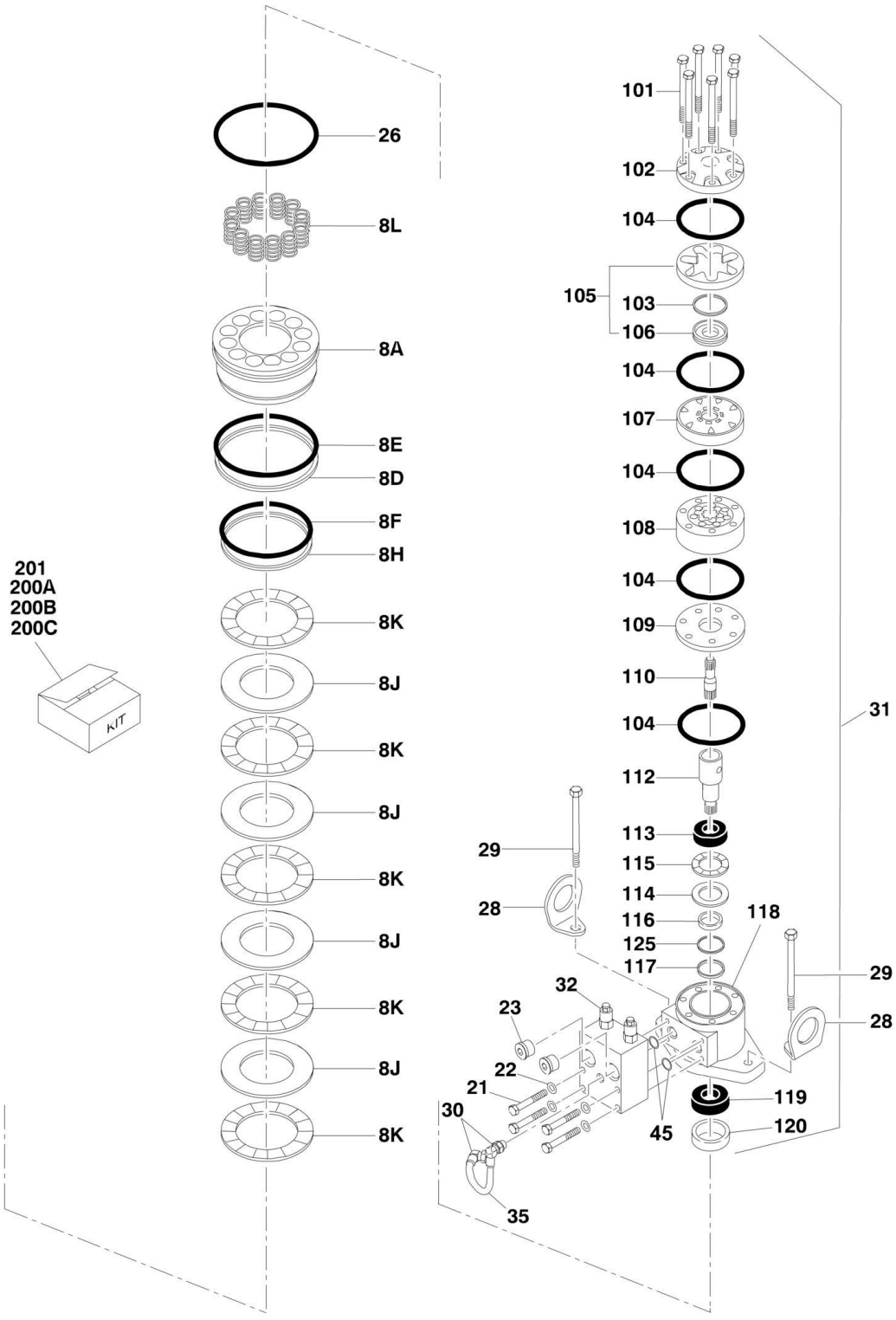
26
8L
8A
8E
8D
8F
8H
201
200A
200B
200C
KIT
8K
8J
8K
8J
8K
8J
8K
8J
8K
101
102
104
105
103
106
104
107
104
108
104
109
110
104
112
113
115
114
116
125
117
118
29
28
31
32
23
22
21
30
35
45
119
120

FIGURE 2-7. SWING MOTOR/HUB ASSEMBLY (SN 0300134352 through 0300140000)

ITEM	PART NUMBER	QTY	DESCRIPTION	REV
	1001101060	Ref	**SWING MOTOR/HUB ASSEMBLY**	A
1	See Note	NSS	Housing/Shaft Assembly (Note: Not Available - Purchase Individual Components)	
1A	7010492	1	Shaft, Output	
1B	7000228	1	Seal, Lip	
1C	7000255	1	Bearing Kit (Includes Cup and Cone)	
1E	7000257	1	Bearing Kit (Includes Cup and Cone)	
1G	7024762	1	Housing	
1H	7007633	1	Thrustwasher	
1I	7000229	1	Ring, Retaining	
1J	7017072	1	Plug, Pipe	
2	7000246	1	Gear, Internal	
3	80424002	1	Carrier Assembly	
3A	7001931	1	Carrier	
3B	7001985	6	Washer, Tanged	
3C	7001909	84	Bearing, Needle	
3D	7000263	3	Thrustwasher	
3E	7001911	3	Shaft, Planet	
3F	7001912	3	Gear, Cluster	
3G	7010474	3	Rollpin	
4	7000248	1	Gear, Ring	
5	7000230	1	O-Ring	
5A	7017070	1	O-Ring	
6	1001101060	NSS	Housing, Brake (Note: Not Available - Purchase Complete Assembly)	
8	70002065	1	Gear, Sun	
8A	70000782	1	Piston	
8D	70002070	1	O-Ring	
8E	70002071	1	Ring, Back-up	
8F	70002073	1	O-Ring	
8H	70002072	1	Ring, Back-up	
8J	70002067	4	Disc, Rotor	
8K	70002068	5	Disc, Stator	
8L	70002066	14	Spring	
11	7000253	2	Thrustwasher	
12	7000217	12	Bolt 3/8in-16NC x 2-1/4in (Grade 8)	
13	7017080	4	Pin, Dowel	
20	7017072	1	Plug, Pipe	
21	7024704	4	Bolt 5/16in-18NC x 2in (Grade 8)	
22	See Note	NSS	Lockwasher (Note: Not Available for Purchase)	
23	7017023	2	Plug, Pipe	
24	See Note	1	Plate, ID (Note: Not Available for Purchase)	
25	7000281	2	Screw, Drive	
26	7024763	1	O-Ring	
28	See Note	NSS	Lug, Lifting (Note: Not Available for Purchase)	
29	70002069	2	Bolt 1/2in-13NC x 2in (Grade 8)	
30	7017085	2	Elbow	
31	70002075	1	Motor Assembly (See Items 101-125 for Breakdown)	
32	7024784	1	Valve Assembly - Complete (No Serviceable Parts)	
35	70002074	1	Tube	

ITEM	PART NUMBER	QTY	DESCRIPTION	REV
44	7017028	1	Ring, Internal Retaining	
45	7000213	2	O-Ring	
	70002075	Ref	**MOTOR ASSEMBLY**	
101	7024454	5	Bolt	
102	7004035	1	Cover, End	
103	7023318	1	Seal, Commutator	
104	7004036	5	Seal, Ring	
105	7024453	1	Commutator and Ring Assembly	
106	7024453	1	Ring	
107	7024379	1	Manifold	
108	7024455	1	Rotor Set	
109	7024380	1	Plate, Wear	
110	7024456	1	Link, Drive	
112	7024458	1	Shaft, Coupling	
113	7024381	1	Bearing, Inner	
114	7004043	1	Thrustwasher	
115	7004044	1	Bearing, Thrust	
116	7004049	1	Seal, Inner	
117	7004045	1	Washer, Back-up	
118	7024457	1	Housing	
119	7024390	1	Bearing, Outer	
120	7004047	1	Seal	
125	80424043	1	Washer, Back-up	
		Ref	**KIT OPTIONS:**	
200		Ref	Seal Kit Options:	
200A	7024100	1	Swing Hub (Includes Items 1B, 1I, 5, 5A & 11)	
200B	70002086	1	Swing Brake (Includes Items 8D, 8E, 8F, 8H & 26)	
200C	7024396	1	Swing Motor (Includes Items 103, 104, 116, 117, 120 & 125)	
201	70002085	1	Disc Kit - Swing Brake (Includes Items 8J & 8K)	

FIGURE 2-8. CATERPILLAR ENGINE INSTALLATION (Prior to SN 0300139398)

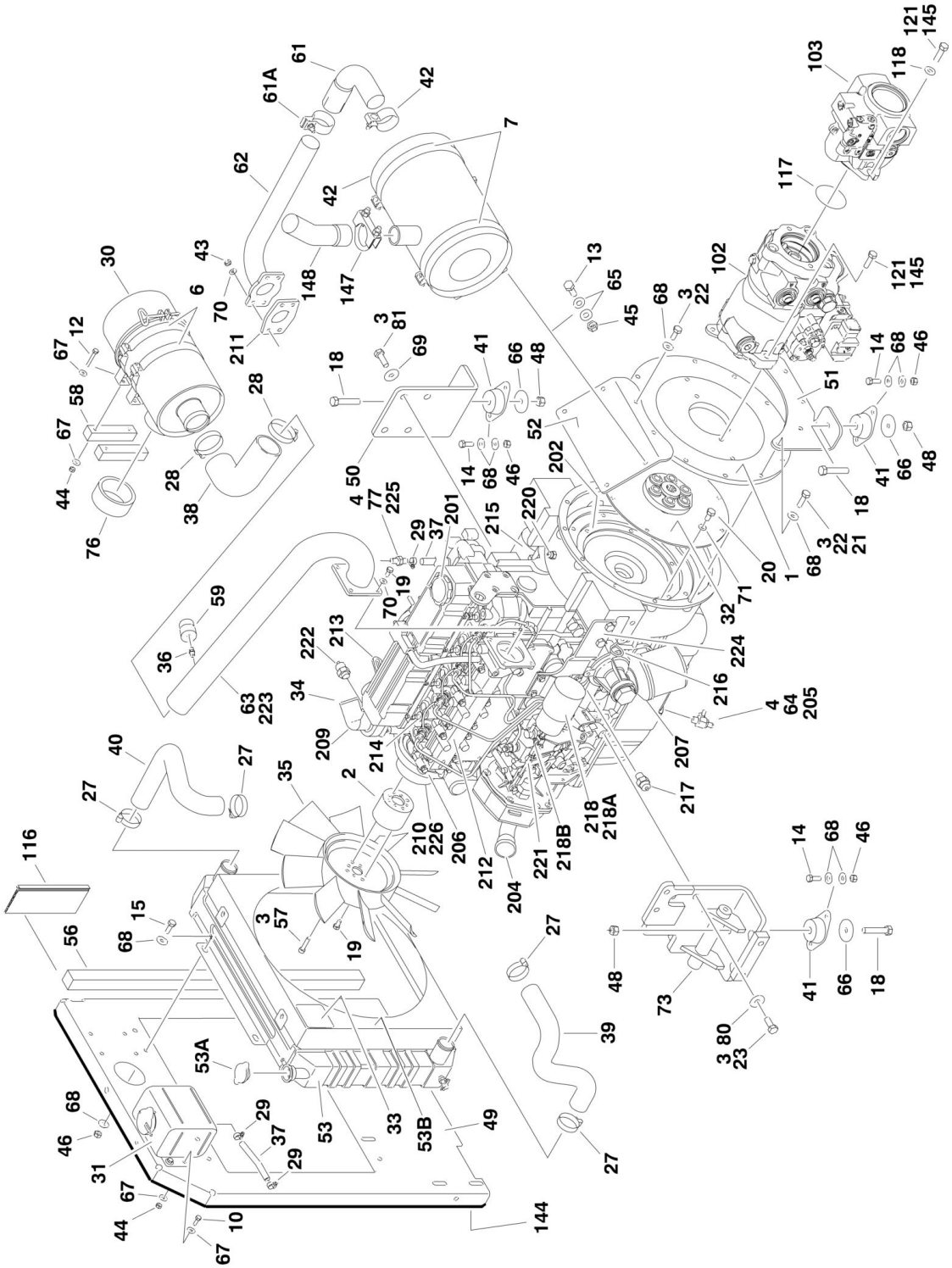

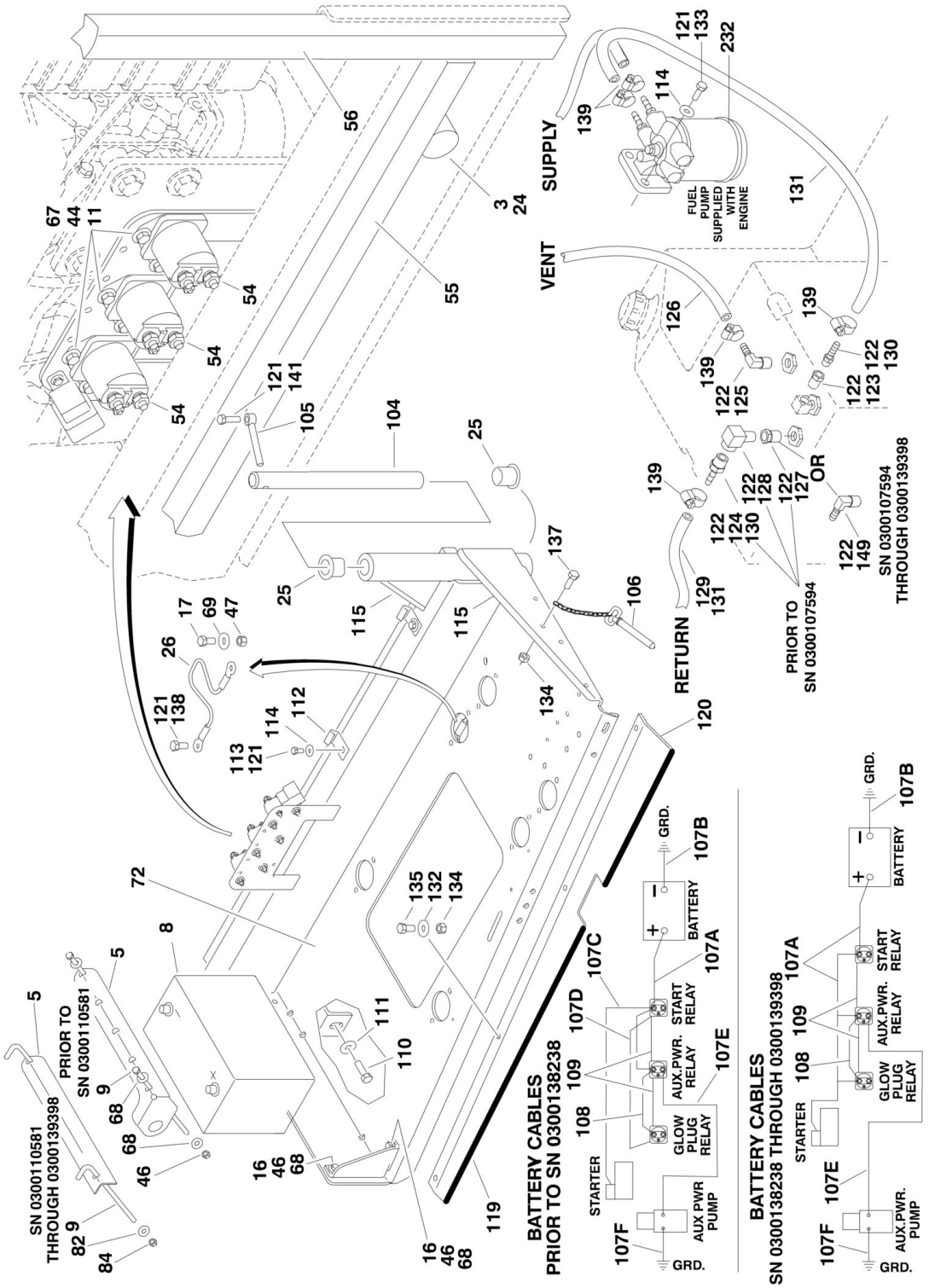
SUPPLY
VENT
RETURN
FUEL PUMP SUPPLIED WITH ENGINE
PRIOR TO SN 0300107594
SN 0300107594 THROUGH 0300139398
OR
PRIOR TO SN 0300110581
SN 0300110581 THROUGH 0300139398
BATTERY CABLES
PRIOR TO SN 0300138238
BATTERY CABLES
SN 0300138238 THROUGH 0300139398
STARTER
AUX PWR PUMP
GLOW PLUG RELAY
AUX.PWR. RELAY
START RELAY
BATTERY
GRD.

FIGURE 2-8. CATERPILLAR ENGINE INSTALLATION (Prior to SN 0300139398)

ITEM	PART NUMBER	QTY	DESCRIPTION	REV
		Ref	**CATERPILLAR ENGINE ASSEMBLIES**	
		Ref	**Machines without Arctic Package**	
	0272796	Ref	**Tier II Engines (Prior to SN 0300087262)**	F
	0274491	Ref	**Tier II Engines (SN 0300087262 through 0300134725)**	L
	1001105993	Ref	**Tier III Engines (SN 0300134726 through 0300139398)**	D
		Ref	**Machines with Arctic Package**	
	0275256	Ref	**Tier II Engines (Prior to SN 0300134726)**	I
	1001106338	Ref	**Tier III Engines (SN 0300134726 through 0300139398)**	D
1	0080181	1	Adaptor, Pump Mounting Plate	
2	0080243	1	Adaptor, Fan Spacer	
3	0100011	AR	Compound, Locking	
4	0100020	AR	Sealant, Thread	
5		Ref	Hold-Down, Battery Options:	
5	0181727	1	Hold-down, Battery **(Prior to SN 0300110581)**	
5	91401281	1	Hold-down, Battery **(SN 0300110581 through 0300139398)**	
6	0340041	2	Band, Mounting	
7	0340046	2	Band, Muffler	
8	0400075	1	Battery	
9		Ref	Bolt, Battery Hold-down Options:	
9	0630498	2	Bolt, Battery Hold-down **(Prior to SN 0300110581)**	
9	1001093382	2	Bolt, Battery Hold-down **(SN 0300110581 through 0300139398)**	
10	0641406	4	Bolt 1/4in-20NC x 3/4in	
11	0641407	6	Bolt 1/4in-20NC x 7/8in	
12	0701414	4	Bolt 1/4in-20NC x 3/4in	
13	0641507	4	Bolt 5/16in-18NC x 7/8in	
14	0641608	AR	Bolt 3/8in-16NC x 1in	
15	0641609	4	Bolt 3/8in-16NC x 1-1/8in	
16	0641610	4	Bolt 3/8in-16NC x 1-1/4in	
17	0641808	1	Bolt 1/2in-13NC x 1in	
18	0641820	4	Bolt 1/2in-13NC x 2-1/2in	
19	0700808	AR	Bolt M8 x 16mm	
20	0701010	8	Bolt M10 x 20mm	
21	0701012	4	Bolt M10 x 25mm	
22	0701015	8	Bolt M10 x 35mm	
23		Ref	Bolt Options:	
23	0701214	4	Bolt M12 x 30mm **(Prior to SN 0300098894)**	
23	0711214	4	Bolt M12 x 30mm **(SN 0300098894 through 0300139398)**	
24	0940070	1	Bumper, Rubber	
25	0961986	2	Bearing, Flange	
26	1060637	1	Lanyard	
27		Ref	Clamp, Hose Options:	
27	1320012	4	Clamp, Hose **(Prior to SN 0300087262)**	
27	8405104	4	Clamp, Hose **(SN 0300087262 through 0300139398)**	
28	1320016	2	Clamp, Hose	
29		Ref	Clamp, Hose Options:	
29	1320022	3	Clamp, Hose **(Prior to SN 0300087262)**	
29	8405009	3	Clamp, Hose **(SN 0300087262 through 0300139398)**	
30	1340060	1	Air Cleaner Assembly	
30	7012664	1	Element, Air Cleaner	

ITEM	PART NUMBER	QTY	DESCRIPTION	REV
31	1580011	1	Container, Coolant Overflow	
32	1660239	1	Coupling, Pump	
33	1703162	2	Decal - Fan Blade	
34		Ref	Caterpillar Engine Assembly Options:	
34	2000194	1	Tier II Engines **(Prior to SN 0300104771)**	
34	2000386	1	Tier II Engines **(SN 0300104771 through 0300134725)**	
34	1001100313	1	Tier III Engines **(SN 0300134726 through 0300139398)**	
35	2060025	1	Fan	
36	2180798	1	Fitting **(Prior to SN 0300104771)**	
37	2720058	0.33 ft /0.1m	Hose	
38	2720434	1	Elbow, Rubber	
39	2720509	1	Hose, Radiator (Bottom)	
40		Ref	Hose, Radiator (Top) Options:	
40	2720510	1	Tier II Engines **(Prior to SN 0300134726)**	
40	1001107705	1	Tier III Engines **(SN 0300134726 through 0300139398)**	
41	3200406	4	Mount, Engine	
42		Ref	Muffler Options:	
42	3220113	1	Spark Arresting Muffler	
42	70001017	1	Clamp	
42	1001107116	1	Catalytic Muffler	
42	70002705	1	Clamp	
42	70002706	1	Plug, Brass	
43	3290801	4	Nut M8 x 1.25	
44	3311405	14	Locknut 1/4in-20NC	
45	3311505	AR	Locknut 5/16in-18NC	
46	3311605	AR	Locknut 3/8in-16NC	
47	3311801	1	Nut 1/2in-13NC	
48	3311805	4	Locknut 1/2in-13NC	
49	3539872	1	Plate, Radiator Mounting	
50	3574206	1	Plate, Motor Mount	
51	3574207	1	Plate, Engine Mount (Rear)	
52	3574208	1	Bracket, Muffler	
53	3620047	1	Radiator	
53A	7027412	1	Cap	
53B	70004182	1	Shroud, Fan	
54	3740067	3	Relay, Solenoid Assembly	
55	3960468	1	Seal, Foam Gasket	
56	3960469	1	Seal, Foam Gasket	
57	4031911	4	Bolt Metric M8 x 35mm	
58	4220191	2	Block, Spacer	
59	4360392	1	Switch, Restriction Indicator **(Prior to SN 0300104771)**	
61	4567073	1	Tube, Exhaust	
61A	70001017	1	Clamp	
62	4568721	1	Exhaust Tube Weldment	
63		Ref	Tube, Air Intake Weldment Options:	
63	4568788	1	Tube, Air Intake Weldment **(Prior to SN 0300087262)**	
63	4569177	1	Tube, Air Intake Weldment (Note: See Engine Components for Air Intake Tube p/n) **(SN 0300087262 through 0300104771)**	
64		Ref	Valve, Oil Drain Options:	
64	4640750	1	Valve, Oil Drain **(Prior to SN 0300134726)**	

ITEM	PART NUMBER	QTY	DESCRIPTION	REV
64	1001105833	NLA	Valve, Oil Drain (Use p/n 4640750) **(SN 0300134726 through 0300139398)**	
65	4711500	8	Flatwasher 5/16in Thin	
66	4740274	4	Washer, Snubbing	
67	4751400	28	Flatwasher 1/4in Regular	
68	4751600	AR	Flatwasher 3/8in Regular	
69	4751800	1	Flatwasher 1/2in Regular	
70	4811900	AR	Flatwasher M8	
71	4832000	8	Lockwasher M10	
72	4846790	1	Tray Engine	
73	4846805	1	Mount, Engine/Generator - Left	
74	4922737	1	Harness, Relay Ground	
75	0721006	1	Bolt #10-24NC x 3/4in **(Prior to SN 0300098894)**	
76	2720515	1	Seal, Air Cleaner	
77	2220767	1	Fitting **(SN 0300075603 through 0300104771)**	
78		Ref	Coolant Options (Not Shown):	
78	2300004	2.63 gal /9.96L	Without Arctic Package **(SN 0300093812 through 0300139398)**	
78	2300041	2.63 gal /9.96L	With Arctic Package **(SN 0300104771 through 0300139398)**	
79		Ref	Motor Oil Options (Not Shown):	
79	3020016	2.5 gal /9.4L	Without Arctic Package - Motor Oil 15W-40 **(SN 0300093812 through 0300139398)**	
79	3020044	2.5 gal /9.4L	With Arctic Package - Motor Oil 0W-40 **(SN 0300104771 through 0300139398)**	
80		Ref	Flatwasher Options:	
80	4751800	8	Flatwasher 1/2in **(Prior to SN 0300098894)**	
80	4812100	8	Flatwasher M12 **(SN 0300098894 through 0300139398)**	
81	0100019	AR	Compound, Locking **(SN 0300098894 through 0300110581)**	
82	4751500	2	Flatwasher 5/16in Regular **(SN 0300110581 through 0300139398)**	
83		Ref	Bolt Options:	
83	0711214	4	Bolt M12 x 30mm **(Prior to SN 0300111029)**	
83	0711212	4	Bolt M12 x 25mm **(SN 0300111029 through 0300139398)**	
84	88521205	2	Locknut, Nylon Insert 5/16in-18NC	
		Ref	**Note: Arctic Package Items 85-89 Not Shown - Used on Arctic Machines Only.**	
85	1060626	1	Cord, 3-Way Extension (Located on Left Front of Engine)	
86	1320223	2	Clamp	
87	2580024	1	Heater, Battery (Located on Battery)	
88	2580055	1	Heater, Block (Located on Left Side of Engine)	
89	3980007	1	Seat, Battery (Located Under Battery)	
		Ref	**CATERPILLAR ENGINE INSTALLATIONS**	
		Ref	**Machines without Arctic Package**	
	0273527	Ref	**Tier II Engines (Prior to SN 0300087262)**	4-D
	0274626	Ref	**Tier II Engines (SN 0300087262 through 0300134725)**	5-E
	1001106698	Ref	**Tier III Engines (SN 0300134726 through 0300139398)**	4-B
		Ref	**Machines with Arctic Package**	
	0275585	Ref	**Tier II Engines (Prior to SN 0300134726)**	B
	1001106699	Ref	**Tier III Engines (SN 0300134726 through 0300139398)**	D
102		Ref	Piston Pump Assembly Options (See PISTON PUMP ASSEMBLY for Breakdown):	
102	3600295	1	Piston Pump Assembly **(Prior to SN 0300135831)**	

ITEM	PART NUMBER	QTY	DESCRIPTION	REV
102	3600410	1	Piston Pump Assembly **(SN 0300135831 through 0300139398)**	
103		Ref	Load Sensing Pump Assembly Options (See LOAD SENSING PUMP ASSEMBLY for Breakdown):	
103	3600324	1	Load Sensing Pump Assembly **(Prior to SN 0300135831)**	
103	3600411	1	Load Sensing Pump Assembly **(SN 0300135831 through 0300139398)**	
104	3422446	1	Pin, Pivot	
105	3841143	1	Keeper, Pin	
106	3422532	1	Pin, Hitch	
107	2901609	1	Battery Cable Kit **(Prior to SN 0300078364)**	
107	2902401	1	Battery Cable Kit (Note: 2902401 Rev A version is no longer available. Verify whether machine is equipped with 2 or 3 relays on the engine tray. If there are 3 relays, purchase latest revision of 2902401 kit. If there are 2 relays, purchase individual items as replacement) **(SN 0300078364 through 0300138237)**	A
107	2902401	1	Battery Cable Kit **(SN 0300138238 through 0300139398)**	B
107A	7016800	1	Cable, Battery (Red) **(Prior to SN 0300078364)**	
107A	7016813	1	Cable, Battery (Red) **(SN 0300078364 through 0300138237)**	
107A	1001116288	1	Cable, Battery (Red) (Machines with 2 Relays on Engine Tray) (was p/n 7027027) **(SN 0300138238 through 0300139398)**	
107A	1001116287	1	Cable, Battery (Red) (Machines with 3 Relays on Engine Tray) (was p/n 7027027) **(SN 0300138238 through 0300139398)**	
107B	7016809	1	Cable, Battery (Black) **(Prior to SN 0300078364)**	
107B	7027012	1	Cable, Battery **(SN 0300078364 through 0300138237)**	
107B	7027004	1	Cable, Battery (Black) **(SN 0300138238 through 0300139398)**	
107C	7016802	1	Cable (Red) **(Prior to SN 0300078364)**	
107C	Not Required	0	Cable (Red) (Part of Item 107A) **(SN 0300078364 through 0300139398)**	
107D	7016803	1	Cable (Red) **(Prior to SN 0300138238)**	
107D	Not Required	0	Cable (Red) **(SN 0300138238 through 0300139398)**	
107E	7016824	1	Cable (Red)	
107F	7016825	1	Cable (Black)	
108	1060904	1	Cable, Battery (Glow Plugs)	
109	4922737	1	Harness, Relay Ground	
110	0642010	1	Bolt 5/8in-11NC x 1-1/4in	
111	4752000	1	Flatwasher 5/8in Regular	
112	1320223	AR	J-Clip 1/2in	
113	0641606	2	Bolt 3/8in-16NC x 3/4in	
114	4711600	4	Flatwasher 3/8in Thin	
115	4060805	2 ft /0.7mm	Flex-Trim 1/4in	
116	3960549	1 ft /0.3mm	Seal	
117	3790044	1	O-Ring	
118	4891800	2	Flatwasher 1/2in Hardened	
119	3960464	42 in/1m	Seal, Hood **(Prior to SN 0300087262)**	
120	3539934	1	Plate, Seal **(Prior to SN 0300087262)**	
121	0100011	AR	Compound, Locking	
122	0100020	AR	Sealant, Thread	
123		Ref	Fitting, Reducer Options:	
123	2220273	1	Without Arctic Package **(Prior to SN 0300107594)**	
123	Not Required	0	With Arctic Package	

SECTION 2 - TURNTABLE

ITEM	PART NUMBER	QTY	DESCRIPTION	REV
124		Ref	Fitting Options:	
124	2180536	1	Without Arctic Package - Fitting, Straight **(Prior to SN 0300075346)**	
124	2221176	1	With Arctic Package - Fitting, Elbow	
125	2220313	1	Fitting, Elbow	
126	2750532	7 ft/2.2m	Hose 3/8in	
127		Ref	Fitting, Reducer Options:	
127	2220250	1	Without Arctic Package **(Prior to SN 0300107594)**	
127	Not Required	0	With Arctic Package	
128		Ref	Fitting, Elbow Options:	
128	2220459	1	Without Arctic Package **(Prior to SN 0300107594)**	
128	Not Required	0	With Arctic Package	
129	2720271	15 ft/4.6m	Hose 3/16in **(Prior to SN 0300075346)**	
130		Ref	Fitting, Barbed	
130	2220794	2	Without Arctic Package **(Prior to SN 0300107594)**	
130	2180348	1	Without Arctic Package **(SN 0300107594 through 0300139398)**	
130	2180348	1	With Arctic Package	
131		Ref	Hose Options:	
131	2720058	16 ft/4.9m	Hose **(Prior to SN 0300075346)**	
131	2720058	30 ft/9.1m	Hose **(SN 0300075346 through 0300139398)**	
132	4751400	AR	Flatwasher 1/4in Regular	
133	0641608	AR	Bolt 3/8in-16NC x 1in	
134	3311405	AR	Locknut 1/4in-20NC	
135	0641406	4	Bolt 1/4in-20NC x 3/4in **(Prior to SN 0300087262)**	
136	3311505	8	Locknut 5/16in-18NC **(Prior to SN 0300075346)**	
137	0641407	1	Bolt 1/4in-20NC x 7/8in	
138		Ref	Bolt Options:	
138	0641808	1	Without Arctic Package - Bolt 1/2in-13NC x 1in	
138	Not Required	0	With Arctic Package	
139	1320022	7	Clamp, Hose	
140	1701505	1	Decal - Diesel (Not Shown - Located on Hood)	
141	0641610	1	Bolt 3/8in-16NC x 1-1/4in	
142	0641514	3	Bolt 5/16in-18NC x 1-3/4in **(Prior to SN 0300075346)**	
143	4751500	3	Flatwasher 5/16in Regular **(Prior to SN 0300075346)**	
144	3960548	42 in/1m	Seal, Hood	
145	0641812	4	Bolt 1/2in-13NC x 1-1/2in	
146	2200222	1	Plug, Pipe (Not Shown - Located in Bottom of Fuel Tank)	
147	1320176	1	Clamp **(SN 0300093812 through 0300139398)**	
148	3460544	1	Pipe, Exhaust **(SN 0300093812 through 0300139398)**	
149	2221176	1	Fitting, Elbow **(SN 0300107594 through 0300139398)**	
		Ref	**Note: Arctic Package Items 150-155 Not Shown - Used on Arctic Machines Only.**	
150	1060625	1	Cable, Immersion Heater (Located on bottom of Hydraulic Oil Tank)	
151	2580050	1	Heater, Hydraulic Tank (Located on bottom of Hydraulic Oil Tank)	
152	1702941	1	Decal - Battery Heater (Located on Battery Heater)	
153	1702942	1	Decal - Engine Block Heater (Located on Right Side of Engine)	
154	1702943	1	Decal - Hydraulic Tank Heater (Located on bottom of Hydraulic Oil Tank)	
155	1702944	1	Decal - Heater Cord (Located on Left Front of Engine)	
		Ref	**ENGINE COMPONENTS**	

ITEM	PART NUMBER	QTY	DESCRIPTION	REV
	2000194	Ref	**Caterpillar 3044 Tier III (Prior to SN 0300104771)**	E
	2000386	Ref	**Caterpillar 3044 Tier III (SN 0300104771 through 0300134725)**	B
	1001100313	Ref	**Caterpillar C3.4 Tier IVi (SN 0300134726 through 0300139398)**	C
201	7026800	1	Cap Oil Filler	
202	7026802	1	Flywheel	
202	7026803	1	Gear, Flywheel	
203	7026804	1	Gasket (Not Shown - Between Flywheel Housing and Engine Block)	
203	7026805	1	Seal (Not Shown - Rear of Flywheel Housing)	
204	7026806	1	Cap, Filler	
204	7026807	1	Seal, Oil (Located in Front Housing)	
205	7026808	1	Plug, Oil Pan	
205	7026809	1	Gasket, Oil Plug	
206	7026810	1	V-Belt	
207	7026811	1	Filter, Oil	
		Ref	Note: Machines with SkyPower use Remote Mounted Oil Filter - See SPECIAL OPTIONS SECTION. The same oil filter is used for all applications.	
207	7026812	1	O-Ring (Between Bolt and Oil Filter Bracket)	
207	7026813	1	O-Ring (Between Oil Filter Bracket and Engine Block)	
208	7026819	1	Engine Cooler Assembly (Not Shown)	
208	7026816	2	O-Ring (Between Cover and Cooler)	
208	7026817	4	O-Ring (Between Cover and Cooler)	
208	7026818	1	Gasket (Between Cover and Engine Block)	
209	7026822	1	Thermostat	
209	7026821	1	Gasket (Between Regulator and Thermostat Housing)	
209	7026820	1	Gasket (Between Regulator and Engine Head)	
210		Ref	Pump, Water Options:	
210		Ref	Caterpillar Engine p/n 2000194	
210	7026823	1	Caterpillar Engine Prior to SN 3440833 (Not Machine SN)	
210	70001120	1	Caterpillar Engine SN 3440833 to Present (Not Machine SN)	
210	70001120	1	Caterpillar Engine p/ns 2000386 & 1001100313	
210	7026824	1	Gasket, Water Pump Cover (Use with p/n 7026823 Pump)	
210	7026825	1	Gasket, Water Pump (Use with p/n 7026823 Pump)	
210	70002765	1	Hose, By-Pass (Not Shown)	
211	7026827	1	Gasket, Exhaust	
211	70002852	4	Stud, Exhaust Manifold	
212	7026829	1	Gasket, Intake Manifold	
212	7026828	1	Gasket, Intake	
213	7026831	1	Alternator	
214	7026832	4	Plug, Glow	
215	7026833	1	Starter	
216		Ref	Dipstick Oil Level Options:	
216	7026834	1	Dipstick for 2000194 Engines	
216	7026888	1	Dipstick for 2000386 Engines	
216	70002844	1	Dipstick for 1001100313 Engines	
216	70002843	1	Seal, Dipstick Tube	
217	7026814	1	Relief Valve, Oil Pressure	
217	7026815		Gasket, Relief Valve	
217	1001097554		Sensor, Oil Pressure (Not Shown)	
218	1600361	1	Actuator/Linkage Assembly - Throttle	
218A	1600361	1	Actuator and Electrical Connector Kit (was p/n 7026842)	

SECTION 2 - TURNTABLE

ITEM	PART NUMBER	QTY	DESCRIPTION	REV
218A	7026835	1	Connector, Actuator	
218B	7026843	1	Linkage Kit	
220	7026841	1	Sensor, Speed Sensor	
220	7026836	1	Connector, Speed Sensor	
221	70002849	1	Pump, Fuel Injection	
221	70002847	1	O-Ring, Fuel Injection Pump Flange	
221	70002848	1	Gasket, Fuel Injection Pump	
221	70002850	1	Solenoid, Fuel Shut-Off	
222	7026840	1	Sensor, Water Temperature	
222	7026882	1	Seal, Sensor	
223	4569371	1	Tube, Air Intake Weldment (2000386 & 1001100313 Engines)	
224	7026887	1	Mounting Bracket, Actuator (was p/n 0902910 & 0903220)	
225	70001051	1	Valve, Air Intake Check	
226	70001742	1	Pulley, Water Pump	
227	2580055	1	Block Heater Kit (Not Shown) (was p/n 7026845)	
227	7026838	1	Gasket, Block Heater (Not Shown)	
227	70002841	1	Cord, Electrical (Not Shown)	
228	70002766	1	Head, Cylinder (Not Shown)	
228	7026801	1	Gasket, Valve Cover (Not Shown)	
228	70002764	1	Gasket, Rear Head (Not Shown)	
228	70002767	1	Gasket, Head (Not Shown)	
228	70002761	AR	Bolt, Head (Not Shown)	
228	70002762	AR	Seat, Valve (Not Shown)	
229	70002845	1	Pump, Oil (Not Shown)	
229	70002846	1	O-Ring, Oil Pump (Not Shown)	
231	70002851	1	Gasket Kit - Complete (Not Shown)	
232	7026839	1	Pump, Fuel Supply	
232	70002763	1	Gasket, Fuel Line (Not Shown)	
232	7026830	1	Element, Fuel Filter	
232	70002834	1	Bowl, Water Collection	
232	70002835	1	Seal Kit - Water Separator	
232	70002833	1	Ring, Fuel Pump Retaining	

FIGURE 2-9. CATERPILLAR ENGINE INSTALLATION (SN 0300139398 through 0300140000)

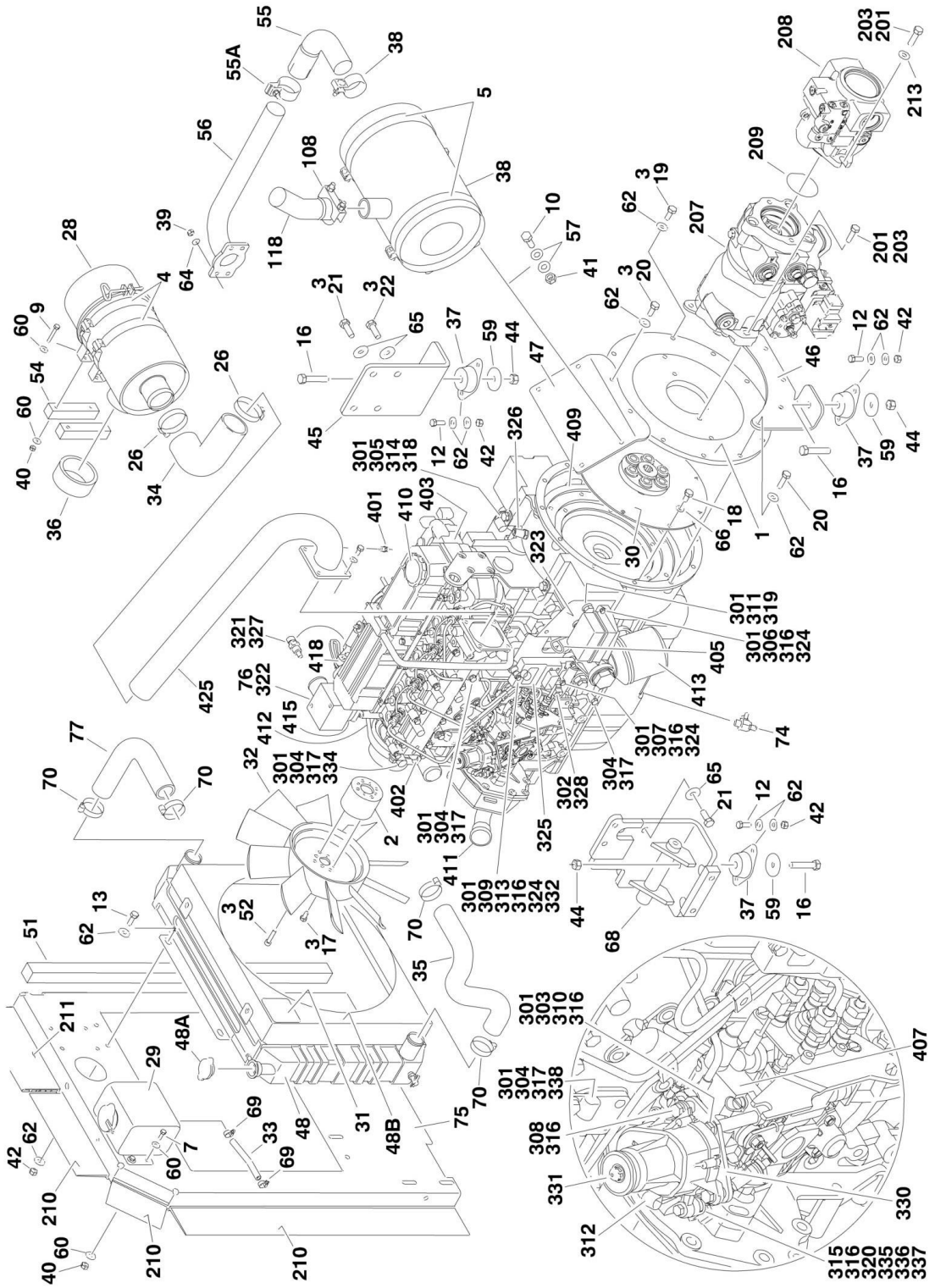

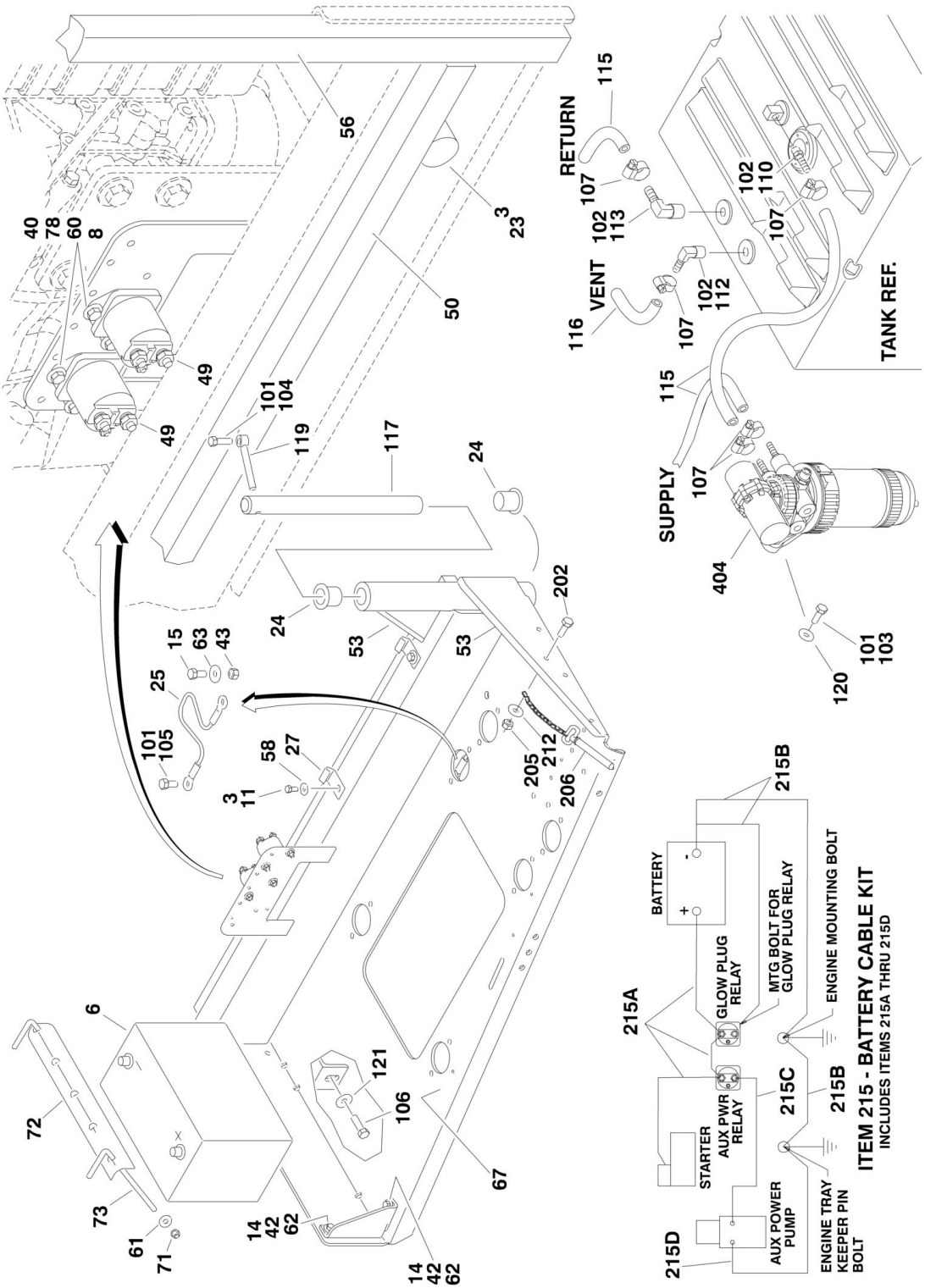
RETURN
VENT
SUPPLY
TANK REF.
BATTERY
GLOW PLUG RELAY
MTG BOLT FOR GLOW PLUG RELAY
ENGINE MOUNTING BOLT
STARTER
AUX PWR RELAY
AUX POWER PUMP
ENGINE TRAY KEEPER PIN BOLT
ITEM 215 - BATTERY CABLE KIT
INCLUDES ITEMS 215A THRU 215D

FIGURE 2-9. CATERPILLAR ENGINE INSTALLATION (SN 0300139398 through 0300140000)

ITEM	PART NUMBER	QTY	DESCRIPTION	REV
	1001109065	Ref	**CATERPILLAR TIER IVi ENGINE ASSEMBLY**	C
1	0080181	1	Adaptor, Pump Mounting Plate	
2	0080243	1	Adaptor, Fan Spacer	
3	0100011	AR	Compound, Locking	
4	0340041	2	Band, Mounting	
5	0340046	2	Band, Muffler	
6	0400075	1	Battery	
7	0641406	4	Bolt 1/4in-20NC x 3/4in	
8	0641407	4	Bolt 1/4in-20NC x 7/8in	
9	0701414	4	Bolt 1/4in-20NC x 3/4in	
10	0641507	4	Bolt 5/16in-18NC x 7/8in	
11	0641606	2	Bolt 3/8in-16NC x 3/4in	
12	0641608	8	Bolt 3/8in-16NC x 1in	
13	0641609	4	Bolt 3/8in-16NC x 1-1/8in	
14	0641610	4	Bolt 3/8in-16NC x 1-1/4in	
15	0641808	1	Bolt 1/2in-13NC x 1in	
16	0641820	4	Bolt 1/2in-13NC x 2-1/2in	
17	0700808	4	Bolt M8 x 16mm	
18	0701010	8	Bolt M10 x 20mm	
19	0701012	4	Bolt M10 x 25mm	
20	0701015	8	Bolt M10 x 35mm	
21	0711214	5	Bolt M12 x 30mm	
22	0771212	3	Bolt M12 x 25mm	
23	0940070	1	Bumper, Rubber	
24	0961986	2	Bearing, Flange	
25	1060637	1	Lanyard	
26	1320016	2	Clamp, Hose	
27	1320223	4	J-Clip 1/2in	
28	1340060	1	Air Cleaner Assembly	
28	7012664	1	Element, Air Cleaner	
29	1580011	1	Container, Coolant Overflow	
30	1660239	1	Coupling, Pump	
31	1703162	2	Decal - Fan Blade	
32	2060025	1	Fan	
33	2720058	0.33 ft /0.1m	Hose	
34	2720434	1	Elbow, Rubber	
35	2720509	1	Hose, Radiator (Bottom)	
36	2720515	1	Seal, Air Cleaner	
37	3200406	4	Mount, Engine	
38		Ref	Muffler Options:	
38	3220113	1	Spark Arresting Muffler	
38	70001017	1	Clamp	
38	1001107116	1	Catalytic Muffler	
38	70002705	1	Clamp	
38	70002706	1	Plug, Brass	
39	3290801	4	Nut M8 x 1.25	
40	3311405	12	Locknut 1/4in-20NC	
41	3311505	4	Locknut 5/16in-18NC	
42	3311605	AR	Locknut 3/8in-16NC	

ITEM	PART NUMBER	QTY	DESCRIPTION	REV
43	3311801	1	Nut 1/2in-13NC	
44	3311805	4	Locknut 1/2in-13NC	
45	3574206	1	Plate, Motor Mount	
46	3574207	1	Plate, Engine Mount (Rear)	
47	3574208	1	Bracket, Muffler	
48	3620047	1	Radiator	
48A	7027412	1	Cap	
48B	70004182	1	Shroud, Fan	
49	3740067	3	Relay, Solenoid Assembly	
50	3960468	1	Seal, Foam Gasket	
51	3960469	1	Seal, Foam Gasket	
52	4031911	4	Bolt M8 x 35mm	
53	4060805	2 ft /0.7mm	Flex-Trim 1/4in	
54	4220191	2	Block, Spacer	
55	4567073	1	Tube, Exhaust	
55A	70001017	1	Clamp	
56	4568721	1	Exhaust Tube Weldment	
57	4711500	8	Flatwasher 5/16in Thin	
58	4711600	2	Flatwasher 3/8in Thin	
59	4740274	4	Washer, Snubbing	
60	4751400	24	Flatwasher 1/4in	
61	4751500	2	Flatwasher 5/16in Regular	
62	4751600	44	Flatwasher 3/8in Regular	
63	4751800	1	Flatwasher 1/2in Regular	
64	4811900	4	Flatwasher M8	
65	4812100	8	Flatwasher M12	
66	4832000	8	Lockwasher M10	
67	4846790	1	Tray Engine	
68	4846805	1	Mount, Engine/Generator - Left	
69	8405009	2	Clamp, Hose	
70	8405104	4	Clamp, Hose	
71	88521205	2	Locknut, Nylon Insert 5/16in-18NC	
72	91401281	1	Hold-down, Battery	
73	1001093382	2	Bolt, Battery Hold-down	
74	1001105833	1	Valve, Oil Drain	
75	1001109595	1	Plate, Radiator Mounting	
76	1001112077	1	Caterpillar Tier IVi Engine Assembly	
77	1001107705	1	Hose, Radiator (Top)	
78	4791400	4	Starwasher 1/4in	
		Ref	**CATERPILLAR TIER IVi ENGINE INSTALLATIONS**	
	1001110212	Ref	**Machines without Arctic Package**	D
	1001110213	Ref	**Machines with Arctic Package**	C
101	0100011	AR	Compound, Locking	
102	0100020	AR	Sealant, Thread	
103	0641608	2	Bolt 3/8in-16NC x 1in	
104	0641610	1	Bolt 3/8in-16NC x 1-1/4in	
105	0641808	1	Bolt 1/2in-13NC x 1in	
106	0642010	1	Bolt 5/8in-11NC x 1-1/4in	
107	1320022	7	Clamp, Hose	
108	1320176	1	Clamp	
109	1701505	1	Decal - Diesel (Not Shown - Located on Hood)	

ITEM	PART NUMBER	QTY	DESCRIPTION	REV
110	2180348	1	Fitting, Barbed	
111	2200222	1	Plug, Pipe (Not Shown - Located in Bottom of Fuel Tank)	
112	2220313	1	Fitting, Elbow	
113	2221176	1	Fitting, Elbow	
114		Ref	Coolant Options (Not Shown):	
114	2300004	2.63 gal /9.96L	Without Arctic Package	
114	2300041	2.63 gal /9.96L	With Arctic Package	
115	2720058	30 ft/9.1m	Hose	
116	2750532	7 ft/2.2m	Hose 3/8in	
117	3422446	1	Pin, Pivot	
118	3460544	1	Pipe, Exhaust	
119	3841143	1	Keeper, Pin	
120	4711600	2	Flatwasher 3/8in Thin	
121	4752000	1	Flatwasher 5/8in Regular	
		Ref	**Note: Arctic Package Items 123-126 Not Shown - Used on Arctic Machines Only.**	
123	1060625	1	Cable, Immersion Heater (Located on bottom of Hydraulic Oil Tank)	
124	1320223	1	Clamp	
125	1702943	1	Decal - Hydraulic Tank Heater (Located on bottom of Hydraulic Oil Tank)	
126	2580050	1	Heater, Hydraulic Tank (Located on bottom of Hydraulic Oil Tank)	
		Ref	**CATERPILLAR TIER IVi ENGINE WITH PUMPS ASSEMBLIES**	
	1001110206	Ref	**Machines without Arctic Package**	B
	1001110205	Ref	**Machines with Arctic Package**	C
201	0100011	AR	Compound, Locking	
202	0641407	1	Bolt 1/4in-20NC x 7/8in	
203	0641812	4	Bolt 1/2in-13NC x 1-1/2in	
204		Ref	Motor Oil Options (Not Shown):	
204	3020016	2.5 gal /9.4L	Without Arctic Package - Motor Oil 15W-40	
204	3020044	2.5 gal /9.4L	With Arctic Package - Motor Oil 0W-40	
205	3311405	1	Locknut 1/4in-20NC	
206	3422532	1	Pin, Hitch	
207	3600410	1	Piston Pump Assembly (See PISTON PUMP ASSEMBLY for Breakdown)	
208	3600411	1	Load Sensing Pump Assembly with Fittings (See LOAD SENSING PUMP ASSEMBLY for Breakdown)	
209	3790044	1	O-Ring	
210	3960548	42 in/1m	Seal, Hood	
211	3960549	1 ft /0.3mm	Seal	
212	4751400	1	Flatwasher 1/4in Regular	
213	4891800	2	Flatwasher 1/2in Hardened	
215	1001112762	1	Battery Cable Kit	B
215A	7027028	1	Cable, Battery (Red)	
215B	7027029	1	Cable, Battery (Black)	
215C	7027030	1	Cable (Red)	
215D	7027031	1	Cable (Black)	
		Ref	**Note: Arctic Package Items 216-226 Not Shown - Used on**	

ITEM	PART NUMBER	QTY	DESCRIPTION	REV
			Arctic Machines Only.	
216	0641608	2	Bolt 3/8in-16NC x 1in	
217	1060626	1	Cord, 3-Way Extension (Located on Left Front of Engine)	
218	1320223	2	Clamp	
219	1702941	1	Decal - Battery Heater (Located on Battery Heater)	
220	1702942	1	Decal - Engine Block Heater (Located on Right Side of Engine)	
221	1702944	1	Decal - Heater Cord (Located on Left Front of Engine)	
222	2580024	1	Heater, Battery (Located on Battery)	
223	2580055	1	Heater, Block (Located on Left Side of Engine)	
224	3311605	2	Locknut 3/8in-16NC	
225	3980007	1	Seat, Battery (Located Under Battery)	
226	4751600	2	Flatwasher 3/8in Regular	
	1001112077	Ref	**CATERPILLAR TIER IVi ENGINE WITH ECM ASSEMBLY**	D
301	0100011	AR	Compound, Locking	
302	0100020	AR	Sealant, Thread	
303	0700620	1	Bolt M6 x 60mm	
304	0700808	5	Bolt M8 x 16mm	
305	0701010	2	Bolt M10 x 20mm	
306	0760606	2	Bolt M6 x 12mm	
307	0760610	2	Bolt M6 x 20mm	
308	0760612	3	Bolt M6 x 25mm	
309	8303541	1	Screw M6 x 35mm	
310	0700616	2	Bolt M6 x 40mm	
311	0761210	2	Bolt M12 x 20mm	
312	8406009	1	Clamp, Cable	
313	1320224	1	Clamp, Cable	
314	8406105	2	Clip, Tube	
315	3290507	1	Locknut M5	
316	4811700	12	Flatwasher M6	
317	4811900	5	Flatwasher M8	
318	4812000	2	Flatwasher M10	
319	4812100	2	Flatwasher M12	
320	4811600	1	Flatwasher M5	
321	1001097553	1	Washer, Coolant Sensor	
322	1001109064	1	Caterpillar Tier IVi Engine Assembly	
323	1001112057	1	Bracket	
324	1001112059	5	Bumper	
325	1001112067	1	Module, ECM	
326	1001112068	1	Sensor, Speed	
327	1001112069	1	Sensor, Temperature	
328	1001112070	1	Switch, Oil Pressure	
329	1001112071	1	Harness, Engine (Not Shown - See ELECTRICAL SECTION for Breakdown)	
330	1001112072	1	Bracket	
331	1001112073	1	Actuator	
331	1001112849	1	Linkage Assembly	
332	1001112570	1	Spacer	
334	1320263	1	Clamp, Cable	
335	1001112075	1	Bolt	
336	1001112592	1	Bearing	
337	1001116595	1	Spacer	
338	8406109	1	Clip, Tube	

SECTION 2 - TURNTABLE

ITEM	PART NUMBER	QTY	DESCRIPTION	REV
	1001109064	Ref	**ENGINE COMPONENTS**	B
401	70001051	1	Valve, Crankcase Actuator Shut-Off	
402	70001120	1	Pump, Water	
402	70001742	1	Pulley, Water Pump	
402	70002765	1	Hose, By-Pass (Not Shown)	
403	See Note		Head, Cylinder (Note: Not Available for Purchase)	
403	7026801	1	Gasket, Valve Cover	
403	70002764	1	Gasket, Rear Head	
403	70002762	15	Seat, Valve	
403	70002761	17	Bolt, Head	
404	7026839	1	Pump, Fuel Supply	
404	7026830	1	Element, Fuel Filter	
404	70002834	1	Bowl, Water Collection	
404	70002835	1	Seal Kit - Water Separator	
404	70002833	1	Ring, Fuel Pump Retaining	
405	70002844	1	Dipstick Oil Level	
405	70002843	1	Seal, Dipstick Tube	
406	70002845	1	Pump, Oil (Not Shown)	
406	70002846	1	O-Ring, Oil Pump (Not Shown)	
407	70002849	1	Pump, Fuel Injection	
407	70002847	1	O-Ring, Fuel Injection Pump Flange	
407	70002848	1	Gasket, Fuel Injection Pump	
407	70002850	1	Solenoid, Fuel Shut-Off	
409	7026802	1	Flywheel	
409	7026803	1	Gear, Flywheel	
409	7026804	1	Gasket (Not Shown - Between Flywheel Housing and Engine Block)	
409	7026805	1	Seal, Rear Main (Not Shown - Rear of Flywheel Housing)	
409	7026807	1	Seal, Front Main (Located in Front Housing)	
410	7026800	1	Cap Oil Filler (Top of Valve Cover)	
411	7026806	1	Cap, Filler (Front Side of Engine)	
412	7026810	1	V-Belt	
413	7026811	1	Filter, Oil	
		Ref	Note: Machines with SkyPower use Remote Mounted Oil Filter - See SPECIAL OPTIONS SECTION. The same oil filter is used for all applications.	
413	7026812	1	O-Ring (Between Bolt and Oil Filter Bracket)	
413	7026813	1	O-Ring (Between Oil Filter Bracket and Engine Block)	
414	7026819	1	Engine Cooler Assembly (Not Shown)	
414	7026816	2	O-Ring (Between Cover and Cooler)	
414	7026817	4	O-Ring (Between Cover and Cooler)	
415	7026822	1	Thermostat	
415	7026821	1	Gasket (Between Regulator and Thermostat Housing)	
415	7026820	1	Gasket (Between Regulator and Engine Head)	
416	7026814	1	Relief Valve, Oil Pressure (Not Shown)	
416	7026815		Gasket, Relief Valve	
417	See Note	4	Injector, Fuel (Not Shown) (Note: Not Available for Purchase)	
417	70002763	4	Gasket, Fuel Line (Not Shown)	
418	7026831	1	Alternator	
419	7026832	1	Plug, Glow (Not Shown)	
420	7026833	1	Starter (Not Shown - Located on other side of engine)	
421	7026826	1	Gasket, Exhaust Manifold to Cylinder Head (Not Shown)	

ITEM	PART NUMBER	QTY	DESCRIPTION	REV
421	7026827	1	Gasket, Exhaust Manifold to Exhaust Pipe (Not Shown)	
421	70002852	4	Stud, Exhaust Manifold (Not Shown)	
422	7026829	1	Gasket, Intake Manifold to Cylinder Head (Not Shown)	
422	7026828	1	Gasket, Intake Manifold to Intake Tube (Not Shown)	
423	7026808	1	Plug, Oil Pan (Not Shown)	
423	7026809	1	Gasket, Oil Plug	
424	70002851	1	Gasket Kit (Not Shown)	
425	4569371	1	Tube, Intake	

FIGURE 2-10. DEUTZ ENGINE INSTALLATION (Prior to SN 0300077586)

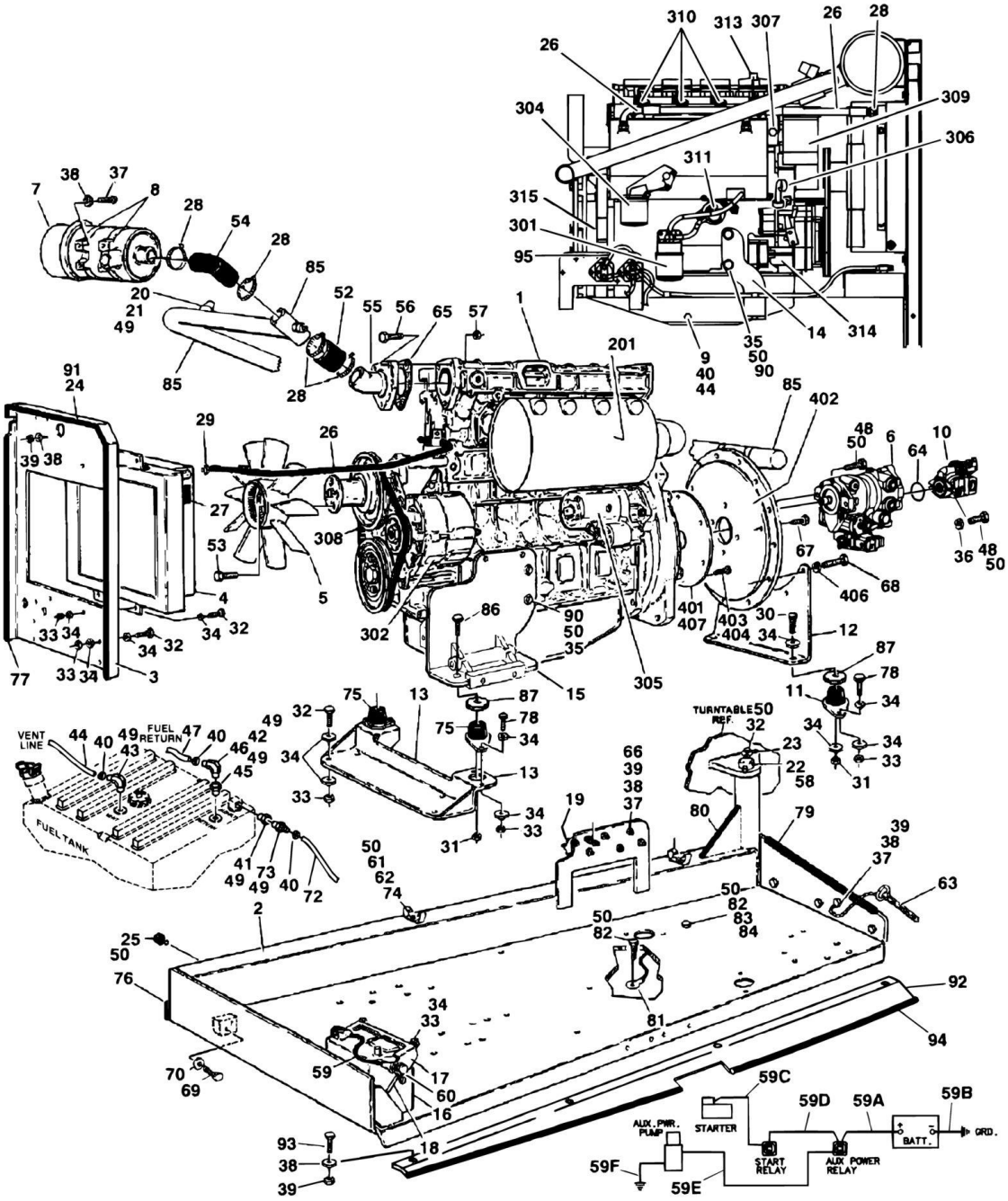

FIGURE 2-10. DEUTZ ENGINE INSTALLATION (Prior to SN 0300077586)

ITEM	PART NUMBER	QTY	DESCRIPTION	REV
	0270878	Ref	**DEUTZ ENGINE INSTALLATIONS**	12-K
1	2000178	1	Engine - Deutz F4M2011F Diesel (See Items 301-318 for Service Parts Offered by JLG)	
2	4845404	1	Tray Engine	
3	3539872	1	Plate, Radiator Mounting	
4	3620033	1	Cooler, Oil	
5	2060025	1	Fan	
6	3600295	1	Piston Pump Assembly (See PISTON PUMP ASSEMBLY for Breakdown)	
7	1340060	1	Air Cleaner Assembly	
7	7012664	1	Element, Air Cleaner	
8	0340041	2	Band, Mounting	
9	4640751	1	Valve, Oil Drain	
10	3600324	1	Load Sensing Pump Assembly (See LOAD SENSING PUMP ASSEMBLY for Breakdown)	
11	3200406	2	Mount, Rubber Engine (Rear)	
12	3537420	1	Bracket, Engine Mounting - Rear	
13	3539971	1	Bracket, Engine Mounting - Front	
14	3537416	1	Support, Engine - Right	
15		Ref	Support, Engine - Left Options:	
15	4846479	1	Support, Engine - Left **(Prior to SN 0300068270)**	
15	4846566	1	Support, Engine - Left **(SN 0300068270 through 0300077586)**	
16	0400075	1	Battery	
17	0181727	1	Hold-Down, Battery	
18	0630498	2	Rod, Hold-Down	
19	3740067	2	Relay	
20	4360392	1	Switch, Restrictor Indicator	
21	2180798	1	Fitting	
22	3422446	1	Pin, Pivot	
23	3841143	1	Keeper, Pin	
24	3960549	4 ft/1.2m	Seal	
25	0940070	1	Bumper, Rubber	
26	2720398	2	Hose, Oil Cooler	
27	1703162	2	Nameplate - Fan Caution	
28	1320016	4	Clamp, Hose	
29	2220451	2	Fitting, Straight	
30	0641818	2	Bolt 1/2in-13NC x 2-1/4in	
31	3311805	4	Locknut 1/2in-13NC	
32	0641610	13	Bolt 3/8in-16NC x 1-1/4in	
33	3311605	22	Locknut 3/8in-16NC	
34	4751600	44	Flatwasher 3/8in Regular	
35	0701414	6	Bolt 1/4in-20NC x 3/4in	
36	4891800	2	Flatwasher 1/2in Hardened	
37	0641407	9	Bolt 1/4in-20NC x 7/8in	
38	4751400	22	Flatwasher 1/4in Regular	
39	3311405	13	Locknut 1/4in-20NC	
40	1320022	5	Clamp, Hose	
41	2220273	1	Fitting, Reducer	
42	2180536	1	Fitting, Straight	
43	2220313	1	Fitting, Elbow	

SECTION 2 - TURNTABLE

ITEM	PART NUMBER	QTY	DESCRIPTION	REV
44	2750532	7 ft/2.2m	Hose 3/8in	
45	2220250	1	Fitting, Reducer	
46	2220459	1	Fitting, Elbow	
47	2720271	15 ft/4.6m	Hose 3/16in	
48	0641812	4	Bolt 1/2in-13NC x 1-1/2in	
49	0100020	AR	Sealant, Thread	
50	0100011	AR	Compound, Locking	
52		Ref	Coupling, Rubber Intake Options:	
52	2720351	3 in/8cm	Coupling, Rubber Intake **(Prior to SN 0300067971)**	
52	2720449	1	Coupling, Rubber Intake **(SN 0300067971 through 0300077586)**	
53	0700808	4	Bolt M8 x 16mm	
54	2720434	1	Elbow, Rubber	
55	4845395	1	Air Intake Adapter Weldment	
56	0641510	3	Bolt 5/16in-18NC x 1-1/4in	
57	3311505	3	Locknut 5/16in-18NC	
58	0961986	2	Bushing, Flanged	
59	2901609	1	Battery Cable Kit	
59A	7016800	1	Cable, Battery (Red)	
59B	7016809	1	Cable, Battery (Black)	
59C	7016802	1	Cable (Red)	
59D	7016803	1	Cable (Red)	
59E	7016824	1	Cable (Red)	
59F	7016825	1	Cable (Black)	
60	4460611	1	Terminal, Battery Jumper Post	
61	1320223	3	J-Clip 1/2in	
62	0641606	3	Bolt 3/8in-16NC x 3/4in	
63	3422532	1	Pin, Hitch	
64	3790044	1	O-Ring	
65	3960407	1	Gasket	
66	4791400	4	Starwasher 1/4in	
67	0701012	4	Bolt M10 x 25mm	
68	0701015	4	Bolt M10 x 35mm	
69	0642010	1	Bolt 5/8in-11NC x 1-1/4in	
70	4752000	1	Flatwasher 5/8in Regular	
71	1701505	1	Decal - Diesel (Not Shown - Located on Hood)	
72	2720058	16 ft/4.9m	Hose	
73	2220794	1	Fitting, Barbed	
74	4711600	3	Flatwasher 3/8in Thin	
75	3200362	2	Mount, Rubber Engine (Front)	
76	3960468	1	Seal, Foam Gasket	
77	3960469	1	Seal, Foam Gasket	
78	0641608	14	Bolt 3/8in-16NC x 1in	
79	4060805	7 in/18cm	Flex-Trim 1/4in	
80	4060804	16 in /40cm	Flex-Trim 3/16in	
81	1060637	1	Lanyard	
82	0641808	2	Bolt 1/2in-13NC x 1in	
83	3311801	1	Nut 1/2in-13NC	
84	4751800	1	Flatwasher 1/2in Regular	
85	4567815	1	Tuning Tube Weldment	
86	0641826	2	Bolt 1/2in-13NC x 3-1/4in	
87	4740274	4	Washer, Snubbing	

ITEM	PART NUMBER	QTY	DESCRIPTION	REV
88	2200222	1	Plug, Pipe (Not Shown - Located in Bottom of Fuel Tank)	
89	1320223	1	J-Clip (Not Shown - Located above Fuel Tank)	
90	4711900	6	Flatwasher 9/16in Thin	
91	3960549	11 in /28cm	Seal, Hood	
92	3539934	1	Plate, Seal	
93	0641406	4	Bolt 1/4in-20NC x 3/4in	
94	3960464	42 in/1m	Seal, Hood	
95	4922737	1	Harness, Relay Ground	
		Ref	**MUFFLER INSTALLATIONS**	
	0256689	Ref	**Standard Equipment (Spark Arresting)**	-
	0256690	Ref	**Optional Equipment (Catalytic)**	-
201		Ref	Muffler Options:	
201	3220103	1	Spark Arresting	
201	3220104	1	Catalytic	
201		Ref	Clamp Options:	
201	1320176	1	Saddle Clamp Used on Spark Arresting	
201	70001017	1	Band Clamp Used on Catalytic	
201	7024398	1	Tube, Exhaust	
201	7024560	1	Plug, Brass	
	2000178	Ref	**ENGINE COMPONENTS**	
301	7016328	1	Filter, Fuel	
302	7000663	1	Alternator (was p/n 7020410)	
302	7020464	1	Regulator, Voltage	
302	70002234	1	Bracket, Adjustable	
303	7020168	1	Switch, Engine Temperature (Not Shown - Located Beside #1 Injector)	
303	7020480	1	Ring, Seal (Not Shown - Used with Temperature Switch)	
304	7016331	1	Filter, Oil	
305	7020479	1	Starter	
306	7026631	1	Dipstick Oil Level	
307	7020461	1	Switch, Oil Pressure	
308	7020408	1	V-Belt	
309	7020458	1	Actuator, Throttle (was p/n 7020478)	
310	7024318	4	Pump, Fuel Injection (was p/n 7023488)	
311	7020463	1	Pump, Fuel Supply	
311	7020411	1	Seal - Supply Pump to Engine Block	
312	7020449	4	Gasket, Exhaust Manifold to Engine Block (Not Shown)	
313	7020465	1	Cap, Oil Filter	
314	70000045	1	Pump, Oil (was p/n 7020484)	
314	7020468	1	Seal - Oil Pump to Engine Block	
315	7024565	1	Sensor, Speed (was p/n 7020481)	
315	70003931	1	Bolt	
315	70003931	1	Spacer	
316	See Note	1	Flywheel (Not Shown) (Note: Not Available for Purchase)	
316	7024579	1	Ring Gear	
317	7020471	4	Gasket, Exhaust Manifold to Engine Block (Not Shown)	
318		Ref	Gasket, Cylinder Head Options (Not Shown):	
318	70002415	1	1 Notch	
318	70002416	1	2 Notches	
318	70002417	1	3 Notches	
	0256847	Ref	**PUMP COUPLING INSTALLATION**	2

SECTION 2 - TURNTABLE

ITEM	PART NUMBER	QTY	DESCRIPTION	REV
401	1660234	1	Coupling, Hayes	
402	0080163	1	Plate, Pump Adapter	
403	0700810	6	Bolt M8 x 20mm	
404	4831900	6	Lockwasher M8	
406	4832000	8	Lockwasher M10 **(Prior to SN 0300084703)**	
407	3020021	AR	Grease, Coupling	

FIGURE 2-11. DEUTZ ENGINE INSTALLATION (SN 0300077586 through 0300140000)

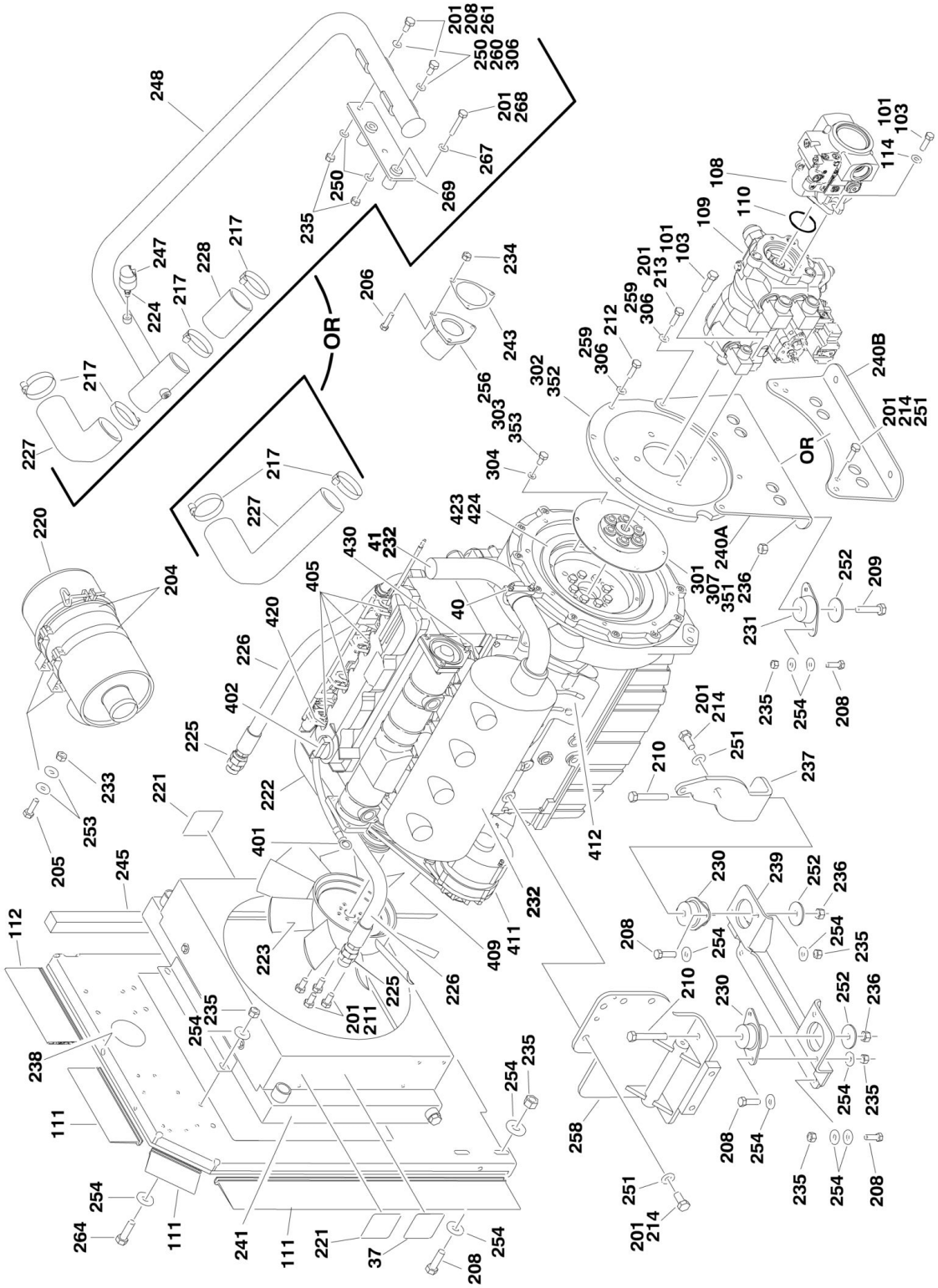

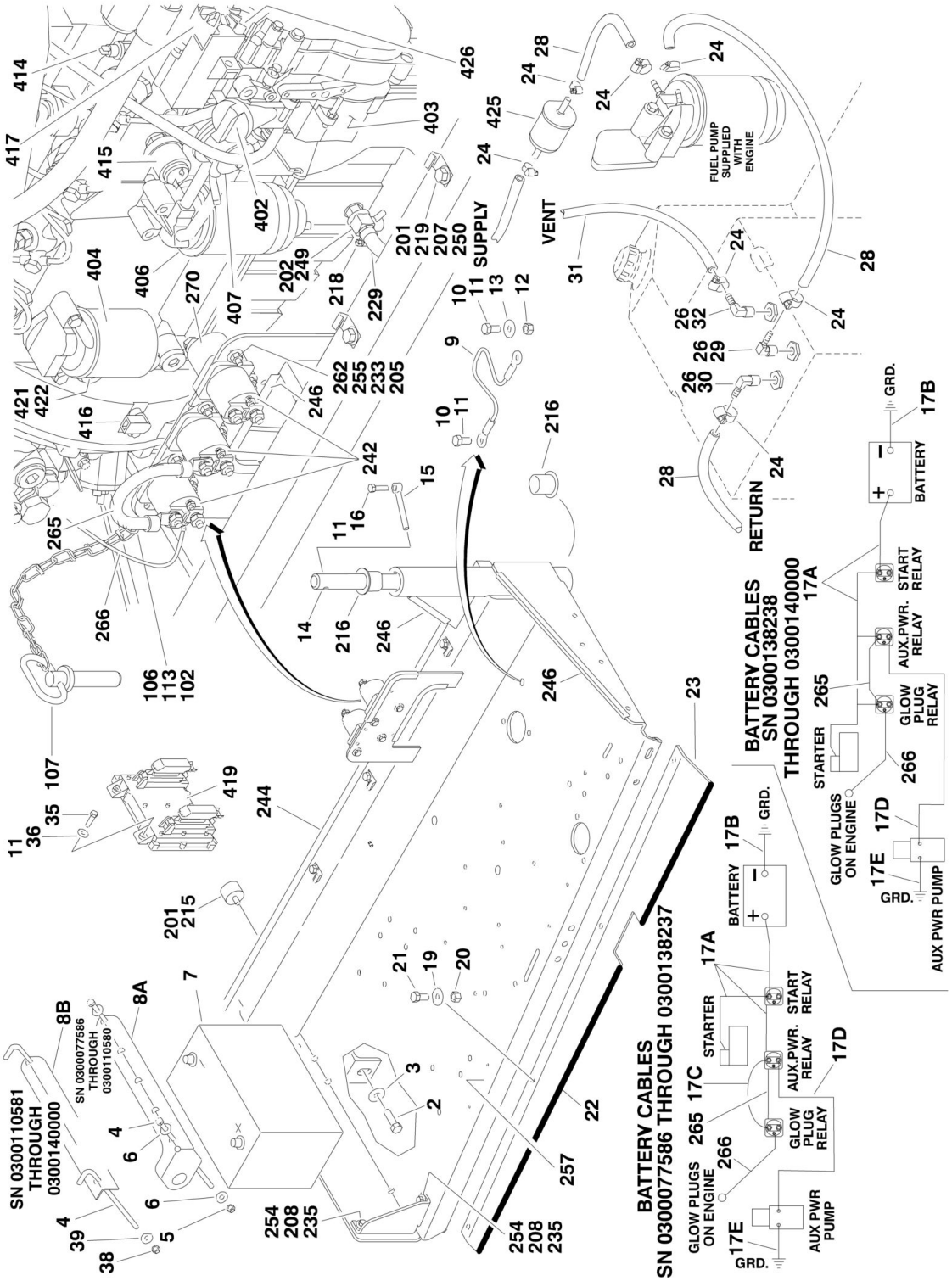
SN 0300110581 THROUGH 0300140000
SN 0300077586 THROUGH 0300110580
BATTERY CABLES SN 0300077586 THROUGH 0300138237
BATTERY CABLES SN 0300138238 THROUGH 0300140000
FUEL PUMP SUPPLIED WITH ENGINE
SUPPLY
VENT
RETURN
BATTERY
START RELAY
AUX.PWR. RELAY
GLOW PLUG RELAY
STARTER
GLOW PLUGS ON ENGINE
AUX PWR PUMP
GRD.

FIGURE 2-11. DEUTZ ENGINE INSTALLATION (SN 0300077586 through 0300140000)

ITEM	PART NUMBER	QTY	DESCRIPTION	REV
		Ref	**DEUTZ ENGINE INSTALLATION**	
		Ref	**Without Arctic Package**	
	0273800	Ref	**Tier II Engines (SN 0300077586 through 0300085331)**	3-B
	0274302	Ref	**Tier II Engines (SN 0300085332 through 0300129453)**	G
	1001099829	Ref	**Tier III Engines (SN 0300129454 through 0300140000)**	A
		Ref	**With Arctic Package**	
	0275584	Ref	**Tier II Engines (SN 0300077586 through 0300129453)**	D
	1001100382	Ref	**Tier III Engines (SN 0300129454 through 0300140000)**	A
2	0642010	1	Bolt 5/8in-11NC x 1-1/4in	
3	4752000	1	Flatwasher 5/8in Regular	
4		Ref	Bolt, Battery Hold-down Options:	
4	0630498	2	Bolt, Battery Hold-down **(SN 0300077586 through 0300110580)**	
4	1001093382	2	Bolt, Battery Hold-down **(SN 0300110581 through 0300140000)**	
5	3311605	2	Locknut 3/8in-16NC **(SN 0300077586 through 0300110581)**	
6	4751600	4	Flatwasher 3/8in Regular **(SN 0300077586 through 0300110581)**	
7	0400075	1	Battery	
8		Ref	Hold-Down, Battery Options:	
8A	0181727	1	Hold-down, Battery **(SN 0300077586 through 0300110580)**	
8B	91401281	1	Hold-down, Battery **(SN 0300110581 through 0300140000)**	
9	1060637	1	Cable, Lanyard	
10	0641808	2	Bolt 1/2in-13NC x 1in	
11	0100011	AR	Compound, Locking	
12	3311801	1	Nut 1/2in-13NC	
13	4751800	1	Flatwasher 1/2in Regular	
14	3422446	1	Pin, Pivot	
15	3841143	1	Pin, Keeper	
16	0641610	1	Bolt 3/8in-16NC x 1-1/4in	
17		Ref	Battery Cable Kit Options:	
17	2902401	1	Battery Cable Kit **(SN 0300077586 through 0300138237)**	A
		Ref	**Note: 2902401 Rev A version is no longer available. Verify whether machine is equipped with 2 or 3 relays on the engine tray. If there are 3 relays, purchase latest revision of 2902401 kit. If there are 2 relays, purchase individual items as replacement.**	
17	2902401	1	Battery Cable Kit **(SN 0300138238 through 0300140000)**	B
17A	7016813	1	Cable, Battery (Red) **(SN 0300077586 through 0300138238)**	
17A	1001116288	1	Cable, Battery (Red) (Machines with 2 Relays on Engine Tray) (was p/n 7027027) **(SN 0300138238 through 0300140000)**	
17A	1001116287	1	Cable, Battery (Red) (Machines with 3 Relays on Engine Tray) (was p/n 7027027) **(SN 0300138238 through 0300140000)**	
17B	7027012	1	Cable, Battery **(SN 0300077586 through 0300138237)**	
17B	7027004	1	Cable, Battery (Black) **(SN 0300138238 through 0300140000)**	
17C	7016803	1	Cable, Battery (Red) **(SN 0300077586 through 0300138237)**	
17C	Not Required	0	Cable, Battery (Red - Part of 17A) **(SN 0300138238 through 0300140000)**	

ITEM	PART NUMBER	QTY	DESCRIPTION	REV
17D	7016824	1	Cable (Red)	
17E	7016825	1	Cable (Black)	
18	4922737	1	Harness, Engine Grounding (Not Shown)	
19	4751400	4	Flatwasher 1/4in Regular **(SN 0300077586 through 0300089980)**	
20	3311405	4	Locknut 1/4in-20NC **(SN 0300077586 through 0300089980)**	
21	0641406	4	Bolt 1/4in-20NC x 3/4in **(SN 0300077586 through 0300089980)**	
22	3960464	3.5 ft /1.1m	Seal **(SN 0300077586 through 0300089980)**	
23	3539934	1	Plate **(SN 0300077586 through 0300089980)**	
24	1320022	5	Clamp, Hose	
25	1320223	1	Clamp (Not Shown - Located on Turntable to clamp fuel line)	
26	0100020	AR	Sealant, Pipe	
27	2200222	1	Fitting, Plug (Not Shown - Located on Fuel Tank for Drain)	
28	2720058	30 ft/9.2m	Hose	
29	2180348	1	Fitting, Straight Barbed	
30	2221176	1	Fitting, Elbow Barbed	
31	2750532	7 ft/2.1m	Hose	
32	2220313	1	Fitting, Elbow	
33	1701505	1	Decal - Diesel (Not Shown - Located on Hood)	
34	4922978	1	Harness, Start Assist Solenoid **(SN 0300077586 through 0300085332)**	
35	0641412	4	Bolt 1/4in-20NC x 1-1/2in **(SN 0300085332 through 0300140000)**	
36	4711400	4	Flatwasher 1/4in Thin **(SN 0300085332 through 0300140000)**	
37		Ref	Decal - Warning Explosion/Fire Options: **(SN 0300092776 through 0300140000)**	
37	1704972	1	ANSI Spec	
37	1706098	1	Australian and CE Spec	
37	1706059	1	Brazilian Spec	
37	1706060	1	Chinese Spec	
37	1706064	1	CSA Spec	
37	1706062	1	Japanese Spec	
37	1706061	1	Korean Spec	
37	1706063	1	Spanish Language	
38	88521205	2	Locknut, Nylon Insert 5/16in-18NC **(SN 0300110581 through 0300140000)**	
39	4751500	2	Flatwasher 5/16in Regular **(SN 0300110581 through 0300140000)**	
40	1320176	1	Clamp (Tier III Engines Only - For Tier-II Engines Purchase Item 232: 1320176) **(SN 0300129454 through 0300140000)**	
41	1001101948	1	Tube, Exhaust Only (Tier III Engines Only - For Tier-II Engines Purchase Item 232: 7024398) **(SN 0300129454 through 0300140000)**	
		Ref	**Note: Arctic Package Items 42-51 Not Shown - Used on Arctic Machines Only**	
42	1060626	1	Cord, 3 Way Extension (Located on Left Front of Engine)	
43	1702941	1	Decal - Battery Heater (Located on Battery Heater)	
44	1702942	1	Decal - Engine Block Heater (Located on Right Side of Engine)	
45	1702943	1	Decal - Hydraulic Tank Heater (Located on bottom of Hydraulic Oil Tank)	
46	1702944	1	Decal - Heater Cord (Located on Left Front of Engine)	
47	2580024	1	Heater, Battery (Located on Battery)	

ITEM	PART NUMBER	QTY	DESCRIPTION	REV
48	2580050	1	Heater, Hydraulic Tank (Located on bottom of Hydraulic Oil Tank)	
49	0641608	1	Bolt 3/8in-16NC x 1in	
50	1060625	1	Cable, Immersion Heater (Located on bottom of Hydraulic Oil Tank)	
51	1320223	2	Clamp	
		Ref	**ENGINE AND PUMP ASSEMBLIES**	
		Ref	**Without Arctic Package**	
	2000233	Ref	**Tier II Engines (SN 0300077586 through 0300085331)**	B
	2000285	Ref	**Tier II Engines (SN 0300085332 through 0300129453)**	D
	1001099828	Ref	**Tier III Engines (SN 0300129454 through 0300140000)**	B
		Ref	**With Arctic Package**	
	2000391	Ref	**Tier II Engines (SN 0300077586 through 0300129453)**	C
	1001100381	Ref	**Tier III Engines (SN 0300129454 through 0300140000)**	B
101	0100011	AR	Compound, Locking	
102	0641407	1	Bolt 1/4in-20NC x 7/8in	
103	0641812	2	Bolt 1/2in-13NC x 1-1/2in	
105	3020016	3.75 gal /14.2L	Oil, Motor (Not Shown) **(SN 0300077586 through 0300092776)**	
106	3311405	1	Locknut 1/4in-20NC	
107	3422532	1	Pin, Hitch	
108	3600411	1	Load Sensing Pump Assembly with Fittings Options (See LOAD SENSING PUMP ASSEMBLY for Breakdown):	
109	3600410	1	Piston Pump Assembly with Fittings Options (See PISTON PUMP ASSEMBLY for Breakdown)	
110		Ref	O-Ring Options:	
110	3790152	1	O-Ring **(SN 0300077586 through 0300138159)**	
110	3790044	1	O-Ring **(SN 0300138160 through 0300140000)**	
111	3960548	3.66 ft /1.1m	Seal, Hood	
112	3960549	1 ft/0.3m	Seal, Hood	
113	4751400	2	Flatwasher 1/4in Regular	
114	4891800	2	Flatwasher 1/2in Hardened	
		Ref	**ENGINE AND PUMP ASSEMBLIES**	
		Ref	**Without Arctic Package**	
	2000219	Ref	**Tier II Engines (SN 0300077586 through 0300085331)**	F
	2000279	Ref	**Tier II Engines (SN 0300085332 through 0300092775)**	E
	2000342	Ref	**Tier II Engines (SN 0300092776 through 0300129453)**	B
	1001098508	Ref	**Tier III Engines (SN 0300129454 through 0300140000)**	E
		Ref	**With Arctic Package**	
	2000365	Ref	**Tier II Engines (SN 0300077586 through 0300129453)**	B
	1001099640	Ref	**Tier III Engines (SN 0300129454 through 0300140000)**	F
	0256689	Ref	**MUFFLER INSTALLATION - SPARK ARRESTING (SN 0300077586 through 0300129454)**	-
	0256690	Ref	**MUFFLER INSTALLATION - CATALYTIC (SN 0300079610 through 0300129454)**	-
201	0100011	AR	Compound, Locking	
202	0100020	AR	Sealant, Pipe	
204	0340041	2	Band, Air Cleaner	
205	0641407	AR	Bolt 1/4in-20NC x 7/8in	
206	0641510	3	Bolt 5/16in-18NC x 1-1/4in	
207	0641606	3	Bolt 3/8in-16NC x 3/4in	
208	0641610	AR	Bolt 3/8in-16NC x 1-1/4in	

ITEM	PART NUMBER	QTY	DESCRIPTION	REV
209	0641818	2	Bolt 1/2in-13NC x 2-1/4in	
210	0641826	2	Bolt 1/2in-13NC x 3-1/4in	
211	0700808	4	Bolt M8 x 16mm	
212	0701012	2	Bolt M10 x 25mm **(SN 0300077586 through 0300129454)**	
213		Ref	Bolt Options:	
213	0701015	4	Bolt M10 x 35mm **(SN 0300077586 through 0300085331)**	
213	0701014	4	Bolt M10 x 30mm **(SN 0300085332 through 0300092775)**	
213	0701015	4	Bolt M10 x 35mm **(SN 0300092776 through 0300129454)**	
214	0701414	AR	Bolt M14 x 130mm	
215	0940070	1	Bumper	
216	0961986	2	Bushing, Flanged	
217	1320016	AR	Clamp	
218	1320022	1	Clamp, Hose **(SN 0300077586 through 0300136498)**	
219	1320223	4	J-Clip	
220	1340060	1	Air Cleaner Assembly Filter Element	
220	7012664	1	Element, Filter (Not Shown)	
221	1703162	2	Decal - Caution Fan Blade	
222		Ref	Engine, Deutz - F4M2011 Options:	
222	2000216	1	Engine, Deutz - F4M2011 (Tier II) **(SN 0300077586 through 0300085331)**	
222	2000274	1	Engine, Deutz - F4M2011 (Tier II) **(SN 0300085332 through 0300092775)**	
222	2000339	1	Engine, Deutz - F4M2011 (Tier II) **(SN 0300092776 through 0300129453)**	
222	1001094101	1	Engine, Deutz - F4M2011 (Tier III) **(SN 0300129454 through 0300140000)**	
223	2060025	1	Fan	
224	2180798	1	Fitting **(SN 0300077586 through 0300085332)**	
225	2220451	2	Fitting, Straight	
226	2720398	2	Hose, Oil Cooler	
227		Ref	Elbow, Rubber Options:	
227	2720434	1	Elbow, Rubber **(SN 0300077586 through 0300136497)**	
227	1001091179	1	Elbow, Rubber **(SN 0300136498 through 0300140000)**	
228	2720449	1	Hose, Air Cleaner **(SN 0300077586 through 0300136498)**	
229		Ref	Hose, Oil Drain Options:	
229	2750532	1 ft/30cm	Hose, Oil Drain **(SN 0300077586 through 0300136497)**	
229	1001091892	6 in/15cm	Hose, Oil Drain **(SN 0300136498 through 0300140000)**	
230	3200362	2	Mount, Motor	
231	3200406	2	Mount, Motor	
232		Ref	Muffler Options:	
232		Ref	Spark Arresting (Standard)	
232	3220103	1	Spark Arresting (Standard) (Tier II) **(SN 0300077586 through 0300129453)**	
232	1001099051	1	Spark Arresting (Standard) (Tier III) **(SN 0300129454 through 0300140000)**	
232		Ref	Catalytic (Optional)	
232	3220104	1	Catalytic (Optional) (Tier II) **(SN 0300077586 through 0300129453)**	
232	1001101241	1	Catalytic (Optional) (Tier III) **(SN 0300129454 through 0300140000)**	
232		Ref	Muffler Components:	
232		Ref	Clamp Options Only (Tier II) **(SN 0300077586 through 0300129454)**	

ITEM	PART NUMBER	QTY	DESCRIPTION	REV
232	1320176	1	Saddle Clamp Used on Spark Arresting	
232	70001017	1	Band Clamp Used on Catalytic	
232	7024398	1	Tube, Exhaust Only (Tier II) **(SN 0300077586 through 0300129454)**	
232	7024560	1	Plug, Brass	
233	3311405	AR	Locknut 1/4in-20NC	
234	3311505	3	Locknut 5/16in-18NC	
235	3311605	AR	Locknut 3/8in-16NC	
236	3311805	4	Locknut 1/2in-13NC	
237	3537416	1	Plate, Engine Mounting (Front Right Side)	
238	3539872	1	Plate, Radiator Mounting	
239	3539971	1	Plate, Engine Mounting (Front Bottom)	
240		Ref	Plate, Engine Mounting (Rear) Options:	
240A	3574978	1	Tier II Engines **(SN 0300077586 through 0300129453)**	
240B	1001093943	1	Tier III Engines **(SN 0300129454 through 0300140000)**	
241	3620033	1	Radiator	
242	3740067	Ref	Relay Options:	
242	3740067	2	Relay **(SN 0300077586 through 0300092775)**	
242	3740067	3	Relay **(SN 0300092776 through 0300140000)**	
243	3960407	1	Gasket, Air Intake	
244	3960468	1	Seal	
245	3960469	1	Seal	
246	4060805	37 in/1m	Flex-Trim	
247	4360392	1	Indicator, Restriction **(SN 0300077586 through 0300085332)**	
248		Ref	Tube, Tuning Options:	
248	4567815	1	Tube, Tuning **(SN 0300077586 through 0300085331)**	
248	4569171	1	Tube, Tuning **(SN 0300085332 through 0300129453)**	
248	1001099686	1	Tube, Tuning **(SN 0300129454 through 0300136498)**	
249		Ref	Valve, Oil Drain Options:	
249	4640751	1	Valve, Oil Drain **(SN 0300077586 through 0300136497)**	
249	1001104308	1	Valve, Oil Drain **(SN 0300136498 through 0300140000)**	
250	4711600	AR	Flatwasher 3/8in Thin	
251		Ref	Flatwasher Options:	
251	4711900	AR	Flatwasher 9/16in Thin **(SN 0300077586 through 0300092775)**	
251	4812200	AR	Flatwasher M14 **(SN 0300092776 through 0300140000)**	
252	4740274	4	Washer, Snubbing	
253	4751400	AR	Flatwasher 1/4in Regular	
254	4751600	AR	Flatwasher 3/8in Regular	
255	4791400	AR	Starwasher 1/4in	
256	4845395	1	Adapter, Air Intake	
257		Ref	Tray, Engine Options:	
257	4845404	1	Tier II Engines **(SN 0300077586 through 0300129453)**	
257	1001094321	1	Tier III Engines **(SN 0300129454 through 0300140000)**	
258	4846566	1	Plate, Engine Mounting (Front Left Side)	
259	4711700	6	Flatwasher 7/16in Thin **(SN 0300084703 through 0300129454)**	
260	4751700	2	Flatwasher 7/16in Regular **(SN 0300084703 through 0300129454)**	
261		Ref	Bolt M10 x 25mm	
261	0701012	2	Bolt M10 x 25mm **(SN 0300077586 through 0300085331)**	
261	0701015	2	Bolt M10 x 35mm **(SN 0300085332 through 0300129454)**	
262		Ref	Flatwasher Options:	
262	4751400	4	Flatwasher 1/4in Regular **(SN 0300077586 through**	

ITEM	PART NUMBER	QTY	DESCRIPTION	REV
			0300092775)	
262	4711400	6	Flatwasher 1/4in Thin **(SN 0300092776 through 0300140000)**	
263		Ref	Oil, Motor Options (Not Shown):	
263	3020016	3.75 gal /14.2L	Without Arctic Package	
263	3020044	3.75 gal /14.2L	With Arctic Package	
264		Ref	Bolt Options:	
264	0641610	6	Bolt 3/8in-16NC x 1-1/4in **(SN 0300077586 through 0300092776)**	
264	0641609	6	Bolt 3/8in-16NC x 1-1/8in **(SN 0300092776 through 0300140000)**	
265	1060904	1	Cable, Jumper **(SN 0300092776 through 0300140000)**	
266	4923379	1	Harness, Glowplug	
267	4891600	2	Flatwasher 3/8in Regular **(SN 0300129454 through 0300136498)**	
268	0711025	2	Bolt Metric M10 x 85mm **(SN 0300129454 through 0300136498)**	
269	1001098916	1	Support, Resonator **(SN 0300129454 through 0300136498)**	
270	3740080	1	Relay **(SN 0300129454 through 0300140000)**	
		Ref	**Note: Arctic Package Item 271 Not Shown - Used on Arctic Machines Only**	
271	2580062	1	Heater, Engine Block	
	0256847	Ref	**PUMP COUPLING INSTALLATION - TIER II ENGINES (SN 0300077586 through 0300129453)**	2
301	1660234	1	Coupling, Hayes	
302	0080163	1	Plate, Pump Adapter	
303	0700810	63	Bolt M8 x 20mm	
304	4831900	6	Lockwasher M8	
306	4832000	8	Lockwasher M10 **(SN 0300077586 through 0300084703)**	
307	3020021	AR	Grease, Coupling	
	2902065	Ref	**PUMP COUPLING INSTALLATION - TIER III ENGINES (SN 0300129454 through 0300140000)**	C
351	70000793	1	Coupling	
352	See Note	NSS	Plate, Pump Adapter (Not Shown) (Note: Not Available - Purchase Complete Coupling)	
353	See Note	NSS	Capscrew M10 (Note: Not Available for Purchase)	
		Ref	**ENGINE COMPONENTS**	
	2000216	Ref	**Tier II Engines (SN 0300077586 through 0300085331)**	D
	2000274	Ref	**Tier II Engines (SN 0300085332 through 0300092775)**	B
	2000339	Ref	**Tier II Engines (SN 0300092776 through 0300129453)**	B
	1001094101	Ref	**Tier III Engines (SN 0300129454 through 0300140000)**	B
401	7026631	1	Dipstick (2000216, 2000274 & 2000339 Engines)	
401	7020487	1	O-Ring, Dipstick	
401	70001002	1	Dipstick (1001094101 Engine)	
402	7020465	1	Cap, Filler	
403	70001850	1	Pump, Oil Lube (was p/ns 7020484 & 70000045)	
403	7020468	1	Seal Between Oil Pump and Engine Block (Not Shown)	
404	7016331	1	Filter, Oil (was p/n 7016641)	
404	70001423	1	Bracket, Oil Filter	
404	70001848	1	Sensor at Oil Filter (1001094101 Engine Only)	
404	70001132	1	Seal, Sensor at Oil Filter (1001094101 Engine Only)	
405		Ref	Pump, Injector Options:	
405		Ref	Tier II Engines	
405	7027246	4	Series A Injector	

ITEM	PART NUMBER	QTY	DESCRIPTION	REV
405	7027608	4	Series B Injector	
405	7027609	4	Series C Injector	
405	7027610	4	Series D Injector	
405		Ref	Tier III Engines	
405	70000912	4	Series A Injector	
405	70000913	4	Series B Injector	
405	70000914	4	Series C Injector	
405	70000915	4	Series D Injector	
405		Ref	Gasket Options (1 Per Injector):	
405	7020447	4	Tier II Engines **(SN 0300077586 through 0300129453)**	
405	See Note	NSS	Tier III Engines (Note: Not Available for Purchase) **(SN 0300129454 through 0300140000)**	
406	7016328	1	Filter, Fuel	
407	70000916	1	Pump, Fuel Supply (was p/n 7027238)	
407	70001435	1	Kit, Repair for 70000916 Pump	
407	70000919	1	Hand Pump for 70000916 Pump	
407	70000918	1	Seal, Hand Pump for 70000916 Pump	
407		Ref	O-Seal Between Fuel Pump and Engine Block Options (Not Shown):	
407	7020411	1	7027238 Pump **(SN 0300077586 through 0300129453)**	
407	70000917	1	70000916 Pump **(SN 0300129454 through 0300140000)**	
408	7020449	4	Gasket, Intake Manifold (Not Shown)	
409	7020408	1	V-Belt	
410	7020471	4	Gasket, Exhaust Manifold to Engine Block (Not Shown)	
410	See Note	1	Gasket, Exhaust Manifold to Exhaust Pipe (Not Shown) (Note: Not Available for Purchase)	
410	70001836	1	Gasket, Exhaust (Engine Head to Header) (Not Shown) **(SN 0300129454 through 0300140000)**	
410	70001835	1	Gasket, Exhaust (Header to EGR Valve Block) (Not Shown) **(SN 0300129454 through 0300140000)**	
410	70001841	1	Valve, EGR (Not Shown) **(SN 0300129454 through 0300140000)**	
410	70001838	2	Gasket, Exhaust (EGR Valve Block to Exhaust Tube) (Not Shown) **(SN 0300129454 through 0300140000)**	
410	70001874	1	Plate Choke (Between 70001838 Gaskets) (Not Shown) **(SN 0300129454 through 0300140000)**	
410	70001837	1	Gasket, Exhaust (Exhaust Tube to Muffler) (Not Shown) **(SN 0300129454 through 0300140000)**	
410	70001839	1	Flange, Sealing (Near Front of Header) (includes Seal and Pin) (Not Shown) **(SN 0300129454 through 0300140000)**	
411	7000663	1	Alternator (was p/n 7020410 & 7016329)	
411		Ref	Regulator, Voltage Options (Not Shown):	
411	7020464	1	Regulator, Voltage **(SN 0300077586 through 0300129453)**	
411	70001868	1	Regulator, Voltage **(SN 0300129454 through 0300140000)**	
411	70001866	1	Gasket, Regulator (Not Shown) **(SN 0300129456 through 0300140000)**	
411	70002234	1	Bracket, Adjusting (Not Shown)	
412	7020479	1	Starter	
412	7026608	1	Solenoid	
412	70001498	1	Shield, Starter Heat	
413	See Note	2	Plug- In Connector (Not Shown) (Note: Not Available for Purchase)	
414	7027241	1	Transmitter, Temperature **(SN 0300077586 through 0300085331)**	

ITEM	PART NUMBER	QTY	DESCRIPTION	REV
414	7027791	1	Transmitter, Temperature **(SN 0300085332 through 0300140000)**	
414	See Note	NSS	Ring, Sealing (Note: Not Available for Purchase)	
415	7020461	1	Sensor, Oil Pressure **(SN 0300077586 through 0300085331)**	
415	7027790	1	Sensor, Oil Pressure **(SN 0300085332 through 0300140000)**	
416	7024565	1	Sensor, Speed	
417	7020458	1	Actuator, Throttle **(SN 0300077586 through 0300085331)**	
417	7027792	1	Actuator, Throttle **(SN 0300085332 through 0300140000)**	
417	7026607	2	Spring, Actuator (was p/n 7027276)	
418		Ref	Sensor, Temperature Options (Not Shown):	
418	7027236	1	Tier II Engines **(SN 0300077586 through 0300129453)**	
418	See Note	NSS	Tier III Engines (Note: Not Available for Purchase) **(SN 0300129454 through 0300140000)**	
419	7027795	1	Module, EMR2 Controller **(SN 0300085332 through 0300140000)**	
419	7027796	1	Harness, EMR2 Module **(SN 0300085332 through 0300140000)**	
420	70000345	4	Plug, Glow **(SN 0300092776 through 0300140000)**	
421	7020459	1	Thermostat	
422	7020460	1	Spring, Compression	
423		Ref	Flywheel Options:	
423	70000264	1	Tier II Engines **(SN 0300077586 through 0300129453)**	
423	70001870	1	Tier III Engines **(SN 0300129454 through 0300140000)**	
424	7024579	1	Rim, Gear	
425	7027245	1	Filter, Fuel In-line (2000216 Engine Only)	
426		Ref	Start Solenoid Options:	
426	7027239	1	Tier II Engines **(SN 0300077586 through 0300129453)**	
426	See Note	NSS	Tier III Engines (Note: Not Available for Purchase) **(SN 0300129454 through 0300140000)**	
427	70001847	1	Breather Valve (Not Shown)	
427	70001126	1	Seal, Breather Valve (Not Shown)	
428		Ref	Gasket, Cylinder Head Options (Not Shown):	
428		Ref	Gasket (2000216, 2000274 & 2000339 Engines):	
428	70003001	1	1 Notch	
428	70003002	1	2 Notches	
428	70003003	1	3 Notches	
428		Ref	Gasket (1001094101 Engine):	
428	70002415	1	1 Notch	
428	70002416	1	2 Notches	
428	70002417	1	3 Notches	
429		Ref	Timing Belt/Idler Kit Options (Not Shown):	
429	70000800	1	Timing Belt/Idler Kit **(SN 0300077586 through 0300085331)**	
429	See Note	NSS	Timing Belt/Idler Kit (Note: Not Available for Purchase) **(SN 0300085332 through 0300140000)**	
430	70002200	8	Stud (Used to attach muffler)	
431		Ref	Harness, Engine Options (Not Shown):	
431	See Note	NSS	Harness, Engine (Note: Not Available for Purchase) **(SN 0300077586 through 0300085331)**	
431	7027794	1	Harness, Engine **(SN 0300085332 through 0300129453)**	
431	70001872	1	Harness, Engine **(SN 0300129454 through 0300140000)**	
431	7027793	1	Plug, Connector	
432	70001847	1	Breather, Valve (Not Shown - Located On Front Cover) **(SN 0300129454 through 0300140000)**	
432	70001126	1	Seal, Breather **(SN 0300129454 through 0300140000)**	

FIGURE 2-12. FORD ENGINE INSTALLATION (Prior to SN 0300079612)

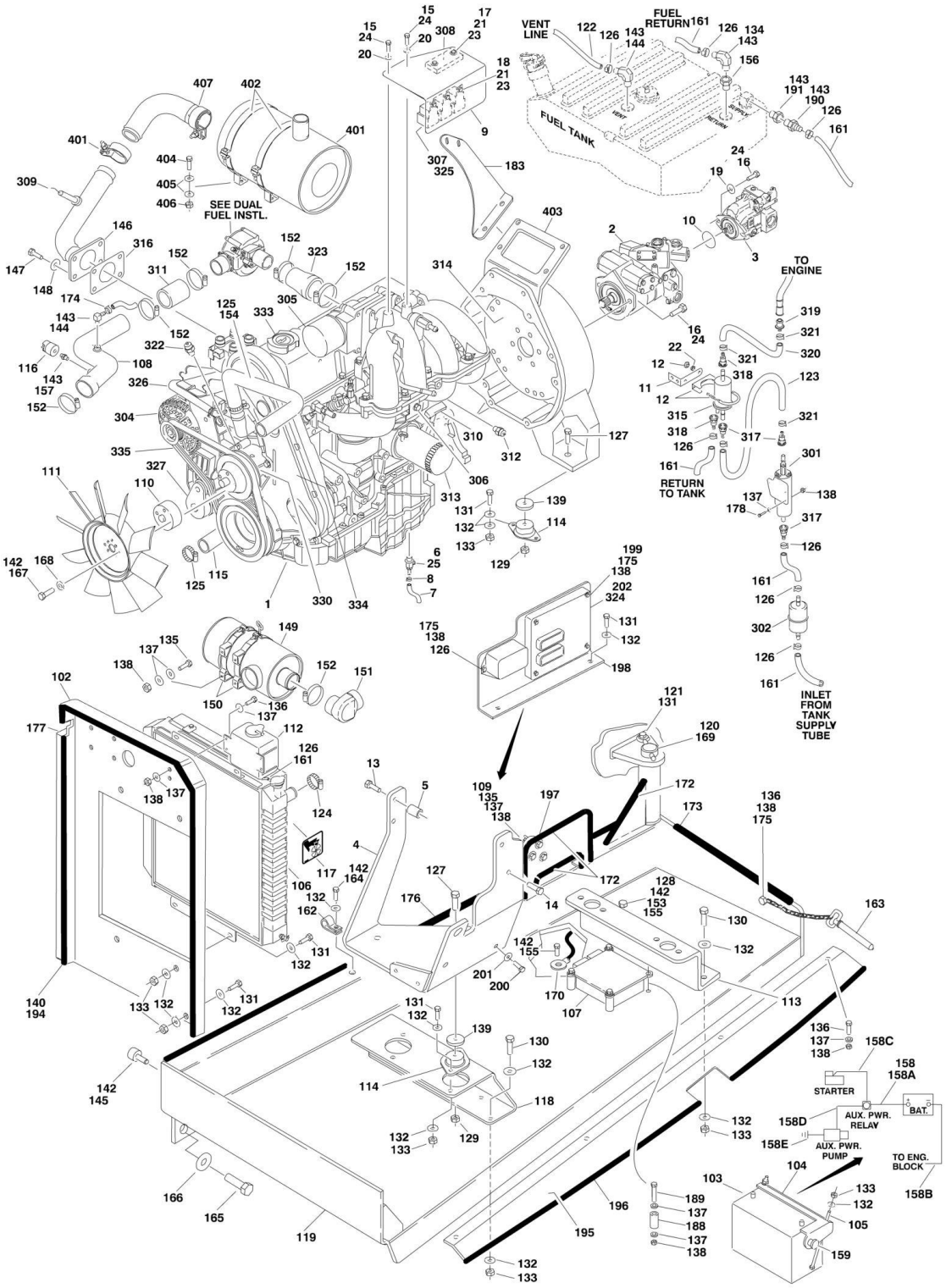

FIGURE 2-12. FORD ENGINE INSTALLATION (Prior to SN 0300079612)

ITEM	PART NUMBER	QTY	DESCRIPTION	REV
		Ref	**ENGINE ASSEMBLIES**	
	0271257	Ref	**Dual Fuel Machines (Prior to SN 0300073336)**	2-A
	0272842	Ref	**Dual Fuel Machines (SN 0300073336 through 0300079612)**	3-C
1		Ref	Engine - Ford LRG-425 EFI Options:	
1	2000174	1	Dual Fuel **(Prior to SN 0300073336)**	
1	2000193	1	Dual Fuel **(SN 0300073336 through 0300079612)**	
2	3600295	1	Piston Pump Assembly (See PISTON PUMP ASSEMBLY for Breakdown)	
3	3600324	1	Load Sensing Pump Assembly (See LOAD SENSING PUMP ASSEMBLY for Breakdown)	
4		Ref	Plate, Engine Mounting - Front Options:	
4	3539972	1	Plate, Engine Mounting - Front **(Prior to SN 0300073336)**	
4	4846806	1	Plate, Engine Mounting - Front **(SN 0300073336 through 0300079612)**	
5	4566605	1	Tube, Spacer	
6	4640989	1	Valve, Oil Drain	
7	2750532	6 in/21cm	Hose	
8	1320022	1	Clamp	
9	3571498	1	Plate, Module Mounting	
10	3790044	1	O-Ring	
11	0902539	1	Bracket	
12	1320019	1	Clamp	
13	0701022	2	Bolt, Metric 10mm-1.5 x 70mm	
14	0701014	2	Bolt, Metric 10mm-1.5 x 30mm	
15	0700810	3	Bolt, Metric 8mm-1.25 x 20mm	
16	0641812	4	Bolt 1/2in-13NC x 1-1/2in	
17	0721014	2	Screw #10-24NC x 1-3/4in	
18	0721006	3	Screw #10-24NC x 3/4in **(Prior to SN 0300073336)**	
19	4891800	2	Flatwasher 1/2in Hardened	
20	4751500	2	Flatwasher 5/16in Regular	
21	4751000	8	Flatwasher #10 Regular	
22	4761500	2	Lockwasher 5/16in	
23	3311005	5	Locknut #10-24NC	
24	0100011	AR	Compound, Locking	
25	0100020	AR	Sealant	
		Ref	**ENGINE INSTALLATIONS**	
	0270879	Ref	**Dual Fuel Machines (Prior to SN 0300073336)**	8-H
	0272873	Ref	**Dual Fuel Machines (SN 0300073336 through 0300079612)**	4-D
102	3539872	1	Mount, Radiator	
103	0400075	1	Battery	
104	0181727	1	Tie-Down	
105	0630498	2	Bolt, Tie-Down	
106	3620040	1	Radiator	
106	8180311	1	Cap, Radiator (was p/n 7019656)	
107	1600314	1	ECM Module **(Prior to SN 0300073336)**	
108	4846046	1	Tube, Air Intake	
109	3740067	1	Relay, Auxiliary Power Relay	
110	0080214	1	Adapter, Fan Spacer	
111	2060025	1	Fan, Suction	
112	1580011	1	Container, Coolant Overflow Container	

SECTION 2 - TURNTABLE

ITEM	PART NUMBER	QTY	DESCRIPTION	REV
113	3570133	1	Plate, Engine Mounting (Rear)	
114	3200362	4	Mount, Rubber	
115	2720435	1	Hose, Lower Radiator (Lower)	
116	4360392	1	Switch, Restriction Indicator Switch	
117	1703162	2	Decal - Fan Blade	
118		Ref	Plate, Engine Mount (Front) Options:	
118	3570103	1	Plate, Engine Mount (Front) **(Prior to SN 0300073336)**	
118	3574122	1	Plate, Engine Mount (Front) **(SN 0300073336 through 0300079612)**	
119	4845404	1	Tray, Engine	
120	3422446	1	Pin, Pivot	
121	3841143	1	Pin, Keeper	
122	2750532	6 ft/1.83m	Hose	
123	2720472	1	Hose	
124	1320060	1	Clamp, Hose - 0.625 **(Prior to SN 0300073336)**	
125	1320012	4	Clamp, Hose, Radiator	
126	1320022	7	Clamp, Hose	
127	0641828	4	Bolt 1/2in-13NC x 3-1/2in	
128	4751800	1	Flatwasher 1/2in Regular	
129	3311805	4	Hex Nut 1/2in - 13UNC	
130	0641610	8	Bolt 3/8in-16NC x 1-1/4in	
131	0641608	AR	Bolt 3/8in-16NC x 1in	
132	4751600	53	Flatwasher 3/8in Regular	
133	3311605	AR	Locknut 3/8in-16UNC	
134	2220805	1	Fitting	
135	0641408	6	Bolt 1/4in-20NC x 1in	
136	0641406	AR	Bolt 1/4in-20NC x 3/4in	
137	4751400	AR	Flatwasher 1/4in Regular	
138	3311405	AR	Locknut 1/4in x 20UNC	
139	4740274	4	Washer, Snubbing	
140		Ref	Seal Options:	
140	3960389	4 ft/1.2m	Seal **(Prior to SN 0300073336)**	
140	3960548	4 ft/1.2m	Seal **(SN 0300073336 through 0300079612)**	
142	0100011	AR	Compound, Locking	
143	0100020	AR	Sealant, Pipe	
144	2220313	AR	Fitting, Elbow Barbed	
145	0940070	1	Bumper, Rubber	
146	4567879	1	Tube, Exhaust	
147	0701012	4	Bolt 10m x 1.5 x 25mm	
148	4832000	4	Lockwasher M10	
149	1340060	1	Air Cleaner Assembly	
149	7012664	1	Filter, Air Cleaner	
150	0340041	2	Band, Muffler/Air Cleaner	
151	0080201	1	Fitting, Elbow Reducing	
152	1320016	AR	Clamp, Worm Gear	
153	3311801	1	Hex Nut 1/2in-13 UNC	
154	2720436	1	Hose, Radiator (Upper)	
155	1641808	2	Bolt 1/2in-13NC x 1in	
156	2220430	1	Fitting, Reducer	
157	2180798	AR	Fitting, Restriction Indicator	
158	2901608	1	Battery Cable Kit	
158A	7016800	1	Cable, Battery (Red)	

ITEM	PART NUMBER	QTY	DESCRIPTION	REV
158B	7016807	1	Cable, Battery (Black)	
158C	7016808	1	Cable (Red)	
158D	7016824	1	Cable (Red)	
158E	7016825	1	Cable (Black)	
159	4460611	1	Terminal, Battery Jumper Post	
161	2720058	21 ft/6.2m	Hose	
162	1320223	3	Clamp, "J" Clip 1/2in	
163	3422532	1	Pin, Hitch	
164	0641606	3	Bolt 3/8in-16NC x 3/4in	
165	0642010	1	Bolt 5/8in-11NC x 1-1/4in	
166	4752000	1	Flatwasher 5/8in Regular	
167	0700819	4	Bolt M8 x 1.25 x 55mm	
168	4831900	4	Lockwasher M8	
169	0961986	2	Bearing, Flange	
170	1060637	1	Cable, Lanyard	
171	1701542	1	Decal - Gasoline (Not Shown - Located Near Tank)	
172	4060804	Ref	Flex-Trim Options:	
172	4060804	19 in /49cm	Flex-Trim **(Prior to SN 0300067701)**	
172	4060804	2.9 ft /0.88m	Flex-Trim **(SN 0300067701 through 0300079612)**	
173	4060806	16 in /41cm	Flex-Trim **(Prior to SN 0300067701)**	
174	1320032	AR	Clamp, Hose	
175	4711400	AR	Flatwasher, 1/4in Thin	
176	3960468	1	Seal, Foam	
177	3960469	1	Seal, Foam	
178	0641416	3	Bolt 1/4in-20NC x 2in	
183	0902572	1	Bracket, LP Mounting (Dual Fuel Machines Only)	
188	4568158	4	Standoff 1/4in x 2in **(Prior to SN 0300073336)**	
189	0641424	4	Bolt 1/4in-20NC x 3in **(Prior to SN 0300073336)**	
190	2220794	1	Fitting, Barbed	
191	2220273	1	Fitting, Reducer	
192	2200222	1	Plug, Pipe (Not Shown - Located on Bottom of Fuel Tank)	
193	1320223	1	J-Clip (Not Shown - Located above Fuel Tank)	
194	3960549	11 in /28cm	Seal	
195	3539934	1	Plate, Seal	
196	3960464	42 in/1m	Seal, Hood	
197	4922737	1	Harness, Relay Ground	
198	3574162	1	Plate, ECM/Relay Mounting **(SN 0300073336 through 0300079612)**	
199	0641414	4	Bolt 1/4in-20NC x 1-3/4in **(SN 0300073336 through 0300079612)**	
200	0641808	1	Bolt 1/2in-13NC x 1in **(SN 0300073336 through 0300079612)**	
201	4771800	2	Starwasher 1/2in **(SN 0300073336 through 0300079612)**	
202	0100048	AR	Grease, Dielectric	
		Ref	**ENGINE COMPONENTS**	
	2000174	Ref	**Engine Components (Prior to SN 0300073336)**	B
	2000193	Ref	**Engine Components (SN 0300073336 through 0300079612)**	D
301	3600377	1	Fuel Pump and Isolator Assembly (was p/n 7022133)	
301	7022134	1	Harness, Fuel Pump Wiring	
302	91083218	1	Filter, Fuel (was p/n 7022135)	

ITEM	PART NUMBER	QTY	DESCRIPTION	REV
303	7019986	1	Starter (Not Shown)	
304	7019977	1	Alternator with Pulley and Regulator	
304	7000897	1	Alternator without Pulley and Regulator	
305		Ref	Actuator, Throttle Options:	
305	7023655	1	Actuator, Throttle **(Prior to SN 0300073336)**	
305	70000007	1	Actuator, Throttle (was p/n 7023683) **(SN 0300073336 through 0300079612)**	
305	7023652	1	Plate, Actuator Adapter	
305	7023654	1	Gasket, Actuator to Adapter Plate	
305	7023653	2	Bolt (Adapter Plate to Intake Manifold)	
305	7023656	4	Bolt (Actuator to Adapter Plate)	
306	7019996	1	Sensor, Air Temperature (was p/n 7023661)	
306	7023662	1	Bracket, Air Temperature Sensor	
307	7023681	1	Harness, Engine Control Processor (was p/n 7023663)	
308	7022139	1	Sensor, MAP	
309	7023682	1	Sensor, EGR (was p/n 7019994)	
310	2420187	1	Dipstick (was p/n 7022140)	
310	4564281	1	Tube, Dipstick (was p/n 7022146)	
311	7023658	1	Horn, Rubber Air	
312	7023637	1	Switch, Oil Pressure Sender	
313	7021868	1	Filter, Oil (was p/n 7022147, 7022173 & 7014501)	
314	1660250	1	Coupling, Pump (was p/n 7016662)	
314	7019976	1	Flywheel	
314	7022180	1	Ring Gear	
315	7019993	1	Pressure Regulator and Filter Assembly	
316	70002307	1	Gasket, Exhaust (Manifold to Pipe) (was p/n 7040050)	
316	7022143	1	Gasket, Exhaust (Manifold to Cylinder Head) (Not Shown)	
317	7022158	3	Connector	
318	7022159	2	Connector	
319	7022160	1	Connector	
320	7022161	2	Tube, Supply	
321	7022162	2	Clamp	
322	7022178	1	Sensor, Crank	
323	2720314	1	Horn, Rubber Air	
324	1600363	1	Module, EPM (was p/n 7023684) **(SN 0300073336 through 0300079612)**	
324		Ref	EPM Update Kit Options:	
		Ref	**Note: Contact JLG Service Dept to determine which kit is required.**	
324	2915195	1	EPM Update Kit (was p/n 7023685)	
324	2915196	1	EPM Update Kit (was p/n 7023686)	
325		Ref	Relay Options:	
325	7023613	3	Relay (2000174 Engines) **(Prior to SN 0300073336)**	
325	7023695	3	Relay (2000193 Engines) **(SN 0300073336 through 0300079612)**	
326	7023644	1	Hose, Water Pump (By-Pass)	
327	70002567	1	Tensioner, Belt	
328	7022149	1	Gasket Kit, Lower Manifold (Not Shown)	
328	7025124	1	Gasket Kit, Upper Manifold (was p/n 7022148) (Not Shown)	
328	7022144	1	Gasket, Upper Manifold Throttle (Not Shown)	
329	7023657	1	Harness, TPS Harness (Not Shown)	
330	7022153	1	Pump, Water	

ITEM	PART NUMBER	QTY	DESCRIPTION	REV
330	7027411	1	Sender, Water (2000174 Engine Only) (Not Shown)	
331	7019925	1	PCV Valve (Not Shown)	
332	7019930	1	Coil, Ignition (Not Shown)	
332	7022157	1	Wire Set, Spark Plug (Not Shown)	
332	7019932	4	Spark Plug (Not Shown)	
333	7022151	1	Cap, Oil Fill	
334	7022150	1	Belt, Timing	
335	7027402	1	Belt, Drive (was p/n 7019979)	
336	3124114	1	Service Manual, Ford EFI System Diagnostic (Not Shown)	
337	7022152	4	Injector, Fuel (Not Shown)	
		Ref	**MUFFLER INSTALLATIONS**	
	0258390	Ref	**Standard Spark Arresting**	1
	0258391	Ref	**Optional Catalytic**	1
401		Ref	Muffler Options:	
401	3220113	1	Standard Spark Arresting	
401	3220114	1	Optional Catalytic	
401	70001017	1	Clamp	
402	0340046	2	Band	
403	0902309	1	Bracket, Muffler	
404	0641507	4	Bolt 5/16in-18NC x 7/8in	
405	4711500	8	Flatwasher 5/16in Thin	
406	3311505	4	Locknut 5/16in-18NC	
407	4567073	1	Tube, Exhaust	
407	70001017	1	Clamp	

FIGURE 2-13. FORD ENGINE INSTALLATION (SN 0300079612 through 0300140000)

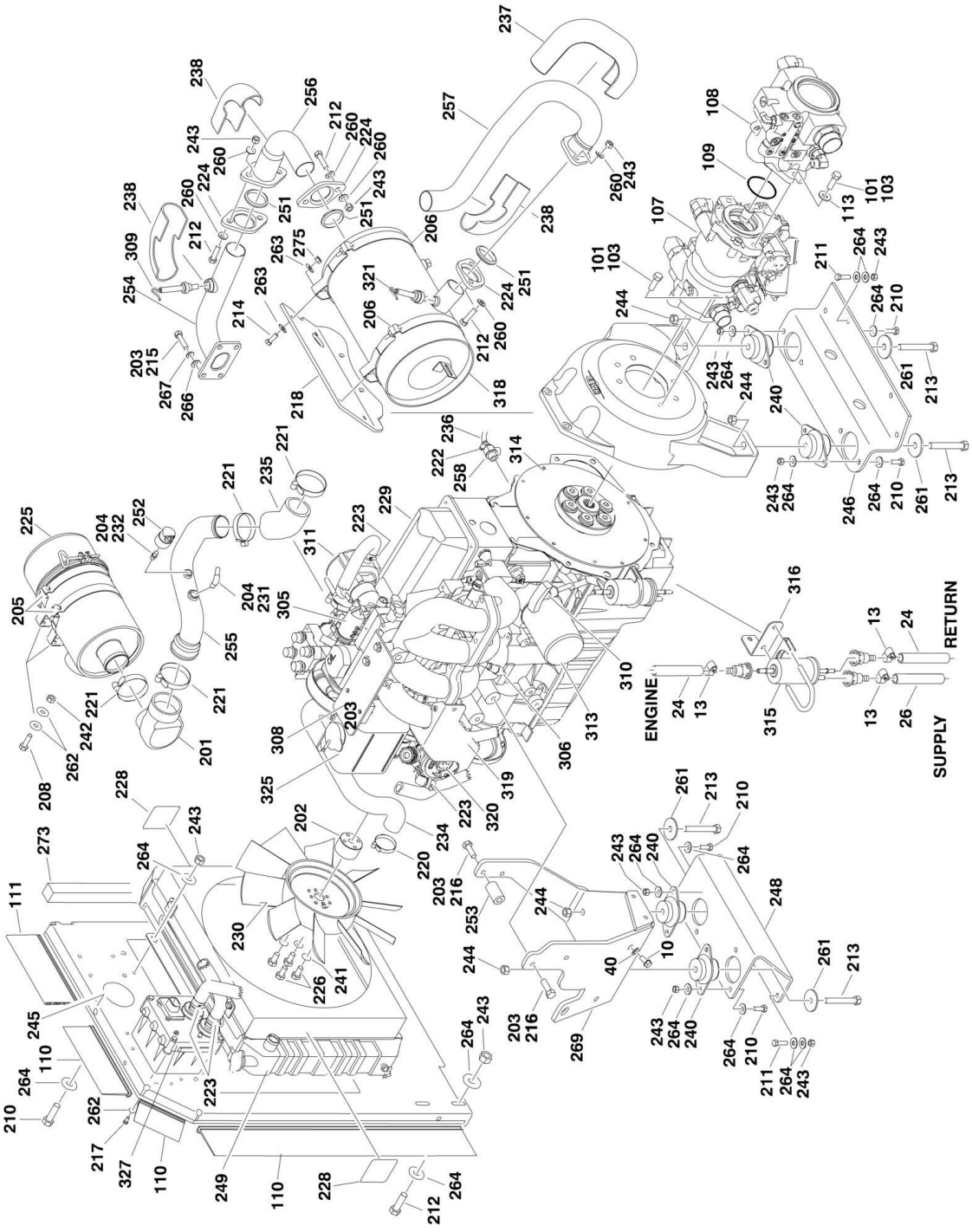

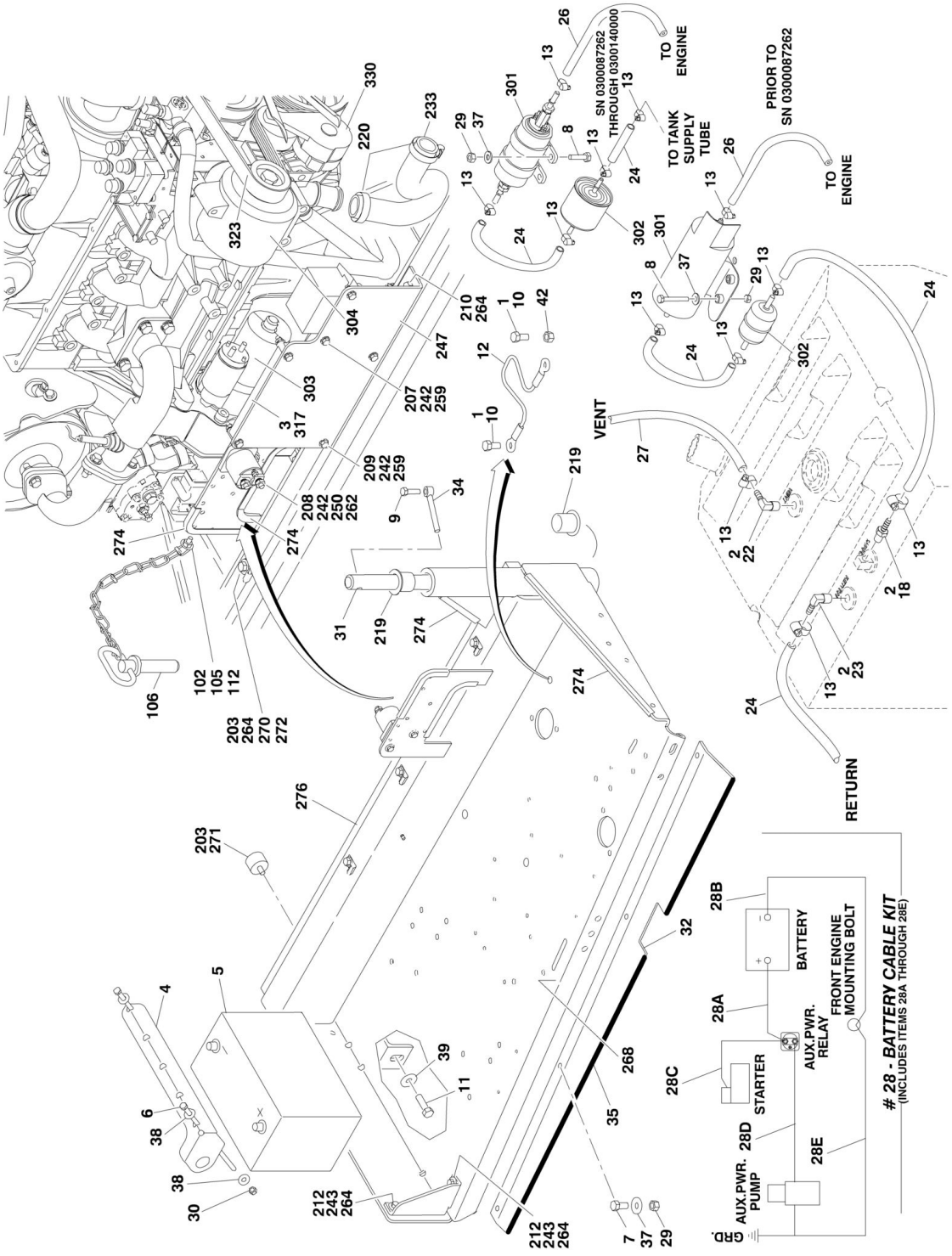
TO ENGINE
SN 0300087262 THROUGH 0300140000
TO TANK SUPPLY TUBE
PRIOR TO SN 0300087262
TO ENGINE
VENT
RETURN
28 - BATTERY CABLE KIT
(INCLUDES ITEMS 28A THROUGH 28E)
BATTERY
FRONT ENGINE MOUNTING BOLT
AUX.PWR. RELAY
STARTER
AUX.PWR. PUMP
GRD.

FIGURE 2-13. FORD ENGINE INSTALLATION (SN 0300079612 through 0300140000)

ITEM	PART NUMBER	QTY	DESCRIPTION	REV
		Ref	**FORD ENGINE INSTALLATIONS**	
	0274237	Ref	**Ford Engine Installations (SN 0300079612 through 0300087261)**	B
	0274627	Ref	**Ford Engine Installations (SN 0300087262 through 0300140000)**	E
1	0100011	AR	Compound, Locking	
2	0100020	AR	Sealant, Pipe	
3	0100048	AR	Grease, Dielectric	
4	0181727	1	Hold-Down, Battery	
5	0400075	1	Battery	
6	0630498	2	Bolt, Battery Hold-Down	
7	0641406	4	Bolt 1/4in-20NC x 3/4in **(SN 0300079612 through 0300089980)**	
8	0641414	3	Bolt 1/4in-20NC x 1-3/4in	
9	0641608	1	Bolt 3/8in-16NC x 1in	
10	0641808	3	Bolt 1/2in-13NC x 1in	
11	0642010	1	Bolt 5/8in-11NC x 1-1/4in	
12	1060637	1	Cable, Lanyard	
13	1320022	7	Clamp, Hose	
14	1320223	1	Clamp (Not Shown - Located on Turntable to clamp fuel line)	
15	1701542	1	Decal - Gas (Not Shown - Located on Hood)	
16	1701543	1	Decal - LP (Not Shown - Located on Frame)	
18	2180348	1	Fitting	
19	2180418	1	Fitting, Straight	
20	2200222	1	Fitting, Plug (Not Shown - Located on Bottom of Fuel Tank) (Apply Item 2 to Fitting)	
21	2220005	1	Fitting, Straight	
22	2220313	1	Fitting, Elbow	
23	2221176	1	Fitting, Elbow	
24	2720058	20.25 ft /6.2m	Hose, Fuel Line	
25	2720392	1	Hose, LP	
26	2720472	1	Hose, Fuel Line	
27	2720532	6 ft/1.8m	Hose, Fuel Line	
28	2901608	1	Battery Cable Kit **(SN 0300079612 through 0300087735)**	
28	2902445	1	Battery Cable Kit **(SN 0300087736 through 0300140000)**	
28A	7016800	1	Cable, Battery (Red) (P/N 2901608 Kit)	
28A	7016821	1	Cable, Battery (Red) (P/N 2902445 Kit)	
28B	7016807	1	Cable, Battery (Black) (P/N 2901608 Kit)	
28B	7016822	1	Cable, Battery (Black) (P/N 2902445 Kit)	
28C	7016808	1	Cable (Red)	
28D	7016824	1	Cable (Red)	
28E	7016825	1	Cable (Black)	
29	3311405	AR	Locknut 1/4in-20NC	
30	3311605	2	Locknut 3/8in-16NC	
31	3422446	1	Pin	
32	3539934	1	Plate, Seal **(SN 0300079612 through 0300089980)**	
34	3841143	1	Pin, Keeper	
35	3960464	3.5 ft /1.1m	Seal **(SN 0300079612 through 0300089980)**	
37	4751400	AR	Flatwasher 1/4in Regular	
38	4751600	4	Flatwasher 3/8in Regular	

ITEM	PART NUMBER	QTY	DESCRIPTION	REV
39	4752000	1	Flatwasher 5/8in Regular	
40	4771800	1	Starwasher 1/2in	
41	1700818	1	Decal - LP Gas (Liquid) (Not Shown - Located on Frame)	
42	3311801	1	Nut 1/2in-13NC	
43	4922737	1	Harness, Engine Grounding (Not Shown)	
		Ref	**ENGINE AND PUMP ASSEMBLIES**	
	2000271	Ref	**Engine and Pump Assemblies (SN 0300079612 through 0300087261)**	B
	2000323	Ref	**Engine and Pump Assemblies (SN 0300087262 through 0300140000)**	B
101	0100011	AR	Compound, Locking	
102	0641406	1	Bolt 1/4in-20NC x 3/4in	
103	0641812	4	Bolt 1/2in-13NC x 1-1/2in	
105	3311405	1	Locknut 1/4in-20NC	
106	3422532	1	Pin, Hitch	
107	3600410	1	Piston Pump Assembly with Fittings Options (See PISTON PUMP ASSEMBLY for Breakdown):	
108	3600411	1	Load Sensing Pump Assembly with Fittings Options (See LOAD SENSING PUMP ASSEMBLY for Breakdown):	
109		Ref	O-Ring Options:	
109	3790152	1	O-Ring **(SN 0300079612 through 0300087261)**	
109	3790044	1	O-Ring **(SN 0300087262 through 0300140000)**	
110	3960548	3.66 ft /1.1m	Seal, Hood	
111	3960549	1 ft/0.3m	Seal, Hood	
112	4711400	1	Flatwasher 1/4in Thin	
113	4891800	2	Flatwasher 1/2in Hardened	
114	2300004	2.63 gal /9.96L	Coolant (Not Shown)	
		Ref	**ENGINE ASSEMBLIES**	
	2000211	Ref	**Engine Assemblies (SN 0300079612 through 0300087261)**	D
	2000296	Ref	**Engine Assemblies (SN 0300087262 through 0300140000)**	C
201	0080201	1	Adapter Elbow	
202	0080214	1	Adapter, Fan Spacer	
203	0100011	AR	Compound, Locking	
204	0100020	AR	Sealant, Pipe	
205	0340041	2	Band, Air Cleaner	
206	0340046	2	Band, Muffler	
207	0641406	2	Bolt 1/4in-20NC x 3/4in	
208	0641408	6	Bolt 1/4in-20NC x 1in	
209	0641414	4	Bolt 1/4in-20NC x 1-3/4in	
210	0641608	14	Bolt 3/8in-16NC x 1in	
211	0641610	10	Bolt 3/8in-16NC x 1-1/4in	
212	0641612	8	Bolt 3/8in-16NC x 1-1/2in	
213	0641828	4	Bolt 1/2in-13NC x 3-1/2in	
214	0641507	4	Bolt 5/16in-18NC x 7/8in	
215	0701012	4	Bolt 10mm x 25mm	
216	0701014	4	Bolt 10mm x 30mm	
217	0760606	4	Bolt 6mm x 12mm	
218		Ref	Bracket, Muffler Options:	
218	0902309	1	Bracket, Muffler **(SN 0300079612 through 0300081681)**	
218	0903079	1	Bracket, Muffler **(SN 0300081682 through 0300140000)**	
219	0961986	2	Bushing, Flanged	

SECTION 2 - TURNTABLE

ITEM	PART NUMBER	QTY	DESCRIPTION	REV
220	1320012	4	Clamp	
221	1320016	3	Clamp	
222	1320022	1	Clamp, Hose	
223	1320033	8	Clamp, Hose	
224	1321138	3	Plate, Exhaust Flange	
225	1340060	1	Air Cleaner Assembly Filter Element	
225	7012664	1	Element, Filter (Not Shown)	
226	0700819	4	Bolt 8mm x 55mm	
227	4920385	7 ft/2.1m	Wire, Safety (Not Shown)	
228	1703162	2	Decal - Caution Fan Blade	
230	2060025	1	Fan	
231	2180467	1	Fitting	
232	2180798	1	Fitting, Restriction Indicator **(SN 0300079612 through 0300087262)**	
233	2720435	1	Hose, Radiator (Bottom)	
234	2720436	1	Hose, Radiator (Upper)	
235	2720514	1	Hose, Elbow	
236	2750532	6 in/15cm	Hose, Oil Drain	
237	2820172	1	Insulation, Exhaust (Shield)	
238	2820173	3	Insulation, Exhaust (Elbow)	
239	1320019	1	Clamp (Not Shown - Used with Item # 238 on) **(SN 0300079312 through 0300081682)**	
240	3200362	4	Mount, Motor	
241	4831900	4	Lockwasher M8	
242	3311405	12	Locknut 1/4in-20NC	
243	3311605	30	Locknut 3/8in-16NC	
244	3311805	4	Locknut 1/2in-13NC	
245	3539872	1	Plate, Radiator Mounting	
246	3572280	1	Plate, Engine Mount	
247	3574162	1	Plate, ECM/Relay Mount	
248	3574504	1	Plate, Engine Mount	
249	3620040	1	Radiator	
249	8180311	1	Cap, Radiator (was p/n 7019656)	
250	3740067	1	Relay	
251	3960591	3	Gasket, Exhaust	
252	4360392	1	Indicator, Restriction **(SN 0300079612 through 0300087262)**	
253	4566605	1	Tube, Spacer	
254	4567879	1	Tube, Exhaust	
255		Ref	Tube, Intake Options:	
255	4568951	1	Tube, Intake **(SN 0300079612 through 0300087261)**	
255	4569173	1	Tube, Intake **(SN 0300087262 through 0300140000)**	
256	4569083	1	Tube, Exhaust	
257	3460398	1	Pipe, Exhaust	
258	4640989	1	Valve, Oil Drain	
259	4711400	12	Flatwasher 1/4in Thin	
260	4711600	12	Flatwasher 3/8in Thin	
261	4740274	4	Washer, Snubbing	
262	4751400	14	Flatwasher 1/4in Regular	
263	4751500	8	Flatwasher 5/16in Regular	
264	4751600	51	Flatwasher 3/8in Regular	
266	4812000	4	Flatwasher M10	
267	4832000	4	Lockwasher M10	

ITEM	PART NUMBER	QTY	DESCRIPTION	REV
268	4845404	1	Tray, Engine	
269	4846806	1	Plate, Engine Mounting	
270	0641606	1	Bolt 3/8in-16NC x 3/4in	
271	0940070	1	Bumper	
272	1320223	3	J-Clip	
273	3960469	1	Seal	
274	4060805	37 in/1m	Flex-Trim	
275	3311505	4	Locknut 5/16in-18NC	
276	3960468	1	Seal	
	2000272	Ref	**ENGINE COMPONENTS**	C
301	3600377	1	Fuel Pump and Isolator Assembly (was p/ns 7022133 & 7027407)	
301	7022134	1	Harness, Fuel Pump (Not Shown)	
302	91083218	1	Filter, Fuel (was p/n 7022135)	
303	7012679	1	Starter (was p/n 7027408)	
304	7019977	1	Alternator with Regulator and Pulley	
304	7000897	1	Alternator without Regulator and Pulley	
305	70000007	1	Actuator, Throttle (was p/n 7023683)	
305	7027404	1	Gasket, Actuator (Not Shown)	
306	7019996	1	Sensor, Air Temperature (was p/n 7023661)	
307	7023681	1	Harness, Engine Control (was p/n 7027403) (Not Shown)	
308	7022139	1	Sensor, MAP	
309	7023682	1	Sensor, EGR	
310	2420187	1	Dipstick (was p/n 7022140)	
310	4564281	1	Tube, Dipstick	
311	7027400	1	Mixer Assembly	
313	7021868	1	Filter, Oil (was p/n 7022147, 7022173 & 7014501)	
314	1660250	1	Coupling, Pump	
314	7019976	1	Flywheel (Not Shown)	
314	7022180	1	Ring Gear (Not Shown)	
315	7019993	1	Pressure Regulator and Filter Assembly	
316	0902539	1	Bracket	
317	1600374	1	Module, EPM	
317	7027413	1	Harness, EPM Jumper	
318	3220134	1	Muffler	
319	0903010	1	Bracket, LP Regulator	
320	7023698	1	Regulator, LP	
321	7019994	1	Sensor, EGR (was p/n 7027406)	
322	70002307	1	Gasket, Exhaust (Manifold to Pipe)	
322	7022143	1	Gasket, Exhaust (Manifold to Cylinder Head) (was p/n 7027401) (Not Shown)	
323	7022150	1	Belt (was p/n 7027402)	
324	7027405	4	Spark Plug (Not Shown)	
325	1580011	1	Bottle, Overflow	
326	7027409	1	Filter, LP Shutoff with Leads	
327	7023699	1	Megajector	
327	7027410	1	Harness, Megajector	
327	70001690	1	Hose Kit - Megajector	
328	7019925	1	PCV Valve (Not Shown)	
329	7022155	1	Sensor, Water Temperature (Not Shown)	
330	70002567	1	Tensioner, Belt	

FIGURE 2-14. DUAL FUEL INSTALLATIONS

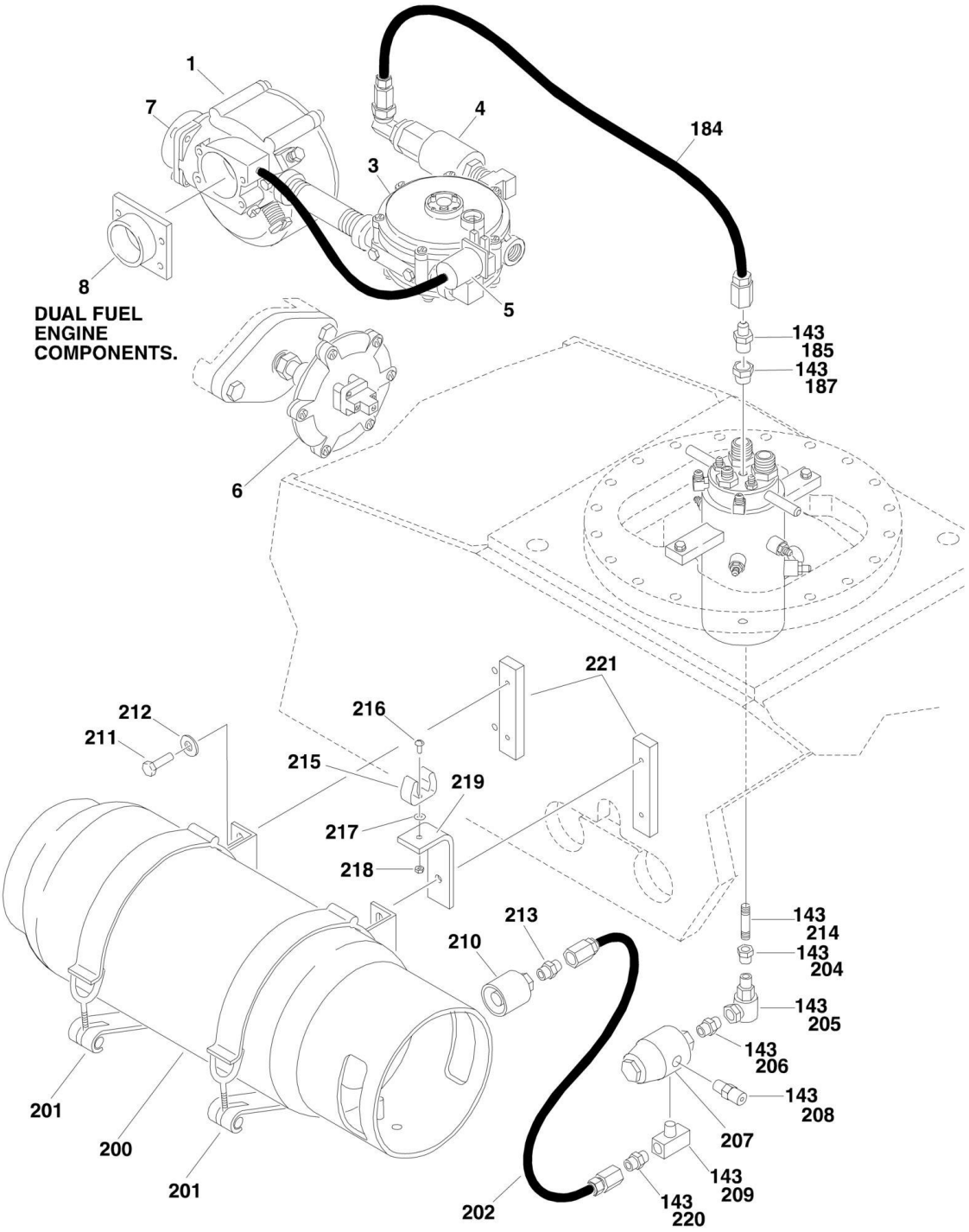

FIGURE 2-14. DUAL FUEL INSTALLATIONS

ITEM	PART NUMBER	QTY	DESCRIPTION	REV
		Ref	**DUAL FUEL ENGINE COMPONENTS (FORD ENGINE MACHINES ONLY) (Prior to SN 0300079612)**	
		Ref	**Note: For Machines built refer to preceding engine Installation (SN 0300079612 through 0300140000)**	
	2000174	Ref	**Dual Fuel Engine Components (Prior to SN 0300073336)**	
	2000193	Ref	**Dual Fuel Engine Components (SN 0300073336 through 0300079612)**	
	7023665	1	Dual Fuel Conversion Kit (Note: Includes hose, fittings, clamps and items indented below. For replacement hose, fittings and clamps supply locally)	
1	7022165	1	Mixer	
1	7022171	1	Repair Kit - 7022165 Mixer	
3	7022167	1	Convertor	
3	7022170	1	Repair Kit - 7022167 Convertor	
4	7022169	1	Filter, LP Shut-Off	
4	7023680	1	Electrical Connector Kit (Includes (1) 2 Position Connector, 2 Pins and 2 Seals) (was p/n 7023679)	
5	7022168	1	Valve, Solenoid	
6	4360188	1	Switch, Vacuum	
7	7023603	1	Adaptor	
8	7022166	1	Adaptor	
		Ref	**DUAL FUEL ENGINE COMPONENTS**	
	0270879	Ref	**Ford Engine Machines (Prior to SN 0300073336)**	8-H
	0272873	Ref	**Ford Engine Machines (SN 0300073336 through 0300140000)**	4-D
	See Note	Ref	**GM Engine Machines (Note: See GM Engine Installation)**	
143	0100020	AR	Sealant	
179	4360336	1	Switch, Toggle (Not Shown - Located on Console Box)	
180	3790012	1	O-Ring (Not Shown - Located on Console Box)	
181	1701543	2	Decal - LPG (Not Shown - See Decal Installation)	
182	1700818	2	Decal - Liquid withdrawal System (Not Shown - See Decal Installation)	
183	0902572	1	Bracket, Convertor Support (Not Shown - See Engine Installation)	
184	2720392	1	Hose	
185	2180418	1	Fitting, Straight	
187	2220005	1	Fitting, Reducer	
	0255524	Ref	**LP TANK AND BRACKETS INSTALLATION**	9-F
200		Ref	Tank, LP Options:	
200	4400275	1	Aluminum	
200	4400420	1	Steel	
201	1320220	2	Clamp Kit - LP	
201	1320127	2	Clamp, Toggle (1 Per Clamp)	
202	2720144	2	Hose	
203	0100020	AR	Sealant, Pipe	
204	2221197	1	Fitting, Reducer	
205	2180125	1	Fitting, Elbow	
206	2220261	1	Fitting, Nipple	
207	2180388	1	Filter, Bulkhead	
208	2180389	1	Valve, Relief	
209	2220418	1	Fitting, Tee	
210	2180387	2	Fitting, LP Tank	

SECTION 2 - TURNTABLE

ITEM	PART NUMBER	QTY	DESCRIPTION	REV
211	0641606	8	Bolt 3/8in-16NC x 3/4in	
212	4751600	8	Flatwasher 3/8in Regular	
213	2180418	2	Fitting, Straight	
214		Ref	Fitting, Nipple Options:	
214	2221018	1	Fitting, Nipple **(Prior to SN 0300136508)**	
214	2220261	1	Fitting, Nipple **(SN 0300136508 through 0300140000)**	
215	1320218	2	Clamp, Spring	
216	3910808	2	Screw, Machine #8-32NC x 1/2in	
217	4750800	4	Flatwasher #8	
218	3310805	2	Locknut #8-32NC	
219	0181949	2	Support, Angle	
220	2221024	2	Fitting, Ball Check	
221	0362519	4	Bar, Clamp	

FIGURE 2-15. GM ENGINE INSTALLATION (Prior to SN 0300139210)

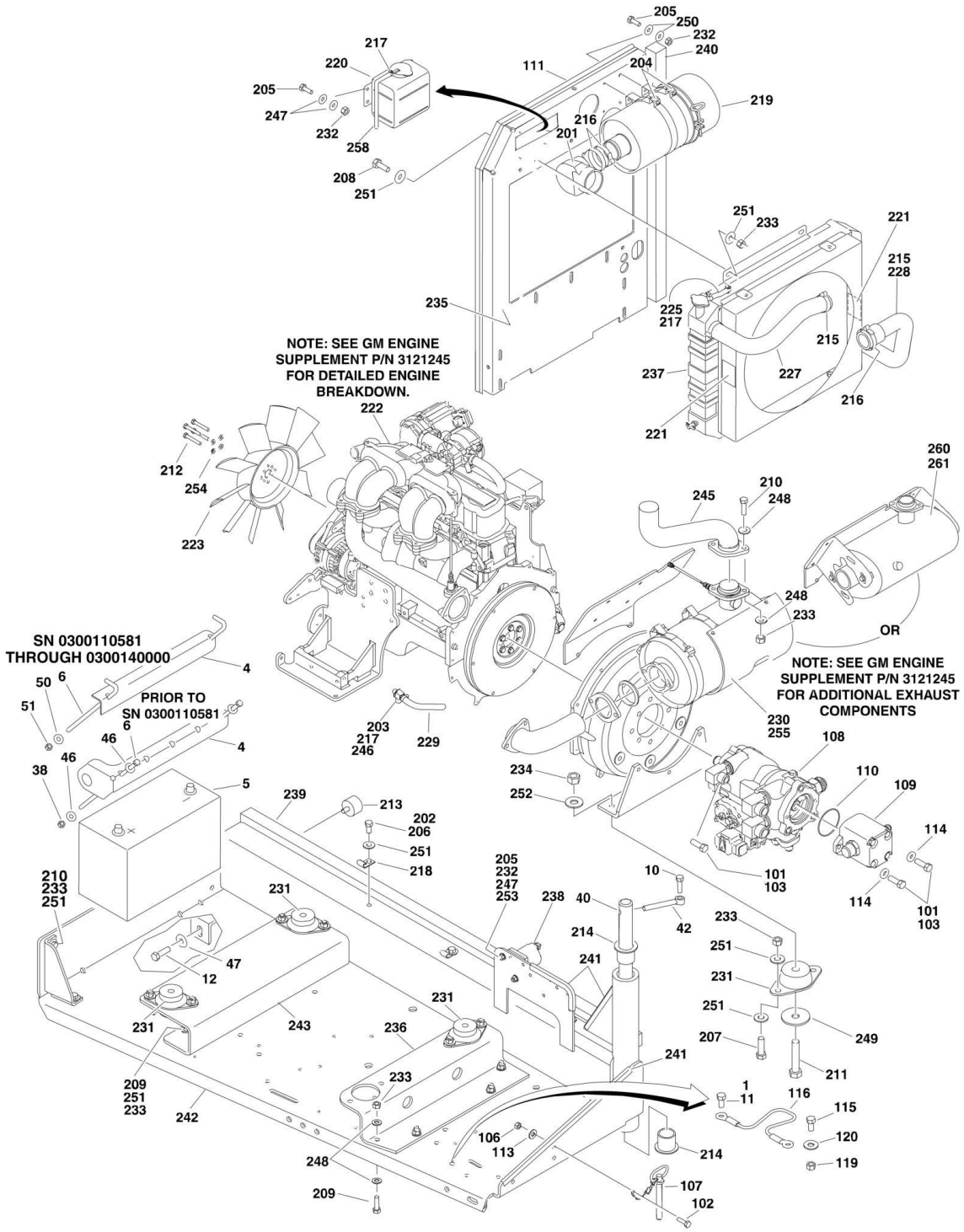

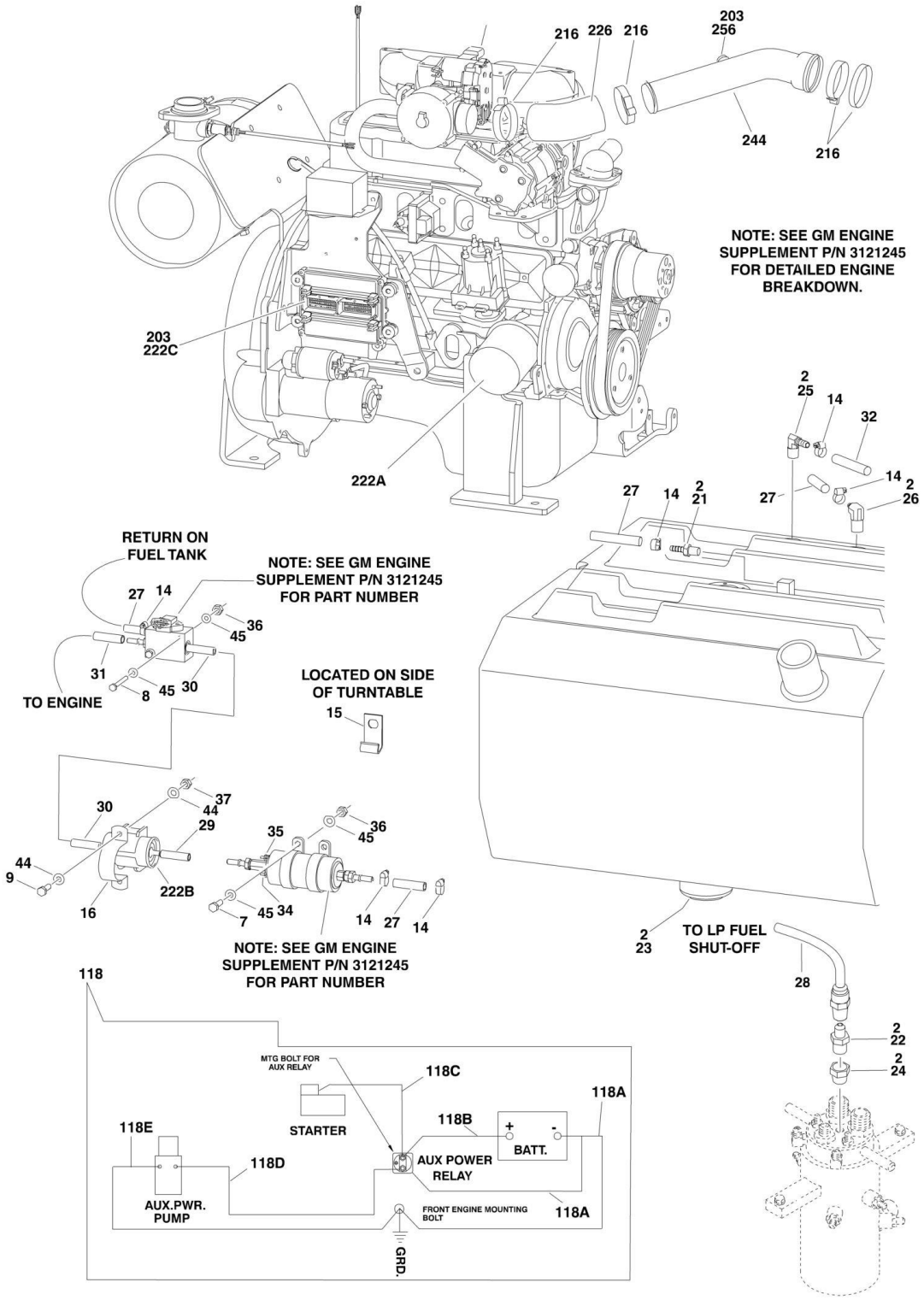
216
226
216
203
256
244
216
NOTE: SEE GM ENGINE SUPPLEMENT P/N 3121245 FOR DETAILED ENGINE BREAKDOWN.
203
222C
222A
2
25
14
32
14
2
26
27
27
14
2
21
RETURN ON FUEL TANK
NOTE: SEE GM ENGINE SUPPLEMENT P/N 3121245 FOR PART NUMBER
27
14
36
45
31
8
45
30
TO ENGINE
LOCATED ON SIDE OF TURNTABLE
15
30
37
44
29
44
9
222B
16
35
36
45
7
45
34
14
27
14
NOTE: SEE GM ENGINE SUPPLEMENT P/N 3121245 FOR PART NUMBER
2
23
TO LP FUEL SHUT-OFF
28
2
22
2
24
118
MTG BOLT FOR AUX RELAY
118C
118A
STARTER
118B
+
-
BATT.
118E
118D
AUX POWER RELAY
AUX.PWR. PUMP
FRONT ENGINE MOUNTING BOLT
118A
GRD.

FIGURE 2-15. GM ENGINE INSTALLATION (Prior to SN 0300139210)

ITEM	PART NUMBER	QTY	DESCRIPTION	REV
		Ref	**GM ENGINE INSTALLATIONS:**	
	0275365	Ref	**Tier I Engine (Prior to SN 0300109493)**	B
	1001091639	Ref	**Tier II Engine (SN 0300109493 through 0300139210)**	F
1	0100011	AR	Compound, Locking	
2	0100020	AR	Sealant, Pipe	
3	0100048	AR	Grease, Dielectric	
4		Ref	Angle, Battery Hold Down Options:	
4	0181727	1	Angle, Battery Hold Down **(Prior to SN 0300110581)**	
4	91401281	1	Angle, Battery Hold Down **(SN 0300110581 through 0300139210)**	
5	0400075	1	Battery (Wet)	
6		Ref	Bolt, Battery Hold-down Options:	
6	0630498	2	Bolt, Battery Hold-down **(Prior to SN 0300110581)**	
6	1001093382	2	Bolt, Battery Hold-down **(SN 0300110581 through 0300139210)**	
7	0641412	2	Bolt 1/4in-20NC x 1-1/2in	
8	0641422	2	Bolt 1/4in-20NC x 2-3/4in	
9	0641511	2	Bolt 5/16in-18NC x 1-3/8in	
10	0641608	1	Bolt 3/8in-16NC x 1in	
11	0641808	AR	Bolt 1/2in-13NC x 1in	
12	0642010	1	Bolt 5/8in-11NC x 1-1/4in	
14	1320022	5	Clamp, Fuel Line	
15	1320223	1	Clamp **(Prior to SN 0300109493)**	
16	1320323	1	Clamp	
17	1700818	AR	Decal - LP Gas (Liquid) (Not Shown)	
18	1701542	1	Decal, Gas (Not Shown) **(Prior to SN 0300109493)**	
19	1701543	AR	Decal, LPG (Not Shown)	
21	2180348	1	Fitting, Barbed	
22	2180418	1	Fitting, Straight	
23	2200222	1	Fitting, Plug	
24	2220005	1	Fitting, Straight	
25	2220313	1	Fitting, Elbow Barbed **(Prior to SN 0300109493)**	
26	2221176	1	Fitting, Elbow	
27		Ref	Hose, Fuel Line Options:	
27	2720058	8.5 ft /2.6m	Hose, Fuel Line **(Prior to SN 0300109493)**	
27	1001091587	8.5 ft /2.6m	Hose, Fuel Line **(SN 0300109493 through 0300139210)**	
28	2720392	1	Hose, LP	
29	2720566	1	Hose, High Pressure Fuel Line (6in/15cm Length)	
30	2720567	1	Hose, High Pressure Fuel Line (4ft/1.2m Length)	
31	2720580	1	Hose	
32	2750532	6 ft/1.8m	Hose	
34	3290405	1	Locknut M4 x 0.7	
35	3290505	1	Locknut M5 x 0.8	
36	3311405	4	Locknut 1/4in x 20NC	
37	3311505	AR	Locknut 5/16in-18NC	
38	3311605	2	Locknut 3/8in-16NC **(Prior to SN 0300110581)**	
40	3422446	1	Pin	
41	3790012	1	O-Ring (Not Shown - Located in Console Box)	

ITEM	PART NUMBER	QTY	DESCRIPTION	REV
42	3841143	1	Keeper	
43	4360336	1	Switch, Toggle (Not Shown - Located in Console Box)	
44	4711500	4	Flatwasher 5/16in Thin	
45	4751400	8	Flatwasher 1/4in Regular	
46	4751600	4	Flatwasher 3/8in Regular **(Prior to SN 0300110581)**	
47	4752000	1	Flatwasher 5/8in Regular	
48	4771800	1	Starwasher 1/2in **(Prior to SN 0300109493)**	
49	4922737	1	Harness, Grounding (Not Shown)	
50	4751500	2	Flatwasher 5/16in Regular **(SN 0300110581 through 0300139210)**	
51	88521205	2	Locknut, Nylon Insert 5/16in-18NC	
52	2300004	2.63 gal /9.9L	Coolant (Not Shown)	
		Ref	**GM ENGINE AND PUMP SUB-ASSEMBLIES**	
	2000379	Ref	**Tier I Engine (Prior to SN 0300109493)**	B
	1001091640	Ref	**Tier II Engine (SN 0300109493 through 0300139210)**	E
101	0100011	AR	Compound, Locking	
102	0641406	1	Bolt 1/4in-20NC x 3/4in	
103	0641812	4	Bolt 1/2in-13NC x 1-1/2in	
106	3311405	1	Locknut 1/4in-20NC	
107	3422532	1	Pin, Hitch	
108	3600410	1	Piston Pump Assembly with Fittings (See PISTON PUMP ASSEMBLY for Breakdown)	
109	3600411	1	Load Sensing Pump Assembly with Fittings (See LOAD SENSING PUMP ASSEMBLY for Breakdown)	
110	3790044	1	O-Ring	
111	3960548	3.66 ft /1.1m	Seal	
112	3960549	1 ft/0.3m	Seal	
113	4751400	1	Flatwasher 1/4in Regular	
114	4891800	2	Flatwasher, 1/2in Hardened	
115	0641808	1	Bolt 1/2in-13NC x 1in	
116	1060637	1	Cable, Lanyard	
118	2902533	1	Battery Cable Kit	B
118A	7027018	1	Cable (Battery - to Ground)	
118B	7027015	1	Cable (Battery + to Auxiliary Relay)	
118C	7027017	1	Cable (Auxiliary Relay to Starter)	
118D	7016824	1	Cable (Auxiliary Relay to Auxiliary Pump)	
118E	7016825	1	Cable (Ground to Auxiliary Pump)	
119	3311801	1	Nut 1/2in-13NC	
120	4751800	1	Flatwasher 1/2in Regular **(SN 0300109493 through 0300140000)**	
		Ref	**GM ENGINE ASSEMBLIES**	
	2000375	Ref	**Tier I Engine (Prior to SN 0300109493)**	E
	1001091632	Ref	**Tier II Engine (SN 0300109493 through 0300139210)**	E
201	0080201	1	Fitting, Elbow	
202	0100011	AR	Compound, Locking	
203	0100020	AR	Sealant **(Prior to SN 0300136498)**	
204	0340041	2	Band, Mounting	
205	0641406	10	Bolt 1/4in-20NC x 3/4in	
206	0641606	3	Bolt 3/8in-16NC x 3/4in	
207	0641608	8	Bolt 3/8in-16NC x 1in	
208	0641609	4	Bolt 3/8in-16NC x 1-1/8in	

SECTION 2 - TURNTABLE

ITEM	PART NUMBER	QTY	DESCRIPTION	REV
209	0641610	10	Bolt 3/8in-16NC x 1-1/4in	
210	0641612	4	Bolt 3/8in-16NC x 1-1/2in	
211	0641828	2	Bolt 1/2in-13NC x 3-1/2in	
212	0700810	4	Bolt M8 x 20mm	
213	0940070	1	Bumper	
214	0961986	2	Bearing, Flanged	
215	1320012	3	Clamp	
216	1320016	5	Clamp	
217	1320022	3	Clamp	
218	1320223	3	Clamp	
219	1340060	1	Air Cleaner Assembly	
219	7012664	1	Element, Air Cleaner	
220	1580011	1	Container, Coolant Overflow	
221	1703162	2	Decal - Caution Fan	
222		Ref	Engine Options (See GM Engine Supplement p/n 3121245 for Breakdown of Additional Components):	
222	2000354	1	Engine, GM 3.0L - Tier I **(Prior to SN 0300109493)**	
222	1001091583	1	Engine, GM 3.0L - Tier II **(SN 0300109493 through 0300139210)**	
222	7027996	4	Plug, Spark (Not Shown)	
222A	7027965	1	Filter, Oil	
222B	7027972	1	Filter, Fuel	
222C	7027994	1	Module, Control (ECU)	
223	2060025	1	Fan	
224	2300004	2.63 gal /9.9L	Coolant (Not Shown)	
225	2720058	4 in/10cm	Hose	
226	2720514	1	Hose	
227	2720563	1	Hose, Radiator (Top)	
228	2720564	1	Hose, Radiator (Bottom)	
229		Ref	Hose Options:	
229	2750532	6 in /15.2cm	Hose **(Prior to SN 0300136498)**	
229	1001091892	6 in /15.2cm	Hose **(SN 0300136498 through 0300139210)**	
230		Ref	Muffler, Insulation Options:	
230	2820180	1	Muffler, Insulation **(Prior to SN 0300109493)**	
230	1001091794	1	Muffler, Insulation **(SN 0300109493 through 0300139210)**	
231	3200362	4	Mount, Engine	
232	3311405	10	Locknut 1/4in-20NC	
233	3311605	26	Locknut 3/8in-16NC	
234	3311805	4	Locknut 1/2in-13NC	
235	3539872	1	Plate, Radiator Mounting	
236	3572280	1	Plate, Engine Mount	
237	3620040	1	Radiator	
237	8180311	1	Cap, Radiator (was p/n 7019656)	
238	3740067	2	Relay	
239	3960468	1	Seal	
240	3960469	1	Seal	
241	4060805	3 ft/0.9m	Seal	
242	4341239	1	Tray, Engine	
243	4341241	1	Mount, Engine (Front)	

ITEM	PART NUMBER	QTY	DESCRIPTION	REV
244	4569342	1	Tube, Intake	
245	4569394	1	Tube, Intake	
246		Ref	Valve, Oil Drain Options:	
246	4640952	1	Valve, Oil Drain **(Prior to SN 0300136498)**	
246	1001105872	NLA	Valve, Oil Drain (Use p/n 4640952) **(SN 0300136498 through 0300140000)**	
247	4711400	12	Flatwasher 1/4in Thin	
248	4711600	12	Flatwasher 3/8in Thin	
249	4740274	4	Flatwasher, Snubbing	
250	4751400	8	Flatwasher 1/4in Regular	
251	4751600	43	Flatwasher 3/8in Regular	
252	4751800	2	Flatwasher 1/2in Regular	
253	4791400	2	Starwasher 1/4in	
254	4831900	4	Lockwasher M8	
255	4920385	10 ft/3m	Wire, Safety	
256	2180877	1	Fitting	
257	0641826	2	Bolt 1/2in-13NC x 3-1/4in	
258	2720271	1.5 ft /0.5m	Hose **(SN 0300136498 through 0300139210)**	

FIGURE 2-16. GM ENGINE INSTALLATION (SN 0300139210 through 0300140000)

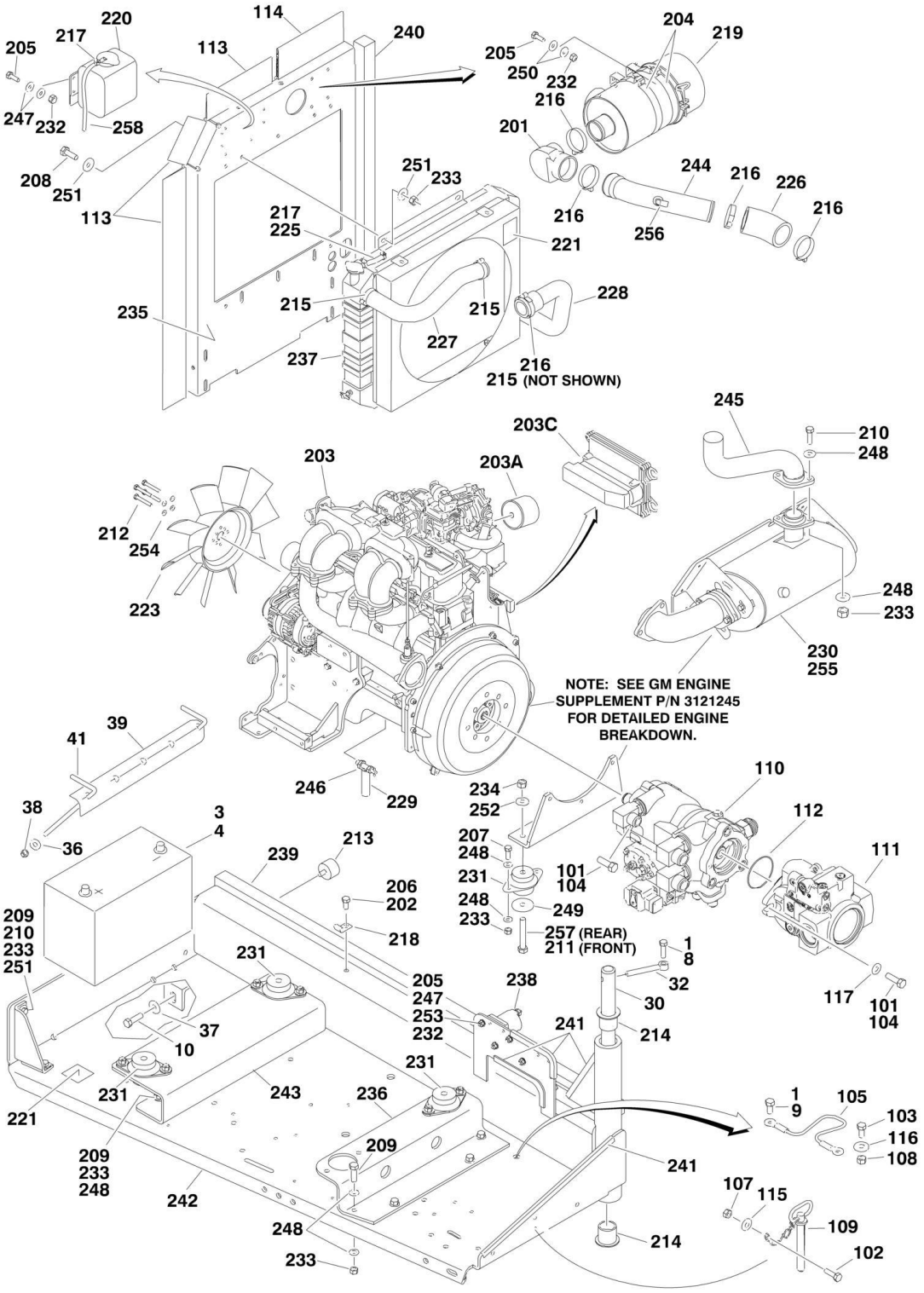

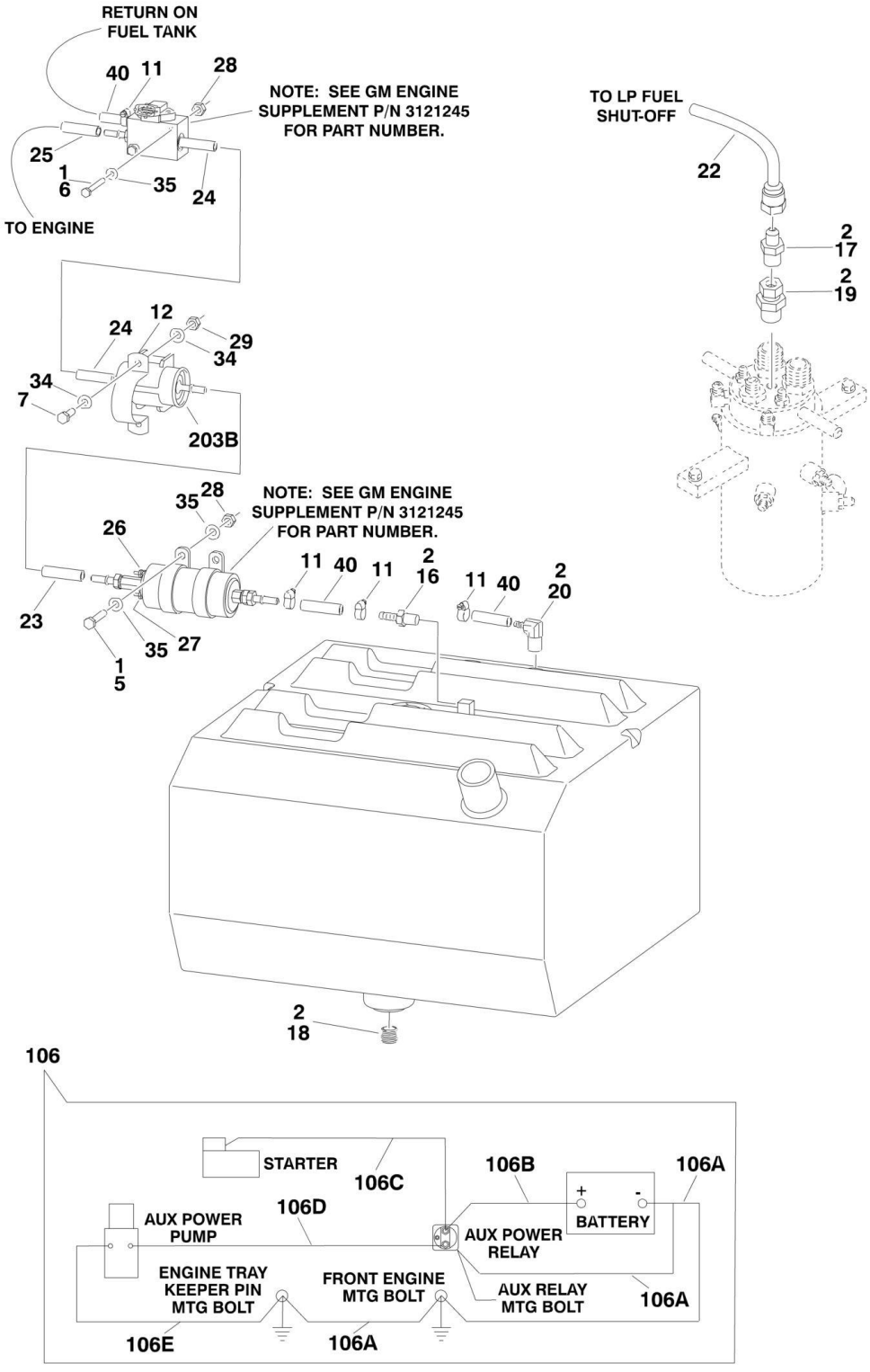
RETURN ON FUEL TANK
40
11
28
NOTE: SEE GM ENGINE SUPPLEMENT P/N 3121245 FOR PART NUMBER.
25
1
6
35
24
TO ENGINE
TO LP FUEL SHUT-OFF
22
2
17
2
19
12
24
29
34
34
7
203B
35
28
NOTE: SEE GM ENGINE SUPPLEMENT P/N 3121245 FOR PART NUMBER.
26
11
40
11
2
16
11
40
2
20
23
35
27
1
5
2
18
106
STARTER
106C
106B
106A
106D
AUX POWER PUMP
AUX POWER RELAY
BATTERY
ENGINE TRAY KEEPER PIN MTG BOLT
FRONT ENGINE MTG BOLT
AUX RELAY MTG BOLT
106A
106E
106A

FIGURE 2-16. GM ENGINE INSTALLATION (SN 0300139210 through 0300140000)

ITEM	PART NUMBER	QTY	DESCRIPTION	REV
	1001114634	Ref	**GM 3.0L TIER III/iV ENGINE INSTALLATION**	A
1	0100011	AR	Compound, Locking	
2	0100020	AR	Sealant, Pipe	
3	0100048	AR	Grease, Dielectric	
4	0400075	1	Battery (Wet)	
5	0641412	2	Bolt 1/4in-20NC x 1-1/2in	
6	0641422	2	Bolt 1/4in-20NC x 2-3/4in	
7	0641511	2	Bolt 5/16in-18NC x 1-3/8in	
8	0641608	1	Bolt 3/8in-16NC x 1in	
9	0641808	1	Bolt 1/2in-13NC x 1in	
10	0642010	1	Bolt 5/8in-11NC x 1-1/4in	
11	1320022	4	Clamp, Fuel Line	
12	1320323	1	Clamp	
13	1700818	2	Decal - LP Gas (Liquid) (Not Shown)	
14	1701542	1	Decal, Gas (Not Shown)	
15	1701543	2	Decal, LPG (Not Shown)	
16	2180348	1	Fitting, Barbed	
17	2180418	1	Fitting, Straight	
18	2200222	1	Fitting, Plug	
19	2220005	1	Fitting, Straight	
20	2221176	1	Fitting, Elbow	
21	2300004	2.63 gal /9.9L	Coolant (Not Shown)	
22	2720392	1	Hose, LP	
23	2720566	1	Hose, High Pressure Fuel Line (6in/15cm Length)	
24	2720567	1	Hose, High Pressure Fuel Line (4ft/1.2m Length)	
25	2720580	1	Hose	
26	3290405	1	Locknut M4 x 0.7	
27	3290505	1	Locknut M5 x 0.8	
28	3311405	4	Locknut 1/4in x 20NC	
29	3311505	2	Locknut 5/16in-18NC	
30	3422446	1	Pin	
31	3790012	1	O-Ring (Not Shown - Located in Console Box)	
32	3841143	1	Keeper	
33	4360336	1	Switch, Toggle (Not Shown - Located in Console Box)	
34	4711500	4	Flatwasher 5/16in Thin	
35	4751400	8	Flatwasher 1/4in Regular	
36	4751500	2	Flatwasher 5/16in Regular	
37	4752000	1	Flatwasher 5/8in Regular	
38	88521205	2	Locknut, Nylon Insert 5/16in-18NC	
39	91401281	1	Angle, Battery Hold Down	
40	1001091587	8.5 ft /2.6m	Hose, Fuel Line	
41	1001093382	2	Bolt, Battery Hold-down	
	1001114633	Ref	**GM ENGINE AND PUMP SUB-ASSEMBLIES**	B
101	0100011	AR	Compound, Locking	
102	0641406	1	Bolt 1/4in-20NC x 3/4in	
103	0641808	1	Bolt 1/2in-13NC x 1in	
104	0641812	4	Bolt 1/2in-13NC x 1-1/2in	
105	1060637	1	Cable, Lanyard	

ITEM	PART NUMBER	QTY	DESCRIPTION	REV
106	2902533	1	Battery Cable Kit	B
106A	7027018	1	Cable (Battery - to Ground)	
106B	7027015	1	Cable (Battery + to Auxiliary Relay)	
106C	7027017	1	Cable (Auxiliary Relay to Starter)	
106D	7016824	1	Cable (Auxiliary Relay to Auxiliary Pump)	
106E	7016825	1	Cable (Ground to Auxiliary Pump)	
107	3311405	1	Locknut 1/4in-20NC	
108	3311805	1	Locknut 1/2in-13NC	
109	3422532	1	Pin, Hitch	
110	3600410	1	Piston Pump Assembly with Fittings (See PISTON PUMP ASSEMBLY for Breakdown)	
111	3600411	1	Load Sensing Pump Assembly with Fittings (See LOAD SENSING PUMP ASSEMBLY for Breakdown)	
112	3790044	1	O-Ring	
113	3960548	3.66 ft /1.1m	Seal	
114	3960549	1 ft/0.3m	Seal	
115	4711400	1	Flatwasher 1/4in Thin	
116	4751800	1	Flatwasher 1/2in Regular	
117	4891800	2	Flatwasher, 1/2in Hardened	
	1001114632	Ref	**GM ENGINE ASSEMBLY**	A
201	0080201	1	Adapter, Elbow	
202	0100011	AR	Compound, Locking	
203	1001114595	1	Engine, GM 3.0L Options (See GM Engine Supplement p/n 3121245 for Breakdown of Additional Components):	
203A	7027965	1	Filter, Oil	
203B	7027972	1	Filter, Fuel	
203C	70002895	1	Module, Control (ECU)	
203D	70000164	4	Sparkplug (Not Shown)	
204	0340041	2	Band, Mounting	
205	0641406	10	Bolt 1/4in-20NC x 3/4in	
206	0641606	3	Bolt 3/8in-16NC x 3/4in	
207	0641608	8	Bolt 3/8in-16NC x 1in	
208	0641609	4	Bolt 3/8in-16NC x 1-1/8in	
209	0641610	10	Bolt 3/8in-16NC x 1-1/4in	
210	0641612	4	Bolt 3/8in-16NC x 1-1/2in	
211	0641828	2	Bolt 1/2in-13NC x 3-1/2in	
212	0700810	4	Bolt M8 x 20mm	
213	0940070	1	Bumper	
214	0961986	2	Bearing, Flanged	
215	1320012	3	Clamp	
216	1320016	5	Clamp	
217	1320022	3	Clamp	
218	1320223	3	Clamp	
219	1340060	1	Air Cleaner Assembly	
219	7012664	1	Element, Air Cleaner	
220	1580011	1	Container, Coolant Overflow	
221	1703162	2	Decal - Caution Fan	
223	2060025	1	Fan	
225	2720058	5.5 in /14cm	Hose	
226	1001116544	1	Duct	

SECTION 2 - TURNTABLE

ITEM	PART NUMBER	QTY	DESCRIPTION	REV
227	2720563	1	Hose, Radiator (Top)	
228	2720564	1	Hose, Radiator (Bottom)	
229	1001091892	6 in /15.2cm	Hose	
230	1001091794	1	Insulation, Muffler	
231	3200362	4	Mount, Engine	
232	3311405	12	Locknut 1/4in-20NC	
233	3311605	26	Locknut 3/8in-16NC	
234	3311805	4	Locknut 1/2in-13NC	
235	3539872	1	Plate, Radiator Mounting	
236	3572280	1	Plate, Engine Mount	
237	3620040	1	Radiator	
237	8180311	1	Cap, Radiator (was p/n 7019656)	
238	3740067	1	Relay	
239	3960468	1	Seal	
240	3960469	1	Seal	
241	4060805	3 ft/0.9m	Seal	
242	4341239	1	Tray, Engine	
243	4341241	1	Mount, Engine (Front)	
244	1001116545	1	Tube, Intake	
245	4569394	1	Pipe, Exhaust	
246	1001105872	NLA	Valve, Oil Drain (Use p/n 4640952)	
247	4711400	12	Flatwasher 1/4in Thin	
248	4711600	36	Flatwasher 3/8in Thin	
249	4740274	4	Flatwasher, Snubbing	
250	4751400	8	Flatwasher 1/4in Regular	
251	4751600	16	Flatwasher 3/8in Regular	
252	4751800	4	Flatwasher 1/2in Regular	
253	4791400	2	Starwasher 1/4in	
254	4831900	4	Lockwasher M8	
255	4920385	10 ft/3m	Wire, Safety	
256	2180877	1	Fitting Elbow	
257	0641826	2	Bolt 1/2in-13NC x 3-1/4in	
258	2720271	18 in /46cm	Hose	

FIGURE 2-17. PISTON PUMP ASSEMBLY

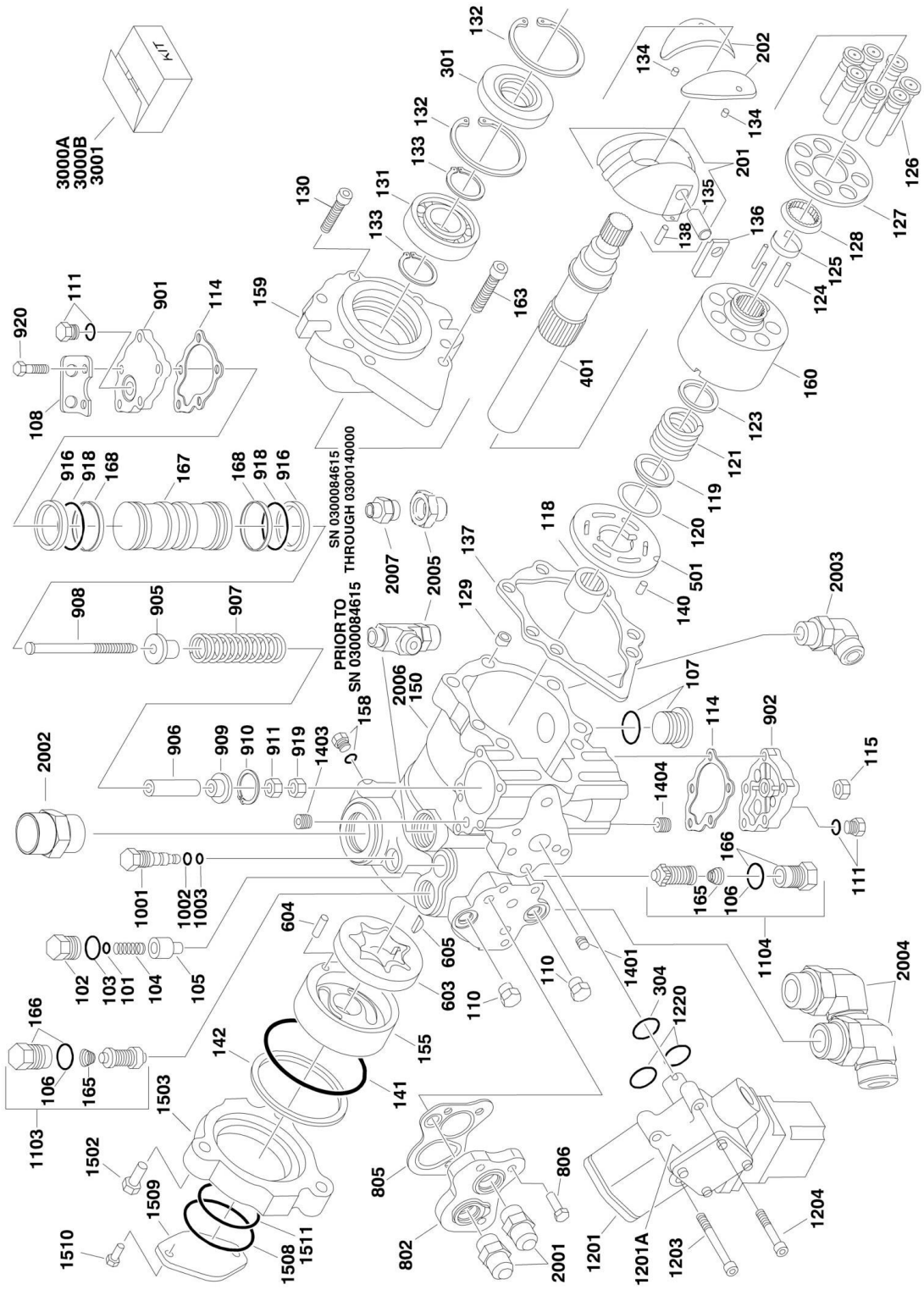

FIGURE 2-17. PISTON PUMP ASSEMBLY

ITEM	PART NUMBER	QTY	DESCRIPTION	REV
	3600295	Ref	**PISTON PUMP ASSEMBLY**	
101	7007413	1	Shim Kit	
102	7007414	1	Plug	
103	See Note	NSS	O-Ring (Note: Use Item 3000A)	
104	7021200	1	Spring, Relief Valve	
105	7007417	1	Valve, Relief	
106	See Note	NSS	O-Ring (Note: Use Item 1103, 1104 or 3000A)	
107	7007419	2	Plug	
108	7021201	1	Bracket, Lifting	
110	7007470	2	Plug	
111	7007470	2	Plug	
114	See Note	NSS	Gasket, Servo Cover (Note: Use Item 3000A)	
115	7007423	1	Nut, Special	
118	7007425	1	Bearing, Needle	
119	See Note	NSS	Ring, Retaining (Note: Use Item 3001)	
120	See Note	NSS	Washer (Note: Use Item 3001)	
121	See Note	NSS	Spring (Note: Use Item 3001)	
123	See Note	NSS	Washer (Note: Use Item 3001)	
124	See Note	NSS	Retainer (Note: Use Item 3001)	
125	See Note	NSS	Pin, Slipper Holddown (Note: Use Item 3001)	
126	See Note	NSS	Piston Assembly (Note: Use Item 3001)	
127	See Note	NSS	Retainer, Slipper (Note: Use Item 3001)	
128	See Note	NSS	Guide, Retainer (Note: Use Item 3001)	
129	7007435	1	Pin, Spring	
130	7021202	1	Screw, 12 Point Head	
131	7007437	1	Bearing, Ball	
132	7007438	2	Ring, Retainer	
133	7007439	2	Ring	
134	7021203	2	Pin, Spring	
135	7007441	1	Handle, Pin (Part of Item 201)	
136	7007442	1	Sleeve, Bearing	
137	See Note	NSS	Gasket, Front Cover (Note: Use Item 3000A)	
138	7021205	1	Pin (Part of Item 201)	
140	7007446	1	Pin	
141	See Note	NSS	O-Ring (Note: Use Item 3000A)	
142	See Note	NSS	Ring, Load Temper (Note: Use Item 3000A)	
150	7023977	1	Housing, Pump	
155	7007452	1	Cover, Gerotor	
158	7007208	1	Plug	
159	7007454	1	Cover, Front	
163	7021207	6	Screw	
165	7021208	2	Spring (Part of Items 1103 & 1104)	
166	7021209	2	Plug, SCR (Part of Items 1103 & 1104)	
167	7007494	1	Piston, Servo	
168	See Note	NSS	Bearing (Note: Use Item 3000A)	
201	7007457	1	Swash Plate Assembly (Includes Items 135 & 138)	
202	7021212	2	Journal, Bearing	
301	See Note	NSS	Seal, Lip (Note: Use Item 3000A)	
304	See Note	NSS	O-Ring (Note: Use Item 3000A)	
401	7021213	1	Shaft, Main Pump	

SECTION 2 - TURNTABLE

ITEM	PART NUMBER	QTY	DESCRIPTION	REV
501	7021214	1	Plate, Valve	
603	7007463	1	Gerotor Assembly	
604	7007464	1	Pin	
605	7007465	1	Key, Woodruff	
802	7007466	1	Adaptor, Remote Filtration	
805	See Note	NSS	Seal, Filter Adapter (Note: Use Item 3000A)	
806	7021218	3	Screw	
901	7021219	1	Cover, Servo	
902	7021220	1	Cover, Servo	
905	7007483	1	Guide, Spring	
906	7007484	1	Stop, Servo	
907	7007485	1	Spring	
908	7021221	1	Screw	
909	7007487	1	Guide, Spring	
910	7007488	1	Ring, Retaining	
911	7021222	1	Nut	
916	See Note	NSS	Ring, Piston (Note: Use Items 3000A & 3000B)	
918	See Note	NSS	O-Ring (Note: Use Items 3000A & 3000B)	
919	7021206	1	Nut	
920	7021223	10	Screw	
1001	7007472	1	Valve, Bypass	
1002	See Note	NSS	Ring, Back-up (Note: Use Item 3000A)	
1003	See Note	NSS	O-Ring (Note: Use Item 3000A)	
1103	7010122	1	SCR Kit (Includes Items 166, 106 & 165)	
1104	7010122	1	SCR Kit (Includes Items 166, 106 & 165)	
1201	7007474	1	Control, Dual Oil-Filled	
1201	7007496	1	Coil Assembly (Pilot)	
1201	7007497	1	Plug (Pump)	
1201	7007498	1	Plug (Valve Harness)	
1201A	7024828	1	Gasket	
1203	7007478	2	Screw	
1204	7001498	2	Screw	
1220	See Note	NSS	O-Ring (Note: Use Item 3000A)	
1401	7007475	1	Plug, Orifice/Screen (.156)	
1403	7021226	1	Plug, Orifice	
1404	7021226	1	Plug, Orifice	
1502	7007453	3	Screw	
1503	7021227	1	Adapter, Flange	
1508	7021228	1	O-Ring	
1509	7021229	1	Plate, Cover	
1510	7021230	2	Screw	
1511	7021231	1	O-Ring	
	3600410	Ref	**PISTON PUMP AND FITTING ASSEMBLY**	B
2001	2111010	2	Fitting, Straight	
2002	2111616	1	Fitting, Straight	
2003	2131212	1	Fitting, Elbow	
2004	2131616	1	Fitting, Elbow	
2005		Ref	Fitting Options:	
2005	2221084	1	Fitting, Tee **(Prior to SN 0300084615)**	
2005	2110408	1	Fitting, Straight **(SN 0300084615 through 0300140000)**	
2006	3600295	1	Pump Options (Includes Items 101-1511)	

ITEM	PART NUMBER	QTY	DESCRIPTION	REV
2007	2220811	1	Fitting, Reducer **(SN 0300084615 through 0300140000)**	
		Ref	**KIT OPTIONS:**	
3000		Ref	Seal Kit Options:	
3000A	7021232	1	Seal Kit - Complete (Includes Items 103, 106, 114, 137, 141, 142, 168, 301, 304, 805, 916, 918, 1002, 1003 & 1220)	
3000B	7007412	1	Seal Kit - Servo Piston (Includes Items 916 & 918)	
3001	7010116	1	Cylinder Block Kit (Includes Items 119-128)	

FIGURE 2-18. LOAD SENSING PUMP ASSEMBLY

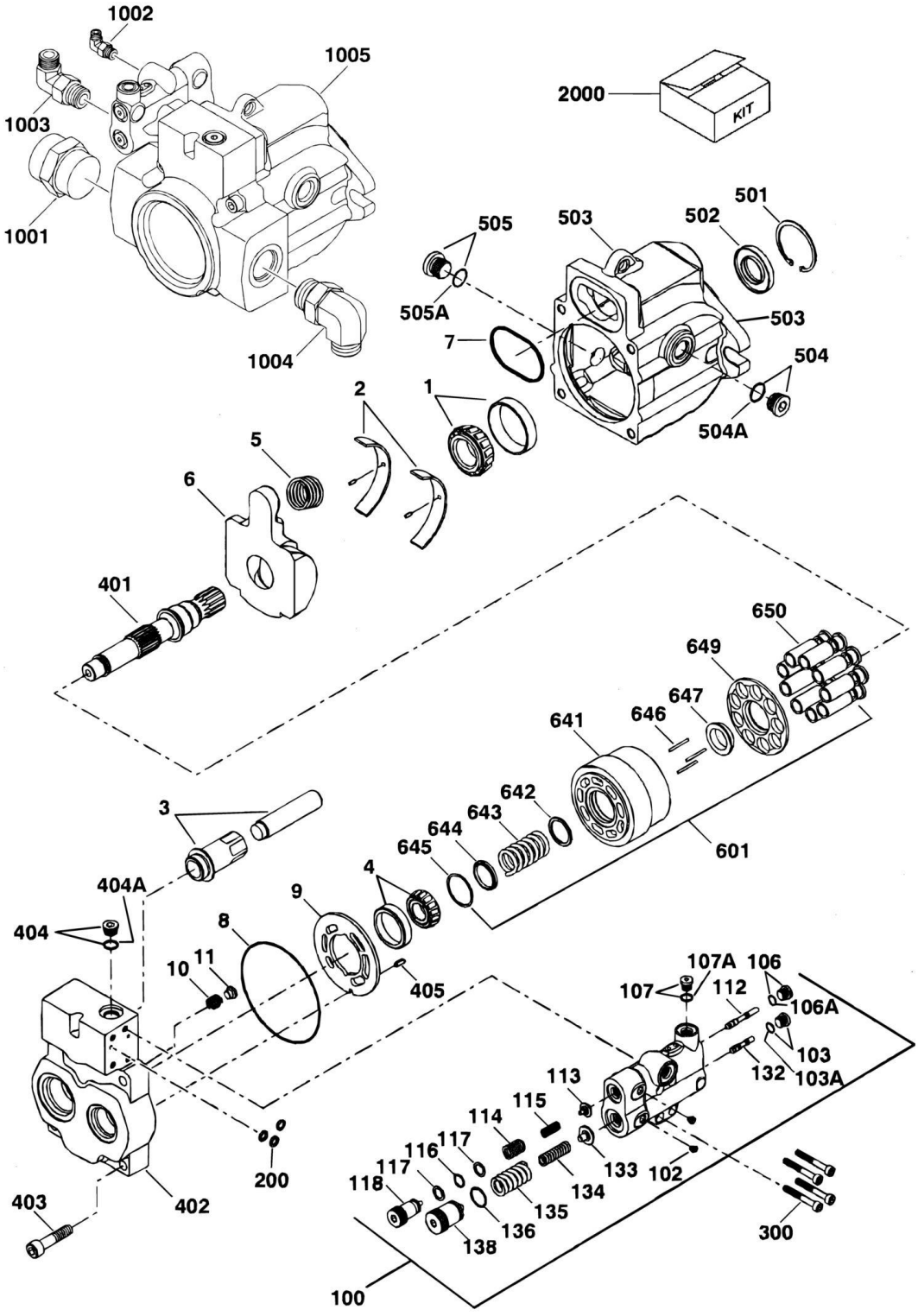

FIGURE 2-18. LOAD SENSING PUMP ASSEMBLY

ITEM	PART NUMBER	QTY	DESCRIPTION	REV
	3600324	Ref	**LOAD SENSING PUMP ASSEMBLY**	D
1	7023947	1	Bearing, Front (Includes Cup and Cone)	
2	7023948	1	Bearings, Swash Plate (Includes Both Sides and Pins)	
3	7023949	1	Servo Piston Assembly	
4	7023950	1	Bearing, Rear (Includes Cup and Cone)	
5	7023951	1	Spring, Bias	
6	7023952	1	Swash Plate	
7	See Note	NSS	O-Ring (Note: Use Item 2000)	
8	See Note	NSS	O-Ring (Note: Use Item 2000)	
9	7023953	1	Plate, Valve	
10	7023954	1	Spring, Check Valve	
11	7023955	1	Poppet, Check Valve	
100	7023956	1	Control Assembly	
102	See Note	2	Setscrew (Note: Not Available for Purchase)	
103	See Note	1	Plug (Note: Not Available for Purchase)	
103A	See Note	NSS	O-Ring (Note: Use Item 100 or 2000)	
106	See Note	1	Plug (Note: Not Available for Purchase)	
106A	See Note	NSS	O-Ring (Note: Use Item 100 or 2000)	
107	See Note	1	Plug (Note: Not Available for Purchase)	
107A	See Note	NSS	O-Ring (Note: Use Item 100 or 2000)	
112	See Note	NSS	Spool, Control (Note: Use Item 100)	
113	See Note	NSS	Guide, Spring (Note: Use Item 100)	
114	See Note	NSS	Spring (Note: Use Item 100)	
115	See Note	NSS	Spring (Note: Use Item 100)	
116	See Note	NSS	O-Ring (Note: Use Item 100 or 2000)	
117	See Note	NSS	Ring, Back-up (Note: Use Item 100 or 2000)	
118	See Note	NSS	Plug, Adjusting (Note: Use Item 100)	
132	See Note	NSS	Spool, Control (Note: Use Item 100)	
133	See Note	NSS	Guide, Spring (Note: Use Item 100)	
134	See Note	NSS	Spring (Note: Use Item 100)	
135	See Note	NSS	Spring (Note: Use Item 100)	
136	See Note	NSS	O-Ring (Note: Use Item 100 or 2000)	
138	See Note	NSS	Plug, PC Adjusting (Note: Use Item 100)	
200	See Note	NSS	Ring, Seal (Note: Use Item 2000)	
300	7023957	4	Screw	
401	7023958	1	Shaft	
402	7023959	1	Cap, End	
403	7023960	4	Screw	
404	7022318	1	Plug	
404A	See Note	NSS	O-Ring (Note: Use Item 404 or 2000)	
405	7023961	1	Pin	
501	7023962	1	Ring, Retaining	
502	7023967	1	Seal, Lip	
503	7023963	1	Housing	
504	7023964	1	Plug	
504A	7007415	1	O-Ring	
505	7023964	1	Plug	
505A	7007415	1	O-Ring	
601	7023965	1	Cylinder Block Assembly	
641	See Note	NSS	Block, Cylinder (Note: Use Item 601)	

SECTION 2 - TURNTABLE

ITEM	PART NUMBER	QTY	DESCRIPTION	REV
642	See Note	NSS	Washer (Note: Use Item 601)	
643	See Note	NSS	Spring (Note: Use Item 601)	
644	See Note	NSS	Retainer, Spring (Note: Use Item 601)	
645	See Note	NSS	Ring, Retaining (Note: Use Item 601)	
646	7021275	3	Pin, Slipper	
647	See Note	NSS	Guide, Slipper (Note: Use Item 601)	
649	See Note	NSS	Retainer, Slipper (Note: Use Item 601)	
650	7023966	9	Piston Assembly	
	3600411	Ref	**LOAD SENSING PUMP AND FITTING ASSEMBLY**	B
1001	2112424	1	Fitting, Straight	
1002	2130404	1	Fitting, Elbow	
1003	2130810	1	Fitting, Elbow	
1004	2131216	1	Fitting, Elbow	
1005	3600324	1	Pump Assembly (Includes Items 1-650)	
		Ref	**KIT OPTIONS:**	
2000	7023967	1	Seal Kit - Complete (Includes Items 7, 8, 103A, 106A, 107A, 116, 117, 136, 200, 404A & 502)	

FIGURE 2-19. TANK INSTALLATIONS

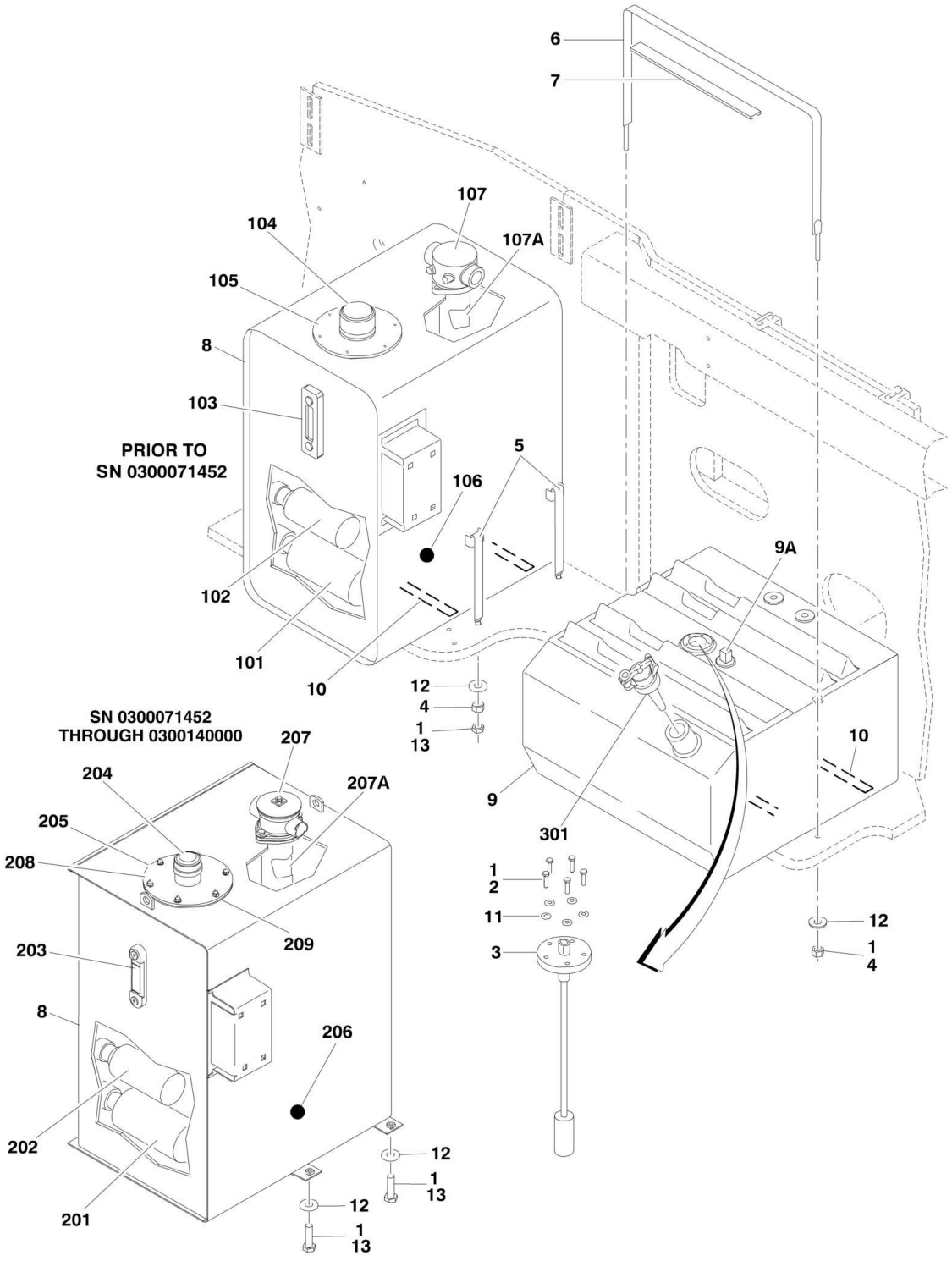

FIGURE 2-19. TANK INSTALLATIONS

ITEM	PART NUMBER	QTY	DESCRIPTION	REV
		Ref	**TANKS INSTALLATION**	
	0270881	Ref	**Diesel Machines**	E
	0270881	Ref	**GM Machines (Prior to SN 0300109493)**	E
	1001091568	Ref	**GM Tier 2 Machines (SN 0300109493 through 0300140000)**	A
1	0100011	AR	Compound, Locking	
2	0731007	5	Capscrew #10-32NF x 7/8in	
3	2420191	1	Gauge, Fuel Level	
3	3960525	1	Gasket	
4	3311601	AR	Nut 3/8in-16NC	
5	4240112	4	Strap, Tank Mounting **(Prior to SN 0300071452)**	
6	4240139	1	Strap, Tank Mounting	
7	4280295	30 in /76cm	Strip, Protector	
8	4400437	1	Hydraulic Oil Tank Assembly (See Items 101-107 for Breakdown) **(Prior to SN 0300071452)**	
8	4400453	1	Hydraulic Oil Tank Assembly (See Items 201-209 for Breakdown) **(SN 0300071452 through 0300140000)**	
9		Ref	Fuel Tank Assembly Options:	
9	4400439	1	Fuel Tank - Diesel Machines	
9	4400439	1	Fuel Tank - GM Machines **(Prior to SN 0300109493)**	
9	1001091563	1	Fuel Tank - GM Tier 2 Machines **(SN 0300109493 through 0300140000)**	
9A		Ref	Tube, Fuel Pickup Options:	
9A	7020043	1	Tube, Pickup (4400439 Tank)	
9A	7020043	1	Tube, Pickup (1001091563 Tank)	
10	4420038	6.5 ft/2m	Tape, Rubber	
11	4751000	5	Flatwasher #10 Regular	
12	4751600	6	Flatwasher 3/8in Regular	
13		Ref	Hardware Options:	
13	3311602	4	Nut, Jam 3/8in-16NC **(Prior to SN 0300071452)**	
13	0641614	4	Bolt 3/8in-16NC x 1-3/4in **(SN 0300071452 through 0300140000)**	
	4400437	Ref	**HYDRAULIC TANK ASSEMBLY (Prior to SN 0300071452)**	C
101	7014818	1	Strainer 1-1/2in NPT	
102	7014801	1	Strainer 1-1/4in NPT	
103	7014802	1	Gauge, Sight	
104	7014811	1	Breather/Fill Cap	
105	7020256	1	Neck, Fill	
105	7014816	1	Screen	
106	7014813	1	Plug, Magnetic	
107	7024374	1	Filter Assembly (was p/n 7024409)	
107	7023306	1	Seal	
107	7023347	1	Gasket (Located Between Flange of Filter and Tank)	
107A	7024375	1	Element, Filter (was p/n 7024408)	
	4400453	Ref	**HYDRAULIC TANK ASSEMBLY (SN 0300071452 through 0300140000)**	E
201	7024481	1	Strainer 1-1/2in NPT	
202	7024442	1	Strainer 1-1/4in NPT	
203	7024441	1	Gauge, Sight	
204	7024444	1	Breather/Fill Cap	
205	7024443	1	Neck, Fill	

ITEM	PART NUMBER	QTY	DESCRIPTION	REV
205	7024445	1	Screen	
206	7024446	1	Plug, Magnetic	
207	7024374	1	Filter Assembly	
207A	7024375	1	Element, Filter	
208	7024439	1	Cover	
209	7024440	1	Gasket	
		Ref	**FUEL TANK CAP INSTALLATION**	
301		Ref	Cap Options:	
301	7016314	1	Standard Non-Locking (Part of Item 3) (Used with p/n 4400439)	
301	70001103	1	Standard Non-Locking (Used with p/n 1001091563)	
301	1120484	1	Optional Lockable (Gas Machines) (Note: Lock not Included)	
301	1120487	1	Optional Lockable (Diesel Machines) (Note: Lock not Included)	

FIGURE 2-20. ROTARY COUPLING INSTALLATION (Prior to SN 0300083331)

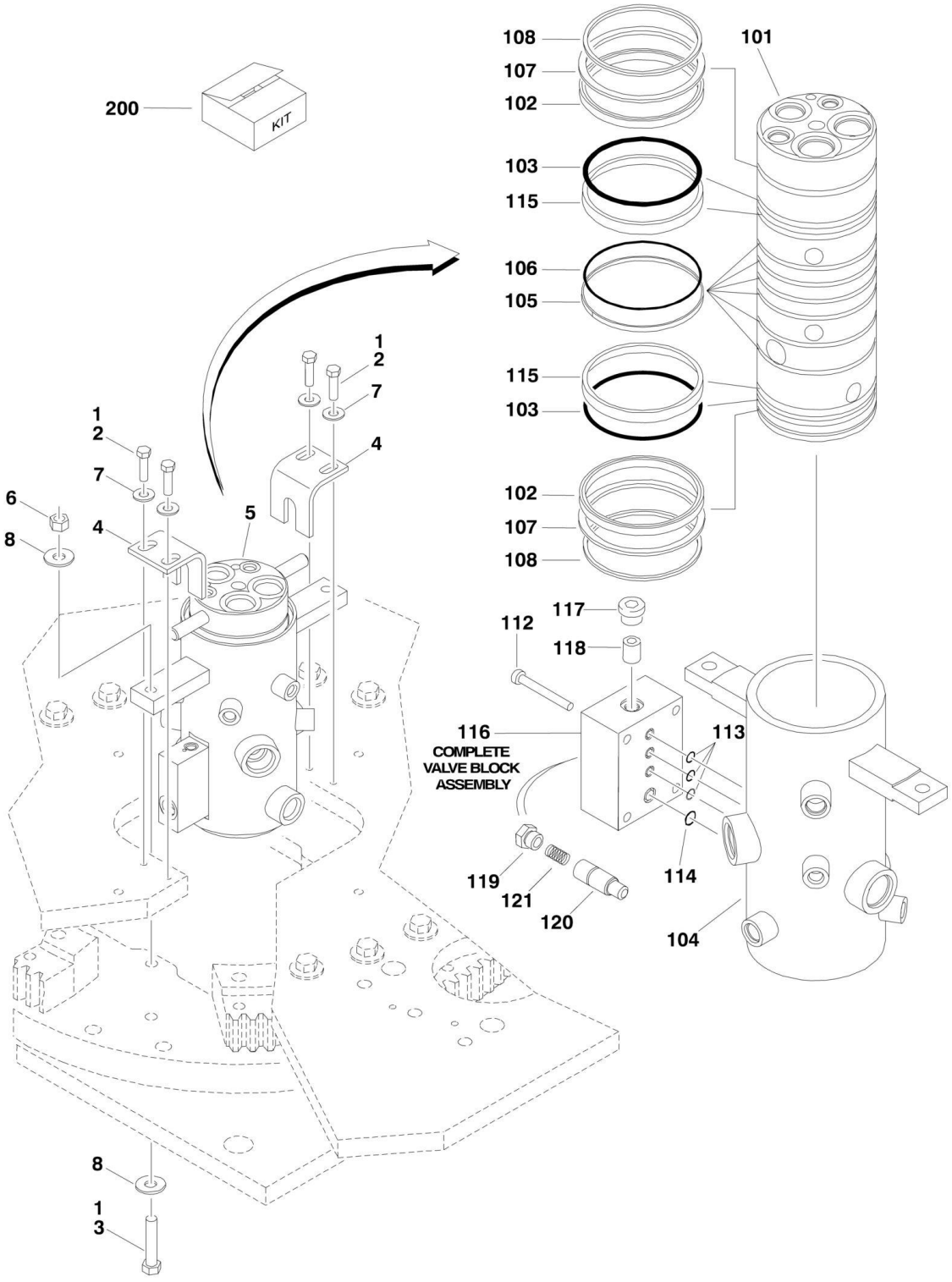

FIGURE 2-20. ROTARY COUPLING INSTALLATION (Prior to SN 0300083331)

ITEM	PART NUMBER	QTY	DESCRIPTION	REV
	0271312	Ref	**ROTARY COUPLING INSTALLATION**	B
1	0100011	AR	Compound, Locking	
2	0641611	4	Bolt 3/8in-16NC x 1-3/8in	
3	0641820	2	Bolt 1/2in-13NC x 2-1/2in	
4	0902520	2	Bracket	
5	1660246	1	Coupling, Rotary (See Items 101-121 for Breakdown)	
5	1660246RR	1	Rebuilt 1660246 Coupling	
6	3271805	2	Locknut 1/2in-13NC	
7	4891600	4	Flatwasher 3/8in Hardened	
8	4751800	4	Flatwasher 1/2in Regular	
	1660246	Ref	**ROTARY COUPLING ASSEMBLY**	E
101	See Note	NSS	Body (Note: Not Available - Purchase Complete Rotary Coupling Assembly)	
102	7026189	2	Seal	
103	See Note	NSS	O-Ring/Seal (Note: Use Item 200)	
104	See Note	NSS	Housing (Note: Not Available - Purchase Complete Rotary Coupling Assembly)	
105	See Note	NSS	Seal, Cap (Note: Use Item 200)	
106	See Note	NSS	O-Ring (Note: Use Item 200)	
107	7026503	2	Ring	
108	7026504	2	Ring, Retaining	
109	See Note	NSS	Plug (Note: Not Available - Purchase Locally)	
112	7026197	4	Capscrew	
113	See Note	NSS	O-Ring (Note: Use Item 200)	
114	See Note	NSS	O-Ring (Note: Use Item 200)	
115	See Note	NSS	Bearing (Note: Not Available for Purchase)	
116	7024404	1	Block Valve Assembly	
117	7026505	1	Plug	
118	7026506	1	Valve, Check	
119	7026507	1	Plug	
120	7026508	1	Plunger, Valve	
121	7026509	1	Spring	
		Ref	**KIT OPTIONS:**	
200	7024400	1	Seal Kit (Includes Items 103, 105, 106, 113 & 114) (Item 102 must be purchased separately)	

FIGURE 2-21. ROTARY COUPLING INSTALLATION (SN 0300083331 through 0300140000)

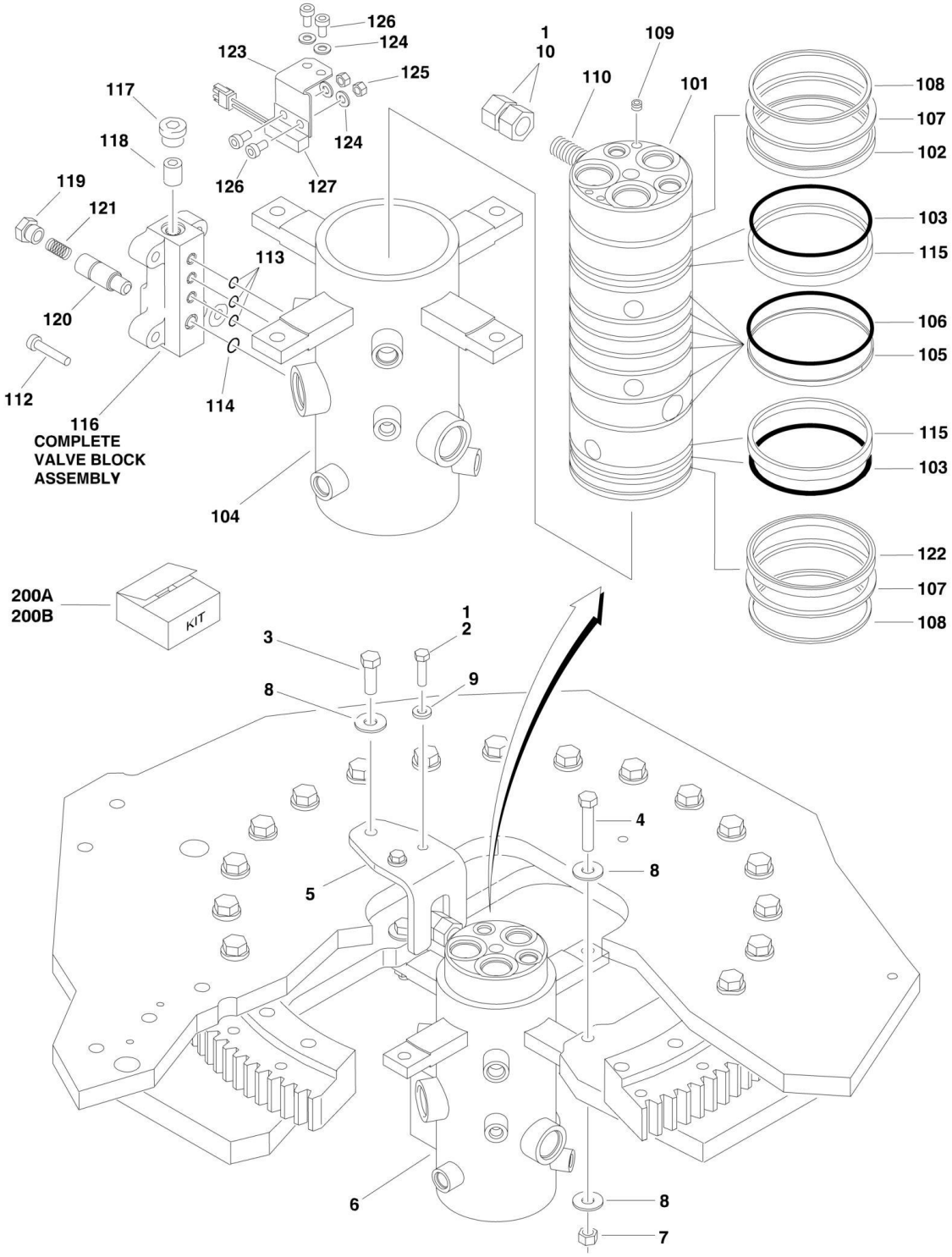

FIGURE 2-21. ROTARY COUPLING INSTALLATION (SN 0300083331 through 0300140000)

ITEM	PART NUMBER	QTY	DESCRIPTION	REV
		Ref	**ROTARY COUPLING INSTALLATION**	
	0274583	Ref	**Rotary Coupling Installation (SN 0300083331 through 0300137912)**	C
	1001107531	Ref	**Rotary Coupling Installation (SN 0300137913 through 0300140000)**	A
		Ref	**Note: P/N 0273393 also designed but superseded by p/n 0274583 before going into production.**	
1	0100011	AR	Compound, Locking	
2	0641611	2	Bolt 3/8in-16NC x 1-3/8in	
3	0641812	1	Bolt 1/2in-13NC x 1-1/2in	
4	0641820	2	Bolt 1/2in-13NC x 2-1/2in	
5	0903242	1	Bracket	
6		Ref	Coupling, Rotary Options (See Items 101-122 for Breakdown):	
6	1660257	NLA	Coupling, Rotary (Use p/n 1660303) **(SN 0300083331 through 0300114015)**	
6	1660303	1	Coupling, Rotary **(SN 0300114016 through 0300137912)**	
6	1001106974	1	Coupling, Rotary **(SN 0300137913 through 0300140000)**	
7	3271805	2	Locknut 1/2in-13NC	
8	4751800	5	Flatwasher 1/2in Regular	
9	4891600	2	Flatwasher 3/8in Hardened	
10	3322201	2	Locknut 3/4in x 16NF	
		Ref	**ROTARY COUPLING ASSEMBLIES**	
	1660257	NLA	**Rotary Coupling Assemblies (SN 0300083331 through 0300114015)**	D
	1660303	Ref	**Rotary Coupling Assemblies (SN 0300114016 through 0300137912)**	B
	1001106974	Ref	**Rotary Coupling Assemblies (SN 0300137913 through 0300140000)**	B
		Ref	**Note: Original Equipment p/n 1660257 component may have been replaced by Service Replacement p/n 1660303 component. Identify p/n on coupling before ordering parts.**	
101	See Note	NSS	Body (Note: Not Available - Purchase Complete Rotary Coupling Assembly)	
102		Ref	Seal Options:	
102	7026189	1	Seal, Oil (p/n 1660257)	
102	70001248	1	Seal, Poly (p/n 1660303 & 1001106974)	
103	See Note	NSS	O-Ring/Seal (Note: Use Item 200A or 200B)	
104	See Note	NSS	Housing (Note: Not Available - Purchase Complete Rotary Coupling Assembly)	
105	See Note	NSS	Seal, Cap (Note: Use Item 200A or 200B)	
106	See Note	NSS	O-Ring (Note: Use Item 200A or 200B)	
107	7026503	2	Ring, Thrust	
108	7026504	2	Ring, Retaining	
109		Ref	Plug Options:	
109	See Note	2	Plug p/n 1660257 (Note: Not Available - Purchase Locally)	
109	80934561	2	Plug p/n 1660303 & 1001106974	
110	See Note	1	Lug, Torque (Note: Not Available for Purchase)	
112	7026197	4	Capscrew	
113	See Note	NSS	O-Ring (Note: Use Item 200A or 200B)	
114	See Note	NSS	O-Ring (Note: Use Item 200A or 200B)	
115		Ref	Bearing Options:	
115	See Note	NLA	Bearing p/n 1660257 (Note: No Longer Available)	

SECTION 2 - TURNTABLE

ITEM	PART NUMBER	QTY	DESCRIPTION	REV
115	See Note	NSS	Bearing p/n 1660303 & 1001106974 (Note: Use Item 200B)	
116	7024404	1	Block Valve Assembly	
117	7026505	1	Plug	
118	7026506	1	Valve, Check	
119	7026507	1	Plug	
120		Ref	Plunger, Valve Options:	
120	7026508	1	Plunger, Valve p/n 1660257	
120	7024404	1	Plunger, Valve p/n 1660303 & 1001106974 (Note: Not Available for Purchase)	
121	7026509	1	Spring	
122		Ref	Seal, Oil Options:	
122	7026189	1	Seal, Oil p/n 1660257	
122	See Note	NSS	Seal, Oil p/n 1660303 & 1001106974 (Note: Use Item 200B)	
123	70003454	1	Bracket, Switch Mounting Only **(SN 0300137913 through 0300140000)**	
124	4711000	4	Flatwasher #10 Thin Only **(SN 0300137913 through 0300140000)**	
125	See Note	2	Locknut 1/4in-24NF Only (Note: Not Available for Purchase) **(SN 0300137913 through 0300140000)**	
126	See Note	4	Capscrew 1/4in-24NF Only (Note: Not Available for Purchase) **(SN 0300137913 through 0300140000)**	
127	4360517	1	Switch, Proximity Only **(SN 0300137913 through 0300140000)**	
128	See Note	AR	Protective Netting (Not Shown) (p/n 1660303 & 1001106974) (Note: Not Available for Purchase)	
		Ref	**KIT OPTIONS:**	
200		Ref	Seal Kit Options:	
200A	7026510	1	Seal Kit for 1660257 (Includes Items 103, 105, 106, 113 & 114) (Item 102, 115 & 122 must be purchased separately)	
200B	70001248	1	Seal Kit for 1660303 & 1001106974 (Includes Items 102, 103, 105, 106, 113, 114, 115 & 122)	

FIGURE 2-22. GROUND CONTROL BOX ASSEMBLY (WITHOUT UGM)

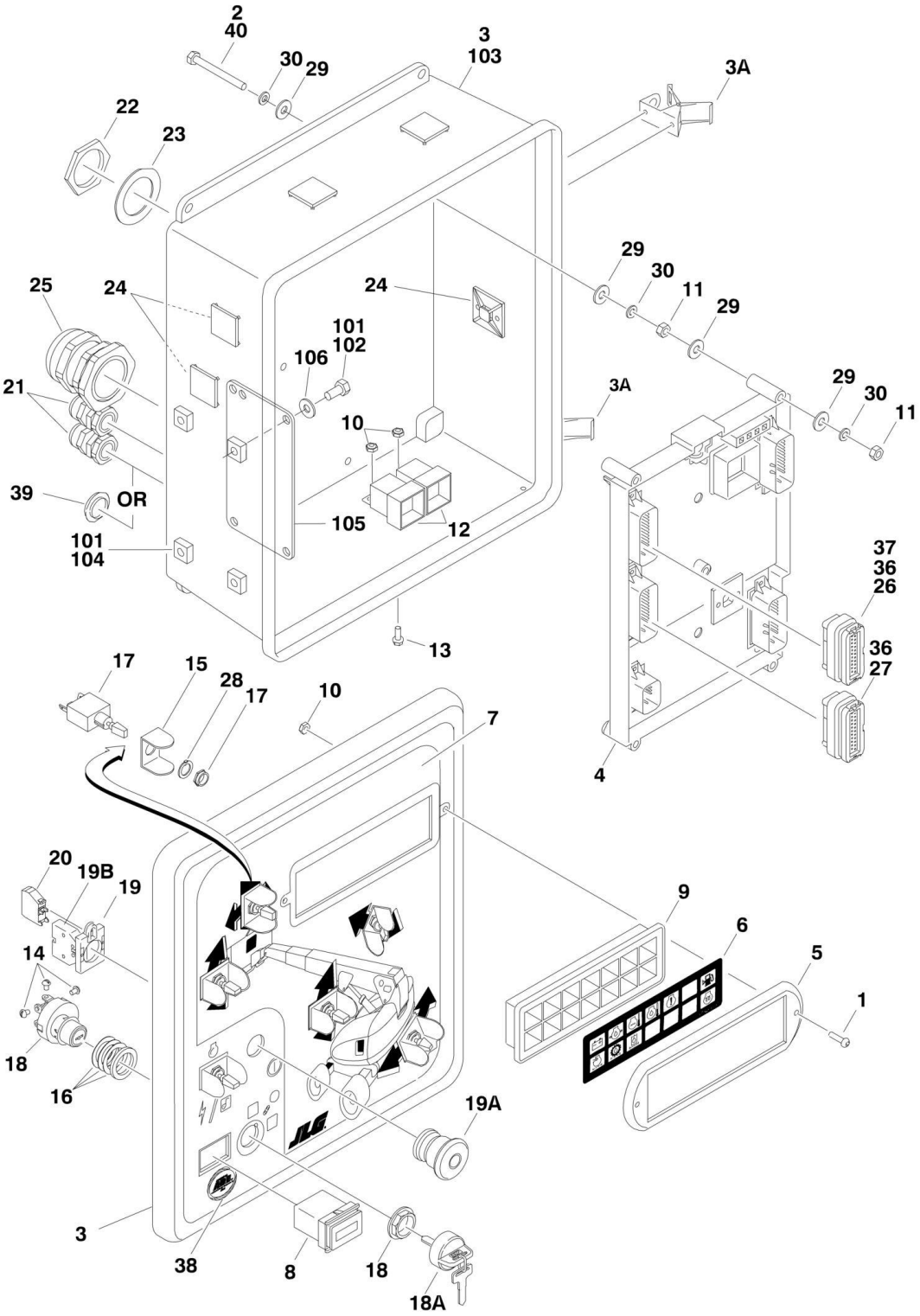

FIGURE 2-22. GROUND CONTROL BOX ASSEMBLY (WITHOUT UGM)

ITEM	PART NUMBER	QTY	DESCRIPTION	REV
		Ref	**GROUND CONTROL BOX ASSEMBLIES**	
		Ref	**Caterpillar Engine:**	
	0861625	Ref	**Caterpillar Engine 800S (Prior to SN 0300087262)**	C
	0861753	Ref	**Caterpillar Engine 800S (SN 0300087262 through 0300099881)**	B
	1810101	Ref	**Caterpillar Engine 800S (SN 0300099882 through 0300140000)**	C
	0861626	Ref	**Caterpillar Engine 860SJ (Prior to SN 0300087262)**	C
	0861754	Ref	**Caterpillar Engine 860SJ (SN 0300087262 through 0300099881)**	B
	1810106	Ref	**Caterpillar Engine 860SJ (SN 0300099882 through 0300140000)**	C
		Ref	**Deutz Engine:**	
	0861456	Ref	**Deutz Engine 800S (Prior to SN 0300085332)**	G
	0861718	Ref	**Deutz Engine 800S (SN 0300085332 through 0300099881)**	B
	1810099	Ref	**Deutz Engine 800S (SN 0300099882 through 0300129453)**	B
	1001102248	Ref	**Deutz Engine 800S (SN 0300129454 through 0300140000)**	C
	0861457	Ref	**Deutz Engine 860SJ (Prior to SN 0300085332)**	G
	0861719	Ref	**Deutz Engine 860SJ (SN 0300085332 through 0300099881)**	B
	1810104	Ref	**Deutz Engine 860SJ (SN 0300099882 through 0300129453)**	B
	1001102249	Ref	**Deutz Engine 860SJ (SN 0300129454 through 0300140000)**	C
		Ref	**Ford Engine:**	
	0861454	Ref	**Ford Engine 800S (Prior to SN 0300087262)**	G
	0861751	Ref	**Ford Engine 800S (SN 0300087262 through 0300099882)**	B
	0861455	Ref	**Ford Engine 860SJ (Prior to SN 0300087262)**	G
	0861752	Ref	**Ford Engine 860SJ (SN 0300087262 through 0300099882)**	B
		Ref	**GM Engine:**	
	0861792	Ref	**GM Engine 800S (Prior to SN 0300099882)**	B
	1810098	Ref	**GM Engine 800S (SN 0300099882 through 0300140000)**	C
	0861793	Ref	**GM Engine 860SJ (Prior to SN 0300099882)**	B
	1810103	Ref	**GM Engine 860SJ (SN 0300099882 through 0300140000)**	C
1	0630518	2	Capscrew, Button Head	
2	0630548	5	Tap, Bolt 2-1/2in	
3	0861389	1	Box, Fiberglass	
3A	7020246	2	Latch	
4		Ref	Module, Ground Control Options:	
		Ref	Note: Re-calibration Required when Replaced.	
4		Ref	Caterpillar Engine	
4	1600327	NLA	Caterpillar Engine (Use p/n 2915014) **(Prior to SN 0300079612)**	
4	1600364	1	Caterpillar Engine **(SN 0300079612 through 0300099881)**	
4	1600411	1	Caterpillar Engine **(SN 0300099882 through 0300140000)**	
4		Ref	Deutz Engine	
4	1600327	NLA	Deutz Engine (Use p/n 2915014) **(Prior to SN 0300079612)**	
4	1600364	1	Deutz Engine **(SN 0300079612 through 0300085331)**	
4	1600411	1	Deutz Engine **(SN 0300085332 through 0300140000)**	
4		Ref	Ford Engine	
4	1600327	NLA	Ford Engine (Use p/n 2915014) **(Prior to SN 0300079612)**	
4	1600364	1	Ford Engine **(SN 0300079612 through 0300140000)**	
4	1600411	1	GM Engine	
5	1670829	1	Bezel	

ITEM	PART NUMBER	QTY	DESCRIPTION	REV
6		Ref	Decal - Ground Control Display Options:	
6	1702610	1	Decal - Ground Control Display **(Prior to SN 0300085332)**	
6	1705753	1	Decal - Ground Control Display **(SN 0300085332 through 0300099881)**	
6	1706712	1	Decal - Ground Control Display **(SN 0300099882 through 0300140000)**	
7		Ref	Decal - Faceplate Options:	
7	1703465	1	Decal - Faceplate 800S **(Prior to SN 0300099882)**	
7	1706914	1	Decal - Faceplate 800S **(SN 0300099882 through 0300134725)**	
7	1001102601	1	Decal - Faceplate 800S **(SN 0300134726 through 0300140000)**	
7	1703466	1	Decal - Faceplate 860SJ **(Prior to SN 0300099882)**	
7	1706915	1	Decal - Faceplate 860SJ **(SN 0300099882 through 0300134725)**	
7	1001102602	1	Decal - Faceplate 860SJ **(SN 0300134726 through 0300140000)**	
8	2420172	1	Gauge, Hourmeter	
9	2760105	1	Housing, Display Light	
10	3300408	AR	Locknut, Plastic Insert	
11	3311401	10	Nut 1/4in-20NC	
12	3740049	AR	Relay Options:	
12		Ref	Caterpillar Engine	
12		Ref	Deutz and GM Engine	
13	3900268	AR	Screw, Flange #10 x 1/2in	
14	3910804	6	Screw #8-32NC x 1/4in	
15	4060906	AR	Shield, Toggle Switch	
16	4070987	1	Shim (.015in)	
17	4360328	AR	Switch, Toggle	
17		Ref	Switch, Toggle 800S	
17		Ref	Switch, Toggle 860SJ	
18	4360469	1	Switch, Key	
18A	2860030	1	Key Replacement	
19	4360475	1	Switch, Emergency Stop	
19A	7020175	1	Cap, Mushroom Head	
19B	7020176	1	Block, Contact	
20	4360476	1	Switch, Contact Block	
21	4460426	AR	Connector, Strain Relief	
22	4460470	1	Nut, Terminal	
23	4460471	1	Lockwasher, Terminal	
24	4460488	AR	Mounting Base, Terminal	
25	4460526	1	Connector, Strain Relief	
26	4460874	1	Connector, Natural	
27	4460875	1	Connector, Gray	
28	4740444	AR	Washer, Special	
29	4751400	20	Flatwasher 1/4in Regular	
30	4761400	15	Lockwasher 1/4in	
31	4922666	1	Harness, Analyzer Cable (Not Shown - See ELECTRICAL SECTION for Breakdown) **(Prior to SN 0300085332)**	
32		Ref	Harness, Engine Options (Not Shown - See ELECTRICAL SECTION for Breakdown):	
32		Ref	Caterpillar Engine Machines	
32	4922922	1	Caterpillar Engine Machines **(Prior to SN 0300085332)**	

ITEM	PART NUMBER	QTY	DESCRIPTION	REV
32	4923278	1	Caterpillar Engine Machines **(SN 0300085332 through 0300099881)**	
32	4923585	1	Caterpillar Engine Machines **(SN 0300099882 through 0300140000)**	
32		Ref	Deutz Engine Machines	
32	4922654	1	Deutz Engine Machines **(Prior to SN 0300085332)**	
32	4923239	1	Deutz Engine Machines **(SN 0300085332 through 0300129453)**	
32	1001102160	1	Deutz Engine Machines **(SN 0300129454 through 0300140000)**	
32		Ref	Ford Engine Machines	
32	4922655	1	Ford Engine Machines **(Prior to SN 0300087262)**	
32	4923277	1	Ford Engine Machines **(SN 0300087262 through 0300140000)**	
32	4923502	1	GM Engine Machines	
33	4922594	1	Harness, Valve (Not Shown - See ELECTRICAL SECTION for Breakdown)	
34		Ref	Harness, Ground Control Box Options (Not Shown - See ELECTRICAL SECTION for Breakdown):	
34		Ref	Caterpillar and Ford Engine Machines	
34	4922619	1	Caterpillar and Ford Engine Machines **(Prior to SN 0300087262)**	
34	4923279	1	Caterpillar and Ford Engine Machines **(SN 0300087262 through 0300099882)**	
34		Ref	Deutz Engine Machines	
34	4922619	1	Deutz Engine Machines **(Prior to SN 0300085332)**	
34	4923213	1	Deutz Engine Machines **(SN 0300085332 through 0300099882)**	
34	4923213	1	GM Engine Machines **(Prior to SN 0300099882)**	
34	4923577	1	Caterpillar, Deutz and GM Engine Machines **(SN 0300099882 through 0300140000)**	
36	0100048	AR	Grease, Dialectic	
37	4460905	AR	Plug	
38	1705132	1	Decal - Control ADE **(SN 0300066054 through 0300099882)**	
39	3520035	1	Plug, Cap **(SN 0300068126 through 0300140000)**	
40	0100011	AR	Compound, Locking	
		Ref	**GROUND CONTROL BOX INSTALLATION**	
		Ref	**Caterpillar Engine:**	
	0273308	Ref	**Caterpillar Engine 800S (Prior to SN 0300087262)**	B
	0861753	Ref	**Caterpillar Engine 800S (SN 0300087262 through 0300099881)**	B
	1810101	Ref	**Caterpillar Engine 800S (SN 0300099882 through 0300140000)**	C
	0273309	Ref	**Caterpillar Engine 860SJ (Prior to SN 0300087262)**	B
	0861754	Ref	**Caterpillar Engine 860SJ (SN 0300087262 through 0300099881)**	B
	1810106	Ref	**Caterpillar Engine 860SJ (SN 0300099882 through 0300140000)**	C
		Ref	**Deutz Engine:**	
	0270893	Ref	**Deutz Engine 800S (Prior to SN 0300085332)**	B
	0861718	Ref	**Deutz Engine 800S (SN 0300085332 through 0300099881)**	B
	1810099	Ref	**Deutz Engine 800S (SN 0300099882 through 0300129453)**	B
	1001102248	Ref	**Deutz Engine 800S (SN 0300129454 through 0300140000)**	C
	0270894	Ref	**Deutz Engine 860SJ (Prior to SN 0300085332)**	B
	0861719	Ref	**Deutz Engine 860SJ (SN 0300085332 through 0300099881)**	B

SECTION 2 - TURNTABLE

ITEM	PART NUMBER	QTY	DESCRIPTION	REV
	1810104	Ref	**Deutz Engine 860SJ (SN 0300099882 through 0300129453)**	B
	1001102249	Ref	**Deutz Engine 860SJ (SN 0300129454 through 0300140000)**	C
		Ref	**Ford Engine:**	
	0270891	Ref	**Ford Engine 800S (Prior to SN 0300087262)**	C
	0861751	Ref	**Ford Engine 800S (SN 0300087262 through 0300099882)**	B
	0270892	Ref	**Ford Engine 860SJ (Prior to SN 0300087262)**	C
	0861752	Ref	**Ford Engine 860SJ (SN 0300087262 through 0300099882)**	B
		Ref	**GM Engine:**	
	0861792	Ref	**GM Engine 800S (Prior to SN 0300099882)**	B
	1810098	Ref	**GM Engine 800S (SN 0300099882 through 0300140000)**	C
	0861793	Ref	**GM Engine 860SJ (Prior to SN 0300099882)**	B
	1810103	Ref	**GM Engine 860SJ (SN 0300099882 through 0300140000)**	C
101	0100011	AR	Compound, Locking	
102	0641506	4	Bolt 5/16in-18NC x 3/4in	
103		Ref	Ground Control Box Assemblies (Includes Items 1-40)	
103		Ref	Caterpillar Engine	
103	0861625	1	Caterpillar Engine 800S **(Prior to SN 0300087262)**	
103	0861753	1	Caterpillar Engine 800S **(SN 0300087262 through 0300099881)**	
103	1810101	1	Caterpillar Engine 800S **(SN 0300099882 through 0300140000)**	
103	0861626	1	Caterpillar Engine 860SJ **(Prior to SN 0300087262)**	
103	0861754	1	Caterpillar Engine 860SJ **(SN 0300087262 through 0300099881)**	
103	1810106	1	Caterpillar Engine 860SJ **(SN 0300099882 through 0300140000)**	
103		Ref	Deutz Engine	
103	0861456	1	Deutz Engine 800S **(Prior to SN 0300085332)**	
103	0861718	1	Deutz Engine 800S **(SN 0300085332 through 0300099881)**	
103	1810099	1	Deutz Engine 800S **(SN 0300099882 through 0300129453)**	
103	1001102248	1	Deutz Engine 800S **(SN 0300129454 through 0300140000)**	
103	0861457	1	Deutz Engine 860SJ **(Prior to SN 0300085332)**	
103	0861719	1	Deutz Engine 860SJ **(SN 0300085332 through 0300099881)**	
103	1810104	1	Deutz Engine 860SJ **(SN 0300099882 through 0300129453)**	
103	1001102249	1	Deutz Engine 860SJ **(SN 0300129454 through 0300140000)**	
103		Ref	Ford Engine	
103	0861454	1	Ford Engine 800S **(Prior to SN 0300087262)**	
103	0861751	1	Ford Engine 800S **(SN 0300087262 through 0300140000)**	
103	0861455	1	Ford Engine 860SJ **(Prior to SN 0300087262)**	
103	0861752	1	Ford Engine 860SJ **(SN 0300087262 through 0300140000)**	
103		Ref	GM Engine	
103	0861792	1	GM Engine 800S **(Prior to SN 0300099882)**	
103	1810098	1	GM Engine 800S **(SN 0300099882 through 0300140000)**	
103	0861793	1	GM Engine 860SJ **(Prior to SN 0300099882)**	
103	1810103	1	GM Engine 860SJ **(SN 0300099882 through 0300140000)**	
104	3300205	4	Nut, Retainer	
105	3539219	1	Plate, Reinforcement	
106	4751500	4	Flatwasher 5/16in Regular	

FIGURE 2-23. GROUND CONTROL BOX ASSEMBLY (WITH UGM)

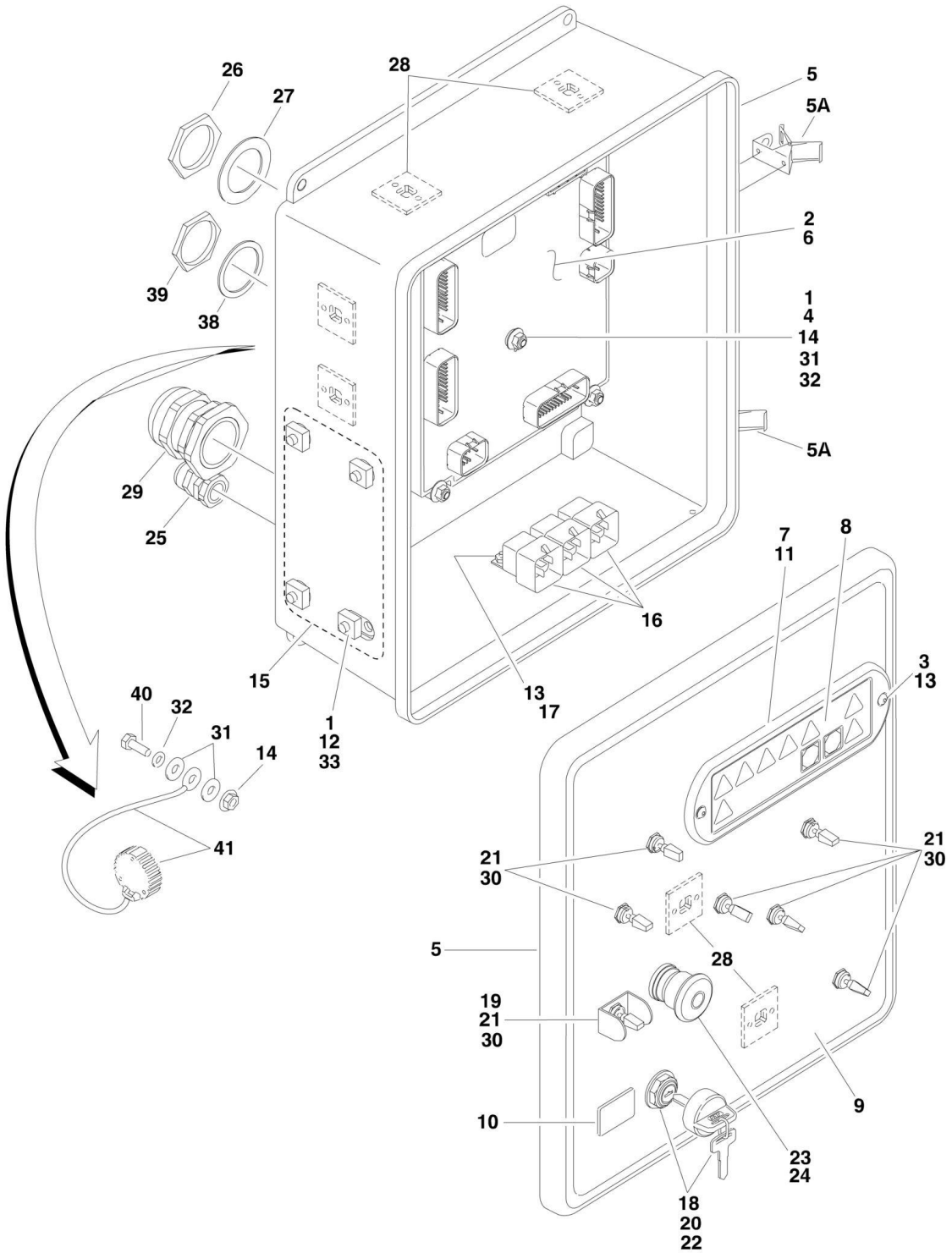

FIGURE 2-23. GROUND CONTROL BOX ASSEMBLY (WITH UGM)

ITEM	PART NUMBER	QTY	DESCRIPTION	REV
		Ref	**GROUND CONTROL BOX ASSEMBLIES**	
	1001110333	Ref	**Ground Control Box Assemblies 800S with Caterpillar Engine**	A
	1001110334	Ref	**Ground Control Box Assemblies 860SJ with Caterpillar Engine**	A
	1001110329	Ref	**Ground Control Box Assemblies 800S with Deutz Engine**	B
	1001110330	Ref	**Ground Control Box Assemblies 860SJ with Deutz Engine**	B
	1001110327	Ref	**Ground Control Box Assemblies 800S with GM Engine**	A
	1001110328	Ref	**Ground Control Box Assemblies 860SJ with GM Engine**	A
1	0100011	AR	Compound, Locking	
2	0100048	AR	Grease, Dielectric	
3	0630518	2	Capscrew, Button Head	
4	0630548	5	Bolt, 2-1/2in Tap	
5	1001111017	1	Box, Fiberglass	
5A	7020246	2	Latch	
6	1001103667	1	Module, Ground Control (Note: Re-calibration Required when Replaced)	
7	1670829	1	Bezel	
8	1706712	1	Decal - Ground Control Display	
9		Ref	Decal - Faceplate Options:	
9	1001102601	1	Decal - Faceplate 800S	
9	1001102602	1	Decal - Faceplate 860SJ	
10	2420172	1	Gauge, Hourmeter	
11	2760105	1	Housing, Display Light	
12	3300205	4	Nut, Retainer	
13	3300408	AR	Locknut, Plastic Insert	
14	77143013	11	Nut 1/4in-20NC	
15	3539219	1	Plate, Reinforcement	
16		Ref	Relay Options:	
16	3740049	3	Caterpillar Engine Machines	
16	3740049	2	Deutz and GM Engine Machines	
17	3900268	3	Screw, Flange #10 x 1/2in	
18	3910804	6	Screw #8-32NC x 1/4in	
19	4060906	1	Shield, Toggle Switch	
20	4070987	1	Shim (.015in)	
21		Ref	Switch, Toggle Options:	
21	4360328	6	Switch, Toggle 800S	
21	4360328	7	Switch, Toggle 860SJ	
22	4360469	1	Switch, Key	
22	2860030	1	Key Replacement	
23	4360475	1	Switch, Emergency Stop	
23	7020175	1	Cap, Mushroom	
23	7020176	1	Block, Contact	
24	4360476	1	Switch, Contact Block	
25	4460426	1	Connector, Strain Relief	
26	4460470	1	Nut, Terminal	
27	4460471	1	Lockwasher, Terminal	
28	4460488	6	Mounting Base, Terminal	
29	4460526	1	Connector, Strain Relief	
30	4740444	6	Washer, Special	
31	4751400	12	Flatwasher 1/4in Regular	

ITEM	PART NUMBER	QTY	DESCRIPTION	REV
32	4761400	6	Lockwasher 1/4in	
33	0641506	4	Bolt 5/16in-18NC x 3/4in	
34	4922594	1	Harness, Valve (Not Shown - See ELECTRICAL SECTION for Breakdown)	
35		Ref	Harness, Engine Options (Not Shown - See ELECTRICAL SECTION for Breakdown):	
35	1001110341	1	Caterpillar Engine Machines	
35	1001110340	1	Deutz Engine Machines	
35	1001110338	1	GM Engine Machines	
36	1001110339	1	Harness, Ground Control Box Options (Not Shown - See ELECTRICAL SECTION for Breakdown)	
37		Ref	Ground Control Box Wiring Diagram (Not Shown - See ELECTRICAL SECTION for Breakdown)	
37	1001110344	1	Caterpillar Engine Machines	
37	1001110343	1	Deutz Engine Machines	
37	1001110342	1	GM Engine Machines	
38	4460496	1	Lockwasher, Terminal	
39	4460497	1	Nut, Terminal	
40	0641407	1	Bolt 1/4in-20NC x 7/8in	
41	1001106736	1	Cap, Dust	

FIGURE 2-24. LIMIT SWITCHES, LIGHTS AND ALARM INSTALLATIONS

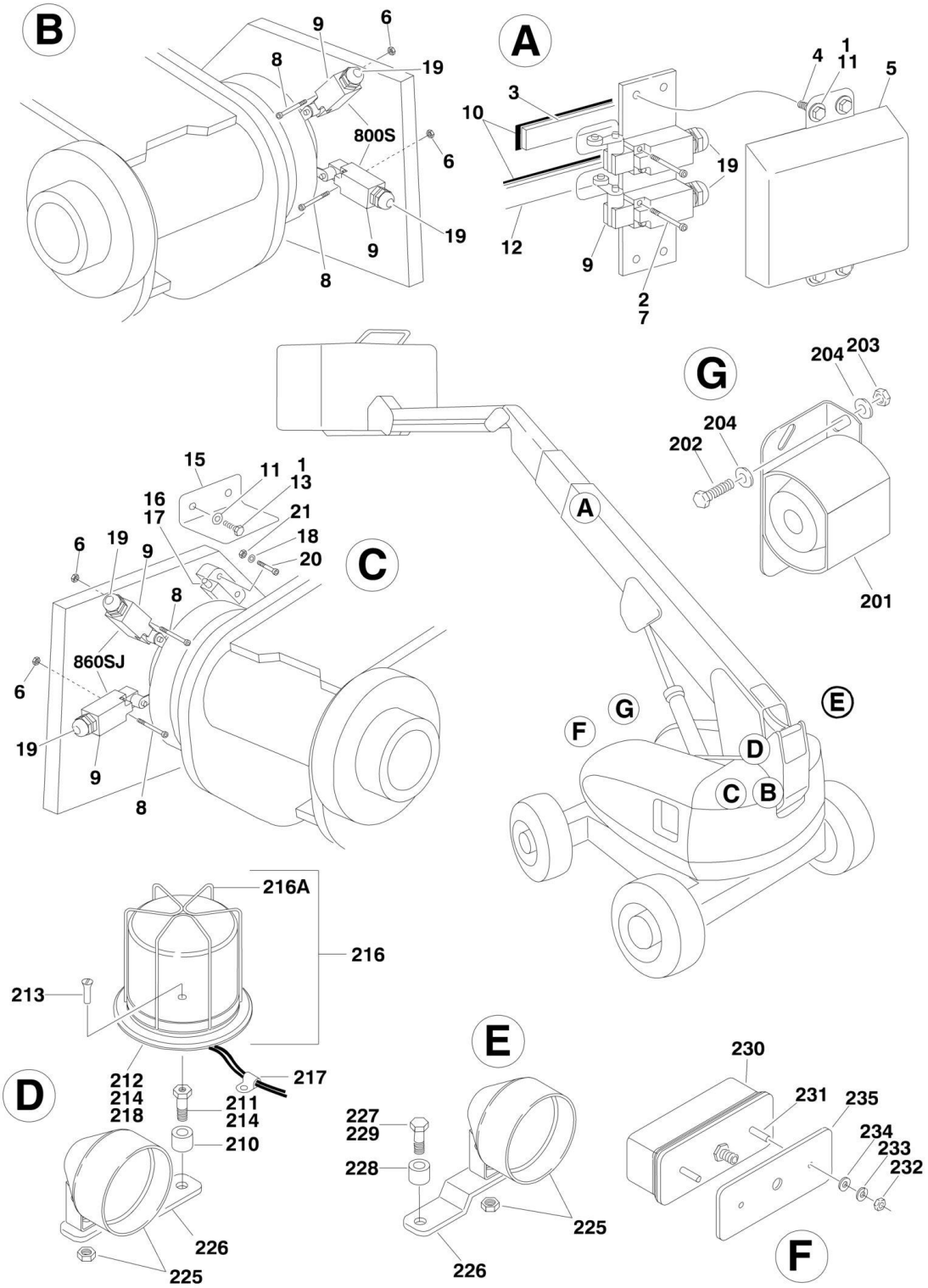

FIGURE 2-24. LIMIT SWITCHES, LIGHTS AND ALARM INSTALLATIONS

ITEM	PART NUMBER	QTY	DESCRIPTION	REV
		Ref	**ELECTRICAL OPTIONS INSTALLATIONS (TURNTABLE MOUNTED)**	
		Ref	**LIMIT SWITCHES INSTALLATION**	
	0271360	Ref	**Limit Switches Installation 800S**	J
	0271362	Ref	**Limit Switches Installation 860SJ**	J
1	0100011	AR	Compound, Locking	
2	0100035	AR	Compound, Locking	
3		Ref	Bar, Fiberglass (Top) Options:	
3	0362529	NLA	Bar, Fiberglass (Top) (Use p/n 1001106480) **(Prior to SN 0300138519)**	
3	1001106480	1	Bar, Fiberglass (Top) **(SN 0300138519 through 0300140000)**	
4	0641403	4	Bolt 1/4in-20NC x 3/8in	
5	1671022	1	Cover, Limit Switch	
6	3310805	4	Locknut #8-32NC	
7	3930816	4	Capscrew, Socket Head #8-32NC x 1in	
8	3930828	4	Capscrew, Socket Head #8-32NC x 1-3/4in	
9		Ref	Switch, Limit Options: (Note: p/n 4360549 & p/n 4360578 does not include #19 Connector - Purchase Separately)	
9	4360322	NLA	Switch, Limit (Use p/n 4360578) **(Prior to SN 0300074425)**	
9	4360579	NLA	Switch, Limit (Use p/n 4360578) **(SN 0300074425 through 0300080869)**	
9	4360578	4	Switch, Limit **(SN 0300080870 through 0300140000)**	
10	4420060	31.2 ft /9.5m	Tape, Double Sided	
11	4751400	6	Flatwasher 1/4in Regular	
12		Ref	Bar, Fiberglass (Bottom) Options:	
12	0363010	NLA	Bar, Fiberglass (Bottom) (Use p/n 1001106449) **(Prior to SN 0300138519)**	
12	1001106449	1	Bar, Fiberglass (Bottom) **(SN 0300138519 through 0300140000)**	
13	0641406	2	Bolt 1/4in-20NC x 3/4in	
15	1671059	1	Cover, Proximity Switch	
16	4071043	1	Shim	
17	4360517	1	Switch, Proximity	
18		Ref	Flatwasher #8 Options:	
18	4750800	4	Flatwasher #8 **(Prior to SN 0300116348)**	
18	1001097942	4	Flatwasher #8 **(SN 0300116348 through 0300140000)**	
19	4460968	2	Connector, Strain Relief **(SN 0300074425 through 0300140000)**	
20		Ref	Capscrew, Socket Head #8-32NC x 1-3/4in Options:	
20	3930828	2	Capscrew, Socket Head #8-32NC x 1-3/4in **(Prior to SN 0300116348)**	
20	1001097939	2	Capscrew, Socket Head #8-32NC x 1-3/4in **(SN 0300116348 through 0300140000)**	
21		Ref	Locknut #8-32NC Options:	
21	3310805	2	Locknut #8-32NC **(Prior to SN 0300116348)**	
21	1001097945	2	Locknut #8-32NC **(SN 0300116348 through 0300140000)**	
	0271999	Ref	**ALARM INSTALLATION**	1
201	0257887	1	Alarm/Harness Assembly	
201	0140032	1	Alarm	
201	2820035	6 in/15cm	Loom	
201	4460424	1	Plug	

SECTION 2 - TURNTABLE

ITEM	PART NUMBER	QTY	DESCRIPTION	REV
201	4460268	2	Socket	
202	0641410	2	Bolt 1/4in-20NC x 1-1/4in	
203	3311405	2	Locknut 1/4in-20NC	
204	4711400	4	Flatwasher 1/4in Thin	
	0270805	Ref	**STROBE LIGHT INSTALLATION (AMBER) (OPTIONAL)**	C
		Ref	**Note: If machine is equipped with BLUE Strobe Light, see SPECIAL OPTIONS SECTION SkyGuard Kit.**	
210	4220162	1	Spacer, Stop (Used with ECCO Model 6640 Only)	
211		Ref	Adapter Options:	
211	0630491	1	Adapter used with ECCO Model 6640	
211	0080241	1	Adapter used with ECCO Model 6650	
212	3539281	1	Plate, Mounting (Used with ECCO Model 6640 Only)	
213	0741606	1	Screw, Flathead Countersunk 3/8in-16NC x 3/4in (Used with ECCO Model 6640 Only)	
214	0100011	AR	Compound, Locking	
215	4240032	1	Wire-Tie (Not Shown)	
216	0255917	NLA	Strobe Light/Guard/Harness Assembly (Use p/n 0272507)	
216		Ref	Bulb, Replacement	
216	7016380	1	Bulb for ECCO Model 6640	
216	70001941	1	Bulb for ECCO Model 6650	
216A		Ref	Guard Options:	
216A	4060907	1	Guard used with ECCO Model 6640	
216A	2920215	1	Guard used with ECCO Model 6650	
217	4460234	1	Clamp	
218	0100048	AR	Sealant, Silicone	
		Ref	**LIGHTS INSTALLATIONS (OPTIONAL)**	
	0271552	Ref	**Headlights and Taillights**	C
	0272057	Ref	**Floodlights (Not Shown)**	B
225		Ref	Light Options:	
225	2920110	2	Headlight	
225	2920157	2	Floodlight (Not Shown)	
226	0902206	2	Bracket, Mounting	
227	0642612	1	Bolt 1in-8NC x 1-1/2in	
228	4220162	2	Spacer	
229	0100011	AR	Compound, Locking	
230		Ref	Light Options:	
230	2920113	2	Taillight	
230	2920157	2	Floodlight (Not Shown)	
231	3911040	4	Screw, Machine #10-24NC x 2-1/2in (0271552 Installation Only)	
232	3311005	4	Nut #10-24NC (0271552 Installation Only)	
233	4751000	4	Flatwasher #10 Regular (0271552 Installation Only)	
234	4740362	4	Washer, Fender (0271552 Installation Only)	
235	3960461	2	Gasket (0271552 Installation Only)	
237	4240032	AR	Tie-Strap (Not Shown)	
238	4460234	AR	Mount, Tie-Strap (Not Shown)	
239		Ref	Switch, Toggle Options (Not Shown - Located on Console):	
239	4360336	1	Switch, Toggle	
239	4360522	1	Switch, Push Button	
240	3790012	1	O-Ring (Used with Toggle Switch) (Not Shown - Located on Console)	
241	3820001	11	Rivet, Pop (Not Shown)	
242	1705170	1	Decal - Lights (Used with Push Button Switch) (Not Shown -	

ITEM	PART NUMBER	QTY	DESCRIPTION	REV
			Located on Console)	

FIGURE 2-25. HOODS INSTALLATION (Prior to SN 0300089982)

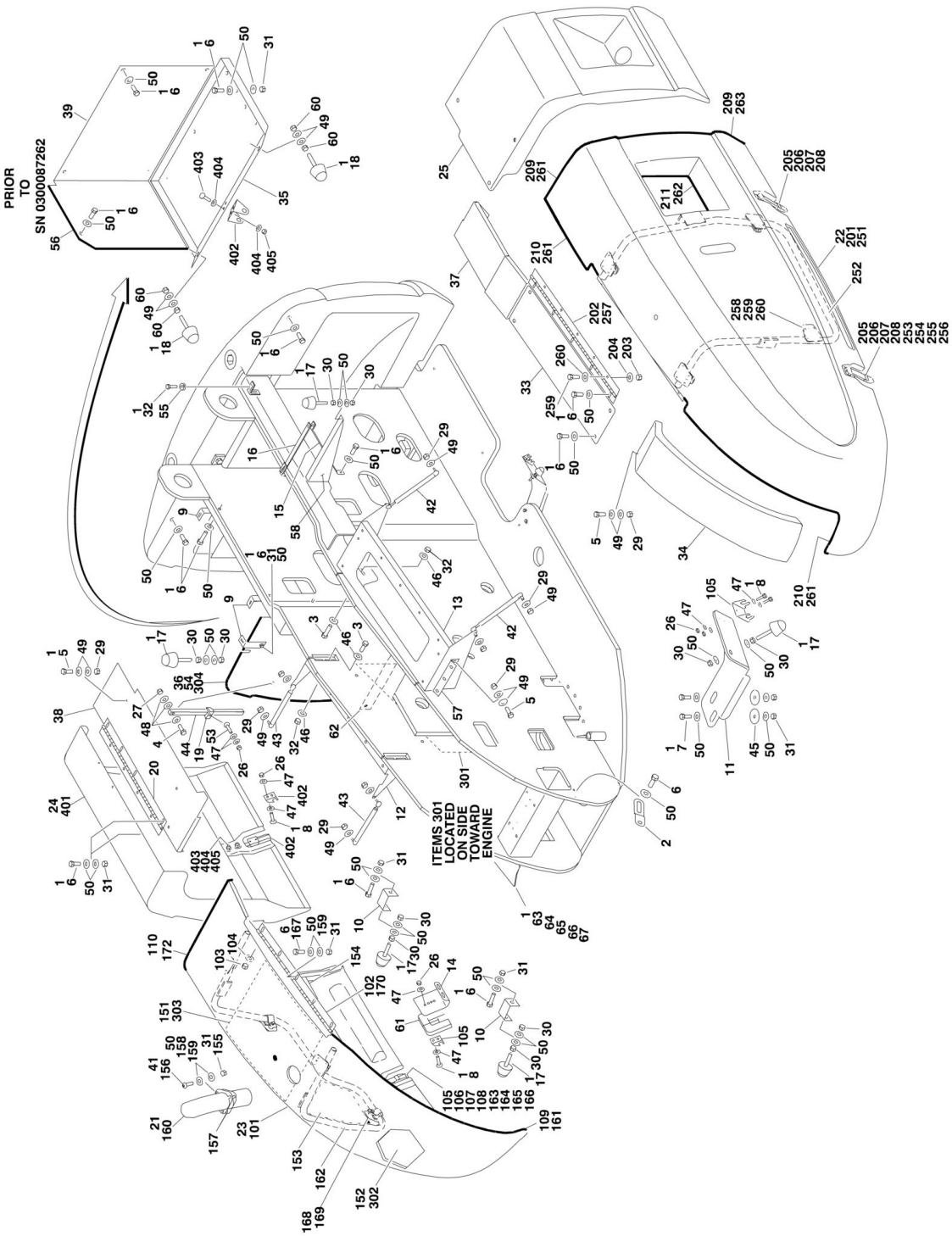

FIGURE 2-25. HOODS INSTALLATION (Prior to SN 0300089982)

ITEM	PART NUMBER	QTY	DESCRIPTION	REV
	0270880	Ref	**HOODS INSTALLATION (CATERPILLAR/DEUTZ) (Prior to SN 0300089980)**	K
	0274762	Ref	**HOODS INSTALLATION (CATERPILLAR/DEUTZ) (SN 0300089980 through 0300089982)**	A
	0270880	Ref	**HOODS INSTALLATION (FORD) (Prior to SN 0300079612)**	K
	0274261	Ref	**HOODS INSTALLATION (FORD) (SN 0300079612 through 0300089979)**	C
	0274768	Ref	**HOODS INSTALLATION (FORD) (SN 0300089980 through 0300089982)**	A
	0273701	Ref	**HOODS INSTALLATION (WITH AIR COMPRESSOR) (Prior to SN 0300089980)**	C
	0274762	Ref	**HOODS INSTALLATION (WITH AIR COMPRESSOR) (CATERPILLAR/DEUTZ) (SN 0300089980 through 0300089982)**	A
	0274768	Ref	**HOODS INSTALLATION (WITH AIR COMPRESSOR) (FORD) (SN 0300089980 through 0300089982)**	A
1	0100011	AR	Compound, Locking	
2	0362770	1	Bar, Panel Mounting	
3	0630507	8	Bolt, Carriage 1/2in-13NC x 1-1/4in	
4	0641414	1	Bolt 1/4in-20NC x 1-3/4in **(Prior to SN 0300087262)**	
5	0641508	9	Bolt 5/16in-18NC x 1in	
6	0641608	AR	Bolt 3/8in-16NC x 1in	
7	0641616	AR	Bolt 3/8in-16NC x 2in	
8	0721006	AR	Screw #10-24NC x 3/4in	
9	0901921	3	Bracket, Hood Mounting	
10	0902219	2	Bracket, Bumper	
11	0902223	2	Bracket, Latch	
12	0902351	1	Bracket, Hood Mounting	
13	0902412	1	Bracket, Hood Mounting	
14	0902491	1	Bracket, Latch	
15	0902673	1	Bracket, Support (Front Cover)	
16	0902674	1	Bracket, Support (Front Cover)	
17	0940071	AR	Bumper	
18	0940088	2	Bumper **(Prior to SN 0300087262)**	
19	1380132	1	Clip, Gripper **(Prior to SN 0300087262)**	
20	2600209	1	Hinge **(Prior to SN 0300087262)**	
21		Ref	Tube, Exhaust Options:	
21	4845411	NLA	Caterpillar/Deutz (Use p/n 4846588) **(Prior to SN 0300089980)**	
21	4846588	1	Caterpillar/Deutz **(SN 0300089980 through 0300089982)**	
21	4845411	NLA	Machines with Air Compressor (Use p/n 4846588) **(Prior to SN 0300089980)**	
21	4846588	1	Machines with Air Compressor **(SN 0300089980 through 0300089982)**	
21	4845411	NLA	Ford (Use p/n 4846588) **(Prior to SN 0300079612)**	
21	3460399	1	Ford **(SN 0300079612 through 0300089982)**	
22		Ref	Hood Assembly Options:	
22	2680492	1	Hood Assembly (See Items 201-211 for Breakdown) **(Prior to SN 0300089980)**	
22	1671228	1	Hood Assembly (See Items 251-263 for Breakdown) **(SN 0300089980 through 0300089982)**	
23		Ref	Hood Assembly Options:	
23	2680451	1	Hood Assembly (See Items 101-110 for Breakdown) **(Prior to SN 0300089980)**	

ITEM	PART NUMBER	QTY	DESCRIPTION	REV
23		Ref	Hood Assembly (See Items 151-172 for Breakdown) **(SN 0300089980 through 0300089982)**	
23	1671248	1	Caterpillar/Deutz Engine	
23	1671236	1	Ford Engine	
24		Ref	Cover Options:	
24	2680488	1	Cover, Storage Box **(Prior to SN 0300087262)**	
24	1671201	1	Cover **(SN 0300087262 through 0300089982)**	
25	2680490	1	Hood, Right Cover	
26	3311005	AR	Locknut #10-24NC	
27	3311405	1	Locknut 1/4in-20NC **(Prior to SN 0300087262)**	
29	3311505	13	Locknut 5/16in-18NC	
30	3311601	AR	Nut 3/8in-16NC	
31	3311605	AR	Locknut 3/8in-16NC	
32	3311805	8	Locknut 1/2in-13NC	
33	3380443	1	Cover/Bracket Weldment (Tank Side) **(Prior to SN 0300087262)**	
34	3380444	1	Panel, Adapter	
35		Ref	Panel, Storage Box (Bottom) Options:	
35	3380458	1	Caterpillar/Deutz/Ford **(Prior to SN 0300087262)**	
35	3380517	1	With Air Compressor	
36		Ref	Panel, Storage Box (Top) Options:	
36	3380459	1	Caterpillar/Deutz/Ford **(Prior to SN 0300087262)**	
36	3380580	1	Caterpillar/Deutz/Ford **(SN 0300087262 through 0300089982)**	
36	3380518	1	With Air Compressor **(Prior to SN 0300087262)**	
37	3380461	1	Cover, Top (Tank Side)	
38		Ref	Panel, Cover Options:	
38	3380462	1	Panel, Cover **(Prior to SN 0300087262)**	
38	3380575	1	Panel, Cover **(SN 0300087262 through 0300089982)**	
39	3380463	1	Panel, Storage Box (Front) **(Prior to SN 0300087262)**	
41	3900232	3	Screw, Button Head 3/8in-16NC x 1-1/4in	
42	4160139	2	Spring, Gas (Tank Side)	
43	4160143	2	Spring, Gas (Engine Side)	
44	4567627	1	Tube, Hood Prop **(Prior to SN 0300087262)**	
45	4740076	4	Washer, Fender	
46	4740171	8	Washer, Hardened	
47	4751000	AR	Flatwasher #10 Regular	
48	4751400	3	Flatwasher 1/4in Regular **(Prior to SN 0300087262)**	
49	4751500	AR	Flatwasher 5/16in Regular	
50	4751600	AR	Flatwasher 3/8in Regular	
52	0641610	3	Bolt 3/8in-16NC x 1-1/4in	
53	0721004	1	Screw #10-24NC x 1/2in **(Prior to SN 0300087262)**	
54	3960389	52 in/1.3m	Seal **(Prior to SN 0300087262)**	
55	2540035	3	Grommet	
56	3960438	22 in/1m	Seal Options:	
56		Ref	Caterpillar/Deutz/Ford	
56		Ref	With Air Compressor **(Prior to SN 0300087262)**	
57	2600244	1	Hinge, Adapter Panel	
58	0902769	1	Bracket, Bumper Support	
59	0902465	1	Bracket, Lock Hasp **(Prior to SN 0300087262)**	
60	3321501	4	Nut 5/16in-24NF **(Prior to SN 0300087262)**	
61	3960470	1	Seal, Latch	
62	0182077	1	Angle, Hood Support **(SN 0300087262 through 0300089982)**	
63	0641406	4	Bolt 1/4in-20NC x 3/4in **(SN 0300089980 through 0300089982)**	

ITEM	PART NUMBER	QTY	DESCRIPTION	REV
64	3311405	4	Locknut 1/4in-20NC **(SN 0300089980 through 0300089982)**	
65	3571712	1	Plate, Seal **(SN 0300089980 through 0300089982)**	
66	3960389	3.5 ft /1.1m	Seal **(SN 0300089980 through 0300089982)**	
67	4751400	4	Flatwasher 1/4in Regular **(SN 0300089980 through 0300089982)**	
	2680451	Ref	**HOOD ASSEMBLY (ENGINE SIDE) (Prior to SN 0300089980)**	B
		Ref	**Note: Replacement Decals Must be Ordered Separately - See DECAL SECTION.**	
101	2680451	1	Hood	
102	2600209	1	Hinge	
103	3311605	4	Locknut 3/8in-16NC	
104	4751600	4	Flatwasher 3/8in Regular	
105	2940088	1	Latch	
106	0721008	2	Screw, Machine #10-24NC x 1in	
107	4751000	2	Flatwasher #10 Regular	
108	3311005	2	Locknut #10-24NC	
109	3960464	65 in /1.67m	Seal	
110	3960462	61 in /1.55m	Seal	
		Ref	**HOOD ASSEMBLIES (ENGINE SIDE) (SN 0300089980 through 0300089982)**	
	1671248	Ref	**Caterpillar/Deutz Engine**	A
	1671236	Ref	**Ford Engine**	A
		Ref	**Note: Replacement Decals Must be Ordered Separately - See DECAL SECTION.**	
151	2820080	1	Foam (Caterpillar/Deutz Engine Only)	
152	2820233	1	Insulation, Rear Sound (Caterpillar/Deutz Engine Only)	
153	2820234	1	Insulation, Center Sound (Caterpillar/Deutz Engine Only)	
154	2820235	1	Insulation, Rear Sound (Caterpillar/Deutz Engine Only)	
155	3311605	3	Locknut 3/8in x 16NC	
156	3900232	3	Screw, Button Head 3/8in-16NC x 1-1/4in	
157	4061010	1	Shield, Heat Gasket	
158	4740500	3	Washer (Special)	
159	4751600	AR	Flatwasher 3/8in Regular	
160		Ref	Exhaust Tube Weldment Options:	
160	4846588	1	Caterpillar/Deutz Engine	
160	3460399	1	Ford Engine	
161	1671237	1	Hood	
162	1671230	1	Frame, Tubular	
163	2940088	1	Latch	
164	0721008	2	Screw, Machine #10-24NC x 1in	
165	4751000	2	Flatwasher #10 Regular	
166	3311005	2	Locknut #10-24NC	
167	0641608	4	Bolt 3/8in-16NC x 1in	
168	1321384	4	Hold Down	
169	0641606	4	Bolt 3/8in-16NC x 3/4in	
170	2600209	1	Hinge	
171	3960464	65 in /1.67m	Seal	
172	3960462	61 in /1.55m	Seal	
	2680492	Ref	**HOOD ASSEMBLY (TANK SIDE) (Prior to SN 0300089980)**	C

SECTION 2 - TURNTABLE

ITEM	PART NUMBER	QTY	DESCRIPTION	REV
		Ref	**Note: Replacement Decals Must be Ordered Separately - See DECAL SECTION.**	
201	2680492	1	Hood	
202	2600233	1	Hinge	
203	3311605	5	Locknut 3/8in-16NC	
204	4711600	5	Flatwasher 3/8in Thin	
205	2940088	2	Latch	
206	0721008	4	Screw, Machine #10-24NC x 1in	
207	4751000	4	Flatwasher #10 Regular	
208	3311005	4	Locknut #10-24NC	
209	3960462	53 in /1.35m	Seal	
210	3960464	83 in /2.11m	Seal	
211	3960438	55 in/1.4m	Seal	
	1671228	Ref	**HOOD ASSEMBLY (TANK SIDE) (SN 0300089980 through 0300089982)**	A
		Ref	**Note: Replacement Decals Must be Ordered Separately - See DECAL SECTION.**	
251	1671231	1	Hood	
252	1671232	1	Frame, Tubular	
253	2940088	2	Latch	
254	0721008	4	Screw, Machine #10-24NC x 1in	
255	4751000	4	Flatwasher #10 Regular	
256	3311005	4	Locknut #10-24NC	
257	2600233	1	Hinge	
258	1321384	4	Hold Down	
259	0641606	9	Bolt 3/8in-16NC x 3/4in	
260	4711600	9	Flatwasher 3/8in Thin	
261	3960464	83 in /2.11m	Seal	
262	3960438	55 in/1.4m	Seal	
263	3960462	53 in /1.35m	Seal	
	0272081	Ref	**NOISE REDUCTION INSTALLATION (DEUTZ/CATERPILLAR ENGINE MACHINES) (OPTIONAL)**	4
301	2820078	1	Foam, Acoustical (Turntable Side)	
302	2820079	1	Foam, Acoustical (Hood Side) **(Prior to SN 0300089980)**	
303	2820080	1	Foam, Acoustical (Hood Top) **(Prior to SN 0300089980)**	
304	2820081	1	Foam, Acoustical (Located on #36) **(Prior to SN 0300076781)**	
	2680488	Ref	**HOOD ASSEMBLY (STORAGE COMPARTMENT) (Prior to SN 0300087262)**	E
401	2680488	1	Hood	
402	2940088	1	Latch	
403	0721008	2	Screw, Machine #10-24NC x 1in	
404	4751000	2	Flatwasher #10 Regular	
405	3311005	2	Locknut #10-24NC	

FIGURE 2-26. HOODS INSTALLATION (SN 0300089982 through 0300140000)

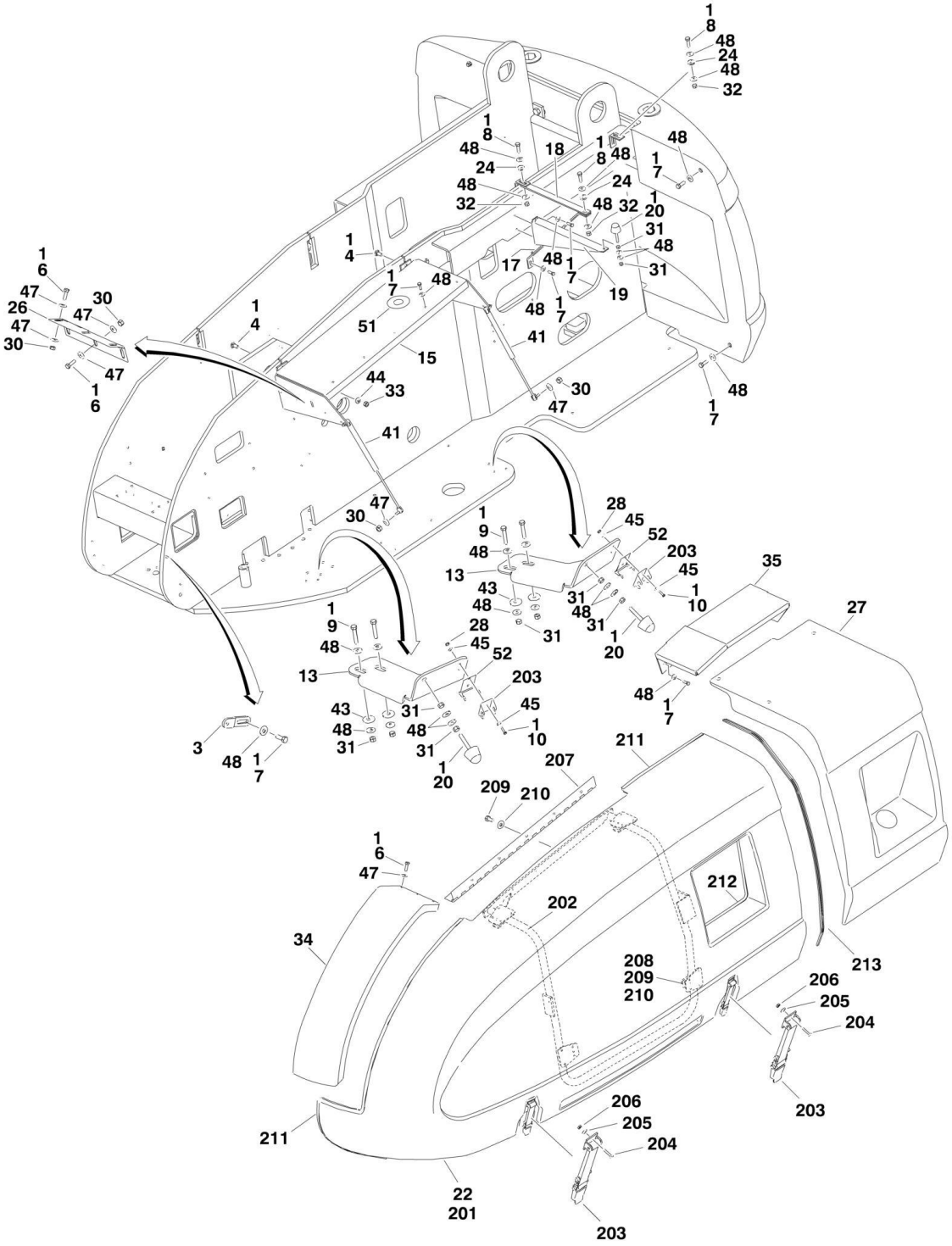

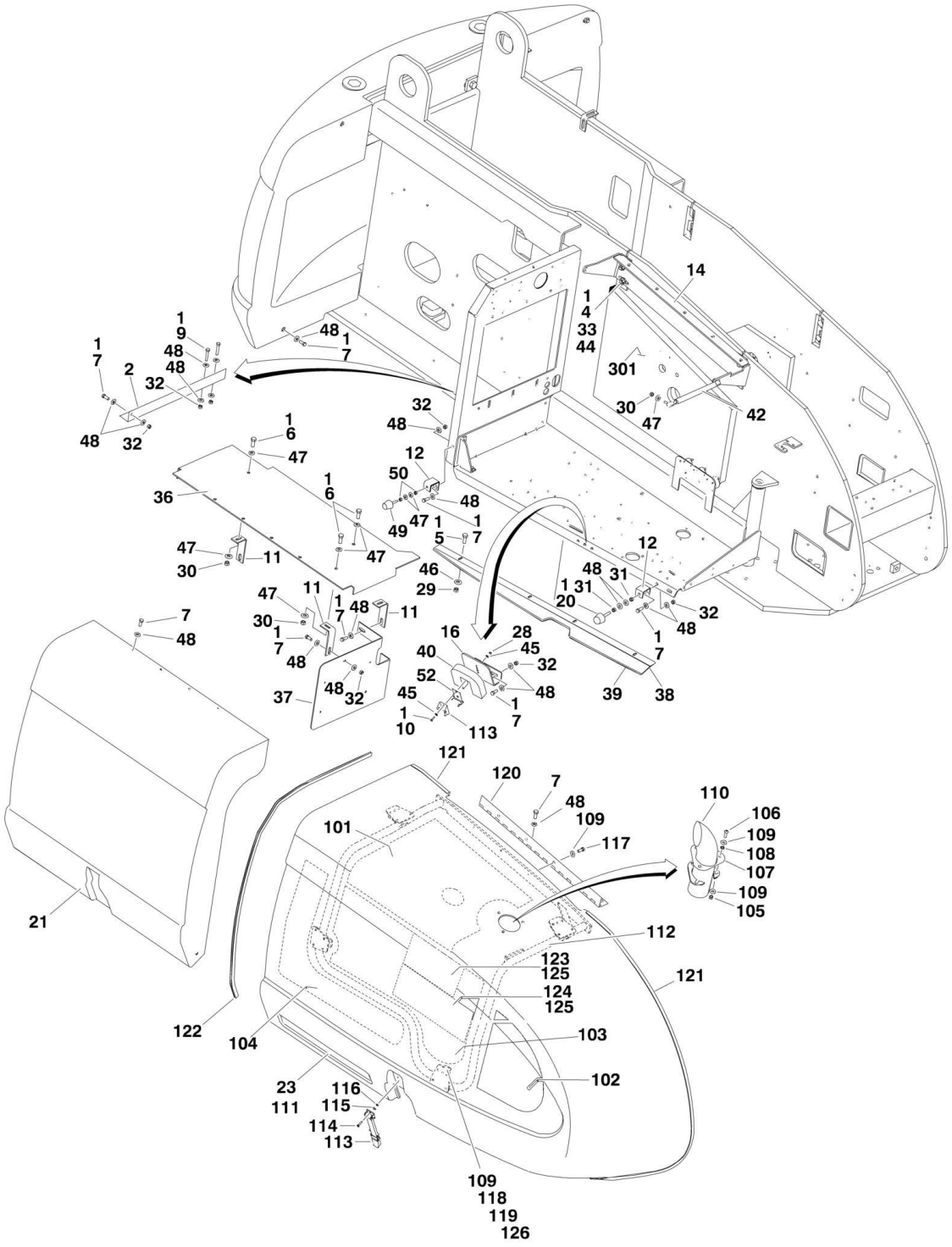
14
1
4
33
44
301
30
47
42
1
9
48
48
1
7
2
32
48
32
48
1
7
32
48
1
6
47
12
50
48
36
1
6
47
49
1
5
1
7
47
30
11
47
46
29
12
48
31
1
31
20
32
48
1
7
47
11
1
7
48
11
30
1
7
48
7
48
16
28
45
40
32
52
48
45
1
10
113
1
7
39
38
37
48
32
121
120
7
48
109
117
110
106
109
108
107
109
105
101
21
112
123
125
124
125
121
122
104
103
102
23
111
116
115
114
113
109
118
119
126

FIGURE 2-26. HOODS INSTALLATION (SN 0300089982 through 0300140000)

ITEM	PART NUMBER	QTY	DESCRIPTION	REV
		Ref	**HOODS INSTALLATIONS**	
	0274762	Ref	**CATERPILLAR ENGINES**	E
		Ref	**DEUTZ ENGINES**	
	0274762	Ref	**Deutz Engines (SN 0300089982 through 0300129453)**	E
	1001100386	Ref	**Deutz Engines (SN 0300129454 through 0300140000)**	A
	0274768	Ref	**FORD ENGINES**	D
	0275547	Ref	**GM ENGINES**	E
1	0100011	AR	Compound, Locking	
2	0182077	1	Angle, Hood Support	
3	0362770	1	Bar, Panel Mounting	
4	0630507	8	Bolt, Carriage 1/2in-13NC x 1-1/4in	
5	0641406	4	Bolt 1/4in-20NC x 3/4in	
6	0641508	9	Bolt 5/16in-18NC x 1in	
7	0641608	33	Bolt 3/8in-16NC x 1in	
8	0641610	3	Bolt 3/8in-16NC x 1-1/4in	
9	0641616	6	Bolt 3/8in-16NC x 2in	
10	0721006	6	Screw #10-24NC x 3/4in	
11	0901921	3	Bracket, Hood Mounting	
12	0902219	2	Bracket, Bumper	
13	0902223	2	Bracket, Latch	
14	0902351	1	Bracket, Hood Mounting	
15	0902412	1	Bracket, Hood Mounting	
16	0902491	1	Bracket, Latch	
17	0902673	1	Bracket, Support (Front Cover)	
18	0902674	1	Bracket, Support (Front Cover)	
19	0902769	1	Bracket, Bumper Support	
20	0940071	4	Bumper	
21	1671201	1	Cover	
22	1671228	1	Hood Assembly (See Items 201-213 for Breakdown)	
23		Ref	Hood Assembly (See Items 101-126 for Breakdown)	
23	1671248	1	Caterpillar Engines	
23		Ref	Deutz Engines	
23	1671248	1	Deutz Engines **(SN 0300089982 through 0300129453)**	
23	1001099138	1	Deutz Engines **(SN 0300129454 through 0300140000)**	
23	1671236	1	Ford Engines	
23		Ref	GM Engines Options:	
23	1671332	1	GM Engines **(SN 0300089982 through 0300139209)**	
23	1001117045	1	GM Engines **(SN 0300139210 through 0300140000)**	
24	2540035	3	Grommet	
26	2600244	1	Hinge, Adapter Panel	
27	2680490	1	Hood, Right Cover	
28	3311005	6	Locknut #10-24NC	
29	3311405	4	Locknut 1/4in-20NC	
30	3311505	12	Locknut 5/16in-18NC	
31	3311601	8	Nut 3/8in-16NC	
32	3311605	15	Locknut 3/8in-16NC	
33	3311805	8	Locknut 1/2in-13NC	
34	3380444	1	Panel, Adapter	
35	3380461	1	Cover, Top (Tank Side)	
36	3380575	1	Panel, Cover	

ITEM	PART NUMBER	QTY	DESCRIPTION	REV
37	3380580	1	Panel, Storage Box (Top)	
38	3571712	1	Plate, Seal	
39	3960389	3.5 ft /1.1m	Seal	
40	3960470	1	Seal, Latch	
41	4160139	2	Spring, Gas (Tank Side)	
42	4160143	1	Spring, Gas (Engine Side)	
43	4740076	4	Washer, Fender	
44	4740171	8	Washer, Hardened	
45	4751000	12	Flatwasher #10 Regular	
46	4751400	4	Flatwasher 1/4in Regular	
47	4751500	23	Flatwasher 5/16in Regular	
48	4751600	67	Flatwasher 3/8in Regular	
49	0940088	1	Bumper	
50	3321501	2	Nut 5/16in-24NF	
51	1120601	1	Plug, Cap **(SN 0300098641 through 0300140000)**	
52	2940188	3	Latch, Spring Clip **(SN 0300098641 through 0300140000)**	
		Ref	**HOOD ASSEMBLIES (ENGINE SIDE)**	
	1671248	Ref	**Caterpillar Engines**	D
		Ref	**Deutz Engines Options:**	
	1671248	Ref	**Deutz Engines (SN 0300089982 through 0300129453)**	D
	1001099138	Ref	**Deutz Engines (SN 0300129454 through 0300140000)**	B
	1671236	Ref	**Ford Engines**	E
		Ref	**GM Engines Options:**	D
	1671332	Ref	**GM Engines (SN 0300089982 through 0300139209)**	E
	1001117045	Ref	**GM Engines (SN 0300139210 through 0300140000)**	A
101		Ref	Foam Options:	
101		Ref	Caterpillar Engine Machines	
101	2820080	1	Caterpillar Engine Machines **(SN 0300089982 through 0300124623)**	
101	1001101391	1	Caterpillar Engine Machines **(SN 0300124624 through 0300140000)**	
101		Ref	Deutz Engine Machines	
101	2820080	1	Deutz Engine Machines **(SN 0300089982 through 0300124623)**	
101	1001101391	1	Deutz Engine Machines **(SN 0300124624 through 0300129453)**	
101	1001101673	1	Deutz Engine Machines **(SN 0300129454 through 0300140000)**	
101	See Note	NLA	Ford and GM Engine (Note: Use p/n 1001117139 and Refer to note at Items 123 & 124) **(SN 0300089982 through 0300139210)**	
101	1001117139	1	GM Engine **(SN 0300139210 through 0300140000)**	
102	2820233	1	Insulation, Rear Sound (Caterpillar/Deutz Engine Machines Only)	
103		Ref	Insulation, Center Sound Options:	
103	2820234	1	Caterpillar/Deutz Engine Machines	
103	Not Required	0	Ford/GM Engine Machines	
104	2820235	1	Insulation, Rear Sound (Caterpillar/Deutz Engine Machines Only)	
105	3311605	AR	Locknut 3/8in x 16NC	
106	3900232	AR	Screw, Button Head 3/8in-16NC x 1-1/4in	
107		Ref	Shield, Heat Gasket Options:	
107	4061010	1	Shield, Heat Gasket **(SN 0300089982 through 0300124623)**	

SECTION 2 - TURNTABLE

ITEM	PART NUMBER	QTY	DESCRIPTION	REV
107		Ref	Shield, Heat Gasket **(SN 0300124624 through 0300129453)**	
107	1001101392	1	Caterpillar/Deutz Engine Machines	
107	Not Required	0	GM Engine Machines	
107		Ref	Shield, Heat Gasket **(SN 0300129454 through 0300140000)**	
107	1001101392	1	Caterpillar Engine Machines	
107	1001101623	1	Deutz Engine Machines	
107	Not Required	0	GM Engine Machines	
108	4740500	AR	Washer (Special)	
109	4751600	AR	Flatwasher 3/8in Regular	
110		Ref	Exhaust Tube Weldment Options:	
110	4846588	1	Caterpillar Engine Machines	
110		Ref	Deutz Engine Machines	
110	4846588	1	Deutz Engine Machines **(SN 0300089982 through 0300129453)**	
110	1001099121	1	Deutz Engine Machines **(SN 0300129454 through 0300140000)**	
110	3460399	1	Ford Engine Machines	
110		Ref	GM Engine Machines Options:	
110	3460552	1	GM Engine Machines **(SN 0300089982 through 0300139209)**	
110	1001117040	1	GM Engine Machines **(SN 0300139210 through 0300140000)**	
111		Ref	Hood Kit Options:	
111	1001097966	1	Caterpillar Engine Machines (Includes Items 101, 102, 103, 104, 107 & 108)	
111		Ref	Deutz Engine Machines	
111	1001097966	1	Deutz Engine Machines (Includes Items 101, 102, 103, 104, 107 & 108) **(SN 0300089982 through 0300129453)**	
111	1001099139	1	Deutz Engine Machines (Must also purchase Items 101, 102, 103, 104, 107 & 108) **(SN 0300129454 through 03000140000)**	
111	1001097964	1	Ford/GM Engine Machines (Includes Items 108, 123 & 124)	
		Ref	**Note: Replacement Decals Must be Ordered Separately - See DECAL SECTION.**	
112	1671230	1	Frame, Tubular	
113	2940088	1	Latch	
114	0721008	2	Screw, Machine #10-24NC x 1in	
115	4751000	2	Flatwasher #10 Regular	
116	3311005	2	Locknut #10-24NC	
117	0641608	6	Bolt 3/8in-16NC x 1in	
118	1321384	4	Hold Down	
119	0641606	4	Bolt 3/8in-16NC x 3/4in	
120	2600209	1	Hinge	
121	3960464	65 in /1.67m	Seal	
122	3960462	61 in /1.55m	Seal	
123	See Note	NSS	Insulation, Heat (Ford and GM Engine Only) (was p/ns 2820176 & 1001101323) (Note: Use Item 101) (Note: Cover complete inside of hood with insulation. Fasten with Item 125 Tape)	
124	See Note	NSS	Insulation, Heat (GM Engine Only) (was p/ns 2820153 & 1001101324) (Note: Use Item 101) (Note: Cover complete inside of hood with insulation. Fasten with Item 125 Tape)	
125	1001117140	AR	Tape, Aluminized Polyester (GM Engine Machines Only) **(SN 0300139210 through 03000140000)**	

ITEM	PART NUMBER	QTY	DESCRIPTION	REV
126	0100011	AR	Compound, Locking (GM Engine Machines Only) **(SN 0300139210 through 0300140000)**	
	1671228	Ref	**HOOD ASSEMBLY (TANK SIDE)**	A
		Ref	**Note: Replacement Decals Must be Ordered Separately - See DECAL SECTION.**	
201	1671231	1	Hood	
202	1671232	1	Frame, Tubular	
203	2940088	2	Latch	
204	0721008	4	Screw, Machine #10-24NC x 1in	
205	4751000	4	Flatwasher #10 Regular	
206	3311005	4	Locknut #10-24NC	
207	2600233	1	Hinge	
208	1321384	4	Hold Down	
209	0641606	9	Bolt 3/8in-16NC x 3/4in	
210	4711600	9	Flatwasher 3/8in Thin	
211	3960464	83 in /2.11m	Seal	
212	3960438	55 in/1.4m	Seal	
213	3960462	53 in/1.35m	Seal	
	0272081	Ref	**NOISE REDUCTION INSTALLATION (DEUTZ/CATERPILLAR ENGINE MACHINES) (OPTIONAL)**	4
301	2820078	1	Foam, Acoustical (Turntable Side)	

FIGURE 2-27. ENGINE TRAY JACK INSTALLATION (OPTIONAL)

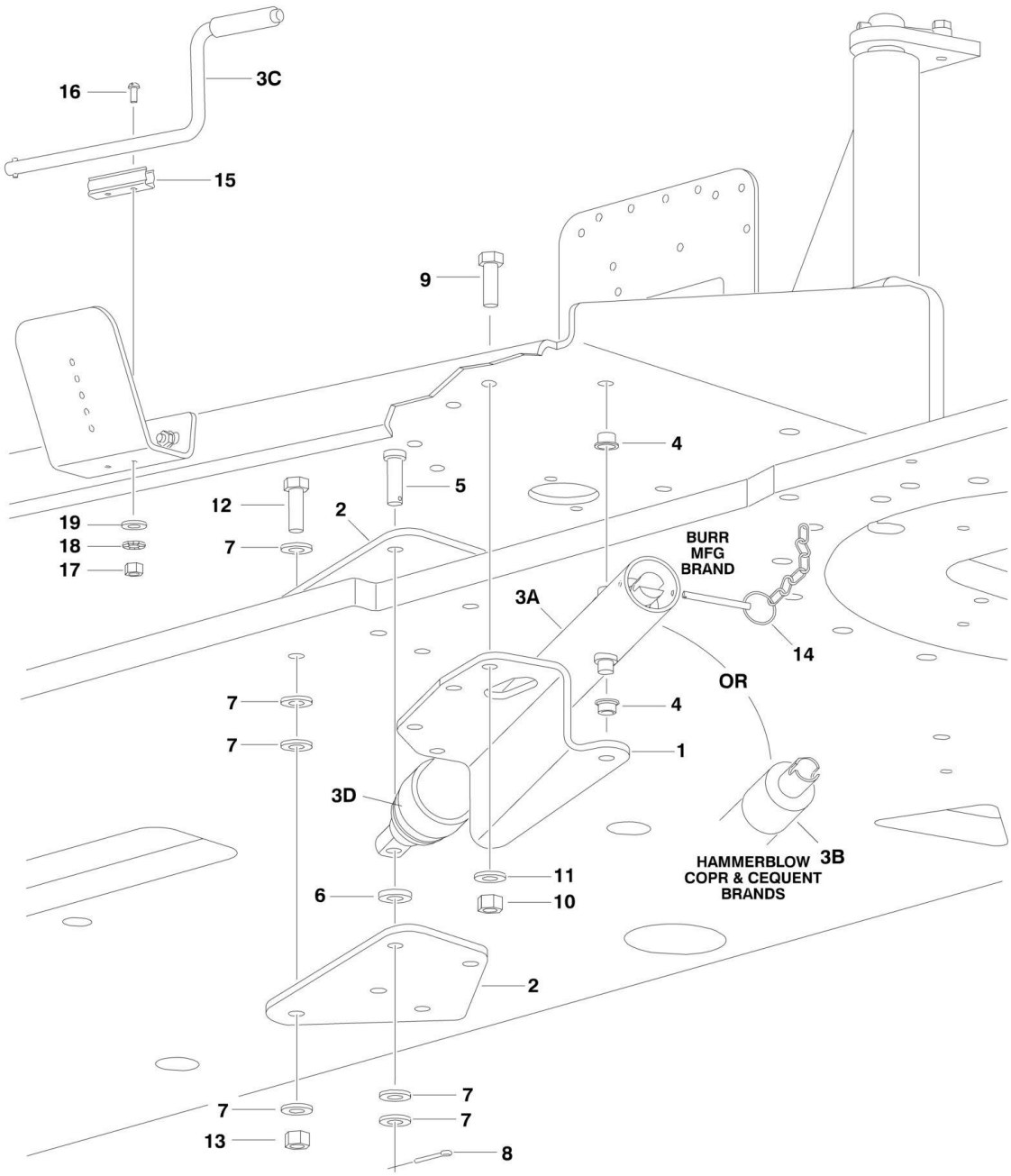

FIGURE 2-27. ENGINE TRAY JACK INSTALLATION (OPTIONAL)

ITEM	PART NUMBER	QTY	DESCRIPTION	REV
	0258728	Ref	**ENGINE TRAY JACK INSTALLATION**	2-C
1	3537445	1	Bracket	
2	3537446	2	Bracket	
3	2840016	1	Jack and Handle Assembly Options:	F
3A		Ref	Burr Manufacturing Brand	
3B		Ref	Hammerblow Corp Brand	
3C		Ref	Handle Options:	
3C	7016374	1	Burr Manufacturing Brand	
3C	7024598	1	Hammerblow Corp Brand	
3D	7016322	1	Wiper (Burr Manufacturing Brand Only)	
4	0962051	2	Bearing, Flange	
5	3430816	1	Pin, Clevis	
6	4891800	1	Washer, Hardened	
7	4711800	6	Flatwasher 1/2in Narrow	
8	3450404	1	Pin, Cotter 1/8in x 1in	
9	0641609	4	Bolt 3/8in-16NC x 1-1/8in	
10	3311605	4	Locknut 3/8in-16NC	
11	4891600	4	Washer, Hardened	
12	0641818	4	Bolt 1/2in-13NC x 2-1/4in	
13	3311805	4	Locknut 1/2in-13NC	
14	3422530	1	Pin, Hitch **(Prior to SN 0300070676)**	
15	1380147	1	Clip, Spring	
16	3910608	2	Screw, Round Head #6-32NC x 1in	
17	3310601	2	Nut #6-32NC	
18	4770600	2	Starwasher #6	
19	4740119	2	Washer, Aluminum	

FIGURE 2-28. 2500W GENERATOR INSTALLATION - CATERPILLAR MACHINES (OPTIONAL)

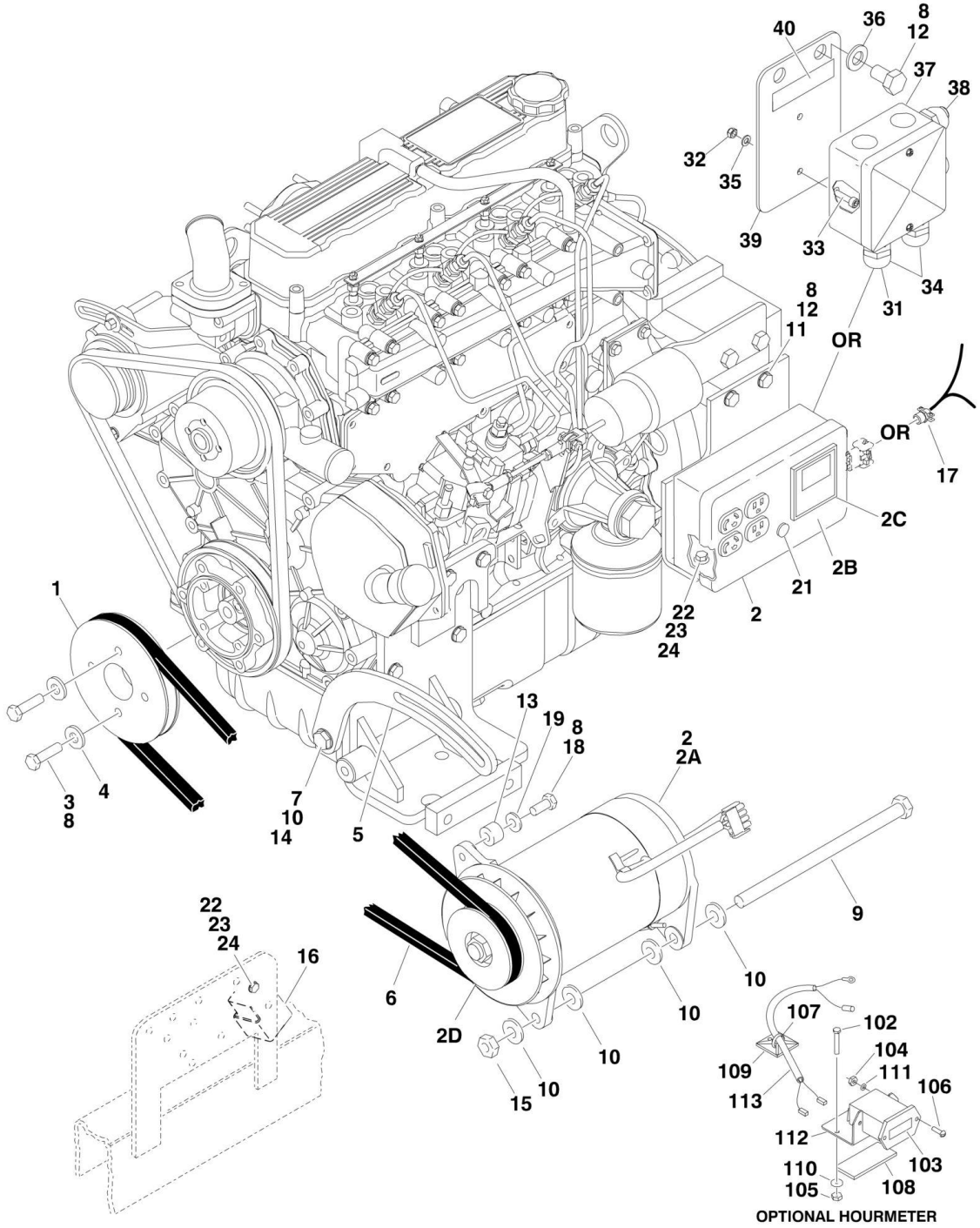

FIGURE 2-28. 2500W GENERATOR INSTALLATION - CATERPILLAR MACHINES (OPTIONAL)

ITEM	PART NUMBER	QTY	DESCRIPTION	REV
		Ref	**GENERATOR INSTALLATION OPTIONS:**	
		Ref	**ANSI Specs - 110V/60Hz**	
	0273518	Ref	**Generator Installation (Prior to SN 0300079612)**	3-C
	0274081	Ref	**Generator Installation (SN 0300079612 through 0300139397)**	1-A
	1001115404	Ref	**Generator Installation (SN 0300139398 through 0300140000)**	A
		Ref	**ANSI Export Specs - 110V/50Hz**	
	0273538	Ref	**Generator Installation (Prior to SN 0300079612)**	3-C
	0274091	Ref	**Generator Installation (SN 0300079612 through 0300132892)**	3-B
	1001102547	Ref	**Generator Installation (SN 0300132893 through 0300139397)**	B
	1001115413	Ref	**Generator Installation (SN 0300139398 through 0300140000)**	A
		Ref	**ANSI Export Specs - 220V/50Hz**	
	0273539	Ref	**Generator Installation (Prior to SN 0300079612)**	3-C
	0274087	Ref	**Generator Installation (SN 0300079612 through 0300132892)**	3-B
	1001102548	Ref	**Generator Installation (SN 0300132893 through 0300139397)**	B
	1001115414	Ref	**Generator Installation (SN 0300139398 through 0300140000)**	A
1	3580322	1	Pulley	
2		Ref	Generator and Control Box Assembly Options:	
2	2460032	1	110V/60Hz **(Prior to SN 0300079612)**	
2	2460055	1	110V/60Hz **(SN 0300079612 through 0300140000)**	
2	2460039	1	110V/50Hz **(Prior to SN 0300079612)**	
2	2460057	1	110V/50Hz **(SN 0300079612 through 0300132892)**	
2	2460049	1	110V/50Hz Generator Only **(SN 0300132893 through 0300140000)**	
2	2460013	1	220V/50Hz **(Prior to SN 0300079612)**	
2	2460056	1	220V/50Hz **(SN 0300079612 through 0300132892)**	
2	1001100321	1	220V/50Hz Generator Only **(SN 0300132893 through 0300140000)**	
2A		Ref	Generator Options:	
2A	7012558	1	110V/60Hz	
2A	2460049	1	110V/50Hz	
2A	1001100321	1	220V/50Hz	
		Ref	**Note: Replacement Generators come standard with p/n 3580134 pulley. This pulley may not be correct for all applications. Refer to pulley options below.**	
2A	7026199	1	110V/60Hz Armature with Slip Rings	
2A	70000122	1	110V/50Hz Armature with Slip Rings	
2A	70000123	1	220V/50Hz Armature with Slip Rings	
2A	7012513	4	Cap, Brush Holder	
2A	7020108	4	Brush	
2A	7020109	4	Holder, Brush	
2A	7012514	1	Fan	
2A	7020190	2	Bearing	
2A	7020110	1	End Bell, Front	
2A	7020111	1	End Bell, Rear	
2B		Ref	Box, Control Options:	
2B	7003657	1	110V/60Hz **(Prior to SN 0300079612)**	
2B	7019680	1	110V/60Hz **(SN 0300079612 through 0300140000)**	
2B	70002239	1	110V/50Hz **(Prior to SN 0300079612)**	
2B	7019680	1	110V/50Hz **(SN 0300079612 through 0300132893)**	
2B	70002235	1	220V/50Hz **(Prior to SN 0300079612)**	

SECTION 2 - TURNTABLE

ITEM	PART NUMBER	QTY	DESCRIPTION	REV
2B	70000127	1	220V/50Hz **(SN 0300079612 through 0300132893)**	
2B		Ref	Breaker, Circuit Options:	
2B	4360542	1	110V/60Hz	
2B	70002240	1	110V/50Hz **(Prior to SN 0300079612)**	
2B	4360542	1	110V/50Hz **(SN 0300079612 through 0300132893)**	
2B	70000126	1	220V/50Hz	
2B	4460190	AR	Receptacle, Double (110V Box)	
2B	4460027	AR	Receptacle, Double Twist Lock (110V Box)	
2B	70000124	1	Receptacle, Double (220V Box)	
2B	70000125	1	Receptacle, Single Twist Lock (220V Box)	
2B	2920162	1	Lamp Assembly **(Prior to SN 0300079612)**	
2B	7020191	1	Switch, Toggle **(Prior to SN 0300079612)**	
2C		Ref	Voltmeter Options:	
2C	2420203	1	110V	
2C	7020192	1	220V	
2D		Ref	Pulley Options:	
2D	3580276	1	110V/60Hz	
2D	3580134	1	110V/50Hz	
2D	3580134	1	220V/50Hz	
2D	7027887	1	Key, Woodruff	
3	0700816	4	Bolt M8 x 40mm	
4	4751900	4	Flatwasher 9/16in	
4	4811900	4	Flatwasher M8 (1001102547, 1001102548, 1001115404, 1001115413 & 1001115414 Installations Only)	
5	0200742	NLA	Arm, Adjusting (Use p/n 0200819)	
6		Ref	V-Belt Options:	
6	0480121	1	110V/60Hz	
6	0480120	1	110V/50Hz	
6	0480120	1	220V/50Hz	
7	0641610	1	Bolt 3/8in-16NC x 1-1/4in	
8	0100011	AR	Compound, Locking	
9	0641772	1	Bolt 7/16in-14NC x 9in	
10	4751600	6	Flatwasher 3/8in	
11	3574684	1	Plate, Box Mounting	
12	0701210	2	Bolt M12 x 20mm	
13	0962653	NLA	Bushing, Spacer (Use p/n 0962563)	
14	3311605	1	Locknut 3/8in-16NC	
15	3311705	1	Locknut 7/16in-14NC	
16	3740080	1	Relay	
17	4460023	1	Connector, Strain Relief **(Prior to SN 0300079612)**	
18	0641508	1	Bolt 5/16in-18NC x 1in	
19	4751500	1	Flatwasher 5/16in	
21	3520028	1	Plug, Hole	
22	0721006	AR	Bolt #10-24NC x 3/4in	
23	3311005	AR	Locknut #10-24NC	
24	4751000	AR	Flatwasher #10	
25	4360336	1	Switch, Toggle (Not Shown - Located at Platform)	
26	4740397	1	Bushing (Not Shown - Located at Platform) **(Prior to SN 0300074859)**	
27	4060802	1	Guard, Switch (Not Shown - Located at Platform)	
28		Ref	Decal - Voltage Options (Not Shown - Located at Platform):	
28	Not Required	0	110V/60Hz	

ITEM	PART NUMBER	QTY	DESCRIPTION	REV
28	1705325	1	110V/50Hz	
28	3252507	1	220V/50Hz	
29	2820031	4 in/10cm	Heat Shrink (Not Shown - Located at Platform)	
30	3251102	1	Decal (Not Shown - Located at Platform)	
		Ref	**Note: Items 31 thru 40 Used with 1001102547, 1001102548 1001115413 & 1001115414 Installations Only.**	
31	0962449	1	Bushing, Silicone	
32	3290505	1	Locknut M5	
33	4031608	2	Capscrew M5 x 20mm	
34	4460968	3	Bushing, Strain Relief	
35	4811600	2	Flatwasher M5	
36	4812100	2	Flatwasher M12	
37	1001099869	1	Box, Junction	
38		Ref	Light, Red Options:	
38	1001100233	1	110V/50Hz	
38	1001100234	1	220V/50Hz	
39	1001102644	1	Bracket, AC Junction Box	
40		Ref	Decal - Voltage Options:	
40	1705325	1	110V/50Hz	
40	3252507	1	220V/50Hz	
	1001094475	Ref	**HOURMETER INSTALLATION (OPTIONAL)**	B
102	0720808	1	Screw #8-32 x 1in	
103	2420165	1	Hourmeter	
104	3310601	2	Nut #6-32	
105	3310805	1	Locknut #8-32	
106	3910608	2	Screw #6-32 x 1/2in	
107	4240032	4	Strap, Tie	
108	4420060	3 in/7cm	Tape, Double-Sided	
109	4460234	3	Mount, Tie Strap	
110	4750800	1	Washer #8	
111	4760600	2	Lockwasher #6	
112	1001094375	1	Bracket, Hourmeter	
113	1001094509	1	Harness, Hourmeter	
114	4460018	1	Connector, Butt Splice (Not Shown)	

FIGURE 2-29. 2500W GENERATOR INSTALLATION - DEUTZ MACHINES (OPTIONAL)

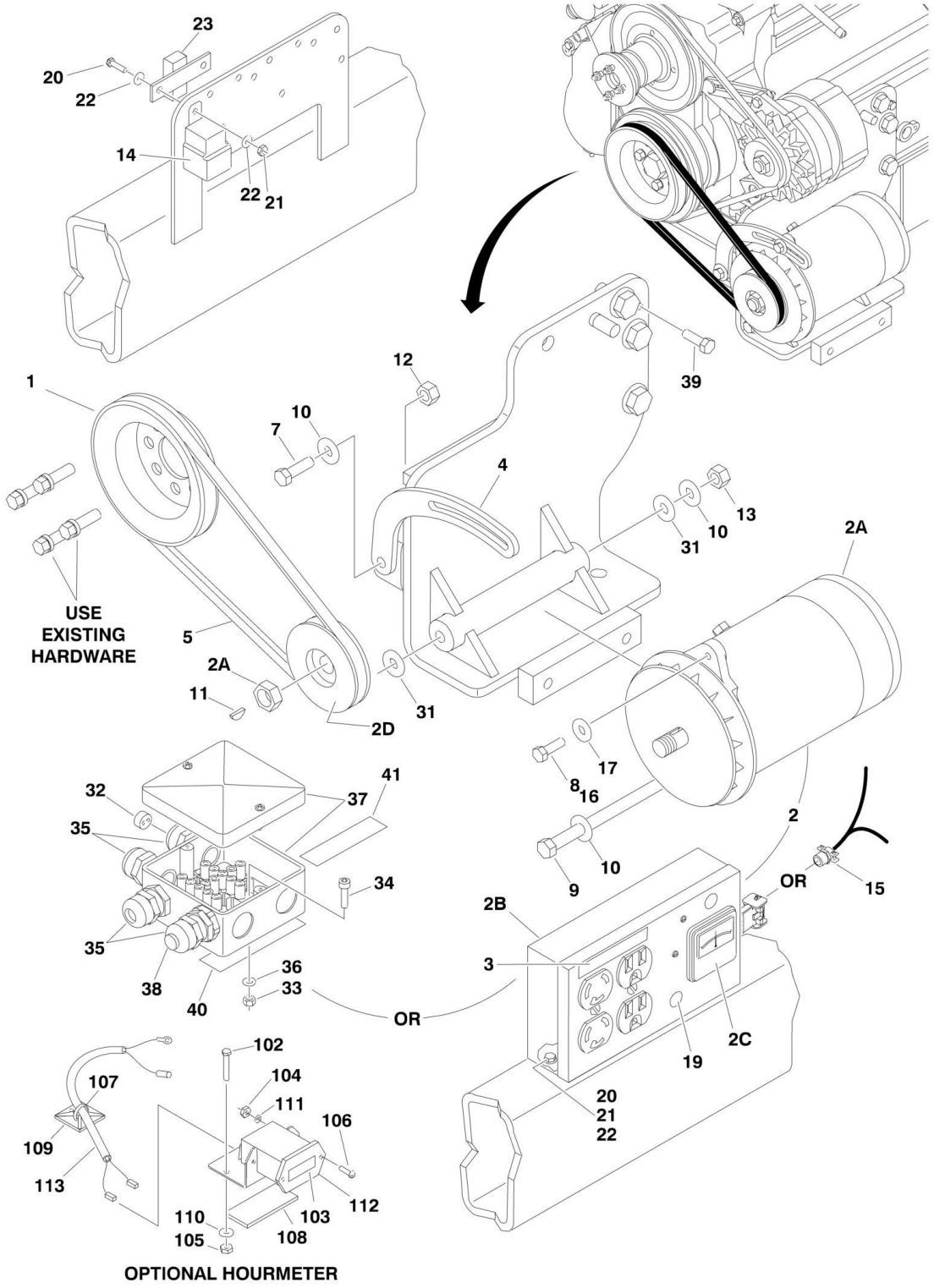

FIGURE 2-29. 2500W GENERATOR INSTALLATION - DEUTZ MACHINES (OPTIONAL)

ITEM	PART NUMBER	QTY	DESCRIPTION	REV
		Ref	**GENERATOR INSTALLATION OPTIONS:**	
		Ref	**ANSI Specs - 110V/60Hz**	
	0271544	Ref	**Generator Installation (Prior to SN 0300069570)**	3-B
	0272480	Ref	**Generator Installation (SN 0300068570 through 0300079611)**	3-B
	0274082	Ref	**Generator Installation (SN 0300079612 through 0300139079)**	3-C
	1001115405	Ref	**Generator Installation (SN 0300139080 through 0300140000)**	A
		Ref	**ANSI Export Specs - 110V/50Hz**	
	0272482	Ref	**Generator Installation (Prior to SN 0300079612)**	3-B
	0274090	Ref	**Generator Installation (SN 0300079612 through 0300122229)**	1-A
	1001100308	Ref	**Generator Installation (SN 0300122230 through 0300139079)**	D
	1001115410	Ref	**Generator Installation (SN 0300139080 through 0300140000)**	A
		Ref	**ANSI Export Specs - 220V/50Hz**	
	0271547	Ref	**Generator Installation (Prior to SN 0300069570)**	5-C
	0272481	Ref	**Generator Installation (SN 0300068570 through 0300079611)**	2-A
	0274086	Ref	**Generator Installation (SN 0300079612 through 0300122914)**	1-A
	1001099868	Ref	**Generator Installation (SN 0300122915 through 0300139079)**	D
	1001115409	Ref	**Generator Installation (SN 0300139080 through 0300140000)**	A
1	3580158	1	Pulley	
2		Ref	Generator and Control Box Assembly Options:	
2	2460011	1	110V/60Hz **(Prior to SN 0300066054)**	
2	2460032	1	110V/60Hz **(SN 0300066054 through 0300079611)**	
2	2460055	1	110V/60Hz **(SN 0300079612 through 0300140000)**	
2	2460039	1	110V/50Hz **(SN 0300068570 through 0300079611)**	
2	2460057	1	110V/50Hz **(SN 0300079612 through 0300122229)**	
2	2460049	1	110V/50Hz Generator Only **(SN 0300122230 through 0300140000)**	
2	2460013	1	220V/50Hz **(Prior to SN 0300066054)**	
2	2460034	1	220V/50Hz **(SN 0300066054 through 0300066740)**	
2	2460013	1	220V/50Hz **(SN 0300066741 through 0300079611)**	
2	2460056	1	220V/50Hz **(SN 0300079612 through 0300122914)**	
2	1001100321	1	220V/50Hz Generator Only **(SN 0300122915 through 0300140000)**	
2A		Ref	Generator Options:	
2A	7012558	1	110V/60Hz	
2A	2460049	1	110V/50Hz	
2A	1001100321	1	220V/50Hz	
		Ref	**Note: Replacement Generators come standard with p/n 3580134 pulley. This pulley may not be correct for all applications. Refer to pulley options below.**	
2A	7026199	1	110V/60Hz Armature with Slip Rings	
2A	70000122	1	110V/50Hz Armature with Slip Rings	
2A	70000123	1	220V/50Hz Armature with Slip Rings	
2A	7012513	4	Cap, Brush Holder	
2A	7020108	4	Brush	
2A	7020109	4	Holder, Brush	
2A	7012514	1	Fan	
2A	7020190	2	Bearing	
2A	7020110	1	End Bell, Front	
2A	7020111	1	End Bell, Rear	
2B		Ref	Box, Control Options:	

SECTION 2 - TURNTABLE

ITEM	PART NUMBER	QTY	DESCRIPTION	REV
2B	7003657	1	110V/60Hz **(Prior to SN 0300079612)**	
2B	7019680	1	110V/60Hz **(SN 0300079612 through 0300140000)**	
2B	70002240	1	110V/50Hz **(Prior to SN 0300079612)**	
2B	7019680	1	110V/50Hz **(SN 0300079612 through 0300136859)**	
2B	70002235	1	220V/50Hz **(Prior to SN 0300079612)**	
2B	70000127	1	220V/50Hz **(SN 0300079612 through 0300122915)**	
2B		Ref	Breaker, Circuit Options:	
2B	4360542	1	110V/60Hz	
2B	70002240	1	110V/50Hz **(Prior to SN 0300079612)**	
2B	4360542	1	110V/50Hz **(SN 0300079612 through 0300136859)**	
2B	70000126	1	220V/50Hz	
2B	4460190	AR	Receptacle, Double (110V Box)	
2B	4460027	AR	Receptacle, Double Twist Lock (110V Box)	
2B	70000124	1	Receptacle, Double (220V Box)	
2B	70000125	1	Receptacle, Single Twist Lock (220V Box)	
2B	2920162	1	Lamp Assembly **(Prior to SN 0300079612)**	
2B	7020191	1	Switch, Toggle **(Prior to SN 0300079612)**	
2C		Ref	Voltmeter Options:	
2C	2420203	1	110V	
2C	7020192	1	220V	
2D		Ref	Pulley Options:	
2D	3580134	1	110V/60Hz **(Prior to SN 0300066054)**	
2D	3580276	1	110V/60Hz **(SN 0300066054 through 0300140000)**	
2D	3580134	1	110V/50Hz	
2D	3580134	1	220V/50Hz **(Prior to SN 0300066054)**	
2D	3580276	1	220V/50Hz **(SN 0300066054 through 0300066740)**	
2D	3580134	1	220V/50Hz **(SN 0300066741 through 0300140000)**	
3	3251243	1	Decal - 120V - 60Hz **(SN 0300094410 through 0300140000)**	
4		Ref	Arm, Adjusting Options:	
4	0200741	1	Arm, Adjusting **(Prior to SN 0300069570)**	
4	0200742	1	Arm, Adjusting **(SN 0300069570 through 0300140000)**	
5		Ref	V-Belt Options:	
5		Ref	110V/60Hz	
5	0480119	1	V-Belt **(Prior to SN 0300066054)**	
5	0480111	1	V-Belt **(SN 0300066054 through 0300069569)**	
5	0480121	1	V-Belt **(SN 0300069570 through 0300140000)**	
5		Ref	110V/50Hz	
5	0480120	1	V-Belt **(Prior to SN 0300069570)**	
5	0480121	1	V-Belt **(SN 0300069570 through 0300140000)**	
5		Ref	220V/50Hz	
5	0480119	1	V-Belt **(Prior to SN 0300066054)**	
5	0480050	1	V-Belt **(SN 0300066054 through 0300066740)**	
5	0480119	1	V-Belt **(SN 0300066741 through 0300069569)**	
5	0480121	1	V-Belt **(SN 0300069570 through 0300140000)**	
7	0641610	1	Bolt 3/8in-16NC x 1-1/4in	
8	0100011	AR	Compound, Locking	
9	0641772	1	Bolt 7/16in-14NC x 9in	
10	4751600	6	Flatwasher 3/8in	
11	2860012	1	Key, Woodruff	
12	3311605	1	Locknut 3/8in-16NC	
13	3311705	1	Locknut 7/16in-14NC	

ITEM	PART NUMBER	QTY	DESCRIPTION	REV
14	3740080	1	Relay	
15	4460023	1	Connector, Strain Relief **(Prior to SN 0300079612)**	
16	0641508	1	Bolt 5/16in-18NC x 1in	
17	4751500	1	Flatwasher 5/16in	
19	3520028	1	Plug, Hole (ANSI Specs Only)	
20	0721006	AR	Bolt #10-24NC x 3/4in	
21	3311005	AR	Locknut #10-24NC	
22	4751000	AR	Flatwasher #10	
23	4360294	1	Breaker, Circuit - 30Amp **(Prior to SN 0300079612)**	
25	4360336	1	Switch, Toggle (Not Shown - Located at Platform)	
26	4740397	1	Bushing (Not Shown - Located at Platform)	
27	4060802	1	Guard, Switch (Not Shown - Located at Platform)	
28	3252507	1	Decal - 220V-50/60Hz (Not Shown - Located at Turntable) (220V/50Hz Generator Only)	
28	1705325	1	Decal - 120V-50Hz (Not Shown - Located at Turntable) (110V/50Hz Generator Only) **(Prior to SN 0300079612)**	
29	2820031	4 in/10cm	Heat Shrink (Not Shown - Located at Platform)	
30	3251102	1	Decal (Not Shown - Located at Platform)	
31	4070585	AR	Shim **(SN 0300094410 through 0300140000)**	
		Ref	**Note: Items 32 thru 41 Used with 1001100308, 1001115410, 1001099868 & 1001115409 Installations Only.**	
32	0962449	1	Bushing, Silicone	
33	3290505	1	Locknut M5	
34	4031608	1	Capscrew M5 x 20mm	
35	4460968	4	Bushing, Strain Relief	
36	4811600	1	Flatwasher M5	
37	1001099869	1	Box, Junction	
38		Ref	Light, Red Options:	
38	1001100233	1	110V/50Hz	
38	1001100234	1	220V/50Hz	
39	0641404	1	Bolt 1/4in-20NC x 1/2in	
40	4420060	AR	Tape, Double Sided	
41		Ref	Decal Options:	
41	3252507	1	Decal - 220V-50/60Hz	
41	1705325	1	Decal - 120V-50Hz	
	1001094475	Ref	**HOURMETER INSTALLATION (OPTIONAL)**	B
102	0720808	1	Screw #8-32 x 1in	
103	2420165	1	Hourmeter	
104	3310601	2	Nut #6-32	
105	3310805	1	Locknut #8-32	
106	3910608	2	Screw #6-32 x 1/2in	
107	4240032	4	Strap, Tie	
108	4420060	3 in/7cm	Tape, Double-Sided	
109	4460234	3	Mount, Tie Strap	
110	4750800	1	Washer #8	
111	4760600	2	Lockwasher #6	
112	1001094375	1	Bracket, Hourmeter	
113	1001094509	1	Harness, Hourmeter	
114	4460018	1	Connector, Butt Splice (Not Shown)	

FIGURE 2-30. 2500W GENERATOR INSTALLATION - FORD MACHINES (OPTIONAL) (Prior to SN 0300079612)

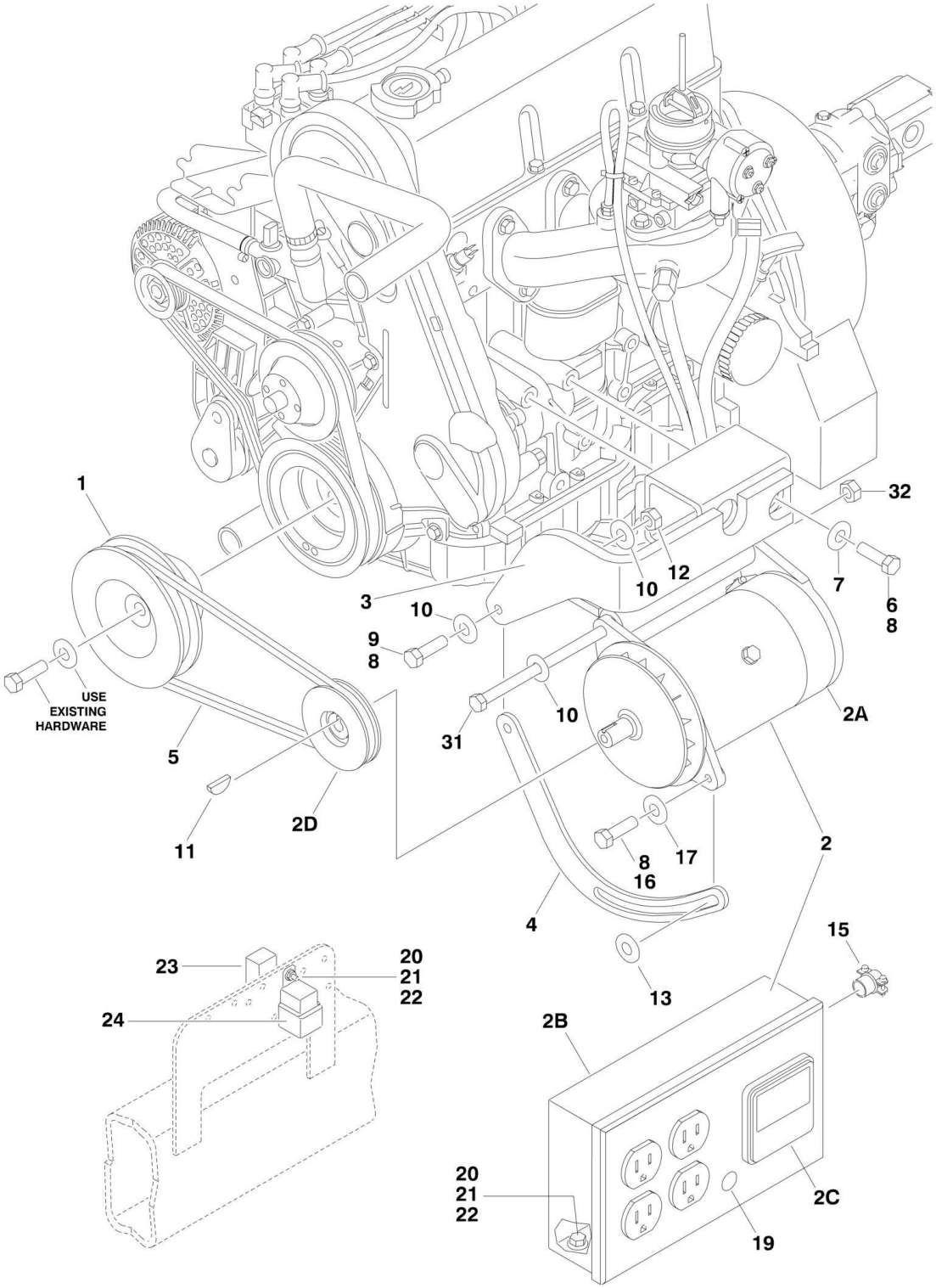

FIGURE 2-30. 2500W GENERATOR INSTALLATION - FORD MACHINES (OPTIONAL) (Prior to SN 0300079612)

ITEM	PART NUMBER	QTY	DESCRIPTION	REV
		Ref	**GENERATOR INSTALLATION OPTIONS:**	
	0271545	Ref	**110V/60Hz Generator**	5-D
	0271546	Ref	**220V/50Hz Generator**	4-C
1	3580250	1	Pulley	
2		Ref	Generator and Control Box Assembly Options:	
2	2460011	1	Generator and Control Box Assembly 110V/60Hz **(Prior to SN 0300066054)**	
2	2460032	1	Generator and Control Box Assembly 110V/60Hz **(SN 0300066054 through 0300069569)**	
2	2460044	1	Generator and Control Box Assembly 110V/60Hz **(SN 0300069570 through 0300079612)**	
2	2460013	1	Generator and Control Box Assembly 220V/50Hz **(Prior to SN 0300066054)**	
2	2460034	1	Generator and Control Box Assembly 220V/50Hz **(SN 0300066054 through 0300066740)**	
2	2460013	1	Generator and Control Box Assembly 220V/50Hz **(SN 0300066741 through 0300079612)**	
2A		Ref	Generator Options:	
2A	7012558	1	110V/60Hz	
2A	1001100321	1	220V/50Hz	
		Ref	**Note: Replacement Generators come standard with p/n 3580134 pulley. This pulley may not be correct for all applications. Refer to pulley options below.**	
2A	7026199	1	110V/60Hz Armature with Slip Rings	
2A	70000123	1	220V/50Hz Armature with Slip Rings	
2A	7012513	4	Cap, Brush Holder	
2A	7020108	4	Brush	
2A	7020109	4	Holder, Brush	
2A	7012514	1	Fan	
2A	7020190	2	Bearing	
2A	7020110	1	End Bell, Front	
2A	7020111	1	End Bell, Rear	
2B		Ref	Box, Control Options:	
2B	7003657	1	110V/60Hz	
2B	70002235	1	220V/50Hz	
2B		Ref	Breaker, Circuit Options:	
2B	4360542	1	110V/60Hz	
2B	70000126	1	220V/50Hz	
2B	4460190	2	Receptacle, Double (110V Box)	
2B	70000124	1	Receptacle, Double (220V Box)	
2B	70000125	1	Receptacle, Single Twist Lock (220V Box)	
2B	2920162	1	Lamp Assembly	
2B	7020191	1	Switch, Toggle	
2C		Ref	Voltmeter Options:	
2C	2420203	1	110V/60Hz	
2C	7020192	1	220V/50Hz	
2D	3580134	1	Pulley	
2D	7027887	1	Key, Woodruff	
3	0902756	1	Bracket, Generator Mounting	
4	0200547	1	Arm, Adjusting	

SECTION 2 - TURNTABLE

ITEM	PART NUMBER	QTY	DESCRIPTION	REV
5		Ref	V-Belt Options:	
5		Ref	110V/60Hz	
5	0480050	1	V-Belt **(Prior to SN 0300066054)**	
5	0480111	1	V-Belt **(SN 0300066054 through 0300073379)**	
5	0480134	1	V-Belt **(SN 0300073380 through 0300079612)**	
5		Ref	220V/50Hz	
5	0480050	1	V-Belt **(Prior to SN 0300066054)**	
5	0480111	1	V-Belt **(SN 0300066054 through 0300066740)**	
5	0480050	1	V-Belt **(SN 0300066741 through 0300079612)**	
6	0701015	2	Bolt M10 x 35mm	
7	4812000	2	Flatwasher M10	
8	0100011	AR	Compound, Locking	
9	0681612	1	Bolt 3/8in-16NC x 1-1/2in (Grade 8)	
10	4751600	6	Flatwasher 3/8in Regular	
11	2860012	1	Key, Woodruff	
12	3311605	1	Locknut 3/8in-16NC	
13	4564417	1	Spacer, Tube	
14	3251243	1	Nameplate - 120V-60Hz (110V Generator Only) (Not Shown)	
15	4460023	1	Connector, Strain Relief	
16	0641508	1	Bolt 5/16in-18NC x 1in	
17	4751500	2	Flatwasher 5/16in Regular	
19	3520028	1	Plug, Hole	
20	0721006	4	Bolt #10-24NC x 3/4in	
21	3311005	4	Locknut #10-24NC	
22	4751000	9	Flatwasher #10 Regular	
23	4360294	1	Breaker, Circuit - 30Amp	
24	3740080	1	Relay, Bosch	
25	4360336	1	Switch, Toggle (Not Shown - Located at Platform)	
26	4740397	1	Bushing (Not Shown - Located at Platform)	
27	4060802	1	Guard, Switch (Not Shown - Located at Platform)	
29	2820031	4 in/10cm	Heat Shrink (Not Shown - Located at Platform)	
30	3251102	1	Decal (Not Shown - Located at Platform)	
31	0641772	1	Bolt 7/16in-14NC x 9in	
32	3311705	1	Locknut 7/16in-14NC	

FIGURE 2-31. 2500W GENERATOR INSTALLATION - FORD MACHINES (OPTIONAL) (SN 0300079612 through 0300140000)

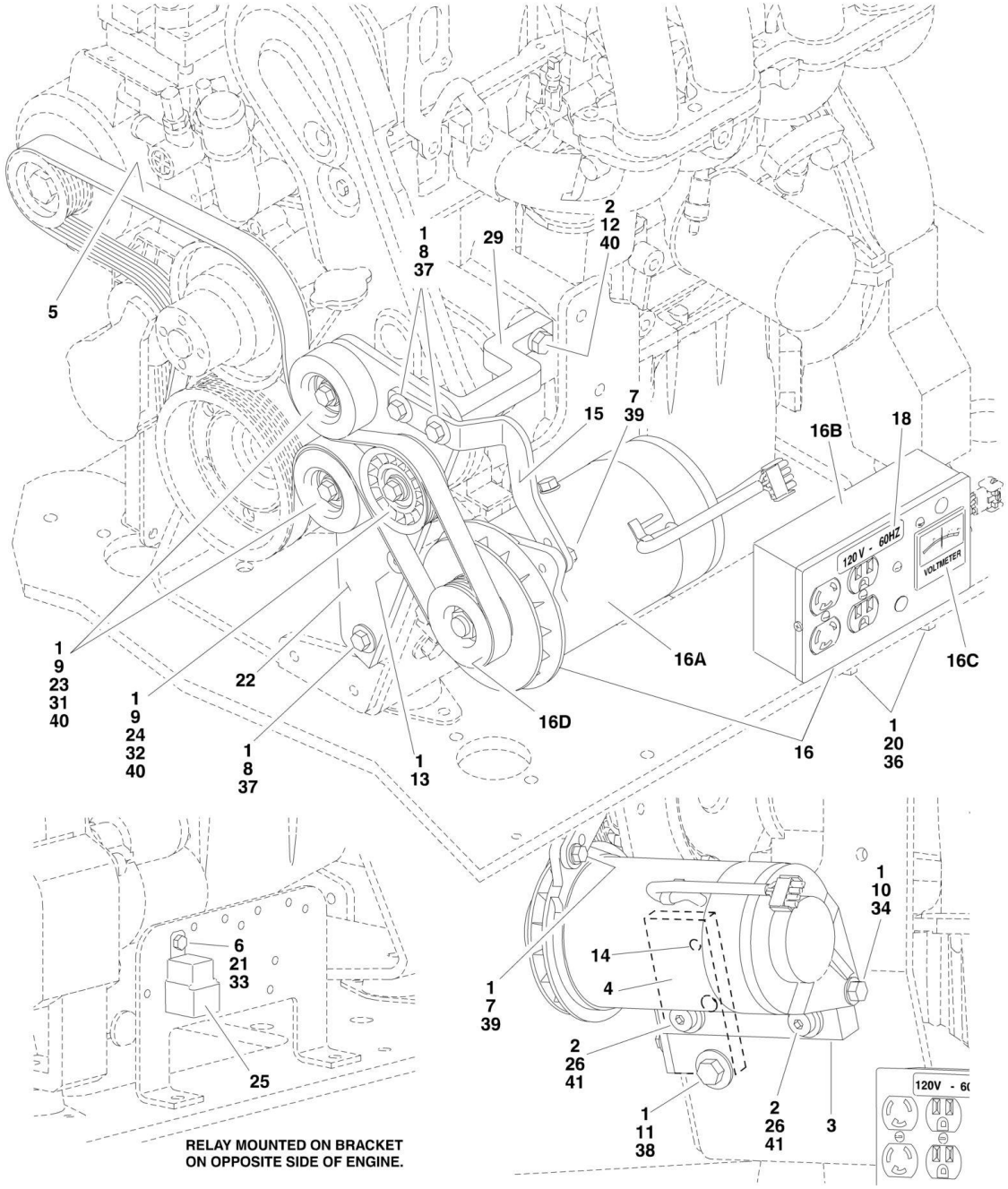

FIGURE 2-31. 2500W GENERATOR INSTALLATION - FORD MACHINES (OPTIONAL) (SN 0300079612 through 0300140000)

ITEM	PART NUMBER	QTY	DESCRIPTION	REV
		Ref	**GENERATOR INSTALLATION OPTIONS:**	
	0273507	Ref	**110V/60Hz Generator**	C
	0273511	Ref	**220V/50Hz Generator**	D
1	0100011	AR	Compound, Locking	
2	0100019	AR	Compound, Locking	
3	0363082	1	Bar, Generator Adjuster	
4	0363097	1	Bar, Pulley Mounting	
5	0480135	1	V-Belt	
6	0641405	1	Bolt 1/4in-20NC x 5/8in	
7	0641508	1	Bolt 5/16in-18NC x 1in	
8	0641611	3	Bolt 3/8in-16NC x 1-3/8in	
9	0641612	3	Bolt 3/8in-16NC x 1-1/2in	
10	0641718	2	Bolt 7/16in-14NC x 2-1/4in	
11	0641810	1	Bolt 1/2in-13NC x 1-1/4in	
12	0701015	1	Bolt M10 x 35mm	
13	0741606	1	Screw, Countersunk 3/8in-16NC x 3/4in	
14	0741808	1	Screw, Countersunk 1/2in-13NC x 1in	
15	0902952	1	Bracket, Generator Mounting	
16		Ref	Generator and Control Box Assembly Options:	
16	2460051	1	110V/60Hz	
16	2460052	1	220V/50Hz	
16A		Ref	Generator Options:	
16A	7012558	1	110V/60Hz	
16A	1001100321	1	220V/50Hz	
		Ref	**Note: Replacement Generators come standard with p/n 3580134 pulley. This pulley may not be correct for all applications. Refer to pulley options below.**	
16A	7020109	4	Holder, Brush	
16A	7020108	4	Brush	
16A	7012513	4	Cap, Brush Holder	
16A	7012514	1	Fan	
16A	7020190	2	Bearing	
16A	7020110	1	End Bell, Front	
16A	7020111	1	End Bell, Rear	
16B		Ref	Box, Control Options:	
16B	7019680	1	110V/60Hz	
16B	70000127	1	220V/50Hz	
16B		Ref	Breaker, Circuit Options:	
16B	4360542	1	110V/60Hz	
16B	70000126	1	220V/50Hz	
16B	4460190	1	Receptacle, Double (110V Box)	
16B	4460027	1	Receptacle, Double Twist Lock (110V Box)	
16B	70000124	1	Receptacle, Double (220V Box)	
16B	70000125	1	Receptacle, Single Twist Lock (220V Box)	
16C		Ref	Voltmeter Options:	
16C	2420203	1	110V	
16C	7020192	1	220V	
16D		Ref	Pulley Options:	
16D	3580324	1	110V/60Hz	

SECTION 2 - TURNTABLE

ITEM	PART NUMBER	QTY	DESCRIPTION	REV
16D	3580325	1	220V/50Hz	
16D	7027887	1	Key, Woodruff	
17	2820031	AR	Heat Shrink (Not Shown - Located at Platform)	
18		Ref	Decal Options:	
18	1702590	1	110Volt Generator	
18	3251243	1	220Volt Generator	
19		Ref	Nameplate Options (Not Shown - Located at Platform):	
19	3252764	1	Nameplate **(Prior to SN 0300085037)**	
19	3251102	1	Nameplate **(SN 0300085037 through 0300140000)**	
20	3311005	2	Locknut #10-24NC	
21	3311405	1	Locknut 1/4in-20NC	
22	3574225	1	Plate, Pulley Mounting	
23	3580312	1	Pulley, Idler	
24	3580313	1	Pulley, Grooved Idler	
25	3740080	1	Relay, Bosch	
26	3900322	2	Screw, Shoulder	
27	4060802	1	Guard, Switch (Not Shown - Located at Platform)	
28	4240018	AR	Tie-Strap	
29	4340738	1	Support, Idler Pulley	
30	4360336	1	Switch, Toggle (Not Shown - Located at Platform)	
31	4568734	1	Spacer, Tube (Idler Pulley Non-Grooved)	
32	4568735	1	Spacer, Tube (Idler Pulley Grooved)	
33	4711400	1	Flatwasher 1/4in Thin	
34	4711700	2	Flatwasher 7/16in Thin	
35	4740397	1	Spacer	
36	4751000	2	Flatwasher #10 Regular	
37	4751600	3	Flatwasher 3/8in Regular	
38	4751800	1	Flatwasher 1/2in Regular	
39	4891500	1	Flatwasher 5/16in Hardened	
40	4891600	4	Flatwasher 3/8in Hardened	
41	4892000	2	Flatwasher 5/8in Hardened	

FIGURE 2-32. 2500W GENERATOR INSTALLATION - GM MACHINES (OPTIONAL)

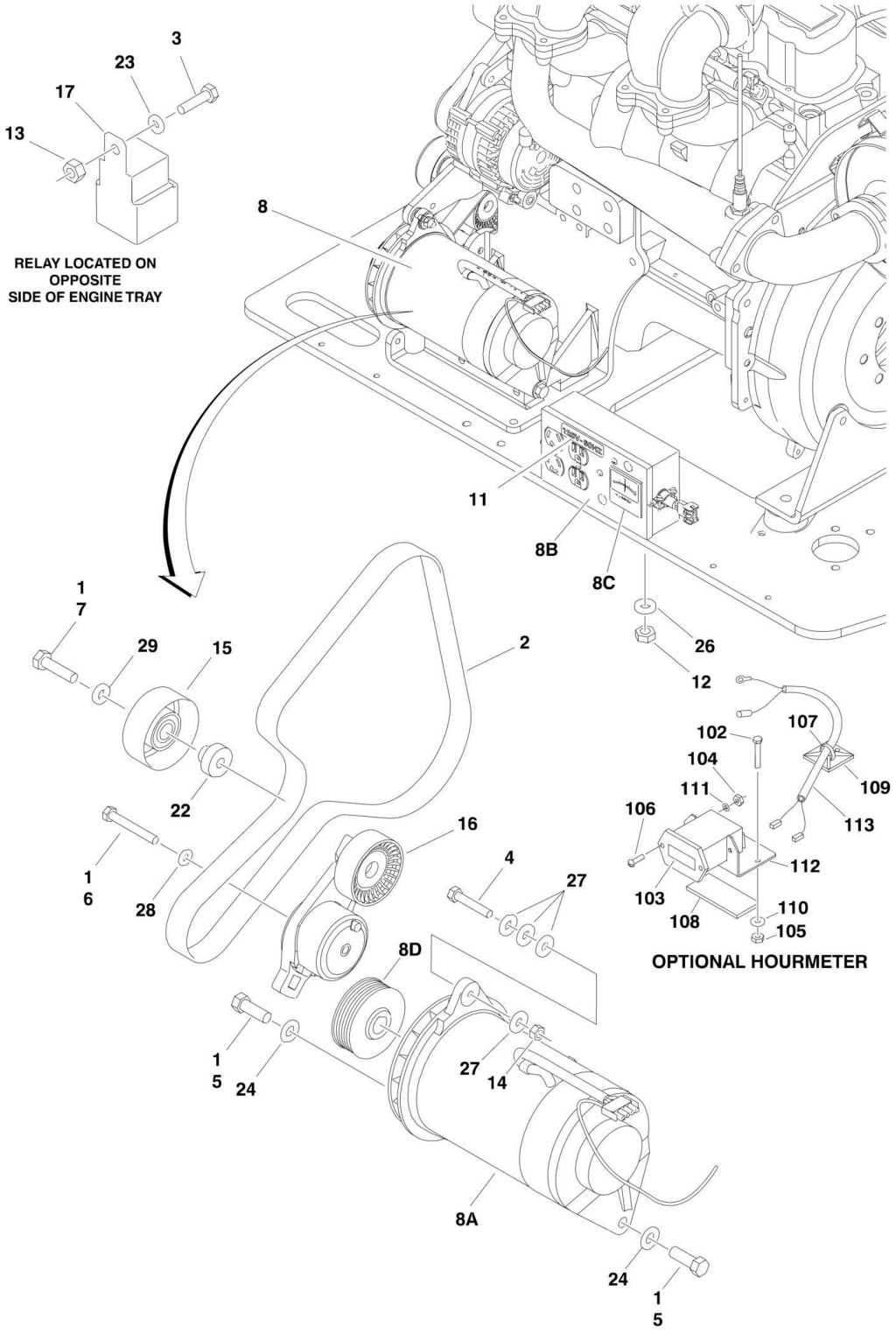

FIGURE 2-32. 2500W GENERATOR INSTALLATION - GM MACHINES (OPTIONAL)

ITEM	PART NUMBER	QTY	DESCRIPTION	REV
		Ref	**GENERATOR INSTALLATION OPTIONS:**	
	0275039	Ref	**110V Generator**	E
	See Note	Ref	**220V Generator (Note: Not Available)**	
1	0100011	AR	Compound, Locking	
2	0480142	1	V-Belt	
3	0641405	1	Bolt 1/4in-20NC x 5/8in	
4	0641510	1	Bolt 5/16in-18NC x 1-1/4in	
5	0641710	2	Bolt 7/16in-14NC x 1-1/4in	
6	0700820	1	Bolt 8mm x 60mm	
7	0701016	1	Bolt 10mm x 340mm	
8	2460051	1	Generator and Control Box Assembly	
8A	7012558	1	Generator	
		Ref	**Note: Replacement Generators come standard with p/n 3580134 pulley. This pulley may not be correct for all applications. Refer to pulley options below.**	
8A	7026199	1	Armature with Slip Rings	
8A	7020109	4	Holder, Brush	
8A	7020108	4	Brush	
8A	7012513	4	Cap, Brush Holder	
8A	7012514	1	Fan	
8A	7020190	2	Bearing	
8A	7020110	1	End Bell, Front	
8A	7020111	1	End Bell, Rear	
8B	7019680	1	Box Control	
8B	4360542	1	Breaker, Circuit	
8B	4460190	1	Receptacle, Double (110V Box)	
8B	4460027	1	Receptacle, Double Twist Lock (110V Box)	
8C	2420203	1	Voltmeter	
8D	3580324	1	Pulley	
8D	7027887	1	Key, Woodruff	
9	2820031	AR	Heat Shrink (Not Shown - Located at Platform)	
10	3251102	1	Nameplate - Generator (Not Shown - Located at Platform)	
11	3251243	1	Decal	
12	3311005	2	Locknut # 10-24NC	
13	3311405	1	Locknut 1/4in-20NC	
14	3311505	1	Locknut 5/16in-18NC	
15	3580312	1	Pulley, Idler	
16	3580348	1	Tensioner, Belt	
17	3740080	1	Relay, Bosch	
18	4060802	1	Guard, Switch (Not Shown - Located at Platform)	
19	4240018	AR	Tie-Strap (Not Shown)	
20	4360336	1	Switch, Toggle (Not Shown - Located at Platform)	
21	4460906	3	Terminal (Not Shown)	
22	4568735	1	Spacer, Tube (Idler Pulley Grooved)	
23	4711400	1	Flatwasher 1/4in Thin	
24	4711700	2	Flatwasher 7/16in Thin	
25	4740397	1	Spacer (Not Shown - Located at Platform)	
26	4751000	2	Flatwasher #10 Regular	
27	4751500	4	Flatwasher 5/16in Regular	
28	4811900	1	Flatwasher M8	

SECTION 2 - TURNTABLE

ITEM	PART NUMBER	QTY	DESCRIPTION	REV
29	4891600	1	Flatwasher 3/8in Hardened	
	1001094475	Ref	**HOURMETER INSTALLATION (OPTIONAL)**	B
102	0720808	1	Screw #8-32 x 1in	
103	2420165	1	Hourmeter	
104	3310601	2	Nut #6-32	
105	3310805	1	Locknut #8-32	
106	3910608	2	Screw #6-32 x 1/2in	
107	4240032	4	Strap, Tie	
108	4420060	3 in/7cm	Tape, Double-Sided	
109	4460234	3	Mount, Tie Strap	
110	4750800	1	Flatwasher #8 Regular	
111	4760600	2	Lockwasher #6	
112	1001094375	1	Bracket, Hourmeter	
113	1001094509	1	Harness, Hourmeter	
114	4460018	1	Connector, Butt Splice (Not Shown)	

FIGURE 2-33. 7500W SKYPOWER GENERATOR INSTALLATION - CATERPILLAR AND DEUTZ ENGINES

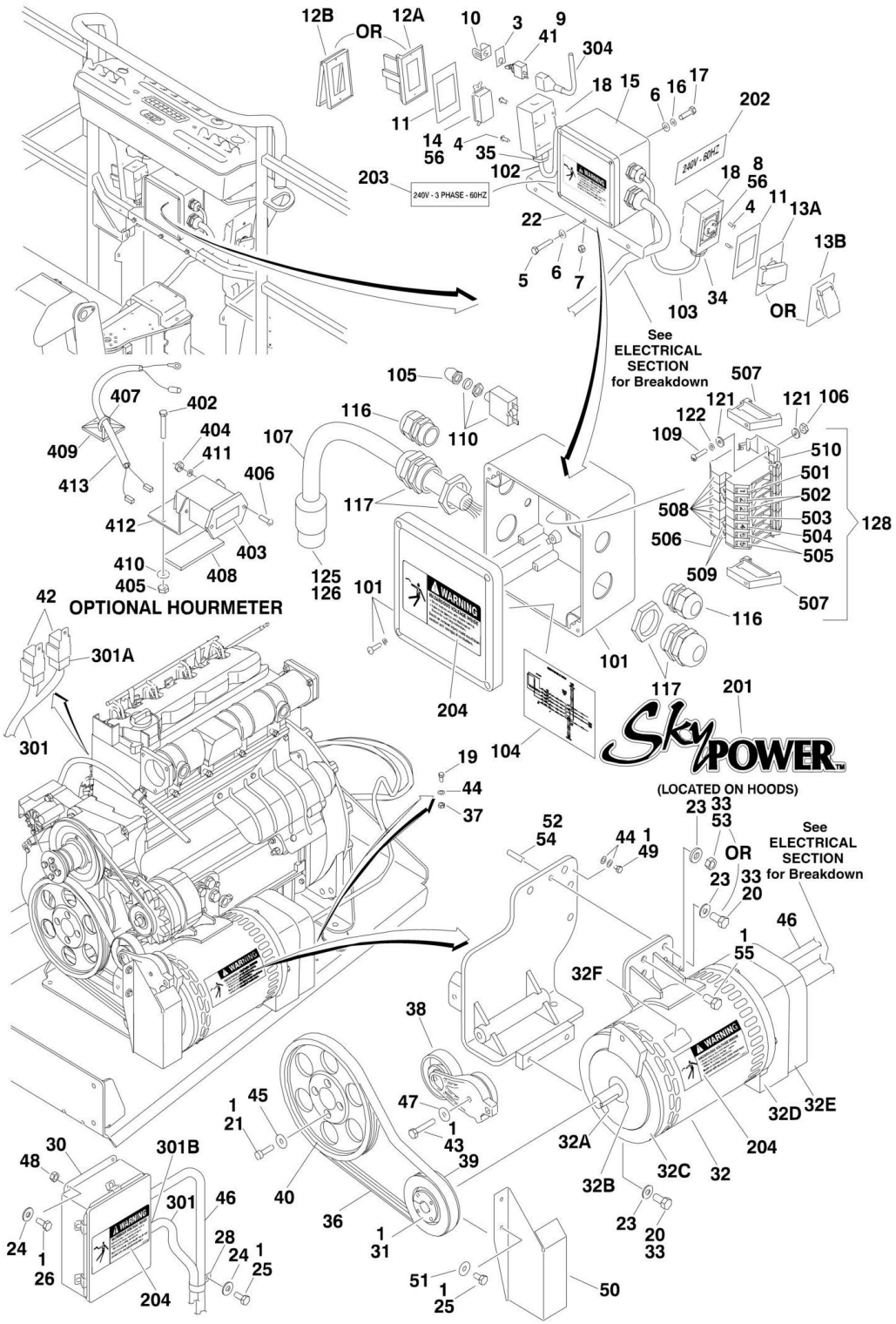

FIGURE 2-33. 7500W SKYPOWER GENERATOR INSTALLATION - CATERPILLAR AND DEUTZ ENGINES

ITEM	PART NUMBER	QTY	DESCRIPTION	REV
		Ref	**7500W SKYPOWER GENERATOR INSTALLATION**	
	0273540	Ref	**60Hz and Caterpillar Engine (Prior to SN 0300139398)**	J
	1001115398	Ref	**60Hz and Caterpillar Engine (SN 0300139398 through 0300140000)**	A
	0272344	Ref	**60Hz and Deutz Engine (Prior to SN 0300139080)**	I
	1001115388	Ref	**60Hz and Deutz Engine (SN 0300139080 through 0300140000)**	A
		Ref	**Note: SkyPower Generator is Standard On ANSI and CSA Specs. Optional on All Other Specs.**	
1	0100011	AR	Compound, Locking	
3	3252764	1	Nameplate	
4	3910606	8	Screw #6-32NC x 3/8in	
5	0641516	3	Bolt 5/16in-18NC x 2in	
6		Ref	Flatwasher Options:	
6	4711500	10	Flatwasher 5/16in Narrow (Caterpillar Engine)	
6	4751500	7	Flatwasher 5/16in Wide (Deutz Engine)	
7		Ref	Locknut Options:	
7	3311505	3	Locknut 5/16in-18NC (Caterpillar Engine)	
7	3311508	3	Nut 5/16in-18NC (Deutz Engine)	
8	4460958	1	Receptacle, Female Twist-Lock	
9	4360336	1	Switch, Toggle	
10	4060802	1	Guard, Switch	
11	3960422	2	Gasket	
12		Ref	Cover, Receptacle Options:	
12A	4060700	1	Cover, Side Hinged **(Prior to SN 0300138287)**	
12B	1001110873	1	Cover, Top Hinged **(SN 0300138287 through 0300140000)**	
13		Ref	Cover, Receptacle Options:	
13A	4061043	1	Cover, Side Hinged **(Prior to SN 0300138287)**	
13B	1001110872	1	Cover, Top Hinged **(SN 0300138287 through 0300140000)**	
14	4460346	1	Receptacle	
15	0861542	1	Junction Box Assembly (See Items 101-128 for Breakdown)	
16	4761500	4	Flatwasher 5/16in (Caterpillar Engine Only)	
17		Ref	Bolt Options:	
17	0641505	4	Bolt 5/16in-18NC x 5/8in (Caterpillar Engine)	
17	0641508	4	Bolt 5/16in-18NC x 1in (Deutz Engine)	
18	0860038	2	Box, Switch	
19	0641406	1	Bolt 1/4in-20NC x 3/4in (Caterpillar Engine Only)	
20	0641808	AR	Bolt 1/2in-13NC x 1in	
21		Ref	Bolt, Metric Options:	
21	0700815	4	Caterpillar Engine (Bolt M8 x 35mm)	
21	4032015	4	Deutz Engine (Capscrew M10 x 55mm)	
22	0902888	1	Bracket, Box Mounting	
23	4711800	AR	Flatwasher 1/2in Thin	
24		Ref	Flatwasher Options:	
24	4711400	5	Flatwasher 1/4in Thin (Caterpillar Engine)	
24	4751400	8	Flatwasher 1/4in Regular (Deutz Engine)	
25	0641404	AR	Bolt 1/4in-20NC x 1/2in	
26		Ref	Bolt Options:	
26	0641404	4	Bolt 1/4in-20NC x 1/2in (Caterpillar Engine)	
26	0641405	4	Bolt 1/4in-20NC x 5/8in (Deutz Engine)	

ITEM	PART NUMBER	QTY	DESCRIPTION	REV
28		Ref	Clamp Options:	
28	1320224	AR	Caterpillar Engine (Insulated Metal Clamp Used) **(Prior to SN 0300129315)**	
28	1320318	AR	Caterpillar Engine (Plastic Clamp Used) **(SN 0300129315 through 0300140000)**	
28	Not Required	0	Deutz Engine	
29	4240018	AR	Tie-Strap (Not Shown)	
30	0861538	1	Control Box Assembly (was p/n 7024487):	
30	7024488	1	Card, Circuit - Generator Power	
30	See Note	NSS	Fuse (Note: Not Available - Purchase Locally)	
30	7024489	1	Card, Circuit - Control	
30	70000619	1	Harness, Control Box (Internal)	
31	0962520	1	Bushing, Split Taper	
32		Ref	Generator Assembly Options:	
32	2460050	1	Caterpillar Engine	
32	2460041	1	Deutz Engine **(Prior to SN 0300075305)**	
32	2460048	1	Deutz Engine **(SN 0300075305 through 0300140000)**	
32	70001100	1	Rotor (Includes p/n 70001384 & 70000863) (Not Shown)	
32	70001384	1	Bearing, Ball Radial (Not Shown)	
32	70000863	1	Fan (Not Shown)	
32		Ref	Stator Options (Not Shown):	
32	70001969	1	2460050 Generator	
32	70002088	1	2460048 Generator	
32	70002297	1	Stud (Not Shown)	
32	7024484	1	Brushholder Assembly (Not Shown)	
32A	70004171	1	Key (was p/n 7024561)	
32B	70001966	1	Bearing, Ball Redial (Located in Belt Tensioner Endbell)	
32B	70003708	1	Ring, Internal Retaining (Located in Belt Tensioner Endbell)	
32B	70003709	1	Ring, External Retaining (Located in Belt Tensioner Endbell)	
32C	70001953	1	Endbell, Belt Tensioner	
32D		Ref	Endbell, Brush Block Options (was p/n 70001385):	
32D	70004170	1	Caterpillar Engine Machines	
32D	70004169	1	Deutz Engine Machines	
32E		Ref	Shroud Assembly Endbell (Rear) Options:	
32E	70004170	1	Caterpillar Engine (was p/ns 70001970 & 70001971)	
32E	70004169	1	Deutz Engine (was p/n 70002290)	
32E	7027799	1	Block, Connection - 6 Position (Not Shown)	
32E	70002460	6	Nut, Brass (Attaches p/n 7027799 to Cover) (Not Shown)	
32E	7024485	1	Breaker, Circuit 30Amp (Not Shown)	
32E	70001696	1	Boot, Breaker (Not Shown)	
32E	7026626	1	Connector, 6 Position (Includes Seal) (Not Shown - Plugs into Item 46)	
32E	7026597	1	Connector, with Lead (Not Shown)	
32E	7026188	1	Connector, Clamp (Not Shown)	
32E		Ref	Panel, End Options (Not Shown):	
32E	70004170	1	Caterpillar Engine (was p/n 70001972)	
32E	70004169	1	Deutz Engine (was p/n 70002255)	
32E	70001974	1	Decal - Terminal Connections (Not Shown)	
32F	70001973	1	Decal - Warning Moving Parts	
33	0100019	AR	Compound, Locking	
34	4460051	1	Connector, Strain Relief	
35	4460071	1	Connector, Strain Relief	

ITEM	PART NUMBER	QTY	DESCRIPTION	REV
36	0480129	1	Belt, Drive	
37	3311405	1	Locknut 1/4in-20NC (Caterpillar Engine Only)	
38	3580317	1	Tensioner, Belt	
39	3580318	1	Pulley	
40		Ref	Pulley Options:	
40	3580321	1	Caterpillar Engine	
40	3580320	1	Deutz Engine	
41	2820031	1	Insulator	
42	3740080	2	Relay	
43		Ref	Bolt 3/8in-16NC x 2-1/4in Options:	
43	3931632	1	Caterpillar Engine (Socket Head Capscrew) **(Prior to SN 0300096485)**	
43	0641618	1	Caterpillar Engine (Hex Head Bolt) **(SN 0300096485 through 0300140000)**	
43	0641618	1	Deutz Engine (Hex Head Bolt)	
44	4791400	AR	Starwasher 1/4in	
45	4811900	4	Flatwasher M8 (Caterpillar Engine Only)	
46	4922925	1	Harness, Generator	
47	4711600	1	Flatwasher 3/8in Thin	
48	3311405	4	Locknut 1/4in-20NC (Deutz Engine Only)	
49		Ref	Bolt Options (Deutz Engine Only):	
49	0641403	1	Bolt 1/4in-20NC x 3/8in **(Prior to SN 0300108684)**	
49	0641404	1	Bolt 1/4in-20NC x 1/2in **(SN 0300108684 through 0300140000)**	
50		Ref	Shield Options:	
50	Not Required	0	Caterpillar Engine	
50	4061049	1	Deutz Engine	
51	4751400	2	Flatwasher 1/4in Regular (Deutz Engine Only)	
52	4300157	1	Stud (Deutz Engine Only)	
53	3311801	1	Nut 1/2in-13NC (Deutz Engine Only)	
54	0100062	1	Loctite (Deutz Engine Only)	
55	0771415	1	Bolt (Metric) M14 x 35mm - Deutz Engine Only **(SN 0300095345 through 0300140000)**	
56	4460315	4	Terminal (Deutz Engine Only) **(SN 0300108684 through 0300140000)**	
57	0100020	AR	Pipe Sealant (Deutz Engine Only) (Not Shown) **(SN 0300108684 through 0300140000)**	
	0861542	Ref	**JUNCTION BOX ASSEMBLY**	D
101	0861541	1	Box, Junction	
102	1060494	2 ft/.6m	Cable, Electrical 12/3	
103	1060708	2.5 ft/.76m	Cable, Electrical 10/3	
104	1705376	1	Decal - Wiring Schematic	
105	3300396	1	Cover, Fuse	
106	3310601	2	Nut #6-32NC	
107	1060343	1.5 ft/.46m	Cable, Electrical 10/4	
109	3910610	2	Bolt #6-32NC x 5/8in	
110	4360070	1	Circuit Breaker - 15Amp	
116	4460425	2	Strain Relief, Terminal	
117	4460426	2	Connector, Strain Relief	
121	4750600	4	Flatwasher, #6 Regular	
122	4760600	2	Lockwasher #6	

SECTION 2 - TURNTABLE

ITEM	PART NUMBER	QTY	DESCRIPTION	REV
125	1671092	1	Cover	
126	4460963	1	Connector	
128		Ref	Terminal Block Assembly Options (See Items 501-510 for Breakdown):	
128	See Note	NSS	Gray Terminal Block Assembly (Complete Assembly Not Available - Purchase Individual Components)	
128	1001121340	1	Tan Terminal Block Assembly	
	0272435	Ref	**DECAL INSTALLATION**	A
201	1705460	2	Decal - SkyPower	
202	1705374	1	Decal - 240V - 60Hz	
203	1705375	1	Decal - 240V - 3 Phase	
204	1705387	3	Decal, Hazardous Voltage	
		Ref	**ELECTRICAL DIAGRAM COMPONENTS OPTIONS:**	
	4933264	Ref	**Electrical Diagram Components (Prior to SN 0300139080)**	C
	1001112586	Ref	**Electrical Diagram Components (SN 0300139080 through 0300140000)**	A
301	4922757	1	Generator Harness **(Prior to SN 0300139080)**	3-C
301	1001112587	1	Generator Harness **(SN 0300139080 through 0300140000)**	A
301A	4460374	2	Plug, Sealed Relay	
301A	4460375	7	Terminal	
301B	4460967	1	Plug, Male - 3 Position	
301B	4460465	3	Socket, Female	
301C	2400060	1	Fuseholder (Not Shown)	
301C	2400064	1	Fuse - 5Amp (Not Shown)	
304	4922641	1	Switch Harness	
	1001094475	Ref	**HOURMETER INSTALLATION (OPTIONAL)**	B
402	0720808	1	Screw #8-32 x 1in	
403	2420165	1	Hourmeter	
404	3310601	2	Nut #6-32	
405	3310805	1	Locknut #8-32	
406	3910608	2	Screw #6-32 x 1/2in	
407	4240032	4	Strap, Tie	
408	4420060	3 in/7cm	Tape, Double-Sided	
409	4460234	3	Mount, Tie Strap	
410	4750800	1	Flatwasher #8 Regular	
411	4760600	2	Lockwasher #6	
412	1001094375	1	Bracket, Hourmeter	
413	1001094509	1	Harness, Hourmeter	
414	4460018	1	Connector, Butt Splice (Not Shown)	
		Ref	**TERMINAL BLOCK ASSEMBLY**	
	See Note	Ref	**Gray Terminal Block Assembly (Note: Complete Assembly Not Available - Purchase Individual Components)**	
	1001121340	Ref	**Tan Terminal Block Assembly**	A
501		Ref	Marker Strip #1 Options:	
501	4460411	2	Gray Terminal Block Assembly	
501	70002818	2	Tan Terminal Block Assembly	
502		Ref	Marker Strip #2 Options:	
502	4460412	4	Gray Terminal Block Assembly	
502	70002819	4	Tan Terminal Block Assembly	
503		Ref	Marker Strip #3 Options:	
503	4460413	2	Gray Terminal Block Assembly	
503	70002820	2	Tan Terminal Block Assembly	

ITEM	PART NUMBER	QTY	DESCRIPTION	REV
504		Ref	Marker Strip #4 Options:	
504	4460414	2	Gray Terminal Block Assembly	
504	70002821	2	Tan Terminal Block Assembly	
505		Ref	Marker Strip #5 Options:	
505	4460415	4	Gray Terminal Block Assembly	
505	70002822	4	Tan Terminal Block Assembly	
506		Ref	Terminal, End Barrier Options:	
506	4460956	1	Gray Terminal Block Assembly	
506	70002823	1	Tan Terminal Block Assembly	
507		Ref	Terminal, End Block Options:	
507	4460607	2	Gray Terminal Block Assembly	
507	70002824	2	Tan Terminal Block Assembly	
508		Ref	Terminal, Block Options:	
508	4460957	7	Gray Terminal Block Assembly	
508	70002825	7	Tan Terminal Block Assembly	
509		Ref	Terminal, Cross Connector Jumper Options:	
509	4461001	2	Gray Terminal Block Assembly	
509	70002826	2	Tan Terminal Block Assembly	
510		Ref	Rail, Relay Options:	
510	3640986	1	Rail, Relay **(Prior to SN 0300072911)**	
510	3641533	1	Rail, Relay **(SN 0300072911 through 0300140000)**	

FIGURE 2-34. 7500W SKYPOWER GENERATOR INSTALLATION - FORD ENGINES

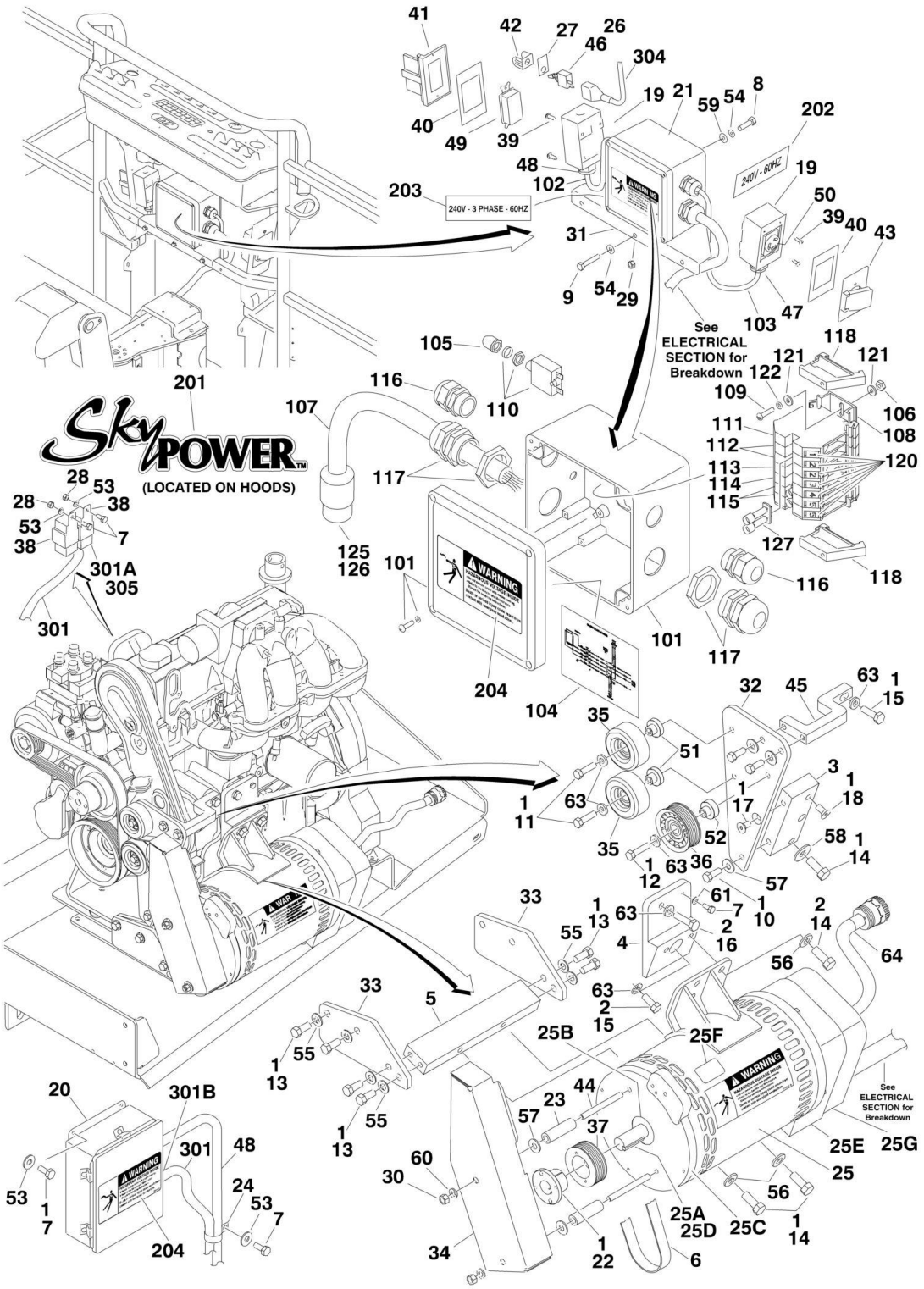

FIGURE 2-34. 7500W SKYPOWER GENERATOR INSTALLATION - FORD ENGINES

ITEM	PART NUMBER	QTY	DESCRIPTION	REV
	0272817	Ref	**7500W SKYPOWER GENERATOR INSTALLATION**	H
		Ref	**Note: SkyPower Generator is Standard On ANSI and CSA Specs. Optional on All Other Specs.**	
		Ref	**Note: See ELECTRICAL SECTION for Boom Cable Installation.**	
1	0100011	AR	Compound, Locking	
2	0100019	AR	Compound, Locking	
3	0363097	1	Bar, Pulley Mount	
4	0363201	1	Bar, Generator Mount (Top)	
5	0363202	1	Bar, Generator Mount (Bottom)	
6	0480130	1	Belt, Generator	
7	0641405	8	Bolt 1/4in-20NC x 5/8in	
8	0641505	4	Bolt 5/16in-18NC x 5/8in	
9	0641516	3	Bolt 5/16in-18NC x 2in	
10	0641608	3	Bolt 3/8in-16NC x 1in	
11	0641611	2	Bolt 3/8in-16NC x 1-3/8in	
12	0641612	1	Bolt 3/8in-16NC x 1-1/2in	
13	0641708	8	Bolt 7/16in-14NC x 1in	
14	0641810	5	Bolt 1/2in-13NC x 1-1/4in	
15	0701015	2	Bolt M10 x 35mm	
16	0701016	1	Bolt M10 x 40mm	
17	0741606	1	Screw, Flathead Countersunk 3/8in-16NC x 3/4in	
18	0741808	1	Screw, Flathead Countersunk 1/2in-13NC x 1in	
19	0860038	2	Box, Switch	
20	0861538	1	Control Box Assembly (was p/n 7024487):	
20	7024488	1	Card, Circuit - Generator Power	
20	See Note	NSS	Fuse (Note: Not Available - Purchase Locally)	
20	7024489	1	Card, Circuit - Control (Includes Harness)	
20	70000619	1	Harness, Control Box (Internal)	
21	0861542	1	Junction Box Assembly (See Items 101-127 for Breakdown)	
22	0962520	1	Bushing, Split Taper	
23	0962521	2	Spacer, Tube	
24	1320224	1	Clamp	
25	2460048	1	Generator Assembly	
25	7024484	1	Brushholder Assembly (Not Shown)	
25	7024485	1	Breaker, Circuit 30Amp (Not Shown)	
25	70001696	1	Boot, Breaker (was p/n 7024486 - Not Shown)	
25	7027799	1	Block, Connection - 6 Position (Not Shown)	
25	70002460	6	Nut, Brass (Attaches p/n 7027799 to Cover) (Not Shown)	
25	7026597	1	Connector, with Lead (Not Shown)	
25	7026188	1	Connector, Clamp (Not Shown)	
25	70004169	1	Panel, End (Not Shown) (was p/n 70002255)	
25	70002088	1	Stator (Not Shown)	
25	70001974	1	Decal - Terminal Connections (Not Shown)	
25	70000863	1	Fan (Not Shown)	
25	70002297	4	Stud (Not Shown)	
25A	70004171	1	Key (was p/n 7024561)	
25B	70001966	1	Bearing, Shaft (Front)	
25C	70001953	1	Endbell (Front)	
25D	70001100	1	Shaft/Rotor/Windings/Fan/Rear Bearing Assembly	
25D	70001384	1	Bearing, Shaft (Rear)	

SECTION 2 - TURNTABLE

ITEM	PART NUMBER	QTY	DESCRIPTION	REV
25E	70004169	1	Endbell, Brush Block (was p/n 70001385)	
25F	70001973	1	Decal - Warning Moving Parts	
25G	70004169	1	Shroud Assembly Endbell (Rear) (was p/n 70002290)	
26	2820031	1	Insulator	
27	3252764	1	Nameplate	
28	3311405	6	Locknut 1/4in-20NC	
29	3311505	3	Locknut 5/16in-18NC	
30	3311601	2	Nut 3/8in-16NC	
31	0902888	1	Bracket, Box Mounting	
32	3574225	1	Plate, Pulley Mounting	
33	3574229	2	Plate, Gusset Generator Mounting	
34	3574262	1	Plate, Shield	
35	3580312	2	Pulley, Idler	
36	3580313	1	Pulley, Idler Grooved	
37	3580314	1	Pulley, Drive Grooved	
38	3740080	2	Relay	
39	3910606	8	Screw #6-32NC x 3/8in	
40	3960422	2	Gasket	
41	4060700	1	Cover, Receptacle	
42	4060802	1	Guard, Switch	
43	4061043	1	Cover, Receptacle	
44	4300111	2	Stud, Chain Assembly	
45	4340738	1	Support, Idler Pulley Mount	
46	4360336	1	Switch, Toggle	
47	4460051	1	Connector, Strain Relief	
48	4460071	1	Connector, Strain Relief	
49	4460346	1	Receptacle	
50	4460958	1	Receptacle, Female Twist-Lock	
51	4568734	2	Tube, Spacer Pulley	
52	4568735	1	Tube, Spacer Pulley Grooved	
53	4711400	11	Flatwasher 1/4in Thin	
54	4711500	10	Flatwasher 5/16in Thin	
55	4711700	8	Flatwasher 7/16in Thin	
56	4711800	4	Flatwasher 1/2in Thin	
57	4751600	5	Flatwasher 3/8in Regular	
58	4751800	1	Flatwasher 1/2in Regular	
59	4761500	4	Flatwasher 5/16in Regular	
60	4761600	2	Flatwasher 3/8in Regular	
61	4791400	1	Starwasher 1/4in	
63	4891600	6	Flatwasher 3/8in Hardened	
64	4922925	1	Harness, Generator	
	0861542	Ref	**JUNCTION BOX ASSEMBLY**	C
101	0861541	1	Box, Junction	
102	1060494	2 ft/.6m	Cable, Electrical 12/3	
103	1060708	2.5 ft /.76m	Cable, Electrical 10/3	
104	1705376	1	Decal - Wiring Schematic	
105	3300396	1	Cover, Fuse	
106	3310601	2	Nut #6-32NC	
107	1060343	1.5 ft /.46m	Cable, Electrical 10/4	
108	3641533	1	Rail, Relay	

ITEM	PART NUMBER	QTY	DESCRIPTION	REV
109	3910610	2	Bolt #6-32NC x 5/8in	
110	4360070	1	Circuit Breaker - 15Amp	
111	4460411	2	Marker Strip #1	
112	4460412	4	Marker Strip #2	
113	4460413	2	Marker Strip #3	
114	4460414	2	Marker Strip #4	
115	4460415	4	Marker Strip #5	
116	4460425	2	Strain Relief, Terminal	
117	4460426	2	Connector, Strain Relief	
118	4460607	2	Terminal, End Stop	
119	4460956	1	Terminal, Block End	
120	4460957	7	Terminal, Block	
121	4750600	4	Flatwasher, #6 Regular	
122	4760600	2	Lockwasher #6	
125	1671092	1	Cover	
126	4460963	1	Connector	
127	4461001	2	Cross Connector - 2 Position	
	0272435	Ref	**DECAL INSTALLATION**	A
201	1705460	2	Decal - SkyPower	
202	1705374	1	Decal - 240V - 60Hz	
203	1705375	1	Decal - 240V - 3 Phase	
204	1705387	3	Decal, Hazardous Voltage	
	4933283	Ref	**ELECTRICAL DIAGRAM COMPONENTS**	1-A
301	4922905	1	Generator Harness	2-B
301A	4460374	2	Plug, Sealed Relay	
301A	4460375	7	Terminal	
301B	4460967	1	Plug, Male - 3 Position	
301B	4460465	3	Socket, Female	
301C	2400060	2	Fuseholder (Not Shown)	
301C	2400064	2	Fuse - 5Amp (Not Shown)	
304	4922641	1	Switch Harness	
305	4460375	1	Terminal	

FIGURE 2-35. 7500W SKYPOWER GENERATOR INSTALLATION - GM ENGINES

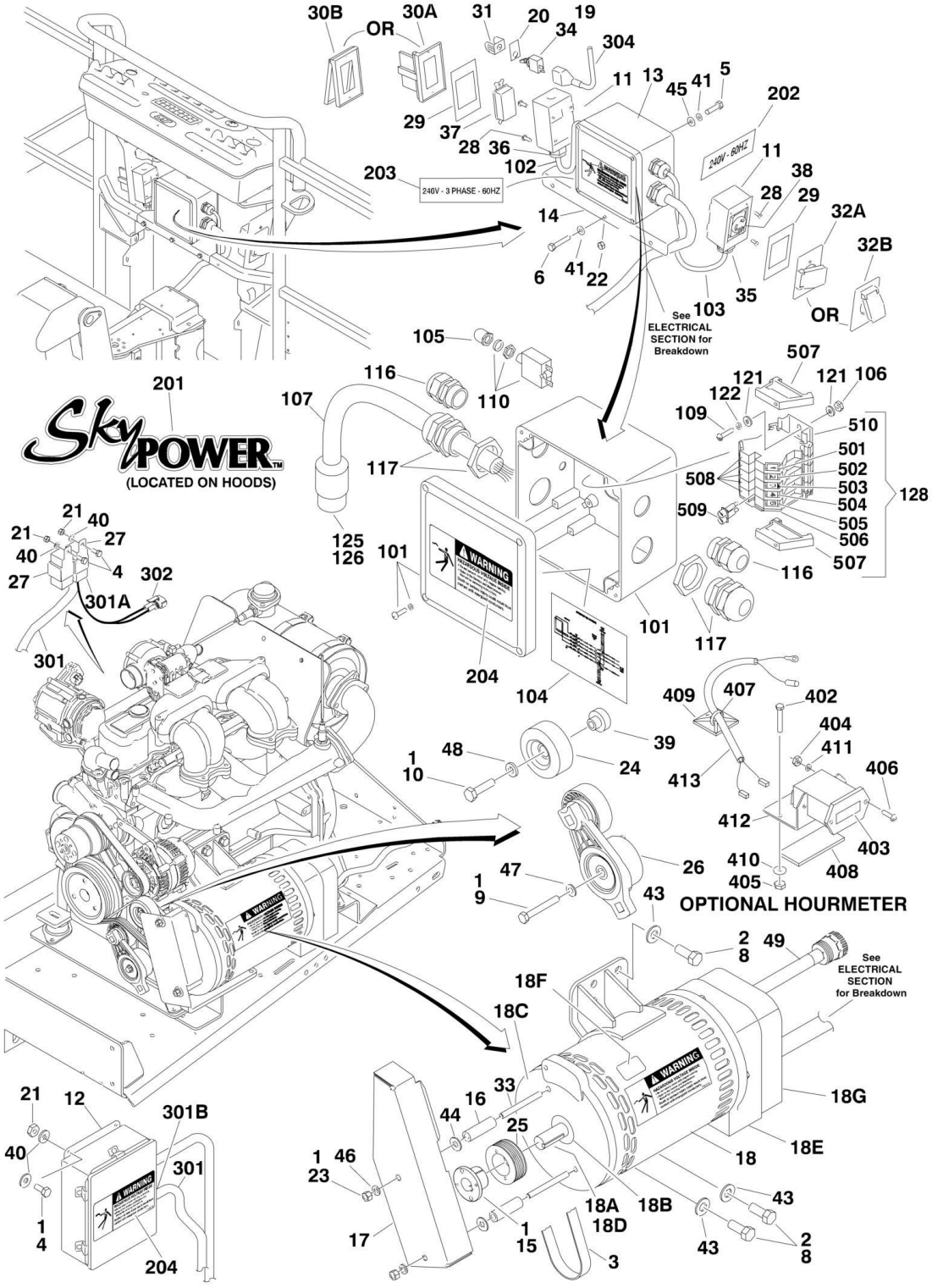

FIGURE 2-35. 7500W SKYPOWER GENERATOR INSTALLATION - GM ENGINES

ITEM	PART NUMBER	QTY	DESCRIPTION	REV
	0275257	Ref	**7500W SKYPOWER GENERATOR INSTALLATION**	E
		Ref	**Note: SkyPower Generator is Standard On ANSI and CSA Specs. Optional on All Other Specs.**	
		Ref	**Note: See ELECTRICAL SECTION for Boom Cable Installation.**	
1	0100011	AR	Compound, Locking	
2	0100019	AR	Compound, Locking	
3	0480142	1	Belt, Generator	
4	0641405	6	Bolt 1/4in-20NC x 5/8in	
5	0641505	4	Bolt 5/16in-18NC x 5/8in	
6	0641516	3	Bolt 5/16in-18NC x 2in	
7	0641608	1	Bolt 3/8in-16NC x 1in **(SN 0300087000 through 0300094705)**	
8		Ref	Bolt Options:	
8	0641810	4	Bolt 1/2in-13NC x 1-1/4in **(SN 0300087000 through 0300094704)**	
8	0641808	4	Bolt 1/2in-13NC x 1in **(SN 0300094705 through 0300140000)**	
9	0700820	1	Bolt M8 x 60mm	
10	0701016	1	Bolt M10 x 40mm	
11	0860038	2	Box, Switch	
12	0861538	1	Control Box Assembly	
12	7024488	1	Card, Circuit - Generator Power	
12	See Note	NSS	Fuse (Note: Not Available - Purchase Locally)	
12	7024489	1	Card, Circuit - Control	
12	70000619	1	Harness, Control Box (Internal)	
13	0861542	1	Junction Box Assembly (See Items 101-128 for Breakdown)	
14	0902888	1	Bracket, Box Mounting	
15	0962520	1	Bushing, Split Taper	
16	0962521	2	Spacer, Tube	
17	1671311	1	Cover, Generator Belt	
18	2460048	1	Generator Assembly	
18	7024484	1	Brushholder Assembly (Not Shown)	
18	7024485	1	Breaker, Circuit 30Amp (Not Shown)	
18	70001696	1	Boot, Breaker (was p/n 7024486 - Not Shown)	
18	7027799	1	Block, Connection - 6 Position (Not Shown)	
18	70002460	6	Nut, Brass (Attaches p/n 7027799 to Cover) (Not Shown)	
18	7026597	1	Connector, with Lead (Not Shown)	
18	7026188	1	Connector, Clamp (Not Shown)	
18	70004169	1	Panel, End (Not Shown) (was p/n 70002255)	
18	70002088	1	Stator (Not Shown)	
18	70001974	1	Decal - Terminal Connections (Not Shown)	
18	70000863	1	Fan (Not Shown)	
18	70002297	4	Stud (Not Shown)	
18A	70004171	1	Key (was p/n 7024561)	
18B	70001966	1	Bearing, Shaft (Front)	
18C	70001953	1	Endbell (Front)	
18D	70001100	1	Shaft/Rotor/Windings/Fan/Rear Bearing Assembly	
18D	70001384	1	Bearing, Shaft (Rear)	
18E	70004169	1	Endbell, Brush Block (was p/n 70001385)	
18F	70001973	1	Decal - Warning Moving Parts	
18G	70004169	1	Shroud Assembly Endbell (Rear) (was p/n 70002290)	
19	2820031	1	Insulator	

SECTION 2 - TURNTABLE

ITEM	PART NUMBER	QTY	DESCRIPTION	REV
20	3252764	1	Nameplate	
21	3311405	6	Locknut 1/4in-20NC	
22	3311505	3	Locknut 5/16in-18NC	
23	3311601	2	Nut 3/8in-16NC	
24	3580312	2	Pulley, Idler	
25	3580314	1	Pulley, Drive Grooved	
26	3580348	1	Pulley, Belt Tensioner	
27	3740080	2	Relay	
28	3910606	8	Screw #6-32NC x 3/8in	
29	3960422	2	Gasket	
30		Ref	Cover, Receptacle Options:	
30A	4060700	1	Cover, Side Hinged **(Prior to SN 0300138287)**	
30B	1001110873	1	Cover, Top Hinged **(SN 0300138287 through 0300140000)**	
31	4060802	1	Guard, Switch	
32		Ref	Cover, Receptacle Options:	
32A	4061043	1	Cover, Side Hinged **(Prior to SN 0300138287)**	
32B	1001110872	1	Cover, Top Hinged **(SN 0300138287 through 0300140000)**	
33	4300111	2	Stud, Chain Assembly	
34	4360336	1	Switch, Toggle	
35	4460051	1	Connector, Strain Relief	
36	4460071	1	Connector, Strain Relief	
37	4460346	1	Receptacle	
38	4460958	1	Receptacle, Female Twist-Lock	
39	4568735	1	Tube, Spacer Pulley Grooved	
40	4711400	10	Flatwasher 1/4in Thin	
41	4711500	10	Flatwasher 5/16in Thin	
42	4711600	1	Flatwasher 3/8in Thin **(SN 0300087000 through 0300094705)**	
43	4711800	4	Flatwasher 1/2in Thin	
44	4751600	2	Flatwasher 3/8in Regular	
45	4761500	4	Lockwasher 5/16in	
46	4761600	2	Lockwasher 3/8in	
47	4811900	1	Flatwasher 8mm	
48	4891600	1	Flatwasher 3/8in Hardened	
49	4922925	1	Harness, Generator	
	0861542	Ref	**JUNCTION BOX ASSEMBLY**	D
101	0861541	1	Box, Junction	
102	1060494	2 ft/.6m	Cable, Electrical 12/3	
103	1060708	2.5 ft /.76m	Cable, Electrical 10/3	
104	1705376	1	Decal - Wiring Schematic	
105	3300396	1	Cover, Fuse	
106	3310601	2	Nut #6-32NC	
107	1060343	1.5 ft /.46m	Cable, Electrical 10/4	
109	3910610	2	Bolt #6-32NC x 5/8in	
110	4360070	1	Circuit Breaker - 15Amp	
116	4460425	2	Strain Relief, Terminal	
117	4460426	2	Connector, Strain Relief	
121	4750600	4	Flatwasher, #6 Regular	
122	4760600	2	Lockwasher #6	
125	1671092	1	Cover	
126	4460963	1	Connector	

ITEM	PART NUMBER	QTY	DESCRIPTION	REV
128		Ref	Terminal Block Assembly Options (See Items 501-510 for Breakdown):	
128	See Note	NSS	Gray Terminal Block Assembly (Note: Not Available - Purchase Individual Components)	
128	1001121340	1	Tan Terminal Block Assembly	
	0272435	Ref	**DECAL INSTALLATION**	A
201	1705460	2	Decal - SkyPower	
202	1705374	1	Decal - 240V - 60Hz	
203	1705375	1	Decal - 240V - 3 Phase	
204	1705387	3	Decal, Hazardous Voltage	
	4933349	Ref	**ELECTRICAL DIAGRAM COMPONENTS**	A
301	4923420	1	Generator Harness	A
301A	4460374	2	Plug, Sealed Relay	
301A	4460375	8	Terminal	
301B	4460967	1	Plug, Male - 3 Position	
301B	4460465	3	Socket, Female	
301C	2400060	2	Fuseholder (Not Shown)	
301C	2400064	2	Fuse - 5Amp (Not Shown)	
302	4460742	1	Connector - 2 Position	
302	4460743	2	Socket, Female	
302	4460458	2	Seal	
304	4922641	1	Switch Harness	
	1001094475	Ref	**HOURMETER INSTALLATION (OPTIONAL)**	B
402	0720808	1	Screw #8-32 x 1in	
403	2420165	1	Hourmeter	
404	3310601	2	Nut #6-32	
405	3310805	1	Locknut #8-32	
406	3910608	2	Screw #6-32 x 1/2in	
407	4240032	4	Strap, Tie	
408	4420060	3 in/7cm	Tape, Double-Sided	
409	4460234	3	Mount, Tie Strap	
410	4750800	1	Flatwasher #8 Regular	
411	4760600	2	Lockwasher #6	
412	1001094375	1	Bracket, Hourmeter	
413	1001094509	1	Harness, Hourmeter	
414	4460018	1	Connector, Butt Splice (Not Shown)	
		Ref	**TERMINAL BLOCK ASSEMBLY**	
	NPN	Ref	**Gray Terminal Block Assembly (Complete Assembly Not Available - Purchase Individual Components)**	
	1001121340	Ref	**Tan Terminal Block Assembly**	A
501		Ref	Marker Strip #1 Options:	
501	4460411	2	Gray Terminal Block Assembly	
501	70002818	2	Tan Terminal Block Assembly	
502		Ref	Marker Strip #2 Options:	
502	4460412	4	Gray Terminal Block Assembly	
502	70002819	4	Tan Terminal Block Assembly	
503		Ref	Marker Strip #3 Options:	
503	4460413	2	Gray Terminal Block Assembly	
503	70002820	2	Tan Terminal Block Assembly	
504		Ref	Marker Strip #4 Options:	
504	4460414	2	Gray Terminal Block Assembly	
504	70002821	2	Tan Terminal Block Assembly	

SECTION 2 - TURNTABLE

ITEM	PART NUMBER	QTY	DESCRIPTION	REV
505		Ref	Marker Strip #5 Options:	
505	4460415	4	Gray Terminal Block Assembly	
505	70002822	4	Tan Terminal Block Assembly	
506		Ref	Terminal, End Barrier Options:	
506	4460956	1	Gray Terminal Block Assembly	
506	70002823	1	Tan Terminal Block Assembly	
507		Ref	Terminal, End Block Options:	
507	4460607	2	Gray Terminal Block Assembly	
507	70002824	2	Tan Terminal Block Assembly	
508		Ref	Terminal, Block Options:	
508	4460957	7	Gray Terminal Block Assembly	
508	70002825	7	Tan Terminal Block Assembly	
509		Ref	Terminal, Cross Connector Jumper Options:	
509	4461001	2	Gray Terminal Block Assembly	
509	70002826	2	Tan Terminal Block Assembly	
510	3641533	1	Rail, Relay	

SECTION 3 - BOOM

FIGURE 3-1. TOWER BOOM, UPRIGHT AND CYLINDERS INSTALLATION

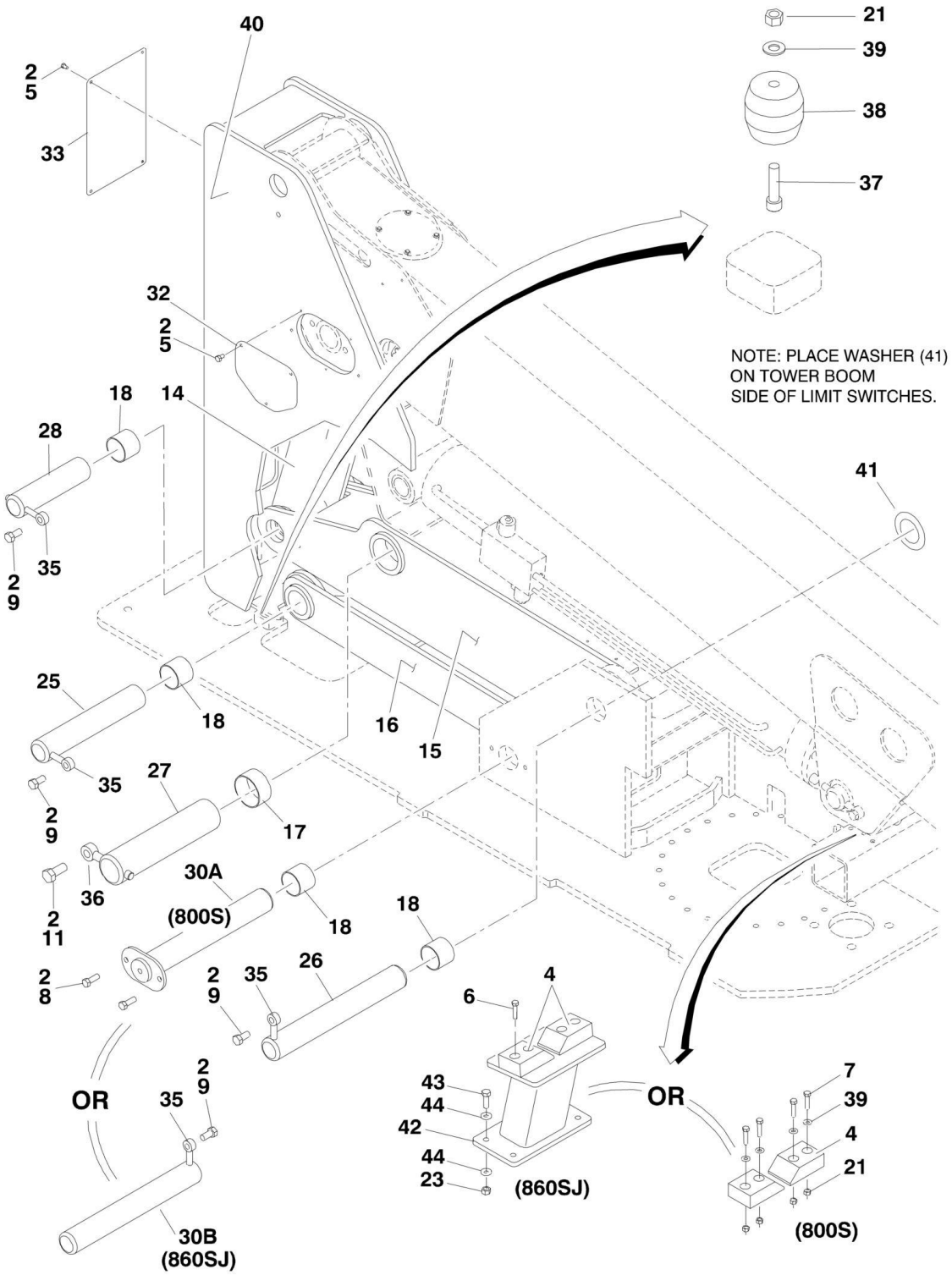

FIGURE 3-1. TOWER BOOM, UPRIGHT AND CYLINDERS INSTALLATION

ITEM	PART NUMBER	QTY	DESCRIPTION	REV
		Ref	**TOWER BOOM, UPRIGHT AND CYLINDERS INSTALLATIONS**	
	0270876	Ref	**Tower Boom, Upright and Cylinders Installations 800S**	J
	0270877	Ref	**Tower Boom, Upright and Cylinders Installations 860SJ**	I
2	0100011	AR	Compound, Locking	
4	0561380	1	Block, Boom Rest	
5	0641504	10	Bolt 5/16in-18NC x 5/8in	
6	0641612	4	Bolt 3/8in-16NC x 1-1/2in (860SJ Only)	
7	0641613	4	Bolt 3/8in-16NC x 1-1/2in (800S Only)	
8	0642014	AR	Bolt 5/8in-11NC x 1-3/4in	
9	0642212	AR	Bolt 3/4in-10NC x 1-1/2in	
11	0642618	1	Bolt 1in-8NC x 2-1/4in	
14		Ref	Power Link Weldment Options:	
14	0801278	NLA	Power Link Weldment 800S (Use p/n 1001117804) (Includes Qty 4 of Item 18)	
14	0801310	NLA	Power Link Weldment 860SJ (Use p/n 1001117805) (Includes Qty 4 of Item 18)	
15		Ref	Tower Weldment Options:	
15	0801279	1	Tower Weldment 800S	
15	0801306	1	Tower Weldment 860SJ	
16		Ref	Link (Tower) Weldment Options:	
16	0801280	1	Link (Tower) Weldment 800S	
16	0801307	1	Link (Tower) Weldment 860SJ	
17	0962122	2	Bushing	
18	0962297	10	Bushing	
21	3311605	6	Locknut 3/8in-16NC	
23	3311805	4	Locknut 1/2in-13NC (860SJ Only)	
25	3422908	1	Pin	
26	3422909	1	Pin	
27	3422910	1	Pin	
28	3422920	1	Pin	
30		Ref	Pin Options:	
30A	3422930	1	Pin 800S	
30B	3422909	1	Pin 860SJ	
32	3573049	2	Cover, Upright Side	
33	3573050	1	Cover, Upright Rear	
35	3841287	AR	Keeper, Pin	
36	3841356	1	Keeper, Pin	
37	3931624	2	Capscrew, Socket Head 3/8in-16NC x 1-1/2in	
38	4160187	2	Spring, Rubber	
39	4711600	AR	Flatwasher 3/8in Narrow	
40	4846355	NLA	Upright (Use p/n 1001157180)	
41	4740492	1	Washer, Thrust	
42	4846427	1	Rest, Boom (860SJ Only)	
43	0641812	4	Bolt 1/2in-13NC x 1-1/2in (860SJ Only)	
44	4711800	8	Flatwasher 1/2in Narrow (860SJ Only)	

FIGURE 3-2. MAIN BOOM INSTALLATION - 800S

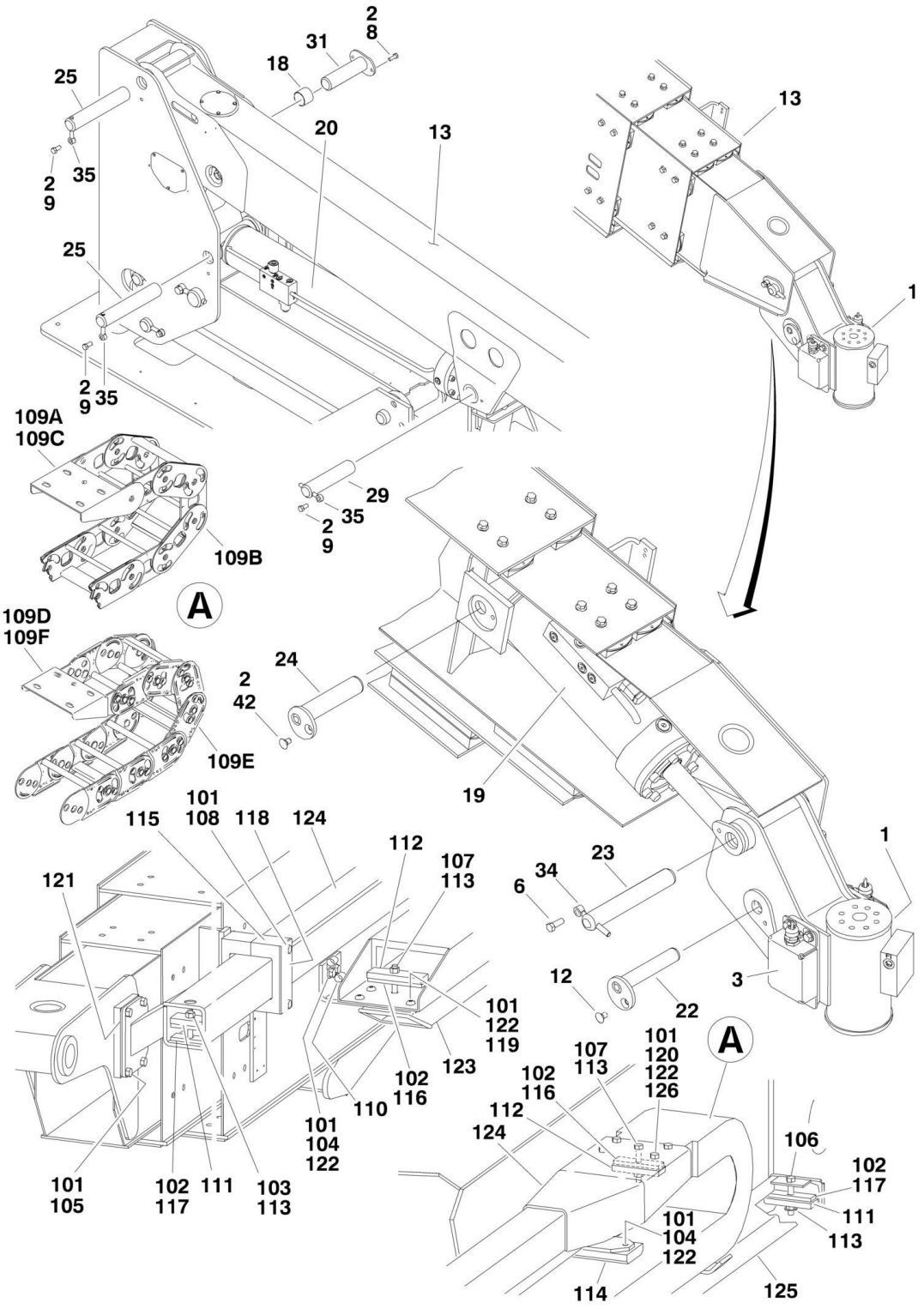

FIGURE 3-2. MAIN BOOM INSTALLATION - 800S

ITEM	PART NUMBER	QTY	DESCRIPTION	REV
	0270876	Ref	BOOM AND CYLINDERS INSTALLATION - 800S	
1	0060061	1	Rotator Assembly (See ROTATOR ASSEMBLY for Breakdown)	
2	0100011	AR	Compound, Locking	
3		Ref	Platform Level Sensor Switch Assembly Options (See PLATFORM SUPPORT AND CONTROL VALVES INSTALLATION for Breakdown):	
3	0271381	1	Platform Level Sensor Switch Assembly **(Prior to SN 0300075873)**	
3	0273695	1	Platform Level Sensor Switch Assembly **(SN 0300075873 through 0300140000)**	
6	0641608	1	Bolt 3/8in-16NC x 1in	
8	0642014	2	Bolt 5/8in-11NC x 1-3/4in	
9	0642212	3	Bolt 3/4in-10NC x 1-1/2in	
12	0741605	1	Bolt 3/8in-16NC x 5/8in	
13	0801274	1	Main Boom Assembly (See MAIN BOOM ASSEMBLY for Breakdown)	
18	0962297	2	Bushing	
19	1684189	NLA	Platform Level Cylinder Assembly (Use p/n 1001228027) (See CYLINDER SECTION for Breakdown) (Original Equipment)	
19	1001228027	1	Platform Level Cylinder Assembly (See CYLINDER SECTION for Breakdown) (Service Replacement)	
20		Ref	Main Lift Cylinder Assembly Options (See CYLINDER SECTION for Breakdown):	
20	1684042	1	Main Lift Cylinder Assembly **(Prior to SN 0300066889)**	
20	1684199	NLA	Main Lift Cylinder Assembly (Use p/n 1001228028) (Original Equipment) **(SN 0300066889 through 0300140000)**	
20	1001228028	1	Main Lift Cylinder Assembly (Service Replacement)	
22	3422580	1	Pin	
23	3422562	1	Pin	
24	3422569	1	Pin	
25	3422908	2	Pin	
29	3422922	1	Pin	
31	3422931	1	Pin	
34	3841143	1	Keeper, Pin	
35	3841287	3	Keeper, Pin	
42		Ref	Bolt Options:	
42	0741605	1	Bolt 3/8in-16NC x 5/8in **(Prior to SN 0300129790)**	
42	3900192	1	Screw 3/8in-16NC x 1/2in **(SN 0300129790 through 0300140000)**	
100		Ref	**POWER TRACK INSTALLATION**	
100		Ref	**Note: These SNs also use the 0271254 Installation: SNs 0300065567, 0300065568, 0300065582, 0300065595, 0300065596 , 0300065614, 0300065615, 0300065617, 0300065624, 0300065625, 0300065628 & 0300065635**	
100	0271254	Ref	**Power Track Installation (Prior to SN 0300065541)**	D
100	0271990	Ref	**Power Track Installation (SN 0300065541 through 0300140000)**	C
101	0100011	AR	Compound, Locking	
102	0100081	AR	Adhesive	
103	0630539	1	Bolt 3/8in-16NC x 3-1/2in	
104	0641606	12	Bolt 3/8in-16NC x 3/4in	
105	0641608	4	Bolt 3/8in-16NC x 1in	
106	0641620	1	Bolt 3/8in-16NC x 2-1/2in	

ITEM	PART NUMBER	QTY	DESCRIPTION	REV
107	0641622	2	Bolt 3/8in-16NC x 2-3/4in	
108	0641652	2	Bolt 3/8in-16NC x 6-1/2in	
109		Ref	Power Track Assembly Options: (Original Equipment)	
		Ref	**Note: Original Equipment Power Track may have been replaced with a Service Replacement. Visually identify the power track before ordering parts.**	
109A	1180373	NLA	Power Track Assembly (Original Equipment) (Use p/n 1001131731) (See Note at Item 100 Power Track Installation) **(Prior to SN 0300065541)**	
109A	1180375	NLA	Power Track Assembly (Original Equipment) (Use p/n 1001131731) (See Note at Item 100 Power Track Installation) **(SN 0300065541 through 0300140000)**	
109B	7024369	AR	Repair Section for 1180373 & 1180375 (Includes Inner and Outer Links, Joining Bars and Rollers and Assembling Hardware)	
109C	7024370	1	Mounting Feet for 1180373 & 1180375 (Includes Mounting Brackets for Both Ends, 1 Roller Assembly and Assembling Hardware)	
109D	1001131731	1	Power Track Assembly (Service Replacement)	
109E	70003921	AR	Repair Section for 1001131731 (Includes 1 Pin Assembly for each end)	
109F	70003922	1	Mounting Feet for 1001131731 (Includes Both Pair of Feet)	
110	1320263	2	Clamp, Cable	
111	1320289	2	Clamp, Hose	
112	1320294	2	Bar, Clamping	
113	3311605	4	Locknut 3/8in-16NC	
114	3340787	1	Pad, Wear	
115	3340936	2	Pad, Push Tube	
116	3340942	2	Pad, Rubber	
117	3340943	4	Pad, Rubber	
118	3573418	1	Plate, Backing	
119	3900283	4	Screw, Button Head 3/8in-16NC x 3/4in	
120	3900316	4	Screw, Button Head 3/8in-16NC x 1in	
121	4070969	2	Shim	
122	4711600	20	Flatwasher 3/8in Thin	
123		Ref	Support, Push Tube Options:	
123	Not Required	0	Support, Push Tube (See Note at Item 100 Power Track Installation) **(Prior to SN 0300065541)**	
123	4846553	2	Support, Push Tube (See Note at Item 100 Power Track Installation) **(SN 0300065541 through 0300140000)**	
124		Ref	Tube, Push Options:	
124	4846402	1	Tube, Push (See Note at Item 100 Power Track Installation) **(Prior to SN 0300065541)**	
124	4846554	1	Tube, Push (See Note at Item 100 Power Track Installation) **(SN 0300065541 through 0300140000)**	
125		Ref	Support, Track Options:	
125	4846403	1	Support, Track (See Note at Item 100 Power Track Installation) **(Prior to SN 0300065541)**	
125	4846558	1	Support, Track (See Note at Item 100 Power Track Installation) **(SN 0300065541 through 0300140000)**	
126	3311608	4	Locknut 3/8in-16NC	

FIGURE 3-3. MAIN BOOM INSTALLATION - 860SJ

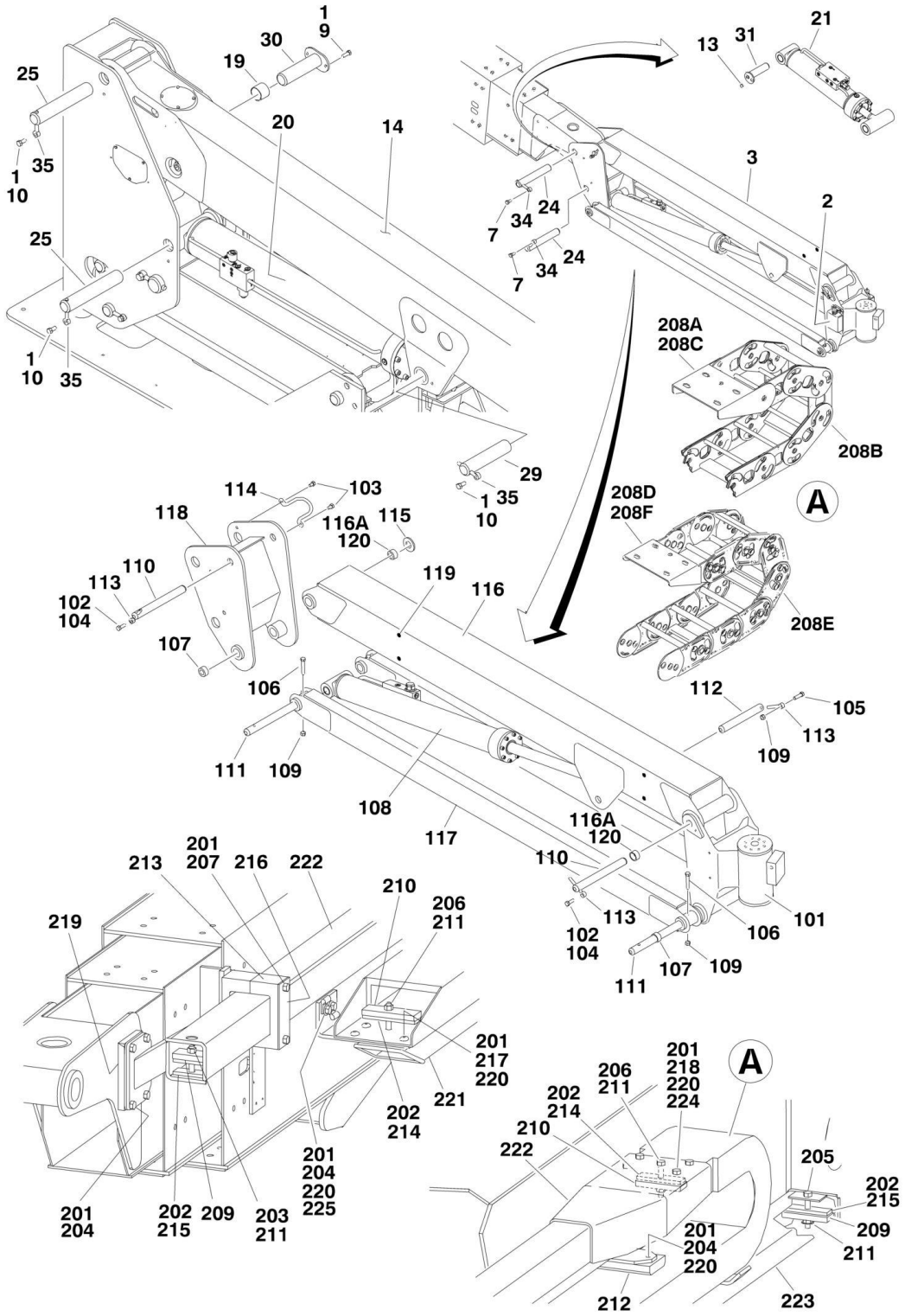

FIGURE 3-3. MAIN BOOM INSTALLATION - 860SJ

ITEM	PART NUMBER	QTY	DESCRIPTION	REV
	0270877	Ref	**BOOM AND CYLINDERS INSTALLATION - 860SJ**	I
1	0100011	AR	Compound, Locking	
2		Ref	Platform Level Sensor Switch Assembly Options (See PLATFORM SUPPORT AND CONTROL VALVES INSTALLATION for Breakdown):	
2	0271381	1	Platform Level Sensor Switch Assembly **(Prior to SN 0300075873)**	
2	0273695	1	Platform Level Sensor Switch Assembly **(SN 0300075873 through 0300140000)**	
3	0271444	1	Jib Assembly (See Items 101-120 for Breakdown)	
7	0641808	2	Bolt 1/2in-13NC x 1in	
9	0642014	2	Bolt 5/8in-11NC x 1-3/4in	
10	0642212	3	Bolt 3/4in-10NC x 1-1/2in	
13		Ref	Bolt Options:	
13	0741605	1	Bolt 3/8in-16NC x 5/8in **(Prior to SN 0300129790)**	
13	3900192	1	Screw 3/8in-16NC x 1/2in **(SN 0300129790 through 0300140000)**	
14	0801281	1	Main Boom Assembly (See MAIN BOOM ASSEMBLY for Breakdown)	
19	0962297	2	Bushing	
20		Ref	Main Lift Cylinder Assembly Options (See CYLINDER SECTION for Breakdown):	
20	1684124	1	Main Lift Cylinder Assembly **(Prior to SN 0300066889)**	
20	1684202	NLA	Main Lift Cylinder Assembly (Use p/n 1001228029) (Original Equipment) **(SN 0300066889 through 0300140000)**	
20	1001228029	1	Main Lift Cylinder Assembly (Service Replacement)	
21	1684136	NLA	Platform Level Cylinder Assembly (Use p/n 1001228022) (See CYLINDER SECTION for Breakdown) (Original Equipment)	
21	1001228022	1	Platform Level Cylinder Assembly (See CYLINDER SECTION for Breakdown) (Service Replacement)	
24	3422793	2	Pin	
25	3422908	2	Pin	
29	3422922	1	Pin	
30	3422931	1	Pin	
31	3422932	1	Pin	
34	3841203	3	Keeper, Pin	
35	3841287	3	Keeper, Pin	
	0271444	Ref	**JIB ASSEMBLY**	F
101	0060048	1	Rotator Assembly (See ROTATOR ASSEMBLY for Breakdown)	
102	0100011	AR	Compound, Locking	
103	0641604	2	Bolt 3/8in-16NC x 1/2in	
104	0641608	2	Bolt 3/8in-16NC x 1in	
105	0641610	1	Bolt 3/8in-16NC x 1-1/4in	
106	0641618	4	Bolt 3/8in-16NC x 2-1/4in	
107	0961947	AR	Bushing	
108	1683609	NLA	Jib Lift Cylinder Assembly (Use p/n 1001248012) (See CYLINDER SECTION for Breakdown) (Original Equipment)	
108	1001228012	NLA	Jib Lift Cylinder Assembly (Use p/n 1001248012) (See CYLINDER SECTION for Breakdown) (Service Replacement)	
108	1001248012	1	Jib Lift Cylinder Assembly (See CYLINDER SECTION for Breakdown) (Service Replacement)	
109	3311605	5	Locknut 3/8in-16NC	

ITEM	PART NUMBER	QTY	DESCRIPTION	REV
110	3422860	2	Pin	
111	3422861	2	Pin	
112	3422867	1	Pin	
113	3841143	3	Keeper, Pin	
114	3841340	1	Loop, Hose	
115	4740439	2	Thrustwasher	
116	4844816	1	Link, Jib (Upper)	
116A	0962335	4	Bushing **(SN 0300096971 through 0300140000)**	
117	4844817	2	Link, Jib (Lower)	
118	4846435	1	Pivot, Jib	
119	3520034	4	Plug, Hole	
120	0962335	4	Bushing **(Prior to SN 0300096971)**	
200		Ref	**POWER TRACK INSTALLATION**	
200		Ref	**Note: These SNs also use the 0271255 Installation: SNs 0300065567, 0300065568, 0300065582, 0300065595, 0300065596 , 0300065614, 0300065615, 0300065617, 0300065624, 0300065625, 0300065628 & 0300065635.**	
200	0271255	Ref	**Power Track Installation (Prior to SN 0300065541)**	D
200	0271991	Ref	**Power Track Installation (SN 0300065541 through 0300140000)**	D
201	0100011	AR	Compound, Locking	
202	0100081	AR	Adhesive	
203	0630539	1	Bolt 3/8in-16NC x 3-1/2in	
204	0641606	16	Bolt 3/8in-16NC x 3/4in	
205	0641620	1	Bolt 3/8in-16NC x 2-1/2in	
206	0641622	2	Bolt 3/8in-16NC x 2-3/4in	
207	0641652	2	Bolt 3/8in-16NC x 6-1/2in	
208		Ref	Power Track Assembly Options: (Original Equipment)	
		Ref	**Note: Original Equipment Power Track may have been replaced with a Service Replacement. Visually identify the power track before ordering parts.**	
208A	1180373	NLA	Power Track Assembly (Original Equipment) (Use p/n 1001131731) (See Note at Item 200 Power Track Installation) **(Prior to SN 0300065541)**	
208A	1180375	NLA	Power Track Assembly (Original Equipment) (Use p/n 1001131731) (See Note at Item 200 Power Track Installation) **(SN 03000065541 through 0300140000)**	
208B	7024369	AR	Repair Section for 1180373 & 1180375 (Includes Inner and Outer Links, Joining Bars and Rollers and Assembling Hardware)	
208C	7024370	1	Mounting Feet for 1180373 & 1180375 (Includes Mounting Brackets for Both Ends, 1 Roller Assembly and Assembling Hardware)	
208D	1001131731	1	Power Track Assembly (Service Replacement)	
208E	70003921	AR	Repair Section for 1001131731 (Includes 1 Pin Assembly for each end)	
208F	70003922	1	Mounting Feet for 1001131731 (Includes Both Pair of Feet)	
209	1320289	2	Clamp, Hose	
210	1320294	2	Bar, Clamping	
211	3311605	4	Locknut 3/8in-16NC	
212	3340787	1	Pad, Wear	
213	3340936	2	Pad, Push Tube	
214	3340942	2	Pad, Rubber	
215	3340943	4	Pad, Rubber	
216	3573418	1	Plate, Backing	

ITEM	PART NUMBER	QTY	DESCRIPTION	REV
217	3900283	4	Screw, Button Head 3/8in-16NC x 3/4in	
218	3900316	4	Screw, Button Head 3/8in-16NC x 1in	
219	4070969	2	Shim	
220	4711600	20	Flatwasher 3/8in Thin	
221		Ref	Support, Push Tube Options:	
221	Not Required	0	Support, Push Tube (See Note at Item 200 Power Track Installation) **(Prior to SN 0300065541)**	
221	4846553	1	Support, Push Tube (See Note at Item 200 Power Track Installation) **(SN 0300065541 through 0300140000)**	
222		Ref	Tube, Push Options:	
222	4846420	1	Tube, Push (See Note at Item 200 Power Track Installation) **(Prior to SN 0300065541)**	
222	4846555	1	Tube, Push (See Note at Item 200 Power Track Installation) **(SN 0300065541 through 0300140000)**	
223		Ref	Support, Track Options:	
223	4846421	1	Support, Track (See Note at Item 200 Power Track Installation) **(Prior to SN 0300065541)**	
223	4846558	1	Support, Track (See Note at Item 200 Power Track Installation) **(SN 0300065541 through 0300140000)**	
224	3311608	4	Locknut 3/8in-16NC	
225	1320263	2	Clamp, Cable	

FIGURE 3-4. MAIN BOOM ASSEMBLY

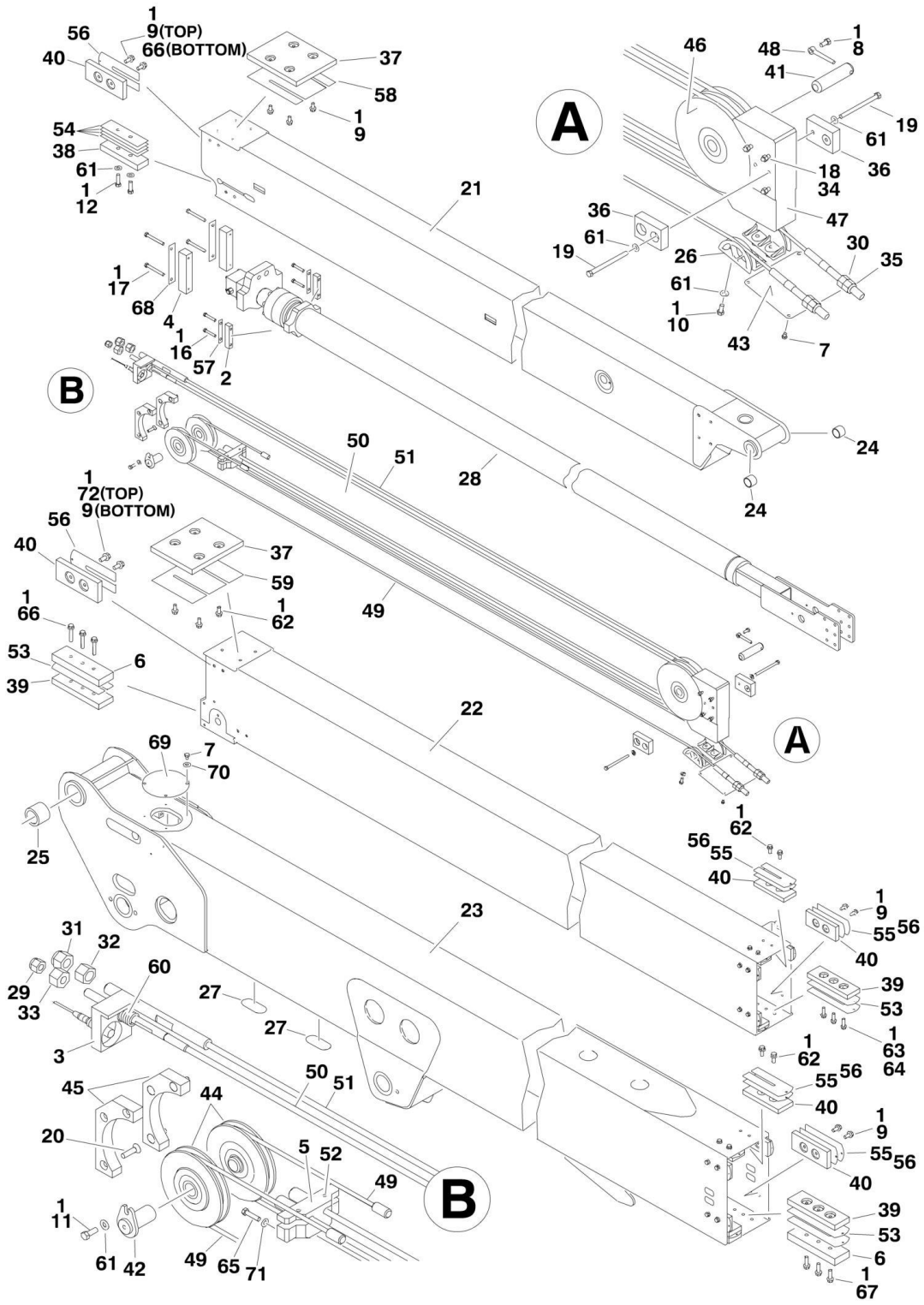

FIGURE 3-4. MAIN BOOM ASSEMBLY

ITEM	PART NUMBER	QTY	DESCRIPTION	REV
		Ref	**MAIN BOOM ASSEMBLY OPTIONS:**	
	0801274	Ref	**Main Boom Assembly 800S**	J
	0801281	Ref	**Main Boom Assembly 860SJ**	K
1	0100011	AR	Compound, Locking	
2	0561185	2	Block, Telescope Attach	
3	0561445	1	Block, Spring Mounting	
4	0561446	2	Block, Tele Mount	
5	0561447	1	Block, Cable Mount	
6	0561449	3	Block, Spacer	
7	0641403	8	Bolt 1/4in-20NC x 3/8in	
8	0641606	1	Bolt 3/8in-16NC x 3/4in	
9		Ref	Screw 3/8in-16NC x 3/4in Options:	
9	0791606	28	Screw 3/8in-16NC x 3/4in **(Prior to SN 0300074431)**	
9	0811606	28	Screw 3/8in-16NC x 3/4in **(SN 0300074431 through 0300140000)**	
10	0641607	4	Bolt 3/8in-16NC x 7/8in	
11	0641608	2	Bolt 3/8in-16NC x 1in	
12	0641610	4	Bolt 3/8in-16NC x 1-1/4in	
16	0641616	4	Bolt 3/8in-16NC x 2in	
17	0641626	4	Bolt 3/8in-16NC x 3-1/4in	
18	0641634	4	Bolt 3/8in-16NC x 4-1/4in	
19	0641640	2	Bolt 3/8in-16NC x 5in	
20	0741612	6	Screw, Flathead 3/8in-16NC x 1-1/2in	
21		Ref	Fly Weldment Options:	
21	0801275	1	Fly Weldment 800S	
21	0801282	1	Fly Weldment 860SJ	
22		Ref	Mid Weldment Options:	
22	0801276	NLA	Mid Weldment 800S (Use p/n 0801649) **(Prior to SN 0300105391)**	
22	0801649	1	Mid Weldment 800S **(SN 0300105391 through 0300140000)**	
22	0801283	NLA	Mid Weldment 800SJ (Use p/n 0801647) **(Prior to SN 0300105391)**	
22	0801647	1	Mid Weldment 860SJ **(SN 0300105391 through 0300140000)**	
23		Ref	Base Weldment Options:	
23	0801325	1	Base Weldment 800S	
23	0801326	1	Base Weldment 860SJ	
24	0961948	2	Bearing (860SJ Only)	
25	0962297	2	Bearing	
26	1220078	2	Sheave, Block	
27	1670836	8	Cover, Boom Only **(Prior to SN 0300120844)**	
28		Ref	Telescope Cylinder Assembly Options (See CYLINDER SECTION for Breakdown):	
28	1684041	NLA	Telescope Cylinder Assembly (Use p/n 1001228081) 800S (Original Equipment)	
28	1001177317	NLA	Telescope Cylinder Assembly (Use p/n 1001228081) 800S (Service Replacement)	
28	1001228081	1	Telescope Cylinder Assembly 800S (Service Replacement)	
28	1684043	NLA	Telescope Cylinder Assembly (Use p/n 1001228083) 860SJ (Original Equipment)	
28	1001181588	NLA	Telescope Cylinder Assembly (Use p/n 1001228083) 860SJ (Service Replacement)	

ITEM	PART NUMBER	QTY	DESCRIPTION	REV
28	1001228083	1	Telescope Cylinder Assembly 860SJ (Service Replacement)	
29	3300240	1	Nut	
30	3300241	2	Locknut 3/4in-10NC	
31	3300242	1	Locknut 7/8in-9NC	
32	3272401	1	Nut 7/8in-9NC	
33	3272001	1	Nut 5/8in-11NC	
34	3311605	4	Locknut 3/8in-16NC	
35	3312201	2	Nut 3/4in-10NC	
36	3340755	2	Pad, Wear	
37	3340757	2	Pad, Wear	
38	3340758	2	Pad, Rubber	
39	3340871	2	Pad, Wear	
40	3340881	5	Pad, Rubber	
41	3422417	1	Pin, Extend Sheave	
42	3422424	2	Pin	
43	3539622	1	Plate, Cover	
44	3580243	2	Sheave, Retract	
44	0961951	1	Bushing	
45	3580249	2	Guard, Sheave	
46	3580288	1	Sheave, Extend	
46	0961951	2	Bushing	
47	3580289	1	Guard, Sheave	
48	3841143	1	Keeper, Pin	
49		Ref	Cable, Wire Rope	
49	3890013	2	Cable, Wire 800S	
49	3890016	2	Cable, Wire 860SJ	
50		Ref	Cable, Wire Rope	
50	3890014	1	Cable, Wire 800S	
50	3890017	1	Cable, Wire 860SJ	
51		Ref	Cable, Wire Rope	
51	3890015	1	Cable, Wire 800S	
51	3890018	1	Cable, Wire 860SJ	
52	3951608	2	Setscrew 3/8in-16NC x 1in	
53	4070863	5	Shim (#11 Gauge)	
54	4070895	8	Shim (#16 Gauge)	
55	4070897	10	Shim (#18 Gauge)	
56	4070898	22	Shim (#11 Gauge)	
57	4070929	2	Shim (#16 Gauge)	
58	4070939	1	Shim (#16 Gauge)	
59	4070940	1	Shim (#16 Gauge)	
60	4160149	1	Spring, Torsion	
61	4711600	12	Flatwasher 3/8in Thin	
62		Ref	Screw 3/8in-16NC x 7/8in Options:	
62	0791607	8	Screw 3/8in-16NC x 7/8in **(Prior to SN 0300074431)**	
62	0811607	8	Screw 3/8in-16NC x 7/8in **(SN 0300074431 through 0300140000)**	
63		Ref	Screw 3/8in-16NC x 1in Options:	
63	0791608	6	Screw 3/8in-16NC x 1in **(Prior to SN 0300074431)**	
63	0811608	6	Screw 3/8in-16NC x 1in **(SN 0300074431 through 0300140000)**	
64		Ref	Screw 3/8in-16NC x 1-1/4in Options:	
64	0791610	6	Screw 3/8in-16NC x 1-1/4in **(Prior to SN 0300074431)**	

ITEM	PART NUMBER	QTY	DESCRIPTION	REV
64	0811610	6	Screw 3/8in-16NC x 1-1/4in **(SN 0300074431 through 0300085466)**	
65		Ref	Screw Options:	
65	0791612	2	Screw 3/8in-16NC x 1-1/2in **(Prior to SN 0300130875)**	
65	0641613	2	Screw 3/8in-16NC x 1-5/8in **(SN 0300130875 through 0300140000)**	
66		Ref	Screw 3/8in-16NC x 1-3/4in Options:	
66	0791614	6	Screw 3/8in-16NC x 1-3/4in **(Prior to SN 0300074431)**	
66	0811614	6	Screw 3/8in-16NC x 1-3/4in **(SN 0300074431 through 0300140000)**	
67		Ref	Screw 3/8in-16NC x 2in Options:	
67	0791616	6	Screw 3/8in-16NC x 2in **(Prior to SN 0300074431)**	
67	0811616	6	Screw 3/8in-16NC x 2in **(SN 0300074431 through 0300140000)**	
68	4071020	2	Shim (#16 Gauge)	
69	1120510	1	Cover, Pin	
70	4751400	4	Flatwasher 1/4in Regular	
71	4891600	2	Flatwasher 3/8in Hardened	
72	0641613	4	Screw 3/8in-16NC x 1-5/8in	

FIGURE 3-5. ROTATOR ASSEMBLY

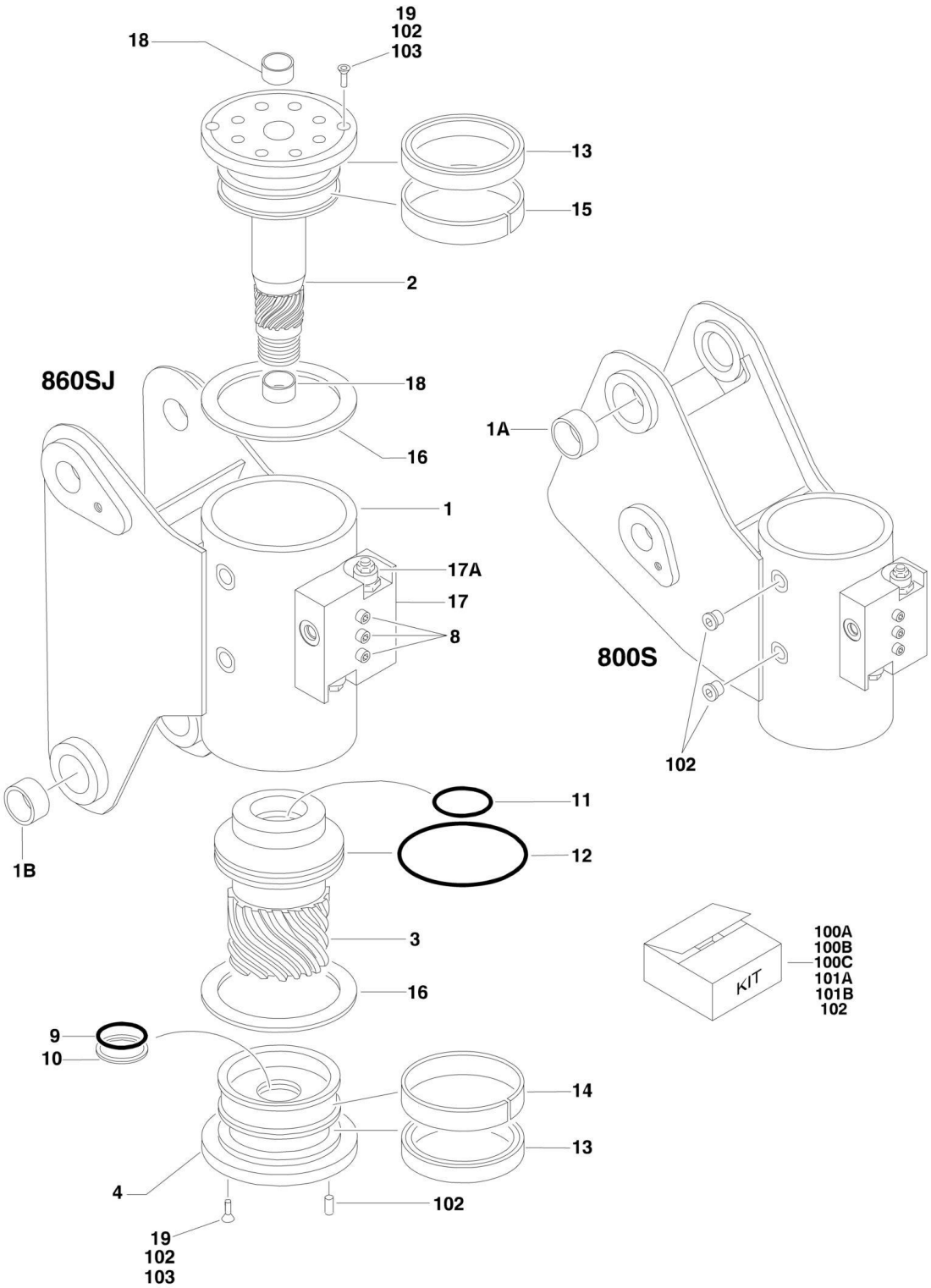

FIGURE 3-5. ROTATOR ASSEMBLY

ITEM	PART NUMBER	QTY	DESCRIPTION	REV
		Ref	**ROTATOR ASSEMBLY**	
	0060061	Ref	**Rotator Assembly 800S**	I
	0060048	Ref	**Rotator Assembly 860SJ**	H
1		Ref	Case/Bracket Weldment	
1	7017175	1	0060061 Rotator	
1	7017141	1	0060048 Rotator	
1A		Ref	Bushing Options: (Top)	
1A	0961951	2	0060061 Rotator	
1A	Not Required	0	0060048 Rotator	
1B		Ref	Bushing Options: (Bottom)	
1B	Not Required	0	0060061 Rotator	
1B	0961947	2	0060048 Rotator	
2		Ref	Shaft Options:	
2	7017162	1	0060061 Rotator	
2	7017140	1	0060048 Rotator	
3		Ref	Sleeve, Piston Options:	
3	7017163	1	0060061 Rotator	
3	7017139	1	0060048 Rotator	
4	7017164	1	Cap, End	
8	See Note	NSS	Bolt 1/4in-20NC x 1-1/2in (Grade 8) (Note: Not Available for Purchase)	
9	See Note	NSS	Seal, Cap (Note: Use Items 100A, 100B & 100C)	
10	See Note	NSS	Ring, Back-up Cap (Note: Use Items 100A, 100B & 100C)	
11	See Note	NSS	Seal, Rod (Note: Use Items 100A, 100B & 100C)	
12	See Note	NSS	Seal, Piston (Note: Use Items 100A, 100B & 100C)	
13	See Note	NSS	Packing, Bearing (Note: Use Items 100A, 100B & 100C)	
14	See Note	NSS	Bearing, Cap (Note: Use Items 101A & 101B)	
15	See Note	NSS	Bearing, Shaft (Note: Use Items 101A & 101B)	
16	See Note	NSS	Thrustwasher (Note: Use Items 101A & 101B)	
17		Ref	Counterbalance Valve Assembly Options:	
17	7017172	1	0060061 Rotator	
17	7017125	1	0060048 Rotator	
17A		Ref	Valve, Cartridge Options:	
17A	7017192	2	0060061 Rotator	
17A	7011323	2	0060048 Rotator	
17A		Ref	Seal Kit (1 Per Assembly)	
17A	See Note	NSS	7017192 Cartridge (Note: Use p/n 7017192)	
17A	2900770	2	7011323 Cartridge	
18	7017136	2	Bushing	
19	70001697	6	Screw, Countersunk (0060048 Rotator)	
		Ref	**KIT OPTIONS:**	
100		Ref	Seal Kit Options: (Includes Items 9-13 & 102)	
100A	7017158	1	0060061 Rotators (Standard)	
100B	70000342	1	0060061 Rotators (Low Temperature)	
100C	7017137	1	0060048 Rotator	
101		Ref	Bearing Kit Options: (Includes Items 14-16)	
101A	7017159	1	0060061 Rotators	
101B	7017138	1	0060048 Rotator	
102	7017142	1	Hardware Kit (Includes End Cap Dowel Pins, Plugs and 103)	
103	70001697	4	Screw, Countersunk 1/4in-20NC x 3/8in (Grade 8)	

FIGURE 3-6. PLATFORM SUPPORT AND CONTROL VALVES INSTALLATIONS

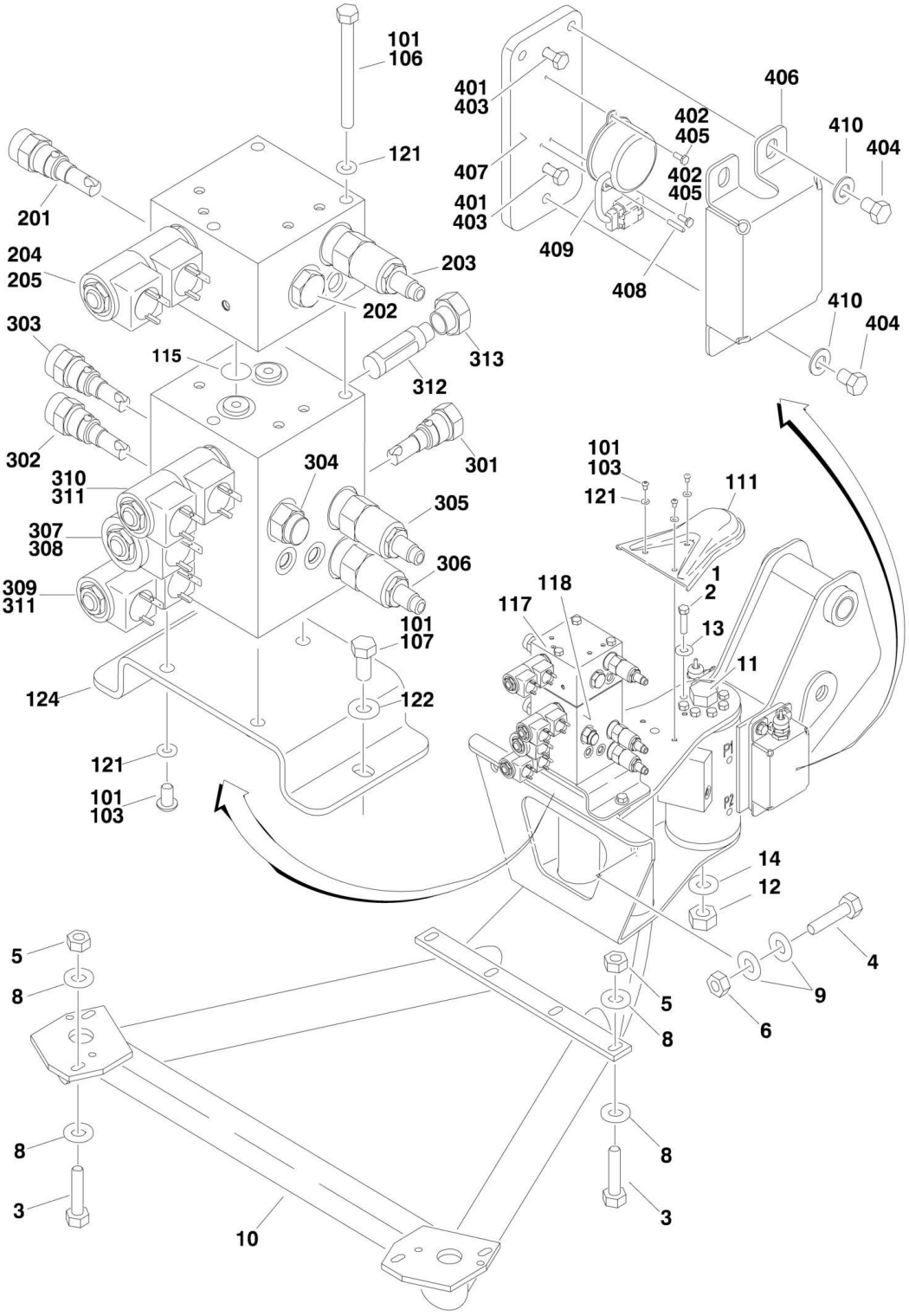

FIGURE 3-6. PLATFORM SUPPORT AND CONTROL VALVES INSTALLATIONS

ITEM	PART NUMBER	QTY	DESCRIPTION	REV
		Ref	**PLATFORM SUPPORT INSTALLATION**	
	0270015	Ref	**Front Entry Platform Machines**	C
	0272070	Ref	**Side Entry Platform Machines without Load Sensing and without SkyGlazier**	E
	See Note	Ref	**Side Entry Platform Machines without Load Sensing and with SkyGlazier (Note: For Replacement Parts, Contact JLG Customer Service and Request Manual p/n 3124242)**	
	See Note	Ref	**Side Entry Platform Machines with Load Sensing and without SkyGlazier (Note: For Replacement Parts, Contact JLG Customer Service and Request Manual p/n 3124287)**	
	See Note	Ref	**Side Entry Platform Machines with Load Sensing and with SkyGlazier (Note: For Replacement Parts, Contact JLG Customer Service and Request Manual p/n 3124287)**	
1	0100011	AR	Compound, Locking	
2	0641606	8	Bolt 3/8in-16NC x 3/4in (Use with p/n 0270015)	
2	0681608	8	Bolt 3/8in-16NC x 1in (Grade 8) (Use with p/n 0272070)	
3	0681610	6	Bolt 3/8in-16NC x 1-1/4in (Grade 8) (Use with p/n 0270015)	
3	0641812	8	Bolt 1/2in-13NC x 1-1/2in (Use with p/n 0272070)	
4	0641820	2	Bolt 1/2in-13NC x 2-1/2in (Use with p/n 0270015 Only)	
5	3311605	AR	Locknut 3/8in-16NC	
6	3311805	2	Locknut 1/2in-13NC (Use with p/n 0270015 Only)	
8	4751600	12	Flatwasher 3/8in Regular (Use with p/n 0270015)	
8	4891800	8	Flatwasher 1/2in Hardened (Use with p/n 0272070)	
9	4751800	4	Flatwasher 1/2in Regular (Use with p/n 0270015 Only)	
10	4846158	1	Support Weldment (Use with p/n 0270015)	
10	4846573	1	Support Weldment (Use with p/n 0272070)	
11	0642684	1	Bolt 1in-8NC x 10-1/2in (Use with p/n 0272070 Only)	
12		Ref	Locknut 1in-8NC Options (Use with p/n 0272070 Only):	
12	3272605	1	Locknut 1in-8NC **(Prior to SN 0300119693)**	
12	3300243	1	Locknut 1in-8NC **(SN 0300119693 through 0300140000)**	
13	4891600	8	Flatwasher 3/8in Hardened (Use with p/n 0272070 Only)	
14	4892600	1	Flatwasher 1in Hardened (Use with p/n 0272070 Only)	
		Ref	**CONTROL VALVE INSTALLATIONS**	
	0270901	Ref	**Control Valve Installations 800S (Prior to SN 0300083331)**	G
	0274173	Ref	**Control Valve Installations 800S (SN 0300083331 through 0300087261)**	B
	0274644	Ref	**Control Valve Installations 800S (SN 0300087262 through 0300140000)**	D
	0270902	Ref	**Control Valve Installations 860SJ (Prior to SN 0300083331)**	F
	0274174	Ref	**Control Valve Installations 860SJ (SN 0300083331 through 0300087261)**	B
	0274645	Ref	**Control Valve Installations 860SJ (SN 0300087262 through 0300140000)**	D
101	0100011	AR	Compound, Locking	
103	0630467	6	Screw, Button Head	
106	0641526	3	Bolt 5/16in-18NC x 3-1/4in (860SJ Only)	
107	0641606	2	Bolt 3/8in-16NC x 3/4in	
111	1670964	1	Cover	
115	3780117	2	O-Ring (860SJ Only)	
117		Ref	Valve, Jib (See Items 201-205 for Breakdown)	
117	Not Required	0	Valve, Jib 800S	
117	4641186	1	Valve, Jib 860SJ	

ITEM	PART NUMBER	QTY	DESCRIPTION	REV
118		Ref	Valve, Level/Rotate Options (See Items 301-313 for Breakdown):	
118	4641185	1	Valve, Level/Rotate **(Prior to SN 0300069206)**	
118	4641251	1	Valve, Level/Rotate **(SN 0300069206 through 0300140000)**	
121	4711500	AR	Flatwasher 5/16in Thin	
122	4711600	2	Flatwasher 3/8in Thin	
124	4846218	1	Plate, Valve Mounting	
	4641186	Ref	**JIB VALVE ASSEMBLY (860SJ ONLY)**	B
201	7012965	1	Valve, Cartridge	
201	7012953	1	Seal Kit - 7012965 Valve	
202	7010542	1	Valve, Load Shuttle	
202	7010543	1	Seal Kit - 7010542 Valve	
203	7023915	1	Valve, Relief	
203	7012967	1	Seal Kit - 7023915 Valve	
204	7023922	1	Valve, Solenoid	
204	7017402	1	Seal Kit - 7017452 Valve	
205	7012944	2	Coil	
		Ref	**LEVEL/ROTATE VALVE ASSEMBLIES**	
	4641185	Ref	**Level/Rotate Valve Assemblies (Prior to SN 0300069206)**	C
	4641251	Ref	**Level/Rotate Valve Assemblies (SN 0300069206 through 0300140000)**	A
301	7012955	1	Valve, Check	
301	7012967	1	Seal Kit - 7012955 Valve	
302	7012965	1	Valve, Flow Regulator (Valve 4641185)	
302	7023984	1	Valve, Flow Regulator (Valve 4641251)	
302	7012953	1	Seal Kit - 7012965/7023984 Valves	
303	7012989	1	Valve, Flow Regulator	
303	7012953	1	Seal Kit - 7012989 Valve	
304	7023924	1	Valve, Flow Regulator (Valve 4641185)	
304	7012965	1	Valve, Flow Regulator (Valve 4641251)	
304	7012953	1	Seal Kit - 7023924/7012965 Valves	
305	7023983	1	Valve, Relief (Level Up)	
305	7012967	1	Seal Kit - 7023983 Valve	
306	7023911	1	Valve, Relief (Level Down)	
306	7012967	1	Seal Kit - 7023911 Valve	
307	7017479	1	Valve, Solenoid (Pressure)	
307	7012518	1	Seal Kit - 7017479 Valve	
308	7012943	1	Coil	
309	7023922	1	Valve, Solenoid (Platform Level)	
309	7017402	1	Seal Kit - 7023922 Valve	
310	7017452	1	Valve, Solenoid (Rotator)	
310	7017402	2	Seal Kit - 7017452 Valve	
311	7012944	4	Coil	
312	7021616	1	Filter (Valve 4641251)	
313	7024832	1	Plug (Valve 4641251)	
		Ref	**LEVEL SENSOR SWITCH INSTALLATION OPTIONS:**	
	0271381	Ref	**Level Sensor Switch Installation (Prior to SN 0300075873)**	F
	0273695	Ref	**Level Sensor Switch Installation (SN 0300075873 through 0300140000)**	A
401	0100011	AR	Compound, Locking	
402	0100035	AR	Compound, Locking	
403	0641406	4	Bolt 1/4in-20NC x 3/4in	
404	0641604	6	Bolt 3/8in-16NC x 1/2in	

ITEM	PART NUMBER	QTY	DESCRIPTION	REV
405		Ref	Screw #6-32NC x 3/8in Options:	
405	0720603	4	Screw #6-32NC x 3/8in **(Prior to SN 0300075873)**	
405	3930606	4	Screw #6-32NC x 3/8in **(SN 0300075873 through 0300140000)**	
406	1671044	2	Cover, Sensor	
407		Ref	Mount, Sensor Options:	
407	3200436	2	Mount, Sensor **(Prior to SN 0300066741)**	
407	3200449	2	Mount, Sensor **(SN 0300066741 through 0300140000)**	
408	3440410	2	Rollpin	
409		Ref	Switch, Tilt Sensor Options:	
409	4360503	NLA	Switch, Tilt Sensor (Use p/n 4360544) **(Prior to SN 0300066741)**	
409	4360528	NLA	Switch, Tilt Sensor (Use p/n 4360544) **(SN 0300066741 through 0300075872)**	
409	4360544	2	Switch, Tilt Sensor **(SN 0300075873 through 0300140000)**	
410	4711600	6	Flatwasher 3/8in Thin	

FIGURE 3-7. BOOM CABLE CLAMPS INSTALLATIONS

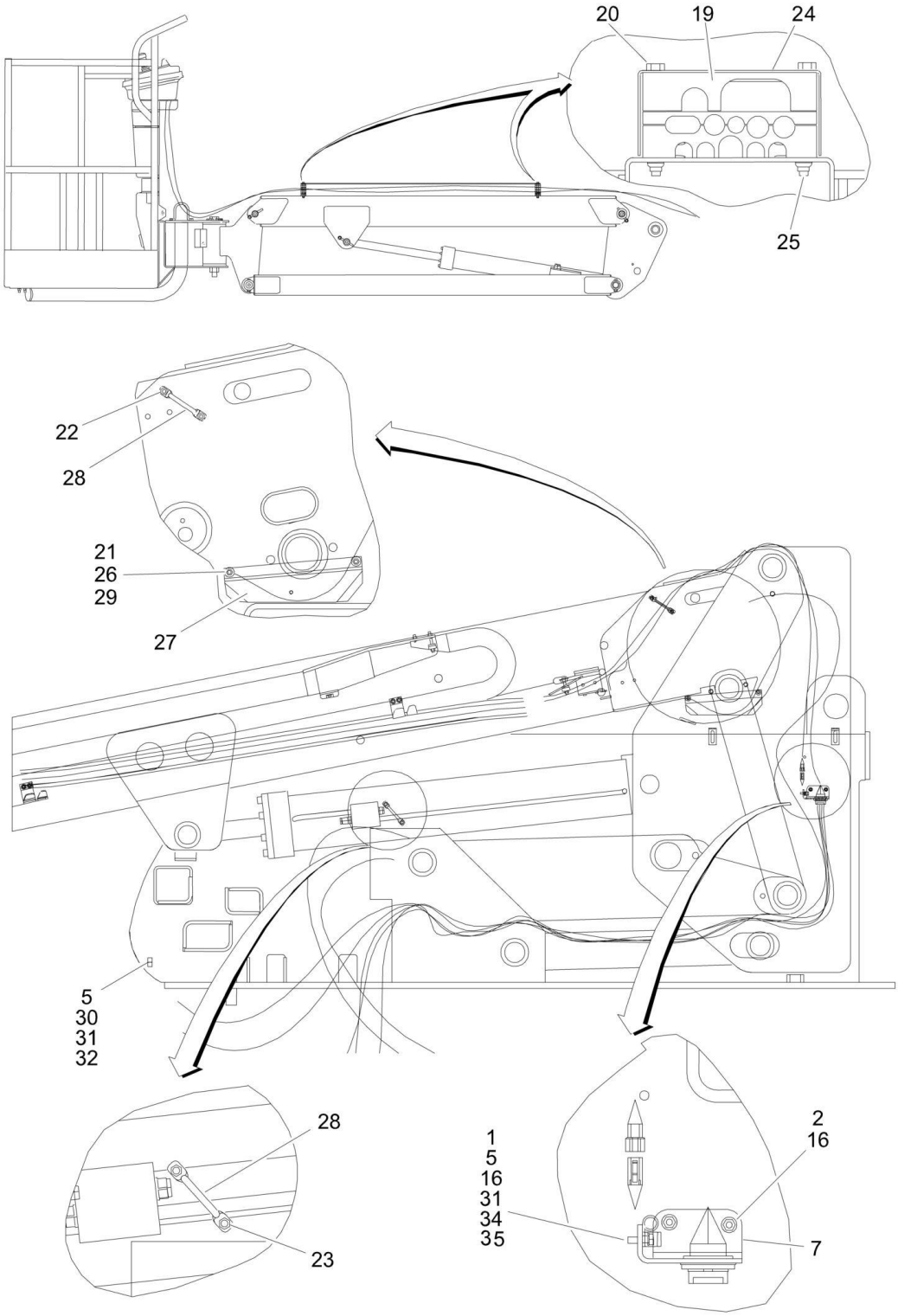

FIGURE 3-7. BOOM CABLE CLAMPS INSTALLATIONS

ITEM	PART NUMBER	QTY	DESCRIPTION	REV
		Ref	**BOOM CABLE CLAMPS INSTALLATION**	
	0271322	Ref	**Boom Cable Clamps Installation 800S**	I
	0272388	Ref	**Boom Cable Clamps Installation 800S (With 7500W Generator and Without Arctic Package)**	F
	1001091609	Ref	**Boom Cable Clamps Installation 800S (Without 7500W Generator and With Arctic Package)**	C
	1001091664	Ref	**Boom Cable Clamps Installation 800S (With 7500W Generator and Arctic Package)**	D
	0271324	Ref	**Boom Cable Clamps Installation 860SJ**	I
	0272389	Ref	**Boom Cable Clamps Installation 860SJ (With 7500W Generator and Without Arctic Package)**	E
	0275586	Ref	**Boom Cable Clamps Installation 860SJ (Without 7500W Generator and With Arctic Package)**	B
	1001091665	Ref	**Boom Cable Clamps Installation 860SJ (With 7500W Generator and Arctic Package)**	D
1	0641408	1	Bolt 1/4in-20NC x 1in	
2	0641412	2	Bolt 1/4in-20NC x 1-1/2in	
5		Ref	Clamp Options:	
5	1320223	2	Machines without 7500W Generator	
5	Not Required	0	Machines with 7500W Generator	
7	3573047	1	Plate, Terminal Mounting	
16	4711400	5	Flatwasher 1/4in Narrow	
19		Ref	Block, Clamp (860SJ Only) Options:	
19	0561484	2	All Machines except Machines without 7500W Generator and With Arctic Package	
19	1001091472	2	Without 7500W Generator and With Arctic Package	
20	0641424	4	Bolt 1/4in-20NC x 3in (860SJ Only)	
21	0641511	2	Bolt 5/16in-18NC x 1-3/8in	
22	0641604	2	Bolt 3/8in-16NC x 1/2in	
23	0641607	2	Bolt 3/8in-16NC x 7/8in	
24	1671034	1	Cover, Jib (860SJ Only)	
25	2080044	4	Rivnut (860SJ Only)	
26	3311505	2	Locknut 5/16in-18NC	
27	3573296	1	Plate, Hose Cover	
28	3841340	2	Loop, Hose	
29	4751500	4	Flatwasher 5/16in	
30		Ref	Bolt 1/4in-20NC x 1-1/4in Options:	
30	0641410	1	Machines without 7500W Generator	
30	Not Required	0	Machines with 7500W Generator	
31	3311405	AR	Locknut 1/4in-20NC	
32		Ref	Flatwasher 1/4in Options:	
32	4751400	1	Machines without 7500W Generator	
32	Not Required	0	Machines with 7500W Generator	
34	1320061	1	Clamp	
35	1320169	NLA	Clamp (Use p/n 1320041) (Machines with 7500W Generator Only)	

SECTION 4 - PLATFORM

SECTION 4 - PLATFORM

FIGURE 4-1. PLATFORM ASSEMBLIES (FRONT ENTRY PLATFORM)

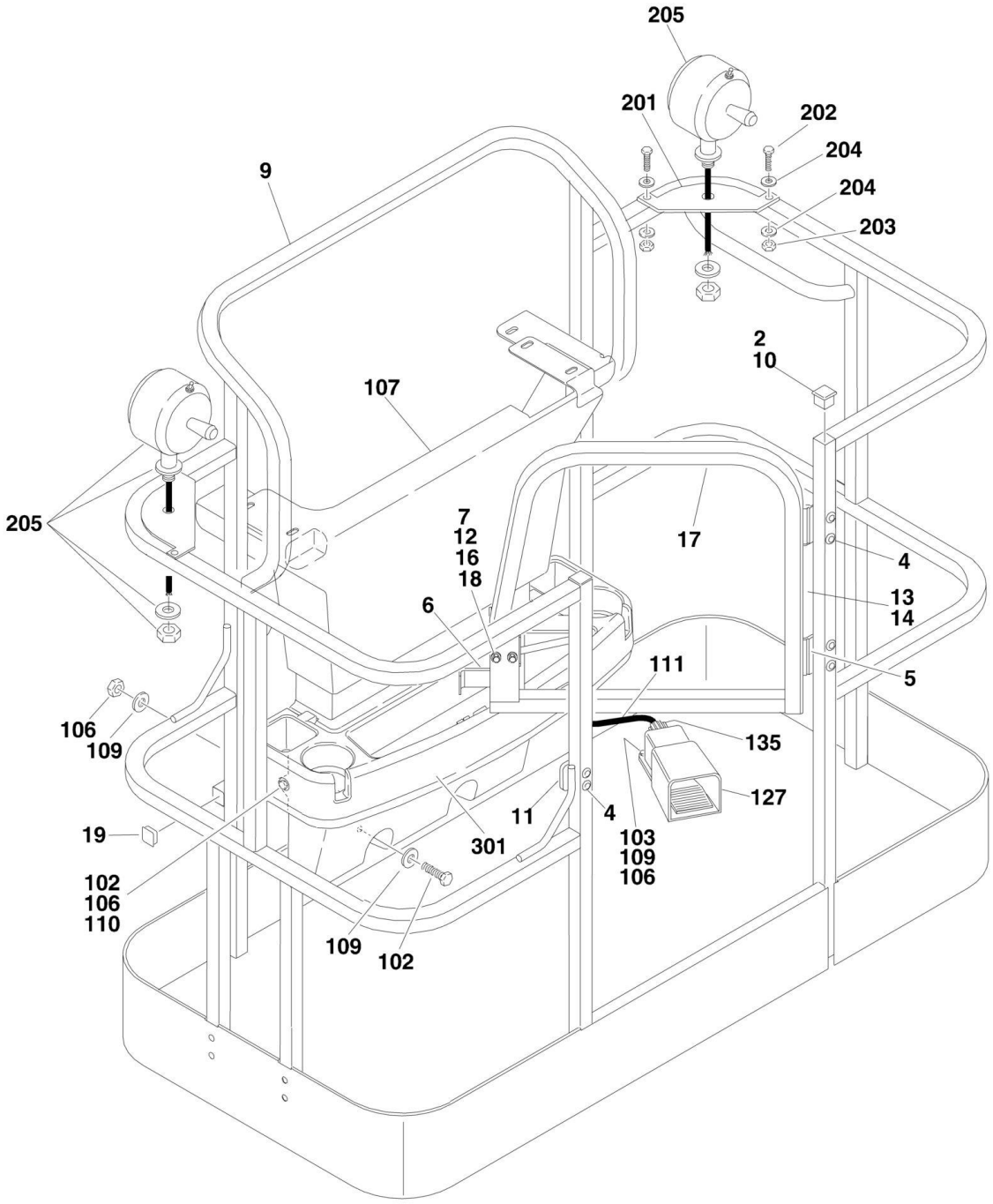

FIGURE 4-1. PLATFORM ASSEMBLIES (FRONT ENTRY PLATFORM)

ITEM	PART NUMBER	QTY	DESCRIPTION	REV
		Ref	**PLATFORM ASSEMBLIES:**	
	3510772	Ref	**8ft (2.44m) with Standard Gate/No Mesh**	A
	3510816	Ref	**8ft (2.44m) with Self-Closing Gate/No Mesh**	A
	3510837	Ref	**8ft (2.44m) with Self-Closing Gate/Mesh to Top Rail**	B
	3510817	Ref	**6ft (1.83m) with Standard Gate/No Mesh**	A
	3510821	Ref	**6ft (1.83m) with Self-Closing Gate/No Mesh**	A
		Ref	**Note: Replacement Decals Must be Ordered Separately - See DECALS SECTION.**	
2	0100074	AR	Sealant, RTV Silicone	
4	2080040	13	Fastener, Huck	
5		Ref	Hinge Options:	
5	2600216	2	Standard Gate	
5	2600219	2	Self-Closing Gate **(Prior to SN 0300068577)**	
5	2600287	2	Self-Closing Gate **(SN 0300068577 through 0300140000)**	
6	2940074	1	Latch	
7	3311001	4	Nut #10-24NC	
9	See Note	NSS	Platform (Note: Not Available - Purchase Complete Platform Assembly)	
10	3520072	AR	Cap-Plug	
11	3539685	1	Plate, Latch	
12	3911008	4	Screw #10-24NC x 1in	
13	4060803	6 in/15cm	Trim	
14	4220165	1	Stop, Gate	
16	4751000	8	Flatwasher #10 Regular	
17		Ref	Gate Options:	
17	4845327	1	Standard Gate	
17	4845426	1	Self-Closing Gate	
17	4845951	1	Self-Closing Gate/Mesh to Top Rail	
18	4761000	4	Lockwasher #10	
19	3520172	2	Plug	
19	0100010	AR	Adhesive	
	0270889	Ref	**FOOTSWITCH AND COVERS INSTALLATION**	C
102	0641406	AR	Bolt 1/4in-20NC x 3/4in	
103	0641408	3	Bolt 1/4in-20NC x 1in	
106	3311405	AR	Locknut 1/4in-20NC	
107	3380434	1	Panel, Molded	
109	4740362	7	Washer, Fender	
110	4751400	4	Flatwasher 1/4in Regular **(Prior to SN 0300096735)**	
111	1060918	7 ft/2.14m	Cable, Electrical - 18/3	
127	See Note	Ref	Footswitch (Note: See PLATFORM ASSEMBLIES - SIDE ENTRY PLATFORM for Service Parts)	
135	4460071	1	Connector, Strain Relief	
	0270814	Ref	**WORKLIGHTS INSTALLATION (OPTIONAL)**	3-E
201	3536089	2	Plate, Mounting	
202	0641414	4	Bolt 1/4in-20NC x 1-3/4in	
203	3311405	4	Locknut 1/4in-20NC	
204	4711400	8	Flatwasher 1/4in Thin	
205	2920140	2	Worklight Assembly	
205	7016399	2	Bulb, Replacement (1 per Assembly)	
206	4240099	10	Tie-Strap (Not Shown)	

SECTION 4 - PLATFORM

ITEM	PART NUMBER	QTY	DESCRIPTION	REV
207	2820035	9 ft/2.75m	Loom, Vinyl (Not Shown)	
209	4460598	1	Connector, Strain Relief (Not Shown - Located at Console Box)	
		Ref	**TRAY INSTALLATIONS (OPTIONAL)**	
301	1580012	1	Tray, Storage (Center)	
302	1580013	1	Tray, Storage (Rail Mounted - Not Shown)	

FIGURE 4-2. PLATFORM ASSEMBLIES - SIDE ENTRY (SN 0300067916 through 0300140000)

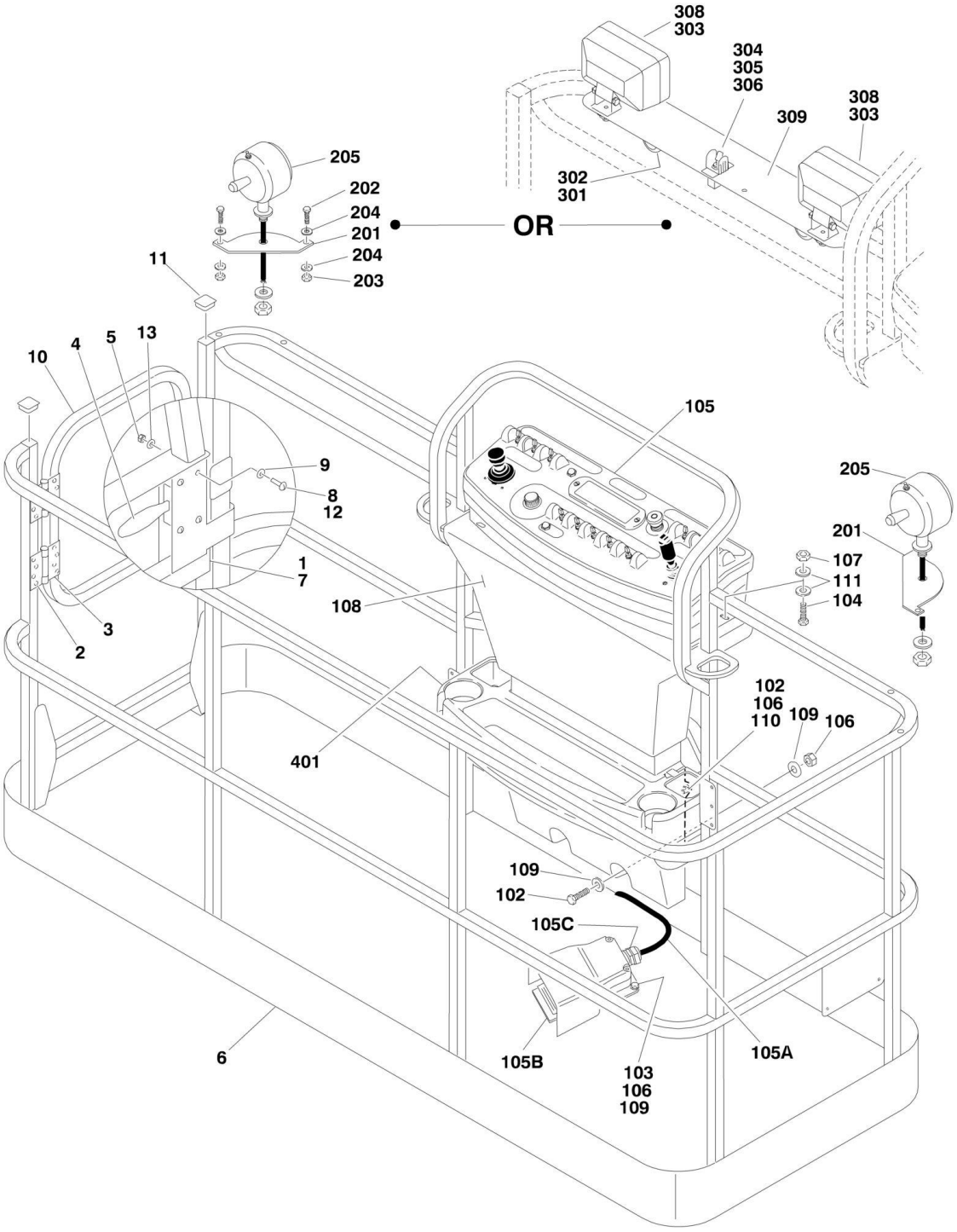

FIGURE 4-2. PLATFORM ASSEMBLIES - SIDE ENTRY (SN 0300067916 through 0300140000)

ITEM	PART NUMBER	QTY	DESCRIPTION	REV
		Ref	**PLATFORM ASSEMBLIES:**	
	3510830	Ref	**Platform 30in x 4ft (76cm x 1.22m) with No Mesh (Use p/n 1001144027)**	B-M
	3510831	Ref	**Platform 30in x 5ft (76cm x 1.5m) with No Mesh (Use p/n 1001144026)**	B-L
	3510833	Ref	**Platform 36in x 6ft (91.5cm x 1.83m) with No Mesh (Use p/n 1001144024)**	B-I
	3510822	Ref	**Platform 36in x 8ft (91.5cm x 2.44m) with No Mesh (Use p/n 1001144023)**	B-J
		Ref	**Note: Original Equipment platform may have been replaced with Service Replacement platform. Identify platform before ordering parts.**	
		Ref	**Note: Platform and Mesh must be ordered separately for Platforms with Mesh. See SPECIAL OPTIONS SECTION for Mesh Installations.**	
		Ref	**Note: Replacement Decals Must be Ordered Separately - See DECALS SECTION.**	
1	0100040	AR	Sealant, Adhesive **(SN 0300067916 through 0300073442)**	
2	2080040	16	Fastener, Huck	
3	2600281	2	Hinge, Self-Closing	
4	2940074	1	Latch	
5	3311001	4	Nut #10-24NC **(SN 0300067916 through 0300077329)**	
6	See Note	NSS	Platform (Note: Not Available - Purchase Complete Platform Assembly)	
7	3520072	1	Cap-Plug	
8		Ref	Screw Options:	
8	3911008	4	Screw #10-24NC x 1in **(SN 0300067916 through 0300076321)**	
8	3900205	4	Screw #10-24NC x 5/8in **(SN 0300076322 through 0300077328)**	
8	3820020	4	Rivet, Pop **(SN 0300077329 through 0300140000)**	
9	4751000	4	Flatwasher #10 Regular **(SN 0300067916 through 0300077329)**	
10		Ref	Gate Options:	
10	4846452	1	Gate for Platform p/ns 3510822, 3120830, 3510831 & 3510833	
10	1001144629	1	Gate for Platform p/ns 1001144023, 1001144024, 1001144026 & 1001144027	
11	3520198	2	Cap-Plug **(SN 0300073442 through 0300140000)**	
12	0100011	AR	Compound, Locking **(SN 0300073442 through 0300077329)**	
13	4761000	4	Lockwasher #10 **(SN 0300073442 through 0300077329)**	
		Ref	**FOOTSWITCH AND COVERS INSTALLATION**	
	0270889	Ref	**Footswitch and Covers Installation (SN 0300067916 through 0300137912)**	D
	1001108867	Ref	**Footswitch and Covers Installation (SN 0300137913 through 0300139079)**	B
	1001114897	Ref	**Footswitch and Covers Installation (SN 0300139080 through 0300140000)**	B
102	0641406	AR	Bolt 1/4in-20NC x 3/4in	
103	0641408	3	Bolt 1/4in-20NC x 1in	
104	0641610	4	Bolt 3/8in-16NC x 1-1/4in	
105		Ref	Platform Console Assembly Options (See PLATFORM CONSOLE ASSEMBLY for Breakdown):	
105	0861416	1	Console Assembly **(SN 0300067916 through 0300137912)**	

SECTION 4 - PLATFORM

ITEM	PART NUMBER	QTY	DESCRIPTION	REV
105	1001108866	1	Console Assembly **(SN 0300137913 through 0300139079)**	
105	1001114896	1	Console Assembly **(SN 0300139080 through 0300140000)**	
105A	1060918	7 ft/2.14m	Cable, Electrical - 18/3	
105B	0272970	1	Footswitch Assembly (Includes Footswitch and Items 105A & 105C) (See ELECTRICAL SECTION for Further Breakdown)	A
		Ref	**Note: Assembly p/n 0272970 may use either p/n 4360031 or p/n 1001117320. If Original Equipment was replaced as an "assembly," p/n 1001117320 may have been used as part of the Service Replacement. Identify component before ordering parts.**	
105B		Ref	Footswitch Less Cable Options:	
105B	4360031	1	Original Equipment	
105B	1001117320	1	Service Replacement	
105B		Ref	Block, Contact Options (see Note Above):	
105B	7000625	2	Contact Block for 4360031 Footswitch	
105B	70003483	1	Contact Block for 1001117320 Footswitch	
105C	4460071	1	Connector, Strain Relief	
106	3311405	AR	Locknut 1/4in-20NC	
107	3311605	4	Locknut 3/8in-16NC	
108	3380434	1	Panel, Molded	
109	4740362	7	Washer, Fender	
110	4751400	4	Flatwasher 1/4in Regular **(SN 0300067916 through 0300096735)**	
111	4751600	8	Flatwasher 3/8in Regular	
		Ref	**WORKLIGHTS INSTALLATIONS (optional)**	
	0270814	Ref	**Worklights Installations (Optional) 800S/860SJ (SN 67916 through 0300074424)**	3-E
	0273472	Ref	**Worklights Installations (Optional) 800S (SN 0300074425 through 0300140000)**	D
	0273483	Ref	**Worklights Installations (Optional) 860SJ (SN 0300074425 through 0300140000)**	D
201	3536089	2	Plate, Mounting	
202		Ref	Hardware Options:	
202	0641414	4	Bolt 1/4in-20NC x 1-3/4in **(SN 0300067916 through 0300112473)**	
202	2080040	4	Huck Fastener **(SN 0300112474 through 0300140000)**	
203	3311405	4	Locknut 1/4in-20NC **(SN 0300067916 through 0300112474)**	
204	4711400	8	Flatwasher 1/4in Thin **(SN 0300067916 through 0300112474)**	
205	2920140	2	Worklight	
205	7016399	2	Bulb, Replacement (1 Per Worklight)	
206	4240099	10	Tie-Strap (Not Shown)	
207	2820035	9	Loom, Vinyl (Not Shown)	
209		Ref	Connector, Strain Relief Options (Not Shown - Located at Console Box):	
209	4460598	1	Connector, Strain Relief **(SN 0300067916 through 0300074424)**	
209	4460426	1	Connector, Strain Relief **(SN 0300074425 through 0300140000)**	
	0272058	Ref	**FLOODLIGHTS INSTALLATION**	B
301	0641518	2	Bolt 5/16in-18NC x 2-1/4in	
302	2560173	2	Handle, Star Knob	
303	2920157	2	Floodlight	
303	7024452	2	Bulb, Replacement (1 Per Light)	
304	3250585	1	Nameplate - Lights On	

ITEM	PART NUMBER	QTY	DESCRIPTION	REV
305	4060802	1	Guard, Switch	
306	4360336	1	Switch, Toggle	
307	4420037	AR	Tape, Insulation (Not Shown)	
308	4751800	2	Flatwasher 1/2in Regular	
309	4846561	1	Mount, Light	
		Ref	**TRAY INSTALLATIONS (OPTIONAL)**	
401	1580012	1	Tray, Storage (Center)	
402	1580013	1	Tray, Storage (Rail Mounted - Not Shown)	

FIGURE 4-3. PLATFORM COMPONENTS INSTALLATION (FALL ARREST PLATFORM)

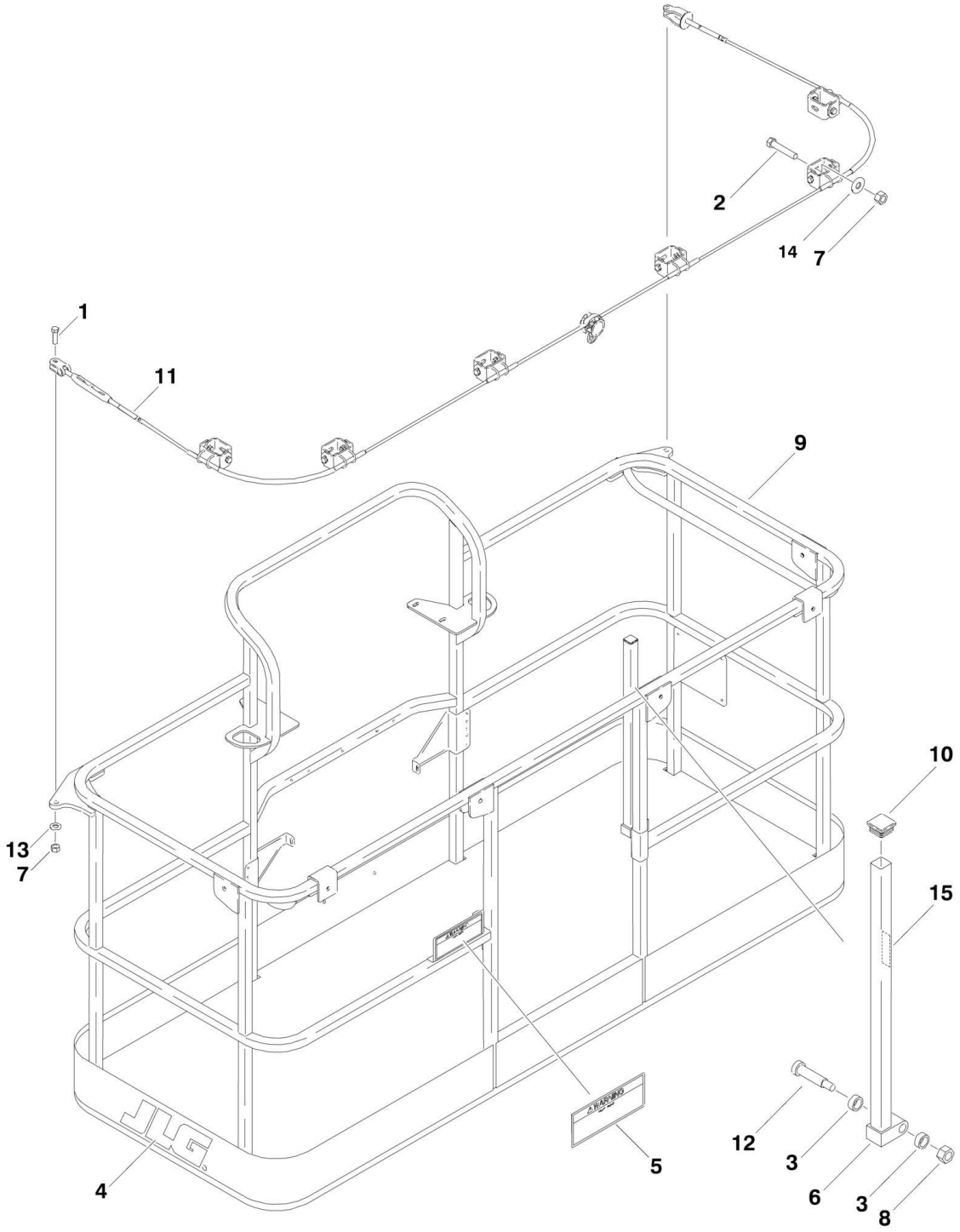

FIGURE 4-3. PLATFORM COMPONENTS INSTALLATION (FALL ARREST PLATFORM)

ITEM	PART NUMBER	QTY	DESCRIPTION	REV
		Ref	**PLATFORM ASSEMBLY (FALL ARREST) OPTIONS:**	
	3510884	Ref	**PLATFORM ASSEMBLY (36 x 72)**	E
	3510868	Ref	**PLATFORM ASSEMBLY (36 x 96)**	D
		Ref	**Note: Replacement Decals Must be Ordered Separately - See DECALS SECTION.**	
1	0681814	2	Bolt 1/2in-13NC x 1-3/4in (Grade 8)	
2	0681822	AR	Bolt 1/2in-13NC x 2-3/4in (Grade 8)	
3	0962270	2	Bearing, Oilite	
4	1702773	1	Decal - JLG	
5	1705014	1	Decal - Safety	
6	2410014	1	Gate	
7	3271805	AR	Locknut 1/2in-13NC (Grade 8)	
8	3311605	1	Locknut 3/8in-16NC	
9	See Note	NSS	Platform (Note: Purchase Platform Assembly)	
10	3520072	1	Cap-Plug	
11		Ref	Cable, Fall Arrest Options:	
11	1060919	1	36 x 72	
11	3890040	1	36 x 96	
12	3900054	1	Bolt 1/2in-13NC x 1-3/4in	
13	4711800	2	Flatwasher 1/2in Thin	
14	4751800	AR	Flatwasher 1/2in Regular	
15	1706385	1	Decal - Drop Bar **(SN 0300085911 through 0300140000)**	

FIGURE 4-4. PLATFORM CONSOLE ASSEMBLY

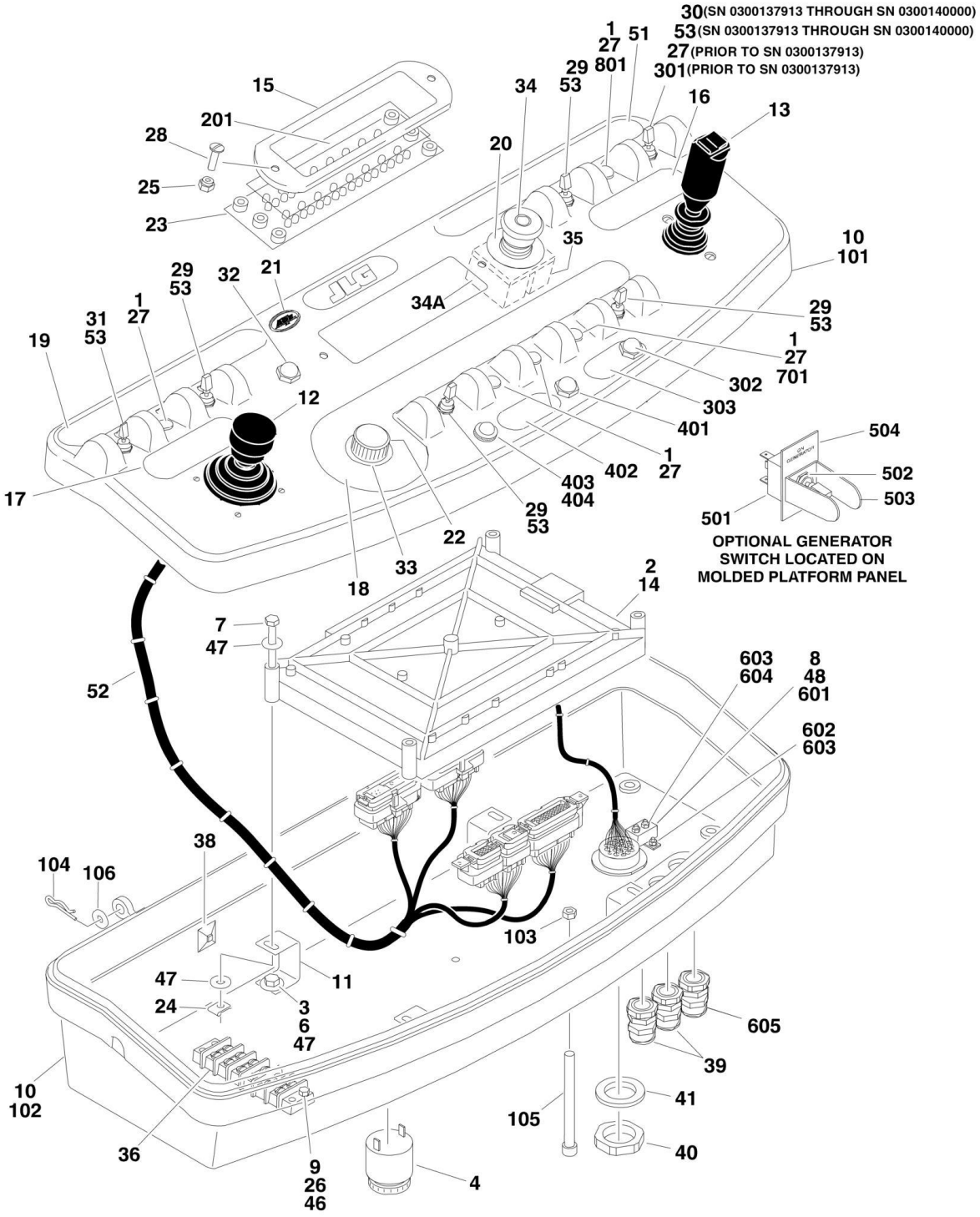

FIGURE 4-4. PLATFORM CONSOLE ASSEMBLY

ITEM	PART NUMBER	QTY	DESCRIPTION	REV
		Ref	**PLATFORM CONSOLE ASSEMBLY**	
	0861416	Ref	**Platform Console Assembly (Prior to SN 0300137913)**	J
	1001108866	Ref	**Platform Console Assembly (SN 0300137913 through 0300139079)**	B
	1001114896	Ref	**Platform Console Assembly (SN 0300139080 through 0300140000)**	B
1	0100009	AR	Sealant	
2	0100048	AR	Grease, Dielectric	
3	0100081	AR	Loctite #454	
4	0140011	1	Alarm	
6	0641406	4	Bolt 1/4in-20NC x 3/4in	
7		Ref	Bolt Options:	
7	0641416	4	Bolt 1/4in-20NC x 2in **(Prior to SN 0300079612)**	
7	0641414	4	Bolt 1/4in-20NC x 1-3/4in **(SN 0300079612 through 0300140000)**	
8	0721003	2	Bolt #10-24NC x 3/8in	
9		Ref	Screw Options:	
9	0721008	1	Screw #10-24NC x 1in **(Prior to SN 0300113581)**	
9	0721006	2	Screw #10-24NC x 3/4in **(SN 0300113581 through 0300140000)**	
10	0861441	1	Box, Console (See Items 101-106 for Breakdown)	
11	0902751	4	Bracket, Support	
12	1600317	NLA	Controller Assembly (Lift and Swing) (See CONTROLLER ASSEMBLY (LIFT AND SWING) for Breakdown) (Use p/n 1001129555)	
13	1600318	NLA	Controller Assembly (Drive and Steer) (See CONTROLLER ASSEMBLY (DRIVE AND STEER) for Breakdown) (Use p/n 1001212415)	
14		Ref	Controller, Module Options:	
		Ref	Note: Re-calibration Required when Replaced.	
14	1600324	1	Controller, Module **(Prior to SN 0300079612)**	
14	1600377	1	Controller, Module **(SN 0300079612 through 0300139079)**	
14	1001110701	1	Controller, Module **(SN 0300139080 through 0300140000)**	
15		Ref	Bezel Options:	
15	1670829	1	Bezel **(Prior to SN 0300081225)**	
15	1671176	1	Bezel **(SN 0300081225 through 0300140000)**	
16	1702565	1	Decal (Drive and Steer)	
17	1702566	1	Decal (Lift and Swing)	
18	1702567	1	Decal (Function Speed)	
19	1702676	1	Decal (Horn)	
20	1704260	1	Decal - EMS	
21	1705132	1	Decal - Control ADE	
22	2560136	1	Handle, Knob	
23	2920154	1	Panel, LED Light	
24	3300353	4	Nut, Tinnerman	
25	3300408	2	Insert, Nylon	
26	3311005	2	Locknut #10-24NC	
27	3520028	AR	Plug, Hole 1/2in	
28	3911018	2	Screw, Round Head #10	
29	4360328	4	Switch, Toggle	
30	4360330	1	Switch, Toggle Only **(SN 0300137913 through 0300140000)**	

ITEM	PART NUMBER	QTY	DESCRIPTION	REV
31	4360331	1	Switch, Toggle	
32	4360387	1	Switch, Pushbutton	
33	4360407	1	Controller, Speed	
34	4360475	1	Switch, Emergency Stop	
34	7020175	1	Cap, Red	
34A	7020176	1	Contact Block	
35	4360476	1	Block, Contact	
36	4460007	1	Bar, Buss - Ground	
37	4460225	1	Plug, Male - 6 Position (Not Shown - See ELECTRICAL SECTION for Location) **(Prior to SN 0300139080)**	
38		Ref	Base, Mounting	
38	4460488	1	Base, Mounting **(Prior to SN 0300137913)**	
38	4460234	3	Base, Mounting **(SN 0300137913 through 0300140000)**	
39	4460428	2	Connector, Strain Relief	
40	4460470	1	Nut, Terminal	
41	4460471	1	Lockwasher, Terminal	
42	4460496	1	Nut, Terminal (Not Shown - See ELECTRICAL SECTION for Location)	
43	4460497	1	Lockwasher, Terminal (Not Shown - See ELECTRICAL SECTION for Location)	
44	4460708	2	Connector, Female - 15 Position (Not Shown - See ELECTRICAL SECTION for Location)	
45	4460905	5	Seal, Plug (Not Shown - See ELECTRICAL SECTION for Location)	
46	4751000	2	Flatwasher #10 Regular **(SN 0300113581 through 0300140000)**	
47	4751400	8	Flatwasher 1/4in Regular	
48	4761000	2	Lockwasher #10 Regular	
49	4922666	1	Harness, Analyzer Cable (Not Shown - See ELECTRICAL SECTION for Breakdown)	
50		Ref	Harness, Upper Valve Options (Not Shown - See ELECTRICAL SECTION for Breakdown):	
50	4922620	1	Harness, Upper Valve **(Prior to SN 0300066741)**	
50	4922749	1	Harness, Upper Valve **(SN 0300066741 through 0300140000)**	
51		Ref	Decal (Stop) Options:	
51	1704997	1	Decal - Stop **(Prior to SN 0300137335)**	
51	1001107527	NLA	Decal - Stop (Use p/n 1704997) **(SN 0300137335 through 0300137912)**	
51	1001107677	1	Decal - Stop **(SN 0300137913 through 0300140000)**	
52		Ref	Harness, Platform Box (See ELECTRICAL SECTION for Breakdown)	
52	4922595	1	Harness, Platform Box **(Prior to SN 0300137913)**	
52	1001107796	1	Harness, Platform Box **(SN 0300137913 through 0300140000)**	
53	3790012	AR	O-Ring	
	0861441	Ref	**CONSOLE BOX ASSEMBLY**	F
101	See Note	1	Console Top (Note: Not Available for Purchase)	
102	See Note	1	Console Bottom (Note: Not Available for Purchase)	
103	3311601	1	Nut 3/8in-16NC	
104		Ref	Pin, Cotter Options:	
104	3450304	2	Pin, Cotter **(Prior to SN 0300073729)**	
104	3420156	2	Pin, Cotter **(SN 0300073729 through 0300088131)**	
104	3470003	2	Pin, Cotter **(SN 0300088132 through 0300140000)**	
105		Ref	Screw 3/8in-16NC x 4-1/2in Options:	
105	3931672	1	Screw 3/8in-16NC x 4-1/2in **(Prior to SN 0300073667)**	

ITEM	PART NUMBER	QTY	DESCRIPTION	REV
105	0630568	1	Screw 3/8in-16NC x 4-1/2in **(SN 0300073667 through 0300140000)**	
106	4711500	2	Flatwasher 5/16in Thin	
		Ref	**LIGHT PANEL DECAL INSTALLATION**	
	0271410	Ref	**Light Panel Decal Installation 800S (Prior to SN 0300137913)**	B
	1001108993	Ref	**Light Panel Decal Installation 800S (SN 0300137913 through 0300140000)**	A
	0271420	Ref	**Light Panel Decal Installation 860SJ (Prior to SN 0300137913)**	B
	1001108991	Ref	**Light Panel Decal Installation 860SJ (SN 0300137913 through 0300140000)**	A
201		Ref	Decal - Display	
201	1704952	1	Decal - Display 800S **(Prior to SN 0300137913)**	
201	1001107954	1	Decal - Display 800S **(SN 0300137913 through 0300140000)**	
201	1704993	1	Decal - Display 860SJ **(Prior to SN 0300137913)**	
201	1001107953	1	Decal - Display 860SJ **(SN 0300137913 through 0300140000)**	
	0271552	Ref	**HEAD AND TAIL LIGHTS INSTALLATION (OPTIONAL)**	C
301	4360336	1	Switch, Toggle **(Prior to SN 0300137913)**	
301	3790012	1	O-Ring **(Prior to SN 0300137913)**	
302	4360522	1	Switch, Push Button **(SN 0300137913 through 0300140000)**	
303	1705170	1	Decal - Lights **(SN 0300137913 through 0300140000)**	
		Ref	**SOFT TOUCH SYSTEM INSTALLATION (OPTIONAL)**	
401	4360387	1	Switch, Pushbutton	
402	1702938	1	Decal - Soft Touch Override	
403	2920028	1	Light, Indicator Only **(SN 0300137913 through 0300140000)**	
404	2920029	1	Bulb, Light Only **(SN 0300137913 through 0300140000)**	
		Ref	**GENERATOR INSTALLATION (OPTIONAL)**	
501	4360336	1	Switch, Toggle	
502	4740397	1	Bushing	
503	4060802	1	Guard, Switch	
504	3251102	1	Decal - Generator ON/OFF	
		Ref	**PLATFORM WORKLIGHT INSTALLATION (OPTIONAL)**	
601	4360232	1	Breaker, Circuit - 15Amp **(Prior to SN 0300074425)**	
602	0721003	2	Bolt #10-24NC x 3/8in **(Prior to SN 0300074425)**	
603	4761000	4	Lockwasher #10 **(Prior to SN 0300074425)**	
604	3311001	2	Nut #10-24NC **(Prior to SN 0300074425)**	
605		Ref	Connector, Strain Relief Options:	
605	4460598	1	Connector, Strain Relief **(Prior to SN 0300074425)**	
605	4460426	1	Connector, Strain Relief **(SN 0300074425 through 0300140000)**	
	0258608	Ref	**JIB SWITCH INSTALLATION (860SJ ONLY)**	B
701		Ref	Switch, Toggle Options:	
701	4360314	1	Switch, Toggle **(Prior to SN 0300070914)**	
701	4360328	1	Switch, Toggle **(SN 0300070914 through 0300140000)**	
701	3790012	1	O-Ring **(Prior to SN 0300070914)**	
		Ref	**DUAL FUEL SWITCH INSTALLATION**	
801	4360336	1	Switch, Toggle	
801	3790012	1	O-Ring	

FIGURE 4-5. CONTROLLER ASSEMBLY (LIFT AND SWING)

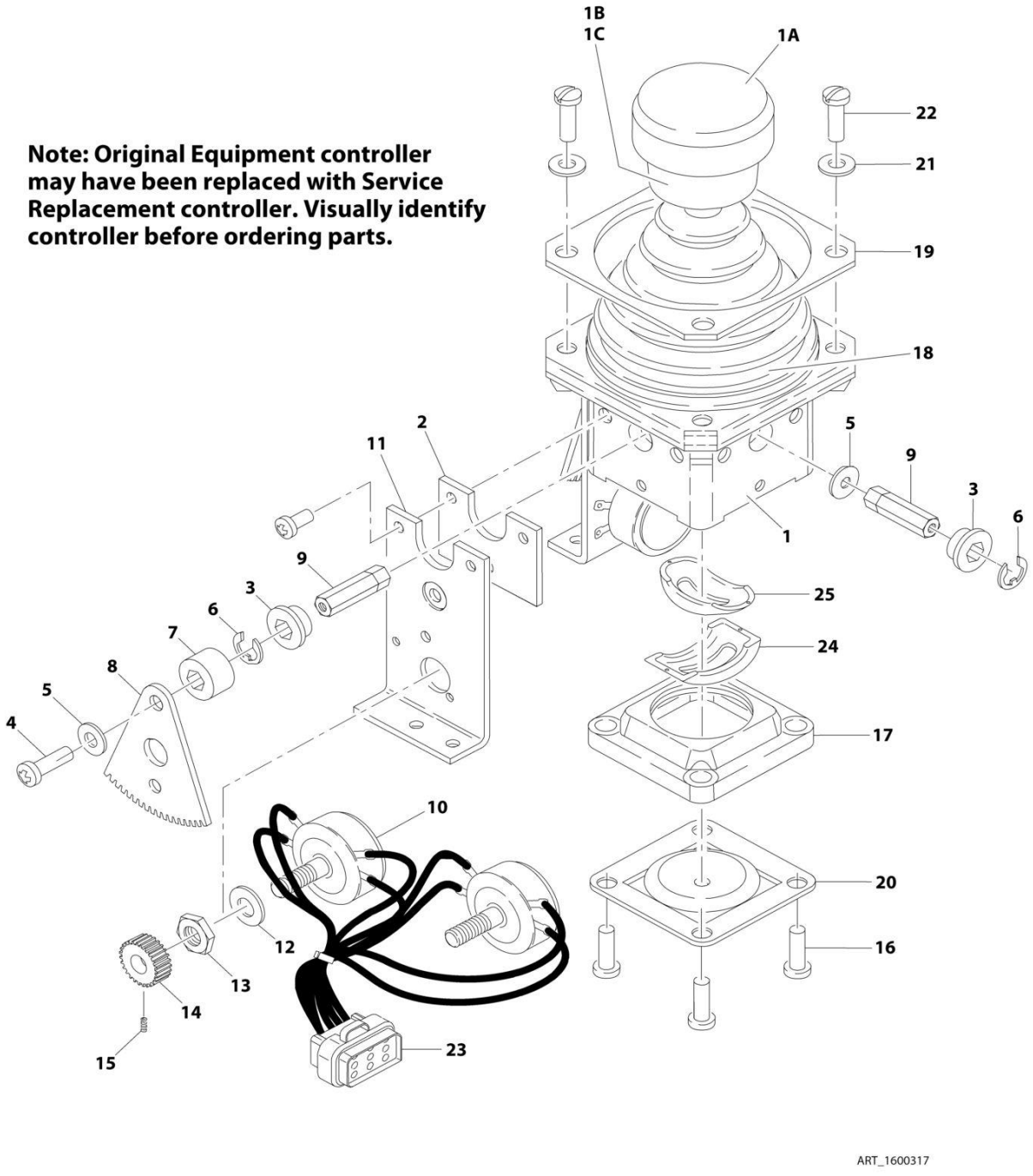

FIGURE 4-5. CONTROLLER ASSEMBLY (LIFT AND SWING)

ITEM	PART NUMBER	QTY	DESCRIPTION	REV
		Ref	**Note: Original Equipment controller may have been replaced with Service Replacement controller. Visually identify controller before ordering parts.**	
	1600317	Ref	**CONTROLLER ASSEMBLY (LIFT & SWING)**	C
		Ref	**Note: Use p/n 1001129555 Kit as Replacement.**	
1	7019141	1	Mechanical Assembly (Includes Base, Handle Stem and Items 1A, 1B, 1C & 18)	
1A	7019197	1	Handle Cap and Rod	
1B	7003928	1	Spring	
1C	7022808	1	Cap, Lift	
2	7019171	2	Plate	
3	7019111	4	Bearing, Gear	
4	7019143	2	Screw	
5	7019144	2	Spacer, Cam	
6	7019145	4	E-Clip	
7	7019174	2	Spacer	
8	7003977	2	Gear, Drive	
9		Ref	Shaft Options:	
9	7019147	2	Shaft, Short	
9	7019177	2	Shaft, Long	
10	7022818	2	Potentiometer	
11	7019142	2	Plate	
12	7003992	2	Washer	
13	7003993	2	Nut	
14	7003976	2	Gear, Slave	
15	7019149	2	Setscrew	
16	7022816	4	Screw	
17	7019150	1	Gate	
18	7022814	1	Boot	
19	7022815	1	Bezel	
20	See Note	NSS	Detent, Center (Note: Use p/n 1001129555)	
21	7003953	4	Washer	
22	7022817	4	Screw	
23	7022819	1	Plug, Male - 8 Position (Natural)	
23	4460871	8	Socket, Female	
24	7019122	1	Gimble, Outer	
25	7019123	1	Gimble, Inner	

FIGURE 4-6. CONTROLLER ASSEMBLY (LIFT AND SWING)

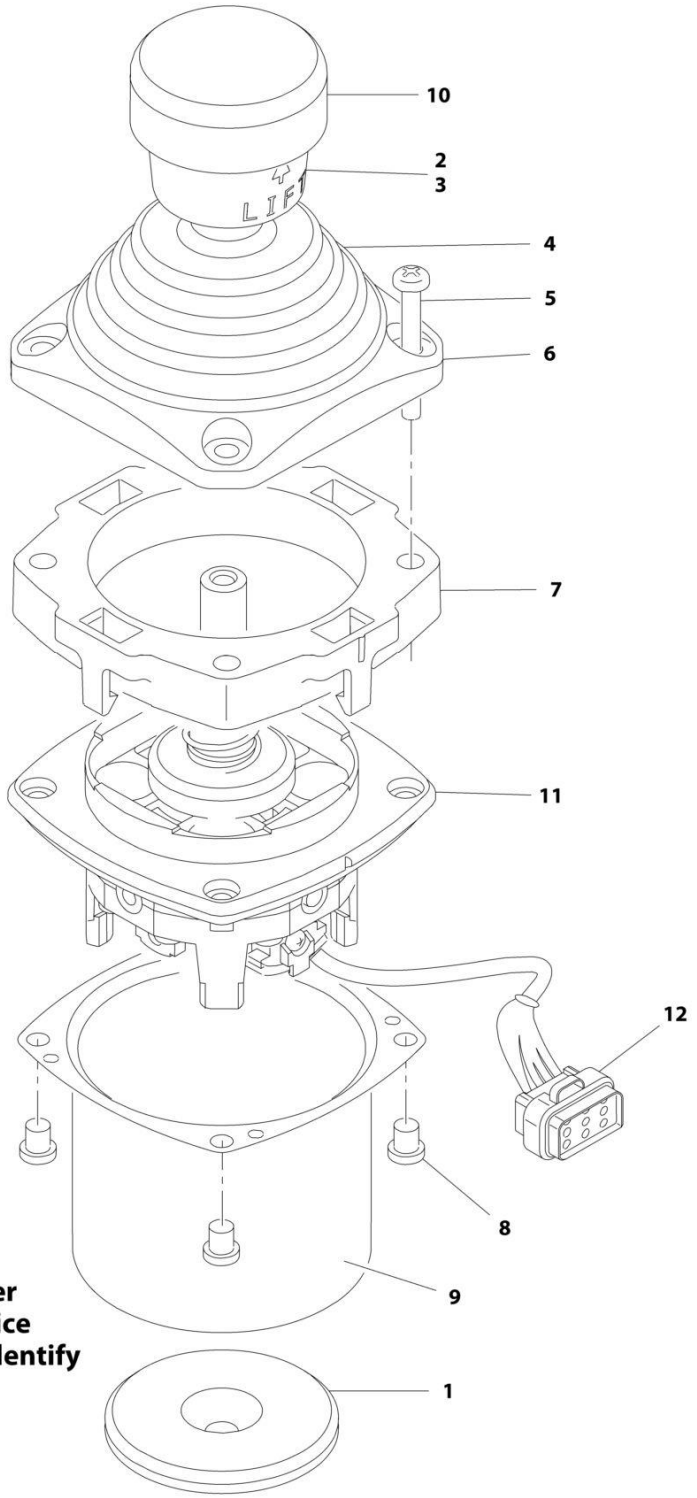

Note: Original Equipment controller may have been replaced with Service Replacement controller. Visually identify controller before ordering parts.

FIGURE 4-6. CONTROLLER ASSEMBLY (LIFT AND SWING)

ITEM	PART NUMBER	QTY	DESCRIPTION	REV
		Ref	**Note: Original Equipment controller may have been replaced with Service Replacement controller. Visually identify controller before ordering parts.**	
	1001118417	Ref	**CONTROLLER ASSEMBLY (LIFT AND SWING)**	E
		Ref	**Note: Use p/n 1001129555 as Replacement.**	
1	70002730	1	Gasket	
2	7003928	1	Spring	
3	7022808	1	Cap, Lift	
4	70002731	1	Boot	
5	70002732	4	Screw	
6	7022815	1	Bezel	
7	70002733	1	Adapter	
8	70002734	1	Screw	
9	70002735	1	Can, Enclosure	
10	70002906	1	Cap	
11	See Note	NSS	Mechanical Assembly (Note: Use p/n 1001129555)	
12	7022819	1	Connector - 8 Position	
12	4460871	6	Socket, Female	

FIGURE 4-7. CONTROLLER ASSEMBLY (LIFT AND SWING)

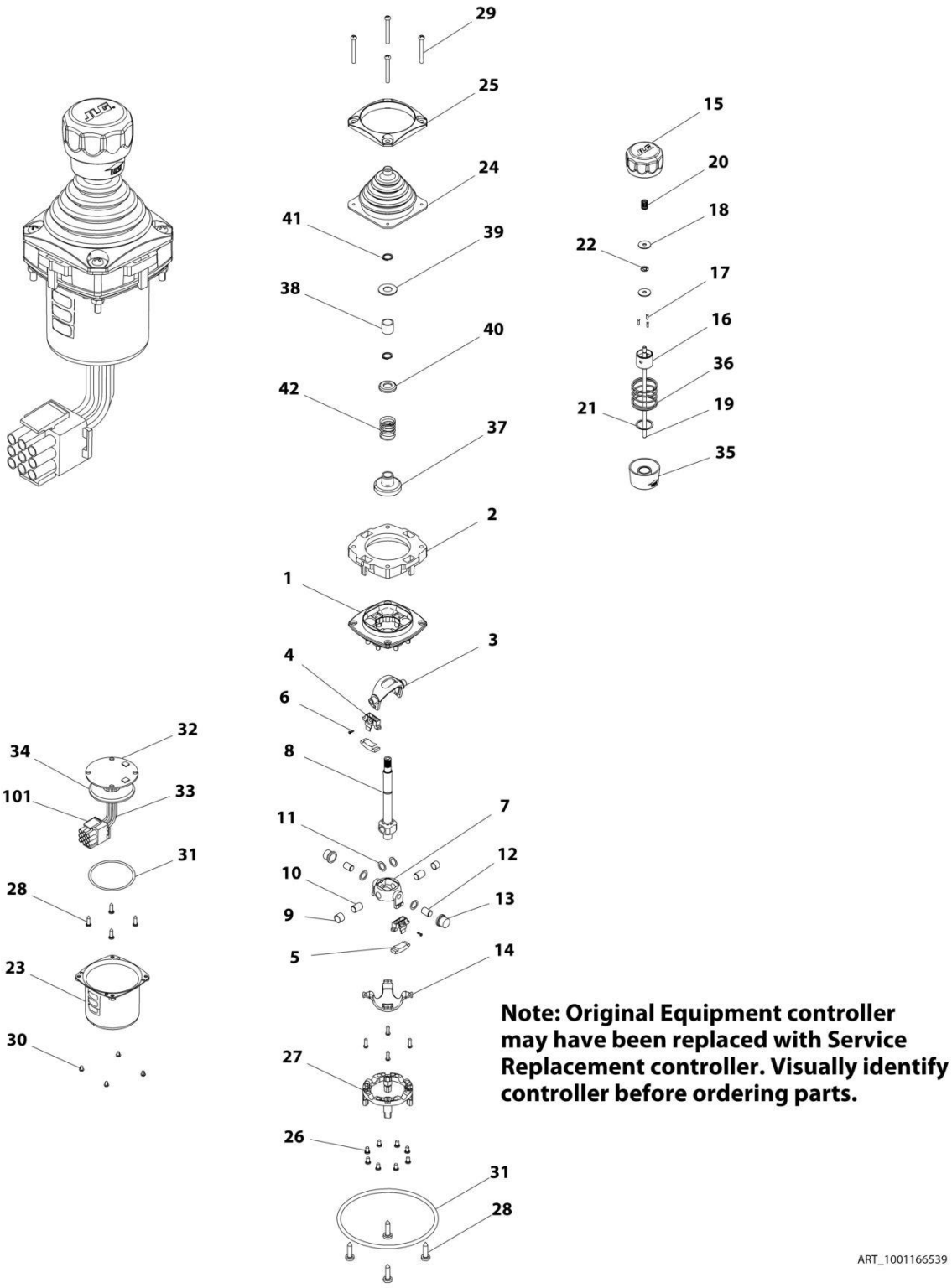

FIGURE 4-7. CONTROLLER ASSEMBLY (LIFT AND SWING)

ITEM	PART NUMBER	QTY	DESCRIPTION	REV
		Ref	**Note: Original Equipment controller may have been replaced with Service Replacement controller. Visually identify controller before ordering parts.**	
	1001166539	Ref	**CONTROLLER ASSEMBLY (LIFT AND SWING)**	D
		Ref	**Note: Use p/n 1001129555 as Replacement.**	
1	See Note	NSS	Main Cast Body (Note: Available - Purchase Complete Assembly)	
2	70004752	1	Adapter	
3	See Note	NSS	Pivot Arm, Plastic (Note: Not Available - Purchase Complete Assembly)	
4	See Note	NSS	Holder, Magnet (Note: Not Available - Purchase Complete Assembly)	
5	See Note	NSS	Arc, Magnet (Note: Not Available - Purchase Complete Assembly)	
6	See Note	NSS	Screw (Note: Not Available for Purchase)	
7	See Note	NSS	Pivot Arm, Cast (Note: Not Available - Purchase Complete Assembly)	
8	See Note	NSS	Shaft, Main (Note: Not Available - Purchase Complete Assembly)	
9	See Note	NSS	Bearing (Note: Not Available - Purchase Complete Assembly)	
10	See Note	NSS	Pin (Note: Not Available - Purchase Complete Assembly)	
11	See Note	NSS	Shim (Note: Not Available - Purchase Complete Assembly)	
12	See Note	NSS	Pin (Note: Not Available - Purchase Complete Assembly)	
13	See Note	NSS	Bearing (Note: Not Available - Purchase Complete Assembly)	
14	See Note	NSS	Dome, Centering (Note: Not Available - Purchase Complete Assembly)	
15	70004753	1	Cap	
16	70004754	1	Insert, Cap	
17	70004755	3	Pin	
18	70004756	2	Washer	
19	70004757	1	Pin, Centering	
20	70004758	1	Spring	
21	70004759	1	Ring, Retaining	
22	70004760	1	E-Ring	
23	70004761	1	Can, Enclosure	
24	70004762	1	Boot	
25	70004763	1	Bezel	
26	See Note	NSS	Screw (Note: Not Available for Purchase)	
27	See Note	NSS	Base, Mounting (Note: Not Available - Purchase Complete Assembly)	
28	See Note	NSS	Screw (Note: Not Available for Purchase)	
29	70004764	4	Screw	
30	70004765	4	Screw	
31	70004766	1	O-Ring	
32	See Note	NSS	Plate (Note: Not Available - Purchase Complete Assembly)	
33	See Note	NSS	Harness (Note: Not Available - Purchase Complete Assembly)	
34	70004767	1	Grommet, Rubber	
35	70004768	1	Housing	
36	70004769	1	Spring	
37	70004770	1	Stopper	
38	70004771	1	Spacer	
39	70004772	1	Washer	
40	70004773	1	Disc	
41	70004774	2	Ring, Retaining	

SECTION 4 - PLATFORM

ITEM	PART NUMBER	QTY	DESCRIPTION	REV
42	70004775	1	Spring	
101	4460265	1	Connector - 9 Position	
101	4460226	6	Socket, Female	

FIGURE 4-8. CONTROLLER ASSEMBLY (DRIVE AND STEER)

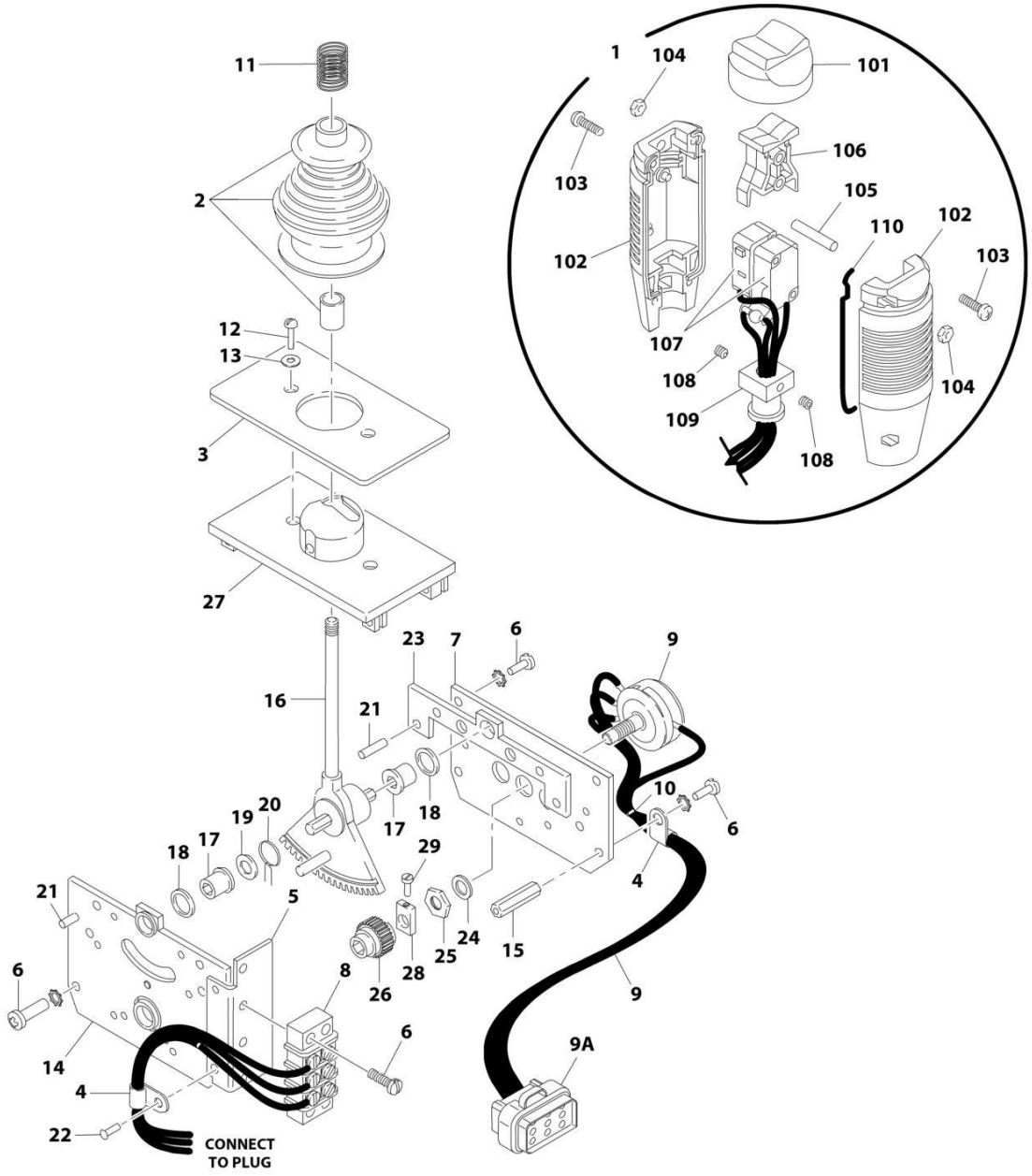

Note: Original Equipment controller may have been replaced with Service Replacement controller. Visually identify controller before ordering parts.

ART_1600318

FIGURE 4-8. CONTROLLER ASSEMBLY (DRIVE AND STEER)

ITEM	PART NUMBER	QTY	DESCRIPTION	REV
		Ref	**Note: Original Equipment controller may have been replaced with Service Replacement controller. Visually identify controller before ordering parts.**	
	1600318	Ref	**CONTROLLER ASSEMBLY (DRIVE & STEER)**	C
		Ref	**Note: Use p/n 1001212415 as Replacement.**	
1	7022812	1	Handle Assembly (See Items 101-110 for Breakdown)	
2	7019161	1	Boot and Sleeve	
3	7003933	1	Gasket	
4	7019154	2	Clamp, Wire	
5	7022823	1	Bracket, Mounting	
6	7003994	1	Screw	
7	7022822	1	Plate, Pot Mounting	
8	7003986	1	Strip, Terminal - 3 Position	
9	7022824	1	Electric Assembly	
9A	1001113961	1	Plug, Male - 8 Position (Black) (was p/n 7022825)	
9A	4460871	7	Socket, Female	
10	7019151	AR	Tie-Strap	
11	7019162	1	Spring	
12	7003969	2	Screw	
13	7003941	2	Washer	
14	See Note	NSS	Plate, Mounting (Left Side) (Note: Use p/n 1001166538)	
15	7019115	2	Stand-Off	
16	7019155	1	Shaft 8mm	
17	7019111	2	Bearing	
18	7019110	2	Spacer, Head Gear	
19	7019112	1	Washer	
20	7003946	1	Spring, Return	
21	7019103	4	Pin	
22	See Note	NSS	Rivet (Note: Not Available - Purchase Locally)	
23	7019168	1	Plate, Mounting (Right Side)	
24	7003992	1	Washer	
25	7003993	1	Nut	
26	7003935	1	Gear, Slave	
27	7019160	1	Plate, Base	
28	7019114	1	Coupling, Potentiometer	
29	See Note	NSS	Cup Point Screw (Note: Not Available for Purchase)	
	7022812	Ref	**HANDLE ASSEMBLY**	
101	7003972	1	Boot, Switch	
102	7003973	2	Half, Handle	
103	7003980	4	Screw	
104	7019167	4	Nut	
105	7019164	1	Axle	
106	7019165	1	Rocker	
107	See Note	NSS	Wiring for Controller Assembly p/n 1600318 (Note: Use p/n 1001166538)	
107	7019166	2	Switch, Micro	
108	7003983	2	Setscrew	
109	7019194	1	Coupling	
110	7003989	2	Gasket	

FIGURE 4-9. CONTROLLER ASSEMBLY (DRIVE AND STEER)

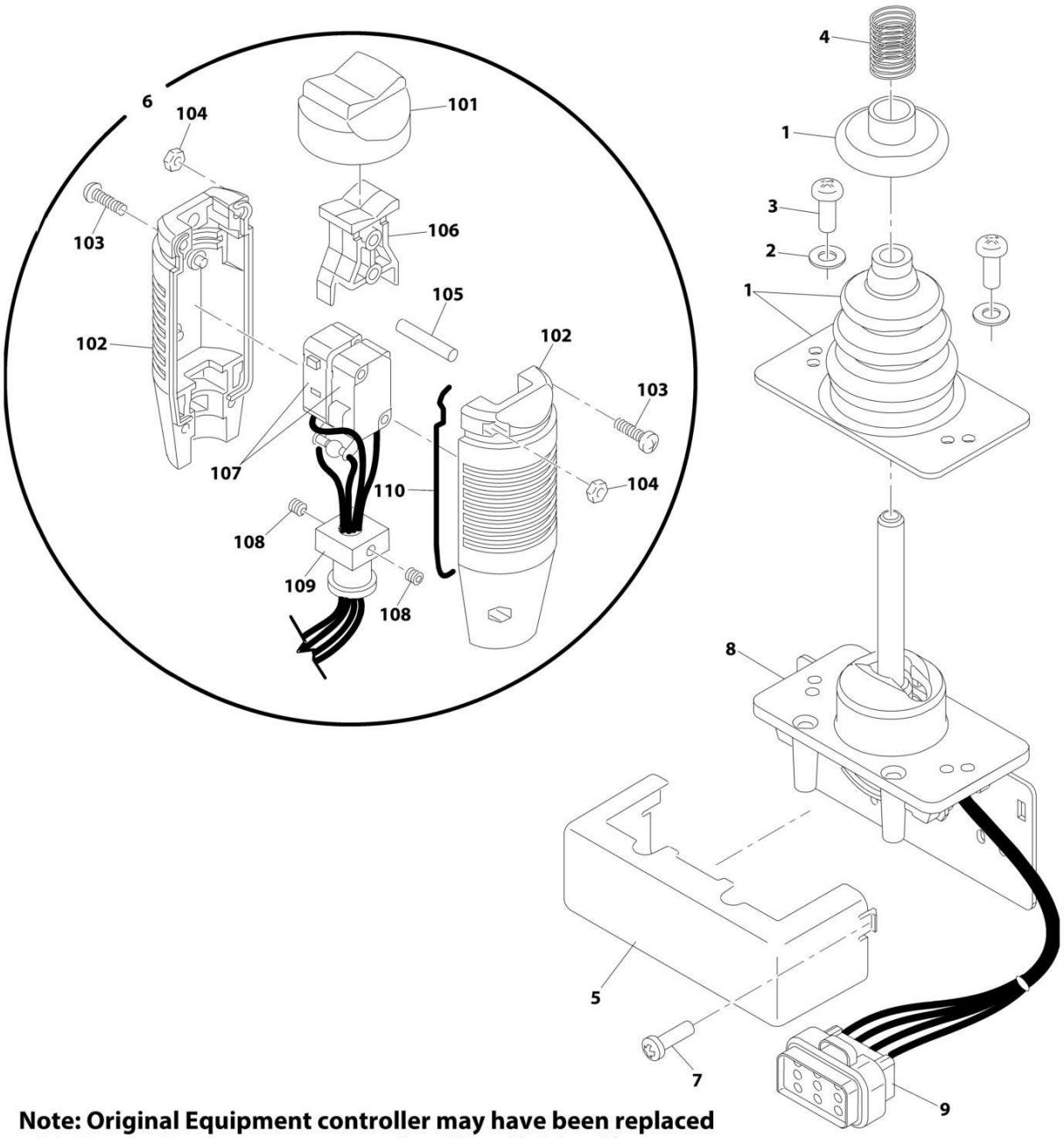

Note: Original Equipment controller may have been replaced with Service Replacement controller. Visually identify controller before ordering parts.

FIGURE 4-9. CONTROLLER ASSEMBLY (DRIVE AND STEER)

ITEM	PART NUMBER	QTY	DESCRIPTION	REV
		Ref	**Note: Original Equipment controller may have been replaced with Service Replacement controller. Visually identify controller before ordering parts.**	
	1001118416	Ref	**CONTROLLER ASSEMBLY (DRIVE AND STEER)**	D
		Ref	**Note: Use p/n 1001212415 as Replacement.**	
1	70002724	1	Boot and Control Lock Assembly	
2	7003941	2	Washer	
3	70002725	2	Screw	
4	7019162	1	Spring	
5	70002726	1	Enclosure	
6	70002727	1	Handle Assembly (See Items 101-110 for Breakdown)	
7	70002728	1	Screw	
8	See Note	NSS	Mechanical Assembly (Note: Use p/n 1001166538)	
9	1001113961	1	Plug, Male - 8 Position (Black) (was p/n 7022825)	
9	4460871	7	Socket, Female	
	70002727	Ref	**HANDLE ASSEMBLY**	
101	7003972	1	Boot, Switch	
102	7003973	2	Half, Handle	
103	7003980	4	Screw	
104	7019167	4	Nut	
105	7019164	1	Axle	
106	7019165	1	Rocker	
107	70002729	1	Wiring Assembly	
107	7003982	2	Switch, Micro	
108	7003983	2	Set Screw	
109	7019194	1	Coupling	
110	7003989	2	Gasket	

FIGURE 4-10. CONTROLLER ASSEMBLY (DRIVE AND STEER)

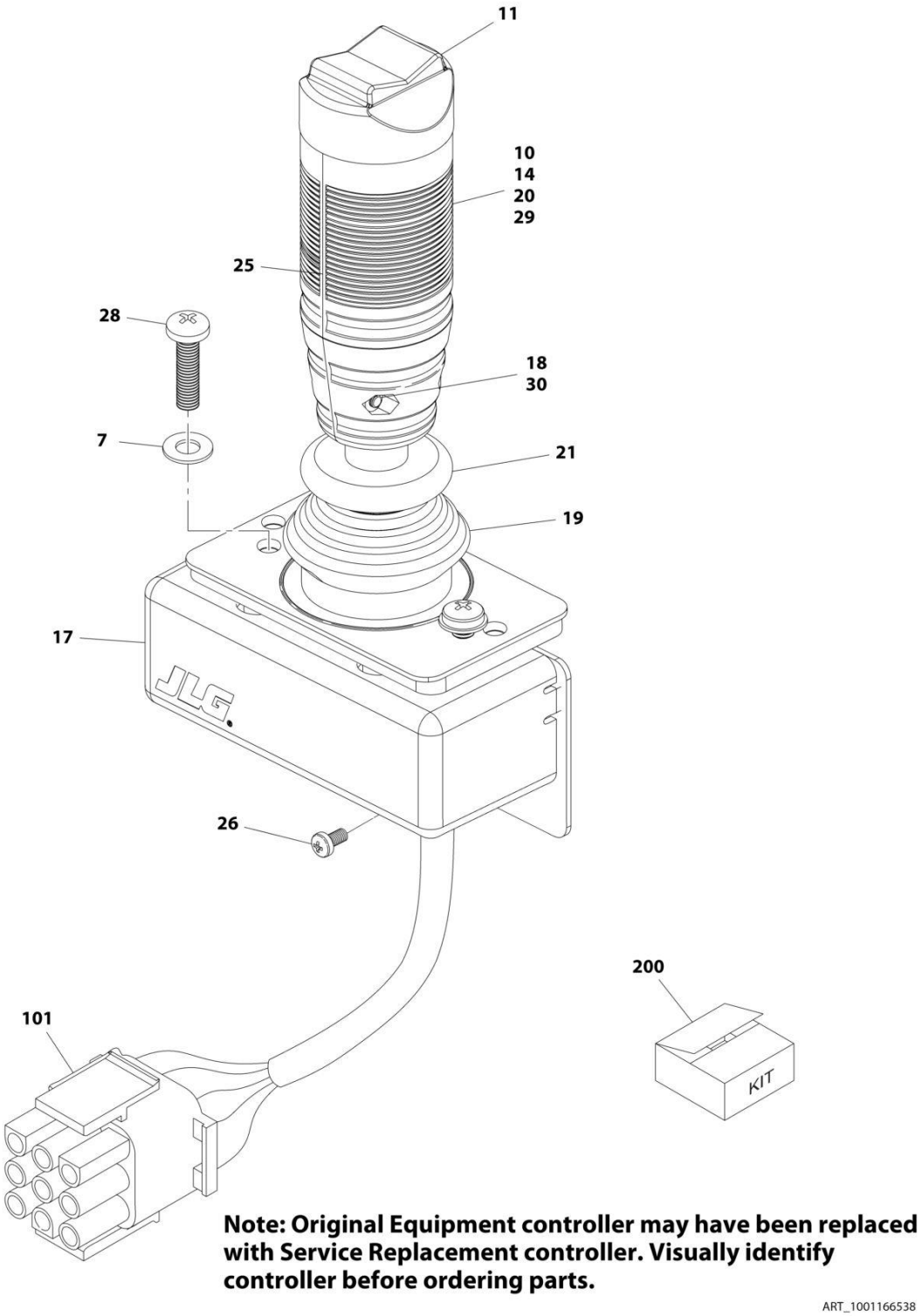

FIGURE 4-10. CONTROLLER ASSEMBLY (DRIVE AND STEER)

ITEM	PART NUMBER	QTY	DESCRIPTION	REV
		Ref	**Note: Original Equipment controller may have been replaced with Service Replacement controller. Visually identify controller before ordering parts.**	
	1001166538	Ref	**CONTROLLER ASSEMBLY (DRIVE AND STEER)**	E
		Ref	**Note: Use p/n 1001212415 as Replacement.**	
7	70004738	2	Washer	
10	70004739	1	Roller	
11	70004740	1	Boot, Switch	
14	70004741	2	Half, Handle	
17	70004742	1	Enclosure	
18	70004743	4	Nut	
19	70004744	NLA	Boot, Controller (Note: Use Item 200)	
20	70004745	NLA	Tube, Locking (Note: Use Item 200)	
21	70004746	NLA	Disc, Locking (Note: Use Item 200)	
25	70004747	2	Seal, Rope	
26	70004748	1	Screw, M3 x 6	
28	70004749	2	Screw, M5 x 20	
29	70004750	1	Pin, Dowel	
30	70004751	4	Screw, M3 x 16	
101	4460265	1	Connector - 9 Position	
101	4460226	7	Socket, Female	
200	70005230	1	Boot Kit (Includes Items 19-21)	

FIGURE 4-11. SOFT TOUCH INSTALLATION (FRONT ENTRY PLATFORM) (OPTIONAL)

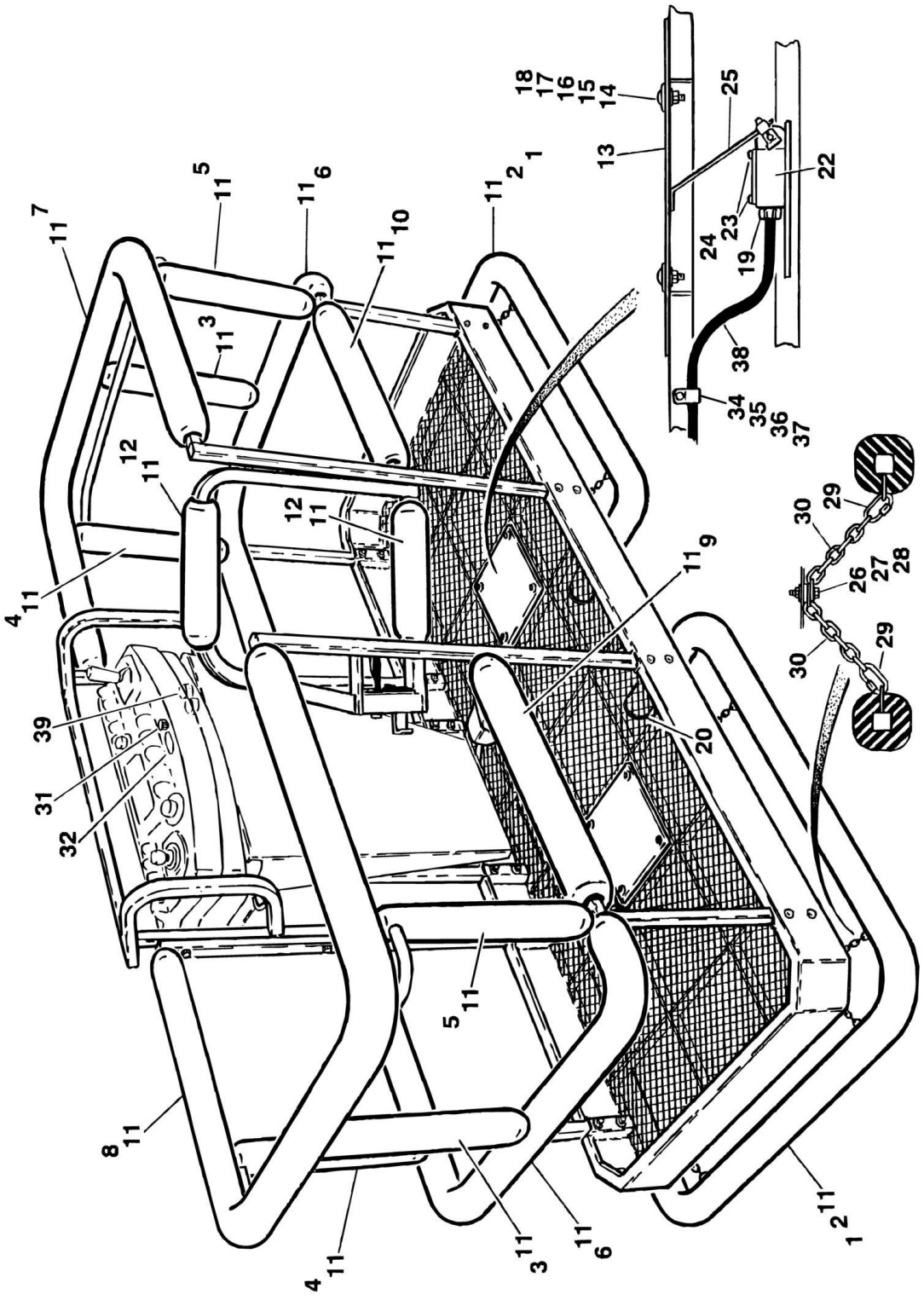

FIGURE 4-11. SOFT TOUCH INSTALLATION (FRONT ENTRY PLATFORM) (OPTIONAL)

ITEM	PART NUMBER	QTY	DESCRIPTION	REV
		Ref	**SOFT TOUCH SYSTEM INSTALLATIONS OPTIONS:**	
	0270795	Ref	**6ft/1.8m Platforms (Prior to SN 0300066909)**	3
	0271550	Ref	**6ft/1.8m Platforms (SN 0300066909 through 0300140000)**	1
	0270796	Ref	**8ft/2.4m Platforms (Prior to SN 0300066909)**	2
	0271551	Ref	**8ft/2.4m Platforms (SN 0300066909 through 0300140000)**	1
1		Ref	Rail Weldment Options:	
1	4845308	2	6ft/1.8m Platforms	
1	4845309	2	8ft/2.4m Platforms	
2		Ref	Cover, Rail Options:	
2	1670804	2	6ft/1.8m Platforms	
2	1670803	2	8ft/2.4m Platforms	
3	1670787	2	Cover, End Post	
4	1670785	2	Cover, Front Right Post	
5	1670786	2	Cover, Front Left Post	
6	1670793	2	Cover, End Mid Rail	
7		Ref	Cover, Right End Top Options:	
7	1670798	1	6ft/1.8m Platforms	
7	1670796	1	8ft/2.4m Platforms	
8		Ref	Cover, Left End Top Options:	
8	1670797	1	6ft/1.8m Platforms	
8	1670795	1	8ft/2.4m Platforms	
9		Ref	Cover, Left End Mid Options:	
9	1670799	1	6ft/1.8m Platforms	
9	1670789	1	8ft/2.4m Platforms	
10		Ref	Cover, Right End Mid Options:	
10	1670801	1	6ft/1.8m Platforms	
10	1670791	1	8ft/2.4m Platforms	
11	0940038	Ref	Padding, Bumper Options:	
11	0940038	70 ft /21.4m	6ft/1.8m Platforms	
11	0940038	80 ft /24.4m	8ft/2.4m Platforms	
12	1670788	2	Cover, Gate	
13	3539719	2	Plate, Switch Strike	
14	0630462	8	Bolt, Carriage	
15	4761500	8	Lockwasher 5/16in	
16	4751800	8	Flatwasher 1/2in Regular	
17	3311501	8	Nut 5/16in-18NC	
18	4751500	8	Flatwasher 5/16in Regular	
19	4460049	2	Connector, Strain Relief	
20	3530072	4	Plug, Cap	
22	4360057	2	Switch, Limit	
23	0731005	4	Bolt #10-32NC x 5/8in	
24	4751000	4	Lockwasher #10	
25	0200550	2	Arm, Switch	
26	0641612	8	Bolt 3/8in-16NC x 1-1/2in	
27	4751600	40	Flatwasher 3/8in Regular	
28	3311605	8	Locknut 3/8in-16NC	
29	3010088	16	Link, Quick	
30	1260136	10 ft/3m	Chain	

SECTION 4 - PLATFORM

ITEM	PART NUMBER	QTY	DESCRIPTION	REV
31	4360387	1	Switch, Push Button	
32	1702938	1	Decal - Soft Touch Override	
34	1320040	4	Clamp	
35	0641406	4	Bolt 1/4in-20NC x 3/4in	
36	4711400	8	Flatwasher 1/4in Thin	
37	3311405	4	Locknut 1/4in-20NC	
38	1060341	16 ft/4.9m	Cable, Electrical (16/2)	
39	4460425	1	Connector, Strain Relief	

FIGURE 4-12. SOFT TOUCH SYSTEM INSTALLATION (SIDE ENTRY PLATFORM) (OPTIONAL)

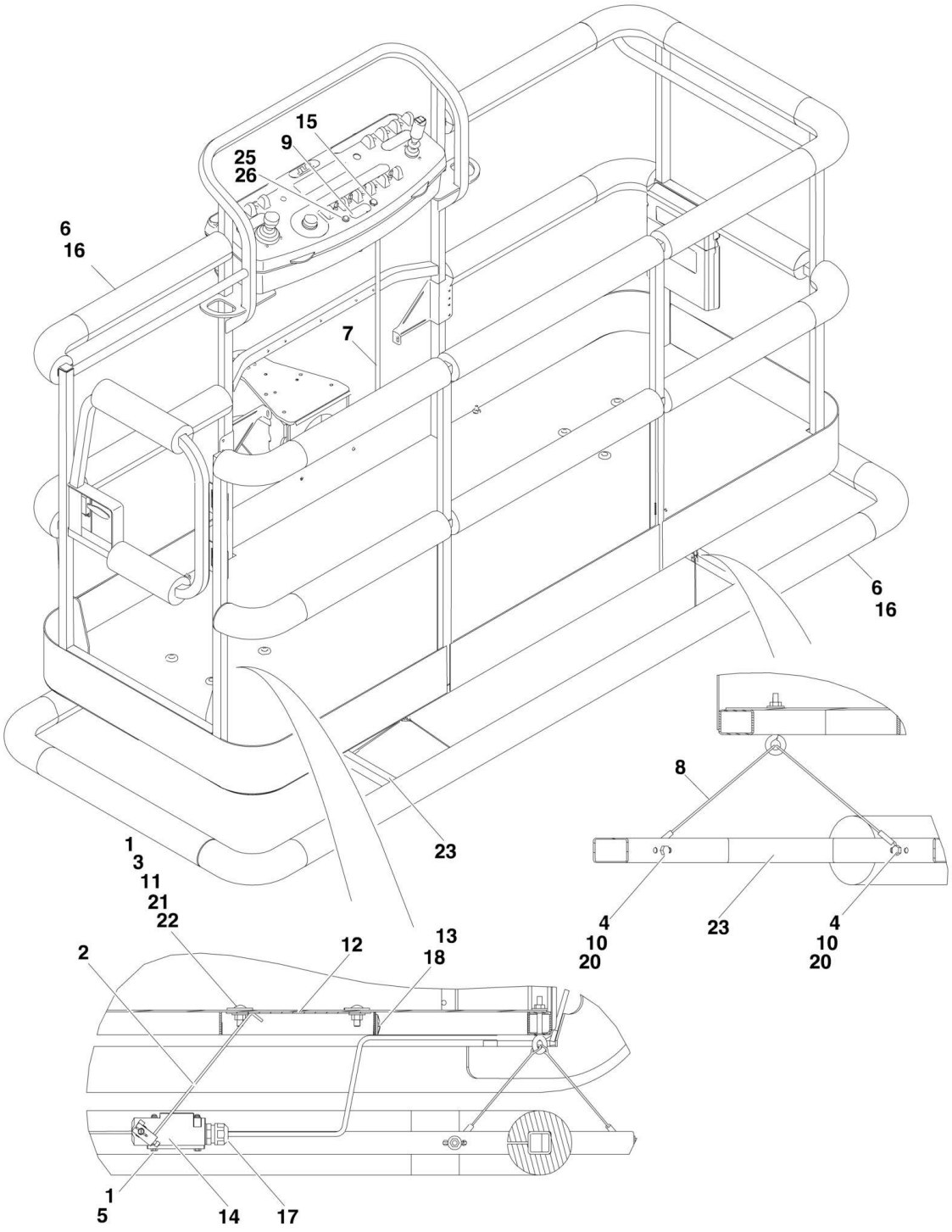

FIGURE 4-12. SOFT TOUCH SYSTEM INSTALLATION (SIDE ENTRY PLATFORM) (OPTIONAL)

ITEM	PART NUMBER	QTY	DESCRIPTION	REV
		Ref	**SOFT TOUCH SYSTEM INSTALLATIONS**	
	0273824	Ref	**6ft Platforms (Side Entry Platform)**	B
	0272427	Ref	**8ft Platforms (Side Entry Platform)**	D
	0274927	Ref	**6ft/1.8m Platforms with Fall Arrest (Prior to SN 0300137913)**	A
	1001108256	Ref	**6ft/1.8m Platforms with Fall Arrest (SN 0300137913 through 0300140000)**	A
	0273706	Ref	**8ft/2.4m Platforms with Fall Arrest**	B
1	0100011	AR	Compound, Locking	
2	0200048	2	Arm, Switch	
3	0630462	8	Bolt, Carriage	
4	0641414	8	Bolt 1/4in-20NC x 1-3/4in	
5	0721005	4	Bolt #10-24NC x 5/8in	
6		Ref	Bumper Kits (Includes Corners and Enough Straight Material for One Platform)	
6	0940134	1	6ft Platform	
6	0940103	1	8ft Platform	
6	0940177	1	6ft/1.8m Platforms with Fall Arrest	
6	0940133	1	8ft/2.4m Platforms with Fall Arrest	
6	0940092	1	Bumper (Corner) Options:	
6	0940092	12	Standard Platform	
6	0940092	8	Fall Arrest Platforms	
6	0940094	AR	Bumper (12ft Length)	
7	1060341	Ref	Cable, Electrical - 16/2 Options:	
7	1060341	22 ft/6.7m	6ft Platform	
7	1060341	23 ft/7m	8ft Platform	
8	1060903	4	Wire Rope and Eyebolt Assembly	
9	1702938	1	Decal - Soft Touch Override	
10	3311401	8	Nut 1/4in-20NC	
11	3311501	8	Nut 5/16in-18NC	
12		Ref	Plate, Switch Strike Options:	
12	3575359	2	6ft Platform	
12	3574091	2	8ft Platform	
13	4240099	7	Tie-Strap	
14	4360057	2	Switch, Limit	
15	4360387	1	Switch, Push Button	
16	4420068	AR	Tape, Adhesive	
17	4460049	2	Connector, Strain Relief	
18	4460234	7	Tie-Strap	
19	4460425	1	Connector, Strain Relief	
20	4751400	8	Flatwasher 1/4in Regular	
21	4751500	AR	Flatwasher 5/16in Regular	
22	4751800	8	Flatwasher 1/2in Regular	
23		Ref	Rail, Soft Touch Options:	
23	3641569	1	6ft Platform	
23	4846673	1	8ft Platform	
25	2920028	1	Light, Indicator Only **(SN 0300137913 through 0300140000)**	
26	2920028	1	Bulb, Light Only **(SN 0300137913 through 0300140000)**	

FIGURE 4-13. PLATFORM PADDING INSTALLATION (SIDE ENTRY PLATFORM) (OPTIONAL)

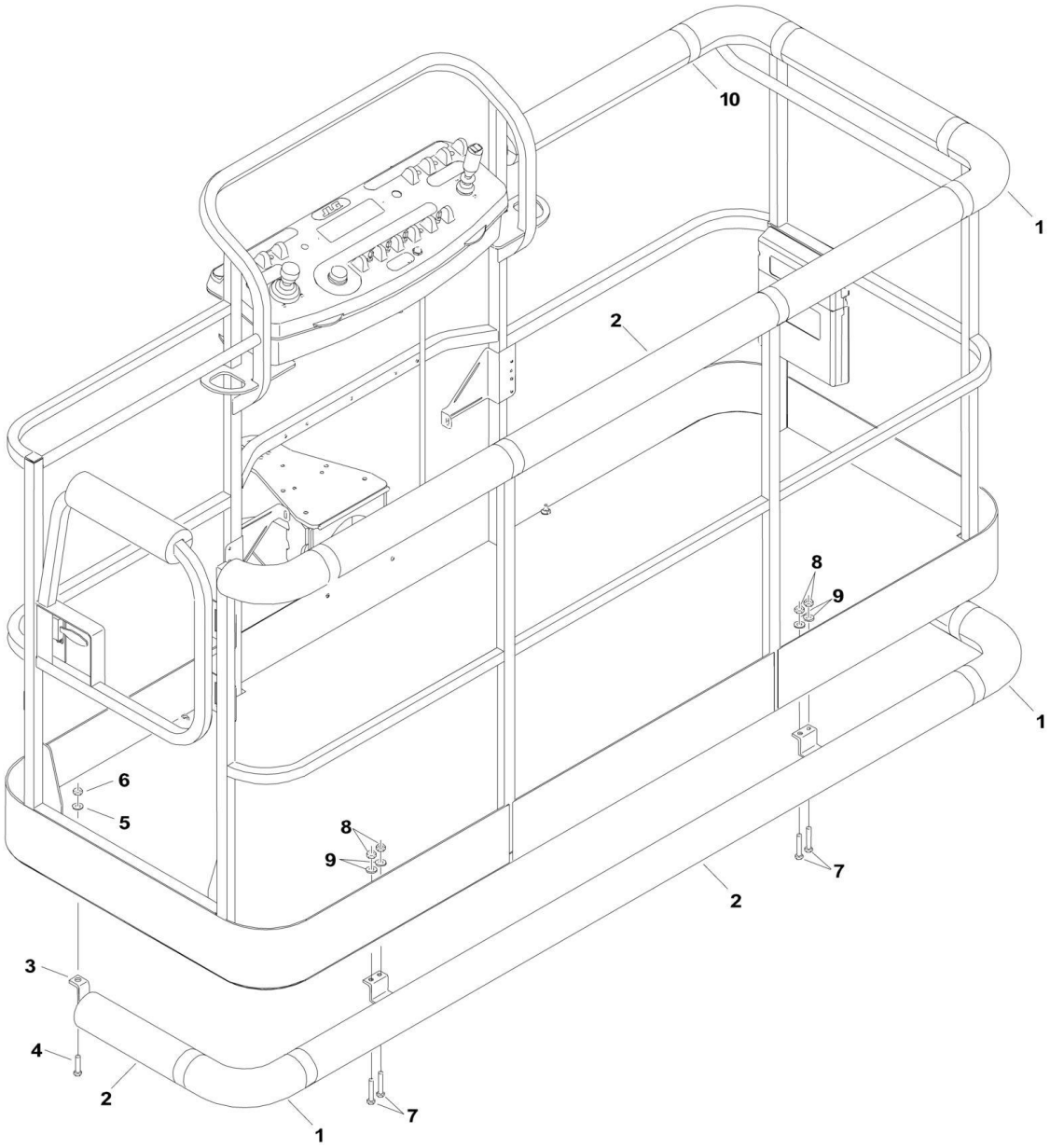

FIGURE 4-13. PLATFORM PADDING INSTALLATION (SIDE ENTRY PLATFORM) (OPTIONAL)

ITEM	PART NUMBER	QTY	DESCRIPTION	REV
	0273542	Ref	**PADDING INSTALLATION (30 X 48 SIDE ENTRY PLATFORM)**	A
1	0940092	4	Bumper, Pad (Corner)	
2	0940094	9 ft/2.7m	Bumper, Pad (Square Tubing)	
3	0940131	1	Bumper, Rail	
4	0641516	2	Bolt 5/16in-18NC x 2in	
5	4751500	2	Flatwasher 5/16in Regular	
6	3311505	2	Locknut 5/16in-18NC	
7	0641813	4	Bolt 1/2in-13NC x 1-5/8in	
8	3311805	4	Locknut 1/2in-13NC	
9	4891800	4	Flatwasher 1/2in (Hardened)	
10	4420068	30 ft/9.1m	Tape	

SECTION 5 - CYLINDER

FIGURE 5-1. AXLE LOCKOUT CYLINDER ASSEMBLY

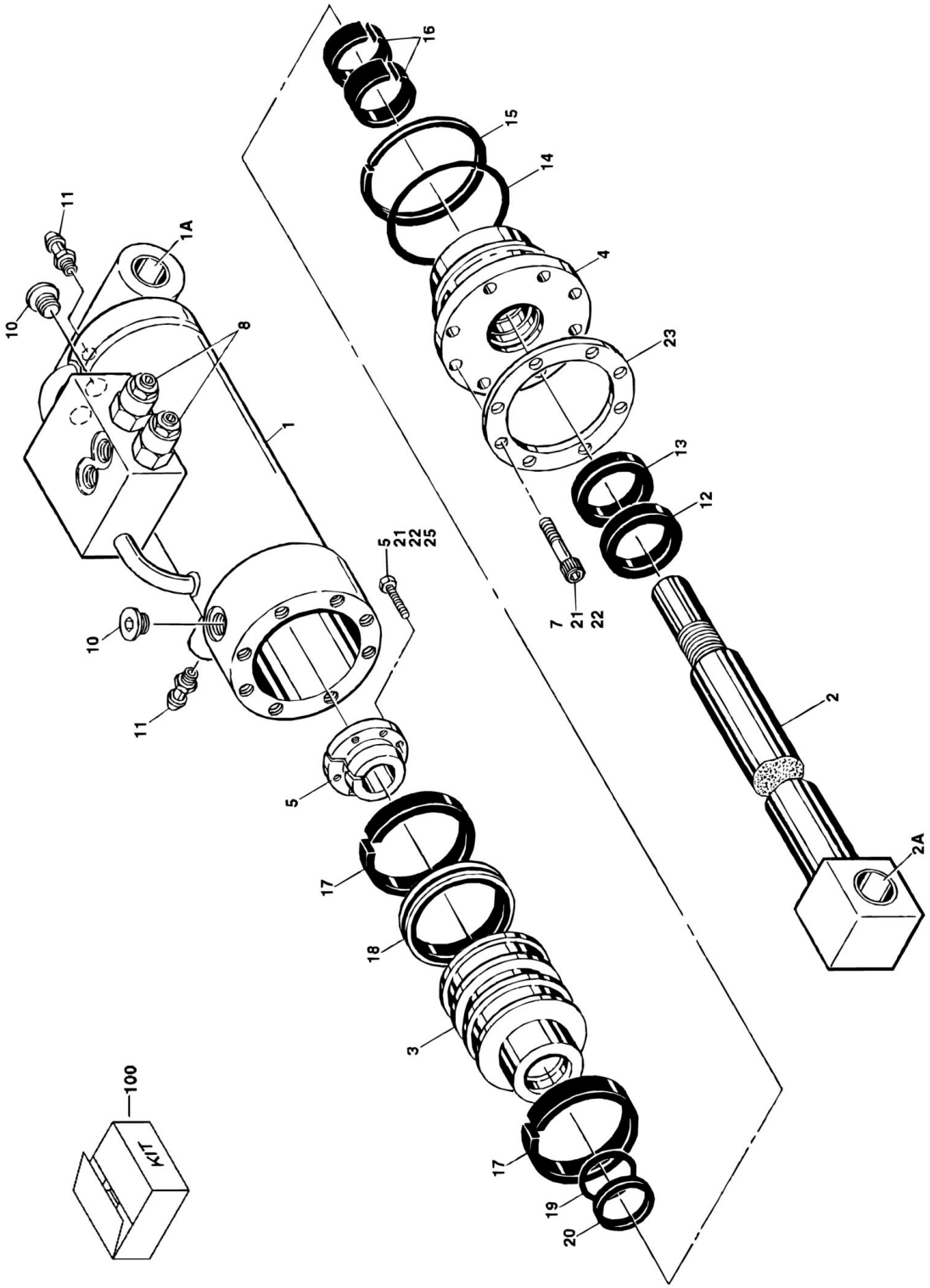

FIGURE 5-1. AXLE LOCKOUT CYLINDER ASSEMBLY

ITEM	PART NUMBER	QTY	DESCRIPTION	REV
	1683078	Ref	**AXLE LOCKOUT CYLINDER ASSEMBLY**	L
1	1684191	1	Barrel Weldment (Note: Includes Item 1A)	
1A	0961816	2	Bushing **(Prior to SN 0300070437)**	
1A	0962496	2	Bushing **(SN 0300070437 through 0300140000)**	
2	1683986	1	Rod Weldment (Note: Includes Item 2A)	
2A	0961816	2	Bushing **(Prior to SN 0300070437)**	
2A	0962496	2	Bushing **(SN 0300070437 through 0300140000)**	
3	3480176	1	Piston	
4	1683059	1	Head	
5	0961895	1	Bushing	
7	3931720	8	Bolt, Socket Head 7/16in-14NC x 1-1/4in	
8	4641162	2	Cartridge, Valve (Counterbalance)	
8	2900770	2	Seal Kit - 4641162 Valve (1 Per Assembly)	
9	2220886	1	Plug, O-Ring	
10	2220885	2	Plug, O-Ring	
11	4640858	3	Valve, Bleeder	
12	See Note	NSS	Wiper (Note: Use Item 100)	
13	See Note	NSS	Seal, Rod (Note: Use Item 100)	
14	See Note	NSS	O-Ring (Note: Use Item 100)	
15	See Note	NSS	Ring, Back-up (Note: Use Item 100)	
16	See Note	NSS	Ring, Wear (Note: Use Item 100)	
17	See Note	NSS	Ring, Wear (Note: Use Item 100)	
18	See Note	NSS	T-Seal (Note: Use Item 100)	
19	See Note	NSS	O-Ring (Note: Use Item 100)	
20	See Note	NSS	Ring, Back-up (Note: Use Item 100)	
21	0100011	AR	Compound, Locking	
22	0100038	AR	Primer, Locking	
23	3760370	1	Ring, Washer	
25	0630535	3	Bolt 1/4in-20NC x 1-1/8in	
100	2901271	1	Seal Kit (Includes Items 12-20)	

FIGURE 5-2. LEVEL CYLINDER ASSEMBLY - PLATFORM SLAVE

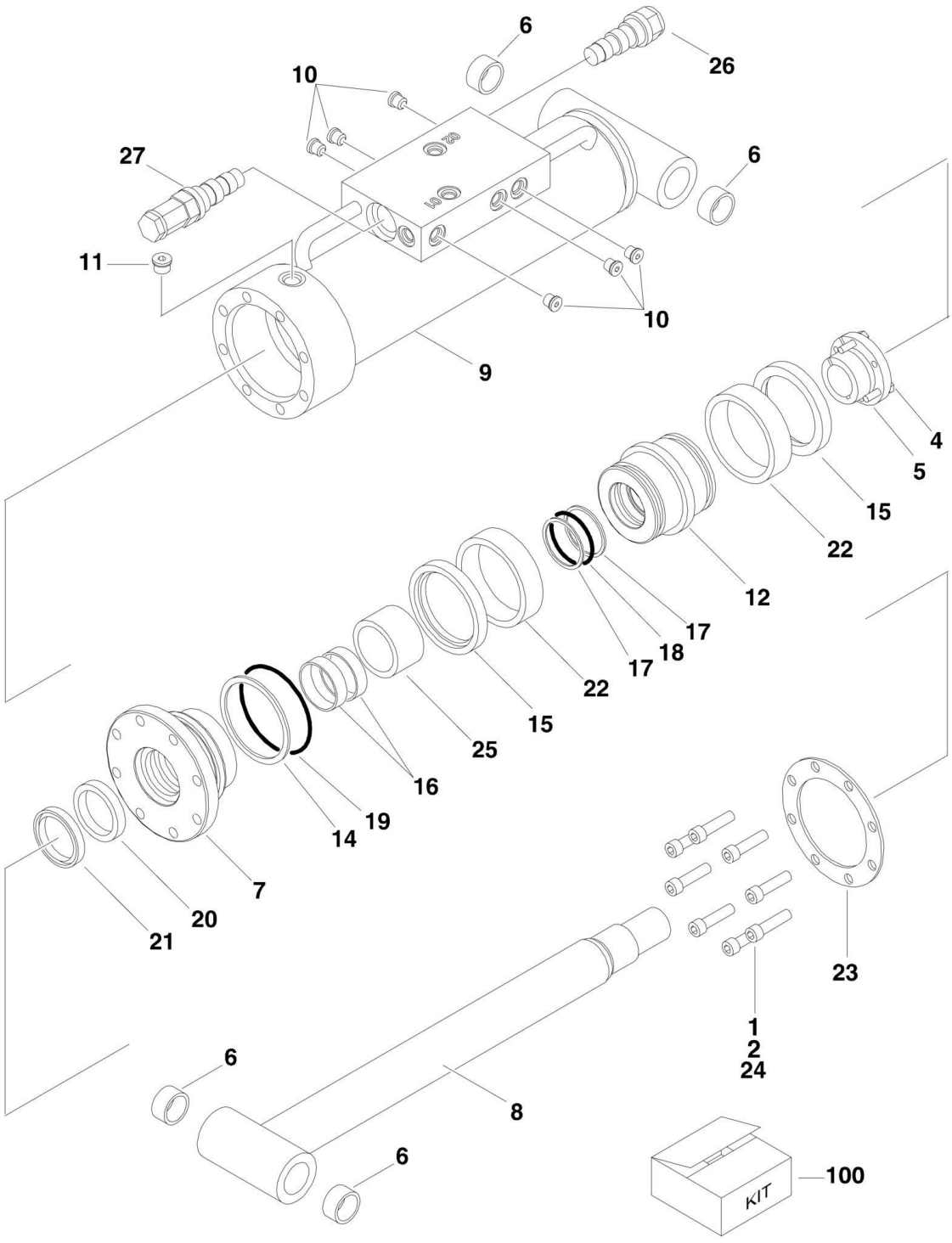

FIGURE 5-2. LEVEL CYLINDER ASSEMBLY - PLATFORM SLAVE

ITEM	PART NUMBER	QTY	DESCRIPTION	REV
		Ref	**SLAVE CYLINDER ASSEMBLIES:**	
	1684189	Ref	Slave Cylinder Assemblies 800S (Original Equipment)	C
	1684136	Ref	Slave Cylinder Assemblies 860SJ (Original Equipment)	D
		Ref	Note: Original Cylinder may have been replaced with Service Replacement. Identify PN Stamped on Cylinder Before Ordering Parts.	
1	0100011	AR	Compound, Locking	
2	0100038	AR	Primer, Locking	
3	0100063	AR	Loctite #RC 609	
4	0630535	3	Capscrew, Socket Head 1/4in-20NC x 1in	
5	0961894	1	Bushing, Tapered	
6		Ref	Bushing Options:	
6	0961947	4	Bushing 800S	
6	0961948	4	Bushing 860SJ	
7	1683059	1	Head	
8		Ref	Rod Options:	
8	1683976	1	Rod 800S (Note: Includes Item 6)	
8	1684133	1	Rod 860SJ (Note: Item 6 not included - Purchase Separately)	
9		Ref	Barrel Options:	
9	1684188	1	Barrel 800S (Note: Includes Item 6)	
9	1684135	1	Barrel 860SJ (Note: Item 6 not included - Purchase Separately)	
10	2220883	10	Plug	
11	2220885	1	Plug	
12	3480267	1	Piston	
14	See Note	NSS	Ring, Back-up (Note: Use Item 100)	
15	See Note	NSS	Ring, Lock (Note: Use Item 100)	
16	See Note	NSS	Ring, Wear (Note: Use Item 100)	
17	See Note	NSS	Ring, Back-up (Note: Use Item 100)	
18	See Note	NSS	O-Ring (Note: Use Item 100)	
19	See Note	NSS	O-Ring (Note: Use Item 100)	
20	See Note	NSS	Seal (Note: Use Item 100)	
21	See Note	NSS	Wiper (Note: Use Item 100)	
22	See Note	NSS	Seal (Note: Use Item 100)	
23	3760370	1	Ring, Washer	
24	3931620	8	Capscrew 3/8in-16NC x 1-1/4in	
25		Ref	Spacer, Tube Options:	
25	4568402	1	Spacer, Tube 800S	
25	4566468	1	Spacer, Tube 860SJ	
26	4641232	1	Valve, Cartridge	
26	7011112	1	Seal Kit - 4641232 Valve	
27	4640932	1	Valve, Cartridge	
27	7011112	1	Seal Kit - 4640932 Valve	
100	2902061	1	Seal Kit (Includes Items 14-22)	

FIGURE 5-3. LEVEL CYLINDER ASSEMBLY - PLATFORM SLAVE (800S) (SERVICE REPLACEMENT)

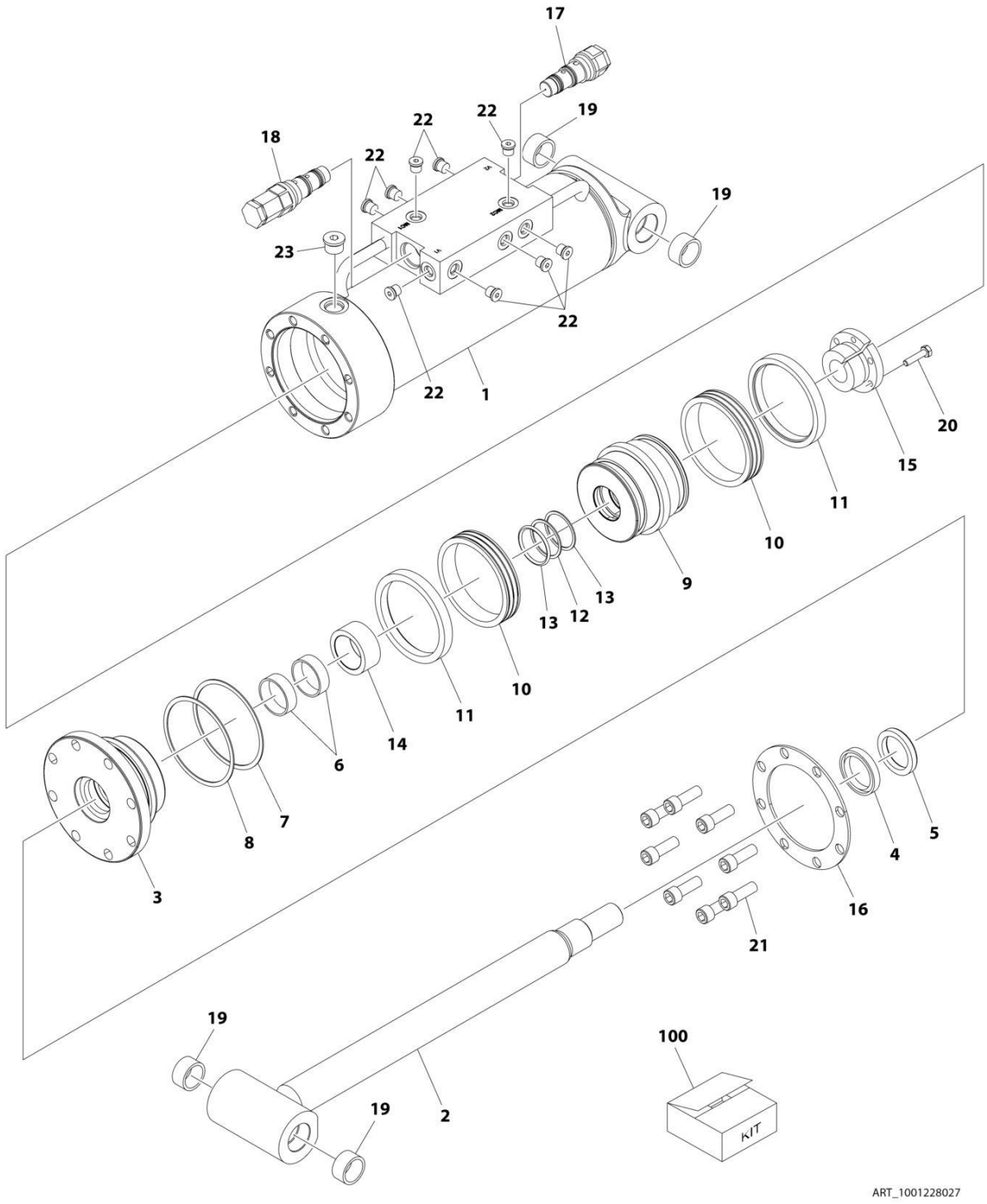

FIGURE 5-3. LEVEL CYLINDER ASSEMBLY - PLATFORM SLAVE (800S) (SERVICE REPLACEMENT)

ITEM	PART NUMBER	QTY	DESCRIPTION	REV
	1001228027	Ref	LEVEL CYLINDER ASSEMBLY - PLATFORM SLAVE	B
		Ref	Note: Original Cylinder may have been replaced with Service Replacement. Identify PN Stamped on Cylinder Before Ordering Parts.	
1	See Note	NSS	Barrel (Note: Not Available for Purchase)	
2	70006648	1	Rod	
3	70006699	1	Head	
4	See Note	NSS	Wiper (Note: Use Item 100)	
5	See Note	NSS	Seal, Rod (Note: Use Item 100)	
6	See Note	NSS	Ring, Wear (Note: Use Item 100)	
7	See Note	NSS	O-Ring (Note: Use Item 100)	
8	See Note	NSS	Ring, Back-up (Note: Use Item 100)	
9	70006700	1	Piston	
10	See Note	NSS	T-Seal (Note: Use Item 100)	
11	See Note	NSS	Ring, Wear (Note: Use Item 100)	
12	See Note	NSS	O-Ring (Note: Use Item 100)	
13	See Note	NSS	Ring, Back-up (Note: Use Item 100)	
14	70006701	1	Spacer, Tube	
15	0961894	1	Bushing, Tapered	
16	3760370	1	Washer	
17	4641232	1	Valve, Cartridge	
17	7011112	1	Seal Kit - 4641232 Valve	
18	4640932	1	Valve, Cartridge	
18	7011112	1	Seal Kit - 4640932 Valve	
19	0961947	4	Bushing	
20	0630535	3	Capscrew 1/4 x 1	
21	3931720	8	Capscrew 7/16 x 1-1/4	
22	2220883	10	Plug	
23	2220886	1	Plug	
100	2902061	1	Seal Kit (Includes Items 4-8 & 10-13)	

FIGURE 5-4. LEVEL CYLINDER ASSEMBLY - PLATFORM SLAVE (860SJ) (SERVICE REPLACEMENT)

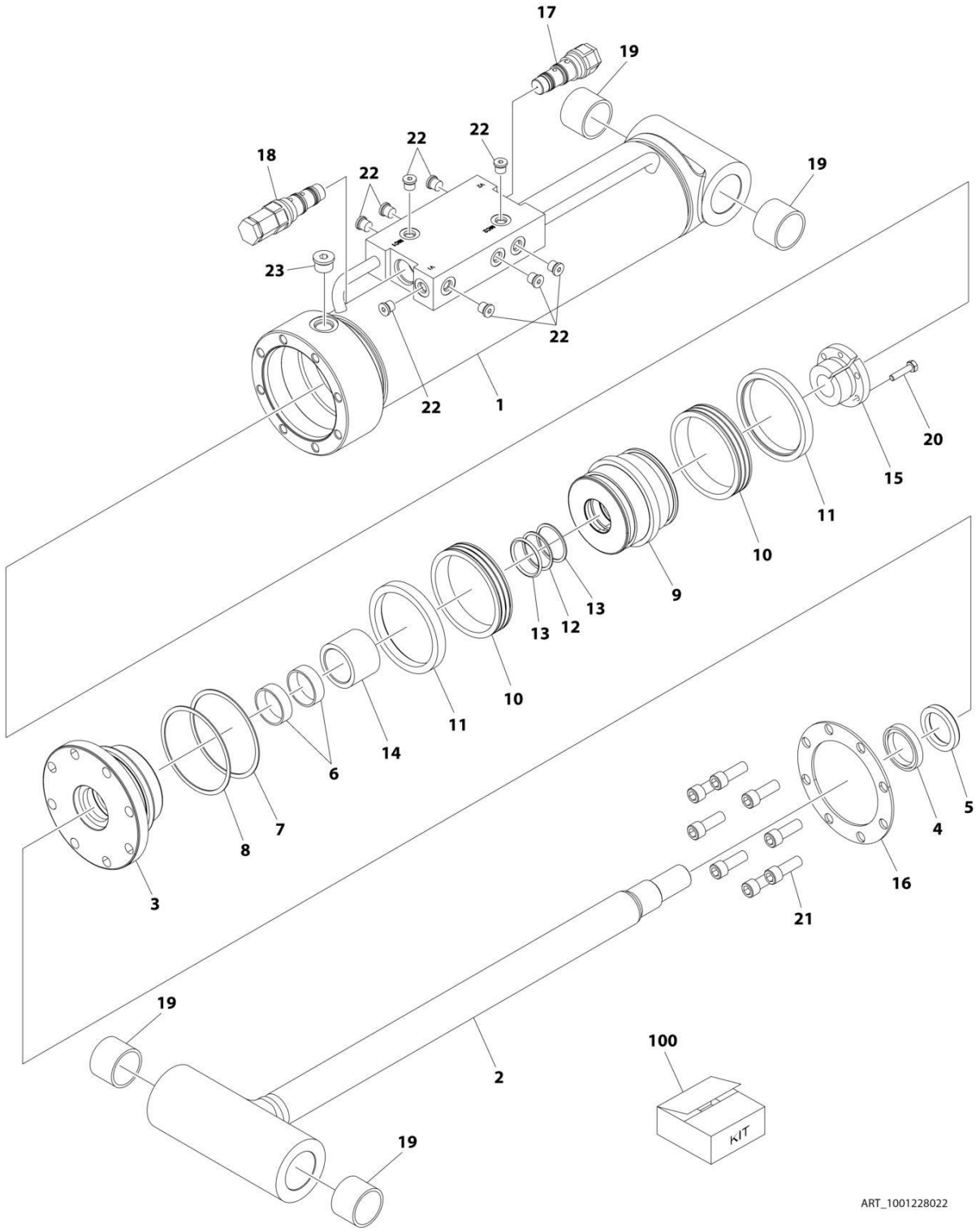

FIGURE 5-4. LEVEL CYLINDER ASSEMBLY - PLATFORM SLAVE (860SJ) (SERVICE REPLACEMENT)

ITEM	PART NUMBER	QTY	DESCRIPTION	REV
	1001228022	Ref	LEVEL CYLINDER ASSEMBLY - PLATFORM SLAVE	B
		Ref	Note: Original Cylinder may have been replaced with Service Replacement. Identify PN Stamped on Cylinder Before Ordering Parts.	
1	See Note	NSS	Barrel (Note: Not Available for Purchase)	
2	70006726	1	Rod	
3	70006699	1	Head	
4	See Note	NSS	Wiper (Note: Use Item 100)	
5	See Note	NSS	Seal, Rod (Note: Use Item 100)	
6	See Note	NSS	Ring, Wear (Note: Use Item 100)	
7	See Note	NSS	O-Ring (Note: Use Item 100)	
8	See Note	NSS	Ring, Back-up (Note: Use Item 100)	
9	70006700	1	Piston	
10	See Note	NSS	T-Seal (Note: Use Item 100)	
11	See Note	NSS	Ring, Wear (Note: Use Item 100)	
12	See Note	NSS	O-Ring (Note: Use Item 100)	
13	See Note	NSS	Ring, Back-up (Note: Use Item 100)	
14	70006645	1	Spacer, Tube	
15	0961894	1	Bushing, Tapered	
16	70006727	2	Washer	
17	4641232	1	Valve, Cartridge	
17	7011112	1	Seal Kit - 4641232 Valve	
18	4640932	1	Valve, Cartridge	
18	7011112	1	Seal Kit - 4640932 Valve	
19	0961948	4	Bushing	
20	0630535	3	Capscrew 1/4 x 1	
21	70006728	8	Bolt	
22	2220883	10	Plug	
23	2220886	1	Plug	
100	2902061	1	Seal Kit (Includes Items 4-8 & 10-13)	

FIGURE 5-5. LIFT CYLINDER ASSEMBLY - JIB (860SJ ONLY) (ORIGINAL EQUIPMENT)

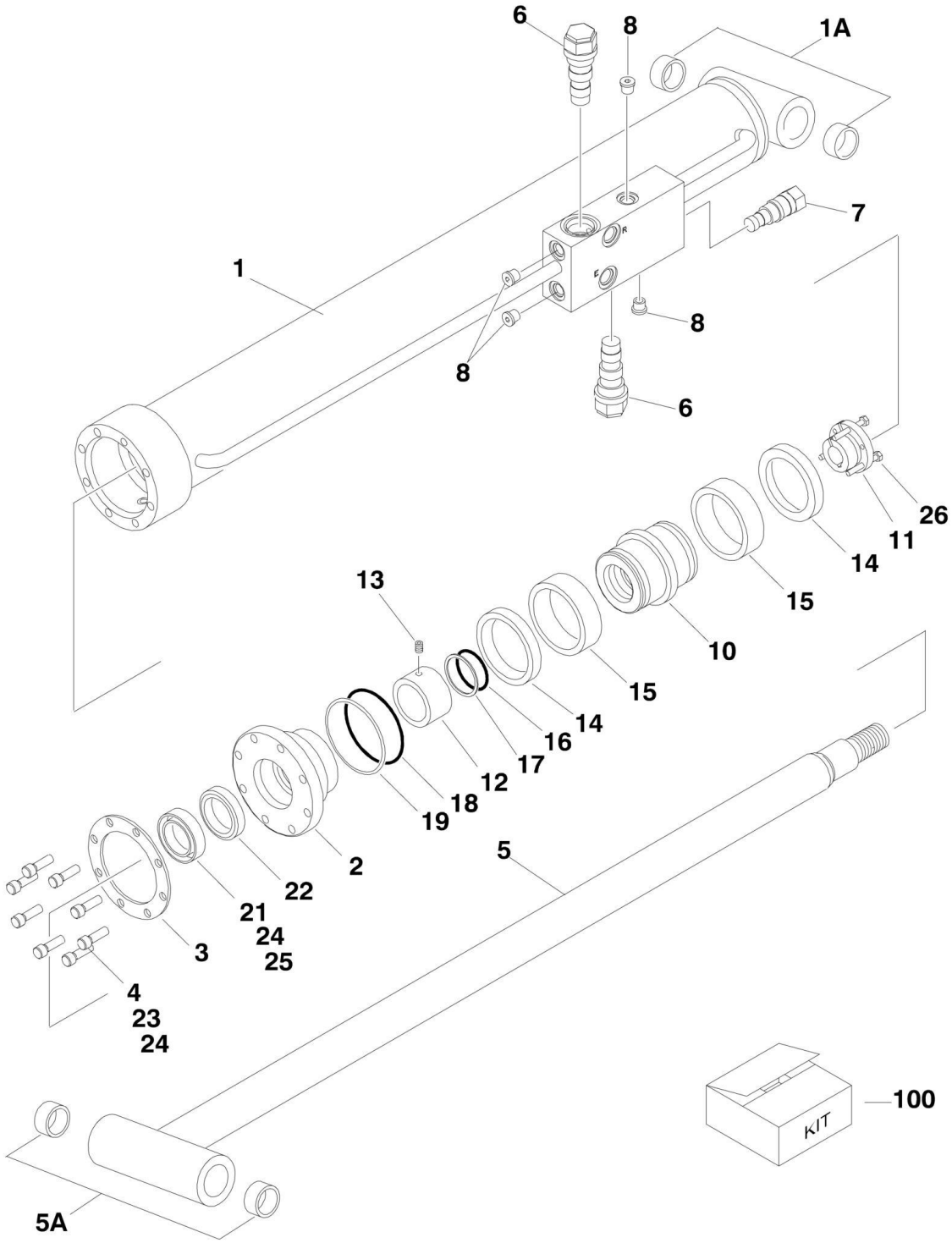

FIGURE 5-5. LIFT CYLINDER ASSEMBLY - JIB (860SJ ONLY) (ORIGINAL EQUIPMENT)

ITEM	PART NUMBER	QTY	DESCRIPTION	REV
	1683609	Ref	JIB LIFT CYLINDER ASSEMBLY (860SJ ONLY)	I
		Ref	Note: Original Cylinder may have been replaced with Service Replacement. Identify PN Stamped on Cylinder Before Ordering Parts.	
1	1684089	1	Barrel Weldment (Note: Includes Item 1A)	
1A	0962336	2	Bushing	
2	1683053	1	Head	
3	3760368	1	Washer, Ring	
4	3931516	8	Bolt, Socket Head 5/16in-18NC x 2in	
5	1684090	1	Rod Weldment (Note: Includes Item 5A)	
5A	0962336	2	Bushing	
6	4640509	2	Cartridge, Valve (Counterbalance Non-Vented)	
6	2900792	2	Seal Kit - 4640509 Valve	
7	4641062	1	Plug, P.O. Check **(Prior to SN 0300069570)**	
8	2220883	4	Plug, O-Ring	
9	2220885	1	Plug, O-Ring	
10	3480210	1	Piston	
11	0961893	1	Bushing, Tapered	
12		Ref	Spacer, Tube Options:	
12	4566471	1	Spacer, Tube **(Prior to SN 0300079610)**	
12	4100100	1	Spacer, Tube **(SN 0300079610 through 0300140000)**	
13	3900141	1	Setscrew 1/4in-20NC x 1/4in **(Prior to SN 0300079610)**	
14	See Note	NSS	Ring, Lock (Note: Use Item 100)	
15	See Note	NSS	Seal, Piston (Note: Use Item 100)	
16	See Note	NSS	O-Ring (Note: Use Item 100)	
17	See Note	NSS	Ring, Back-up (Note: Use Item 100)	
18	See Note	NSS	O-Ring (Note: Use Item 100)	
19	See Note	NSS	Ring, Back-up (Note: Use Item 100)	
20	See Note	NSS	Seal (Note: Use Item 100)	
21	See Note	NSS	Wiper (Note: Use Item 100)	
22	See Note	NSS	Ring, Wear (Note: Use Item 100)	
23	0100011	AR	Compound, Locking	
24	0100038	AR	Primer, Locking	
25	0100063	AR	Loctite #RC609 **(Prior to SN 0300079610)**	
26	0630534	3	Capscrew, Socket Head #10-24NC x 1in	
100	2901303	1	Seal Kit (Includes Items 14-22)	

FIGURE 5-6. LIFT CYLINDER ASSEMBLY - JIB (860SJ ONLY) (USAGE MAY VARY) (SERVICE REPLACEMENT)

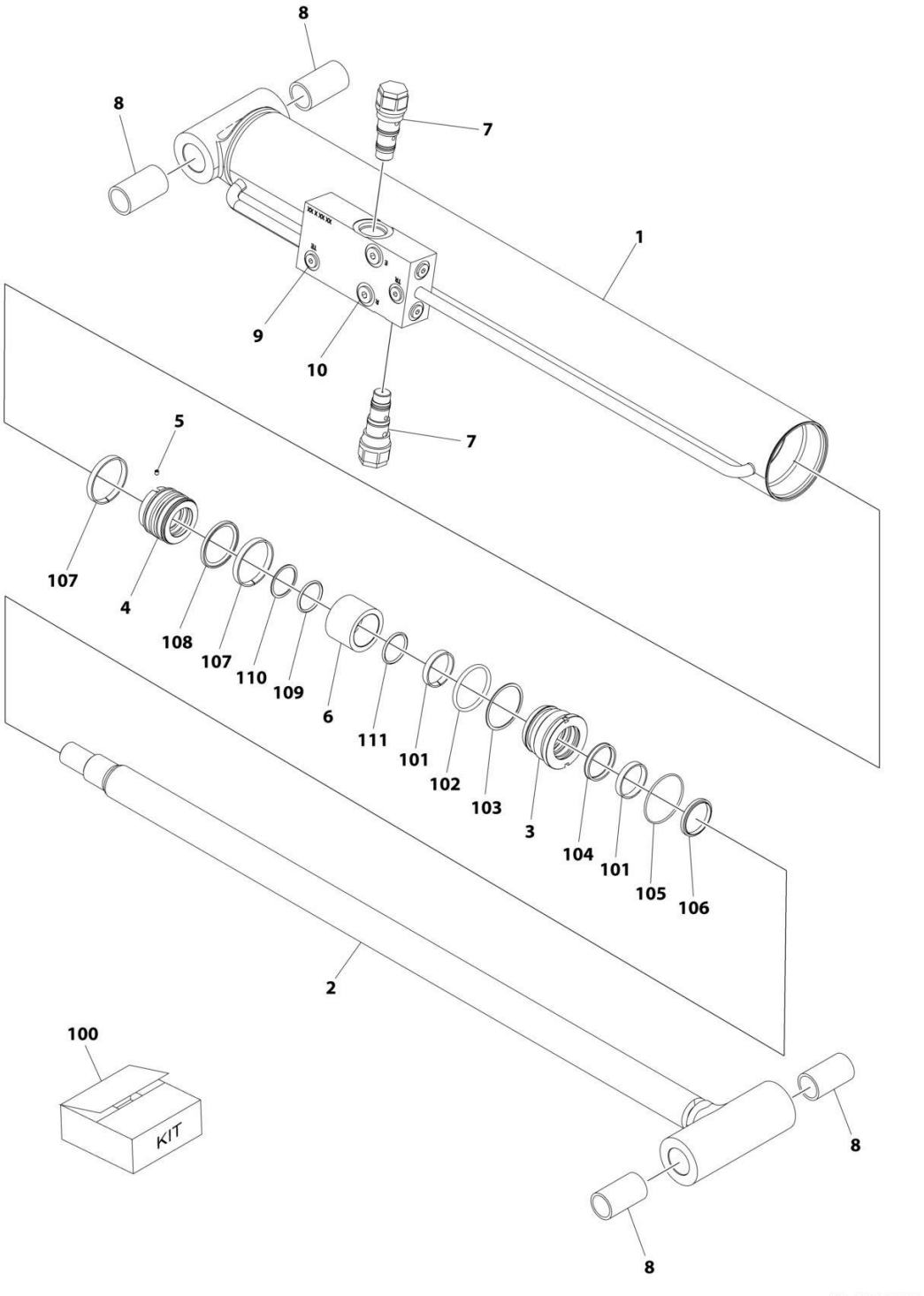

FIGURE 5-6. LIFT CYLINDER ASSEMBLY - JIB (860SJ ONLY) (USAGE MAY VARY) (SERVICE REPLACEMENT)

ITEM	PART NUMBER	QTY	DESCRIPTION	REV
	1001228012	Ref	LIFT CYLINDER ASSEMBLY - JIB	C
		Ref	Note: Original Cylinder May Have Been Replaced with Service Replacement. Identify PN Stamped on Cylinder Before Ordering Parts.	
1	See Note	NSS	Barrel (Note: Not Available for Purchase)	
2	70006572	1	Rod	
3	70006571	1	Head	
4	70006570	1	Piston	
5	70023915	1	Screw	
6	70006569	1	Spacer	
7	4640509	2	Cartridge, Valve	
7	2900792	2	Seal Kit - 4640509 Valve	
8	0962336	4	Bushing	
9	2220883	6	Plug, O-Ring	
10	2220885	2	Plug, O-Ring	
100	70006568	1	Seal Kit (Includes Items 101-111)	
101	See Note	NSS	Ring, Wear (Note: Use Item 100)	
102	See Note	NSS	O-Ring (Note: Use Item 100)	
103	See Note	NSS	Ring, Back-up (Note: Use Item 100)	
104	See Note	NSS	Seal, Rod (Note: Use Item 100)	
105	See Note	NSS	O-Ring (Note: Use Item 100)	
106	See Note	NSS	Wiper (Note: Use Item 100)	
107	See Note	NSS	Ring, Wear (Note: Use Item 100)	
108	See Note	NSS	Seal (Note: Use Item 100)	
109	See Note	NSS	O-Ring (Note: Use Item 100)	
110	See Note	NSS	Ring, Back-up (Note: Use Item 100)	
111	See Note	NSS	O-Ring (Note: Use Item 100)	

FIGURE 5-7. LEVEL CYLINDER ASSEMBLY - JIB (860SJ ONLY) (USAGE MAY VARY) (SERVICE REPLACEMENT)

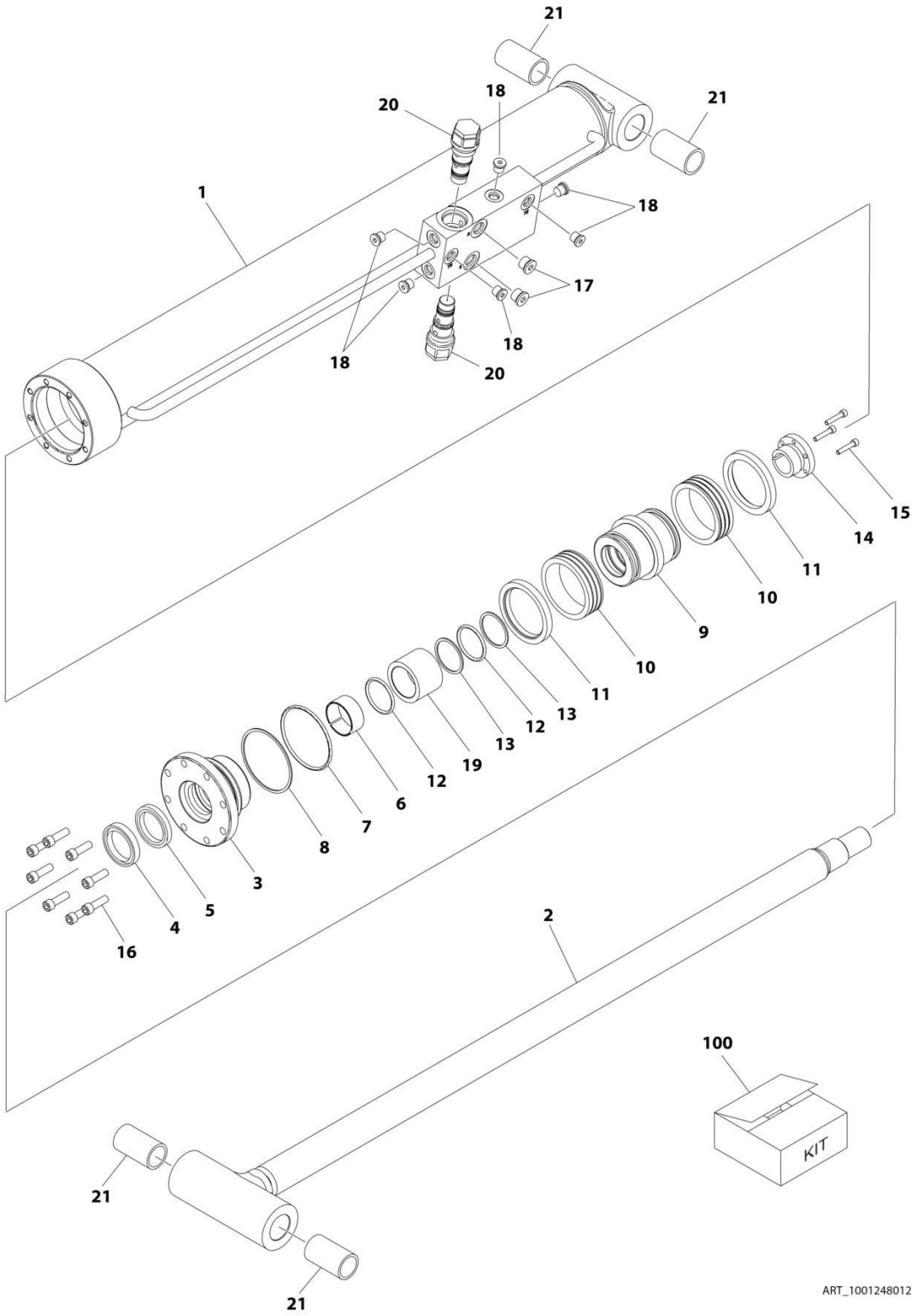

FIGURE 5-7. LEVEL CYLINDER ASSEMBLY - JIB (860SJ ONLY) (USAGE MAY VARY) (SERVICE REPLACEMENT)

ITEM	PART NUMBER	QTY	DESCRIPTION	REV
	1001248012	Ref	LIFT CYLINDER ASSEMBLY - JIB	C
		Ref	Note: Original Cylinder May Have Been Replaced with Service Replacement. Identify PN Stamped on Cylinder Before Ordering Parts.	
1	See Note	NSS	Barrel (Note: Not Available for Purchase)	
2	70006734	1	Rod	
3	70006649	1	Head	
4	See Note	NSS	Wiper (Note: Use Item 100)	
5	See Note	NSS	Seal, Rod (Note: Use Item 100)	
6	See Note	NSS	Ring, Wear (Note: Use Item 100)	
7	See Note	NSS	O-Ring (Note: Use Item 100)	
8	See Note	NSS	Ring, Back-up (Note: Use Item 100)	
9	70006650	1	Piston	
10	See Note	NSS	Seal (Note: Use Item 100)	
11	See Note	NSS	Ring, Lock (Note: Use Item 100)	
12	See Note	NSS	O-Ring (Note: Use Item 100)	
13	See Note	NSS	Ring, Back-up (Note: Use Item 100)	
14	0961893	1	Bushing, Tapered	
15	0630534	3	Capscrew, Socket Head #10 x 1	
16	70006735	8	Capscrew 5/16	
17	2220885	2	Plug, O-Ring	
18	2220883	6	Plug, O-Ring	
19	70006736	1	Spacer	
20	4640509	2	Cartridge, Valve	
20	2900792	2	Seal Kit - 4640509 Valve	
21	0962336	4	Bushing	
100	1001138795	1	Seal Kit (Includes Items 4-8 & 10-13)	

FIGURE 5-8. LIFT CYLINDER ASSEMBLY - MAIN BOOM

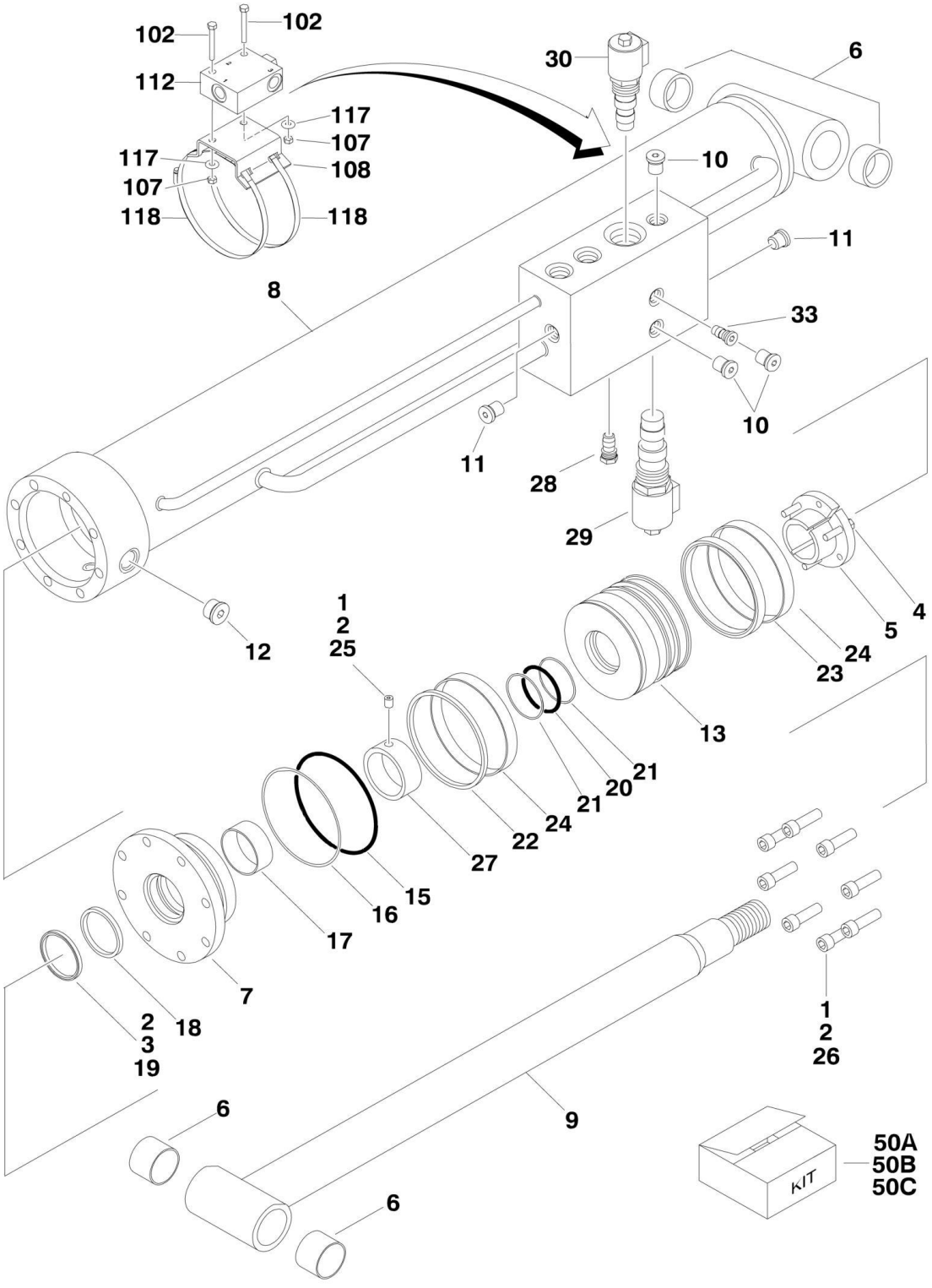

FIGURE 5-8. LIFT CYLINDER ASSEMBLY - MAIN BOOM

ITEM	PART NUMBER	QTY	DESCRIPTION	REV
		Ref	**MAIN LIFT CYLINDER ASSEMBLY**	
	1684042	Ref	**Main Lift Cylinder Assembly 800S (Prior to SN 0300066889)**	F
	1684199	Ref	**Main Lift Cylinder Assembly 800S (Original Equipment) (SN 0300066889 through 0300140000)**	E
	1684124	Ref	**Main Lift Cylinder Assembly 860SJ (Prior to SN 0300066889)**	D
	1684202	Ref	**Main Lift Cylinder Assembly 860SJ (Original Equipment) (SN 0300066889 through 0300140000)**	F
		Ref	Note: Original Cylinder may have been replaced with Service Replacement. Identify PN Stamped on Cylinder Before Ordering Parts.	
1	0100011	AR	Compound, Locking	
2	0100038	AR	Primer, Locking	
3	0100063	AR	Loctite #RC 609 **(Prior to SN 0300110961)**	
4	0630536	3	Bolt	
5	0961898	1	Bushing, Tapered	
6	0962033	4	Bushing	
7	1683818	1	Head	
8		Ref	Barrel Weldment Options:	
8	1684078	1	1684042 Cylinder	
8	1684198	1	1684199/1684202 Cylinder	
8	1684184	1	1684124 Cylinder	
9		Ref	Rod Weldment Options:	
9	1684080	1	1684042/1684199 Cylinder	
9	1684123	1	1684124/1684202 Cylinder	
10	2220883	5	Plug, O-Ring	
11	2220885	2	Plug, O-Ring	
12	2220888	1	Plug, O-Ring	
13		Ref	Piston Options:	
13	3480265	1	1684042/1684124 Cylinder	
13	3480275	1	1684199/1684202 Cylinder	
15	See Note	NSS	O-Ring (Note: Use Item 50A, 50B or 50C)	
16	See Note	NSS	Ring, Back-up (Note: Use Item 50A, 50B or 50C)	
17	See Note	NSS	Ring, Wear (Note: Use Item 50A, 50B or 50C)	
18	See Note	NSS	Seal, Rod (Note: Use Item 50A, 50B or 50C)	
19	See Note	NSS	Wiper (Note: Use Item 50A, 50B or 50C)	
20	See Note	NSS	O-Ring (Note: Use Item 50A, 50B or 50C)	
21	See Note	NSS	Ring, Back-up (Note: Use Item 50A, 50B or 50C)	
22		Ref	Seal/Ring Options:	
22	See Note	NSS	Seal - 1684042/1684124 Cylinder (Note: Use Item 50A)	
22	See Note	NSS	Ring, Guidelock - 1684199/1684202 Cylinder (Note: Use Item 50B or 50C)	
23	See Note	AR	Seal (Note: Use Item 50A, 50B or 50C)	
24		Ref	Ring Options:	
24	See Note	NSS	Ring, Wear - 1684042/1684124 Cylinder (Note: Use Item 50A)	
24	See Note	NSS	Ring, Guidelock - 1684199/1684202 Cylinder (Note: Use Item 50B or 50C)	
25	3900310	1	Setscrew	
26	3932240	6	Capscrew 3/4in-10NC x 2-1/2in	
27		Ref	Spacer, Tube Options:	
27	4568240	1	1684042/1684199 Cylinder	
27	4568273	1	1684124/1684202 Cylinder	

SECTION 5 - CYLINDER

ITEM	PART NUMBER	QTY	DESCRIPTION	REV
28	4641144	1	Cartridge, Restrictor/Check Valve	
28	7012967	1	Seal Kit - 4641144 Valve	
29	4641234	1	Cartridge, Lift Dump Proportional Solenoid	
29	7023982	1	Cartridge - 4641234 Valve	
29	7012925	1	Seal Kit - 4641234 Valve	
29	7017451	1	Coil - 4641234 Valve	
30	4641188	1	Cartridge, Lift Holding Solenoid	
30	7023923	1	Cartridge - 4641188 Valve	
30	7023919	1	Seal Kit - 4641188 Valve	
30	7012943	1	Coil - 4641188 Valve	
33	4641194	1	Cartridge, Relief Valve	
33	7023927	1	Seal Kit - 4641194 Valve	
50		Ref	Seal Kit Options (Includes Items 15-24):	
50A	2902050	1	Seal Kit - Main Boom Lift Cylinder 1684042/1684124	
50B	2902134	1	Seal Kit - Main Boom Lift Cylinder 1684199/1684202 **(Prior to SN 0300079435)**	
50C	2901537	1	Seal Kit - Main Boom Lift Cylinder 1684199/1684202 **(SN 0300079435 through 0300140000)**	
	0272750	Ref	**MANUAL DESCENT INSTALLATION (OPTIONAL) (SN 0300068651 through 0300140000)**	A
102	0641514	2	Bolt 5/16in-18NC x 1-3/4in	
107	3311505	2	Locknut 5/16in-18NC	
108	3574172	1	Plate, Valve Mounting	
112	4640673	1	Valve, Check	
112	7011325	1	Cartridge, Valve Check	
117	4751500	2	Flatwasher 5/16in Regular	
118	1320315	2	Clamp	

FIGURE 5-9. LIFT CYLINDER ASSEMBLY - MAIN BOOM (800S) (SERVICE REPLACEMENT)

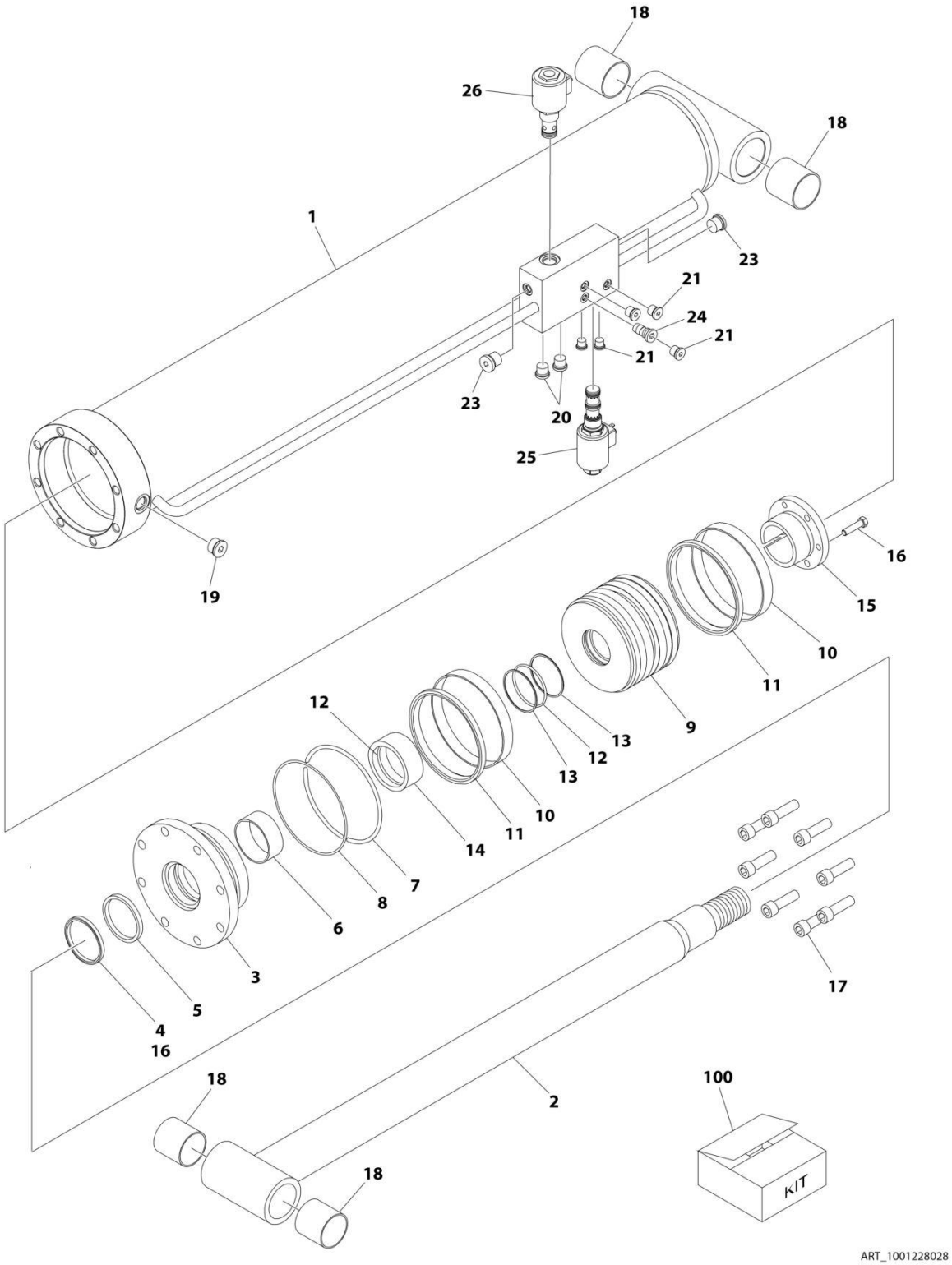

FIGURE 5-9. LIFT CYLINDER ASSEMBLY - MAIN BOOM (800S) (SERVICE REPLACEMENT)

ITEM	PART NUMBER	QTY	DESCRIPTION	REV
	1001228028	Ref	LIFT CYLINDER ASSEMBLY - MAIN BOOM	C
		Ref	Note: Original Cylinder may have been replaced with Service Replacement. Identify PN Stamped on Cylinder Before Ordering Parts.	
1	See Note	NSS	Barrel (Note: Not Available for Purchase)	
2	70006506	1	Rod	
3	70006505	1	Head	
4	See Note	NSS	Wiper (Note: Use Item 100)	
5	See Note	NSS	Seal, Rod (Note: Use Item 100)	
6	See Note	NSS	Ring, Wear (Note: Use Item 100)	
7	See Note	NSS	O-Ring (Note: Use Item 100)	
8	See Note	NSS	Ring, Back-up (Note: Use Item 100)	
9	70006504	1	Piston	
10	See Note	NSS	Ring, Guidelock (Note: Use Item 100)	
11	See Note	NSS	Ring, Guidelock (Note: Use Item 100)	
12	See Note	NSS	O-Ring (Note: Use Item 100)	
13	See Note	NSS	Ring, Back-up (Note: Use Item 100)	
14	70006503	1	Spacer, Tube	
15	0961898	1	Bushing, Tapered	
16	0630536	3	Bolt	
16	0100011	AR	Compound, Locking	
16	0100038	AR	Primer, Locking	
17	3932240	8	Capscrew 3/4 x 2-1/2	
17	0100011	AR	Compound, Locking	
17	0100038	AR	Primer, Locking	
18	0962033	4	Bushing	
19	2220888	3	Plug	
20	2220887	2	Plug	
21	2220883	4	Plug	
23	2220885	2	Plug	
24	4641194	1	Cartridge, Relief Valve	
24	7023927	1	Seal Kit - 4641194 Valve	
25	4641188	1	Cartridge, Lift Holding Solenoid **(SN 0300257003 through 0300272492, SN B300003768 through B300005730, Except SN 0300272449 through 0300272454, Excluding B300005568)**	
25	7023923	1	Cartridge - 4641188 Valve	
25	7023919	1	Seal Kit - 4641188 Valve	
25	7012943	1	Coil - 4641188 Valve	
26	4641234	1	Cartridge, Lift Relief Proportional Solenoid **(SN 0300257003 through 0300272492, SN B300003768 through B300005730, Except SN 0300272449 through 0300272454, Excluding B300005568)**	
26	7023982	1	Cartridge - 4641234 Valve	
26	7012925	1	Seal Kit - 4641234 Valve	
26	7017451	1	Coil - 4641234 Valve	
100	2901537	1	Seal Kit (Includes Items 5-8 & 10-13)	

FIGURE 5-10. LIFT CYLINDER ASSEMBLY - MAIN BOOM (860SJ) (SERVICE REPLACEMENT)

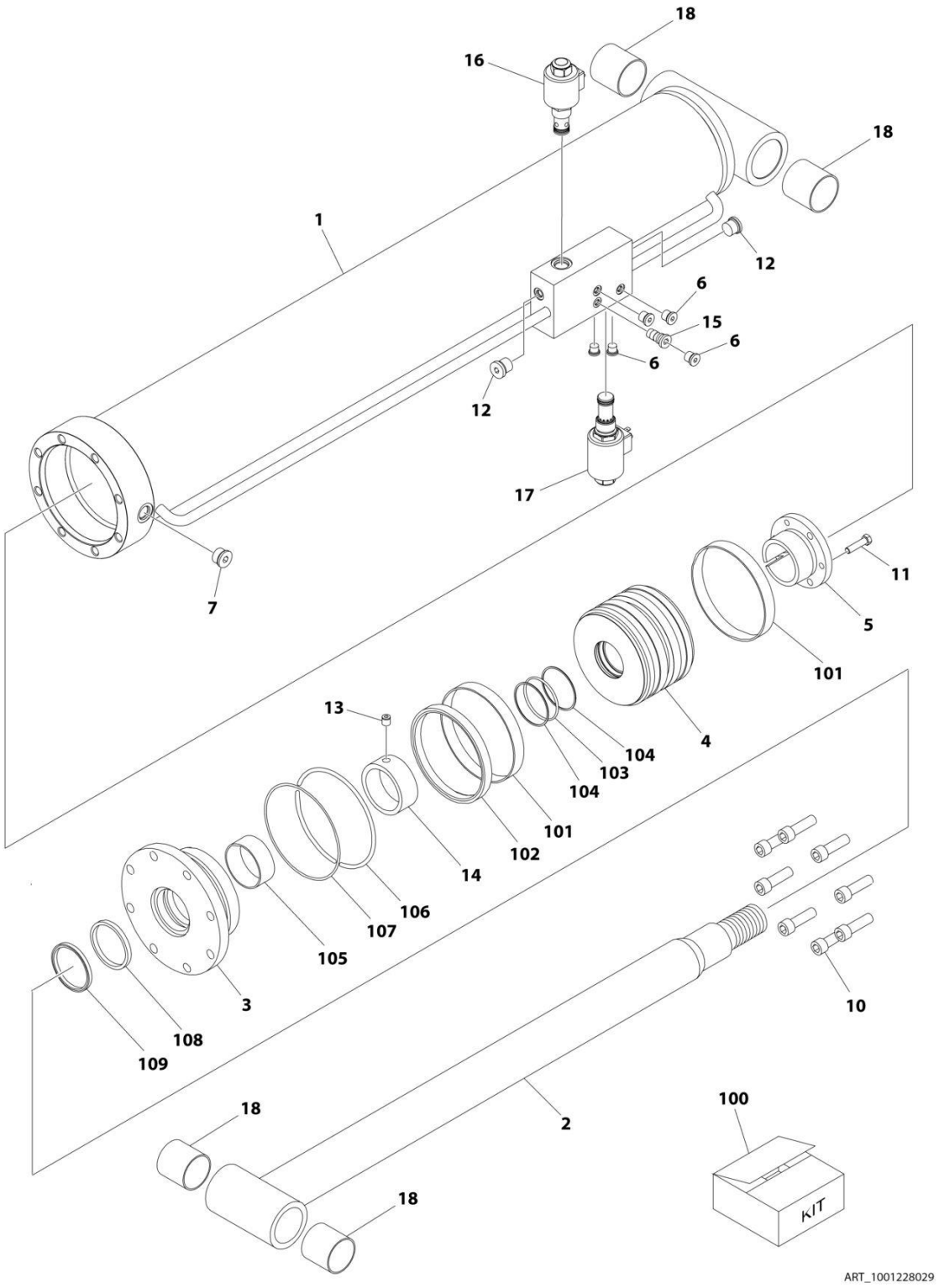

FIGURE 5-10. LIFT CYLINDER ASSEMBLY - MAIN BOOM (860SJ) (SERVICE REPLACEMENT)

ITEM	PART NUMBER	QTY	DESCRIPTION	REV
	1001228029	Ref	LIFT CYLINDER ASSEMBLY - MAIN BOOM	B
		Ref	Note: Original Cylinder may have been replaced with Service Replacement. Identify PN Stamped on Cylinder Before Ordering Parts.	
1	See Note	NSS	Barrel (Note: Not Available for Purchase)	
2	70006395	1	Rod	
3	70006377	1	Head	
4	70006394	1	Piston	
5	70006365	1	Bushing, Tapered	
6	2220883	5	Plug	
7	See Note	NSS	Plug (Note: Not Available for Purchase)	
10	3932240	8	Capscrew 3/4 x 2-1/2	
11	0630536	3	Bolt	
12	2220885	2	Plug	
13	3900310	1	Setscrew	
14	70006393	1	Spacer, Tube	
15	4641194	1	Cartridge, Relief Valve	
15	7023927	1	Seal Kit - 4641194 Valve	
16	4641234	1	Cartridge, Relief Valve	
16	7023982	1	Cartridge Less Coil	
16	7012925	1	Seal Kit - 7023982/4641234 Valve	
16	7017451	1	Coil	
17	4641188	1	Cartridge, Holding Valve	
17	7023923	1	Cartridge Less Coil	
17	7023919	1	Seal Kit - 7023923/4641188 Valve	
17	7012943	1	Coil	
18	0962033	4	Bushing	
100	70006392	1	Seal Kit (Includes Items 101-109)	
101	See Note	NSS	Ring, Guidelock (Note: Use Item 100)	
102	See Note	NSS	Seal (Note: Use Item 100)	
103	See Note	NSS	O-Ring (Note: Use Item 100)	
104	See Note	NSS	Ring, Back-up (Note: Use Item 100)	
105	See Note	NSS	Ring, Wear (Note: Use Item 100)	
106	See Note	NSS	O-Ring (Note: Use Item 100)	
107	See Note	NSS	Ring, Back-up (Note: Use Item 100)	
108	See Note	NSS	Seal, Rod (Note: Use Item 100)	
109	See Note	NSS	Wiper (Note: Use Item 100)	

FIGURE 5-11. STEER CYLINDER ASSEMBLY

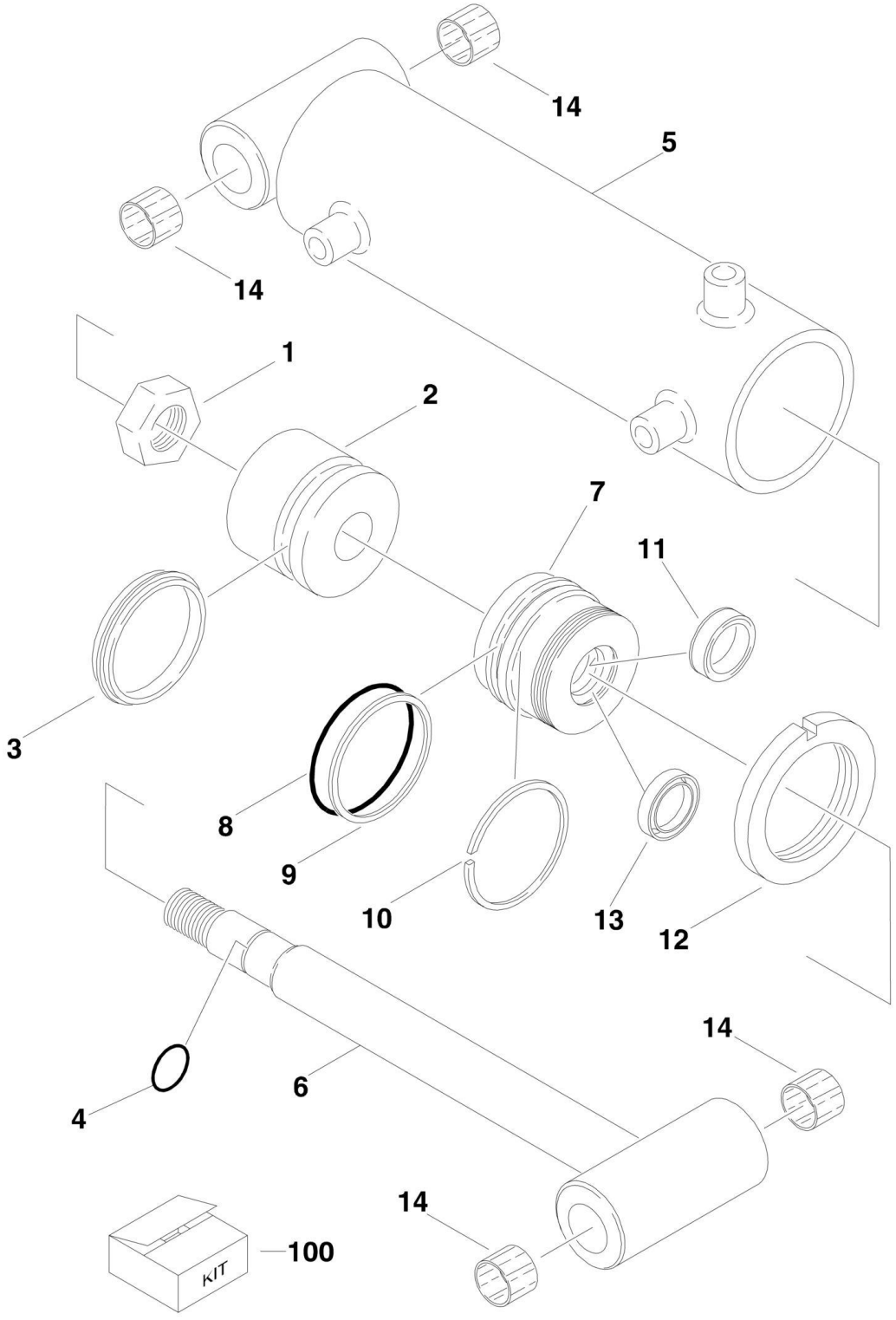

FIGURE 5-11. STEER CYLINDER ASSEMBLY

ITEM	PART NUMBER	QTY	DESCRIPTION	REV
	1683740	Ref	**STEER CYLINDER ASSEMBLY**	B
1	7017210	1	Locknut	
2	7017211	1	Piston	
3	See Note	NSS	Seal (Note: Use Item 100)	
4	See Note	NSS	O-Ring (Note: Use Item 100)	
5	7023023	1	Barrel Weldment	
6	7017236	1	Rod Weldment	
7	7017213	1	Head	
8	See Note	NSS	O-Ring (Note: Use Item 100)	
9	See Note	NSS	Ring, Back-up (Note: Use Item 100)	
10	See Note	NSS	Ring, Retainer (Note: Use Item 100)	
11	See Note	NSS	Seal (Note: Use Item 100)	
12	7017214	1	Nut, Spanner	
13	See Note	NSS	Wiper (Note: Use Item 100)	
14	0961977	4	Bushings	
100	7017215	1	Seal Kit (Includes Items 3, 4, 8-11 & 13)	

FIGURE 5-12. TELESCOPE CYLINDER ASSEMBLY

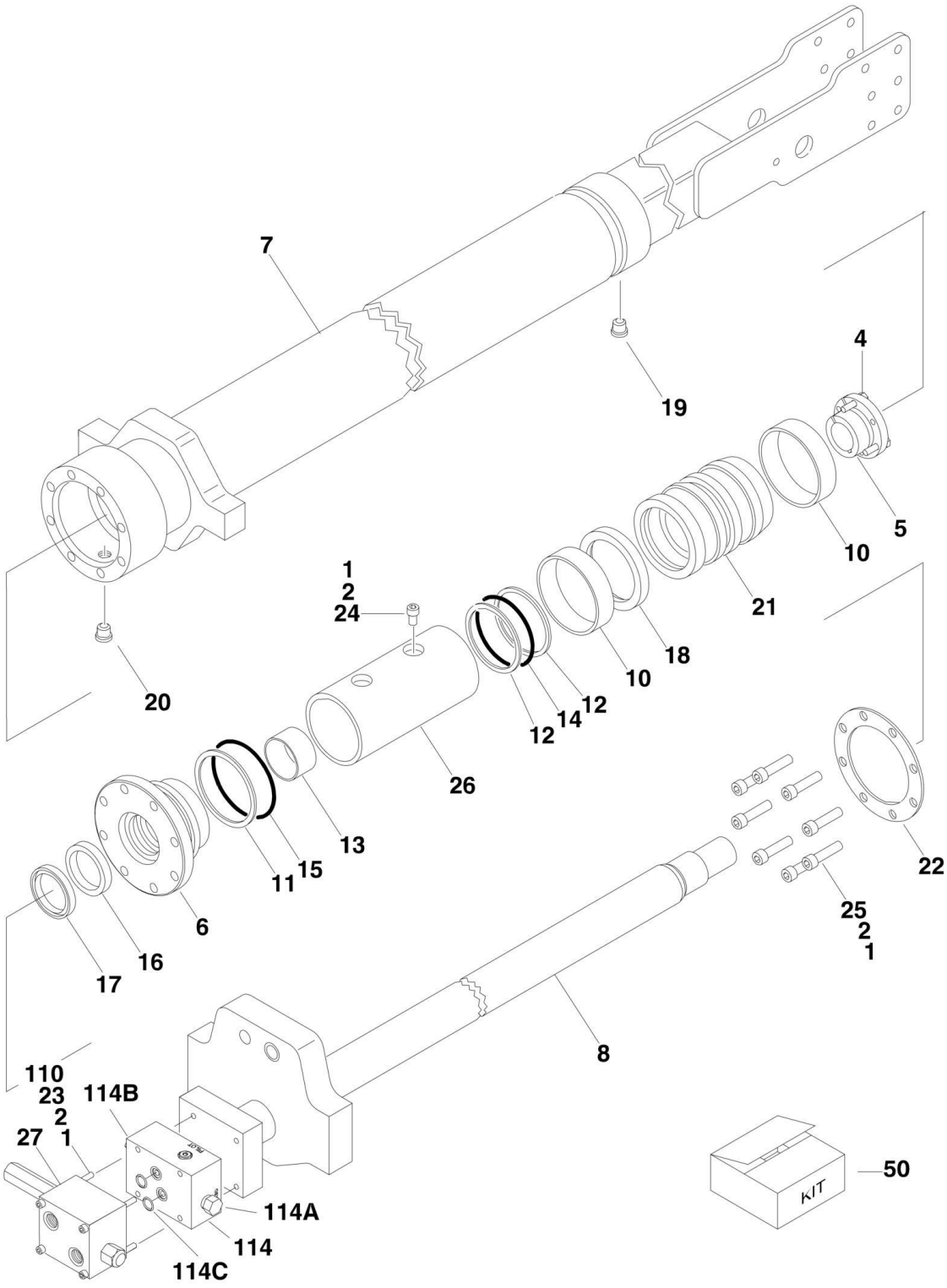

FIGURE 5-12. TELESCOPE CYLINDER ASSEMBLY

ITEM	PART NUMBER	QTY	DESCRIPTION	REV
		Ref	**TELESCOPE CYLINDER ASSEMBLY**	
	1684041	Ref	**Telescope Cylinder Assembly 800S (Original Equipment)**	E
	1001177317	Ref	**Telescope Cylinder Assembly 800S (Service Replacement)**	B
	1684043	Ref	**Telescope Cylinder Assembly 860SJ (Original Equipment)**	F
	1001181588	Ref	**Telescope Cylinder Assembly 860SJ (Service Replacement)**	C
		Ref	Note: Original Cylinder may have been replaced with Service Replacement. Identify PN Stamped on Cylinder Before Ordering Parts.	
1	0100011	AR	Compound, Locking	
2	0100038	AR	Primer, Locking	
4	0630535	3	Bolt 1/4in-20NC x 1-1/8in	
5	0961897	1	Bushing, Tapered	
6		Ref	Head Options:	
6	1683077	1	Head (1684041 & 1684043 Cylinders)	
6	1001175884	1	Head (1001177317 & 1001181588 Cylinders)	
7		Ref	Barrel Options:	
7	1684049	1	Barrel 800S	
7	1684045	1	Barrel 860SJ	
8		Ref	Rod Options:	
8	1684050	1	Rod 800S (1684041 Cylinder) **(Prior to SN 0300071018)**	
8	1684267	1	Rod 800S (1684041 Cylinder) **(SN 0300071018 through 0300140000)**	
8	1001115631	1	Rod 800S (1001177317 Cylinder)	
8	1684046	1	Rod 860SJ (1684043 Cylinder) **(Prior to SN 0300071018)**	
8	1684269	1	Rod 860SJ (1684043 Cylinder) **(SN 0300071018 through 0300140000)**	
8	1001115465	1	Rod 860SJ (1001181588 Cylinder)	
10	See Note	NSS	Ring, Wear (Note: Use Item 50)	
11	See Note	NSS	Ring, Back-up (Note: Use Item 50)	
12	See Note	NSS	Ring, Back-up (Note: Use Item 50)	
13	See Note	NSS	Ring, Wear (Note: Use Item 50)	
14	See Note	NSS	O-Ring (Note: Use Item 50)	
15	See Note	NSS	O-Ring (Note: Use Item 50)	
16	See Note	NSS	Seal, Rod (Note: Use Item 50)	
17	See Note	NSS	Wiper (Note: Use Item 50)	
18	See Note	NSS	T-Seal (Note: Use Item 50)	
19	2220885	1	Plug, O-Ring	
20	2220886	2	Plug, O-Ring	
21		Ref	Piston Options:	
21	3480266	1	Piston (1684041 & 1684043 Cylinders)	
21	1001115504	1	Piston (1001177317 & 1001181588 Cylinders)	
22		Ref	Ring, Washer Options:	
22	3760370	1	Ring, Washer **(Prior to SN 0300137483)**	
22	1001108958	1	Ring, Washer **(SN 0300137483 through 0300140000)**	
23	3931448	4	Capscrew 1/4in-20NC x 3in	
24	3931508	1	Capscrew 5/16in-18NC x 1/2in	
25		Ref	Capscrew Options:	
25	3931724	8	Capscrew 7/16in-14NC x 1-1/2in (1684041 & 1684043 Cylinders)	
25	3931740	8	Capscrew 7/16in-14NC x 2-1/2in (1001177317 & 1001181588)	

SECTION 5 - CYLINDER

ITEM	PART NUMBER	QTY	DESCRIPTION	REV
26		Ref	Spacer, Tube	
26	4568264	1	Spacer, Tube 800S (1684041 Cylinder)	
26	1001115633	1	Spacer, Tube 800S (1001177317 Cylinder)	
26	4568282	1	Spacer, Tube 860SJ (1684043 Cylinder)	
26	1001115469	1	Spacer, Tube 800S (1001181588 Cylinder)	
27	4641033	1	Valve Assembly Options: (No serviceable parts - sold as assembly only)	
27	7024508	2	O-Ring (Not Shown - Located between valve and cylinder)	
50		Ref	Seal Kit Options (Includes Items 10-18):	
50	2901554	1	Seal Kit (1684041 & 1684043 Cylinders)	
50	1001181694	1	Seal Kit (1001177317 & 1001181588 Cylinders)	
	0272750	Ref	**MANUAL DESCENT INSTALLATION (SN 0300068651 through 0300140000)**	A
110	3931480	4	Capscrew 1/4in-20NC x 5in	
114	4641262	1	Valve, Assembly (Manual Descent)	
114A	7026015	1	Cartridge	
114A	7026004	1	Seal Kit - 7026015 Cartridge	
114B	7026016	1	Cartridge	
114B	7011346	1	Seal Kit - 7026016 Cartridge	
114C	3790112	2	O-Ring	

FIGURE 5-13. TELESCOPE CYLINDER ASSEMBLY (800S) (SERVICE REPLACEMENT)

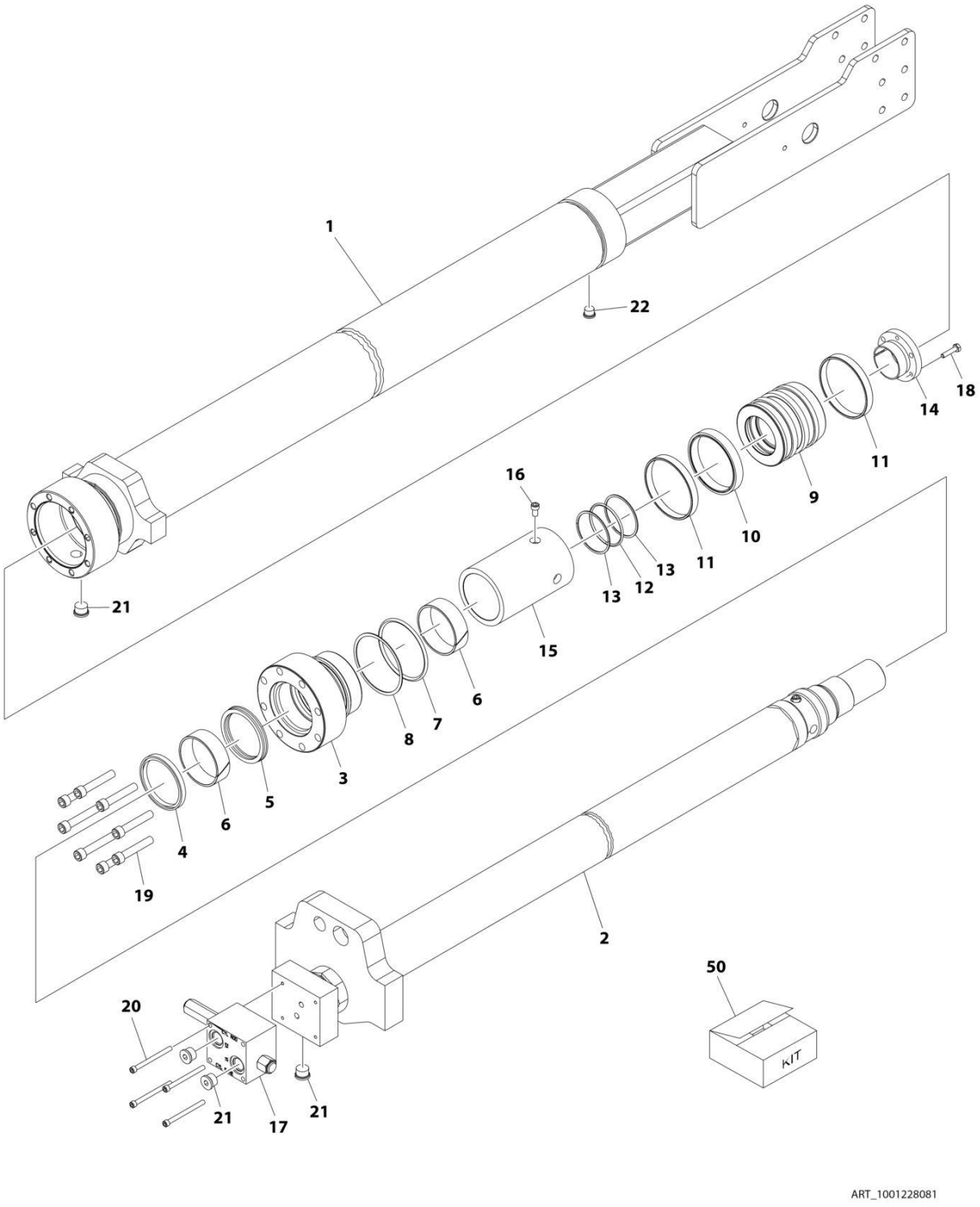

FIGURE 5-13. TELESCOPE CYLINDER ASSEMBLY (800S) (SERVICE REPLACEMENT)

ITEM	PART NUMBER	QTY	DESCRIPTION	REV
	1001228081	Ref	TELESCOPE CYLINDER ASSEMBLY	B
		Ref	Note: Original Cylinder may have been replaced with Service Replacement. Identify PN Stamped on Cylinder Before Ordering Parts.	
1	See Note	NSS	Barrel (Note: Not Available for Purchase)	
2	70006719	1	Rod	
3	70006694	1	Head	
4	See Note	NSS	Wiper (Note: Use Item 50)	
5	See Note	NSS	Seal, Rod (Note: Use Item 50)	
6	See Note	NSS	Ring, Wear (Note: Use Item 50)	
7	See Note	NSS	O-Ring (Note: Use Item 50)	
8	See Note	NSS	Ring, Back-up (Note: Use Item 50)	
9	70006720	1	Piston	
10	See Note	NSS	T-Seal (Note: Use Item 50)	
11	See Note	NSS	Ring, Wear (Note: Use Item 50)	
12	See Note	NSS	O-Ring (Note: Use Item 50)	
13	See Note	NSS	Ring, Back-up (Note: Use Item 50)	
14	0961897	1	Bushing, Tapered	
15	70006721	1	Spacer, Tube	
16	3931508	1	Capscrew 5/16 x 1/2	
17	4641033	1	Valve Assembly (No serviceable parts - sold as assembly only)	
17	7024508	2	O-Ring (Not Shown - Located between valve and cylinder)	
18	0630535	3	Bolt 1/4 x 1-1/8	
19	3931740	8	Capscrew 7/16 x 2-1/2	
20	3931448	4	Capscrew 1/4 x 3	
21	2220886	2	Plug, O-Ring	
22	2220885	1	Plug, O-Ring	
50	1001181694	1	Seal Kit Options (Includes Items 4-8 & 10-13)	

FIGURE 5-14. TELESCOPE CYLINDER ASSEMBLY (860SJ) (SERVICE REPLACEMENT)

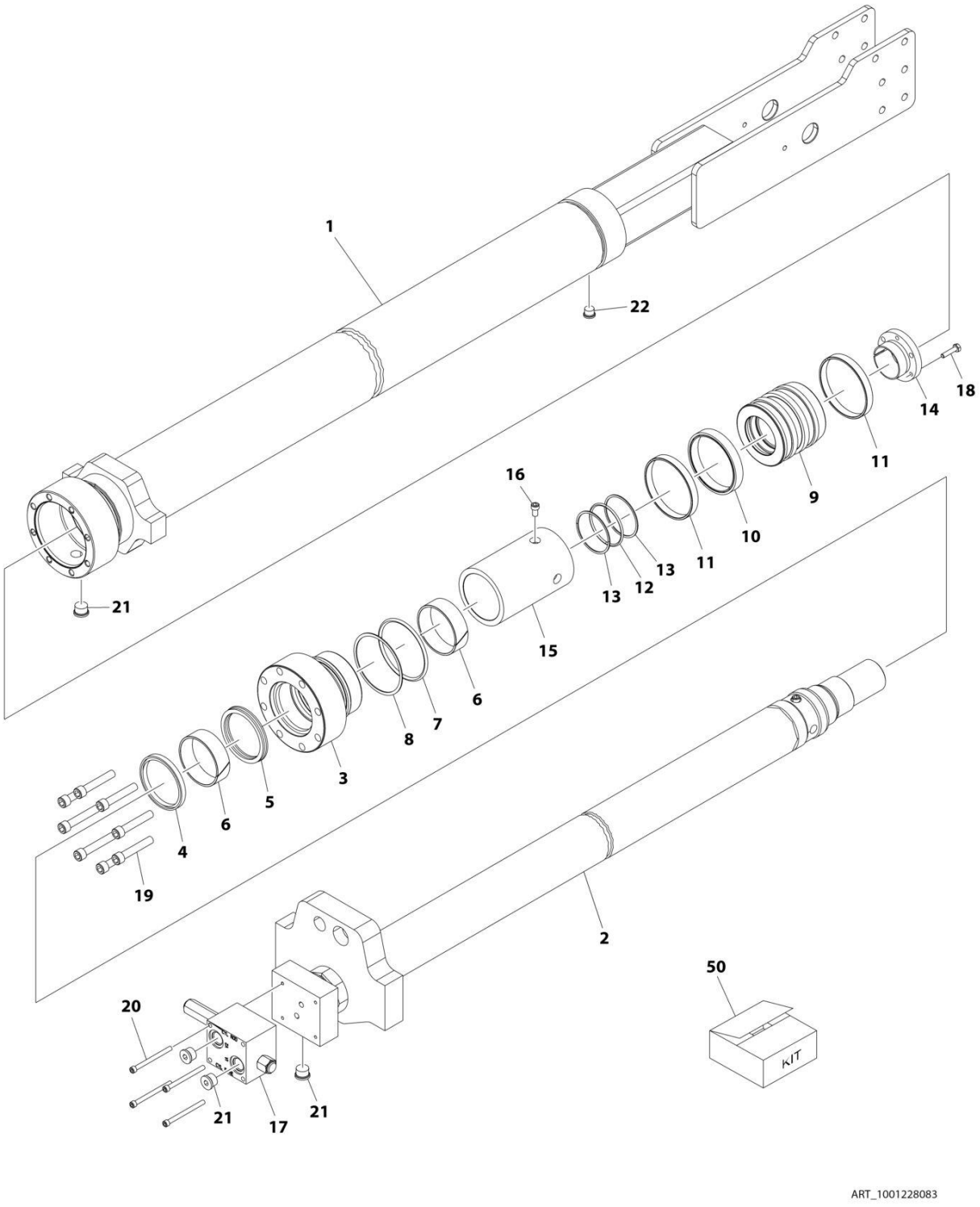

FIGURE 5-14. TELESCOPE CYLINDER ASSEMBLY (860SJ) (SERVICE REPLACEMENT)

ITEM	PART NUMBER	QTY	DESCRIPTION	REV
	1001228083	Ref	TELESCOPE CYLINDER ASSEMBLY	B
		Ref	Note: Original Cylinder may have been replaced with Service Replacement. Identify PN Stamped on Cylinder Before Ordering Parts.	
1	See Note	NSS	Barrel (Note: Not Available for Purchase)	
2	70006729	1	Rod	
3	70006694	1	Head	
4	See Note	NSS	Wiper (Note: Use Item 50)	
5	See Note	NSS	Seal, Rod (Note: Use Item 50)	
6	See Note	NSS	Ring, Wear (Note: Use Item 50)	
7	See Note	NSS	O-Ring (Note: Use Item 50)	
8	See Note	NSS	Ring, Back-up (Note: Use Item 50)	
9	70006720	1	Piston	
10	See Note	NSS	T-Seal (Note: Use Item 50)	
11	See Note	NSS	Ring, Wear (Note: Use Item 50)	
12	See Note	NSS	O-Ring (Note: Use Item 50)	
13	See Note	NSS	Ring, Back-up (Note: Use Item 50)	
14	0961897	1	Bushing, Tapered	
15	70006730	1	Spacer, Tube	
16	70006731	1	Bolt	
17	4641033	1	Valve Assembly (No serviceable parts - sold as assembly only)	
17	7024508	2	O-Ring (Not Shown - Located between valve and cylinder)	
18	0630535	3	Bolt 1/4 x 1-1/8	
19	70006732	8	Bolt	
20	70006733	4	Bolt	
21	2220886	4	Plug, O-Ring	
22	2220885	1	Plug, O-Ring	
50	1001181694	1	Seal Kit Options (Includes Items 4-8 & 10-13)	

SECTION 6 - HYDRAULIC

FIGURE 6-1. AXLE LOCKOUT HYDRAULIC DIAGRAM

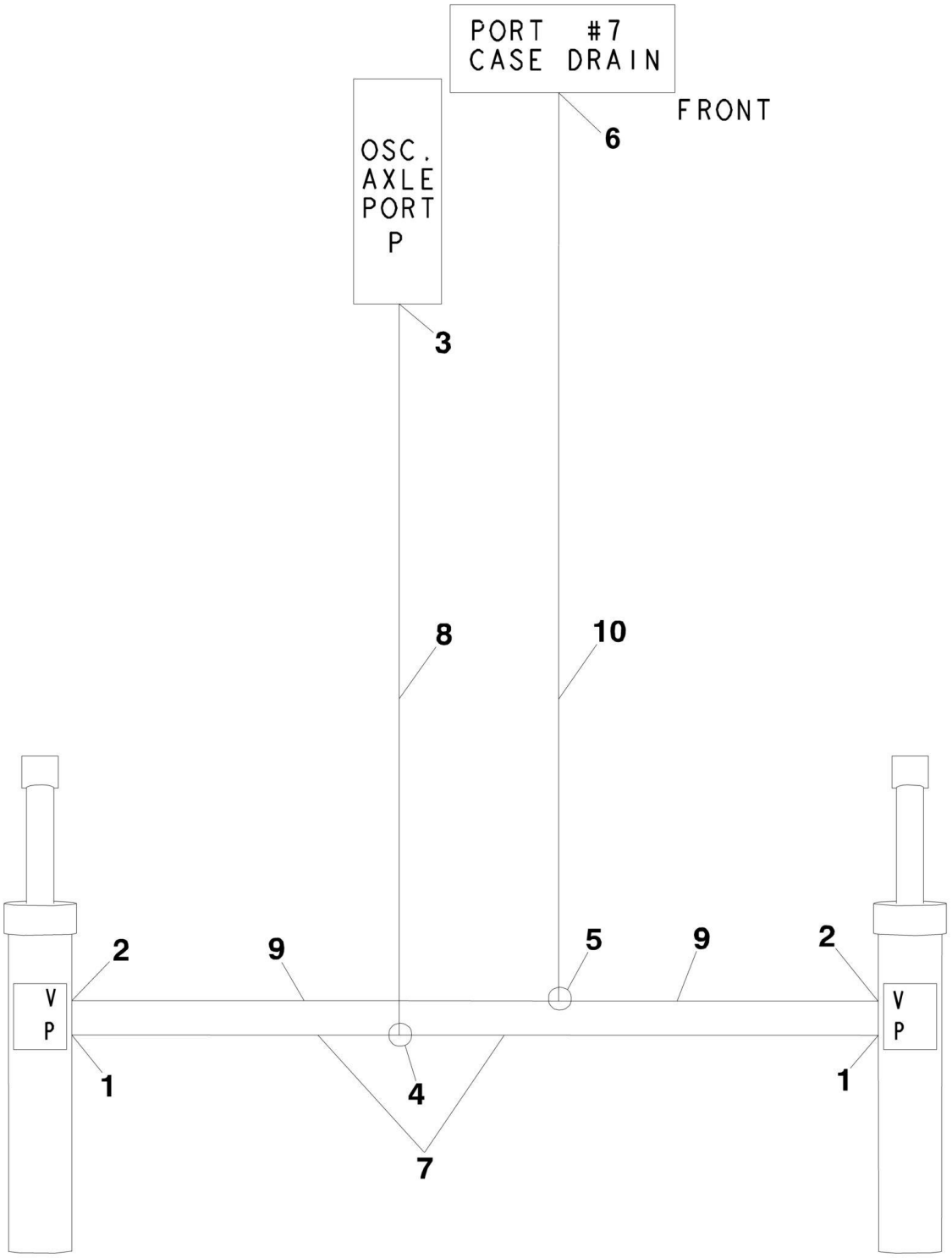

FIGURE 6-1. AXLE LOCKOUT HYDRAULIC DIAGRAM

ITEM	PART NUMBER	QTY	DESCRIPTION	REV
		Ref	**AXLE LOCKOUT HYDRAULIC DIAGRAM**	
	2792502	Ref	**Axle Lockout Hydraulic Diagram (Prior to SN 0300083331)**	3-J
	2792648	Ref	**Axle Lockout Hydraulic Diagram (SN 0300083331 through 0300140000)**	3-K
1		Ref	Fitting, Straight Options:	
1	2110404	2	Fitting, Straight **(Prior to SN 0300083331)**	
1	2110406	2	Fitting, Straight **(SN 0300083331 through 0300140000)**	
2	2110606	2	Fitting, Straight	
3	2110408	1	Fitting, Straight	
4	2170504	1	Fitting, Tee	
5	2170506	1	Fitting, Tee	
6		Ref	Fitting Options:	
6	2110404	1	Straight Fitting **(Prior to SN 0300083331)**	
6	2170406	1	Tee Fitting **(SN 0300083331 through 0300097959)**	
7	2753629	2	Hose	
8	2753630	1	Hose	
9	2753624	2	Hose	
10	2753627	1	Hose	

FIGURE 6-2. DRIVE HYDRAULIC DIAGRAM - 2WD (Prior to SN 0300083331)

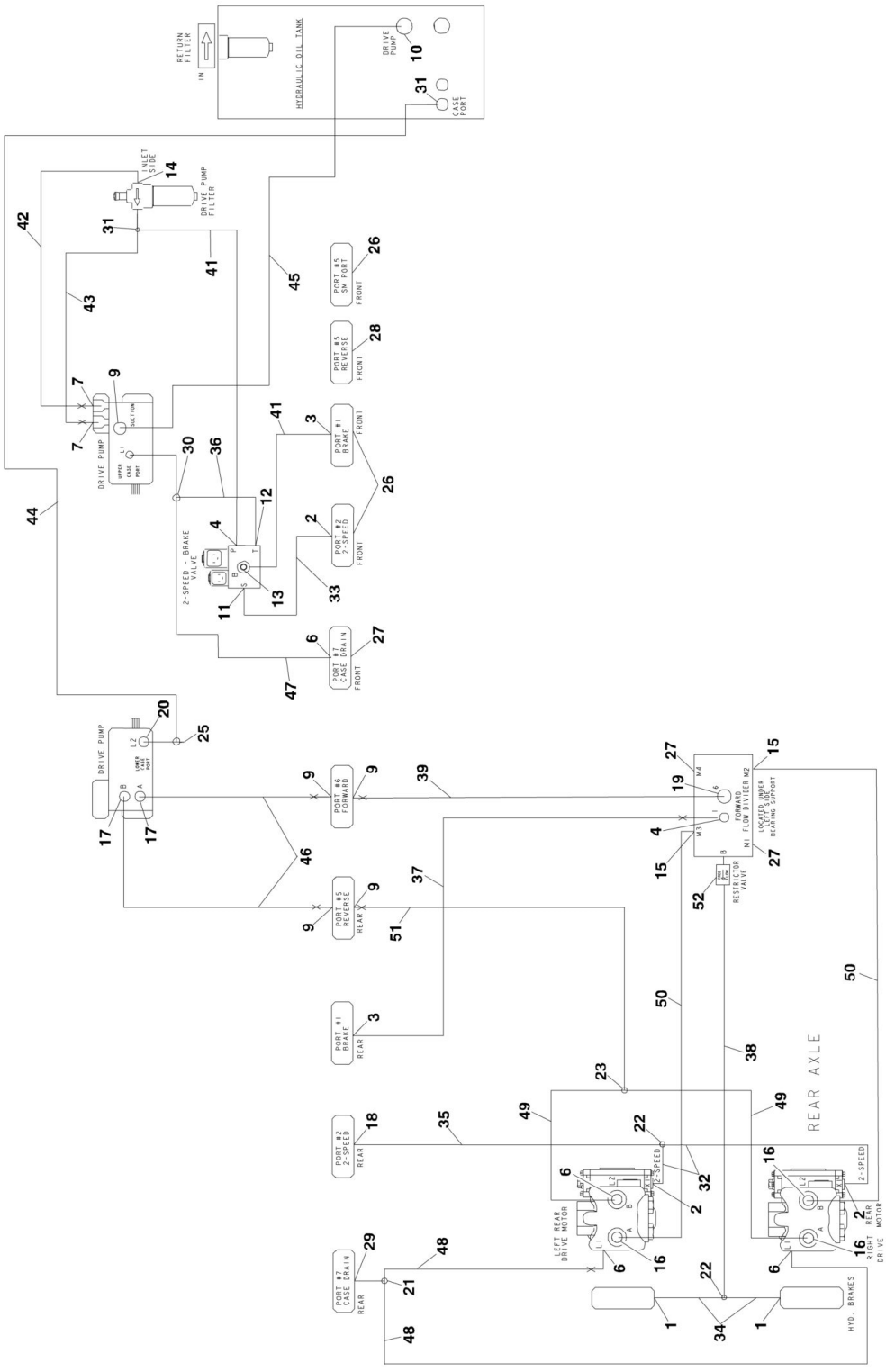

FIGURE 6-2. DRIVE HYDRAULIC DIAGRAM - 2WD (Prior to SN 0300083331)

ITEM	PART NUMBER	QTY	DESCRIPTION	REV
	2792465	Ref	**DRIVE HYDRAULIC DIAGRAM - 2WD**	6-J
1	2110404	2	Fitting, Straight	
2	2110406	3	Fitting, Straight	
3	2110806	2	Fitting, Straight	
4	2110808	2	Fitting, Straight	
6	2110812	3	Fitting, Straight	
7	2111010	2	Fitting, Straight	
9	2111616	5	Fitting, Straight	
10	2111620	1	Fitting, Straight	
11	2130404	1	Fitting, Elbow	
12	2130604	1	Fitting, Elbow	
13	2130808	1	Fitting, Elbow	
14	2131012	1	Fitting, Elbow	
15	2131212	2	Fitting, Elbow	
16	2131216	4	Fitting, Elbow	
17	2131616	2	Fitting, Elbow	
18	2150406	1	Fitting, Elbow	
19	2151616	1	Fitting, Elbow	
20	2170312	1	Fitting, Tee	
21	2170408	1	Fitting, Tee	
22	2170504	2	Fitting, Tee	
23	2170516	1	Fitting, Tee	
25	2170912	1	Fitting, Cap	
26	2220237	3	Fitting, Plug	
27	2220240	3	Fitting, Plug	
28	2220242	1	Fitting, Plug	
29	2220811	1	Fitting, Reducer	
30	2221084	1	Fitting, Tee	
31	2221088	2	Fitting, Tee	
32	2753709	2	Hose	
33	2753540	1	Hose	
34	2753725	2	Hose	
35	3753550	1	Hose	
36	2753575	1	Hose	
37	2753582	1	Hose	
38	2753621	1	Hose	
39	2753635	1	Hose	
41	2753659	2	Hose	
42	2753660	1	Hose	
43	2753661	1	Hose	
44	2753664	1	Hose	
45		Ref	Hose Options:	
45	2753666	1	Hose **(Prior to SN 0300066054)**	
45	2753807	1	Hose **(SN 0300066054 through 0300083331)**	
46	2753667	2	Hose	
47	2753685	1	Hose	
48	2753652	2	Hose	
49	2753687	2	Hose	
50	2753688	2	Hose	
51	2753689	1	Hose	

SECTION 6 - HYDRAULIC

ITEM	PART NUMBER	QTY	DESCRIPTION	REV
52	4641198	1	Valve, Check	

FIGURE 6-3. DRIVE HYDRAULIC DIAGRAM - 2WD (SN 0300083331 through 0300140000)

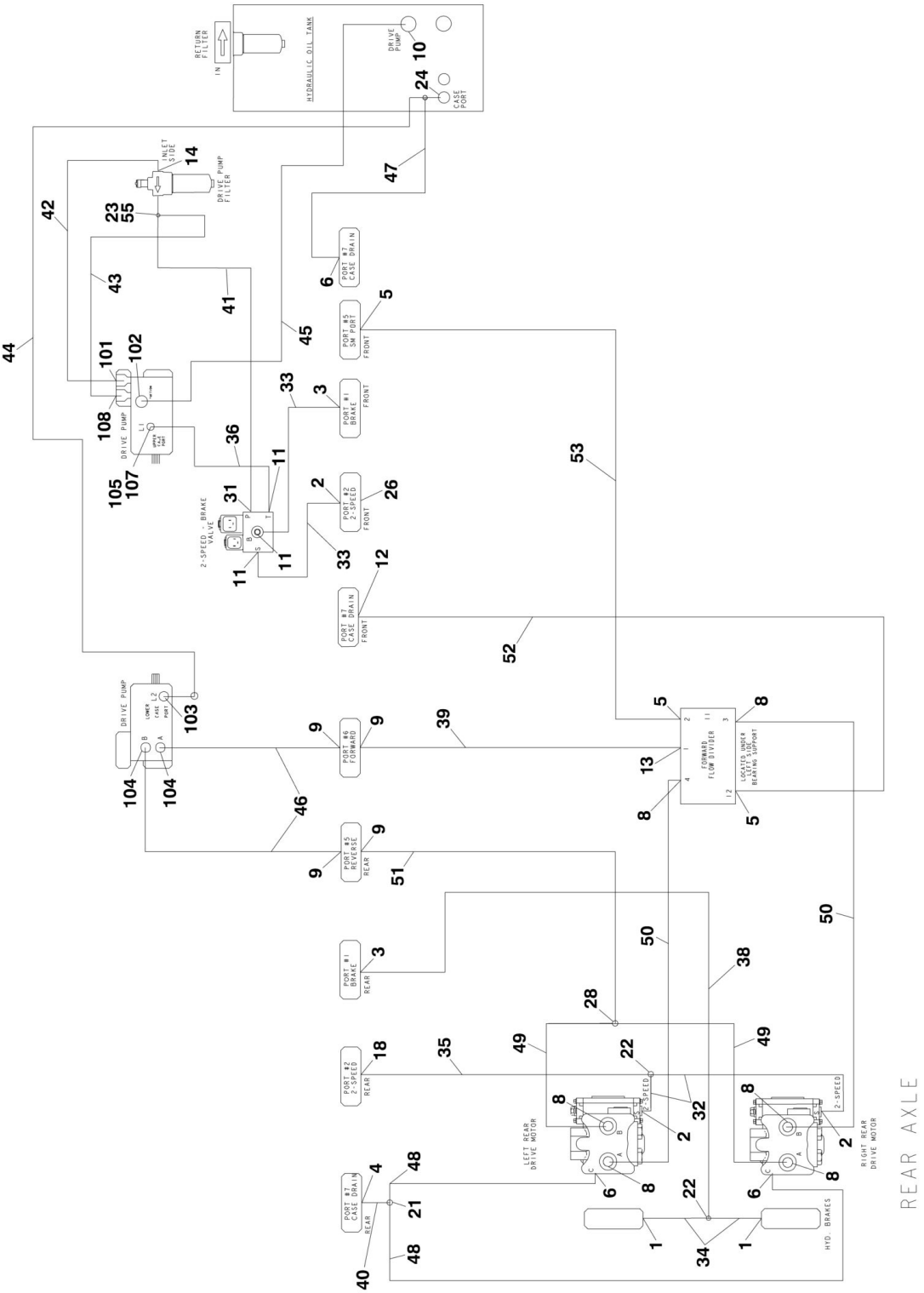

FIGURE 6-3. DRIVE HYDRAULIC DIAGRAM - 2WD (SN 0300083331 through 0300140000)

ITEM	PART NUMBER	QTY	DESCRIPTION	REV
		Ref	**DRIVE HYDRAULIC DIAGRAM - 2WD**	
	2792651	Ref	**Drive Hydraulic Diagram - 2WD (SN 0300083331 through 0300087261)**	3-D
	2792714	Ref	**Drive Hydraulic Diagram - 2WD (SN 0300087262 through 0300140000)**	6-K
1	2110404	2	Fitting, Straight	
2	2110406	3	Fitting, Straight	
3	2110408	2	Fitting, Straight	
4	2110808	1	Fitting, Straight	
5	2110606	3	Fitting, Straight	
6	2110812	3	Fitting, Straight	
8	2111212	6	Fitting, Straight	
9	2111616	4	Fitting, Straight	
10	2111620	1	Fitting, Straight	
11	2130404	3	Fitting, Elbow	
12		Ref	Fitting Options:	
12	2130606	1	Fitting, Elbow **(SN 0300085466 through 0300097958)**	
12	2170406	1	Fitting, Tee **(SN 0300097959 through 0300140000)**	
13		Ref	Fitting Options:	
13	2111616	1	Fitting, Straight **(SN 0300083331 through 0300087261)**	
13	2151616	1	Fitting, Elbow **(SN 0300087262 through 0300140000)**	
14		Ref	Fitting, Elbow Options:	
14	2131012	1	Fitting, Elbow **(SN 0300083331 through 0300087261)**	
14	2131008	1	Fitting, Elbow **(SN 0300087262 through 0300140000)**	
18	2150406	1	Fitting, Elbow	
21	2170508	1	Fitting, Tee	
22	2170504	2	Fitting, Tee	
23	2221183	1	Fitting, Reducer	
24	2221088	2	Fitting, Tee	
26	2220237	1	Fitting, Plug	
28	2170516	1	Fitting, Tee	
30	2221084	1	Fitting, Tee **(SN 0300083331 through 0300085466)**	
31	2170204	1	Fitting, Elbow	
32		Ref	Hose Options:	
32	2753709	2	Hose **(SN 0300083331 through 0300085465)**	
32	2754401	2	Hose **(SN 0300085466 through 0300140000)**	
33	2753540	2	Hose	
34	2753725	2	Hose	
35	3753550	1	Hose	
36	2753935	1	Hose	
38	2753622	1	Hose	
39	2753635	1	Hose	
40		Ref	Hose Options:	
40	2754245	1	Hose **(SN 0300083331 through 0300085465)**	
40	2753685	1	Hose **(SN 0300085466 through 0300140000)**	
41		Ref	Hose Options:	
41	2753555	1	Hose **(SN 0300083331 through 0300109492)**	
41	1001095307	1	Hose **(SN 0300109493 through 0300140000)**	
42		Ref	Hose Options:	
42	2753582	1	Hose **(SN 0300083331 through 0300109492)**	

ITEM	PART NUMBER	QTY	DESCRIPTION	REV
42	1001095308	1	Hose **(SN 0300109493 through 0300140000)**	
43		Ref	Hose Options:	
43	2753661	1	Hose **(SN 0300083331 through 0300097958)**	
43	2753661	1	Hose **(SN 0300097959 through 0300140000)**	
44	2753664	1	Hose	
45	2753807	1	Hose	
46	2753667	2	Hose	
47	2754242	1	Hose	
48	2754240	2	Hose	
49	2754238	2	Hose	
50		Ref	Hose Options:	
50	2754238	2	Hose **(SN 0300083331 through 0300085465)**	
50	2753688	2	Hose **(SN 0300085466 through 0300140000)**	
51		Ref	Hose Options:	
51	2754239	1	Hose **(SN 0300083331 through 0300085465)**	
51	2754402	1	Hose **(SN 0300085466 through 0300140000)**	
52	2754242	1	Hose	
53	2754243	1	Hose	
55	2170308	1	Fitting, Straight **(SN 0300097959 through 0300140000)**	
	3600410	Ref	**PISTON PUMP ASSEMBLY**	C
101	2111010	1	Fitting, Straight	
102	2111616	1	Fitting, Straight	
103	2131212	1	Fitting, Elbow	
104	2131616	2	Fitting, Elbow	
105	2110408	1	Fitting, Straight	
107	2220811	1	Fitting, Reducer	
108	2110810	1	Fitting, Straight	

FIGURE 6-4. DRIVE HYDRAULIC DIAGRAM - 4WD (Prior to SN 0300083331)

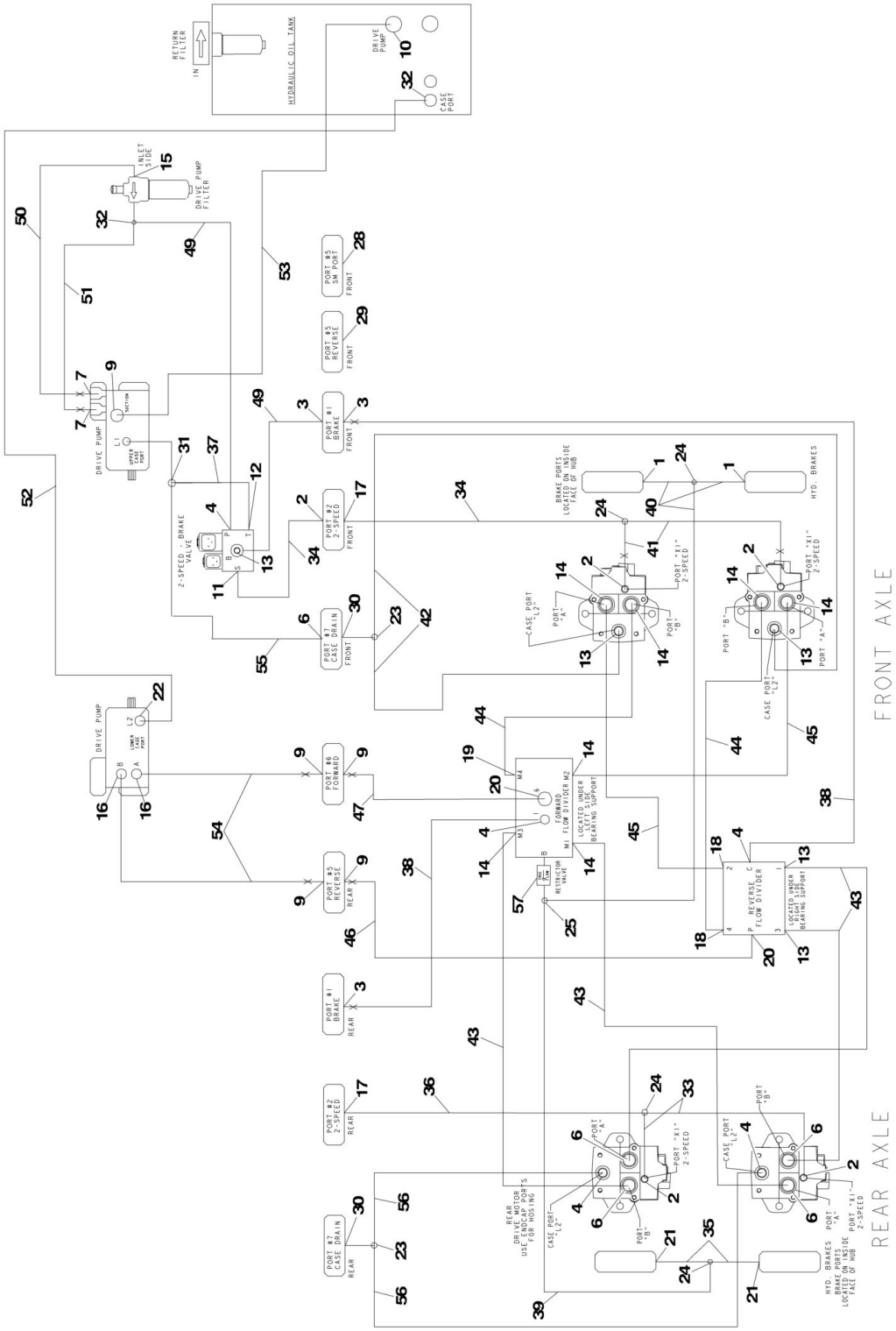

FIGURE 6-4. DRIVE HYDRAULIC DIAGRAM - 4WD (Prior to SN 0300083331)

ITEM	PART NUMBER	QTY	DESCRIPTION	REV
	2792466	Ref	**DRIVE HYDRAULIC DIAGRAM - 4WD**	8-K
1	2110404	2	Fitting, Straight	
2	2110406	5	Fitting, Straight	
3	2110806	3	Fitting, Straight	
4	2110808	5	Fitting, Straight	
6	2110812	5	Fitting, Straight	
7	2111010	2	Fitting, Straight	
9	2111616	5	Fitting, Straight	
10	2111620	1	Fitting, Straight	
11	2130404	1	Fitting, Elbow	
12	2130604	1	Fitting, Elbow	
13	2130808	5	Fitting, Elbow	
14	2130812	7	Fitting, Elbow	
15	2131012	1	Fitting, Elbow	
16	2131616	2	Fitting, Elbow	
17	2150406	2	Fitting, Elbow	
18	2150808	2	Fitting, Elbow	
19	2150812	1	Fitting, Elbow	
20	2151616	2	Fitting, Elbow	
21	2170104	2	Fitting, Long Straight	
22	2170312	1	Fitting, Tee	
23	2170408	2	Fitting, Tee	
24	2170504	4	Fitting, Tee	
25	2170704	1	Fitting, Tee	
27	2170912	1	Fitting, Cap	
28	2220237	1	Fitting, Plug	
29	2220242	1	Fitting, Plug	
30	2220811	2	Fitting, Reducer	
31	2221084	1	Fitting, Tee	
32	2221088	2	Fitting, Tee	
33		Ref	Hose Options:	
33	2753537	2	Hose **(Prior to SN 0300072376)**	
33	2754401	2	Hose **(SN 0300072376 through 0300083331)**	
34	2753540	2	Hose	
35	2753546	2	Hose	
36	3753550	1	Hose	
37	2753575	1	Hose	
38	2753582	2	Hose	
39	2753621	1	Hose	
40	2753622	3	Hose	
41	2753623	2	Hose	
42	2753628	2	Hose	
43	2753631	4	Hose	
44	2753632	2	Hose	
45	2753633	NLA	Hose (Use p/n 2754040)	
46	2753634	1	Hose	
47	2753635	1	Hose	
49	2753659	2	Hose	
50	2753660	1	Hose	
51	2753661	1	Hose	

ITEM	PART NUMBER	QTY	DESCRIPTION	REV
52	2753664	1	Hose	
53		Ref	Hose Options:	
53	2753666	1	Hose **(Prior to SN 0300066054)**	
53	2753807	1	Hose **(SN 0300066054 through 0300083331)**	
54	2753667	2	Hose	
55	2753685	1	Hose	
56	2753686	2	Hose	
57	4641198	1	Valve, Check	

FIGURE 6-5. DRIVE HYDRAULIC DIAGRAM - 4WD (SN 0300083331 through 0300140000)

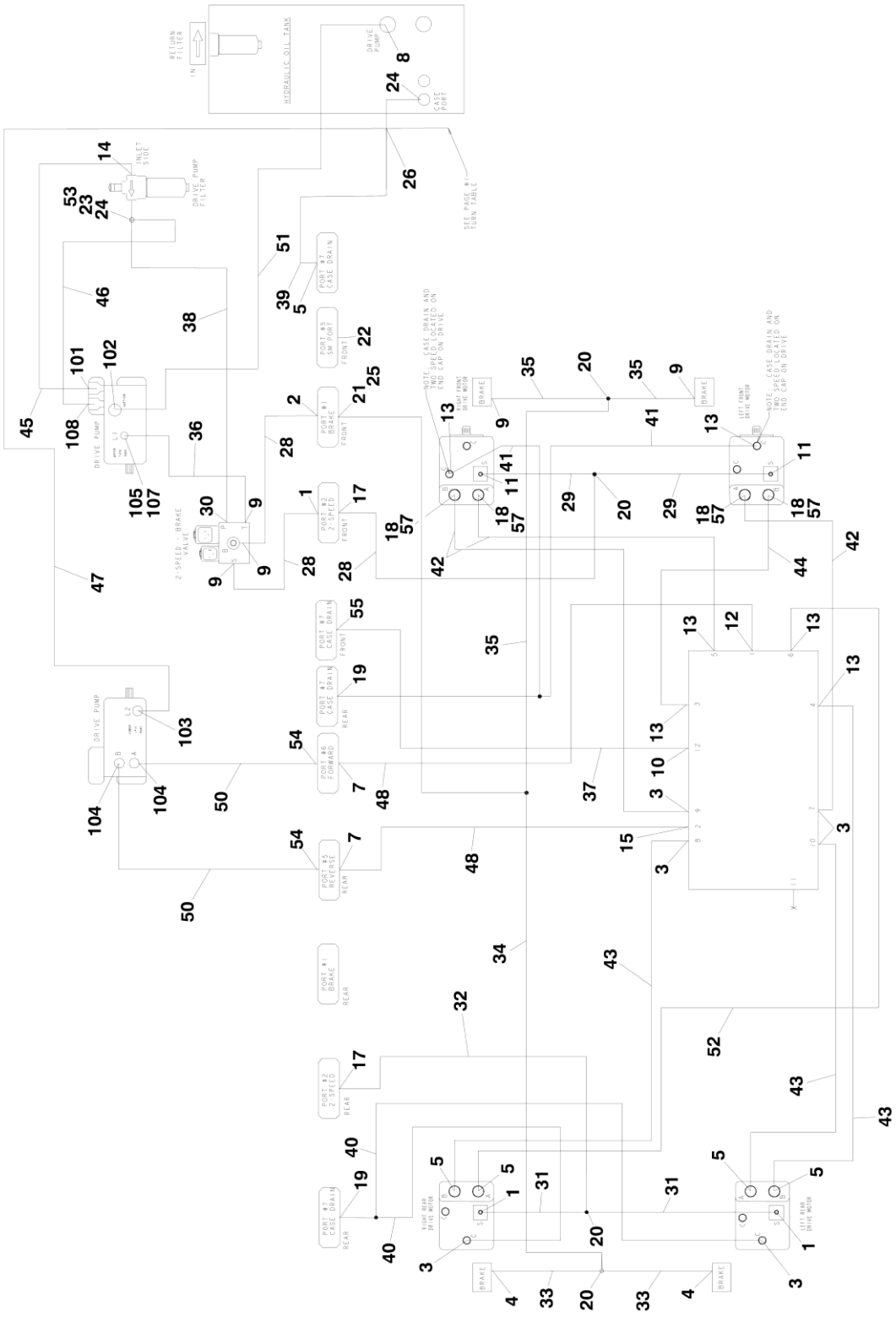

FIGURE 6-5. DRIVE HYDRAULIC DIAGRAM - 4WD (SN 0300083331 through 0300140000)

ITEM	PART NUMBER	QTY	DESCRIPTION	REV
		Ref	**DRIVE HYDRAULIC DIAGRAM - 4WD**	
	2792652	Ref	**Drive Hydraulic Diagram - 4WD (SN 0300083331 through 0300087261)**	4-C
	2792713	Ref	**Drive Hydraulic Diagram - 4WD (SN 0300087262 through 0300140000)**	7-K
	2792770	Ref	**With Arctic Package**	4-B
1	2110406	3	Fitting, Straight	
2	2110408	1	Fitting, Straight	
3	2110808	6	Fitting, Straight	
4	2110404	2	Fitting, Straight	
5	2110812	5	Fitting, Straight	
7	2111616	4	Fitting, Straight	
8	2111620	1	Fitting, Straight	
9	2130404	5	Fitting, Elbow	
10	2130604	1	Fitting, Elbow	
11	2130406	2	Fitting, Elbow	
12	2151616	1	Fitting, Elbow	
13	2130808	6	Fitting, Elbow	
14		Ref	Fitting, Elbow Options:	
14	2131012	1	Fitting, Elbow **(SN 0300083331 through 0300087261)**	
14	2131008	1	Fitting, Elbow **(SN 0300087262 through 0300140000)**	
15	2131616	1	Fitting, Elbow	
17	2150406	2	Fitting, Elbow	
18		Ref	Fitting, Elbow Options:	
18	2150812	4	Fitting, Elbow **(Prior to SN 0300138515)**	
18	2150808	4	Fitting, Elbow **(SN 0300138515 through 0300140000)**	
19	2170408	2	Fitting, Tee	
20	2170504	4	Fitting, Tee	
21	2170350	1	Fitting, Tee	
22	2220237	1	Fitting, Plug	
23	2221183	1	Fitting, Reducer	
24	2221088	AR	Fitting, Tee	
25	2220591	1	Fitting, Reducer	
26	2170708	1	Fitting, Tee	
28	2753540	3	Hose	
29		Ref	Hose Options:	
29	2753546	2	Without Arctic Package **(SN 0300083331 through 0300087261)**	
29	2753549	2	Without Arctic Package **(SN 0300087262 through 0300140000)**	
29	2754994	NLA	With Arctic Package (Use p/n 2754718) **(SN 0300083331 through 0300107593)**	
29	2754718	2	With Arctic Package **(SN 0300107594 through 0300140000)**	
30	2130204	1	Fitting, Elbow	
31	2754401	2	Hose	
32	2753550	1	Hose	
33	2754337	2	Hose	
34	2754044	1	Hose	
35		Ref	Hose Options:	
35	2753622	3	Without Arctic Package	
41	2754995	NLA	With Arctic Package (Use p/n 2754719) **(SN 0300083331**	

ITEM	PART NUMBER	QTY	DESCRIPTION	REV
			through 0300107593)	
35	2754719	3	With Arctic Package **(SN 0300107594 through 0300140000)**	
36	2753935	1	Hose	
37	2753626	1	Hose	
38		Ref	Hose Options:	
38	2753555	1	Hose **(SN 0300083331 through 0300109492)**	
38	1001095307	1	Hose **(SN 0300109493 through 0300140000)**	
39	2753685	1	Hose	
40	2753686	2	Hose	
41		Ref	Hose Options:	
41	2753628	2	Without Arctic Package	
41	2754996	NLA	With Arctic Package (Use p/n 2754720) **(SN 0300083331 through 0300107593)**	
41	2754720	2	With Arctic Package **(SN 0300107594 through 0300140000)**	
42		Ref	Hose Options:	
42	2753970	3	Without Arctic Package	
42	2754997	NLA	With Arctic Package (Use p/n 2754743) **(SN 0300083331 through 0300107593)**	
42	2754743	3	With Arctic Package **(SN 0300107594 through 0300140000)**	
43	2753971	3	Hose	
44		Ref	Hose Options:	
44	2754040	1	Without Arctic Package	
44	2754998	NLA	With Arctic Package (Use p/n 2754744) **(SN 0300083331 through 0300107593)**	
44	2754744	1	With Arctic Package **(SN 0300107594 through 0300140000)**	
45	2753660	1	Hose	
46		Ref	Hose Options:	
46	2753661	1	Hose **(SN 0300083331 through 0300097958)**	
46	2753582	1	Hose **(SN 0300097959 through 0300109492)**	
46	1001095308	1	Hose **(SN 0300109493 through 0300140000)**	
47	2753664	1	Hose	
48	2753634	2	Hose	
50	2753667	2	Hose	
51	2753807	1	Hose	
52	2754338	1	Hose	
53		Ref	Fitting Options:	
53	2221216	1	Fitting, Straight **(SN 0300087262 through 0300097958)**	
53	2170308	1	Tee Fitting **(SN 0300097959 through 0300140000)**	
54		Ref	Fitting Options:	
54	2131616	2	Fitting, Elbow **(SN 0300083331 through 0300097958)**	
54	2111616	2	Fitting, Straight **(SN 0300097959 through 0300140000)**	
55		Ref	Fitting Options:	
55	2110408	1	Fitting, Straight **(SN 0300083331 through 0300097958)**	
55	2170406	1	Tee Fitting **(SN 0300097959 through 0300140000)**	
57	2220811	4	Fitting, Reducer **(SN 0300138515 through 0300140000)**	
	3600410	Ref	**PISTON PUMP ASSEMBLY**	C
101	2111010	1	Fitting, Straight	
102	2111616	1	Fitting, Straight	
103	2131212	1	Fitting, Elbow	
104	2131616	2	Fitting, Elbow	
105	2110408	1	Fitting, Straight	
107	2220811	1	Fitting, Reducer	

ITEM	PART NUMBER	QTY	DESCRIPTION	REV
108	2110810	1	Fitting, Straight	

FIGURE 6-6. MANUAL DESCENT HYDRAULIC DIAGRAM (OPTIONAL)

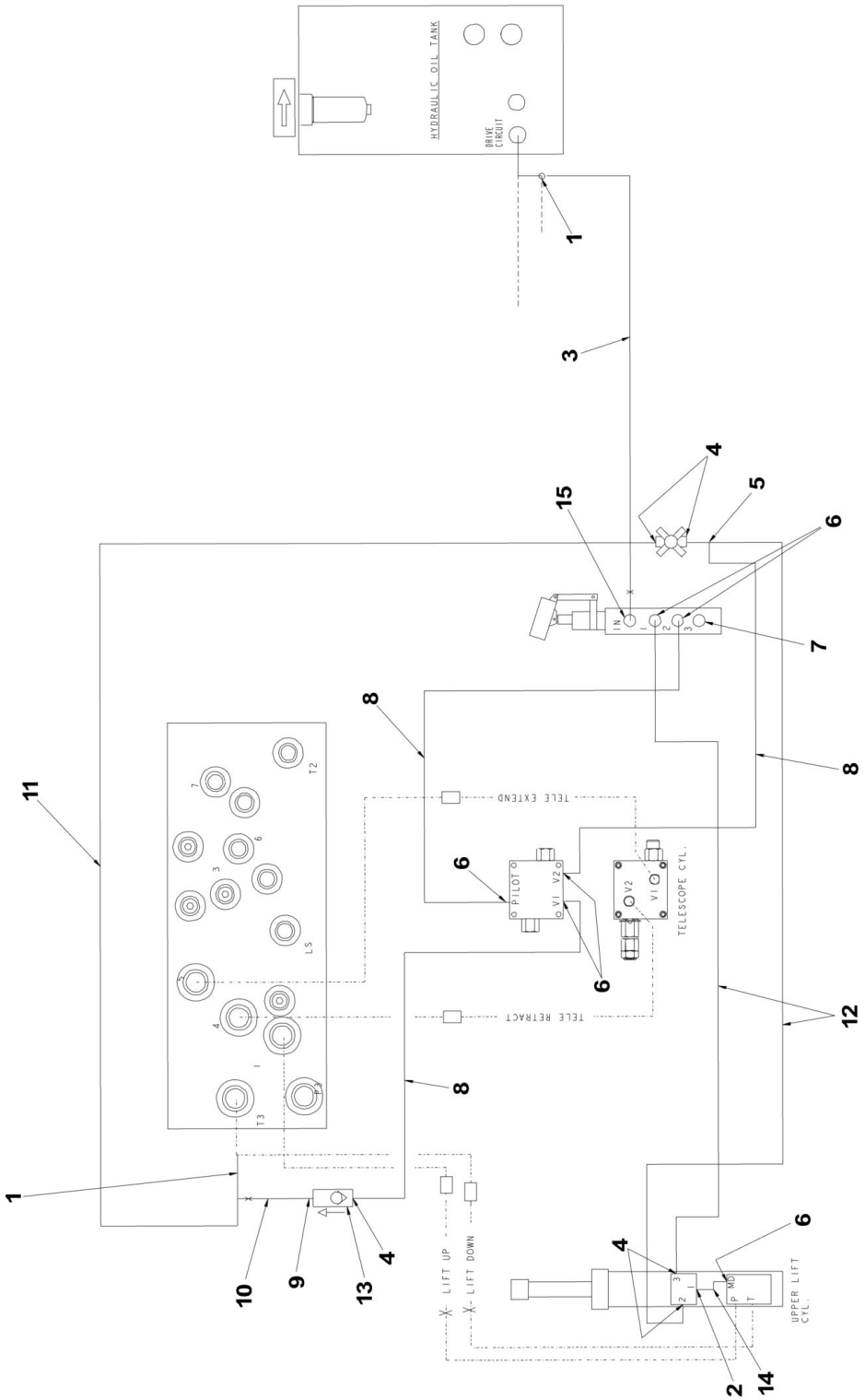

FIGURE 6-6. MANUAL DESCENT HYDRAULIC DIAGRAM (OPTIONAL)

ITEM	PART NUMBER	QTY	DESCRIPTION	REV
	2792597	Ref	**MANUAL DESCENT HYDRAULIC DIAGRAM**	A
1	2170708	2	Fitting, Tee	
2	2110406	1	Fitting	
3	2753578	1	Hose	
4	2130406	5	Fitting, Elbow	
5	2170804	1	Fitting, Tee	
6	2130404	6	Fitting, Elbow	
7	2220235	1	Fitting, Plug	
8	2753678	3	Hose	
9	2170306	1	Fitting, Tee	
10	2753895	1	Hose	
11	2753896	1	Hose	
12	2753897	2	Hose	
13	4640774	1	Valve, Check	
14	4568708	1	Tube	
15	2110604	1	Fitting	

FIGURE 6-7. STANDARD HYDRAULIC DIAGRAM

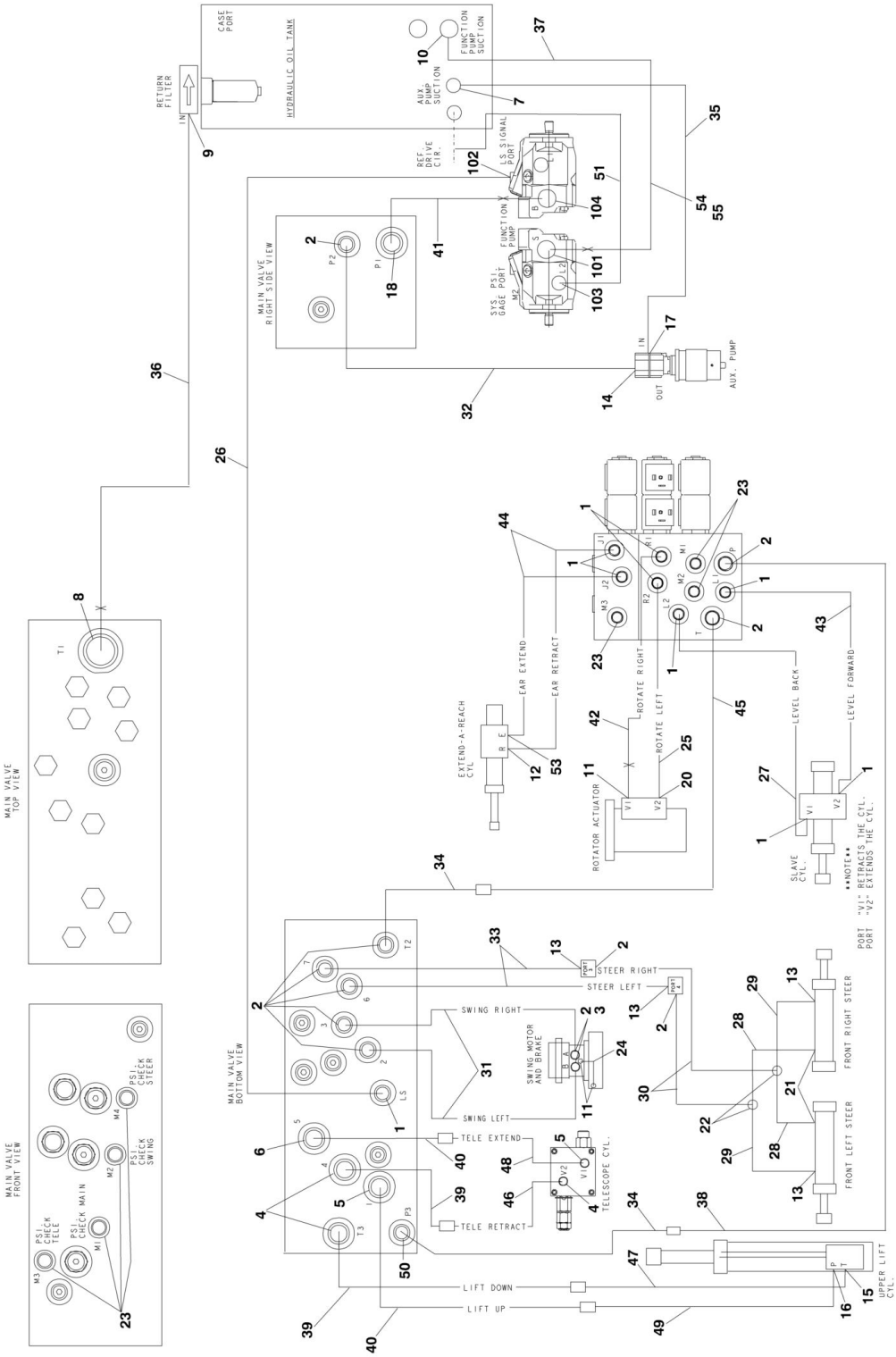

FIGURE 6-7. STANDARD HYDRAULIC DIAGRAM

ITEM	PART NUMBER	QTY	DESCRIPTION	REV
		Ref	**STANDARD HYDRAULIC DIAGRAM**	
	2792463	Ref	**Standard Hydraulic Diagram 800S (Prior to SN 0300083331)**	8-J
	2792649	Ref	**Standard Hydraulic Diagram 800S (SN 0300083331 through 0300140000)**	3-K
	2792464	Ref	**Standard Hydraulic Diagram 860SJ (Prior to SN 0300083331)**	9-J
	2792650	Ref	**Standard Hydraulic Diagram 860SJ (SN 0300083331 through 0300140000)**	3-K
1	2110404	AR	Fitting, Straight	
2	2110606	12	Fitting, Straight	
3	2110610	2	Fitting, Straight **(Prior to SN 0300066054)**	
4	2110808	3	Fitting, Straight	
5	2111008	2	Fitting, Straight	
6	2111010	1	Fitting, Straight	
7	2111212	1	Fitting, Straight	
8	2111612	1	Fitting, Straight	
9	2111616	1	Fitting, Straight	
10	2112424	1	Fitting, Straight	
11	2130404	1	Fitting, Elbow	
12		Ref	Fitting, Elbow Options:	
12	Not Required	0	Fitting, Elbow 800S	
12	2130406	1	Fitting, Elbow 860SJ	
13	2130606	4	Fitting, Elbow	
14	2130608	1	Fitting, Elbow	
15	2130810	1	Fitting, Elbow	
16	2131010	1	Fitting, Elbow	
17	2131210	1	Fitting, Elbow	
18	2131212	1	Fitting, Elbow	
20	2150404	1	Fitting, Elbow	
21	2150606	2	Fitting, Elbow	
22	2170506	2	Fitting, Tee	
23	2221086	AR	Fitting, Pressure Check	
24	2753538	1	Hose **(Prior to SN 0300066054)**	
25	2753545	1	Hose	
26	2753622	1	Hose	
27		Ref	Hose Options:	
27	2753622	1	Hose 800S	
27	2753677	1	Hose 860SJ	
28	2753625	2	Hose	
29	2753626	2	Hose	
30	2753627	2	Hose	
31	2753653	2	Hose	
32	2753654	1	Hose	
33	2753656	2	Hose	
34	2753657	2	Hose	
35	2753662	1	Hose	
36	2753665	1	Hose	
37		Ref	Hose Options:	
37	2753668	1	Hose **(Prior to SN 0300066054)**	
37	2753808	1	Hose **(SN 0300066054 through 0300140000)**	
38		Ref	Hose Options:	

ITEM	PART NUMBER	QTY	DESCRIPTION	REV
38	2753693	1	Hose 800S	
38	2753692	1	Hose 860SJ	
39	2753670	2	Hose	
40	2753671	2	Hose	
41	2753672	1	Hose	
42	2753674	1	Hose	
43		Ref	Hose Options:	
43	2753675	1	Hose 800S	
43	2753678	1	Hose 860SJ	
44		Ref	Hose Options:	
44	Not Required	0	Hose 800S	
44	2753676	2	Hose 860SJ	
45		Ref	Hose Options:	
45	2753679	1	Hose 800S	
45	2753680	1	Hose 860SJ	
46	2753681	1	Hose	
47	2753682	1	Hose	
48	2753683	1	Hose	
49	2753684	1	Hose	
50	2110608	1	Fitting, Straight	
51		Ref	Hose Options:	
51	2753658	1	Hose **(Prior to SN 0300066054)**	
51	2753590	1	Hose **(SN 0300066054 through 0300140000)**	
52	2753576	1	Hose **(Prior to SN 0300069206)**	
53		Ref	Fitting, Elbow Options:	
53	Not Required	0	Fitting, Elbow 800S	
53	2180829	1	Fitting, Elbow 860SJ **(SN 0300066054 through 0300140000)**	
54	4061032	1	Hose Guard **(SN 0300067077 through 0300140000)**	
55	4240018	3	Tie Strap **(SN 0300067077 through 0300140000)**	
	2902460	1	Hose Kit - 800S (Includes Items 26, 38, 42, 43 & 45)	
	2902461	1	Hose Kit - 800S/860SJ (Includes Items 34, 39, 40, 47 & 49)	
	2902462	1	Hose Kit - 860SJ (Includes Items 27, 38 & 42-45)	
	3600411	Ref	**LOAD SENSING PUMP AND FITTING ASSEMBLY**	A
101	2112424	1	Fitting, Straight	
102	2130404	1	Fitting, Elbow	
103	2130810	1	Fitting, Elbow	
104	2131216	1	Fitting, Elbow	

FIGURE 6-8. HYDRAULIC DIAGRAM LIST

ITEM	PART NUMBER	QTY	DESCRIPTION	REV
		Ref	**Note: Information on diagrams not shown are available from JLG Service/Parts Departments.**	
		Ref	**Axle Lockout Hydraulic Diagram**	
	2792502	Ref	**Axle Lockout Hydraulic Diagram (Prior to SN 0300083331)**	
	1283242	Ref	**Axle Lockout Hydraulic Diagram (Prior to SN 0300083331)**	
	2792648	Ref	**Axle Lockout Hydraulic Diagram (SN 0300083331 through 0300140000)**	
	1283387	Ref	**Axle Lockout Hydraulic Diagram (SN 0300083331 through 0300140000)**	
		Ref	**Drive Hydraulic Diagrams:**	
	2792465	Ref	**2WD Machines (Prior to SN 0300083331)**	
	1283242	Ref	**2WD Machines (Prior to SN 0300083331)**	
	2792651	Ref	**2WD Machines (SN 0300083331 through 0300087261)**	
	1283387	Ref	**2WD Machines (SN 0300083331 through 0300087261)**	
	2792714	Ref	**2WD Machines (SN 0300087262 through 0300140000)**	
	1283387	Ref	**2WD Machines (SN 0300087262 through 0300140000)**	
	2792466	Ref	**4WD Machines (Prior to SN 0300083331)**	
	1283242	Ref	**4WD Machines (Prior to SN 0300083331)**	
	2792652	Ref	**4WD Machines (SN 0300083331 through 0300087261)**	
	1283387	Ref	**4WD Machines (SN 0300083331 through 0300087261)**	
	2792713	Ref	**4WD Machines (SN 0300087262 through 0300140000)**	
	1283387	Ref	**4WD Machines (SN 0300087262 through 0300140000)**	
	2792770	Ref	**4WD Machines with Arctic Package**	
	2792597	Ref	**Manual Descent Hydraulic Diagram (Optional)**	
	2792497	Ref	**Hydraulic Welder Schematic**	
	1283242	Ref	**Hydraulic Welder Schematic**	
	4641237	1	Valve, Check	
		Ref	**Oil Cooler Hydraulic Diagrams:**	
		Ref	**Deutz Engine Machines**	
	0271938	Ref	**Deutz Engine Machines (Prior to SN 0300137667)**	
	1282665	Ref	**Deutz Engine Machines (Prior to SN 0300137667)**	
	1001108703	Ref	**Deutz Engine Machines (SN 0300137667 through 0300140000)**	
	0271939	Ref	**Ford/GM Engine Machines**	
	1283309	Ref	**Ford/GM Engine Machines**	
		Ref	**Standard Hydraulic Diagrams:**	
	2792463	Ref	**Standard Hydraulic Diagrams 800S (Prior to SN 0300083331)**	
	1283242	Ref	**Standard Hydraulic Diagrams 800S (Prior to SN 0300083331)**	
	2792649	Ref	**Standard Hydraulic Diagrams 800S (SN 0300083331 through 0300140000)**	
	1283387	Ref	**Standard Hydraulic Diagrams 800S (SN 0300083331 through 0300140000)**	
	2792464	Ref	**Standard Hydraulic Diagrams 860SJ (Prior to SN 0300083331)**	
	1283242	Ref	**Standard Hydraulic Diagrams 860SJ (Prior to SN 0300083331)**	
	2792650	Ref	**Standard Hydraulic Diagrams 860SJ (SN 0300083331 through 0300140000)**	
	1283387	Ref	**Standard Hydraulic Diagrams 860SJ (SN 0300083331 through 0300140000)**	
		Ref	**Standard Hydraulic Schematic**	

ITEM	PART NUMBER	QTY	DESCRIPTION	REV
	2792495	Ref	**Standard Hydraulic Schematic (Prior to SN 0300083331)**	
	2792678	Ref	**Standard Hydraulic Schematic (SN 0300083331 through 0300140000)**	
		Ref	**Tow Hydraulic Diagram**	
	2792503	Ref	**Tow Hydraulic Diagram (Prior to SN 0300083331)**	
	1283242	Ref	**Tow Hydraulic Diagram (Prior to SN 0300083331)**	
	2792653	Ref	**Tow Hydraulic Diagram (SN 0300083331 through 0300140000)**	
	1283387	Ref	**Tow Hydraulic Diagram (SN 0300083331 through 0300140000)**	

SECTION 7 - ELECTRICAL

FIGURE 7-1. ELECTRICAL DIAGRAM LIST

ITEM	PART NUMBER	QTY	DESCRIPTION	REV
		Ref	**Note: Diagrams not shown in manual are available from the JLG Service/Parts Department.**	
	4933243	Ref	**ADE SYSTEM POWER-DOWN ELECTRICAL DIAGRAM**	
	0257157	Ref	**ETHER START ELECTRICAL DIAGRAM**	
	1282571	Ref	**ETHER START ELECTRICAL DIAGRAM**	
		Ref	**GENERATOR ELECTRICAL DIAGRAM**	
		Ref	**2500W Generators (50Hz)**	
	4933215	Ref	**ANSI Export Specs (110V Generators) - Caterpillar/Deutz/Ford Engines Only) (Prior to SN 0300079612)**	
	4933216	Ref	**ANSI Export Specs (220V Generators) - Caterpillar/Deutz/Ford Engines Only) (Prior to SN 0300079612)**	
	4933300	Ref	**ANSI Export Specs - Caterpillar/Deutz (SN 0300079612 through 0300122915)**	
	4933300	Ref	**ANSI Export Specs - Caterpillar/Deutz (SN 0300079612 through 0300122914)**	
	1001100027	Ref	**ANSI Export Specs - Caterpillar/Deutz (SN 0300122915 through 0300129397)**	
	1001112743	Ref	**ANSI Export Specs - Caterpillar/Deutz (SN 0300129398 through 0300140000)**	
		Ref	**2500W Generators (60Hz)**	
	4933215	Ref	**ANSI Specs (110V Generators) - Caterpillar/Deutz/Ford Engines Only) (Prior to SN 0300079612)**	
	4933216	Ref	**ANSI Specs (220V Generators) - Caterpillar/Deutz/Ford Engines Only) (Prior to SN 0300079612)**	
	4933300	Ref	**ANSI Specs - Caterpillar/Deutz/Ford Engines Only (SN 0300079612 through 0300129397)**	
	1001112588	Ref	**ANSI Specs - Caterpillar and Deutz Engines Only (SN 0300129398 through 0300140000)**	
	4933350	Ref	**ANSI Specs - GM Engines Only**	
		Ref	**7500W Generators**	
	4933264	Ref	**Caterpillar and Deutz Engine Machines (Prior to SN 0300139080)**	
	1001112586	Ref	**Caterpillar and Deutz Engine Machines (SN 0300139080 through 0300140000)**	
	4933283	Ref	**Ford Engine Machines**	
	4933349	Ref	**GM Engine Machines**	
		Ref	**GLOW PLUG ELECTRICAL DIAGRAM (DEUTZ MACHINES)**	
	4933189	Ref	**Glow Plug Electrical Diagram (Deutz Machines) (Prior to SN 0300073336)**	
	4933217	Ref	**Glow Plug Electrical Diagram (Deutz Machines) (SN 0300073336 through 0300140000)**	
	4933193	Ref	**HYDRAULIC WELDER ELECTRICAL DIAGRAM**	
		Ref	**LIGHTS ELECTRICAL DIAGRAM**	
	4933231	Ref	**Chassis Flood Lights**	
	4933219	Ref	**Head and Tail Lights**	
	4933249	Ref	**Platform Flood Lights**	
	See Note	Ref	**PLATFORM ELECTRICAL DIAGRAM (Note: Not Available)**	
		Ref	**PLATFORM WORKLIGHTS ELECTRICAL DIAGRAM**	
	0270814	Ref	**Platform Worklights Electrical Diagram 800S/860SJ (Prior to SN 0300074425)**	

ITEM	PART NUMBER	QTY	DESCRIPTION	REV
	0273472	Ref	**Platform Worklights Electrical Diagram 800S (SN 0300074425 through 0300140000)**	
	0273483	Ref	**Platform Worklights Electrical Diagram 860SJ (SN 0300074425 through 0300140000)**	
	4933218	Ref	**SOFT TOUCH ELECTRICAL DIAGRAM**	
		Ref	**STANDARD ELECTRICAL DIAGRAMS**	
		Ref	**Caterpillar Machines**	
	4933292	Ref	**Standard Electrical Diagrams (Prior to SN 0300085332)**	
	4933337	Ref	**Standard Electrical Diagrams (SN 0300085332 through 0300099881)**	
	4933376	Ref	**Standard Electrical Diagrams (SN 0300099882 through 030013929)**	
	1001110344	Ref	**Standard Electrical Diagrams (SN 0300139210 through 0300140000)**	
		Ref	**Deutz Machines**	
	4933201	Ref	**Standard Electrical Diagrams (Prior to SN 0300085332)**	
	4933323	Ref	**Standard Electrical Diagrams (SN 0300085332 through 0300099881)**	
	4933375	Ref	**Standard Electrical Diagrams (SN 0300099882 through 0300139209)**	
	1001110343	Ref	**Standard Electrical Diagrams (SN 0300139210 through 0300140000)**	
		Ref	**Ford Machines**	
	4933200	Ref	**Standard Electrical Diagrams (Prior to SN 0300085332)**	
	4933336	Ref	**Standard Electrical Diagrams (SN 0300085332 through 0300140000)**	
		Ref	**GM Machines**	
	4933357	Ref	**Standard Electrical Diagrams (Prior to SN 0300099882)**	
	4933374	Ref	**Standard Electrical Diagrams (SN 0300099882 through 0300139209)**	
	1001110342	Ref	**Standard Electrical Diagrams (SN 0300139210 through 0300140000)**	
		Ref	**STANDARD ELECTRICAL SCHEMATICS**	
	1870133	Ref	**Caterpillar/Ford/Deutz**	
	1870195	Ref	**Deutz EMR2 and GM (SN 0300085332 through 0300099881)**	
	1870221	Ref	**Caterpillar, Deutz EMR2 and GM (SN 0300099882 through 0300139079)**	
	1001110325	Ref	**Caterpillar, Deutz EMR2 and GM (SN 0300139080 through 0300140000)**	
	1001131992	Ref	**GM Engine Schematic (Engine Schematic Only. P/N 1001110325 is Schematic for complete machine)**	

FIGURE 7-2. HARNESS COMPONENTS INSTALLATION (WITHOUT UGM) (Prior to SN 0300085332)

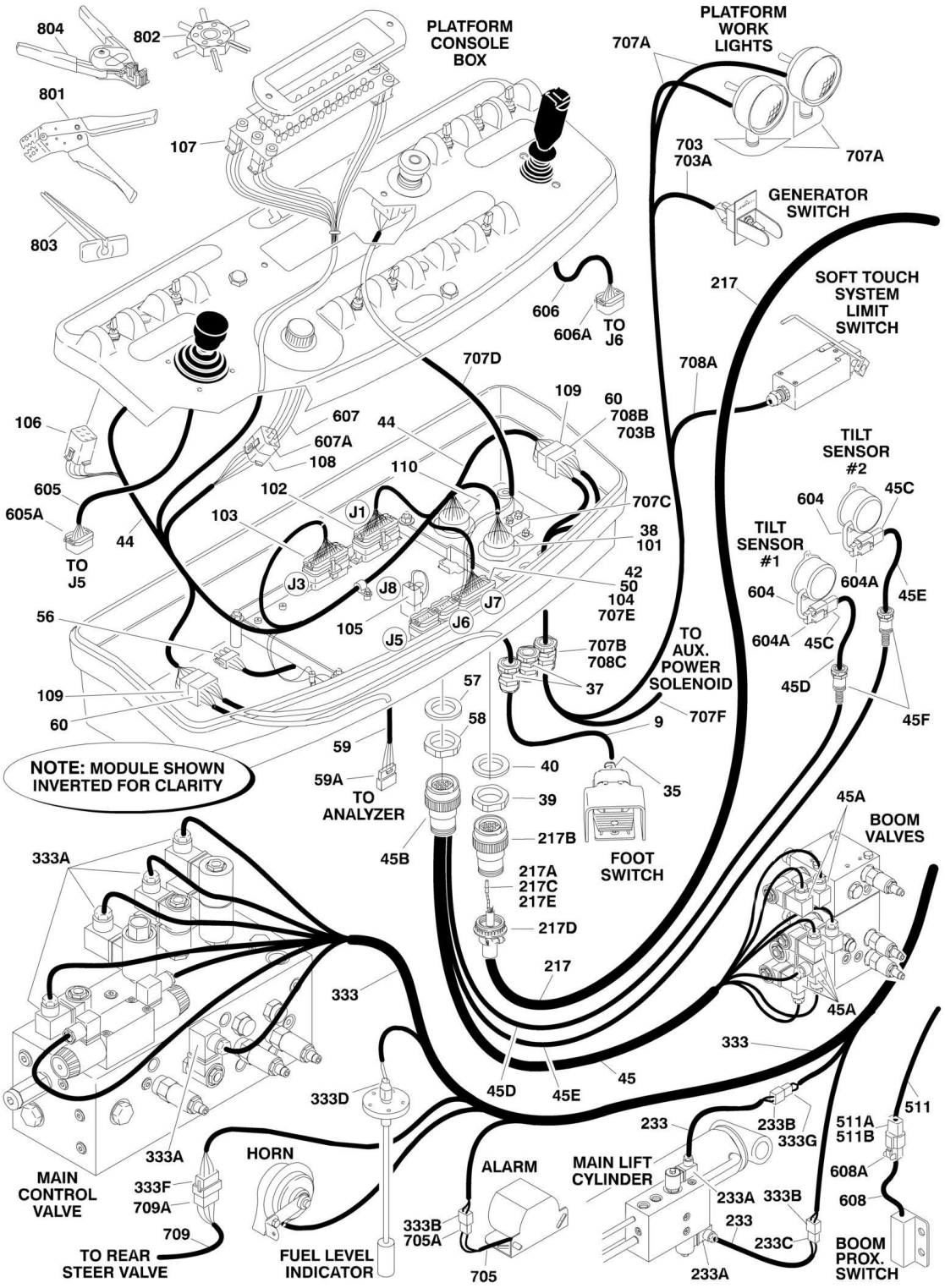

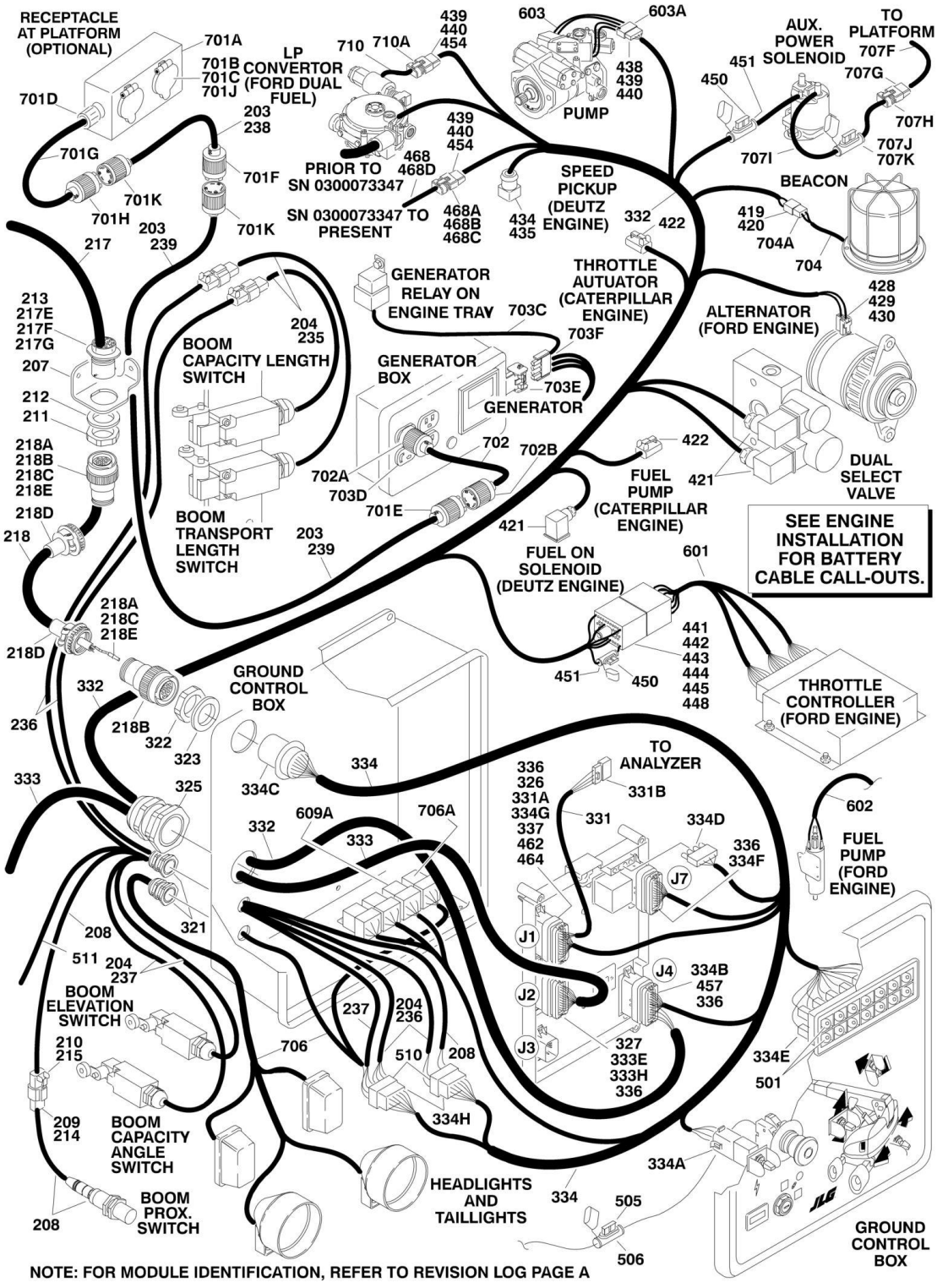

NOTE: FOR MODULE IDENTIFICATION, REFER TO REVISION LOG PAGE A

FIGURE 7-2. HARNESS COMPONENTS INSTALLATION (WITHOUT UGM) (Prior to SN 0300085332)

ITEM	PART NUMBER	QTY	DESCRIPTION	REV
		Ref	**HARNESS COMPONENTS INSTALLATION**	
		Ref	**NOTE: FOR MODULE IDENTIFICATION, REFER TO REVISION LOG PAGE A.**	
	0861416	Ref	**PLATFORM CONSOLE BOX COMPONENTS**	E
9	1060918	7 ft/2.14m	Cable, Electrical - 18/3	
35	4460071	1	Connector, Strain Relief	
37	4460428	2	Connector, Strain Relief	
38	4460464	1	Pin, Male Deutsch	
39	4460470	1	Nut, Terminal	
40	4460471	1	Lockwasher, Terminal	
42	4460226	2	Socket, Female	
44	4922595	1	Harness, Platform Box (See Items 101-110 for Breakdown)	
45		Ref	Harness, Upper Valve Options:	
45	4922620	NLA	Harness, Upper Valve (Use p/n 4922749) **(Prior to SN 0300066741)**	6-F
45	4922749	1	Harness, Upper Valve **(SN 0300066741 through 0300085332)**	2-A
45A	4460880	7	Connector, DIN	
45B	4460928	8	Socket, Female	
45B	4460918	8	Socket, Female	
45B	4460926	1	Connector - 21 Position	
45C	4460913	2	Lock Wedge - 3 Position	
45C	4460910	2	Connector, Female Deutsch - 3 Position	
45C	4460917	6	Pin, Male	
45D		Ref	Cable, Electrical - 18/3 Options:	
45D	1060937	5 ft/1.5m	Cable, Electrical - 18/3 **(Prior to SN 0300066741)**	
45D	1060975	5 ft/1.5m	Cable, Electrical - 18/3 **(SN 0300066741 through 0300070286)**	
45D	1060981	5 ft/1.5m	Cable, Electrical - 18/3 **(SN 0300070287 through 0300085332)**	
45E		Ref	Cable, Electrical - 18/3 Options:	
45E	1060938	7 ft/2.2m	Cable, Electrical - 18/3 **(Prior to SN 0300066741)**	
45E	1060976	7 ft/2.2m	Cable, Electrical - 18/3 **(SN 0300066741 through 0300070286)**	
45E	1060982	7 ft/2.2m	Cable, Electrical - 18/3 **(SN 0300070287 through 0300085332)**	
45F		Ref	Connector, Strain Relief Options:	
45F	4460428	2	Connector, Strain Relief **(Prior to SN 0300066360)**	
45F	1560012	2	Connector, Strain Relief **(SN 0300066360 through 0300085332)**	
50	4460905	5	Seal, Plug	
56	4460225	1	Plug, Male - 6 Position	
57	4460496	1	Lockwasher, Terminal	
58	4460497	1	Nut, Terminal	
59	4922666	1	Harness, Analyzer Cable	2-B
59	4460226	4	Socket, Female (Not Shown - Located at J2)	
59A	4460761	1	Connector, Female - 4 Position	
59A	4460227	4	Pin, Male	
60	4460708	2	Receptacle - 15 Position	
	4922595	Ref	**PLATFORM BOX HARNESS ASSEMBLY**	8-G
101	4460866	1	Connector - 19 Pin	
101	4460929	10	Pin, Male Deutsch 16Ga	

ITEM	PART NUMBER	QTY	DESCRIPTION	REV
101	4460508	3	Pin, Male Deutsch 12Ga	
102	4460874	1	Connector - 35 Position (Natural)	
102	4460871	23	Socket, Female	
103	4460875	1	Connector - 35 Position (Gray) **(Prior to SN 0300068375)**	
103	4460871	22	Socket, Female	
103	4460876	1	Connector - 35 Position (Blue) **(SN 0300068375 through 0300085332)**	
103	4460871	23	Socket, Female	
104	4460873	1	Connector - 35 Position (Black)	
104	4460871	28	Socket, Female	
105	4460879	1	Connector, Male 2 Position	
105	4460887	2	Terminal (12 Gauge)	
106	4460418	6	Connector, Female - 6 Position	
106	4460419	18	Socket, Female	
107	4460225	4	Plug, Male - 6 Position	
107	4460226	18	Terminal (16 Gauge)	
108	4460225	1	Plug, Male - 6 Position	
108	4460227	5	Pin, Male	
109	4460434	2	Plug, Male - 15 Position	
109	4460227	AR	Pin, Male	
110	4460925	1	Connector - 21 Pin	
110	4460929	8	Pin, Male Deutsch 16Ga	
110	4460917	8	Pin, Male Deutsch 12Ga	
		Ref	**BOOM CABLES INSTALLATION**	
	0271322	Ref	**Boom Cables Installation 800S**	H
	0272388	Ref	**Boom Cables Installation 800S (With 7500W Generator)**	C
	0271324	Ref	**Boom Cables Installation 860SJ**	H
	0272389	Ref	**Boom Cables Installation 860SJ (With 7500W Generator)**	C
203	1060708	Ref	Cable, Electrical - 10/3 **(Prior to SN 0300071452)**	
203	1060708	96 ft /29.3m	Cable, Electrical - 10/3 800S	
203	1060708	103 ft /31.4m	Cable, Electrical - 10/3 860SJ	
203	1060945	Ref	Cable, Electrical - 8/5	
203	1060945	103 ft /31.4m	Cable, Electrical - 8/5 800S (With 7500W Generator)	
203	1060945	112 ft /34.1m	Cable, Electrical - 8/5 860SJ (With 7500W Generator)	
203	1060945	11 ft/3.4m	GC Box To Boom Connector Item 213	
203	1060945	83 ft /25.3m	Boom Connector Item 213 to Platform (800S)	
203	1060945	88 ft/27m	Boom Connector Item 213 to Platform (860SJ)	
204	1060902	Ref	Cable, Electrical - 18/2 **(Prior to SN 0300071452)**	
204	1060902	134 ft /41m	Cable, Electrical - 18/2 800S	
204	1060902	138 ft /42m	Cable, Electrical - 18/2 860SJ	
204		Ref	To Boom Capacity Length Switch	
204	1060902	20 ft/6m	Turntable to Bulkhead	
204	1060902	34 ft /10.4m	Bulkhead to Switch	
204	1060902	Ref	To Boom Transport Length Limit Switch	
204	1060902	20 ft/6m	Turntable to Bulkhead	

SECTION 7 - ELECTRICAL

ITEM	PART NUMBER	QTY	DESCRIPTION	REV
204	1060902	34 ft /10.4m	Bulkhead to Switch	
204		Ref	To Boom Elevation Switch	
204	1060902	13 ft/4m	To Boom Elevation Switch 800S	
204	1060902	15 ft/4.6m	To Boom Elevation Switch 860SJ	
204		Ref	To Boom Capacity Angle Switch	
204	1060902	13 ft/4m	To Boom Capacity Angle Switch 800S	
204	1060902	15 ft/4.6m	To Boom Capacity Angle Switch 860SJ	
204	1060902	20 ft/6m	To Bulkhead (For Lift Holding Valve)	
204	1060902	20 ft/6m	To Bulkhead (For Lift Dump Valve)	
207	3573047	1	Plate, Receptacle Mounting	
208	4360506	1	Proximity Switch and Harness Assembly	
209	4460464	4	Pin, Male **(Prior to SN 0300071452)**	
210	4460465	4	Socket, Female **(Prior to SN 0300071452)**	
211	4460470	1	Nut, Terminal	
212	4460471	1	Lockwasher, Terminal	
213	4460866	1	Connector - 19 Position	
214	4460891	2	Plug, Male - 2 Position **(Prior to SN 0300071452)**	
215	4460897	2	Receptacle, Female - 2 Position **(Prior to SN 0300071452)**	
217		Ref	Harness Assembly - Main Boom (12/4 - 18/8) Options:	
217	4922566	1	Harness Assembly - Main Boom (12/4 - 18/8) 800S	2-B
217	4922567	1	Harness Assembly - Main Boom (12/4 - 18/8) 860SJ	3-C
217	1060896	Ref	Cable, Electrical - 12/4 & 18/8	
217	1060896	85 ft/26m	Cable, Electrical - 12/4 & 18/8 800S	
217	1060896	95 ft/29m	Cable, Electrical - 12/4 & 18/8 860SJ	
217	2820031	4 in/9cm	Heat Shrink	
217A	4460465	11	Socket, Female 18 Gauge	
217B	4460865	1	Connector - 19 Position	
217C	4460509	4	Socket, Female 12 Gauge	
217D	4460473	1	Clamp, Cable	
217E	4460466	8	Seal, Plug	
217F	4460464	11	Pin, Male 18 Gauge	
217G	4460508	4	Pin, Male 12 Gauge	
218	4922569	1	Harness Assembly - Tower Boom (12/4 - 18/8)	1-A
218	1060896	20 ft/6.1m	Cable, Electrical - 12/4 & 18/8	
218A	4460465	22	Socket, Female 18 Gauge	
218B	4460865	2	Connector - 19 Position	
218C	4460509	8	Socket, Female 12 Gauge	
218D	4460473	2	Clamp, Cable	
218E	4460466	8	Seal, Plug	
233	4922660	1	Holding Valve/Lift Dump Harness Assembly (Note: This is actually two separate harnesses under the same p/n)	2-D
233A	4460880	2	Connector, DIN	
233B	4460320	1	Plug, Male - 2 Position	
233B	4460226	2	Socket, Female	
233C	4460424	1	Connector, Female - 2 Position	
233C	4460267	2	Pin, Male	
235	4922871	2	Harness, Limit Switch Upper **(SN 0300071452 through 0300085332)**	
235		Ref	To Boom Capacity Angle Switch	
235	1060902	34 ft /10.4m	Cable, Electrical - 18/2	

ITEM	PART NUMBER	QTY	DESCRIPTION	REV
235	4460464	2	Pin, Male	
235	4460897	1	Receptacle, Female - 2 Position	
235		Ref	To Boom Transport Length Limit Switch	
235	1060902	34 ft /10.4m	Cable, Electrical - 18/2	
235	4460464	2	Pin, Male	
235	4460897	1	Receptacle, Female - 2 Position	
236	4922872	2	Harness, Limit Switch Lower **(SN 0300071452 through 0300085332)**	
236		Ref	To Boom Capacity Length Switch	
236	1060902	20 ft/6m	Cable, Electrical - 18/2	
236	4460465	2	Socket, Female	
236	4460891	1	Plug, Male - 2 Position	
236		Ref	To Boom Transport Length Limit Switch	
236	1060902	20 ft/6m	Cable, Electrical - 18/2	
236	4460465	2	Socket, Female	
236	4460891	1	Plug, Male - 2 Position	
237		Ref	Cable, Electrical - 18/2 **(SN 0300071452 through 0300085332)**	
237	1061018	2	Cable, Electrical - 18/2 800S	
237	1061019	2	Cable, Electrical - 18/2 860SJ	
238		Ref	Harness Options (To Bulkhead): **(SN 0300071452 through 0300085332)**	
238	4922873	1	Harness, 110V A/C - 800S (Standard)	
238	4922790	1	Harness, 8/5 Cable - 800S (With 7500W Generator)	
238	4922877	1	Harness, 110V A/C - 860SJ (Standard)	
238	4922808	1	Harness, 8/5 Cable - 860SJ (With 7500W Generator)	
239		Ref	Harness Options (To Generator Box): **(SN 0300071452 through 0300085332)**	
239	4922874	1	Harness, 110V A/C (Standard)	
239	4922809	1	Harness, 8/5 Cable (With 7500W Generator)	
		Ref	**GROUND CONTROL BOX COMPONENTS**	
321	4460426	AR	Connector, Strain Relief	
322	4460470	1	Nut, Terminal	
323	4460471	1	Locknut, Terminal	
325	4460526	1	Connector, Strain Relief	
326	4460874	1	Connector (Natural)	
327	4460875	1	Connector (Gray)	
331	4922666	1	Harness, Analyzer Cable	2-B
331A	4460226	4	Socket, Female (Not Shown - Located at J2)	
331B	4460761	1	Connector, Female - 4 Position	
331B	4460227	4	Pin, Male	
332		Ref	Engine Harness Assembly (See Items 401-468D for Breakdown)	
332	4922654	1	Deutz Engine Machines	
332	4922655	1	Ford Engine Machines	
332	4922922	1	Caterpillar Engine Machines	
333	4922594	1	Valve Harness Assembly	6-J
333A	4460880	7	DIN Connector	
333B	4460320	2	Plug, Male - 2 Position	
333B	4460267	4	Pin, Male	
333D	4460834	1	Connector, Female - 2 Position	
333D	4460842	2	Terminal, Female	
333E	4460871	22	Socket, Female	

ITEM	PART NUMBER	QTY	DESCRIPTION	REV
333F	4460225	1	Plug, Male - 6 Position	
333F	4460267	6	Pin, Male	
333G	4460424	1	Connector, Female - 2 Position	
333G	4460267	2	Pin, Male	
333H	4460226	1	Socket, Female	
334	4922619	1	Ground Control Box Harness Assembly	6-F
334	3990010	2	Diode - 6Amp (Not Shown - Located at Power Down Relay)	
334A	4460418	7	Connector, Female - 6 Position	
334A	4460419	21	Socket, Female	
334B	4460876	1	Connector - 35 Position (Blue)	
334B	4460871	23	Socket, Female	
334C	4460866	1	Connector - 19 Pin	
334C	4460464	10	Pin, Male Deutsch 16Ga	
334C	4460508	3	Pin, Male Deutsch 12Ga	
334D	4460878	1	Housing, Terminal - 4 Position	
334D	4460887	3	Terminal (12 Gauge)	
334E	4120035	4	Base, Light	
334E	4460634	5	Terminal (16 Gauge)	
334E	4460635	3	Terminal (12 Gauge)	
334F	4460873	1	Connector - 35 Position (Black)	
334F	4460871	19	Socket, Female	
334G	4460871	9	Socket, Female	
334H	4460434	2	Plug, Male - 15 Position	
334H	4460227	22	Pin, Male	
335		Ref	Ground Control Box Wiring Diagram (Not Shown - See Items 501 to 511B for Breakdown)	
335	4933201	1	Deutz Engine Machines	
335	4933200	1	Ford Engine Machines	
335	4923292	1	Caterpillar Engine Machines	
336	0100048	AR	Grease, Diaelectric	
337	4460905	4	Plug, Seal	
		Ref	**ENGINE HARNESS ASSEMBLY**	
	4922654	Ref	**Deutz Engine**	5-E
	4922655	Ref	**Ford Engine**	5-E
	4922922	Ref	**Caterpillar Engine**	3-C
419	4460424	1	Receptacle, Female - 2 Position	
420	4460268	2	Socket, Female	
421	4460880	AR	DIN Connector without Diode	
422	4460891	2	Connector, Male - 2 Position (Caterpillar Engine Only)	
422	4460465	7	Socket, Female	
428	4460582	3	Terminal (Ford Engine Only)	
429	4460580	1	Lock, Terminal (Ford Engine Only)	
430	4460579	1	Housing - 3 Position (Ford Engine Only)	
434	4460890	1	Housing - 2 Position (Deutz Engine Only)	
435	4460889	2	Terminal (Deutz Engine Only)	
438	4460460	AR	Connector, Male - 4 Position	
439	4460457	AR	Terminal, Female	
440	4460458	AR	Seal, Terminal	
441	4460713	1	Connector, Housing 42 Position (Ford Engine Only)	
442	4460725	1	Connector Wedge Lock, Center (Ford Engine Only)	
443	4460726	2	Connector Wedge Lock, Side (Ford Engine Only)	
444	4460800	29	Connector, Plug (Ford Engine Only)	

ITEM	PART NUMBER	QTY	DESCRIPTION	REV
445	4460799	7	Pin, Male (Ford Engine Only)	
448	4460728	3	Pin, Male (Ford Engine Only)	
450	2400061	2	Fuse (Ford Engine Only)	
451	2400060	2	Holder, Fuse (Ford Engine Only)	
454	4460742	1	Receptacle, Female - 2 Position	
457	4460871	AR	Socket, Female	
462	4460464	1	Pin, Male	
464	4460887	1	Terminal, Molex	
468	3730120	1	Resistor Assembly **(SN 0300073347 through 0300085332)**	
468A	4460978	1	Receptacle, Male - 2 Position	
468B	4460979	2	Pin, Male	
468C	4460458	2	Seal, Terminal	
468D	3730121	1	Resistor	
		Ref	**GROUND CONTROL BOX WIRING DIAGRAM**	
	4933201	Ref	**Deutz Engine**	6-I
	4933200	Ref	**Ford Engine**	5-G
	4933292	Ref	**Caterpillar Engine**	2-C
501	2920129	AR	Bulb, Light	
505	2400065	1	Fuse, 30Amp	
506	2400066	1	Fuse, Holder	
510	4460708	2	Receptacle, Female - 15 Position	
510	4460226	13	Socket, Female	
511	4922771	1	Harness, Angle Sensor	
511	1060902	9.5 ft /2.9m	Cable - 18/2	
511A	4460226	4	Socket, Female	
511B	4460424	1	Receptacle, Female - 2 Position	
		Ref	**STANDARD HARNESS COMPONENTS**	
601		Ref	Ford Engine ECM Harness (For replacement parts refer to Ford engine dealer (Ford Engine Machines) Options:	
601	7023681	1	Ford Engine ECM Harness (was p/n 7023663) **(Prior to SN 0300079612)**	
601	7027403	1	Ford Engine ECM Harness **(SN 0300079612 through 0300085332)**	
602	7022134	1	Ford Engine Fuel Pump Harness	
603	See Note	NSS	Pump Harness (Note: Not Available for Purchase)	
603	7007497	2	Plug (Pump)	
603A	7007498	1	Plug (Valve Harness)	
604		Ref	Switch, Tilt Sensor Options (Includes Tilt Sensor):	
604	4360503	NLA	Switch, Tilt Sensor (Use p/n 4360544) **(Prior to SN 0300066741)**	
604	4360528	NLA	Switch, Tilt Sensor (Use p/n 4360544) **(SN 0300066741 through 0300075872)**	
604	4360544	2	Switch, Tilt Sensor **(SN 0300075873 through 0300085332)**	
604A	4460911	2	Plug, Male Deutsch - 3 Position	
604A	4460918	6	Socket, Female	
604A	4460912	2	Lock, Wedge	
605	See Note	NSS	Controller Harness Assembly (Lift and Swing) (Note: Purchase Complete Controller)	
605A	7022819	1	Connector, Male - 9 Position	
605A	7022820	8	Socket, Female	
606	7022824	1	Controller Harness/Circuit Board Assembly (Drive and Steer)	
606A	7022825	1	Connector, Female - 9 Position	

ITEM	PART NUMBER	QTY	DESCRIPTION	REV
606A	7022820	7	Socket, Female	
607	See Note	NSS	Speed Control Harness (Note: Purchase Complete Controller)	
607A	4460224	1	Connector, Female - 6 Position	
607A	4460226	5	Socket, Female	
608	See Note	NSS	Proximity Switch and Harness (Note: Not Available for Purchase)	
608A	4460320	1	Plug, Male - 2 Position	
608A	4460227	2	Pin, Male	
609	4922690	1	ADE System Power-Down Harness	
609A	3740049	1	Relay	
609A	3990010	2	Diode - 6Amp (Not Shown)	
		Ref	**OPTIONAL HARNESS COMPONENTS**	
701		Ref	AC to Platform Receptacle Components Options:	
701	0255382	Ref	110V GFI Receptacle (ANSI Spec) **(Prior to SN 0300065541)**	4
701	0272259	Ref	110V GFI Receptacle (ANSI Spec) **(SN 0300065541 through 0300085332)**	1
701	0257176	Ref	220V GFI Receptacle (ANSI Spec) **(Prior to SN 0300065541)**	4
701	0272260	Ref	220V GFI Receptacle (ANSI Spec) **(SN 0300065541 through 0300085332)**	1
701	0256202	Ref	(ANSI Export Spec)	5
701A	0860038	1	Box, Switch (ANSI Spec Only)	
701B		Ref	Receptacle Options (ANSI Spec Only):	
701B	4460346	1	110V GFI	
701B	4460125	1	220V GFI	
701C		Ref	Shield, Cover Options (ANSI Spec Only):	
701C	4060700	1	110V GFI	
701C	4060092	1	220V GFI	
701D		Ref	Connector, Strain Relief Options (ANSI Spec Only):	
701D	4460071	1	Connector, Strain Relief **(Prior to SN 0300065541)**	
701D	4460051	1	Connector, Strain Relief **(SN 0300065541 through 0300085332)**	
701E		Ref	Plug, Male Options:	
701E	4460205	1	110V GFI (ANSI Spec)	
701E	4460233	1	220V GFI (ANSI Spec)	
701E	See Note	1	ANSI Export Spec (Note: Not Available - Purchase Locally)	
701F		Ref	Plug, Male Options:	
701F	4460205	1	110V GFI (ANSI Spec)	
701F	4460233	1	220V GFI (ANSI Spec)	
701F	4460709	1	ANSI Export Spec	
701G		Ref	Platform Receptacle Harness Options:	
701G	4921801	1	ANSI Spec **(Prior to SN 0300065541)**	-
701G	4921820	1	ANSI Export Spec **(Prior to SN 0300065541)**	2
701G		Ref	Cable, Electrical - 12/3 Options:	
701G	1060494	18 in /46cm	ANSI Spec	
701G	1060461	30 in /76cm	ANSI Export Spec	
701H		Ref	Plug, Male Options:	
701H	4460205	1	ANSI Spec	
701H	4460709	1	ANSI Export Spec	
701J	3960422	1	Gasket, Cover (ANSI Spec Only)	
701K		Ref	Connector, Female Options:	
701K	4460134	1	110V GFI (ANSI Spec)	

ITEM	PART NUMBER	QTY	DESCRIPTION	REV
701K	4460701	1	220V GFI (ANSI Spec)	
701K	4460710	1	ANSI Export Spec	
702		Ref	Generator to Rear of Boom Harness Options:	
		Ref	**Note: Harness used to connect AC at platform harness to generator receptacle to power platform receptacle.**	
702	4922741	1	110V GFI (ANSI Spec)	A
702	4922742	1	220V GFI (ANSI Spec)	A
702	4922743	1	ANSI Export Spec	A
702		Ref	Cable, Electrical - 10/3 Options:	
702	1060708	6 ft/1.8m	ANSI Spec	
702	1060545	6 ft/1.8m	ANSI Export Spec	
702A		Ref	Plug, Male Options:	
702A	4460205	1	110V GFI (ANSI Spec)	
702A	4460233	1	220V GFI (ANSI Spec)	
702A	See Note	NLA	ANSI Export Spec (Note: Not Available - Purchase Locally)	
702B		Ref	Receptacle, Female Options:	
702B	4460134	1	110V GFI (ANSI Spec)	
702B	4460701	1	220V GFI (ANSI Spec)	
702B	See Note	NLA	ANSI Export Spec (Note: Not Available - Purchase Locally)	
703		Ref	Generator Electrical Components	
703	4933216	AR	110V **(Prior to SN 0300079612)**	2-C
703	4933215	AR	220V **(Prior to SN 0300079612)**	1-B
703	4933300	AR	110V/220V **(SN 0300079612 through 0300085332)**	1-A
703	3990010	1	Diode - 6Amp (Not Shown)	
703A	4922641	1	Harness - On/Off Switch	
703B	4460226	2	Socket, Female	
703C		Ref	Powermite Control Box to Relay Options:	
703C	4922482	1	Powermite Control Box to Relay **(Prior to SN 0300079612)**	
703C	4922970	1	Powermite Control Box to Relay **(SN 0300079612 through 0300085332)**	
703D	4460027	1	Receptacle, Twist Lock (110V Only)	
703E	4460961	1	Connector, Female - 4 Position	
703E	4460705	4	Pin, Male	
703F	4460321	1	Connector, Male - 4 Position	
703F	4460906	4	Socket, Female	
704		Ref	Strobe Light Harness (Includes Strobe Light) Options:	
704	0255917	1	Strobe Light Harness (Includes Strobe Light) **(Prior to SN 0300069716)**	
704	0272507	1	Strobe Light Harness (Includes Strobe Light) **(SN 0300069716 through 0300085332)**	
704A	4460320	1	Connector, Female - 2 Position	
704A	4460267	2	Pin, Male	
705	0257887	1	Alarm Harness (Includes Alarm)	
705A	4460424	1	Plug, Male - 2 Position	
705A	4460268	2	Socket, Female	
706	See Note	NSS	Lights Harness (Note: Not Available for Purchase)	
706	1060341	37 ft /11.3m	Cable, Electrical - 16/2	
706A	3740049	1	Relay	
706A	4922643	1	Harness, Bag (Located at Ground Control Box) (Not Shown)	
707		Ref	Platform Worklights/Floodlights Components	
707A		Ref	Platform Worklights/Floodlights External Harness (Includes Light and Wire Only)	

ITEM	PART NUMBER	QTY	DESCRIPTION	REV
707A	2920140	2	Platform Worklights External Harness	
707A	2920157	2	Platform Floodlights External Harness (Light to Switch)	
707A	4460320	2	Connector, Female - 2 Position (Part of 4933249 Wiring Diagram)	
707A	4460227	4	Pin, Male (Part of 4933249 Wiring Diagram)	
707A	4922764	2	Platform Floodlights External Harness (Switch to Platform Box) (Part of 4933249 Wiring Diagram)	1-A
707A	4460424	2	Receptacle, Female - 2 Position	
707A	4460226	4	Socket, Female	
707B		Ref	Connector, Strain Relief Options:	
707B	4460598	1	Platform Worklights	
707B	4460425	1	Platform Floodlights	
707C		Ref	Circuit Breaker, 15Amp Options:	
707C	4360232	1	Platform Worklights **(Prior to SN 0300074425)**	
707C	Not Required	0	Platform Worklights **(SN 0300074425 through 0300085332)**	
707C	4360232	1	Platform Floodlights	
707D	4922498	1	Platform Worklights Internal Harness **(Prior to SN 0300074425)**	
707E	4460871	3	Socket, Female **(Prior to SN 0300074425)**	
		Ref	**Note: Items 707F-707K. (SN 0300074425 through 0300085332)**	
707F		Ref	Platform Worklights Harness Options:	
707F	4922873	1	Platform Worklights Harness 800S with Platform Worklights	
707F	1060708	85 ft/26cm	Cable, Electrical - 10/3	
707F	4922877	1	Platform Worklights Harness 860SJ with Platform Worklights	
707F	1060708	92 ft/28cm	Cable, Electrical - 10/3	
707F	4922883	1	Platform Worklights Harness 800S/860SJ with Platform Floodlights	
707F	1060708	120 ft /37cm	Cable, Electrical - 10/3	
707G	4460459	1	Connector, Female - 3 Position (Platform Worklights Only)	
707G	4460789	3	Terminal, Seal	
707G	4460790	3	Socket, Female	
707H	4460476	1	Connector, Male - 3 Position (Platform Worklights Only)	
707H	4460789	3	Terminal, Seal	
707H	4460850	3	Pin, Male	
707I	4922874	1	Worklights Harness to Aux Power Solenoid (Platform Worklights Only)	
707I	1060708	11 ft /3.4mm	Cable, Electrical - 10/3	
707J	2400070	1	Fuse (Platform Worklights Only)	
707K	2400066	1	Holder, Fuse (Platform Worklights Only)	
708	See Note	1	Soft Touch System Harness (Note: Not Available for Purchase)	
708A	1060341	22 ft/6.7m	Cable, Electrical - 16/2	
708B	4460226	2	Socket, Female	
708C	4460425	1	Connector, Strain Relief	
709	See Note	1	Rear Steer Valves Harness (Note: Not Available for Purchase)	
709A	4460224	1	Connector, Female - 6 Position	
709A	4460226	6	Socket, Female	
710	See Note	NSS	Dual Fuel Shut-Off Filter Harness (Note: Not Available for Purchase)	
710A	7023679	1	Electrical Connector Kit (Includes [1] 2 Position Connector, 2 Pins and 2 Seals)	
		Ref	**TOOLS**	

ITEM	PART NUMBER	QTY	DESCRIPTION	REV
801	7002821	1	Crimper (For Wire to Pin/Socket Connections)	
802	7002823	1	Extractor (For Removal of Pin/Socket from Connectors)	
803	4460467	1	Extractor, Pin (Blue 16-18 Gauge) (For Removal of Pin/Socket from Connectors)	
803	4460510	1	Extractor, Pin (Yellow 12-14 Gauge) (For Removal of Pin/Socket from Connectors)	
804	7002828	1	Stripper, Wire	

FIGURE 7-3. HARNESS COMPONENTS INSTALLATION (WITHOUT UGM) (SN 0300085332 through 0300140000)

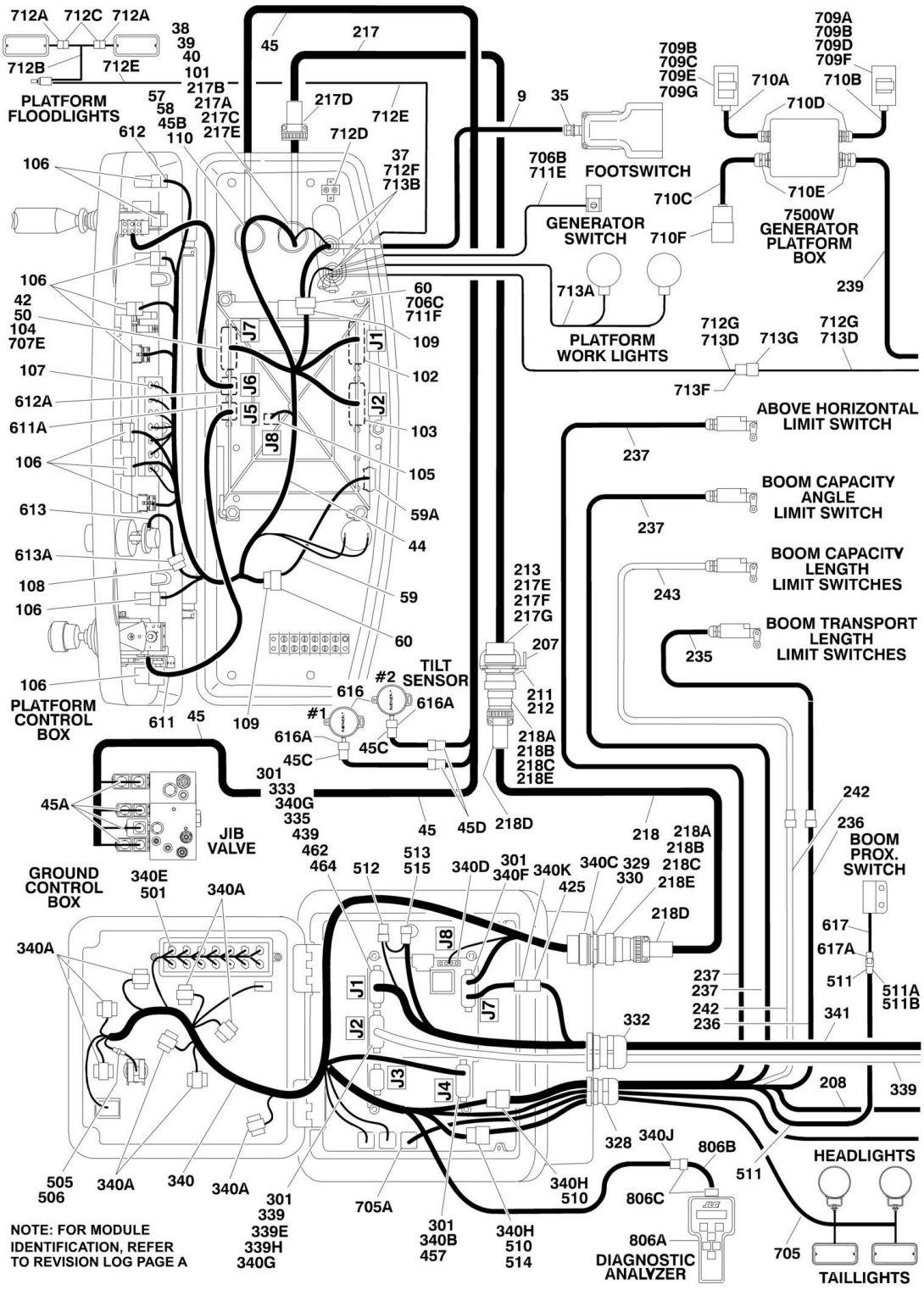

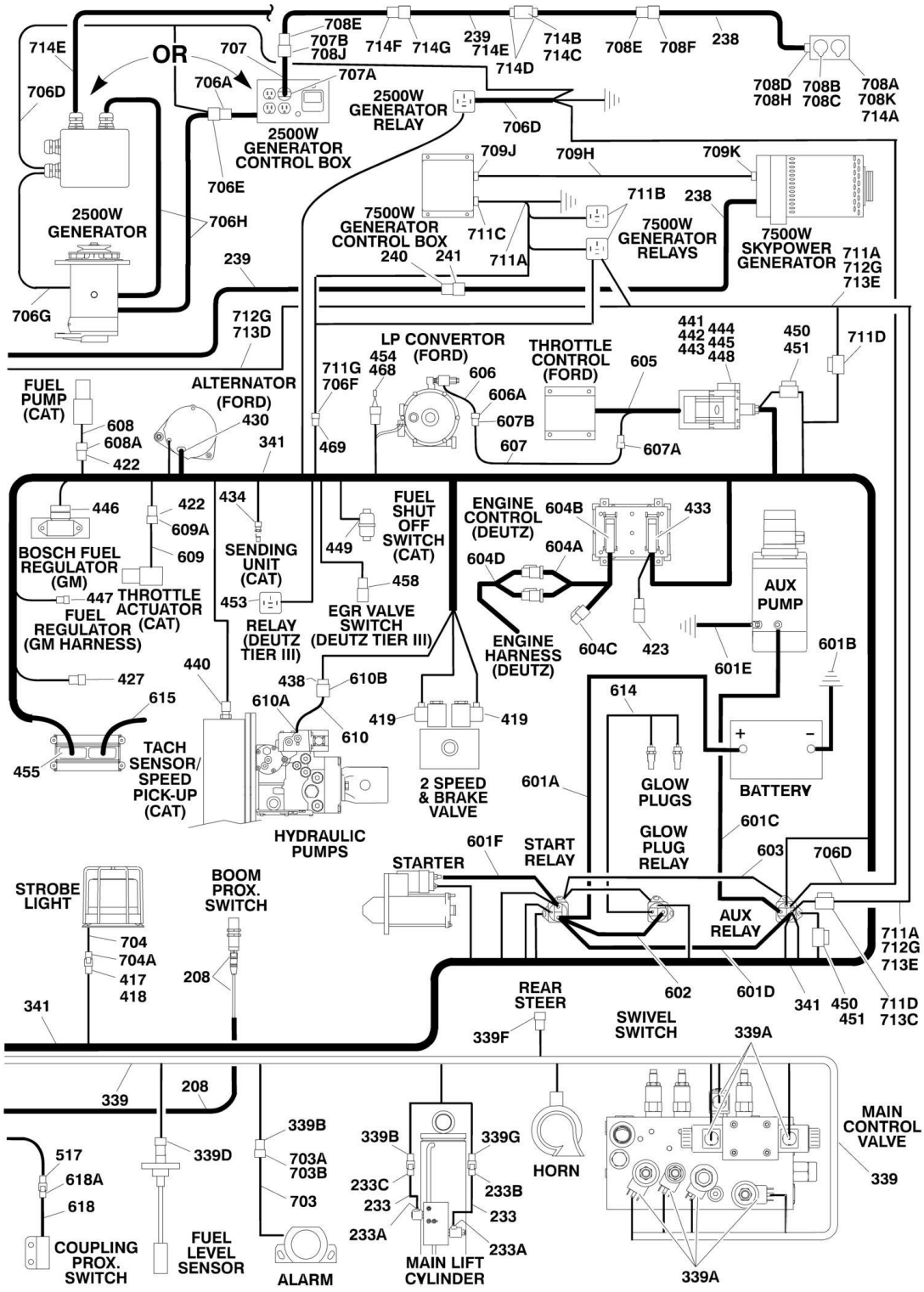
OR
2500W GENERATOR
2500W GENERATOR CONTROL BOX
2500W GENERATOR RELAY
7500W GENERATOR CONTROL BOX
7500W GENERATOR RELAYS
7500W SKYPOWER GENERATOR
LP CONVERTOR (FORD)
THROTTLE CONTROL (FORD)
FUEL PUMP (CAT)
ALTERNATOR (FORD)
BOSCH FUEL REGULATOR (GM)
THROTTLE ACTUATOR (CAT)
FUEL REGULATOR (GM HARNESS)
SENDING UNIT (CAT)
RELAY (DEUTZ TIER III)
FUEL SHUT OFF SWITCH (CAT)
EGR VALVE SWITCH (DEUTZ TIER III)
ENGINE CONTROL (DEUTZ)
ENGINE HARNESS (DEUTZ)
AUX PUMP
TACH SENSOR/ SPEED PICK-UP (CAT)
HYDRAULIC PUMPS
2 SPEED & BRAKE VALVE
GLOW PLUGS
GLOW PLUG RELAY
BATTERY
STARTER
START RELAY
AUX RELAY
STROBE LIGHT
BOOM PROX. SWITCH
REAR STEER
SWIVEL SWITCH
MAIN CONTROL VALVE
HORN
COUPLING PROX. SWITCH
FUEL LEVEL SENSOR
ALARM
MAIN LIFT CYLINDER

FIGURE 7-3. HARNESS COMPONENTS INSTALLATION (WITHOUT UGM) (SN 0300085332 through 0300140000)

ITEM	PART NUMBER	QTY	DESCRIPTION	REV
		Ref	**NOTE: FOR MODULE IDENTIFICATION, REFER TO REVISION LOG PAGE A.**	
		Ref	**PLATFORM CONSOLE BOX COMPONENTS**	
	0861416	Ref	**Platform Console Box Components (SN 0300085332 through 0300137912)**	J
	1001108866	Ref	**Platform Console Box Components (SN 0300137913 through 0300140000)**	B
9	1060918	7 ft/2.14m	Cable, Electrical - 18/3	
35	4460071	1	Connector, Strain Relief	
37	4460428	2	Connector, Strain Relief	
38	4460464	1	Pin, Male Deutsch	
39	4460470	1	Nut, Terminal	
40	4460471	1	Lockwasher, Terminal	
42	4460226	2	Socket, Female	
44		Ref	Harness, Platform Box Options (See Items 101-110 for Breakdown)	
44	4922595	1	Harness, Platform Box **(SN 0300085332 through 0300137912)**	
44	1001107796	1	Harness, Platform Box **(SN 0300137913 through 0300140000)**	
45	4922749	1	Harness, Upper Valve	2-A
45A	4460880	7	Connector, DIN	
45B	4460928	8	Socket, Female	
45B	4460918	8	Socket, Female	
45B	4460926	1	Connector, Deutsch - 21 Position	
45C	4460913	2	Lock Wedge - 3 Position	
45C	4460910	2	Connector, Female Deutsch - 3 Position	
45C	4460917	6	Pin, Male	
45D	1560012	2	Connector, Strain Relief	
50	4460905	5	Seal, Plug	
56	4460225	1	Plug, Male - 6 Position	
57	4460496	1	Lockwasher, Terminal	
58	4460497	1	Nut, Terminal	
59	4922666	1	Harness, Analyzer Cable	2-B
59	4460226	4	Socket, Female (Not Shown - Located at J2)	
59A	4460761	1	Connector, Female - 4 Position	
59A	4460227	4	Pin, Male	
60	4460708	2	Receptacle - 15 Position	
		Ref	**PLATFORM BOX HARNESS ASSEMBLY**	
	4922595	Ref	**Platform Box Harness Assembly (SN 0300085332 through 0300137912)**	10-I
	1001107796	Ref	**Platform Box Harness Assembly (SN 0300137913 through 0300140000)**	C
101	4460866	1	Connector - 19 Pin	
101	4460929	10	Pin, Male Deutsch 16Ga	
101	4460508	3	Pin, Male Deutsch 12Ga	
102	4460874	1	Connector - 35 Position (Natural)	
102	4460871	23	Socket, Female	
103	4460876	1	Connector - 35 Position (Blue)	
103	4460871	23	Socket, Female	
104	4460873	1	Connector - 35 Position (Black)	
104	4460871	28	Socket, Female	

ITEM	PART NUMBER	QTY	DESCRIPTION	REV
105	4460879	1	Connector, Male 2 Position	
105	4460887	2	Terminal (12 Gauge)	
106	4460418	7	Connector, Female - 6 Position	
106	4460419	21	Socket, Female	
107	4460225	4	Plug, Male - 6 Position	
107	4460226	18	Terminal (16 Gauge)	
108	4460225	1	Plug, Male - 6 Position	
108	4460227	5	Pin, Male	
109	4460434	2	Plug, Male - 15 Position	
109	4460227	AR	Pin, Male	
110	4460925	1	Connector - 21 Pin	
110	4460929	8	Pin, Male Deutsch 16Ga	
110	4460917	8	Pin, Male Deutsch 12Ga	
		Ref	**BOOM CABLES INSTALLATION**	
	0271322	Ref	**Boom Cables Installation 800S**	I
	0272388	Ref	**Boom Cables Installation 800S (With 7500W Generator and Without Arctic Package)**	F
	1001091609	Ref	**Boom Cables Installation 800S (Without 7500W Generator and With Arctic Package)**	C
	1001091664	Ref	**Boom Cables Installation 800S (With 7500W Generator and Arctic Package)**	D
	0271324	Ref	**Boom Cables Installation 860SJ**	I
	0272389	Ref	**Boom Cables Installation 860SJ (With 7500W Generator and Without Arctic Package)**	E
	0275586	Ref	**Boom Cables Installation 860SJ (Without 7500W Generator and With Arctic Package)**	B
	1001091665	Ref	**Boom Cables Installation 860SJ (With 7500W Generator and Arctic Package)**	D
207	3573047	1	Plate, Receptacle Mounting	
208	4360506	1	Proximity Switch and Harness Assembly	
211	4460470	1	Nut, Terminal	
212	4460471	1	Lockwasher, Terminal	
213	4460866	1	Connector - 19 Position	
217		Ref	Harness Assembly - Main Boom (12/4 - 18/8) Options:	
217	4922566	1	Harness Assembly - Main Boom (12/4 -18/8) 800S	2-B
217	1001091618	1	Harness Assembly - Main Boom (12/4 -18/8) 800S (With Arctic Package)	1-A
217	4922567	1	Harness Assembly - Main Boom (12/4 -18/8) 860SJ	3-C
217	4923595	1	Harness Assembly - Main Boom (12/4 -18/8) 860SJ (With Arctic Package)	1-A
217		Ref	Cable, Electrical - 12/4 & 18/8 Options:	
217	1060896	85 ft/26m	Cable, Electrical - 12/4 & 18/8 800S	
217	4923462	85 ft/26m	Cable, Electrical - 12/4 & 18/8 800S (With Arctic Package)	
217	1060896	95 ft/29m	Cable, Electrical - 12/4 & 18/8 860SJ	
217	4923462	95 ft/29m	Cable, Electrical - 12/4 & 18/8 860SJ (With Arctic Package)	
217	2820031	4 in/9cm	Heat Shrink	
217A	4460465	11	Socket, Female 18 Gauge	
217B	4460865	1	Connector - 19 Position	
217C	4460509	4	Socket, Female 12 Gauge	
217D	4460473	1	Clamp, Cable	
217E	4460466	8	Seal, Plug	
217F	4460464	11	Pin, Male 18 Gauge	
217G	4460508	4	Pin, Male 12 Gauge	

ITEM	PART NUMBER	QTY	DESCRIPTION	REV
218		Ref	Harness Assembly - Tower Boom (12/4 - 18/8) Options:	
218	4922569	1	Standard and SkyWelder	1-A
218	1001091619	NLA	Arctic Package (Use p/n 4923596) **(SN 0300085332 through 0300107594)**	2-B
218	4923596	1	Arctic Package	2-B
218		Ref	Cable, Electrical - 12/4 & 18/8 Options:	
218	1060896	20 ft/6.1m	Standard and SkyWelder	
218	4923462	20 ft/6.1m	With Arctic Package	
218A	4460465	22	Socket, Female 18 Gauge	
218B	4460865	2	Connector - 19 Position	
218C	4460509	8	Socket, Female 12 Gauge	
218D	4460473	2	Clamp, Cable	
218E	4460466	8	Seal, Plug	
233		Ref	Holding Valve/Lift Dump Harness Assembly Options: (Note: This is actually two separate harnesses under the same p/n)	
233	4922660	1	Standard and SkyWelder	2-D
233	4922660	1	With Arctic Package **(SN 0300085332 through 0300107593)**	2-D
233	4923597	1	With Arctic Package **(SN 0300107594 through 0300140000)**	1-A
233A	4460880	2	Connector, DIN	
233B	4460320	1	Plug, Male - 2 Position	
233B	4460226	2	Socket, Female	
233C	4460424	1	Connector, Female - 2 Position	
233C	4460267	2	Pin, Male	
235		Ref	Harness, Limit Switch Upper Options (To Boom Transport Length Limit Switch):	
235	4922871	1	Standard and SkyWelder	
235	4923598	1	With Arctic Package	
235		Ref	Cable, Electrical - 18/2 Options:	
235	1060902	34 ft /10.4m	Standard and SkyWelder	
235	1060902	34 ft /10.4m	With Arctic Package **(SN 0300085332 through 0300107593)**	
235	4923466	34 ft /10.4m	With Arctic Package **(SN 0300107594 through 0300140000)**	
235	4460464	2	Pin, Male	
235	4460897	1	Receptacle, Female - 2 Position	
236		Ref	Harness, Limit Switch Lower Options (To Boom Transport Length Limit Switch):	
236	4922872	1	Standard and SkyWelder	
236	1001091622	NLA	With Arctic Package (Use p/n 4923599) **(SN 0300085332 through 0300107593)**	
236	4923599	1	With Arctic Package **(SN 0300107594 through 0300140000)**	
236		Ref	Cable, Electrical - 18/2 Options:	
236	1060902	20 ft/6m	Standard and SkyWelder	
236	4923466	20 ft/6m	With Arctic Package	
236	4460465	2	Socket, Female	
236	4460891	1	Plug, Male - 2 Position	
237		Ref	Cable, Electrical - 18/2	
237	1061018	2	Cable, Electrical - 18/2 800S	
237	1061019	2	Cable, Electrical - 18/2 860SJ	
238		Ref	Harness Options (To Bulkhead):	
238		Ref	Harness Options (To Bulkhead) 800S:	
238	4922873	1	Harness, 110V A/C - Standard	

ITEM	PART NUMBER	QTY	DESCRIPTION	REV
238	4922790	1	Harness, 8/5 Cable - SkyWelder	
238	1001091620	1	Harness, 8/5 Cable - With Arctic Package	
238	1001091667	NLA	Harness, 8/5 Cable - With 7500W Generator and Arctic Package (Use p/n 4922790) **(SN 0300085332 through 0300121306)**	
238	4922790	1	Harness, 8/5 Cable - With 7500W Generator and Arctic Package **(SN 0300121307 through 0300140000)**	
238		Ref	Harness Options (To Bulkhead) 860SJ:	
238	4922877	1	Harness, 110V A/C - Standard	
238	4922808	1	Harness, 8/5 Cable - SkyWelder	
238	4923600	1	Harness, 8/5 Cable - With Arctic Package	
238	1001091671	NLA	Harness, 8/5 Cable - With 7500W Generator and Arctic Package (Use p/n 4922808) **(SN 0300085332 through 0300121306)**	
238	4922808	1	Harness, 8/5 Cable - With 7500W Generator and Arctic Package **(SN 0300121307 through 0300140000)**	
239		Ref	Harness Options (To Generator Box):	
239	4922874	1	Harness, 110V A/C (Standard)	
239	4922809	1	Harness, 8/5 Cable (SkyWelder)	
239	1001091621	NLA	Harness, 8/5 Cable (With Arctic Package) (Use p/n 4923601) **(SN 0300085332 through 0300107593)**	
239	4923601	1	Harness, 8/5 Cable (With Arctic Package) **(SN 0300107594 through 0300140000)**	
239	1001091668	NLA	Harness, 8/5 Cable - With 7500W Generator and Arctic Package (Use p/n 4922809) **(SN 0300085332 through 0300121306)**	
239	4922809	1	Harness, 8/5 Cable - With 7500W Generator and Arctic Package **(SN 0300121307 through 0300140000)**	
240	4460959	1	Terminal, Turnlock Plug (With 7500W Generator and Arctic Package)	
240	1671092	1	Cover, Female Connector	
241	4460960	1	Terminal, Turnlock Connector (With 7500W Generator and Arctic Package)	
241	1671093	1	Cover, Male Connector	
242		Ref	Harness, Limit Switch Lower Options (To Boom Capacity Length Switch):	
242	4922872	1	Standard and SkyWelder **(SN 0300085332 through 0300120843)**	
242	1001098908	1	Standard and SkyWelder **(SN 0300120844 through 0300140000)**	
242	1001091622	NLA	With Arctic Package (Use p/n 4923599) **(SN 0300085332 through 0300107593)**	
242	4923599	1	With Arctic Package **(SN 0300107594 through 0300120843)**	
242	1001098910	1	With Arctic Package **(SN 0300120844 through 0300140000)**	
242		Ref	Cable, Electrical - 18/2 Options:	
242	1060902	20 ft/6m	Standard and SkyWelder	
242	4923466	20 ft/6m	With Arctic Package	
242		Ref	Terminal Options:	
242	4460465	2	Socket, Female **(SN 0300085332 through 0300120843)**	
242	4460464	2	Pin, Male **(SN 0300120844 through 0300140000)**	
242		Ref	Connector Options:	
242	4460891	1	Receptacle, Female - 2 Position **(SN 0300085332 through 0300120843)**	
242	4460897	1	Plug, Male - 2 Position **(SN 0300120844 through 0300140000)**	

ITEM	PART NUMBER	QTY	DESCRIPTION	REV
243		Ref	Harness, Limit Switch Upper Options (To Boom Capacity Length Switch):	
243	4922871	1	Standard and SkyWelder **(SN 0300085332 through 0300120843)**	
243	1001098909	1	Standard and SkyWelder **(SN 0300120844 through 0300140000)**	
243	4923598	1	With Arctic Package **(SN 0300085332 through 0300120843)**	
243	1001098911	1	With Arctic Package **(SN 0300120844 through 0300140000)**	
243		Ref	Cable, Electrical - 18/2 Options:	
243	1060902	34 ft /10.4m	Standard and SkyWelder	
243	1060902	34 ft /10.4m	With Arctic Package **(SN 0300085332 through 0300107593)**	
243	4923466	34 ft /10.4m	With Arctic Package **(SN 0300107594 through 0300140000)**	
243		Ref	Terminal Options:	
243	4460464	2	Pin, Male **(SN 0300085332 through 0300120843)**	
243	4460465	2	Socket, Female **(SN 0300120844 through 0300140000)**	
243		Ref	Connector Options:	
243	4460897	1	Receptacle, Female - 2 Position **(SN 0300085332 through 0300120843)**	
243	4460891	1	Plug, Male - 2 Position **(SN 0300120844 through 0300140000)**	
		Ref	**GROUND CONTROL BOX COMPONENTS**	
301	0100048	AR	Grease, Dielectric	
328	4460426	1	Connector, Strain Relief	
329	4460470	1	Nut, Terminal	
330	4460471	1	Locknut, Terminal	
332	4460526	1	Connector, Strain Relief	
333	4460874	1	Connector (Natural)	
334	4460875	1	Connector (Gray)	
335	4460905	4	Plug, Seal	
339	4922594	1	Valve Harness Assembly	7-K
339A	4460880	7	DIN Connector	
339B	4460320	2	Plug, Male - 2 Position	
339B	4460267	4	Pin, Male	
339D	4460834	1	Connector, Female - 2 Position	
339D	4460842	2	Terminal, Female	
339E	4460871	22	Socket, Female	
339F	4460225	1	Plug, Male - 6 Position	
339F	4460267	6	Pin, Male	
339G	4460424	1	Connector, Female - 2 Position	
339G	4460267	2	Pin, Male	
339H	4460226	1	Socket, Female **(SN 0300085332 through 0300087262)**	
340		Ref	Ground Control Box Harness Assemblies:	
340	4923213	1	Deutz and GM Engine **(SN 0300085332 through 0300099882)**	E
340	4923279	1	Caterpillar and Ford Engine **(SN 0300085332 through 0300099881)**	2-B
340	4923577	1	Caterpillar, Deutz and GM Engine **(SN 0300099882 through 0300140000)**	D
340	3990010	2	Diode - 6Amp (Not Shown - Located at Power Down Relay)	
340A	4460418	7	Connector, Female - 6 Position	
340A	4460419	21	Socket, Female	
340B	4460876	1	Connector - 35 Position (Blue)	

ITEM	PART NUMBER	QTY	DESCRIPTION	REV
340B	4460871	AR	Socket, Female	
340B	4460905	1	Seal, Plug	
340C	4460866	1	Connector - 19 Pin	
340C	4460464	AR	Pin, Male Deutsch 16Ga	
340C	4460508	3	Pin, Male Deutsch 12Ga	
340D	4460878	1	Housing, Terminal - 4 Position	
340D	4460887	3	Terminal (12 Gauge)	
340E	4120035	AR	Base, Light	
340E	4460634	AR	Terminal (16 Gauge)	
340E	4460635	AR	Terminal (12 Gauge)	
340F	4460873	1	Connector - 35 Position (Black)	
340F	4460871	19	Socket, Female	
340F	4460905	1	Seal, Plug	
340G	4460871	AR	Socket, Female	
340H	4460434	2	Plug, Male - 15 Position	
340H	4460227	AR	Pin, Male	
340J	4460761	1	Connector, Female 4 - Position	
340J	4460227	4	Pin, Male	
340K	4460536	1	Connector, Female 3- Position	
340K	4460943	3	Pin, Male	
340L	4460424	1	Receptacle, Female - 2 Position	
340L	4460226	2	Socket, Female	
341		Ref	Engine Harness Assembly (See Items 401-469 for Breakdown)	
341	4923278	1	Caterpillar Engine Machines **(SN 0300085332 through 0300099881)**	
341	4923585	1	Caterpillar Engine Machines **(SN 0300099882 through 0300140000)**	
341	4923239	1	Deutz Engine Machines **(SN 0300085332 through 0300129453)**	
341	1001102160	1	Deutz Engine Machines **(SN 0300129454 through 0300140000)**	
341	4923277	1	Ford Engine Machines	
341	4923502	1	GM Engine Machines	
342		Ref	Ground Control Box Wiring Diagram (Not Shown - See Items 501-517 for Breakdown)	
342	4933337	1	Caterpillar Engine **(SN 0300085332 through 0300099881)**	
342	4933376	1	Caterpillar Engine **(SN 0300099882 through 0300140000)**	
342	4933323	1	Deutz Engine Machines **(SN 0300085332 through 0300099881)**	
342	4933375	1	Deutz Engine Machines **(SN 0300099882 through 0300140000)**	
342	4933336	1	Ford Engine Machines	
342	4933357	1	GM Engine Machines **(SN 0300085332 through 0300099881)**	
342	4933374	1	GM Engine Machines **(SN 0300099882 through 0300140000)**	
		Ref	**ENGINE HARNESS ASSEMBLY**	
	4923278	Ref	**Caterpillar Engine (SN 0300085332 through 0300099881)**	4-C
	4923585	Ref	**Caterpillar Engine (SN 0300099882 through 0300140000)**	D
	4923239	Ref	**Deutz Engine (SN 0300085332 through 0300129453)**	E
	1001102160	Ref	**Deutz Engine (SN 0300129454 through 0300140000)**	B
	4923277	Ref	**Ford Engine**	3-C
	4923502	Ref	**GM Engine**	D
417	4460424	1	Receptacle, Female - 2 Position	
418	4460268	2	Socket, Female	
419	4460880	2	DIN Connector without Diode	
422	4460891	2	Connector, Male - 2 Position (Caterpillar Engine Only)	
422	4460465	7	Socket, Female	

ITEM	PART NUMBER	QTY	DESCRIPTION	REV
423	4461070	1	Receptacle, Female with Resistor (3 Position) (Deutz Engine Only)	
423	4461095	1	Plug, Male - 3 Position (Deutz Engine Only)	
423	4460944	3	Socket, Female (Deutz Engine Only)	
425	4460539	1	Connector, Male - 3 Position (Deutz and GM Engine Only)	
425	4460944	3	Socket, Female (Deutz and GM Engine Only)	
427	4461070	3	Receptacle with Resistor (GM Engine Only)	
427	4460944	1	Terminal, Gold (GM Engine Only)	
427	4461095	1	Plug, Male - 3 Position (GM Engine Only)	
430	4460582	3	Terminal (Ford Engine Only)	
430	4460580	1	Lock, Terminal (Ford Engine Only)	
430	4460579	1	Housing - 3 Position (Ford Engine Only)	
433	4461052	1	Connector, Receptacle - 25 Position (Deutz Engine Only)	
433	4461005	5	Terminal (Gold) (Deutz Engine Only)	
433	4461006	5	Seal, Terminal (Deutz Engine Only)	
433	4461060	2	Terminal (Tin) (Deutz Engine Only)	
433	4461054	2	Seal, Terminal (Deutz Engine Only)	
433	4461053	1	Cover, Plug (Deutz Engine Only)	
434	4460996	1	Connector, Female - 3 Position (Caterpillar Engines Only)	
434	4460995	2	Terminal, Spade (Caterpillar Engines Only)	
438	4460460	1	Connector, Male - 4 Position	
438	4460457	AR	Terminal, Female	
438	4460458	AR	Seal, Terminal	
439	4460871	AR	Socket, Female	
440	4460539	1	Plug, Male - 3 Position (Caterpillar Engines Only)	
440	4460465	3	Socket, Female (Caterpillar Engines Only)	
441	4460713	1	Connector, Housing 42 Position (Ford Engine Only)	
442	4460725	1	Connector Wedge Lock, Center (Ford Engine Only)	
443	4460726	2	Connector Wedge Lock, Side (Ford Engine Only)	
444	4460800	29	Connector, Plug (Ford Engine Only)	
445	4460799	7	Pin, Male (Ford Engine Only)	
446	4461121	1	Plug, Male - 4 Position (GM Engine Only)	
446	4461122	4	Socket, Female (GM Engine Only)	
446	4461123	4	Seal, Terminal (GM Engine Only)	
447	4461124	1	Receptacle, Female - 4 Position (GM Engine Only)	
447	4460693	4	Pin, Male (GM Engine Only)	
447	4460608	4	Seal, Terminal (GM Engine Only)	
447	4461161	1	Lock, Terminal (GM Engine Only)	
448	4460728	3	Pin, Male (Ford Engine Only)	
449	4460792	1	Plug, Male - 1 Position (Caterpillar Engines Only)	
449	4460339	3	Terminal (Caterpillar Engines Only)	
450	2400061	2	Fuse (Ford Engine Only)	
451	2400060	2	Holder, Fuse (Ford Engine Only)	
453	4460374	1	Plug, Sealed Relay (Deutz Engine Tier III) **(SN 0300129454 through 0300140000)**	
453	4460375	4	Terminal (Deutz Engine Tier III) **(SN 0300129454 through 0300140000)**	
454	4460742	1	Plug, Male - 2 Position (Ford Engine Only)	
454	4460457	2	Terminal, Female (Ford Engine Only)	
454	4460458	2	Seal, Terminal (Ford Engine Only)	
455	4461109	1	Plug, Male - 16 Position (GM Engine Only)	
455	4461111	7	Pin, Male (GM Engine Only)	

ITEM	PART NUMBER	QTY	DESCRIPTION	REV
455	4461113	16	Seal, Terminal (GM Engine Only)	
455	4461222	9	Plug, Terminal (GM Engine Only)	
458	1001102290	1	Connector, 2 Position (Deutz Engine Tier III) **(SN 0300129454 through 0300140000)**	
458	1001102304	2	Seal (Deutz Engine Tier III) **(SN 0300129454 through 0300140000)**	
458	1001102291	2	Terminal, Receptacle (Deutz Engine Tier III) **(SN 0300129454 through 0300140000)**	
462	4460464	1	Pin, Male	
464	4460887	1	Terminal, Molex	
468	3730120	1	Resistor Assembly (Ford Engine Only)	
468	4460978	1	Receptacle, Male - 2 Position	
468	4460979	2	Pin, Male	
468	4460458	2	Seal, Terminal	
468	3730121	1	Resistor	
469	4461157	1	Receptacle, Female - 2 Position (GM Engine Only)	
469	4460979	2	Pin, Male (GM Engine Only)	
469	4460458	2	Seal, Terminal (GM Engine Only)	
		Ref	**GROUND CONTROL BOX WIRING DIAGRAM**	
	4933337	Ref	**Caterpillar Engine (SN 0300085332 through 0300099881)**	3-C
	4933376	Ref	**Caterpillar Engine (SN 0300099882 through 0300140000)**	D
	4933323	Ref	**Deutz Engine (SN 0300085332 through 0300099881)**	F
	4933375	Ref	**Deutz Engine (SN 0300099882 through 0300140000)**	D
	4933336	Ref	**Ford Engine**	2-B
	4933357	Ref	**GM Engine (SN 0300085332 through 0300099881)**	B
	4933374	Ref	**GM Engine (SN 0300099882 through 0300140000)**	D
501	2920129	AR	Bulb, Light	
505	2400065	1	Fuse, 30Amp	
506	2400066	1	Fuse, Holder	
510	4460708	2	Receptacle, Female - 15 Position	
510	4460226	AR	Socket, Female	
511	4922771	1	Harness, Angle Sensor (Boom Proximity Sensor)	
511	1060902	9.5 ft /2.9m	Cable - 18/2	
511A	4460226	2	Socket, Female	
511B	4460424	1	Receptacle, Female - 2 Position	
512	4460894	1	Plug, Male - 6 Position (Deutz and GM Engines - Caterpillar Engines) **(SN 0300099882 through 0300140000)**	
512	4460892	1	Connector, Bussbar - 6 Position (Deutz and GM Engines - Caterpillar Engines) **(SN 0300099882 through 0300140000)**	
513	2902443	1	Receptacle Kit (Deutz Only)	
513	4461071	8	Socket, Female	
513	4461072	1	Receptacle	
513	4461073	1	Cap, Dust	
513	4461074	1	Shell, Black	
514	4922636	1	Harness, Jumper	
514	4460226	2	Socket, Female	
515	4460539	1	Plug, Male - 3 Position (Caterpillar Only) **(SN 0300099884 through 0300140000)**	
516	4923591	1	Harness, Jumper (Not Shown - Located on Module J7-6 to J7-17 Caterpillar Only)	
517	4460424	1	Receptacle, Female - 2 Position **(SN 0300136458 through 0300140000)**	

ITEM	PART NUMBER	QTY	DESCRIPTION	REV
517	4460226	2	Socket, Female **(SN 0300136458 through 0300140000)**	
		Ref	**STANDARD HARNESS COMPONENTS**	
601		Ref	Battery Cable Kit Options:	
601	2902401	1	Caterpillar and Deutz Engines Machines	B
601	2901608	1	Ford Engine Machines **(SN 0300085332 through 0300087735)**	B
601	2902445	1	Ford Engine Machines **(SN 0300087736 through 0300140000)**	A
601	2902533	1	GM Engine Machines	A
601A		Ref	Cable, Battery (Red) Options:	
601A	7016813	1	Caterpillar and Deutz Engines Machines (Starter Cable terminates at the Start Relay) **(SN 0300085332 through 0300138237)**	
601A	7027027	1	Caterpillar and Deutz Engines Machines (Starter Cable terminates at the Glow Plug Relay) (Not Shown) **(SN 0300138238 through 0300140000)**	
601A	7016800	1	Ford Engine Machines **(SN 0300085332 through 0300087735)**	
601A	7016821	1	Ford Engine Machines **(SN 0300087736 through 0300140000)**	
601A	7027015	1	GM Engine Machines	
601B		Ref	Cable, Battery (Black) Options:	
601B	7027012	1	Caterpillar and Deutz Engines Machines **(SN 0300085332 through 0300138237)**	
601B	7027004	1	Caterpillar and Deutz Engines Machines **(SN 0300138238 through 0300140000)**	
601B	7016807	1	Ford Engine Machines **(SN 0300085332 through 0300087735)**	
601B	7016822	1	Ford Engine Machines **(SN 0300087736 through 0300140000)**	
601B	7027018	1	GM Engine Machines	
601C	7016824	1	Cable (Red)	
601D		Ref	Cable (Red) Options:	
601D	7016803	1	Caterpillar and Deutz Engines Machines **(SN 0300085332 through 0300138237)**	
601D	Not Required	0	Caterpillar and Deutz Engines Machines (Part of Item 601A p/n 7027027) **(SN 0300138238 through 0300140000)**	
601D	Not Required	0	Ford Engine Machines **(SN 0300087736 through 0300140000)**	
601D	Not Required	0	GM Engine Machines	
601E	7016825	1	Cable (Black)	
601F		Ref	Cable, Battery (Red) Options:	
601F	Not Required	0	Caterpillar and Deutz Engines Machines	
601F	7016808	1	Ford Engine Machines	
601F	7016825	1	GM Engine Machines	
602	1060904	1	Cable, Battery (Deutz Engine Machines Only)	
603	4922737	1	Harness, Relay Ground (Caterpillar Engine Machines Only)	
604		Ref	Deutz Engine Harness Components (Deutz Engine Machines Only)	
604A	7027796	1	Deutz Engine Harness	
604B	See Note	NSS	Receptacle, Female - 25 Position (Note: Not Available - Purchase Complete Harness)	
604C	7027793	1	Plug-In, Connector	
604D		Ref	Deutz Engine Harness Options (For other replacement parts refer to Deutz engine dealer):	
604D	7027794	1	Tier II Engines **(SN 0300085332 through 0300129453)**	
604D	70001872	1	Tier III Engines **(SN 0300129454 through 0300140000)**	

ITEM	PART NUMBER	QTY	DESCRIPTION	REV
605	7027403	1	Ford Engine Harness (For other replacement parts refer to Ford engine dealer)	
606	See Note	NSS	Dual Fuel Shut-Off Filter Harness (Note: Not Available for Purchase)	
606A	7023679	1	Electrical Connector Kit (Includes [1] 2 Position Connector, 2 Pins and 2 Seals)	
607	4922968	1	Dual Fuel Shut-Off Filter Extension Harness (Not Shown) (Ford Engines Only)	
607A	4460742	1	Connector, Male - 2 Position	
607A	4460458	2	Seal, Terminal	
607A	4460743	2	Socket, Female	
607B	4460978	1	Receptacle, Male - 2 Position	
607B	4460979	2	Pin, Male	
607B	4460458	2	Seal, Terminal	
608	See Note	1	Fuel Pump Harness (Caterpillar Engines Only) (Note: Not Available for Purchase)	
608	4460897	1	Receptacle, Female - 2 Position (Caterpillar Engines Only)	
608	4460464	2	Pin, Male (Caterpillar Engines Only)	
609	See Note	NSS	Throttle Actuator Harness (Caterpillar Engines Only) (Note: Not Available for Purchase)	
609	4460897	1	Receptacle, Female - 2 Position (Caterpillar Engines Only)	
609	4460464	2	Pin, Male (Caterpillar Engines Only)	
610	See Note	NSS	Pump Harness (Note: Not Available for Purchase)	
610A	7007497	1	Plug (Pump End)	
610B	7007498	1	Plug (Engine Harness End)	
611	See Note	NSS	Controller Harness Assembly (Lift and Swing) (Note: Purchase Complete Controller)	
611A	7022819	1	Plug, Male - 8 Position (Natural)	
611A	4460871	8	Socket, Female	
612	See Note	NSS	Controller Harness/Circuit Board Assembly (Drive and Steer) (Note: Purchase Complete Controller)	
612A	7022825	1	Plug, Male - 8 Position (Black)	
612A	4460871	7	Socket, Female	
613	See Note	NSS	Controller Harness (Speed Control) (Note: Purchase Complete Controller)	
613A	4460224	1	Receptacle, Female - 6 Position	
613A	4460226	6	Socket, Female	
614	4923379	1	Harness, Glowplug **(SN 0300092776 through 0300140000)**	
615	7027991	AR	GM Engine Harness Components (GM Engine Machines Only)	
616	4360544	2	Switch, Tilt Sensor (Includes Tilt Sensor)	
616A	4460911	2	Plug, Male Deutsch - 3 Position	
616A	4460918	6	Socket, Female	
616A	4460912	2	Lock, Wedge	
617	4360517	1	Harness, Boom Proximity Sensor (Includes Sensor)	
617A	4460320	1	Plug, Male - 2 Position	
617A	4460227	2	Pin, Male	
618	4360517	1	Harness, Swivel Coupling Sensor (Includes Sensor)	
618A	4460320	1	Plug, Male - 2 Position	
618A	4460227	2	Pin, Male	
		Ref	**OPTIONAL HARNESS COMPONENTS**	
703	0257887	1	Alarm Harness (Includes Alarm)	
703	0140032	1	Alarm	
703	2820035	6 in/15cm	Loom	

ITEM	PART NUMBER	QTY	DESCRIPTION	REV
703A	4460424	1	Plug, Male - 2 Position	
703B	4460268	2	Socket, Female	
704	0272507	1	Strobe Light Harness Options (Includes Strobe Light):	
704A	4460320	1	Connector, Female - 2 Position	
704B	4460267	2	Pin, Male	
705	See Note	NSS	Headlight and Taillight/Chassis Illumination Harness (Note: Not Available for Purchase)	
705	1060341	Ref	Cable, Electrical 16/2 Options:	
705	1060341	37 ft /11.3m	Headlights and Taillights	
705	1060341	40 ft /12.2m	Chassis Illumination Lights	
705A	3740049	1	Relay	
705A	4460259	3	Terminal	
705A	4460260	4	Housing, Terminal	
705A	4460297	1	Terminal	
705A	4922643	1	Lights Harness for Ground Control Box	1-A
705A	4460226	2	Socket, Female	
706		Ref	2500W Generator Electrical Components	
706	4933300	AR	ANSI Export Specs - Caterpillar/Deutz **(SN 0300085332 through 0300122914)**	2-A
706	1001100027	AR	ANSI Export Specs - Caterpillar/Deutz **(SN 0300122915 through 0300140000)**	3-C
706	4933300	AR	ANSI Specs - Caterpillar/Deutz/Ford Engines Only	2-A
706	4933350	AR	ANSI Specs - GM Engines Only	A
706A	4460321	1	Connector, Male - 4 Position (ANSI Spec Only)	
706A	4460906	4	Socket, Female	
706B	4922641	1	Harness - On/Off Switch	
706C	4460226	2	Socket, Female	
706D		Ref	Powermite Control Box to Relay	
706D	4922970	1	Caterpillar/Deutz/Ford Engines Only	
706D	4923445	1	GM Engines Only	
706E	4460961	1	Connector, Female - 4 Position (ANSI Spec Only)	
706E	4460705	4	Pin, Male	
706F	4460742	1	Plug, Male - 2 Position (GM Engine Only)	
706F	4460743	2	Socket, Female (GM Engine Only)	
706F	4460458	2	Seal, Terminal (GM Engine Only)	
706G	1001100305	1	Harness, Ground For Generator (ANSI Export Specs Only) **(SN 0300122915 through 0300136123)**	
706H	7020193	1	Harness, Generator Power	
707		Ref	Generator to Rear of Boom Harness Options:	
		Ref	**Note: Harness used to connect AC at platform harness to Powermite Generator Control Box receptacle.**	
707	4922741	1	110V GFI (ANSI Spec)	A
707	4922742	1	220V GFI (ANSI Spec)	A
707	4922743	1	ANSI Export Spec	A
707		Ref	Cable, Electrical - 10/3 Options:	
707	1060708	6 ft/1.8m	ANSI Spec	
707	1060545	6 ft/1.8m	ANSI Export Spec	
707A		Ref	Plug, Male Options:	
707A	4460205	1	110V GFI (ANSI Spec)	
707A	4460233	1	220V GFI (ANSI Spec)	
707A	See Note	NLA	ANSI Export Spec (Note: Not Available - Purchase Locally)	

ITEM	PART NUMBER	QTY	DESCRIPTION	REV
707B		Ref	Receptacle, Female Options:	
707B	4460134	1	110V GFI (ANSI Spec)	
707B	4460701	1	220V GFI (ANSI Spec)	
707B	See Note	NLA	ANSI Export Spec (Note: Not Available - Purchase Locally)	
708		Ref	AC to Platform Receptacle Components Options:	
708	0272259	Ref	110V GFI Receptacle (ANSI Spec)	3
708	0272260	Ref	220V GFI Receptacle (ANSI Spec)	2
708	0256202	Ref	(ANSI Export Spec)	5
708A	0860038	1	Box, Switch (ANSI Spec Only)	
708B		Ref	Receptacle Options (ANSI Spec Only):	
708B	4460346	1	110V GFI	
708B	4460125	1	220V GFI	
708C		Ref	Shield, Cover Options (ANSI Spec Only):	
708C	4060700	1	110V GFI (Side Hinged Cover) **(SN 0300085332 through 0300138286)**	
708C	1001110873	1	110V GFI (Top Hinged Cover) **(SN 0300138287 through 0300140000)**	
708C	4060092	1	220V GFI	
708D	4460051	1	Connector, Strain Relief (ANSI Spec Only):	
708E		Ref	Plug, Male Options:	
708E	4460205	1	110V GFI (ANSI Spec)	
708E	4460233	1	220V GFI (ANSI Spec)	
708E	See Note	NLA	ANSI Export Spec (Note: Not Available - Purchase Locally)	
708F		Ref	Plug, Male Options:	
708F	4460205	1	110V GFI (ANSI Spec)	
708F	4460233	1	220V GFI (ANSI Spec)	
708F	4460709	1	ANSI Export Spec	
708G		Ref	Connector, Female Options:	
708G	4460134	1	110V GFI (ANSI Spec)	
708G	4460701	1	220V GFI (ANSI Spec)	
708G	4460710	1	ANSI Export Spec	
708K	3960422	1	Gasket, Cover (ANSI Spec Only)	
709		Ref	7500W SkyPower Generator Installation	
709	0273540	Ref	60Hz and Caterpillar Engine	J
709	0273541	Ref	50Hz Spec and Caterpillar Engine	I
709	0272344	Ref	60Hz and Deutz Engine	I
709	0272643	Ref	50Hz Spec and Deutz Engine	F
709	0272817	Ref	60Hz Spec and Ford Engine	H
709	0275257	Ref	60Hz Spec and GM Engine	D
		Ref	**Note: SkyPower Generator is Standard On ANSI and CSA Specs, Optional on All Other Specs**	
709A		Ref	Receptacle, Female Twist-Lock Options:	
709A	4460958	1	60Hz Spec	
709A	See Note	NLA	50Hz Spec (Note: Not Available - Purchase Locally)	
709B		Ref	Gasket Options:	
709B	3960422	2	60Hz Spec	
709B	See Note	NLA	50Hz Spec (Note: Not Available - Purchase Locally)	
709C		Ref	Cover, Receptacle Options:	
709C	4060700	1	60Hz Spec (Side Hinged Cover) **(SN 0300085332 through 0300138286)**	
709C	1001110873	1	60Hz Spec (Top Hinged Cover) **(SN 0300138287 through 0300140000)**	

SECTION 7 - ELECTRICAL

ITEM	PART NUMBER	QTY	DESCRIPTION	REV
709C	See Note	NLA	50Hz Spec (Note: Not Available - Purchase Locally)	
709D		Ref	Cover, Receptacle Options:	
709D	4061043	1	60Hz Spec (Side Hinged Cover) **(SN 0300085332 through 0300138286)**	
709D	1001110872	1	60Hz Spec (Top Hinged Cover) **(SN 0300138287 through 0300140000)**	
709D	See Note	NLA	50Hz Spec (Note: Not Available - Purchase Locally)	
709E		Ref	Receptacle Options:	
709E	4460346	1	60Hz Spec	
709E	See Note	1	50Hz Spec (Note: Not Available - Purchase Locally)	
709F	4460051	1	Connector, Strain Relief	
709G	4460071	1	Connector, Strain Relief	
709H	4922925	1	Harness, Generator	
709J	See Note	1	Plug, Male - 6 Position (Note: Not Available for Purchase)	
709J	See Note	6	Socket, Female (Note: Not Available for Purchase)	
709K	4460225	1	Plug, Male - 6 Position	
709K	4460226	6	Socket, Female	
710		Ref	7500W SkyPower Generator Junction Box Components	
710	0861542	Ref	60Hz Spec	C
710	0861567	Ref	50Hz Specs	B
710A		Ref	Cable, Electrical 12/3	
710A	1060494	2 ft/.6m	60Hz Spec	
710A	See Note	2 ft/.6m	50Hz Spec (Note: Not Available - Purchase Locally)	
710B		Ref	Cable, Electrical 10/3	
710B	1060708	2.5 ft /.76m	60Hz Spec	
710B	See Note	2.5 ft /.76m	50Hz Spec (Note: Not Available - Purchase Locally)	
710C	1060343	1.5 ft /.46m	Cable, Electrical 10/4 (60Hz Spec Only)	
710D	4460425	2	Connector, Strain Relief	
710E		Ref	Component Options:	
710E	4460426	2	Connector, Strain Relief (60Hz Spec Only)	
710E	4460426	1	Connector, Strain Relief (50Hz Spec Only)	
710E	3520189	1	Plug (50Hz Spec Only)	
710F	1671092	1	Cover (60Hz Spec Only)	
710F	4460963	1	Connector (60Hz Spec Only)	
711		Ref	7500W Generator Electrical Diagram Components	
711	4933264	Ref	Caterpillar and Deutz Engine Machines	C
711	4933283	Ref	Ford Engine Machines	2-B
711	4933349	Ref	GM Engine Machines	1-A
711A		Ref	Generator Harness Options:	
711A	4922757	1	Caterpillar and Deutz Engine Machines	3-C
711A	4922905	1	Ford Engine Machines	1-A
711A	4923420	1	GM Engine Machines	1-A
711B	4460374	2	Plug, Sealed Relay	
711B	4460375	7	Terminal	
711C	4460967	1	Plug, Male - 3 Position	
711C	4460465	3	Socket, Female	
711D	2400060	Ref	Fuseholder Options:	
711D	2400060	1	Caterpillar, Deutz and GM Engine Machines	
711D	2400060	2	Ford Engine Machines	

ITEM	PART NUMBER	QTY	DESCRIPTION	REV
711D	2400064	Ref	Fuse - 5Amp Options:	
711D	2400064	1	Caterpillar, Deutz and GM Engine Machines	
711D	2400064	2	Ford Engine Machines	
711E	4922641	1	Switch Harness	
711F	4460226	2	Socket, Female	
711G	4460742	1	Plug, Male - 2 Position (GM Engine Only)	
711G	4460743	2	Socket, Female (GM Engine Only)	
712	4933249	1	Floodlights Harness Components	2-A
712A	4460320	2	Plug, Male - 2 Position	
712A	4460227	4	Pin, Male	
712B	4922764	1	Floodlight Harness (Lights to Switch)	1-A
712C	4460424	2	Connector, Female - 2 Position	
712C	4460226	4	Socket, Female	
712D	4360232	1	Circuit Breaker - 15Amp	
712E	1060977	1	Cord, 2 Wire Coiled (Console Box Circuit Breaker to Switch)	
712F	4460425	1	Connector, Strain Relief	
712G	4922883	1	Harness, Console Box to Aux Relay	
712G	1060708	120 ft /36.6m	10/3 Cable	
713		Ref	Platform Worklights Components	
713A	2920140	2	Platform Worklights External Harness (Includes Light and Wire Only)	
713B	4460426	1	Connector, Strain Relief	
713C	2400070	1	Fuse	
713C	2400066	1	Holder, Fuse	
713D		Ref	Harness, Console Box to Connector Options:	
713D	4922873	1	Harness, Console Box to Connector 800S Harness (85ft/25.9m of 10/3 Cable p/n 1060708)	
713D	4922877	1	Harness, Console Box to Connector 860SJ Harness (92ft/28m of 10/3 Cable p/n 1060708)	
713E	4922874	1	Harness, Connector to Aux Relay	
713E	1060708	11 ft/3.4m	10/3 Cable	
713F		Ref	Connector, Female - 3 Position Options (Platform Worklights Only):	
713F	4460459	1	Connector, Female - 3 Position **(SN 0300085332 through 0300117585)**	
713F	4460789	3	Terminal, Seal	
713F	4460790	3	Socket, Female	
713F	1001098234	1	Connector, Female - 3 Position **(SN 0300117586 through 0300140000)**	
713G		Ref	Connector, Male - 3 Position Options (Platform Worklights Only):	
713G	4460476	1	Harness, Console Box to Connector **(SN 0300085332 through 0300117585)**	
713G	4460789	3	Terminal, Seal	
713G	4460790	3	Socket, Female	
713G	1001098349	1	Harness, Console Box to Connector **(SN 0300117586 through 0300140000)**	
714 to 714	Not Required	0	Not Required	
		Ref	**TOOLS**	
801	7002821	1	Crimper (For Wire to Pin/Socket Connections) (Not Shown)	
802	7002823	1	Extractor (For Removal of Pin/Socket from Connectors) (Not Shown)	
803	4460467	1	Extractor, Pin (Blue 16-18 Gauge) (For Removal of Pin/Socket	

ITEM	PART NUMBER	QTY	DESCRIPTION	REV
			from Connectors) (Not Shown)	
804	4460510	1	Extractor, Pin (Yellow 12-14 Gauge) (For Removal of Pin/Socket from Connectors) (Not Shown)	
805	7002828	1	Stripper, Wire (Not Shown)	
806	2901443	1	Analyzer Kit (Not Shown)	
806A	1600244	1	Analyzer	
806B	1060633	1	Cable, Analyzer	1-A
806C	4460321	2	Plug, Male	
806C	4460226	8	Socket, Female	

FIGURE 7-4. HARNESS COMPONENTS INSTALLATION (WITH UGM)

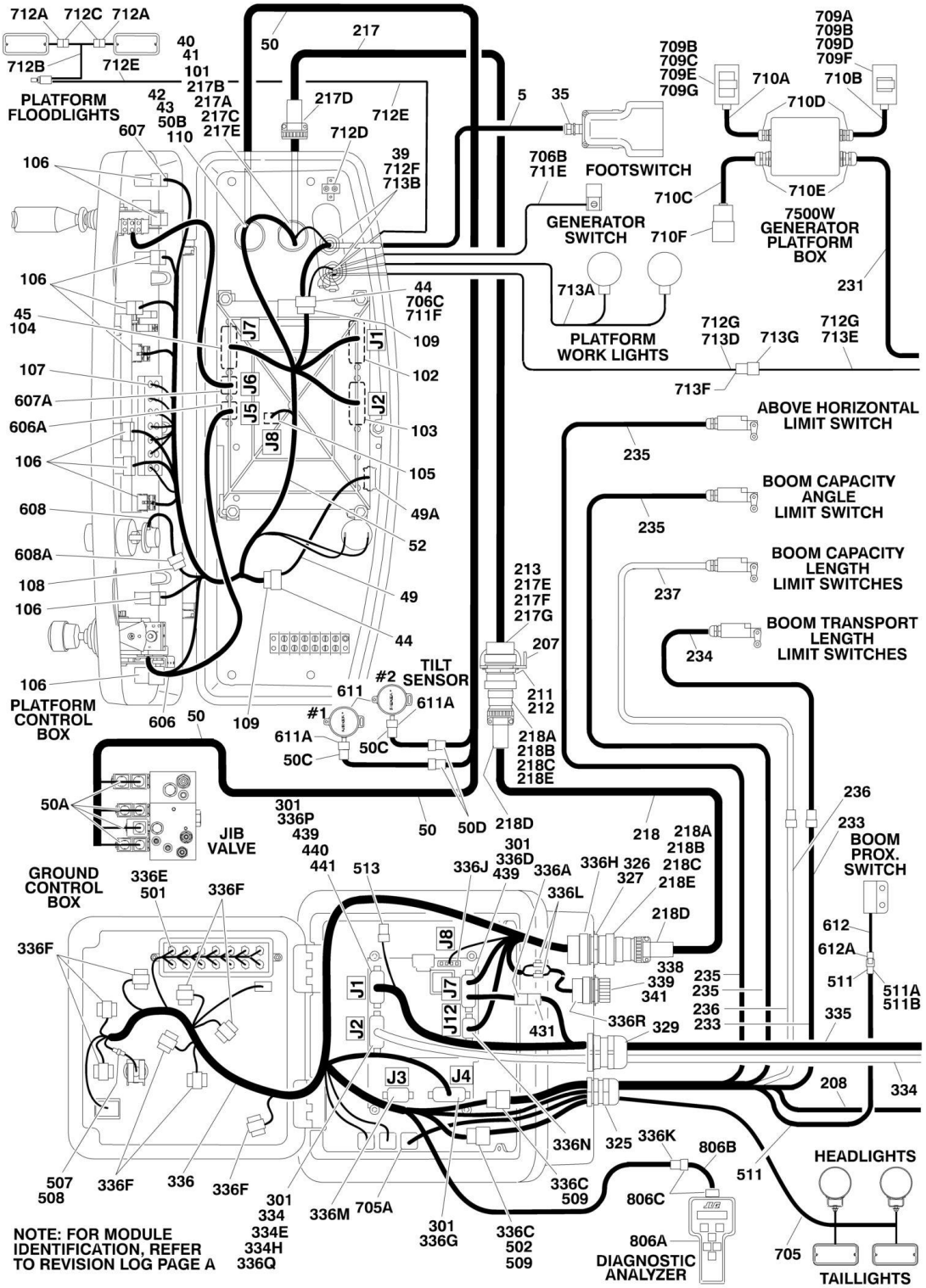

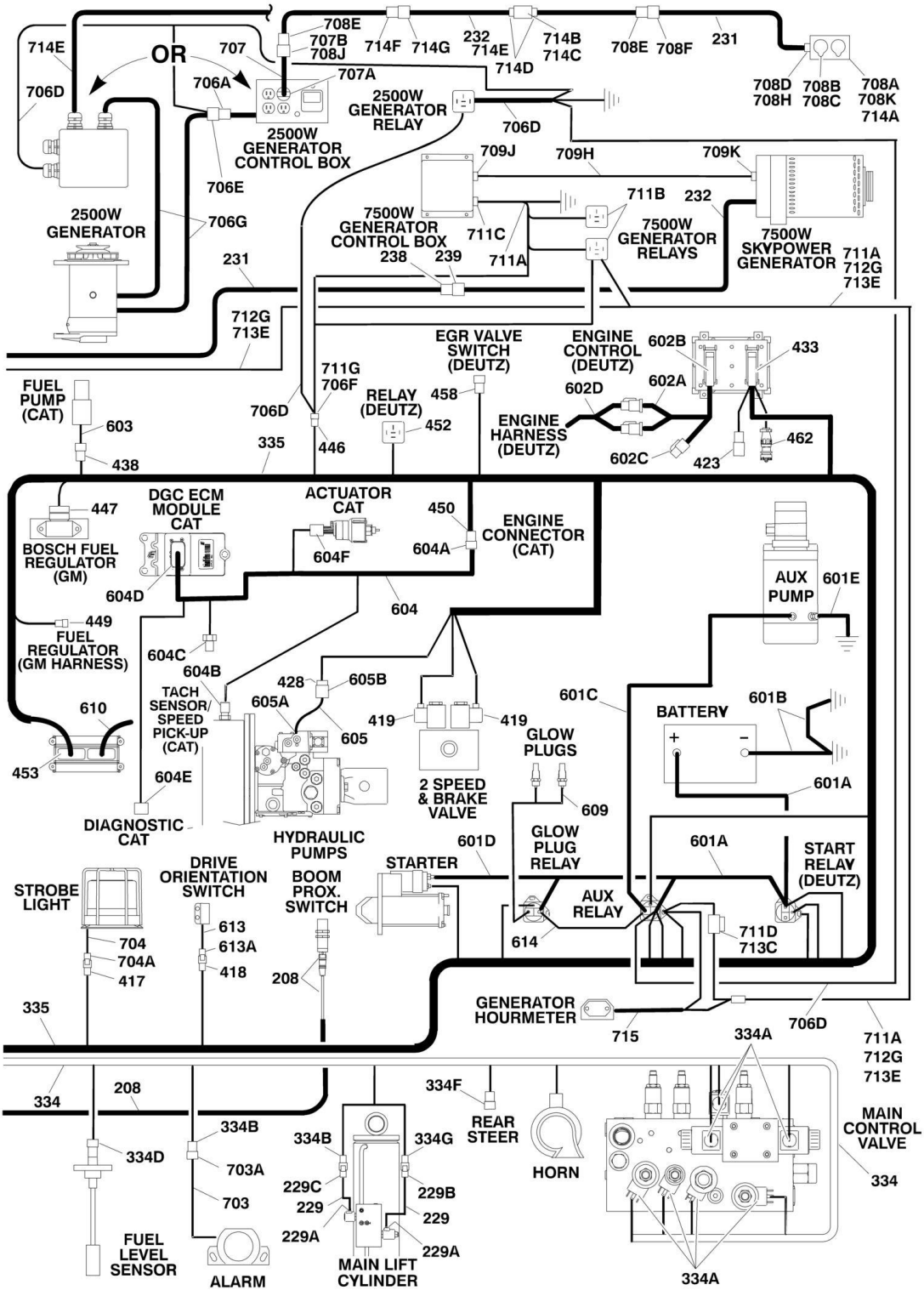
714E
OR
707
706D
706A
708E
707B
708J
714F
714G
232
714E
714D
714B
714C
708E
708F
231
708D
708H
708B
708C
708A
708K
714A
707A
2500W GENERATOR RELAY
2500W GENERATOR CONTROL BOX
706D
706E
709J
709H
709K
711B
232
2500W GENERATOR
706G
7500W GENERATOR CONTROL BOX
711C
711A
238
239
7500W GENERATOR RELAYS
7500W SKYPOWER GENERATOR
711A
712G
713E
231
712G
713E
EGR VALVE SWITCH (DEUTZ)
ENGINE CONTROL (DEUTZ)
602B
433
711G
706F
602D
602A
FUEL PUMP (CAT)
706D
RELAY (DEUTZ)
458
ENGINE HARNESS (DEUTZ)
603
452
462
335
446
602C
423
438
447
DGC ECM MODULE CAT
ACTUATOR CAT
450
ENGINE CONNECTOR (CAT)
BOSCH FUEL REGULATOR (GM)
604F
604A
AUX PUMP
601E
604D
604
449
FUEL REGULATOR (GM HARNESS)
604C
604B
428
605B
TACH SENSOR/ SPEED PICK-UP (CAT)
605A
601C
BATTERY
601B
610
419
419
GLOW PLUGS
605
453
601A
604E
2 SPEED & BRAKE VALVE
609
DIAGNOSTIC CAT
HYDRAULIC PUMPS
601D
GLOW PLUG RELAY
601A
START RELAY (DEUTZ)
STARTER
STROBE LIGHT
DRIVE ORIENTATION SWITCH
BOOM PROX. SWITCH
AUX RELAY
704
613
711D
713C
704A
613A
614
417
418
208
335
GENERATOR HOURMETER
715
706D
334A
711A
712G
713E
334
208
334F
REAR STEER
MAIN CONTROL VALVE
334B
334B
334G
334D
703A
HORN
334
229C
229B
703
229
229
229A
229A
FUEL LEVEL SENSOR
ALARM
MAIN LIFT CYLINDER
334A

FIGURE 7-4. HARNESS COMPONENTS INSTALLATION (WITH UGM)

ITEM	PART NUMBER	QTY	DESCRIPTION	REV
		Ref	**NOTE: FOR MODULE IDENTIFICATION, REFER TO REVISION LOG PAGE A.**	
	1001114896	Ref	**PLATFORM CONSOLE BOX COMPONENTS**	B
5	1060918	7 ft/2.14m	Cable, Electrical - 18/3	
35	4460071	1	Connector, Strain Relief	
39	4460428	2	Connector, Strain Relief	
40	4460470	1	Nut, Terminal	
41	4460471	1	Lockwasher, Terminal	
42	4460496	1	Lockwasher, Terminal	
43	4460497	1	Nut, Terminal	
44	4460708	2	Receptacle - 15 Position	
45	4460905	5	Seal, Plug	
49	4922666	1	Harness, Analyzer Cable	2-B
49	4460226	4	Socket, Female (Not Shown - Located at J2)	
49A	4460761	1	Connector, Female - 4 Position	
49A	4460227	4	Pin, Male	
50	4922749	1	Harness, Upper Valve	2-A
50A	4460880	7	Connector, DIN	
50B	4460928	8	Socket, Female	
50B	4460918	8	Socket, Female	
50B	4460926	1	Connector, Deutsch - 21 Position	
50C	4460913	2	Lock Wedge - 3 Position	
50C	4460910	2	Connector, Female Deutsch - 3 Position	
50C	4460917	6	Pin, Male	
50D	1560012	2	Connector, Strain Relief	
52	1001107796	1	Harness, Platform Box (See Items 101-110 for Breakdown)	
	1001107796	Ref	**PLATFORM BOX HARNESS ASSEMBLY**	C
101	4460866	1	Connector - 19 Pin	
101	4460929	10	Pin, Male Deutsch 16Ga	
101	4460508	3	Pin, Male Deutsch 12Ga	
102	4460874	1	Connector - 35 Position (Natural)	
102	4460871	23	Socket, Female	
103	4460876	1	Connector - 35 Position (Blue)	
103	4460871	23	Socket, Female	
104	4460873	1	Connector - 35 Position (Black)	
104	4460871	28	Socket, Female	
105	4460879	1	Connector, Male 2 Position	
105	4460887	2	Terminal (12 Gauge)	
106	4460418	7	Connector, Female - 6 Position	
106	4460419	21	Socket, Female	
107	4460225	4	Plug, Male - 6 Position	
107	4460226	18	Terminal (16 Gauge)	
108	4460225	1	Plug, Male - 6 Position	
108	4460227	5	Pin, Male	
109	4460434	2	Plug, Male - 15 Position	
109	4460227	AR	Pin, Male	
110	4460925	1	Connector - 21 Pin	
110	4460929	8	Pin, Male Deutsch 16Ga	
110	4460917	8	Pin, Male Deutsch 12Ga	
		Ref	**BOOM CABLES INSTALLATION**	

ITEM	PART NUMBER	QTY	DESCRIPTION	REV
	0271322	Ref	**Boom Cables Installation 800S**	I
	0272388	Ref	**Boom Cables Installation 800S (SkyWelder)**	F
	1001091609	Ref	**Boom Cables Installation 800S (With Arctic Package)**	C
	1001091664	Ref	**Boom Cables Installation 800S (With 7500W Generator and Arctic Package)**	D
	0271324	Ref	**Boom Cables Installation 860SJ**	I
	0272389	Ref	**Boom Cables Installation 860SJ (SkyWelder)**	E
	0275586	Ref	**Boom Cables Installation 860SJ (With Arctic Package)**	B
	1001091665	Ref	**Boom Cables Installation 860SJ (With 7500W Generator and Arctic Package)**	D
207	3573047	1	Plate, Receptacle Mounting	
208	4360506	1	Proximity Switch and Harness Assembly	
211	4460470	1	Nut, Terminal	
212	4460471	1	Lockwasher, Terminal	
213	4460866	1	Connector - 19 Position	
217		Ref	Harness Assembly - Main Boom (12/4 - 18/8) Options:	
217	4922566	1	Harness Assembly - Main Boom (12/4 -18/8) 800S	2-B
217	1001091618	1	Harness Assembly - Main Boom (12/4 -18/8) 800S (With Arctic Package)	1-A
217	4922567	1	Harness Assembly - Main Boom (12/4 -18/8) 860SJ	3-C
217	4923595	1	Harness Assembly - Main Boom (12/4 -18/8) 860SJ (With Arctic Package)	1-A
217		Ref	Cable, Electrical - 12/4 & 18/8 Options:	
217	1060896	85 ft/26m	Cable, Electrical - 12/4 & 18/8 800S	
217	4923462	85 ft/26m	Cable, Electrical - 12/4 & 18/8 800S (With Arctic Package)	
217	1060896	95 ft/29m	Cable, Electrical - 12/4 & 18/8 860SJ	
217	4923462	95 ft/29m	Cable, Electrical - 12/4 & 18/8 860SJ (With Arctic Package)	
217	2820031	4 in/9cm	Heat Shrink	
217A	4460465	11	Socket, Female 18 Gauge	
217B	4460865	1	Connector - 19 Position	
217C	4460509	4	Socket, Female 12 Gauge	
217D	4460473	1	Clamp, Cable	
217E	4460466	8	Seal, Plug	
217F	4460464	11	Pin, Male 18 Gauge	
217G	4460508	4	Pin, Male 12 Gauge	
218		Ref	Harness Assembly - Tower Boom (12/4 - 18/8) Options:	
218	4922569	1	Standard & SkyWelder	1-A
218	4923596	1	Arctic Package	2-B
218		Ref	Cable, Electrical - 12/4 & 18/8 Options:	
218	1060896	20 ft/6.1m	Standard and SkyWelder	
218	4923462	20 ft/6.1m	With Arctic Package	
218A	4460465	22	Socket, Female 18 Gauge	
218B	4460865	2	Connector - 19 Position	
218C	4460509	8	Socket, Female 12 Gauge	
218D	4460473	2	Clamp, Cable	
218E	4460466	8	Seal, Plug	
229		Ref	Holding Valve/Lift Dump Harness Assembly Options: (Note: This is actually two separate harnesses under the same p/n)	
229	4922660	1	Standard and SkyWelder	2-D
229	4923597	1	With Arctic Package	1-A
229A	4460880	2	Connector, DIN	
229B	4460320	1	Plug, Male - 2 Position	

ITEM	PART NUMBER	QTY	DESCRIPTION	REV
229B	4460226	2	Socket, Female	
229C	4460424	1	Connector, Female - 2 Position	
229C	4460267	2	Pin, Male	
231		Ref	Harness Options (To Bulkhead):	
231		Ref	Harness 800S:	
231	4922873	1	Harness, 110V A/C - Standard	
231	4922790	1	Harness, 8/5 Cable - SkyWelder	
231	1001091620	1	Harness, 8/5 Cable - With Arctic Package	
231	4922790	1	Harness, 8/5 Cable - With 7500W Generator and Arctic Package	
231		Ref	Harness 860SJ:	
231	4922877	1	Harness, 110V A/C - Standard	
231	4922808	1	Harness, 8/5 Cable - SkyWelder	
231	4923600	1	Harness, 8/5 Cable - With Arctic Package	
231	4922808	1	Harness, 8/5 Cable - With 7500W Generator and Arctic Package	
232		Ref	Harness Options (To Generator Box):	
232	4922874	1	Harness, 110V A/C (Standard)	
232	4922809	1	Harness, 8/5 Cable (SkyWelder)	
232	4923601	1	Harness, 8/5 Cable (With Arctic Package)	
232	4922809	1	Harness, 8/5 Cable - With 7500W Generator and Arctic Package	
233		Ref	Harness, Limit Switch Lower Options (To Boom Transport Length Limit Switch):	
233	4922872	1	Standard and SkyWelder	
233	4923599	1	With Arctic Package	
233		Ref	Cable, Electrical - 18/2 Options:	
233	1060902	20 ft/6m	Standard and SkyWelder	
233	4923466	20 ft/6m	With Arctic Package	
233	4460465	2	Socket, Female	
233	4460891	1	Plug, Male - 2 Position	
234		Ref	Harness, Limit Switch Upper Options (To Boom Transport Length Limit Switch):	
234	4922871	1	Standard and SkyWelder	
234	4923598	1	With Arctic Package	
234		Ref	Cable, Electrical - 18/2 Options:	
234	1060902	34 ft /10.4m	Standard and SkyWelder	
234	4923466	34 ft /10.4m	With Arctic Package	
234	4460464	2	Pin, Male	
234	4460897	1	Receptacle, Female - 2 Position	
235		Ref	Cable, Electrical - 18/2	
235	1061018	2	Cable, Electrical - 18/2 800S	
235	1061019	2	Cable, Electrical - 18/2 860SJ	
236		Ref	Harness, Limit Switch Lower Options (To Boom Capacity Length Switch):	
236	1001098908	1	Standard and SkyWelder	
236	1001098910	1	With Arctic Package	
236		Ref	Cable, Electrical - 18/2 Options:	
236	1060902	20 ft/6m	Standard and SkyWelder	
236	4923466	20 ft/6m	With Arctic Package	
236	4460464	2	Pin, Male	

ITEM	PART NUMBER	QTY	DESCRIPTION	REV
236	4460897	1	Plug, Male - 2 Position	
237		Ref	Harness, Limit Switch Upper Options (To Boom Capacity Length Switch):	
237	1001098909	1	Standard and SkyWelder	
237	1001098911	1	With Arctic Package	
237		Ref	Cable, Electrical - 18/2 Options:	
237	1060902	34 ft /10.4m	Standard and SkyWelder	
237	4923466	34 ft /10.4m	With Arctic Package	
237	4460465	2	Socket, Female	
237	4460891	1	Plug, Male - 2 Position	
238	4460959	1	Terminal, Turnlock Plug (With 7500W Generator)	
238	1671092	1	Cover, Female Connector	
239	4460960	1	Terminal, Turnlock Connector (With 7500W Generator)	
239	1671093	1	Cover, Male Connector	
		Ref	**GROUND CONTROL BOX COMPONENTS**	
301	0100048	AR	Grease, Dielectric	
325	4460426	1	Connector, Strain Relief	
326	4460470	1	Nut, Terminal	
327	4460471	1	Locknut, Terminal	
329	4460526	1	Connector, Strain Relief	
334	4922594	1	Valve Harness Assembly	7-K
334A	4460880	7	DIN Connector	
334B	4460320	2	Plug, Male - 2 Position	
334B	4460267	4	Pin, Male	
334D	4460834	1	Connector, Female - 2 Position	
334D	4460842	2	Terminal, Female	
334E	4460871	22	Socket, Female	
334F	4460225	1	Plug, Male - 6 Position	
334F	4460267	6	Pin, Male	
334G	4460424	1	Connector, Female - 2 Position	
334G	4460267	2	Pin, Male	
334H	4460226	1	Socket, Female	
335		Ref	Engine Harness Assembly (See Items 401-462 for Breakdown)	
335	1001110341	1	Caterpillar Engine Machines	
335	1001110340	1	Deutz Engine Machines	
335	1001110338	1	GM Engine Machines	
336	1001110339	1	Ground Control Box Harness Assembly	B
336A	4460536	1	Connector, Female 3- Position	
336A	4460943	3	Pin, Male	
336B	3990010	2	Diode - 6Amp (Not Shown - Located at Power Down Relay)	
336C	4460434	2	Plug, Male - 15 Position	
336C	4460227	21	Pin, Male	
336D	4460873	1	Connector - 35 Position (Black)	
336D	4460871	19	Socket, Female	
336D	4460905	1	Seal, Plug	
336E	4120035	6	Base, Light	
336E	4460634	7	Terminal (16 Gauge)	
336E	4460635	5	Terminal (12 Gauge)	
336F	4460418	7	Connector, Female - 6 Position	
336F	4460419	21	Socket, Female	

ITEM	PART NUMBER	QTY	DESCRIPTION	REV
336G	4460876	1	Connector - 35 Position (Blue)	
336G	4460871	24	Socket, Female	
336G	4460905	1	Seal, Plug	
336H	4460866	1	Connector - 19 Pin	
336H	4460464	10	Pin, Male Deutsch 16Ga	
336H	4460508	3	Pin, Male Deutsch 12Ga	
336J	4460878	1	Housing, Terminal - 4 Position	
336J	4460887	3	Terminal (12 Gauge)	
336K	4460761	1	Connector, Female 4 - Position	
336K	4460227	4	Pin, Male	
336L	8229242	2	Fuse 5A	
336L	2400060	2	Holder, Fuse	
336M	1001106339	1	Connector, Male - 14 Position	
336M	4460871	2	Socket, Female	
336N	1001106340	1	Connector, Male - 14 Position	
336N	4460871	5	Socket, Female	
336P	4460874	1	Connector, Natural	
336P	4460871	10	Socket, Female	
336Q	4460875	1	Connector, Gray	
336Q	4460871	5	Socket, Female	
336R	1001112612	1	Connector - 9 Position	
336R	4460943	4	Pin, Male	
337		Ref	Ground Control Box Wiring Diagram (Not Shown - See Items 501-513 for Breakdown)	
337	1001110344	1	Caterpillar Engine	
337	1001110343	1	Deutz Engine Machines	
337	1001110342	1	GM Engine Machines	
338	4460496	1	Lockwasher, Terminal	
339	4460497	1	Nut, Terminal	
341	1001106736	1	Cap, Dust	
		Ref	**ENGINE HARNESS ASSEMBLY**	
	1001110341	Ref	**Caterpillar Engine**	B
	1001110340	Ref	**Deutz Engine**	A
	1001110338	Ref	**GM Engine**	A
417	4460424	1	Receptacle, Female - 2 Position	
417	4460268	2	Socket, Female	
418	4460424	1	Receptacle, Female - 2 Position	
418	4460226	2	Socket, Female	
419	4460880	2	DIN Connector without Diode	
423	4461070	1	Receptacle, Female with Resistor (3 Position) (Deutz Engine Only)	
423	4461095	1	Plug, Male - 3 Position (Deutz Engine Only)	
423	4460944	3	Socket, Female (Deutz Engine Only)	
428	4460460	1	Connector, Male - 4 Position	
428	4460457	4	Terminal, Female	
428	4460458	4	Seal, Terminal	
431	4460539	1	Plug, Male - 3 Position	
431	4460944	3	Socket, Female	
433	4461052	1	Connector, Receptacle - 25 Position (Deutz Engine Only)	
433	4461005	5	Terminal (Gold) (Deutz Engine Only)	
433	4461006	5	Seal, Terminal (Deutz Engine Only)	
433	4461060	2	Terminal (Tin) (Deutz Engine Only)	

ITEM	PART NUMBER	QTY	DESCRIPTION	REV
433	4461054	2	Seal, Terminal (Deutz Engine Only)	
433	4461053	1	Cover, Plug (Deutz Engine Only)	
433	4461008	18	Plug, Hole (Deutz Engine Only)	
438	4460891	2	Connector, Male - 2 Position (Caterpillar Engine Only)	
438	4460465	7	Socket, Female	
439	4460871	AR	Socket, Female	
440	4460464	1	Pin, Male	
441	4460887	1	Terminal, Molex	
446	4461157	1	Receptacle, Female - 2 Position	
446	4460979	2	Pin, Male	
446	4460458	2	Seal, Terminal	
447	4461121	1	Plug, Male - 4 Position (GM Engine Only)	
447	4461122	4	Socket, Female (GM Engine Only)	
447	4461123	4	Seal, Terminal (GM Engine Only)	
449	4461124	1	Receptacle, Female - 4 Position (GM Engine Only)	
449	4460693	4	Pin, Male (GM Engine Only)	
449	4460608	4	Seal, Terminal (GM Engine Only)	
449	4461161	1	Lock, Terminal (GM Engine Only)	
450	4460899	1	Connector - 6 Position (Caterpillar Engines Only)	
450	4460464	5	Pin, Male (Caterpillar Engines Only)	
450	4460466	1	Seal, Plug (Caterpillar Engines Only)	
452	4460374	1	Plug, Sealed Relay (Deutz Engine)	
452	4460375	4	Terminal (Deutz Engine)	
453	4461109	1	Plug, Male - 16 Position (GM Engine Only)	
453	4461111	7	Pin, Male (GM Engine Only)	
453	4461113	7	Seal, Terminal (GM Engine Only)	
453	4461222	9	Plug, Terminal (GM Engine Only)	
458	1001102290	1	Connector, 2 Position (Deutz Engine)	
458	1001102304	2	Seal (Deutz Engine)	
458	1001102291	2	Terminal, Receptacle (Deutz Engine)	
462	2902443	1	Kit, Receptacle (Deutz Engine Only)	
462	4461071	8	Terminal, Female (Gold) (Deutz Engine Only)	
462	4461072	1	Connector, Flange Mount (Deutz Engine Only)	
462	4461073	1	Connector, Dust Cap (Deutz Engine Only)	
462	4461074	1	Connector, Shell (Deutz Engine Only)	
		Ref	**GROUND CONTROL BOX WIRING DIAGRAM**	
	1001110344	Ref	**Caterpillar Engine**	A
	1001110343	Ref	**Deutz Engine**	A
	1001110342	Ref	**GM Engine**	A
501	2920129	AR	Bulb, Light	
502	4922636	1	Harness, Jumper	
502	4460226	2	Socket, Female	
507	2400065	1	Fuse, 30Amp	
508	2400066	1	Fuse, Holder	
509	4460708	2	Receptacle, Female - 15 Position	
509	4460226	13	Socket, Female	
511	4922771	1	Harness, Angle Sensor (Boom Proximity Sensor)	
511	1060902	9.5 ft /2.9m	Cable - 18/2	
511A	4460226	2	Socket, Female	
511B	4460424	1	Receptacle, Female - 2 Position	
513	4460894	1	Plug, Male - 6 Position	

ITEM	PART NUMBER	QTY	DESCRIPTION	REV
513	4460892	1	Connector, Bussbar - 6 Position	
		Ref	**STANDARD HARNESS COMPONENTS**	
601		Ref	Battery Cable Kit Options:	
601	1001112762	1	Caterpillar Engines Machines	B
601	2902401	1	Deutz Engines Machines	B
601	2902533	1	GM Engine Machines	C
601A		Ref	Cable, Battery (Red) Options:	
601A	7027028	1	Caterpillar Engines Machines (Battery to Glow Plug Relay to Aux Relay to Starter)	
601A	7027027	1	Deutz Engines Machines (Battery to Start Relay to Aux Relay to Glow Plug Relay to Starter)	
601A	7027015	1	GM Engine Machines (Battery to Aux Relay to Starter)	
601B		Ref	Cable, Battery (Black) Options:	
601B	7027029	1	Caterpillar Engines Machines	
601B	7027004	1	Deutz Engines Machines	
601B	7027018	1	GM Engine Machines	
601C		Ref	Cable (Red) Options:	
601C	7027030	1	Caterpillar Engines Machines	
601C	7016824	1	Deutz and GM Engines Machines	
601D		Ref	Cable, Battery (Red) Options:	
601D	Not Required	0	Caterpillar and Deutz Engines Machines	
601D	7027017	1	GM Engine Machines	
601E		Ref	Cable (Black) Options:	
601E	7027031	1	Caterpillar Engines Machines	
601E	7016825	1	Deutz and GM Engine Machines	
602		Ref	Deutz Engine Harness Components (Deutz Engine Machines Only)	
602A	7027796	1	Deutz Engine Harness	
602B	See Note	NSS	Receptacle, Female - 25 Position (Note: Not Available - Purchase Complete Harness)	
602C	7027793	1	Plug-In, Connector	
602D	70001872	1	Deutz Tier III Engine Harness (For other replacement parts refer to Deutz engine dealer)	
603	See Note	NSS	Fuel Pump Harness (Caterpillar Engines Only) (Note: Not Available for Purchase)	
603	4460897	1	Receptacle, Female - 2 Position (Caterpillar Engines Only)	
603	4460464	2	Pin, Male (Caterpillar Engines Only)	
604	1001112071	1	Caterpillar Engine Harness Components (Caterpillar Engine Machines Only)	B
604	70004318	1	Fuse 5Amp (at Fuse Box F1)	
604	70004319	3	Fuse 10Amp (at Fuse Box F2, F3 & F4)	
604	70004316	1	Relay, Starter (at Fuse Box)	
604	70004317	2	Relay, Shut-Off and Glow Plug Control 25Amp (at Fuse Box)	
604A	4460894	1	Plug, Male - 6 Position	
604A	4460465	5	Socket, Female	
604A	4460466	1	Seal, Plug	
604B	4460891	1	Plug, Male - 2 Position	
604B	4460465	2	Socket, Female	
604C	4460891	1	Plug, Male - 2 Position	
604C	4460465	2	Socket, Female	
604D	70020808	1	Plug, Male - 23 Position	
604D	70020809	16	Socket, Female	
604E	See Note	NSS	Connector - 8 Position (Note: Not Available for Purchase)	

ITEM	PART NUMBER	QTY	DESCRIPTION	REV
604F	See Note	NSS	Connector - 5 Position (Note: Not Available for Purchase)	
605	See Note	NSS	Pump Harness (Note: Not Available for Purchase)	
605A	7007497	1	Plug (Pump End)	
605B	7007498	1	Plug (Engine Harness End)	
606	See Note	NSS	Controller Harness Assembly (Lift and Swing) (Note: Purchase Complete Controller)	
606A	7022819	1	Plug, Male - 8 Position (Natural)	
606A	4460871	8	Socket, Female	
607	See Note	NSS	Controller Harness/Circuit Board Assembly (Drive and Steer) (Note: Purchase Complete Controller)	
607A	7022825	1	Plug, Male - 8 Position (Black)	
607A	4460871	7	Socket, Female	
608	See Note	NSS	Controller Harness (Speed Control) (Note: Purchase Complete Controller)	
608A	4460224	1	Receptacle, Female - 6 Position	
608A	4460226	6	Socket, Female	
609	4923379	1	Harness, Glowplug	
610	7027991	AR	GM Engine Harness Components (GM Engine Machines Only)	
611	4360544	2	Switch, Tilt Sensor (Includes Tilt Sensor)	
611A	4460911	2	Plug, Male Deutsch - 3 Position	
611A	4460918	6	Socket, Female	
611A	4460912	2	Lock, Wedge	
612	4360517	1	Harness, Boom Proximity Sensor (Includes Sensor)	
612A	4460320	1	Plug, Male - 2 Position	
612A	4460227	2	Pin, Male	
613	4360517	1	Harness, Swivel Coupling Sensor (Includes Sensor)	
613A	4460320	1	Plug, Male - 2 Position	
613A	4460227	2	Pin, Male	
614	1060904	1	Cable, Battery (Deutz Engine Machines Only)	
		Ref	**OPTIONAL HARNESS COMPONENTS**	
703	0257887	1	Alarm Harness (Includes Alarm)	
703	0140032	1	Alarm	
703	2820035	6 in/15cm	Loom	
703A	4460424	1	Plug, Male - 2 Position	
703A	4460268	2	Socket, Female	
704	0272507	1	Strobe Light Harness Options (Includes Strobe Light):	
704A	4460320	1	Connector, Female - 2 Position	
704A	4460267	2	Pin, Male	
705	See Note	1	Headlight and Taillight/Chassis Illumination Harness (Note: Not Available for Purchase)	
705	1060341	Ref	Cable, Electrical 16/2 Options:	
705	1060341	37 ft /11.3m	Headlights and Taillights	
705	1060341	40 ft /12.2m	Chassis Illumination Lights	
705A	3740049	1	Relay	
705A	4460259	3	Terminal	
705A	4460260	4	Housing, Terminal	
705A	4460297	1	Terminal	
705A	4922643	1	Lights Harness for Ground Control Box	1-A
705A	4460226	2	Socket, Female	
706		Ref	2500W Generator Electrical Components	
706	1001112588	AR	ANSI Specs - Caterpillar/Deutz Engines Only	A

ITEM	PART NUMBER	QTY	DESCRIPTION	REV
706	1001112743	AR	ANSI Export Specs - Caterpillar/Deutz Engines Only	A
706	4933350	AR	ANSI Specs - GM Engines Only	B
706A	4460321	1	Connector, Male - 4 Position (ANSI Spec Only)	
706A	4460906	4	Socket, Female	
706B	4922641	1	Harness - On/Off Switch	
706C	4460226	2	Socket, Female	
706D		Ref	Powermite Control Box to Relay Options:	
706D	1001112589	1	Caterpillar and Deutz Engines	
706D	4923445	1	GM Engines	
706D	4460374	1	Plug, Sealed Relay	
706D	4460375	3	Terminal	
706D	4460742	1	Plug, Male - 2 Position	
706D	4460743	1	Socket, Female	
706D	4460458	1	Seal, Terminal	
706E	4460961	1	Connector, Female - 4 Position (ANSI Spec Only)	
706E	4460705	4	Pin, Male	
706F	4460742	1	Plug, Male - 2 Position (GM Engine Only)	
706F	4460743	2	Socket, Female (GM Engine Only)	
706F	4460458	2	Seal, Terminal (GM Engine Only)	
706G	7020193	1	Harness, Generator Power	
707	4922741	1	Generator to Rear of Boom Harness	
		Ref	**Note: Harness used to connect AC at platform harness to Powermite Generator Control Box receptacle.**	
707	1060708	6 ft/1.8m	Cable, Electrical - 10/3	
707A	4460205	1	Plug, Male	
707B	4460134	1	Receptacle, Female	
708		Ref	AC to Platform Receptacle Components Options:	
708	0272259	Ref	110V GFI Receptacle (ANSI Spec)	3
708	0272260	Ref	220V GFI Receptacle (ANSI Spec)	2
708	0256202	Ref	ANSI Export Spec	5
708A	0860038	1	Box, Switch (ANSI Spec Only)	
708B		Ref	Receptacle Options (ANSI Spec Only):	
708B	4460346	1	110V GFI	
708B	4460125	1	220V GFI	
708C		Ref	Shield, Cover Options (ANSI Spec Only):	
708C	1001110873	1	110V GFI (Top Hinged Cover)	
708C	4060092	1	220V GFI	
708D	4460051	1	Connector, Strain Relief (ANSI Spec Only):	
708E		Ref	Plug, Male Options:	
708E	4460205	2	110V GFI (ANSI Spec)	
708E	4460233	2	220V GFI (ANSI Spec)	
708E	See Note	2	ANSI Export Spec (Note: Not Available - Purchase Locally)	
708F		Ref	Connector, Female Options:	
708F	4460134	1	110V GFI (ANSI Spec)	
708F	4460701	1	220V GFI (ANSI Spec)	
708F	4460710	1	ANSI Export Spec	
708G	Not Required	0	Not Required	
708H	Not Required	0	Not Required	
708J	Not Required	0	Not Required	
708K	3960422	1	Gasket, Cover (ANSI Spec Only)	
709		Ref	7500W SKYPOWER GENERATOR INSTALLATION	
709	1001115398	Ref	60Hz and Caterpillar Engine	A

ITEM	PART NUMBER	QTY	DESCRIPTION	REV
709	1001115400	Ref	50Hz Spec and Caterpillar Engine	A
709	1001115388	Ref	60Hz and Deutz Engine	A
709	1001115394	Ref	50Hz Spec and Deutz Engine	A
709	0275257	Ref	60Hz Spec and GM Engine	D
		Ref	**Note: SkyPower Generator is Standard On ANSI and CSA Specs. Optional on All Other Specs.**	
709A		Ref	Receptacle, Female Twist-Lock Options:	
709A	4460958	1	60Hz Spec	
709A	See Note	NLA	50Hz Spec (Note: Not Available - Purchase Locally)	
709B		Ref	Gasket Options:	
709B	3960422	2	60Hz Spec	
709B	See Note	NLA	50Hz Spec (Note: Not Available - Purchase Locally)	
709C		Ref	Cover, Receptacle Options:	
709C	1001110873	1	60Hz Spec (Top Hinged Cover)	
709C	See Note	NLA	50Hz Spec (Note: Not Available - Purchase Locally)	
709D		Ref	Cover, Receptacle Options:	
709D	1001110872	1	60Hz Spec (Top Hinged Cover)	
709D	See Note	NLA	50Hz Spec (Note: Not Available - Purchase Locally)	
709E		Ref	Receptacle Options:	
709E	4460346	1	60Hz Spec	
709E	See Note	NLA	50Hz Spec (Note: Not Available - Purchase Locally)	
709F	4460051	1	Connector, Strain Relief	
709G	4460071	1	Connector, Strain Relief	
709H	4922925	1	Harness, Generator	
709J	See Note	NLA	Plug, Male - 6 Position (Note: Not Available - Purchase Locally)	
709J	See Note	NLA	Socket, Female (Note: Not Available - Purchase Locally)	
709K	4460225	1	Plug, Male - 6 Position	
709K	4460226	6	Socket, Female	
710		Ref	7500W SkyPower Generator Junction Box Components	
710	0861542	Ref	60Hz Spec	C
710	0861567	Ref	50Hz Specs	B
710A		Ref	Cable, Electrical 12/3	
710A	1060494	2 ft/.6m	60Hz Spec	
710A	See Note	2 ft/.6m	50Hz Spec (Note: Not Available - Purchase Locally)	
710B		Ref	Cable, Electrical 10/3	
710B	1060708	2.5 ft /.76m	60Hz Spec	
710B	See Note	2.5 ft /.76m	50Hz Spec (Note: Not Available - Purchase Locally)	
710C	1060343	1.5 ft /.46m	Cable, Electrical 10/4 (60Hz Spec Only)	
710D	4460425	2	Connector, Strain Relief	
710E		Ref	Component Options:	
710E	4460426	2	Connector, Strain Relief (60Hz Spec Only)	
710E	4460426	1	Connector, Strain Relief (50Hz Spec Only)	
710E	3520189	1	Plug (50Hz Spec Only)	
710F	1671092	1	Cover (60Hz Spec Only)	
710F	4460963	1	Connector (60Hz Spec Only)	
711		Ref	7500W Generator Electrical Diagram Components	
711	1001112586	Ref	Caterpillar and Deutz Engine Machines	A
711	4933349	Ref	GM Engine Machines	1-A

ITEM	PART NUMBER	QTY	DESCRIPTION	REV
711A		Ref	Generator Harness Options:	
711A	1001112587	1	Caterpillar and Deutz Engine Machines	A
711A	4923420	1	GM Engine Machines	1-A
711B	4460374	2	Plug, Sealed Relay	
711B	4460375	7	Terminal	
711C	4460967	1	Plug, Male - 3 Position	
711C	4460465	3	Socket, Female	
711D	2400060	1	Fuseholder	
711D	2400064	1	Fuse - 5Amp	
711E	4922641	1	Switch Harness	
711F	4460226	2	Socket, Female	
711G	4460742	1	Plug, Male - 2 Position (GM Engine Only)	
711G	4460743	2	Socket, Female (GM Engine Only)	
712	4933249	1	Floodlights Harness Components	2-A
712A	4460320	2	Plug, Male - 2 Position	
712A	4460227	4	Pin, Male	
712B	4922764	1	Floodlight Harness (Lights to Switch)	1-A
712C	4460424	2	Connector, Female - 2 Position	
712C	4460226	4	Socket, Female	
712D	4360232	1	Circuit Breaker - 15Amp	
712E	1060977	1	Cord, 2 Wire Coiled (Console Box Circuit Breaker to Switch)	
712F	4460425	1	Connector, Strain Relief	
712G	4922883	1	Harness, Console Box to Aux Relay	
712G	1060708	120 ft /36.6m	10/3 Cable	
713		Ref	Platform Worklights Components	
713A	2920140	2	Platform Worklights External Harness (Includes Light and Wire Only)	
713B	4460426	1	Connector, Strain Relief	
713C	2400070	1	Fuse	
713C	2400066	1	Holder, Fuse	
713D		Ref	Harness, Console Box to Connector Options:	
713D	4922873	1	Harness, Console Box to Connector 800S Harness (85ft/25.9m of 10/3 Cable p/n 1060708)	
713D	4922877	1	Harness, Console Box to Connector 860SJ Harness (92ft/28m of 10/3 Cable p/n 1060708)	
713E	4922874	1	Harness, Connector to Aux Relay	
713E	1060708	11 ft/3.4m	10/3 Cable	
713F	1001098234	1	Connector, Female - 3 Position (Platform Worklights Only)	
713G	1001098349	1	Connector, Male - 3 Position (Platform Worklights Only)	
714 to 714	Not Required	0	Not Required	
715	1001094509	1	Generator Hourmeter Harness	A
		Ref	**TOOLS**	
801	7002821	1	Crimper (For Wire to Pin/Socket Connections) (Not Shown)	
802	7002823	1	Extractor (For Removal of Pin/Socket from Connectors) (Not Shown)	
803	4460467	1	Extractor, Pin (Blue 16-18 Gauge) (For Removal of Pin/Socket from Connectors) (Not Shown)	
804	4460510	1	Extractor, Pin (Yellow 12-14 Gauge) (For Removal of Pin/Socket from Connectors) (Not Shown)	
805	7002828	1	Stripper, Wire (Not Shown)	
806	2901443	1	Analyzer Kit (Not Shown)	
806A	1600244	1	Analyzer	

ITEM	PART NUMBER	QTY	DESCRIPTION	REV
806B	1060633	1	Cable, Analyzer	1-A
806C	4460321	2	Plug, Male	
806C	4460226	8	Socket, Female	

SECTION 8 - DECALS

SECTION 8 - DECALS

FIGURE 8-1. DECAL INSTALLATION (ANSI SPEC) (Prior to SN 0300088933)

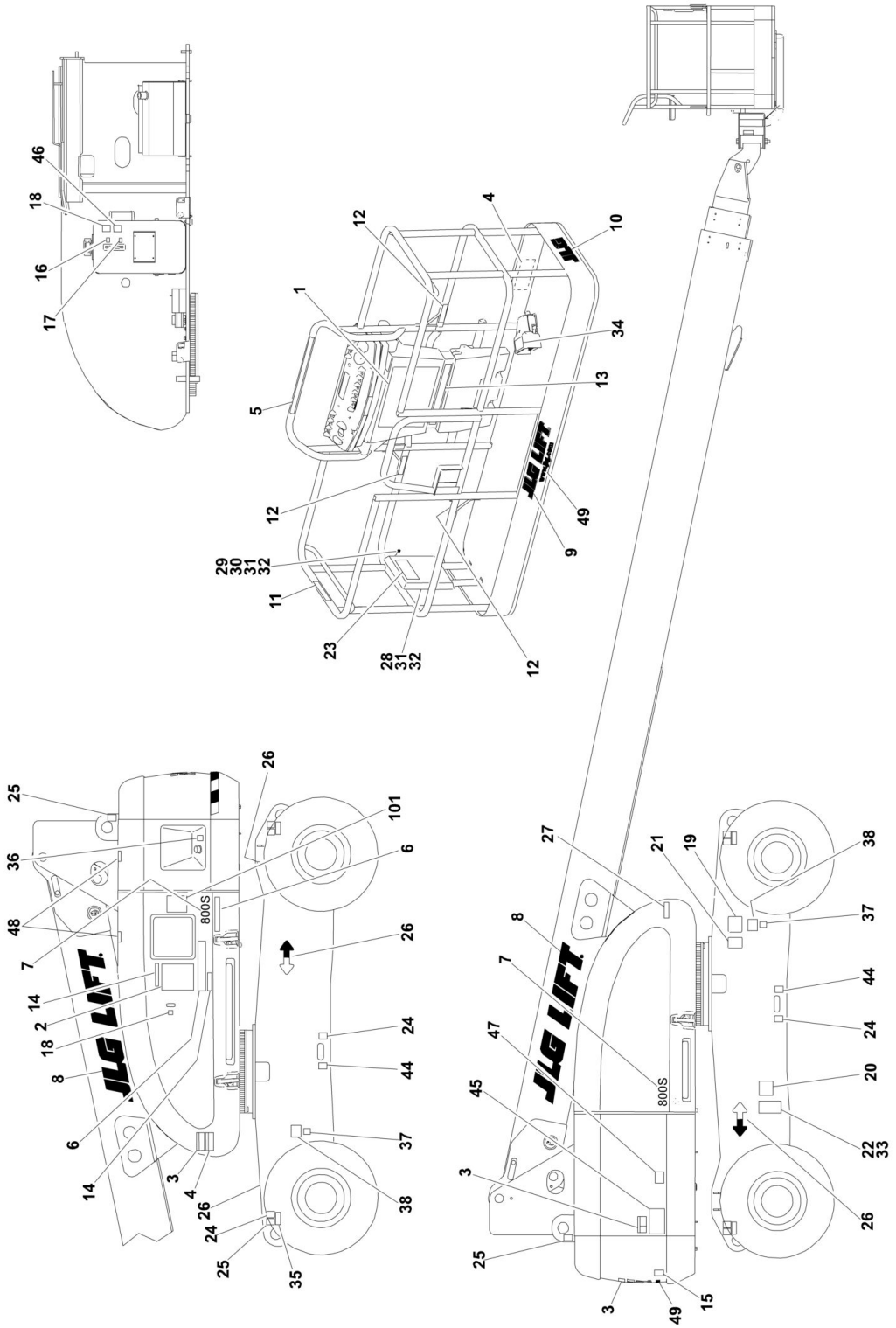

FIGURE 8-1. DECAL INSTALLATION (ANSI SPEC) (Prior to SN 0300088933)

ITEM	PART NUMBER	QTY	DESCRIPTION	REV
		Ref	**STANDARD DECAL INSTALLATIONS**	
	0270907	Ref	**Standard Decal Installations 800S (Prior to SN 0300067916)**	2
	0272533	Ref	**Standard Decal Installations 800S (SN 0300067916 through 0300088933)**	1
	0270908	Ref	**Standard Decal Installations 860SJ (Prior to SN 0300067916)**	2
	0272554	Ref	**Standard Decal Installations 860SJ (SN 0300067916 through 0300088933)**	1
	0271386	Ref	**JLG Logo Decals**	3
1	1703797	1	Decal - Danger/Warning	
2	1703798	1	Decal - Danger/Warning	
3	1703805	3	Decal - Danger/Electrocution	
4	1703804	3	Decal - Warning/Crushing	
5	1705015	1	Decal - Legend	
6	1703808	1	Decal - Legend	
7		Ref	Decal - Model Options:	
7	1704906	2	Decal - Model 800S	
7	1704907	2	Decal - Model 860SJ	
8	1702861	2	Decal - JLG Lift (8in)	
9	1702774	1	Decal - JLG Lift (3-1/2in)	
10	1702773	1	Decal - JLG (5in)	
11	1702868	2	Decal - - No Hands	
12	1704277	3	Decal - Attach Lanyard Here	
13		Ref	Decal - Capacity Options:	
13	1705088	2	Decal - Capacity 800S	
13	1704995	1	Decal - Capacity 860SJ	
14		Ref	Decal - Capacity Options:	
14	1705089	1	Decal - Capacity 800S	
14	1704996	1	Decal - Capacity 860SJ	
15	3251813	1	Decal - USA	
16	1701502	1	Decal - High Oil Level	
17	1701503	1	Decal - Low Oil Level	
18	1701504	2	Decal - Hydraulic Oil	
19	1702153	1	Decal - Inspection	
20	See Note	NSS	Decal - Bar Code (Note: Not Available for Purchase)	
21	1700584	1	Decal - Patent	
22	See Note	NSS	Nameplate - Serial Number (Note: Not Available for Purchase)	
23	1701509	1	Decal - Manual	
24	1702300	6	Decal - Tie Down /Lift	
25	1701500	4	Decal - Tie Down /Lift	
26	1701501	4	Decal- Arrow	
27		Ref	Nameplate Options:	
27	3251243	1	120V-60Hz	
27	3252507	1	220V-50/60Hz	
28	0860520	1	Box, Manual Storage	
29	1060279	1	Cable, Lanyard	
30	0641408	1	Bolt 1/4in-20NC x 1in	
31	4751400	6	Flatwasher 1/4in	
32	3311405	5	Locknut 1/4in-20NC	
33	3820001	4	Rivet	
34	3252347	1	Decal - Footswitch (Part of 4360031 Footswitch)	

SECTION 8 - DECALS

ITEM	PART NUMBER	QTY	DESCRIPTION	REV
35		Ref	Decal - Max Tire Load Options:	
35	1703475	4	Decal - Max Tire Load 800S	
35	1703482	4	Decal - Max Tire Load 860SJ	
36		Ref	Decal - Fuel	
36	1701542	1	Ford Engine Machines	
36	1701505	1	Deutz Engine Machines	
37		Ref	Decal - LPG Gas	
37	Not Required	0	Non-Dual Fuel Machines	
37	1701543	1	Dual Fuel Machines	
38		Ref	Decal - LP Gas Liquid withdrawal System	
38	Not Required	0	Non-Dual Fuel Machines	
38	1700818	1	Dual Fuel Machines	
44	1701499	4	Decal - No Lift	
45	3252781	1	Decal - Lift Capacity	
46	1704412	1	Decal - Hydraulic Oil Chart	
47	1704540	1	Decal - Storage Capacity	
48	1701691	4	Decal - No Step	
49	1704885	2	Decal - Website	
	0272341	Ref	**DECAL TIRE SEALANT INSTALLATION**	1-A
101	1705363	1	Decal - Tire Sealant	

SECTION 8 - DECALS

FIGURE 8-2. DECAL INSTALLATION (ANSI SPEC) (SN 0300088933 through 0300140000)

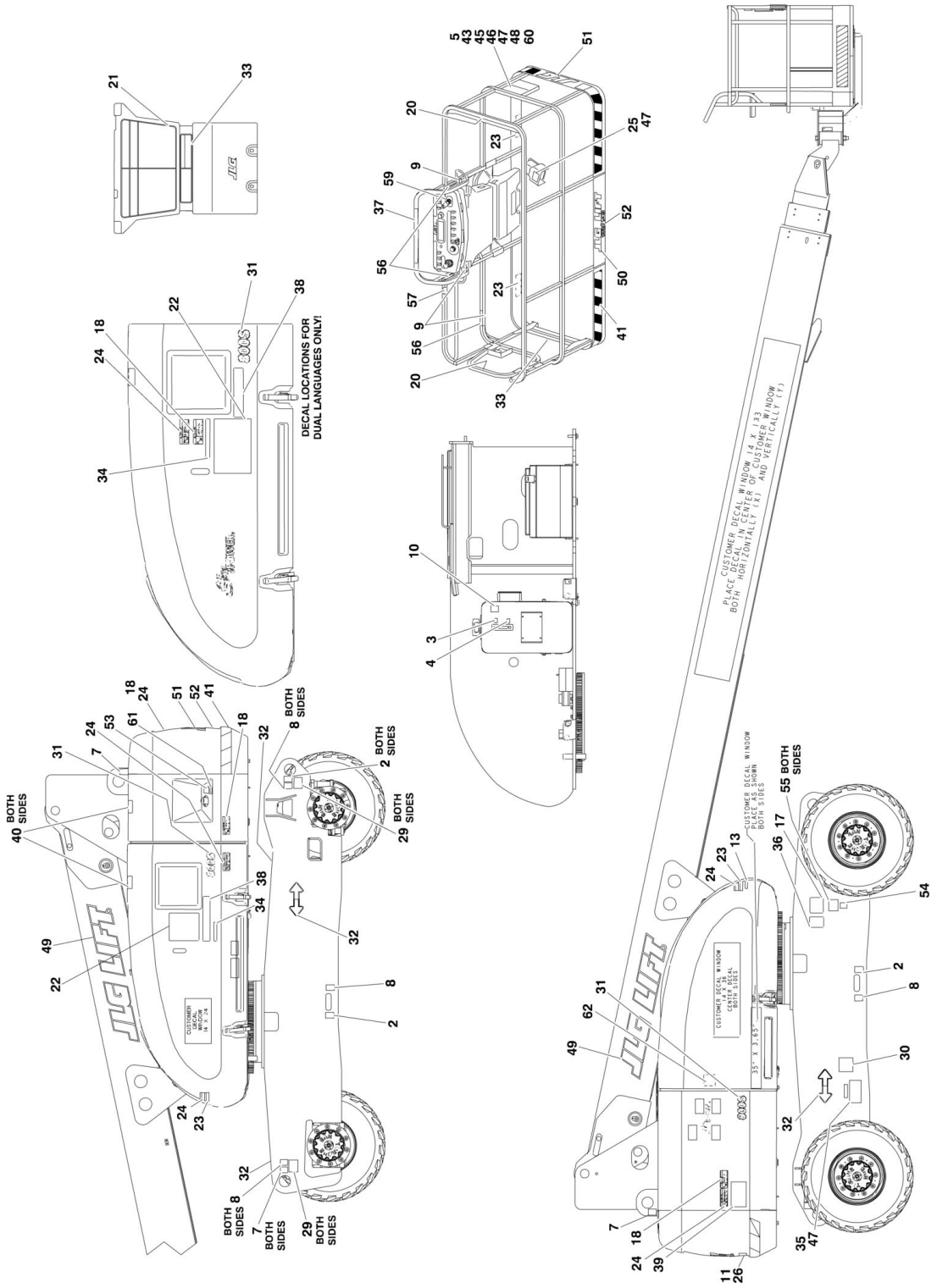

FIGURE 8-2. DECAL INSTALLATION (ANSI SPEC) (SN 0300088933 through 0300140000)

ITEM	PART NUMBER	QTY	DESCRIPTION	REV
		Ref	**STANDARD DECAL INSTALLATIONS**	
	0274499	Ref	**Standard Decal Installations 800S**	7
	0274500	Ref	**Standard Decal Installations 860SJ**	7
	0274518	Ref	**JLG Logo Decals**	1
2	1701499	4	Decal - No Lift	
3	1701502	1	Decal - High Oil Level **(SN 0300088933 through 0300134563)**	
4	1701503	1	Decal - Low Oil Level **(SN 0300088933 through 0300134563)**	
5	1701509	1	Decal - Manual	
7	1703811	4	Decal - Lift	
8	1703814	6	Decal - Tie Down	
9	1704277	4	Decal - Attach Lanyard Here	
10	1704412	1	Decal - Hydraulic Oil Chart	
13	3251243	1	Nameplate - 120V-60Hz	
17	1702153	1	Decal - Inspection **(SN 0300088933 through 0300134563)**	
18	1703953	4	Decal - Warning Crushing	
20	1702868	2	Decal - No Hands	
21	1703797	1	Decal - Warning/Danger	
22	1705336	1	Decal - Warning Inspection (MTB)	
23	1703804	4	Decal - Warning Crushing	
24	1703805	4	Decal - Danger Electrocution	
26	3251813	1	Decal - USA	
28	1703475	4	Decal - Max Tire Load (800S)	
28	1703482	4	Decal - Max Tire Load (860SJ)	
30	See Note	NSS	Decal - Bar Code (Note: Not Available for Purchase)	
31		Ref	Decal Options:	
31	1704906	2	Decal - 800S	
31	1704907	2	Decal - 860SJ	
32	1701501	4	Decal- Arrow	
33		Ref	Decal Capacity Options:	
33	1705088	2	Decal Capacity 800S - Decal - 500LBS Unrestricted Capacity	
33	1704995	2	Decal Capacity 860SJ - Decal - 500LBS Maximum Capacity	
34		Ref	Decal Capacity Options:	
34		Ref	Decal Capacity 800S - Decal - 500LBS Unrestricted Capacity:	
34	1705089	1	Decal Capacity **(SN 0300088933 through 0300100613)**	
34	1707016	1	Decal Capacity **(SN 0300100614 through 0300140000)**	
34		Ref	Decal Capacity 860SJ - Decal - 500LBS Maximum Capacity:	
34	1704996	1	Decal Capacity **(SN 0300088933 through 0300100613)**	
34	1707015	1	Decal Capacity **(SN 0300100614 through 0300140000)**	
35	See Note	NSS	Nameplate, Manufacturers (Note: Not Available for Purchase)	
36	1700584	1	Decal - Patent	
37		Ref	Decal - Legend Options:	
37	1705015	1	Decal - Legend **(SN 0300088933 through 0300137912)**	
37	1001108496	1	Decal - Legend **(SN 0300137913 through 0300140000)**	
38		Ref	Decal - Legend (MTB)	
38	1703808	1	Decal - Legend (MTB) **(SN 0300088933 through 0300099881)**	
38	1706941	1	Decal - Legend (MTB) **(SN 0300099882 through 0300140000)**	
39	3252781	1	Decal - Lift Diagram	
40	1701691	4	Decal - No Step	
43	0641408	1	Bolt 1/4in-20NC x 1in	
44	0860520	1	Box, Manual Storage	

SECTION 8 - DECALS

ITEM	PART NUMBER	QTY	DESCRIPTION	REV
45	1060279	1	Cable, Lanyard	
46	3311405	5	Locknut 1/4in	
47	3820001	2	Rivet	
48	4751400	10	Flatwasher 1/4in	
49	1702861	2	Decal - JLG Lift (8in Height)	
50	1702774	1	Decal - JLG Lift (3-1/2in Height)	
51	1702773	1	Decal - JLG (5in Height)	
52	1704885	2	Decal - Website	
53		Ref	Decal - Fuel	
53	1701505	1	Diesel	
53	1701542	1	Gas	
54	1701543	1	Decal - LP Gas (Ford/GM Engine Machines Only)	
55	1700818	2	Decal - LP Gas (Liquid) (Ford/GM Engine Machines Only)	
56	1703175	1	Decal - Lanyard Attach (GM Spec)	
57	1702962	1	Decal - Warning Prop (DSL)	
58	1702961	1	Decal - Warning Prop (Gas)	
59	1705351	1	Decal - Drive/Steer Instructions Only **(SN 0300137913 through 0300140000)**	
60	0641406	1	Bolt 1/4in-20NC x 3/4in **(SN 0300099882 through 0300140000)**	
61	1001108923	1	Decal - Low Sulfur Fuel (Caterpillar and Deutz Machines)	
62	1704972	1	Decal - Warning Explosion/Fire	

SECTION 8 - DECALS

FIGURE 8-3. DECAL INSTALLATION (COUNTRY SPEC) (Prior to SN 0300088933)

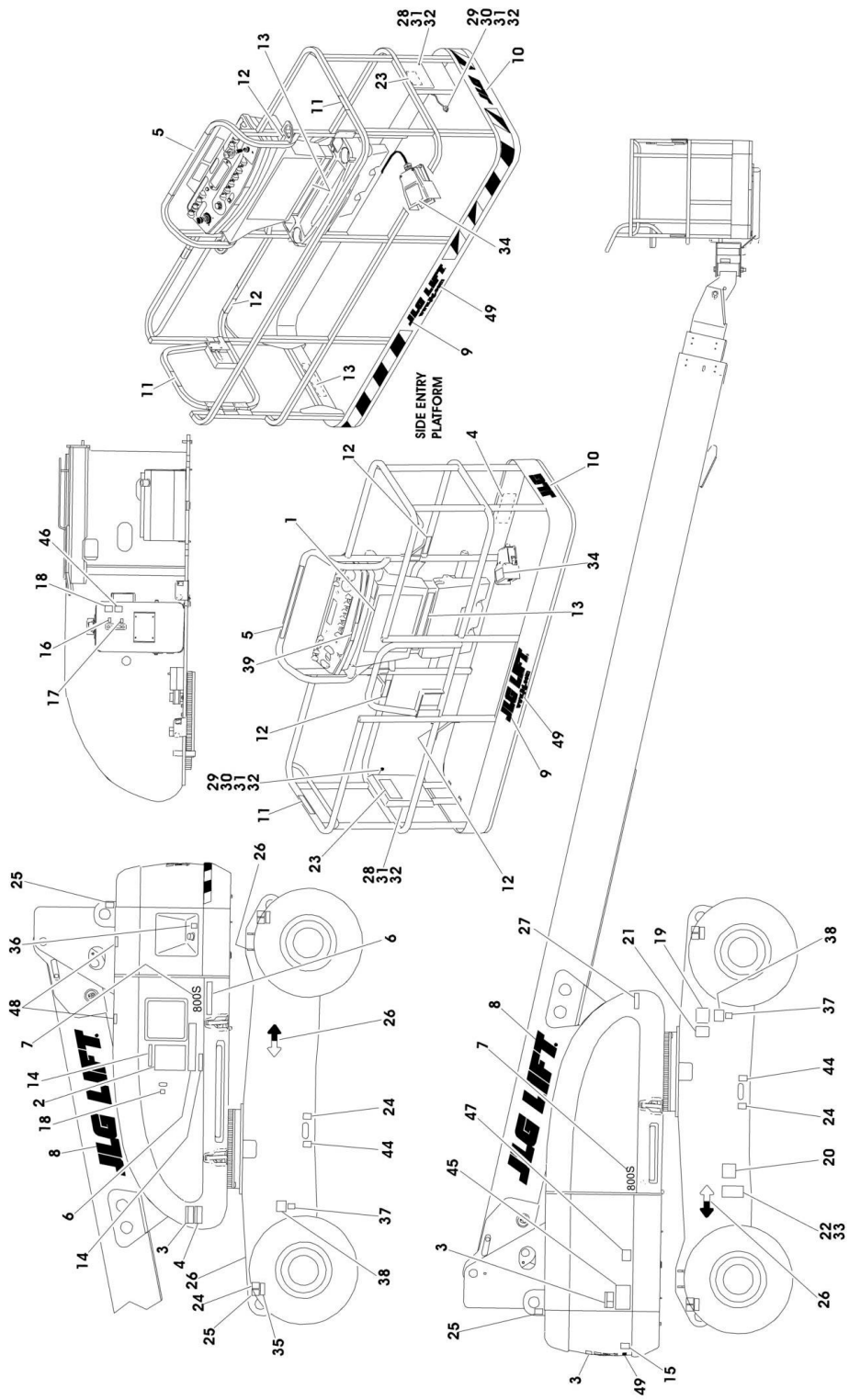

FIGURE 8-3. DECAL INSTALLATION (COUNTRY SPEC) (Prior to SN 0300088933)

ITEM	PART NUMBER	QTY	DESCRIPTION	REV
		Ref	**DECAL INSTALLATIONS**	
		Ref	**Decal Installations (Prior to SN 0300067916)**	
	0270933	Ref	**Decal Installations 800S - Brazil Spec (Spanish/Portuguese)**	1
	0270931	Ref	**Decal Installations 800S - Chinese Spec (English/Chinese)**	1
	0270929	Ref	**Decal Installations 800S - CSA Spec (English/French)**	1
	0270923	Ref	**Decal Installations 800S - Japanese Spec**	1
	0270925	Ref	**Decal Installations 800S - Korean Spec**	1
	0270927	Ref	**Decal Installations 800S - Latin America Spec (English/Spanish)**	1
	0270934	Ref	**Decal Installations 860SJ - Brazil Spec (Spanish/Portuguese)**	1
	0270932	Ref	**Decal Installations 860SJ - Chinese Spec (English/Chinese)**	1
	0270930	Ref	**Decal Installations 860SJ - CSA Spec (English/French)**	1
	0270924	Ref	**Decal Installations 860SJ - Japanese Spec**	1
	0270926	Ref	**Decal Installations 860SJ - Korean Spec**	1
	0270928	Ref	**Decal Installations 860SJ - Latin America Spec (English/Spanish)**	1
		Ref	**Decal Installations (SN 0300067916 through 0300088933)**	
	0272548	Ref	**Decal Installations 800S - Brazil Spec (Spanish/Portuguese)**	1
	0272547	Ref	**Decal Installations 800S - Chinese Spec (English/Chinese)**	2
	0272546	Ref	**Decal Installations 800S - CSA Spec (English/French)**	2
	0272540	Ref	**Decal Installations 800S - Japanese Spec**	2
	0272541	Ref	**Decal Installations 800S - Korean Spec**	2
	0270927	Ref	**Decal Installations 800S - Latin America Spec (English/Spanish)**	1
	0272568	Ref	**Decal Installations 860SJ - Brazil Spec (Spanish/Portuguese)**	1
	0272567	Ref	**Decal Installations 860SJ - Chinese Spec (English/Chinese)**	1
	0272566	Ref	**Decal Installations 860SJ - CSA Spec (English/French)**	2
	0272561	Ref	**Decal Installations 860SJ - Japanese Spec**	2
	0272562	Ref	**Decal Installations 860SJ - Korean Spec**	2
	0270928	Ref	**Decal Installations 860SJ - Latin America Spec (English/Spanish)**	1
	0271386	Ref	**JLG Logo Decals**	3
1		Ref	Decal - Danger/Warning Options:	
1	1703928	1	Brazil Spec (Spanish/Portuguese)	
1	1703925	1	Chinese Spec	
1	1703924	1	CSA Spec	
1	1703926	1	Japanese Spec	
1	1703927	1	Korean Spec	
1	1703923	1	Latin American Spec	
2		Ref	Decal - Danger/Warning Options:	
2	1703934	1	Brazil Spec (Spanish/Portuguese)	
2	1703931	1	Chinese Spec	
2	1703930	1	CSA Spec	
2	1703932	1	Japanese Spec	
2	1703933	1	Korean Spec	
2	1703929	1	Latin American Spec	
3		Ref	Decal - Danger Electrocution Options:	
3	1703940	3	Brazil Spec (Spanish/Portuguese)	
3	1703937	3	Chinese Spec	
3	1703936	3	CSA Spec	

SECTION 8 - DECALS

ITEM	PART NUMBER	QTY	DESCRIPTION	REV
3	1703938	3	Japanese Spec	
3	1703939	3	Korean Spec	
3	1703935	3	Latin American Spec	
4		Ref	Decal - Warning/Crushing	
4	1703952	3	Brazil Spec (Spanish/Portuguese)	
4	1703949	3	Chinese Spec	
4	1703948	3	CSA Spec	
4	1703950	3	Japanese Spec	
4	1703951	3	Korean Spec	
4	1703947	3	Latin American Spec	
5		Ref	Decal - Legend Options:	
5	Not Required	0	Brazil/Chinese/Japanese/Korean Spec	
5	1705015	1	CSA/Latin America Spec	
6		Ref	Decal - Legend Options:	
6	Not Required	0	Brazil/Chinese/Japanese/Korean Spec	
6	1703808	1	CSA/Latin American Spec	
7		Ref	Decal - Model Options:	
7	1704906	2	Decal - Model 800S	
7	1704907	2	Decal - Model 860SJ	
8	1702861	2	Decal - JLG Lift (8in)	
9	1702774	1	Decal - JLG Lift (3 1/2in)	
10	1702773	1	Decal - JLG (5in)	
11		Ref	Decal - No Hands Options:	
11	1704002	2	Brazil Spec (Spanish/Portuguese)	
11	Not Required	0	Chinese/Japanese/Korean Spec	
11	1704000	2	CSA Spec	
11	1704001	2	Latin American Spec	
12	1704277	3	Decal - Attach Lanyard	
13		Ref	Decal - Capacity Options:	
13		Ref	Decal - Capacity 800S	
13	1704100	1	Brazil Spec (Spanish/Portuguese)	
13	1704101	1	Chinese Spec	
13	1704099	1	CSA Spec	
13	1704102	1	Japanese Spec	
13	1704103	1	Korean Spec	
13	1704098	1	Latin American Spec	
13	1703996	1	Decal - Capacity 860SJ	
14		Ref	Decal - Capacity Options:	
14		Ref	Decal - Capacity 800S	
14	1704108	1	Brazil Spec (Spanish/Portuguese)	
14	1704109	1	Chinese Spec	
14	170417	1	CSA Spec	
14	1704110	1	Japanese Spec	
14	1704111	1	Korean Spec	
14	1704106	1	Latin American Spec	
14	1704112	1	Decal - Capacity 860SJ	
15		Ref	Decal - USA Options:	
15	3251813	1	Brazil/CSA/Latin American Spec	
15	Not Required	0	Chinese/Japanese/Korean Spec	
16	1701502	1	Decal - High Oil Level	
17	1701503	1	Decal - Low Oil Level	

ITEM	PART NUMBER	QTY	DESCRIPTION	REV
18	1701504	2	Decal - Hydraulic Oil	
19		Ref	Decal - Inspection Options:	
19	1704008	1	Brazil Spec	
19	1704006	1	CSA Spec	
19	1704007	1	Latin American Spec	
19	Not Required	0	Chinese/Japanese/Korean Spec	
20	See Note	NSS	Decal - Bar Code (Note: Not Available for Purchase)	
21	1700584	1	Decal - Patent	
22	See Note	NSS	Nameplate - Serial Number (Note: Not Available for Purchase)	
23	1701509	1	Decal - Manual	
24	1702300	6	Decal - Tie Down /Lift	
25	1701500	4	Decal - Tie Down /Lift	
26	1701501	4	Decal - Arrow	
27		Ref	Decal Options:	
27	3251243	1	120V-60Hz - Brazil/CSA/Latin American Spec	
27	3252507	1	220V-50/60Hz - Brazil/CSA/Latin American Spec	
27	Not Required	0	Chinese/Japanese/Korean Spec	
28	0860520	1	Box, Manual Storage	
29	1060279	1	Cable, Lanyard	
30	0641408	1	Bolt 1/4in-20NC x 1in	
31	4751400	6	Flatwasher 1/4in	
32	3311405	5	Locknut 1/4in-20NC	
33	3820001	8	Rivet	
34		Ref	Decal - Footswitch Options:	
34	1703985	1	Brazil Spec	
34	1703982	1	Chinese Spec	
34	1703984	1	CSA Spec	
34	1703980	1	Japanese Spec	
34	1703981	1	Korean Spec	
34	1703983	1	Latin American Spec	
35		Ref	Decal - Max Tire Load Options:	
35	1703475	4	Decal - Max Tire Load 800S	
35	1703482	4	Decal - Max Tire Load 860SJ	
36		Ref	Decal - Fuel Options:	
36	1701542	1	Ford Engine Machines	
36	1701505	1	Deutz Engine Machines	
37		Ref	Decal - LPG Gas	
37	Not Required	0	Non-Dual Fuel Machines	
37	1701543	1	Dual Fuel Machines	
38		Ref	Decal - LP Gas Liquid withdrawal System	
38	Not Required	0	Non-Dual Fuel Machines	
38	1700818	1	Dual Fuel Machines (English Language)	
38	1704271	1	Dual Fuel Machines (CSA Spec)	
38	1702720	1	Dual Fuel Machines (Spanish Language)	
39		Ref	Decal - CSA Options:	
39	3252221	1	CSA Spec **(Prior to SN 0300069447)**	
39	1705514	1	CSA Spec **(SN 0300069447 through 0300088933)**	
39	Not Required	0	Brazil/Chinese/Japanese/Korean/Latin American Spec	
44	1701499	4	Decal - No Lift	
45	3252781	1	Decal - Lift Capacity	
46	1704412	1	Decal - Hydraulic Oil Chart	

SECTION 8 - DECALS

ITEM	PART NUMBER	QTY	DESCRIPTION	REV
47	1704540	1	Decal - Storage Capacity	
48	1701691	4	Decal - No Step	
49	1704885	2	Decal - Website	

SECTION 8 - DECALS

FIGURE 8-4. DECAL INSTALLATION (COUNTRY SPEC) (SN 0300088933 through 0300140000)

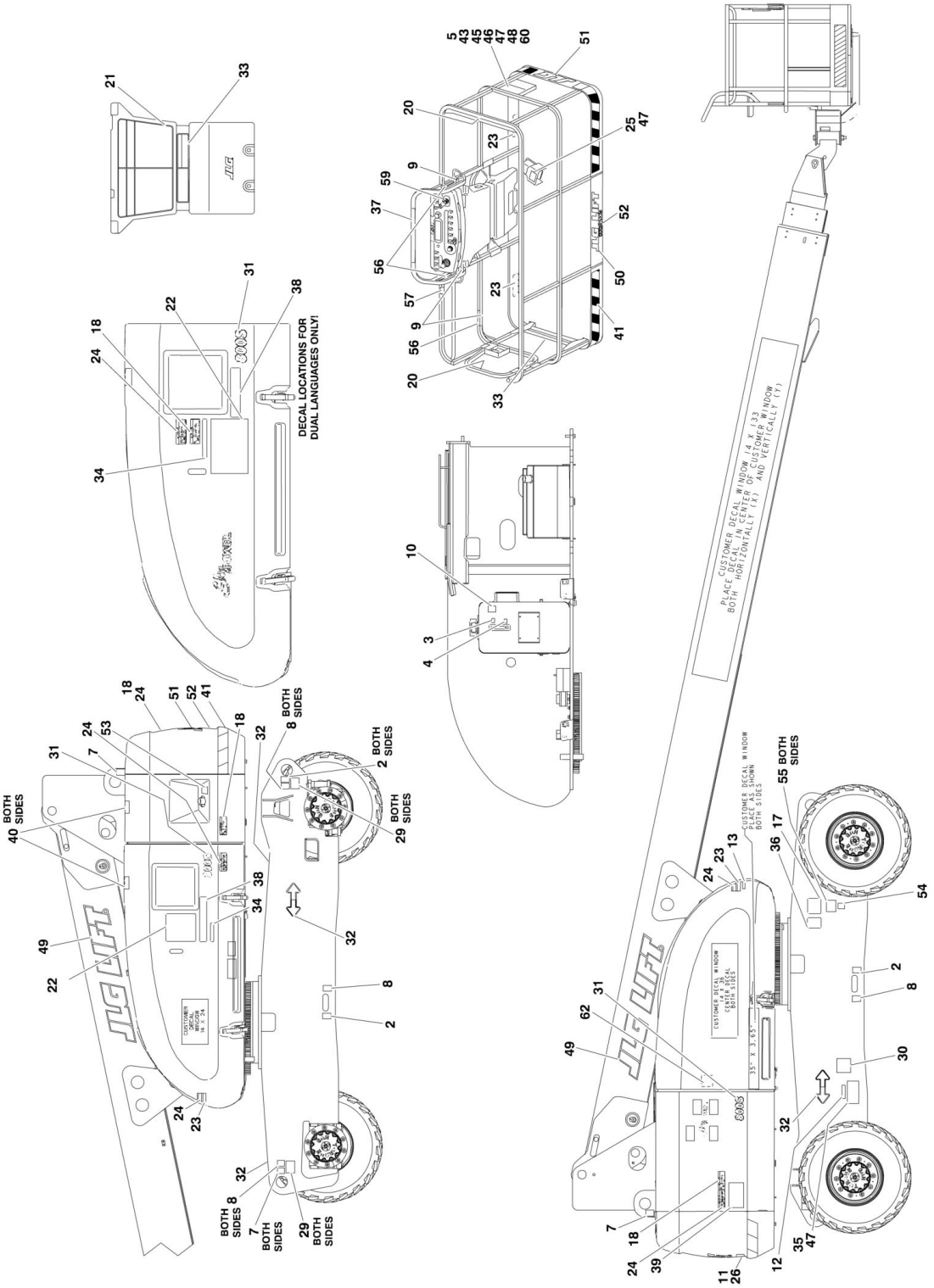

FIGURE 8-4. DECAL INSTALLATION (COUNTRY SPEC) (SN 0300088933 through 0300140000)

ITEM	PART NUMBER	QTY	DESCRIPTION	REV
		Ref	**DECAL INSTALLATIONS**	
	0274505	Ref	**Decal Installations 800S Brazil Spec (English/Portuguese)**	7
	0274503	Ref	**Decal Installations 800S Chinese Spec (English/Chinese)**	6
	0274507	Ref	**Decal Installations 800S CSA Spec (English/French)**	6
	0274511	Ref	**Decal Installations 800S Japanese Spec (English/Japanese)**	6
	0274501	Ref	**Decal Installations 800S Korean Spec (English/Korean)**	6
	0274513	Ref	**Decal Installations 800S Latin America Spec (English/Spanish)**	6
	0274506	Ref	**Decal Installations 860SJ Brazil Spec (English/Portuguese)**	8
	0274504	Ref	**Decal Installations 860SJ Chinese Spec (English/Chinese)**	7
	0274508	Ref	**Decal Installations 860SJ CSA Spec (English/French)**	7
	0274512	Ref	**Decal Installations 860SJ Japanese Spec (English/Japanese)**	7
	0274502	Ref	**Decal Installations 860SJ Korean Spec (English/Korean)**	7
	0274514	Ref	**Decal Installations 860SJ Latin America Spec (English/Spanish)**	7
	0274518	Ref	**JLG Logo Decals**	1
2	1701499	4	Decal - No Tie Down /Lift	
3	1701502	1	Decal - High Oil Level **(SN 0300088933 through 0300134563)**	
4	1701503	1	Decal - Low Oil Level **(SN 0300088933 through 0300134563)**	
5	1701509	1	Decal - Manual	
6	Not Required	0	Not Required	
7	1703811	4	Decal - Tie Down /Lift	
8	1703814	6	Decal - Tie Down	
9	1704277	3	Decal - Attach Lanyard	
10	1704412	1	Decal - Hydraulic Oil Chart	
11	Not Required	0	Not Required	
12		Ref	Decal - CSA (Booms)	
12	Not Required	0	Brazil/ Chinese/ Japanese/ Korean/ Latin American Spec	
12	1705514	1	CSA Specs	
13		Ref	Decal Options:	
13	Not Required	0	Brazil/Chinese/Korean Spec	
13	3251243	1	120V-60Hz - CSA/Japanese/Latin American Spec	
17		Ref	Decal - Inspection Options:	
17	1705901	1	Brazil Spec (English/Portuguese)	
17	Not Required	0	Chinese/Japanese/Korean Spec	
17	1704006	1	CSA Spec	
17	1704007	1	Latin American Spec	
18		Ref	Decal - Warning Crushing (Rotate) Options:	
18	1705903	1	Brazil Spec (English/Portuguese)	
18	1703943	7	Chinese Spec	
18	1703942	7	CSA Spec	
18	1703944	6	Japanese Spec	
18	1703945	6	Korean Spec	
18	1703941	7	Latin American Spec	
20		Ref	Decal - No Hands Options:	
20	1705967	2	Brazil Spec (English/Portuguese)	
20		Ref	Chinese Spec (Traditional)	
20	1705968	2	USA Built Machines **(Prior to SN 0300137104)**	
20	1001116846	2	USA Built Machines **(SN 0300137104 through 0300140000)**	
20	1705968	2	Chinese Spec (Simplified)	

SECTION 8 - DECALS

ITEM	PART NUMBER	QTY	DESCRIPTION	REV
20	1704000	2	CSA Spec	
20	Not Required	0	Japanese Spec	
20	1705969	2	Korean Spec	
20	1704001	2	Latin American Spec	
21		Ref	Decal - Warning/Danger (PLF) Options:	
21	1705895	1	Brazil Spec (English/Portuguese)	
21	1703925	1	Chinese Spec	
21	1703924	1	CSA Spec	
21	1703926	1	Japanese Spec	
21	1703927	1	Korean Spec	
21	1703923	1	Latin American Spec	
22		Ref	Decal - Warning Inspection (MTB) Options:	
22	1705896	1	Brazil Spec (English/Portuguese)	
22		Ref	Chinese Spec (Traditional)	
22	1705348	1	USA Built Machines **(Prior to SN 0300137104)**	
22	1001116849	1	USA Built Machines **(SN 0300137104 through 0300140000)**	
22	1705348	1	Chinese Spec (Simplified)	
22	1705347	1	CSA Spec	
22	1705344	1	Japanese Spec	
22	1705345	1	Korean Spec	
22	1705917	1	Latin American Spec	
23		Ref	Decal - Warning Crushing (Down) Options:	
23	1705898	6	Brazil Spec (English/Portuguese)	
23	1703949	6	Chinese Spec	
23	1703948	6	CSA Spec	
23	1703950	6	Japanese Spec	
23	1703951	6	Korean Spec	
23	1703947	6	Latin American Spec	
24		Ref	Decal - Danger Electrocution Options:	
24	1705897	5	Brazil Spec (English/Portuguese)	
24		Ref	Chinese Spec (Traditional)	
24	1703937	5	USA Built Machines **(Prior to SN 0300137104)**	
24	1001116851	5	USA Built Machines **(SN 0300137104 through 0300140000)**	
24	1703937	5	Chinese Spec (Simplified)	
24	1703936	5	CSA Spec	
24	1703938	5	Japanese Spec	
24	1703939	5	Korean Spec	
24	1703935	5	Latin American Spec	
25		Ref	Decal - Foot Switch Options:	
25	1705902	1	Brazil Spec (English/Portuguese)	
25	1703982	1	Chinese Spec	
25	1703984	1	CSA Spec	
25	1703980	1	Japanese Spec	
25	1703981	1	Korean Spec	
25	1703983	1	Latin American Spec	
26		Ref	Decal - USA Options:	
26	3251813	1	Brazil/Chinese/CSA/Japanese/Korean/Latin American Spec	
26	Not Required	0	Korean Spec	
28	1703475	4	Decal - Max Tire Load (800S)	
28	1703482	4	Decal - Max Tire Load (860SJ)	
30	See Note	NSS	Decal - Bar Code (Note: Not Available for Purchase)	

ITEM	PART NUMBER	QTY	DESCRIPTION	REV
31		Ref	Decal Options:	
31	1704906	2	Decal - 800S	
31	1704907	2	Decal - 860SJ	
32	1701501	4	Decal- Arrow	
33		Ref	Decal Capacity Options:	
33		Ref	Decal Capacity 800S - Decal - 500LBS Unrestricted Capacity	
33	1706380	2	Brazil Spec (English/Portuguese)	
33	1704101	2	Chinese Spec	
33	1704099	2	CSA Spec	
33	1704102	2	Japanese Spec	
33	1704103	2	Korean Spec	
33	1704098	2	Latin American Spec	
33		Ref	Decal Capacity 860SJ - Decal - 500LBS Maximum Capacity	
33		Ref	Decal Capacity **(SN 0300088933 through 0300100613)**	
33	1703996	2	All Spec	
33		Ref	Decal Capacity **(SN 0300100614 through 0300110580)**	
33	1707057	2	Brazil Spec (English/Portuguese)	
33	1707060	2	Chinese Spec	
33	1707055	2	CSA Spec	
33	1707059	2	Japanese Spec	
33	1707058	2	Korean Spec	
33	1707056	2	Latin American Spec	
33		Ref	Decal Capacity **(SN 0300110581 through 0300140000)**	
33	1001094804	2	Brazil Spec (English/Portuguese)	
33	1001094800	2	Chinese Spec	
33	1001094806	2	CSA Spec	
33	1001094809	2	Japanese Spec	
33	1001094798	2	Korean Spec	
33	1001094802	2	Latin American	
34		Ref	Decal Capacity Options:	
34		Ref	Decal Capacity 800S - Decal - 500LBS Unrestricted Capacity	
34		Ref	Decal Capacity **(SN 0300088933 through 0300100613)**	
34	1706381	1	Brazil Spec (English/Portuguese)	
34	1704109	1	Chinese Spec	
34	1704107	1	CSA Spec	
34	1704110	1	Japanese Spec	
34	1704111	1	Korean Spec	
34	1704106	1	Latin American Spec	
34		Ref	Decal Capacity **(SN 0300100614 through 0300140000)**	
34	1707051	1	Brazil Spec (English/Portuguese)	
34	1707045	1	Chinese Spec	
34	1707046	1	CSA Spec	
34	1707053	1	Japanese Spec	
34	1707043	1	Korean Spec	
34	1707048	1	Latin American Spec	
34		Ref	Decal Capacity 860SJ - Decal - 500LBS Maximum Capacity	
34		Ref	Decal Capacity **(SN 0300088933 through 0300100613)**	
34	1704112	1	All Spec	
34		Ref	Decal Capacity **(SN 0300100614 through 0300110580)**	
34	1707052	1	Brazil Spec (English/Portuguese)	
34	1707044	1	Chinese Spec	

SECTION 8 - DECALS

ITEM	PART NUMBER	QTY	DESCRIPTION	REV
34	1707047	1	CSA Spec	
34	1707054	1	Japanese Spec	
34	1707042	1	Korean Spec	
34	1707049	1	Latin American Spec	
34		Ref	Decal Capacity **(SN 0300110581 through 0300140000)**	
34	1001094805	1	Brazil Spec (English/Portuguese)	
34	1707044	1	Chinese Spec	
34	1001094808	1	CSA Spec	
34	1001094810	1	Japanese Spec	
34	1001094799	1	Korean Spec	
34	1001094803	1	Latin American Spec	
35	See Note	NSS	Nameplate, Manufacturers (Note: Not Available for Purchase)	
36	1700584	1	Decal - Patent	
37		Ref	Decal - Legend Options:	
37	1705015	1	Decal - Legend **(SN 0300088933 through 0300137912)**	
37	1001108496	1	Decal - Legend **(SN 0300137913 through 0300140000)**	
38		Ref	Decal - Legend (MTB)	
38	1703808	1	Decal - Legend (MTB) **(SN 0300088933 through 0300099881)**	
38	1706941	1	Decal - Legend (MTB) **(SN 0300099882 through 0300140000)**	
39	3252781	1	Decal - Lift Diagram	
40	1701691	4	Decal - No Step	
43	0641408	1	Bolt 1/4in-20NC x 1in	
44	0860520	1	Box, Manual Storage	
45	1060279	1	Cable, Lanyard	
46	3311405	5	Locknut 1/4in	
47	3820001	2	Rivet	
48	4751400	10	Flatwasher 1/4in	
49	1702861	2	Decal - JLG Lift (8in Height)	
50	1702774	1	Decal - JLG Lift (3-1/2in Height)	
51	1702773	1	Decal - JLG (5in Height)	
52	1704885	2	Decal - Website	
53		Ref	Decal - Fuel	
53	1701505	1	Diesel	
53	1701542	1	Gas	
54	1701543	1	Decal - LP Gas (Ford Engine Machines Only)	
55	1700818	2	Decal - LP Gas (Liquid) (Ford Engine Machines Only)	
56		Ref	Decal - Lanyard Attach (GM Spec)	
56	Not Required	0	Brazil/Chinese/Japanese/Korean/Latin American Spec	
56	1703175	1	CSA Spec	
59		Ref	Decal - Drive/Steer Instructions Options Only: **(SN 0300137913 through 0300140000)**	
59	1705905	1	Brazil Spec (English/Portuguese)	
59	1705430	1	Chinese Spec	
59	1705429	1	CSA Spec	
59	1705426	1	Japanese Spec	
59	1705427	1	Korean Spec	
59	1705910	1	Latin American Spec	
60	0641406	1	Bolt 1/4in-20NC x 3/4in **(SN 0300099882 through 0300140000)**	
62		Ref	Decal - Warning Explosion/Fire Options:	
62	1706059	1	Brazil Spec (English/Portuguese)	1
62	1706060	1	Chinese Spec	
62	1706064	1	CSA Spec	

ITEM	PART NUMBER	QTY	DESCRIPTION	REV
62	1706062	1	Japanese Spec	
62	1706061	1	Korean Spec	
62	1706063	1	Latin American Spec	

SECTION 9 - RECOMMENDED SERVICE PARTS STOCK

SECTION 9 - RECOMMENDED SERVICE PARTS STOCK

FIGURE 9-1. MODEL 800S/860SJ STANDARD PARTS

ITEM	PART NUMBER	QTY	DESCRIPTION	REV
		Ref	**Note: The following list will service one machine (built to current production per date on the front cover) with emergency repair parts which can be installed in the field. Parts from the list should be replaced when inventory is depleted to keep service parts stock supplied. For further information, contact your JLG dealer or the JLG Industries Parts Department.**	
		Ref	**STANDARD PARTS**	
	2120210	12	Element, Filter	
	7012944	1	Coil	
	7012943	1	Coil	
	7017451	1	Coil	
	70000582	1	Coil	
	7012664	1 doz	Element, Air Cleaner	
	3740067	1	Relay	
	3740080	1	Relay	
	7007496	1	Coil	
	7024444	3	Breather, Hydraulic Tank	
	4360517	1	Switch, Proximity	
	3740049	1	Relay	
	4360328	1	Switch, Toggle	
	4360469	1	Switch, Key	
	2860030	1	Key, Replacement	
	4360475	1	Switch, Mushroom	
	4360476	1	Contact, Switch Block	
	4360544	1	Switch, Level Sensor	
	2940074	1	Latch	
	4360031	1	Footswitch	
	4360330	1	Switch, Toggle	
	4360331	1	Switch, Toggle	
	4360387	1	Switch, Push Button	
	1001129555	1	Controller (Lift and Swing)	
	1001212415	1	Controller (Drive and Steer)	
	4360506	1	Switch, Proximity	

SECTION 9 - RECOMMENDED SERVICE PARTS STOCK

FIGURE 9-2. MODEL 800S/860SJ VARIABLE PARTS

ITEM	PART NUMBER	QTY	DESCRIPTION	REV
		Ref	**Note: The following list will service one machine (built to current production per date on the front cover) with emergency repair parts which can be installed in the field. Parts from the list should be replaced when inventory is depleted to keep service parts stock supplied. For further information, contact your JLG dealer or the JLG Industries Parts Department.**	
		Ref	**VARIABLE PARTS**	
	7026811	1 doz	Filter, Oil (Caterpillar Engine Machines)	
	7026830	1 doz	Filter, Fuel (Caterpillar Engine Machines)	
	1001112067	1	Module, Engine Control (Caterpillar Engine Machines)	
	7016331	1 doz	Filter, Oil (Deutz Engine Machines)	
	7016328	1 doz	Filter, Fuel (Deutz Engine Machines)	
	7027795	1	Module, Engine Control (Deutz Engine Machines)	
	7021868	1 doz	Filter, Oil (Ford Engine Machines)	
	7022135	1 doz	Filter, Fuel (Ford Engine Machines)	
	1600374	1	Module, EPM (Ford Engine Machines)	
	7027965	1 doz	Filter, Oil (GM Engine Machines)	
	7027972	1 doz	Filter, Fuel (GM Engine Machines)	
	70002895	1	Module, Engine Control (GM Engine Machines)	
	1001103667	1	Module, Ground Control (Caterpillar/Deutz/GM Engine)	
	4360578	1	Switch, Limit	
	3740080	1	Relay (Machine with Generator Option)	
	4360336	1	Switch, Toggle (Machines with Generator Option)	
	4360070	1	Breaker, Circuit (Machines with SkyPower)	
	2400064	2	Fuse - 5Amp (Machines with SkyPower)	
	7024369	1	Powertrack Repair Section	
	7024370	1	Powertrack Mounting Bracket Kit	
	4360522	1	Switch, Push Button (Machines with Headlights Option)	
	4360336	1	Switch, Toggle (Machines with Dual Fuel Option)	
	4360328	1	Switch, Toggle (860SJ Only)	
	1001110701	1	Module, Controller	
	4360057	1	Switch, Limit	
	4360232	1	Breaker, Circuit (Machines with Platform Worklights)	
	3990010	2	Diode (Machines with Generator Option)	
	2400070	2	Fuse (Machines with Platform Worklights)	
	70004318	2	Fuse 5Amp (Caterpillar Engine Machines)	
	70004319	2	Fuse 10Amp (Caterpillar Engine Machines)	
	70004317	1	Relay 25Amp (Caterpillar Engine Machines)	
	70004316	1	Relay (Caterpillar Engine Machines)	

SECTION 10 - SPECIAL OPTIONS

SECTION 10 - SPECIAL OPTIONS

FIGURE 10-1. SPECIAL OPTIONS

ITEM	PART NUMBER	QTY	DESCRIPTION	REV
		Ref	**Note: This list is to accommodate machines ordered with special equipment. Options may not be applicable to all models. For more specific parts information contact JLG Parts Department.**	
		Ref	**MISCELLANEOUS SPECIAL OPTIONS**	
	1340061	Ref	**Air Cleaner with Dust Evacuator Valve**	
	0271472	Ref	**Air Line at Platform Installation - 800S**	
	1001091712	Ref	**Air Line at Platform Installation - 800S (With Arctic Package)**	
	0271473	Ref	**Air Line at Platform Installation - 860SJ**	
	1001091713	Ref	**Air Line at Platform Installation - 860SJ (With Arctic Package)**	
		Ref	**Bellows Installations**	
	0271476	Ref	**Bellows Installations 800S Boom Bellows**	
	0271477	Ref	**Bellows Installations 860SJ Boom Bellows**	
	0258757	Ref	**Fixed Axle with 2WS Frame Bellows**	
	0258759	Ref	**Fixed Axle with 4WS Frame Bellows**	
	0258387	Ref	**Oscillating Axle with 2WS Frame Bellows**	
	0258758	Ref	**Oscillating Axle with 4WS Frame Bellows**	
		Ref	**Boom Rope Service Kits**	
	1001111231	Ref	**Boom Rope Service Kit (800S)**	
	1001197240	Ref	**Boom Rope Service Kit (860SJ)**	
	2910888	Ref	**Boom Wear Pad Kit**	
	0271448	Ref	**Boom Wiper Installation**	
	0256789	Ref	**Camera Mount Assembly**	
	0272057	Ref	**Chassis Flood Lights Installation**	
		Ref	**ClearSky (Telematics) Installation (Factory Installed)**	
		Ref	**Note: Refer to Manual Supplement p/n 3128499 for available replacement parts.**	
		Ref	**ADE Machines**	
	1001102841	Ref	**ANSI Spec**	
	1001102842	Ref	**ANSI Export and Japanese Specs**	
	1001104985	Ref	**CSA Spec**	
		Ref	**ADE/UGM Machines**	
	1001112990	Ref	**ANSI Spec**	
	1001112991	Ref	**ANSI Export and Japanese Specs**	
	1001112992	Ref	**CSA Spec**	
		Ref	**ClearSky (Telematic) Kits (Dealer Installed)**	
		Ref	**ANSI Spec**	
	1001117251	Ref	**Pre-UGM**	
	1001119939	Ref	**UGM**	
		Ref	**Australian Spec**	
	1001139132	Ref	**Pre-UGM**	
	1001139151	Ref	**UGM**	
		Ref	**CSA Spec**	
	1001117258	Ref	**Pre-UGM**	
	1001119947	Ref	**UGM**	
		Ref	**Cold Weather Start Kits**	
	0273575	Ref	**Caterpillar Engine Machines**	
	0256060	Ref	**Deutz Engine Machines (Ether)**	
		Ref	**Deutz Engine Machines (Glow Plugs) Options:**	

ITEM	PART NUMBER	QTY	DESCRIPTION	REV
	0271333	Ref	**Deutz Engine Machines (Glow Plugs) (Prior to SN 0300073336)**	
	0271912	Ref	**Deutz Engine Machines (Glow Plugs) (SN 0300073336 through 0300140000)**	
	0255386	Ref	**Ford Engine Machines**	
	0275262	Ref	**GM Engine Machines**	
		Ref	**Decal Installations**	
	1001116597	Ref	Decal - ClearSky (ANSI Spec)	
	1001116598	Ref	Decal - ClearSky (CSA Spec)	
	0257195	Ref	Decal - Government Warranty Installation	
	1703175	1	Decal - Lanyard Attach (GM K-1 Spec)	
	1702962	1	Decal - Prop 65 Warning (Diesel Machines) (California Spec)	
	1702961	1	Decal - Prop 65 Warning (Gasoline Machines) (California Spec)	
	0274528	Ref	Decals - Head and Engquist Equipment L.L.C. (H & E)	
	0274455	Ref	Decal - FedEx	
	0273251	Ref	Decal - Hertz	
	0273376	Ref	Decal - Nations Rent	
	0274244	Ref	Decal - National Equipment Services	
	1001095392	Ref	Decal - RSC Equipment Rental	
	0273687	Ref	Decal - SkyAir	
	0272599	Ref	Decal - SkyCutter (ANSI, ANSI Export and CSA Specs)	
	0272607	Ref	Decal - SkyCutter (Japanese Spec)	
	0272418	Ref	Decal - SkyGlazier (800S Only)	
	0272589	Ref	Decal - SkyPower	
	0272448	Ref	Decal - SkyWelder	
	0271816	Ref	Decal - Sunbelt **(Prior to SN 0300139592)**	
	1001120206	Ref	Decal - Sunbelt **(SN 0300139592 through 0300140000)**	
	0271815	Ref	Decal - United Rentals	
	4420051	Ref	Decal - Warning Stripes	
	0272312	Ref	Decal - Tire Sealant	
	2902203	1	Kit - Tire Sealant	
		Ref	**Decal Kits Options:**	
	2902307	Ref	Decal Kit - Country Spec (ANSI and ANSI Export)	
	2902312	Ref	Decal Kit - Country Spec (Brazil)	
	2902322	Ref	Decal Kit - Country Spec (CSA)	
	1001116844	Ref	Decal Kit - Country Spec (Chinese - Simplified)	
	2902309	Ref	Decal Kit - Country Spec (Chinese - Traditional)	
	2902308	Ref	Decal Kit - Country Spec (Japanese)	
	2902310	Ref	Decal Kit - Country Spec (Korean)	
	2902311	Ref	Decal Kit - Country Spec (Latin America)	
	2902303	Ref	Decal Kit - Master **(SN 0300088933 through 0300137912)**	
	1001109029	Ref	Decal Kit - Master **(SN 0300137913 through 0300140000)**	
	1001193640	Ref	Decal Kit - Machine	
	1001108722	Ref	Decal Kit - Platform (800S)	
	1001108723	Ref	Decal Kit - Platform (860SJ)	
	2910871	Ref	Decal Kit - Platform Console Box **(Prior to SN 0300137913)**	
	1001119564	Ref	Decal Kit - Platform Console Box (ANSI Spec) **(SN 0300137913 through 0300140000)**	
	2902354	Ref	Decal Kit - Tire Load (800S)	
	2902429	Ref	Decal Kit - Tire Load (860SJ)	
	2902394	Ref	**Drive/Steer Cutout Kit**	
		Ref	**Electrical Connector Kits**	

SECTION 10 - SPECIAL OPTIONS

ITEM	PART NUMBER	QTY	DESCRIPTION	REV
	1001148902	Ref	Amp Electrical Connector Kit	
	1001148903	Ref	Deutsch DT Electrical Connector Kit	
	1001148904	Ref	Deutsch HD Electrical Connector Kit	
	1001148905	Ref	Packard Electrical Connector Kit	
	1001148906	Ref	Various Electrical Connectors Kit	
		Ref	**Engine Block Heater Installation Options:**	
	0258696	Ref	**Ford Engines**	
	0275261	Ref	**GM Engines**	
	0257157	Ref	**Ether Start Installation (Deutz Engine Machines)**	
	1001093389	Ref	**Fan Cover Installation (Deutz D2011 Engine Machines)**	
	1001185078	Ref	**Fan Cover Add-on Kit (Deutz D2011 Engine Machines)**	
	1001204149	Ref	**Fuel/Water Separater (WIF) Filter Add-on Kit (Deutz D2011 Engines)**	
		Ref	**Filter Kits:**	
		Ref	Combined Filter Kit Options (Hydraulic/Air and Fuel/Engine Oil):	
		Ref	Caterpillar Engine Machines	
	2915140	1	Combined Filter Kit **(Prior to SN 0300069206)**	
	1001114053	1	Combined Filter Kit **(SN 0300069206 through 0300087261)**	
	1001114054	1	Combined Filter Kit **(SN 0300087262 through 03000140000)**	
		Ref	Deutz Engine Machines	
	2910928	1	Combined Filter Kit **(Prior to SN 0300069206)**	
	2910799	1	Combined Filter Kit **(SN 0300069206 through 0300077585)**	
	1001111006	1	Combined Filter Kit **(SN 0300077586 through 0300087261)**	
	1001114048	1	Combined Filter Kit **(SN 0300087262 through 0300092775)**	
	1001111004	1	Combined Filter Kit **(SN 0300092776 through 0300140000)**	
		Ref	Ford LRG-425 with EFI Engine Machines	
	2910950	1	Combined Filter Kit **(Prior to SN 0300069206)**	
	1001114050	1	Combined Filter Kit **(SN 0300069206 through 0300087261)**	
	1001114051	NLA	Combined Filter Kit (Use p/n 1001114052) **(SN 0300087262 through 0300140000)**	
		Ref	GM Engine Machines	
	1001113981	1	Combined Filter Kit **(Prior to SN 0300140000)**	
		Ref	Hydraulic/Air Filter Options:	
	See Note	NLA	Caterpillar/Ford LRG-425 W/EFI/GM Engine Machines (Note: Not Available for Purchase)	
		Ref	Deutz Engine Machines	
	1001114047	NLA	Hydraulic/Air Filter (Use p/n 1001109707) **(Prior to SN 0300087262)**	
	1001109702	1	Hydraulic/Air Filter **(SN 0300087262 through 0300140000)**	
		Ref	Engine - Fuel/Engine Oil Filter Options:	
	See Note	NLA	Caterpillar/Ford LRG-425 W/EFI/GM Engine Machines (Note: Not Available for Purchase)	
		Ref	Deutz Engine Machines	
	1001110133	1	Hydraulic/Air Filter **(SN 0300071452 through 03000140000)**	
		Ref	**Fluids:**	
	2300004	Ref	Coolant, Standard	
	2300041	Ref	Coolant, Arctic	
	2300040	Ref	Diesel Fuel Conditioner	
	3020016	Ref	Engine Oil, (15W-40)	
	3020044	Ref	Engine Oil, (0W-40)	
	1001115930	Ref	Engine Oil, (10W-30)	
	1001115931	Ref	Engine Oil, Fully Synthetic (5W-30)	

ITEM	PART NUMBER	QTY	DESCRIPTION	REV
		Ref	Hydraulic Fluids Options:	
	2300014	Ref	Mobil 424	
	2300027	Ref	Mobil 224H Bio	
	2300029	Ref	Mobil EAL ISO 46 Bio	
	2300016	Ref	Mobil DTE 10 EXCEL 32	
	2300021	Ref	Union Carbide Ucon HP5046 Fire Resistant	
	2300039	Ref	Exxon Univis HvI (Arctic Package Only)	
		Ref	**Footswitch Shield Installation**	
	4060959	1	Shield, Footswitch	
	3380652	Ref	**Footswitch Shield (With Arctic Package)**	
	1001116163	Ref	**Generator (7500W SkyPower) Add-on Kit**	
		Ref	**Glow Plug Installations (Deutz Engine Machines)**	
	0271326	Ref	**Glow Plug Installations (Deutz Engine Machines) (Prior to SN 0300073336)**	
	0271548	Ref	**Glow Plug Installations (Deutz Engine Machines) (SN 0300073336 through 0300140000)**	
		Ref	**Hood (ABS to Steel) Replacement Kits**	
	1001121708	Ref	Hood Kit (800S with Deutz Engine)	
	1001121709	Ref	Hood Kit (800S with GM/Caterpillar Engines)	
	1001121710	Ref	Hood Kit (860SJ with Deutz Engine)	
	1001121711	Ref	Hood Kit (860SJ with GM/Caterpillar Engines)	
		Ref	**Hose Kits**	
	1001187509	Ref	Hose Kit - Boom (Upper) (800S	
	1001187500	Ref	Hose Kit - Boom (Upper) (860SJ)	
	1001209634	Ref	Hose Kit - Platform Valve (800S)	
	1001209635	Ref	Hose Kit - Platform Valve (860SJ)	
	1001204929	Ref	**Hostile Environment Add-on Kit (800S)**	
	1001241416	Ref	**Hostile Environment Add-on Kit (860SJ)**	
		Ref	**Hydraulic Welder Assemblies**	
	0271573	1	110/220V-60Hz (ANSI Spec 800S)	
	0271574	1	110/220V-60Hz (ANSI Spec 860SJ)	
	0271577	1	110/220V-50Hz (ANSI Export Spec 800S)	
	0271578	1	110/220V-50Hz (ANSI Export Spec 860SJ)	
	1001148971	Ref	**Lanyard (Bolt-on) Kit Installation**	
		Ref	**Oil Cooler Installations**	
	0271938	1	Deutz Powered Machines **(Prior to SN 0300137667)**	
	1001108703	1	Deutz Powered Machines **(SN 0300137667 through 0300140000)**	
	0271939	1	Ford and GM Powered Machines	
	0271439	Ref	**Pinion Shield Installations**	
	0257728	Ref	**Pipe Jacks Installations**	
		Ref	**Platform Console Cover Installations**	
	0255398	1	Platform Console Cover Installations **(Prior to SN 0300128731)**	
	0258703	1	Platform Console Cover Installations **(SN 0300128731 through 0300140000)**	
	1001205175	1	Platform Console Cover Add-on Kit	
		Ref	**Platform Entry Kits**	
	1001142504	Ref	**Drop Bar (Replacing Swing Gate with Drop Bar)**	
	1001142505	Ref	**Swing Gate (Replacing Drop Bar with Swing Gate)**	
		Ref	**Platform Mesh To Mid Rail Installation (Side Entry Platform)**	
	1001140318	Ref	**Platform Mesh To Mid Rail Installation 800S/860SJ - 2.5ftx4ft Platforms (ANSI, ANSI Export and Australian Specs)**	

SECTION 10 - SPECIAL OPTIONS

ITEM	PART NUMBER	QTY	DESCRIPTION	REV
	1001140315	Ref	**Platform Mesh To Mid Rail Installation 800S/860SJ - 2.5ftx5ft Platforms (ANSI, ANSI Export and CSA Specs)**	
	1001138772	Ref	**Platform Mesh To Mid Rail Installation 800S/860SJ - 3ftx6ft Platforms (ANSI, ANSI Export and CSA Specs)**	
	1001138773	Ref	**Platform Mesh To Mid Rail Installation 800S/860SJ - 3ftx8ft Platforms (ANSI, ANSI Export and CSA Specs)**	
		Ref	**Platform Mesh To Top Rail Installation (Side Entry Platform)**	
	0273147	Ref	**Platform Mesh To Top Rail Installation 800S/860SJ - 2.5ftx4ft Platforms (ANSI, ANSI Export and CSA Specs)**	
	0273146	Ref	**Platform Mesh To Top Rail Installation 800S/860SJ - 2.5ftx5ft Platforms (ANSI, ANSI Export and CSA Specs)**	
	0273149	Ref	**Platform Mesh To Top Rail Installation 800S/860SJ - 3ftx6ft Platforms (ANSI, ANSI Export and CSA Specs)**	
	0273145	Ref	**Platform Mesh To Top Rail Installation 800S/860SJ - 3ftx8ft Platforms (ANSI, ANSI Export and CSA Specs)**	
	1001120532	Ref	**Platform Mesh To Top Rail Installation 800S - 3ftx8ft Platforms (With Fall Arrest) (ANSI Export Specs)**	
	1702868	Ref	Decal - NO HANDS (ANSI Spec)	
	1704000	Ref	Decal - NO HANDS (CSA Spec)	
	1001149730	Ref	**Platform Mid Rail Repair Kit**	
		Ref	**Platform Top Rail Extension Installations**	
	0272396	1	Platform 6ft (1.83m)	
	0272397	1	Platform 8ft (2.44m)	
	0272733	1	Side Entry Platform 6ft (1.83m)	
	0272725	1	Side Entry Platform 8ft (2.44m)	
	1001177328	Ref	**Power Track Mounting Block Repair Kit**	
	1001100121	Ref	**Programmable Security Lock Installation**	
	1001162546	Ref	**Pump Coupling Service Kit (Deutz D2011 Engines)**	
	2902300	Ref	**Remote Oil Filter Kit - Required on Caterpillar Engine to Allow SkyPower 7500 Watt Generator to Fit (SN 0300069000 through 0300078177)**	
		Ref	**Sky Accessory:**	
	0273596	Ref	SkyAir Compressor Installation	
	0272590	NLA	SkyCutter Plasma Cutter **(Prior to SN 0300119293)**	
	1001098149	Ref	SkyCutter Plasma Cutter **(SN 0300119293 through 0300140000)**	
	0273353	Ref	SkyCutter/SkyWelder Combo	
	0275528	Ref	SkyCutter/SkyWelder Combo	
		Ref	SkyGlazier (ANSI Spec 800S Only) Options:	
	0272395	NLA	SkyGlazier (ANSI Spec 800S Only) (Use p/n 1001101422) **(Prior to SN 0300124536)**	
	1001099376	NLA	SkyGlazier (ANSI Spec 800S Only) (Use p/n 1001101422) **(SN 0300124536 through 0300131395)**	
	1001101422	Ref	SkyGlazier (ANSI Spec 800S Only) **(SN 0300131396 through 0300140000)**	
		Ref	SkyGlazier (ANSI Export Spec 800S Only) (Spanish) Options:	
	0272387	NLA	SkyGlazier (ANSI Export Spec 800S Only) (Spanish) (Use p/n 1001099421) **(Prior to SN 0300124536)**	
	1001099421	Ref	SkyGlazier (ANSI Export Spec 800S Only) (Spanish) **(SN 0300124536 through 0300140000)**	
		Ref	SkyGlazier (ANSI Export Spec 800S Only) (Portuguese) Options:	
	0272955	NLA	SkyGlazier (ANSI Export Spec 800S Only) (Portuguese) (Use p/n 1001099422) **(Prior to SN 0300124536)**	
	1001099422	Ref	SkyGlazier (ANSI Export Spec 800S Only) (Portuguese) **(SN 0300124536 through 0300140000)**	

ITEM	PART NUMBER	QTY	DESCRIPTION	REV
		Ref	SkyGlazier (ANSI Export Spec 860SJ Only) Options:	
	0274362	NLA	SkyGlazier (ANSI Export Spec 860SJ Only) (Use p/n 1001099423) **(Prior to SN 0300124536)**	
	1001099423	Ref	SkyGlazier (ANSI Export Spec 860SJ Only) **(SN 0300124536 through 0300131395)**	
	1001101422	Ref	SkyGlazier (ANSI Export Spec 860SJ Only) **(SN 0300131396 through 0300140000)**	
	0273540	Ref	SkyPower - 7500W 60Hz (Caterpillar Engine) **(Prior to SN 0300139398)**	
	1001115398	Ref	SkyPower - 7500W 60Hz (Caterpillar Engine) **(SN 0300139398 through 0300140000)**	
	0273541	Ref	SkyPower - 7500W 50Hz (Caterpillar Engine) **(Prior to SN 0300139398)**	
	1001115400	Ref	SkyPower - 7500W 50Hz (Caterpillar Engine) **(SN 0300139398 through 0300140000)**	
	0272344	Ref	SkyPower - 7500W 60Hz (Deutz Engine) **(Prior to SN 0300139080)**	
	1001115388	Ref	SkyPower - 7500W 60Hz (Deutz Engine) **(SN 0300139080 through 0300140000)**	
	0272643	Ref	SkyPower - 7500W 50Hz (Deutz Engine) **(Prior to SN 0300139080)**	
	1001115394	Ref	SkyPower - 7500W 50Hz (Deutz Engine) **(SN 0300139080 through 0300140000)**	
	0272817	Ref	SkyPower - 7500W 60Hz (Ford Engine)	
	0275257	Ref	SkyPower - 7500W 60Hz (GM Engine)	
	0272254	Ref	SkyWelder - Stick, 250A	
		Ref	**Note: For Breakdown of Sky Accessories Refer to Accessory Manual p/n 3124242**	
		Ref	**SkyGuard Component Options:**	
	1001149560	NLA	SkyGuard Complete Add-on Kit (Blue Beacon) (Non-UGM Machines) (Use p/n 1001206478)	
	1001206478	Ref	SkyGuard Complete Add-on Kit (Blue Beacon) (Non-UGM Machines)	
	1001210026	Ref	SkyGuard Complete Add-on Kit (Red Beacon) (Non-UGM Machines)	
	1001143669	NLA	SkyGuard Complete Add-on Kit (Blue Beacon) (UGM Machines) (Use p/n 1001206477)	
	1001206477	Ref	SkyGuard Complete Add-on Kit (Blue Beacon) (UGM Machines)	
	1001137672	Ref	SkyGuard Platform Sensor Kit (UGM Machines)	
	1001137440	1	SkyGuard Sensor Harness	
	1001186431	2	Relay	
	1001143256	NLA	SkyGuard Blue Beacon Kit (Use p/n 1001206311)	
	1001206311	Ref	SkyGuard Blue Beacon Kit	
	1001210025	Ref	SkyGuard Red Beacon Kit	
	1001228357	Ref	**Telematics Retrofit Harness Kit (Machines with UGM)**	
	1001184931	Ref	**Telescope Cylinder Service Kit**	
	0272325	Ref	**Tire Sealant Installation**	
	0272312	Ref	**Tire Sealant Decal Installation**	
	2902203	1	Kit, Tire Sealant Decal	
		Ref	**Tools for Service**	
	2901443	1	Analyzer Kit **(SN 0300062045 through 0300140000)**	
	8896941	1	Wire Stripper	
	7002821	1	Wire Crimper (To install wire ends to wires)	
	7002823	1	Pin/Socket Extractor - Universal (To Remove Pins/Sockets from Connectors)	

SECTION 10 - SPECIAL OPTIONS

ITEM	PART NUMBER	QTY	DESCRIPTION	REV
	4460467	1	Extractor - 16-18 Gauge (For Removal of Pin/Sockets from Deutsch Connectors)	
	4460510	1	Extractor - 12-14 Gauge (For Removal of Pin/Sockets from Deutsch Connectors)	
	7002822	1	Screwdriver, Potentiometer (To Adjust Drive Controllers)	
	7016654	1	Screwdriver, Magnetic	
	7004275	1	Seal Installation Tool - 1in	
	7004276	1	Seal Installation Tool - 1-1/2in	
	7002826	1	Seal Installation Tool - 2in	
	7016655	1	Wire Rope Sheave Gauge	
	7016652	1	Huck Fastner Tool	
	2915094	Ref	**Turntable Bearing Kit**	
	0258918	Ref	**Utility Rack Installation**	
	1001149676	Ref	**UGM Conversion Kit**	
		Ref	**Weld Leads at Platform Installations**	
	0271487	Ref	**Weld Leads at Platform Installations 800S**	
	0271488	Ref	**Weld Leads at Platform Installations 860SJ**	

FIGURE 10-2. SKY WELDER INSTALLATION

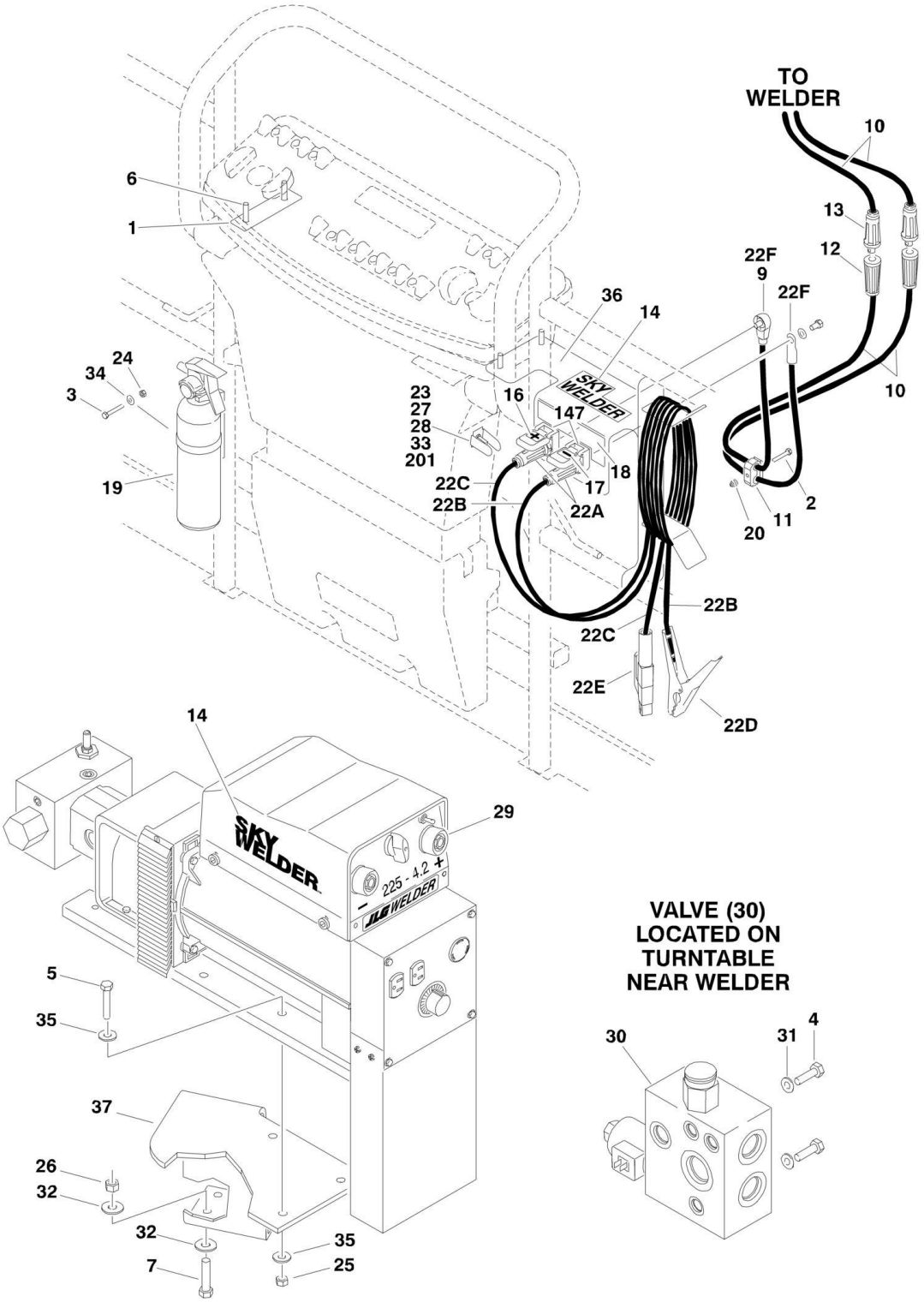

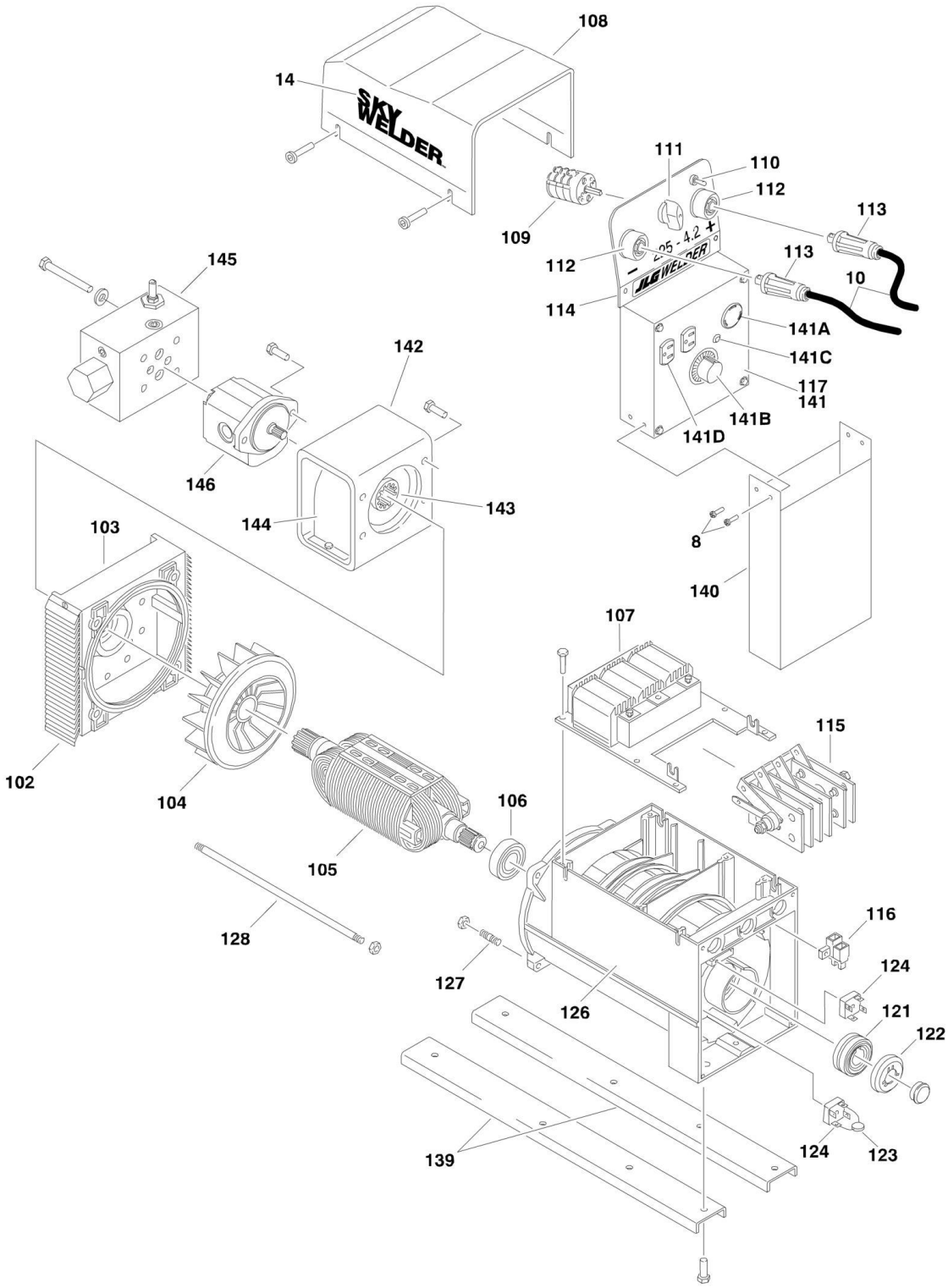
108
14
SKY WELDER
111
110
112
109
112
113
113
10
114
141A
141C
117
141
141B
141D
145
142
146
144
143
103
8
140
107
115
102
104
106
105
128
127
126
116
124
121
122
124
123
139

FIGURE 10-2. SKY WELDER INSTALLATION

ITEM	PART NUMBER	QTY	DESCRIPTION	REV
		Ref	**SKY WELDER INSTALLATIONS**	
	0271573	Ref	**110/220V-60Hz (ANSI Spec 800S)**	A
	0271574	Ref	**110/220V-60Hz (ANSI Spec 860SJ)**	A
	0271577	Ref	**110/220V-50Hz (ANSI Export Spec 800S)**	A
	0271578	Ref	**110/220V-50Hz (ANSI Export Spec 860SJ)**	A
1	0362949	1	Bar, Spacer	
2	0641412	1	Bolt 1/4in-20NC x 1-1/2in	
3	0641414	2	Bolt 1/4in-20NC x 1-3/4in	
4	0641511	2	Bolt 5/16in-18NC x 1-3/8in	
5	0641514	4	Bolt 5/16in-18NC x 1-3/4in	
6	0641611	4	Bolt 3/8in-16NC x 1-3/8in	
7	0641818	4	Bolt 1/2in-13NC x 2-1/4in	
8	0750605	4	Screw	
9	0840041	1	Boot, Cable	
10		Ref	Cable, Weld	
10	1060883	200 ft /61m	110/220V-60Hz (ANSI Spec 800S)	
10	1060883	212 ft /64.6m	110/220V-60Hz (ANSI Spec 860SJ)	
10	1060921	200 ft /61m	110/220V-50Hz (ANSI Export Spec 800S)	
10	1060921	212 ft /64.6m	110/220V-50Hz (ANSI Export Spec 860SJ)	
11	1320146	1	Clamp, Hose	
12	1660241	2	Terminal, Female Weld Cable Attach	
13	1660242	2	Terminal, Male Weld Cable Attach	
14	1704895	2	Decal - SkyWelder	
15	1704896	1	Decal - SkyWelder (Not Shown - Located on Hood)	
16	1704919	1	Decal - Positive	
17	1704920	1	Decal - Negative	
18	1705000	1	Decal - Platform Controls	
19	2030010	1	Extinguisher, Fire	
20	2080044	1	Rivnut, Fastener	
22	2901971	1	Platform Weld Leads Kit	B
22A	7023413	2	Connector, Cable	
22B	7023414	1	Cable, #1 Weld - Black (12ft Length)	
22C	7023418	1	Cable, #1 Weld - Red (12ft Length)	
22D	7023415	1	Clamp, Ground	
22E	7023416	1	Holder, Electrode	
22F	7023417	2	Lugs, Cable	
23	3252764	1	Nameplate - Welding Leads	
24	3311405	2	Locknut 1/4in-20NC	
25	3311505	4	Locknut 5/16in-18NC	
26	3311805	4	Locknut 1/2in-13NC	
27	4060802	1	Guard, Switch	
28	4360336	1	Switch, Toggle	
29		Ref	Hydraulic Welder Assembly Options (See 101 to 147 for Breakdown):	
29	4530016	1	ANSI Spec (60Hz)	
29	4530020	1	ANSI Export Spec (50Hz)	
30	4641201	1	Diverter Valve Assembly	

ITEM	PART NUMBER	QTY	DESCRIPTION	REV
31	4711500	4	Flatwasher 5/16in Thin	
32	4711800	8	Flatwasher 1/2in Thin	
33	4740397	1	Spacer	
34	4751400	2	Flatwasher 1/4in Regular	
35	4751500	8	Flatwasher 5/16in Regular	
36	4846231	1	Support, Weld Lead	
37	4846477	1	Support, Welder	
		Ref	**Hydraulic Welder Assembly**	
	4530016	Ref	**ANSI Spec (60Hz)**	C
	4530020	Ref	**ANSI Export Spec (50Hz)**	B
102	7023444	2	Grid - Front	
103	7023445	1	Shield Front	
104	7023446	1	Fan	
105	7023251	1	Rotor	
106	7023252	1	Bearing	
107		Ref	Impedance, Weld Options:	
107	7023253	1	ANSI Spec (60Hz)	
107	7024313	1	ANSI Export Spec (50Hz)	
108	7023447	1	Cover	
109	7023254	1	Switch, Step	
110	7023255	1	Selector, Range	
111	7023256	1	Knob, Switch	
112	7023257	2	Terminal, Female Weld Cable Attach	
113	7023258	2	Terminal, Male Weld Cable Attach	
114		Ref	Panel, Front Options:	
114	See Note	NSS	ANSI Spec (60Hz) (Note: Not Available for Purchase)	
114	7024314	1	ANSI Export Spec (50Hz)	
115	7023259	1	Bridge, Rectifier	
116	7023260	1	Brushes and Holder	
117		Ref	Panel, Receptacle (Panel Only)	
117	7023419	1	ANSI Spec (60Hz)	
117	7024315	1	ANSI Export Spec (50Hz)	
121	7023261	1	Ring, Slip	
122	7023262	1	Cover, Slip Ring	
123	7022363	1	Varistor	
124	7023264	2	Bridge, Single Phase Rectifier	
126		Ref	Housing and Stator Options:	
126	7023265	1	ANSI Spec (60Hz)	
126	7024316	1	ANSI Export Spec (50Hz)	
127	7023266	4	Bolt, Stay M8 x 30mm	
128	7023267	4	Bolt, Stay	
139	7023448	1	Rail Set	
140	7023449	1	Duct	
141		Ref	Panel Assembly (Complete) Options:	
141	7023420	1	ANSI Spec (60Hz)	
141	See Note	NLA	ANSI Export Spec (50Hz) (Note: Not Available for Purchase)	
141A		Ref	Receptacle, Twistlock Options:	
141A	7023421	1	ANSI Spec (60Hz)	
141A	See Note	1	ANSI Export Spec (50Hz) (Note: Not Available for Purchase)	
141B	7023422	1	Control, Fine	
141C	7023423	1	Light - AC	

SECTION 10 - SPECIAL OPTIONS

ITEM	PART NUMBER	QTY	DESCRIPTION	REV
141D		Ref	Receptacle Options:	
141D	7023424	1	ANSI Spec (60Hz)	
141D	See Note	NLA	ANSI Export Spec (50Hz) (Note: Not Available for Purchase)	
141E	7023425	1	Harness (Not Shown)	
142	See Note	NLA	Mount, Motor (Note: Not Available for Purchase)	
143	7023426	1	Coupling	
144	See Note	NLA	Guard, Coupling (Note: Not Available for Purchase)	
145	7023427	1	Valve Assembly	
146		Ref	Motor Assembly Options:	
146	7023428	1	ANSI Spec (60Hz)	
146	7024317	1	ANSI Export Spec (50Hz)	
147	7024559	2	Receptacle with Cover	
	4933193	Ref	**ELECTRICAL COMPONENTS**	
201	4922641	1	Harness - On/Off Switch	
202	4922570	1	Harness - Welder (Not Shown - Relay in Ground Control Box to Welder)	
203	3740047	1	Relay (Not Shown - Located in Ground Control Box)	

PART NUMBER INDEX

SECTION 10 - SPECIAL OPTIONS

0060048.....227, 235
0060061.....223, 235
0080163.....98, 107
0080181.....78, 88
0080201....112, 119, 129, 135
0080214.....111, 119
0080241.....168
0080243.....78, 88
0100009.....255
0100010.....245
0100011....11, 12, 15, 16, 19, 43, 45, 47, 51, 59, 78, 81, 88, 89, 90, 91, 96, 102, 104, 111, 112, 118, 119, 128, 129, 134, 135, 147, 151, 153, 159, 160, 163, 167, 168, 171, 178, 181, 186, 190, 194, 197, 201, 205, 211, 215, 221, 223, 227, 228, 231, 237, 238, 249, 277, 283, 285, 291, 297, 301, 307
0100019....11, 15, 59, 80, 197, 206, 211, 215
0100020....78, 81, 89, 91, 96, 103, 104, 111, 112, 118, 119, 123, 128, 129, 134, 207
0100035.....167, 238
0100038....283, 285, 291, 297, 301, 307
0100040.....249
0100048....113, 118, 128, 134, 159, 163, 168, 255, 352, 364, 381
0100062.....207
0100063.....285, 291, 297
0100074.....245
0100081.....223, 228, 255
0140001.....51
0140011.....255
0140032.....167, 369, 385
018172778, 95, 102, 111, 118, 128
0181949.....124
0182077.....172, 178
0200048.....277
0200547.....193
0200550.....273
0200741.....190
0200742.....186, 190
0250528.....47
0255382.....354
0255386.....419
0255398.....421
0255524.....123
0255917.....168, 355
0256060.....418
0256202.....354, 371, 386
0256689.....97, 104
0256690.....97, 104
0256789.....418
0256847.....97, 107
0257157.....344, 420
0257176..... 354
0257195..... 419
0257728..... 421
0257887... 167, 355, 369, 385
0258286..... 11
0258387..... 418
0258390..... 115
0258391..... 115
0258608..... 257
0258696..... 420
0258703..... 421
0258728..... 183
0258757..... 418
0258758..... 418
0258759..... 418
0258918..... 424
0259147..... 59
0270015..... 237
0270528..... 47
0270795..... 273
0270796..... 273
0270805..... 168
0270814.....245, 250, 344
0270876.....221, 223
0270877.....221, 227
0270878..... 95
0270879.....111, 123
0270880..... 171
0270881..... 147
0270885..... 20
0270886..... 20
0270888..... 20
0270889.....245, 249
0270891..... 160
0270892..... 160
0270893..... 159
0270894..... 159
0270901.....51, 237
0270902.....51, 237
0270907..... 393
0270908..... 393
0270923..... 401
0270924..... 401
0270925..... 401
0270926..... 401
0270927..... 401
0270928..... 401
0270929..... 401
0270930..... 401
0270931..... 401
0270932..... 401
0270933..... 401
0270934..... 401
0271002..... 59
0271013..... 59
0271083..... 20
0271084..... 20
0271085..... 20
0271086..... 20
0271090..... 20
0271091..... 20
0271135..... 11
0271254..... 223
0271255..... 228
0271257..... 111
0271312..... 151
0271316..... 43
0271322... 241, 349, 361, 379
0271324... 241, 349, 361, 379
0271326..... 421
0271333..... 419
0271341.... 12, 16, 19, 43
0271349..... 19, 43
0271352..... 15
0271353..... 15
0271354..... 47
0271360..... 167
0271362..... 167
0271381.... 223, 227, 238
0271386..... 393, 401
0271410..... 257
0271419..... 20
0271420..... 257
0271439..... 421
0271444..... 227
0271448..... 418
0271472..... 418
0271473..... 418
0271476..... 418
0271477..... 418
0271487..... 424
0271488..... 424
0271496..... 59
0271544..... 189
0271545..... 193
0271546..... 193
0271547..... 189
0271548..... 421
0271550..... 273
0271551..... 273
0271552..... 168, 257
0271573..... 421, 428
0271574..... 421, 428
0271577..... 421, 428
0271578..... 421, 428
0271815..... 419
0271816..... 419
0271912..... 419
0271938..... 340, 421
0271939..... 340, 421
0271990..... 223
0271991..... 228
0271999..... 167
0272003..... 11
0272057..... 168, 418
0272058..... 250
0272070..... 237
0272081..... 174, 181
0272188..... 59
0272254..... 423
0272259.... 354, 371, 386
0272260.... 354, 371, 386
0272312..... 419, 423
0272322..... 20
0272325..... 423
0272333..... 20
0272334..... 20
0272341..... 394
0272344.....205, 371, 423
0272387.....422
0272388....241, 349, 361, 379
0272389....241, 349, 361, 379
0272395.....422
0272396.....422
0272397.....422
0272418.....419
0272427.....277
0272435.....208, 213, 217
0272448.....419
0272480.....189
0272481.....189
0272482.....189
0272507.....355, 370, 385
0272533.....393
0272540.....401
0272541.....401
0272546.....401
0272547.....401
0272548.....401
0272554.....393
0272561.....401
0272562.....401
0272566.....401
0272567.....401
0272568.....401
0272589.....419
0272590.....422
0272599.....419
0272607.....419
0272643.....371, 423
0272725.....422
0272733.....422
0272750.....52, 298, 308
0272796.....78
0272817.....211, 371, 423
0272842.....111
0272873.....111, 123
0272955.....422
0272970.....250
0273145.....422
0273146.....422
0273147.....422
0273149.....422
0273251.....419
0273308.....159
0273309.....159
0273353.....422
0273376.....419
0273378.....12, 16, 19, 45
0273472.....250, 345
0273483.....250, 345
0273507.....197
0273511.....197
0273518.....185
0273527.....80
0273538.....185
0273539.....185
0273540.....205, 371, 423
0273541.....371, 423
0273542.....279
0273575.....418
0273596.....422

0273687 419
0273695 .... 223, 227, 238
0273701 171
0273704 ..... 19, 45
0273706 277
0273800 102
0273824 277
0274081 185
0274082 189
0274086 189
0274087 185
0274090 189
0274091 185
0274173 ..... 51, 237
0274174 ..... 51, 237
0274237 118
0274244 419
0274261 171
0274267 45
0274302 102
0274362 423
0274455 419
0274491 78
0274499 397
0274500 397
0274501 407
0274502 407
0274503 407
0274504 407
0274505 407
0274506 407
0274507 407
0274508 407
0274511 407
0274512 407
0274513 407
0274514 407
0274518 ..... 397, 407
0274528 419
0274571 11
0274572 15
0274583 153
0274626 80
0274627 118
0274644 ..... 51, 237
0274645 ..... 51, 237
0274762 ..... 171, 178
0274768 ..... 171, 178
0274927 277
0275039 201
0275256 78
0275257 ... 215, 371, 387, 423
0275261 420
0275262 419
0275365 128
0275528 422
0275547 178
0275584 102
0275585 80
0275586 .... 241, 361, 379
0340041 . 78, 88, 95, 104, 112, 119, 129, 135
0340046 78, 88, 115, 119
0362519 124
0362529 167
0362726 ..... 11, 15
0362770 ..... 171, 178
0362910 47
0362949 428
0363010 167
0363082 197
0363097 ..... 197, 211
0363201 211
0363202 211
0400075 .. 78, 88, 95, 102, 111, 118, 128, 134
0440244 59
0480050 ..... 190, 194
0480111 ..... 190, 194
0480119 190
0480120 ..... 186, 190
0480121 ..... 186, 190
0480129 207
0480130 211
0480134 194
0480135 197
0480142 ..... 201, 215
0561185 231
0561380 221
0561445 231
0561446 231
0561447 231
0561449 231
0561484 241
0630462 ..... 273, 277
0630467 237
0630491 168
063049878, 95, 102, 111, 118, 128
0630507 ..... 171, 178
0630518 ..... 157, 163
0630534 ..... 291, 295
0630535 .... 283, 285, 287, 289, 307, 311, 313
0630536 ..... 297, 301, 303
0630539 ..... 223, 228
0630548 ..... 157, 163
0630568 257
0641403 ..... 167, 207, 231
0641404 ..... 191, 205, 207
0641405 .... 197, 201, 205, 211, 215
0641406 .... 78, 82, 88, 97, 103, 112, 118, 119, 129, 134, 135, 167, 172, 178, 205, 238, 245, 249, 255, 274, 398, 410
0641407 .... 78, 82, 88, 90, 95, 104, 164
0641408 ..... 51, 112, 119, 241, 245, 249, 393, 397, 403, 410
0641410 ..... 168, 241
0641412 .... 103, 128, 134, 241, 428
0641414 .... 113, 118, 119, 171, 245, 250, 255, 277, 428
0641416 ..... 51, 113, 255
0641418 51
0641420 52
0641422 ..... 128, 134
0641424 ..... 51, 113, 241
0641504 ..... 47, 221
0641505 ..... 205, 211, 215
0641506 ..... 160, 164
0641507 . 78, 88, 115, 119
0641508 ..... 15, 171, 178, 186, 191, 194, 197, 205
0641510 ..... 96, 104, 201
0641511 .... 128, 134, 241, 428
0641514 . 52, 82, 298, 428
0641516 .... 205, 211, 215, 279
0641518 250
0641526 237
0641542 45
0641560 45
0641604 ..... 227, 238, 241
0641606 .. 81, 88, 96, 104, 113, 121, 124, 129, 135, 173, 174, 180, 181, 223, 228, 231, 237
0641607 ..... 231, 241
0641608 .... 11, 15, 43, 45, 78, 82, 88, 89, 91, 96, 104, 112, 118, 119, 128, 129, 134, 135, 171, 173, 178, 180, 211, 215, 223, 227, 231
064160978, 88, 107, 129, 135, 183
0641610 .... 78, 82, 88, 89, 95, 102, 104, 107, 112, 119, 130, 135, 172, 178, 186, 190, 227, 231, 249
0641611 .... 151, 153, 197, 211, 428
0641612 ..... 51, 119, 130, 135, 197, 211, 221, 273
0641613 ..... 221, 233
0641614 147
0641616 ..... 171, 178, 231
0641618 ..... 207, 227
0641620 ..... 51, 223, 228
0641622 ..... 224, 228
0641626 231
0641628 43
0641634 231
0641640 231
0641652 ..... 224, 228
0641708 211
0641710 201
0641718 197
0641772 ..... 186, 190, 194
0641808 .... 78, 82, 88, 89, 96, 102, 113, 118, 128, 129, 134, 205, 215, 227
064181011, 16, 197, 211, 215
0641812 .. 82, 90, 96, 104, 111, 119, 129, 134, 153, 221, 237
0641813 279
0641818 ..... 95, 105, 183, 428
0641820 . 11, 78, 88, 151, 153, 237
0641826 ..... 96, 105, 131, 136
0641828 ... 112, 119, 130, 135
0642010 ... 47, 81, 89, 96, 102, 113, 118, 128, 134
0642014 ..... 221, 223, 227
064221211, 15, 221, 223, 227
0642612 168
0642618 221
0642684 237
0651406 51
0681608 ..... 11, 15, 237
0681610 237
0681612 194
0681810 19
0681814 253
0681822 253
0681832 59
0682016 ..... 12, 16, 19
0682023 59
0682032 59
0682214 59
0682216 59
0700616 91
0700620 91
0700808 ... 78, 88, 91, 96, 105
0700810 ..... 98, 107, 111, 130, 135
0700815 205
0700816 186
0700819 ..... 113, 120
0700820 ..... 201, 215
0701010 ..... 78, 88, 91
0701012 . 78, 88, 96, 105, 106, 112, 119
0701014 ..... 105, 111, 119
0701015 . 78, 88, 96, 105, 106, 194, 197, 211
0701016 ..... 201, 211, 215
0701022 111
0701210 186
0701214 78
0701414 ... 78, 88, 95, 105
0711025 107
0711212 80
0711214 ..... 78, 80, 88
0720603 239
0720808 ... 187, 191, 202, 208, 217
0721003 ..... 255, 257
0721004 ..... 47, 172
0721005 277
0721006 ..... 80, 111, 171, 178, 186, 191, 194, 255
0721008 ... 173, 174, 180, 181, 255
0721014 111
0731005 273
0731007 147
0741605 ..... 223, 227
0741606 ..... 168, 197, 211
0741607 ..... 16, 47

SECTION 10 - SPECIAL OPTIONS

0741609.....16
0741612.....231
0741808.....197, 211
0750605.....428
0760606.....91, 119
0760610.....91
0760612.....91
0761210.....91
0771212.....88
0771415.....207
0791606.....231
0791607.....232
0791608.....232
0791610.....232
0791612.....233
0791614.....233
0791616.....233
0801274.....223, 231
0801275.....231
0801276.....231
0801278.....221
0801279.....221
0801280.....221
0801281.....227, 231
0801282.....231
0801283.....231
0801306.....221
0801307.....221
0801310.....221
0801325.....231
0801326.....231
0801647.....231
0801649.....231
0811606.....231
0811607.....232
0811608.....232
0811610.....233
0811614.....233
0811616.....233
0840041.....428
0860038....205, 211, 215, 354, 371, 386
0860520....393, 397, 403, 410
0861389.....157
0861416....249, 255, 348, 360
0861441.....255, 256
0861454.....157, 160
0861455.....157, 160
0861456.....157, 160
0861457.....157, 160
0861538.....206, 211, 215
0861541.....207, 212, 216
0861542....205, 207, 211, 212, 215, 216, 372, 387
0861567.....372, 387
0861625.....157, 160
0861626.....157, 160
0861718.....157, 159, 160
0861719.....157, 159, 160
0861751.....157, 160
0861752.....157, 160
0861753.....157, 159, 160
0861754.....157, 159, 160
0861792.....157, 160
0861793.....157, 160
0901921.....171, 178
0902206..... 168
0902219.....171, 178
0902223.....171, 178
0902309.....115, 119
0902351.....171, 178
0902412.....171, 178
0902465..... 172
0902491.....171, 178
0902520..... 151
0902539.....111, 121
0902572.....113, 123
0902673.....171, 178
0902674.....171, 178
0902751..... 255
0902756..... 193
0902769.....172, 178
0902888.....205, 212, 215
0902952..... 197
0903010..... 121
0903079..... 119
0903242..... 153
0920117.....19, 59
0940038..... 273
0940070. 78, 88, 95, 105, 112, 121, 130, 135
0940071.....171, 178
0940088.....171, 179
0940092.....277, 279
0940094.....277, 279
0940103..... 277
0940131..... 279
0940133..... 277
0940134..... 277
0940177..... 277
0961816..... 283
0961893.....291, 295
0961894.....285, 287, 289
0961895..... 283
0961897.....307, 311, 313
0961898.....297, 301
0961947... 227, 235, 285, 287
0961948.....231, 285, 289
0961951.....232, 235
0961977..... 305
0961986. 78, 88, 96, 105, 113, 119, 130, 135
0962033.....297, 301, 303
0962051..... 183
0962102.....11, 15
0962122..... 221
0962152.....12, 15
0962270..... 253
0962292..... 15
0962297... 221, 223, 227, 231
0962335..... 228
0962336.....291, 293, 295
0962348..... 15
0962448.....12, 15
0962449.....187, 191
0962496..... 283
0962520.....206, 211, 215
0962521.....211, 215
0962653..... 186
1001091179..... 105
1001091472..... 241
1001091563..... 147
1001091568..... 147
1001091583..... 130
1001091587..... 128, 134
1001091609..... 241, 361, 379
1001091618..... 361, 379
1001091619..... 362
1001091620..... 363, 380
1001091621..... 363
1001091622..... 362, 363
1001091632..... 129
1001091639..... 128
1001091640..... 129
1001091664..... 241, 361, 379
1001091665..... 241, 361, 379
1001091667..... 363
1001091668..... 363
1001091671..... 363
1001091712..... 418
1001091713..... 418
1001091794..... 130, 136
1001091892..... 105, 130, 136
1001093382. 78, 89, 102, 128, 134
1001093389..... 420
1001093943..... 106
1001094101..... 105, 107
1001094321..... 106
1001094375..... 187, 191, 202, 208, 217
1001094475..... 187, 191, 202, 208, 217
1001094509..... 187, 191, 202, 208, 217, 388
1001094798..... 409
1001094799..... 410
1001094800..... 409
1001094802..... 409
1001094803..... 410
1001094804..... 409
1001094805..... 410
1001094806..... 409
1001094808..... 410
1001094809..... 409
1001094810..... 410
1001094899..... 59
1001095307..... 323, 332
1001095308..... 324, 332
1001095392..... 419
1001097553..... 91
1001097554..... 83
1001097939..... 167
1001097942..... 167
1001097945..... 167
1001097964..... 180
1001097966..... 180
1001098149..... 422
1001098234..... 373, 388
1001098349..... 373, 388
1001098508..... 104
1001098908..... 363, 380
1001098909..... 364, 381
1001098910.....363, 380
1001098911.....364, 381
1001098916.....107
1001099051.....105
1001099121.....180
1001099138.....178, 179
1001099139.....180
1001099376.....422
1001099421.....422
1001099422.....422
1001099423.....423
1001099640.....104
1001099686.....106
1001099828.....104
1001099829.....102
1001099868.....189
1001099869.....187, 191
1001099870.....45
1001100027.....344, 370
1001100121.....422
1001100233.....187, 191
1001100234.....187, 191
1001100305.....370
1001100308.....189
1001100313.....79, 83
1001100321.....185, 189, 193, 197
1001100381.....104
1001100382.....102
1001100386.....178
1001101060.....59, 74
1001101241.....105
1001101391.....179
1001101392.....180
1001101422.....422, 423
1001101623.....180
1001101673.....179
1001101948.....103
1001102160.....159, 365
1001102248.....157, 159, 160
1001102249.....157, 160
1001102290.....367, 383
1001102291.....367, 383
1001102304.....367, 383
1001102547.....185
1001102548.....185
1001102601.....158, 163
1001102602.....158, 163
1001102644.....187
1001102841.....418
1001102842.....418
1001103667.....163, 416
1001103810.....12
1001104308.....106
1001104985.....418
1001105833.....80, 89
1001105872.....131, 136
1001105993.....78
1001106338.....78
1001106339.....382
1001106340.....382
1001106449.....167
1001106480.....167
1001106698.....80
1001106699.....80
1001106736.....164, 382

1001106974 153
1001107116 ..... 79, 88
1001107527 256
1001107531 153
1001107677 256
1001107705 ..... 79, 89
1001107796 ..... 256, 360, 378
1001107953 257
1001107954 257
1001108256 277
1001108496 ..... 397, 410
1001108703 ..... 340, 421
1001108722 419
1001108723 419
1001108866 ..... 250, 255, 360
1001108867 249
1001108923 398
1001108958 307
1001108991 257
1001108993 257
1001109029 419
1001109064 ..... 91, 92
1001109065 88
1001109595 89
1001109702 420
1001110133 420
1001110205 90
1001110206 90
1001110212 89
1001110213 89
1001110325 345
1001110327 163
1001110328 163
1001110329 163
1001110330 163
1001110333 163
1001110334 163
1001110338 ..... 164, 381, 382
1001110339 ..... 164, 381
1001110340 ..... 164, 381, 382
1001110341 ..... 164, 381, 382
1001110342 ..... 164, 345, 382, 383
1001110343 ..... 164, 345, 382, 383
1001110344 ..... 164, 345, 382, 383
1001110701 ..... 255, 416
1001110872 ..... 205, 216, 372, 387
1001110873 ..... 205, 216, 371, 386, 387
1001111004 420
1001111006 420
1001111017 163
1001111231 418
1001112057 91
1001112059 91
1001112067 ..... 91, 416
1001112068 91
1001112069 91
1001112070 91
1001112071 ..... 91, 384
1001112072 91
1001112073 91
1001112075 91
1001112077 ..... 89, 91
1001112570 91
1001112586 ..... 208, 344, 387
1001112587 ..... 208, 388
1001112588 ..... 344, 385
1001112589 386
1001112592 91
1001112612 382
1001112743 ..... 344, 386
1001112762 ..... 90, 384
1001112849 91
1001112990 418
1001112991 418
1001112992 418
1001113961 ..... 267, 269
1001113981 420
1001114047 420
1001114048 420
1001114050 420
1001114051 420
1001114053 420
1001114054 420
1001114595 135
1001114632 135
1001114633 134
1001114634 134
1001114896 ..... 250, 255, 378
1001114897 249
1001115388 ..... 205, 387, 423
1001115394 ..... 387, 423
1001115398 ..... 205, 386, 423
1001115400 ..... 387, 423
1001115404 185
1001115405 189
1001115409 189
1001115410 189
1001115413 185
1001115414 185
1001115465 307
1001115469 308
1001115504 307
1001115631 307
1001115633 308
1001115930 420
1001115931 420
1001116163 421
1001116287 ..... 81, 102
1001116288 ..... 81, 102
1001116544 135
1001116545 136
1001116595 91
1001116597 419
1001116598 419
1001116844 419
1001116846 407
1001116849 408
1001116851 408
1001117040 180
1001117045 ..... 178, 179
1001117139 179
1001117140 180
1001117251 418
1001117258 418
1001117320 250
1001118416 269
1001118417 261
1001119564 419
1001119939 418
1001119947 418
1001120206 419
1001120532 422
1001121340 ..... 208, 217
1001121708 421
1001121709 421
1001121710 421
1001121711 421
1001129555 414
1001131731 ..... 224, 228
1001131992 345
1001137440 423
1001137672 423
1001138772 422
1001138773 422
1001138795 295
1001139132 418
1001139151 418
1001140315 422
1001140318 421
1001142504 421
1001142505 421
1001143256 423
1001143669 423
1001144629 249
1001148902 420
1001148903 420
1001148904 420
1001148905 420
1001148906 420
1001148971 421
1001149560 423
1001149676 424
1001149730 422
1001162546 422
1001166538 271
1001166539 263
1001175884 307
1001177317 ..... 231, 307
1001177328 422
1001181588 ..... 231, 307
1001181694 ..... 308, 311, 313
1001184931 423
1001185078 420
1001186431 423
1001187500 421
1001187509 421
1001193640 419
1001197240 418
1001204149 420
1001204929 421
1001205175 421
1001206311 423
1001206477 423
1001206478 423
1001209634 421
1001209635 421
1001210025 423
1001210026 423
1001212415 414
1001228012 ..... 227, 293
1001228022 ..... 227, 289
1001228027 ..... 223, 287
1001228028 ..... 223, 301
1001228029 ..... 227, 303
1001228081 ..... 231, 311
1001228083 ..... 232, 313
1001228357 423
1001241416 421
1001248012 ..... 227, 295
1060279 ... 393, 398, 403, 410
1060341 ... 274, 277, 355, 356, 370, 385
1060343 ... 207, 212, 216, 372, 387
1060461 354
1060494 ... 207, 212, 216, 354, 372, 387
1060545 ..... 355, 370
1060584 47
1060625 ..... 82, 90, 104
1060626 ..... 80, 91, 103
1060633 ..... 374, 389
1060637 . 78, 88, 96, 102, 113, 118, 129, 134
1060708 ... 207, 212, 216, 349, 355, 356, 370, 372, 373, 386, 387, 388
1060883 428
1060896 ... 350, 361, 362, 379
1060902 ... 349, 350, 351, 353, 362, 363, 364, 367, 380, 381, 383
1060903 277
1060904 ..... 81, 107, 368, 385
1060918 ... 245, 250, 348, 360, 378
1060919 253
1060921 428
1060937 348
1060938 348
1060945 349
1060975 348
1060976 348
1060977 ..... 373, 388
1060981 348
1060982 348
1061018 ..... 351, 362, 380
1061019 ..... 351, 362, 380
10837580 55
1120484 148
1120487 148
1120510 233
1120552 20
1120601 179
1180373 ..... 224, 228
1180375 ..... 224, 228
1220078 231
1260017 59
1260136 273
1282571 344

SECTION 10 - SPECIAL OPTIONS

1282665.....340
1283242.....340, 341
1283309.....340
1283387.....340, 341
1300019.....20
1320012.....78, 112, 120, 130, 135
1320016..78, 88, 95, 105, 112, 120, 130, 135
1320019.....52, 111, 120
1320022....78, 82, 89, 95, 103, 105, 111, 112, 118, 120, 128, 130, 134, 135
1320032.....113
1320033.....120
1320040.....274
1320060.....112
1320061.....241
1320127.....123
1320146.....428
1320169.....241
1320176..82, 89, 97, 103, 106
1320218.....124
1320220.....123
1320223....80, 81, 88, 90, 91, 96, 97, 103, 104, 105, 113, 118, 121, 128, 130, 135, 241
1320224.....91, 206, 211
1320263.....91, 224, 229
1320289.....224, 228
1320294.....224, 228
1320315.....298
1320318.....206
1320323.....128, 134
1321138.....120
1321384....173, 174, 180, 181
1340060..78, 88, 95, 105, 112, 120, 130, 135
1340061.....418
1380132.....171
1380136.....53
1380147.....183
1560012.....348, 360, 378
158001179, 88, 111, 121, 130, 135
1580012.....246, 251
1580013.....246, 251
1600244.....374, 388
1600314.....111
1600317.....255, 259
1600318.....255, 267
1600324.....255
1600327.....157
1600361.....83
1600363.....114
1600364.....157
1600374.....121, 416
1600377.....255
1600411.....157
1641808.....112
1660234.....98, 107
1660239.....79, 88
1660241.....428
1660242..... 428
1660246..... 151
1660246RR..... 151
1660250.....114, 121
1660257..... 153
1660303..... 153
1670785..... 273
1670786..... 273
1670787..... 273
1670788..... 273
1670789..... 273
1670791..... 273
1670793..... 273
1670795..... 273
1670796..... 273
1670797..... 273
1670798..... 273
1670799..... 273
1670801..... 273
1670803..... 273
1670804..... 273
1670829.....157, 163, 255
1670836..... 231
1670964..... 237
1671022..... 167
1671034..... 241
1671044..... 239
1671059..... 167
1671092... 208, 213, 216, 363, 372, 381, 387
1671093.....363, 381
1671176..... 255
1671201.....172, 178
1671228... 171, 174, 178, 181
1671230.....173, 180
1671231.....174, 181
1671232.....174, 181
1671236... 172, 173, 178, 179
1671237..... 173
1671248... 172, 173, 178, 179
1671311..... 215
1671332.....178, 179
1683053..... 291
1683059.....283, 285
1683077..... 307
1683078.....11, 15, 283
1683609.....227, 291
1683740.....12, 15, 305
1683818..... 297
1683976..... 285
1683986..... 283
1684041.....231, 307
1684042.....223, 297
1684043.....231, 307
1684045..... 307
1684046..... 307
1684049..... 307
1684050..... 307
1684078..... 297
1684080..... 297
1684089..... 291
1684090..... 291
1684123..... 297
1684124.....227, 297
1684133..... 285
1684135..... 285
1684136..... 227, 285
1684184..... 297
1684188..... 285
1684189..... 223, 285
1684191..... 283
1684198..... 297
1684199..... 223, 297
1684202..... 227, 297
1684267..... 307
1684269..... 307
1700584... 393, 397, 403, 410
1700818... 119, 123, 128, 134, 394, 398, 403, 410
1701499... 394, 397, 403, 407
1701500..... 393, 403
1701501... 393, 397, 403, 409
1701502... 393, 397, 402, 407
1701503... 393, 397, 402, 407
1701504..... 393, 403
1701505 . 82, 89, 96, 103, 394, 398, 403, 410
1701509... 393, 397, 403, 407
1701542... 113, 118, 128, 134, 394, 398, 403, 410
1701543... 118, 123, 128, 134, 394, 398, 403, 410
1701691... 394, 397, 404, 410
1702153..... 393, 397
1702300..... 393, 403
1702565..... 255
1702566..... 255
1702567..... 255
1702590..... 198
1702610..... 158
1702676..... 255
1702701..... 20
1702720..... 403
1702773... 253, 393, 398, 402, 410
1702774... 393, 398, 402, 410
1702861... 393, 398, 402, 410
1702868.... 393, 397, 422
1702901..... 53
1702903..... 53
1702924..... 53
1702925..... 53
1702927..... 52
1702938.... 257, 274, 277
1702941..... 82, 91, 103
1702942..... 82, 91, 103
1702943..... 82, 90, 103
1702944..... 82, 91, 103
1702961..... 398, 419
1702962..... 398, 419
1703162 . 79, 88, 95, 105, 112, 120, 130, 135
1703175.....398, 410, 419
1703465.....158
1703466.....158
1703475....394, 397, 403, 408
1703482....394, 397, 403, 408
1703797.....393, 397
1703798.....393
1703804.....393, 397
1703805.....393, 397
1703808....393, 397, 402, 410
1703811.....397, 407
1703814.....397, 407
1703923.....401, 408
1703924.....401, 408
1703925.....401, 408
1703926.....401, 408
1703927.....401, 408
1703928.....401
1703929.....401
1703930.....401
1703931.....401
1703932.....401
1703933.....401
1703934.....401
1703935.....402, 408
1703936.....401, 408
1703937.....401, 408
1703938.....402, 408
1703939.....402, 408
1703940.....401
1703941.....407
1703942.....407
1703943.....407
1703944.....407
1703945.....407
1703947.....402, 408
1703948.....402, 408
1703949.....402, 408
1703950.....402, 408
1703951.....402, 408
1703952.....402
1703953.....397
1703980.....403, 408
1703981.....403, 408
1703982.....403, 408
1703983.....403, 408
1703984.....403, 408
1703985.....403
1703996.....402, 409
1704000.....402, 408, 422
1704001.....402, 408
1704002.....402
1704006.....403, 407
1704007.....403, 407
1704008.....403
1704098.....402, 409
1704099.....402, 409
1704100.....402
1704101.....402, 409
1704102.....402, 409
1704103.....402, 409
1704106.....402, 409
1704107.....409
1704108.....402

1704109 ..... 402, 409
1704110 ..... 402, 409
1704111 ..... 402, 409
1704112 ..... 402, 409
170417 402
1704260 255
1704271 403
1704277 ... 393, 397, 402, 407
1704412 ... 394, 397, 403, 407
1704540 ..... 394, 404
1704578 47
1704885 ... 394, 398, 404, 410
1704895 428
1704896 428
1704906 ... 393, 397, 402, 409
1704907 ... 393, 397, 402, 409
1704919 428
1704920 428
1704952 257
1704972 ..... 103, 398
1704993 257
1704995 ..... 393, 397
1704996 ..... 393, 397
1704997 256
1705000 428
1705014 253
1705015 ... 393, 397, 402, 410
1705088 ..... 393, 397
1705089 ..... 393, 397
1705090 47
1705132 ..... 159, 255
1705170 ..... 168, 257
1705325 ..... 187, 191
1705336 397
1705344 408
1705345 408
1705347 408
1705348 408
1705351 398
1705363 394
1705364 20
1705374 .... 208, 213, 217
1705375 .... 208, 213, 217
1705376 .... 207, 212, 216
1705387 .... 208, 213, 217
1705426 410
1705427 410
1705429 410
1705430 410
1705460 .... 208, 213, 217
1705514 ..... 403, 407
1705589 52
1705753 158
1705895 408
1705896 408
1705897 408
1705898 408
1705901 407
1705902 408
1705903 407
1705905 410
1705910 410
1705917 408
1705967 407
1705968 407
1705969 408
1706059 ..... 103, 410
1706060 ..... 103, 410
1706061 ..... 103, 411
1706062 ..... 103, 411
1706063 ..... 103, 411
1706064 ..... 103, 410
1706098 103
1706380 409
1706381 409
1706385 253
1706712 ..... 158, 163
1706914 158
1706915 158
1706941 ..... 397, 410
1707015 397
1707016 397
1707042 410
1707043 409
1707044 ..... 409, 410
1707045 409
1707046 409
1707047 410
1707048 409
1707049 410
1707051 409
1707052 409
1707053 409
1707054 410
1707055 409
1707056 409
1707057 409
1707058 409
1707059 409
1707060 409
1810098 ..... 157, 160
1810099 ..... 157, 159, 160
1810101 ..... 157, 159, 160
1810103 ..... 157, 160
1810104 ..... 157, 160
1810106 ..... 157, 159, 160
1870133 345
1870195 345
1870221 345
2000174 ..... 111, 113, 123
2000178 ..... 95, 97
2000193 ..... 111, 113, 123
2000194 ..... 79, 83
2000211 119
2000216 ..... 105, 107
2000219 104
2000233 104
2000271 119
2000272 121
2000274 ..... 105, 107
2000279 104
2000285 104
2000296 119
2000323 119
2000339 ..... 105, 107
2000342 104
2000354 130
2000365 104
2000375 129
2000379 129
2000386 ..... 79, 83
2000391 104
2030010 428
2060025 .. 79, 88, 95, 105, 111, 120, 130, 135
2080040 ..... 245, 249, 250
2080044 ..... 241, 428
2110404 .... 317, 319, 323, 327, 331, 337
2110406 .... 317, 319, 323, 327, 331, 335
2110408 .... 140, 317, 323, 324, 331, 332
2110604 335
2110606 ..... 317, 323, 337
2110608 338
2110610 337
2110806 ..... 319, 327
2110808 .... 319, 323, 327, 331, 337
2110810 ..... 324, 333
2110812 .... 319, 323, 327, 331
2111008 337
2111010 .... 140, 319, 324, 327, 332, 337
2111212 ..... 323, 337
2111612 337
2111616 .... 140, 319, 323, 324, 327, 331, 332, 337
2111620 .... 319, 323, 327, 331
2112424 ..... 144, 337, 338
2120150 51
2120163 51
2120182 52
2120209 51
2120210 ..... 51, 414
2130204 331
2130404 .... 144, 319, 323, 327, 331, 335, 337, 338
2130406 ..... 331, 335, 337
2130604 ..... 319, 327, 331
2130606 ..... 323, 337
2130608 337
2130808 ..... 319, 327, 331
2130810 ..... 144, 337, 338
2130812 327
2131008 ..... 323, 331
2131010 337
2131012 .... 319, 323, 327, 331
2131210 337
2131212 .... 140, 319, 324, 332, 337
2131216 ..... 144, 319, 338
2131616 .... 140, 319, 324, 327, 331, 332
2150404 337
2150406 .... 319, 323, 327, 331
2150606 337
2150808 ..... 327, 331
2150812 ..... 327, 331
2151616 ... 319, 323, 327, 331
2160001 59
2170104 327
2170204 323
2170306 335
2170308 ..... 324, 332
2170312 ..... 319, 327
2170350 331
2170406 ..... 317, 323, 332
2170408 ..... 319, 327, 331
2170504 ... 317, 319, 323, 327, 331
2170506 ..... 317, 337
2170508 323
2170516 ..... 319, 323
2170704 327
2170708 ..... 331, 335
2170804 335
2170912 ..... 319, 327
2180125 123
2180344 59
2180348 82, 90, 103, 118, 128, 134
2180387 123
2180388 123
2180389 123
2180418 ... 118, 123, 124, 128, 134
2180467 120
2180536 ..... 82, 95
2180798 79, 95, 105, 112, 120
2180829 338
2180877 ..... 131, 136
2200222 ... 63, 68, 82, 90, 97, 103, 113, 118, 128, 134
2220005 ... 118, 123, 128, 134
2220063 59
2220124 60
2220235 335
2220237 ... 319, 323, 327, 331
2220240 319
2220242 ..... 319, 327
2220250 ..... 82, 96
2220261 ..... 123, 124
2220273 ..... 81, 95, 113
2220313 . 82, 90, 95, 103, 112, 118, 128
2220418 123
2220430 112
2220451 ..... 95, 105
2220459 ..... 82, 96
2220591 331
2220767 80
2220794 ..... 82, 96, 113
2220805 112
2220811 ... 141, 319, 324, 327, 332
2220883 39, 40, 285, 287, 289, 291, 293, 295, 297, 301, 303

SECTION 10 - SPECIAL OPTIONS

2220885....283, 285, 291, 293, 295, 297, 301, 303, 307, 311, 313
222088639, 40, 283, 287, 289, 307, 311, 313
2220887.....301
2220888.....39, 297, 301
2221018.....124
2221024.....124
2221084....140, 319, 323, 327
2221086.....337
2221088....319, 323, 327, 331
222117682, 90, 103, 118, 128, 134
2221183.....323, 331
2221197.....123
2221216.....332
230000480, 90, 119, 129, 130, 134, 420
2300014.....421
2300016.....19, 421
2300021.....421
2300027.....421
2300029.....421
2300039.....421
2300040.....420
2300041.....80, 90, 420
2400060....208, 213, 217, 353, 366, 372, 382, 388
2400061.....353, 366
2400064....208, 213, 217, 373, 388, 416
2400065.....353, 367, 383
2400066....353, 356, 367, 373, 383, 388
2400070....356, 373, 388, 416
2410014.....253
2420165....187, 191, 202, 208, 217
2420172.....158, 163
2420187.....114, 121
2420191.....147
2420203....186, 190, 193, 197, 201
2460011.....189, 193
2460013.....185, 189, 193
2460032.....185, 189, 193
2460034.....189, 193
2460039.....185, 189
2460041.....206
2460044.....193
2460048.....206, 211, 215
2460049.....185, 189
2460050.....206
2460051.....197, 201
2460052.....197
2460055.....185, 189
2460056.....185, 189
2460057.....185, 189
2540035.....172, 178
2560122.....53
2560123.....53
2560136.....255
2560173.....250
2573001..... 15
2580024.....80, 91, 103
2580050.....82, 90, 104
2580055.....80, 84, 91
2580062..... 107
2600209.....171, 173, 180
2600216..... 245
2600219..... 245
2600233.....174, 181
2600244.....172, 178
2600281..... 249
2600287..... 245
2680451.....171, 173
2680488.....172, 174
2680490.....172, 178
2680492.....171, 173, 174
2720058... 79, 82, 88, 90, 96, 103, 113, 118, 128, 130, 135
2720144..... 123
2720271.82, 96, 131, 136
2720314..... 114
2720351..... 96
2720392... 118, 123, 128, 134
2720398.....95, 105
2720434...79, 88, 96, 105
2720435.....112, 120
2720436.....112, 120
2720449.....96, 105
2720472.....112, 118
2720509.....79, 88
2720510..... 79
2720514.....120, 130
2720515.....80, 88
2720532..... 118
2720563.....130, 136
2720564.....130, 136
2720566.....128, 134
2720567.....128, 134
2720580.....128, 134
2750532. 82, 90, 96, 103, 105, 111, 112, 120, 128, 130
2751032..... 60
2753537..... 327
2753538..... 337
2753540... 319, 323, 327, 331
2753545..... 337
2753546.....327, 331
2753549..... 331
2753550..... 331
2753555.....323, 332
2753575.....319, 327
2753576..... 338
2753578..... 335
2753582... 319, 323, 327, 332
2753590..... 338
2753621.....319, 327
2753622... 323, 327, 331, 337
2753623..... 327
2753624..... 317
2753625..... 337
2753626.....332, 337
2753627..... 317, 337
2753628..... 327, 332
2753629.....317
2753630.....317
2753631.....327
2753632.....327
2753633.....327
2753634..... 327, 332
2753635.... 319, 323, 327
2753652.....319
2753653.....337
2753654.....337
2753656.....337
2753657.....337
2753658.....338
2753659..... 319, 327
2753660.... 319, 327, 332
2753661... 319, 324, 327, 332
2753662.....337
2753664... 319, 324, 328, 332
2753665.....337
2753666..... 319, 328
2753667... 319, 324, 328, 332
2753668.....337
2753670.....338
2753671.....338
2753672.....338
2753674.....338
2753675.....338
2753676.....338
2753677.....337
2753678..... 335, 338
2753679.....338
2753680.....338
2753681.....338
2753682.....338
2753683.....338
2753684.....338
2753685... 319, 323, 328, 332
2753686..... 328, 332
2753687.....319
2753688..... 319, 324
2753689.....319
2753692.....338
2753693.....338
2753709..... 319, 323
2753725..... 319, 323
2753807... 319, 324, 328, 332
2753808.....337
2753895.....335
2753896.....335
2753897.....335
2753935..... 323, 332
2753970.....332
2753971.....332
2754040.....332
2754044.....331
2754238.....324
2754239.....324
2754240.....324
2754242.....324
2754243.....324
2754245.....323
2754337.....331
2754338.....332
2754401.....323, 327, 331
2754402.....324
2754718.....331
2754719.....332
2754720.....332
2754743.....332
2754744.....332
2754994.....331
2754995.....331
2754996.....332
2754997.....332
2754998.....332
2760105.....158, 163
2780205.....59, 63
2780227.....19, 23, 29
2780229.....12, 16
2780259.....19, 25
2780272.....19, 29
2792463.....337, 340
2792464.....337, 340
2792465.....319, 340
2792466.....327, 340
2792495.....341
2792497.....340
2792502.....317, 340
2792503.....341
2792597.....335, 340
2792648.....317, 340
2792649.....337, 340
2792650.....337, 340
2792651.....323, 340
2792652.....331, 340
2792653.....341
2792678.....341
2792713.....331, 340
2792714.....323, 340
2792770.....331, 340
2820031....187, 191, 194, 198, 201, 207, 212, 215, 350, 361, 379
2820035....167, 246, 250, 369, 385
2820078.....174, 181
2820079.....174
2820080.....173, 174, 179
2820081.....174
2820172.....120
2820173.....120
2820180.....130
2820233.....173, 179
2820234.....173, 179
2820235.....173, 179
2840016.....183
2860012.....190, 194
2860030.....158, 163, 414
2900062.....52
2900708.....43
2900733.....65
2900756.....45, 53
2900770.....235, 283
2900792.....291, 293, 295
2901271.....283
2901303.....291
2901443.....374, 388, 423

2901537 ..... 298, 301
2901554 308
2901608 .... 112, 118, 368
2901609 ..... 81, 96
2901971 428
2902050 298
2902061 .... 285, 287, 289
2902065 107
2902134 298
2902203 ..... 419, 423
2902300 422
2902303 419
2902307 419
2902308 419
2902309 419
2902310 419
2902311 419
2902312 419
2902322 419
2902354 419
2902394 419
2902401 ..... 81, 102, 368, 384
2902429 419
2902443 ..... 367, 383
2902445 ..... 118, 368
2902460 338
2902461 338
2902462 338
2902533 ... 129, 135, 368, 384
2910799 420
2910871 419
2910888 418
2910928 420
2910950 420
2915094 424
2915140 420
2915195 114
2915196 114
2920028 ..... 257, 277
2920029 257
2920110 168
2920113 168
2920129 .... 353, 367, 383
2920140 ... 245, 250, 356, 373, 388
2920154 255
2920157 .... 168, 250, 356
2920162 .... 186, 190, 193
2920215 168
2940074 .... 245, 249, 414
2940088 ... 173, 174, 180, 181
2940188 179
3010088 273
3020008 19
3020016 80, 90, 104, 107, 420
3020021 ..... 98, 107
3020044 80, 90, 107, 420
3124114 115
3160266 ..... 19, 35
3160268 ..... 19, 33
3160280 ..... 59, 65
3160286 ..... 59, 68
3160294 ..... 59, 68
3160308 ..... 19, 35
3160347 ..... 19, 39
3160348 ..... 19, 39
3200362 ..... 96, 105, 112, 120, 130, 136
3200406 ... 79, 88, 95, 105
3200436 239
3200449 239
3220103 ..... 97, 105
3220104 ..... 97, 105
3220113 ..... 79, 88, 115
3220114 115
3220134 121
3250585 250
3250872 47
3251102 .... 187, 191, 194, 198, 201, 257
3251243 .... 190, 194, 198, 201, 393, 397, 403, 407
3251813 .... 393, 397, 402, 408
3252221 403
3252347 393
3252507 .... 187, 191, 393, 403
3252764 .... 198, 205, 212, 216, 428
3252781 .... 394, 397, 403, 410
3271805 ..... 151, 153, 253
3272001 232
3272401 232
3272605 237
3290405 ..... 128, 134
3290505 .... 128, 134, 187, 191
3290507 91
3290801 ..... 79, 88
3300007 ..... 12, 16, 19
3300205 ..... 160, 163
3300240 232
3300241 232
3300242 232
3300243 237
3300353 255
3300396 ..... 207, 212, 216
3300408 ..... 158, 163, 255
3310601 .... 183, 187, 191, 202, 207, 208, 212, 216, 217
3310805 .... 124, 167, 187, 191, 202, 208, 217
3311001 ..... 245, 249, 257
3311005 ..... 53, 111, 168, 172, 173, 174, 178, 180, 181, 186, 191, 194, 198, 201, 255
3311401 ..... 158, 277
3311405 .... 51, 52, 79, 82, 88, 90, 95, 103, 104, 106, 112, 118, 119, 120, 128, 129, 130, 134, 135, 136, 168, 172, 173, 178, 198, 201, 207, 212, 216, 241, 245, 250, 274, 393, 398, 403, 410, 428
3311501 ..... 273, 277
3311505 .... 45, 52, 79, 82, 88, 96, 106, 115, 121, 128, 134, 172, 178, 201, 205, 212, 216, 241, 279, 298, 428
3311508 205
3311601 .... 147, 172, 178, 212, 216, 256
3311602 147
3311605 .... 79, 88, 91, 95, 102, 106, 112, 118, 120, 128, 130, 136, 172, 173, 174, 178, 179, 183, 186, 190, 194, 221, 224, 227, 228, 232, 237, 250, 253, 273
3311608 ..... 224, 229
3311705 ..... 186, 190, 194
3311801 .... 19, 79, 89, 96, 102, 112, 119, 129, 207
3311805 .. 79, 89, 95, 106, 112, 120, 130, 135, 136, 172, 178, 183, 221, 237, 279, 428
3312002 59
3312201 232
3321501 ..... 172, 179
3322201 153
3340755 232
3340757 232
3340758 232
3340787 ..... 224, 228
3340871 232
3340881 232
3340936 ..... 224, 228
3340942 ..... 224, 228
3340943 ..... 224, 228
3340966 16
3380434 ..... 245, 250
3380443 172
3380444 ..... 172, 178
3380458 172
3380459 172
3380461 ..... 172, 178
3380462 172
3380463 172
3380517 172
3380518 172
3380575 ..... 172, 178
3380580 ..... 172, 179
3380652 421
3420156 256
3420372 47
3420447 47
3421565 ..... 47, 59
3422417 232
3422424 232
3422446 .. 81, 90, 95, 102, 112, 118, 128, 134
3422530 183
3422532 .. 81, 90, 96, 104, 113, 119, 129, 135
3422562 223
3422567 15
3422569 223
3422580 223
3422701 ..... 12, 15
3422702 ..... 11, 12, 15
3422703 ..... 11, 15
3422754 ..... 12, 15
3422755 ..... 11, 15
3422793 227
3422813 15
3422841 47
3422847 47
3422848 15
3422849 12
3422860 228
3422861 228
3422867 228
3422908 ..... 221, 223, 227
3422909 221
3422910 221
3422920 221
3422922 ..... 223, 227
3422930 221
3422931 ..... 223, 227
3422932 227
3422972 15
3430816 183
3440410 239
3450304 256
3450404 183
3460398 120
3460399 ..... 171, 173, 180
3460544 ..... 82, 90
3460552 180
3470003 256
3480176 283
3480210 291
3480265 297
3480266 307
3480267 285
3480275 297
3510772 245
3510816 245
3510817 245
3510821 245
3510822 249
3510830 249
3510831 249
3510833 249
3510837 245
3510868 253
3510884 253
3520028 ... 186, 191, 194, 255
3520034 228
3520035 159
3520072 ..... 245, 249, 253
3520172 245
3520189 ..... 372, 387
3520198 249
3530072 273
3536089 ..... 245, 250
3537416 ..... 95, 106
3537420 95
3537445 183
3537446 183
3538047 ..... 11, 15
3539219 ..... 160, 163
3539281 168

SECTION 10 - SPECIAL OPTIONS

3539622.....232
3539662.....47
3539685.....245
3539719.....273
353987279, 95, 106, 111, 120, 130, 136
3539877.....11
3539878.....11
353993481, 97, 103, 113, 118
3539971.....95, 106
3539972.....111
3570103.....112
3570133.....112
3570686.....43
3571498.....111
3571712.....173, 179
3572009.....47
3572010.....47
3572011.....47
3572012.....47
3572280.....120, 130, 136
3573047....241, 350, 361, 379
3573049.....221
3573050.....221
3573296.....241
3573418.....224, 228
3574091.....277
3574122.....112
3574162.....113, 120
3574172.....298
3574179.....52
3574206.....79, 89
3574207.....79, 89
3574208.....79, 89
3574225.....198, 212
3574229.....212
3574262.....212
3574504.....120
3574684.....186
3574978.....106
3575359.....277
3575718.....45
3580134.....186, 190, 193
3580158.....189
3580243.....232
3580249.....232
3580250.....193
3580276.....186, 190
3580288.....232
3580289.....232
3580312....198, 201, 212, 216
3580313.....198, 212
3580314.....212, 216
3580317.....207
3580318.....207
3580320.....207
3580321.....207
3580322.....185
3580324.....197, 201
3580325.....198
3580348.....201, 216
360029580, 95, 111, 139, 140
360032481, 95, 111, 143, 144
3600342.....51, 52
3600377.....113, 121
360041081, 90, 104, 119, 129, 135, 140, 324, 332
360041181, 90, 104, 119, 129, 135, 144, 338
3600424.....51, 52
3620033.....95, 106
3620040... 111, 120, 130, 136
3620047.....79, 89
3640986..... 209
3641533.....209, 212, 218
3641569..... 277
3730120.....353, 367
3730121.....353, 367
3740047..... 430
3740049... 158, 163, 354, 355, 370, 385, 414
3740067. 79, 89, 95, 106, 111, 120, 130, 136, 414
3740080... 107, 186, 191, 194, 198, 201, 207, 212, 216, 414, 416
3753550.....319, 323, 327
3760170.....47, 59
3760368..... 291
3760370... 283, 285, 287, 307
3780117..... 237
3790012... 123, 128, 134, 168, 256, 257
3790044. 81, 90, 96, 104, 111, 119, 129, 135
3790045..... 19
3790112..... 308
3790152.....104, 119
3820001..... 47, 168, 393, 398, 403, 410
3820020..... 249
3841143... 11, 12, 15, 81, 90, 95, 102, 112, 118, 129, 134, 223, 228, 232
3841203..... 227
384128711, 15, 221, 223, 227
3841340.....228, 241
3841356..... 221
3890013..... 232
3890014..... 232
3890015..... 232
3890016..... 232
3890017..... 232
3890018..... 232
3890040..... 253
3900054..... 253
3900141..... 291
3900192.....223, 227
3900205..... 249
3900232.....172, 173, 179
3900268.....158, 163
3900283.....224, 229
3900293..... 59
3900310.....297, 303
3900316.....224, 229
3900322..... 198
3910606.... 205, 212, 216
3910608... 183, 187, 191, 202, 208, 217
3910610.... 207, 213, 216
3910804..... 158, 163
3910808..... 124
3911008..... 53, 245, 249
3911018..... 255
3911040..... 168
3930606..... 239
3930816..... 167
3930828..... 167
3931448..... 307, 311
3931480..... 308
3931508..... 307, 311
3931516..... 291
3931620..... 285
3931624..... 221
3931632..... 207
3931672..... 256
3931720..... 283, 287
3931724..... 307
3931740..... 307, 311
3932224..... 59
3932240.... 297, 301, 303
3951608..... 232
3952020..... 59
3960389... 112, 172, 173, 179
3960407..... 96, 106
3960422... 205, 212, 216, 354, 371, 386, 387
3960438.... 172, 174, 181
3960461..... 168
3960462... 173, 174, 180, 181
396046481, 97, 103, 113, 118, 173, 174, 180, 181
3960468. 79, 89, 96, 106, 113, 121, 130, 136
3960469. 79, 89, 96, 106, 113, 121, 130, 136
3960470..... 172, 179
3960525..... 147
396054882, 90, 104, 112, 119, 129, 135
3960549... 81, 90, 95, 97, 104, 113, 119, 129, 135
3960591..... 120
3980007..... 80, 91
3990010... 352, 354, 355, 364, 381, 416
4031608..... 187, 191
4031911..... 79, 89
4032015..... 205
4060092.... 354, 371, 386
4060700... 205, 212, 216, 354, 371
4060802... 186, 191, 194, 198, 201, 205, 212, 216, 251, 257, 428
4060803..... 245
4060804..... 96, 113
4060805. 81, 89, 96, 106, 121, 130, 136
4060806..... 113
4060906.....158, 163
4060907.....168
4060959.....421
4061010.....173, 179
4061032.....338
4061043....205, 212, 216, 372
4061049.....207
4070585.....191
4070863.....232
4070878.....11, 15
4070879.....11, 15
4070895.....232
4070897.....232
4070898.....232
4070929.....232
4070939.....232
4070940.....232
4070944.....11
4070945.....11
4070969.....224, 229
4070987.....158, 163
4071009.....59
4071020.....233
4071043.....167
4071059.....16
4100100.....291
4120035.....352, 365, 381
4130388.....15
4130389.....12
4130390.....12, 15
4160139.....172, 179
4160143.....172, 179
4160149.....232
4160187.....221
4220162.....168
4220165.....245
4220191.....79, 89
4240018....198, 201, 206, 338
4240032....168, 187, 191, 202, 208, 217
4240099.....245, 250, 277
4240112.....147
4240139.....147
4280295.....147
4300097.....19
4300111.....212, 216
4300157.....207
4340738.....198, 212
4341239.....130, 136
4341241.....130, 136
4360031.....250, 414
4360057.....273, 277, 416
4360070....207, 213, 216, 416
4360188.....123
4360232....257, 356, 373, 388, 416
4360294.....191, 194
4360314.....257
4360322.....167
4360328....158, 163, 255, 257, 414, 416
4360330.....255, 414
4360331.....256, 414

4360336 ... 123, 129, 134, 168, 186, 191, 194, 198, 201, 205, 212, 216, 251, 257, 416, 428
4360387 ... 256, 257, 274, 277, 414
436039279, 95, 106, 112, 120
4360407 256
4360469 .... 158, 163, 414
4360475 ... 158, 163, 256, 414
4360476 ... 158, 163, 256, 414
4360503 ..... 239, 353
4360506 ... 350, 361, 379, 414
4360517 ... 154, 167, 369, 385, 414
4360522 .... 168, 257, 416
4360528 ..... 239, 353
4360542 ... 186, 190, 193, 197, 201
4360544 ... 239, 353, 369, 385, 414
4360578 ..... 167, 416
4360579 167
4400275 123
4400420 123
4400437 147
4400439 147
4400453 147
4420037 251
4420038 147
4420051 ..... 47, 419
4420060 ... 167, 187, 191, 202, 208, 217
4420068 ..... 277, 279
4460007 256
4460018 ... 187, 191, 202, 208, 217
4460023 .... 186, 191, 194
4460027 ... 186, 190, 197, 201, 355
4460049 ..... 273, 277
4460051 ... 206, 212, 216, 354, 371, 372, 386, 387
4460071 ... 206, 212, 216, 245, 250, 348, 354, 360, 372, 378, 387
4460125 .... 354, 371, 386
4460134 ... 354, 355, 371, 386
4460190 ... 186, 190, 193, 197, 201
4460205 ... 354, 355, 370, 371, 386
4460224 ... 354, 356, 369, 385
4460225 ... 256, 348, 349, 352, 360, 361, 364, 372, 378, 381, 387
4460226 ... 264, 271, 348, 349, 350, 351, 352, 353, 354, 355, 356, 360, 361, 362, 364, 365, 367, 368, 369, 370, 372, 373, 374, 378, 380, 381, 382, 383, 385, 386, 387, 388, 389
4460227 .... 348, 349, 351, 352, 354, 356, 360, 361, 365, 369, 373, 378, 381, 382, 385, 388
4460233 .... 354, 355, 370, 371, 386
4460234 .... 168, 187, 191, 202, 208, 217, 256, 277
4460259 ..... 370, 385
4460260 ..... 370, 385
4460265 ..... 264, 271
4460267 .... 350, 351, 352, 355, 362, 364, 370, 380, 381, 385
4460268 .... 168, 352, 355, 365, 370, 382, 385
4460297 ..... 370, 385
4460315 207
4460320 .... 350, 351, 354, 355, 356, 362, 364, 369, 370, 373, 379, 381, 385, 388
4460321 .... 355, 370, 374, 386, 389
4460339 366
4460346 .... 205, 212, 216, 354, 371, 372, 386, 387
4460374 .... 208, 213, 217, 366, 372, 383, 386, 388
4460375 .... 208, 213, 217, 366, 372, 383, 386, 388
4460411 ..... 208, 213, 217
4460412 ..... 208, 213, 217
4460413 ..... 208, 213, 217
4460414 ..... 209, 213, 217
4460415 ..... 209, 213, 218
4460418 .... 349, 352, 361, 364, 378, 381
4460419 .... 349, 352, 361, 364, 378, 381
4460424 .... 167, 350, 352, 353, 355, 356, 362, 364, 365, 367, 370, 373, 380, 381, 382, 383, 385, 388
4460425 .... 207, 213, 216, 274, 277, 356, 372, 373, 387, 388
4460426 .... 158, 163, 207, 213, 216, 250, 257, 351, 364, 372, 373, 381, 387, 388
4460428 .... 256, 348, 360, 378
4460434 .... 349, 352, 361, 365, 378, 381
4460457 ..... 352, 366, 382
4460458 .... 217, 352, 353, 366, 367, 369, 370, 382, 383, 386
4460459 ..... 356, 373
4460460 ..... 352, 366, 382
4460464 .... 348, 350, 351, 352, 353, 360, 361, 362, 363, 364, 365, 367, 369, 379, 380, 382, 383, 384
4460465 .... 208, 213, 217, 350, 351, 352, 361, 362, 363, 364, 365, 366, 372, 379, 380, 381, 383, 384, 388
4460466 .... 350, 361, 362, 379, 383, 384
4460467 .... 357, 373, 388, 424
4460470 .... 158, 163, 256, 348, 350, 351, 360, 361, 364, 378, 379, 381
4460471 .... 158, 163, 256, 348, 350, 351, 360, 361, 364, 378, 379, 381
4460473 .... 350, 361, 362, 379
4460476 ..... 356, 373
4460488 ..... 158, 163, 256
4460496 .... 164, 256, 348, 360, 378, 382
4460497 .... 164, 256, 348, 360, 378, 382
4460508 .... 349, 350, 352, 360, 361, 365, 378, 379, 382
4460509 .... 350, 361, 362, 379
4460510 .... 357, 374, 388, 424
4460526 .... 158, 163, 351, 364, 381
4460536 ..... 365, 381
4460539 ..... 366, 367, 382
4460579 ..... 352, 366
4460580 ..... 352, 366
4460582 ..... 352, 366
4460598 .... 246, 250, 257, 356
4460607 ..... 209, 213, 218
4460608 ..... 366, 383
4460611 ..... 96, 113
4460634 ..... 352, 365, 381
4460635 ..... 352, 365, 381
4460693 ..... 366, 383
4460701 ..... 355, 371, 386
4460705 ..... 355, 370, 386
4460708 .... 256, 348, 353, 360, 367, 378, 383
4460709 ..... 354, 371
4460710 ..... 355, 371, 386
4460713 ..... 352, 366
4460725 ..... 352, 366
4460726 ..... 352, 366
4460728 ..... 353, 366
4460742 .... 217, 353, 366, 369, 370, 373, 386, 388
4460743 .... 217, 369, 370, 373, 386, 388
4460761 .... 348, 351, 360, 365, 378, 382
4460789 ..... 356, 373
4460790 ..... 356, 373
4460792 366
4460799 ..... 353, 366
4460800 ..... 352, 366
4460834 ..... 351, 364, 381
4460842 ..... 351, 364, 381
4460850 356
4460865 ... 350, 361, 362, 379
4460866 ... 348, 350, 352, 360, 361, 365, 378, 379, 382
4460871 ... 259, 261, 267, 269, 349, 351, 352, 353, 356, 360, 364, 365, 366, 369, 378, 381, 382, 383, 385
4460873 ... 349, 352, 360, 365, 378, 381
4460874 ... 158, 349, 351, 360, 364, 378, 382
4460875 ... 158, 349, 351, 364, 382
4460876 ... 349, 352, 360, 364, 378, 382
4460878 ..... 352, 365, 382
4460879 ..... 349, 361, 378
4460880 ... 348, 350, 351, 352, 360, 362, 364, 365, 378, 379, 381, 382
4460887 ... 349, 352, 353, 361, 365, 367, 378, 382, 383
4460889 352
4460890 352
4460891 ... 350, 351, 352, 362, 363, 364, 365, 380, 381, 383, 384
4460892 ..... 367, 384
4460894 ..... 367, 383, 384
4460897 ... 350, 351, 362, 363, 364, 369, 380, 381, 384
4460899 383
4460905 ... 159, 256, 348, 352, 360, 364, 365, 378, 381, 382
4460906 ... 201, 355, 370, 386
4460910 ..... 348, 360, 378
4460911 ..... 353, 369, 385
4460912 ..... 353, 369, 385
4460913 ..... 348, 360, 378
4460917 ... 348, 349, 360, 361, 378
4460918 ... 348, 353, 360, 369, 378, 385
4460925 ..... 349, 361, 378
4460926 ..... 348, 360, 378
4460928 ..... 348, 360, 378
4460929 ... 348, 349, 360, 361, 378
4460943 ..... 365, 381, 382
4460944 ..... 366, 382
4460956 ..... 209, 213, 218
4460957 ..... 209, 213, 218

SECTION 10 - SPECIAL OPTIONS

4460958....205, 212, 216, 371, 387
4460959.....363, 381
4460960.....363, 381
4460961.....355, 370, 386
4460963....208, 213, 216, 372, 387
4460967....208, 213, 217, 372, 388
4460968.....167, 187, 191
4460978.....353, 367, 369
4460979....353, 367, 369, 383
4460995.....366
4460996.....366
4461001.....209, 213, 218
4461005.....366, 382
4461006.....366, 382
4461008.....383
4461052.....366, 382
4461053.....366, 383
4461054.....366, 383
4461060.....366, 382
4461070.....366, 382
4461071.....367, 383
4461072.....367, 383
4461073.....367, 383
4461074.....367, 383
4461095.....366, 382
4461109.....366, 383
4461111.....366, 383
4461113.....367, 383
4461121.....366, 383
4461122.....366, 383
4461123.....366, 383
4461124.....366, 383
4461157.....367, 383
4461161.....366, 383
4461222.....367, 383
4520252.....20
4520253.....20
4520256.....20
4530016.....428, 429
4530020.....428, 429
4564281.....114, 121
4564417.....194
4566468.....285
4566471.....291
4566605.....111, 120
4567073.....79, 89, 115
4567627.....172
4567815.....96, 106
4567879.....112, 120
4568133.....47
4568158.....113
4568240.....297
4568264.....308
4568273.....297
4568282.....308
4568402.....285
4568708.....335
4568721.....79, 89
4568734.....198, 212
4568735....198, 201, 212, 216
4568788.....79
4568951.....120
4569083..... 120
4569171..... 106
4569173..... 120
4569177..... 79
4569342..... 131
4569371.....84, 93
4569394.....131, 136
4640113..... 20
4640261..... 47
4640509.....291, 293, 295
4640673..... 298
4640750..... 79
4640751.....95, 106
4640774..... 335
4640858..... 283
4640902..... 53
4640930..... 52
4640932.....285, 287, 289
4640952..... 131
4640989.....111, 120
4641033.....308, 311, 313
4641062..... 291
4641108..... 52
4641144..... 298
4641162..... 283
4641183..... 43
4641184.....51, 55
4641185..... 238
4641186.....237, 238
4641188.....298, 301, 303
4641194.....298, 301, 303
4641198.....320, 328
4641201..... 428
4641209..... 43
4641232.....285, 287, 289
4641234.....298, 301, 303
4641237..... 340
4641251..... 238
4641262..... 308
4641263..... 53
4641300..... 45
4641303..... 45
4641317..... 51
4641432.....51, 55
4711000..... 154
4711400..... 52, 103, 107, 113, 119, 120, 131, 135, 136, 168, 198, 201, 205, 212, 216, 241, 245, 250, 274
4711500... 45, 47, 80, 89, 115, 129, 134, 205, 212, 216, 238, 257, 429
4711600... 11, 15, 81, 89, 90, 96, 106, 120, 131, 136, 174, 181, 207, 216, 221, 224, 229, 232, 238, 239
4711700... 106, 198, 201, 212
4711800... 183, 205, 212, 216, 221, 253, 429
4711900.....97, 106
4740036..... 47
4740057..... 59
4740076.....172, 179
4740111.....12, 15
4740119.....183
4740155.....16
4740171..... 172, 179
4740256..... 12, 16
4740274 . 80, 89, 96, 106, 112, 120, 131, 136
4740362 .... 168, 245, 250
4740397 ... 186, 191, 194, 198, 201, 257, 429
4740439.....228
4740444..... 158, 163
4740463..... 12, 16
4740472..... 11, 15
4740473..... 12, 16
4740492.....221
4740500..... 173, 180
4750600 .... 207, 213, 216
4750800 ... 124, 167, 187, 191, 202, 208, 217
475100047, 53, 111, 147, 168, 172, 173, 174, 179, 180, 181, 186, 191, 194, 198, 201, 245, 249, 256, 273
4751400 ... 52, 53, 80, 82, 89, 90, 95, 103, 104, 106, 112, 118, 120, 129, 131, 134, 136, 158, 163, 167, 172, 173, 179, 205, 207, 233, 241, 245, 250, 256, 277, 393, 398, 403, 410, 429
4751500 ... 52, 53, 80, 82, 89, 103, 111, 120, 129, 134, 160, 172, 179, 186, 191, 194, 201, 205, 241, 273, 277, 279, 298, 429
4751600 ... 43, 45, 52, 80, 89, 91, 95, 102, 106, 112, 118, 120, 124, 129, 131, 136, 147, 172, 173, 179, 180, 186, 190, 194, 198, 212, 216, 237, 250, 273
4751700 106
4751800 . 80, 89, 96, 102, 112, 129, 131, 135, 136, 151, 153, 198, 212, 237, 251, 253, 273, 277
4751900 186
4752000 . 81, 90, 96, 102, 113, 119, 129, 134
4760600 ... 187, 191, 202, 207, 208, 213, 216, 217
4761000 ... 245, 249, 256, 257
4761400 ..... 158, 164
4761500 ... 111, 205, 212, 216, 273
4761600 ..... 212, 216
4770600 183
4771800 .... 113, 119, 129
479140089, 96, 106, 131, 136, 207, 212
4811600.....91, 187, 191
4811700.....91
4811900..80, 89, 91, 186, 201, 207, 216
4812000.....91, 120, 194
4812100...80, 89, 91, 187
4812200.....106
4831900.....98, 107, 113, 120, 131, 136
4832000..80, 89, 98, 107, 112, 120
4844816.....228
4844817.....228
4844958.....59
4845308.....273
4845309.....273
4845327.....245
4845395.....96, 106
4845404.....95, 106, 112, 121
4845411.....171
4845426.....245
4845658.....11
4845951.....245
4846046.....111
4846158.....237
4846218.....238
4846231.....429
4846295.....47
4846296.....47
4846355.....221
4846402.....224
4846403.....224
4846413.....15
4846414.....16
4846420.....229
4846421.....229
4846427.....221
4846430.....59
4846435.....228
4846452.....249
4846477.....429
4846479.....95
4846553.....224, 229
4846554.....224
4846555.....229
4846558.....224, 229
4846561.....251
4846566.....95, 106
4846573.....237
4846588.....171, 173, 180
4846673.....277
4846790.....80, 89
4846805.....80, 89
4846806.....111, 121
4846935.....16
4860224.....20
4860225.....20
4860230.....20
4891500.....198
4891600....107, 151, 153, 183, 198, 202, 212, 216, 233, 237
4891800....19, 59, 81, 90, 95, 104, 111, 119, 129, 135, 183, 237, 279

4892000 ... 12, 16, 19, 59, 198
4892200 59
4892600 237
4920385 .... 120, 131, 136
4921801 354
4921820 354
4922482 355
4922498 356
4922566 .... 350, 361, 379
4922567 .... 350, 361, 379
4922569 .... 350, 362, 379
4922570 430
4922594 ... 159, 164, 351, 364, 381
4922595 .... 256, 348, 360
4922619 ..... 159, 352
4922620 ..... 256, 348
4922636 ..... 367, 383
4922641 ... 208, 213, 217, 355, 370, 373, 386, 388, 430
4922643 .... 355, 370, 385
4922654 .... 159, 351, 352
4922655 .... 159, 351, 352
4922660 .... 350, 362, 379
4922666 ... 158, 256, 348, 351, 360, 378
4922690 354
4922737 . 80, 81, 97, 103, 113, 119, 129, 368
4922741 .... 355, 370, 386
4922742 ..... 355, 370
4922743 ..... 355, 370
4922749 ... 256, 348, 360, 378
4922757 ..... 208, 372
4922764 .... 356, 373, 388
4922771 .... 353, 367, 383
4922790 .... 351, 363, 380
4922808 .... 351, 363, 380
4922809 .... 351, 363, 380
4922871 ... 350, 362, 364, 380
4922872 ... 351, 362, 363, 380
4922873 ... 351, 356, 362, 373, 380, 388
4922874 ... 351, 356, 363, 373, 380, 388
4922877 ... 351, 356, 363, 373, 380, 388
4922883 .... 356, 373, 388
4922905 ..... 213, 372
4922922 .... 158, 351, 352
4922925 ... 207, 212, 216, 372, 387
4922968 369
4922970 ..... 355, 370
4922978 103
4923213 ..... 159, 364
4923239 ..... 159, 365
4923277 ..... 159, 365
4923278 ..... 159, 365
4923279 ..... 159, 364
4923292 352
4923379 .... 107, 369, 385
4923420 ..... 217, 372, 388
4923445 ..... 370, 386
4923462 ..... 361, 362, 379
4923466 .... 362, 363, 364, 380, 381
4923502 ..... 159, 365
4923577 ..... 159, 364
4923585 ..... 159, 365
4923591 367
4923595 ..... 361, 379
4923596 ..... 362, 379
4923597 ..... 362, 379
4923598 ..... 362, 364, 380
4923599 ..... 362, 363, 380
4923600 ..... 363, 380
4923601 ..... 363, 380
4933189 344
4933193 ..... 344, 430
4933200 ..... 345, 352, 353
4933201 ..... 345, 352, 353
4933215 ..... 344, 355
4933216 ..... 344, 355
4933217 344
4933218 345
4933219 344
4933231 344
4933243 344
4933249 ..... 344, 373, 388
4933264 ..... 208, 344, 372
4933283 ..... 213, 344, 372
4933292 ..... 345, 353
4933300 ..... 344, 355, 370
4933323 ..... 345, 365, 367
4933336 ..... 345, 365, 367
4933337 ..... 345, 365, 367
4933349 .... 217, 344, 372, 387
4933350 ..... 344, 370, 386
4933357 ..... 345, 365, 367
4933374 ..... 345, 365, 367
4933375 ..... 345, 365, 367
4933376 ..... 345, 365, 367
70000007 ..... 114, 121
70000045 97
70000122 ..... 185, 189
70000123 ... 185, 189, 193
70000124 .. 186, 190, 193, 197
70000125 .. 186, 190, 193, 197
70000126 .. 186, 190, 193, 197
70000127 ... 186, 190, 197
70000164 135
70000264 109
70000342 235
70000345 109
70000579 55
70000580 55
70000582 ..... 55, 414
70000583 55
70000619 ... 206, 211, 215
70000781 45
70000782 74
70000793 107
70000794 39
70000795 39
70000797 39
70000800 109
70000863 ... 206, 211, 215
70000912 108
70000913 108
70000914 108
70000915 108
70000916 108
70000917 108
70000918 108
70000919 108
70000934 51
70001002 107
70001017 .. 79, 88, 89, 97, 106, 115
70001051 ..... 84, 92
70001056 52
70001100 ... 206, 211, 215
70001103 148
70001120 ..... 83, 92
70001126 109
70001132 107
70001248 ..... 153, 154
70001384 ... 206, 211, 215
70001423 107
70001435 108
70001498 108
70001690 121
70001696 ... 206, 211, 215
70001697 235
70001742 ..... 84, 92
70001835 108
70001836 108
70001837 108
70001838 108
70001839 108
70001841 108
70001847 109
70001848 107
70001850 107
70001866 108
70001868 108
70001870 109
70001872 ... 109, 368, 384
70001874 108
70001941 168
70001953 ... 206, 211, 215
70001966 ... 206, 211, 215
70001969 206
70001973 ... 206, 212, 215
70001974 ... 206, 211, 215
70002065 74
70002066 74
70002067 74
70002068 74
70002069 74
70002070 74
70002071 74
70002072 74
70002073 74
70002074 74
70002075 ..... 74, 75
70002085 75
70002086 75
70002088 ... 206, 211, 215
7000209 ..... 63, 68
7000213 ..... 23, 25, 29, 75
7000214 ..... 63, 68
7000217 ..... 63, 68, 74
7000220 ..... 23, 25, 29
70002200 109
70002234 ..... 97, 108
70002235 ... 185, 190, 193
70002239 185
7000224 ..... 23, 25, 29
70002240 ..... 186, 190
7000228 ..... 63, 68, 74
7000229 ..... 63, 68, 74
70002297 ... 206, 211, 215
7000230 ..... 63, 68, 74
70002307 ..... 114, 121
7000231 ..... 23, 25, 29
7000235 ..... 23, 25, 29
7000236 ..... 23, 29
7000238 ..... 23, 25, 29
7000239 ..... 23, 29
70002390 45
7000240 ..... 23, 29
70002415 ..... 97, 109
70002416 ..... 97, 109
70002417 ..... 97, 109
7000246 ..... 63, 68, 74
70002460 ... 206, 211, 215
7000248 ..... 68, 74
7000253 ..... 63, 68, 74
7000255 ..... 63, 68, 74
7000256 63
70002567 ..... 114, 121
7000257 ..... 63, 68, 74
7000258 63
7000263 ..... 63, 68, 74
7000265 ... 12, 16, 23, 25, 29
7000269 ..... 63, 68
7000270 ..... 63, 68
70002705 ..... 79, 88
70002706 ..... 79, 88
7000272 ..... 23, 29
70002724 269
70002725 269
70002726 269
70002727 269
70002728 269
70002729 269
7000273 ..... 23, 29
70002730 261
70002731 261
70002732 261
70002733 261
70002734 261
70002735 261
7000274 ..... 23, 29
7000275 ..... 23, 29
70002761 ..... 84, 92
70002762 ..... 84, 92
70002763 ..... 84, 92
70002764 ..... 84, 92
70002765 ..... 83, 92
70002766 84
70002767 84
7000281 ..... 68, 74
70002818 ..... 208, 217
70002819 ..... 208, 217
7000282 ..... 23, 25, 29

SECTION 10 - SPECIAL OPTIONS

70002820.....208, 217
70002821.....209, 217
70002822.....209, 218
70002823.....209, 218
70002824.....209, 218
70002825.....209, 218
70002826.....209, 218
7000283.....23, 25, 29
70002833.....84, 92
70002834.....84, 92
70002835.....84, 92
7000284.....23, 25, 29
70002841.....84
70002843.....83, 92
70002844.....83, 92
70002845.....84, 92
70002846.....84, 92
70002847.....84, 92
70002848.....84, 92
70002849.....84, 92
70002850.....84, 92
70002851.....84, 93
70002852.....83, 93
7000287.....23, 25, 29
7000288.....23, 25, 29
7000289.....23, 25, 29
70002895.....135, 416
7000290.....23, 29
70002906.....261
70003001.....109
70003002.....109
70003003.....109
70003024.....55
70003454.....154
70003483.....250
70003708.....206
70003709.....206
70003921.....224, 228
70003922.....224, 228
70003931.....97
70003935.....45
70003936.....45
70004019.....53
70004169..206, 211, 212, 215
70004170.....206
70004171...206, 211, 215
70004182.....79, 89
70004316.....384, 416
70004317.....384, 416
70004318.....384, 416
70004319.....384, 416
70004738.....271
70004739.....271
70004740.....271
70004741.....271
70004742.....271
70004743.....271
70004744.....271
70004745.....271
70004746.....271
70004747.....271
70004748.....271
70004749.....271
70004750.....271
70004751.....271
70004752.....263
70004753..... 263
70004754..... 263
70004755..... 263
70004756..... 263
70004757..... 263
70004758..... 263
70004759..... 263
70004760..... 263
70004761..... 263
70004762..... 263
70004763..... 263
70004764..... 263
70004765..... 263
70004766..... 263
70004767..... 263
70004768..... 263
70004769..... 263
70004770..... 263
70004771..... 263
70004772..... 263
70004773..... 263
70004774..... 263
70004775..... 264
70005230..... 271
7000625..... 250
70006365..... 303
70006377..... 303
70006392..... 303
70006393..... 303
70006394..... 303
70006395..... 303
70006503..... 301
70006504..... 301
70006505..... 301
70006506..... 301
70006568..... 293
70006569..... 293
70006570..... 293
70006571..... 293
70006572..... 293
7000663.....97, 108
70006645..... 289
70006648..... 287
70006649..... 295
70006650..... 295
70006694.....311, 313
70006699.....287, 289
70006700.....287, 289
70006701..... 287
70006719..... 311
70006720.....311, 313
70006721..... 311
70006726..... 289
70006727..... 289
70006728..... 289
70006729..... 313
70006730..... 313
70006731..... 313
70006732..... 313
70006733..... 313
70006734..... 295
70006735..... 295
70006736..... 295
7000731.....19, 30, 59
7000897.....114, 121
7001498..... 140
7001901.....23, 25, 29
7001902 ..... 23, 25, 29
7001903 ..... 23, 25, 29
7001906 ..... 23, 25, 29
7001909 ..... 63, 68, 74
7001911 ..... 63, 68, 74
7001912 ..... 68, 74
7001928 ... 23, 25, 29, 63, 68
7001931 ..... 63, 68, 74
7001985 ..... 63, 68, 74
7001987 63
7001988 63
70020808 384
70020809 384
7002107 65
7002110 65
7002111 65
7002112 65
7002117 65
7002125 65
70023915 293
7002821 ... 357, 373, 388, 423
7002822 424
7002823 ... 357, 373, 388, 423
7002826 424
7002828 .... 357, 374, 388
7003657 .... 185, 190, 193
7003928 ..... 259, 261
7003933 267
7003935 267
7003941 ..... 267, 269
7003946 267
7003953 259
7003969 267
7003972 ..... 267, 269
7003973 ..... 267, 269
7003976 259
7003977 259
7003980 ..... 267, 269
7003982 269
7003983 ..... 267, 269
7003986 267
7003989 ..... 267, 269
7003992 ..... 259, 267
7003993 ..... 259, 267
7003994 267
7004035 75
7004036 75
7004042 69
7004043 ..... 69, 75
7004044 ..... 69, 75
7004045 75
7004047 75
7004049 75
7004275 424
7004276 424
7007208 139
7007412 141
7007413 139
7007414 139
7007415 143
7007417 139
7007419 ..... 33, 36, 139
7007420 36
7007423 139
7007425.....33, 139
7007435.....33, 139
7007437...33, 36, 40, 139
7007438...33, 35, 39, 139
7007439...33, 35, 39, 139
7007441.....33, 139
7007442.....33, 139
7007446...33, 35, 39, 139
7007452.....139
7007453.....140
7007454.....139
7007457.....139
7007463.....140
7007464.....140
7007465.....140
7007466.....140
7007470.....33, 139
7007472.....140
7007474.....140
7007475.....140
7007478.....140
7007483.....140
7007484.....140
7007485.....140
7007487.....140
7007488.....140
7007494.....139
7007496.....140, 414
7007497....140, 353, 369, 385
7007498....140, 353, 369, 385
7007633.....63, 68, 74
7009992.....65
7009996.....65
7009998.....65
7010114.....33
7010116.....33, 141
7010122.....140
7010404.....12, 16
7010405.....12, 16
7010406.....12, 16
7010461.....68
7010464.....23, 29
7010474.....63, 68, 74
7010488.....63
7010492.....63, 68, 74
7010494.....63
7010542.....238
7010543...51, 52, 55, 238
7010545.....55
7011016.....52
7011043.....52
7011044.....52
7011048.....52
7011062.....52
7011112.....285, 287, 289
7011323.....235
7011325.....298
7011346.....308
7012513....185, 189, 193, 197, 201
7012514....185, 189, 193, 197, 201
7012518.....52, 238
7012558....185, 189, 193, 197, 201

7012664 . 78, 88, 95, 105, 112, 120, 130, 135, 414
7012679 121
7012699 53
7012769 55
7012772 55
7012903 55
7012925 ..... 55, 298, 301, 303
7012930 43
7012941 51
7012942 55
701294352, 55, 238, 298, 301, 303, 414
7012944 . 51, 52, 55, 238, 414
7012953 ..... 53, 238
7012955 238
7012961 53
7012965 238
7012967 ..... 55, 238, 298
7012974 52
7012975 55
7012989 238
7012995 52
7012998 55
7013711 52
7013715 52
7013716 52
7013753 52
7014801 147
7014802 147
7014811 147
7014813 147
7014816 147
7014818 147
7014900 65
7016314 148
7016322 183
7016328 ..... 97, 108, 416
7016331 ..... 97, 107, 416
7016374 183
7016380 168
7016399 ..... 245, 250
7016652 424
7016654 424
7016655 424
7016769 52
701680081, 96, 112, 118, 368
7016802 ..... 81, 96
7016803 81, 96, 102, 368
7016807 .... 113, 118, 368
7016808 .... 113, 118, 368
7016809 ..... 81, 96
7016813 ..... 81, 102, 368
7016821 ..... 118, 368
7016822 ..... 118, 368
701682481, 96, 103, 113, 118, 129, 135, 368, 384
701682581, 96, 103, 113, 118, 129, 135, 368, 384
7017023 ..... 68, 74
7017027 ..... 23, 25, 29
7017028 75
7017033 ..... 23, 29
7017034 23
7017035 23
7017036 23
7017037 23
7017038 23
7017039 23
7017040 23
7017041 23
7017042 23
7017047 ..... 23, 25, 29
7017048 ..... 23, 25, 29
7017050 ..... 23, 25, 29
7017051 ..... 12, 16
7017052 ..... 12, 16
7017053 ..... 12, 16
7017054 ..... 12, 16
7017055 ..... 12, 16
7017056 ..... 12, 16
7017057 ..... 12, 16
7017058 ..... 12, 16
7017068 ..... 23, 30
7017070 ..... 63, 68, 74
7017072 74
7017080 74
7017082 ..... 25, 68
7017085 ..... 68, 74
7017089 ..... 63, 68
7017125 235
7017136 235
7017137 235
7017138 235
7017139 235
7017140 235
7017141 235
7017142 235
7017158 235
7017159 235
7017162 235
7017163 235
7017164 235
7017172 235
7017175 235
7017192 235
7017210 305
7017211 305
7017213 305
7017214 305
7017215 305
7017236 305
7017402 ..... 55, 238
7017406 45
7017422 55
7017451 ..... 55, 298, 301, 303, 414
7017452 238
7017479 238
7017489 55
7017492 45
7017496 55
7018612 ..... 19, 59
7018912 55
7019103 267
7019110 267
7019111 ..... 259, 267
7019112 267
7019114 267
7019115 267
7019122 259
7019123 259
7019141 259
7019142 259
7019143 259
7019144 259
7019145 259
7019147 259
7019149 259
7019150 259
7019151 267
7019154 267
7019155 267
7019160 267
7019161 267
7019162 ..... 267, 269
7019164 ..... 267, 269
7019165 ..... 267, 269
7019166 267
7019167 ..... 267, 269
7019168 267
7019171 259
7019174 259
7019177 259
7019194 ..... 267, 269
7019197 259
7019680 .... 185, 190, 197, 201
7019925 ..... 115, 121
7019930 115
7019932 115
7019976 ..... 114, 121
7019977 ..... 114, 121
7019986 114
7019993 ..... 114, 121
7019994 121
7019996 ..... 114, 121
7020020 51
7020043 147
7020108 .... 185, 189, 193, 197, 201
7020109 .... 185, 189, 193, 197, 201
7020110 .... 185, 189, 193, 197, 201
7020111 .... 185, 189, 193, 197, 201
7020168 97
7020175 ..... 158, 163, 256
7020176 ..... 158, 163, 256
7020190 .... 185, 189, 193, 197, 201
7020191 ..... 186, 190, 193
7020192 .... 186, 190, 193, 197
7020193 ..... 370, 386
7020246 ..... 157, 163
7020256 147
7020352 65
7020353 65
7020357 65
7020359 65
7020362 65
7020363 65
7020408 ..... 97, 108
7020411 ..... 97, 108
7020447 108
7020449 ..... 97, 108
7020458 ..... 97, 109
7020459 109
7020460 109
7020461 ..... 97, 109
7020463 97
7020464 ..... 97, 108
7020465 ..... 97, 107
7020468 ..... 97, 107
7020471 ..... 97, 108
7020479 ..... 97, 108
7020480 97
7020487 107
7021200 139
7021201 139
7021202 ..... 33, 139
7021203 ..... 33, 139
7021205 139
7021206 140
7021207 ..... 33, 139
7021208 139
7021209 139
7021212 139
7021213 139
7021214 140
7021218 140
7021219 ..... 33, 140
7021220 140
7021221 140
7021222 140
7021223 ..... 33, 140
7021226 140
7021227 140
7021228 140
7021229 140
7021230 140
7021231 140
7021232 141
7021249 ..... 35, 39
7021275 ..... 35, 39, 144
7021276 39
7021277 ..... 35, 39
7021612 55
7021616 238
7021625 ..... 43, 45
7021639 45
7021868 ..... 114, 121, 416
7022134 ..... 113, 121, 353
7022135 416
7022139 ..... 114, 121
7022143 ..... 114, 121
7022144 114
7022149 114
7022150 ..... 115, 121
7022151 115
7022152 115
7022153 114
7022155 121
7022157 115
7022158 114
7022159 114
7022160 114
7022161 114
7022162 114
7022165 123
7022166 123
7022167 123
7022168 123

7022169.....123
7022170.....123
7022171.....123
7022178.....114
7022180.....114, 121
7022207.....52
7022215.....52
7022227.....52
7022228.....52
7022229.....52
7022230.....52
7022231.....52
7022302.....35, 39
7022305.....35, 39
7022310.....35, 39
7022311.....35, 39
7022312.....35, 39
7022313.....35, 39
7022314.....35, 39
7022318.....143
7022321.....35, 36
7022323.....36
7022326.....36, 40
7022328.....36, 40
7022363.....429
7022367.....35
7022368.....35, 39
7022370.....36
7022371.....33, 36, 40
7022372.....36, 40
7022397.....43, 45
7022399.....43, 45
7022808.....259, 261
7022812.....267
7022814.....259
7022815.....259, 261
7022816.....259
7022817.....259
7022818.....259
7022819....259, 261, 353, 369, 385
7022820.....353, 354
7022822.....267
7022823.....267
7022824.....267, 353
7022825.....353, 369, 385
7023023.....305
7023206.....51
7023207.....51
7023251.....429
7023252.....429
7023253.....429
7023254.....429
7023255.....429
7023256.....429
7023257.....429
7023258.....429
7023259.....429
7023260.....429
7023261.....429
7023262.....429
7023264.....429
7023265.....429
7023266.....429
7023267.....429
7023306.....147
7023318.....75
7023347.....147
7023413.....428
7023414.....428
7023415.....428
7023416.....428
7023417.....428
7023418.....428
7023419.....429
7023420.....429
7023421.....429
7023422.....429
7023423.....429
7023424.....430
7023425.....430
7023426.....430
7023427.....430
7023428.....430
7023444.....429
7023445.....429
7023446.....429
7023447.....429
7023448.....429
7023449.....429
7023603.....123
7023613.....114
7023637.....114
7023644.....114
7023652.....114
7023653.....114
7023654.....114
7023655.....114
7023656.....114
7023657.....114
7023658.....114
7023662.....114
7023665.....123
7023679.....356, 369
7023680.....123
7023681.....114, 121, 353
7023682.....114, 121
7023695.....114
7023698.....121
7023699.....121
7023907.....35, 39
7023908.....35, 39
7023910.....35, 39
7023911.....238
7023915.....238
7023917.....43, 45
7023918.....55
7023919.....55, 298, 301, 303
7023921.....55
7023922.....55, 238
7023923.....55, 298, 301, 303
7023924.....238
7023925.....55
7023927.....298, 301, 303
7023933.....43, 45
7023938.....33
7023939.....33
7023940.....33
7023941.....33
7023942.....33
7023943.....33
7023944.....33
7023945.....33
7023946.....33
7023947.....143
7023948.....143
7023949.....143
7023950.....143
7023951.....143
7023952.....143
7023953.....143
7023954.....143
7023955.....143
7023956.....143
7023957.....143
7023958.....143
7023959.....143
7023960.....143
7023961.....143
7023962.....143
7023963.....143
7023964.....143
7023965.....143
7023966.....144
7023967.....143, 144
7023977.....139
7023982....298, 301, 303
7023983.....238
7023984.....238
7023985.....55
7023986.....55
7023987.....55
7024100.....63, 75
7024106.....25, 26
7024108.....25
7024137.....25
7024138.....25
7024139.....25
7024140.....25
7024141.....25
7024142.....25
7024143.....25
7024144.....25
7024145.....25, 29
7024146.....25, 29
7024147.....25, 29
7024148.....25, 29
7024149.....25, 29
7024150.....25
7024151.....25, 29
7024152.....25
7024153.....25
7024154.....25, 29
7024155.....23, 25, 29
7024156.....25
7024182.....29, 30
7024185.....68
7024189.....30, 69
7024190.....30, 69
7024191.....30, 69
7024192.....30, 69
7024193.....30, 70
7024194.....30, 69
7024195.....30, 70
7024196.....30, 70
7024197.....30, 70
7024313.....429
7024314.....429
7024315.....429
7024316.....429
7024317.....430
7024318.....97
7024369.....224, 228, 416
7024370.....224, 228, 416
7024373.....52
7024374.....147, 148
7024375.....147, 148
7024379.....69, 75
7024380.....69, 75
7024381.....75
7024389.....69
7024390.....75
7024396.....75
7024398.....97, 106
7024400.....151
7024404.....151, 154
7024439.....148
7024440.....148
7024441.....147
7024442.....147
7024443.....147
7024444.....147, 414
7024445.....148
7024446.....148
7024452.....250
7024453.....69, 75
7024454.....69, 75
7024455.....69, 75
7024456.....69, 75
7024457.....69, 75
7024458.....69, 75
7024459.....69
7024481.....147
7024484.....206, 211, 215
7024485.....206, 211, 215
7024488.....206, 211, 215
7024489.....206, 211, 215
7024508.....308, 311, 313
7024559.....430
7024560.....97, 106
7024565.....97, 109
7024579.....97, 109
7024598.....183
7024702.....69
7024703.....68
7024704.....68, 74
7024705.....68
7024706.....69
7024707.....68, 69
7024709.....26
7024710.....26
7024711.....26
7024717.....30
7024718.....30
7024719.....26
7024720.....26
7024762.....74
7024763.....30, 74
7024781.....29
7024782.....29
7024783.....29
7024784.....68, 74
7024828.....140
7024832.....238
7024844.....45
7024854.....40

7024861 35
7024862 ..... 35, 39
7024865 35
7024867 ..... 35, 39
7024868 39
7024870 36
7024871 ..... 36, 40
7024881 45
7025124 114
7026004 308
7026015 308
7026016 308
7026188 .... 206, 211, 215
7026189 .... 151, 153, 154
7026197 ..... 151, 153
7026199 ... 185, 189, 193, 201
7026503 ..... 151, 153
7026504 ..... 151, 153
7026505 ..... 151, 154
7026506 ..... 151, 154
7026507 ..... 151, 154
7026508 ..... 151, 154
7026509 ..... 151, 154
7026510 154
7026597 .... 206, 211, 215
7026607 109
7026608 108
7026626 206
7026631 ..... 97, 107
7026800 ..... 83, 92
7026801 ..... 84, 92
7026802 ..... 83, 92
7026803 ..... 83, 92
7026804 ..... 83, 92
7026805 ..... 83, 92
7026806 ..... 83, 92
7026807 ..... 83, 92
7026808 ..... 83, 93
7026809 ..... 83, 93
7026810 ..... 83, 92
7026811 ..... 83, 92, 416
7026812 ..... 83, 92
7026813 ..... 83, 92
7026814 ..... 83, 92
7026815 ..... 83, 92
7026816 ..... 83, 92
7026817 ..... 83, 92
7026818 83
7026819 ..... 83, 92
7026820 ..... 83, 92
7026821 ..... 83, 92
7026822 ..... 83, 92
7026823 83
7026824 83
7026825 83
7026826 92
7026827 ..... 83, 93
7026828 ..... 83, 93
7026829 ..... 83, 93
7026830 ..... 84, 92, 416
7026831 ..... 83, 92
7026832 ..... 83, 92
7026833 ..... 83, 92
7026834 83
7026835 84
7026836 84
7026838 84
7026839 ..... 84, 92
7026840 84
7026841 84
7026843 84
7026882 84
7026887 84
7026888 83
7027004 ..... 81, 102, 368, 384
7027012 ..... 81, 102, 368
7027015 .... 129, 135, 368, 384
7027017 ..... 129, 135, 384
7027018 .... 129, 135, 368, 384
7027027 ..... 368, 384
7027028 ..... 90, 384
7027029 ..... 90, 384
7027030 ..... 90, 384
7027031 ..... 90, 384
7027236 109
7027239 109
7027241 108
7027245 109
7027246 107
7027400 121
7027402 115
7027403 ..... 353, 369
7027404 121
7027405 121
7027409 121
7027410 121
7027411 115
7027412 ..... 79, 89
7027413 121
7027435 35
7027608 108
7027609 108
7027610 108
7027740 ..... 35, 39
7027741 ..... 36, 40
7027790 109
7027791 109
7027792 109
7027793 ..... 109, 368, 384
7027794 ..... 109, 368
7027795 ..... 109, 416
7027796 ..... 109, 368, 384
7027799 ..... 206, 211, 215
7027887 ... 186, 193, 198, 201
7027965 ..... 130, 135, 416
7027972 ..... 130, 135, 416
7027991 ..... 369, 385
7027994 130
7027996 130
7029592 52
7029593 52
77143013 163
80424002 ..... 68, 74
80424042 69
80424043 75
80934561 153
8180311 ... 111, 120, 130, 136
8229242 382
8303541 91
8405009 ..... 78, 89
8405104 ..... 78, 89
8406009 91
8406105 91
8406109 91
88521205 ..... 80, 89, 103, 129, 134
8896941 423
91083218 ..... 113, 121
91401281 ..... 78, 89, 102, 128, 134





Corporate Office
JLG Industries, Inc.
1 JLG Drive
McConnellsburg, PA 17233-9533 USA
(717) 485-5161 (Corporate)
(877) 554-5438 (Customer Support)
(717) 485-6417

Visit our website for JLG Worldwide Locations.
www.jlg.com