Illustrated Parts Manual

Models
600S
660SJ

SN 0300171769
through 0300235167
SN B300000970
through B300002654

P/N
3121299

September 14, 2018 - Rev P

ANSI

AS/NZS

An Oshkosh Corporation Company

REVISION LOG

NOTES:

NOTE: LOCATION OF MANUFACTURE

The 600S & 600SJ Boom Lifts are manufactured by JLG Industries in the following countries: USA and China. Refer to the Serial Number Tag to Identify the country of manufacture. The country of manufacture may be determined by the Serial Number. Machines manufactured In the USA will have a serial number prefix of 03 (i.e. 03XXXXXXXX). Machines manufactured in China will have a serial number prefix of B3 (i.e. B3XXXXXXXX).

NOTE: USA Built Machines with SNs 0300170082 & 0300170091 are also built to the same specs as USA Built Machines SN 0300171769 through 0300235167 - Use Parts Manual P/N 3121299.

NOTE: USA Built Machines with SNs 0300224266, 0300224267, 0300224755-0300224758, 0300233720-0300233722 & 0300234973-0300234975 are built to the same specs as USA Built Machines SN 0300235168 to Present - Use Parts Manual P/N 3121729.

NOTE : China Built Machines with SNs B300000869, B300000871 & B300000875 are also built to the same specs as China built machines SN 0300000970 through B300002654 - Use Parts Manual P/N 3121299.

NOTE : China Built Machines with SNs B300002216, B300002217, B300002339 & B300002382 are also built to the same specs as China built machines SN 0300002355 to Present - Use Parts Manual P/N 3121729.

MANUAL REVISION LOG:

April 25, 2013 - A - Original Issue Of Manual (Edited to 1001150648 Revision A)

June 14, 2013 - B - Revised (Edited to 1001150648 Revision A)

September 30, 2013 - C - Revised (Edited to 1001150648 Revision B & 1001160020 Revision C

February 28, 2014 - D - Revised (Edited to 1001150648 Revision E & 1001160020 Revision K & 1001155750 Revision C)

October 1, 2014 - E - Revised (Edited to 1001150648 Revision E & 1001160020 Revision K & 1001155750 Revision C)

October 30, 2015 - F - Revised (Edited to 1001150648 Revision G & 1001160020 Revision AD & 1001155750 Revision K) (Revision 2)

January 11, 2016 - G - Revised (Edited to 1001150648 Revision G & 1001160020 Revision AD 1001155750 Revision K) (Revision 4)

April 29, 2016 - H - Revised (Edited to 1001150648 Revision G & 1001160020 Revision AF & 1001155750 Revision K) (Revision 2)

July 20, 2016 - I - Revised (Edited to 1001150648 Revision G & 1001160020 Revision AF & 1001155750 Revision K) (Revision 2)

October 20, 2016 - J - Revised (Edited to 1001150648 Revision G & 1001160020 Revision AF & 1001155750 Revision K) (Revision 2)

January 17, 2017 - K - Revised (Edited to 1001150648 Revision G & 1001160020 Revision AN & 1001155750 Revision K) (Revision 2)

REVISION LOG

April 20, 2017 - L - Revised (Edited to 1001150648 Revision G & 1001160020 Revision AQ & 1001155750 Revision K) (Revision 2)

July 21, 2017 - M - Revised (Edited to 1001150648 Revision G & 1001160020 Revision AR & 1001155750 Revision K) (Revision 2)

October 31, 2017 - N - Revised (Edited to 1001150648 Revision G & 1001160020 Revision AR & 1001155750 Revision A-K, M-AA) (Revision 2)

January 31, 2018 - O - Revised (Edited to 1001150648 Revision G & 1001160020 Revision A-AR, AT, AU, AW & 1001155750 Revision A-K, M-AA) (Revision 1)

September 14, 2018 - P - Revised Manual

GENERAL INFORMATION

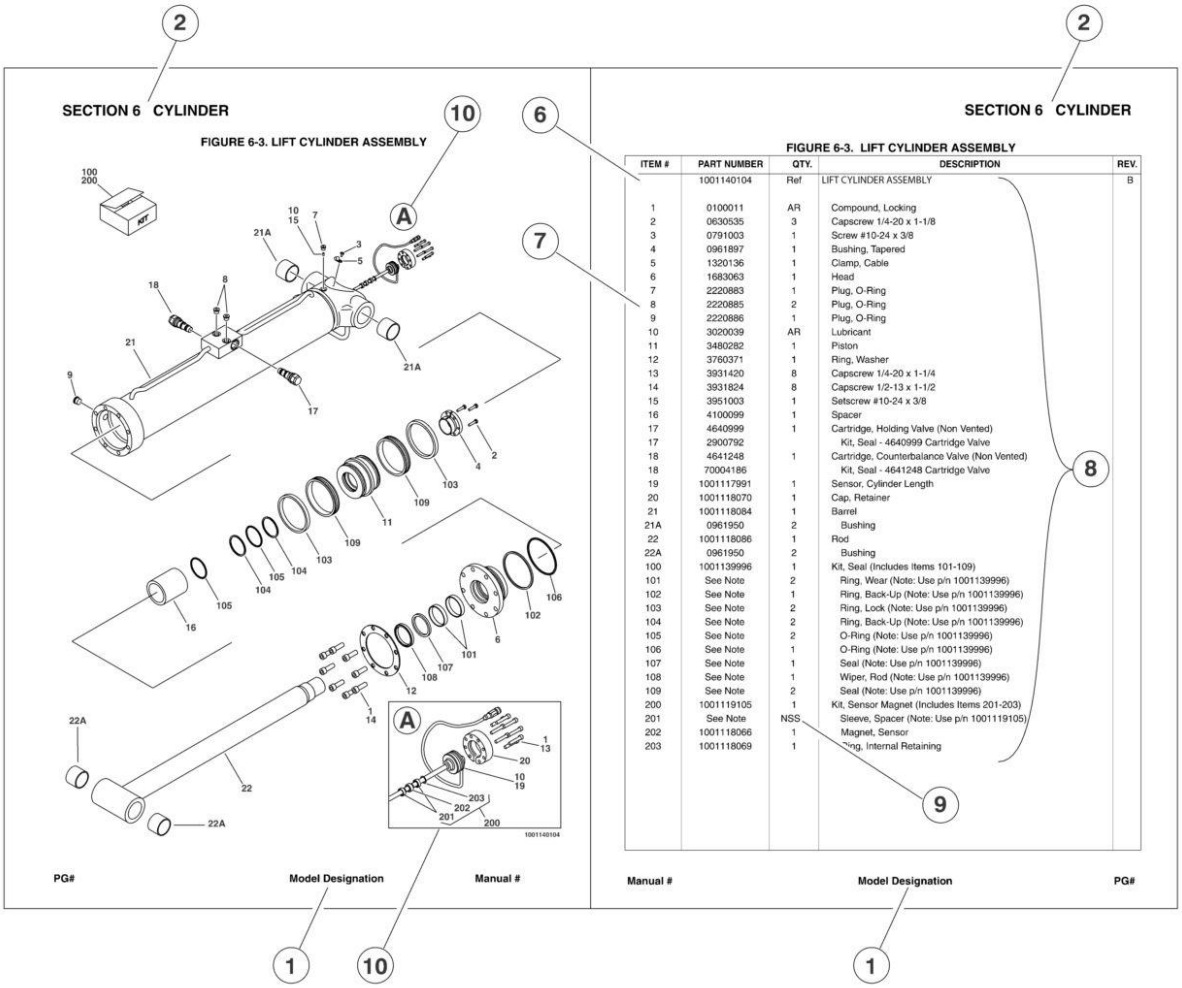

ITEM #	PART NUMBER	QTY.	DESCRIPTION	REV.
	1001140104	Ref.	LIFT CYLINDER ASSEMBLY	B
1	0100011	AR	Compound, Locking	
2	0630535	3	Capscrew 1/4-20 x 1-1/8	
3	0791003	1	Screw #10-24 x 3/8	
4	0961897	1	Bushing, Tapered	
5	1320136	1	Clamp, Cable	
6	1683063	1	Head	
7	2220883	1	Plug, O-Ring	
8	2220885	2	Plug, O-Ring	
9	2220886	1	Plug, O-Ring	
10	3020039	AR	Lubricant	
11	3480282	1	Piston	
12	3760371	1	Ring, Washer	
13	3931420	8	Capscrew 1/4-20 x 1-1/4	
14	3931824	8	Capscrew 1/2-13 x 1-1/2	
15	3951003	1	Setscrew #10-24 x 3/8	
16	4100099	1	Spacer	
17	4640999	1	Cartridge, Holding Valve (Non Vented)	
17	2900792		Kit, Seal - 4640999 Cartridge Valve	
18	4641248	1	Cartridge, Counterbalance Valve (Non Vented)	
18	70004186		Kit, Seal - 4641248 Cartridge Valve	
19	1001117991	1	Sensor, Cylinder Length	
20	1001118070	1	Cap, Retainer	
21	1001118084	1	Barrel	
21A	0961950	2	Bushing	
22	1001118086	1	Rod	
22A	0961950	2	Bushing	
100	100139996	1	Kit, Seal (Includes Items 101-109)	
101	See Note	2	Ring, Wear (Note: Use p/n 1001139996)	
102	See Note	1	Ring, Back-Up (Note: Use p/n 1001139996)	
103	See Note	2	Ring, Lock (Note: Use p/n 1001139996)	
104	See Note	2	Ring, Back-Up (Note: Use p/n 1001139996)	
105	See Note	2	O-Ring (Note: Use p/n 1001139996)	
106	See Note	1	O-Ring (Note: Use p/n 1001139996)	
107	See Note	1	Seal (Note: Use p/n 1001139996)	
108	See Note	1	Wiper, Rod (Note: Use p/n 1001139996)	
109	See Note	2	Seal (Note: Use p/n 1001139996)	
200	1001119105	1	Kit, Sensor Magnet (Includes Items 201-203)	
201	See Note	NSS	Sleeve, Spacer (Note: Use p/n 1001119105)	
202	1001118066	1	Magnet, Sensor	
203	1001118069	1	Ring, Internal Retaining	

Manual # Model Designation PG#

1) MACHINE IDENTIFICATION
Machines are identified by model and in some cases a combination of models, serial number (SN) or regional standard (i.e ANSI, CE,CSA). Components may also be identified by SN or manufacturer. common components that may be identified by these characteristics are engines and hydraulic components.

2) PARTS MANUAL ORGANIZATION
Product information in this manual is organized under section titles. Frame, Cylinder, Hydraulic and Electrical are a few examples. Each section is organized by figure and page number. The information within the Figure is then organized by item number, part number, description and corresponding illustration (s).

3) TABLE OF CONTENTS
A table of contents is found toward the beginning of the manual. Figure number, description and page number are provided for quick reference to the page containing the related information.

4) RECOMMENDED SPARE PARTS
The Recommended Spare Parts, located near the end of the manual, referance most frequently used maintenance parts.

5) PART NUMBER INDEX
A numerical index listing all part numbers and the corresponding page number(s) appears at the back of the manual.

GENERAL INFORMATION

6) NON-SERVICED PARTS
In some instances, it is necessary to display non-serviced parts, assemblies or installations. In the case of assemblies and installations there will be a Ref in the Qty column. In case of parts that are not available for service within assemblies or components, there will be a NSS (Not Sold Separately) or NLA (No Longer Available) listed in the Qty. column of the manual.

7) PARTS LIST ITEM NUMBERS
Numbers shown in the item# column correspond to numbers used in the associated illustration (s). Item numbers which are missing from the sequence in the parts list are not used on that page

8) INDENTED PARTS DESCRIPTION
An indented part description is included in the item under which it is indented.

9) ABB REVIATION AND SYMBOLS

AC ..... Alternating Current
ADE. ..... Advanced Design Electronics
ANSI ..... American National Standards Institute
AR.. ..... As Required
ASSY ..... Assembly
AUX... ..... Auxiliary
AWG ..... American WireGauge
B/M.. ..... Bill of Material
CE.. ..... European Conformity
CCW ..... Counter Clockwise
cm. ..... Centimeter
CW ..... Clockwise
CSA. ..... Canadian Standards Association
CYL... ..... Cylinder
DIA. ..... Diameter
DC ..... Direct Current
EMS ..... Emergency Stop
ENG ..... Engine
FT(ft). ..... Feet
GA(Ga).. ..... Gauge
HYD ..... Hydraulic
Hz.. ..... Hertz
ID. ..... Inside Diameter
in... ..... inches
ISO ..... International Organization for Standards
JIC ..... Joint Industry Council
KG ..... Kilogram
L.. ..... Liter
LB ..... Pounds
LCD ..... Liquid Crystal Display
LED ..... Light Emitting Diodes
LH... ..... Left Hand
LSS ..... Load Sensing System
M(m)... ..... Metric/Meter
MM (mm) ..... Milimeter
mA. ..... Miliamps
NLA ..... No Longer Available
NPT ..... National Pipe Threads
NSS ..... Not Sold Separately
OD.. ..... Outside Diameter
ORB ..... O-Ring Boss
ORFS ..... O-Ring Face Seal
OZ (oz). ..... Ounces
PG ..... Page
P/N. ..... Part Number
qt. ..... Quarts
QTY. ..... Quantity
REF ..... Reference
REV ..... Revision Level
RH... ..... Right Hand
SAE ..... Society of Automotive Engineers
SN.. ..... Serial Number
SPEC(S) ..... Specifications
T/T. ..... Turntable
UGM ..... Universal Ground Module
V. ..... Volts
W... ..... Watts
#... ..... Number

10) ILLUSTRATION REFERANCE LETTERS
When necessary, illustrations may contain referance letters that are intended to track information (i. e. hoses, harnesses) from one point to another or to track visual enlargement of components to show details that may be located in another area on the illustration.

Note: Due to continuous product improvements, JLG Industries, Inc. reserves the right to make specification changes without prior notification. Contact JLG Industries, Inc. for updated information.

TABLE OF CONTENTS

SECTION 1 - FRAME 9

FIGURE 1-1. AXLE INSTALLATION 10
FIGURE 1-2. STEERING INSTALLATION WITHOUT TOW PACKAGE 12
FIGURE 1-3. STEERING INSTALLATION WITH TOW PACKAGE 16
FIGURE 1-4. TIRE AND WHEEL DRIVE INSTALLATIONS 20
FIGURE 1-5. DRIVE HUB ASSEMBLY 24
FIGURE 1-6. DRIVE MOTOR ASSEMBLY 28
FIGURE 1-7. DRIVE VALVES AND SHIELDS INSTALLATION (FRAME MOUNTED) 30
FIGURE 1-8. TOW PACKAGE INSTALLATION (OPTIONAL) 34

SECTION 2 - TURNTABLE 37

FIGURE 2-1. CONTROL VALVES INSTALLATIONS 38
FIGURE 2-2. CONTROL VALVES INSTALLATIONS 42
FIGURE 2-3. MAIN CONTROL VALVE ASSEMBLY 44
FIGURE 2-4. MAIN CONTROL VALVE ASSEMBLY 48
FIGURE 2-5. ACCESSORY VALVE ASSEMBLY 52
FIGURE 2-6. SWING DRIVE, TURNTABLE BEARING AND LOCK INSTALLATIONS 54
FIGURE 2-7. SWING MOTOR/HUB ASSEMBLY 56
FIGURE 2-8. DEUTZ D2011 ENGINE INSTALLATION 60
FIGURE 2-9. DEUTZ TD2.9L4 ENGINE INSTALLATION 70
FIGURE 2-10. GM ENGINE INSTALLATION 84
FIGURE 2-11. PISTON PUMP ASSEMBLY (SN 0300171769 through 0300208280, SN B300000970 through B300002654) 90
FIGURE 2-12. PISTON PUMP ASSEMBLY (SN 0300208281 through 0300235167) 96
FIGURE 2-13. GEAR PUMP ASSEMBLY 102
FIGURE 2-14. FUEL-WATER SEPARATOR INSTALLATION - DEUTZ D2011 ENGINES 104
FIGURE 2-15. TANK INSTALLATIONS 106
FIGURE 2-16. HYDRAULIC TANK LOCK INSTALLATION 110
FIGURE 2-17. ROTARY COUPLING INSTALLATION 112
FIGURE 2-18. GROUND CONTROL BOX ASSEMBLY (FIBERGLASS BOX) 116
FIGURE 2-19. GROUND CONTROL BOX ASSEMBLY (STEEL BOX) 120
FIGURE 2-20. ELECTRICAL OPTIONS INSTALLATION (TURNTABLE MOUNTED) 124
FIGURE 2-21. ENGINE TRAY JACK INSTALLATION (OPTIONAL) 130
FIGURE 2-22. HOODS (ABS) AND LIFTING PLATE INSTALLATIONS 132
FIGURE 2-23. HOODS (STEEL) AND LIFTING PLATE INSTALLATIONS (DEUTZ D2011 & GM ENGINES) 138
FIGURE 2-24. HOODS (STEEL) AND LIFTING PLATE INSTALLATIONS (DEUTZ TD2.9L4 ENGINES) 144
FIGURE 2-25. 2500W GENERATOR INSTALLATION - DEUTZ D2011 MACHINES (OPTIONAL) 150
FIGURE 2-26. 2500W GENERATOR INSTALLATION - DEUTZ TD2.9L4 MACHINES (OPTIONAL) 154
FIGURE 2-27. 2500W GENERATOR INSTALLATION - GM MACHINES (OPTIONAL) 156
FIGURE 2-28. 4000W GENERATOR INSTALLATION - DEUTZ D2011 ENGINES 160
FIGURE 2-29. 4000W GENERATOR INSTALLATION - DEUTZ TD2.9L4 ENGINES 164
FIGURE 2-30. 4000W GENERATOR INSTALLATION - GM ENGINES 168
FIGURE 2-31. 7500W SKYPOWER GENERATOR INSTALLATION - DEUTZ ENGINE (OPTIONAL) 172
FIGURE 2-32. 7500W SKYPOWER GENERATOR INSTALLATION - GM ENGINE (OPTIONAL) 180
FIGURE 2-33. SKYAIR AIR COMPRESSOR INSTALLATION 186
FIGURE 2-34. AIR COMPRESSOR ASSEMBLY 188

SECTION 3 - BOOM 191

FIGURE 3-1. BOOM INSTALLATION - 600S 192
FIGURE 3-2. BOOM INSTALLATION - 660SJ 196
FIGURE 3-3. MAIN BOOM ASSEMBLIES 202
FIGURE 3-4. ROTATOR ASSEMBLIES 208
FIGURE 3-5. PLATFORM SUPPORT INSTALLATION - WITH LSS 212
FIGURE 3-6. CONTROL VALVE INSTALLATION (BOOM) 216
FIGURE 3-7. POWER TRACK INSTALLATIONS 220

SECTION 4 - PLATFORM 223

FIGURE 4-1. PLATFORM COMPONENTS INSTALLATION 224
FIGURE 4-2. PLATFORM COMPONENTS INSTALLATION (FALL ARREST PLATFORM) 230
FIGURE 4-3. PLATFORM CONSOLE ASSEMBLY (WITHOUT SKYGUARD) 232
FIGURE 4-4. PLATFORM CONSOLE ASSEMBLY (WITH SKYGUARD) 238
FIGURE 4-5. CONTROLLER ASSEMBLY (LIFT AND SWING) 242
FIGURE 4-6. CONTROLLER ASSEMBLY (LIFT AND SWING) 244

TABLE OF CONTENTS

FIGURE 4-7. CONTROLLER ASSEMBLY (DRIVE AND STEER) 248
FIGURE 4-8. CONTROLLER ASSEMBLY (DRIVE AND STEER) 250
FIGURE 4-9. SOFT TOUCH SYSTEM INSTALLATION (OPTIONAL) 252
FIGURE 4-10. SKYGUARD SYSTEM INSTALLATION 256
FIGURE 4-11. CROSS RAIL INSTALLATION 258
FIGURE 4-12. SKYGLAZIER INSTALLATION 260
FIGURE 4-13. SKYWELDER/SKYCUTTER COMBO INSTALLATION (60HZ) 262
FIGURE 4-14. SKYWELDER INSTALLATION (50HZ) 266
FIGURE 4-15. SKYWELDER INSTALLATION (60HZ) 268
FIGURE 4-16. SKYWELDER PREP PACKAGE (60HZ) 270
FIGURE 4-17. WELDER ASSEMBLY 272
FIGURE 4-18. SKYCUTTER INSTALLATION 274
FIGURE 4-19. PLASMA CUTTER ASSEMBLY 276
FIGURE 4-20. PIPE RACKS INSTALLATION 278

SECTION 5 - CYLINDER 281

FIGURE 5-1. AXLE LOCKOUT CYLINDER ASSEMBLY 282
FIGURE 5-2. LEVEL CYLINDER ASSEMBLY - PLATFORM SLAVE (ORIGINAL EQUIPMENT) 284
FIGURE 5-3. LEVEL CYLINDER ASSEMBLY - PLATFORM SLAVE (600S) (SERVICE REPLACEMENT) 288
FIGURE 5-4. LEVEL CYLINDER ASSEMBLY - PLATFORM SLAVE (660SJ) (SERVICE REPLACEMENT) 290
FIGURE 5-5. LIFT CYLINDER ASSEMBLY - JIB (660SJ) (ORIGINAL EQUIPMENT) 292
FIGURE 5-6. LIFT CYLINDER ASSEMBLY - JIB (660SJ) (SERVICE REPLACEMENT) 294
FIGURE 5-7. LIFT CYLINDER ASSEMBLY - JIB (660SJ) (SERVICE REPLACEMENT) 296
FIGURE 5-8. LIFT CYLINDER ASSEMBLY - MAIN BOOM 298
FIGURE 5-9. MASTER CYLINDER ASSEMBLY 300
FIGURE 5-10. STEER CYLINDER ASSEMBLY 304
FIGURE 5-11. TELESCOPE CYLINDER ASSEMBLY 306

SECTION 6 - HYDRAULIC 309

FIGURE 6-1. HYDRAULIC DIAGRAM - AXLE LOCKOUT 310
FIGURE 6-2. HYDRAULIC DIAGRAM - DRIVE AND STEER (2WD/2WS) 312
FIGURE 6-3. HYDRAULIC DIAGRAM - DRIVE AND STEER (4WD/2WS) 314
FIGURE 6-4. HYDRAULIC DIAGRAM - STANDARD 316
FIGURE 6-5. HYDRAULIC DIAGRAM - STANDARD 320
FIGURE 6-6. HYDRAULIC DIAGRAM LIST 324

SECTION 7 - ELECTRICAL 325

FIGURE 7-1. ELECTRICAL DIAGRAM LIST 326
FIGURE 7-2. HARNESS COMPONENTS INSTALLATION 328
FIGURE 7-3. HARNESS COMPONENTS INSTALLATION 348

SECTION 8 - DECALS 369

FIGURE 8-1. DECAL INSTALLATION (ANSI SPEC) 370
FIGURE 8-2. DECAL INSTALLATION (COUNTRY SPEC) 374
FIGURE 8-3. DECAL INSTALLATION (AUSTRALIAN AND CE SPEC) 380

SECTION 9 - RECOMMENDED SERVICE PARTS STOCK 383

FIGURE 9-1. MODEL 600SJ/660SJ STANDARD PARTS 384
FIGURE 9-2. MODEL 600SJ/660SJ VARIABLE PARTS 386

SECTION 10 - SPECIAL OPTIONS 387

FIGURE 10-1. SPECIAL OPTIONS 388

PART NUMBER INDEX 397

SECTION 1 - FRAME

FIGURE 1-1. AXLE INSTALLATION

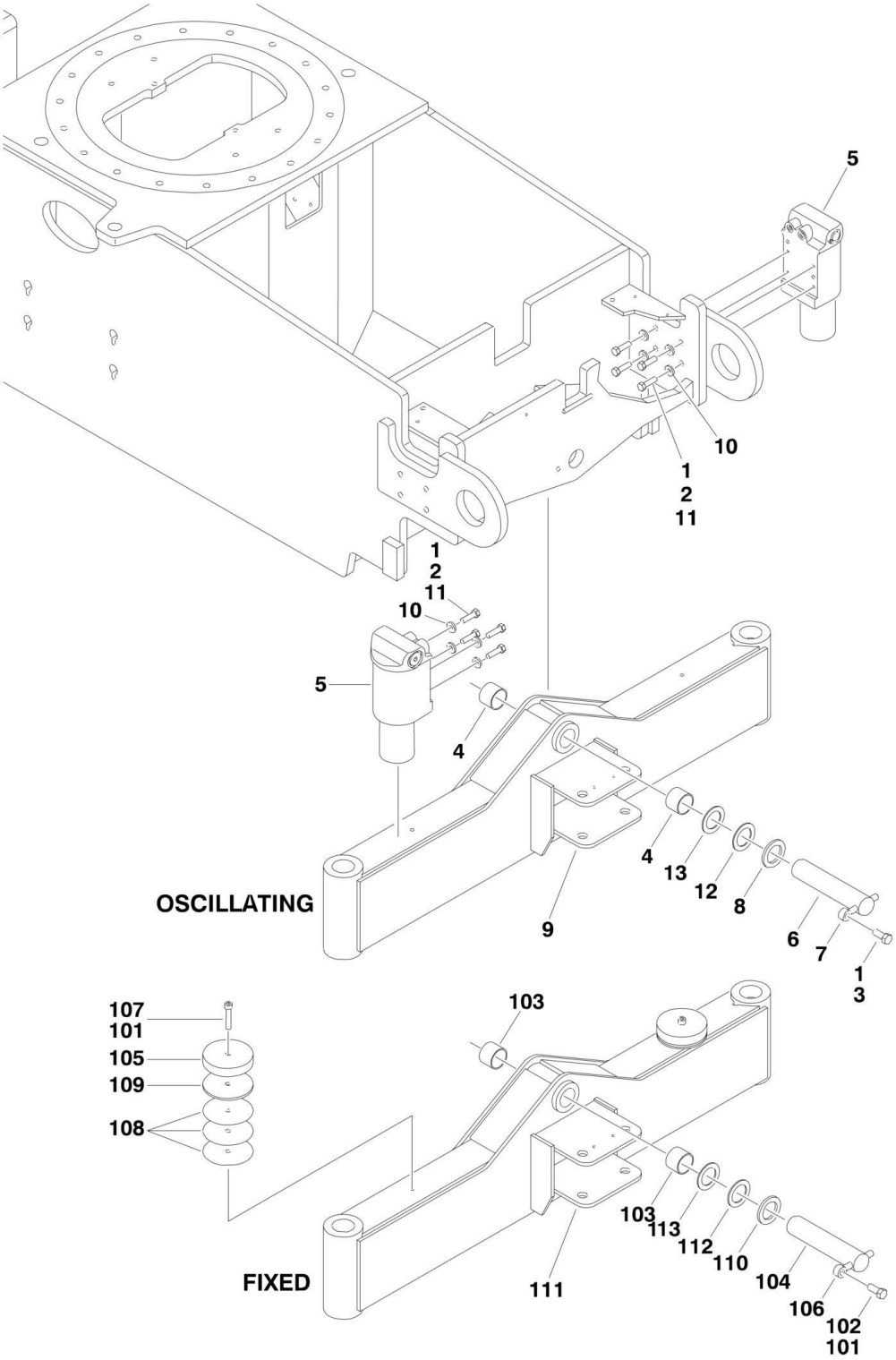

FIGURE 1-1. AXLE INSTALLATION

ITEM	PART NUMBER	QTY	DESCRIPTION	REV
		Ref	**AXLE INSTALLATIONS - OSCILLATING**	
	1001148168	Ref	**Axle without Tow Package**	C
	1001148170	Ref	**Axle with Tow Package**	C
1	0100011	AR	Compound, Locking	
2	0641814	8	Bolt 1/2in-13NC x 1-3/4in	
3	0642012	1	Bolt 5/8in-11NC x 1-1/2in	
4	0961950	2	Bearing	
5	1684465	2	Lockout Cylinder Assembly (See CYLINDER SECTION for Breakdown)	
6	3423184	1	Pin	
7	3841258	1	Keeper, Pin	
8	4740158	AR	Thrustwasher (1/4in Thick)	
9		Ref	Axle Weldment Options:	
9	1001148171	1	Axle without Tow Package	
9	1001148172	1	Axle with Tow Package (Not Shown)	
10	4891800	8	Flatwasher 1/2in Hardened	
11	0100038	AR	Primer, Locking	
12	4740229	AR	Thrustwasher (1/8in Thick)	
13	4071101	AR	Shim (18Ga)	
	1001148169	Ref	**AXLE INSTALLATIONS - FIXED**	C
101	0100011	AR	Compound, Locking	
102	0642012	1	Bolt 5/8in-11NC x 1-1/2in	
103	0961950	2	Bearing	
104	3423184	1	Pin, Pivot	
105	3539877	2	Plate, Stop	
106	3841258	1	Keeper, Pin	
107	3931840	2	Screw 1/2in-13NC x 2-1/2in	
108	4070944	6	Shim (.06)	
109	4070945	2	Shim (.25)	
110	4740158	AR	Thrustwasher	
111	1001148171	1	Axle Weldment	
112	4071101	AR	Shim (18Ga)	
113	4740229	AR	Thrustwasher (1/8in Thick)	

FIGURE 1-2. STEERING INSTALLATION WITHOUT TOW PACKAGE

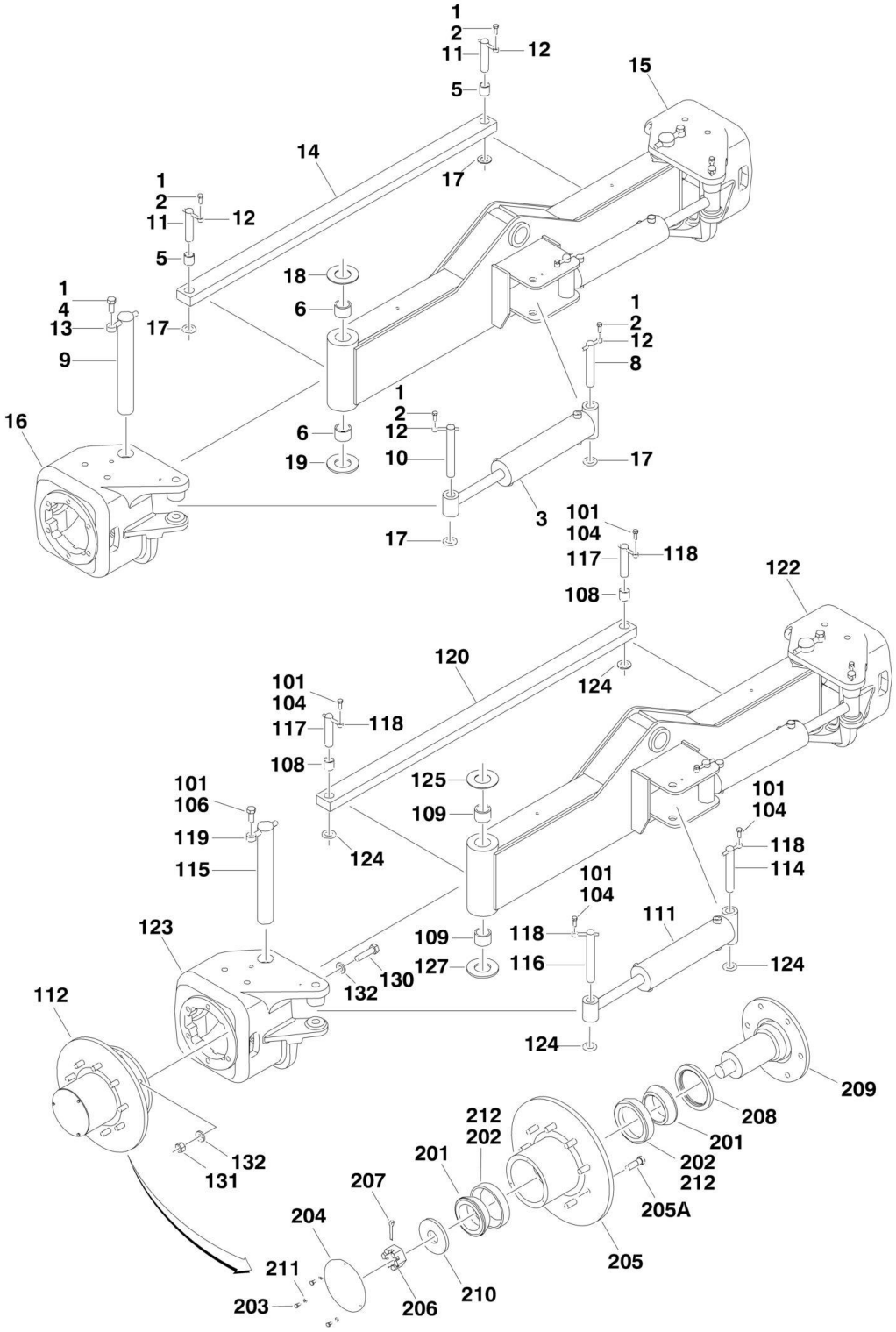

FIGURE 1-2. STEERING INSTALLATION WITHOUT TOW PACKAGE

ITEM	PART NUMBER	QTY	DESCRIPTION	REV
		Ref	**4WD STEERING INSTALLATION**	
	1001148162	Ref	**4WD/2WS**	C
	1001148163	Ref	**4WD/4WS (Note: Double Qty for 4WD/4WS Machines)**	B
1	0100011	AR	Compound, Locking	
2	0641608	6	Bolt 3/8in-16NC x 1in	
3	1001097242	2	Steer Cylinder Assembly (See CYLINDER SECTION for Breakdown)	
4	0642012	2	Bolt 5/8in-11NC x 1-1/2in	
5	0962356	2	Bushing	
6	0962131	4	Bushing	
8	3422326	2	Pin	
9	3422900	2	Kingpin	
10	3422902	2	Pin	
11	3422903	2	Pin	
12	3841143	6	Keeper, Pin	
13	3841258	2	Keeper, Pin	
14	1001155574	1	Tie-Rod	
15	1001099387	1	Spindle - Left Side	
16	1001099196	1	Spindle - Right Side	
17	4740111	6	Thrustwasher	
18	4740256	2	Thrustwasher	
19	4740463	2	Thrustwasher	
	1001148161	Ref	**2WD STEERING INSTALLATION**	D
101	0100011	AR	Compound, Locking	
104	0641608	6	Bolt 3/8in-16NC x 1in	
106	0642012	2	Bolt 5/8in-11NC x 1-1/2in	
108	0962356	2	Bushing	
109	0962131	4	Bushing	
111	1001097242	2	Steer Cylinder Assembly (See CYLINDER SECTION for Breakdown)	
112	4130410	2	Hub Assembly (See Items 201-212 for Breakdown)	
114	3422326	2	Pin	
115	3422900	2	Kingpin	
116	3422902	2	Pin	
117	3422903	2	Pin	
118	3841143	6	Keeper, Pin	
119	3841258	2	Keeper, Pin	
120	1001155574	1	Tie-Rod	
122	1001099387	1	Spindle - Left Side	
123	1001099196	1	Spindle - Right Side	
124	4740111	6	Thrustwasher	
125	4740256	2	Thrustwasher	
127	4740463	2	Thrustwasher	
130	0682020	12	Bolt 5/8in-11NC x 2-1/2in (Grade 8)	
131	3272001	12	Nut 5/8in-11NC (Grade 8)	
132	4892000	24	Flatwasher 5/8in Hardened	
	4130409	Ref	**HUB ASSEMBLY**	C
201	0440170	2	Cone, Bearing	
202	0440171	2	Cup, Bearing	
203	0721003	3	Bolt #10-24NC x 3/8in	

ITEM	PART NUMBER	QTY	DESCRIPTION	REV
204	1120304	1	Cap, Hub	
205	2780271	1	Hub	
205A	0630490	9	Stud, Wheel	
206	3323403	1	Nut, Slotted 1-1/2in -12NF	
207	3451010	1	Pin, Cotter 5/8in x 2-1/2in	
208	3960343	1	Seal, Grease	
209	4130409	1	Adapter, Spindle	
210	4740283	1	Flatwasher, Hardened	
211	4761000	3	Lockwasher #10	
212	3020017	AR	Grease, Bearing	

FIGURE 1-3. STEERING INSTALLATION WITH TOW PACKAGE

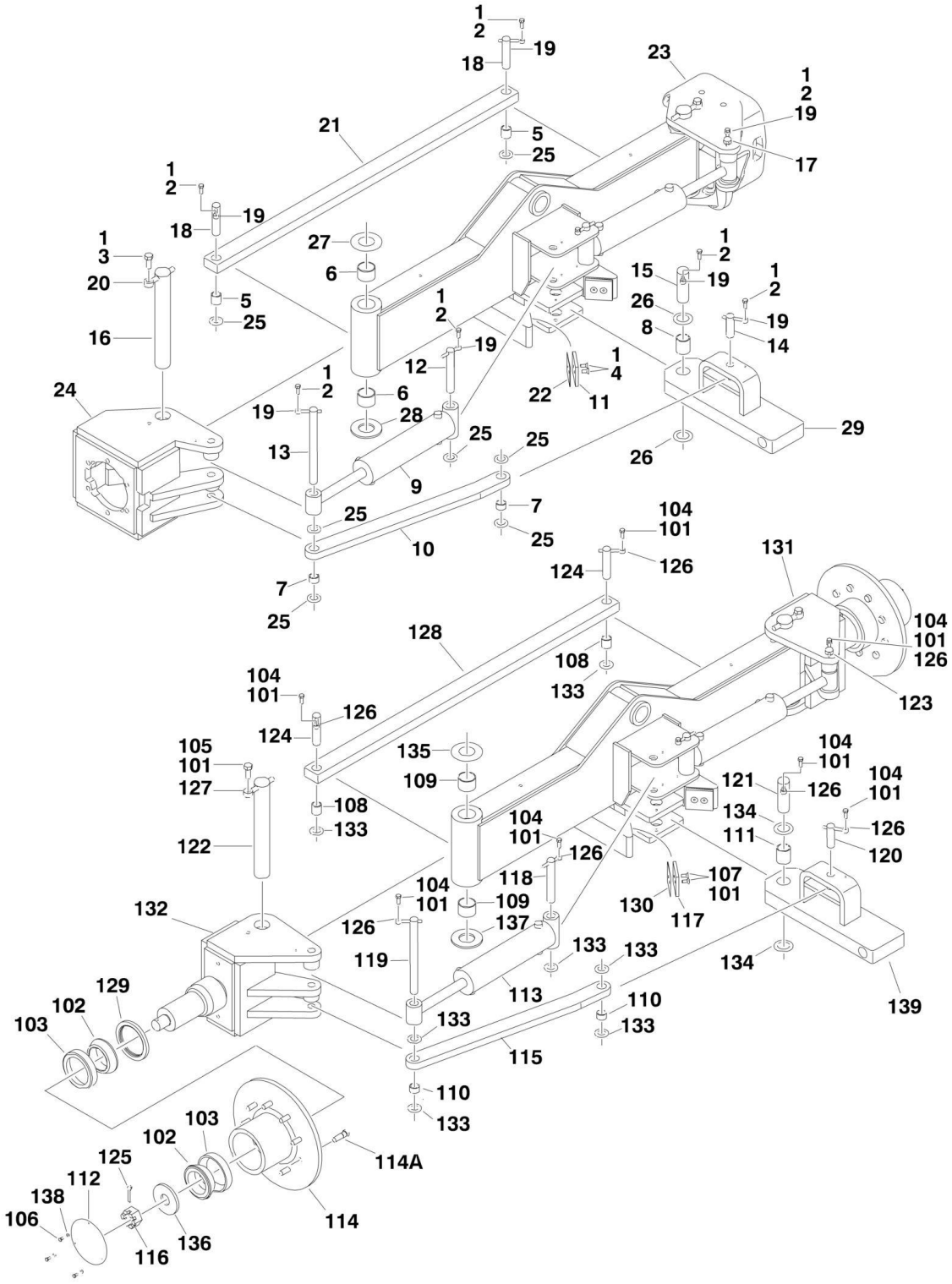

FIGURE 1-3. STEERING INSTALLATION WITH TOW PACKAGE

ITEM	PART NUMBER	QTY	DESCRIPTION	REV
		Ref	**4WD STEERING INSTALLATION**	
		Ref	**USA Built Machines:**	
	1001148164	Ref	**USA Built Machines 4WD/2WS**	C
	1001148166	Ref	**USA Built Machines 4WD/4WS (Note: Double Qty for 4WD/4WS Machines)**	C
		Ref	**China Built Machines:**	
	1001148164	Ref	**China Built Machines 4WD/2WS**	C
1	0100011	AR	Compound, Locking	
2	0641608	8	Bolt 3/8in-16NC x 1in	
3	0642012	2	Bolt 5/8in-11NC x 1-1/2in	
4	0741607	4	Screw 3/8in-16NC x 7/8in	
5	0962356	2	Bushing	
6	0962131	4	Bushing	
7	0962292	2	Bushing	
8	0962348	1	Bushing	
9	1001097242	2	Steer Cylinder Assembly (See CYLINDER SECTION for Breakdown)	
10	1001148178	1	Link	
11	3340966	2	Pad	
12	3422326	2	Pin	
13	3422567	1	Pin	
14	3422813	1	Pin	
15	3422848	1	Pin	
16	3422900	2	Pin	
17	3422902	1	Pin	
18	3422903	2	Pin	
19	3841143	8	Keeper, Pin	
20	3841258	2	Keeper, Pin	
21	1001155574	1	Tie-Rod	
22	4071059	2	Shim	
23	1001099387	1	Spindle - Left Side	
24	4130399	1	Spindle - Right Side	
25	4740111	9	Thrustwasher	
26	4740155	2	Thrustwasher	
27	4740256	2	Thrustwasher	
28	4740463	2	Thrustwasher	
29	4846935	1	Pivot	
	1001148165	Ref	**2WD STEERING INSTALLATION**	C
		Ref	**Note: Only Available on USA Built Machines.**	
101	0100011	AR	Compound, Locking	
102	0440170	4	Cone, Bearing	
103	0440171	4	Cup, Bearing	
104	0641608	8	Bolt 3/8in-16NC x 1in	
105	0642012	2	Bolt 5/8in-11NC x 1-1/2in	
106	0721003	6	Bolt #10-24NC x 3/8in	
107	0741607	4	Screw 3/8in-16NC x 7/8in	
108	0962356	2	Bushing	
109	0962131	4	Bushing	
110	0962292	2	Bushing	
111	0962348	1	Bushing	

ITEM	PART NUMBER	QTY	DESCRIPTION	REV
112	1120304	2	Cap, Hub	
113	1001097242	2	Steer Cylinder Assembly (See CYLINDER SECTION for Breakdown)	
114	2780271	2	Hub	
114A	0630490	18	Stud, Wheel (9 Per Hub)	
115	1001148178	1	Link	
116	3323403	2	Nut, Slotted 1-1/2in -12NF	
117	3340966	2	Pad	
118	3422326	2	Pin	
119	3422567	1	Pin	
120	3422813	1	Pin	
121	3422848	1	Pin	
122	3422900	2	Pin	
123	3422902	1	Pin	
124	3422903	2	Pin	
125	3451010	1	Pin, Cotter 5/8in x 2-1/2in	
126	3841143	8	Keeper, Pin	
127	3841258	2	Keeper, Pin	
128	1001155574	1	Tie-Rod	
129	3960343	2	Seal, Grease	
130	4071059	2	Shim	
131	4130396	1	Spindle - Left Side	
132	4130400	1	Spindle - Right Side	
133	4740111	9	Thrustwasher	
134	4740155	2	Thrustwasher	
135	4740256	2	Thrustwasher	
136	4740283	2	Flatwasher, Hardened	
137	4740463	2	Thrustwasher	
138	4761000	6	Lockwasher #10	
139	4846935	1	Pivot	

FIGURE 1-4. TIRE AND WHEEL DRIVE INSTALLATIONS

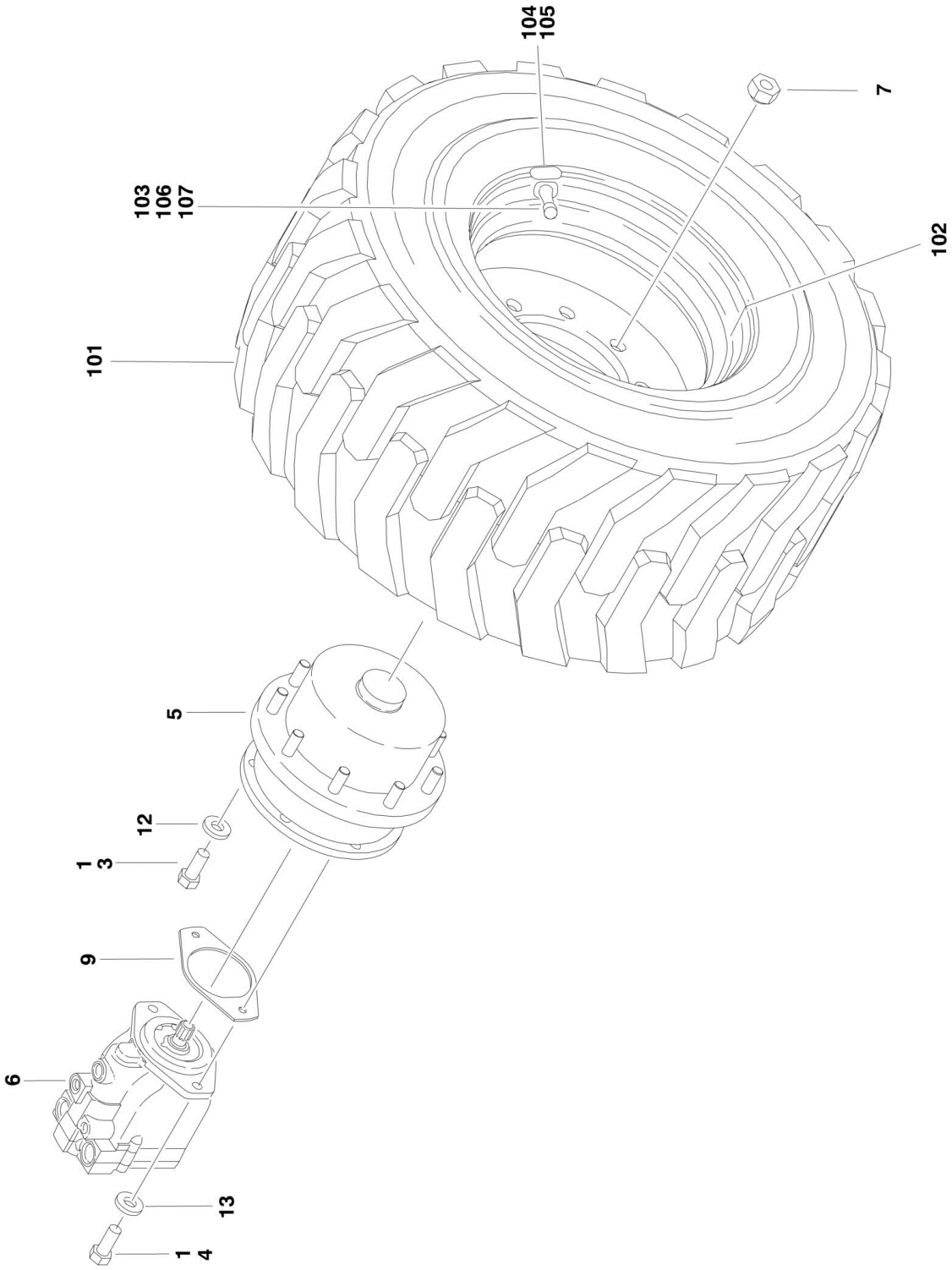

FIGURE 1-4. TIRE AND WHEEL DRIVE INSTALLATIONS

ITEM	PART NUMBER	QTY	DESCRIPTION	REV
		Ref	**WHEEL DRIVE INSTALLATIONS**	
	1001149287	Ref	**Wheel Drive Installations 2WD**	B
	1001149288	Ref	**Wheel Drive Installations 4WD/2WS**	B
	1001149289	Ref	**Wheel Drive Installations 4WD/4WS**	B
		Ref	**Note: 2WD Qty Shown. For 4WD, Double Qty Shown.**	
1	0100011	AR	Compound, Locking	
3	0681810	4	Bolt 1/2in-13NC x 1-1/4in (Grade 8)	
4	0682016	12	Bolt 5/8in-11NC x 2in (Grade 8)	
5	2780269	2	Drive Hub Assembly (See DRIVE HUB ASSEMBLY for Breakdown)	
6		Ref	Drive Motor Assembly (See DRIVE MOTOR ASSEMBLY for Breakdown)	
6	3160349	2	2WD	
6	3160350	2	4WD	
7	3300106	18	Nut, Wheel	
9	3960526	1	Gasket	
12	4891800	4	Flatwasher 1/2in Hardened	
13	4740393	12	Flatwasher 5/8in Hardened	
19	3020008	AR	Lubricant - 80W-90 (Not Shown)	
		Ref	**TIRE AND WHEEL INSTALLATIONS OPTIONS**	
		Ref	**USA Built Machines:**	
	1001101800	Ref	**Pneumatic - OTR Tires (Available on All Specs except Australian and CE Specs)**	D
	1001101802	Ref	**Pneumatic W/Sealant - OTR Tires (Available on ANSI and ANSI Export Specs Only)**	C
	0275860	Ref	**Pneumatic Turf/Sand - Galaxy Tires (Available on ANSI Specs Only)**	1
	1001101801	Ref	**Foam-Filled - OTR Tires (Available on All Specs)**	C
	0274152	Ref	**Foam-Filled - OTR Tires (Non-Marking) (Available on All Specs)**	1
		Ref	**China Built Machines:**	
	1001101800	Ref	**Pneumatic - OTR Tires (Available on ANSI Export and Japanese Specs)**	D
	1001101801	Ref	**Foam-Filled - OTR Tires (Available on All Specs)**	C
		Ref	Tire and Wheel Assembly Options:	
	1001097358	2	Pneumatic - OTR Tire (Right Side)	D
	1001097357	2	Pneumatic - OTR Tire (Left Side)	D
	1001097388	2	Pneumatic W/Sealant - OTR Tire (Right Side)	D
	1001097387	2	Pneumatic W/Sealant - OTR Tire (Left Side)	D
	4520674	4	Pneumatic Turf/Sand - Galaxy Tire (Not Shown)	A
	1001097374	2	Foam-Filled - OTR Tire (Right Side)	G
	1001097373	2	Foam-Filled - OTR Tire (Left Side)	G
	4520340	2	Foam-Filled - OTR Tire (Non-Marking) (Right Side)	B
	4520339	2	Foam-Filled - OTR Tire (Non-Marking) (Left Side)	B
		Ref	**Note: Assemblies may require ballast/foam filling to manufacturer's specifications prior to installing on a machine. Refer to Operation and Safety or Service and Maintenance Manuals. Purchase individual tire and/or rim only if able to foam fill tire and wheel assembly, otherwise, purchase complete assembly.**	
		Ref	**Note: Turf/Sand Tires required additional chassis counterweight. See SPECIAL OPTIONS SECTION before installing this option.**	

ITEM	PART NUMBER	QTY	DESCRIPTION	REV
101		Ref	Tire (1 Per Assembly) Options:	
101	1001097351	4	Tire 39 x 15-22.5	
101	4520256	4	Tire 41/18LL x 22.5 - Turf/Sand (1 Per Assembly)	
102		Ref	Rim, Wheel (1 Per Assembly) Options:	
102	1001097348	4	Rim, Wheel - 39 x 15-22.5 Tire (1 Per Assembly)	
102	4520672	4	Rim, Wheel - Turf/Sand 22.5 x 14 (1 Per Assembly)	
103	4640113	4	Valve, Air (1 Per Assembly) (All Assemblies except p/n 4520339 & 4520340)	
103	4640113	4	Valve, Air (1 Per Assembly) (4520339 & 4520340 Assemblies) (USA Built Machines) **(SN 0300171769 through 0300195754)**	
103	4641122	4	Valve, Air (1 Per Assembly) (4520339 & 4520340 Assemblies) (USA Built Machines) **(SN 0300195755 through 0300235167)**	
104		Ref	Decal PSI Options:	
104	1702701	4	Decal - 95 PSI	
104	1701643	4	Decal - 70 PSI (Turf/Sand Tires 41/18LL x 22.5 Only)	
105	1705364	AR	Decal - Tire Sealant (With Sealant Only)	
106	1300019	AR	Chemical, Tire Sealant (Green) (With Sealant Only)	
107	1120552	AR	Cap, Valve Stem (Green) (With Sealant Only)	

FIGURE 1-5. DRIVE HUB ASSEMBLY

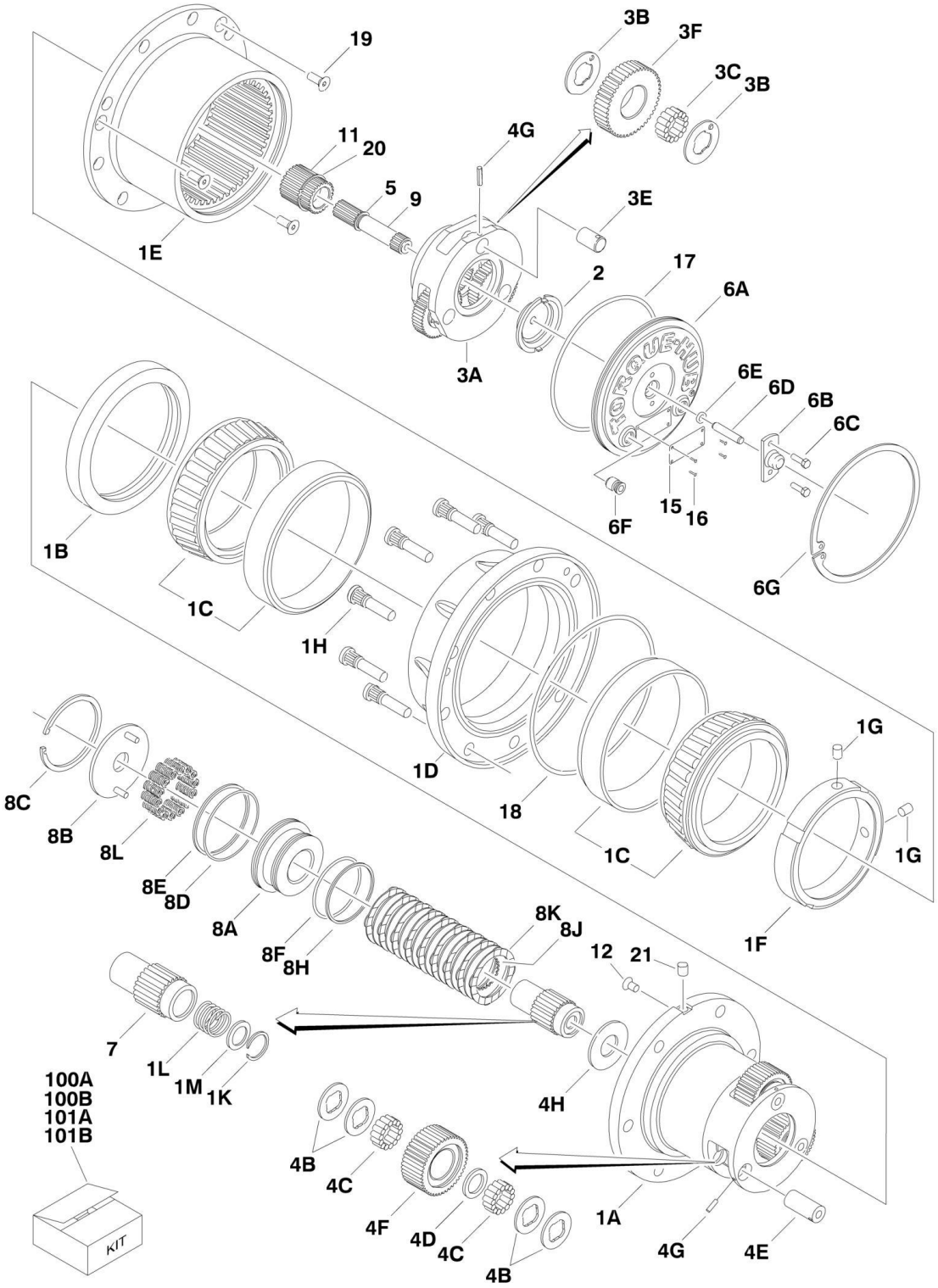

FIGURE 1-5. DRIVE HUB ASSEMBLY

ITEM	PART NUMBER	QTY	DESCRIPTION	REV
	2780269	Ref	**DRIVE HUB/BRAKE ASSEMBLY**	E
1	See Note	NSS	Spindle/Housing Assembly (Note: Not Available - Purchase p/n 2780269 Complete Replacement. See 1A-1M for Available Components)	
1A	7024729	1	Spindle	
1B	70001119	1	Seal	
1C	7024735	2	Bearing (Includes Cup and Cone)	
1D	2780269	1	Housing (Note: Not Available for Purchase)	
1E	7024730	1	Ring, Gear	
1F	See Note	NSS	Nut, Bearing (Note: Use Item 100A)	
1G	See Note	NSS	Setscrew 1/4in-28NF x 1/2in (Note: Use Item 100A,100B,101A or 101B)	
1H	7024732	9	Stud, Wheel	
1K	7024125	1	Ring, Retaining	
1L	7024124	1	Spring	
1M	7024129	1	Thrustwasher	
2	7024741	1	Thrustwasher	
3	See Note	NSS	Carrier Assembly (Note: Not Available for Purchase. See 3A-3F for Available Components)	
3A	7024725	1	Carrier	
3B	7024127	6	Thrustwasher	
3C	7024733	42	Bearing, Needle	
3E	7024724	3	Shaft, Planet	
3F	7024727	3	Gear, Planet	
4	See Note	NSS	Planet Gear Sub-Assembly (Note: Not Available for Purchase. See 4B-4H for Available Components)	
4B	7024740	12	Thrustwasher	
4C	7024734	84	Bearing, Needle	
4D	7024736	3	Spacer, Thrust	
4E	7024726	3	Shaft, Planet	
4F	7024728	3	Gear, Planet	
4G	7001913	6	Rollpin	
4H	7024742	1	Thrustwasher	
5	7017027	1	Ring, Retaining	
6	See Note	NSS	Cover Assembly (Note: Not Available for Purchase. See 6A-6G for Available Components)	
6A	7024731	1	Plate, Cover	
6B	7017093	1	Cap, Disengage	
6C	7000216	2	Bolt 1/2in-20NC x 1/2in	
6D	7024739	1	Pin, Dowel	
6E	7017095	1	O-Ring	
6F	7017072	2	Plug, Pipe	
6G	7024738	1	Ring, Retaining	
7	7024722	1	Coupling	
8	See Note	NSS	Brake, Input (Note: Not Available for Purchase. See 8A-8L for Available Components)	
8A	70000782	1	Piston, Brake	
8B	7024743	1	Plate, Pressure	
8C	See Note	NSS	Ring, Retaining (Note: Use Item 100B, 101A or 101B)	
8D	See Note	NSS	O-Ring (Note: Use Item 100B or 101A)	
8E	See Note	NSS	Ring, Back-up (Note: Use Item 100B or 101A)	

ITEM	PART NUMBER	QTY	DESCRIPTION	REV
8F	See Note	NSS	O-Ring (Note: Use Item 100B or 101A)	
8H	See Note	NSS	Ring, Back-up (Note: Use Item 100B or 101A)	
8J	See Note	NSS	Rotor, Brake (Note: Use Item 101A)	
8K	See Note	NSS	Stator, Brake (Note: Use Item 101A)	
8L	See Note	NSS	Spring, Brake (Note: Use Item 101B)	
9	7024721	1	Shaft, Input	
11	7024723	1	Gear, Sun	
12	See Note	NSS	Plug (Note: Not Available - Purchase Locally)	
15	See Note	NSS	Plate, ID (Not Shown) (Note: Not Available for Purchase)	
16	7000281	4	Screw, Drive	
17	7024134	1	O-Ring	
18	See Note	NSS	O-Ring (Note: Use Item 100A)	
19	7017022	3	Screw, Countersunk 3/8in-16NC	
20	7024737	1	Ring, Retaining	
21	See Note	NSS	Plug (Note: Not Available - Purchase Locally)	
100		Ref	Seal Kit Options:	
100A	7024744	1	Hub Seal Kit (Includes Items 1B, 1F, 1G, 17, 18 & 19)	
100B	7024765	1	Brake Seal Kit (Includes Items 1G, 8C, 8D, 8E, 8F & 8H)	
101		Ref	Repair Kit Options:	
101A	7024764	1	Brake Lining Kit (Includes Items 1G, 8C, 8D, 8E, 8F, 8H, 8J & 8K)	
101B	7024766	1	Brake Spring Kit (Includes Items 1G, 8C & 8L)	

FIGURE 1-6. DRIVE MOTOR ASSEMBLY

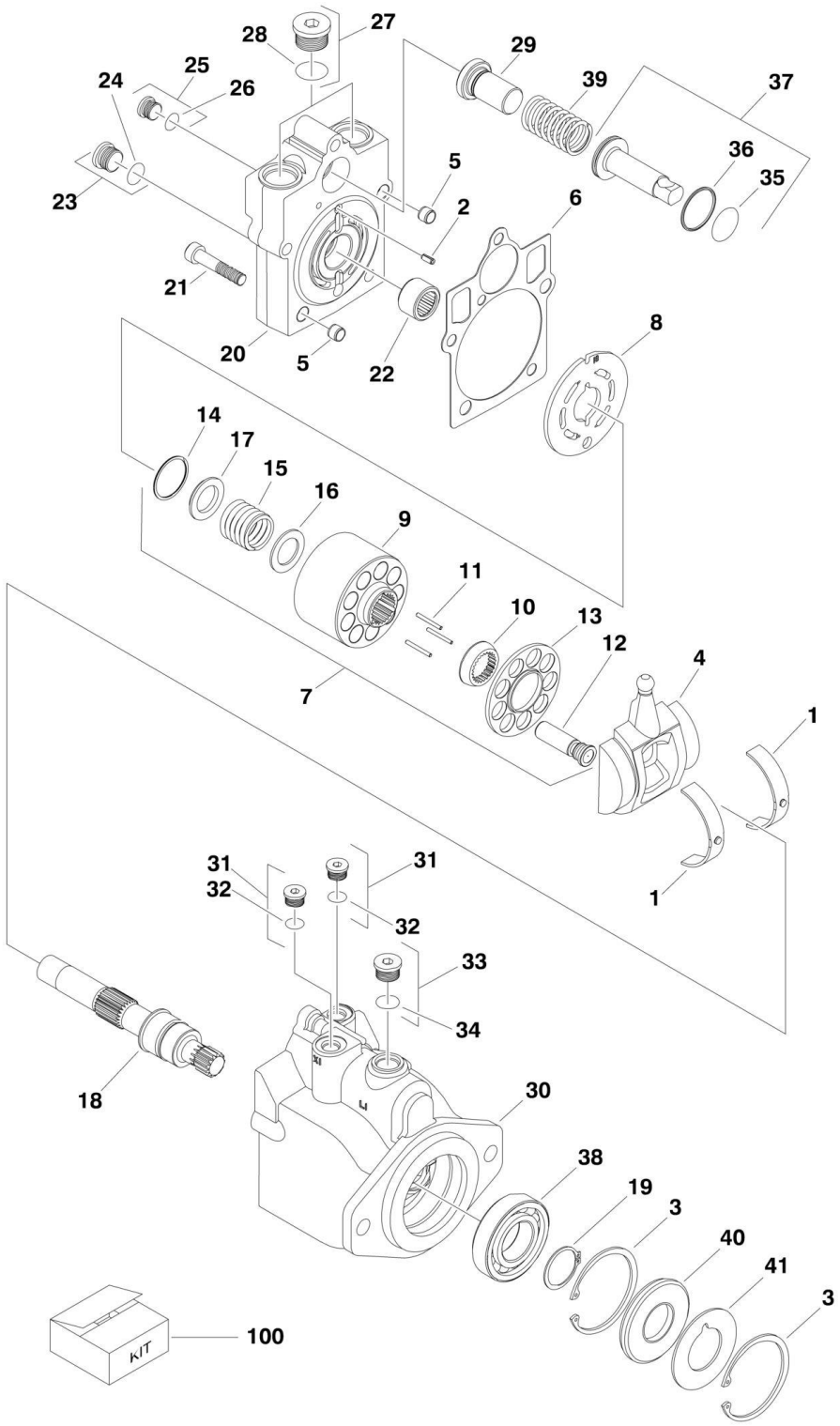

FIGURE 1-6. DRIVE MOTOR ASSEMBLY

ITEM	PART NUMBER	QTY	DESCRIPTION	REV
		Ref	**DRIVE MOTOR ASSEMBLY**	
	3160349	Ref	**Drive Motor Assembly 2WD**	B
	3160350	Ref	**Drive Motor Assembly 4WD**	B
1	7022302	2	Bearing, Journal	
2	7007446	1	Pin	
3	7007438	2	Ring, Retaining	
4	70000794	1	Swash Plate	
5	See Note	NSS	Pin (Note: Not Available for Purchase)	
6	See Note	NSS	Gasket (Note: Use Item 100)	
7	7027740	1	Cylinder Block Kit (Includes Items 9-17)	
8	7024862	1	Plate, Valve	
9	See Note	NSS	Block, Cylinder (Note: Use Item 7)	
10	See Note	NSS	Guide, Slipper Retainer (Note: Use Item 7)	
11	7021275	3	Pin, Slipper Hold Down	
12	7024865	9	Piston Assembly	
13	See Note	NSS	Retainer, Slipper (Note: Use Item 7)	
14	7022311	1	Ring, Retaining	
15	7024867	1	Spring	
16	7022313	1	Washer	
17	7022314	1	Retainer, Spring	
18	7023910	1	Shaft	
19	7007439	1	Ring, Retaining	
20	70000795	1	Cap, End - Axial	
21	7022368	5	Screw	
22	7021249	1	Bearing, Needle	
23	2220886	1	Plug (Includes Item 24)	
24	See Note	NSS	O-Ring (Note: Use Item 23 or 100)	
25	2220883	1	Plug (Includes Item 26)	
26	See Note	NSS	O-Ring (Note: Use Item 25 or 100)	
27	7027419	2	Plug (Includes Item 28)	
28	See Note	NSS	O-Ring (Note: Use Item 27 or 100)	
29		Ref	Seat, Spring Options:	
29	7024853	1	2WD/2WS	
29	7022372	1	2WD/4WS, 4WD/2WS & 4WD/4WS	
30	See Note	NSS	Housing (Note: Not Available - Purchase Complete Drive Motor Assembly)	
31	2220883	2	Plug (Includes Item 32)	
32	See Note	NSS	O-Ring (Note: Use Item 31 or 100)	
33	2220886	1	Plug (Includes Item 34)	
34	See Note	NSS	O-Ring (Note: Use Item 33 or 100)	
35	See Note	NSS	O-Ring (Note: Use Item 100)	
36	See Note	NSS	Ring, Seal (Note: Use Item 100)	
37	7024871	1	Piston, Servo	
38	7007437	1	Bearing	
39	7022326	1	Spring	
40	See Note	NSS	Seal, Lip (Note: Use Item 100)	
41	7022371	1	Washer, Support	
100	7022328	1	Seal Kit (Includes Items 6, 24, 26, 28, 32, 34, 35, 36 & 40)	

FIGURE 1-7. DRIVE VALVES AND SHIELDS INSTALLATION (FRAME MOUNTED)

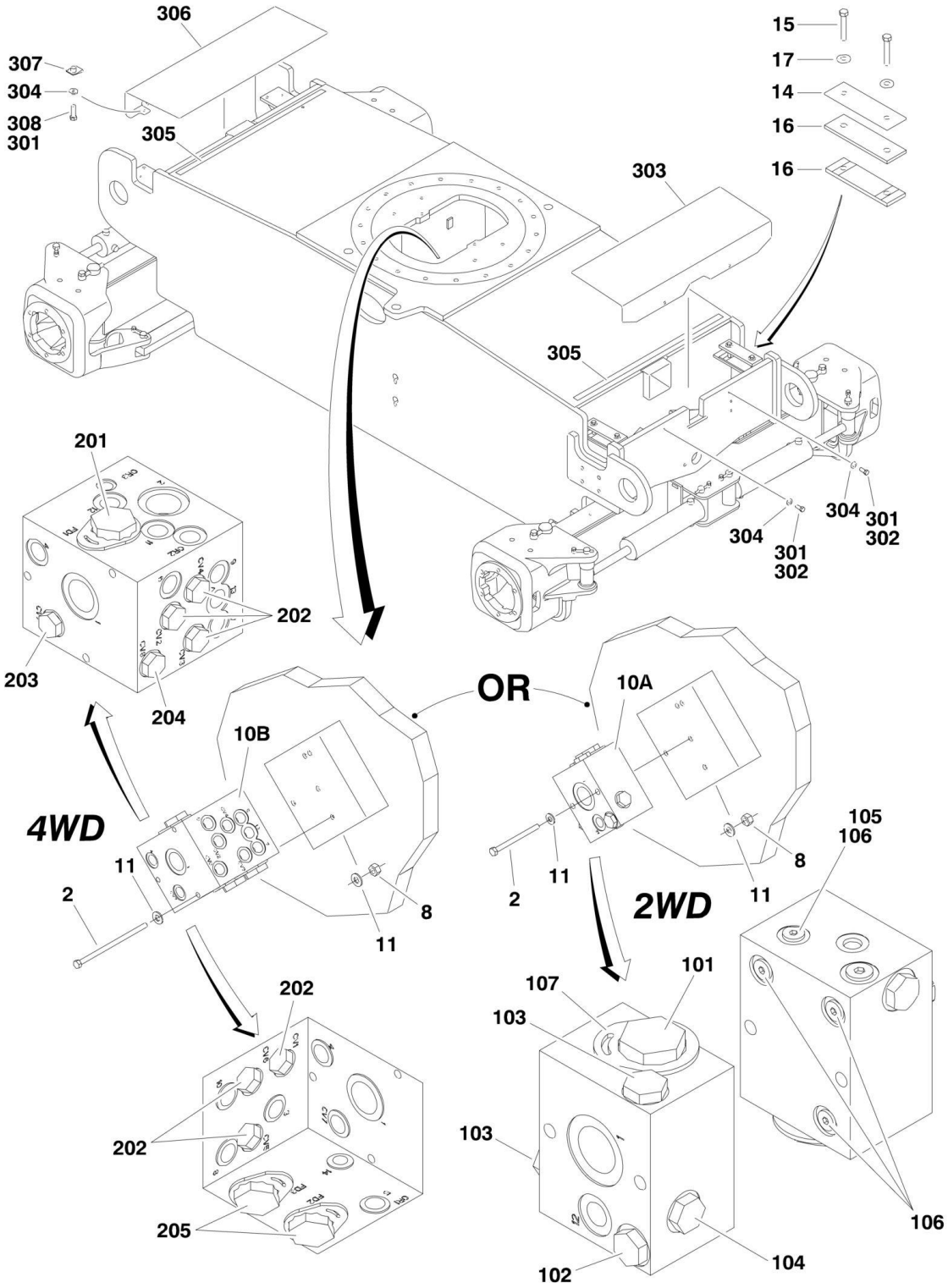

FIGURE 1-7. DRIVE VALVES AND SHIELDS INSTALLATION (FRAME MOUNTED)

ITEM	PART NUMBER	QTY	DESCRIPTION	REV
		Ref	**DRIVE VALVES INSTALLATION OPTIONS:**	
	1001149287	Ref	**Drive Valves Installation 2WD**	A
	1001149288	Ref	**Drive Valves Installation 4WD/2WS**	A
	1001149289	Ref	**Drive Valves Installation 4WD/4WS**	A
2		Ref	Bolt 5/16in-18NC Options:	
2	0641530	2	3-3/4in Length (2WD)	
2	0641552	3	6-1/2in Length (4WD)	
8	3311505	AR	Locknut 5/16in-18NC	
10		Ref	Flow Divider Valve Assembly Options:	
10A	1001100120	1	2WD (See Items 101-107 for Breakdown)	
10B	1001098503	1	4WD (See Items 201-207 for Breakdown)	
11	4711500	AR	Flatwasher 5/16in Thin	
14		Ref	Bar, Clamping	
14	Not Required	0	Bar, Clamping 2WD	
14	0363012	2	Bar, Clamping 4WD	
15	0641618	4	Bolt 3/8in-16NC x 2-1/4in	
16	3340911	4	Rubber, Clamp	
17	4751600	4	Flatwasher 3/8in Regular	
	1001100120	Ref	**FLOW DIVIDER ASSEMBLIES (2WD)**	B
101	7023933	1	Valve, Cartridge (Flow Divider)	
101	7021625	1	Seal Kit - Flow Divider Cartridge	
102	7024892	1	Valve, Cartridge (Check)	
102	7023936	1	Seal Kit - Check Cartridge	
103	7022397	2	Valve, Cartridge (Check)	
103	7022399	2	Seal Kit - Check Cartridge	
104	7023935	1	Valve, Cartridge (Check)	
104	7023936	1	Seal Kit - Check Cartridge	
105	70002063	1	Orifice	
106	7017406	4	Plug	
107	70000781	1	Lock Down Kit	
	1001098503	Ref	**FLOW DIVIDER ASSEMBLIES (4WD)**	B
201	7023933	1	Valve, Cartridge (Flow Divider)	
201	7021625	1	Seal Kit - Flow Divider Cartridge	
202	70003408	6	Valve, Cartridge (Check)	
202	7022399	6	Seal Kit - Check Cartridge	
203	7023935	1	Valve, Cartridge (Check)	
203	7023936	1	Seal Kit - Check Cartridge	
204	7024892	1	Valve, Cartridge (Check)	
204	7023936	1	Seal Kit - Check Cartridge	
205	7023917	2	Valve, Cartridge (Flow Divider)	
205	7021625	2	Seal Kit - Flow Divider Cartridge	
206	70002063	1	Plug, Orifice	
207	70002064	2	Plug, Orifice	
		Ref	**FRAME SHIELDS INSTALLATION**	
	1001150994	Ref	**Frame Shields Installation 2WS**	A
	1001150995	Ref	**Frame Shields Installation 4WS**	A
301	0100011	AR	Compound, Locking	
302	0641607	AR	Bolt 3/8in - 16NC x 7/8in	
303	1001150845	1	Cover (Front)	
304	4891600	AR	Flatwasher, 3/8in Hardened	

ITEM	PART NUMBER	QTY	DESCRIPTION	REV
305	4280296	AR	Trim	
306	1001150845	1	Cover (Rear) (4WS Only)	
307	83683307	2	Nut, Tinnerman (4WS Only)	
308	0641610	1	Bolt 3/8in - 16NC x 1-1/4in (4WS Only)	

FIGURE 1-8. TOW PACKAGE INSTALLATION (OPTIONAL)

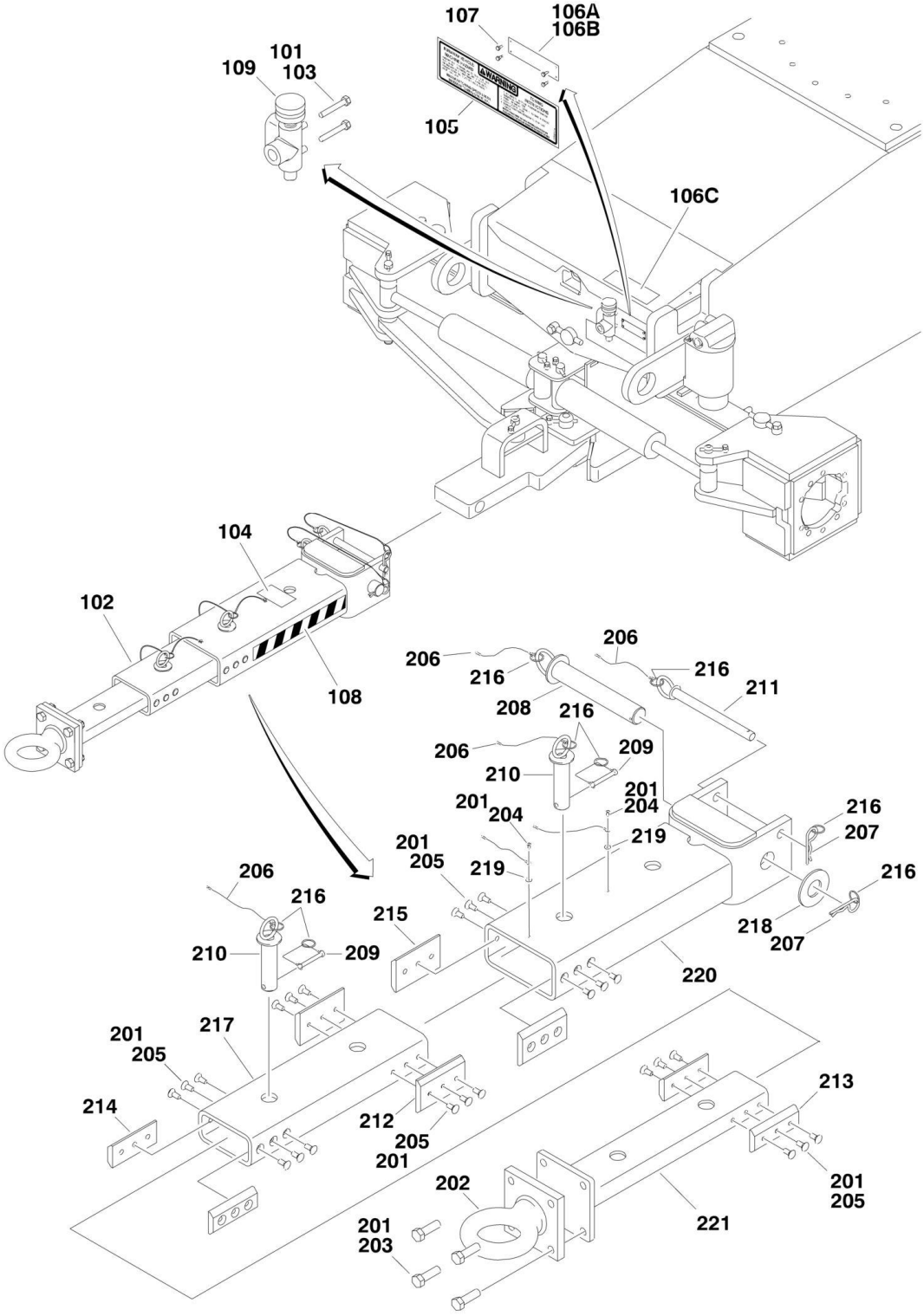

FIGURE 1-8. TOW PACKAGE INSTALLATION (OPTIONAL)

ITEM	PART NUMBER	QTY	DESCRIPTION	REV
		Ref	**TOW PACKAGE INSTALLATION**	
		Ref	**USA Built Machines:**	
	1001150571	Ref	**ANSI Spec**	D
	1001150570	Ref	**CSA Spec**	D
	1001150569	Ref	**CE Spec**	A
		Ref	**China Built Machines:**	
	1001150571	Ref	**ANSI Export Spec**	C
101	0100011	AR	Compound, Locking	
102	0270528	1	Bar Assembly (See Items 201-221 for Breakdown)	
103	0641516	2	Bolt 5/16in-18NC x 2in	
104		Ref	Decal - Crushing Options:	
104	1704578	2	ANSI Spec	
104	1704578	2	CSA Spec **(SN 0300171769 through 0300223341, SN B300000970 through B300001602)**	
104	1706593	2	CSA Spec **(SN 0300223342 through 0300235167, SN B300001603 through B300002654)**	
104	1706960	2	CE Spec	
105		Ref	Decal - Towing Instructions Options:	
105	1705090	1	ANSI Spec	
105	1705820	1	CSA Spec	
105	Not Required	1	CE Spec	
106		Ref	Nameplate - Steer/Tow Select Valve Options:	
106A	3250872	1	ANSI Spec	
106B	1704272	1	CSA Spec	
106C	1706957	1	CE Spec	
107		Ref	Screw, Self-Tapping #6-32NF x 1/2in Options:	
107	3940604	4	ANSI/CSA Spec	
107	Not Required	4	CE Spec	
108	4420051	2 ft/.61m	Tape, Safety	
109	4640261	1	Valve, Select	
	0270528	Ref	**TOW BAR ASSEMBLY**	A
201	0100011	AR	Compound, Locking	
202	0362910	1	Pintle, Draw Eye	
203	0642010	4	Bolt 5/8in-11NC x 1-1/4in	
204	0721004	2	Screw, Hex Machine	
205	0741607	24	Screw, Countersunk 3/8in-16NC x 7/8in	
206	1060584	6	Cable, Lanyard	
207	3420372	2	Pin, Cotter	
208	3420447	1	Pin, Towing	
209	3421565	2	Pin, Snap	
210	3422841	2	Pin	
211	3422847	1	Pin	
212	3572009	2	Plate, Slide Stop	
213	3572010	2	Plate, Slide Stop	
214	3572011	2	Plate, Slide Stop	
215	3572012	2	Plate, Slide Stop	
216	3760170	8	Ring, Split	
217	4568133	1	Tube, Tow Bar	
218	4740036	1	Flatwasher	
219	4751000	2	Flatwasher #10 Regular	

SECTION 1 - FRAME

ITEM	PART NUMBER	QTY	DESCRIPTION	REV
220	4846295	1	Tow Bar Attach Weldment	
221	4846296	1	Pintle Attach Weldment	

SECTION 2 - TURNTABLE

FIGURE 2-1. CONTROL VALVES INSTALLATIONS

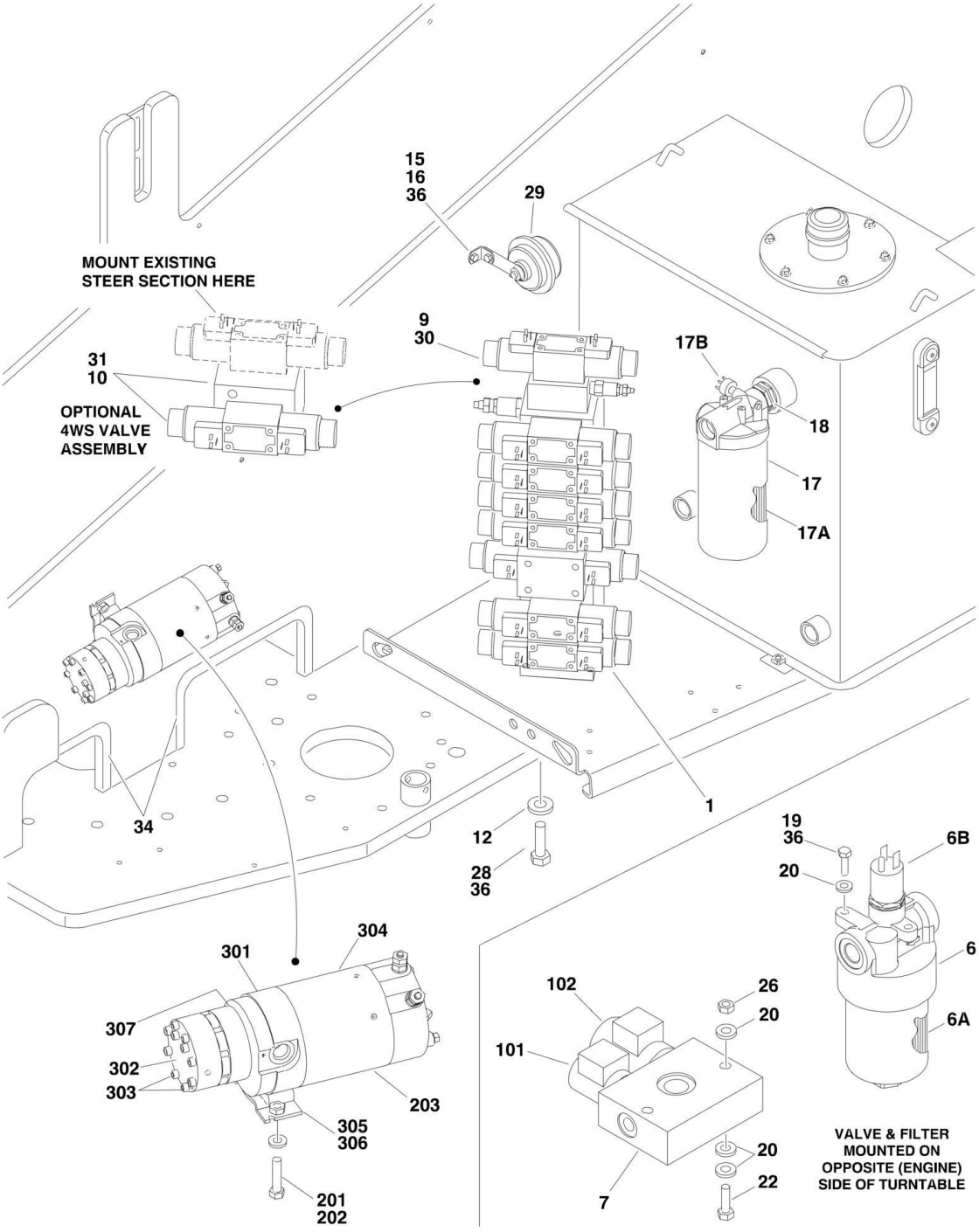

FIGURE 2-1. CONTROL VALVES INSTALLATIONS

ITEM	PART NUMBER	QTY	DESCRIPTION	REV
		Ref	**USAGE CHART:**	
		Ref	**USA Built Machines with Deutz D2011 & GM Engines (SN 0300171769 through 0300181890)**	
		Ref	**USA Built Machines with Deutz TD2.9L4 Engines (SN 0300171769 through 0300188198)**	
		Ref	**China Built Machines (SN B300000970 through B300002654)**	
		Ref	**CONTROL VALVES INSTALLATIONS**	
		Ref	**USA Built Machines with Deutz D2011 & GM Engines (SN 0300171769 through 0300181890)**	
	1001145279	Ref	**Control Valves Installations 600S (2WS)**	A
	1001145280	Ref	**Control Valves Installations 600S (4WS)**	A
	1001145281	Ref	**Control Valves Installations 660SJ (2WS)**	A
	1001145282	Ref	**Control Valves Installations 660SJ (4WS)**	A
		Ref	**USA Built Machines with Deutz TD2.9L4 Engines (SN 0300171769 through 0300188198)**	
	1001163262	Ref	**Control Valves Installations 600S (2WS)**	A
	1001163263	Ref	**Control Valves Installations 600S (4WS)**	A
	1001163264	Ref	**Control Valves Installations 660SJ (2WS)**	A
	1001163265	Ref	**Control Valves Installations 660SJ (4WS)**	A
		Ref	**China Built Machines:**	
	1001145279	Ref	**Control Valves Installations 600S (2WS)**	A
	1001145280	Ref	**Control Valves Installations 600S (4WS)**	A
	1001145281	Ref	**Control Valves Installations 660SJ (2WS)**	A
	1001145282	Ref	**Control Valves Installations 660SJ (4WS)**	A
1	1001091303	1	Main Control Valve Assembly Options (See MAIN CONTROL VALVE ASSEMBLY for Breakdown)	
6	2120209	1	Hydraulic Pressure Filter Assembly	
6A	2120210	1	Element, Filter	
6B	7020020	1	Indicator, Clogged Filter	
6C	70000934	1	O-Ring, Filter Bowl (Not Shown)	
7	1001099391	1	Valve Assembly (2 Speed/Brake) (See Items 101-103 for Breakdown)	
9		Ref	Valve Kit (Articulating Jib) Options:	
9	Not Required	0	Valve Kit 600S	
9	4640921	1	Valve Kit 660SJ (See ACCESSORY VALVE ASSEMBLY for Breakdown)	
10		Ref	4WS Valve Kit Options:	
10	Not Required	0	2WS Machines	
10	4640922	1	4WS Machines (See ACCESSORY VALVE ASSEMBLY for Breakdown)	
12	4711600	3	Flatwasher 3/8in Thin	
15	4711500	1	Flatwasher 5/16in Thin	
16	3311501	1	Nut 5/16in-18NC	
16	0641506	1	Bolt 5/16in-18NC x 3/4in	
17	2120164	1	Return Filter Assembly	
17A	2120149	1	Element, Filter	
17B	7020021	1	Switch, Clog Indicator	
19	0651406	3	Bolt 1/4in-28NF x 3/4in	
20	4711400	17	Flatwasher 1/4in Thin	
22	0641416	2	Bolt 1/4in-20NC x 2in	
26	3311405	2	Locknut 1/4in-20NC	

ITEM	PART NUMBER	QTY	DESCRIPTION	REV
28	0641608	3	Bolt 3/8in-16NC x 1in	
29	0140001	1	Horn	
30		Ref	Harness Assembly (Jib Control) Options (See ELECTRICAL SECTION for Breakdown):	
30	Not Required	0	Harness Assembly 600S	
30	4921927	1	Harness Assembly 660SJ	
31		Ref	Harness Assembly (4WS Control) Options (See ELECTRICAL SECTION for Breakdown):	
31	Not Required	0	2WS Machines	
31	4921928	1	4WS Machines	
34	4060918	40 in/10m	Flex-Trim	
36	0100011	AR	Compound, Locking	
	1001099391	Ref	**VALVE ASSEMBLY (DUAL SELECT BRAKE/2 SPEED)**	A
101	7012941	1	Cartridge without Coil	
101	7010543	1	Seal Kit - 7012941 Cartridge	
101	7012944	1	Coil	
102	7012995	1	Cartridge without Coil	
102	7012518	1	Seal Kit - 7012995 Cartridge	
102	7012943	1	Coil	
103	70002209	1	Plug, Orifice (Not Shown - Access to orifice is through port T)	
	1001150423	Ref	**AUXILIARY PUMP INSTALLATION**	A
201	0100011	AR	Compound, Locking	
202	0811610	2	Bolt 3/8in-16NC x 1-1/4in	
203	1001137458	1	Auxiliary Pump Assembly (See Items 301-307 for Breakdown)	
	1001137458	Ref	**AUXILIARY PUMP ASSEMBLY**	A
301	70003995	1	Base	
302	70003996	1	Pump	
303	70003997	4	Screw 1/4in-20NC x 3in	
304	70003998	1	Motor	
305	70003999	1	Bracket	
306	70004000	2	Screw 3/8in-16NC x 1in	
307	7026330	1	Seal, Shaft	

FIGURE 2-2. CONTROL VALVES INSTALLATIONS

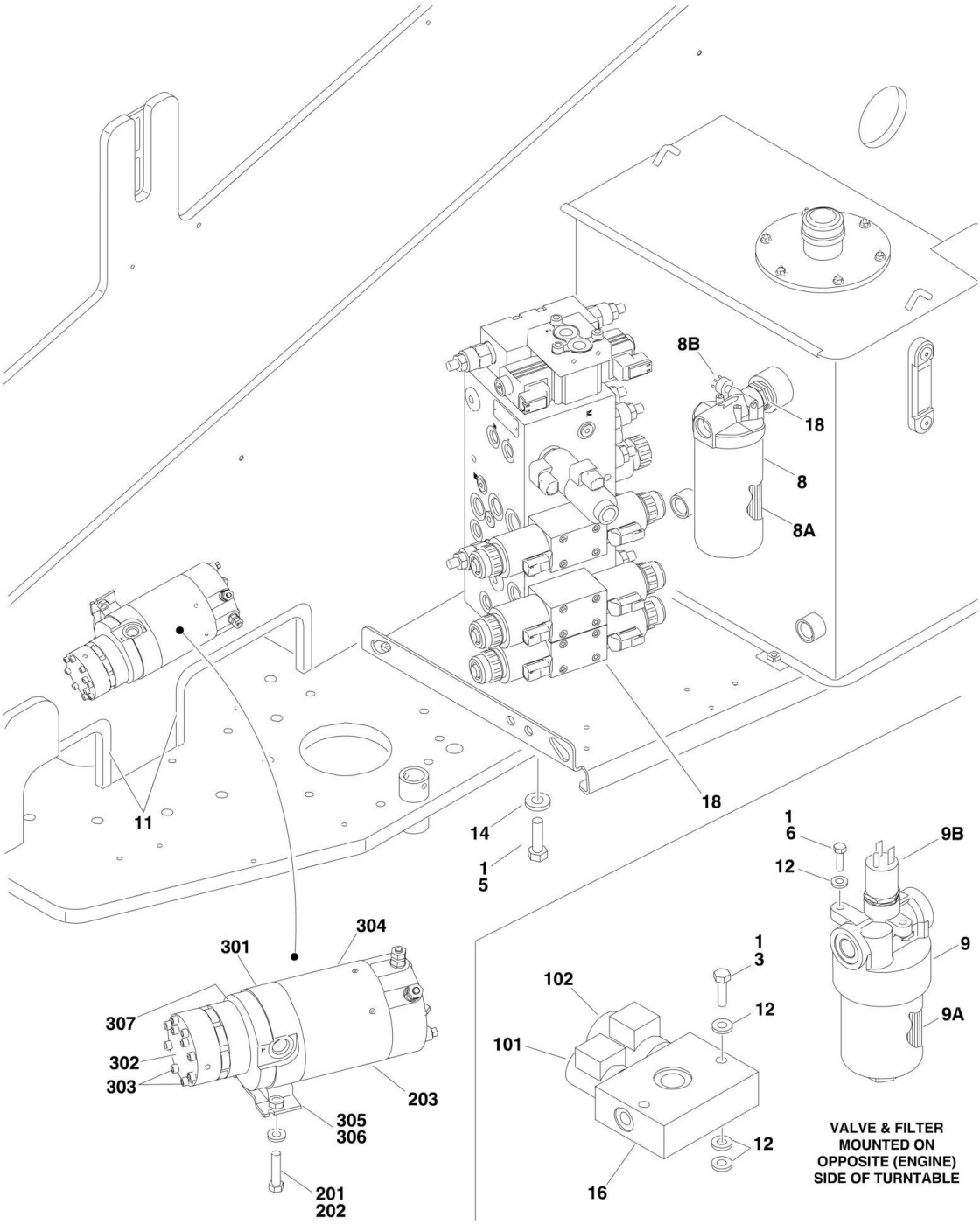

FIGURE 2-2. CONTROL VALVES INSTALLATIONS

ITEM	PART NUMBER	QTY	DESCRIPTION	REV
		Ref	**USAGE CHART:**	
		Ref	**USA Built Machines with Deutz D2011 & GM Engines (SN 0300181891 through 0300235167)**	
		Ref	**USA Built Machines with Deutz TD2.9L4 Engines (SN 0300188199 through 0300235167)**	
		Ref	**CONTROL VALVES INSTALLATIONS**	
	1001160095	Ref	**Control Valves Installations 600S (2WS)**	B
	1001160096	Ref	**Control Valves Installations 600S (4WS)**	B
	1001159731	Ref	**Control Valves Installations 660SJ (2WS)**	B
	1001160192	Ref	**Control Valves Installations 660SJ (4WS)**	B
1	0100011	AR	Compound, Locking	
3	0641416	2	Bolt 1/4in-20NC x 2in	
5	0641608	3	Bolt 3/8in-16NC x 1in	
6	0651406	3	Bolt 1/4in-28NF x 3/4in	
8	2120164	1	Return Filter Assembly	
8A	2120149	1	Element, Filter	
8B	7020021	1	Switch, Clog Indicator	
9	2120209	1	Hydraulic Pressure Filter Assembly	
9A	2120210	1	Element, Filter	
9B	7020020	1	Indicator, Clogged Filter	
9C	70000934	1	O-Ring, Filter Bowl (Not Shown)	
11	4060918	40 in/10m	Flex-Trim	
12	4711400	15	Flatwasher 1/4in Thin	
14	4711600	3	Flatwasher 3/8in Thin	
16	1001099391	1	Valve Assembly (2 Speed/Brake) (See Items 101-103 for Breakdown)	
18		Ref	Main Control Valve Assembly Options (See MAIN CONTROL VALVE ASSEMBLY for Breakdown):	
18	1001152886	1	Main Control Valve Assembly 600S (2WS) & 660SJ (2WS)	
18	1001152560	1	Main Control Valve Assembly 600S (4WS) & 660SJ (4WS)	
	1001099391	Ref	**VALVE ASSEMBLY (DUAL SELECT BRAKE/2 SPEED)**	A
101	7012941	1	Cartridge without Coil	
101	7010543	1	Seal Kit - 7012941 Cartridge	
101	7012944	1	Coil	
102	7012995	1	Cartridge without Coil	
102	7012518	1	Seal Kit - 7012995 Cartridge	
102	7012943	1	Coil	
103	70002209	1	Plug, Orifice (Not Shown - Access to orifice is through port T)	
	1001150423	Ref	**AUXILIARY PUMP INSTALLATION**	A
201	0100011	AR	Compound, Locking	
202	0811610	2	Bolt 3/8in-16NC x 1-1/4in	
203	1001137458	1	Auxiliary Pump Assembly (See Items 301-307 for Breakdown)	
	1001137458	Ref	**AUXILIARY PUMP ASSEMBLY**	A
301	70003995	1	Base	
302	70003996	1	Pump	
303	70003997	4	Screw 1/4in-20NC x 3in	
304	70003998	1	Motor	
305	70003999	1	Bracket	
306	70004000	2	Screw 3/8in-16NC x 1in	
307	7026330	1	Seal, Shaft	

FIGURE 2-3. MAIN CONTROL VALVE ASSEMBLY

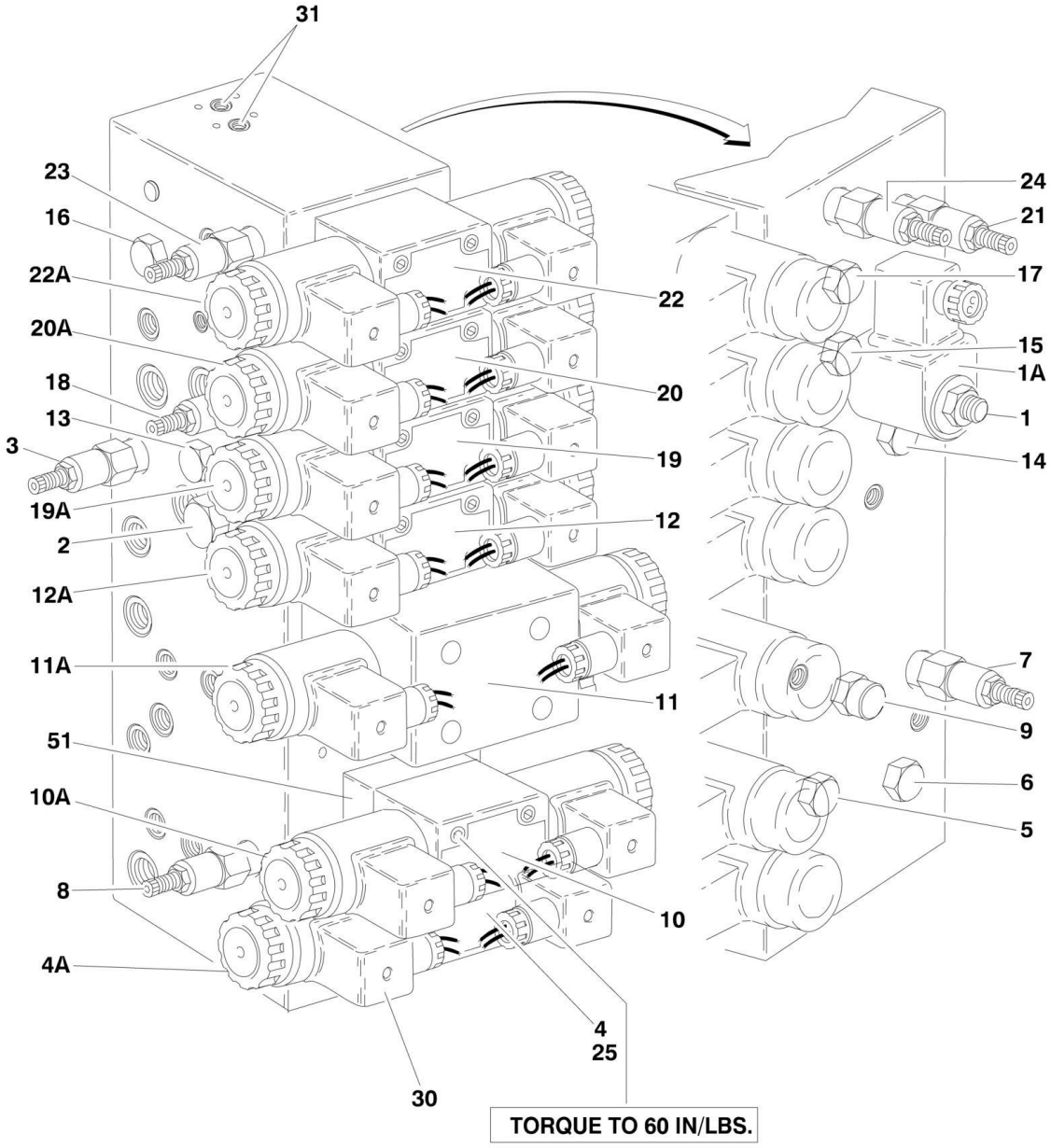

FIGURE 2-3. MAIN CONTROL VALVE ASSEMBLY

ITEM	PART NUMBER	QTY	DESCRIPTION	REV
		Ref	**USAGE CHART:**	
		Ref	**USA Built Machines with Deutz D2011 & GM Engines (SN 0300171769 through 0300181890)**	
		Ref	**USA Built Machines with Deutz TD2.9L4 Engines (SN 0300171769 through 0300188198)**	
		Ref	**China Built Machines (SN B300000970 through B300002654)**	
	1001091303	Ref	**MAIN CONTROL VALVE ASSEMBLIES**	B
1	7017410	1	Cartridge, without Coil	
1	7012967	1	Seal Kit - 7017410 Cartridge	
1A	7012944	1	Coil	
2	7017464	1	Cartridge, Pressure Sensing	
2	7012518	1	Seal Kit	
3	7012912	1	Cartridge (Main Relief)	
3	7012998	1	Seal Kit	
4	70001976	1	Control Valve Assembly (Platform Level)	
4	7012773	1	Seal Kit	
4A	7018991	2	Coil	
4A	7018912	2	Nut, Coil	
5	7012914	1	Cartridge, Check Valve	
5	7012918	1	Seal Kit - 7012914 Cartridge	
6	7012914	1	Cartridge, Check Valve	
6	7012918	1	Seal Kit - 7012914 Cartridge	
7	7012912	1	Cartridge, Relief Valve (Platform Level Backward)	
7	7012998	1	Seal Kit - 7012912 Cartridge	
8	7012912	1	Cartridge, Relief Valve (Platform Level Forward)	
8	7012998	1	Seal Kit - 7012912 Cartridge	
9	7012989	1	Cartridge, Flow Control	
9	7012953	1	Seal Kit - 7012989 Cartridge	
10	70001976	1	Control Valve Assembly (Platform Rotate)	
10	7012773	1	Seal Kit	
10	7018986	4	Capscrew #10 x 3-1/2	
10A	7018991	2	Coil	
10A	7018912	2	Nut, Coil	
11	70000579	1	Control Valve Assembly (Upper Tele):	
11	70000583	1	Seal Kit Options	
11	7018951	4	Capscrew 1/4 x 1-1/2	
11A	70000582	1	Coil	
11A	70000580	1	Nut, Coil	
12	7012775	1	Control Valve Assembly (Flow Control)	
12	7012773	1	Seal Kit	
12	7018942	4	Capscrew #10 x 2	
12A	7012772	2	Coil	
12A	7018912	2	Nut, Coil	
12A	7024015	2	Pipe, Pole	
13	7010542	1	Cartridge, Shuttle	
13	7010543	1	Seal Kit - 7010542 Cartridge	
14	7010542	1	Cartridge, Shuttle	
14	7010543	1	Seal Kit - 7010542 Cartridge	
15	7010542	1	Cartridge, Shuttle	
15	7010543	1	Seal Kit - 7010542 Cartridge	

ITEM	PART NUMBER	QTY	DESCRIPTION	REV
16	7010542	1	Cartridge, Shuttle	
16	7010543	1	Seal Kit - 7010542 Cartridge	
17	7010542	1	Cartridge, Shuttle	
17	7010543	1	Seal Kit - 7010542 Cartridge	
18	7012912	1	Cartridge, Relief Valve (Upper Lift Down)	
18	7012998	1	Seal Kit - 7012912 Cartridge	
19	7012775	1	Control Valve Assembly (Upper Lift)	
19	7012773	1	Seal Kit	
19	7018942	4	Capscrew #10 x 2	
19A	7012772	2	Coil	
19A	7018912	2	Nut, Coil	
19A	7024015	2	Pipe, Pole	
20	7012775	1	Control Valve Assembly (Swing)	
20	7012773	1	Seal Kit	
20	7018942	4	Capscrew #10 x 2	
20A	7012772	2	Coil	
20A	7018912	2	Nut, Coil	
20A	7024015	2	Pipe, Pole	
21	7012912	1	Cartridge, Relief Valve (Swing)	
21	7012998	1	Seal Kit - 7012912 Cartridge	
22	7012774	1	Control Valve Assembly (Steer)	
22	7012773	1	Seal Kit	
22	7018942	4	Capscrew #10 x 2	
22A	7012772	2	Coil	
22A	7018912	2	Nut, Coil	
22A	7024014	2	Pipe, Pole	
23	7012912	1	Cartridge, Relief Valve (Steer Left)	
23	7012998	1	Seal Kit - 7012912 Cartridge	
24	7012912	1	Cartridge, Relief Valve (Steer Right)	
24	7012998	1	Seal Kit - 7012912 Cartridge	
25	7018941	2	Orifice	
30	4460499	15	Connector, Din with Diode (Part of Valve Harness)	
31	2220885	2	Plug	
	2901763	Ref	**ROTATE SANDWICH VALVE KIT**	A
51	7021310	1	Block, Valve	

FIGURE 2-4. MAIN CONTROL VALVE ASSEMBLY

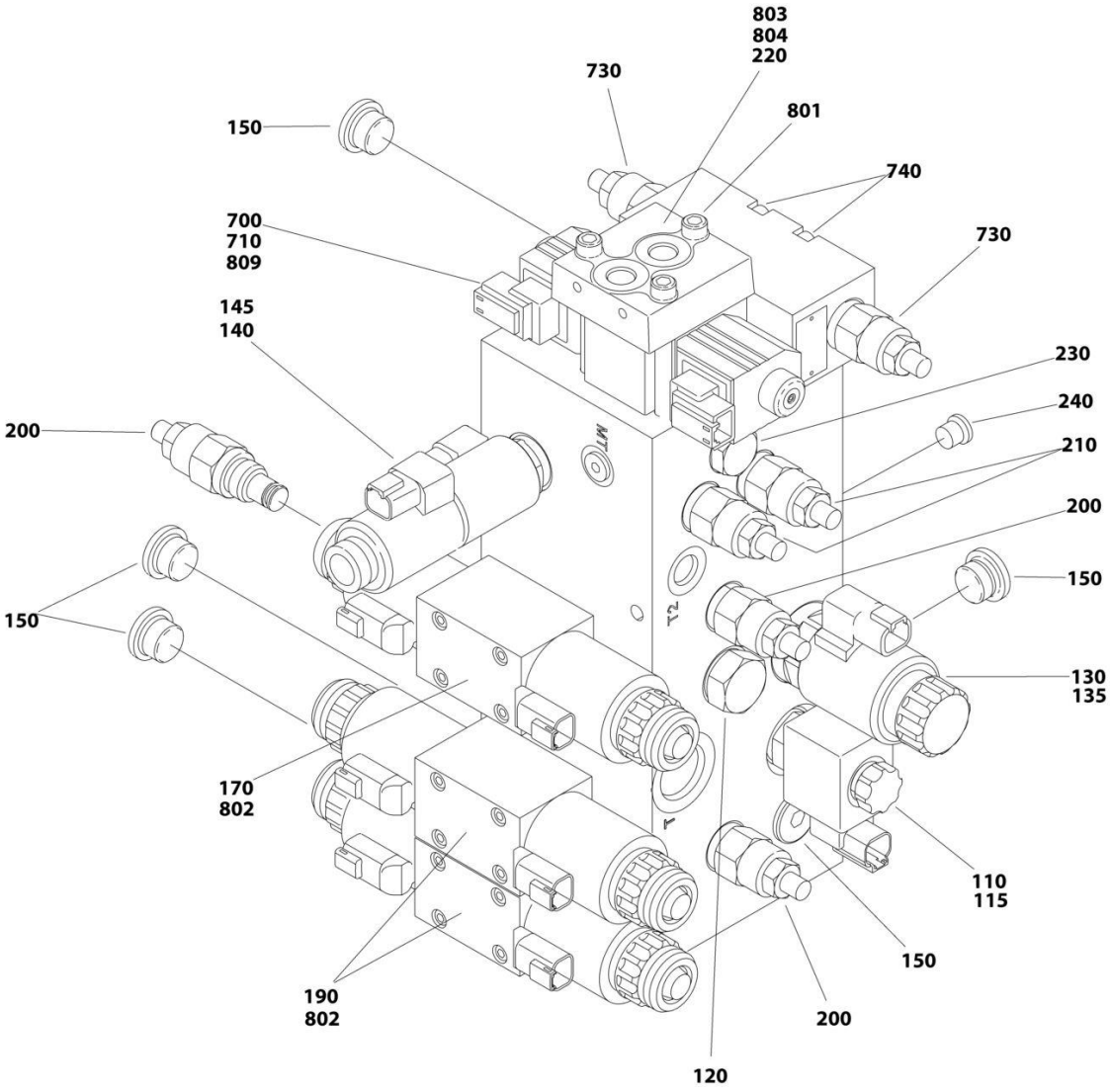

FIGURE 2-4. MAIN CONTROL VALVE ASSEMBLY

ITEM	PART NUMBER	QTY	DESCRIPTION	REV
		Ref	**USAGE CHART:**	
		Ref	**USA Built Machines with Deutz D2011 & GM Engines (SN 0300181891 through 0300235167)**	
		Ref	**USA Built Machines with Deutz TD2.9L4 Engines (SN 0300188199 through 0300235167)**	
		Ref	**MAIN CONTROL VALVE ASSEMBLIES**	
	1001152886	Ref	**Main Control Valve Assemblies 600S (2WS) & 660SJ (2WS)**	D
	1001152560	Ref	**Main Control Valve Assemblies 600S (4WS) & 660SJ (4WS)**	E
110	70004652	1	Cartridge, Valve Less Coil (Dump)	
110	70023867	1	Seal Kit - 70004652 Valve	
115	70004653	1	Coil	
115	70004654	1	Nut, Coil	
120	70004655	1	Cartridge, Valve	
120	70004656	1	Seal Kit - 70004655 Valve	
130	70004657	1	Valve, Cartridge Less Coil	
130	70004594	1	Seal Kit - 70004657 Valve	
135	70004595	1	Coil	
135	70004597	1	Nut, Coil	
135	70004596	1	O-Ring, Solenoid Tube	
140	70004659	1	Valve, Solenoid Less Cartridge (Front Steer)	
140	70004660	1	Seal Kit - 70004660 Valve	
145	80434249	2	Coil	
145	70004661	1	Nut, Coil	
145	70024457	1	O-Ring, Solenoid Tube (Upper)	
145	70004662	1	O-Ring, Solenoid Tube (Lower)	
150	70023859	5	Valve, Cartridge	
170	70004459	1	Valve, Directional Control (Telescope)	
170	7012773	1	Seal Kit - 70004459 Valve	
170	70004460	2	Coil	
170	7021375	2	Nut, Coil	
170	70004461	2	O-Ring, Solenoid Tube	
190	70004666	2	Valve, Directional Control (Lift and Swing)	
190	7012773	2	Seal Kit - 70004666 Valve (1 Per Assembly)	
190	70004463	4	Coil (2 Per Assembly)	
190	7021375	4	Nut, Coil (2 Per Assembly)	
190	70004461	1	O-Ring, Solenoid Tube (2 Per Assembly)	
200	70003019	3	Valve, Cartridge	
200	70004052	3	Seal Kit - 70003019 Valve (1 Per Valve)	
210	70003019	2	Valve, Cartridge	
210	70004052	2	Seal Kit - 70003019 Valve (1 Per Valve)	
220	70004667	1	Plate, Cover	
230	70004670	1	Plug	
240	70004668	1	Plug	
700	70004671	1	Valve, Directional Control (Rear Steer) (4WS Machines Only)	
700	70004672	1	Seal Kit - 70004671 Valve	
710	70004673	2	Coil	
730	70004674	2	Valve, Cartridge	
740	See Note	4	Capscrew M5 x 60 (Note: Not Available - Purchase Locally)	
801	See Note	1	Bolt Kit	
802	3931032	12	Capscrew #10-24 x 2	

ITEM	PART NUMBER	QTY	DESCRIPTION	REV
803	See Note	2	O-Ring (Note: Not Available for Purchase)	
804	See Note	1	O-Ring (Note: Not Available for Purchase)	
805	See Note	4	Plug #4 (Not Shown) (Note: Not Available for Purchase)	
806	See Note	4	Plug #6 (Not Shown) (Note: Not Available for Purchase)	
807	See Note	1	Plug #8 (Not Shown) (Note: Not Available for Purchase)	
809	See Note	2	O-Ring (Note: Not Available for Purchase)	

FIGURE 2-5. ACCESSORY VALVE ASSEMBLY

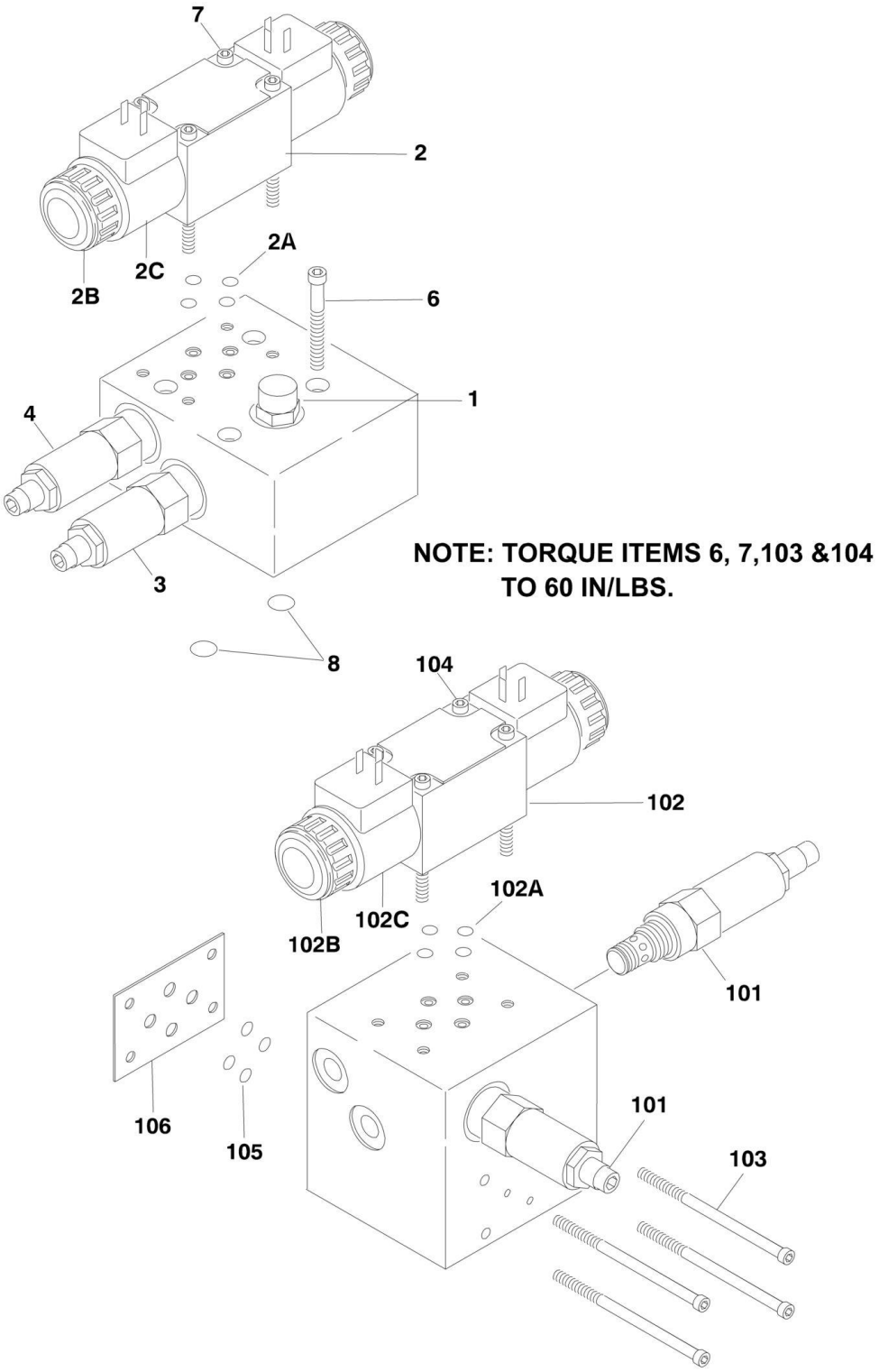

FIGURE 2-5. ACCESSORY VALVE ASSEMBLY

ITEM	PART NUMBER	QTY	DESCRIPTION	REV
		Ref	**ACCESSORY VALVE ASSEMBLIES**	
	4640921	Ref	**ARTICULATING JIB VALVE ASSEMBLY**	D
1	7012965	1	Cartridge, Flow Control	
1	7012953	1	Seal Kit - 7012965 Cartridge	
2	70001976	1	Directional Control Valve Assembly	
2	7012773	1	Seal Kit	
2A	7018945	4	O-Ring	
2B	7018912	2	Nut	
2C	7012772	2	Coil	
3	7017421	1	Cartridge, Relief	
3	7012998	1	Seal Kit - 7017421 Cartridge	
4	7017422	1	Cartridge, Relief	
4	7012998	1	Seal Kit - 7017422 Cartridge	
5	4460499	2	Connector, DIN with Diode (Not Shown - Part of Valve Harness)	
6	7012777	4	Capscrew, Socket Head 5/16in-18NC x 2-1/4in (Used to Mount Valve Assembly)	
7	7018942	4	Capscrew, Socket Head #10-24NC x 2in	
8	7012776	2	O-Ring (Used to Mount Main Valve)	
	4640922	Ref	**4WS VALVE ASSEMBLY**	B
101	7017420	1	Cartridge, Relief	
101	7012998	1	Seal Kit - 7017420 Cartridge	
102	7012774	1	Directional Control Valve Assembly	
102	7012773	1	Seal Kit	
102A	7018945	4	O-Ring	
102B	7018912	2	Nut	
102C	7012772	2	Coil	
103	7018946	4	Capscrew, Socket Head #10-24NC x 5in (Used to Mount Main Valve)	
104	7018942	4	Capscrew, Socket Head #10-24NC x 2in	
105	7018948	4	O-Ring (Used to Mount Main Valve)	
106	7018947	1	Plate, O-Ring	

FIGURE 2-6. SWING DRIVE, TURNTABLE BEARING AND LOCK INSTALLATIONS

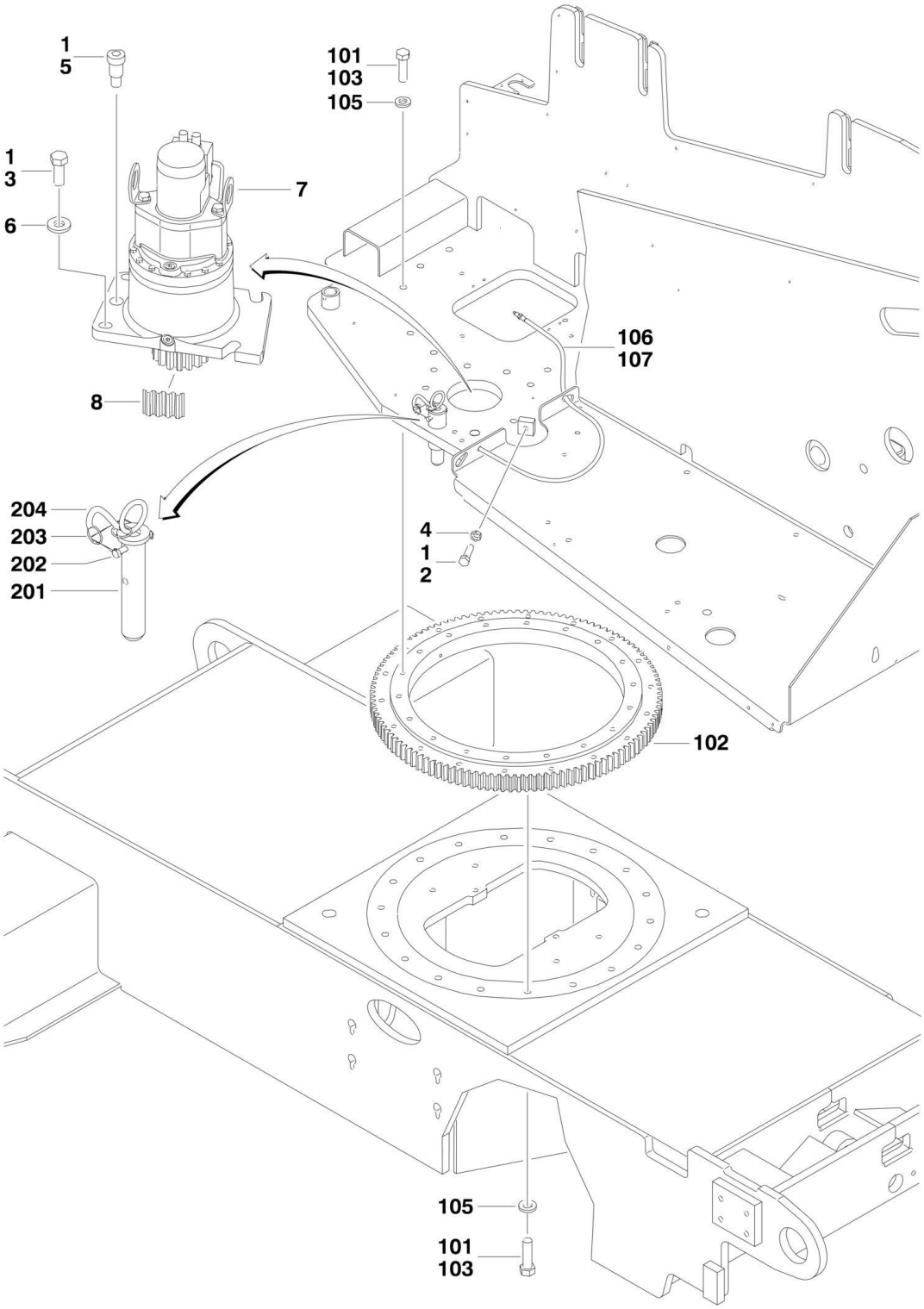

FIGURE 2-6. SWING DRIVE, TURNTABLE BEARING AND LOCK INSTALLATIONS

ITEM	PART NUMBER	QTY	DESCRIPTION	REV
	1001150390	Ref	**SWING DRIVE INSTALLATION**	F
1	0100019	AR	Compound, Locking	
2	0682018	1	Bolt 5/8 x 2-1/4 (Grade 8)	
2	0682016	1	Bolt 5/8 x 2 (Grade 8)	
3	0682216	4	Bolt 3/4in - 10NC x 2in (Grade 8)	
4	3312002	1	Nut, Jam 5/8in - 11NC	
5	3900293	1	Capscrew 1in x 1-1/4in	
6	4740057	4	Flatwasher, Hardened	
7	1001101060	1	Swing Hub Assembly (See SWING MOTOR/HUB ASSEMBLY for Breakdown)	
8	4071009	NLA	Shim **(SN 0300171769 through 0300195125)**	
8	1001125492	1	Shim **(SN 0300195126 through 0300235167)**	
8	4071009	NLA	Shim **(SN B300000970 through B300001062)**	
8	1001125492	1	Shim **(SN B300001063 through B300002654)**	
	1001150391	Ref	**TURNTABLE BEARING AND REMOTE LUBE INSTALLATION**	C
101	0100019	AR	Compound, Locking	
102	0440207	1	Bearing, Turntable	
103	0682018	36	Bolt 5/8in - 11NC x 2-1/4in (Grade 8)	
104	3020029	AR	Lubricant	
105	4892000	36	Flatwasher 5/8in Hardened	
106	0100011	AR	Compound, Locking	
107	1001149927	1	Hose (Includes Grease Fitting and Adapter Fittings)	
	1001151203	Ref	**TURNTABLE LOCK INSTALLATION**	C
201	3421627	1	Pin	
202	3421565	1	Pin, Snap	
203	3760170	2	Ring, Quick Release	
204	1260017	9 in/23cm	Chain	

FIGURE 2-7. SWING MOTOR/HUB ASSEMBLY

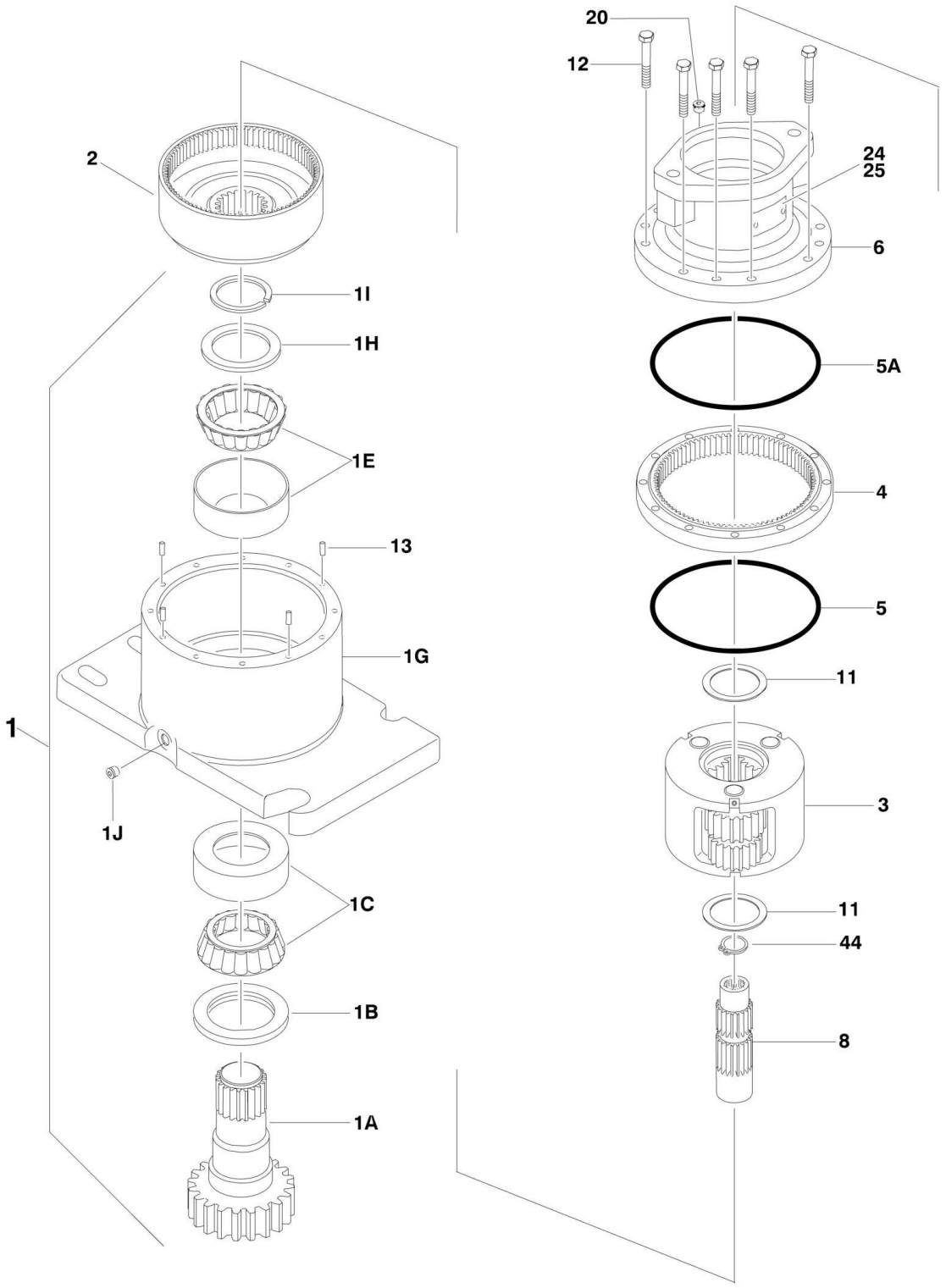

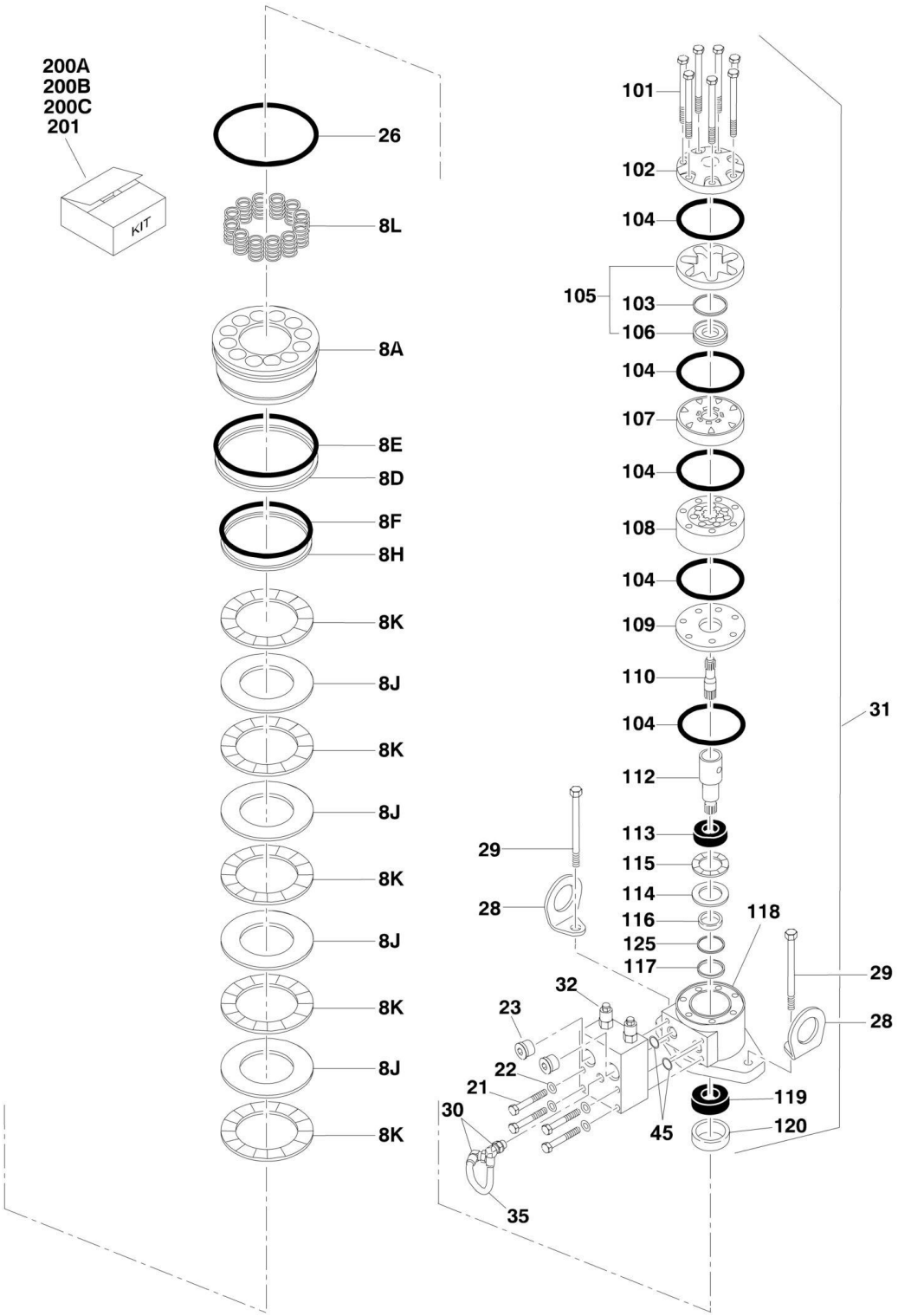
200A
200B
200C
201
KIT
26
8L
8A
8E
8D
8F
8H
8K
8J
8K
8J
8K
8J
8K
8J
8K
101
102
104
105
103
106
104
107
104
108
104
109
110
104
112
113
115
114
116
125
117
118
29
28
29
28
31
32
23
22
21
30
35
45
119
120

FIGURE 2-7. SWING MOTOR/HUB ASSEMBLY

ITEM	PART NUMBER	QTY	DESCRIPTION	REV
	1001101060	Ref	**SWING MOTOR/HUB ASSEMBLY**	A
1	See Note	NSS	Housing/Shaft Assembly (Note: Not Available - Purchase Individual Components)	
1A	7010492	1	Shaft, Output	
1B	7000228	1	Seal, Lip	
1C	7000255	1	Bearing Kit (Includes Cup and Cone)	
1E	7000257	1	Bearing Kit (Includes Cup and Cone)	
1G	7024762	1	Housing	
1H	7007633	1	Washer, Thrust	
1I	7000229	1	Ring, Retaining	
1J	7017072	1	Plug, Pipe	
2	7000246	1	Gear, Internal	
3	80424002	1	Carrier Assembly	
4	7000248	1	Gear, Ring	
5	7000230	1	O-Ring	
5A	7017070	1	O-Ring	
6	1001101060	1	Housing, Brake (Note: Not Available - Purchase Complete Assembly)	
8	70002065	1	Gear, Sun	
8A	70000782	1	Piston	
8D	70002070	1	O-Ring	
8E	70002071	1	Ring, Back-up	
8F	70002073	1	O-Ring	
8H	70002072	1	Ring, Back-up	
8J	70002067	4	Disc, Rotor	
8K	70002068	5	Disc, Stator	
8L	70002066	14	Spring	
11	7000253	2	Washer, Thrust	
12	7000217	12	Bolt 3/8in-16NC x 2-1/4in (Grade 8)	
13	7017080	4	Pin, Dowel	
20	7017072	1	Plug, Pipe	
21	7024704	4	Bolt 5/16in-18NC x 2in (Grade 8)	
22	See Note	4	Lockwasher (Note: Not Available for Purchase)	
23	7017023	2	Plug, Pipe	
24	See Note	NSS	Plate, ID (Note: Not Available for Purchase)	
25	7000281	2	Screw, Drive	
26	7024763	1	O-Ring	
28	See Note	2	Lug, Lifting (Note: Not Available for Purchase)	
29	70002069	2	Bolt 1/2in-13NC x 2in (Grade 8)	
30	7017085	2	Elbow	
31	70002075	1	Motor Assembly (See Items 101-125 for Breakdown)	
32	7024784	1	Valve Assembly - Complete (No Serviceable Parts)	
35	70002074	1	Tube	
44	7017028	1	Ring, Internal Retaining	
45	7000213	2	O-Ring	
	70002075	Ref	**MOTOR ASSEMBLY**	
101	7024454	5	Bolt	
102	7004035	1	Cover, End	
103	7023318	1	Seal, Commutator	
104	7004036	5	Seal, Ring	

ITEM	PART NUMBER	QTY	DESCRIPTION	REV
105	7024453	1	Commutator and Ring Assembly	
106	7024453	1	Ring	
107	7024379	1	Manifold	
108	7024455	1	Rotor Set	
109	7024380	1	Plate, Wear	
110	7024456	1	Link, Drive	
112	7024458	1	Shaft, Coupling	
113	7024381	1	Bearing, Inner	
114	7004043	1	Washer, Thrust	
115	7004044	1	Bearing, Thrust	
116	7004049	1	Seal, Inner	
117	7004045	1	Washer, Back-up	
118	7024457	1	Housing	
119	7024390	1	Bearing, Outer	
120	7004047	1	Seal	
125	80424043	1	Washer, Back-up	
		Ref	**KIT OPTIONS:**	
200		Ref	Seal Kit Options:	
200A	7024100	1	Swing Hub (Includes Items 1B, 1I, 5, 5A & 11)	
200B	70002086	1	Swing Brake (Includes Items 8D, 8E, 8F, 8H & 26)	
200C	7024396	1	Swing Motor (Includes Items 103, 104, 116, 117, 120 & 125)	
201	70002085	1	Disc Kit - Swing Brake (Includes Items 8J & 8K)	

FIGURE 2-8. DEUTZ D2011 ENGINE INSTALLATION

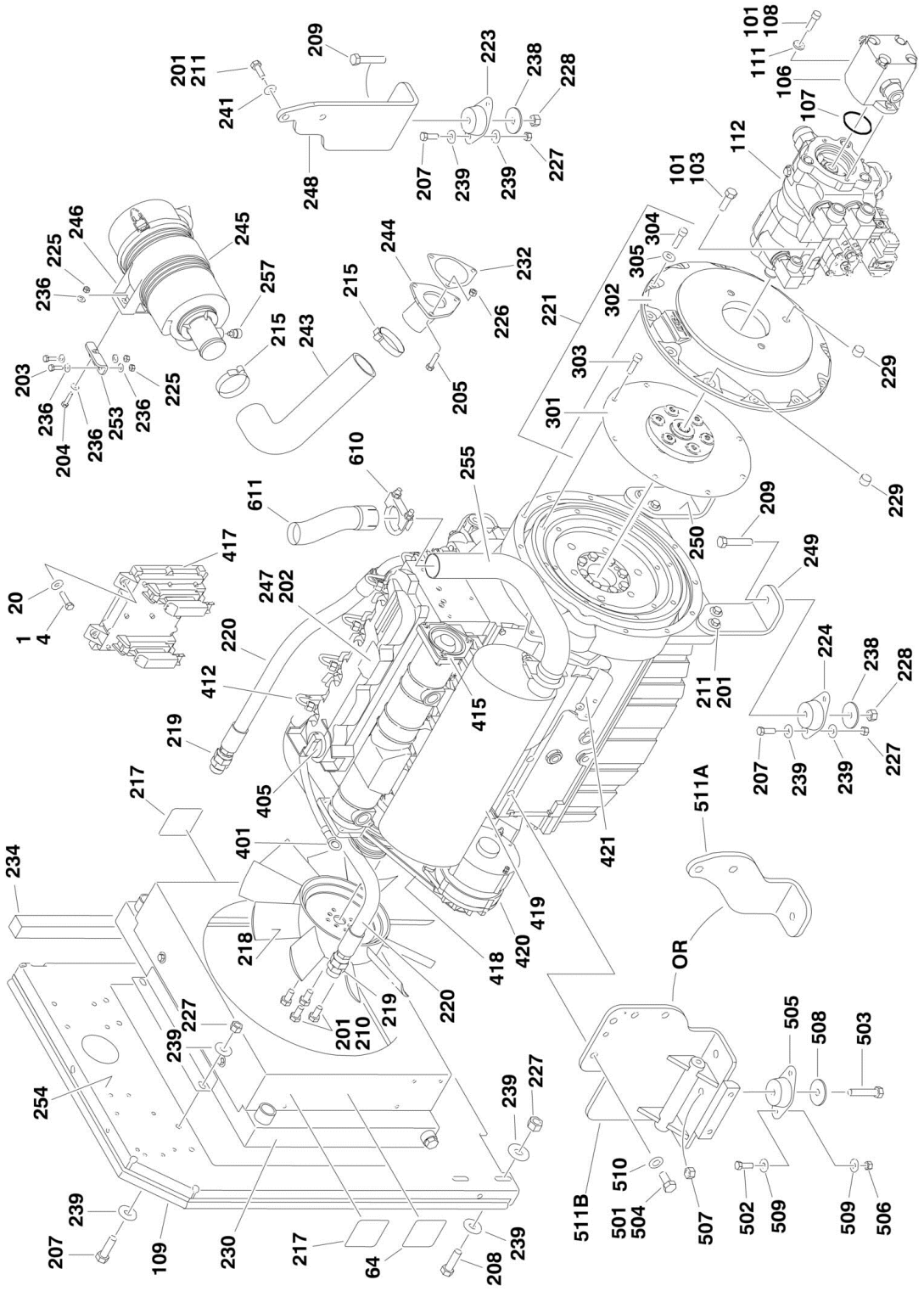

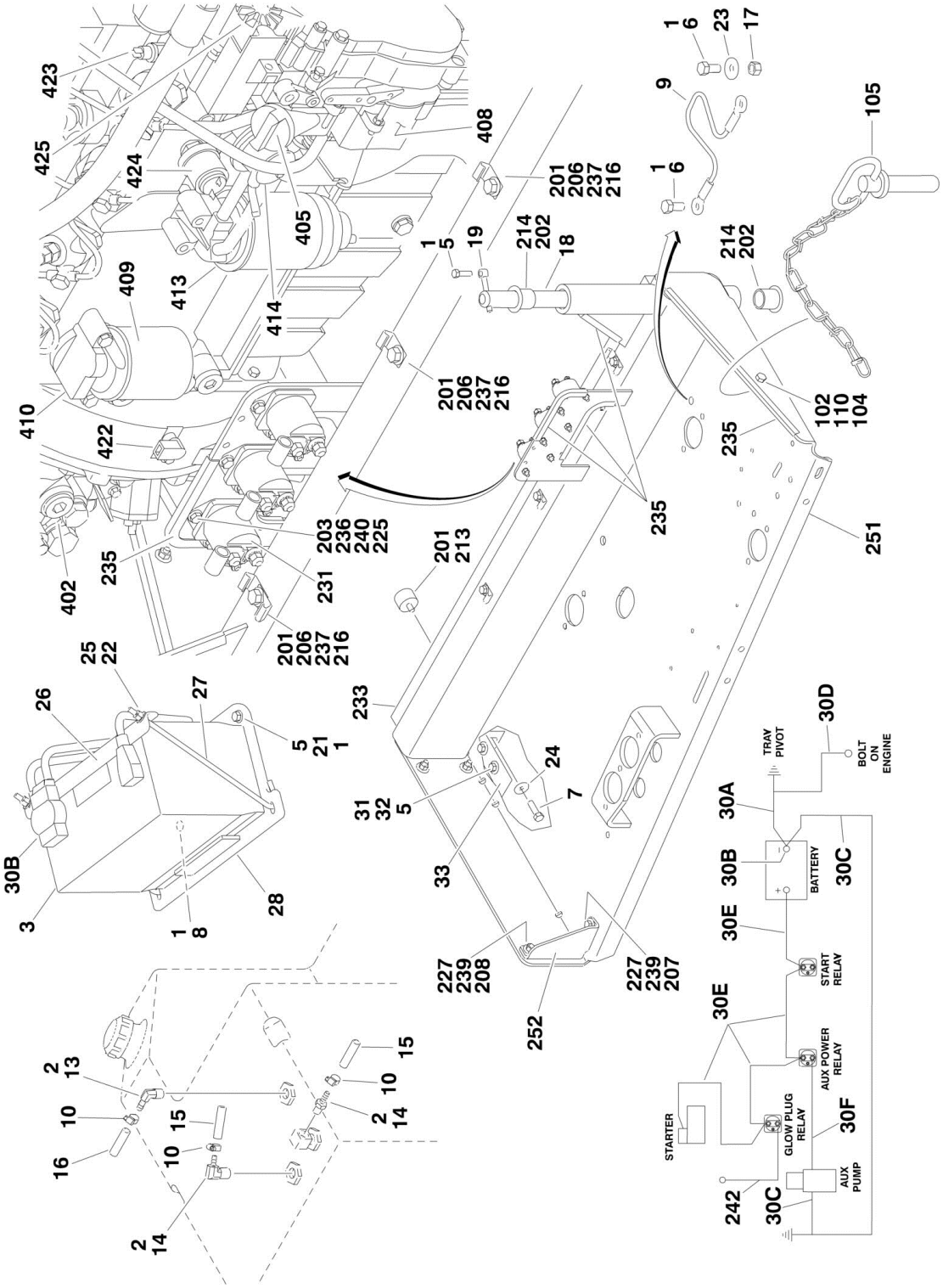
TRAY PIVOT
BOLT ON ENGINE
BATTERY
START RELAY
AUX POWER RELAY
GLOW PLUG RELAY
STARTER
AUX PUMP

FIGURE 2-8. DEUTZ D2011 ENGINE INSTALLATION

ITEM	PART NUMBER	QTY	DESCRIPTION	REV
		Ref	**DEUTZ D2011 ENGINE INSTALLATIONS**	
		Ref	**USA Built Machines:**	
		Ref	**2WD**	
	1001151341	Ref	**Tier IVi Engines (All Specs Except ANSI and CSA Specs) (SN 0300171769 through 0300208280)**	B
	1001151636	Ref	**Tier IVi Flex Engines (ANSI and CSA Specs Only) (SN 0300171769 through 0300208280)**	A
	1001188209	Ref	**Tier IVi Engines (All Specs) (SN 0300208281 through 0300235167)**	A
		Ref	**4WD without Arctic Package**	
	1001151342	Ref	**Tier IVi Engines (All Specs Except ANSI and CSA Specs) (SN 0300171769 through 0300208280)**	B
	1001151637	Ref	**Tier IVi Flex Engines (ANSI and CSA Specs Only) (SN 0300171769 through 0300208280)**	A
	1001188210	Ref	**Tier IVi Engines (All Specs) (SN 0300208281 through 0300235167)**	A
		Ref	**4WD with Arctic Package**	
	1001151343	Ref	**Tier IVi Engines (ANSI Export Specs) (SN 0300171769 through 0300208280)**	C
	1001151638	Ref	**Tier IVi Flex Engines (ANSI and CSA Specs Only) (SN 0300171769 through 0300208280)**	A
	1001188211	Ref	**Tier IVi Engines (All Specs) (SN 0300208281 through 0300235167)**	A
		Ref	**China Built Machines:**	
		Ref	**2WD**	
	1001151341	Ref	**Tier IVi Engines (All Specs)**	B
		Ref	**4WD without Arctic Package**	
	1001151342	Ref	**Tier IVi Engines (All Specs)**	B
		Ref	**4WD with Arctic Package**	
	1001151343	Ref	**Tier IVi Engines (ANSI Export Specs)**	B
1	0100011	AR	Compound, Locking	
2	0100020	AR	Sealant, Pipe (Not Shown)	
3	0400075	1	Battery	
4	0641410	4	Bolt 1/4in-20NC x 1-1/4in	
5	0641610	1	Bolt 3/8in-16NC x 1-1/4in	
6	0641808	2	Bolt 1/2in-13NC x 1in	
7	0642010	1	Bolt 5/8in-11NC x 1-1/4in	
8	0741610	1	Screw, Countersunk 3/8in-16NC x 1-1/4in	
9	1060637	1	Cable, Lanyard	
10	1320022	5	Clamp, Hose	
11	1701505	1	Decal - Diesel (Not Shown - Located on Hood)	
12	2180348	1	Fitting, Straight Barbed	
13	2220313	1	Fitting, 90	
14	2221176	1	Fitting, 90 Barbed	
15	2720058	26 ft/7.9m	Hose	
16	2750532	6 ft/1.8m	Hose	
17	3311801	1	Nut 1/2in-13NC	
18	3311805	1	Locknut 1/2in-13NC	
18	3422446	1	Pin, Pivot	
19	3841143	1	Pin, Keeper	
20	4711400	4	Flatwasher 1/4in Thin	
21	4751400	AR	Flatwasher 1/4in Regular	

ITEM	PART NUMBER	QTY	DESCRIPTION	REV
22	4751500	2	Flatwasher 5/16in Regular	
23	4751800	1	Flatwasher 1/2in Regular	
24	4752000	1	Flatwasher 5/8in Regular	
25	88521205	2	Locknut 5/16in-18NC	
26	91401281	1	Hold-down, Battery	
27	1001093382	2	J-Bolt	
28	1001144040	1	Plate, Battery Hold-down	
30	1001151565	1	Battery Cable Kit	A
30A	7027051	1	Cable, Battery (Black) (Battery - to Tray Pivot/Relay Grd)	
30B	8270147	1	Terminal, Battery (with Boot)	
30C	7027052	1	Cable, Battery (Black) (Battery - to Aux Pump Grd)	
30D	7027053	1	Cable, Battery (Black) (Engine Grd to Tray Pivot Grd)	
30E	7027054	1	Cable (Red) (Battery + to Relays/Starter)	
30F	7027055	1	Cable (Red) (Aux Relay to Aux Pump)	
31	3311605	2	Locknut 3/8in-16NC	
32	4751600	4	Flatwasher 3/8in Regular	
33	1001151070	1	Angle, Mounting	
		Ref	**Note: Arctic Package Items (Used on Arctic Machines Only) - Items 51-61 Not Shown.**	
51	1060625	1	Cable, Immersion Heater (Located on bottom of Hydraulic Oil Tank) **(SN 0300171769 through 0300206590)**	
52	1060626	1	Cord, 3 Way Extension (Located on Left Front of Engine)	
53	1320223	2	Clamp (Located on Right Front of Engine Tray)	
54	1702941	1	Decal - Battery Heater (Located on Battery Heater)	
55	1702942	1	Decal - Engine Block Heater (Located on Right Side of Engine)	
56	1702943	1	Decal - Hydraulic Tank Heater (Located on bottom of Hydraulic Oil Tank)	
57	1702944	1	Decal - Heater Cord (Located on Left Front of Engine)	
58	2580024	1	Heater, Battery (Located on Battery)	
59	2580050	1	Heater, Hydraulic Tank (Located on bottom of Hydraulic Oil Tank) **(SN 0300171769 through 0300206590)**	
59	1001188972	1	Heater, Hydraulic Tank (Located on bottom of Hydraulic Oil Tank) **(SN 0300206591 through 0300235167)**	
60	3980007	1	Seat, Battery (Located on Battery)	
61	1001150918	2	Cord, 8ft Extension (Located at Battery)	
61	0641608	1	Bolt 3/8in-16NC x 1in	
61	1060625	1	Cable, Immersion Heater (Located on bottom of Hydraulic Oil Tank)	
64		Ref	Decal - Warning Explosion/Fire Options:	
64	1704972	1	ANSI Spec	
64	1706098	1	Australian and CE Spec	
64	1706059	1	Brazilian Spec	
64	1706060	1	Chinese Spec	
64	1706064	1	CSA Spec	
64	1706062	1	Japanese Spec	
64	1706061	1	Korean Spec	
64	1706063	1	Spanish Language	
		Ref	**ENGINE AND PUMP ASSEMBLIES**	
		Ref	**USA Built Machines:**	
		Ref	**2WD**	
	1001150156	Ref	**Tier IVi Engines (All Specs Except ANSI and CSA Specs) (SN 0300171769 through 0300208280)**	C

ITEM	PART NUMBER	QTY	DESCRIPTION	REV
	1001151633	Ref	**Tier IVi Flex Engines (ANSI and CSA Specs Only) (SN 0300171769 through 0300208280)**	A
	1001188222	Ref	**Tier IVi Engines (All Specs) (SN 0300208281 through 0300235167)**	A
		Ref	**4WD without Arctic Package**	
	1001150155	Ref	**Tier IVi Engines (All Specs Except ANSI and CSA Specs) (SN 0300171769 through 0300208280)**	C
	1001151632	Ref	**Tier IVi Flex Engines (ANSI and CSA Specs Only) (SN 0300171769 through 0300208280)**	A
	1001188223	Ref	**Tier IVi Engines (All Specs) (SN 0300208281 through 0300235167)**	A
		Ref	**4WD with Arctic Package**	
	1001150154	Ref	**Tier IVi Engines (ANSI Export Specs) (SN 0300171769 through 0300208280)**	C
	1001151634	Ref	**Tier IVi Flex Engines (ANSI and CSA Specs Only) (SN 0300171769 through 0300208280)**	A
	1001188224	Ref	**Tier IVi Engines (All Specs) (SN 0300208281 through 0300235167)**	A
		Ref	**China Built Machines:**	
		Ref	**2WD**	
	1001150156	Ref	**Tier IVi Engines (All Specs)**	C
		Ref	**4WD without Arctic Package**	
	1001150155	Ref	**Tier IVi Engines (All Specs)**	C
		Ref	**4WD with Arctic Package**	
	1001150154	Ref	**Tier IVi Engines (ANSI Export Specs)**	C
101	0100011	AR	Compound, Locking	
102	0641407	1	Bolt 1/4in-20NC x 7/8in	
103	0641812	2	Bolt 1/2in-13NC x 1-1/2in	
104	3311405	1	Locknut 1/4in-20NC	
105	3422532	1	Pin, Hitch	
106	3600395	1	Gear Pump Assembly with Fittings (See GEAR PUMP ASSEMBLY for Breakdown)	
107	3790152	1	O-Ring	
108	3931620	2	Capscrew 3/8in-16NC x 1-1/4in	
109	3960389	5 ft/1.5m	Seal	
110	4751400	1	Flatwasher 1/4in Regular	
111	4891600	2	Flatwasher 3/8in Hardened	
112		Ref	Piston Pump Assembly with Fittings Options (See PISTON PUMP ASSEMBLY for Breakdown):	
112	3600394	1	Pump (2WD USA Built Machines) **(SN 0300171769 through 0300208280)**	
112	1001186545	1	Pump (2WD USA Built Machines) **(SN 0300208281 through 0300235167)**	
112	3600394	1	Pump (2WD China Built Machines)	
112	1001117799	1	Pump (4WD USA Built Machines) **(SN 0300171769 through 0300208280)**	
112	1001186543	1	Pump (4WD USA Built Machines) **(SN 0300208281 through 0300235167)**	
112	1001117799	1	Pump (4WD China Built Machines)	
		Ref	**ENGINE ASSEMBLIES**	
		Ref	**USA Built Machines:**	
		Ref	**Machines without Arctic Package**	
	1001150158	Ref	**Tier IVi Engines (All Specs Except ANSI and CSA Specs)**	F
	1001151631	Ref	**Tier IVi Flex Engines (ANSI and CSA Specs Only)**	C

ITEM	PART NUMBER	QTY	DESCRIPTION	REV
		Ref	**Machines with Arctic Package**	
	1001150179	Ref	**Tier IVi Engines (ANSI Export Specs)**	F
	1001151635	Ref	**Tier IVi Flex Engines (ANSI and CSA Specs Only)**	D
		Ref	**China Built Machines:**	
		Ref	**Machines without Arctic Package**	
	1001150158	Ref	**Tier IVi Engines (All Specs)**	F
		Ref	**Machines with Arctic Package**	
	1001150179	Ref	**Tier IVi Engines (ANSI Export Specs)**	D
201	0100011	AR	Compound, Locking	
202	0100062	AR	Compound, Locking	
203	0641407	8	Bolt 1/4in-20NC x 7/8in	
204	0641409	2	Bolt 1/4in-20NC x 1-1/8in	
204	0641410	2	Bolt 1/4in-20NC x 1-1/4in	
205	0641510	AR	Bolt 5/16in-18NC x 1-1/4in	
205	0641512	AR	Bolt 1/4in-20NC x 1-1/2in	
206	0641606	3	Bolt 3/8in-16NC x 3/4in	
207	0641609	14	Bolt 3/8in-16NC x 1-1/8in	
208	0641610	4	Bolt 3/8in-16NC x 1-1/4in	
209	0641820	3	Bolt 1/2in-13NC x 2-1/2in	
210	0700808	4	Bolt 8mm x 16mm	
211	0771414	AR	Bolt 14mm x 30mm (Grade 10.9)	
213	0940070	1	Bumper	
214	0961986	2	Bushing, Flanged	
215	1320016	2	Clamp	
216	1320223	4	J-Clip	
217	1703162	2	Decal - Caution Fan Blade	
218	2060025	1	Fan	
219	2220451	2	Fitting, Straight	
220	2720398	2	Hose, Oil Cooler	
221	2902065	1	Pump Coupling Kit (See Items 301-303 for Breakdown)	
222		Ref	Oil, Motor Options (Not Shown)	
222	3020016	3.75 gal /14.2L	Without Arctic Package	
222	3020044	3.75 gal /14.2L	With Arctic Package	
223	3200401	1	Mount, Motor	
224	3200406	2	Mount, Motor	
225	3311405	10	Locknut 1/4in-20NC	
226	3311505	3	Locknut 5/16in-18NC	
227	3311605	10	Locknut 3/8in-16NC	
228	3311805	3	Locknut 1/2in-13NC	
229	3520054	2	Plug, Hole	
230	1001150998	1	Radiator	
231	3740067	3	Relay	
232	3960407	1	Gasket, Air Intake	
233	3960468	1	Seal	
234	3960469	1	Seal	
235	4060805	37 in/1m	Flex-Trim	
236	4711400	14	Flatwasher 1/4in Thin	
237	4711600	3	Flatwasher 3/8in Thin	
238	4740274	3	Washer, Snubbing	
239	4751600	36	Flatwasher 3/8in Regular	

ITEM	PART NUMBER	QTY	DESCRIPTION	REV
240	4791400	6	Starwasher 1/4in	
241	4812200	2	Flatwasher M14	
242	4923379	1	Harness, Glow Plug	
243	1001130041	1	Elbow, Air Intake	
244	1001139819	1	Adapter, Air Intake	
245	1001141693	1	Air Cleaner Assembly Filter Element	
245	70003783	1	Element, Filter (Not Shown)	
246	1001141694	1	Clamp, Air Filter	
247		Ref	Engine, Deutz - D2011 Options (See Items 401-426 for Serviced Components):	
247		Ref	USA Built Machines	
247	1001146368	Ref	Tier IVi Engines (All Specs Except ANSI and CSA Specs)	
247	1001151630	Ref	Tier IVi Flex Engines (ANSI and CSA Specs Only)	
247		Ref	China Built Machines	
247	1001146368	Ref	Tier IVi Engines (All Specs)	
248	1001149704	Ref	Plate, Engine Mounting (Front Left Side)	
249	1001149705	1	Plate, Engine Mounting (Rear Left Side)	
250	1001149706	1	Plate, Engine Mounting (Rear Right Side)	
251	1001149793	1	Tray, Engine	
252	1001150915	1	Support	
253	1001151078	1	Angle, Mounting	
254	1001151206	1	Plate, Radiator Mounting	
255		Ref	Pipe, Exhaust Options:	
255	1001151251	1	Pipe used with Standard Muffler	
255	See Note	1	Pipe used with Optional Mufflers (Note: See Item 419)	
257	1001143390	1	Indicator, Air Filter Service **(SN 0300229131 through 0300235167)**	
		Ref	**Note: Arctic Package Items (Used on Arctic Machines Only) - Item 281 Not Shown.**	
281	2580062	1	Heater, Engine Block	
	2902065	Ref	**PUMP COUPLING INSTALLATION**	K
301	70000793	1	Coupling	
302	See Note	NSS	Plate, Pump Adapter (Note: Use p/n 2902065)	
303	See Note	NSS	Capscrew M10 x 20 (Grade 10.9) (Note: Not Available - Purchase Locally)	
304	See Note	NSS	Bolt M10 x 30 (Grade 10.9) (Note: Not Available - Purchase Locally)	
305	See Note	NSS	Flatwasher M10 (Note: Not Available - Purchase Locally)	
		Ref	**ENGINE COMPONENTS**	
		Ref	**USA Built Machines:**	
	1001146368	Ref	**Tier IVi Engines (All Specs Except ANSI and CSA Specs)**	D
	1001151630	Ref	**Tier IVi Flex Engines (ANSI and CSA Specs Only)**	B
		Ref	**China Built Machines:**	
	1001146368	Ref	**Tier IVi Engines (All Specs)**	D
401	7026631	1	Dipstick	
401	7020487	1	Seal, Dipstick	
401	70001002	1	Tube, Dipstick	
401	7020403	1	Seal, Dipstick Tube	
402	70003475	1	Thermostat	
403	70002718	1	Seal, Rear Main (Not Shown)	
404	70001870	1	Flywheel (Not Shown)	
404	7024579	1	Ring Gear (Located on Flywheel - Not Shown)	

ITEM	PART NUMBER	QTY	DESCRIPTION	REV
405	7020465	1	Cap, Filler	
406		Ref	Gasket, Head Options (Not Shown):	
406	70003456	1	Gasket with 1 Notch	
406	70003457	1	Gasket with 2 Notches	
406	70003003	1	Gasket with 3 Notches	
406	7020431	1	Gasket, Valve Cover (Not Shown)	
406	70004273	1	Gasket Kit (Note: Does not include Head Gasket)	
407	70000800	1	Kit, Timing Belt/Idler (Not Shown)	
408	70001850	1	Pump, Oil Lube	
408	7020468	1	Seal Between Oil Pump and Engine Block (Not Shown)	
409	7016331	1	Filter, Oil	
410	70003472	1	Bracket, Oil Filter	
410	7027236	1	Sender, Temperature	
410	70003473	1	Gasket, Bracket to Engine Block	
411	70004268	2	Connector, Radiator Hose (Not Shown)	
411	70004269	2	Ring, Sealing (Not Shown)	
412		Ref	Injector, Fuel	
412		Ref	Pump, Injector Options:	
412	70000912	4	Series A Injector	
412	70000913	4	Series B Injector	
412	70000914	4	Series C Injector	
412	70000915	4	Series D Injector	
413	7016328	1	Filter, Fuel	
413	70001423	1	Bracket, Fuel Filter	
414	70000916	1	Pump Fuel Supply	
414	70001435	1	Repair Kit for 70000916 Pump	
414	70000919	1	Hand Pump	
414	70000918	1	Seal, Hand Pump	
414	70000917	1	O-Seal Between Fuel Pump and Engine Block	
415		Ref	Intake Manifold Components	
415	70003469	1	Flange, Blanking	
415	70003468	1	Seal (Flange to Air Intake Manifold)	
415	70001871	4	Gasket, Intake Manifold to Engine Block (Not Shown)	
415	70003470	8	Screw, Torx Head (Not Shown)	
416	70001847	1	Breather Valve (Not Shown - Located On Front Cover)	
416	70001126	1	Seal, Breather Valve	
417	7027795	1	Module, Control	
417		Ref	Left Module Connections:	
417	7027796	1	Cable, Interconnect (Module to 70001872 Cable)	
417	70004060	1	Plug, Connector	
417	70001872	1	Cable, Harness	
417	70004103	1	Cable (Alternator to 70001872 Cable)	
417	70004271	1	Cable (Starter to 70001872 Cable)	
417		Ref	Right Module Connections:	
417	70004059	1	Plug, Diagnostic	
418	7020408	1	V-Belt	
419		Ref	Muffler Options:	
419	7000695	1	Standard Muffler (Supplied with Engine)	
419	0256689	NSS	Spark Arrester Muffler (Use p/n 3220103)	
419	0256690	NSS	Catalytic Muffler (Use p/n 3220104)	
419		Ref	Muffler Components:	

ITEM	PART NUMBER	QTY	DESCRIPTION	REV
419	1320176	1	Clamp, Saddle for 3220103 Muffler and Standard Muffler	
419	70001017	1	Clamp for 3220104 Muffler	
419	7024560	1	Plug, Brass (3220103 & 3220104 Mufflers)	
419	See Note	1	Pipe, Exhaust Standard Muffler (Note: See Item 255)	
419	7024398	1	Pipe, Exhaust (3220103 & 3220104 Mufflers)	
419	7020471	4	Gasket, Exhaust Manifold to Engine Block	
419	70004270	8	Stud, Muffler	
420	70004056	1	Alternator	
420	70001868	1	Regulator, Voltage Options (Not Shown)	
420	70001866	1	Seal, Gasket for Voltage Regulator (Not Shown)	
420	70000851	1	Bracket, Mounting (Not Shown)	
420	70002234	1	Bracket, Adjusting (Not Shown)	
421	7020479	1	Starter	
421	70004058	1	Relay	
421	70001498	1	Shield, Starter Heat	
422	70004272	1	Sensor, Speed	
422	70003932	1	Spacer, Sensor	
423	7027791	1	Transmitter, Temperature	
424	7027790	1	Sensor, Oil Pressure	
425	7027792	1	Actuator, Throttle	
425	7027276	2	Spring, Actuator	
426	70000345	4	Plug, Glow (Not Shown)	
427	70005479	1	Pulley, Crankshaft (Not Shown)	
		Ref	**RIGHT ENGINE SUPPORT INSTALLATIONS**	
	1001151253	Ref	**Machines without Generator**	B
	1001151252	Ref	**Machines with Generator**	B
501	0100011	AR	Compound, Locking	
502	0641609	2	Bolt 3/8in-16NC x 1-1/8in	
503	0641820	1	Bolt 1/2in-13NC x 2-1/2in	
503	0641818	1	Bolt 1/4in-13NC x 2-1/2in	
504	0771414	3	Bolt 14mm x 30mm (Grade 10.9)	
505	3200401	1	Mount, Motor	
506	3311605	2	Locknut 3/8in-16NC	
507	3311805	1	Locknut 1/2in-13NC	
508	4740274	1	Washer, Snubbing	
509	4751600	4	Flatwasher 3/8in Regular	
510	4812200	3	Flatwasher M14	
511		Ref	Support, Engine (Right Front)	
511A	1001149703	1	Machines without Generator	
511B	1001150890	1	Machines with Generator	
	1001151295	Ref	**EXHAUST EXTENSION INSTALLATION**	A
610	1320176	1	Clamp, Saddle	
611	1001145996	1	Pipe, Exhaust Extension	

FIGURE 2-9. DEUTZ TD2.9L4 ENGINE INSTALLATION

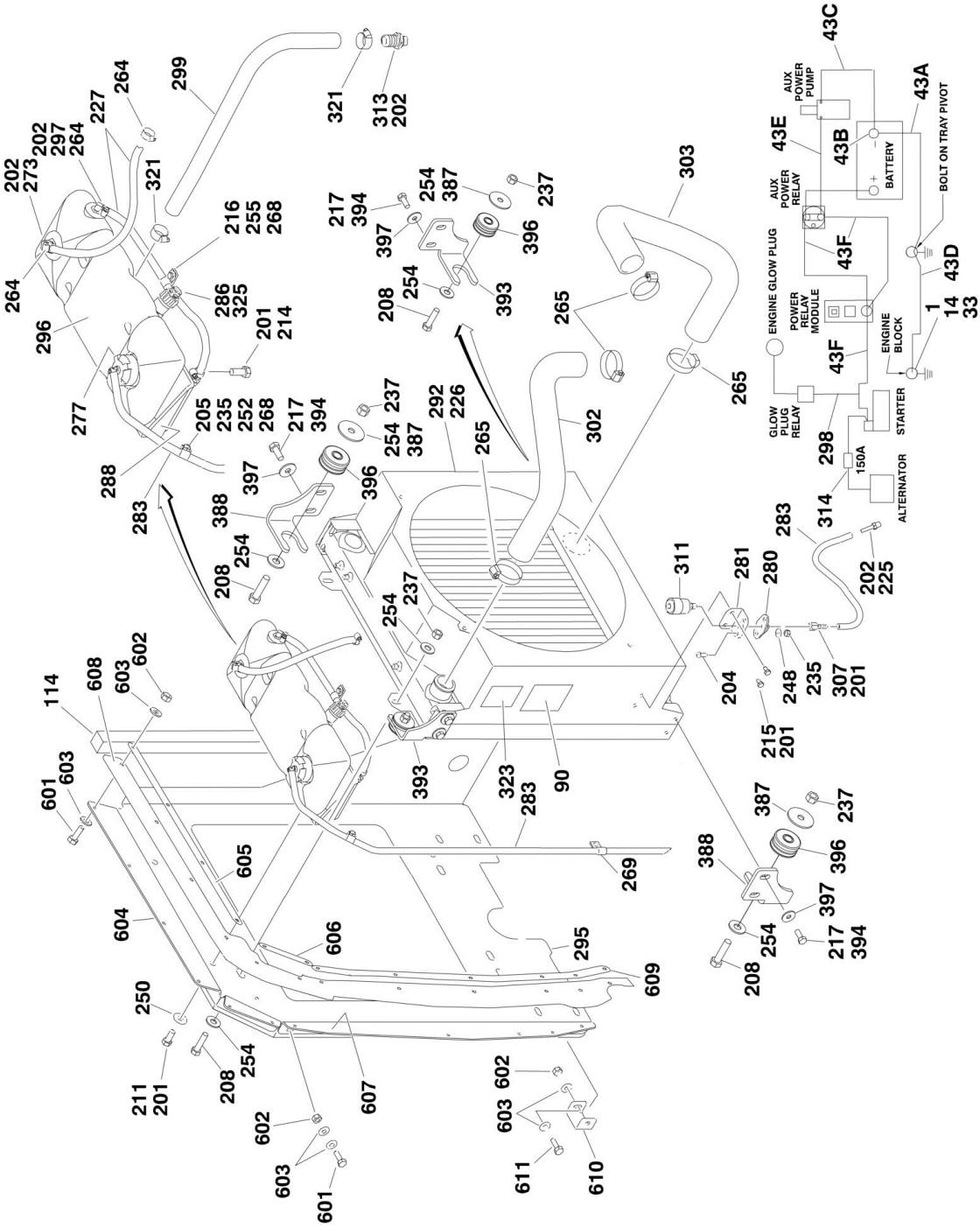

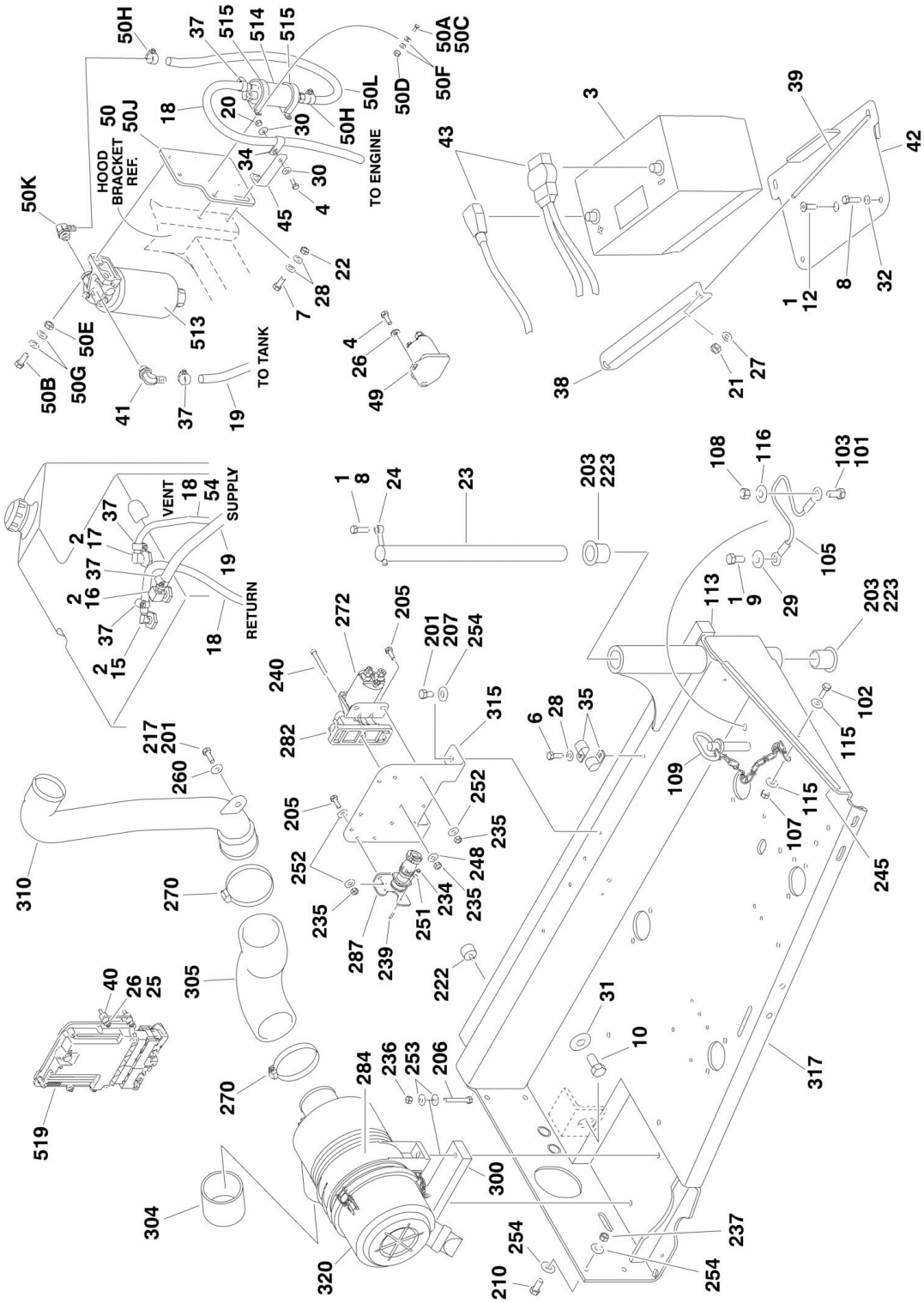
HOOD BRACKET REF.
TO ENGINE
TO TANK
VENT
SUPPLY
RETURN

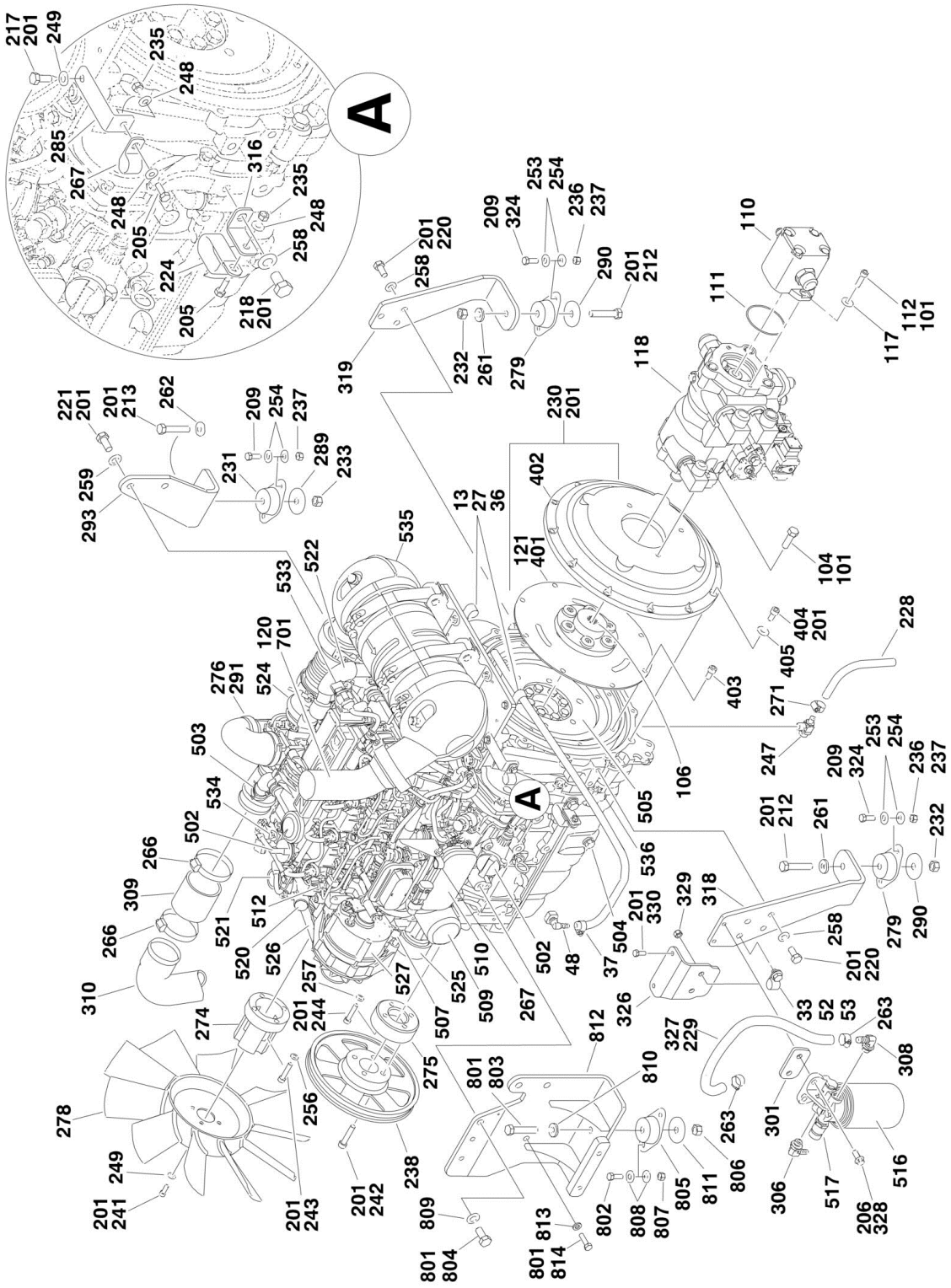
A
A
217
201
249
235
248
285
267
316
235
248
205
248
258
224
218
201
205
258
201
220
319
232
261
279
209
324
253
254
236
237
290
201
212
110
111
112
101
117
118
230
201
402
13
27
36
121
401
104
101
535
522
533
120
701
524
276
291
503
534
502
266
309
266
310
521
512
520
526
257
201
244
274
527
525
509
510
507
275
267
502
48
37
504
201
330
536
505
106
329
318
326
812
801
803
810
327
229
263
806
811
805
807
808
802
813
814
801
809
238
242
201
256
243
201
278
249
241
201
221
201
213
262
209
254
237
289
233
231
293
259
404
201
405
403
271
247
228
209
324
253
254
236
237
201
212
261
232
258
279
290
201
220
33
52
53
263
308
301
306
517
516
206
328
801
804

FIGURE 2-9. DEUTZ TD2.9L4 ENGINE INSTALLATION

ITEM	PART NUMBER	QTY	DESCRIPTION	REV
		Ref	**DEUTZ TD2.9LA ENGINE INSTALLATIONS**	
	1001149807	Ref	**USA Built Machines 2WD Machines without Arctic Package (SN 0300171769 through 0300208280)**	K
	1001188212	Ref	**USA Built Machines 2WD Machines without Arctic Package (SN 0300208281 through 0300227212)**	C
	1001176020	Ref	**USA Built Machines 2WD Machines without Arctic Package (SN 0300227213 through 0300235167)**	C
	1001149813	Ref	**USA Built Machines 4WD Machines without Arctic Package (SN 0300171769 through 0300208280)**	K
	1001188213	Ref	**USA Built Machines 4WD Machines without Arctic Package (SN 0300208281 through 0300227212)**	C
	1001176022	Ref	**USA Built Machines 4WD Machines without Arctic Package (SN 0300227213 through 0300235167)**	C
	1001149815	Ref	**USA Built Machines 4WD Machines with Arctic Package (SN 0300171769 through 0300208280)**	K
	1001188214	Ref	**USA Built Machines 4WD Machines with Arctic Package (SN 0300208281 through 0300227212)**	C
	1001176025	Ref	**USA Built Machines 4WD Machines with Arctic Package (SN 0300227213 through 0300235167)**	D
	1001214850	Ref	**Chinese Built Machines**	A
1	0100011	AR	Compound, Locking	
2	0100020	AR	Sealant, Pipe	
3	0400075	1	Battery	
4	0641406	3	Bolt 1/4in-20NC x 3/4in	
6	0641608	1	Bolt 3/8in-16NC x 1in	
7	0641609	2	Bolt 3/8in-16NC x 1-1/8in	
8	0641610	3	Bolt 3/8in-16NC x 1-1/4in	
9	0641808	1	Bolt 1/2in-13NC x 1in	
10	0642010	1	Bolt 5/8in-11NC x 1-1/4in	
12	0741610	AR	Screw, Flat Head 3/8in-16NC x 1-1/4in	
13	0760806	AR	Bolt M8 x 12mm	
13	0760810	AR	Bolt M8 x 20mm	
14	0771212	1	Bolt M12 x 25mm (Grade 10.9)	
15	2220313	1	Fitting, 90 Barbed	
16	2221119	1	Fitting, Straight Barbed **(SN 0300171769 through 0300184118)**	
16	2180832	1	Fitting, Straight Barbed **(SN 0300184119 through 0300235167)**	
17	2221176	1	Fitting, 90 Barbed **(SN 0300171769 through 0300195438)**	
17	2220313	1	Fitting, 90 Barbed **(SN 0300195439 through 0300227212)**	
17	2221176	1	Fitting, 90 Barbed **(SN 0300227213 through 0300235167)**	
18	1001165035	28 ft/8.5m	Hose	
19	1001154405	7 ft/2.1m	Hose	
20	3311405	AR	Locknut 1/4in-20NC	
21	3311501	AR	Nut 5/16in-18NC	
21	88521205	AR	Locknut 5/16in-18NC	
22	3311605	2	Locknut 3/8in-16NC	
23	3422446	1	Pin, Pivot	
24	3841143	1	Pin, Keeper	
25	3931424	AR	Capscrew 1/4in-20NC x 1-1/2in	
25	0641412	AR	Bolt 1/4in-20NC x 1-1/2in	
26	4711400	AR	Flatwasher 1/4in Thin	
27	4711500	AR	Flatwasher 5/16in Thin	
27	4751500	2	Flatwasher 5/16in Regular	

ITEM	PART NUMBER	QTY	DESCRIPTION	REV
28	4711600	5	Flatwasher 3/8in Thin	
29	4711800	1	Flatwasher 1/2in Thin	
30	4751400	2	Flatwasher 1/4in Regular	
31	4752000	1	Flatwasher 5/8in Regular	
32	4761600	2	Lockwasher 3/8in	
33	4812100	1	Flatwasher M12	
34	8406101	1	Clip	
35	8406102	2	Clip	
36	8406112	2	Clip **(SN 0300171769 through 0300219470)**	
37	8410013	7	Clamp	
38	91401281	1	Hold-down, Battery	
39	1001093382	2	J-Bolt	
40	1001110425	4	Spacer	
41	1001142501	1	Fitting, 90 Barbed	
42	1001144040	1	Plate, Battery	
43		Ref	Battery Cable Kit Options:	
43	1001144440	1	Machines without Arctic Package	D
43	1001143736	1	Machines with Arctic Package	D
43A		Ref	Cable, Battery (Black) (Battery - to Tray Pivot Grd)	
43A	7027063	1	Machines without Arctic Package	
43A	7027084	1	Machines with Arctic Package	
43B	8270147	1	Terminal, Battery (with Boot)	
43C		Ref	Cable, Battery (Black) (Battery - to Aux Pump and Relay Grounds)	
43C	7027064	1	Machines without Arctic Package	
43C	7027085	1	Machines with Arctic Package	
43D		Ref	Cable, Battery (Black) (Engine to Tray Pivot Grd)	
43D	7027065	1	Machines without Arctic Package	
43D	7027086	1	Machines with Arctic Package	
43E		Ref	Cable (Red) (Aux Relay to Aux Pump)	
43E	7027067	1	Machines without Arctic Package	
43E	7027087	1	Machines with Arctic Package	
43F		Ref	Cable (Red) (Battery + to Aux Relay/Power Module/Starter)	
43F	7027066	1	Machines without Arctic Package	
43F	7027088	1	Machines with Arctic Package	
44	1001222666	1	Fuel Pump Harness with Ring Terminals (Not Shown - See ELECTRICAL SECTION for Breakdown) **(SN 0300171769 through 0300234519)**	
44	1001144660	1	Fuel Pump Harness with Push-On Terminals (Not Shown - See ELECTRICAL SECTION for Breakdown) **(SN 0300234520 through 0300235167)**	
44	1001222666	1	Fuel Pump Harness with Ring Terminals (Not Shown - See ELECTRICAL SECTION for Breakdown) **(SN B300000970 through B300002071)**	
44	1001144660	1	Fuel Pump Harness with Push-On Terminals (Not Shown - See ELECTRICAL SECTION for Breakdown) **(SN B300002072 through B300002654)**	
45	1001148149	1	Bracket	
48	1001155823	1	Fitting, 90 Quick Disconnect	
49	3740067	1	Relay	
50	1001162413	1	Fuel Bracket Assembly	C
50A	0100011	AR	Compound, Locking	
50B	0641607	2	Bolt 3/8in-16NC x 7/8in	

ITEM	PART NUMBER	QTY	DESCRIPTION	REV
50C	0721004	4	Screw M10-24NC x 1/2in	
50D	3311001	4	Nut #10-24NC	
50E	3311605	2	Locknut 3/8in-16NC	
50F	4711500	8	Flatwasher #10	
50G	4711600	4	Flatwasher 3/8in Thin	
50H	8405006	2	Clamp	
50J	1001149528	1	Mount, Fuel Pump	
50K	1001142501	1	Fitting, 90 Barbed	
50L	2720615	1.5 ft/ 0.5m	Hose	
51	1701505	1	Decal - Diesel (Not Shown - Located on Front of Fuel Tank)	
		Ref	**Note: Arctic Package Items 77-87 (Used on Arctic Machines Only) Not Shown.**	
52	1320061	1	Clamp **(SN 0300227213 through 0300235167)**	
53	0761008	1	Bolt M10 x 16 **(SN 0300227213 through 0300235167)**	
54	2750532	42 in/1m	Hose (Vent Hose Only) **(SN 0300227213 through 0300235167)**	
77	1060625	1	Cable, Immersion Heater **(SN 0300171769 through 0300206590)**	
78	1060626	1	Plug, 3 Way	
79	1320223	3	Clamp, Muffler	
80	1702941	1	Decal - Battery Heater	
81	1702942	1	Decal - Engine Block Heater	
82	1702943	1	Decal - Hydraulic Tank Heater	
83	1702944	1	Decal - Heater Cord	
84	2580024	1	Heater, Battery	
85	2580050	1	Heater, Hydraulic Tank **(SN 0300171769 through 0300206590)**	
85	1001188972	1	Heater, Hydraulic Tank **(SN 0300206591 through 0300235167)**	
86	3980007	1	Seat, Battery	
87	1001150918	2	Cord, 8ft Extension	
90		Ref	Decal - Warning Explosion/Fire Options:	
90	1704972	1	ANSI Spec	
90	1706098	1	Australian and CE Spec	
90	1706060	1	Chinese Spec	
90	1706064	1	CSA Spec	
		Ref	**ENGINE AND PUMP ASSEMBLIES**	
	1001149812	Ref	**USA Built Machines 2WD Machines without Arctic Package (SN 0300171769 through 0300208280)**	E
	1001188225	Ref	**USA Built Machines 2WD Machines without Arctic Package (SN 0300208281 through 0300227212)**	C
	1001176019	Ref	**USA Built Machines 2WD Machines without Arctic Package (SN 0300227213 through 0300235167)**	C
	1001149814	Ref	**USA Built Machines 4WD Machines without Arctic Package (SN 0300171769 through 0300208280)**	E
	1001188226	Ref	**USA Built Machines 4WD Machines without Arctic Package (SN 0300208281 through 0300227212)**	C
	1001176021	Ref	**USA Built Machines 4WD without Arctic Package (SN 0300227213 through 0300235167)**	C
	1001149816	Ref	**USA Built Machines 4WD Machines with Arctic Package (SN 0300171769 through 0300208280)**	E
	1001188227	Ref	**USA Built Machines 4WD Machines with Arctic Package (SN 0300208281 through 0300227212)**	C
	1001176024	Ref	**USA Built Machines 4WD Machines with Arctic Package (SN 0300227213 through 0300235167)**	C
	1001214850	Ref	**China Built Machines**	A

ITEM	PART NUMBER	QTY	DESCRIPTION	REV
101	0100011	AR	Compound, Locking	
102	0641406	1	Bolt 1/4in-20NC x 3/4in	
103	0641808	1	Bolt 1/2in-13NC x 1in	
104	0641812	2	Bolt 1/2in-13NC x 1-1/2in	
105	1060637	1	Lanyard **(SN 0300171769 through 0300182649)**	
105	1001131542	1	Lanyard **(SN 0300182650 through 0300235167)**	
105	1001131542	1	Lanyard **(SN B300000970 through B300002654)**	
106	3020037	AR	Grease, Pump Coupling	
107	3311405	1	Locknut 1/4in-20NC	
108	3311805	1	Locknut 1/2in-13NC	
109	3422532	1	Pin, Hitch	
110	3600395	1	Gear Pump Assembly with Fittings (See GEAR PUMP ASSEMBLY for Breakdown)	
111	3790152	1	O-Ring	
112	3931620	2	Bolt 3/8in-16NC x 1-1/4in	
113	3960468	1	Seal	
114	3960469	1	Seal	
115	4751400	2	Flatwasher 1/4in Regular	
116	4751800	1	Flatwasher 1/2in Regular	
117	4891600	2	Flatwasher 3/8in Hardened	
118		Ref	Pump Assembly with Fittings Options (See PISTON PUMP ASSEMBLY for Breakdown):	
118	3600394	1	Pump (2WD) **(SN 0300171769 through 0300208280)**	
118	1001186545	1	Pump (2WD) **(SN 0300208281 through 0300235167)**	
118	1001186545	1	Pump (2WD) **(SN B300000970 through B300002654)**	
118	1001117799	1	Pump (4WD) **(SN 0300171769 through 0300208280)**	
118	1001186543	1	Pump (4WD) **(SN 0300208281 through 0300235167)**	
118	1001186543	1	Pump (4WD) **(SN B300000970 through B300002654)**	
120	1001149908	1	Pipe, Exhaust	
121	3020037	AR	Lubricant, Coupling	
		Ref	**ENGINE ASSEMBLIES**	
	1001150969	Ref	**USA Built Machines without Arctic Package (SN 0300171769 through 0300229690)**	N
	1001176018	Ref	**USA Built Machines without Arctic Package (SN 0300229691 through 0300235167)**	L
	1001150971	Ref	**USA Built Machines with Arctic Package (SN 0300171769 through 0300229690)**	P
	1001176023	Ref	**USA Built Machines with Arctic Package (SN 0300229691 through 0300235167)**	L
	1001214044	Ref	**China Built Machines**	D
201	0100011	AR	Compound, Locking	
202	0100020	AR	Sealant	
203	0100062	AR	Compound, Locking	
204	0630407	2	Screw 1/4in-20 x 5/8in	
205	0641406	AR	Bolt 1/4in-20NC x 3/4in	
206	0641518	AR	Bolt 5/16in-18NC x 2-1/4in	
207	0641605	2	Bolt 3/8in-16NC x 5/8in	
208	0641607	4	Bolt 3/8in-16NC x 7/8in	
208	0641612	4	Bolt 3/8in-16NC x 1-1/2	
209	0641608	AR	Bolt 3/8in-16NC x 1in	
210	0641609	6	Bolt 3/8in-16NC x 1-1/8in	
211	0641708	2	Bolt 7/16in-14NC x 1in	
212	0681620	2	Bolt 3/8in-16NC x 2-1/2in (Grade 8)	

ITEM	PART NUMBER	QTY	DESCRIPTION	REV
213	0681820	1	Bolt 1/2in-13NC x 2-1/2in (Grade 8)	
214	0741605	2	Screw, Flathead 3/8in-16NC x 5/8in	
215	0760605	2	Bolt M6 x 10mm	
216	0760606	2	Bolt M6 x 12mm	
217	0760810	AR	Bolt M8 x 20mm	
218	0761210	1	Bolt M12 x 20mm	
220	0771212	6	Bolt M12 x 25mm (Grade 10.9)	
221	0771414	3	Bolt M14 x 30mm (Grade 10.9)	
222	0940070	1	Bumper	
223	0961986	2	Bushing, Flanged	
224	1321716	1	Clamp **(SN 0300171769 through 0300196715)**	
224	1001181899	1	Clamp **(SN 0300196716 through 0300235167)**	
225	2220315	1	Fitting, Straight Barbed	
226		Ref	Coolant Options:	
226	2300004	AR	Without Arctic Package	
226	2300041	AR	With Arctic Package	
227	2720015	40 in/1m	Hose	
228	2720340	12 in /30cm	Hose	
229	2720615	20 in /51cm	Hose (Use p/n 1001154405) **(SN 0300171769 through 0300219470)**	
230	2902065	1	Pump Coupling Kit (See Items 401-405 for Breakdown)	
231	3200401	1	Mount, Motor	
232	3271601	2	Nut 3/8in-16NC (Grade 8)	
233	3271801	1	Nut 1/2in-13NC (Grade 8)	
234	3310401	3	Nut #4	
235	3311405	AR	Locknut 1/4in-20NC	
236	3311505	AR	Locknut 5/16in-18NC	
237	3311605	14	Locknut 3/8in-16NC	
238	3580320	1	Pulley	
239	3910408	3	Screw #4-40NC x 1/2in	
240	3931432	1	Capscrew 1/4in-20NC x 2in	
241	3931512	4	Capscrew 5/16in-18NC x 3/4in	
242	3931628	4	Capscrew 3/8in-16NC x 1-3/4in	
243	4031914	4	Bolt M8 x 50mm	
244	4032014	4	Bolt M10 x 50mm	
245	4060805	15 in /38cm	Flex-Trim	
246	4240099	AR	Tie-Strap (Not Shown)	
247	4640751	1	Valve, Oil Drain	
248	4711400	AR	Flatwasher 1/4in Thin	
249	4711500	AR	Flatwasher 5/16in Thin	
250	4751700	2	Flatwasher 7/16in Regular	
251	4750400	3	Flatwasher #4 Regular	
252	4751400	10	Flatwasher 1/4in Regular	
253	4751500	AR	Flatwasher 5/16in Regular	
254	4751600	AR	Flatwasher 3/8in Regular	
255	4811702	3	Flatwasher M6	
256	4811900	4	Flatwasher M8	
257	4812000	AR	Flatwasher M10	
258	4812100	7	Flatwasher M12	
259	4812200	3	Flatwasher M14	

ITEM	PART NUMBER	QTY	DESCRIPTION	REV
260	4891500	1	Flatwasher 5/16in Hardened	
261	4891600	2	Flatwasher 3/8in Hardened	
262	4891800	1	Flatwasher 1/2in Hardened	
263	8405006	2	Clamp (USA Built Machines) **(SN 0300171769 through 0300219470)**	
264	8405009	4	Clamp	
265	8405104	4	Clamp	
266	8405204	2	Clamp	
267	8406102	AR	Clip	
268	8406109	2	Clip	
269	8406110	1	Clip	
270	8410011	2	Clamp	
271	8410013	2	Clamp	
272	1001117308	1	Relay	
273	1001134488	1	Fitting, 90 Barbed	
274	1001135138	1	Adapter	
275	1001135679	1	Adapter	
276		Ref	Oil, Motor Options:	
276	1001136079	AR	Without Arctic Package	
276	1001136172	AR	With Arctic Package	
277	1001136834	1	Cap, Tank	
278	1001137276	1	Fan	
279	1001138170	2	Mount, Motor	
280	1001138173	1	Support	
281	1001138175	1	Bracket	
282	1001138228	1	Relay, Power Module	
282	70023593	1	Fuse 30Amp (Battery Output)	
282	70023592	1	Fuse 20Amp (Switched Output)	
283	1001138248	62 in/1.6m	Tube	
284	1001138557	1	Clamp	
285	1001138717	1	Bracket **(SN 0300171769 through 0300219470)**	
286	1001138827	1	Sensor, Coolant Level	
287	1001139240	1	Bracket	
288	1001139303	1	Bracket (USA Built Machines) **(SN 0300171769 through 0300229690)**	
288	1001176419	1	Bracket (USA Built Machines) **(SN 0300229691 through 0300235167)**	
288	1001176419	1	Bracket (China Built Machines)	
289	1001139409	1	Washer, Special	
290	1001139429	2	Washer, Special	
291	1001139813	1	Engine, Deutz TD2.9L4 (USA Built Machines) (See Items 501-535 for Serviced Components)	
291	1001214039	1	Engine, Deutz TD2.9L4 (China Built Machines) (See Items 501-535 for Serviced Components)	
292	1001155384	1	Radiator (RCP) (USA Built Machines) **(SN 0300171769 through 0300229690)**	
292	1001167042	1	Radiator (Modine) (USA Built Machines) **(SN 0300229691 through 0300235167)**	
292	1001167042	1	Radiator (Modine) (China Built Machines)	
293	1001140454	1	Mount, Front Engine	
295	1001140487	1	Plate, Radiator Mounting (RCP Radiator) (Use p/n 1001162593) (USA Built Machines) **(SN 0300171769 through 0300229690)**	
295	1001177774	1	Plate, Radiator Mounting (Modine Radiator) (USA Built	

ITEM	PART NUMBER	QTY	DESCRIPTION	REV
			Machines) **(SN 0300229691 through 0300235167)**	
295	1001177774	1	Plate, Radiator Mounting (Modine Radiator) (China Built Machines)	
296	1001140535	NLA	Tank (Use p/n 1001230635 - Includes Items 273, 286 & 297)	
297	1001140564	1	Fitting, 90 Barbed	
298	1001141304	1	Harness, Glow Plug (See ELECTRICAL SECTION for Breakdown)	
299	1001141370	1	Hose	
300	1001141419	1	Shim	
301	1001141546	1	Shim (Not Shown) (USA Built Machines) **(SN 0300171769 through 0300219470)**	
302	1001141583	1	Hose, Radiator - Upper (RCP Radiator) (USA Built Machines) **(SN 0300171769 through 0300229690)**	
302	1001177844	1	Hose, Radiator - Upper (Modine Radiator) (USA Built Machines) **(SN 0300229691 through 0300235167)**	
302	1001177844	1	Hose, Radiator - Upper (Modine Radiator) (China Built Machines)	
303	1001141584	1	Hose, Radiator - Lower (RCP Radiator) (USA Built Machines) **(SN 0300171769 through 0300229690)**	
303	1001177845	1	Hose, Radiator - Lower (Modine Radiator) (USA Built Machines) **(SN 0300229691 through 0300235167)**	
303	1001177845	1	Hose, Radiator - Lower (Modine Radiator) (China Built Machines)	
304	1001141585	1	Hose, Inlet	
305	1001141586	1	Elbow	
306	1001152489	1	Fitting, 90 Barbed (USA Built Machines)	
306	1001152489	1	Fitting, 90 Barbed (China Built Machines)	
307	1001141995	1	Fitting, Straight Barbed	
308	1001142501	1	Fitting, 90 Barbed (USA Built Machines) **(SN 0300171769 through 0300219470)**	
309	1001142623	1	Hose	
310	1001142733	1	Pipe (USA Built Machines) **(SN 0300171769 through 0300187582)**	
310	1001165842	1	Pipe (USA Built Machines) **(SN 0300187583 through 0300235167)**	
310	1001165842	1	Pipe (China Built Machines)	
311	1001143390	1	Indicator, Service	
312	1001143726	1	Harness, Engine (Not Shown - See ELECTRICAL SECTION for Breakdown)	
313	1001143797	1	Fitting, Straight Barbed	
314	1001143907	1	Cable, Alternator Power (See ELECTRICAL SECTION for Breakdown)	
315	1001145154	1	Plate, Relay Mounting	
316	1001148641	1	Bracket **(SN 0300171769 through 0300196715)**	
317	1001150974	1	Tray	
318	1001151318	1	Mount, Rear Engine	
319	1001151319	1	Mount, Rear Engine	
320	1001138489	1	Air Cleaner Assembly Filter Element	
320	91403102	1	Element, Filter (Not Shown)	
321	8405007	2	Clamp	
323	1703162	1	Decal - Caution Fan	
324	0641508	4	Bolt 5/16-18NC x 1in	
325	1001182997	NLA	Adhesive (Use Item 202)	
326	1001178876	1	Mount **(SN 0300219471 through 0300235167)**	
327	1001177359	1	Hose **(SN 0300219471 through 0300235167)**	
328	0761015	AR	Bolt M10 x 35 **(SN 0300219471 through 0300235167)**	

ITEM	PART NUMBER	QTY	DESCRIPTION	REV
329	3291005	AR	Nut M10 **(SN 0300219471 through 0300235167)**	
330	5250810	AR	Bolt M8 x 20 **(SN 0300219471 through 0300235167)**	
		Ref	**Note: Arctic Package Item 351 (Used on Arctic Machines Only) Not Shown.**	
351	1001140312	1	Heater, Engine Block	
351	1001181895	AR	Adhesive	
387	1001169138	4	Washer (USA Built Machines) **(SN 0300229691 through 0300235167)**	
387	1001169138	4	Washer (China Built Machines)	
388	1001204325	2	Bracket (USA Built Machines) (Used with Modine Radiator) **(SN 0300229691 through 0300235167)**	
388	1001204325	2	Bracket (China Built Machines) (Used with Modine Radiator)	
393	1001178223	2	Bracket (USA Built Machines) (Used with Modine Radiator) **(SN 0300229691 through 0300235167)**	
393	1001178223	2	Bracket (China Built Machines) (Used with Modine Radiator)	
394	1001180620	AR	Adhesive	
396	1001169054	4	Pad, Isolator (USA Built Machines) **(SN 0300229691 through 0300235167)**	
396	1001169054	4	Pad, Isolator (China Built Machines)	
397	4811902	AR	Washer M8	
	2902065	Ref	**KIT PUMP COUPLING AND MOUNTING PLATE**	K
401	70000793	1	Coupling	
402	See Note	NSS	Plate, Pump Adapter (Note: Use p/n 2902065)	
403	See Note	NSS	Capscrew M10 x 20 (Grade 10.9) (Note: Not Available - Purchase Locally)	
404	See Note	NSS	Bolt M10 x 30 (Grade 10.9) (Note: Not Available - Purchase Locally)	
405	See Note	NSS	Flatwasher M10 (Note: Not Available - Purchase Locally)	
	1001139813	Ref	**ENGINE COMPONENTS (USA BUILT MACHINES)**	I
	1001214039	Ref	**ENGINE COMPONENTS (CHINA BUILT MACHINES)**	A
501	70004274	1	Dipstick (Not Shown - Located On Side Left Front) (1001139813 Engines)	
501	70024904	1	Dipstick (Not Shown - Located On Side Left Front) (1001214039 Engines)	
501	70024905	1	Seal	
502	7020465	2	Cap, Oil Fill	
503	70025111	2	Clamp	
503	70005920	1	Hose, Breather	
504	70025088	1	Plug (1001139813 Engines)	
504	70005941	2	Plug (1001214039 Engines)	
504	7020404	1	Seal (1001139813 Engines)	
504	70005942	1	Seal (1001214039 Engines)	
505	70001870	1	Flywheel with Ring Gear	
505	7024579	1	Gear, Ring	
506		Ref	Gasket and Seal Options (Not Shown):	
506	70024906	1	Gasket, Head	
506	70025206	1	Gasket, Small Valve Cover (1001139813 Engines)	
506	70025205	1	Gasket, Small Valve Cover (1001214039 Engines)	
506	70025207	1	Gasket, Large Valve Cover (1001139813 Engine)	
506	70005171	1	Gasket, Large Valve Cover (1001214039 Engine)	
506	7002508	1	Gasket, Valve Cover to Air Charge Elbow	
506	70002718	1	Seal, Rear Main	
506	70004280	1	Seal, Front Main	

ITEM	PART NUMBER	QTY	DESCRIPTION	REV
506	70024907	1	Gasket, Front Cover (1001139813 Engines)	
506	See Note	1	Gasket, Front Cover (1001214039 Engines)	
506	70025164	1	Gasket, Exhaust Manifold to Head	
506	70024912	1	Gasket, Exhaust Manifold to Turbocharger	
506	70005177	1	Gasket, Air Charge Pipe to Head (1001214309 Engines)	
506	70021895	2	Gasket, Exhaust Bend (1001214039 Engines)	
506	70004279	1	Gasket Kit	
507	70025091	1	Plug	
507	70025082	1	Seal	
507	70025176	1	Spring	
507	70025076	1	Valve, Pressure Control	
508	70025202	1	Pump, Oil Lube (Not Shown - Located Front Left Side)	
508	70005172	1	Pump, Oil Lube (Not Shown - Located Front Left Side) (1001214039 Engines)	
508	70025135	1	O-Ring (1001139813 Engines)	
508	See Note	1	O-Ring (1001214039 Engines)	
508	70025136	1	Seal (1001139813 Engines)	
508	70005173	1	Gasket (1001214039 Engines)	
509	7016331	1	Filter, Oil	
510	70004275	1	Cooler, Oil (1001139813 Engines)	
510	70024494	1	Cooler, Oil (1001214039 Engines)	
510	70024925	1	Gasket	
511	70024924	1	Pump, High Pressure (Not Shown - Located Front Left Side)	
511	70025152	1	O-Ring (Between Pump and Spacer)	
511	70024488	1	Spacer	
511	70024517	1	O-Ring (Between Spacer and Engine Block)	
512	70025181	4	Injector, Fuel	
512	70025140	4	Washer, Sealing	
512	70025146	4	Clamp (Top of Injector)	
512	70025416	4	O-Seal	
512	70025154	4	Shoe, Clamping	
512	70000345	4	Plug, Glow	
512	70025231	1	Harness, Glow Plug (Not Shown)	
513	70024961	1	Filter with Head	
513	70025153	NLA	Filter, Fuel (Use p/n 1001225430)	
513	70024513	1	Cable, Sensor	
513	70025239	1	Seal	
514	70024486	1	Pump, Fuel (1001139813 Engines)	
514	1001226098	1	Pump, Fuel (1001214039 Engines)	
515	70025144	2	Clamp	
516	70025160	1	Filter with Head	
516	70025161	NLA	Filter, Fuel (Use p/n 1001225431)	
517	70024504	1	Sensor, Pressure	
517	70024920	1	Seal	
518	70025151	1	Rail, Fuel (Not Shown)	
518	70025235	1	Repair Kit	
519	70025210	1	ECU (Engine Control Unit)	
520	70024910	1	Pump, Water	
520	70025200	1	Seal	
520	70025084	2	Plug	
520	7020492	2	Seal	
521	70024473	1	Thermostat (1001139813 Engines)	

ITEM	PART NUMBER	QTY	DESCRIPTION	REV
521	70005929	1	Thermostat (1001214039 Engines)	
521	70025143	1	O-Seal (1001139813 Engines)	
521	70005184	1	O-Seal (1001214039 Engines)	
521	70005931	1	Gasket (Under Thermostat) (1001214039 Engines)	
521	70025142	1	Cover, Thermostat	
522	70025178	1	Pipe	
522	70025156	1	Valve, Shuttle (1001139813 Engines)	
522	70025768	1	Valve, Shuttle (1001214039 Engines)	
522	70025179	2	Gasket	
522	70025180	1	Gasket	
523	70025203	1	Module, EGR (Not Shown - Located on Left Side)	
524	70004276	1	Turbocharger	
525	70005527	1	Clamp (Turbocharger to Compensator) (1001214038 Engines)	
525	70004504	1	Compensator (1001214039 Engines)	
525	70025477	1	Tensioner, Belt	
526	70004277	1	Belt, Drive	
527	70024914	1	Alternator	
527	70025149	1	Regulator, Voltage	
528	70024915	1	Starter (Not Shown - Located on Left Side)	
528	70005647	1	Solenoid, Start	
528	70005648	1	Relay, Start	
529	70025077	1	Harness, Engine (Not Shown)	
530	70024503	2	Sensor, Speed (1001139813 Engines) (Not Shown - Located Left Side Front and Flywheel Housing)	
530	70026210	2	Sensor, Speed (1001214039 Engines) (Not Shown - Located Left Side Front and Flywheel Housing)	
530	70024917	2	Seal	
531	70024918	1	Sender, Temperature (Not Shown - Located Top Front)	
532	70024504	1	Sensor, Pressure (Not Shown - Located Left Side Front)	
532	70024920	1	Seal	
533	70024507	1	Sensor, Pressure	
533	70025120	1	Seal	
534	70024922	1	Sender, Temperature	
534	70025212	1	Seal	
535	70025799	1	Muffler (DOC) and Inlet (1001139813 Engines)	
535	70005937	1	Muffler (DOC) and Inlet (1001214039 Engines)	
535	70024515	1	Clamp (Outlet to Muffler) (1001139813 Engines)	
535	70025877	2	Clamp	
535	70024512	1	Clamp (1001139813 Engnies)	
535	70025245	1	Clamp, Mounting (1001214039 Engines)	
535	70025801	1	Gasket (Between Muffler & Outlet) (1001139813 Engines)	
535	70004278	1	Outlet, Muffler (1001139813 Engines)	
535	70025246	1	Outlet, Muffler (1001214039 Engines)	
536	70025660	1	Plug	
536	70104570	1	Seal	
536	70124538	1	Spring	
536	70124530	1	Valve, Pressure Relief	
		Ref	**BAFFLES INSTALLATION**	
	1001143484	Ref	**ABS Hoods (USA Built Machines)**	C
	1001143483	Ref	**Steel Hoods (USA Built Machines)**	B
	1001214850	Ref	**Steel Hoods (China Built Machines)**	A
601	0641406	AR	Bolt 1/4in-20NC x 3/4in	

ITEM	PART NUMBER	QTY	DESCRIPTION	REV
602	3311405	19	Locknut 1/4in-20NC	
603	4711400	38	Flatwasher 1/4in Thin	
604	1001141711	1	Bracket **(SN 0300171769 through 0300199612)**	
604	1001174745	1	Bracket **(SN 0300199613 through 0300235167)**	
604	1001174745	1	Bracket **(SN B300000970 through B300002654)**	
605	1001142031	1	Bracket	
606	1001142032	1	Bracket	
607	1001143449	1	Bracket	
608		Ref	Seal Options:	
608	1001143575	1	Seal (ABS Hoods) (USA Built Machines) **(SN 0300171769 through 0300199612)**	
608	1001195967	1	Seal (ABS Hoods) (USA Built Machines) **(SN 0300199613 through 0300235167)**	
608	1001143472	1	Seal (Steel Hoods) (USA Built Machines) **(SN 0300171769 through 0300199612)**	
608	1001174746	1	Seal (Steel Hoods) (USA Built Machines) **(SN 0300199613 through 0300235167)**	
608	1001174746	1	Seal (Steel Hoods) (China Built Machines)	
609	1001143525	1	Bracket	
610	1001143860	1	Bracket, Bumper (ABS Hoods Only)	
611	0641407	1	Bolt 1/4in-20NC x 7/8in	
	1001145750	Ref	**SPARK ARRESTER INSTALLATION (OPTIONAL)**	A
701	1001145751	1	Arrester, Spark	
		Ref	**RIGHT ENGINE SUPPORT INSTALLATIONS**	
	1001177043	Ref	**Machines without Generator (USA Built Machines)**	A
	1001177399	Ref	**Machines with Generator (USA Built Machines)**	B
	1001214850	Ref	**Machines without Generator (China Built Machines)**	A
801	0100011	AR	Compound, Locking	
802	0641608	2	Bolt 3/8in-16NC x 1	
803	0681820	1	Bolt 1/2-13NC x 2-1/2 (Grade 8)	
803	0681822	1	Bolt 1/2-13NC x 2-3/4 (Grade 8)	
804	0771414	2	Bolt M14 x 30mm (Grade 10.9)	
804	0771415	2	Bolt M14 x 35mm (Grade 10.9)	
805	3200401	1	Mount, Motor	
806	3271801	1	Locknut 1/2in-13NC (Grade 8)	
807	3311605	2	Locknut 3/8in-16NC	
808	4751600	4	Flatwasher 3/8in Regular	
809	4812200	2	Flatwasher M14	
810	4891800	1	Flatwasher 1/2in Hardened	
811	1001139409	1	Washer, Snubbing	
812		Ref	Support, Engine (Right Front)	
812	1001140466	1	Machines without Generator (USA Built Machines) **(SN 0300171769 through 0300208346)**	
812	1001177038	1	Machines without Generator (Not Shown) (USA Built Machines) **(SN 0300208347 through 0300235167)**	
812	1001177038	1	Machines without Generator (China Built Machines)	
812	1001140466	1	Machines with Generator (USA Built Machines) **(SN 0300171769 through 0300227212)**	
812	1001202368	1	Machines with Generator (USA Built Machines) **(SN 0300227213 through 0300235167)**	
812	1001140466	1	Machines with Generator (China Built Machines)	
813	5240800	AR	Washer M8	
814	0700814	AR	Bolt M8 x 30	

FIGURE 2-10. GM ENGINE INSTALLATION

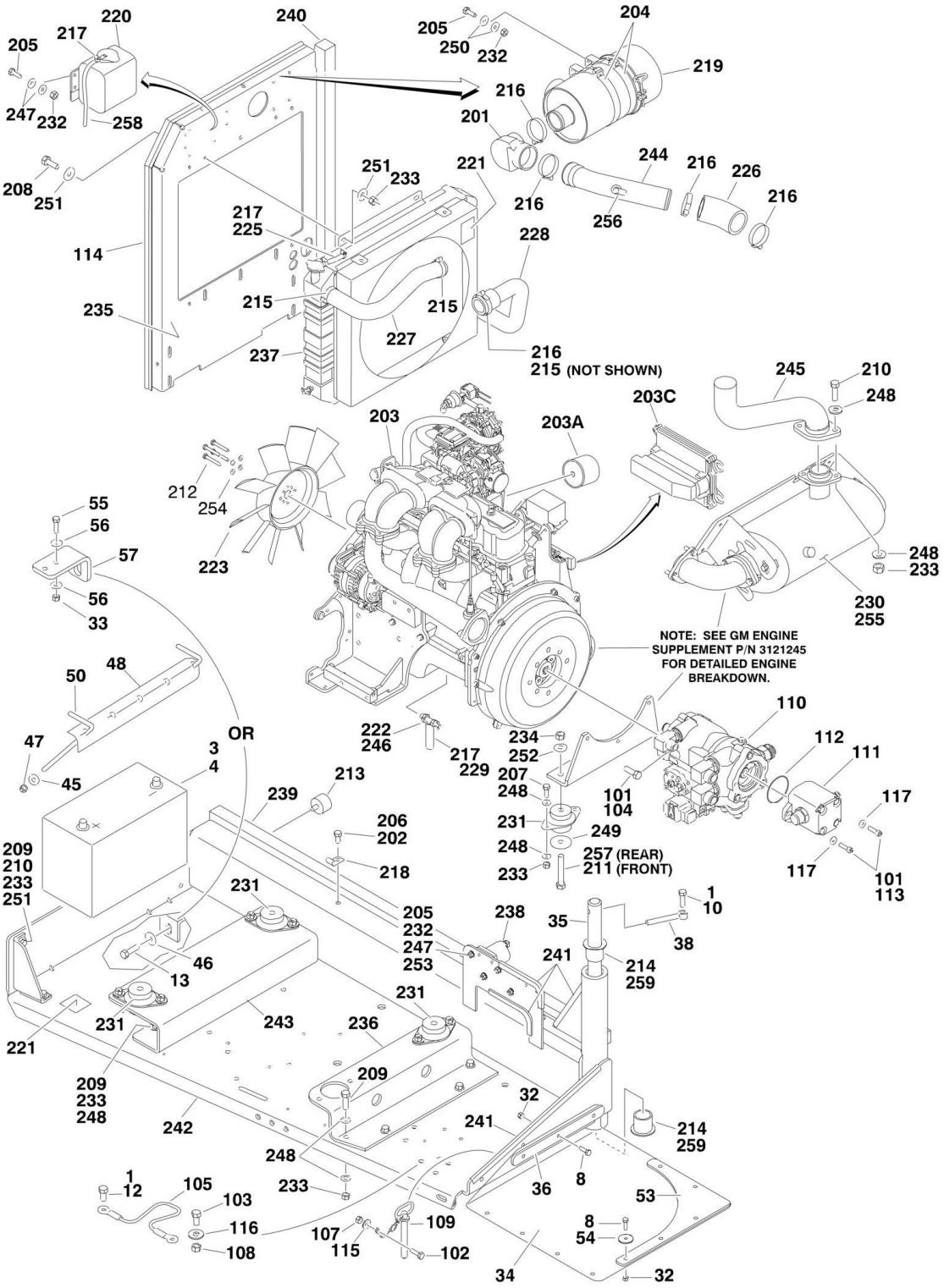

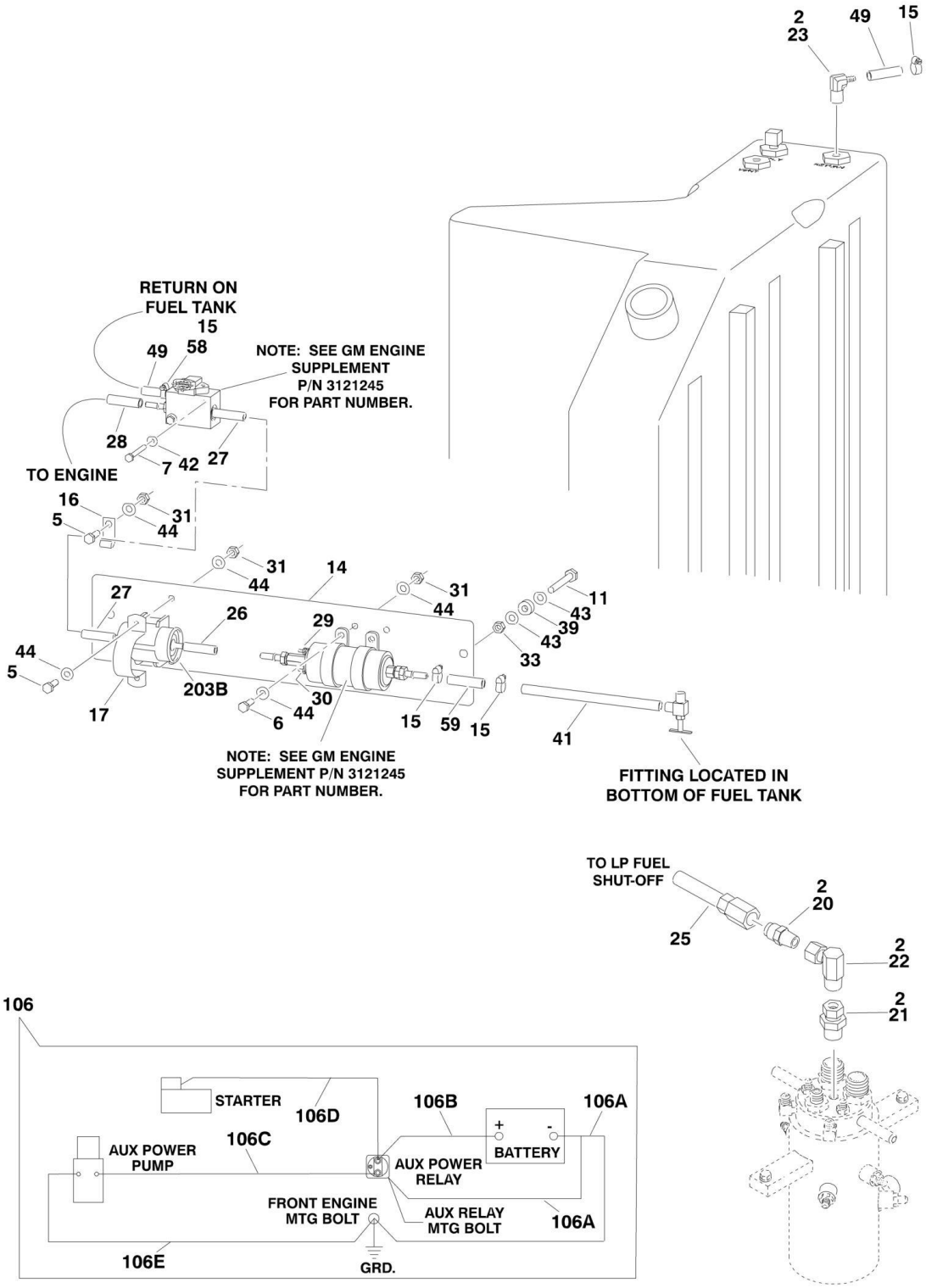
2
23
49
15
RETURN ON
FUEL TANK
15
49
58
NOTE: SEE GM ENGINE
SUPPLEMENT
P/N 3121245
FOR PART NUMBER.
28
7
42
27
TO ENGINE
16
5
31
44
31
44
14
31
44
11
43
39
43
33
27
26
29
44
5
203B
30
17
6
44
15
59
15
41
NOTE: SEE GM ENGINE
SUPPLEMENT P/N 3121245
FOR PART NUMBER.
FITTING LOCATED IN
BOTTOM OF FUEL TANK
TO LP FUEL
SHUT-OFF
2
20
25
2
22
2
21
106
STARTER
106D
106B
106A
+
-
BATTERY
AUX POWER
PUMP
106C
AUX POWER
RELAY
FRONT ENGINE
MTG BOLT
AUX RELAY
MTG BOLT
106A
106E
GRD.

FIGURE 2-10. GM ENGINE INSTALLATION

ITEM	PART NUMBER	QTY	DESCRIPTION	REV
		Ref	**Note: Only Available on USA Built Machines.**	
		Ref	**GM ENGINE INSTALLATIONS**	
	1001114644	Ref	**2WD (SN 0300171769 through 0300208280)**	I
	1001188208	Ref	**2WD (SN 0300208281 through 0300222348)**	B
	1001216723	Ref	**2WD (SN 0300222349 through 0300235167)**	B
	1001114646	Ref	**4WD (SN 0300171769 through 0300208280)**	I
	1001188159	Ref	**4WD (SN 0300208281 through 0300222348)**	B
	1001216722	Ref	**4WD (SN 0300222349 through 0300235167)**	B
1	0100011	AR	Compound, Locking	
2	0100020	AR	Sealant, Pipe	
3	0100048	AR	Grease, Dielectric	
4	0400075	1	Battery (Wet)	
5	0641406	3	Bolt 1/4in-20NC x 3/4in	
6	0641408	2	Bolt 1/4in-20NC x 1in	
7	0641418	2	Bolt 1/4in-20NC x 2 1/4in	
8	0641508	6	Bolt 5/16in-18NC x 1in **(SN 0300171769 through 0300174311)**	
9	3900272	3	Capscrew 5/16in-18NC x 1-3/4in **(SN 0300171769 through 0300174311)**	
10	0641608	1	Bolt 3/8in-16NC x 1in	
11	0641612	2	Bolt 3/8in-16NC x 1-1/2in	
12	0641808	1	Bolt 1/2in-13NC x 1in	
13	0642010	1	Bolt 5/8in-11NC x 1-1/4in	
14	0903510	1	Bracket, Fuel Pump Filter	
15	1001174486	AR	Clamp, Fuel Line	
16	1320222	1	Clamp	
17	1320323	1	Clamp	
18	1701542	1	Decal, Gas (Not Shown)	
19	1701543	1	Decal, LPG (Not Shown)	
20	2180418	1	Fitting, Straight	
21	2220005	1	Fitting, Straight	
22	2220064	1	Fitting, Adapter	
23	2221176	1	Fitting, 90	
24	2300004	2.7 gal /10L	Coolant (Not Shown)	
25	2720392	1	Hose, LP	
26	2720566	1	Hose, High Pressure Fuel Line (6in/15cm Length) **(SN 0300171769 through 0300183233)**	
26	1001156823	1	Hose, High Pressure Fuel Line (6in/15cm Length) **(SN 0300183234 through 0300235167)**	
27	2720567	1	Hose, High Pressure Fuel Line (4ft/1.2cm Length) **(SN 0300171769 through 0300183233)**	
27	1001156824	1	Hose, High Pressure Fuel Line (4ft/1.2m Length) **(SN 0300183234 through 0300235167)**	
28	2720580	1	Hose **(SN 0300171769 through 0300183233)**	
28	1001156825	1	Hose **(SN 0300183234 through 0300235167)**	
29	3290405	1	Locknut M4 x 0.7	
30	3290505	1	Locknut M5 x 0.8	
31	3311405	5	Locknut 1/4in-20NC	
32	3311505	8	Locknut 5/16in-18NC **(SN 0300171769 through 0300174311)**	
33	3311605	AR	Locknut 3/8in-16NC	
34	1001121891	1	Panel, Rubber **(SN 0300171769 through 0300174311)**	

ITEM	PART NUMBER	QTY	DESCRIPTION	REV
35	3422446	1	Pin	
36	3539957	1	Plate, Hold Down **(SN 0300171769 through 0300174311)**	
37	3790012	1	O-Ring (Not Shown - Located in Console Box)	
38	3841143	1	Keeper	
39	4071122	2	Shim	
40	4360336	1	Switch, Toggle (Not Shown - Located in Console Box)	
41	4569385	1	Tube, Fuel Line	
42	4711400	8	Flatwasher 1/4in Thin	
43	4711600	4	Flatwasher 3/8in Thin	
44	4751400	9	Flatwasher 1/4in Regular	
45	4751500	2	Flatwasher 5/16in Regular	
46	4752000	1	Flatwasher 5/8in Regular	
47	88521205	2	Locknut with Nylon Lock 5/16in-18NC	
48	91401281	1	Hold-down, Battery	
49	1001091587	7 ft/2.1m	Hose, Fuel Line **(SN 0300171769 through 0300183233)**	
49	1001156819	7 ft/2.1m	Hose, Fuel Line **(SN 0300183234 through 0300196715)**	
49	1001177228	1	Hose, Fuel Line **(SN 0300196716 through 0300235167)**	
50	1001093382	2	Bolt, Battery Hold-down	
53	1001123000	1	Bracket, Baffle Support **(SN 0300171769 through 0300174311)**	
54	4740508	3	Flatwasher, Special **(SN 0300171769 through 0300174310)**	
55	0641610	2	Bolt 3/8in-16NC x 1-1/4in **(SN 0300174311 through 0300235167)**	
56	4751600	4	Flatwasher 3/8in (Wide) **(SN 0300174311 through 0300235167)**	
57	1001153359	1	Bracket, Engine Tray Mount **(SN 0300174311 through 0300235167)**	
58	1001174093	2	Fitting, Quick Disconnect **(SN 0300171769 through 0300196715)**	
59	1001091587	AR	Hose, Fuel Line **(SN 0300171769 through 0300183233)**	
59	1001156819	AR	Hose, Fuel Line **(SN 0300183234 through 0300196715)**	
59	1001177157	1	Hose, Fuel Line **(SN 0300196716 through 0300235167)**	
		Ref	**GM ENGINE AND PUMP SUB-ASSEMBLY**	
	1001114643	Ref	**2WD (SN 0300171769 through 0300208280)**	H
	1001188221	Ref	**2WD (SN 0300208281 through 0300222348)**	B
	1001216718	Ref	**2WD (SN 0300222349 through 0300235167)**	B
	1001114645	Ref	**4WD (SN 0300171769 through 0300208280)**	H
	1001188161	Ref	**4WD (SN 0300208281 through 0300222348)**	B
	1001216717	Ref	**4WD (SN 0300222349 through 0300235167)**	B
101	0100011	AR	Compound, Locking	
102	0641407	1	Bolt 1/4in-20NC x 7/8in	
103	0641808	1	Bolt 1/2in-13NC x 1in	
104	0641812	2	Bolt 1/2in-13NC x 1-1/2in	
105	1060637	1	Cable, Lanyard	
106	2902531	1	Battery Cable Kit	B
106A	7016822	1	Cable (Battery - to Ground)	
106B	7027015	1	Cable (Battery + to Auxiliary Relay)	
106C	7027016	1	Cable (Relay to Auxiliary Pump)	
106D	7027017	1	Cable (Relay to Starter)	
106E	7027003	1	Cable (Auxiliary Pump to Ground)	
107	3311405	1	Locknut 1/4in-20NC	
108	3311805	1	Locknut 1/2in-13NC	
109	3422532	1	Pin, Hitch	
110		Ref	Piston Pump Assembly with Fittings Options (See PISTON	

ITEM	PART NUMBER	QTY	DESCRIPTION	REV
			PUMP ASSEMBLY for Breakdown):	
110	3600394	1	Pump (2WD) **(SN 0300171769 through 0300208280)**	
110	1001186545	1	Pump (2WD) **(SN 0300208281 through 0300235167)**	
110	1001117799	1	Pump (4WD) **(SN 0300171769 through 0300208280)**	
110	1001186543	1	Pump (4WD) **(SN 0300208281 through 0300235167)**	
111	3600395	1	Gear Pump Assembly with Fittings (See GEAR PUMP ASSEMBLY for Breakdown)	
112	3790012	1	O-Ring	
113	3931620	2	Bolt 3/8in-16NC x 1-1/4in	
114	3960389	5 ft/1.5m	Seal	
115	4751400	1	Flatwasher 1/4in Regular	
116	4751800	1	Flatwasher 1/2in Regular	
117	4891600	2	Flatwasher 3/8in Hardened	
119	1001115930	AR	Oil, Engine (Not Shown)	
		Ref	**GM ENGINE ASSEMBLY**	
	1001114632	Ref	**GM Engine Assembly (SN 0300171769 through 0300222348)**	F
	1001216714	Ref	**GM Engine Assembly (SN 0300222349 through 0300235167)**	B
201	0080201	2	Fitting, 90	
202	0100011	AR	Compound, Locking	
203	1001114595	1	Engine, GM 3.0L (See GM Engine Supplement P/N 3121245 for Breakdown of Additional Components) **(SN 0300171769 through 0300222348)**	
203	1001214862	1	Engine, GM 3.0L without Mounting Brackets (See GM Engine Supplement P/N 3121245 for Breakdown of Additional Components) **(SN 0300222349 through 0300235167)**	
203	1001216713	1	Engine, GM 3.0L with Mounting Brackets (See GM Engine Supplement P/N 3121245 for Breakdown of Additional Components)	
203	70000164	4	Plug, Spark (Not Shown)	
203A	7027965	1	Filter, Oil	
203B	7027972	1	Filter, Fuel	
203C	70002895	1	Module, Control (ECU)	
204	0340041	2	Band, Mounting	
205	0641406	10	Bolt 1/4in-20NC x 3/4in	
206	0641606	4	Bolt 3/8in-16NC x 3/4in	
207	0641608	9	Bolt 3/8in-16NC x 1in	
208	0641609	4	Bolt 3/8in-16NC x 1-1/8in	
209	0641610	10	Bolt 3/8in-16NC x 1-1/4in	
210	0641612	4	Bolt 3/8in-16NC x 1-1/2in	
211	0641828	2	Bolt 1/2in-13NC x 3-1/2in	
212	0700810	4	Bolt M8 x 20mm	
213	0940070	1	Bumper	
214	0961986	2	Bearing, Flanged	
215	1320012	3	Clamp	
216	1320016	5	Clamp	
217	1320022	4	Clamp	
218	1320223	3	Clamp	
219	1340060	1	Air Cleaner Assembly	
219	7012664	1	Element, Air Cleaner	
220	1580011	1	Container, Coolant Overflow	
221	1703162	2	Decal - Caution Fan	
222	0100020	AR	Sealant	
223	2060025	1	Fan	

ITEM	PART NUMBER	QTY	DESCRIPTION	REV
225	2720058	1 ft/0.3m	Hose	
226	1001116544	1	Duct, Elbow	
227	2720563	1	Hose, Radiator (Top)	
228	2720564	1	Hose, Radiator (Bottom)	
229	2750532	1 ft/0.3m	Hose	
230	1001091794	1	Insulation, Muffler	
231	3200362	4	Mount, Engine	
232	3311405	10	Locknut 1/4in-20NC	
233	3311605	26	Locknut 3/8in-16NC	
234	3311805	4	Locknut 1/2in-13NC	
235	3539872	1	Plate, Radiator Mount	
236	3572280	1	Plate, Engine Mount	
237	3620040	1	Radiator	
237	8180311	1	Cap, Radiator (was p/n 7019656)	
238	3740067	1	Relay	
239	3960468	1	Seal	
240	3960469	1	Seal	
241	4060805	3 ft/0.9m	Seal	
242	4341239	1	Tray, Engine	
243	4341241	1	Mount, Engine (Front)	
244	1001116545	1	Tube, Intake	
245	4569394	1	Tube, Exhaust	
246	4640952	1	Valve, Oil Drain	
247	4711400	12	Flatwasher 1/4in Thin	
248	4711600	36	Flatwasher 3/8in Thin	
249	4740274	4	Flatwasher, Snubbing	
250	4751400	8	Flatwasher 1/4in Regular	
251	4751600	16	Flatwasher 3/8in Regular	
252	4751800	4	Flatwasher 1/2in Regular	
253	4791400	2	Starwasher 1/4in	
254	4831900	4	Lockwasher M8	
255	4920385	10 ft/3m	Wire, Safety	
256	2180877	1	Fitting 90	
257	0641826	2	Bolt 1/2in-13NC x 3-1/4in	
258	2720271	18 in /46cm	Hose	
259	0100062	AR	Adhesive	

FIGURE 2-11. PISTON PUMP ASSEMBLY (SN 0300171769 through 0300208280, SN B300000970 through B300002654)

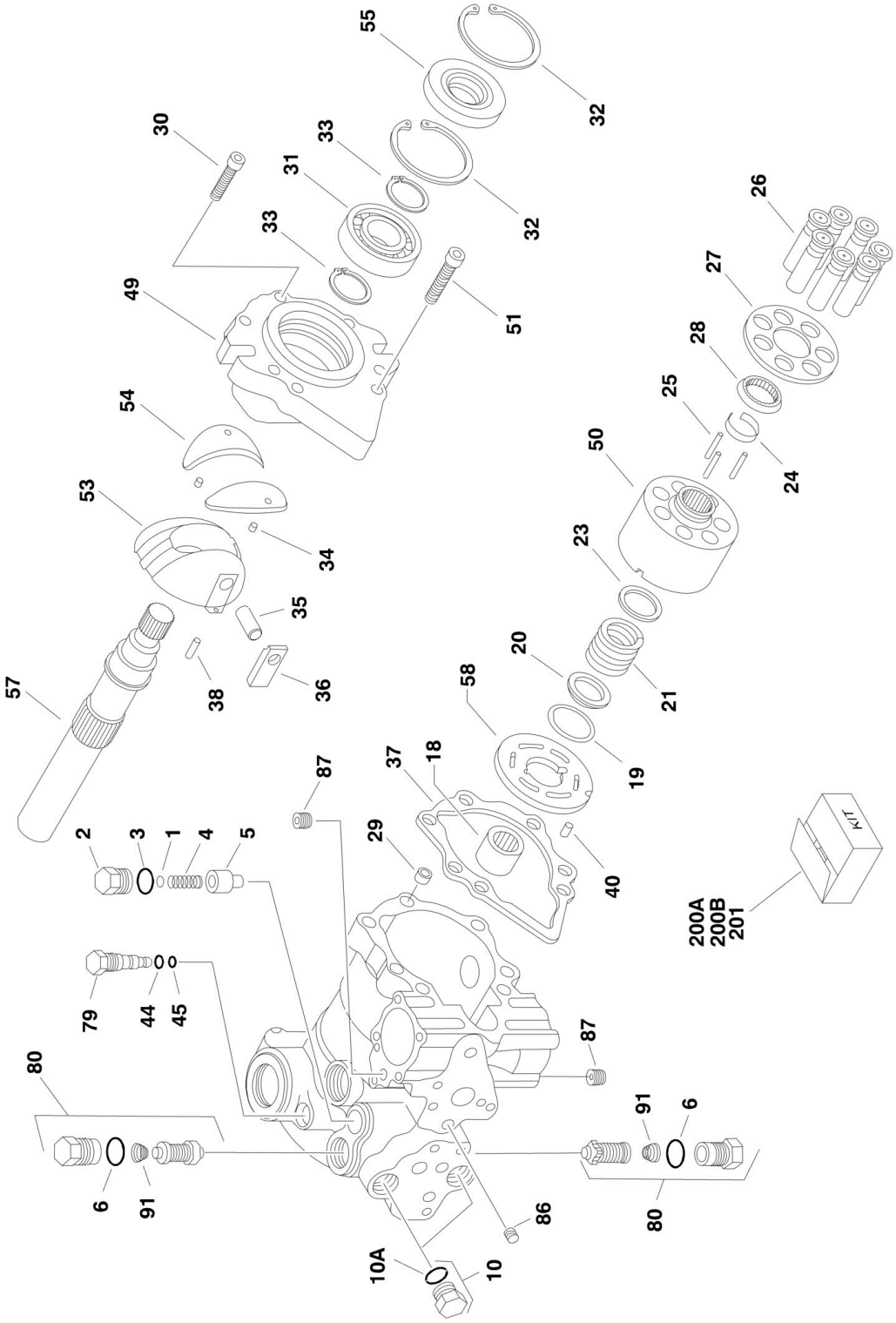

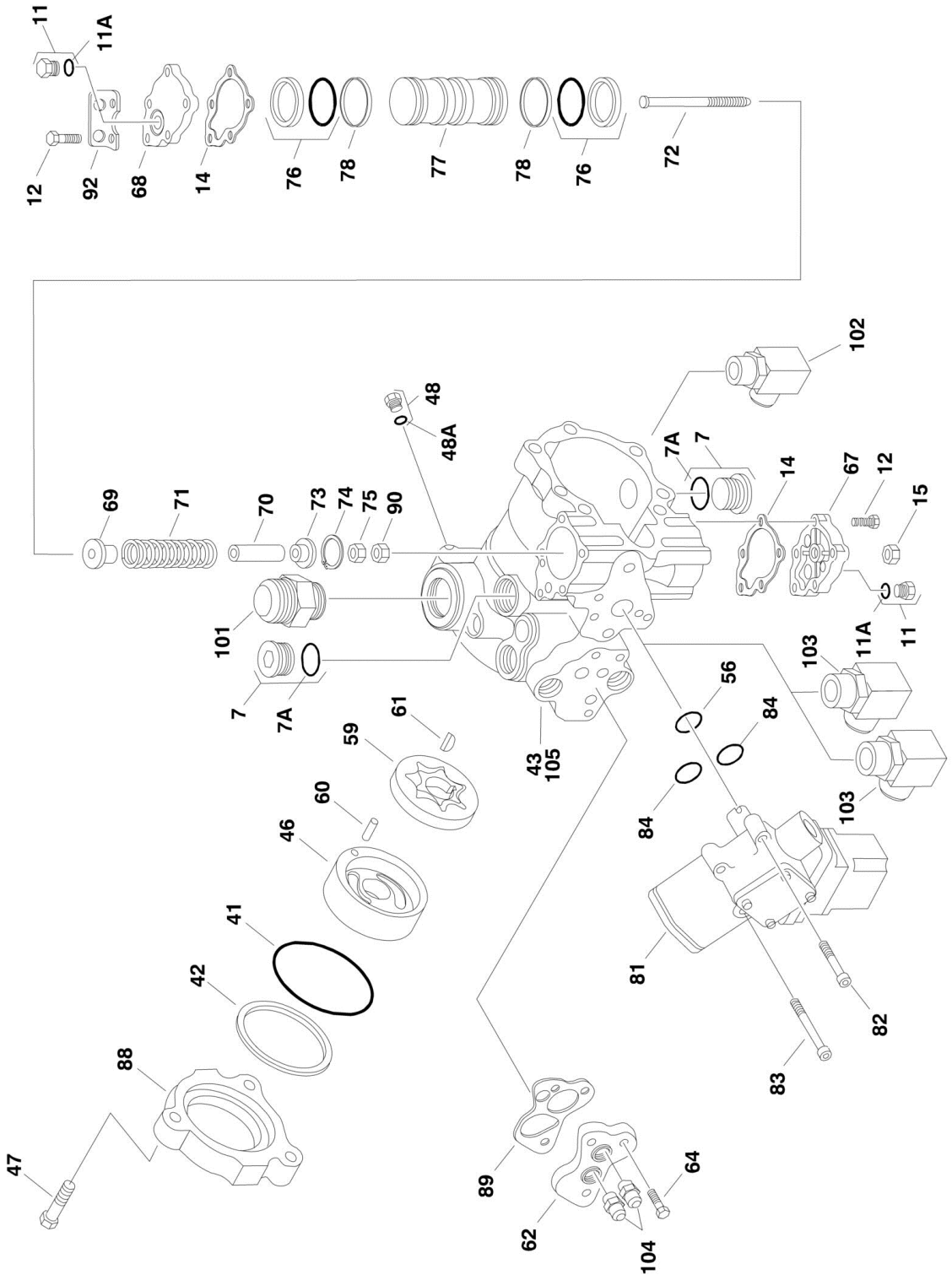
11
11A
12
92
68
14
76
78
77
78
76
72
102
48
48A
7A
7
14
67
12
15
69
71
70
73
74
75
90
101
7
7A
11A
11
103
56
84
84
103
61
59
43
105
60
46
41
42
88
47
81
82
83
89
64
62
104

FIGURE 2-11. PISTON PUMP ASSEMBLY (SN 0300171769 through 0300208280, SN B300000970 through B300002654)

ITEM	PART NUMBER	QTY	DESCRIPTION	REV
		Ref	**PISTON PUMP ASSEMBLY (SN 0300171769 through 0300208280, SN B300000970 through B300002654)**	
	3600388	Ref	**2WD**	A
	3600381	Ref	**4WD**	A
1	7007413	1	Shim Kit	
2		Ref	Plug Options:	
2	7024874	1	Plug (Pump Assembly p/n 3600388) (2WD)	
2	7007414	1	Plug (Pump Assembly p/n 3600381) (4WD)	
3	See Note	NSS	O-Ring (Note: Use Item 200A)	
4	7021200	1	Spring, Relief Valve	
5	7007417	1	Valve, Relief	
6	See Note	NSS	O-Ring (Note: Use Item 200A)	
7	7007419	2	Plug	
7A	7007418	2	O-Ring	
10	7007470	2	Plug	
10A	7021256	2	O-Ring	
11	7007470	2	Plug	
11A	7021256	2	O-Ring	
12	7021223	10	Screw	
14	See Note	NSS	Gasket, Servo Cover (Note: Use Item 200A)	
15	7007423	1	Nut, Special	
18	7007425	1	Bearing, Needle	
19	See Note	NSS	Ring, Retaining (Note: Use Item 201)	
20	See Note	NSS	Washer (Note: Use Item 201)	
21	See Note	NSS	Spring (Note: Use Item 201)	
23	See Note	NSS	Washer (Note: Use Item 201)	
24	See Note	NSS	Retainer (Note: Use Item 201)	
25	See Note	NSS	Pin, Slipper Holddown (Note: Use Item 201)	
26	See Note	NSS	Piston Assembly (Note: Use Item 201)	
27	See Note	NSS	Retainer, Slipper (Note: Use Item 201)	
28	See Note	NSS	Guide, Retainer (Note: Use Item 201)	
29	7007435	1	Pin, Spring	
30	7021202	1	Screw	
31	7007437	1	Bearing, Ball	
32	7007438	2	Ring, Retainer	
33	7007439	2	Ring	
34	7021203	2	Pin, Spring	
35	7007441	1	Handle, Pin	
36	7007442	1	Sleeve, Bearing	
37	7021232	1	Gasket, Front Cover	
38	7007444	1	Pin	
40	7007446	1	Pin	
41	See Note	NSS	O-Ring (Note: Use Item 200A)	
42	See Note	NSS	Ring, Load Temper (Note: Use Item 200A)	
43	7023977	1	Housing, Pump	
44	See Note	NSS	Ring, Back-up (Note: Use Item 200A)	
45	See Note	NSS	O-Ring (Note: Use Item 200A)	
46	7007452	1	Cover, Gerotor	
47	7007453	3	Bolt, Hex	

ITEM	PART NUMBER	QTY	DESCRIPTION	REV
48	7007208	1	Plug	
48A	7007207	1	O-Ring	
49		Ref	Cover, Front Options:	
49	7024875	1	Cover, Front (Pump Assembly p/n 3600388) (2WD)	
49	7007454	1	Cover, Front (Pump Assembly p/n 3600381) (4WD)	
50	See Note	NSS	Block, Cylinder (Note: Use Item 201)	
51	7021207	6	Screw	
53	7007457	1	Swash Plate	
54		Ref	Journal, Bearing Options:	
54	7021210	1	Journal, Bearing (Pump Assembly p/n 3600388) (2WD)	
54	7021212	1	Journal, Bearing (Pump Assembly p/n 3600381) (4WD)	
55	See Note	NSS	Seal, Lip (Note: Use Item 200A)	
56	See Note	NSS	O-Ring (Note: Use Item 200A)	
57	7010121	1	Shaft, Main Pump	
58	7021214	1	Plate, Valve	
59	7007463	1	Gerotor Assembly	
60	7007464	1	Pin	
61	7007465	1	Key, Woodruff	
62	7007466	1	Adaptor, Remote Filtration	
64	7021218	3	Screw	
67	7021220	1	Cover, Servo	
68	7021219	1	Cover, Servo	
69	7023979	1	Guide, Spring	
70	7007484	1	Stop, Servo	
71	7007485	1	Spring	
72	7021221	1	Screw	
73	7007487	1	Guide, Spring	
74	7007488	1	Ring, Retaining	
75	7021222	1	Locknut	
76	See Note	NSS	Ring, Piston (Note: Use Item 200A or 200B)	
77	7007494	1	Piston, Servo	
78	See Note	NSS	O-Ring (Note: Use Item 200A or 200B)	
79		Ref	Valve, Bypass Options:	
79	7024877		Valve, Bypass (Pump Assembly p/n 3600388) (2WD)	
79	7007472		Valve, Bypass (Pump Assembly p/n 3600381) (4WD)	
80	7010122	2	Valve, Pressure Relief Options (Includes Item 6):	
80	7010122	2	Valve (Pump Assembly p/n 3600388) (2WD)	
80	7024851	2	Valve (Pump Assembly p/n 3600381) (4WD)	
81	7007474	1	Control, Dual Oil-Filled	
81	7007496	1	Coil Assembly (Pilot)	
81	7007497	1	Plug (Pump)	
81	7007498	1	Plug (Valve Harness)	
82	7001498	2	Screw	
83	7007478	2	Screw	
84	7001433	2	O-Ring	
86	7007475	1	Plug, Orifice/Screen (.156)	
87	7007477	2	Plug, Orifice (.37)	
88	7007476	1	Adapter, Auxiliary Pump	
89	7021217	1	Spacer/Gasket	
90	7021206	1	Nut	
91	7024800	2	Spring	

ITEM	PART NUMBER	QTY	DESCRIPTION	REV
92	7021201	1	Bracket, Lifting	
		Ref	**PISTON PUMP AND FITTING ASSEMBLIES**	
	3600394	Ref	**2WD**	D
	1001117799	Ref	**4WD**	A
101	2220377	1	Fitting, Straight	
101	2220479	1	Fitting, Straight	
102	2220578	1	Fitting, 90	
103	2220646	2	Fitting, 90	
104	2220947	2	Fitting, Straight	
105		Ref	Pump Options (Includes Items 1-92)	
105	3600388	1	2WD	
105	3600381	1	4WD	
		Ref	**KIT OPTIONS:**	
200		Ref	Seal Kit Options:	
200A	7021232	1	Seal Kit - Complete (Includes Items 3, 6, 14, 37, 41, 42, 44, 45, 55, 56, 76, 78, 84 & 89)	
200B	7007412	1	Seal Kit - Servo Piston (Includes Items 76 & 78)	
201	7010116	1	Cylinder Block Kit (Includes Items 19-28 & 50)	

FIGURE 2-12. PISTON PUMP ASSEMBLY (SN 0300208281 through 0300235167)

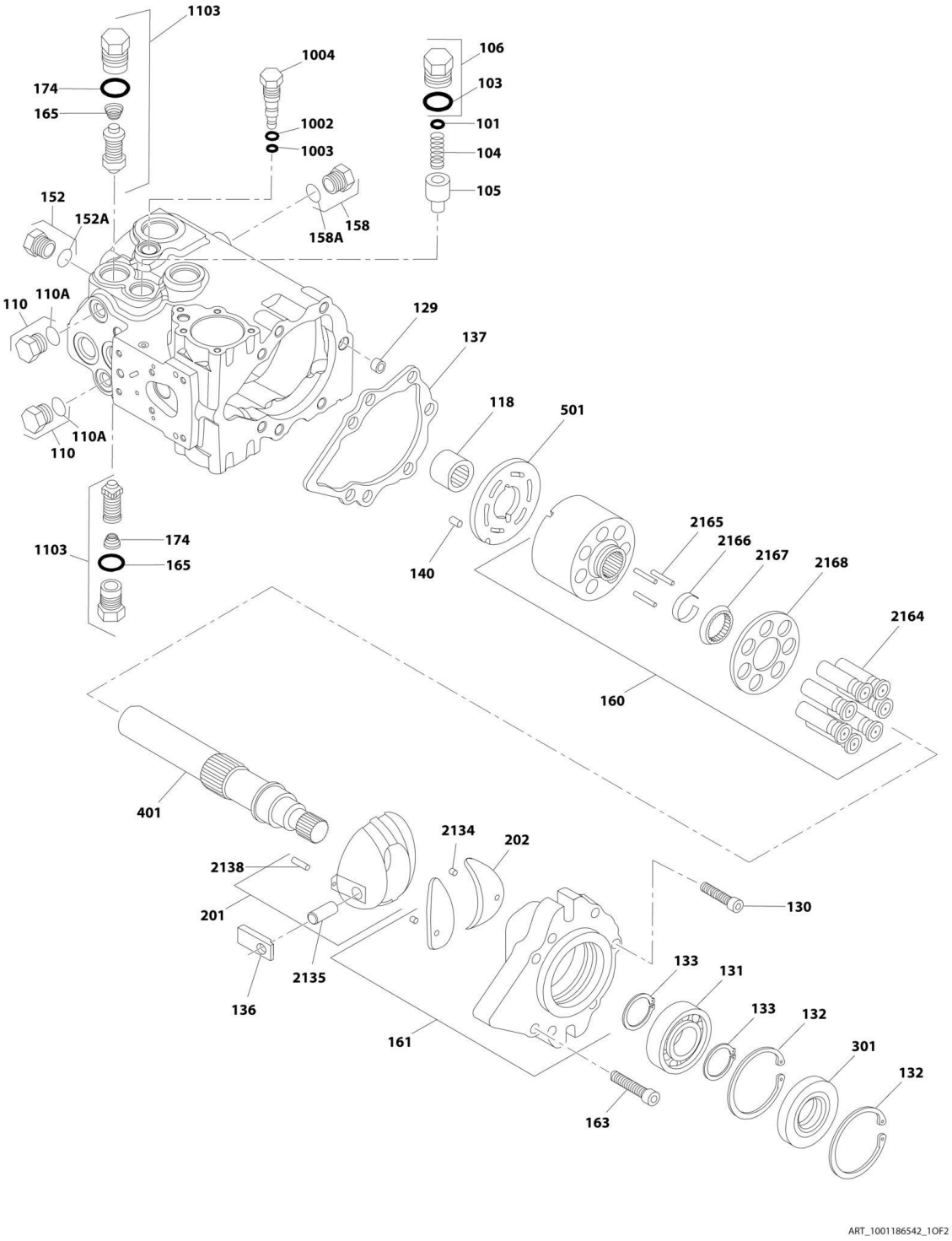

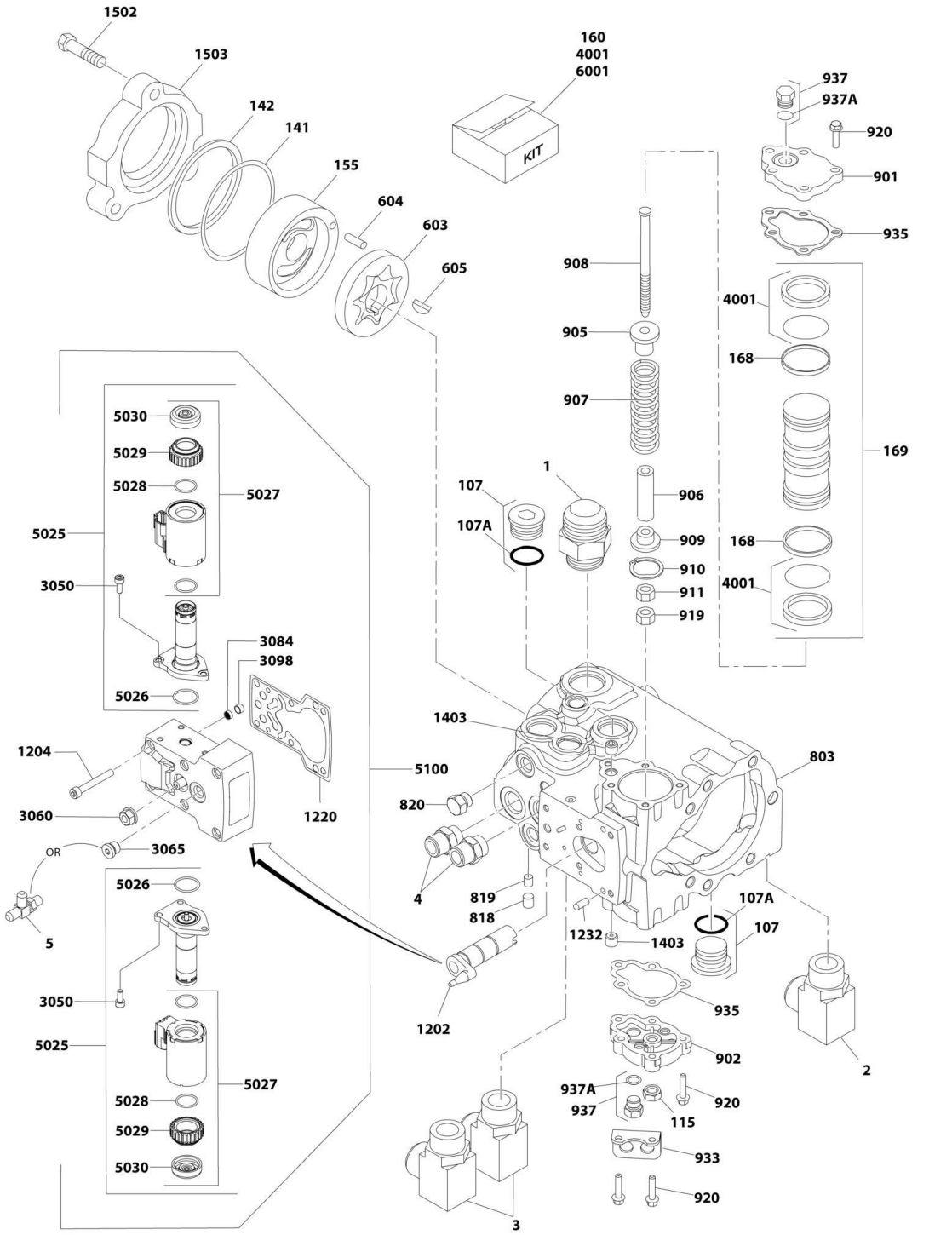
1502
1503
142
141
155
604
603
605
160
4001
6001
KIT
937
937A
920
901
935
908
905
907
906
909
910
911
919
4001
168
169
168
4001
1
107
107A
5030
5029
5028
5027
5025
3050
3084
3098
5026
1204
3060
OR
3065
5
1220
5100
1403
820
803
4
819
818
1232
1403
107A
107
935
902
937A
937
115
920
933
920
1202
2
3
5026
3050
5025
5027
5028
5029
5030
ART_1001186542_2OF2

FIGURE 2-12. PISTON PUMP ASSEMBLY (SN 0300208281 through 0300235167)

ITEM	PART NUMBER	QTY	DESCRIPTION	REV
	1001186545	Ref	**PUMP AND FITTING ASSEMBLY - 2WD MACHINES**	A
	1001186543	Ref	**PUMP AND FITTING ASSEMBLY - 4WD MACHINES**	A
1	2220479	1	Fitting, Straight JIC/ORB	
2	2220578	1	Fitting, 90 JIC/ORB	
3	2220646	2	Fitting, 90 JIC/ORB	
4	2220947	2	Fitting, Straight JIC/ORB	
5	2221034	1	Fitting, Tee JIC/ORB	
	1001186544	Ref	**PISTON PUMP ASSEMBLY - 2WD MACHINES**	B
	1001186542	Ref	**PISTON PUMP ASSEMBLY - 4WD MACHINES**	B
89	7021217	1	Spacer/Gasket	
101	7007413	1	Shim Kit	
103	7007415	1	O-Ring (Part of Item 106)	
104	7021200	1	Spring, Relief Valve	
105	7007417	1	Valve, Relief	
106	7024874	2	Plug (Includes Item 103)	
107	7007419	2	Plug	
107A	7007418	2	O-Ring	
110	7007420	2	Plug	
110A	7021256	2	O-Ring	
115	7007423	1	Nut, Special	
118	7007425	1	Bearing, Needle	
129	7007435	1	Pin, Spring	
130	7021202	1	Screw	
131	70002176	1	Bearing, Ball	
132	7007438	2	Ring, Retainer	
133	7007439	2	Ring	
136	7007442	1	Sleeve, Bearing	
137	7007443	1	Gasket, Front Cover	
140	7007446	1	Pin	
141	7021233	1	O-Ring	
142	7007448	1	Ring, Load Temper	
152	7007420	1	Plug, Assembly	
152A	7021256	1	O-Ring	
155	70005466	1	Cover, Gerotor	
158	7007208	1	Plug	
158A	7007207	1	O-Ring	
160	7010116	1	Cylinder Block Kit (Includes Items 2164-2168)	
161	7024875	1	Cover Assembly - Front (Includes Items 202 & 2134)	
163	7021207	6	Screw	
165	70005467	2	Spring	
168	7021210	2	Bearing	
169	70005468	1	Servo Piston Assembly (Includes Items 168 & QB)	
174	7007418	2	O-Ring	
201	7007457	1	Swash Plate Assembly (Includes Items 2135 & 2138)	
202	7021212	1	Journal, Bearing	
301	7007459	1	Seal, Lip	
401	7010121	1	Shaft, Main Pump	
501	7021214	1	Plate, Valve	
603	7007463	1	Gerotor Assembly	
604	7007464	1	Pin	

ITEM	PART NUMBER	QTY	DESCRIPTION	REV
605	7007465	1	Key, Woodruff	
803	See Note	NSS	Housing, Pump (Note: Use p/n 1001186542)	
818	70005469	1	Plug	
819	70005470	1	Plug	
820	70005469	1	Plug	
901	7021219	1	Cover, Servo (With Adjuster)	
902	7021220	1	Cover, Servo (Without Adjuster)	
905	7023979	1	Guide, Spring	
906	7007484	1	Stop, Servo	
907	7007485	1	Spring	
908	7021221	1	Screw	
909	7007487	1	Guide, Spring	
910	7007488	1	Ring, Retaining	
911	7021222	1	Locknut	
919	7021206	1	Nut	
920	7021223	10	Screw	
933	7021201	1	Bracket, Lifting	
935	7007422	2	Gasket, Servo Cover	
937	7007420	2	Plug	
937A	7021256	2	O-Ring	
1002	7007450	1	Ring, Back-up	
1003	70005471	1	O-Ring	
1004	7024877	1	Valve, Bypass	
1103	7010122	2	Valve, Pressure Relief (Includes Items 165 & 174) (2WD Machines)	
1103	7024851	2	Valve, Pressure Relief (Includes Items 165 & 174) (4WD Machines)	
1202	70005472	1	Sleeve	
1204	70002156	6	Screw	
1220	70002154	1	Gasket	
1232	70002157	2	Pin	
1403	70005477	2	Plug, Orifice (2WD Machines)	
1403	7007477	2	Plug, Orifice (4WD Machines)	
1502	7007453	3	Bolt, Hex	
1503	7007476	1	Adapter, Auxiliary Pump	
2134	7021203	2	Pin, Spring	
2135	7007441	1	Handle, Pin	
2138	7007444	1	Pin	
2164	7010117	7	Piston Assembly	
2165	7007431	3	Pin, Slipper Holddown	
2166	7007430	1	Retainer	
2167	7007434	1	Guide, Retainer	
2168	7010119	1	Retainer, Slipper	
3050	70002150	6	Screw	
3060	70005473	1	Nut, Seal	
3065	70002151	1	Plug	
3084	70002134	1	Screen	
3098	70002153	1	Ring	
4001	7007412	1	Seal Kit - Servo Piston	
5025	70002147	2	Solenoid Assembly (Includes Items 5026-5030)	
5026	70002148	2	O-Ring	
5027	70002149	2	Coil Assembly (Includes Items 5028-5030)	

ITEM	PART NUMBER	QTY	DESCRIPTION	REV
5028	70005474	2	O-Ring	
5029	70005475	2	Screw	
5030	70005476	2	Cap	
5100	70002146	1	EDC Assembly (Includes Items 1204, 1220, 3050-3098 & 5025-5030)	
6001	7021232	1	Seal Kit - Complete (Includes Items 103, 137, 141, 142, 168, 174, 301, 935, 1002, 1003, 4001 and Plug O-Ring)	

FIGURE 2-13. GEAR PUMP ASSEMBLY

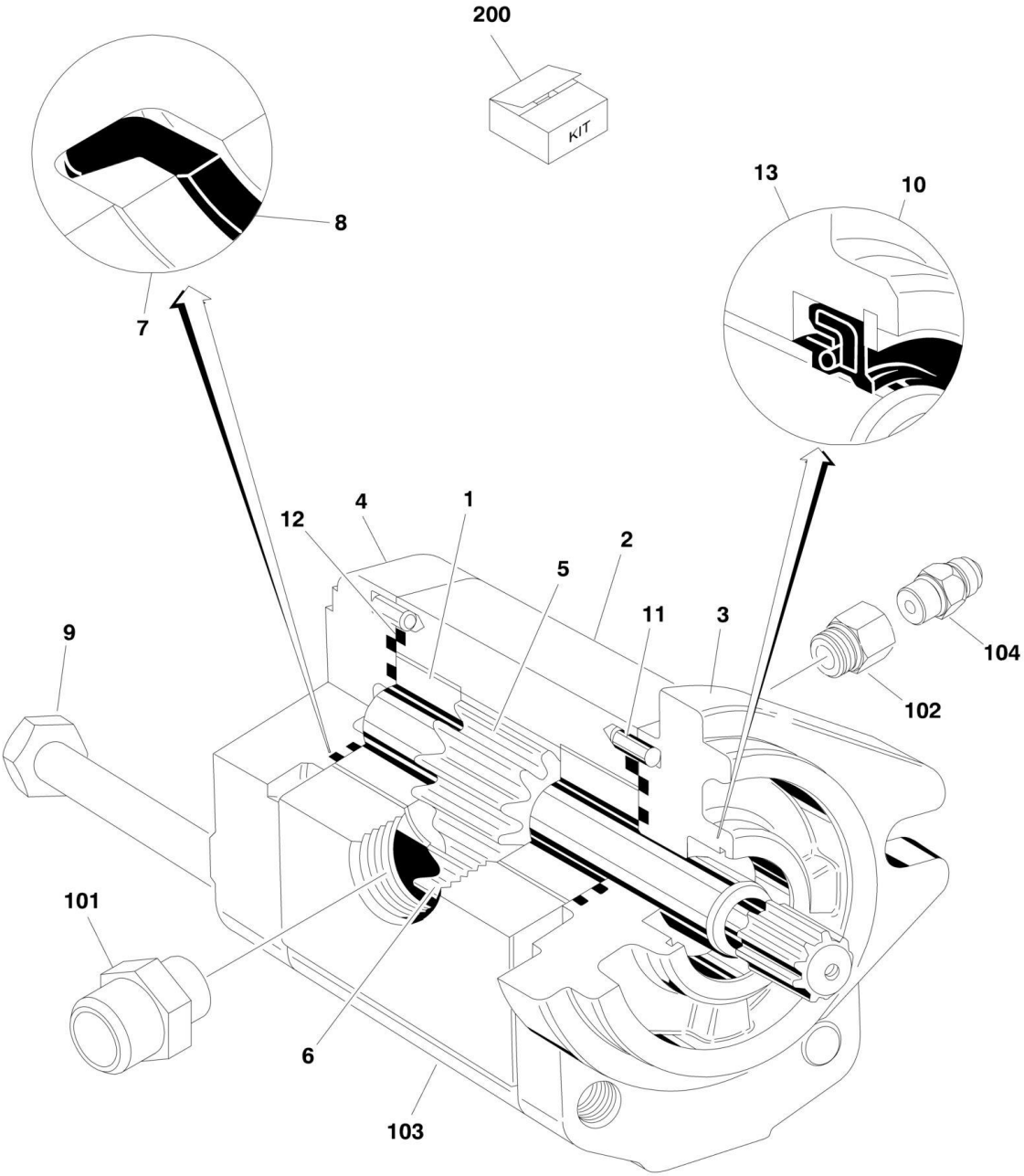

FIGURE 2-13. GEAR PUMP ASSEMBLY

ITEM	PART NUMBER	QTY	DESCRIPTION	REV
	3600242	Ref	**GEAR PUMP ASSEMBLY**	
1	7010105	2	Bearing/Bushing	
2	See Note	NSS	Housing (Note: Not Available - Purchase p/n 3600242 Complete Replacement)	
3	See Note	NSS	Flange (Note: Not Available - Purchase p/n 3600242 Complete Replacement)	
4	7010103	1	Cover	
5	7012987	1	Gear, Drive	
6	7012988	1	Gear, Idler	
7	See Note	NSS	Ring, Anti-Extrusion (Note: Use Item 200)	
8	See Note	NSS	Seal (Note: Use Item 200)	
9	See Note	NSS	Bolt (Note: Not Available for Purchase)	
10	7010104	1	Ring, Retaining	
11	See Note	NSS	Pin, Dowel (Note: Not Available for Purchase)	
12	See Note	NSS	Seal, O-Ring (Note: Use Item 200)	
13	See Note	NSS	Seal, Shaft (Note: Use Item 200)	
	3600395	Ref	**GEAR PUMP AND FITTING ASSEMBLY**	B
101	2220376	1	Fitting, Straight	
102	2220810	1	Fitting, Reducer	
103	3600242	1	Pump (Includes Items 1-13)	
104	4640744	1	Fitting, Check Valve	
		Ref	**KIT OPTIONS**	
200	7007489	1	Seal Kit (Includes Items 7, 8, 12 & 13)	

FIGURE 2-14. FUEL-WATER SEPARATOR INSTALLATION - DEUTZ D2011 ENGINES

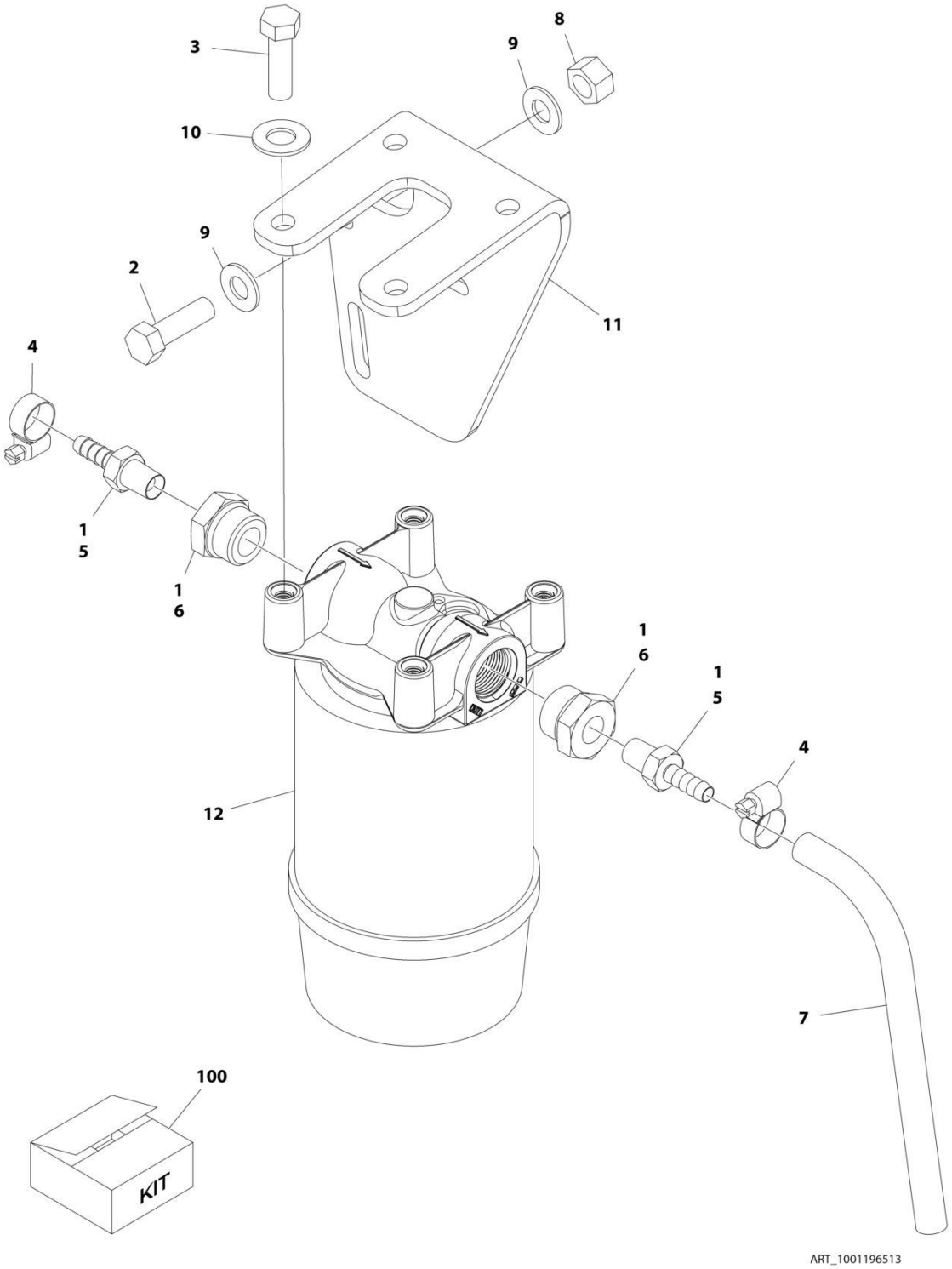

FIGURE 2-14. FUEL-WATER SEPARATOR INSTALLATION - DEUTZ D2011 ENGINES

ITEM	PART NUMBER	QTY	DESCRIPTION	REV
	1001196513	Ref	**FUEL-WATER SEPARATOR INSTALLATION - DEUTZ D2011 ENGINES (OPTIONAL)**	A
1	0100020	1	Sealant	
2	0641608	2	Bolt 3/8 x 1	
3	0641610	4	Bolt 3/8 x 1-1/4	
4	1320022	2	Clamp	
5	2180348	2	Fitting, Straight Barbed	
6	2220816	2	Fitting, Straight NPT	
7	2720058	13 ft/4m	Hose	
8	3271601	2	Nut 3/8 (Grade 8)	
9	4711600	4	Washer 3/8	
10	4711700	4	Washer 7/16	
11	1001188885	1	Bracket	
12	1001188887	1	Fuel/Water Separator Assembly	
12	1001202280	1	Head	
12	1001202281	1	Element	
100	1001204668	1	Fuel/Water Separator Add-on Kit	

FIGURE 2-15. TANK INSTALLATIONS

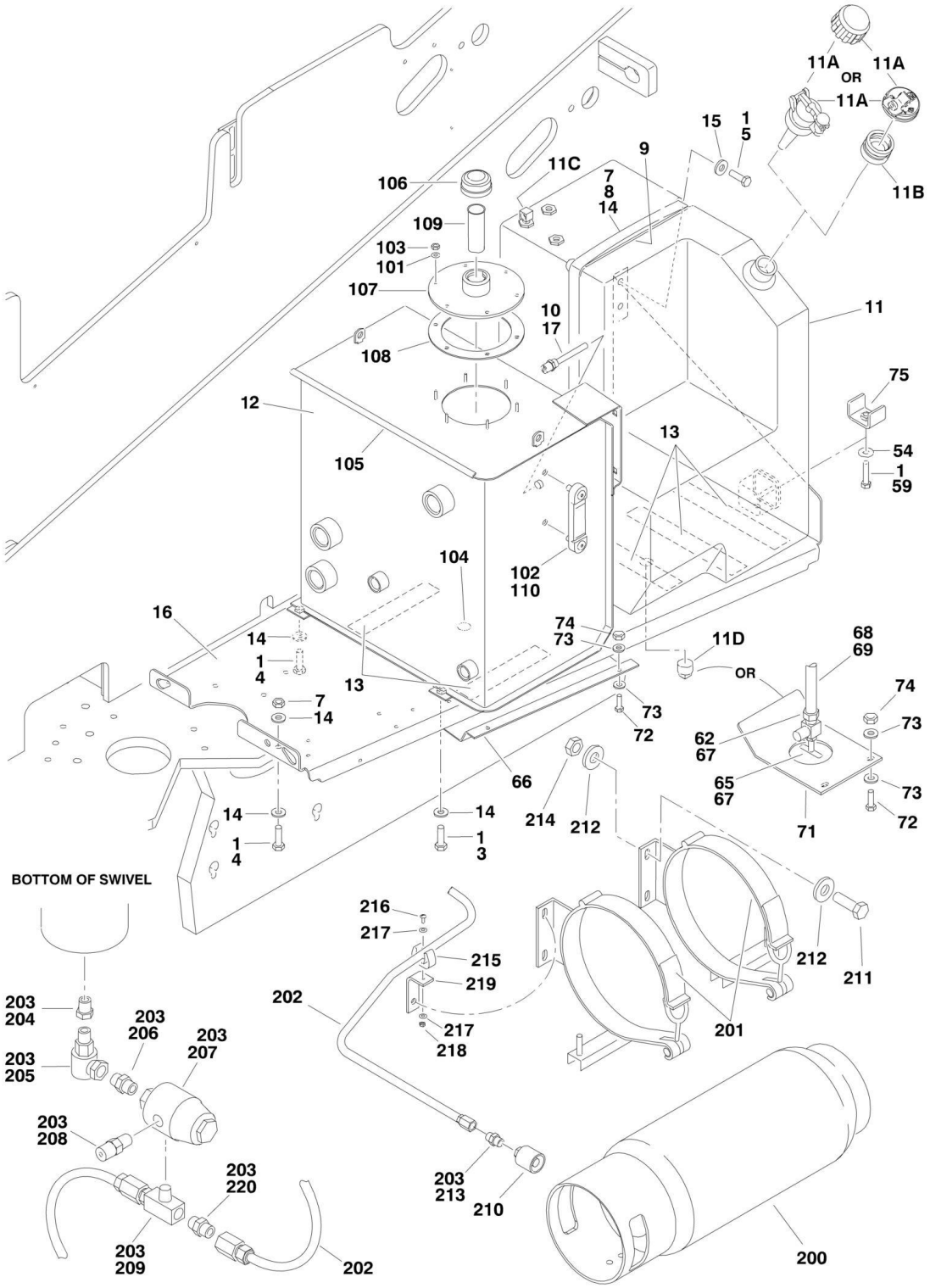

FIGURE 2-15. TANK INSTALLATIONS

ITEM	PART NUMBER	QTY	DESCRIPTION	REV
		Ref	**TANKS INSTALLATIONS**	
	1001150389	Ref	**Deutz Engine Machines**	F
	1001150388	Ref	**GM Engine Machines**	C
1	0100011	AR	Compound, Locking	
3	0641608	2	Bolt 3/8in-16NC x 1in	
4	0641618	4	Bolt 3/8in-16NC x 2-1/4in	
5	0641811	2	Bolt 1/2in-13NC x 1-3/8in	
7	3311601	AR	Nut 3/8in-16NC	
8	4240113	1	Strap, Tank (Deutz Engine Machines Only)	
9	4280295	25 in /63cm	Strip, Protective (Deutz Engine Machines Only)	
10	4360436	1	Switch, Fuel Level	
11		Ref	Tank, Fuel Options:	
11	4400400	NLA	Tank (Deutz Engine Machines) (Use p/n 1001173897) **(SN 0300171769 through 0300195170)**	
11	1001173897	1	Tank (Deutz Engine Machines) **(SN 0300195171 through 0300235167)**	
11	4400400	NLA	Tank (Deutz Engine Machines) (Use p/n 1001173897) **(SN B300000970 through B300001063)**	
11	1001173897	1	Tank (Deutz Engine Machines) **(SN B300001064 through B300002654)**	
11	1001111514	1	Tank (GM Engine Machines)	
11A		Ref	Cap Options:	
11A	70002715	1	Standard Black Cap (GM Engine Machines) (Not Shown)	
11A	7016314	1	Standard Black Cap (Deutz Engine Machines)	
11A	1120487	1	Optional Blue Cap (Deutz Engine Machines) (Not Shown) (Not Included with Tank)	
11B	70002716	1	Adapter	
11C		Ref	Tube, Fuel Pick-up (with Fitting) Options:	
11C	70004149	1	GM Engine Machines	
11C	7019658	1	Deutz Engine Machines (4400400 Tank)	
11C	70004184	1	Deutz Engine Machines (1001173897 Tank)	
11D	2200222	1	Plug (Deutz Engine Machines Only)	
11D	0100020	AR	Sealant, Pipe	
12	1001145172	1	Hydraulic Tank Assembly (See Items 101-110 for Breakdown)	
13	4420038	75 in/1.9m	Tape, Rubber	
14	4751600	AR	Flatwasher 3/8in Regular	
15	4891800	2	Flatwasher 1/2in Hardened	
16	1001150198	1	Tray	
17	1001182997	AR	Adhesive	
		Ref	**Note: Items 54 - 75 Used on GM Engine Machines Only**	
54	4751800	2	Flatwasher 1/2in Regular	
59	0641818	2	Bolt 1/2in-13NC x 2-1/4in	
62	2221270	1	Fitting, Brass	
65	4641022	1	Valve, Needle	
66	3576755	1	Cover, Fuel Pump	
67	0100020	AR	Sealant	
68	0100062	AR	Adhesive	
69	4568119	1	Tube, Fuel	
71	3572423	1	Plate, Valve, Needle	
72	0641508	AR	Bolt 5/16in-18NC x 1in	

ITEM	PART NUMBER	QTY	DESCRIPTION	REV
73	4711500	AR	Flatwasher 5/16in Thin	
74	3311505	AR	Locknut 5/16in-18NC	
75	1001118133	2	Bracket	
	1001145172	Ref	**HYDRAULIC TANK ASSEMBLY**	C
101	83304173	6	Flatwasher 1/4in Regular	
102	7024441	1	Gauge, Sight	
103	83304174	6	Nut 1/4in-20NC	
104	7024446	1	Plug, Magnetic	
105	4060803	22 in /68cm	Trim	
106	7024444	1	Cap, Vented (Helgensen Brand)	
106	See Note	NSS	Cap, Vented (Hydac Brand) (Note: Use Kit p/n 70004862 - Includes Breather Cap and Filler Neck Screen)	
107	7024439	1	Cover	
108	7024440	1	Gasket	
109	7024445	1	Strainer (Helgensen Brand)	
109	See Note	NSS	Strainer (Hydac Brand) (Note: Use Kit p/n 70004862 - Includes Breather Cap and Filler Neck Screen)	
110	0100079	AR	Sealant #565	
	1001151010	Ref	**LP TANK BRACKETS INSTALLATION (GM ENGINE MACHINES ONLY)**	D
200		Ref	Tank, LP - 43.5 Lbs Options:	
200	4400275	1	Aluminum	
200	4400420	1	Steel	
201	1320220	2	Clamp	
201	1320127	2	Clamp, Toggle (1 Per Clamp)	
202	2720144	2	Hose	
203	0100020	AR	Sealant, Pipe	
204	2221197	1	Fitting, Reducer	
205	2180125	1	Fitting, 90 Swivel	
206	2220261	1	Fitting, Nipple	
207	2180388	1	Fitting, Bulkhead	
208	2180389	1	Valve, Relief	
209	2220418	1	Fitting, Tee	
210	2180387	2	Fitting, Straight	
211	0641617	8	Bolt 3/8in-16NC x 2-1/8in	
212	4891600	16	Flatwasher 3/8in Hardened	
213	2180418	2	Fitting, Connector	
214	3311605	8	Locknut 3/8in-16NC	
215	1320218	2	Clamp, Spring	
216	3910808	2	Screw #8-32NC x 1/2in **(SN 0300171769 through 0300182452)**	
216	0720804	2	Screw #8-32NC x 1/2in **(SN 0300182453 through 0300235167)**	
217	4750800	4	Flatwasher #8 Regular	
218	3310805	2	Locknut #8-32NC	
219	0181949	2	Angle, Support	
220	2221024	2	Fitting, Union Ball Check	

FIGURE 2-16. HYDRAULIC TANK LOCK INSTALLATION

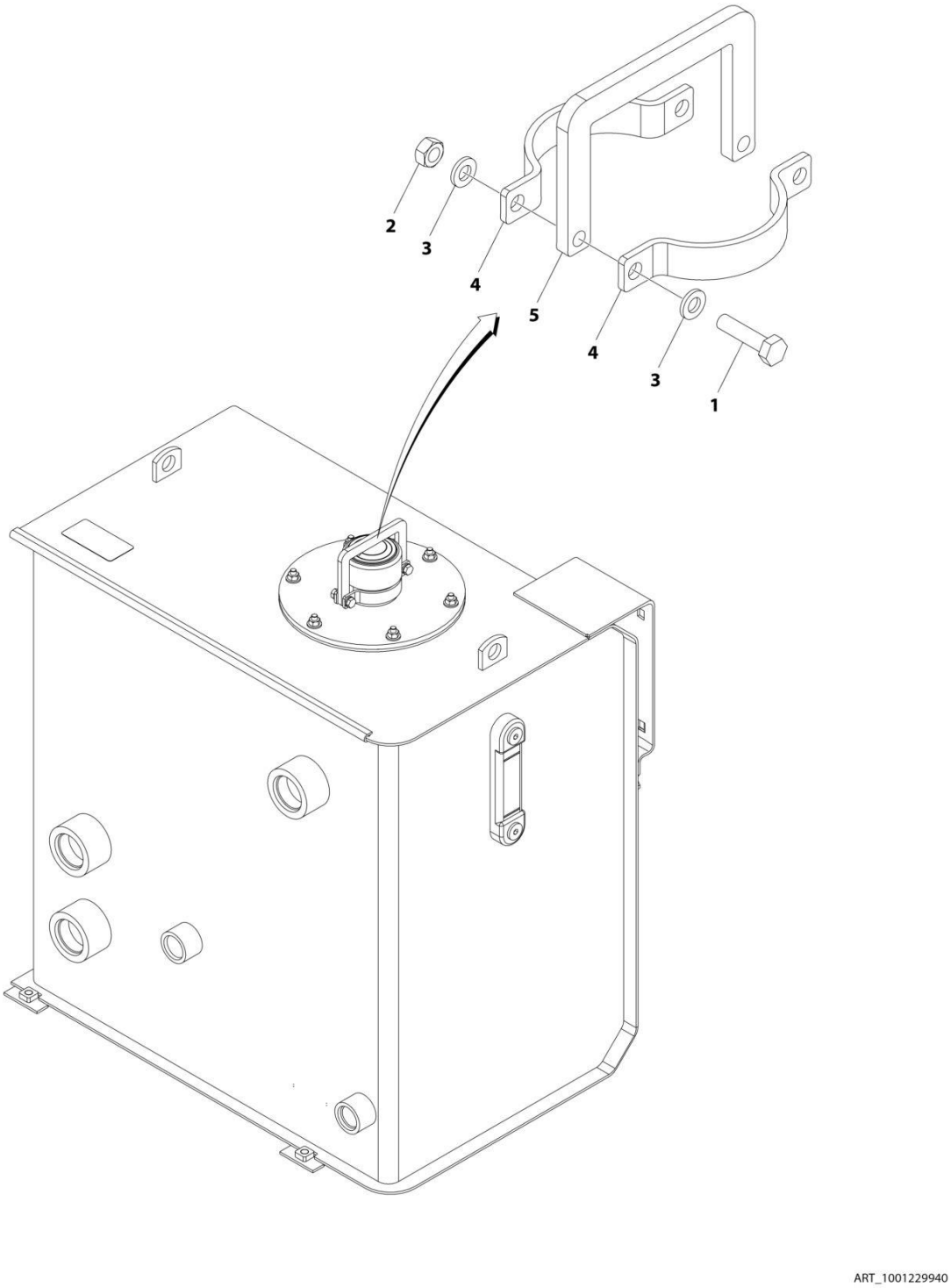

FIGURE 2-16. HYDRAULIC TANK LOCK INSTALLATION

ITEM	PART NUMBER	QTY	DESCRIPTION	REV
	1001229940	Ref	HYDRAULIC TANK LOCK INSTALLATION	A
1	0760612	2	Bolt M6 x 25	
2	3290601	2	Nut M6	
3	4811700	4	Washer M6	
4	1001229938	2	Bracket	
5	1001229939	1	Bracket	

FIGURE 2-17. ROTARY COUPLING INSTALLATION

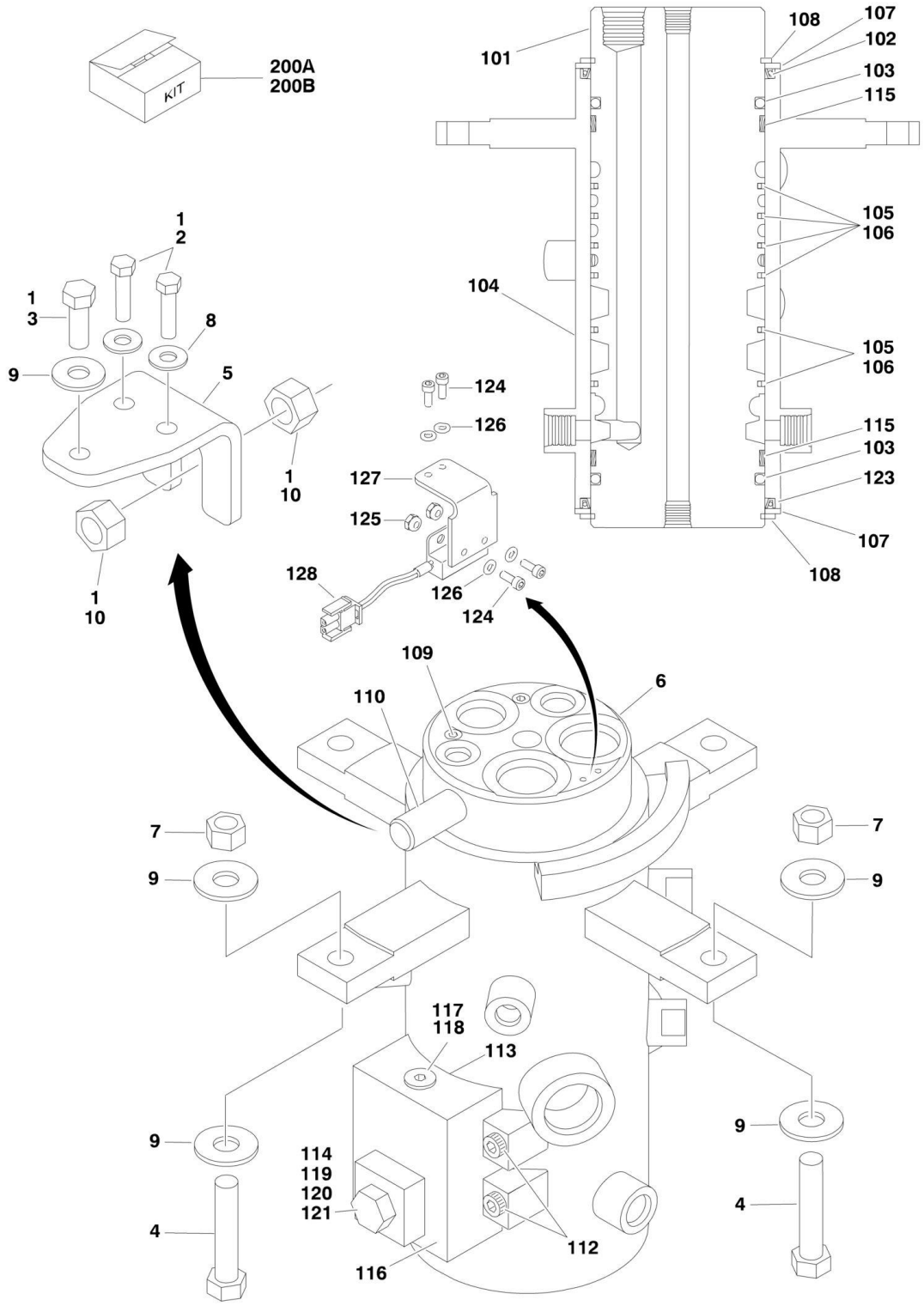

FIGURE 2-17. ROTARY COUPLING INSTALLATION

ITEM	PART NUMBER	QTY	DESCRIPTION	REV
		Ref	**ROTARY COUPLING INSTALLATION**	
	1001151303	Ref	**2WS**	A
	1001151304	Ref	**4WS**	A
1	0100011	AR	Compound, Locking	
2	0641612	2	Bolt 3/8in-16NC x 1-1/2in	
3	0641811	1	Bolt 1/2in-13NC x 1-3/8in	
4	0641820	2	Bolt 1/2in-13NC x 2-1/2in	
5	0903056	1	Bracket	
6	3271805	2	Locknut 1/2in-13NC	
7	4751600	2	Flatwasher 3/8in Regular	
8	4751800	5	Flatwasher 1/2in Regular	
9	3322201	2	Nut 3/4in-16NC	
10		Ref	Coupling, Rotary Options (See Items 101-123 for Breakdown):	
10	1001106974	1	2WS	
10	1001106975	1	4WS	
		Ref	**ROTARY COUPLING ASSEMBLY**	
	1001106974	Ref	**2WS**	
	1001106975	Ref	**4WS**	
101	See Note	NSS	Body (Note: Not Available - Purchase Complete Rotary Coupling Assembly)	
102		Ref	Seal Options:	
102	70001248	1	2WS	
102	70002212	1	4WS	
103	See Note	NSS	O-Ring (Note: Use Item 200A or 200B)	
104	See Note	NSS	Housing (Note: Not Available - Purchase Complete Rotary Coupling Assembly)	
105		Ref	Seal, Cap	
105	70001248	6	2WS	
105	70002212	9	4WS	
106		Ref	O-Ring	
106	70001248	6	2WS	
106	70002212	9	4WS	
107		Ref	Ring Options:	
107	7026503	2	2WS	
107	7026511	2	4WS	
108		Ref	Ring, Retaining Options:	
108	7026504	1	2WS	
108	7013189	1	4WS	
109		Ref	Plug Options:	
109	80934561	2	2WS	
109	80934561	4	4WS	
110	See Note	1	Lug, Torque (Note: Not Available for Purchase)	
112	7026197	4	Bolt 5/16in-18NC x 1-1/4in	
113	See Note	NSS	O-Ring (Note: Use Item 200A or 200B)	
114	See Note	NSS	O-Ring (Note: Use Item 200A or 200B)	
115	See Note	NSS	Bearing (Note: Use Item 200A or 200B)	
116	7024404	1	Block Valve Assembly	
117	7026505	1	Plug	
118	7026506	1	Valve, Check	
119	7026507	1	Plug	

ITEM	PART NUMBER	QTY	DESCRIPTION	REV
120	See Note	NSS	Plunger, Valve (Note: Use p/n 7024404)	
121	7026509	1	Spring, Compression	
122	See Note	AR	Protective Netting (Not Shown) (1660303, 1660304, 1001106974 & 1001106975 Couplings) (Note: Not Available for Purchase)	
123		Ref	Seal Options:	
123	70001248	1	2WS	
123	70002212	1	4WS	
124	See Note	NSS	Screw, Socket Head #10-24NC x 1/2in (Note: Not Available - Purchase Locally)	
125	See Note	NSS	Locknut #10-24NC (Note: Not Available - Purchase Locally)	
126	See Note	NSS	Flatwasher #10 Regular (Note: Not Available - Purchase Locally)	
127	70003454	1	Bracket, Switch Mounting	
128	4360517	1	Switch, Proximity	
		Ref	**KIT OPTIONS**	
200		Ref	Seal Kit Options:	
200A	70001248	1	1001106974 Couplings (Includes Items 102, 103, 105, 106, 113, 114, 115 & 123)	
200B	70002212	1	1001106975 Coupling (Includes Items 102, 103, 105, 106, 113, 114, 115 & 123)	

FIGURE 2-18. GROUND CONTROL BOX ASSEMBLY (FIBERGLASS BOX)

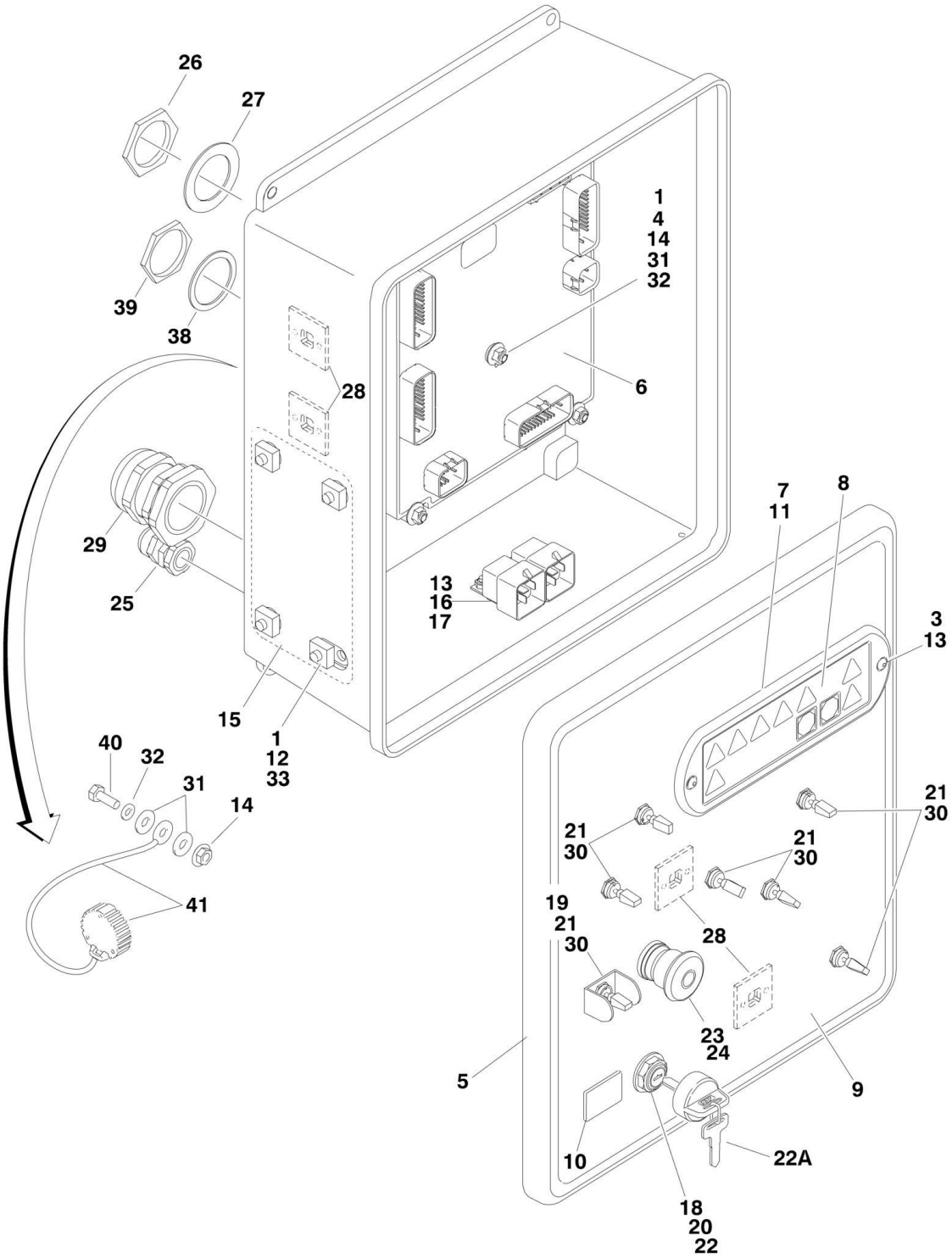

FIGURE 2-18. GROUND CONTROL BOX ASSEMBLY (FIBERGLASS BOX)

ITEM	PART NUMBER	QTY	DESCRIPTION	REV
		Ref	**GROUND CONTROL BOX ASSEMBLIES**	
		Ref	**Ground Control Box Assemblies 600S:**	
		Ref	**USA Built Machines:**	
	1001110349	Ref	**Deutz D2011 Engine (All Specs except CE Specs)**	C
	1001110352	Ref	**Deutz D2011 Engine (CE Specs)**	D
	1001145040	Ref	**Deutz TD2.9L4 Engine**	D
	1001110348	Ref	**GM Engine (ANSI and ANSI Export Specs)**	E
		Ref	**China Built Machines:**	
	1001110349	Ref	**Deutz D2011 Engine (All Specs)**	C
		Ref	**Ground Control Box Assemblies 660SJ:**	
		Ref	**USA Built Machines:**	
	1001110351	Ref	**Deutz D2011 Engine (All Specs except CE Specs)**	C
	1001110353	Ref	**Deutz D2011 Engine (CE Specs)**	D
	1001145041	Ref	**Deutz TD2.9L4 Engine**	D
	1001110350	Ref	**GM Engine (ANSI and ANSI Export Specs)**	E
		Ref	**China Built Machines:**	
	1001110351	Ref	**Deutz D2011 Engine (All Specs)**	C
1	0100011	AR	Compound, Locking	
2	0100048	AR	Grease, Dielectric	
3	0630518	2	Capscrew, Button Head	
4	0630548	5	Bolt	
5	1001111017	1	Box, Fiberglass	
5A	7020246	2	Latch	
6	1001103667	1	Module, Ground Control (Re-calibration Required when Replaced)	
7	1670829	1	Bezel	
8	1706712	1	Decal - Ground Control Display	
9		Ref	Decal - Faceplate Options:	
9	1001102601	1	Decal - Faceplate 600S	
9	1001102602	1	Decal - Faceplate 660SJ	
10	2420172	1	Gauge, Hourmeter	
11	2760105	1	Housing, Display Light	
12	3300205	4	Nut, Retainer	
13	3300408	4	Locknut, Plastic Insert	
14	77143013	11	Nut 1/4in-20NC, Whiz Lock	
15	3539219	1	Plate, Reinforcement	
16	3740049	2	Relay	
17	3900268	AR	Screw, Flange #10 x 1/2in	
18	3910804	6	Screw #8-32NC x 1/4in	
19	4060906	1	Shield, Toggle Switch	
20		Ref	Shim Options:	
20	4070987	1	Shim (.125in)	
20	1001151393	1	Shim (.063in)	
21	4360328	Ref	Switch, Toggle	
21	4360328	6	Switch, Toggle 600S	
21	4360328	7	Switch, Toggle 660SJ	
22		Ref	Switch, Key Options:	
22	4360469	1	All Specs Except CE Specs	
22	4360470	1	CE Specs	
22A	2860030	1	Key Replacement	

ITEM	PART NUMBER	QTY	DESCRIPTION	REV
23	4360475	1	Switch, Emergency Stop	
24	4360476	1	Switch, Contact Block	
25	4460426	1	Terminal, Strain Relief	
26	4460470	1	Nut, Terminal	
27	4460471	1	Lockwasher, Terminal	
28	4460488	6	Mounting Base, Terminal	
29	4460526	1	Connector, Strain Relief	
30	4740444	AR	Washer, Special	
31	4751400	12	Flatwasher 1/4in Regular	
32	4761400	6	Lockwasher 1/4in	
33	0641506	4	Bolt 5/16in-18NC x 3/4in	
34	4923206	1	Harness, Valve (See ELECTRICAL SECTION for Breakdown) (Not Shown)	
35		Ref	Harness, Engine Options (See ELECTRICAL SECTION for Breakdown) (Not Shown):	
35	1001110361	1	Deutz D2011 Engine	
35	1001145046	1	Deutz TD2.9L4 Engine	
35	1001110359	1	GM Engine **(SN 0300171769 through 0300226220)**	
35	1001154388	1	GM Engine **(SN 0300226221 through 0300235167)**	
36		Ref	Harness, Ground Control Box Options (See ELECTRICAL SECTION for Breakdown) (Not Shown):	
36	1001108602	1	Deutz D2011 Engine	
36	1001145993	1	Deutz TD2.9L4 Engine	
36	1001108602	1	GM Engine	
38	4460496	1	Lockwasher, Terminal	
39	4460497	1	Nut, Terminal	
40	0641407	1	Bolt 1/4in-20NC x 7/8in	
41	1001106736	1	Cap, Dust	

FIGURE 2-19. GROUND CONTROL BOX ASSEMBLY (STEEL BOX)

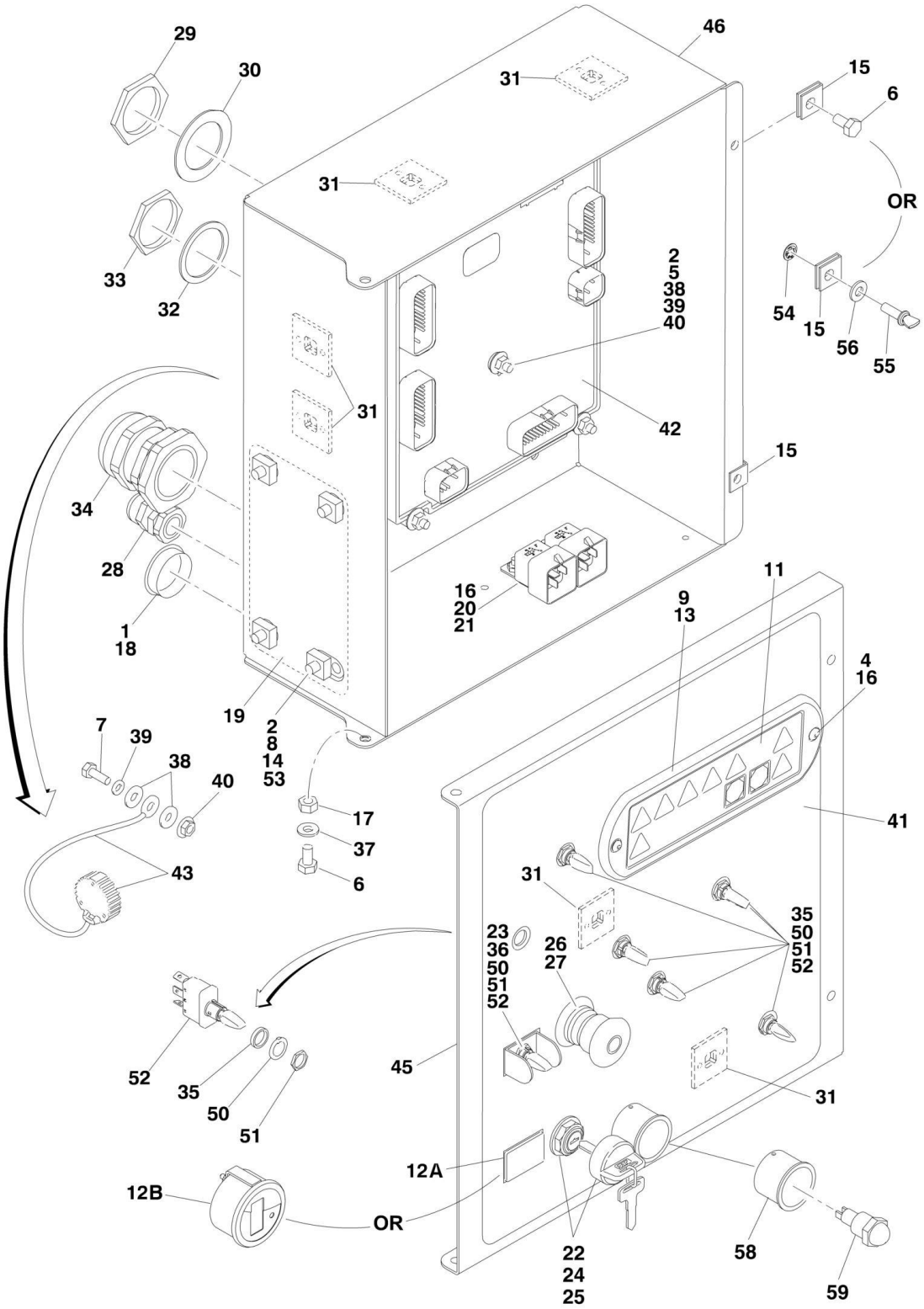

FIGURE 2-19. GROUND CONTROL BOX ASSEMBLY (STEEL BOX)

ITEM	PART NUMBER	QTY	DESCRIPTION	REV
		Ref	**Note: Only Available on USA Built Machines.**	
		Ref	**GROUND CONTROL BOX ASSEMBLY**	
		Ref	**Ground Control Box Assembly - 600S:**	
	1001154652	Ref	**Deutz D2011 Engine (All Specs except CE Specs) (SN 0300171769 through 0300208280)**	E
	1001191873	Ref	**Deutz D2011 Engine (All Specs except CE Specs) (SN 0300208281 through 0300235167)**	B
	1001154655	Ref	**Deutz D2011 Engine (CE Specs) (SN 0300171769 through 0300200771)**	E
	1001188010	Ref	**Deutz D2011 Engine (CE Specs) (SN 0300200772 through 0300208280)**	D
	1001191865	Ref	**Deutz D2011 Engine (CE Specs) (SN 0300208281 through 0300235167)**	C
	1001165550	Ref	**Deutz TD2.9L4 Engine (SN 0300171769 through 0300208280)**	E
	1001191870	Ref	**Deutz TD2.9L4 Engine (SN 0300208281 through 0300235167)**	B
	1001154651	Ref	**GM Engine (SN 0300171769 through 0300208280)**	F
	1001191872	Ref	**GM Engine (SN 0300208281 through 0300235167)**	B
		Ref	**Ground Control Box Assembly - 660SJ:**	
	1001154654	Ref	**Deutz D2011 Engine (All Specs except CE Specs) (SN 0300171769 through 0300208280)**	E
	1001191914	Ref	**Deutz D2011 Engine (All Specs except CE Specs) (SN 0300208281 through 0300235167)**	A
	1001154656	Ref	**Deutz D2011 Engine (CE Specs) (SN 0300171769 through 0300200771)**	E
	1001188011	Ref	**Deutz D2011 Engine (CE Specs) (SN 0300200772 through 0300208280)**	E
	1001191864	Ref	**Deutz D2011 Engine (CE Specs) (SN 0300208281 through 0300235167)**	C
	1001165549	Ref	**Deutz TD2.9L4 Engine (SN 0300171769 through 0300208280)**	E
	1001191871	Ref	**Deutz TD2.9L4 Engine (SN 0300208281 through 0300235167)**	B
	1001154653	Ref	**GM Engine (SN 0300171769 through 0300208280)**	F
	1001191874	Ref	**GM Engine (SN 0300208281 through 0300235167)**	A
1	0100009	AR	Sealant	
2	0100011	AR	Compound, Locking	
3	0100048	AR	Grease, Dielectric (Not Shown)	
4	0630518	2	Capscrew, Button Head	
5	0630548	5	Bolt	
6	0641404	AR	Bolt 1/4in-20NC x 1/2in	
7	0641407	1	Bolt 1/4in-20NC x 7/8in	
8	0641506	4	Bolt 5/16in-18NC x 3/4in	
8	0641507	4	Bolt 5/16in-18NC x 7/8in	
9	1670829	1	Bezel	
11	1706712	1	Decal - Ground Control Display	
12A	2420172	1	Gauge, Hourmeter	
12B	1001109503	1	Gauge, Hourmeter	
13	2760105	1	Housing, Display Light	
14	3300205	4	Nut, Retainer	
15	3300353	2	Nut, Tinnerman	
16	3300408	4	Locknut, Plastic Insert	
17	3311405	2	Locknut 1/4in-20NC	
18	3520035	1	Plug	
19	3539219	1	Plate, Reinforcement **(SN 0300171769 through 0300204683)**	

ITEM	PART NUMBER	QTY	DESCRIPTION	REV
20	3740049	2	Relay	
21	3900268	2	Screw, Flange #10 x 1/2in	
22	3910804	6	Screw #8-32NC x 1/4in	
23	4060906	1	Shield, Toggle Switch	
24	4070991	1	Shim (.125in)	
25		Ref	Switch, Key Options:	
25	4360469	1	All Specs Except CE Specs	
25	4360470	1	CE Specs **(SN 0300171769 through 0300200771)**	
25	4360469	1	CE Specs **(SN 0300200772 through 0300235167)**	
25A	2860030	1	Key Replacement	
26	4360475	1	Switch, Emergency Stop	
26	7020175	1	Cap	
26	7020176	1	Block, Contact	
27	4360476	1	Switch, Contact Block	
28	4460426	1	Terminal, Strain Relief	
29	4460470	1	Nut, Terminal **(SN 0300171769 through 0300219038)**	
29	1001205043	1	Nut, Terminal **(SN 0300219039 through 0300235167)**	
30	4460471	1	Washer, Terminal **(SN 0300171769 through 0300219038)**	
30	1001205044	1	Washer, Terminal **(SN 0300219039 through 0300235167)**	
31	4460488	6	Mounting Base, Terminal	
32	4460496	1	Washer, Terminal **(SN 0300171769 through 0300219038)**	
32	1001125784	1	Washer, Terminal **(SN 0300219039 through 0300235167)**	
33	4460497	1	Nut, Terminal **(SN 0300171769 through 0300219038)**	
33	1001125785	1	Nut, Terminal **(SN 0300219039 through 0300235167)**	
34	4460526	1	Connector, Strain Relief	
35	4740397	AR	Washer, Spacer	
36	4740444	1	Washer, Special	
37	4740518	2	Washer, Special	
38	4751400	12	Flatwasher 1/4in Regular	
39	4761400	6	Lockwasher 1/4in	
40	77143013	11	Nut 1/4in-20NC, Whiz Lock	
41		Ref	Decal - Faceplate Options:	
41	1001102601	1	Decal - Faceplate 600S (All Specs except CE Spec)	
41	1001102601	1	Decal - Faceplate 600S (CE Spec) **(SN 0300171769 through 0300200771)**	
41	1001180091	1	Decal - Faceplate 600S (CE Spec) **(SN 0300200772 through 0300235167)**	
41	1001102602	1	Decal - Faceplate 660SJ (All Specs except CE Spec)	
41	1001102602	1	Decal - Faceplate 660SJ (CE Spec) **(SN 0300171769 through 0300200771)**	
41	1001180092	1	Decal - Faceplate 660SJ (CE Spec) **(SN 0300200772 through 0300235167)**	
42	1001103667	1	Module, Ground Control (Re-calibration Required when Replaced)	
43	1001106736	1	Cap, Dust	
44		Ref	Harness, Ground Control Box Options (See ELECTRICAL SECTION for Breakdown) (Not Shown):	
44	1001108602	1	Deutz D2011 Engine (All Specs expect CE Spec) **(SN 0300171769 through 0300208280)**	
44	1001192611	1	Deutz D2011 Engine (All Specs expect CE Spec) **(SN 0300208281 through 0300235167)**	
44	1001108602	1	Deutz D2011 Engine (CE Spec) **(SN 0300171769 through 0300200771)**	

ITEM	PART NUMBER	QTY	DESCRIPTION	REV
44	1001185897	1	Deutz D2011 Engine (CE Spec) **(SN 0300200772 through 0300208280)**	
44	1001192611	1	Deutz D2011 Engine (CE Spec) **(SN 0300208281 through 0300235167)**	
44	1001145993	1	Deutz TD2.9L4 Engine	
44	1001108602	1	GM Engine	
45		Ref	Lid, Box Options:	
45	1001152174	1	Lid (All Specs expect CE Spec) **(SN 0300171769 through 0300208280)**	
45	1001188041	1	Lid (All Specs expect CE Spec) **(SN 0300208281 through 0300235167)**	
45	1001152174	1	Lid (CE Spec) **(SN 0300171769 through 0300200771)**	
45	1001188041	1	Lid **(SN 0300200772 through 0300235167)**	
46	1001169234	1	Box, Control	
47		Ref	Harness, Engine Options (See ELECTRICAL SECTION for Breakdown) (Not Shown):	
47	1001154390	1	Deutz D2011 Engine **(SN 0300171769 through 0300208280)**	
47	1001191868	1	Deutz D2011 Engine **(SN 0300208281 through 0300235167)**	
47	1001164563	1	Deutz TD2.9L4 Engine **(SN 0300171769 through 0300208280)**	
47	1001191866	1	Deutz TD2.9L4 Engine **(SN 0300208281 through 0300235167)**	
47	1001154388	1	GM Engine **(SN 0300171769 through 0300208280)**	
47	1001191867	1	GM Engine **(SN 0300208281 through 0300235167)**	
48	1001154393	1	Harness, Valve (See ELECTRICAL SECTION for Breakdown) (Not Shown)	
50	1001155043	AR	Washer, Special	
51	1001155044	AR	Nut, Special	
52	1001155045	AR	Switch, Toggle	
53	4891500	4	Washer 5/16	
54	1001188874	2	Nut	
55	1001103308	2	Screw 1/4	
56	4711400	2	Washer 1/4	
57	3520031	2	Plug	
58	1001176469	1	Shroud (CE Spec) **(SN 0300200772 through 0300235167)**	
59	4360387	1	Switch, Push Button (CE Spec) **(SN 0300200772 through 0300235167)**	

FIGURE 2-20. ELECTRICAL OPTIONS INSTALLATION (TURNTABLE MOUNTED)

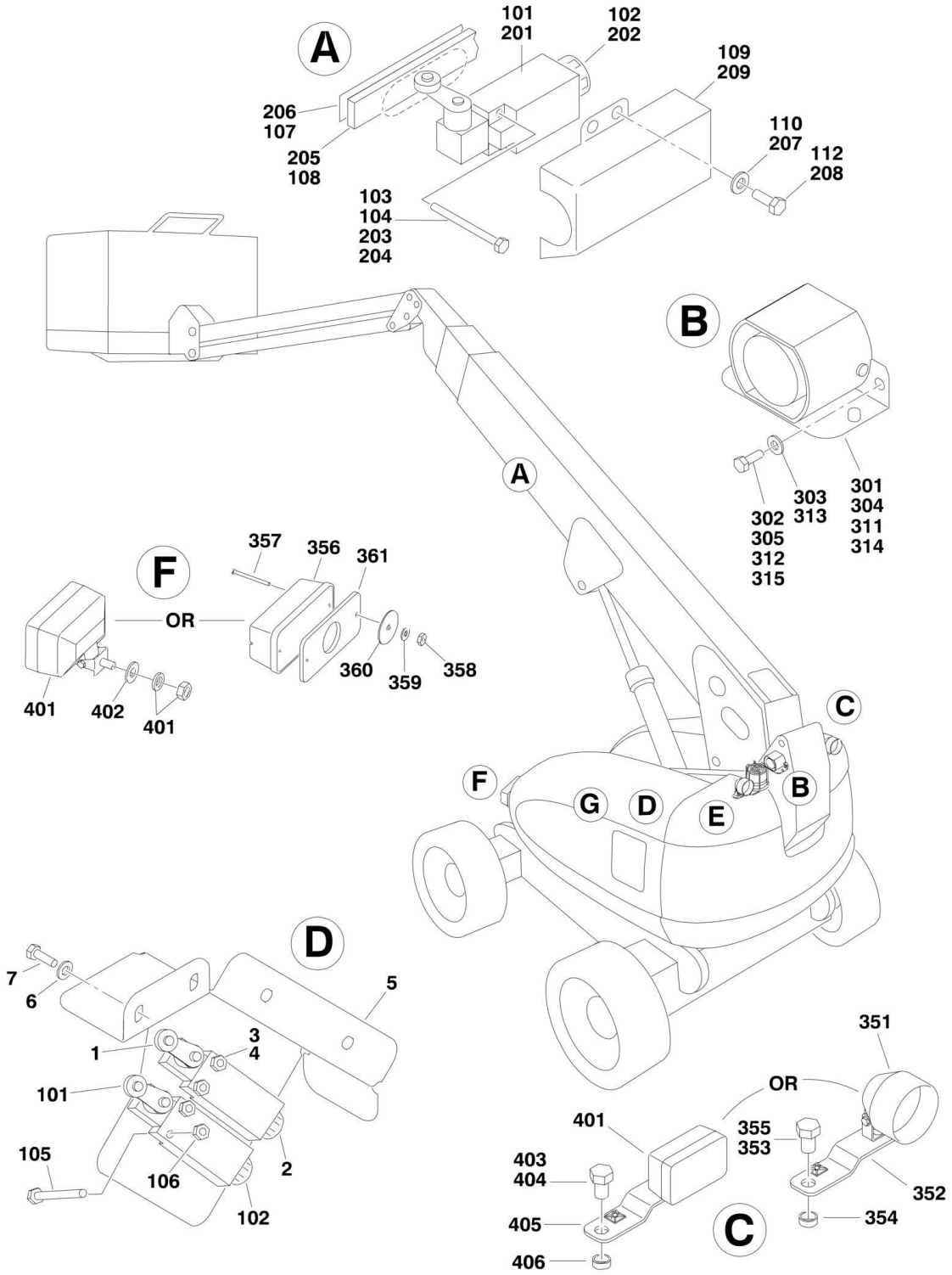

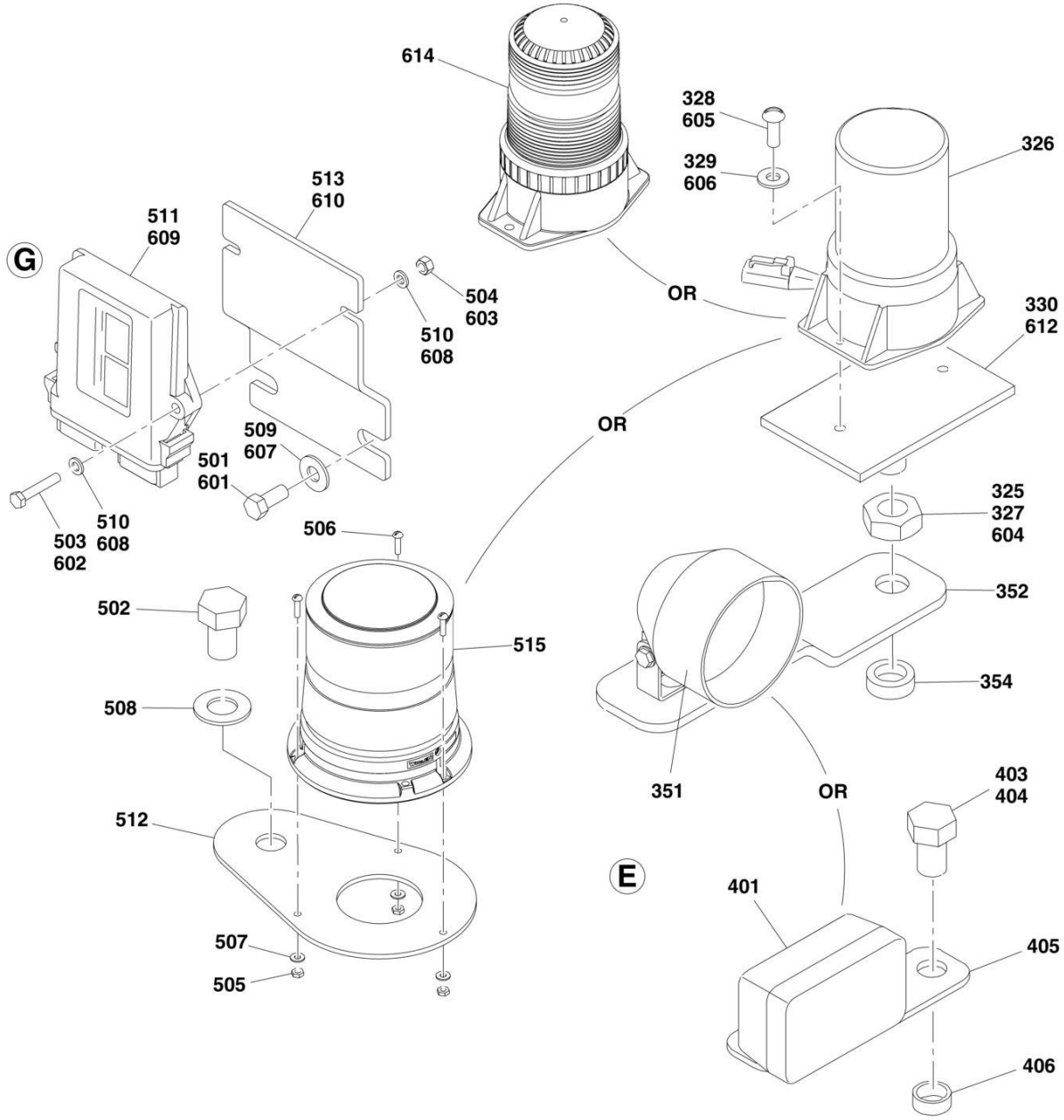
614
328
605
329
606
326
513
610
511
609
G
504
603
510
608
OR
330
612
OR
509
607
501
601
510
608
503
602
506
325
327
604
502
352
515
354
508
351
OR
403
404
512
E
401
507
505
405
406

FIGURE 2-20. ELECTRICAL OPTIONS INSTALLATION (TURNTABLE MOUNTED)

ITEM	PART NUMBER	QTY	DESCRIPTION	REV
	0255335	Ref	**LIMIT SWITCH INSTALLATION - ABOVE HORIZONTAL (ALL SPECS EXCEPT CE SPEC)**	G
1	4360578	1	Switch, Limit	
2	4460968	1	Connector, Strain Relief	
3		Ref	Capscrew Options:	
3	3931028	2	Capscrew, Socket Head #8-32NC x 1-3/4in	
3	3930828	2	Capscrew, Socket Head #10-24NC x 1-3/4in	
4		Ref	Locknut Options:	
4	3310805	2	Locknut #8-32NC	
4	3311005	2	Locknut #10-24NC	
5	1670818	1	Cover, Limit Switch	
6	4751400	4	Flatwasher 1/4in Regular	
7	3931408	4	Capscrew 1/4in-20NC x 1in	
	0255698	Ref	**LIMIT SWITCHES INSTALLATION - DUAL CAPACITY (600S ALL SPECS EXCEPT CE AND LATIN AMERICAN SPECS)**	7-D
101	4360578	1	Switch, Limit	
102	4460968	2	Connector, Strain Relief	
103	0100035	AR	Compound, Locking	
104	3930816	2	Capscrew, Socket Head #8-32NC x 1in	
105	3930828	2	Capscrew, Socket Head #8-32NC x 1-3/4in	
106	3310805	2	Locknut #8-32NC	
107	4420054	9 ft/2.7m	Tape, Double Sided	
108	1001106479	1	Bar, Fiberglass	
109	1670824	1	Cover, Limit Switch	
110	4751400	4	Flatwasher 1/4in Regular	
112	0641403	4	Bolt 1/4in-20NC x 3/8in	
	0256305	Ref	**TRANSPORT SWITCH INSTALLATION (CE SPEC)**	6
201	4360578	1	Switch, Limit	
202	4460968	1	Connector, Strain Relief	
203	3930828	2	Capscrew, Socket Head #8-32NC x 1-3/4in	
204	3310805	2	Locknut #8-32NC	
205	1001106481	1	Bar, Fiberglass	
206	4420060	AR	Tape, Double-Sided	
207	4751400	4	Flatwasher 1/4in Regular	
208	0641403	4	Bolt 1/4in-20NC x 3/8in	
209	3380535	1	Cover, Limit Switch	
		Ref	**ALARM INSTALLATIONS**	
		Ref	**USA Built Machines:**	
	0270833	Ref	**Alarm Installations (SN 0300171769 through 0300181890)**	D
	0270833	Ref	**China Built Machines**	D
301		Ref	Alarm/Harness Assembly	
301	0140032	1	Alarm	
301	2820035	6 in/15cm	Loom	
301	4460424	1	Plug	
301	4460268	2	Socket	
302	0641406	2	Bolt 1/4in-20NC x 3/4in	
303	4711400	2	Flatwasher 1/4in Thin	
304	0100048	AR	Sealant, Silicone	
305	0100011	AR	Compound, Locking	
		Ref	**ALARM INSTALLATIONS**	

ITEM	PART NUMBER	QTY	DESCRIPTION	REV
	1001160074	Ref	**USA Built Machines (SN 0300181891 through 0300235167)**	A
311	0140044	1	Alarm/Motion/Descent/Horn	
312	0641406	2	Bolt 1/4in-20NC x 3/4in	
313	4711400	2	Flatwasher 1/4in Thin	
314	0100048	AR	Sealant, Silicone	
315	0100011	AR	Compound, Locking	
		Ref	**STROBE LIGHT INSTALLATIONS (AMBER) (OPTIONAL)**	
		Ref	**USA Built Machines:**	
	1001149955	Ref	**Strobe Light Installations (SN 0300171769 through 0300181890)**	A
	1001160077	Ref	**Strobe Light Installations (SN 0300181891 through 0300235167)**	A
	1001149955	Ref	**China Built Machines**	A
	1001150406	1	Strobe Light Sub-Assembly (Amber)	B
325	0100035	AR	Compound, Locking	
326	2920161	1	Strobe Light/Harness Assembly	
326	7016319	1	Bulb	
326	7016372	1	Lens	
327	3312602	1	Nut, Jam 1in-8NC	
328	3900085	2	Screw #10-32 x 1/2in	
329	4751000	2	Flatwasher 1/4in Thin	
330	1001149994	1	Mount, Strobe	
331	1001149818	1	Harness, Strobe Light Options (Not Shown - See ELECTRICAL SECTION for Breakdown):	
331		Ref	USA Built Machines	
331	1001149818	1	Harness, Strobe Light **(SN 0300171769 through 0300181890)**	
331	Not Required	0	Harness, Strobe Light **(SN 0300181891 through 0300235167)**	
331	1001149818	1	China Built Machines	
	1001151306	Ref	**LIGHTS INSTALLATIONS (OPTIONAL)**	B
351	2920110	2	Headlight	
352	0902206	2	Bracket, Mounting	
353	0642612	1	Bolt 1in-8NC x 1-1/2in	
354	4220162	2	Spacer	
354	4892600	4	Washer 1in Hardened	
355	0100011	AR	Compound, Locking	
356	2920113	2	Taillight	
357	3911040	4	Screw, Machine #10-24NC x 2-1/2in	
358	3311005	4	Nut #10-24NC	
359	4751000	4	Flatwasher #10 Regular	
360	4740362	4	Washer, Fender	
361	3960461	2	Gasket	
363	4240032	AR	Tie-Strap (Not Shown)	
364	4460234	AR	Mount, Tie-Strap (Not Shown)	
365	4360522	1	Switch, Push Button (Not Shown - Located on Console)	
366	1705170	1	Decal - Lights (Not Shown - Located on Console)	
367	3311605	4	Nut 3/8in-16NC	
	1001151307	Ref	**CHASSIS ILLUMINATION LIGHT INSTALLATION (OPTIONAL)**	B
401	2920157	4	Lamp, Worklight	
402	4740546	4	Washer, Rubber	
403	0100011	AR	Compound, Locking	

ITEM	PART NUMBER	QTY	DESCRIPTION	REV
404	0642612	2	Bolt 1in-8NC x 1-1/2in	
405	0902206	2	Bracket, Light Mounting	
406	4220162	2	Spacer	
408	4360522	1	Switch, Push Button (Not Shown - Located on Console)	
409	4240032	AR	Strap, Tie (Not Shown)	
410	4460234	AR	Mount, Cable (Not Shown)	
411	1705170	1	Decal - Lights (Not Shown - Located on Console)	
	1001188858	Ref	**STROBE LIGHT INSTALLATION (BLUE) (OPTIONAL) (SN 0300171769 through 0300225192)**	B
	1001188858	Ref	**STROBE LIGHT INSTALLATION (BLUE) (OPTIONAL) (SN B300000970 through B300001692)**	B
	1001207306	Ref	**STROBE LIGHT INSTALLATION (RED) (OPTIONAL) (SN 0300171769 through 0300217293)**	B
	1001207306	Ref	**STROBE LIGHT INSTALLATION (RED) (OPTIONAL) (SN B300000970 through B300001692)**	B
501	0641607	2	Bolt 3/8 x 7/8	
502	0642612	1	Bolt 1 x 1-1/2	
503	0700615	2	Bolt M6 x 35	
504	3290607	2	Nut M6	
505	3311005	3	Nut #10	
506	3911012	3	Screw #10 x 3/4	
507	4711000	3	Washer #10	
508	4712600	1	Washer 1	
509	4751600	2	Washer 3/8	
510	4811700	4	Washer M6	
511	1001142683	1	Module, Beacon Light	
512	1001142694	1	Bracket	
513	1001142722	1	Bracket	
514	1001142736	1	Harness, Beacon Control (Module to Light) (Not Shown - See ELECTRICAL SECTION for Breakdown)	
515	1001143431	1	Light, Strobe (Blue)	
515	1001197067	1	Light, Strobe (Red)	
516	1001150944	1	Harness, Beacon Control (Module to Ground Control Box) (Not Shown - See ELECTRICAL SECTION for Breakdown)	
	1001205495	Ref	**STROBE LIGHT AND HARNESS INSTALLATION (BLUE) (OPTIONAL) (SN 0300225193 through 0300235167)**	B
	1001205495	Ref	**STROBE LIGHT AND HARNESS INSTALLATION (BLUE) (OPTIONAL) (SN B300001693 through B300002654)**	D
	1001209870	Ref	**STROBE LIGHT AND HARNESS INSTALLATION (RED) (OPTIONAL) (SN 0300217294 through 0300235167)**	B
	1001209887	Ref	**STROBE LIGHT AND HARNESS INSTALLATION (RED) (OPTIONAL) (SN B300001693 through B300002654)**	B
601	0641607	2	Bolt 3/8 x 7/8	
602	0700615	2	Bolt M6 x 35	
603	3290607	2	Nut M6	
604	3312602	1	Nut 1	
605	3900085	2	Screw #10 x 1/2	
606	4751000	2	Washer #10	
607	4751600	2	Washer 3/8	
608	4811700	4	Washer M6	
609	1001142683	1	Module, Beacon Light	
610	1001142722	1	Bracket	
611	1001142736	1	Harness, Beacon Control (Module to Light) (Not Shown - See ELECTRICAL SECTION for Breakdown)	

ITEM	PART NUMBER	QTY	DESCRIPTION	REV
612	1001149994	1	Mount, Strobe	
614	1001200910	1	Light, Strobe (Blue)	
614	1001207004	1	Light, Strobe (Red)	
615	4240032	AR	Tie-Strap (Not Shown)	
616	4460488	AR	Mount, Tie-Strap (Not Shown)	
617	1001217005	1	Blue Beacon Kit (Not Shown – Includes Items 604-606, 612 & 614)	

FIGURE 2-21. ENGINE TRAY JACK INSTALLATION (OPTIONAL)

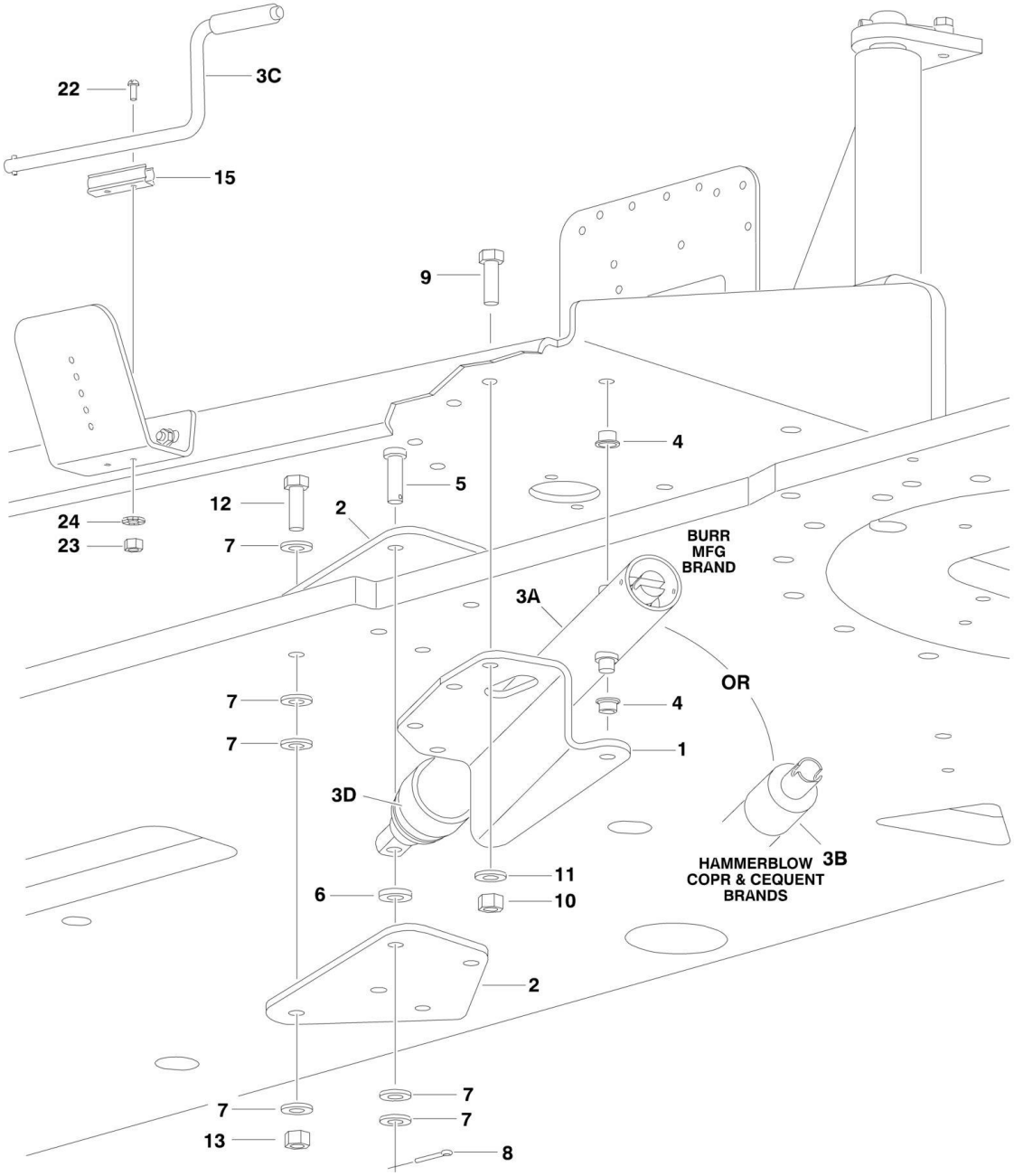

FIGURE 2-21. ENGINE TRAY JACK INSTALLATION (OPTIONAL)

ITEM	PART NUMBER	QTY	DESCRIPTION	REV
	0255881	Ref	**ENGINE TRAY JACK INSTALLATION**	3-G
1	3537445	1	Bracket	
2	3537446	2	Bracket	
3	2840016	1	Hydraulic Jack Assembly Options:	F
3A	2840016	1	Burr Manufacturing Brand	
3B	2840016	1	Hammerblow Corp and Cequent Brands	
3C		Ref	Handle Options:	
3C	7016374	1	Burr Manufacturing Brand	
3C	7024598	1	Hammerblow Corp and Cequent Brands	
3D	7016322	1	Wiper (Burr Manufacturing Brand Only)	
4	0962051	2	Bushing, Flanged	
5	3430816	1	Pin, Clevis	
6	4891800	1	Flatwasher 1/2in Hardened	
7	4711800	6	Flatwasher 1/2in Thin	
8	3450404	1	Pin, Cotter 1/8in x 1in	
9	0641609	4	Bolt 3/8in-16NC x 1-1/8in	
10	3311605	4	Locknut 3/8in-16NC	
11	4891600	4	Flatwasher 3/8in Hardened	
12	0641818	4	Bolt 1/2in-13NC x 2-1/4in	
13	3311805	4	Locknut 1/2in-13NC	
15	1380147	1	Clip, Spring	
22	3910608	2	Screw #6-32NC x 1in	
23	3310601	2	Nut #6-32NC	
24	4770600	2	Starwasher #6	

FIGURE 2-22. HOODS (ABS) AND LIFTING PLATE INSTALLATIONS

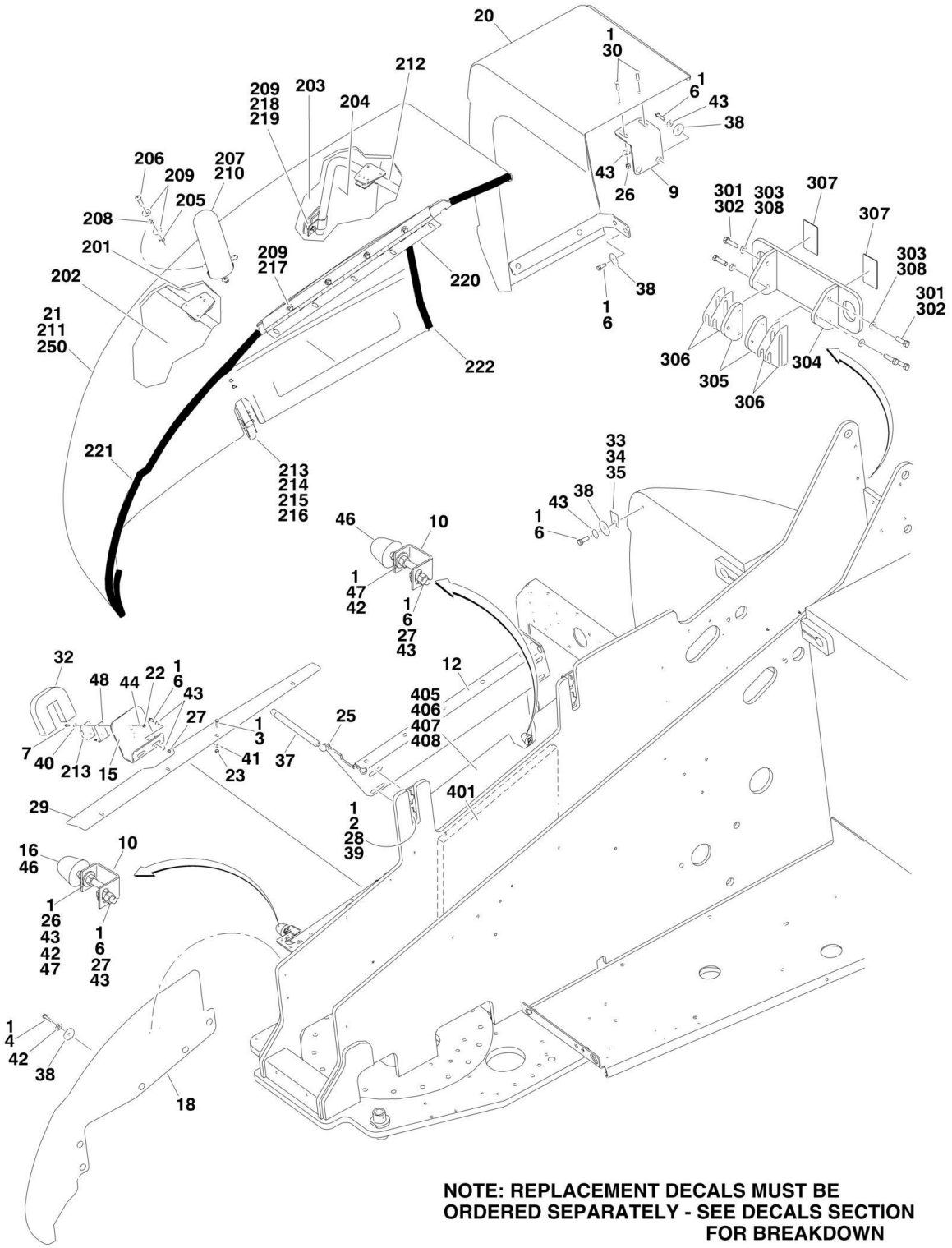

NOTE: REPLACEMENT DECALS MUST BE ORDERED SEPARATELY - SEE DECALS SECTION FOR BREAKDOWN

NOTE: REPLACEMENT DECALS MUST BE ORDERED SEPARATELY - SEE DECALS SECTION FOR BREAKDOWN

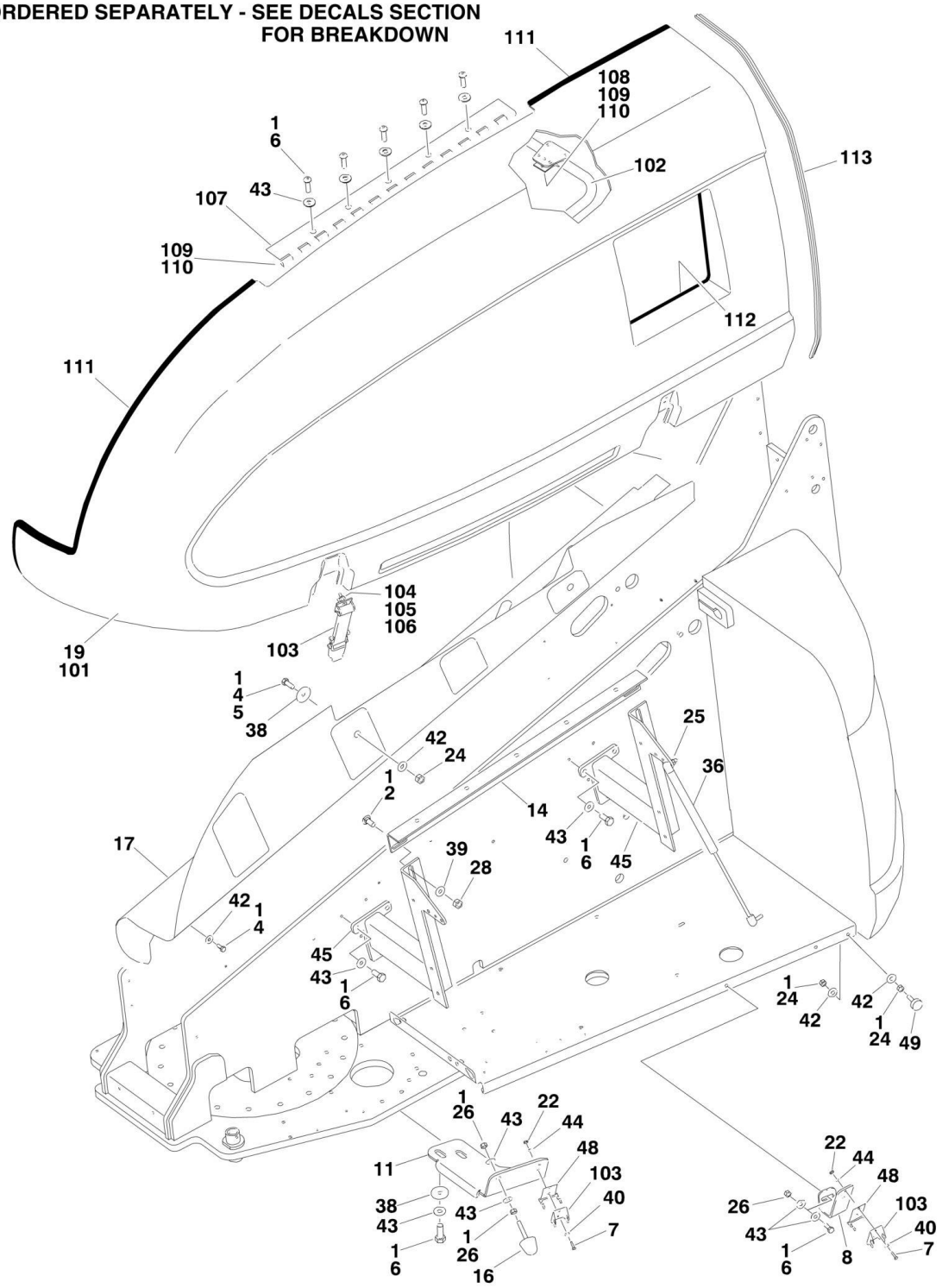

FIGURE 2-22. HOODS (ABS) AND LIFTING PLATE INSTALLATIONS

ITEM	PART NUMBER	QTY	DESCRIPTION	REV
		Ref	**Note: Only Available on Australian and CE Specs.**	
		Ref	**Note: Steel Hood Replacement Kits are available for machines built with Deutz engines (Purchase p/n 1001126286) or GM engines (Purchase p/n 1001126287).**	
		Ref	**Note: ABS Hoods Not Available on Machines with GM Engines.**	
	0274751	Ref	**HOODS INSTALLATIONS**	J
1	0100011	AR	Compound, Locking	
2	0630507	6	Bolt, Carriage 1/2in-13NC x 1-1/4in	
3	0641406	4	Bolt 1/4in-20NC x 3/4in	
4	0641506	14	Bolt 5/16in-18NC x 3/4in	
6	0641608	28	Bolt 3/8in-16NC x 1in	
7	0721006	6	Bolt #10-24NC x 3/4in	
8	0902143	1	Bracket	
9	0902161	1	Bracket, Hood Spacer	
10	0902219	2	Bracket, Bumper	
11	0902223	1	Bracket, Latch	
12	0902351	1	Bracket, Hood Mount **(SN 0300171769 through 0300216623)**	
12	1001207558	1	Bracket, Hood Mount **(SN 0300216624 through 0300235167)**	
12	0902351	1	Bracket, Hood Mount **(SN B300000970 through B300001524)**	
12	1001207558	1	Bracket, Hood Mount **(SN B300001525 through B300002654)**	
14	0902416	1	Bracket, Hood Mount	
15	0902491	1	Bracket, Hood Latch	
16	0940071	AR	Bumper (3/8NC)	
17	1670771	1	Cover	
18		Ref	Cover, Engine/Turntable Options:	
18		Ref	USA Built Machines	
18	1670779	1	Cover, Engine/Turntable **(SN 0300171769 through 0300181890)**	
18	1001158206	1	Cover, Engine/Turntable **(SN 0300181891 through 0300235167)**	
18	1001158206	1	China Built Machines	
19	1671228	1	Hood, Tank Side	
20	1671233	1	Hood, Engine Spacer	
21	1671247	1	Hood, Engine Side	
22	3311001	6	Nut #10-24NC	
23	3311405	4	Locknut 1/4in-20NC	
24	3311501	6	Nut 5/16in-18NC	
25	3311505	3	Locknut 5/16in-18NC	
26	3311601	AR	Nut 3/8in-16NC	
27	3311605	5	Locknut 3/8in-16NC	
28	3311805	6	Locknut 1/2in-13NC	
29	3571712	1	Plate, Seal	
30	3900232	2	Screw, Button Head 3/8in-16NC x 1-1/4in	
31	3960389	3.5 ft /1.1m	Seal	
32	3960470	1	Seal	
33	4070410	1	Shim 1/16in	
34	4070411	AR	Shim 1/8in	
35	4070412	AR	Shim 3/16in	
36	4160139	2	Spring, Gas (Tank Side)	

ITEM	PART NUMBER	QTY	DESCRIPTION	REV
37	4160143	1	Spring, Gas (Engine Side)	
38	4740076	16	Washer, Fender	
39	4740171	6	Flatwasher, Hardened	
40	4751000	6	Flatwasher #10 Regular	
41	4751400	4	Flatwasher 1/4in Regular	
42	4751500	AR	Flatwasher 5/16in Regular	
43	4751600	AR	Flatwasher 3/8in Regular	
44	4761000	6	Lockwasher #10	
45	4845356	2	Hood Mount Weldment	
46	0940088	AR	Bumper (5/16NF)	
47	3321501	AR	Nut 5/16in-24NF	
48	2940188	3	Latch, Spring Clip	
49	0940049	1	Stopper, Hood	
	1671228	Ref	**HOOD TANK SIDE**	A
101	1671231	1	Shell, Tank Side	
102	1671232	1	Frame, Tank Side	
103	2940088	2	Latch	
104	0721008	4	Bolt #10-24NC x 1in	
105	4751000	4	Flatwasher #10 Regular	
106	3311001	4	Nut #10-24NC	
107	2600233	1	Hinge	
108	1321384	4	Hold Down	
109	0641606	9	Bolt 3/8in-16NC x 3/4in	
110	4751600	9	Flatwasher 3/8in Regular	
111	3960464	7 ft/2.1m	Seal	
112	3960438	5 ft/1.5m	Seal	
113	3960462	4.5 ft /1.4m	Seal	
	1671247	Ref	**HOOD ENGINE SIDE OPTIONS:**	D
201	1001101391	1	Foam, Acoustical	
202	2820233	1	Insulation, Rear	
203	2820234	1	Insulation, Center	
204	2820235	1	Insulation, Rear	
205	3311605	3	Locknut 3/8in-16NC	
206	3900232	3	Screw, Button Head 3/8in-16NC x 1-1/4in	
207	1001101392	1	Gasket, Heat	
208	4740500	3	Washer, Special	
209	4751600	AR	Flatwasher 3/8in Regular	
210	4845411	1	Exhaust Stack Options:	
211	1671229	1	Shell, Engines Side (Use p/n 1001097961)	
212	1671230	1	Frame, Engine Side	
213	2940088	1	Latch	
214	0721008	2	Bolt #10-24NC x 1in	
215	4751000	2	Flatwasher #10 Regular	
216	3311001	2	Nut #10-24NC	
217	0641608	AR	Bolt 3/8in-16NC x 1in	
218	1321384	4	Hold Down	
219	0641606	4	Bolt 3/8in-16NC x 3/4in	
220	2600209	1	Hinge	
221	3960464	5.5 ft /1.7m	Seal	
222	3960462	5.1 ft	Seal	

ITEM	PART NUMBER	QTY	DESCRIPTION	REV
		/1.6m		
250	1001097961	1	Hood Kit (Engine Side) (Includes Items 201-204, 207, 208 & 211)	B
		Ref	**Note: Replacement Decals must be Purchased Separately - See DECALS SECTION.**	
	1001150400	Ref	**LIFTING PLATE INSTALLATION (SN 0300171769 through 0300228992)**	E
	1001218677	Ref	**LIFTING PLATE INSTALLATION (SN 0300228993 through 0300235167)**	B
	1001150400	Ref	**LIFTING PLATE INSTALLATION (SN B300000970 through B300001785)**	E
	1001218677	Ref	**LIFTING PLATE INSTALLATION (SN B300001786 through B300002654)**	B
301	0100019	AR	Compound, Locking	
302	0682018	6	Bolt 5/8in-11NC x 2-1/4in (Grade 8)	
302	0682020	6	Bolt 5/8in-11NC x 2-1/2in (Grade 8)	
303	4892000	6	Flatwasher 5/8in Hardened	
304	1001149928	1	Plate, Lifting **(SN 0300171769 through 0300228992, SN B300000970 through B300001785)**	
304	1001218679	1	Plate, Lifting **(SN 0300228993 through 0300235167, SN B300001786 through B300002654)**	
305	1001149952	NLA	Plate (Use p/n 1001218681) **(SN 0300171769 through 0300228992, SN B300000970 through B300001785)**	
305	1001218681	2	Plate **(SN 0300228993 through 0300235167, SN B300001786 through B300002654)**	
306	1001151501	AR	Shim **(SN 0300171769 through 0300228992, SN B300000970 through B300001785)**	
306	1001218682	AR	Shim **(SN 0300228993 through 0300235167, SN B300001786 through B300002654)**	
307	1703811	2	Decal - Lifting Lug	
308	4812300	AR	Flatwasher M16	
	0256823	Ref	**NOISE REDUCTION INSTALLATION**	3
401	2820078	1	Foam, Acoustical	
405	3539955	1	Plate, Baffle	
406	0641506	2	Bolt 5/16in-18NC x 3/4in	
407	4751500	2	Flatwasher 5/16in Regular	
408	0100011	AR	Compound, Locking	

FIGURE 2-23. HOODS (STEEL) AND LIFTING PLATE INSTALLATIONS (DEUTZ D2011 & GM ENGINES)

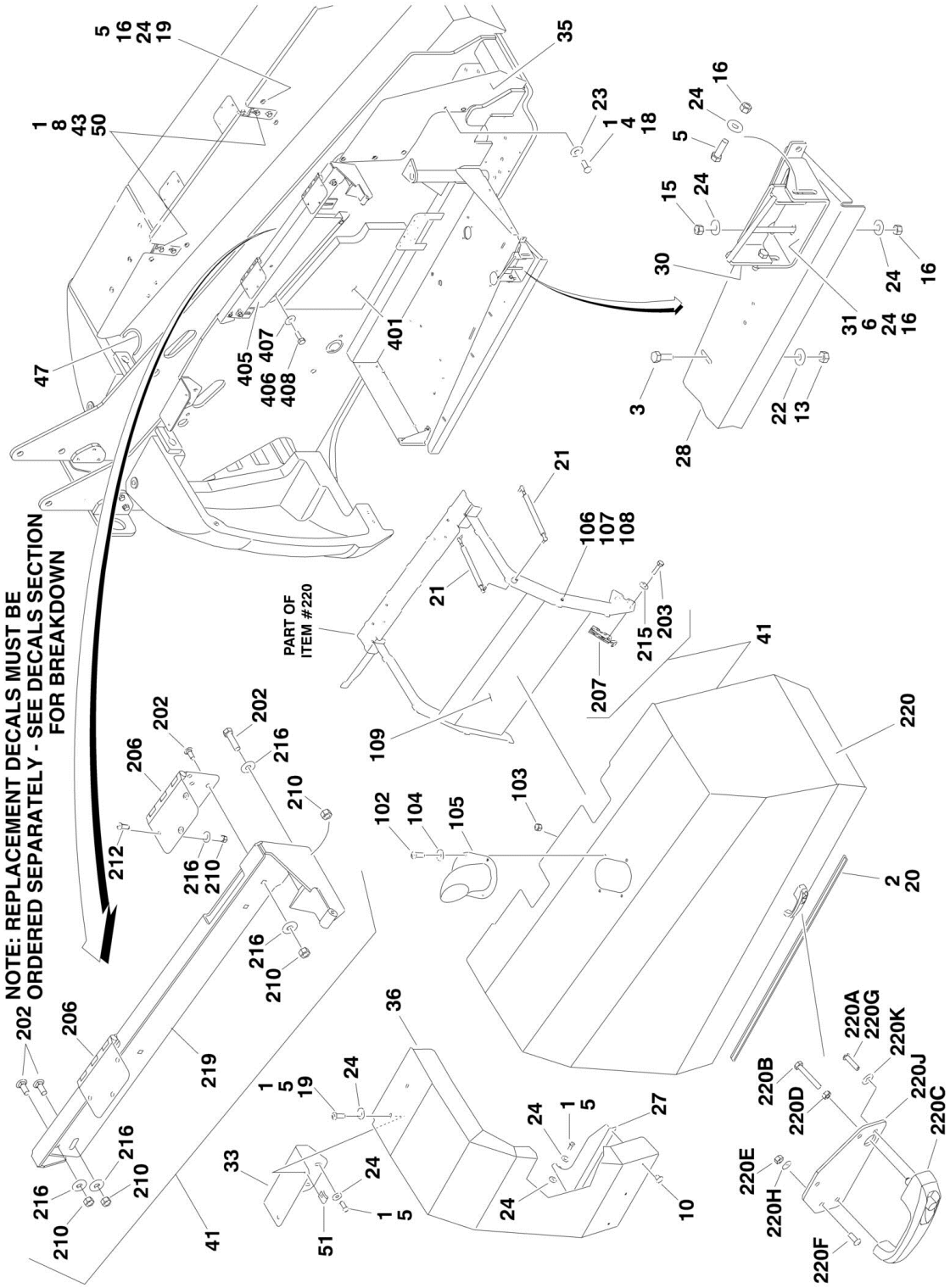

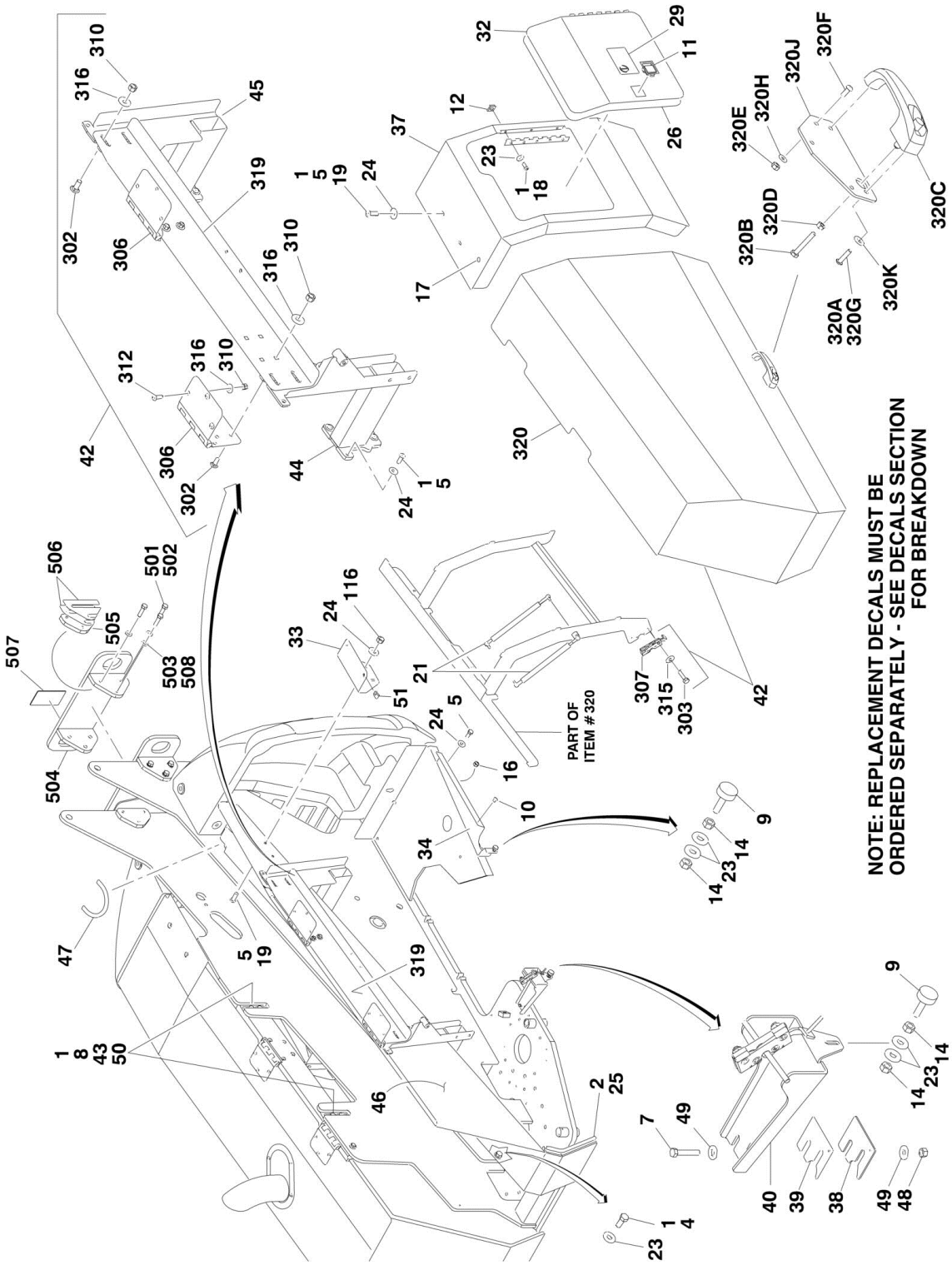
NOTE: REPLACEMENT DECALS MUST BE
ORDERED SEPARATELY - SEE DECALS SECTION
FOR BREAKDOWN
PART OF
ITEM # 320

FIGURE 2-23. HOODS (STEEL) AND LIFTING PLATE INSTALLATIONS (DEUTZ D2011 & GM ENGINES)

ITEM	PART NUMBER	QTY	DESCRIPTION	REV
	1001150241	Ref	**HOODS INSTALLATIONS**	C
1	0100011	AR	Compound, Locking	
2	0100081	AR	Adhesive	
3	0641406	4	Bolt 1/4in-20NC x 3/4in	
4	0641506	AR	Bolt 5/16in-18NC x 1in	
5	0641608	AR	Bolt 3/8in-16NC x 7/8in	
6	0641611	2	Bolt 3/8in-16NC x 1-3/8in	
7	0681618	2	Bolt 3/8in-16NC x 2-1/4in (Grade 8)	
8		Ref	Fastener Options:	
8	0641810	8	Bolt 1/2in-13NC x 1-1/4in	
8	0811812	8	Screw 1/2in-13NC x 1-1/2in	
9	0940049	2	Stopper, Hood	
10	2080040	6	Fastener, Huck	
11	2940045	1	Latch, Paddle	
12		Ref	Nut Options:	
12	3300364	3	Nut, Tinnerman	
12	3311505	3	Locknut 5/16in-18NC	
13	3311405	4	Locknut 1/4in-20NC	
14	3311501	4	Nut 5/16in-18NC	
15	3311601	1	Nut 3/8in-16NC	
16	3311605	AR	Locknut 3/8in-16NC	
17	3520030	1	Plug, Hole	
18	3900210	8	Screw, Button Head 5/16in-18 x 3/4in	
19	3900316	AR	Screw, Button Head 3/8in-16NC x 1in	
20	3960389	50 in/1.3m	Seal	
21	4160194	4	Spring, Gas	
22	4751400	4	Flatwasher 1/4in Regular	
23	4751500	AR	Flatwasher 5/16in Regular	
24	4751600	AR	Flatwasher 3/8in Regular	
25	1001110166	12 ft/30cm	Seal	
26	1001113047	77 in/2m	Seal	
27	1001117234	1	Bracket, Hood	
28	1001117249	1	Plate, Seal	
29	1001117307	1	Decal - Emergency Stop	
30	1001117523	1	Bracket, Striker Plate	
31	1001117525	1	Bracket, Striker Plate	
32	1001117598	1	Door	
33		Ref	Bracket, Hood Mounting Options:	
33	1001118264	2	Bracket, Hood Mounting **(SN 0300171769 through 0300179027)**	
33	1001157867	2	Bracket, Hood Mounting **(SN 0300179028 through 0300235167)**	
34	1001118550	1	Bracket, Hood Support	
35	1001118735	1	Plate, Filler	
36	1001119283	1	Hood, Fixed Engine Side	
		Ref	**Note: Replacement Decals must be Purchased Separately - See DECALS SECTION.**	
37	1001121061	1	Hood Assembly - Fixed Tank Side	
		Ref	**Note: Replacement Decals must be Purchased Separately - See DECALS SECTION.**	
38	1001121118	AR	Shim 3mm	

ITEM	PART NUMBER	QTY	DESCRIPTION	REV
39	1001121119	AR	Shim 1.5mm	
40	1001125097	1	Bracket, Striker	
41	1001150243	1	Hood Assembly - Engine Side (See Items 201-220K for Breakdown)	
		Ref	**Note: Customer must transfer Item 109 Heat Shield to Hood Assembly before putting machine back in service.**	
		Ref	**Note: Replacement Decals must be Purchased Separately - See DECALS SECTION.**	
42	1001150244	1	Hood Assembly - Tank Side (See Items 301-320H for Breakdown)	
		Ref	**Note: Replacement Decals must be Purchased Separately - See DECALS SECTION.**	
43	1001150260	4	Plate, Hinge	
44	1001150332	1	Bracket	
45	1001150333	1	Bracket	
46	1001150370	1	Trough, Power Track **(SN 0300171769 through 0300219809)**	
46	1001196770	1	Trough, Power Track **(SN 0300219810 through 0300235167)**	
46	1001150370	1	Trough, Power Track **(SN B300000970 through B300001747)**	
46	1001196770	1	Trough, Power Track **(SN B300001748 through B300002654)**	
47	90206194	10 in /24cm	Trim-Lock	
48	3271605	2	Locknut 3/8in-16NC	
49	4891600	4	Flatwasher 3/8in Hardened	
50	2080072	4	Retainer	
51	88662523	4	Nut, Tinnerman	
		Ref	**HOODS INSTALLATIONS**	
	1001151295	Ref	**Deutz D2011 Engines**	B
	1001151294	Ref	**GM Engines**	B
102	3311605	4	Locknut 3/8in-16NC	
103	3900316	AR	Screw 3/8 x 1	
103	0641608	AR	Bolt 3/8 x 1	
104	4751600	AR	Flatwasher 3/8in Regular	
105	1001116457	1	Stack, Exhaust	
106	0641406	3	Bolt 1/4in-20NC x 3/4in	
107	3311405	3	Locknut 1/4in-20NC	
108	4751400	3	Flatwasher 1/4in Regular	
109	1001150561	1	Shield, Heat	
	1001150243	Ref	**HOOD ENGINE SIDE ASSEMBLY**	C
		Ref	**Note: Customer must transfer Item 109 Heat Shield to Hood Assembly before putting machine back in service.**	
		Ref	**Note: Replacement Decals must be Purchased Separately - See DECALS SECTION.**	
202	0630485	8	Bolt, Carriage	
203	0641408	4	Bolt 1/4in-20NC x 1in	
206	2600280	2	Hinge **(SN 0300171769 through 0300219809)**	
206	1001186254	2	Hinge **(SN 0300219810 through 0300235167)**	
206	2600280	2	Hinge **(SN B300000970 through B300001747)**	
206	1001186254	1	Hinge **(SN B300001748 through B300002654)**	
207	2940173	1	Latch, Rotary	
210	3311605	14	Locknut 3/8in-16NC	
212	3900316	AR	Screw 3/8 x 1	
212	0641609	AR	Bolt 3/8 x 1-1/8	
215	4751400	4	Flatwasher 1/4in Regular	
216	4751600	AR	Flatwasher 3/8in Regular	

ITEM	PART NUMBER	QTY	DESCRIPTION	REV
219	1001150253	1	Bracket	
220	1001157208	1	Hood with Latch	D
		Ref	**Note: Customer must transfer Item 109 Heat Shield to Hood before putting machine back in service.**	
220A	0100011	AR	Compound, Locking	
220B	0700616	1	Bolt M6 x 40	
220B	0700617	1	Bolt M6 x 45	
220B	0700618	1	Bolt M6 x 50	
220C	2560187	1	Handle, Push Button	
220D	3290601	1	Nut M6	
220E	3311505	3	Locknut 5/16in-18NC	
220F	3900210	3	Screw, Button Head 5/16in-18NC x 3/4in	
220G	3900363	2	Screw, Button Head M6 x 25mm	
220H	4711500	5	Flatwasher 5/16in Thin	
220J	1001116290	1	Plate, Latch Mounting	
220K	4751400	4	Flatwasher 1/4in Regular	
	1001150244	Ref	**HOOD TANK SIDE ASSEMBLY**	C
		Ref	**Note: Replacement Decals must be Purchased Separately - See DECALS SECTION.**	
302	0630485	8	Bolt, Carriage	
303	0641408	4	Bolt 1/4in-20NC x 1in	
306	2600280	2	Hinge **(SN 0300171769 through 0300219809)**	
306	1001186254	2	Hinge **(SN 0300219810 through 0300235167)**	
306	2600280	2	Hinge **(SN B300000970 through B300001747)**	
306	1001186254	2	Hinge **(SN B300001748 through B300002654)**	
307	2940173	1	Latch, Rotary	
310	3311605	14	Locknut 3/8in-16NC	
312	3900316	AR	Screw 3/8 x 1	
312	0641608	AR	Bolt 3/8 x 1	
315	4751400	4	Flatwasher 1/4in Regular	
316	4751600	AR	Flatwasher 3/8in Regular	
317	1001116290	1	Plate, Latch Mounting	
319	1001150339	1	Bracket	
320	1001157209	1	Hood with Latch	B
320A	0100011	AR	Compound, Locking	
320B	0700616	1	Bolt M6 x 40mm	
320C	2560187	1	Handle, Push Button	
320D	3290601	1	Nut M6	
320E	3311505	3	Locknut 5/16in-18NC	
320F	3900210	3	Screw, Button Head 5/16in-18NC x 3/4in	
320G	3900363	2	Screw, Button Head M6 x 25mm	
320H	4711500	5	Flatwasher 5/16in Thin	
320J	1001116290	1	Plate, Latch Mounting	
320K	4751400	4	Flatwasher 1/4in Regular	
	0256823	Ref	**NOISE REDUCTION INSTALLATION (DIESEL MACHINES)**	3
401	2820078	1	Foam, Acoustical	
405	3539955	1	Plate, Baffle	
406	0641506	2	Bolt 5/16in-18NC x 3/4in	
407	4751500	2	Flatwasher 5/16in Regular	
408	0100011	AR	Compound, Locking	
	1001150400	Ref	**LIFTING PLATE INSTALLATION (SN 0300171769 through 0300228992)**	E

ITEM	PART NUMBER	QTY	DESCRIPTION	REV
	1001218677	Ref	**LIFTING PLATE INSTALLATION (SN 0300228993 through 0300235167)**	B
	1001150400	Ref	**LIFTING PLATE INSTALLATION (SN B300000970 through B300001785)**	E
	1001218677	Ref	**LIFTING PLATE INSTALLATION (SN B300001786 through B300002654)**	B
501	0100019	AR	Compound, Locking	
502	0682018	6	Bolt 5/8in-11NC x 2-1/4in (Grade 8)	
502	0682020	6	Bolt 5/8in-11NC x 2-1/2in (Grade 8)	
503	4892000	6	Flatwasher 5/8in Hardened	
504	1001149928	1	Plate, Lifting **(SN 0300171769 through 0300228992, SN B300000970 through B300001785)**	
504	1001218679	1	Plate, Lifting **(SN 0300228993 through 0300235167, SN B300001786 through B300002654)**	
505	1001149952	NLA	Plate (Use p/n 1001218618) **(SN 0300171769 through 0300228992, SN B300000970 through B300001785)**	
505	1001218681	2	Plate **(SN 0300228993 through 0300235167, SN B300001786 through B300002654)**	
506	1001151501	AR	Shim **(SN 0300171769 through 0300228992, SN B300000970 through B300001785)**	
506	1001218682	AR	Shim **(SN 0300228993 through 0300235167, SN B300001786 through B300002654)**	
507	1703811	2	Decal - Lifting Lug	
508	4812300	AR	Flatwasher M16	

FIGURE 2-24. HOODS (STEEL) AND LIFTING PLATE INSTALLATIONS (DEUTZ TD2.9L4 ENGINES)

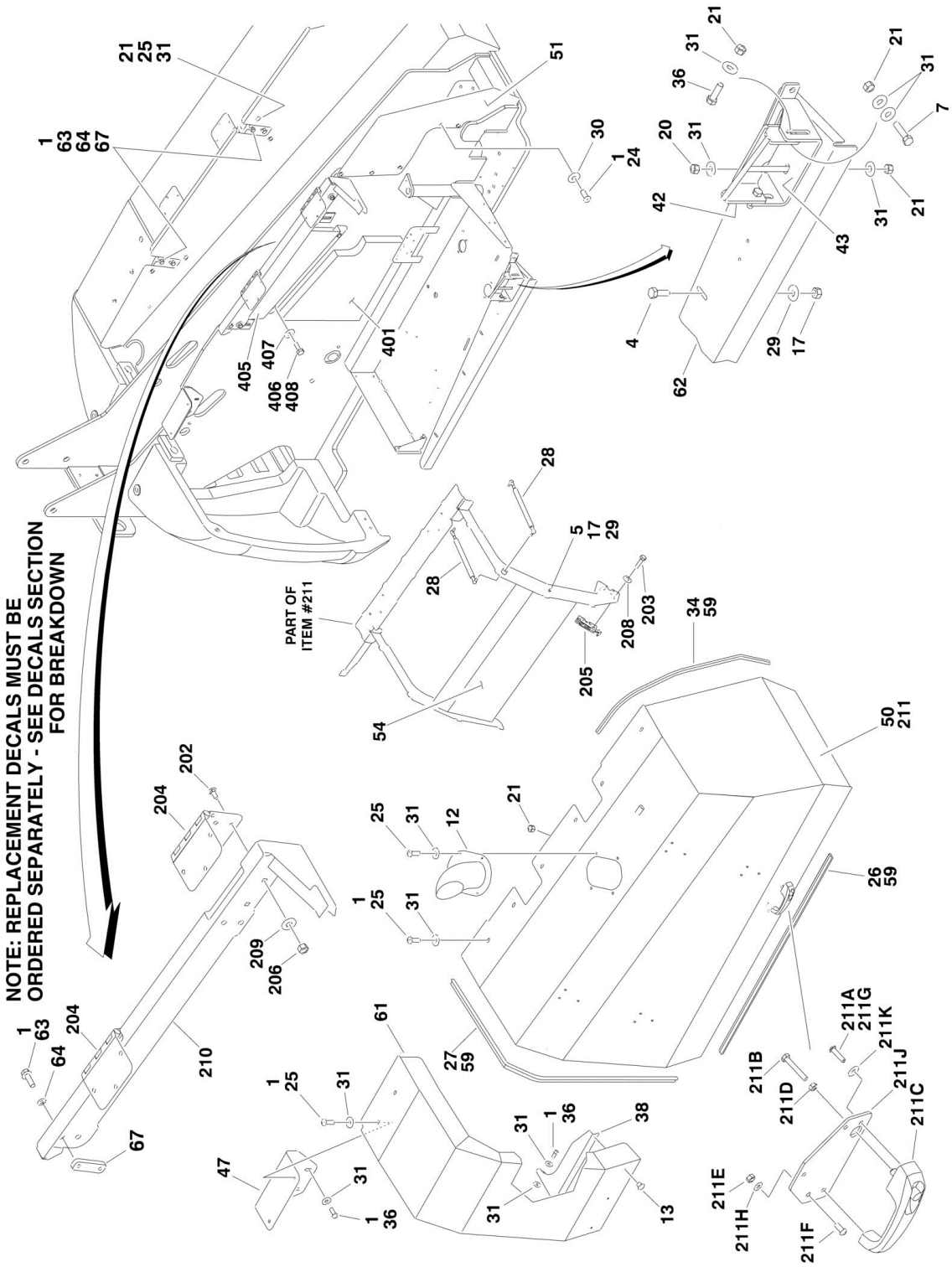

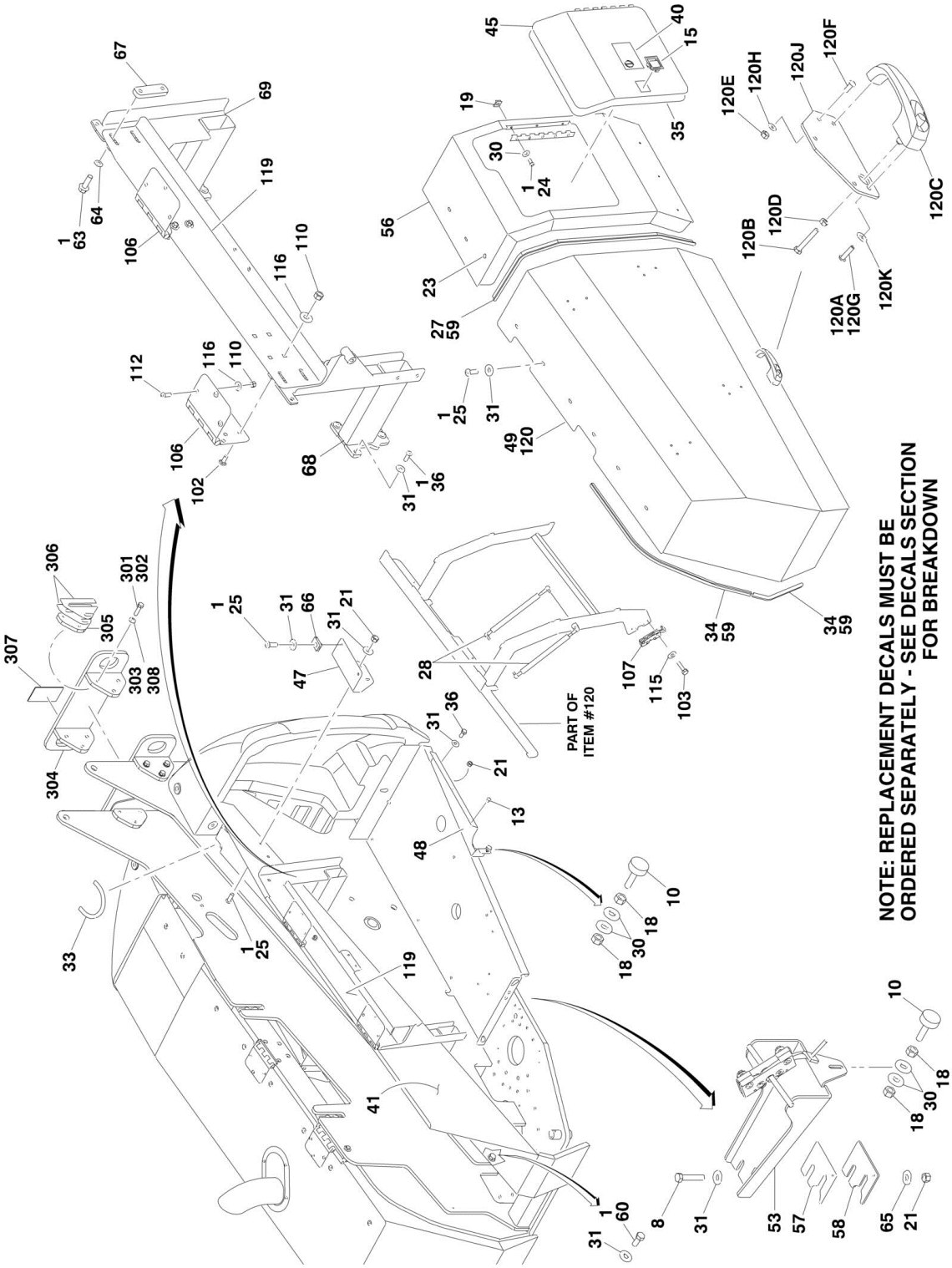
PART OF
ITEM #120
NOTE: REPLACEMENT DECALS MUST BE
ORDERED SEPARATELY - SEE DECALS SECTION
FOR BREAKDOWN

FIGURE 2-24. HOODS (STEEL) AND LIFTING PLATE INSTALLATIONS (DEUTZ TD2.9L4 ENGINES)

ITEM	PART NUMBER	QTY	DESCRIPTION	REV
		Ref	**HOODS INSTALLATIONS**	
	1001144354	Ref	**Deutz TD2.9L4Engines**	E
1	0100011	AR	Compound, Locking	
4	0641406	4	Bolt 1/4in-20NC x 3/4in	
5	0641408	3	Bolt 1/4in-20NC x 1in	
7	0641611	2	Bolt 3/8in-16NC x 1-3/8in	
8	0681618	2	Bolt 3/8in-16NC x 2in (Grade 8)	
10	0940049	2	Stopper, Hood	
12	1001144527	1	Pipe, Exhaust	
13	2080040	6	Fastener, Huck	
15	2940045	1	Latch, Paddle	
17	3311405	7	Locknut 1/4in-20NC	
18	3311501	4	Nut 5/16in-18NC	
19	3300364	3	Nut, Tinnerman 5/16in-18NC	
20	3311601	1	Nut 3/8in-16NC	
21	3311605	19	Locknut 3/8in-16NC	
23	3520030	1	Plug, Hole	
24	3900210	AR	Screw, Button Head 5/16in-18 x 3/4in	
25	3900316	14	Screw, Button Head 3/8in-16NC x 1in	
26	3960389	50 in/1.3m	Seal	
27	3960462	9.5 ft /2.9m	Seal	
28	4160194	4	Spring, Gas	
29	4751400	7	Flatwasher 1/4in Regular	
30	4751500	17	Flatwasher 5/16in Regular	
31	4751600	AR	Flatwasher 3/8in Regular	
33	90206194	10 in /24cm	Trim-Lock	
34	1001110166	8 ft/2.5m	Seal	
35	1001113047	77 in/2m	Seal	
36	0641608	AR	Bolt 3/8in-16NC x 1in	
38	1001117234	1	Bracket, Hood	
40	1001117307	1	Decal - Emergency Stop	
41	1001150370	1	Trough, Powertrack **(SN 0300171769 through 0300219809)**	
41	1001196770	1	Trough, Powertrack **(SN 0300219810 through 0300235167)**	
41	1001150370	1	Trough, Powertrack **(SN B300000970 through B300001747)**	
41	1001196770	1	Trough, Powertrack **(SN B300001748 through B300002654)**	
42	1001117523	1	Bracket, Striker Plate	
43	1001117525	1	Bracket, Striker Plate	
45	1001117598	1	Door	
47	1001157867	2	Bracket, Hood Mounting	
48	1001118550	1	Bracket, Hood Mounting	
49	1001150244	1	Hood Assembly - Tank Side (See Items 101-120 for Breakdown)	
		Ref	**Note: Replacement Decals must be Purchased Separately - See DECALS SECTION.**	
50	1001162916	1	Hood Assembly - Engine Side (See Items 201-212 for Breakdown)	
		Ref	**Note: Replacement Decals must be Purchased Separately - See DECALS SECTION.**	
51	1001118735	1	Plate, Filler	
53	1001125097	1	Bracket, Striker	

ITEM	PART NUMBER	QTY	DESCRIPTION	REV
54	1001163101	1	Shield, Heat	
56	1001121061	1	Hood, Fixed Tank Side	
		Ref	**Note: Replacement Decals must be Purchased Separately - See DECALS SECTION.**	
57	1001121118	AR	Shim 3mm	
58	1001121119	AR	Shim 1.5mm	
59	0100081	AR	Adhesive	
60	0641506	5	Bolt 5/16in-18NC x 3/4in	
61	1001151710	1	Hood, Fixed Engine Side	
		Ref	**Note: Replacement Decals must be Purchased Separately - See DECALS SECTION.**	
62	1001143841	1	Plate, Seal	
63	0811812	8	Screw 1/2in-13NC x 1-1/2in	
64	2080072	4	Retainer	
65	4891600	4	Flatwasher 3/8in Hardened	
66	88662523	4	Nut, Tinnerman	
67	1001150260	4	Plate, Hinge	
68	1001150332	1	Bracket	
69	1001150333	1	Bracket	
	1001150244	Ref	**HOOD TANK SIDE**	C
101	0100011	AR	Compound, Locking	
102	0630485	8	Bolt, Carriage	
103	0641408	4	Bolt 1/4in-20NC x 1in	
106	2600280	2	Hinge **(SN 0300171769 through 0300219809)**	
106	1001186254	2	Hinge **(SN 0300219810 through 0300235167)**	
106	2600280	2	Hinge **(SN B300000970 through B300001747)**	
106	1001186254	2	Hinge **(SN B300001748 through B300002654)**	
107	2940173	1	Latch, Rotary	
110	3311605	14	Locknut 3/8in-16NC	
112	0641608	6	Bolt 3/8in-16NC x 1in	
115	4751400	4	Flatwasher 1/4in Regular	
116	4751600	14	Flatwasher 3/8in Regular	
119	1001150339	1	Bracket	
120	1001157209	1	Hood with Latch	B
120A	0100011	AR	Compound, Locking	
120B	0700616	1	Bolt M6 x 40mm	
120C	2560187	1	Handle, Push Button	
120D	3290601	1	Nut M6	
120E	3311505	3	Locknut 5/16in-18NC	
120F	3900210	3	Screw, Button Head 5/16in-18NC x 3/4in	
120G	3900363	2	Screw, Button Head M6 x 25mm	
120H	4711500	5	Flatwasher 5/16in Thin	
120J	1001116290	1	Plate, Latch Mounting	
120K	4751400	4	Flatwasher 1/4in Regular	
	1001162916	Ref	**HOOD ENGINE SIDE**	B
201	0100011	AR	Compound, Locking	
202	0630485	8	Bolt, Carriage	
203	0641408	4	Bolt 1/4in-20NC x 1in	
204	2600280	2	Hinge **(SN 0300171769 through 0300219809)**	
204	1001186254	2	Hinge **(SN 0300219810 through 0300235167)**	
204	2600280	2	Hinge **(SN B300000970 through B300001747)**	
204	1001186254	2	Hinge **(SN B300001748 through B300002654)**	

ITEM	PART NUMBER	QTY	DESCRIPTION	REV
205	2940173	1	Latch, Rotary	
206	3311605	14	Locknut 3/8in-16NC	
207	3900316	AR	Screw 3/8 x 1	
207	0641609	AR	Bolt 3/8 x 1-1/8	
208	4751400	4	Flatwasher 1/4in Regular	
209	4751600	AR	Flatwasher 3/8in Regular	
210	1001150253	1	Bracket **(SN 0300171769 through 0300219809)**	
210	1001196768	1	Bracket **(SN 0300219810 through 0300235167)**	
210	1001150253	1	Bracket **(SN B300000970 through B300001747)**	
210	1001196768	1	Bracket **(SN B300001748 through B300002654)**	
211	1001162915	1	Hood with Latch	C
211A	0100011	AR	Compound, Locking	
211B	0700617	1	Bolt M6 x 45	
211B	0700618	1	Bolt M6 x 40	
211C	2560187	1	Handle, Push Button	
211D	3290601	1	Nut M6	
211E	3311505	3	Locknut 5/16in-18NC	
211F	3900210	3	Screw, Button Head 5/16in-18NC x 3/4in	
211G	3900363	2	Screw, Button Head M6 x 25mm	
211H	4711500	3	Flatwasher 5/16in Thin	
211J	1001116290	1	Plate, Latch Mounting	
211K	4751400	2	Flatwasher 1/4in Regular	
	1001150400	Ref	**LIFTING PLATE INSTALLATION (SN 0300171769 through 0300228992)**	E
	1001218677	Ref	**LIFTING PLATE INSTALLATION (SN 0300228993 through 0300235167)**	B
	1001150400	Ref	**LIFTING PLATE INSTALLATION (SN B300000970 through B300001785)**	E
	1001218677	Ref	**LIFTING PLATE INSTALLATION (SN B300001786 through B300002654)**	B
301	0100019	AR	Compound, Locking	
302	0682018	6	Bolt 5/8in-11NC x 2-1/4in (Grade 8)	
302	0682020	6	Bolt 5/8in-11NC x 2-1/2in (Grade 8)	
303	4892000	6	Flatwasher 5/8in Hardened	
304	1001149928	1	Plate, Lifting **(SN 0300171769 through 0300228992, SN B300000970 through B300001785)**	
304	1001218679	1	Plate, Lifting **(SN 0300228993 through 0300235167, SN B300001786 through B300002654)**	
305	1001149952	NLA	Plate (Use p/n 1001218618) **(SN 0300171769 through 0300228992, SN B300000970 through B300001785)**	
305	1001218681	2	Plate **(SN 0300228993 through 0300235167, SN B300001786 through B300002654)**	
306	1001151501	AR	Shim **(SN 0300171769 through 0300228992, SN B300000970 through B300001785)**	
306	1001218682	1	Shim **(SN 0300228993 through 0300235167, SN B300001786 through B300002654)**	
307	1703811	2	Decal - Lifting Lug	
308	4812300	AR	Flatwasher M16	
	0256823	Ref	**NOISE REDUCTION INSTALLATION (DIESEL MACHINES)**	3
401	2820078	1	Foam, Acoustical	
405	3539955	1	Plate, Baffle	
406	0641506	2	Bolt 5/16in-18NC x 3/4in	
407	4751500	2	Flatwasher 5/16in Regular	

ITEM	PART NUMBER	QTY	DESCRIPTION	REV
408	0100011	AR	Compound, Locking	

FIGURE 2-25. 2500W GENERATOR INSTALLATION - DEUTZ D2011 MACHINES (OPTIONAL)

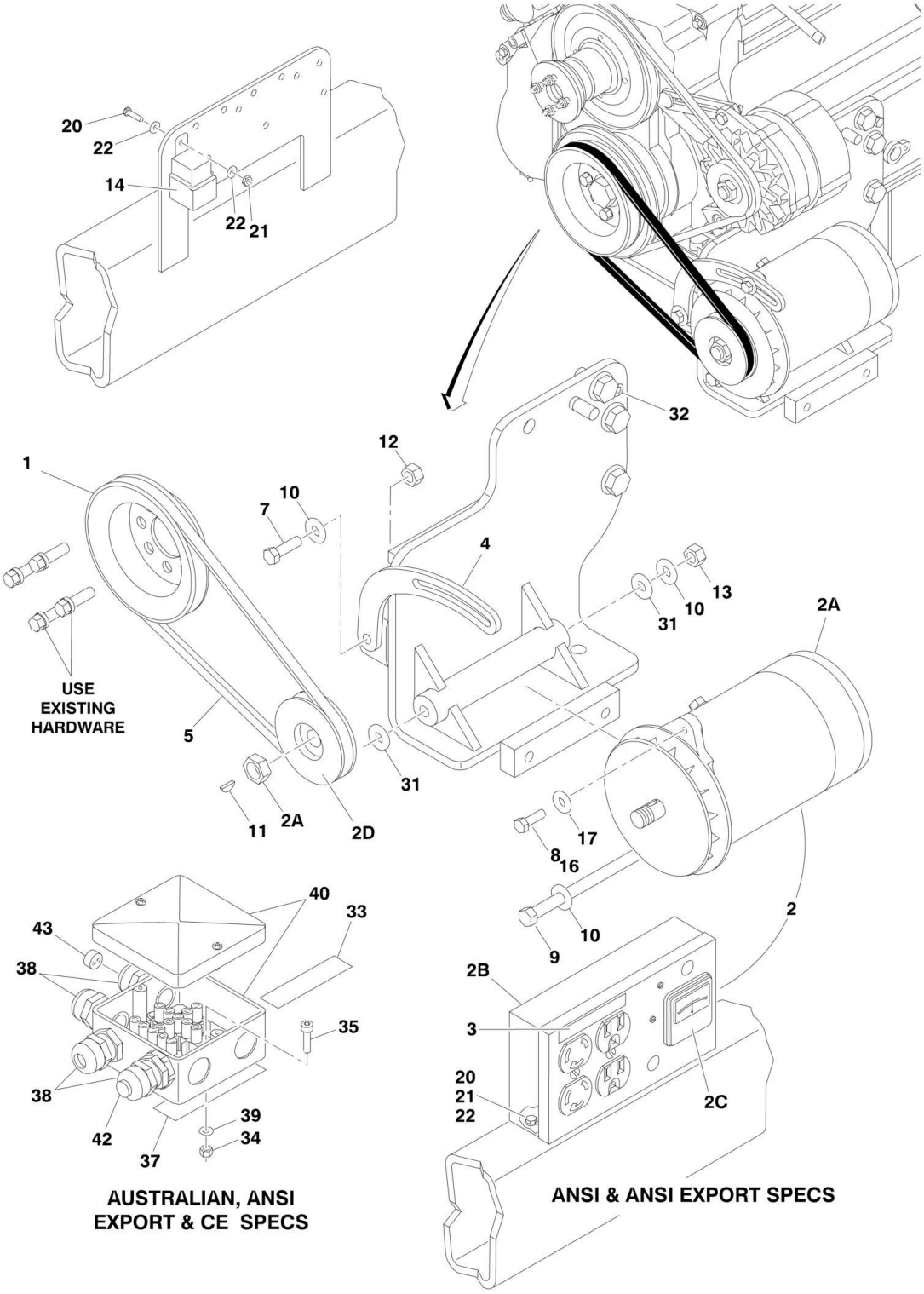

FIGURE 2-25. 2500W GENERATOR INSTALLATION - DEUTZ D2011 MACHINES (OPTIONAL)

ITEM	PART NUMBER	QTY	DESCRIPTION	REV
		Ref	**GENERATOR INSTALLATIONS (DEUTZ D2011 MACHINES) (OPTIONAL)**	
	1001115405	Ref	**110V/60Hz**	A
	1001115409	Ref	**220V/50Hz**	A
1	3580158	1	Pulley	
2		Ref	Generator and Control Box Assembly Options:	
2	2460055	1	110V/60Hz (ANSI and ANSI Export Specs)	
2	2460056	1	220V/50Hz (ANSI Export Specs):	
2	1001100321	1	220V/50Hz (Australian and CE Specs):	
2A	7012558	1	Generator Only - 110V/60Hz	
2A	1001100321	1	Generator Only - 220V/50Hz	
2A		Ref	**Note: Replacement Generators come standard with p/n 3580134 pulley. This pulley may not be correct for all applications. Refer to pulley options below.**	
2A		Ref	Armature with Slip Rings Options:	
2A	7026199	1	Armature with Slip Rings - 110V/60Hz	
2A	70000123	1	Armature with Slip Rings - 220V/50Hz	
2A	7012513	4	Cap, Brush Holder	
2A	7020108	4	Brush	
2A	7020109	4	Holder, Brush	
2A	7012514	1	Fan	
2A	7020110	1	Bell, Front	
2A	7020111	1	Bell, Rear	
2A	7020190	2	Bearing	
2B	7019680	1	Box, Control - 110V/60Hz	
2B	Not Required	0	Box, Control - 220V/50Hz	
2B		Ref	Receptacle Options:	
2B	4460190	1	Receptacle, Standard (110V Only)	
2B	4460027	1	Receptacle, Twistlock (110V Only)	
2B	70000124	1	Receptacle, Double (220V/50Hz Only)	
2B	70000125	1	Receptacle, Single (220V/50Hz Only)	
2B		Ref	Breaker, Circuit Options:	
2B	4360542	1	Breaker 110V/60Hz	
2B	70000126	1	Breaker 220V/50Hz	
2B	3520028	1	Plug, Hole	
2C		Ref	Voltmeter Options:	
2C	2420203	1	Voltmeter - 110V	
2C	7020192	1	Voltmeter - 220V	
2D		Ref	Pulley Options:	
2D	3580276	1	Pulley - 60Hz	
2D	3580134	1	Pulley - 50Hz	
2D	7027887	1	Key, Woodruff	
3		Ref	Decal Options:	
3	3251243	1	110V/60Hz	
3	Not Required	0	220V/50Hz	
4	0200742	1	Arm, Adjusting	
5	0480121	1	V-Belt	
7	0641610	1	Bolt 3/8in-16NC x 1-1/4in	
8	0100011	AR	Compound, Locking	
9	0641772	1	Bolt 7/16in-14NC x 9in	

ITEM	PART NUMBER	QTY	DESCRIPTION	REV
10	4751600	6	Flatwasher 3/8in Regular	
11	2860012	1	Key, Woodruff	
12	3311605	1	Locknut 3/8in-16NC	
13	3311705	1	Locknut 7/16in-14NC	
14	3740080	1	Relay	
16	0641508	1	Bolt 5/16in-18NC x 1in	
17	4751500	AR	Flatwasher 5/16in Regular	
20	0721006	AR	Bolt #10-24NC x 3/4in	
21	3311005	AR	Locknut #10-24NC	
22	4751000	AR	Flatwasher #10 Regular	
25	4360336	1	Switch, Toggle (Not Shown - Located at Platform)	
26	4740397	1	Bushing (Not Shown - Located at Platform)	
27	4060802	1	Guard, Switch (Not Shown - Located at Platform)	
28	3252507	1	Decal - 220V - 50/60Hz (Not Shown - Located on Turntable)	
29	2820031	4 in/10cm	Heat Shrink (Not Shown - Located at Platform)	
30	3251102	1	Decal (Not Shown - Located at Platform)	
		Ref	**Note: Items 32-43 Used on 220V/50Hz Specs Only.**	
32	0641404	1	Bolt 1/4in-20NC x 1/2	
33	3252507	2	Decal - 220V - 50Hz	
		Ref	**Note: One Decal Not Shown - Located on the Inside of Platform Rail.**	
34	3290505	1	Locknut M5 x 0.8mm	
35	4031608	1	Bolt M5 x 20mm	
36	4240018	1	Tie-Strap (Not Shown)	
37	4420060	1	Tape, Double Coated Acrylic Foam	
38	4460968	3	Connector, Strain Relief	
39	4811600	1	Flatwasher M5	
40	1001099869	1	Box, Junction	
42		Ref	Light Red Options:	
42	1001100233	1	125 Vac	
42	1001100234	1	250 Vac	
43	0962449	1	Bushing	
50	2902085	1	Kit, Powermite Generator Mounting (Not Shown)	

FIGURE 2-26. 2500W GENERATOR INSTALLATION - DEUTZ TD2.9L4 MACHINES (OPTIONAL)

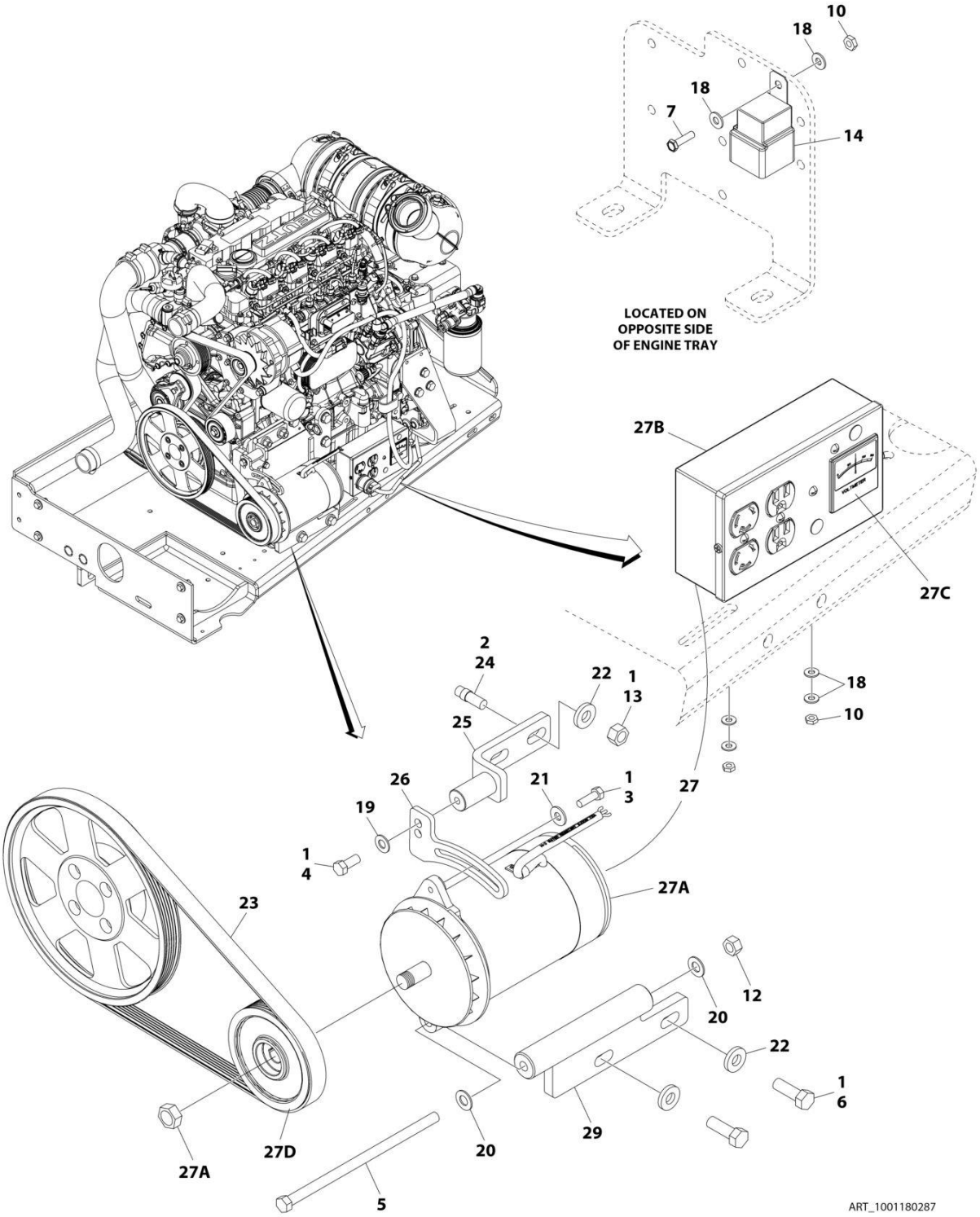

FIGURE 2-26. 2500W GENERATOR INSTALLATION - DEUTZ TD2.9L4 MACHINES (OPTIONAL)

ITEM	PART NUMBER	QTY	DESCRIPTION	REV
	1001180287	Ref	**2500W GENERATOR INSTALLATION - DEUTZ TD2.9L4 MACHINES (OPTIONAL)**	B
1	0100011	AR	Compound, Locking	
2	0100019	AR	Compound, Locking	
3	0641508	1	Bolt 5/16 x 1	
4	0641607	1	Bolt 3/8 x 7/8	
5	0641772	1	Bolt 7/16 x 9	
6	0641812	2	Bolt 1/2 x 1-1/2	
7	0721006	1	Screw #10 x 3/4	
8	2820031	AR	Heat Shrink (Not Shown - Located at Platform)	
9	3251102	1	Name Plate - Generator On (Not Shown - Located at Platform)	
10	3311005	3	Nut #10	
12	3311705	1	Nut 7/16	
13	3311801	2	Nut 1/2	
14	3740080	1	Relay	
15	4060802	1	Guard, Switch (Not Shown - Located at Platform)	
16	4240018	AR	Strap, Cable Tie (Not Shown)	
17	4360336	1	Switch, Toggle (Not Shown - Located at Platform)	
18	4711000	6	Washer #10	
19	4711600	1	Washer 3/8	
20	4711700	2	Washer 7/16	
21	4751500	1	Washer 5/16	
22	4891800	4	Washer 1/2	
23	1001148138	1	V-Belt	
24	1001163599	2	Stud	
25	1001216015	1	Bracket	
26	1001179837	1	Arm, Adjustment	
27	1001180001	1	Generator and Control Box Assembly	
27A	7012558	1	Generator Only - 110V/60Hz	
27A		Ref	**Note: Replacement Generators come standard with p/n 3580134 pulley. This pulley may not be correct for all applications. Refer to pulley options below.**	
27A	7026199	1	Armature with Slip Rings	
27A	7012513	4	Cap, Brush Holder	
27A	7020108	4	Brush	
27A	7020109	4	Holder, Brush	
27A	7012514	1	Fan	
27A	7020110	1	Bell, Front	
27A	7020111	1	Bell, Rear	
27A	7020190	2	Bearing	
27B	7019680	1	Box, Control - 110V/60Hz	
27B		Ref	Receptacle Options:	
27B	4460190	1	Receptacle, Standard (110V Only)	
27B	4460027	1	Receptacle, Twistlock (110V Only)	
27B	4360542	1	Breaker, Circuit	
27B	3520028	1	Plug, Hole	
27C	2420203	1	Voltmeter	
27D	3580276	1	Pulley	
27D	7027887	1	Key, Woodruff	
29	1001181243	1	Mount, Generator	

FIGURE 2-27. 2500W GENERATOR INSTALLATION - GM MACHINES (OPTIONAL)

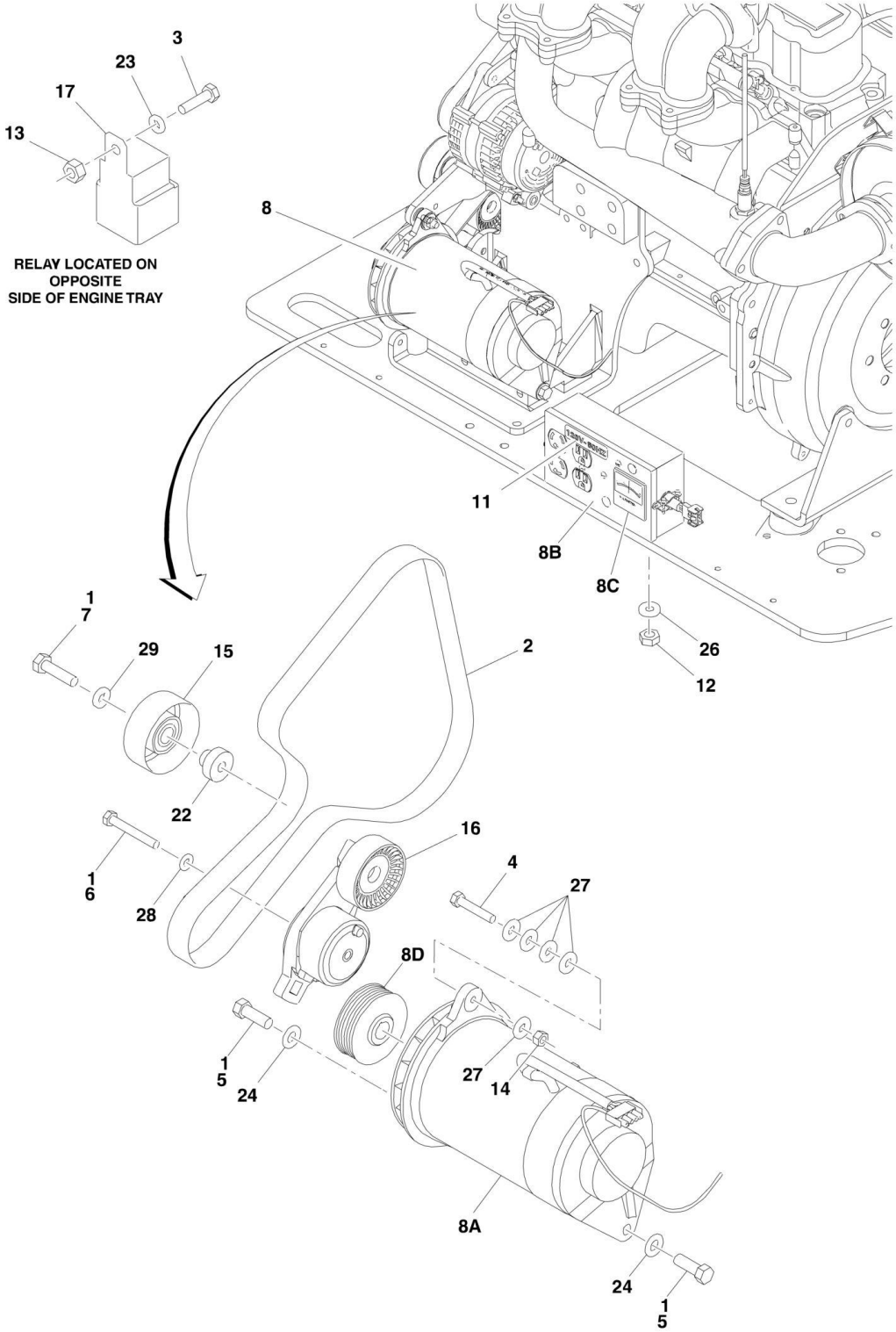

FIGURE 2-27. 2500W GENERATOR INSTALLATION - GM MACHINES (OPTIONAL)

ITEM	PART NUMBER	QTY	DESCRIPTION	REV
		Ref	**GENERATOR INSTALLATION OPTIONS:**	
	0275039	Ref	**110V Generator**	E
1	0100011	AR	Compound, Locking	
2	0480142	1	V-Belt	
3	0641405	1	Bolt 1/4in-20NC x 5/8in	
4		Ref	Bolt Options:	
4	0641514	1	Bolt 5/16in-18NC x 1-3/4in	
4	0641510	1	Bolt 5/16in-18NC x 1-1/4in	
5	0641710	2	Bolt 7/16in-14NC x 1-1/4in	
6	0700820	1	Bolt M8 x 60mm	
7	0701016	1	Bolt M10 x 340mm	
8	2460051	1	Generator and Control Box Assembly	
8A	7012558	1	Generator Only - 110V/60Hz	
		Ref	**Note: Replacement Generators come standard with p/n 3580134 pulley. This pulley may not be correct for all applications. Refer to pulley options below.**	
8A		Ref	Armature with Slip Rings Options:	
8A	7026199	1	Armature with Slip Rings - 110V/60Hz	
8A	70000123	1	Armature with Slip Rings - 220V/50Hz	
8A	7012513	4	Cap, Brush Holder	
8A	7020108	4	Brush	
8A	7020109	4	Holder, Brush	
8A	7012514	1	Fan	
8A	7020110	1	Bell, Front	
8A	7020111	1	Bell, Rear	
8A	7020190	2	Bearing	
8B	7019680	1	Box, Control - 110V/60Hz	
8B		Ref	Receptacle Options:	
8B	4460190	1	Receptacle, Standard (110V Only)	
8B	4460027	1	Receptacle, Twistlock (110V Only)	
8B	4360542	1	Breaker, Circuit	
8B	3520028	1	Plug, Hole	
8C	2420203	1	Voltmeter	
8D	3580324	1	Pulley	
8D	7027887	1	Key, Woodruff	
9	2820031	AR	Heat Shrink (Not Shown - Located at Platform)	
10	3251102	1	Nameplate - Generator (Not Shown - Located at Platform)	
11	3251243	1	Decal - 110 Volt	
12	3311005	2	Locknut # 10-24NC	
13	3311405	1	Locknut 1/4in-20NC	
14	3311505	1	Locknut 5/16in-18NC	
15	3580312	1	Pulley, Idler	
16	3580348	1	Tensioner, Belt	
17	3740080	1	Relay, Bosch	
18	4060802	1	Guard, Switch (Not Shown - Located at Platform)	
19	4240018	AR	Tie-Strap (Not Shown)	
20	4360336	1	Switch, Toggle (Not Shown - Located at Platform)	
21	4460906	3	Terminal (Not Shown)	
22	4568735	1	Spacer, Tube (Idler Pulley Grooved)	
23	4711400	1	Flatwasher 1/4in Thin	

ITEM	PART NUMBER	QTY	DESCRIPTION	REV
24	4711700	2	Flatwasher 7/16in Thin	
25	4740397	1	Spacer (Not Shown - Located at Platform)	
26	4751000	2	Flatwasher #10 Regular	
27	4751500	AR	Flatwasher 5/16in Regular	
28	4811900	1	Flatwasher M8	
29	4891600	1	Flatwasher 3/8in Hardened	

FIGURE 2-28. 4000W GENERATOR INSTALLATION - DEUTZ D2011 ENGINES

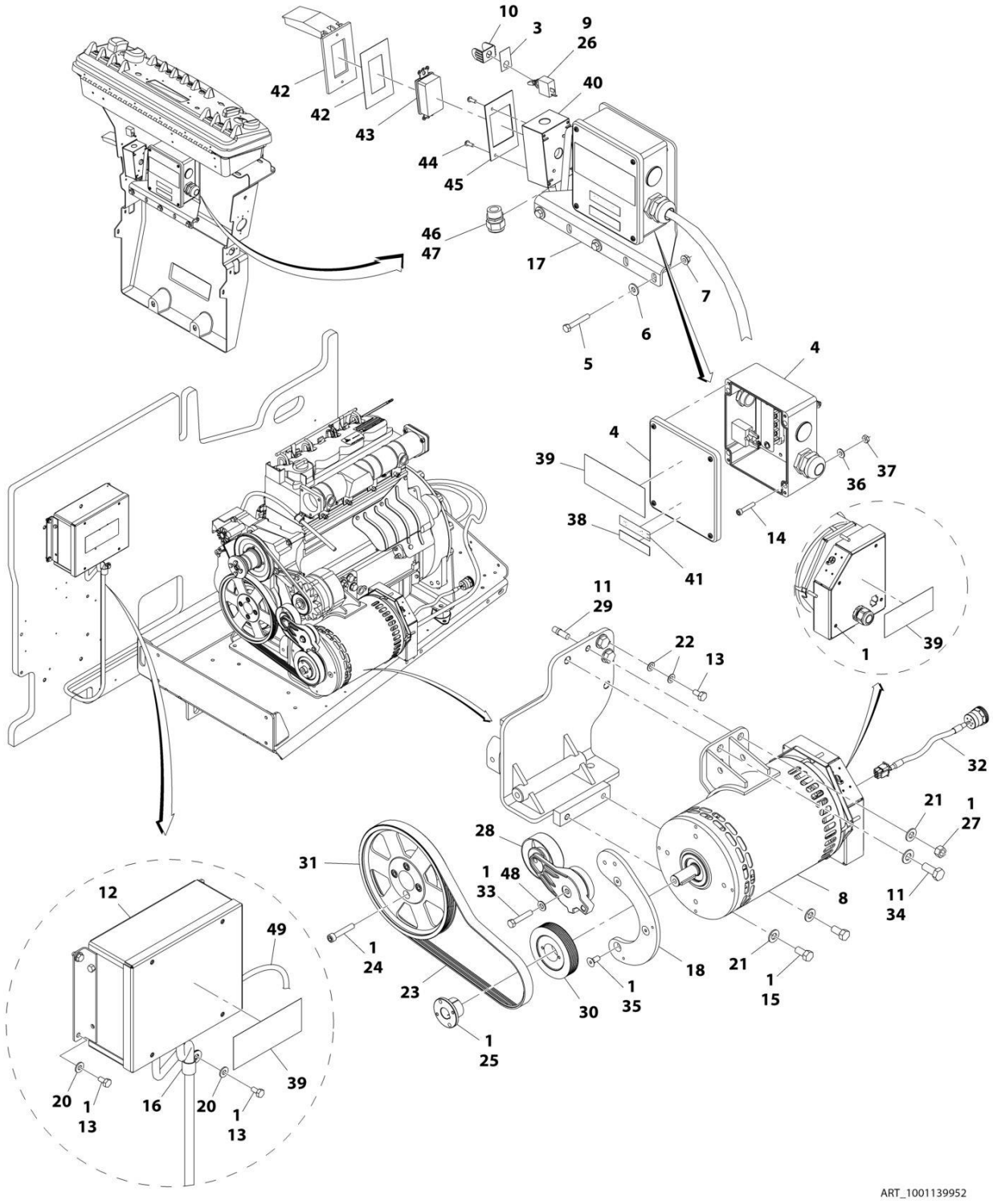

FIGURE 2-28. 4000W GENERATOR INSTALLATION - DEUTZ D2011 ENGINES

ITEM	PART NUMBER	QTY	DESCRIPTION	REV
		Ref	**4000W GENERATOR INSTALLATION - DEUTZ D2011 ENGINES**	
	1001139952	Ref	**4000W/60Hz Generator Installation - Deutz D2011 Engines**	B
	1001139953	Ref	**4000W/50Hz Generator Installation - Deutz D2011 Engines**	D
1	0100011	AR	Compound, Locking	
3	3251102	1	Nameplate - Generator	
4	1001152457	1	Junction Box Assembly (60Hz)	
4	3300396	1	Cover, Breaker	
4	4360070	1	Breaker, Circuit - 15Amp	
4	4460425	1	Connector, Strain Relief (LH Side)	
4	4460426	1	Connector, Strain Relief (RH Side)	
5	0641516	3	Bolt 5/16 x 2	
6	4751500	3	Washer 5/16	
7	3311508	3	Nut 5/16	
8	1001129858	1	Generator Assembly (60Hz)	
8	70003709	1	Ring, Retaining (External)	
8	70003708	1	Ring, Retaining (Internal)	
8	70001966	1	Bearing	
8	70004092	1	Endbell (Shaft End)	
8	70004171	1	Key	
8	70004676	1	Rotor	
8	70004684	1	Stator (60Hz)	
8	70004677	1	Stator (50Hz)	
8	70004678	1	Endbell (Rear)	
8	70004679	1	Cover, Endbell (Rear)	
8	70004680	1	Enclosure, Wiring	
8	70004685	1	Cover, Enclosure (60Hz)	
8	70004681	1	Cover, Enclosure (50Hz)	
8	70004682	1	Switch, Reset (Located on Enclosure Cover)	
8	70004098	1	Connector, Strain Relief (60Hz) (Located on Enclosure Cover)	
8	70004683	1	Connector, Strain Relief (50Hz) (Located on Enclosure Cover)	
8	1001138565	1	Generator Assembly (50Hz)	
9	4360336	1	Switch, Toggle	
10	4060802	1	Guard, Switch	
11	0100019	AR	Compound, Locking	
12	1001138566	1	Control Box Assembly	
13	0641404	6	Bolt 1/4 x 1/2	
14	3931016	4	Capscrew #10 x 1	
15	0641808	2	Bolt 1/2 x 1	
16	1320318	1	Clamp	
17	0902888	1	Bracket (60Hz)	
18	1001139357	1	Mount, Tensioner	
19	4240018	AR	Tie-Strap (Not Shown)	
20	4711400	5	Washer 1/4	
21	4711800	3	Washer 1/2	
22	4791400	2	Washer 1/4	
23	0480129	1	Belt, Generator (60Hz)	
23	0480126	1	Belt, Generator (50Hz)	
24	4032015	4	Capscrew M10 x 55	
25	0962520	1	Bushing, Split	
26	2820031	0.33 ft	Heat Shrink	

ITEM	PART NUMBER	QTY	DESCRIPTION	REV
		/0.1m		
27	3311801	1	Nut 1/2	
28	3580317	1	Tensioner, Belt with Pulley	
29	4300157	1	Stud	
30	3580318	1	Pulley, Generator (60Hz)	
30	3580319	1	Pulley, Generator (50Hz)	
31	3580320	1	Pulley, Engine	
32	1001152532	1	Harness, Generator	
33	0641616	1	Bolt 3/8 x 2	
34	0771415	1	Bolt M14 x 35	
35	0741607	3	Screw 3/8 x 7/8	
36	4751000	4	Washer #10	
37	3311005	4	Nut #10	
38	1705374	1	Decal - 240V (60Hz)	
39	1705387	3	Decal - Hazardous Voltage (60Hz)	
39	1705389	1	Decal - Hazardous Voltage (50Hz)	
40	0860038	1	Box, Switch - Weatherhead (60Hz)	
41	3251243	1	Decal - 120V (60Hz)	
42	1001110873	1	Cover, Receptacle (60Hz)	
43	4460346	1	Receptacle (60Hz)	
44	3910606	4	Screw #6 x 3/8	
45	3960422	1	Gasket (60Hz)	
46	0100020	AR	Sealant #567	
47	4460071	1	Connector (60Hz)	
48	4711600	1	Washer 3/8	
49	1001153197	1	Generator Harness (See ELECTRICAL SECTION for Breakdown)	
61	1001096070	1	Breaker Box Kit (Not Shown) (50Hz) (See ELECTRICAL SECTION for Breakdown)	
62	1001153636	1	Bracket (Attaches Item 61) (Not Shown) (50Hz)	

FIGURE 2-29. 4000W GENERATOR INSTALLATION - DEUTZ TD2.9L4 ENGINES

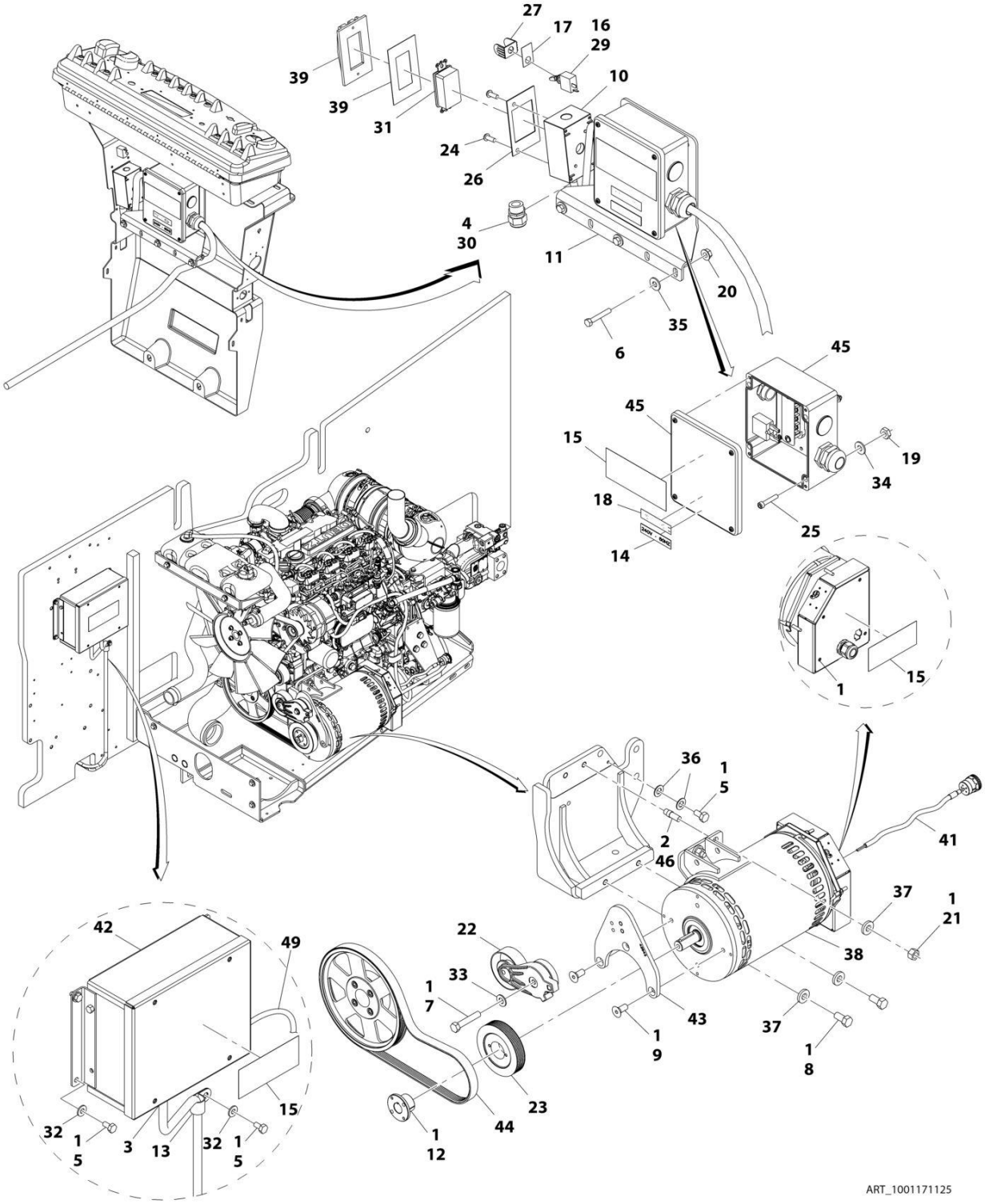

FIGURE 2-29. 4000W GENERATOR INSTALLATION - DEUTZ TD2.9L4 ENGINES

ITEM	PART NUMBER	QTY	DESCRIPTION	REV
		Ref	**4000W GENERATOR INSTALLATION - DEUTZ TD2.9L4 ENGINES**	
	1001171125	Ref	**4000W/60Hz Generator Installation - Deutz TD2.9L4 Engines**	B
	1001180218	Ref	**4000W/50Hz Generator Installation - Deutz TD2.9L4 Engines**	D
1	0100011	AR	Compound, Locking	
2	0100019	AR	Compound, Locking	
3	0100048	AR	Grease Dielectric	
4	0100079	AR	Sealant	
5	0641404	6	Bolt 1/4 x 1/2	
6	0641516	3	Bolt 5/16 x 2	
7	0641616	1	Bolt 3/8 x 2	
8	0641808	2	Bolt 1/2 x 1	
9	0741607	3	Screw 3/8 x 7/8	
10	0860038	1	Box, Switch (60Hz)	
11	0902888	1	Bracket, Junction Box (60Hz)	
12	0962520	1	Bushing, Split	
13	1320318	1	Clamp	
14	1705374	1	Decal - 240V (60Hz)	
15	1705387	3	Decal - Hazardous Voltage (60Hz)	
15	1705389	2	Decal - Hazardous Voltage (50Hz)	
16	2820031	0.33 ft /0.1m	Heat Shrink	
17	3251102	1	Nameplate, Generator	
18	3251243	1	Decal - 120V (60Hz)	
19	3311005	4	Nut #10	
20	3311508	3	Nut 5/16	
21	3311801	2	Nut 1/2	
22	3580317	1	Tensioner, Belt with Pulley	
23	3580318	1	Pulley, Generator (60Hz)	
23	3580319	1	Pulley, Generator (50Hz)	
24	3910606	4	Screw 6 x 3/8	
25	3931016	4	Capscrew #10 x 1	
26	3960422	1	Gasket, AC Receptacle (60Hz)	
27	4060802	1	Guard, Switch	
28	4240018	AR	Tie-Strap (Not Shown)	
29	4360336	1	Switch, Toggle	
30	4460071	1	Connector, Strain Relief (60Hz)	
31	4460346	1	Receptacle (60Hz)	
32	4711400	5	Washer 1/4	
33	4711600	1	Washer 3/8	
34	4751000	4	Washer #10	
35	4751500	3	Washer 5/16	
36	4791400	2	Washer 1/4	
37	4891800	4	Washer 1/2	
38	1001140346	1	Generator Assembly (60Hz)	
38	1001140347	1	Generator Assembly (50Hz)	
38	70003709	1	Ring, Retaining (External)	
38	70003708	1	Ring, Retaining (Internal)	
38	70001966	1	Bearing	
38	70004092	1	Endbell (Shaft End)	

ITEM	PART NUMBER	QTY	DESCRIPTION	REV
38	70004099	1	Key	
38	70004676	1	Rotor	
38	70004687	1	Stator (60Hz)	
38	70004686	1	Stator (50Hz)	
38	70004678	1	Endbell (Rear)	
38	70004679	1	Cover, Endbell (Rear)	
38	70004680	1	Enclosure, Wiring	
38	70004685	1	Cover, Enclosure (60Hz)	
38	70004681	1	Cover, Enclosure (50Hz)	
38	70004682	1	Switch, Reset (Located on Enclosure Cover)	
38	70004098	1	Connector, Strain Relief (60Hz) (Located on Enclosure Cover)	
38	70004683	1	Connector, Strain Relief (50Hz) (Located on Enclosure Cover)	
39	1001110873	1	Cover, Receptacle (60Hz)	
41	1001152532	1	Harness, Generator	
42	1001138566	1	Control Box Assembly	
43	1001142643	1	Support, Tensioner	
44	1001142646	1	Belt, Generator (60Hz)	
44	1001142645	1	Belt, Generator (50Hz)	
45	1001152457	1	Junction Box Assembly (60Hz)	
45	3300396	1	Cover, Breaker	
45	4360070	1	Breaker, Circuit - 15Amp	
45	4460425	1	Connector, Strain Relief (LH Side)	
45	4460426	1	Connector, Strain Relief (RH Side)	
46	1001163599	2	Stud	
49	1001153197	1	Generator Harness (See ELECTRICAL SECTION for Breakdown) **(SN 0300171769 through 0300213407, SN B300000970 through B300001593)**	
49	1001153259	1	Generator Harness (See ELECTRICAL SECTION for Breakdown) **(SN 0300213408 through 0300235167, SN B300001594 through B300002654)**	
75	1001096070	1	Breaker Box Kit (Not Shown) (50Hz) (See ELECTRICAL SECTION for Breakdown) **(SN 0300171769 through 0300213938, SN B300000970 through B300001593)**	
75	1001165368	1	Breaker Box Kit (Not Shown) (50Hz) (See ELECTRICAL SECTION for Breakdown) **(SN 0300213939 through 0300235167, SN B300001594 through B300002654)**	
76	1001153636	1	Bracket (Used to Attach Item 75) (Not Shown) (50Hz)	

FIGURE 2-30. 4000W GENERATOR INSTALLATION - GM ENGINES

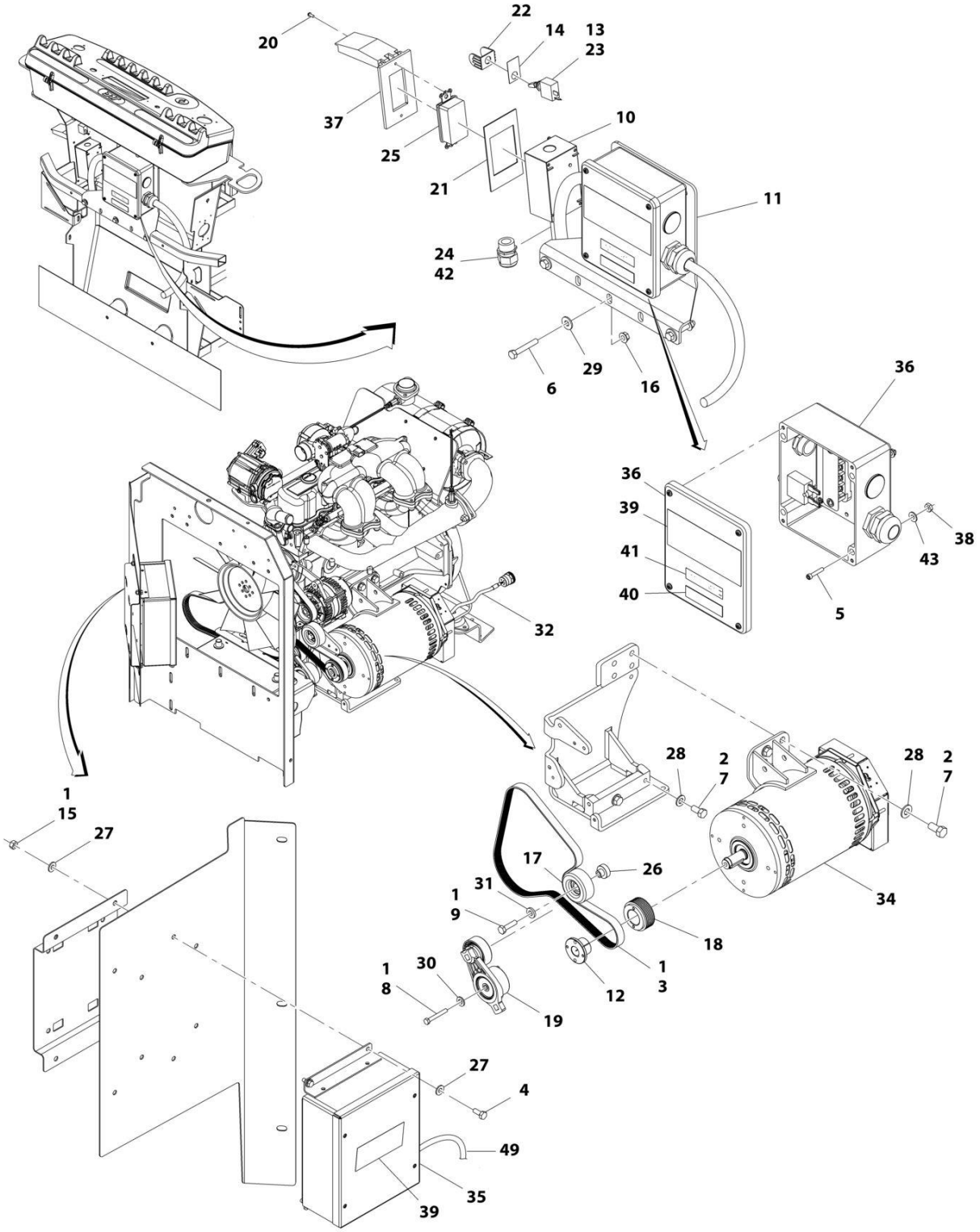

FIGURE 2-30. 4000W GENERATOR INSTALLATION - GM ENGINES

ITEM	PART NUMBER	QTY	DESCRIPTION	REV
	1001139960	Ref	**4000W GENERATOR INSTALLATION - GM ENGINES**	A
1	0100011	AR	Compound, Locking	
2	0100019	AR	Compound, Locking	
3	0480142	1	Belt, Generator	
4	0641405	4	Bolt 1/4 x 5/8	
5	3931016	4	Capscrew #10 x 1	
6	0641516	3	Bolt 5/16 x 2	
7	0641808	4	Bolt 1/2 x 1	
8	0700820	1	Bolt M8 x 60	
9	0701016	1	Bolt M10 x 40	
10	0860038	1	Box, Switch	
11	0902888	1	Bracket, Junction Box	
12	0962520	1	Bushing, Split	
13	2820031	33 ft /10.1m	Heat Shrink	
14	3251102	1	Nameplate, Generator	
15	3311405	4	Nut 1/4	
16	3311508	3	Nut 5/16	
17	3580312	1	Pulley, Idler	
18	3580314	1	Pulley, Drive	
19	3580348	1	Tensioner, Belt with Pulley	
20	3910606	4	Screw #6 x 3/8	
21	3960422	1	Gasket	
22	4060802	1	Guard, Switch	
23	4360336	1	Switch, Toggle	
24	4460071	1	Connector, Strain Relief	
25	4460346	1	Receptacle	
26	4568735	1	Tube, Spacer	
27	4711400	8	Washer 1/4	
28	4711800	4	Washer 1/2	
29	4751500	3	Washer 5/16	
30	4811900	1	Washer M8	
31	4891600	1	Washer 3/8	
32	1001152532	1	Harness, Generator	
34	1001129858	1	Generator Assembly	
34	70003709	1	Ring, Retaining (External)	
34	70003708	1	Ring, Retaining (Internal)	
34	70001966	1	Bearing	
34	70004092	1	Endbell (Shaft End)	
34	70004171	1	Key	
34	70004676	1	Rotor	
34	70004684	1	Stator	
34	70004678	1	Endbell (Rear)	
34	70004679	1	Cover, Endbell (Rear)	
34	70004680	1	Enclosure, Wiring	
34	70004685	1	Cover, Enclosure	
34	70004682	1	Switch, Reset (Located on Enclosure Cover)	
34	70004098	1	Connector, Strain Relief (Located on Enclosure Cover)	
35	1001138566	1	Box, Control	
36	1001152457	1	Junction Box Assembly	

ITEM	PART NUMBER	QTY	DESCRIPTION	REV
36	3300396	1	Cover, Breaker	
36	4360070	1	Breaker, Circuit - 15Amp	
36	4460425	1	Connector, Strain Relief (LH Side)	
36	4460426	1	Connector, Strain Relief (RH Side)	
37	1001110873	1	Cover	
38	3311005	4	Nut #10	
39	1705387	3	Decal - Hazardous Voltage	
40	1705374	1	Decal - 240V-60Hz	
41	3251243	1	Decal - 120V-60Hz	
42	0100020	AR	Sealant	
43	4751000	4	Washer #10	
49	1001153197	1	Generator Harness (See ELECTRICAL SECTION for Breakdown)	

FIGURE 2-31. 7500W SKYPOWER GENERATOR INSTALLATION - DEUTZ ENGINE (OPTIONAL)

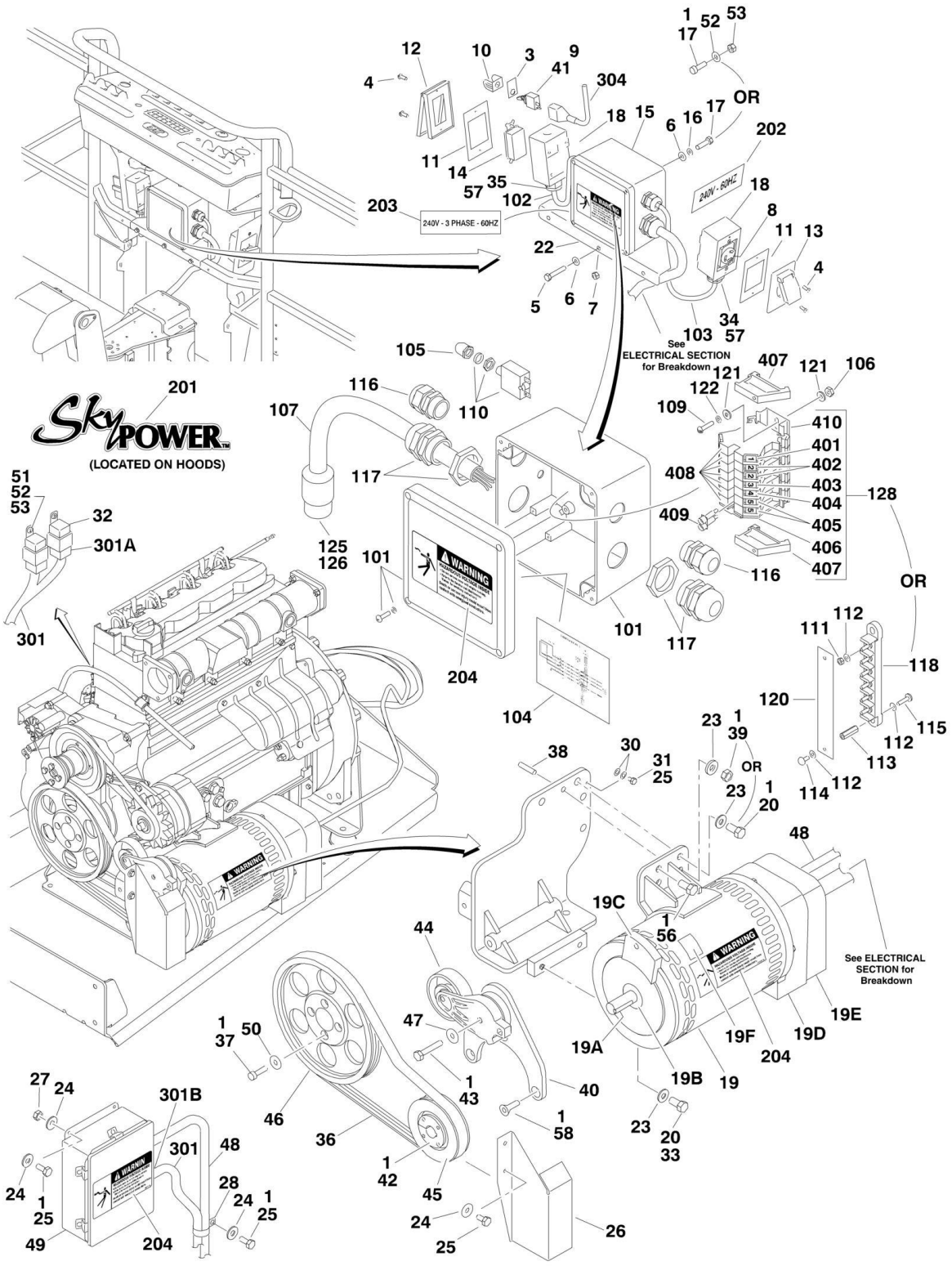

FIGURE 2-31. 7500W SKYPOWER GENERATOR INSTALLATION - DEUTZ ENGINE (OPTIONAL)

ITEM	PART NUMBER	QTY	DESCRIPTION	REV
		Ref	**7500W SKYPOWER GENERATOR INSTALLATION (OPTIONAL)**	
		Ref	**USA Built Machines:**	
	1001115387	Ref	**60Hz and Deutz D2011 Engine**	F
	1001115393	Ref	**60Hz and Deutz D2011 Engine (Brazilian Spec Only)**	C
	1001141421	Ref	**60Hz and Deutz TD2.9L4 Engine**	F
	1001115389	Ref	**50Hz and Deutz D2011 Engine**	E
		Ref	**China Built Machines:**	
	1001115387	Ref	**60Hz and Deutz D2011 Engine**	E
	1001115389	Ref	**50Hz and Deutz D2011 Engine**	E
		Ref	**Note: See ELECTRICAL SECTION for Boom Cable Installation.**	
1	0100011	AR	Compound, Locking	
3	3252764	1	Nameplate	
4	3910606	AR	Screw #6-32NC x 3/8in	
5	0641516	3	Bolt 5/16in-18NC x 2in	
6	4711500	AR	Flatwasher 5/16in Thin	
7		Ref	Nut Options:	
7	3311505	3	Locknut 5/16in-18NC (Standard)	
7	3311508	3	Locknut 5/16in-18NC (Serrated Flange)	
8		Ref	Receptacle, Female Twist-Lock Options (220-240V Single) (Deutz D2011 Engines Only):	
8	4460958	1	60Hz **(SN 0300171769 through 0300182752)**	
8	See Note	1	50Hz (Note: Not Available - Purchase Locally)	
9	4360336	1	Switch, Toggle	
10	4060802	1	Guard, Switch	
11		Ref	Gasket Options:	
11	3960422	AR	60Hz	
11	See Note	Ref	50Hz (Note: Not Available - Purchase Locally)	
12		Ref	Cover, Receptacle Options:	
12	See Note	1	50Hz (Note: Not Available - Purchase Locally)	
12	1001110873	1	60Hz	
13		Ref	Cover, Receptacle Options (Deutz D2011 Engines Only):	
13	See Note	1	50Hz (Note: Not Available - Purchase Locally)	
13	1001110872	1	60Hz **(SN 0300171769 through 0300182752)**	
14		Ref	Receptacle, Female Options (110-120V):	
14	4460346	1	60Hz	
14	See Note	1	50Hz (Note: Not Available - Purchase Locally)	
14	4460315	AR	Terminal, Spade (60HZ Machines Only)	
15		Ref	Junction Box Assembly Options (See Items 101-128 for Breakdown):	
15	0861542	1	60Hz with Deutz D2011 Engine **(SN 03000171769 through 0300182752)**	
15	1001157592	1	60Hz with Deutz D2011 Engine **(SN 0300182753 through 0300235167)**	
15	1001157592	1	60Hz with Deutz D2011 Engine **(SN B300000970 through B300002654)**	
15	1001142914	1	60Hz with Deutz TD2.9L4 Engine **(SN 0300171769 through 0300182752)**	
15	1001157592	1	60Hz with Deutz TD2.9L4 Engine **(SN 0300182753 through 0300235167)**	
15	0861567	1	50Hz Spec **(SN 0300171769 through 0300182752)**	

ITEM	PART NUMBER	QTY	DESCRIPTION	REV
15	1001157525	1	50Hz Spec **(SN 0300182753 through 0300235167)**	
15	1001157525	1	50Hz Spec **(SN B300000970 through B300002654)**	
16	4761500	AR	Lockwasher 5/16in	
17		Ref	Bolt Options:	
17	0641505	4	Bolt 5/16in-18NC x 5/8in	
17	0641508	4	Bolt 5/16in-18NC x 1in	
17	3931016	4	Capscrew #10-24NC x 1in	
18		Ref	Box, Switch Options:	
18	0860038	AR	60Hz Spec	
18	See Note	Ref	50Hz Spec (Note: Not Available - Purchase Locally)	
19		Ref	Generator Assembly Options:	
19	2460048	1	Deutz D2011 Engines	
19	1001136988	1	Deutz TD2.9L4 Engines **(SN 0300171769 through 0300226220)**	
19	1001212223	1	Deutz TD2.9L4 Engines **(SN 0300226221 through 0300235167)**	
19	70001100	1	Rotor (Includes p/n 70001384 & 70000863) (Not Shown)	
19	70001384	1	Bearing, Ball Radial (Not Shown):	
19	70000863	1	Fan (Not Shown)	
19		Ref	Stator Options (Not Shown):	
19	70002088	1	2460048 Generator	
19	70004093	1	1001136988 Generator	
19	70006093	1	1001212223 Generator	
19	70002297	1	Stud	
19	70003631	1	Brushholder Assembly (Not Shown) (was p/n 7024484)	
19A		Ref	Key Options:	
19A	70004171	1	2460048 Generator (was p/n 7024561)	
19A	70004099	1	1001136988 & 1001212223 Generators	
19B	70001966	1	Bearing, Ball Radial (Located in Belt Tensioner Endbell)	
19C		Ref	Endbell, Belt Tensioner Options:	
19C	70001953	1	2460048 Generator	
19C	70004092	1	1001136988 & 1001212223 Generators	
19D		Ref	Endbell, Brush Block Options:	
19D	70004169	1	2460048 Generator (was p/n 70001385)	
19D	70004094	1	1001136988 & 1001212223 Generators	
19E		Ref	Shroud (was p/n 70002290)	
19E	70004169	1	2460048 Generator (was p/n 70002290)	
19E	70004096	1	1001136988 Generator	
19E	70006094	1	1001212223 Generator	
19E		Ref	Insulator, Endbell Options:	
19E	See Note	1	2460048 Generator (Note: Not Available for Purchase)	
19E	70004097	1	1001136988 Generator	
19E	70002291	1	1001212223 Generator	
19E	7027799	1	Block, Connector 6 Position (Not Shown)	
19E	70002460	1	Nut, Brass (Attaches p/n 7027799 to Cover) (Not Shown)	
19E		Ref	Breaker, Circuit 30Amp Options (Not Shown):	
19E	7024485	1	2460048 & 1001136988 Generators	
19E	70006095	1	1001212223 Generator	
19E		Ref	Boot, Breaker Options (Not Shown):	
19E	70001696	1	2460048 & 1001136988 Generators (was p/n 7024486)	
19E	70006096	1	1001212223 Generator	
19E	7026597	1	Connector, W/Leads (Not Shown)	

ITEM	PART NUMBER	QTY	DESCRIPTION	REV
19E	7026626	1	Housing Plug and Pins (Not Shown)	
19E		Ref	Clamp, Cable Options (Not Shown):	
19E	7026188	1	2460048 Generator	
19E	70004098	1	1001136988 & 1001212223 Generators	
19E	70003708	1	Retaining Ring Internal (Not Shown)	
19E	70003709	1	Retaining Ring External (Not Shown)	
19E		Ref	Plate, End Panel Options:	
19E	70004169	1	2460048 Generator	
19E	70004095	1	1001136988 Generator	
19E	70006097	1	1001212223 Generator	
19E	70001974	1	Decal - Terminal Connections	
19F	70001973	1	Decal - Warning Moving Parts	
20	0641808	2	Bolt 1/2in-13NC Options	
22	0902888	1	Bracket, Box Mounting	
23	4891800	AR	Flatwasher 1/2in Hardened	
24		Ref	Flatwasher 1/4in Options:	
24	4711400	AR	Flatwasher 1/4in Thin	
24	4751400	AR	Flatwasher 1/4in Regular	
24	4761400	AR	Lockwasher 1/4in	
25		Ref	Bolt Options:	
25	0641404	AR	Bolt 1/4in-20NC x 1/2in	
25	0641405	AR	Bolt 1/4in-20NC x 5/8in	
25	0641408	AR	Bolt 1/4in-20NC x 1in	
26	4061049	1	Shield **(SN 0300171769 through 0300172626)**	
27	3311405	AR	Nut 1/4in-20NC	
28	1320318	1	Clamp	
29	4240018	AR	Tie-Strap (Not Shown)	
30	4791400	2	Starwasher 1/4in	
31	0641403	AR	Bolt 1/4in-20NC x 3/8in	
32	3740080	1	Relay (Deutz D2011 Engines) **(SN 0300171769 through 0300181890)**	
32	3740080	1	Relay (Deutz D2011 Engines) **(SN B300000970 through B300000865)**	
33	0100019	AR	Compound, Locking	
34		Ref	Connector, Strain Relief Options (Deutz D2011 Engines Only):	
34	4460051	1	60Hz **(SN 0300171769 through 0300182752)**	
34	See Note	NSS	50Hz (Note: Not Available - Purchase Locally)	
35		Ref	Connector, Strain Relief	
35	4460071	1	60Hz	
35	See Note	NSS	50Hz (Note: Not Available - Purchase Locally)	
36		Ref	Belt, Drive Options:	
36	0480129	1	Deutz D2011 Engines with 60Hz Generators	
36	0480126	1	Deutz D2011 Engines with 50Hz Generators	
36	1001142646	1	Deutz TD2.9L4 Engine with 60 Hz Generator	
37	4032015	AR	Capscrew M10 x 55mm (Deutz D2011 Engines Only)	
38	4300157	1	Stud **(SN 0300171769 through 0300181890)**	
38	1001163599	1	Stud **(SN 0300181891 through 0300235167)**	
38	4300157	1	Stud **(SN B300000970 through B300000865)**	
38	1001163599	1	Stud **(SN B300000866 through B300002654)**	
39	3311801	1	Nut 1/2in-13NC	
40	1001142643	1	Support, Belt Tensioner (Deutz TD2.9L4 Engines Only)	
41	2820031	1	Insulator	

ITEM	PART NUMBER	QTY	DESCRIPTION	REV
42	0962520	1	Bushing, Split Taper (was p/n 7024562)	
43		Ref	Bolt 3/8in-16NC Options:	
43	3931632	1	Capscrew, Socket Head 3/8in-16NC x 2in	
43	0641618	1	Bolt, Hex Head 3/8in-16NC x 2-1/4in	
43	0641616	1	Bolt, Hex Head 3/8in-16NC x 2in	
44	3580317	1	Tensioner, Belt (was p/n 7024482)	
45		Ref	Pulley Options:	
45	3580318	1	60Hz Generator (was p/n 7024563)	
45	3580319	1	50Hz Generator (was p/n 7026187)	
46	3580320	1	Pulley (Deutz D2011 Engines Only)	
47	4711600	AR	Flatwasher 3/8in Thin	
48	4922925	1	Harness, Generator	
49		Ref	Control Box Assembly Options:	
49	0861538	1	60Hz Generator (was p/n 7024487)	
49	0861572	1	50Hz Generator (was p/n 7024487)	
49	7024488	1	Card, Circuit - Generator Power	
49	See Note	1	Fuse (Note: Not Available - Purchase Locally)	
49	70000619	1	Harness, Control Box (Internal)	
49	7024489	1	Card, Circuit - Control	
		Ref	**Note: Same Circuit Card (P/N 7024489) is used for both 60Hz & 50Hz When replacing card, rocker switch on card must be set for required application.**	
50	4811900	AR	Flatwasher M8	
51	0721004	2	Screw, Machine #10-24NC 1/2in	
52	4751000	AR	Flatwasher #10 Regular	
53	3311005	AR	Locknut #10-24NC	
56	0771415	AR	Bolt M14 x 35mm	
57	0100020	AR	Sealant, Pipe	
58	0741607	3	Screw, Flat Head 3/8in-16NC x 7/8in	
		Ref	**JUNCTION BOX ASSEMBLY**	
	0861542	Ref	**60Hz and Deutz D2011 Engines (SN 0300171769 through 0300182752)**	E
	1001157592	Ref	**60Hz and Deutz D2011 Engines (SN 0300182753 through 0300235167)**	C
	1001157592	Ref	**60Hz and Deutz D2011 Engines (SN B300000970 through B300002654)**	C
	1001157592	Ref	**60Hz and Deutz DT2.9L4 Engines**	C
	0861567	Ref	**50Hz (SN 0300171769 through 0300182752)**	B
	1001157525	Ref	**50Hz (SN 0300182753 through 0300235167)**	B
	1001157525	Ref	**50Hz (SN B300000970 through B300002654)**	B
		Ref	Box, Junction Options:	
101	0861541	1	Deutz D2011 Engines **(SN 0300171769 through 0300182752)**	
101	1001157521	1	Deutz D2011 Engines **(SN 0300182753 through 0300235167)**	
101	1001157521	1	Deutz DT2.9L4 Engines	
102		Ref	Cable, Electrical 12/3 Options:	
102	1060494	2 ft/.6m	60Hz **(SN 0300171769 through 0300205261)**	
102	1001179154	2 ft/.6m	60Hz **(SN 0300205262 through 0300235167)**	
102	See Note	2 ft/.6m	50Hz (Note: Not Available - Purchase Locally) **(SN 0300171769 through 0300182752)**	
103		Ref	Cable, Electrical 10/3 Options:	
103	1060708	2.5 ft /.76m	60Hz and Deutz D2011 Engines **(SN 0300171769 through 0300182752)**	
103	Not Required	0	60Hz and Deutz D2011 Engines **(SN 0300182753 through**	

ITEM	PART NUMBER	QTY	DESCRIPTION	REV
			0300235167)	
103	Not Required	0	60Hz and Deutz TD2.9L4 Engines	
103	See Note	NLA	50Hz (ANSI Export, Australian and CE Specs) (Note: Not Available - Purchase Locally)	
104		Ref	Decal - Wiring Schematic Options:	
104	1705376	1	Deutz D2011 Engines **(SN 0300171769 through 0300182752)**	
104	1001157528	1	Deutz D2011 Engines **(SN 0300182753 through 0300235167)**	
104	1001157528	1	Deutz DT2.9L4 Engines	
105	3300396	1	Cover, Fuse	
106	3310601	2	Nut #6-32NC	
107	1060343	AR	Cable, Electrical 10/4 (60Hz Spec Only)	
109	3910610	2	Bolt #6-32NC x 5/8in	
110	4360070	1	Circuit Breaker - 15Amp	
111	3311001	6	Nut #10-24NC	
112	4711000	10	Flatwasher #10 Thin	
113	1001158008	2	Stand-off	
114	10702077	2	Screw #10-32NF x 3/8in	
115	10702082	2	Screw #10-32NF x 3/4in	
116	4460425	AR	Strain Relief, Terminal	
116	3520192	AR	Plug (50Hz Spec Only)	
117	4460426	AR	Connector, Strain Relief (60Hz Spec Only)	
117	3520189	AR	Plug (50Hz Spec Only)	
118	1001157520	1	Block, Terminal - 6 Pole	
120	1001158007	1	Cover, PVC	
121	4750600	4	Flatwasher, #6 Regular	
122	4760600	2	Lockwasher #6	
125	1671092	1	Cover (60Hz Spec Only)	
126	4460963	1	Connector (60Hz Spec Only)	
128	1001121340	1	Terminal Block Assembly (Deutz D2011 Engines) (See Items 401-410 for Breakdown) **(SN 0300171769 through 0300182752)**	
		Ref	**DECAL INSTALLATION**	
	0272435	Ref	**60Hz Specs**	D
	0272589	Ref	**50Hz Specs**	A
201	1705460	2	Decal - SkyPower	
202	1705374	1	Decal - 240V - 60Hz (60Hz Spec Only) **(SN 0300171769 through 0300201770)**	
202	3251243	1	Decal - 120V - 60Hz (60Hz Spec Only) (Located on Opposite Side) **(SN 0300222414 through 0300235167, SN B300001594 through B300002654)**	
203		Ref	Decal - 240V - 3 Phase Options:	
203	1705375	1	60Hz Spec	
203	1705461	1	50Hz Spec	
204		Ref	Decal, Hazardous Voltage Options:	
204	1705387	3	60Hz Spec	
204	1705489	3	50Hz Spec	
		Ref	**ELECTRICAL DIAGRAM COMPONENTS**	
	1001112586	Ref	**Deutz D2011 Engines (SN 0300171769 through 0300182752)**	B
	1001157769	Ref	**Deutz D2011 Engines (SN 0300182753 through 0300235167)**	B
	1001122528	Ref	**Deutz TD2.9L4 Engines**	B
301		Ref	Generator Harness Options (See ELECTRICAL SECTION for Breakdown):	
301	1001112587	1	Deutz D2011 Engines **(SN 0300171769 through 0300182752)**	B
301	1001152429	1	Deutz D2011 Engines **(SN 0300182753 through 0300235167)**	B

ITEM	PART NUMBER	QTY	DESCRIPTION	REV
301	1001119968	1	Deutz TD2.9L4 Engines	C
301A	4460374	2	Plug, Sealed Relay (Deutz D2011 Engines Only) **(SN 0300171769 through 0300182752)**	
301A	4460375	7	Terminal (Deutz D2011 Engines Only) **(SN 0300171769 through 0300182752)**	
301B	4460967	1	Plug, Male - 3 Position	
301B	4460465	3	Socket, Female	
301C		Ref	Component Options:	
301C	2400060	1	Fuseholder (Deutz D2011 Engines) (Not Shown)	
301C	2400064	1	Fuse - 5Amp (Deutz D2011 Engines) (Not Shown)	
301C	1001117078	1	Fuseholder (Includes Fuse and Cap) (Deutz TD2.9L4 Engines) (Not Shown)	
301C	See Note	NSS	Fuse - 5Amp (Deutz TD2.9L4 Engines) (Not Shown) (Note: Use 1001117078 Assembly or Purchase Fuse Locally)	
301C	1001096134	1	Cover, Fuseholder (Deutz TD2.9L4 Engines) (Not Shown)	
301D	4460742	1	Connector - 2 Position (1001152429 Harness) (Not Shown)	
301D	4460743	2	Terminal (1001152429 Harness) (Not Shown)	
304	4922641	1	Switch Harness	
	1001121340	Ref	**TERMINAL BLOCK ASSEMBLY (DEUTZ D2011 ENGINES) (SN 0300171769 through 0300182752)**	A
401	70002818	2	Marker Strip #1	
402	70002819	4	Marker Strip #2	
403	70002820	2	Marker Strip #3	
404	70002821	2	Marker Strip #4	
405	70002822	4	Marker Strip #5	
406	70002823	1	Terminal, End Barrier	
407	70002824	2	Terminal, End Block	
408	70002825	7	Terminal, Block	
409	70002826	2	Terminal, Cross Connector Jumper	
410	3641533	1	Rail, Relay	

FIGURE 2-32. 7500W SKYPOWER GENERATOR INSTALLATION - GM ENGINE (OPTIONAL)

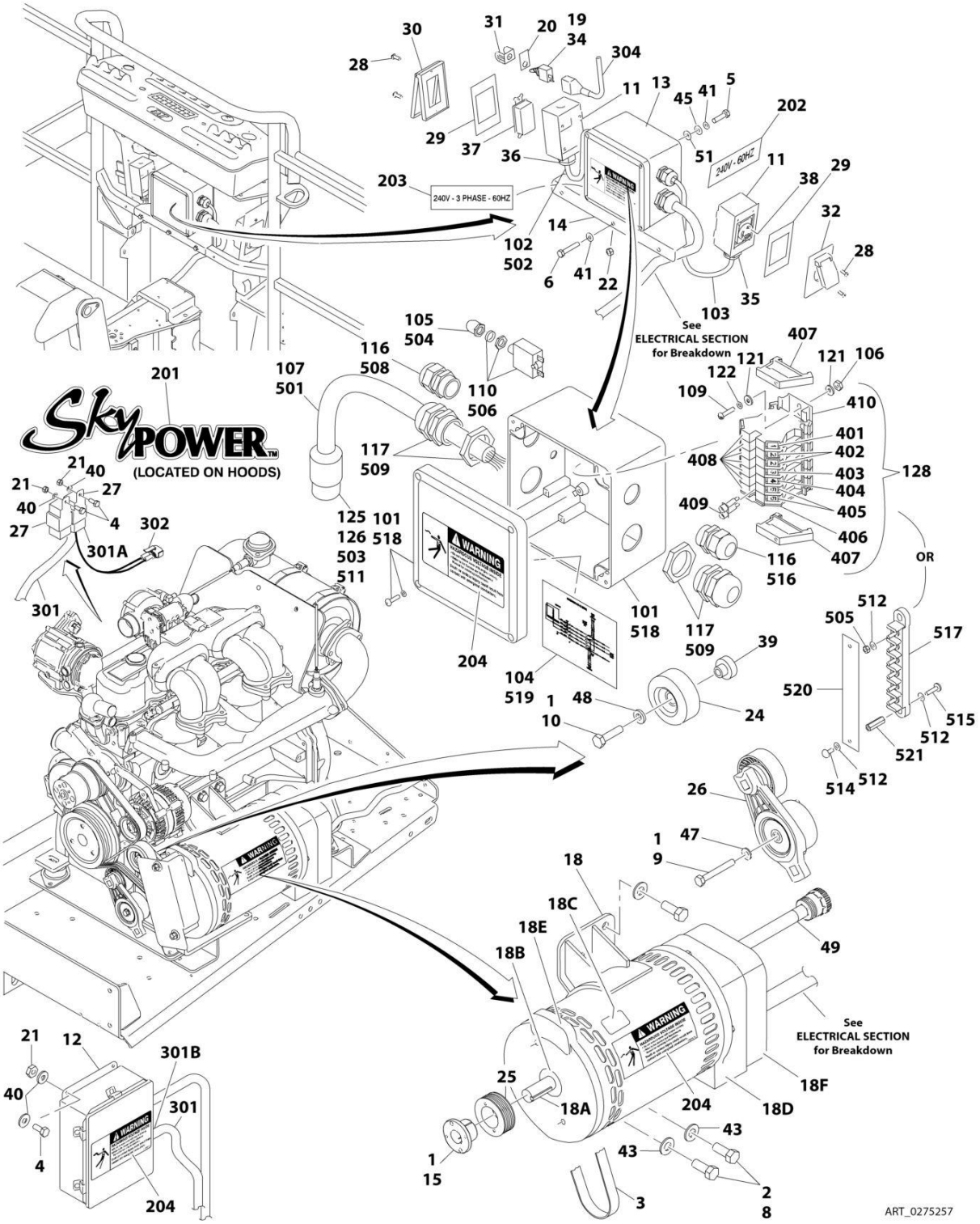

FIGURE 2-32. 7500W SKYPOWER GENERATOR INSTALLATION - GM ENGINE (OPTIONAL)

ITEM	PART NUMBER	QTY	DESCRIPTION	REV
		Ref	**Note: Only Available on USA Built Machines.**	
	0275257	Ref	**7500W SKYPOWER GENERATOR INSTALLATION**	I
		Ref	**Note: See ELECTRICAL SECTION for Boom Cable Components.**	
1	0100011	AR	Compound, Locking	
2	0100019	AR	Compound, Locking	
3	0480142	1	Belt, Generator	
4	0641405	6	Bolt 1/4in-20NC x 5/8in	
5	0641505	4	Bolt 5/16in-18NC x 5/8in **(SN 0300171769 through 0300182752)**	
5	3931016	4	Capscrew #10-24NC x 1in **(SN 0300182753 through 0300235167)**	
6	0641516	3	Bolt 5/16in-18NC x 2in	
8	0641808	4	Bolt 1/2in-13NC x 1in	
9	0700820	1	Bolt M8 x 60mm	
10	0701016	1	Bolt M10 x 40mm	
11	0860038	AR	Box, Switch	
12	0861538	1	Control Box Assembly	
12	7024488	1	Card, Circuit - Generator Power	
12	See Note	1	Fuse (Note: Not Available - Purchase Locally)	
12	7024489	1	Card, Circuit - Control	
12	70000619	1	Harness, Circuit Card	
13	0861542	1	Junction Box Assembly (See Items 101-128 for Breakdown) **(SN 0300171769 through 0300182752)**	
13	1001157592	1	Junction Box Assembly (See Items 501-521 for Breakdown) **(SN 0300182753 through 0300235167)**	
14	0902888	1	Bracket, Box Mounting	
15	0962520	1	Bushing, Split Taper	
18	2460048	1	Generator Assembly	
18	70003631	1	Brush Holder Assembly (Not Shown) (was p/n 7024484)	
18	7024485	1	Breaker, Circuit 30Amp (Not Shown)	
18	70001696	1	Boot, Breaker (was p/n 7024486 - Not Shown)	
18	70001966	1	Bearing, Ball Radial (Located in Belt Tensioner Endbell - Not Shown)	
18	7027799	1	Block, Connector 6 Position (Not Shown)	
18	70002460	6	Nut, Brass (Attaches p/n 7027799 to Cover) (Not Shown)	
18	7026188	1	Clamp, Cable (Not Shown)	
18	7026597	1	Connector, with Leads (Not Shown)	
18	7026626	1	Connector - 6 Position with Seal (Not Shown)	
18	70002088	1	Stator (Not Shown)	
18	70004169	1	Panel, End (Not Shown) (was p/n 70002255)	
18	70001974	1	Decal - Terminal Connections (Not Shown)	
18	70000863	1	Fan (Not Shown)	
18	70002297	4	Stud (Not Shown)	
18A	70004171	1	Key (was p/n 7024561)	
18A	70001100	1	Armature, Generator (Includes Radial Ball Bearing on End with Brushes and Fan)	
18A	70001384	1	Bearing, Ball Radial	
18B	70001966	1	Bearing, Radial Ball	
18B	70003708	1	Ring, Internal Retaining (Located in Belt Tensioner Endbell)	
18B	70003709	1	Ring, External Retaining (Located in Belt Tensioner Endbell)	
18C	70001973	1	Decal - Warning Moving Parts	

ITEM	PART NUMBER	QTY	DESCRIPTION	REV
18D	70004169	1	Endbell, Brush Block (was p/n 70001385)	
18E	70001953	1	Endbell, Belt Tensioner	
18F	70004169	1	Endbell, Shroud Assembly (was p/n 70002290)	
19	2820031	1	Insulator	
20	3252764	1	Nameplate	
21	3311405	6	Locknut 1/4in-20NC	
22	3311505	3	Locknut 5/16in-18NC	
24	3580312	2	Pulley, Idler	
25	3580314	1	Pulley, Drive Grooved	
26	3580348	1	Tensioner, Belt with Pulley	
27	3740080	2	Relay	
28	3910606	AR	Screw #6-32NC x 3/8in	
29	3960422	AR	Gasket	
30	1001110873	1	Cover, Receptacle	
31	4060802	1	Guard, Switch	
32	1001110872	1	Cover, Receptacle **(SN 0300171769 through 0300182752)**	
34	4360336	1	Switch, Toggle	
35	4460051	1	Connector, Strain Relief **(SN 0300171769 through 0300182752)**	
36	4460071	1	Connector, Strain Relief	
37	4460346	1	Receptacle	
38	4460958	1	Receptacle, Female Twist-Lock **(SN 0300171769 through 0300182752)**	
39	4568735	1	Tube, Spacer Pulley Grooved	
40	4711400	10	Flatwasher 1/4in Thin	
41	4711500	AR	Flatwasher 5/16in Thin	
43	4711800	4	Flatwasher 1/2in Thin	
45	4761500	AR	Lockwasher 5/16in	
45	4751000	AR	Flatwasher #10	
47	4811900	1	Flatwasher M8	
48	4891600	1	Flatwasher 3/8in Hardened	
49	4922925	1	Harness, Generator	
51	3311005	AR	Locknut #10-24	
	0861542	Ref	**JUNCTION BOX ASSEMBLY (SN 0300171769 through 0300182752)**	E
101	0861541	1	Box, Junction	
102	1060494	2 ft/.6m	Cable, Electrical 12/3 **(SN 0300171769 through 0300205261)**	
102	1001179154	2 ft/.6m	Cable, Electrical 12/3 **(SN 0300205262 through 0300235167)**	
103	1060708	2.5 ft /.76m	Cable, Electrical 10/3	
104	1705376	1	Decal - Wiring Schematic	
105	3300396	1	Cover, Fuse	
106	3310601	2	Nut 6-32NC	
107	1060343	1.5 ft /.46m	Cable, Electrical 10/4	
109	3910610	2	Bolt 6-32NC x 5/8	
110	4360070	1	Circuit Breaker - 15Amp	
116	4460425	2	Strain Relief, Terminal	
117	4460426	2	Connector, Strain Relief	
121	4750600	4	Flatwasher, #6 Regular	
122	4760600	2	Lockwasher #6	
125	1671092	1	Cover	
126	4460963	1	Connector	

ITEM	PART NUMBER	QTY	DESCRIPTION	REV
128	1001121340	1	Terminal Block Assembly (See Items 401-410 for Breakdown)	
	0272435	Ref	**DECAL INSTALLATION**	D
201	1705460	2	Decal - SkyPower	
202	1705374	1	Decal - 240V - 60Hz **(SN 0300171769 through 0300201770)**	
202	3251243	1	Decal - 120V - 60Hz (60Hz Spec Only) (Located on Opposite Side) **(SN 0300222414 through 0300235167)**	
203	1705375	1	Decal - 240V - 3 Phase	
204	1705387	3	Decal, Hazardous Voltage	
	4933349	Ref	**ELECTRICAL DIAGRAM COMPONENTS (SN 0300171769 through 0300182752)**	A
	1001157768	Ref	**ELECTRICAL DIAGRAM COMPONENTS (SN 0300182753 through 0300235167)**	A
301	4923420	1	Generator Harness	A
301A	4460374	2	Plug, Sealed Relay	
301A	4460375	8	Terminal	
301B	4460967	1	Plug, Male - 3 Position	
301B	4460465	3	Socket, Female	
301C	2400060	2	Fuseholder (Not Shown)	
301C	2400064	2	Fuse - 5Amp (Not Shown)	
302	4460742	1	Connector - 2 Position **(SN 0300171769 through 0300182752)**	
302	4460743	2	Socket, Female **(SN 0300171769 through 0300182752)**	
302	4460458	2	Seal **(SN 0300171769 through 0300182752)**	
304	4922641	1	Switch Harness	
	1001121340	Ref	**TERMINAL BLOCK ASSEMBLY**	A
401	70002818	2	Marker Strip #1	
402	70002819	4	Marker Strip #2	
403	70002820	2	Marker Strip #3	
404	70002821	2	Marker Strip #4	
405	70002822	4	Marker Strip #5	
406	70002823	1	Terminal, End Barrier	
407	70002824	2	Terminal, End Block	
408	70002825	7	Terminal, Block	
409	70002826	2	Terminal, Cross Connector Jumper	
410	3641533	1	Rail, Relay	
	1001157592	Ref	**JUNCTION BOX ASSEMBLY (SN 0300182753 through 0300235167)**	C
501	1060343	1.5 ft /.46m	Cable, Electrical - 10/4 (60Hz Only)	
502	1060494	2 ft/.6m	Cable, Electrical - 12/3 **(SN 0300171769 through 0300205491)**	
502	1001179154	2.5 ft /.76m	Cable, Electrical - 12/3 **(SN 0300205492 through 0300235167)**	
503	1671092	1	Cover, Connector	
504	3300396	1	Cover, Fuse	
505	3311001	6	Nut #10	
506	4360070	1	Breaker, Circuit 15Amp	
508	4460425	1	Connector, Strain Relief	
509	4460426	2	Connector, Strain Relief	
511	4460963	1	Receptacle	
512	4711000	10	Washer #10	
514	10702077	2	Screw #10 x 3/8	
515	10702082	2	Screw #10 x 3/4	
516	1001152525	1	Plug, Hole	
517	1001157520	1	Block, Terminal Pole	

ITEM	PART NUMBER	QTY	DESCRIPTION	REV
518	1001157521	1	Box, Junction	
519	1001157528	1	Decal - Box Junction	
520	1001158007	1	Cover	
521	1001158008	2	Stand-off	

FIGURE 2-33. SKYAIR AIR COMPRESSOR INSTALLATION

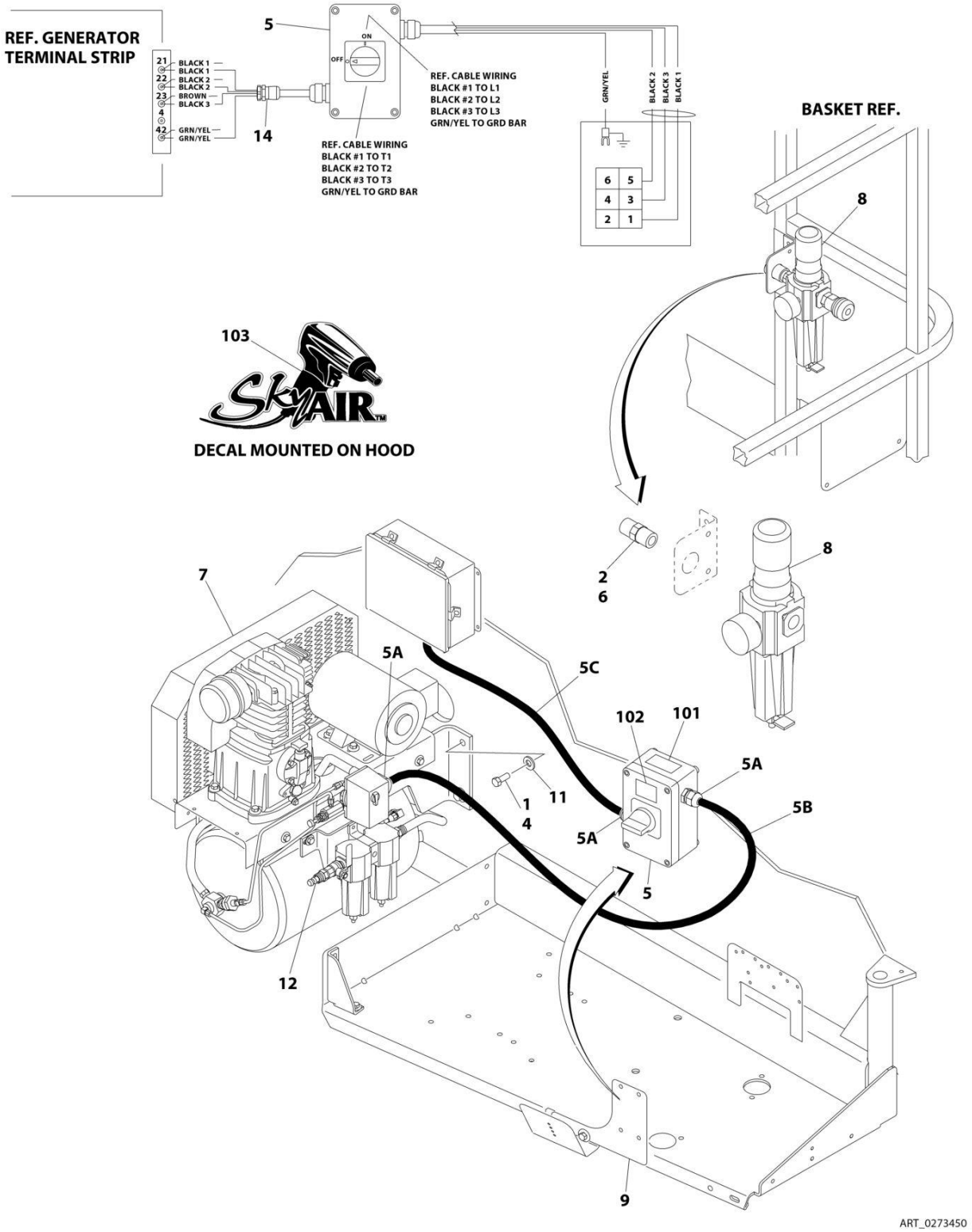

FIGURE 2-33. SKYAIR AIR COMPRESSOR INSTALLATION

ITEM	PART NUMBER	QTY	DESCRIPTION	REV
	0273450	Ref	**SKYAIR AIR COMPRESSOR INSTALLATION**	D
		Ref	**Note: ANSI, ANSI Export, China and CSA Specs Only.**	
		Ref	**Note: Not Available on 600S Shipyard Machines.**	
		Ref	**Note: Only Available on 60Hz Machines.**	
1	0100019	AR	Compound, Locking	
2	0100020	AR	Sealant	
4	0641810	4	Bolt 1/2 x 1-1/4	
5	0861642	1	Control Box Assembly	
5A	4460633	3	Connector, Strain Relief	
5B	70002948	AR	Cable, Electrical - 12/4 (13ft/4m)	
5C	70002948	AR	Cable, Electrical - 12/4 (30in/76cm)	
6	2220252	1	Fitting, Adapter	
7	3600386	1	Compressor Assembly (See AIR COMPRESSOR ASSEMBLY for Breakdown)	
8	3720021	1	Filter/Regulator Assembly	
8	7027781	1	Service Kit (Includes Gaskets and Seals)	
8	7027782	1	Filter	
8	7027784	1	Gauge	
8	7027783	1	Valve, Drain	
9	4340747	1	Bracket, Control Box	
11	4751800	4	Washer 1/2	
12	2220750	1	Fitting	
14	4460428	1	Connector, Strain Relief	
	0273687	Ref	**DECAL INSTALLATION**	A
101	1705836	1	Decal - Hazard Voltage	
102	1705837	1	Decal - Air Compressor	
103	1705886	2	Decal - SkyAir	

FIGURE 2-34. AIR COMPRESSOR ASSEMBLY

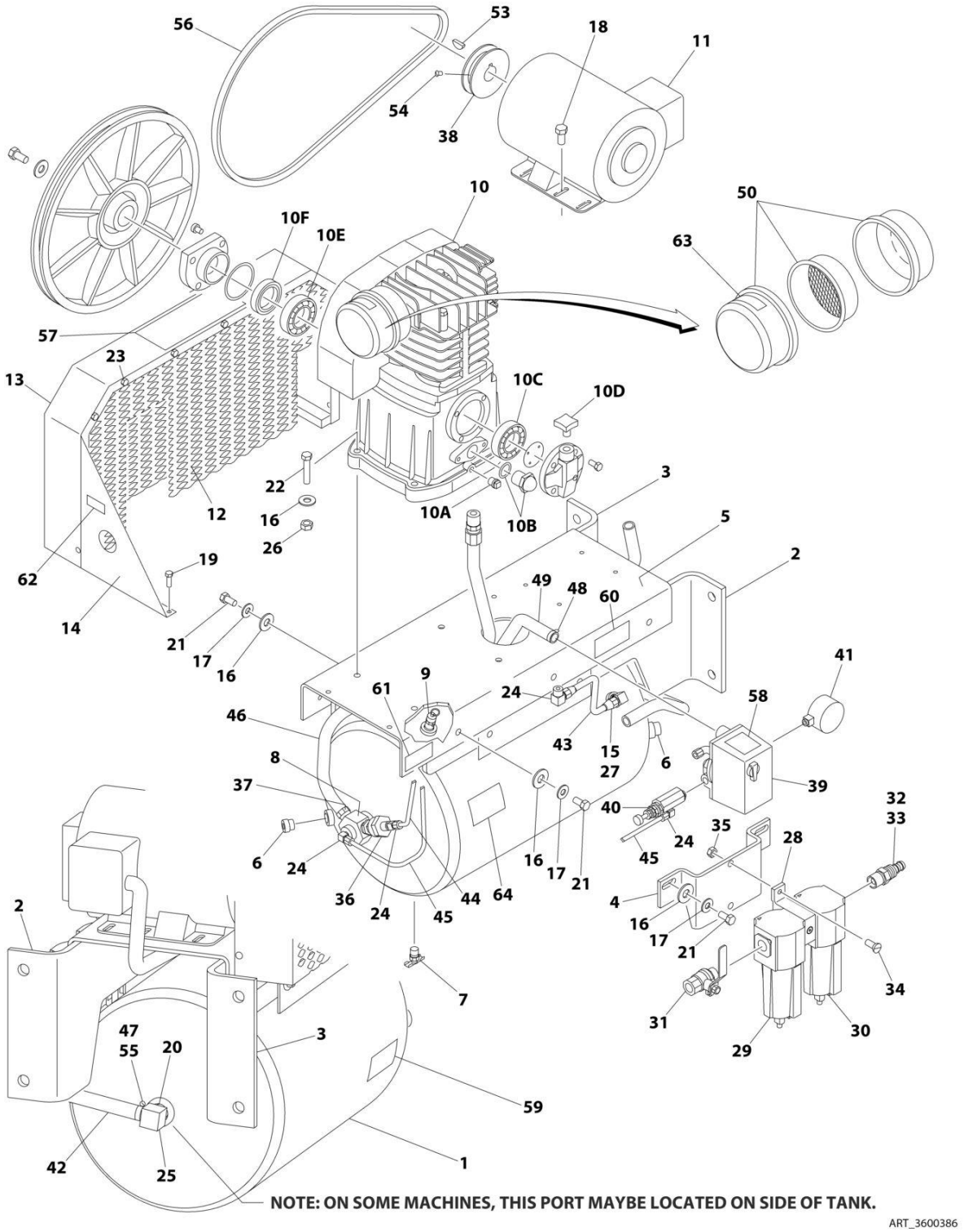

FIGURE 2-34. AIR COMPRESSOR ASSEMBLY

ITEM	PART NUMBER	QTY	DESCRIPTION	REV
	3600386	Ref	**AIR COMPRESSOR ASSEMBLY**	B
1	7026632	1	Tank	
2	See Note	1	Bracket, Mounting (Note: Not Available for Purchase)	
3	See Note	1	Bracket, Mounting (Note: Not Available for Purchase)	
4	See Note	1	Bracket, Regulator Mounting (Note: Not Available for Purchase)	
5	See Note	1	Deck (Note: Not Available for Purchase)	
6	See Note	2	Plug (Note: Not Available for Purchase)	
7	7026633	1	Valve, Drain	
8	7026634	1	Valve, Check	
9	7026635	1	Valve, Safety	
10	7026636	1	Pump Assembly	
10	7026659	1	Gasket and Seal Kit	
10A	7026651	1	Plug, Oil Drain	
10B	7026652	1	Gauge, Oil Sight	
10C	7026653	1	Bearing	
10D	7026654	1	Cap, Oil Fill	
10E	7026655	1	Bearing	
10F	7026656	1	Seal	
11	7026637	1	Motor Assembly	
11	See Note	1	Brush Kit (Note: Not Available for Purchase)	
12	See Note	1	Screen, Inner (Note: Not Available for Purchase)	
13	See Note	1	Guard, Belt (Note: Not Available for Purchase)	
14	See Note	2	Support (Note: Not Available for Purchase)	
15	See Note	1	Bushing (Note: Not Available for Purchase)	
16	4751600	18	Washer 3/8	
17	4761600	10	Washer 3/8	
18	0641506	4	Bolt 5/16 x 3/4	
19	0641406	8	Bolt 1/4 x 3/4	
20	See Note	1	Bushing (Note: Not Available for Purchase)	
21	0641610	10	Bolt 3/8 x 1-1/4	
22	0641616	4	Bolt 3/8 x 2	
23	See Note	10	Bolt 1/4 x 1/2 (Note: Not Available for Purchase)	
24	See Note	4	Fitting (Note: Not Available for Purchase)	
25	See Note	1	Fitting, Barbed (Note: Not Available for Purchase)	
26	3311605	4	Nut 3/8	
27	See Note	1	Fitting, Compression (Note: Not Available for Purchase)	
28	See Note	1	Bracket, Mounting (Note: Not Available for Purchase)	
29	7026660	1	Filter, Oil Removal	
30	7026661	1	Filter, Water Removal	
31	70001663	1	Valve, Ball Shut-Off	
32	See Note	1	Bushing (Note: Not Available for Purchase)	
33	See Note	1	Fitting, Barbed (Note: Not Available for Purchase)	
34	See Note	2	Screw 1/4 x 1 (Note: Not Available for Purchase)	
35	3311405	2	Nut 1/4	
36	See Note	1	Unloader (Note: Not Available for Purchase)	
37	See Note	1	Fitting (Note: Not Available for Purchase)	
38	See Note	1	Pulley (Note: Not Available for Purchase)	
39	7026638	1	Switch, Pressure	
40	7026639	1	Valve, Pilot	
41	7026640	1	Gauge	

ITEM	PART NUMBER	QTY	DESCRIPTION	REV
42	See Note	1	Hose (Note: Not Available for Purchase)	
43	See Note	1	Tube, Feed (Note: Not Available for Purchase)	
44	See Note	1	Tube (Note: Not Available for Purchase)	
45	See Note	1	Tube (Note: Not Available for Purchase)	
46	See Note	1	Aftercooler (Note: Not Available for Purchase)	
47	See Note	2	Clamp (Note: Not Available for Purchase)	
48	See Note	2	Clamp (Note: Not Available for Purchase)	
49	See Note	1	Harness, Wiring (Note: Not Available for Purchase)	
50	7026658	1	Filter Assembly	
50	7026641	1	Element, Filter	
51	See Note	23 oz	Oil, Compressor (Note: Not Available for Purchase)	
52	0100020	AR	Sealant	
53	See Note	1	Key (Note: Not Available for Purchase)	
54	See Note	2	Setscrew (Note: Not Available for Purchase)	
55	See Note	2	Cover, Clamp End (Note: Not Available for Purchase)	
56	7026642	1	Belt	
57	7026643	1	Decal - Unit Warning	
58	7026644	1	Decal - Pressure Switch Warning	
59	7026645	1	Decal - Drain Tank Warning	
60	7026646	1	Decal - Compressor Maintenance	
61	7026647	1	Decal - Initial Oil Fill	
62	7026648	1	Decal - Hot Surfaces Warning	
63	7026649	1	Decal - Paper Element Cleaning	
64	7026650	1	Decal - Dual Control	

SECTION 3 - BOOM

FIGURE 3-1. BOOM INSTALLATION - 600S

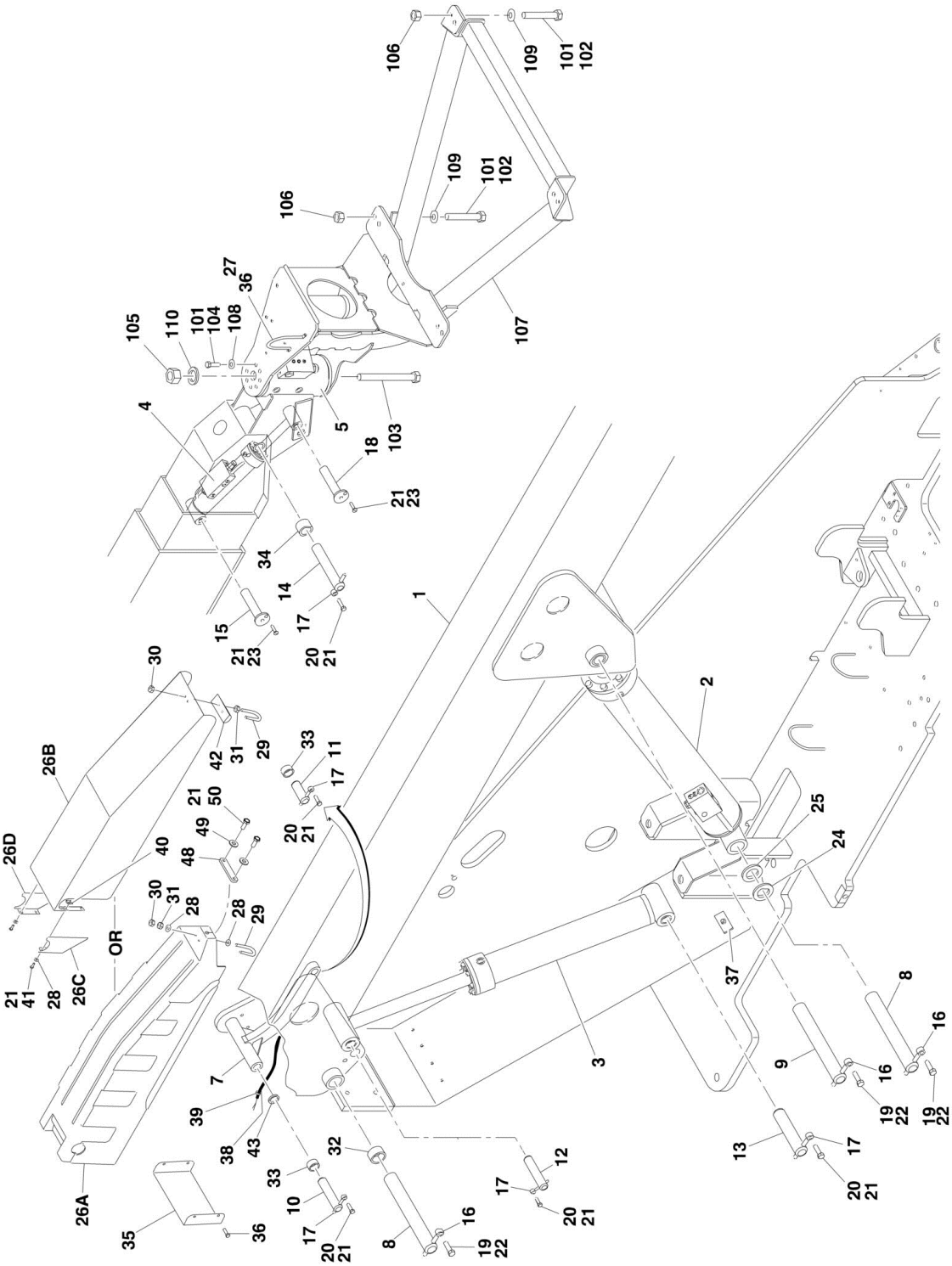

FIGURE 3-1. BOOM INSTALLATION - 600S

ITEM	PART NUMBER	QTY	DESCRIPTION	REV
		Ref	**BOOM AND CYLINDERS INSTALLATIONS - 600S**	
		Ref	**USA Built Machines: (Machines without Shipyard Package)**	
	1001108341	Ref	**Boom and Cylinders Installations (SN 0300171769 through 0300181890)**	K
	1001160098	Ref	**Boom and Cylinders Installations (SN 0300181891 through 0300235167)**	H
		Ref	**USA Built Machines: (Machines with Shipyard Package)**	
	1001121410	Ref	**Boom and Cylinders Installations (SN 0300171769 through 0300181890)**	G
	1001160101	Ref	**Boom and Cylinders Installations (SN 0300181891 through 0300235167)**	I
	1001108341	Ref	**China Built Machines - Boom and Cylinders Installations**	K
1	See Note	1	Boom Assembly (See MAIN BOOM ASSEMBLY for Breakdown)	
2	1001112468	1	Boom Lift Cylinder Assembly (See CYLINDER SECTION for Breakdown)	
3	1684414	1	Master Cylinder Assembly (See CYLINDER SECTION for Breakdown)	
4	1683415	NLA	Platform Level Cylinder Assembly (See CYLINDER SECTION for Breakdown) (Use p/n 1001223512) **(SN 0300171769 through 0300229955)**	
4	1001223512	NLA	Platform Level Cylinder Assembly (Use p/n 1001228008) (See CYLINDER SECTION for Breakdown) **(SN 0300229956 through 0300235167)**	
4	1683415	NLA	Platform Level Cylinder Assembly (See CYLINDER SECTION for Breakdown) (Use p/n 1001223512) **(SN B300000970 through B300002654)**	
5		Ref	Rotator Assembly Options (See ROTATOR ASSEMBLIES for Breakdown):	
5		Ref	USA Built Machines	
5	0060067	NLA	Rotator Assembly (Original Equipment) **(SN 0300171769 through 0300181890)**	
5	1001181057	1	Rotator Assembly (Service Replacement) **(SN 0300171769 through 0300181890)**	
5	1001157221	1	Rotator Assembly **(SN 0300181891 through 0300201109)**	
5	1001181058	1	Rotator Assembly **(SN 0300201110 through 0300235167)**	
5		Ref	China Built Machines	
5	0060067	1	Rotator Assembly **(SN B300000970 through B300001318)**	
5	1001181057	1	Rotator Assembly **(SN B300001319 through B300002654)**	
7	1001094043	1	Link, Push	
8	3422564	2	Pin (Cylinder Pivot - T/T End and Boom Pivot)	
9	3423184	1	Pin (Lift Cylinder Pivot - Boom End)	
10	3422566	1	Pin (Link - T/T End)	
11	3422557	1	Pin (Link - Boom End)	
12	3422563	1	Pin (Master Cylinder - Boom End)	
13	3422565	1	Pin (Master Cylinder - T/T End)	
14	3422562	1	Pin (Rotator)	
15	3422569	1	Pin (Level Cylinder - Boom End)	
16	3841258	3	Keeper, Pin	
17	3841143	5	Keeper, Pin	
18	3422580	1	Pin (Level Cylinder - Rotator End)	
19	0642012	3	Bolt 5/8in-11NC x 1-1/2in	
20	0641608	5	Bolt 3/8in-16NC x 1in	

ITEM	PART NUMBER	QTY	DESCRIPTION	REV
21	0100011	AR	Compound, Locking	
22	0100019	AR	Compound, Locking	
23	0741607	AR	Screw, Countersunk 3/8in-16NC x 7/8in	
23	0741605	2	Screw, Countersunk 3/8in-16NC x 5/8in	
24	4740314	AR	Thrustwasher	
25	4740158	AR	Thrustwasher	
26		Ref	Cover, Boom Options:	
26A	1001148925	1	Cover, Black Poly	
26B	1001122472	1	Cover, Steel (Machines with Shipyard Package Only)	
26C	1001127195	1	Bracket, LH Cover (Machines with Shipyard Package Only)	
26D	1001127196	1	Bracket, RH Cover (Machines with Shipyard Package Only)	
27	3841340	AR	Loop, Hose	
28	4751400	AR	Flatwasher 1/4in Regular Options:	
28	4751400	4	Machines without Shipyard Package **(SN 0300171769 through 0300172252)**	
28	4751400	4	Machines with Shipyard Package	
29	0630458	AR	U-Bolt Options:	
29	0630458	1	Machines without Shipyard Package **(SN 0300171769 through 0300172252)**	
29	0630458	1	Machines with Shipyard Package	
30		Ref	Nut Options:	
30	3311402	4	Nut, Jam 1/4in-20NC (Machines without Shipyard Package) **(SN 0300171769 through 0300172252)**	
30	3311401	4	Nut 1/4in-20NC (Machines with Shipyard Package)	
31	3311405	AR	Locknut 1/4in-20NC Options:	
	3311405	2	Machines without Shipyard Package **(SN 0300171769 through 0300172252)**	
	3311405	2	Machines with Shipyard Package	
32	0961950	2	Bushing	
33	0962006	3	Bushing	
34	0961951	2	Bushing	
35	3539563	1	Cover **(SN 0300171769 through 0300172252)**	
36	0641604	AR	Bolt 3/8in-16NC x 1/2in	
37	1320235	1	Clamp, Stauff	
38	4100033	3 ft/.9m	Sleeve	
39	4240018	AR	Tie-Strap	
40	3300454	4	Nut, Special	
41	0641406	4	Bolt 1/4in-20NC x 3/4in	
42	3340800	1	Pad, Wear (Machines with Shipyard Package Only)	
43	0962057	2	Bushing (Machines with Shipyard Package Only)	
48	1001180303	1	Bar **(SN 0300200429 through 0300235167)**	
48	1001180303	1	Bar **(SN B300001319 through B300002654)**	
49	4711000	2	Flatwasher #10	
50	0721004	2	Screw #10 x 1/2	
		Ref	**SUPPORT INSTALLATIONS**	
		Ref	**Machines without LSS and without SkyGlazier.**	
	0272070	Ref	**USA Built Machines**	D
	1001115098	Ref	**China Built Machines**	B
	See Note	Ref	**Machines with LSS (Note: See Separate Breakdown in this Section)**	
101	0100011	AR	Compound, Locking	
102	0641812	8	Bolt 1/2in-13NC x 1-1/2in	

ITEM	PART NUMBER	QTY	DESCRIPTION	REV
103	0642684	1	Bolt 1in-8NC x 10-1/2in	
104	0681608	8	Bolt 3/8in-16NC x 1in (Grade 8)	
105		Ref	Locknut 1in-8NC Options:	
105	3272605	1	USA Built Machines	
105	3300243	1	China Built Machines	
106	3311805	8	Locknut 1/2in-13NC	
107		Ref	Support, Platform Options:	
107	4846573	1	USA Built Machines	
107	1001113465	1	China Built Machines	
108	4891600	8	Flatwasher 3/8in Hardened	
109	4891800	8	Flatwasher 1/2in Hardened	
110	4892600	1	Flatwasher 1in Hardened	

FIGURE 3-2. BOOM INSTALLATION - 660SJ

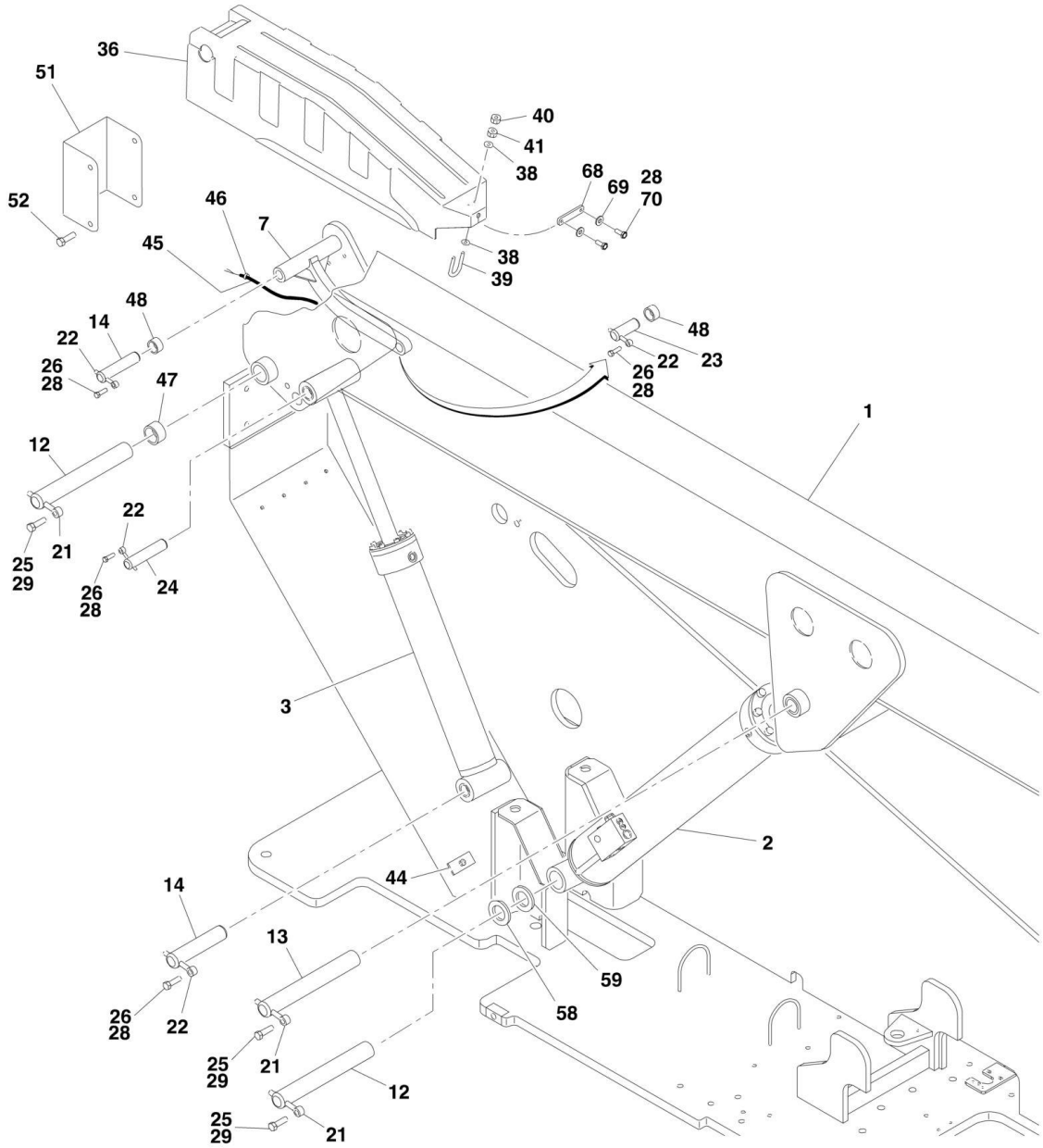

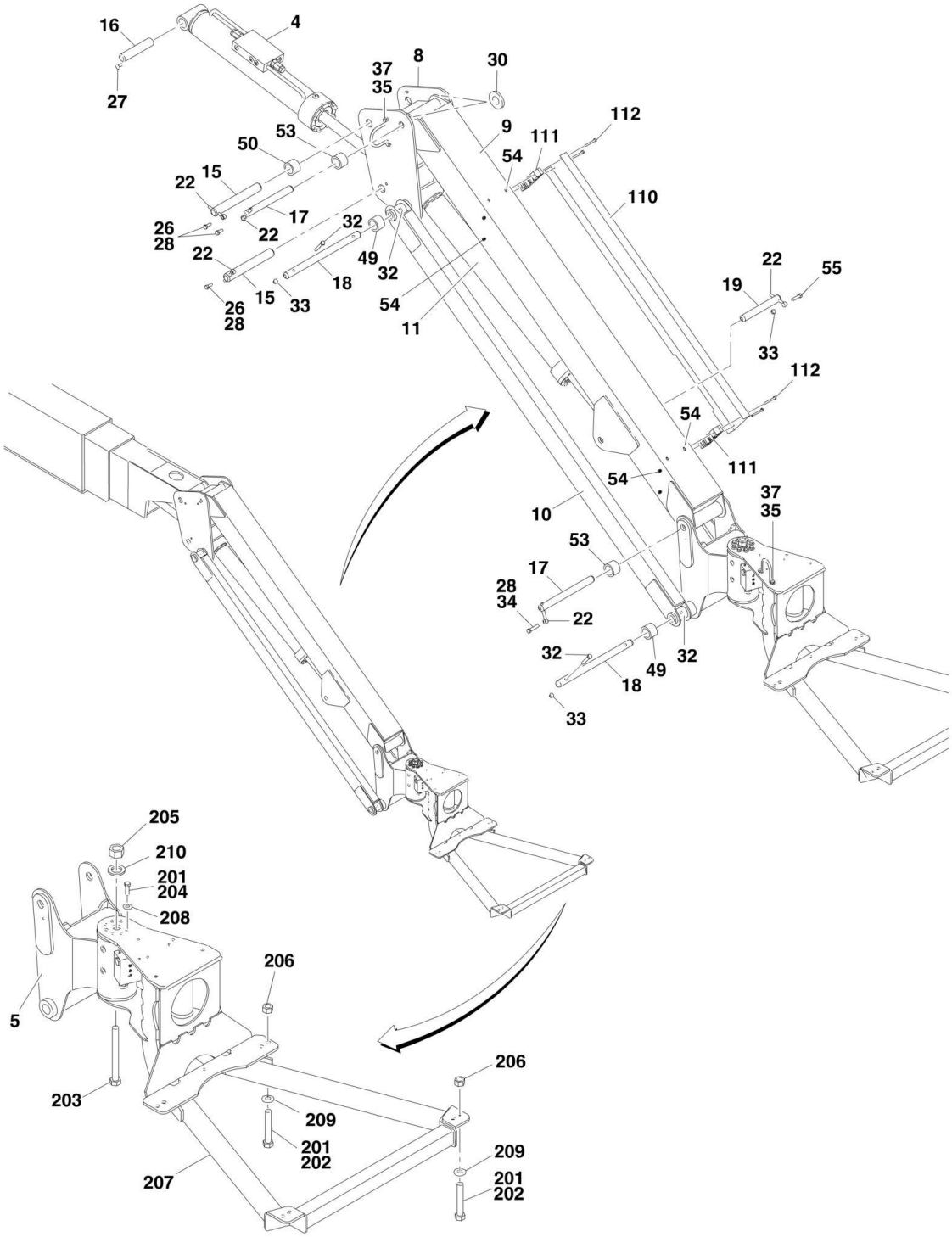
16
4
27
37
35
8
30
53
50
9
111
112
54
22
15
17
110
26
28
22
32
22
49
32
18
15
33
54
11
22
55
19
33
112
54
111
54
10
37
35
53
17
28
34
22
32
32
49
18
33
205
210
201
204
208
206
5
203
209
201
202
207
206
209
201
202

FIGURE 3-2. BOOM INSTALLATION - 660SJ

ITEM	PART NUMBER	QTY	DESCRIPTION	REV
		Ref	**BOOM AND CYLINDERS INSTALLATIONS - 660SJ**	
		Ref	**USA Built Machines:**	
	1001108342	Ref	**Boom and Cylinders Installations (SN 0300171769 through 0300181890)**	L
	1001160099	Ref	**Boom and Cylinders Installations (SN 0300181891 through 0300235167)**	L
	1001115359, 1001115357 AND 1001113429	Ref	**China Built Machines**	F-D-G
1	See Note	1	Boom Assembly (See MAIN BOOM ASSEMBLY for Breakdown)	
2	1001112468	1	Boom Lift Cylinder Assembly (See CYLINDER SECTION for Breakdown)	
3	1684413	1	Master Cylinder Assembly (See CYLINDER SECTION for Breakdown)	
4	1683418	NLA	Platform Level Cylinder Assembly (Use p/n 1001228051) (See CYLINDER SECTION for Breakdown) (Use p/n 1001223331) **(SN 0300171769 through 0300229955)**	
4	1001223331	NLA	Platform Level Cylinder Assembly (Use p/n 1001228051) (See CYLINDER SECTION for Breakdown) **(SN 0300229956 through 0300235167)**	
4	1683418	NLA	Platform Level Cylinder Assembly (Use p/n 1001228051) (See CYLINDER SECTION for Breakdown) (Use p/n 1001223331) **(SN B300000970 through B300002654)**	
5		Ref	Rotator Assembly (See ROTATOR ASSEMBLIES for Breakdown)	
5		Ref	USA Built Machines	
5	0060066	NLA	Rotator Assembly (Use p/n 1001178269) **(SN 0300171769 through 0300181890)**	
5	1001157220	1	Rotator Assembly **(SN 0300181891 through 0300201109)**	
5	1001178256	NLA	Rotator Assembly (Use p/n 1001217780) **(SN 0300201110 through 0300231801)**	
5	1001217780	1	Rotator Assembly **(SN 0300231802 through 0300235167)**	
5		Ref	China Built Machines	
5	0060066	NLA	Rotator Assembly (Use p/n 1001178269) **(SN B300000970 through B300001318)**	
5	1001178269	1	Rotator Assembly **(SN B300001319 through B300002654)**	
7	1001094043	1	Link, Push	
8	4844815	1	Pivot **(SN 0300171769 through 0300200428)**	
8	1001169384	1	Pivot **(SN 0300200429 through 0300235167)**	
8	4844815	1	Pivot **(SN B300000970 through B300001318)**	
8	1001169384	1	Pivot **(SN B300001319 through B300002654)**	
9		Ref	Tube, Top Jib Options:	
9	4844816	1	USA Built Machines	
9	1001113386	1	China Built Machines	
10		Ref	Tube, Bottom Jib Options	
10	4844817	2	USA Built Machines	
10	1001113407	2	China Built Machines	
11	1683609	NLA	Jib Lift Cylinder Assembly (Use p/n 1001248012) (See CYLINDER SECTION for Breakdown)	
12	3422564	2	Pin (Boom Pivot and Lift Cylinder Pivot - T/T End)	
13	3423184	1	Pin (Boom Lift Cylinder - Boom End)	
14	3422566	2	Pin (Link - T/T End and Master Cylinder - T/T End)	

ITEM	PART NUMBER	QTY	DESCRIPTION	REV
15	3422561	2	Pin (Jib Cylinder - Pivot End and Pivot - Boom End)	
16	3422583	1	Pin (Jib Level Cylinder - Boom End)	
17	3422860	2	Pin (Top Tube - Pivot End)	
18	3422861	2	Pin (Bottom Tube - Both Ends)	
19	3422867	1	Pin (Jib Lift Cylinder - Top Tube End)	
21	3841258	3	Keeper, Pin	
22	3841143	9	Keeper, Pin	
23	3422557	1	Pin (Link - Boom)	
24	3422790	1	Pin (Master Cylinder - Boom End)	
25	0642012	3	Bolt 5/8in-11NC x 1-1/2in	
26	0641608	7	Bolt 3/8in-16NC x 1in	
27	0741607	1	Screw, Countersunk 3/8in-16NC x 7/8in	
27	0741605	1	Screw, Countersunk 3/8in-16NC x 5/8in	
28	0100011	AR	Compound, Locking	
29	0100019	AR	Compound, Locking	
30	4740439	2	Thrustwasher	
32	0641618	4	Bolt 3/8in-16NC x 2-1/4in	
33	3311605	5	Locknut 3/8in-16NC	
34		Ref	Bolt Options:	
34	0641614	1	Bolt 3/8in-16NC x 1-3/4in	
34	0641610	1	Bolt 3/8in-16NC x 1-1/4in	
35	3841340	AR	Clamp, Loop	
36	1001148925	1	Cover, Boom	
37	0641606	AR	Bolt 3/8in-16NC x 3/4in	
38	4751400	Ref	Flatwasher 1/4in Regular Options:	
38	4751400	4	USA Built Machines **(SN 0300171769 through 0300172252)**	
38	4751400	4	China Built Machines	
39	0630458	Ref	U-Bolt Options:	
39	0630458	1	USA Built Machines **(SN 0300171769 through 0300172252)**	
39	0630458	1	China Built Machines	
40	3311402	Ref	Nut, Jam 1/4in-20NC Options:	
40	3311402	4	USA Built Machines **(SN 0300171769 through 0300172252)**	
40	3311402	4	China Built Machines	
41	3311405	Ref	Locknut 1/4in-20NC Options:	
41	3311405	2	USA Built Machines **(SN 0300171769 through 0300172252)**	
41	3311405	2	China Built Machines	
44	1320235	1	Clamp, Stauff	
45	4100033	3 ft/.9m	Sleeve, Abrasion	
46	4240018	AR	Tie-Strap	
47	0961950	2	Bushing	
48	0962006	3	Bushing	
49	0961947	6	Bushing	
50	0961951	2	Bushing	
51	3539563	Ref	Cover Options:	
51	3539563	1	USA Built Machines **(SN 0300171769 through 0300172252)**	
51	Not Required	0	China Built Machines	
52	0641604	AR	Bolt 3/8in-16NC x 1/2in	
53	0962335	4	Bushing	
54	2080044	4	Rivnut	
54		Ref	Plug Options:	
54		Ref	USA Built Machines	

ITEM	PART NUMBER	QTY	DESCRIPTION	REV
54	3520034	4	Plug **(Prior to SN 0300229956)**	
54	1001223899	4	Plug **(SN 0300229956 to Present)**	
54		Ref	China Built Machines	
54	3520034	4	Plug **(Prior to SN B300002249)**	
54	1001223899	4	Plug **(SN B300002249 through B300002654)**	
55	0641611	1	Bolt 3/8in-16NC x 1-3/8in	
56	4360328	1	Switch, Toggle (Not Shown - Located at Platform Console Box)	
57	3790012	1	O-Ring (Not Shown - Used with item 56)	
58	4740314	AR	Thrustwasher	
59	4740158	AR	Thrustwasher	
61		Ref	Plug Options: (Not Shown)	
61		Ref	USA Built Machines	
61	3520034	4	Plug **(Prior to SN 0300229956)**	
61	1001223899	1	Plug **(SN 0300229956 to Present)**	
61		Ref	China Built Machines	
61	3520034	4	Plug **(Prior to SN B300002249)**	
61	1001223899	4	Plug **(SN B300002249 through B300002654)**	
68	1001180303	1	Bar **(SN 0300200097 through 0300235167)**	
68	1001180303	1	Bar **(SN B300001161 through B300002654)**	
69	4711000	2	Flatwasher #10	
70	0721004	2	Screw #10 x 1/2	
		Ref	**BOOM CABLES INSTALLATION**	
110		Ref	Cover Options:	
110		Ref	USA Built Machines	
110	1670769	1	Cover **(SN 0300171769 through 0300181890)**	
110	1671034	1	Cover **(SN 0300181891 through 0300235167)**	
110	Not Required	0	China Built Machines	
111		Ref	Clamp, Block Options:	
111		Ref	USA Built Machines	
111	0561237	2	Clamp, Block **(SN 0300171769 through 0300181890)**	
111	1001165350	2	Clamp, Block **(SN 0300181891 through 0300235167)**	
111	0561237	2	China Built Machines	
112	0641416	4	Bolt 1/4in-20NC x 2in	
112	0641424	4	Bolt 1/4in-20NC x 3in	
		Ref	**SUPPORT INSTALLATIONS**	
		Ref	**Machines without LSS and without SkyGlazier.**	
	0272070	Ref	**USA Built Machines**	D
	1001115098	Ref	**China Built Machines**	B
	See Note	Ref	**Machines with LSS (Note: See Separate Breakdown in this Section)**	
201	0100011	AR	Compound, Locking	
202	0641812	8	Bolt 1/2in-13NC x 1-1/2in	
203	0642684	1	Bolt 1in-8NC x 10-1/2in	
204	0681608	8	Bolt 3/8in-16NC x 1in (Grade 8)	
205		Ref	Locknut 1in-8NC Options:	
205	3272605	1	USA Built Machines:	
205	3300243	1	China Built Machines:	
206	3311805	8	Locknut 1/2in-13NC	
207		Ref	Support, Platform Options:	
207		Ref	Machines without Load Sensing and without SkyGlazier	
207	4846573	1	USA Built Machines	
207	1001113465	1	China Built Machines	

ITEM	PART NUMBER	QTY	DESCRIPTION	REV
207	See Notes Above	1	Machines with Load Sensing and/or SkyGlazier Options	
208	4891600	8	Flatwasher 3/8in Hardened	
209	4891800	8	Flatwasher 1/2in Hardened	
210	4892600	1	Flatwasher 1in Hardened	

FIGURE 3-3. MAIN BOOM ASSEMBLIES

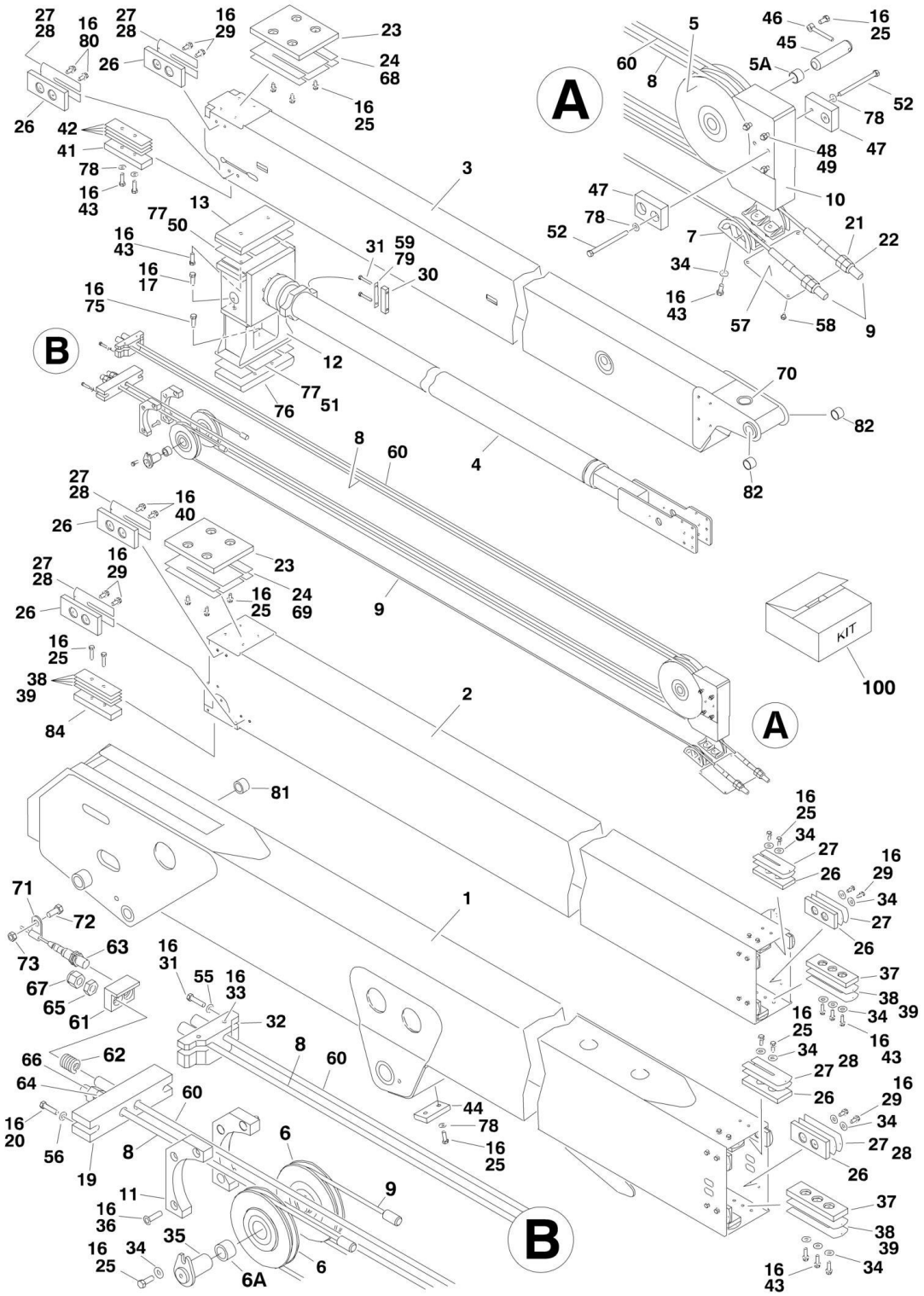

FIGURE 3-3. MAIN BOOM ASSEMBLIES

ITEM	PART NUMBER	QTY	DESCRIPTION	REV
		Ref	**MAIN BOOM ASSEMBLY OPTIONS:**	
		Ref	**USA Built Machines:**	
		Ref	**ANSI and ANSI Export Specs (USA Built Machines)**	
	0801471	Ref	**Main Boom Assembly 600S (SN 0300171769 through 0300182176)**	I
	1001157430	Ref	**Main Boom Assembly 600S (SN 0300182177 through 0300235167)**	B
	0801475	Ref	**Main Boom Assembly 660SJ (SN 0300171769 through 0300182176)**	I
	1001158407	Ref	**Main Boom Assembly 660SJ (SN 0300182177 through 0300235167)**	B
		Ref	**Australian and CE Specs (USA Built Machines)**	
	0801472	Ref	**Main Boom Assembly 600S (SN 0300171769 through 0300182176)**	I
	1001157431	Ref	**Main Boom Assembly 600S (SN 0300182177 through 0300235167)**	C
	0801473	Ref	**Main Boom Assembly 660SJ (SN 0300171769 through 0300182176)**	H
	1001157626	Ref	**Main Boom Assembly 660SJ (SN 0300182177 through 0300235167)**	C
		Ref	**China Built Machines**	
		Ref	**ANSI Export and Japanese Specs (China Built Machines)**	
	1001127285	Ref	**Main Boom Assembly 600S (SN B300000970 through B300001232)**	D
	1001157490	Ref	**Main Boom Assembly 600S (SN B300001233 through B300002654)**	C
	1001126509	Ref	**Main Boom Assembly 660SJ (SN B300000970 through B300001232)**	D
	1001158729	Ref	**Main Boom Assembly 660SJ (SN B300001233 through B300002654)**	C
		Ref	**Australian Spec (China Built Machines)**	
	1001126597	Ref	**Main Boom Assembly 600S (SN B300000970 through B300001232)**	D
	1001157489	Ref	**Main Boom Assembly 600S (SN B300001233 through B300002654)**	C
	1001126596	Ref	**Main Boom Assembly 660SJ (SN B300000970 through B300001232)**	D
	1001158728	Ref	**Main Boom Assembly 660SJ (SN B300001233 through B300002654)**	C
1	0801396	1	Base Weldment	
2	0801524	1	Mid Weldment	
3		Ref	Fly Weldment Options:	
3		Ref	USA Built Machines	
3	0801498	1	Fly Weldment 600S **(SN 0300171769 through 0300182176)**	
3	1001157429	1	Fly Weldment 600S **(SN 0300182177 through 0300235167)**	
3	0801504	1	Fly Weldment 660SJ **(SN 0300171769 through 0300182176)**	
3	1001157623	1	Fly Weldment 660SJ **(SN 0300182177 through 0300235167)**	
3		Ref	China Built Machines	
3	0801498	1	Fly Weldment 600S **(SN B300000970 through B300001232)**	

ITEM	PART NUMBER	QTY	DESCRIPTION	REV
3	1001157429	1	Fly Weldment 600S **(SN B300001233 through B300002654)**	
3	0801504	1	Fly Weldment 660SJ **(SN B300000970 through B300001232)**	
3	1001157623	1	Fly Weldment 660SJ **(SN B300001233 through B300002654)**	
4	1683618	1	Telescope Cylinder Assembly (See CYLINDER SECTION for Breakdown)	
5	3580241	1	Sheave Assembly (Extend)	2-B
5A	0961951	2	Bushing	
6	3580243	2	Sheave Assembly (Retract)	1-A
6A	0961951	2	Bushing (1 Per Sheave)	
7	1220078	2	Block, Sheave	
8		Ref	Cable (Extend) Options:	
8	3890005	1	ANSI and ANSI Export Specs	
8	3890010	1	Australian and CE Specs **(SN 0300171769 through 0300206978)**	
8	1001187468	1	Australian and CE Specs **(SN 0300206979 through 0300235167)**	
8	3890010	1	Australian Specs **(SN B300000970 through B300001475)**	
8	1001187468	1	Australian Specs **(SN B300001476 through B300002654)**	
9	3890006	2	Cable (Retract)	
10	3580248	1	Guard, Sheave (Extend)	
11	3580249	2	Guard, Sheave (Retract)	
12	4846319	1	Support, Wear Pad	
13	3340844	1	Pad, Wear	
16	0100011	AR	Compound, Locking	
17	0681610	4	Bolt 3/8in-16NC x 1-1/4in (Grade 8)	
19		Ref	Block, Cable Options:	
19	0561184	1	ANSI and ANSI Export Specs	
19	0561245	1	Australian and CE Specs	
20	0641824	2	Bolt 1/2in-13NC x 3in	
21	3312201	2	Nut 3/4in-10NC	
22	3300241	2	Locknut, Special 3/4in-10NC	
23	3340757	2	Pad, Wear	
24	4070896	4	Shim (.06) (Without Slide-In Slots)	
25	0811607	AR	Bolt 3/8in-16NC x 7/8in	
26		Ref	Pad, Wear Options:	
26	1001148652	20	USA Built Machines	
26	3340881	20	China Built Machines	
27	4070897	28	Shim (.05)	
28	4070898	24	Shim (.12)	
29	0811606	24	Bolt 3/8in-16NC x 3/4in	
30	0561185	2	Block	
31	0641616	6	Bolt 3/8in-16NC x 2in	
32	0561183	1	Block, Cable	
33	3951608	2	Setscrew 3/8in-16NC x 1in	
34	4711600	AR	Flatwasher 3/8in Thin	
35	3422424	2	Pin (Retract Sheave)	
36	0741612	6	Screw, Countersunk 3/8in-16NC x 1-1/2in	
37	3340871	4	Pad, Wear	
38	4070863	AR	Shim (.12)	
39	4070864	AR	Shim (.05)	

ITEM	PART NUMBER	QTY	DESCRIPTION	REV
40	0641613	AR	Bolt 3/8in-16NC x 1-5/8in	
41		Ref	Pad, Wear Options:	
41	1001148650	2	USA Built Machines	
41	3340758	2	China Built Machines	
42	4070895	8	Shim (.06)	
43	0811608	22	Bolt 3/8in-16NC x 1in	
44	0561076	1	Block	
45	3422417	2	Pin (Extend Sheave)	
46	3841143	1	Keeper, Pin	
47		Ref	Pad, Wear Options:	
47	1001148651	2	USA Built Machines	
47	3340755	2	China Built Machines	
48	0641634	4	Bolt 3/8in-16NC x 4-1/4in	
49	3311605	4	Locknut 3/8in-16NC	
50	4070976	1	Shim (.12)	
51	4071004	1	Shim (.25)	
52	0641638	2	Bolt 3/8in-16NC x 4-3/4in	
55	4891600	6	Flatwasher 3/8in Hardened	
56	4891800	2	Flatwasher 1/2in Hardened	
57	3539622	1	Plate, Cover	
58	0641403	4	Bolt 1/4in-20NC x 3/8in	
59	4070929	AR	Shim	
60		Ref	Cable (Extend) Options:	
60	3890005	1	ANSI and ANSI Export Specs	
60	3890009	1	Australian and CE Specs **(SN 0300171769 through 0300206978)**	
60	1001187467	1	Australian and CE Specs **(SN 0300206979 through 0300235167)**	
60	3890009	1	Australian Specs **(SN B300000970 through B300001475)**	
	1001187467	1	Australian Specs **(SN B300001476 through B300002654)**	
61	0561508	1	Plate, Spring Mounting (Australian and CE Specs Only)	
62	4160149	1	Spring (Australian and CE Specs Only)	
63	4360506	1	Switch, Proximity (Australian and CE Specs Only)	
64		Ref	Nut Options:	
64	3300241	1	Locknut, Special 3/4in-10NC (ANSI and ANSI Export Specs)	
64	3272401	1	Nut 7/8in-9NC (Grade 8) (Australian and CE Specs)	
65		Ref	Nut Options	
65	3300241	1	Locknut, Special 3/4in-10NC (ANSI and ANSI Export Specs)	
65	3272001	1	Nut 5/8in-11NC (Grade 8) (Australian and CE Specs)	
66		Ref	Locknut Options:	
66	3312201	1	Nut 3/4in-10NC (ANSI and ANSI Export Specs)	
66	3300242	1	Locknut 7/8in-9NC (Australian and CE Specs)	
67		Ref	Locknut Options:	
67	3312201	1	Nut 3/4in-10NC (ANSI and ANSI Export Specs)	
67	3300240	1	Locknut 5/8in-11NC (Australian and CE Specs)	
68	4070939	AR	Shim 16Ga	
69	4070940	AR	Shim 16Ga	
70	4060805	6 in/16cm	Flex-Trim	
71	1320244	1	Clamp (Australian and CE Specs Only)	
72	0641406	1	Bolt 1/4in-20NC x 3/4in (Australian and CE Specs Only)	
73	3311401	NLA	Locknut 1/4in-20NC (Australian and CE Specs Only) (Use p/n 3311405)	

ITEM	PART NUMBER	QTY	DESCRIPTION	REV
75	0681608	4	Bolt 3/8in-16NC x 1in	
76	3340900	1	Pad, Wear	
77	4071005	AR	Shim	
78	4751600	12	Flatwasher 3/8in Regular	
79	4071007	AR	Shim	
80	0811614	4	Bolt 3/8in-16NC x 1-3/4in	
81	0961950	2	Bushing	
82	0961951	2	Bushing (660SJ Only)	
83	3020039	AR	Lubricant (Not Shown)	
84		Ref	Pad, Wear	
84	1001148653	1	USA Built Machines	
84	3340871	1	China Built Machines	
100	2901986	1	Kit, Wear Pad Support (Includes Items 12, 51, 75, 76 & 77)	

FIGURE 3-4. ROTATOR ASSEMBLIES

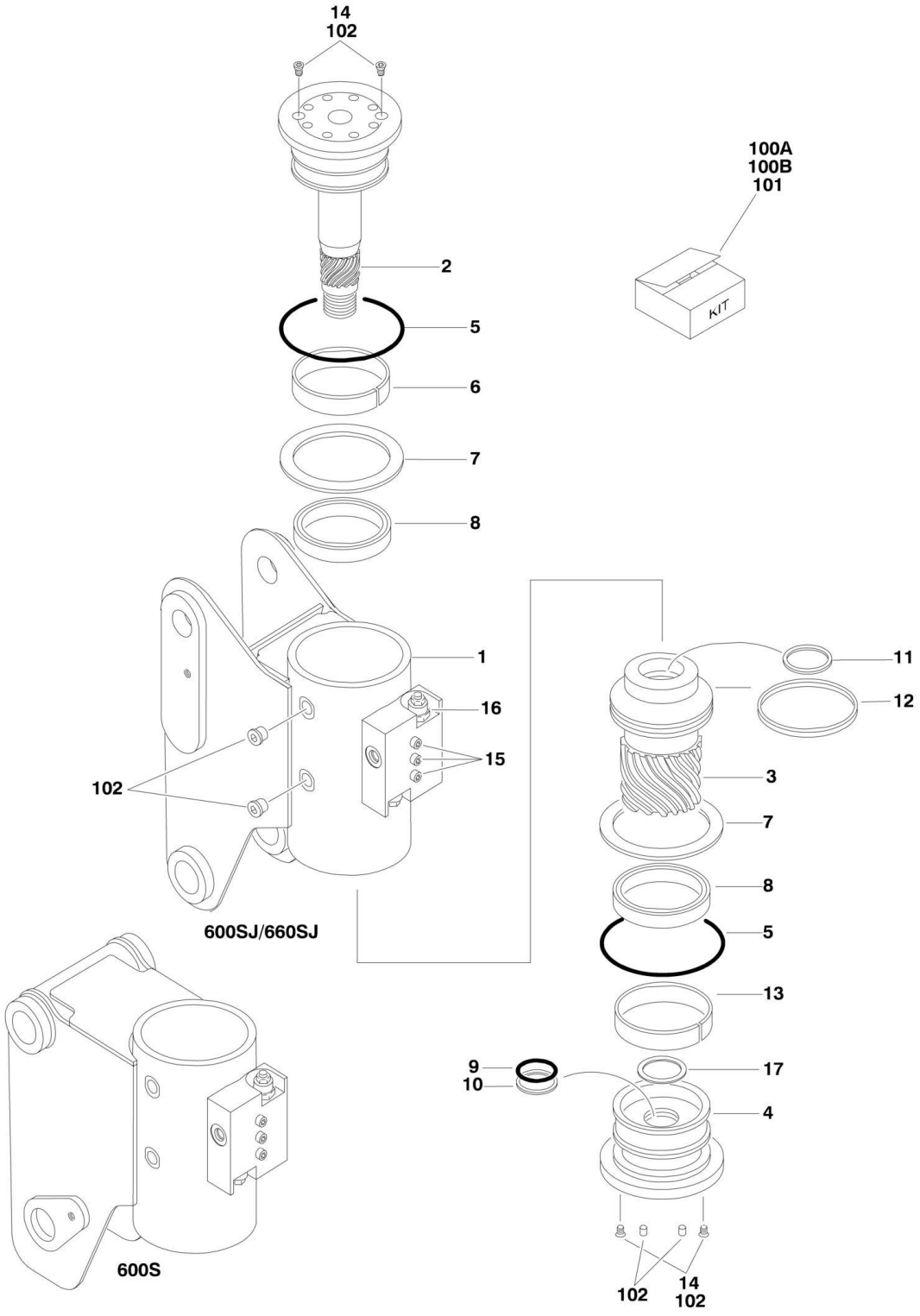

FIGURE 3-4. ROTATOR ASSEMBLIES

ITEM	PART NUMBER	QTY	DESCRIPTION	REV
		Ref	**ROTATOR ASSEMBLIES**	
		Ref	**Rotator Assemblies 600S**	
		Ref	**USA Built Machines:**	
	0060067	Ref	**Rotator Assemblies (Original Equipment) (SN 0300171769 through 0300181890)**	B
	1001181057	Ref	**Rotator Assemblies (Service Replacement) (SN 0300171769 through 0300181890)**	A
	1001157221	Ref	**Rotator Assemblies (SN 0300181891 through 0300201109)**	B
	1001181058	Ref	**Rotator Assemblies (SN 0300201110 through 0300235167)**	A
		Ref	**China Built Machines**	A
	0060067	Ref	**Rotator Assemblies (SN B300000970 through B300001318)**	B
	1001181057	Ref	**Rotator Assemblies (SN B300001319 through B300002654)**	A
		Ref	**Rotator Assemblies 660SJ**	
		Ref	**USA Built Machines:**	
	0060066	Ref	**Rotator Assemblies (Original Equipment) (SN 0300171769 through 0300181890)**	D
	1001178269	Ref	**Rotator Assemblies (Service Replacement) (SN 0300171769 through 0300181890)**	A
	1001157220	Ref	**Rotator Assemblies (SN 0300181891 through 0300201109)**	A
	1001178256	Ref	**Rotator Assemblies (SN 0300201110 through 0300231801)**	A
	1001217780	Ref	**Rotator Assemblies (SN 0300231802 through 0300235167)**	A
		Ref	**China Built Machines**	C
	0060066	Ref	**Rotator Assemblies (SN B300000970 through B300001318)**	D
	1001178269	Ref	**Rotator Assemblies (SN 0300001319 through 0300235167)**	A
1	See Note	NSS	Housing/Ring Gear Assembly (Note: Not Available - Purchase Complete Rotator Assembly)	
2	7017162	1	Shaft Weldment	
2	7017195	2	Bushing, Shaft	
3	7017163	1	Piston/Sleeve Assembly	
4	7017164	1	Cap, End	
5	See Note	NSS	O-Ring (Note: Use Item 100A or 100B)	
6	See Note	NSS	Bearing, Shaft (Note: Use Item 101)	
7	See Note	NSS	Thrustwasher (Note: Use Item 101)	
8	See Note	NSS	Packing, Bearing (Note: Use Item 100A or 100B)	
9	See Note	NSS	Seal, Cap (Note: Use Item 100A or 100B)	
10	See Note	NSS	Ring, Back-up Cap (Note: Use Item 100A or 100B)	
11	See Note	NSS	Seal, Rod (Note: Use Item 100A or 100B)	
12	See Note	NSS	Seal, Piston (Note: Use Item 100A or 100B)	
13	See Note	NSS	Bearing, Cap (Note: Use Item 101)	
14	70001697	4	Screw, Countersunk 1/4in-20NC x 3/8in (Grade 8)	
15	See Note	NSS	Capscrew 1/4in-20NC x 1-1/2 (Grade 8) (Note: Not Available for Purchase)	
16		Ref	Valve Assembly Options:	
16	7017183	1	Valve Assembly (Rotator p/n 0060066, 0060067, 1001181057 & 1001178269)	
16	7017193	2	Cartridge, Valve	
16	See Note	NSS	Seal Kit - 7017193 Valve (Note: Use p/n 7017193)	
16	See Note	NSS	Cartridge, Valve (Not Shown - Located on Side of Block) (Note: Use p/n 7017183)	
16	See Note	NSS	Seal Kit - Valve Located on Side of Block (Note: Use p/n 7017183)	
16	7017172	1	Valve Assembly (Rotator p/n 1001157220, 1001157221,	

ITEM	PART NUMBER	QTY	DESCRIPTION	REV
			1001181058, 1001178256 & 1001217780)	
16	7017192	2	Cartridge, Valve	
16	See Note	NSS	Seal Kit - 7017192 Valve (Note: Use p/n 7017192)	
17	70004314	1	Tube, Stop (Rotator p/n 1001157220 & 1001157221 Only)	
		Ref	**KIT OPTIONS**	
100		Ref	Seal Kit Options (Includes Items 5, 8 - 12):	
100A	7017158	1	Seal Kit - Standard (0060066/0060067/1001157220/1001157221 Assemblies)	
100B	70000342	1	Seal Kit - Low Temperature (1001178269/1001178256/1001181057/1001181058/1001217780 Assemblies)	
101	7017159		Bearing Kit (Includes Items 6, 7 & 13)	
102	7017142	1	Hardware Kit (Includes Items 14, 2 Setscrews and 2 Plugs)	

FIGURE 3-5. PLATFORM SUPPORT INSTALLATION - WITH LSS

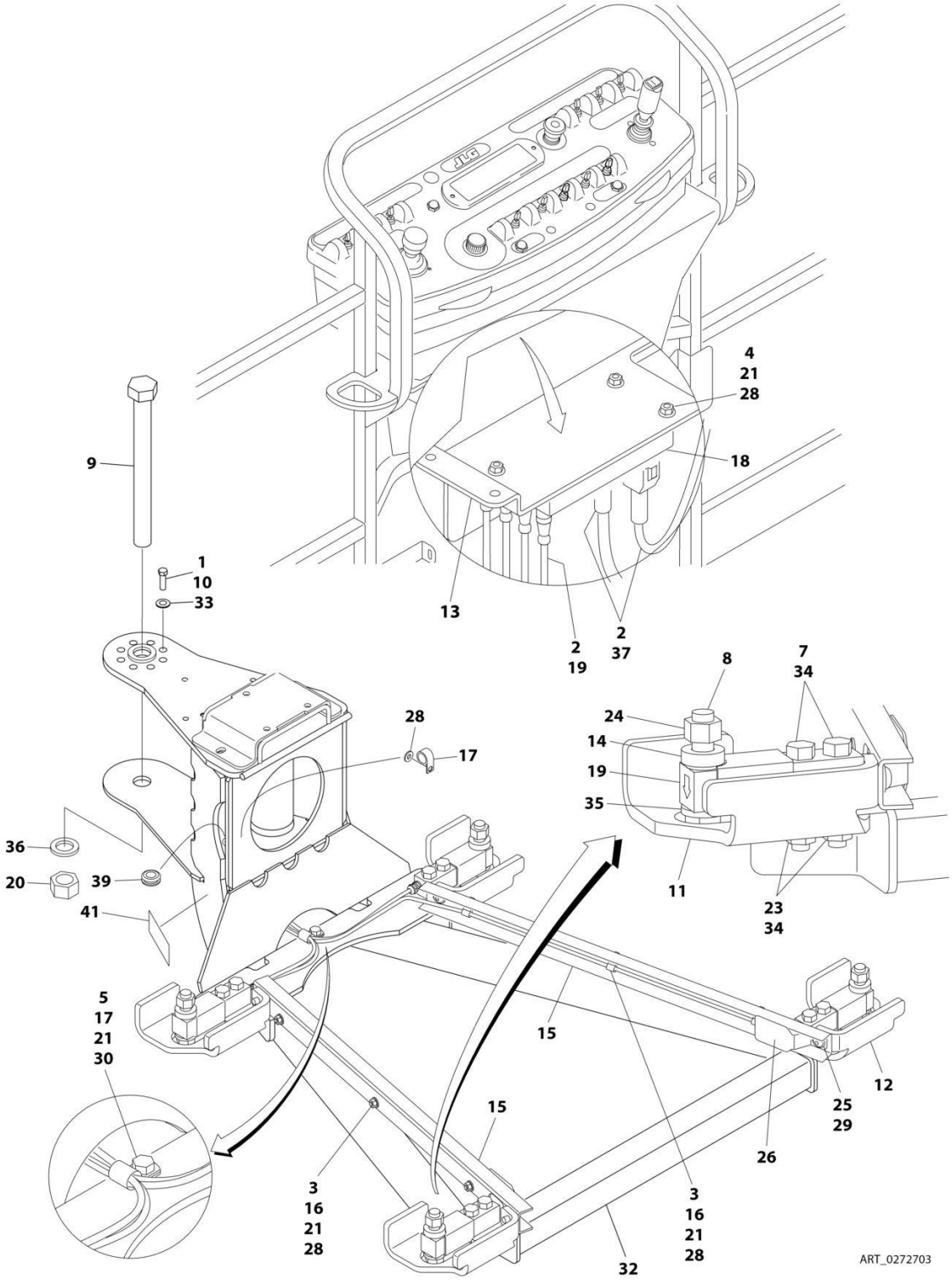

FIGURE 3-5. PLATFORM SUPPORT INSTALLATION - WITH LSS

ITEM	PART NUMBER	QTY	DESCRIPTION	REV
	0272703	Ref	**PLATFORM SUPPORT INSTALLATION - WITH LSS (USA BUILT MACHINES)**	Q
	1001115099	Ref	**PLATFORM SUPPORT INSTALLATION - WITH LSS (CHINA BUILT MACHINES)**	C
1	0100011	AR	Compound, Locking	
2	0100048	AR	Grease, Dielectric	
3	0641405	6	Bolt 1/4 x 5/8	
4	0641416	3	Bolt 1/4 x 2	
5	0641407	1	Bolt 1/4 x 7/8	
7	0641822	8	Bolt 1/2 x 2-3/4	
8	0642024	4	Bolt 5/8 x 3	
9	0642684	1	Bolt 1 x 10-1/2	
10	0681608	8	Bolt 3/8 x 1 Grade 8	
11	0902919	2	Bracket, Cell Guard	
12	0902920	2	Bracket, Cell Guard	
13	1001113483	1	Bracket, Module Mount	
14	0962450	4	Bushing, Spacer	
15	1271538	2	Channel	
16	1320136	6	Clamp	
17	1320224	2	Clamp	
18	1600387	1	Module, Control - LSS (Note: Recalibration Required When Replaced)	
19	2420202	4	Cell, Load (Includes Cable)	
20	3272605	1	Nut 1 Grade 8	
21	3311405	10	Nut 1/4	
23	3311805	8	Nut 1/2	
24	3312005	4	Nut 5/8	
25	3900283	4	Screw 3/8 x 3/4	
26	4061054	2	Shield	
27	4240033	AR	Tie-Strap (Not Shown)	
28	4711400	10	Washer 1/4	
29	4711600	4	Washer 3/8	
30	4751400	1	Washer 1/4	
32	4846573	1	Support, Platform	
33	4891600	8	Washer 3/8	
34	4891800	8	Washer 1/2	
35	4892000	4	Washer 5/8	
36	4892600	1	Washer 1	
37	4922869	1	LSS Harness	
37	4922705	1	Analyzer Harness (Not Shown)	
37	4460761	1	Receptacle, Female - 4 Position (Not Shown)	
37	4460226	1	Socket, Female	
37	4460836	1	Connector - 12 Position (Black) (J2)	
37	4460465	1	Socket, Female	
37	4460466	1	Plug, Terminal	
37	0840055	1	Boot	
37	4460933	1	Connector - 12 Position (Grey) (J1)	
37	4460465	1	Socket, Female	
37	4460466	1	Plug, Terminal	
37	0840055	1	Boot	

ITEM	PART NUMBER	QTY	DESCRIPTION	REV
39	2540038	1	Grommet	
40	2920129	1	Bulb, Light (Not Shown - Located on Ground Control Box)	
41	1001216630	2	Decal - Tie Down/No Lift (USA Built Machines Only)	

FIGURE 3-6. CONTROL VALVE INSTALLATION (BOOM)

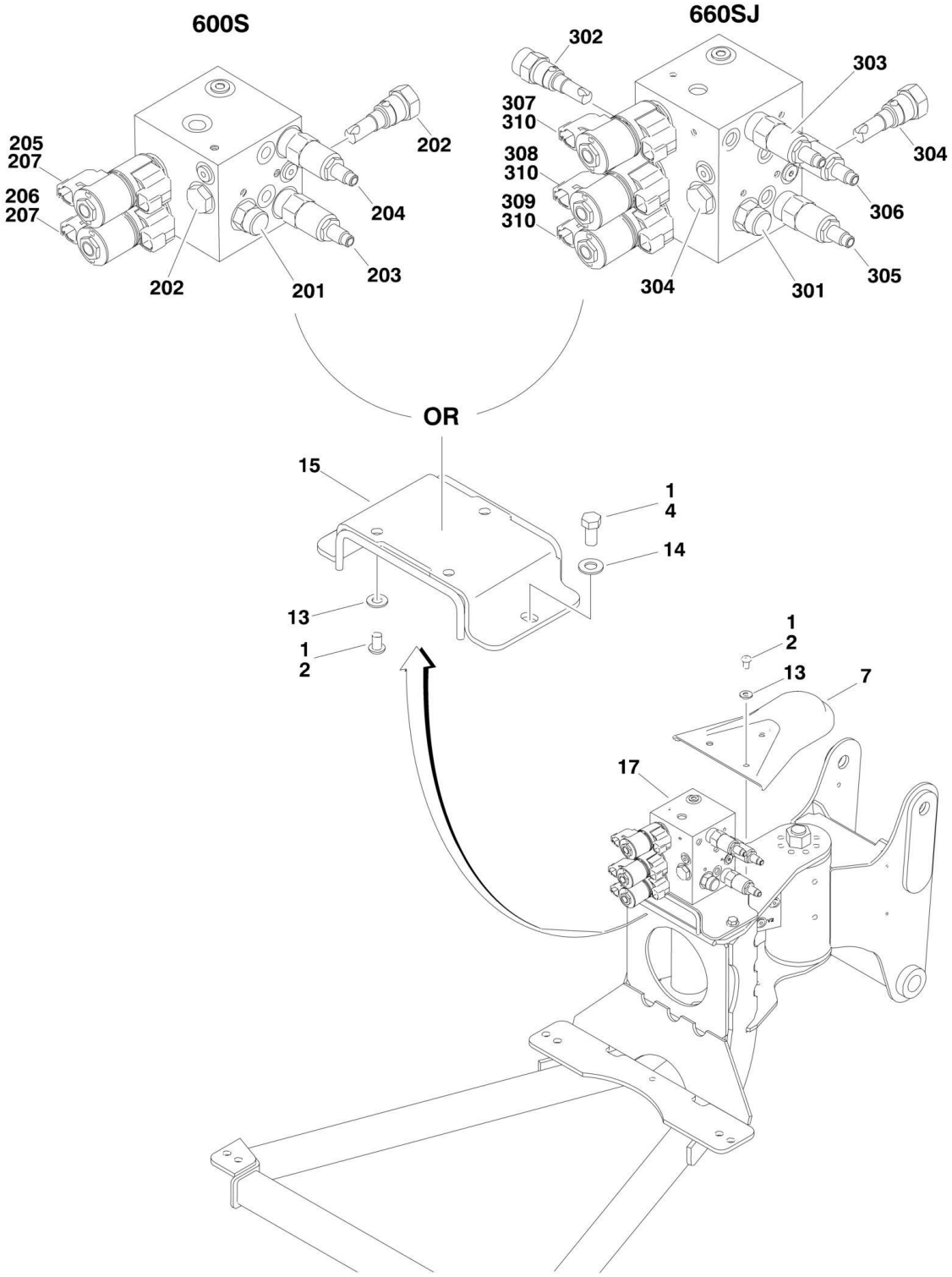

FIGURE 3-6. CONTROL VALVE INSTALLATION (BOOM)

ITEM	PART NUMBER	QTY	DESCRIPTION	REV
		Ref	**USAGE CHART:**	
		Ref	**USA Built Machines with Deutz D2011 & GM Engines (SN 0300181891 through 0300235167)**	
		Ref	**USA Built Machines with Deutz TD2.9L4 Engines (SN 0300188199 through 0300235167)**	
		Ref	**CONTROL VALVES INSTALLATIONS**	
	1001160095	Ref	**Control Valves Installations 600S (2WS)**	B
	1001160096	Ref	**Control Valves Installations 600S (4WS)**	B
	1001159731	Ref	**Control Valves Installations 660SJ (2WS)**	B
	1001160192	Ref	**Control Valves Installations 660SJ (4WS)**	B
1	0100011	AR	Compound, Locking	
2	0630467	6	Screw, Button Head	
4	0641606	2	Bolt 3/8in-16NC x 3/4in	
7	1670964	1	Cover	
13	4711500	6	Flatwasher 5/16in Thin	
14	4711600	2	Flatwasher 3/8in Thin	
15	4846218	1	Plate, Valve Mounting	
17		Ref	Control Valve Assembly Options:	
17	1001152564	1	Control Valve Assembly 600S (See Items 201-209 for Breakdown)	
17	1001152565	1	Control Valve Assembly 660SJ (See Items 301-312 for Breakdown)	
	1001152564	Ref	**CONTROL VALVE ASSEMBLY (600S)**	C
201	7012965	1	Valve, Flow	
201	7012953	1	Seal Kit - 7012965 Valves	
202	7012914	2	Valve, Cartridge	
202	7012918	2	Seal Kit - 7012914 Valve	
203	7023911	1	Valve, Relief	
203	7012967	1	Seal Kit - 7023911 Valve	
204	7023912	1	Valve, Relief	
204	7012967	1	Seal Kit - 7023912 Valve	
205	7017452	1	Valve, Solenoid (Platform Level)	
205	7017402	1	Seal Kit - 7017452 Valve	
206	7017452	1	Valve, Solenoid (Rotator)	
206	7017402	2	Seal Kit - 7017452 Valve	
207	70002386	4	Coil	
208	70002064	2	Plug, Orifice (Not Shown)	
209	7017406	2	Plug (Not Shown)	
	1001152565	Ref	**CONTROL VALVE ASSEMBLY (660SJ)**	C
301	7012989	1	Valve, Flow	
301	7012953	1	Seal Kit - 7012989 Valves	
302	7012965	1	Valve, Flow	
302	7012953	1	Seal Kit - 7012965 Valves	
303	70003790	1	Valve, Relief	
303	7021653	1	Seal Kit - 70003790 Valve	
304	7012914	2	Valve, Cartridge	
304	7012918	2	Seal Kit - 7012914 Valve	
305	7023911	1	Valve, Relief	
305	7012967	1	Seal Kit - 7023911 Valve	
306	7023912	1	Valve, Relief	

ITEM	PART NUMBER	QTY	DESCRIPTION	REV
306	7012967	1	Seal Kit - 7023912 Valve	
307	7017452	1	Valve, Solenoid (Jib)	
307	7017402	2	Seal Kit - 7017452 Valve	
308	7017452	1	Valve, Solenoid (Platform Level)	
308	7017402	1	Seal Kit - 7017452 Valve	
309	7017452	1	Valve, Solenoid (Rotator)	
309	7017402	2	Seal Kit - 7017452 Valve	
310	70002386	6	Coil	
311	70002064	2	Plug, Orifice (Not Shown)	
312	7017406	2	Plug (Not Shown)	

FIGURE 3-7. POWER TRACK INSTALLATIONS

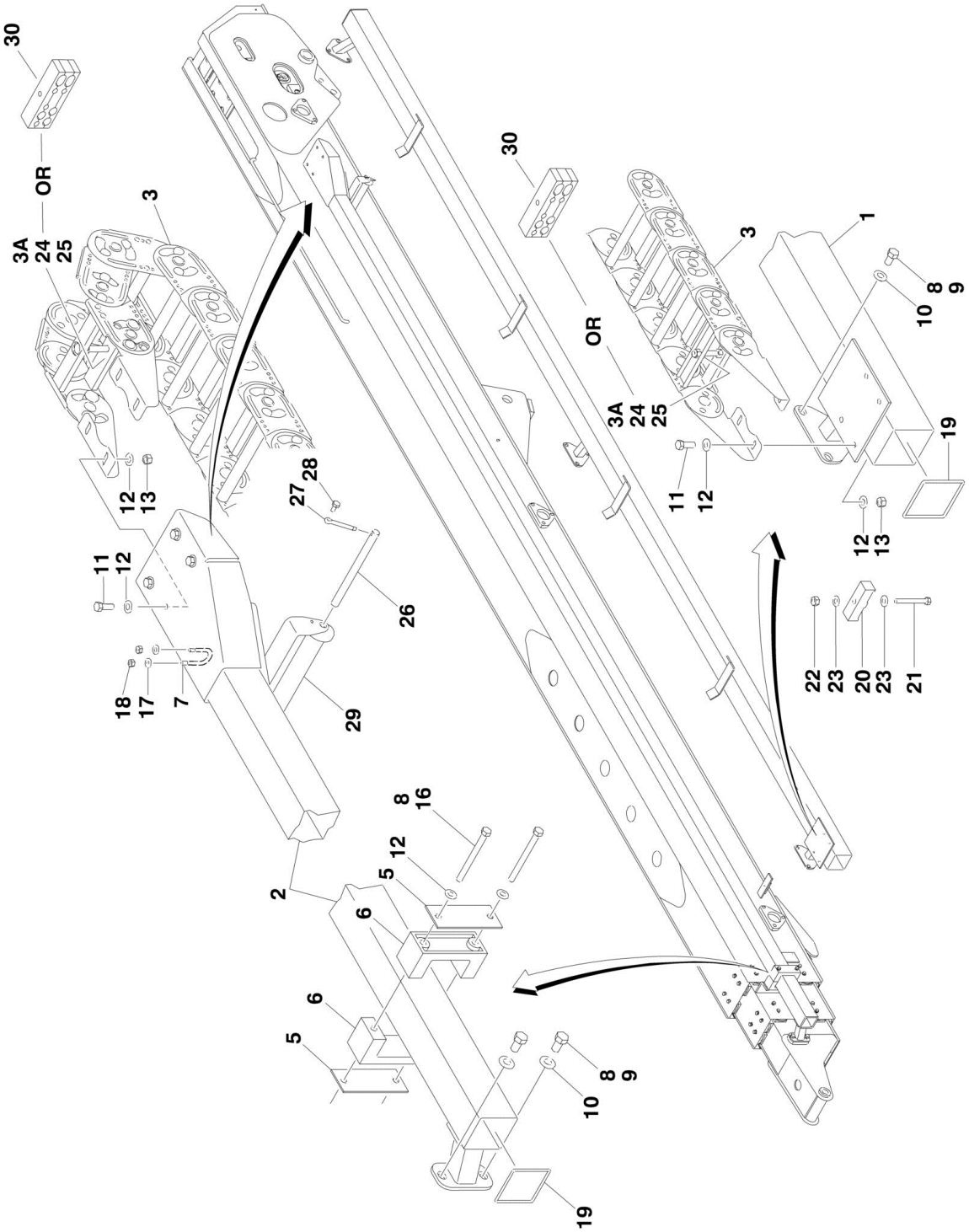

FIGURE 3-7. POWER TRACK INSTALLATIONS

ITEM	PART NUMBER	QTY	DESCRIPTION	REV
		Ref	**POWER TRACK INSTALLATIONS**	
	0270804	Ref	**USA Built Machines**	5
	1001115236	Ref	**China Built Machines**	B
1		Ref	Support, Power Track Options:	
1	4845819	1	USA Built Machines	
1	1001114668	1	China Built Machines	
2		Ref	Tube, Push Options:	
2	4845671	1	USA Built Machines	
2	1001114816	1	China Built Machines	
3	1001099832	1	Power Track Assembly	
3	70002005	AR	Power Track - Repair Section	
3	70002006	1	Power Track - Bracket Kit	
3A	70004643	2	Clamp with Hardware	
5	3538758	AR	Plate	
6	3340764	2	Pad, Wear	
7	0630458	1	U-Bolt	
8	0100011	AR	Compound, Locking	
9	0641807	11	Bolt 1/2in-13NC x 7/8in	
10	4711800	11	Flatwasher 1/2in Thin	
11	0641608	8	Bolt 3/8in-16NC x 1in	
12	4711600	18	Flatwasher 3/8in Thin	
13	3311605	8	Locknut 3/8in-16NC	
16		Ref	Bolt 3/8in-16NC Options:	
16	0641644	2	Bolt 3/8in-16NC x 5-1/2in	
16	0641648	2	Bolt 3/8in-16NC x 6in	
17	4711400	2	Flatwasher 1/4in Thin	
18	3311405	2	Locknut 1/4in-20NC	
19	4060803	AR	Shield, Trim	
20	1320247	1	Clamp, Nylon	
21	0641522	1	Bolt 5/16in-18NC x 2-3/4in	
22	3311505	1	Locknut 5/16in-18NC	
23	4711500	2	Flatwasher 5/16in Thin	
24	4070994	AR	Shim	
25	4070995	AR	Shim	
25	0100081	AR	Adhesive	
26	3841013	1	Roller, Rod	
27	3450806	1	Pin, Cotter	
28	0641404	1	Bolt 1/4in-20NC x 1/2in	
29	3860050	1	Roller	
30	1001221292	2	Clamp, Hose (China Built Machines Only) **(SN B300001748 through B300002654)**	

SECTION 4 - PLATFORM

FIGURE 4-1. PLATFORM COMPONENTS INSTALLATION

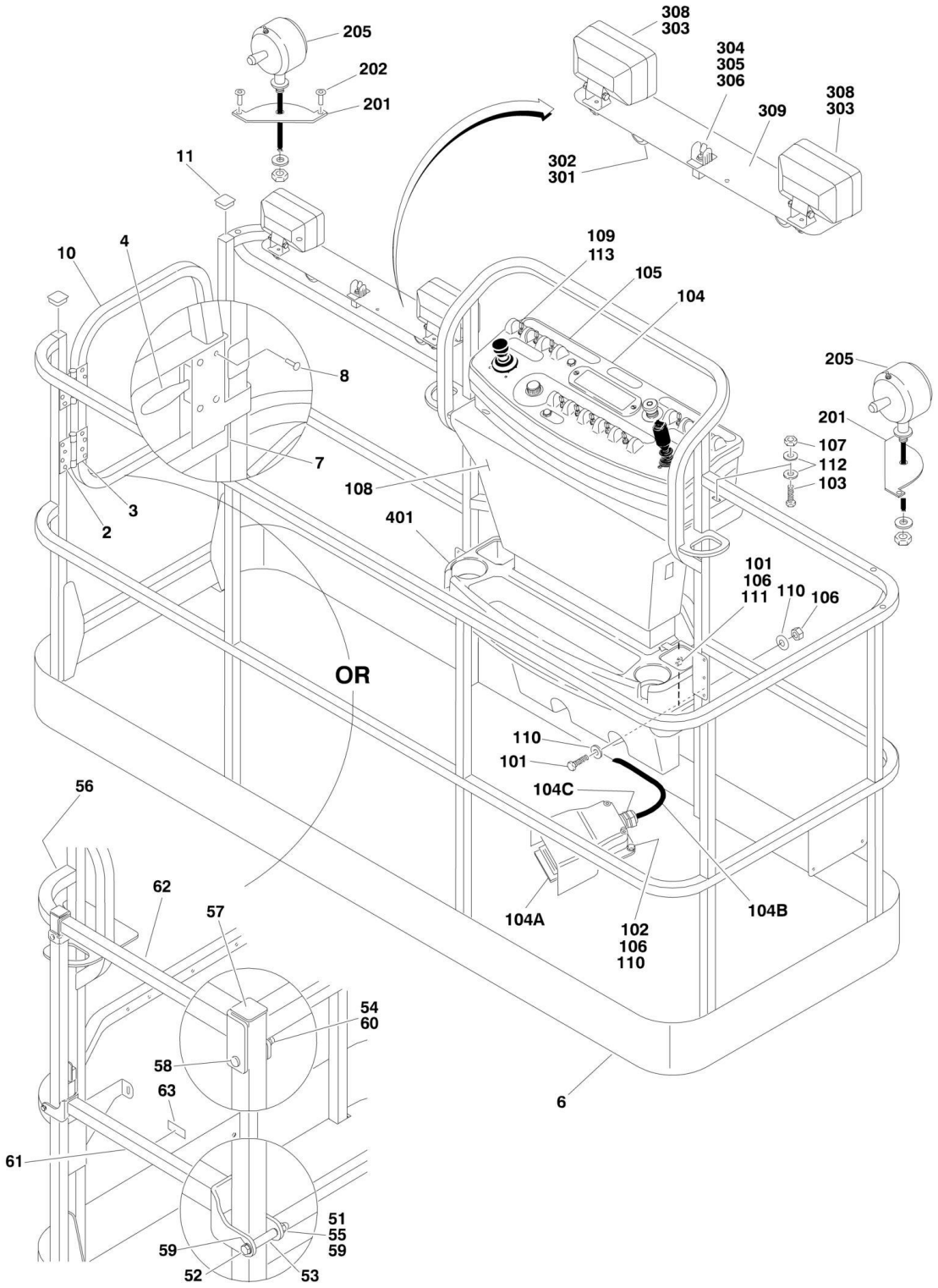

FIGURE 4-1. PLATFORM COMPONENTS INSTALLATION

ITEM	PART NUMBER	QTY	DESCRIPTION	REV
		Ref	**PLATFORM ASSEMBLY WITH GATE:**	
		Ref	**USA Built Machines:**	
	1001144027	Ref	**Platform 30in x 4ft (76cm x 1.22m) (SN 0300171769 through 0300200771)**	D
	1001186387	Ref	**Platform 30in x 4ft (76cm x 1.22m) (SN 0300200772 through 0300235167)**	B
	1001144026	Ref	**Platform 30in x 5ft (76cm x 1.52m) (SN 0300171769 through 0300200771)**	D
	1001186386	Ref	**Platform 30in x 5ft (76cm x 1.52m) (SN 0300200772 through 0300235167)**	C
	1001144024	Ref	**Platform 36in x 6ft (91.5cm x 1.83m) (SN 0300171769 through 0300200771)**	D
	1001186384	Ref	**Platform 36in x 6ft (91.5cm x 1.83m) (SN 0300200772 through 0300235167)**	C
	1001144023	Ref	**Platform 36in x 8ft (91.5cm x 2.44m) (SN 0300171769 through 0300200771)**	D
	1001186383	Ref	**Platform 36in x 8ft (91.5cm x 2.44m) (SN 0300200772 through 0300235167)**	D
		Ref	**China Built Machines:**	
	1001146180	Ref	**Platform 36in x 6ft (91.5cm x 1.83m) (SN B300000970 through B300001178)**	E
	1001188305	Ref	**Platform 36in x 6ft (91.5cm x 1.83m) (SN B300001179 through B300002654)**	C
	1001146179	Ref	**Platform 36in x 8ft (91.5cm x 2.44m) (SN B300000970 through B300001178)**	E
	1001188308	Ref	**Platform 36in x 8ft (91.5cm x 2.44m) (SN B300001179 through B300002654)**	C
		Ref	**Note: Original Equipment platform may have been replaced with Service Replacement platform. Identify platform before ordering parts.**	
		Ref	**Note: For Platforms with Mesh to the Top Rail, customer must order Platforms and Mesh separately. See SPECIAL OPTIONS SECTION for Mesh Installations.**	
		Ref	**Note: Replacement Decals Must Be Ordered Separately - See DECALS SECTION.**	
		Ref	**Note: When replacing 8ft/2.44m platform with Soft Touch option, new Soft Touch Rail p/n 4846673 must be purchased to accommodate limit switch locations.**	
		Ref	**Note: When replacing platform on machines with SkyCutter option, new bracket p/n 1001145405 must be purchased to accommodate SkyCutter components.**	
2	2080040	16	Fastener, Huck	
3	2600281	2	Hinge, Self-Closing	
4	2940074	1	Latch	
6	See Note	NSS	Platform (Note: Purchase Complete Platform Assembly.)	
7		Ref	Cap-Plug Options:	
7	3520072	1	USA Built Machines	
7	1001152037	1	China Built Machines	
8	3820020	4	Rivet	
10	1001144629	1	Gate	
11	1001145781	AR	Cap-Plug	
		Ref	**PLATFORM ASSEMBLY WITH DROP-BAR**	
		Ref	**USA Built Machines:**	
	1001144018	Ref	**Platform 30in x 4ft (76cm x 1.22m) (SN 0300171769 through**	D

ITEM	PART NUMBER	QTY	DESCRIPTION	REV
			0300200771)	
	1001186375	Ref	**Platform 30in x 4ft (76cm x 1.22m) (SN 0300200772 through 0300235167)**	B
	1001144019	Ref	**Platform 30in x 5ft (76cm x 1.52m) (SN 0300171769 through 0300200771)**	D
	1001186377	Ref	**Platform 30in x 5ft (76cm x 1.52m) (SN 0300200772 through 0300235167)**	C
	1001144021	Ref	**Platform 36in x 6ft (91.5cm x 1.83m) (SN 0300171769 through 0300200771)**	D
	1001186379	Ref	**Platform 36in x 6ft (91.5cm x 1.83m) (SN 0300200772 through 0300235167)**	B
	1001128598	Ref	**Platform 36in x 6ft (91.5cm x 1.83m) (Machines with Shipyard Package) (Not Shown) (SN 0300171769 through 0300200771)**	D
	1001186374	Ref	**Platform 36in x 6ft (91.5cm x 1.83m) (Machines with Shipyard Package) (Not Shown) (SN 0300200772 through 0300235167)**	A
	1001128479	Ref	**Platform 36in x 6ft (91.5cm x 1.83m) (Machines with Shipyard Package with Platform Bumpers) (Not Shown) (SN 0300171769 through 0300200771)**	D
	1001186371	Ref	**Platform 36in x 6ft (91.5cm x 1.83m) (Machines with Shipyard Package with Platform Bumpers) (Not Shown) (SN 0300200772 through 0300235167)**	A
	1001144022	Ref	**Platform 36in X 8ft (91.5cm x 2.44m) (SN 0300171769 through 0300200771)**	D
	1001186382	Ref	**Platform 36in X 8ft (91.5cm x 2.44m) (SN 0300200772 through 0300235167)**	B
		Ref	**China Built Machines:**	
	1001146182	Ref	**Platform 36in x 6ft (91.5cm x 1.83m) (SN B300000970 through B300001178)**	E
	1001186306	Ref	**Platform 36in x 6ft (91.5cm x 1.83m) (SN B300001179 through B300002654)**	B
	1001146181	Ref	**Platform 36in x 8ft (91.5cm x 2.44m) (SN B300000970 through B300001178)**	E
	1001186309	Ref	**Platform 36in x 8ft (91.5cm x 2.44m) (SN B300001179 through B300002654)**	A
		Ref	**Note: Original Equipment platform may have been replaced with Service Replacement platform. Identify platform before ordering parts.**	
		Ref	**Note: Replacement Decals Must Be Ordered Separately - See DECALS SECTION.**	
		Ref	**Note: When replacing 8ft/2.44m platform with Soft Touch option, new Soft Touch Rail p/n 4846673 must be purchased to accommodate limit switch locations.**	
		Ref	**Note: When replacing platform on machines with SkyCutter option, new bracket p/n 1001145405 must be purchased to accommodate SkyCutter components.**	
51	0100011	AR	Compound, Locking	
52	0641418	AR	Bolt 1/4 x 2-1/4	
52	0641420	AR	Bolt 1/4 x 2-1/2	
53	0961845	2	Bushing	
54	3290606	2	Nut M6	
55	3300151	2	Nut, Acorn	
56	See Note	NSS	Platform (Note: Purchase Platform Assembly.)	
57	1001145781	AR	Cap-Plug	
58	4010618	2	Screw M6 x 50mm	
59	4711400	4	Flatwasher 1/4in Thin	
60	4811700	2	Flatwasher M6	
61		Ref	Bar, Drop Options:	

ITEM	PART NUMBER	QTY	DESCRIPTION	REV
61	1001138494	1	Drop Bar (Machines without Shipyard Package)	
61	1001111346	1	Drop Bar (Machines with Shipyard Package) (Not Shown)	
62	1001138514	1	Rail (Top)	
63	1001140429	1	Decal - Drop-Bar	
		Ref	**CONSOLE BOX INSTALLATION**	
		Ref	**USA Built Machines:**	
	1001145896	Ref	**Console Box Installation (Without SkyGuard) (SN 0300171769 through 0300181890)**	C
	1001159096	Ref	**Console Box Installation (Without SkyGuard) (SN 0300181891 through 0300183172)**	B
	1001159286	Ref	**Console Box Installation (Without SkyGuard) (SN 0300183173 through 0300235167)**	C
	1001190115	Ref	**Console Box Installation (With SkyGuard) (Prior to SN B300002270)**	C
	1001190116	Ref	**Console Box Installation (With SkyGuard) (SN B300002270 through B300002654)**	B
		Ref	**China Built Machines**	
	1001145896	Ref	**Console Box Installation (Without SkyGuard)**	C
	1001190116	Ref	**Console Box Installation (With SkyGuard)**	B
101	0641406	4	Bolt 1/4in-20NC x 3/4in	
102	0641408	3	Bolt 1/4in-20NC x 1in	
103	0641610	4	Bolt 3/8in-16NC x 1-1/4in	
104		Ref	Platform Console Box Assembly Options (See PLATFORM CONSOLE ASSEMBLY for Breakdown):	
104		Ref	USA Built Machines	
104	1001145895	1	Platform Console Box Assembly (Without SkyGuard) **(SN 0300171769 through 0300181890)**	
104	1001159099	1	Platform Console Box Assembly (Without SkyGuard) **(SN 0300181891 through 0300183172)**	
104	1001159285	1	Platform Console Box Assembly (Without SkyGuard) **(SN 0300183173 through 0300188601)**	
104	1001166673	1	Platform Console Box Assembly (Without SkyGuard) **(SN 0300188602 through 0300220044)**	
104	1001202600	1	Platform Console Box Assembly (Without SkyGuard) **(SN 0300220045 through 0300235167)**	
104	1001190091	1	Platform Console Box Assembly (With SkyGuard) **(SN 0300200809 through 0300220044)**	
104	1001202599	1	Platform Console Box Assembly (With SkyGuard) **(SN 0300220045 through 0300235167)**	
104		Ref	China Built Machines	
104	1001145895	1	Platform Console Box (Without SkyGuard) **(SN B300000970 through B300001441)**	
104	1001184541	1	Platform Console Box (Without SkyGuard) **(SN B300001442 through B300001599)**	
104	1001202602	1	Platform Console Box (Without SkyGuard) **(SN B300001600 through B300002654)**	
104	1001190092	1	Platform Console Box (With SkyGuard) **(SN B300000970 through B300001599)**	
104	1001202601	1	Platform Console Box (With SkyGuard) **(SN B300001600 through B300002654)**	
104A	1001117174	1	Footswitch Assembly Options (Includes Footswitch and Items 104B & 104C):	
104A	1001117172	1	Footswitch	
104A	70002902	1	Block, Contact	
104A	70002903	1	Gasket	

ITEM	PART NUMBER	QTY	DESCRIPTION	REV
104A	70002905	1	Cover	
104A	70002904	1	Bolt Replacement Kit	
104B	1060918	7 ft/2.14m	Cable, Electrical - 18/3	
104C	4460071	1	Connector, Strain Relief	
105	1702676	1	Decal - Horn	
106	3311405	7	Locknut 1/4in-20NC	
107	3311605	4	Locknut 3/8in-16NC	
108	3380434	1	Panel, Decal Mount	
109	4360331	1	Switch, Toggle	
110	4740362	7	Flatwasher 1/4in Fender	
111	4751400	4	Flatwasher 1/4in Regular	
112	4751600	8	Flatwasher 3/8in Regular	
113	3790012	1	O-Ring	
		Ref	**WORKLIGHTS INSTALLATIONS (OPTIONAL)**	
	0273486	Ref	**Worklights Installations 600S**	D
	0273491	Ref	**Worklights Installations 660SJ**	D
201	3536089	2	Plate, Mounting	
202	2080040	4	Huck Fastener	
205	2920140	2	Worklight	
205	7016399	2	Bulb, Replacement (1 Per Worklight)	
206	4240099	10	Tie-Strap (Not Shown)	
207	2820035	9 ft/2.7m	Loom, Vinyl (Not Shown)	
209	4460426	1	Connector, Strain Relief (Not Shown - Located at Console Box)	
		Ref	**FLOODLIGHT INSTALLATION (OPTIONAL)**	
	0274209	Ref	**Floodlight Installation 600S**	A
	1001093274	Ref	**Floodlight Installation 660SJ**	A
301	0641518	2	Bolt 5/16in-18NC x 2-1/4in	
302	2560173	2	Handle	
303	2920157	2	Lamp, Work Light	
304	3250585	1	Nameplate - Light On	
305	4060802	1	Guard, Switch	
306	4360336	1	Switch, Toggle	
307	4420037	1	Tape, Insulation (Not Shown)	
308	4751800	2	Flatwasher 1/2in Regular	
309	4846561	1	Mount, Light	
310		Ref	Harness 12/3 Options (Not Shown):	
310	4922888	1	Harness 600S	
310	4922964	1	Harness 660SJ	
		Ref	**TRAY INSTALLATIONS (OPTIONAL)**	
401	1580012	1	Tray, Storage (Center)	
402	1580013	1	Tray, Storage (Rail Mounted - Not Shown)	

FIGURE 4-2. PLATFORM COMPONENTS INSTALLATION (FALL ARREST PLATFORM)

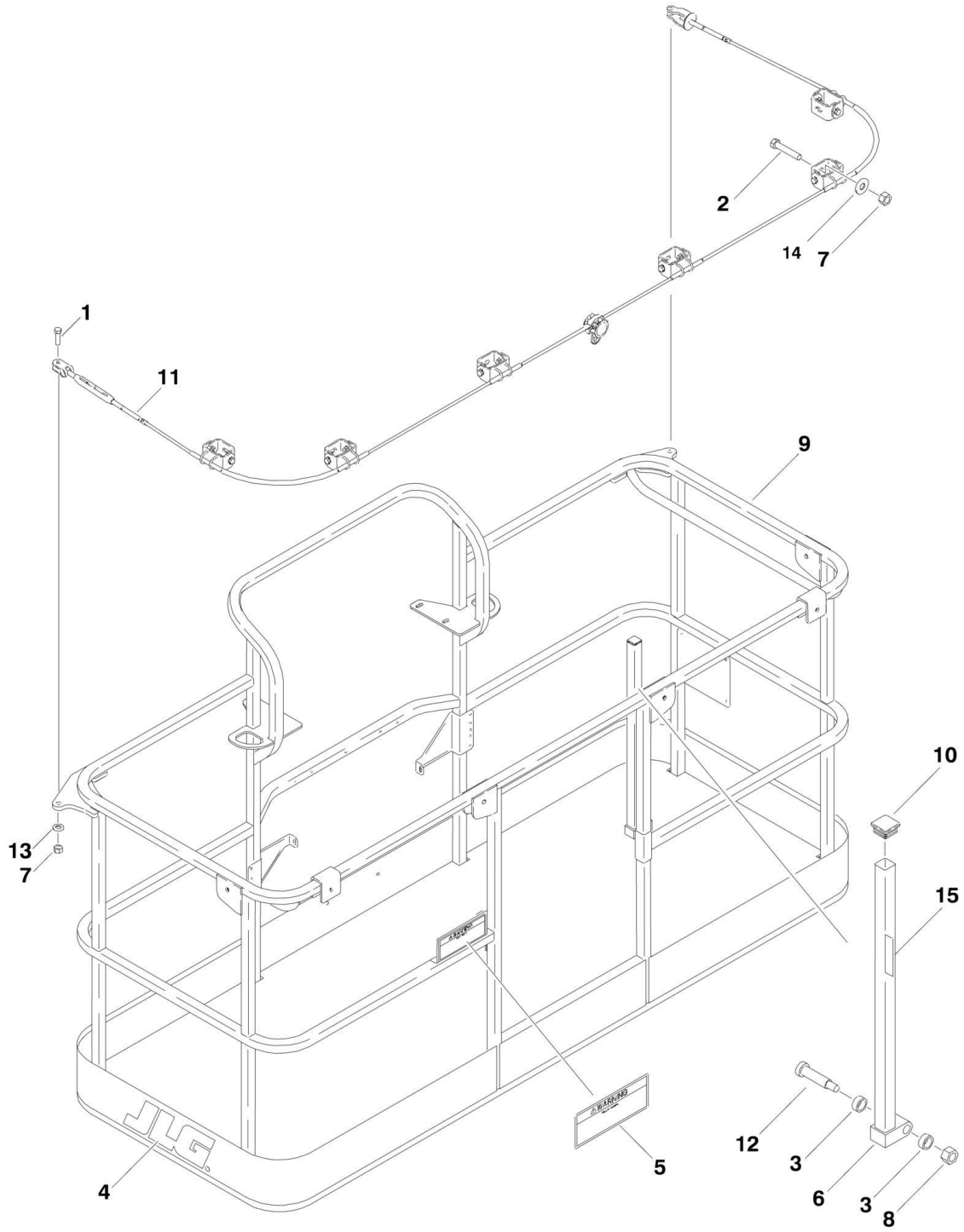

FIGURE 4-2. PLATFORM COMPONENTS INSTALLATION (FALL ARREST PLATFORM)

ITEM	PART NUMBER	QTY	DESCRIPTION	REV
		Ref	**PLATFORM ASSEMBLY (FALL ARREST)**	
	3510884	Ref	**Platform (3ft x 6ft) (SN 0300171769 through 0300202808)**	D
	1001186333	Ref	**Platform (3ft x 6ft) (SN 0300202809 through 0300235167)**	C
	3510868	Ref	**Platform (3ft x 8ft) (SN 0300171769 through 0300202808)**	E
	1001186334	Ref	**Platform (3ft x 8ft) (SN 0300202809 through 0300235167)**	D
	1001186334	Ref	**Platform (3ft x 8ft) (SN B300000970 through B300002654)**	D
		Ref	**Note: Fall Arrest Not Available on Australian or CE Spec Machines.**	
		Ref	**Note: Fall Arrest Not Available on Japanese Machines with 3ft x 8ft Platform.**	
1	0681814	2	Bolt 1/2in-13NC x 1-3/4in (Grade 8)	
2	0681822	6	Bolt 1/2in-13NC x 2-3/4in (Grade 8)	
3	0962270	2	Bearing, Oilite	
4	1702773	1	Decal - JLG	
5	1705014	1	Decal - Safety	
6	2410014	1	Gate	
7	3271805	8	Locknut 1/2in-13NC (Grade 8)	
8	3311605	1	Locknut 3/8in-16NC	
9	See Note	NSS	Platform (Note: Purchase Platform Assembly)	
10	3520072	1	Cap-Plug	
11		Ref	Cable, Fall Arrest Options:	
11	1060919	NLA	Cable (3ft x 6ft Platform) (Use p/n 1001203655) **(SN 0300171769 through 0300213965)**	
11	1001203655	1	Cable (3ft x 6ft Platform) **(SN 0300213966 through 0300235167)**	
11	3890040	NLA	Cable (3ft x 8ft Platform) (Use p/n 1001203656) **(SN 0300171769 through 0300215775)**	
11	1001203656	1	Cable (3ft x 8ft Platform) **(SN 0300215776 through 0300235167)**	
11	1001203656	1	Cable (3ft x 8ft Platform) **(SN B300000970 through B300002654)**	
12	3900054	1	Bolt 1/2in-13NC x 1-3/4in	
13	4711800	AR	Flatwasher 1/2in Thin	
14	4751800	AR	Flatwasher 1/2in Regular	
15	1706385	1	Decal - Drop Bar	

FIGURE 4-3. PLATFORM CONSOLE ASSEMBLY (WITHOUT SKYGUARD)

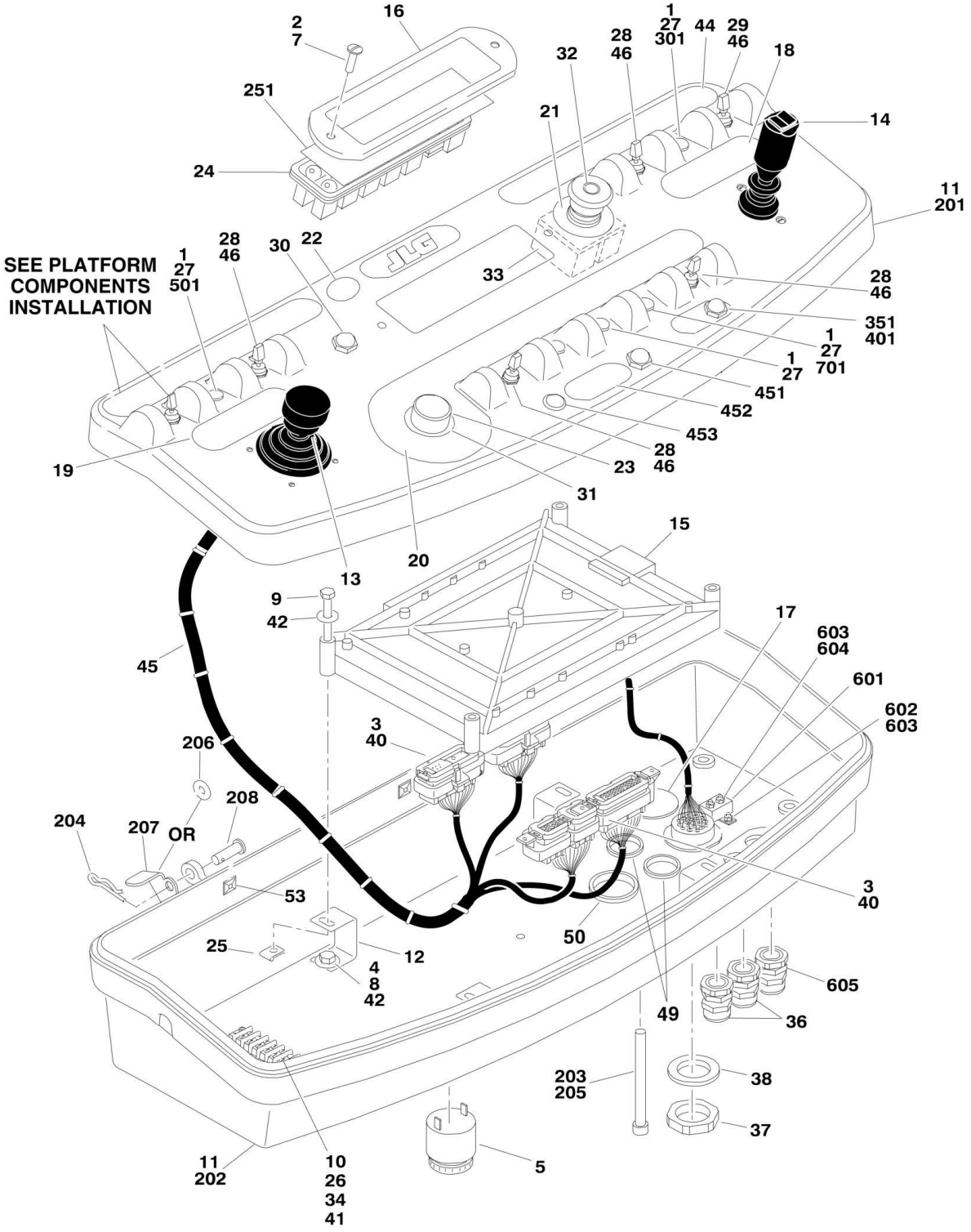

FIGURE 4-3. PLATFORM CONSOLE ASSEMBLY (WITHOUT SKYGUARD)

ITEM	PART NUMBER	QTY	DESCRIPTION	REV
		Ref	**CONSOLE BOX AND FOOTSWITCH ASSEMBLY (WITHOUT SKYGUARD)**	
		Ref	**USA Built Machines:**	
	1001145895	Ref	**Console Box and Footswitch Assembly (SN 0300171769 through 0300181890)**	B
	1001159099	Ref	**Console Box and Footswitch Assembly (SN 0300181891 through 0300183172)**	B
	1001159285	Ref	**Console Box and Footswitch Assembly (SN 0300183173 through 0300188601)**	B
	1001166673	Ref	**Console Box and Footswitch Assembly (SN 0300188602 through 0300220044)**	C
	1001202600	Ref	**Console Box and Footswitch Assembly (SN 0300220045 through 0300235167)**	C
		Ref	**China Built Machines:**	
	1001145895	Ref	**Console Box and Footswitch Assembly (SN B300000970 through B300001441)**	B
	1001184541	Ref	**Console Box and Footswitch Assembly (SN B300001442 through B300001599)**	A
	1001202602	Ref	**Console Box and Footswitch Assembly (SN B300001600 through B300002654)**	C
1	0100009	AR	Sealant	
2	0100035	AR	Compound, Locking	
3	0100048	AR	Grease, Dielectric	
4	0100081	AR	Compound, Locking	
5	0140011	1	Alarm	
7	0630464	2	Screw, Button Head #10-24NC x 1/2in	
8	0641404	4	Bolt 1/4in-20NC x 1/2in	
9	0641414	4	Bolt 1/4in-20NC x 1 3/4in	
10	0721006	2	Screw #10-24NC x 3/4in	
11	0861537	1	Box, Console (See Items 201-208 for Breakdown) **(SN 0300171769 through 0300220044)**	
11	1001201890	1	Box, Console (See Items 201-208 for Breakdown) **(SN 0300220045 through 0300235167)**	
11	0861537	1	Box, Console (See Items 201-208 for Breakdown) **(SN B300000970 through B300001599)**	
11	1001201890	1	Box, Console (See Items 201-208 for Breakdown) **(SN B300001600 through B300002654)**	
12	0902751	4	Bracket, Support **(SN 0300171769 through 0300188601)**	
12	1001172760	4	Bracket, Support **(SN 0300188602 through 0300235167)**	
12	0902751	4	Bracket, Support **(SN B300000970 through B300001441)**	
12	1001172760	4	Bracket, Support **(SN B300001442 through B300002654)**	
13	1001118417	NLA	Controller Assembly (Lift and Swing) (Use p/n 1001129555) (See CONTROLLER ASSEMBLY (LIFT AND SWING) for Breakdown) **(SN 0300171769 through 0300188601)**	
13	1001166539	NLA	Controller Assembly (Lift and Swing) (Use p/n 1001129555) (See CONTROLLER ASSEMBLY (LIFT AND SWING) for Breakdown) **(SN 0300188602 through 0300235167)**	
13	1001118417	NLA	Controller Assembly (Lift and Swing) (Use p/n 1001129555) (See CONTROLLER ASSEMBLY (LIFT AND SWING) for Breakdown) **(SN B300000970 through B300001441)**	
13	1001166539	NLA	Controller Assembly (Lift and Swing) (Use p/n 1001129555) (See CONTROLLER ASSEMBLY (LIFT AND SWING) for Breakdown) **(SN B300001442 through B300002654)**	
14	1001118416	NLA	Controller Assembly (Drive and Steer) (Use p/n 1001212415)	

ITEM	PART NUMBER	QTY	DESCRIPTION	REV
			(See CONTROLLER ASSEMBLY (DRIVE AND STEER) for Breakdown) **(SN 0300171769 through 0300188601)**	
14	1001166538	NLA	Controller Assembly (Drive and Steer) (Use p/n 1001212415) (See CONTROLLER ASSEMBLY (DRIVE AND STEER) for Breakdown) **(SN 0300188602 through 0300235167)**	
14	1001118416	NLA	Controller Assembly (Drive and Steer) (Use p/n 1001212415) (See CONTROLLER ASSEMBLY (DRIVE AND STEER) for Breakdown) **(SN B300000970 through B300001441)**	
14	1001166538	NLA	Controller Assembly (Drive and Steer) (Use p/n 1001212415) (See CONTROLLER ASSEMBLY (DRIVE AND STEER) for Breakdown)	
15		Ref	Controller, Module Options:	
		Ref	Note: Re-calibration Required when Replaced.	
15		Ref	USA Built Machines	
15	1001106355	1	Controller, Module **(SN 0300171769 through 0300181890)**	
15	1001106938	1	Controller, Module **(SN 0300181891 through 0300235167)**	
15	1001106355	1	China Built Machines	
16	1670829	1	Bezel	
17	1001110434	1	Cover	
18	1702565	1	Decal (Drive and Steer)	
19	1702566	1	Decal (Lift and Swing)	
20	1702567	1	Decal (Function Speed)	
21	1704260	1	Decal (EMS)	
22	1705132	AR	Decal (ADE) **(SN 0300171769 through 0300220044)**	
23	2560136	1	Handle, Knob	
24	2760105	1	Housing, Display Light	
24	2920129	12	Bulb, Light	
25	3300353	4	Nut, Tinnerman	
26	3311005	2	Locknut #10-24NC	
27	3520054	5	Plug, Hole 1/2in	
28		Ref	Switch, Toggle Options:	
28		Ref	USA Built Machines	
28	4360328	AR	Switch, Toggle **(SN 0300171769 through 0300183172)**	
28	1001155045	AR	Switch, Toggle **(SN 0300183173 through 0300235167)**	
28	1001155044	AR	Nut **(SN 0300183173 through 0300235167)**	
28	4740397	AR	Spacer, Washer	
28		Ref	China Built Machines	
28	4360328	AR	Switch, Toggle **(SN B300000970 through B300001441)**	
28	1001155045	AR	Switch, Toggle **(SN B300001442 through B300002654)**	
28	1001155044	AR	Nut **(SN B300001442 through B300002654)**	
28	4740397	AR	Spacer, Washer **(SN B300001442 through B300002654)**	
29		Ref	Switch, Toggle Options:	
29		Ref	USA Built Machines	
29	4360330	1	Switch, Toggle **(SN 0300171769 through 0300183172)**	
29	1001159256	1	Switch, Toggle **(SN 0300183173 through 0300235167)**	
29	1001155044	1	Nut **(SN 0300183173 through 0300235167)**	
29	4740397	1	Spacer, Washer	
29		Ref	China Built Machines	
29	4360330	1	Switch, Toggle **(SN B300000970 through B300001441)**	
29	1001159256	1	Switch, Toggle **(SN B300001442 through B300002654)**	
29	1001155044	1	Nut **(SN B300001442 through B300002654)**	
29	4740397	1	Spacer, Washer **(SN B300001442 through B300002654)**	
30	4360387	1	Switch, Pushbutton	

ITEM	PART NUMBER	QTY	DESCRIPTION	REV
31	4360407	1	Controller, Speed	
31	See Note	1	Gasket "Top Hat" (Included with Switch) (Note: Not Available - Purchase Complete Controller.)	
31	70003784	1	Seal	
32	4360475	1	Switch, Emergency Stop	
32	7020175	1	Cap, Red	
32	7020176	1	Contact Block	
33	4360476	1	Block, Contact	
34	4460007	1	Bar, Buss	
35	4460234	3	Mount, Wire Tie (Not Shown - Used on bottom of Console Lid)	
36	4460428	2	Connector, Strain Relief	
37	4460470	1	Nut, Strain Relief	
38	4460471	1	Lockwasher, Strain Relief	
39	4460708	2	Connector, Female - 15 Position (Not Shown - Used on Console Box End of Footswitch Cable and Analyzer Harness)	
40	4460905	5	Connector, Amp Seal Plug	
41	4751000	2	Flatwasher #10 Regular	
42	4751400	8	Flatwasher 1/4in Regular	
43	4922666	1	Harness, Analyzer Cable (Not Shown - See ELECTRICAL SECTION for Breakdown)	
44	1001131168	1	Decal (Stop)	
45	1001107753	1	Harness, Platform Box (See ELECTRICAL SECTION for Breakdown)	
46	3790012	5	O-Ring	
47	1001139135	1	Harness, Platform Valve (Not Shown - See ELECTRICAL SECTION for Breakdown)	
49	3520033	2	Plug **(SN 0300220045 through 0200224148)**	
49	1001220486	2	Plug **(SN 0300224149 through 0300235167)**	
49	3520033	2	Plug **(SN B300001600 through B300001642)**	
49	1001220486	2	Plug **(SN B300001643 through B300002654)**	
50	3520035	1	Plug **(SN 0300220045 through 0300235167)**	
	0861537	Ref	**CONSOLE BOX COMPONENTS (SN 0300171769 through 0300220044)**	I
	1001201890	Ref	**CONSOLE BOX COMPONENTS (SN 0300220045 through 0300235167)**	B
	0861537	Ref	**CONSOLE BOX COMPONENTS (SN B300000970 through B300001599)**	H
	1001201890	Ref	**CONSOLE BOX COMPONENTS (SN B300001600 through B300002654)**	B
201	See Note	1	Console Top (Note: Not Available - Purchase Complete Console Box Assembly.)	
202	See Note	1	Console Bottom (Note: Not Available - Purchase Complete Console Box Assembly.)	
203	3311601	1	Nut 3/8in-16NC	
204	3470003	2	Pin, Hair	
205	0630568	1	Screw 3/8in-16NC x 4-1/2in	
206	4711500	AR	Washer 5/16	
206	4711600	AR	Washer 3/8	
207	1001200575	2	Bracket	
208	3430616	2	Pin **(SN 0300220045 through 0300235167, SN B300001600 through B300002654)**	
		Ref	**LIGHT PANEL DECAL INSTALLATION**	
	1001108763	Ref	**Dual Capacity**	B
	1001108764	Ref	**Single Capacity**	A

ITEM	PART NUMBER	QTY	DESCRIPTION	REV
251		Ref	Decal - Display Options:	
251	1001121657	1	ANSI, ANSI Export, CSA, Brazilian, Japanese and Latin America Specs	
251	1001107926	1	CE, ANSI Export, Australian and Japanese Specs	
		Ref	**DUAL FUEL SWITCH INSTALLATION (GM ENGINE MACHINES)**	
301	4360336	1	Switch, Toggle	
301	3790012	1	O-Ring	
	1001151306	Ref	**HEAD AND TAIL LIGHTS INSTALLATIONS (OPTIONAL)**	B
351	4360522	1	Switch, Push Button	
351	1705170	1	Decal - Lights	
	1001151307	Ref	**CHASSIS ILLUMINATION LIGHT INSTALLATION (OPTIONAL)**	B
401	4360522	1	Switch, Push Button	
401	1705170	1	Decal - Lights	
		Ref	**SOFT TOUCH SYSTEM INSTALLATION (OPTIONAL)**	
		Ref	**USA Built Machines:**	
	0273824	Ref	**6ft Platforms**	C
	1001108256	Ref	**6ft Platforms with Fall Arrest**	B
	0272427	Ref	**8ft Platforms**	F
	0273706	Ref	**8ft Platforms With Fall Arrest**	C
		Ref	**China Built Machines:**	
	0272427	Ref	**8ft Platforms**	F
451	4360387	1	Switch, Pushbutton	
452	1702938	1	Decal - Soft Touch Override	
453	2920028	1	Light, Indicator	
453	2920029	1	Bulb, Light	
		Ref	**4WS COMPONENTS INSTALLATION (OPTIONAL)**	
		Ref	**USA Built Machines:**	
	1001148163	Ref	**Machines without Tow Package**	A
	1001148166	Ref	**Machines with Tow Package**	A
		Ref	**China Built Machines:**	
	0258945	Ref	**Machines without Tow Package**	A
501	4360331	1	Switch, Toggle	
501	3790012	1	O-Ring	
		Ref	**PLATFORM WORKLIGHT INSTALLATION (OPTIONAL)**	
	0273486	Ref	**Platform Worklight Installation 600S**	C
	0273491	Ref	**Platform Worklight Installation 660SJ**	C
601	4360232	1	Breaker, Circuit - 15Amp	
602	0721003	2	Bolt #10-24NC x 3/8in	
603	4761000	4	Lockwasher #10	
604	3311001	2	Nut #10-24NC	
605	4460426	1	Connector, Strain Relief	
		Ref	**JIB SWITCH INSTALLATION (660SJ ONLY)**	
701	4360328	1	Switch, Toggle	
701	3790012	1	O-Ring	

FIGURE 4-4. PLATFORM CONSOLE ASSEMBLY (WITH SKYGUARD)

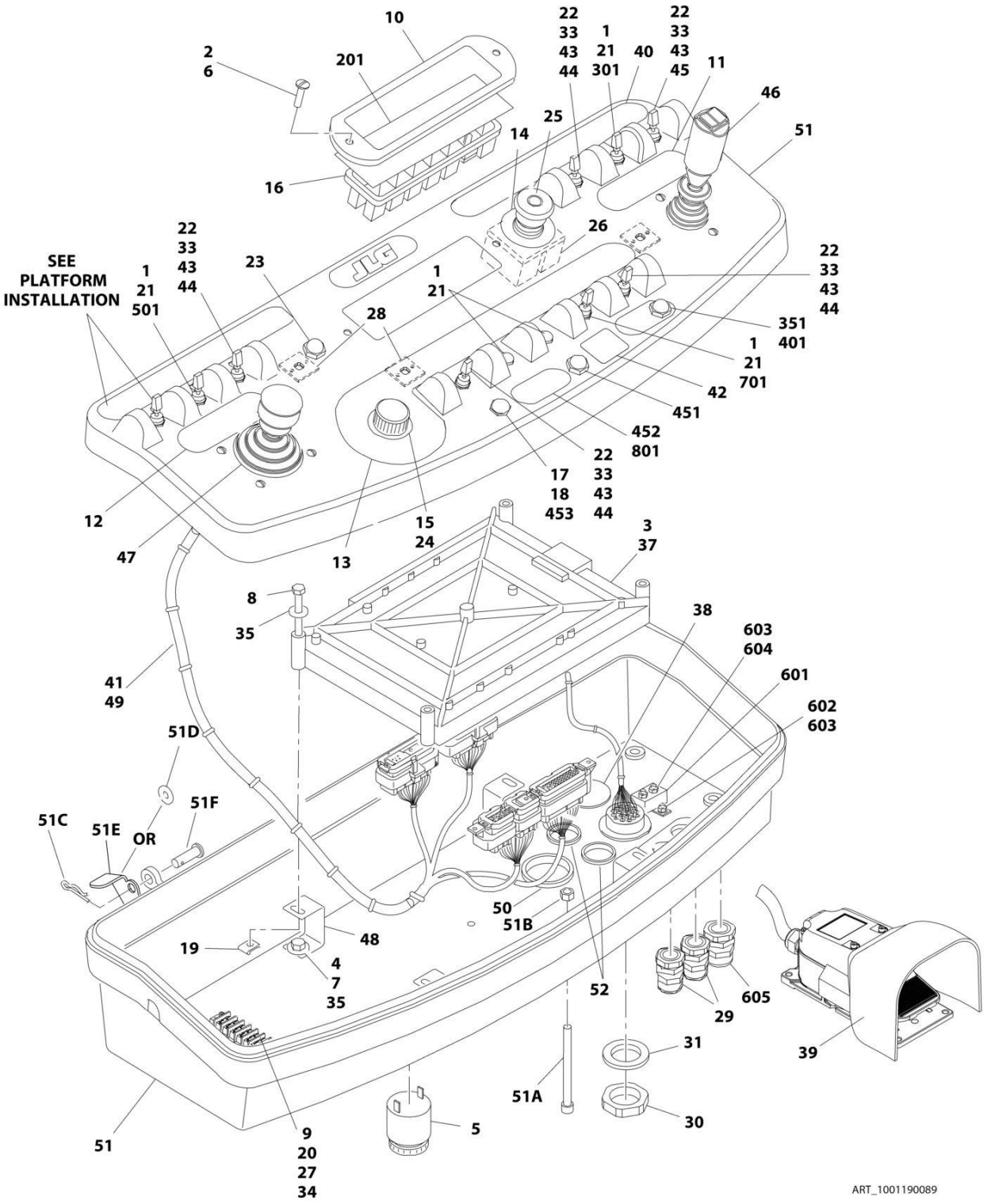

FIGURE 4-4. PLATFORM CONSOLE ASSEMBLY (WITH SKYGUARD)

ITEM	PART NUMBER	QTY	DESCRIPTION	REV
		Ref	**PLATFORM CONSOLE ASSEMBLY (WITH SKYGUARD)**	
	1001190091	Ref	**Platform Console Assembly (USA Built Machines) (SN 0300200809 through 0300220044)**	C
	1001202599	Ref	**Platform Console Assembly (USA Built Machines) (SN 0300220045 through 0300235167)**	C
	1001190092	Ref	**Platform Console Assembly (China Built Machines) (SN B300001179 through B300001599)**	B
	1001202601	Ref	**Platform Console Assembly (China Built Machines) (SN B300001600 through B300002654)**	C
		Ref	**Note: For Machines Built SN 0300171769 through 0300200808 & SN B300000970 through B300001178, Refer to SPECIAL OPTIONS SECTION.**	
1	0100009	AR	Sealant	
2	0100035	AR	Compound, Locking	
3	0100048	AR	Grease, Dielectric	
4	0100081	AR	Adhesive	
5	0140011	1	Alarm	
6	0630464	2	Screw #10 x 1/2	
7	0641404	4	Bolt 1/4 x 1/2	
8	0641414	4	Bolt 1/4 x 1-3/4	
9	0721006	2	Screw #10 x 3/4	
10	1670829	1	Bezel	
11	1702565	1	Decal - Drive and Steer	
12	1702566	1	Decal - Lift and Swing	
13	1702567	1	Decal - Function Speed	
14	1704260	1	Decal - Emergency Stop	
15	2560136	1	Knob	
16	2760105	1	Fixture, Light	
17	2920028	1	Light, Indicator	
18	2920029	1	Lamp, Bulb	
19	3300353	4	Nut, Tinnerman	
20	3311005	2	Nut #10	
21	3520054	5	Plug, Hole	
22	3790012	5	O-Ring	
23	4360387	2	Switch, Push Button	
24	4360407	1	Switch, Flow Control	
24	See Note	NSS	Gasket "Top Hat" (Included with Switch) (Note: Not Available for Purchase)	
24	70003784	1	Seal	
25	4360475	1	Switch, Emergency Stop	
25	7020175	1	Cap, Red	
25	7020176	1	Block, Contact	
26	4360476	1	Switch, Contact	
27	4460007	1	Bussbar	
28	4460234	3	Mount Cable, Tie	
29	4460428	2	Connector, Strain Relief	
30	4460470	1	Terminal, Nut	
31	4460471	1	Terminal, Washer	
32	4460708	2	Connector - 15 Position	
33	4740397	7	Spacer, Washer	
34	4751000	2	Washer #10	

ITEM	PART NUMBER	QTY	DESCRIPTION	REV
35	4751400	8	Washer 1/4	
36	4922666	1	Harness, Analyzer Cable (See ELECTRICAL SECTION for Breakdown)	
37		Ref	Module, Control Options:	
		Ref	Note: Re-calibration Required when Replaced.	
37	1001106938	1	Module (USA Built Machines)	
37	1001106355	1	Module (China Built Machines)	
38	1001110434	1	Plug, Hole	
39	1001117174	1	Footswitch Assembly (See PLATFORM COMPONENTS INSTALLATION for Breakdown)	
40	1001131168	1	Decal - Stop	
41	1001139135	1	Harness, Platform Valve (USA Built Machines Only) (See ELECTRICAL SECTION for Breakdown)	
42	1001144433	1	Decal - No Weight SkyGuard	
43	1001155044	7	Nut 15/32	
44	1001155045	6	Switch, Toggle	
45	1001159256	1	Switch, Toggle	
46	1001166538	NLA	Controller Drive/Steer (Use p/n 1001212415) (See CONTROLLER ASSEMBLY (DRIVE AND STEER) for Breakdown)	
47	1001166539	NLA	Controller Lift/Swing (Use p/n 1001129555) (See CONTROLLER ASSEMBLY (LIFT AND SWING) for Breakdown)	
48	1001172760	4	Bracket	
49	1001185280	1	Harness, Console Box (See ELECTRICAL SECTION for Breakdown)	
50	1001185281	1	Plug	
51	1001189116	1	Box, Console **(SN 0300200809 through 0300220044)**	D
51	1001201891	1	Box, Console **(SN 0300220045 through 0300235167)**	B
51	1001189116	1	Box, Console **(SN B300001179 through B300001599)**	C
51	1001201891	1	Box, Console **(SN B300001600 through B300002654)**	B
51A	0630568	1	Capscrew 3/8 x 4-1/2	
51B	3311601	1	Nut 3/8	
51C	3470003	1	Hairpin	
51D	4711500	AR	Washer 5/16	
51D	4711600	AR	Washer 3/8	
51E	1001200575	2	Bracket	
51F	3430616	2	Pin **(SN 0300220045 through 0300235167, SN B300001600 through B300002654)**	
52	3520033	2	Plug **(SN 0300220045 through 0300224148)**	
52	1001220486	2	Plug **(SN 0300224149 through 0300235167)**	
52	3520033	2	Plug **(SN B300001600 through B300001642)**	
52	1001220486	2	Plug **(SN B300001643 through B300002654)**	
		Ref	**LIGHT PANEL DECAL INSTALLATION**	
	1001108763	Ref	**Dual Capacity Machines**	B
	1001108764	Ref	**Single Capacity Machines**	A
201		Ref	Decal - Display Options:	
201	1001121657	1	Dual Capacity Machines	
201	1001107926	1	Single Capacity Machines	
		Ref	**DUAL FUEL SWITCH INSTALLATION (GM ENGINE MACHINES)**	
301	4360336	1	Switch, Toggle	
301	3790012	1	O-Ring	
	1001151306	Ref	**HEAD AND TAIL LIGHTS INSTALLATIONS (OPTIONAL)**	B

ITEM	PART NUMBER	QTY	DESCRIPTION	REV
351	4360522	1	Switch, Push Button	
351	1705170	1	Decal - Lights	
	1001151307	Ref	**CHASSIS ILLUMINATION LIGHT INSTALLATION (OPTIONAL)**	B
401	4360522	1	Switch, Push Button	
401	1705170	1	Decal - Lights	
		Ref	**SOFT TOUCH SYSTEM INSTALLATION (OPTIONAL)**	
		Ref	**USA Built Machines:**	
	0273824	Ref	**6ft Platforms**	C
	1001108256	Ref	**6ft Platforms with Fall Arrest**	B
	0272427	Ref	**8ft Platforms**	F
	0273706	Ref	**8ft Platforms with Fall Arrest**	C
		Ref	**China Built Machines:**	
	0272427	Ref	**8ft Platforms**	F
451	4360387	1	Switch, Push Button	
452	1702938	1	Decal - Soft Touch Override	
453	2920028	1	Light, Indicator	
453	2920029	1	Bulb, Light	
		Ref	**4WS COMPONENTS INSTALLATION (OPTIONAL)**	
		Ref	**USA Built Machines:**	
	1001148163	Ref	**Machines without Tow Package**	A
	1001148166	Ref	**Machines with Tow Package**	A
		Ref	**China Built Machines:**	
	0258945	Ref	**Machines without Tow Package**	A
501	4360331	1	Switch, Toggle	
501	3790012	1	O-Ring	
		Ref	**PLATFORM WORKLIGHT INSTALLATION (OPTIONAL)**	
	0273486	Ref	**Platform Worklight Installation 600S**	C
	0273491	Ref	**Platform Worklight Installation 660SJ**	C
601	4360232	1	Breaker, Circuit - 15Amp	
602	0721003	2	Bolt #10-24NC x 3/8in	
603	4761000	4	Lockwasher #10	
604	3311001	2	Nut #10-24NC	
605	4460426	1	Connector, Strain Relief	
		Ref	**JIB SWITCH INSTALLATION (660SJ ONLY)**	
701	4360328	1	Switch, Toggle	
701	3790012	1	O-Ring	
		Ref	**SKYGUARD OVERRIDE DECALS INSTALLATION**	
801	1001141300	1	Decal - SkyGuard Override	
801	1001141302	1	Decal - SkyGuard Override with Soft Touch	

FIGURE 4-5. CONTROLLER ASSEMBLY (LIFT AND SWING)

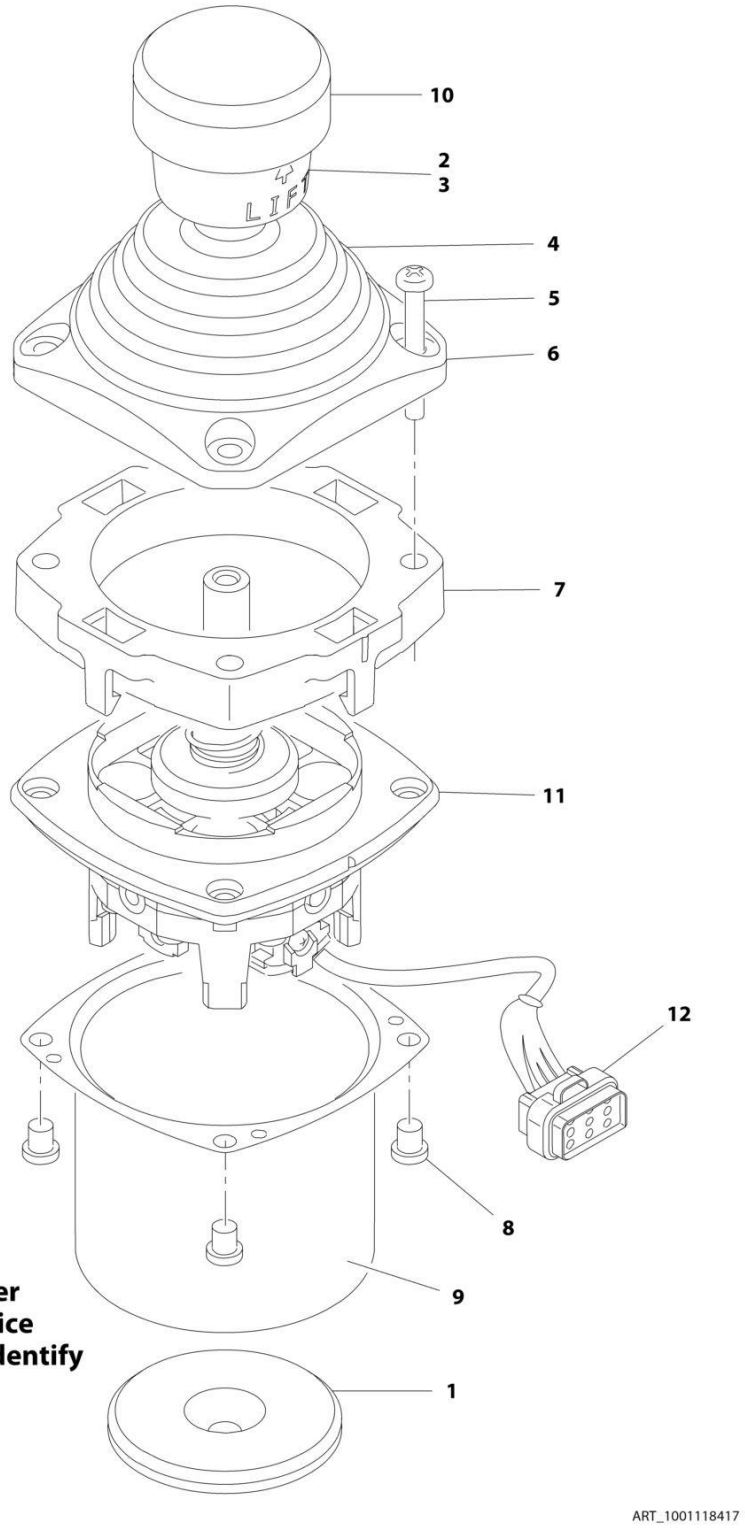

Note: Original Equipment controller may have been replaced with Service Replacement controller. Visually identify controller before ordering parts.

FIGURE 4-5. CONTROLLER ASSEMBLY (LIFT AND SWING)

ITEM	PART NUMBER	QTY	DESCRIPTION	REV
		Ref	**Note: Original Equipment controller may have been replaced with Service Replacement controller. Visually identify controller before ordering parts.**	
	1001118417	Ref	**CONTROLLER ASSEMBLY (LIFT AND SWING) (SN 0300171769 through 0300188601)**	E
	1001118417	Ref	**CONTROLLER ASSEMBLY (LIFT AND SWING) (SN B300000970 through B300001441)**	E
		Ref	**Note: Use p/n 1001129555 as Replacement.**	
1	70002730	1	Gasket	
2	7003928	1	Spring	
3	7022808	1	Cap, Lift	
4	70002731	1	Boot	
5	70002732	4	Screw	
6	7022815	1	Bezel	
7	70002733	1	Adapter	
8	70002734	4	Screw	
9	70002735	1	Can, Enclosure	
10	70002906	1	Cap	
11	See Note	NSS	Mechanical Assembly (Note: Use p/n 1001129555)	
12	7022819	1	Connector - 8 Position	
12	4460871	6	Socket, Female	

FIGURE 4-6. CONTROLLER ASSEMBLY (LIFT AND SWING)

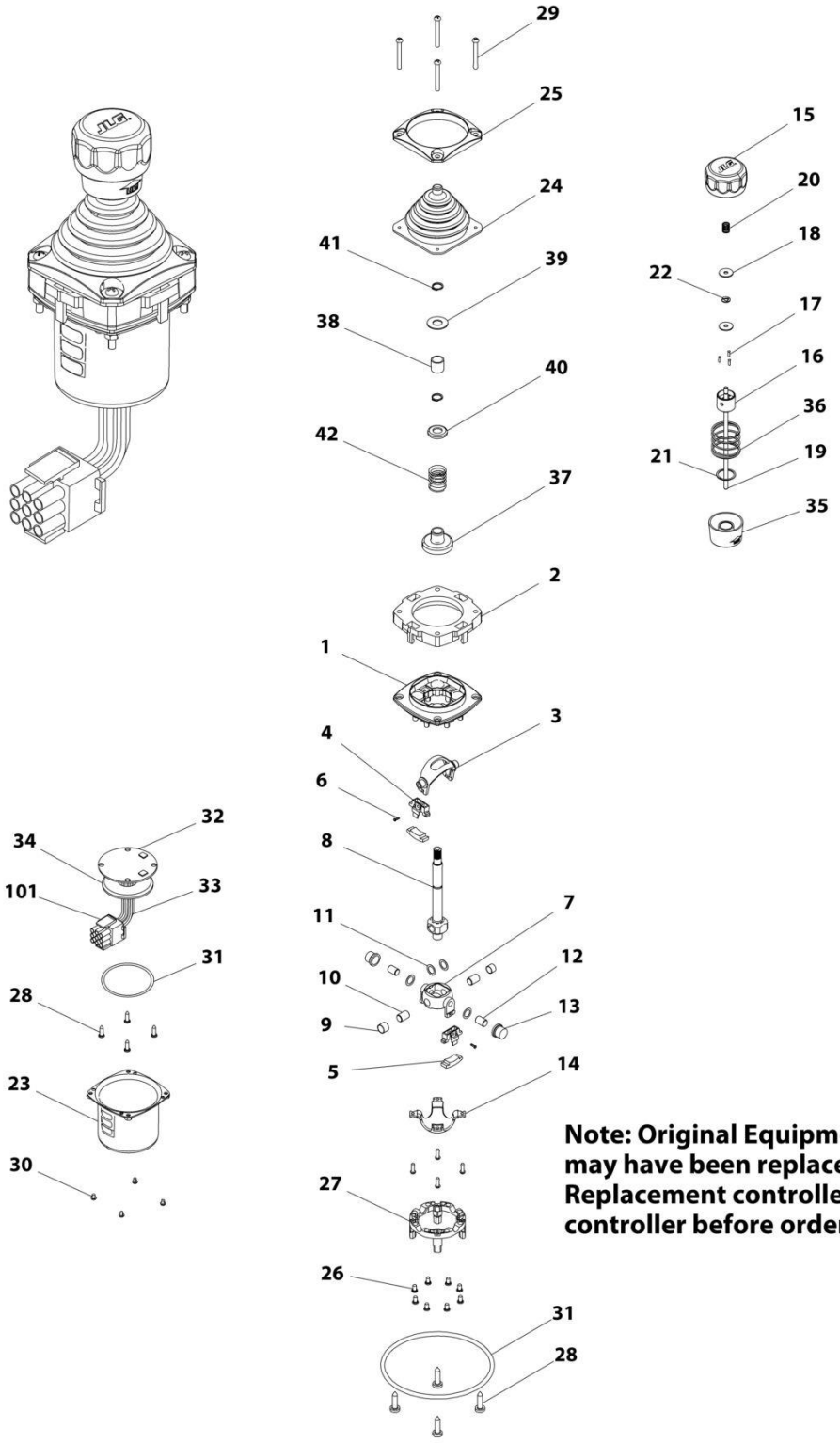

Note: Original Equipment controller may have been replaced with Service Replacement controller. Visually identify controller before ordering parts.

FIGURE 4-6. CONTROLLER ASSEMBLY (LIFT AND SWING)

ITEM	PART NUMBER	QTY	DESCRIPTION	REV
		Ref	**Note: Original Equipment controller may have been replaced with Service Replacement controller. Visually identify controller before ordering parts.**	
	1001166539	Ref	**CONTROLLER ASSEMBLY (LIFT AND SWING) (SN 0300188602 through 0300235167)**	D
	1001166539	Ref	**CONTROLLER ASSEMBLY (LIFT AND SWING) (SN B300001442 through B300002654)**	D
		Ref	**Note: Use p/n 1001129555 as Replacement.**	
1	See Note	1	Main Cast Body (Note: Not Available - Purchase Complete Assembly)	
2	70004752	1	Adapter	
3	See Note	NSS	Pivot Arm, Plastic (Note: Not Available - Purchase Complete Assembly)	
4	See Note	NSS	Holder, Magnet (Note: Not Available - Purchase Complete Assembly)	
5	See Note	NSS	Arc, Magnet (Note: Not Available - Purchase Complete Assembly)	
6	See Note	NSS	Screw (Note: Not Available for Purchase)	
7	See Note	NSS	Pivot Arm, Cast (Note: Not Available - Purchase Complete Assembly)	
8	See Note	NSS	Shaft, Main (Note: Not Available - Purchase Complete Assembly)	
9	See Note	NSS	Bearing (Note: Not Available - Purchase Complete Assembly)	
10	See Note	NSS	Pin (Note: Not Available - Purchase Complete Assembly)	
11	See Note	NSS	Shim (Note: Not Available - Purchase Complete Assembly)	
12	See Note	NSS	Pin (Note: Not Available - Purchase Complete Assembly)	
13	See Note	NSS	Bearing (Note: Not Available - Purchase Complete Assembly)	
14	See Note	NSS	Dome, Centering (Note: Not Available - Purchase Complete Assembly)	
15	70004753	1	Cap	
16	70004754	1	Insert, Cap	
17	70004755	3	Pin	
18	70004756	2	Washer	
19	70004757	1	Pin, Centering	
20	70004758	1	Spring	
21	70004759	1	Ring, Retaining	
22	70004760	1	E-Ring	
23	70004761	1	Can, Enclosure	
24	70004762	1	Boot	
25	70004763	1	Bezel	
26	See Note	NSS	Screw (Note: Not Available for Purchase)	
27	See Note	NSS	Base Mounting (Note: Not Available - Purchase Complete Assembly)	
28	See Note	NSS	Screw (Note: Not Available for Purchase)	
29	70004764	4	Screw	
30	70004765	4	Screw	
31	70004766	1	O-Ring	
32	See Note	NSS	Plate (Note: Not Available - Purchase Complete Assembly)	
33	See Note	NSS	Harness (Note: Not Available - Purchase Complete Assembly)	
34	70004767	1	Grommet, Rubber	
35	70004768	1	Housing	
36	70004769	1	Spring	
37	70004770	1	Stopper	
38	70004771	1	Spacer	

ITEM	PART NUMBER	QTY	DESCRIPTION	REV
39	70004772	1	Washer	
40	70004773	1	Disc	
41	70004774	2	Ring, Retaining	
42	70004775	1	Spring	
101	4460265	1	Connector - 9 Position	
101	4460226	6	Socket, Female	

FIGURE 4-7. CONTROLLER ASSEMBLY (DRIVE AND STEER)

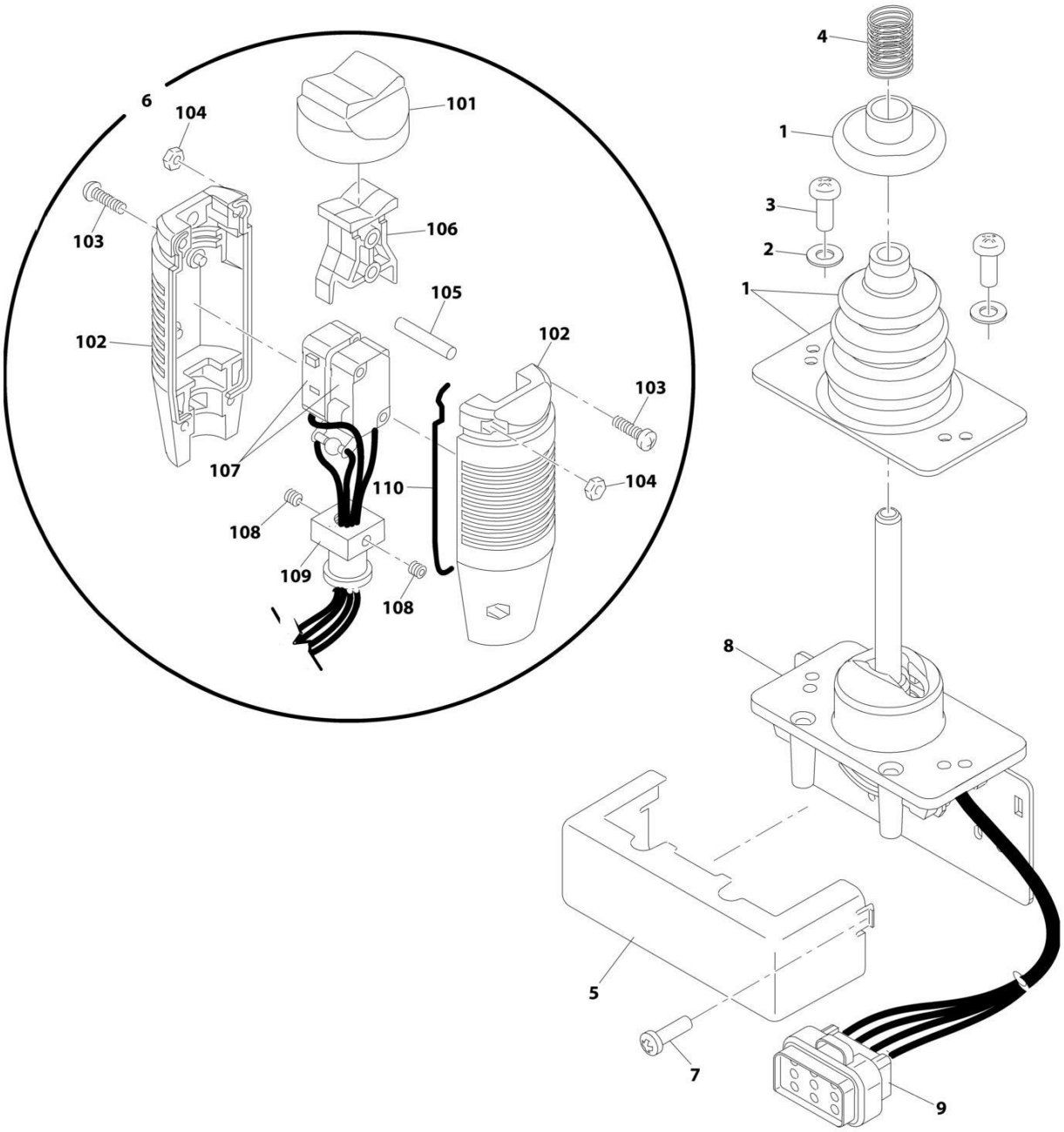

Note: Original Equipment controller may have been replaced with Service Replacement controller. Visually identify controller before ordering parts.

ART_1001118416

FIGURE 4-7. CONTROLLER ASSEMBLY (DRIVE AND STEER)

ITEM	PART NUMBER	QTY	DESCRIPTION	REV
		Ref	**Note: Original Equipment controller may have been replaced with Service Replacement controller. Visually identify controller before ordering parts.**	
	1001118416	Ref	**CONTROLLER ASSEMBLY (DRIVE AND STEER) (SN 0300171769 through 0300188601)**	D
	1001118416	Ref	**CONTROLLER ASSEMBLY (DRIVE AND STEER) (SN B300000970 through B300001441)**	D
		Ref	**Note: Use p/n 1001212415 as Replacement.**	
1	70002724	1	Boot and Control Lock Assembly	
2	7003941	2	Washer	
3	70002725	2	Screw	
4	7019162	1	Spring	
5	70002726	1	Enclosure	
6	70002727	1	Handle Assembly (See Items 101-110 for Breakdown)	
7	70002728	1	Screw	
8	See Note	NSS	Mechanical Assembly (Note: Use p/n 1001166538)	
9	1001113961	1	Plug, Male - 8 Position (Black) (was p/n 7022825)	
9	4460871	7	Socket, Female	
	70002727	Ref	**HANDLE ASSEMBLY**	
101	7003972	1	Boot, Switch	
102	7003973	2	Half, Handle	
103	7003980	4	Screw	
104	7019167	4	Nut	
105	7019164	1	Axle	
106	7019165	1	Rocker	
104	70002729	1	Wiring Assembly	
107	7003982	2	Switch, Micro	
108	7003983	2	Setscrew	
109	7019194	1	Coupling	
110	7003989	2	Gasket	

FIGURE 4-8. CONTROLLER ASSEMBLY (DRIVE AND STEER)

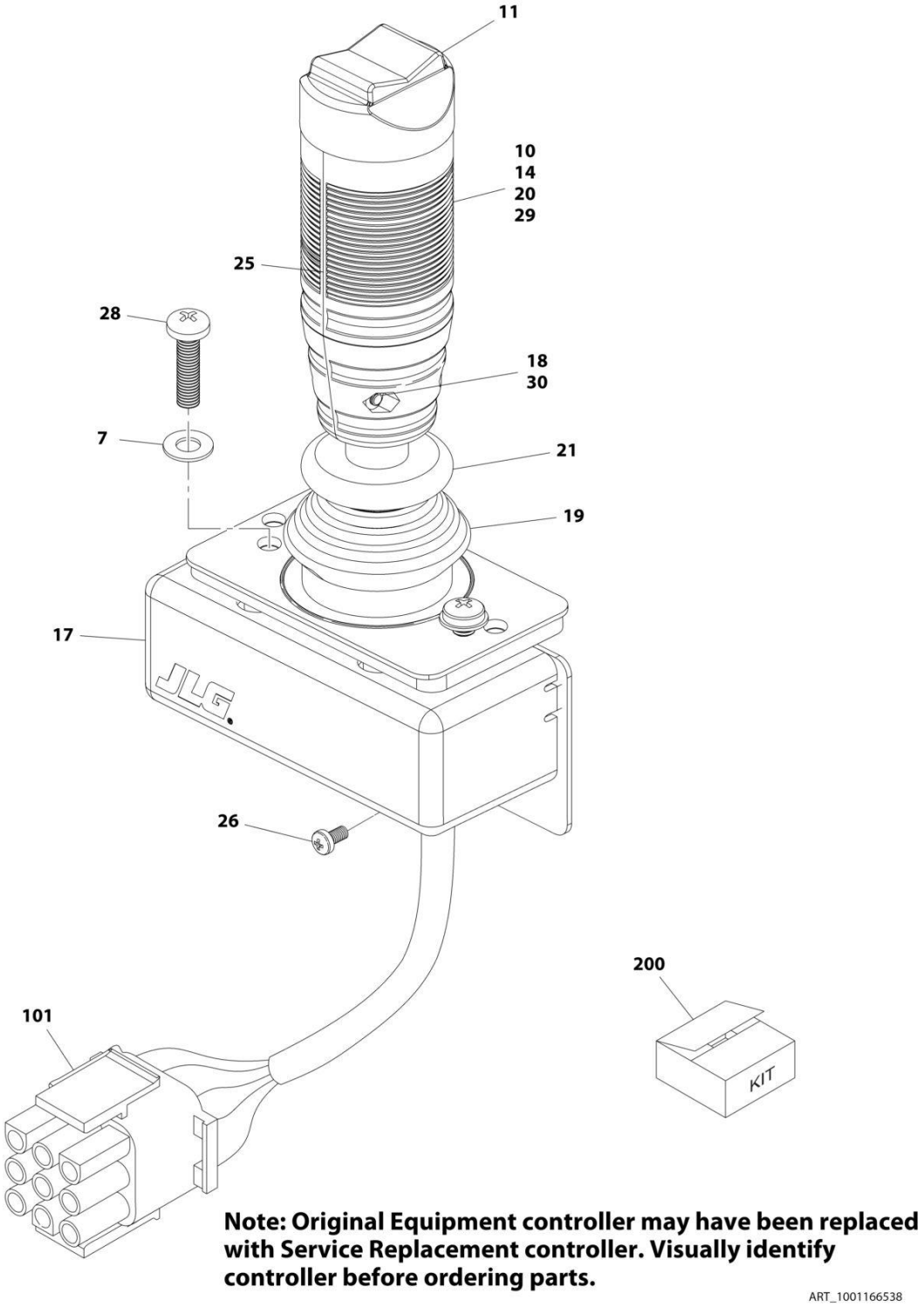

FIGURE 4-8. CONTROLLER ASSEMBLY (DRIVE AND STEER)

ITEM	PART NUMBER	QTY	DESCRIPTION	REV
		Ref	**Note: Original Equipment controller may have been replaced with Service Replacement controller. Visually identify controller before ordering parts.**	
	1001166538	Ref	**CONTROLLER ASSEMBLY (DRIVE AND STEER) (SN 0300188602 through 0300235167)**	G
	1001166538	Ref	**CONTROLLER ASSEMBLY (DRIVE AND STEER) (SN B300001442 through B300002654)**	G
		Ref	**Note: Use p/n 1001212415 as Replacement.**	
7	70004738	2	Washer	
10	70004739	1	Roller	
11	70004740	1	Boot, Switch	
14	70004741	2	Half, Handle	
17	70004742	1	Enclosure	
18	70004743	4	Nut	
19	70004744	NLA	Boot, Controller (Note: Use Item 200)	
20	70004745	NLA	Tube, Locking (Note: Use Item 200)	
21	70004746	NLA	Disc, Locking (Note: Use Item 200)	
25	70004747	2	Seal, Rope	
26	70004748	1	Screw, M3 x 6	
28	70004749	2	Screw, M5 x 20	
29	70004750	1	Pin, Dowel	
30	70004751	4	Screw, M3 x 16	
101	4460265	1	Connector - 9 Position	
101	4460226	7	Socket, Female	
200	70005230	1	Boot Kit (Includes Items 19-21)	

FIGURE 4-9. SOFT TOUCH SYSTEM INSTALLATION (OPTIONAL)

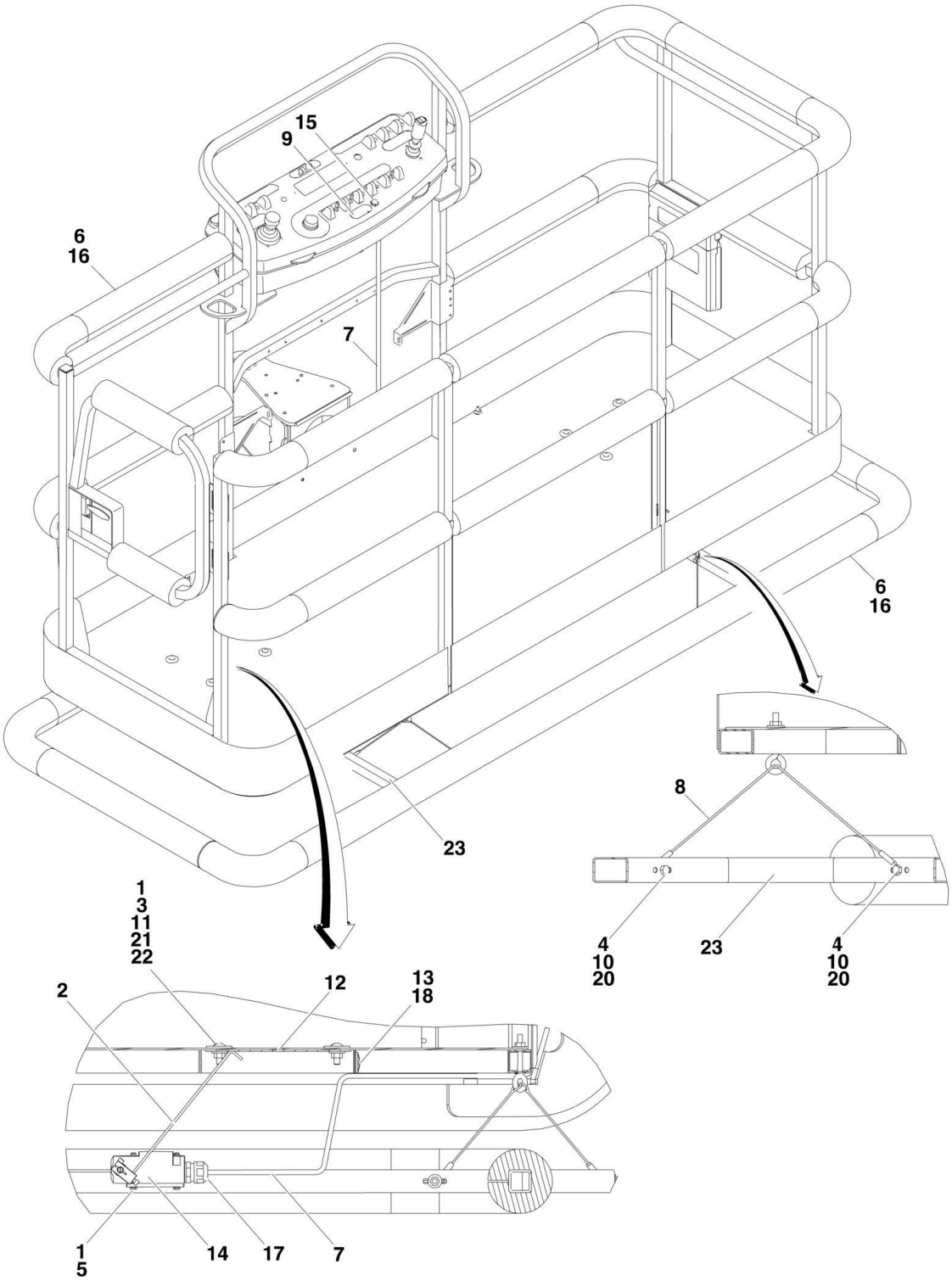

FIGURE 4-9. SOFT TOUCH SYSTEM INSTALLATION (OPTIONAL)

ITEM	PART NUMBER	QTY	DESCRIPTION	REV
		Ref	**SOFT TOUCH SYSTEM INSTALLATIONS**	
		Ref	**USA Built Machines:**	
	0273824	Ref	**6ft Platforms (Side Entry Platform)**	C
	0272427	Ref	**8ft Platforms (Side Entry Platform)**	F
	1001108256	Ref	**6Ft/1.8m Platforms (Fall Arrest Platform)**	B
	0273706	Ref	**8Ft/2.4m Platforms (Fall Arrest Platform)**	C
		Ref	**China Built Machines:**	
	0272427	Ref	**8ft Platforms (Side Entry Platform)**	E
		Ref	**Note: For Overhead Soft Touch, See SPECIAL OPTIONS SECTION.**	
1	0100011	AR	Compound, Locking	
2	0200048	2	Arm, Switch	
3	0630462	8	Bolt, Carriage	
4	0641414	8	Bolt 1/4in-20NC x 1-3/4in	
5	0721005	4	Bolt #10-24NC x 5/8in	
6		Ref	Bumper Kits (Includes Corners and Enough Straight Material for One Platform)	
6	0940134	1	6ft Platforms (Side Entry Platform)	
6	0940103	1	8ft Platforms (Side Entry Platform)	
6	0940177	1	6Ft/1.8m Platforms (Fall Arrest Platform)	
6	0940133	1	8Ft/2.4m Platforms (Fall Arrest Platform)	
6	0940092	1	Bumper (Corner) Options:	
6	0940092	12	Standard Side Entry Platform	
6	0940092	8	Fall Arrest Platforms	
6	0940094	AR	Bumper	
7	1060341		Cable, Electrical - 16/2 Options:	
7	1060341	22 ft/6.7m	6ft Platform	
7	1060341	23 ft/7m	8ft Platform	
8	1060903	4	Wire Rope and Eyebolt Assembly	
9	1702938	1	Decal - Soft Touch Override	
10	3311401	8	Nut 1/4in-20NC	
11	3311501	8	Nut 5/16in-18NC	
12		Ref	Plate, Switch Strike Options:	
12	3575359	2	6ft Platform	
12	3574091	2	8ft Platform	
13	4240099	7	Tie-Strap	
14	4360057	2	Switch, Limit	
15	4360387	1	Switch, Push Button	
16	4420068	1	Tape, Adhesive	
16	1001197017	AR	Tie-Strap (Not shown)	
17	4460049	2	Connector, Strain Relief	
18	4460234	7	Tie-Strap	
19	4460425	1	Connector, Strain Relief	
20	4751400	8	Flatwasher 1/4in Regular	
21	4751500	12	Flatwasher 5/16in Regular	
22	4751800	8	Flatwasher 1/2in Regular	
23		Ref	Rail, Soft Touch Options:	
23	3641569	1	6ft Platform	
23	4846673	1	8ft Platform	
100		Ref	Soft-Touch Add-On Kit Options (Includes required components	

ITEM	PART NUMBER	QTY	DESCRIPTION	REV
			to add option to existing machines) (Not Shown):	
		Ref	Note: May not be available for all machines depending on existing options. Contact JLG Parts Dept before ordering.	
100	1001121592	1	3ft x 6ft (.9m x 1.83m) Platform	
100	1001121593	1	3ft x 6ft (.9m x 2.44m) Platform	

FIGURE 4-10. SKYGUARD SYSTEM INSTALLATION

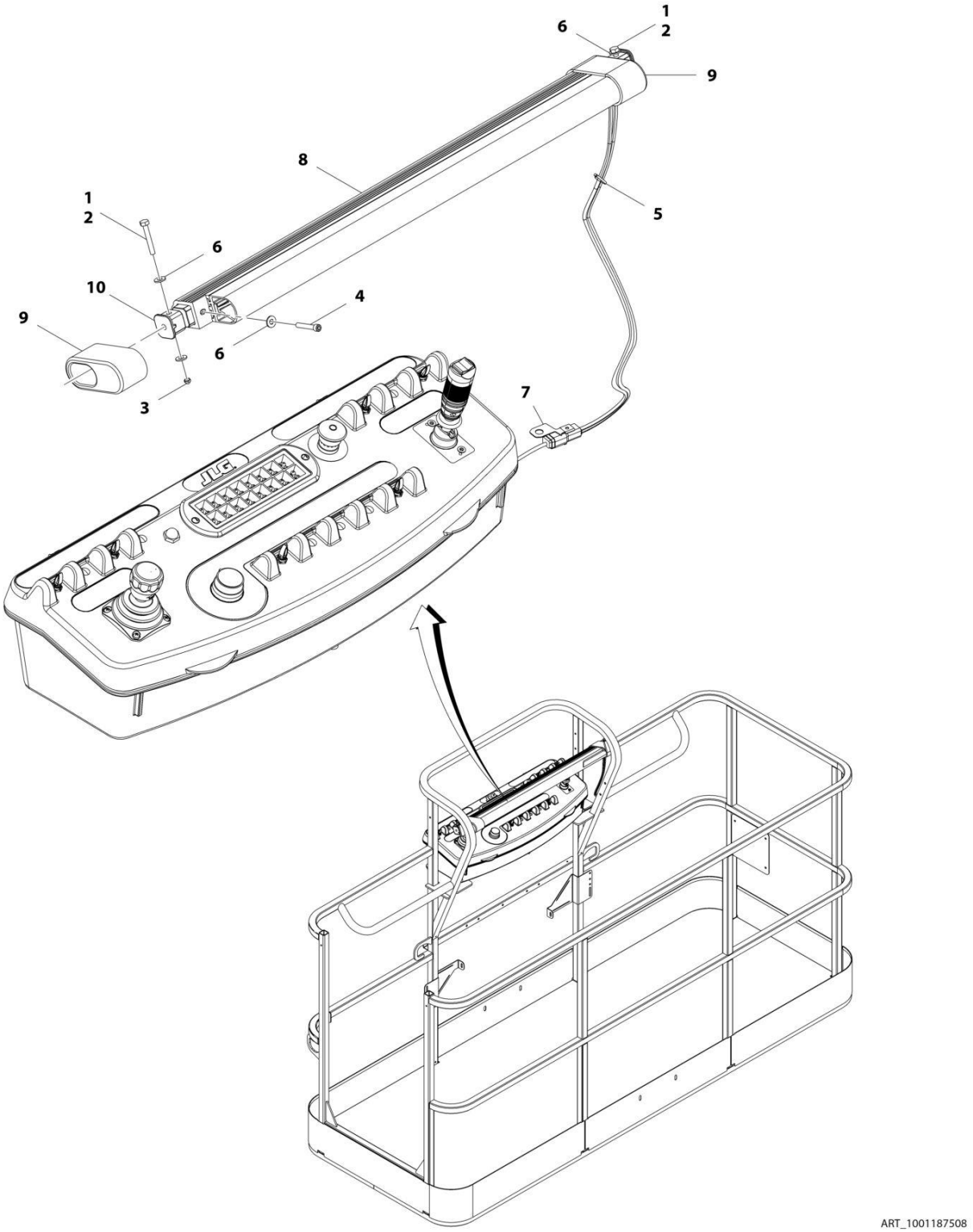

FIGURE 4-10. SKYGUARD SYSTEM INSTALLATION

ITEM	PART NUMBER	QTY	DESCRIPTION	REV
	1001187508	Ref	**SKYGUARD SYSTEM INSTALLATION (SN 0300200809 through 0300235167)**	B
		Ref	**Note: For Machines SN 0300177361 through SN 0300200808, refer to SPECIAL OPTIONS SECTION.**	
1	0100011	AR	Compound, Locking	
2	0641414	2	Bolt, 1/4-20 x 1-3/4	
3	3300430	2	Nut, Acorn 1/4-20	
4	3931424	2	Capscrew, 1/4-20 x 1-1/2	
5	4240033	AR	Tie-Strap	
6	4711400	AR	Washer, 1/4	
7	1001120328	1	Mount	
8	1001137673	1	Switch, SkyGuard Assembly	
9	1001186517	2	Cover, Platform Sensor	
10	1001188889	2	Support, Block	

FIGURE 4-11. CROSS RAIL INSTALLATION

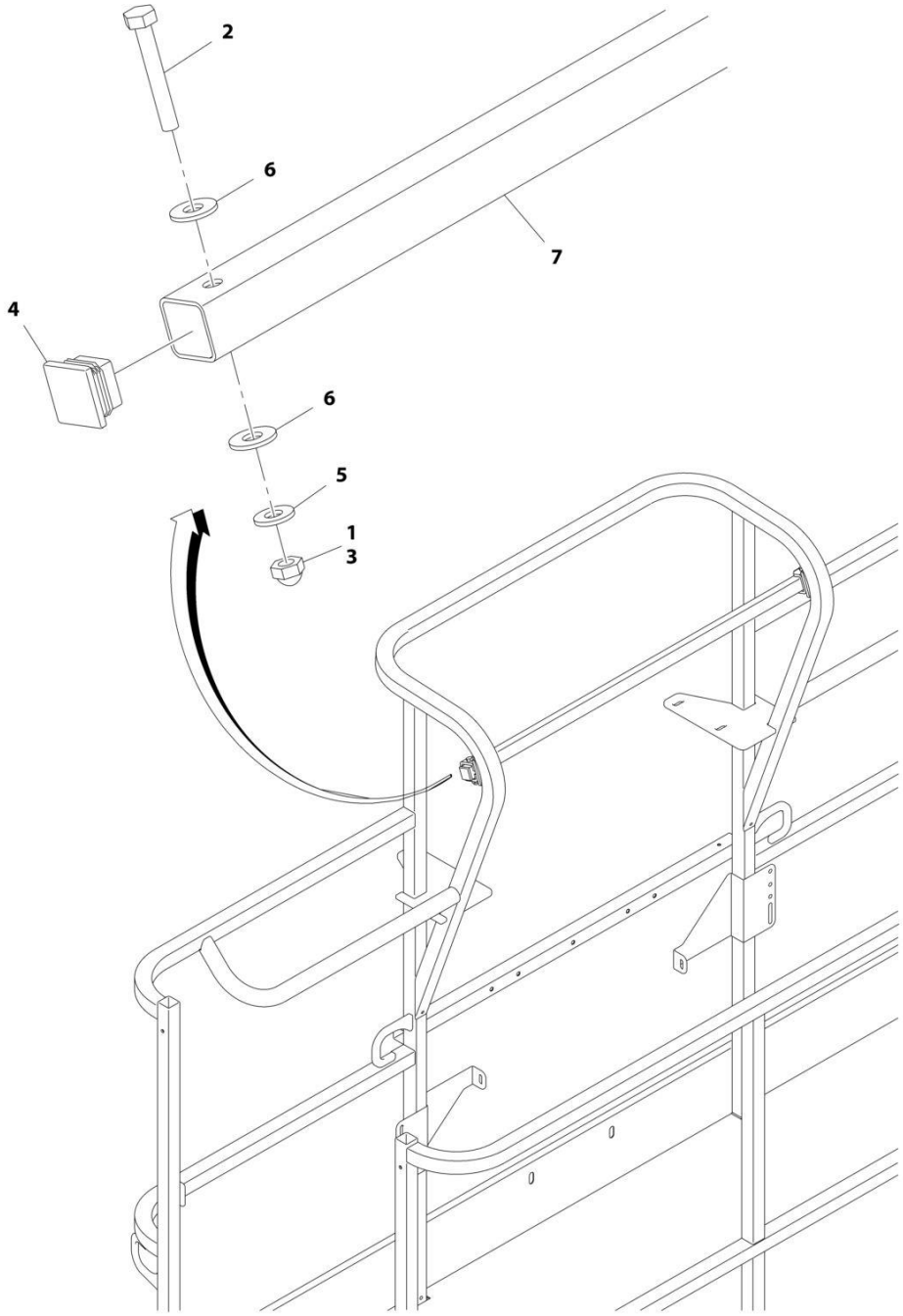

ART_1001182138

FIGURE 4-11. CROSS RAIL INSTALLATION

ITEM	PART NUMBER	QTY	DESCRIPTION	REV
	1001182138	Ref	**CROSS RAIL INSTALLATION**	A
1	0100071	AR	Compound, Locking	
2	0641414	2	Bolt 1/4 x 1-3/4	
3	3300430	2	Nut 1/4	
4	3520182	2	Plug	
5	4711400	2	Washer 1/4	
6	4751400	4	Washer 1/4	
7	1001191708	1	Bar	

FIGURE 4-12. SKYGLAZIER INSTALLATION

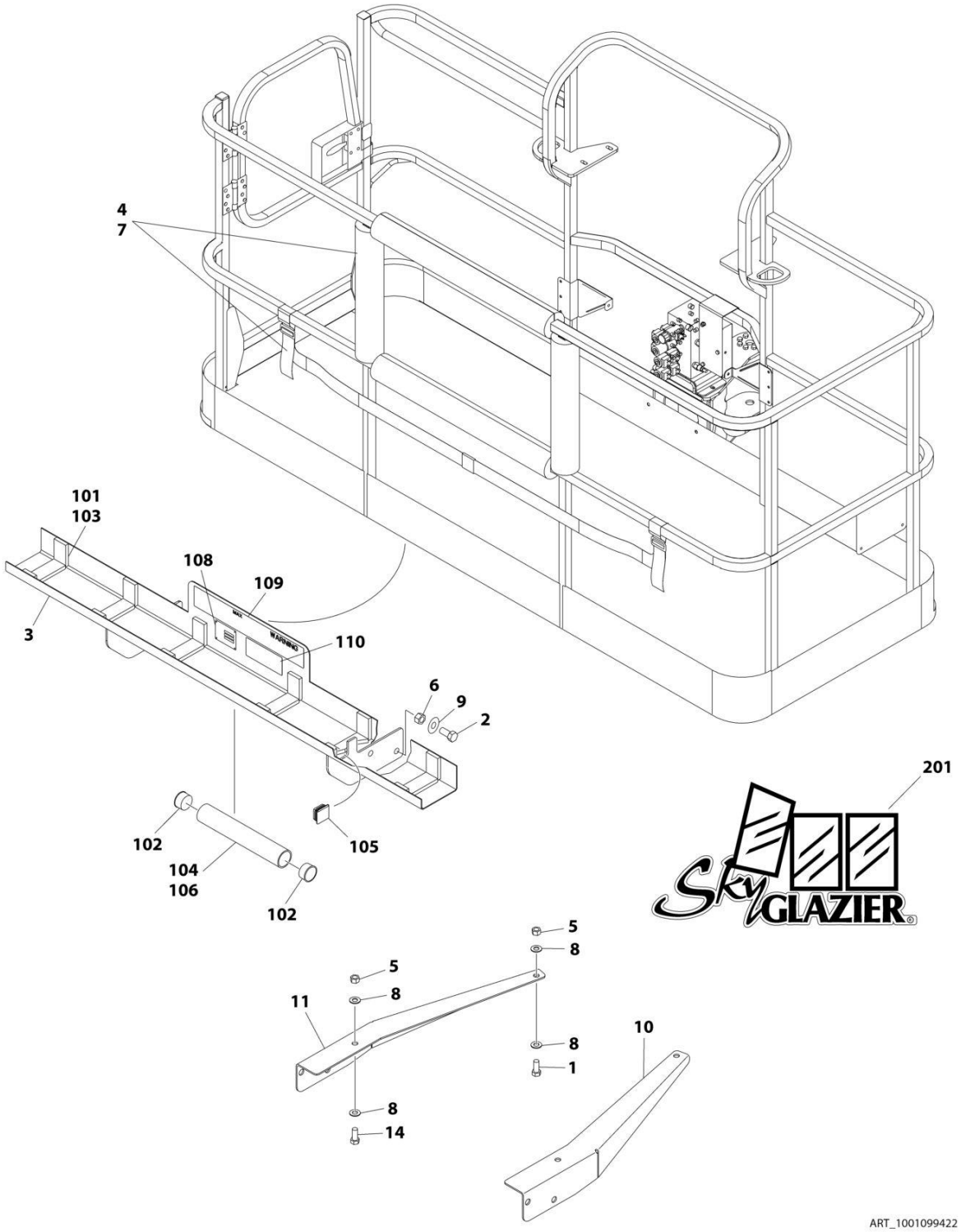

FIGURE 4-12. SKYGLAZIER INSTALLATION

ITEM	PART NUMBER	QTY	DESCRIPTION	REV
	1001101422	Ref	**SKYGLAZIER INSTALLATION (ANSI, ANSI EXPORT AND CSA SPECS)**	C
	1001101422	Ref	**SKYGLAZIER INSTALLATION (AUSTRALIAN SPECS WITHOUT LSS)**	C
	1001102647	Ref	**SKYGLAZIER INSTALLATION (AUSTRALIAN SPECS WITH LSS)**	C
	1001099422	Ref	**SKYGLAZIER INSTALLATION (BRAZIL SPECS)**	C
	1001099421	Ref	**SKYGLAZIER INSTALLATION (LATIN AMERICAN SPECS)**	C
		Ref	Note: Only Available on 600S for Brazil and Latin American Specs. Available on 600S & 660SJ for ANSI, ANSI Export, Australian and CSA Specs.	
1	0642012	2	Bolt 5/8 x 1-1/2	
1	0642026	2	Bolt 5/8 x 3-1/4	
2	0642212	4	Bolt 3/4 x 1-1/2	
3	1001101421	1	Tray Assembly (All Spec except Brazil and Latin American Specs) (See Items 101-110 for Breakdown)	
3	0272951	1	Tray Assembly (Brazil Spec) (See Items 101-110 for Breakdown)	
3	0272948	1	Tray Assembly (Latin American Spec) (See Items 101-110 for Breakdown)	
4	2902212	1	Bumpers and Strap Kit	
4	0940102	1	Bumper Only	
4	4240149	1	Strap Only	
5	3312005	4	Nut 5/8	
5	1001149924	AR	Nut, Plastic 5/8	
6	3312205	4	Nut 3/4	
7	4420014	AR	Tape	
8	4712000	6	Washer 5/8	
9	4712200	8	Washer 3/4	
10	1001099367	1	Support	
11	1001099366	1	Support	
14	8310129	2	Bolt 5/8 x 2-1/2	
14	0642026	2	Bolt 5/8 x 3-1/4	
14	8310230	2	Bolt 5/8 x 4	
	1001101421	Ref	**TRAY ASSEMBLY (ALL SPECS EXCEPT BRAZIL AND LATIN AMERICAN SPECS)**	E
	0272951	Ref	**TRAY ASSEMBLY (BRAZIL SPECS)**	E
	0272948	Ref	**TRAY ASSEMBLY (LATIN AMERICAN SPECS)**	E
101	0100081	AR	Adhesive	
102	1120555	2	Cap, Tube	
103	3340956	1	Pad Kit	
104	3460334	1	Tube	
105	3520071	2	Plug	
106	4420066	AR	Tape, Double Sided	
108	See Note	NSS	Nameplate - Serial Number (Note: Not Available for Purchase)	
109	1001163131	1	Decal - Glazier Capacity (All Specs except Brazil and Latin American Specs)	
109	1001163297	2	Decal - Glazier Capacity (Brazil Specs)	
109	1001163296	2	Decal - Glazier Capacity (Latin American Specs)	
110	1701509	2	Decal - Manual	
	0272418	Ref	**SKYGLAZIER DECAL INSTALLATION**	4
201	1705358	2	Decal - SkyGlazier	

FIGURE 4-13. SKYWELDER/SKYCUTTER COMBO INSTALLATION (60HZ)

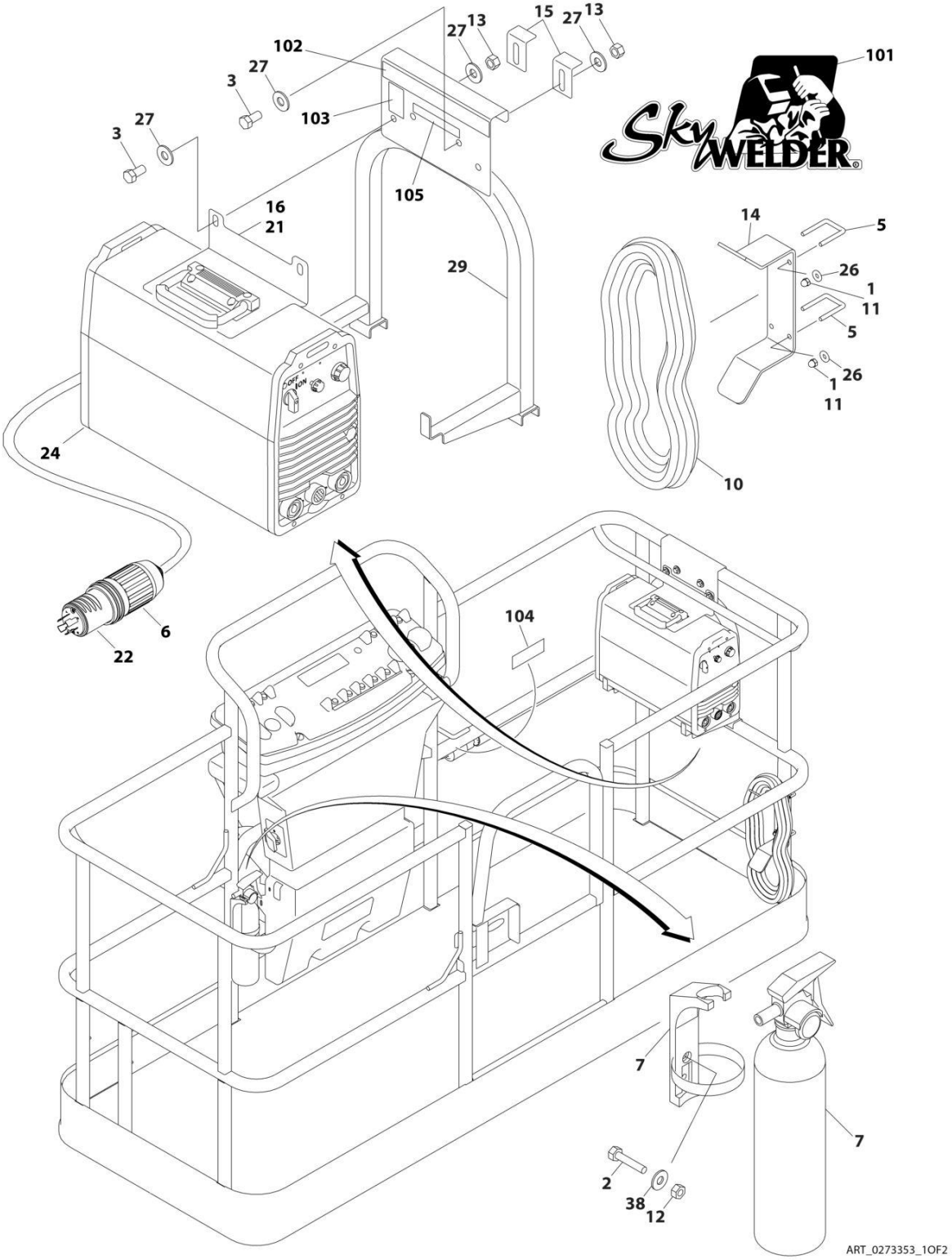

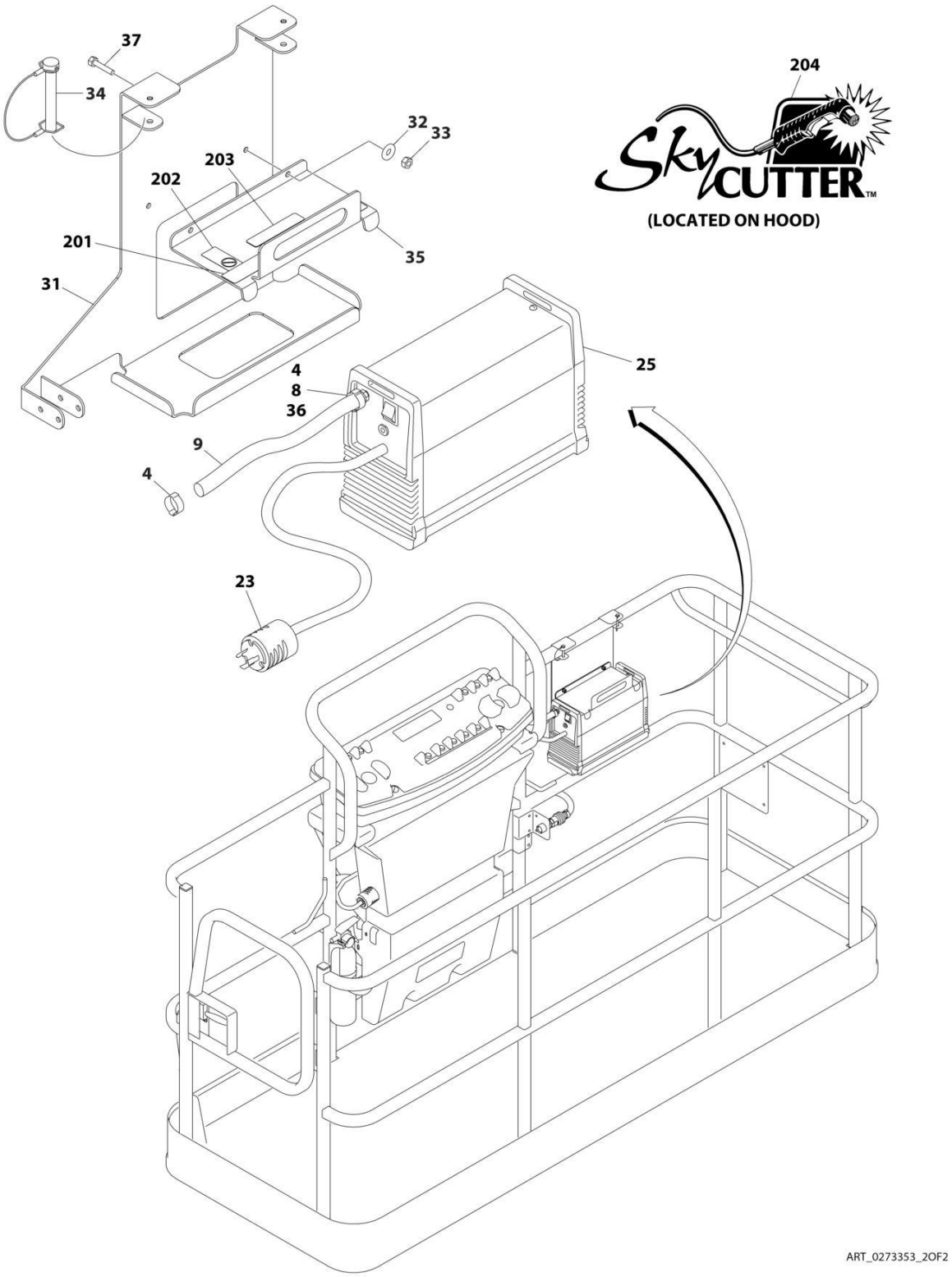
37
34
32
33
204
203
202
201
35
31
SkyCUTTER™
(LOCATED ON HOOD)
25
4
8
36
9
4
23
ART_0273353_2OF2

FIGURE 4-13. SKYWELDER/SKYCUTTER COMBO INSTALLATION (60HZ)

ITEM	PART NUMBER	QTY	DESCRIPTION	REV
	0273353	Ref	**SKYWELDER/SKYCUTTER COMBO INSTALLATION (60HZ)**	G
		Ref	**Note: USA Built Machines ANSI, ANSI Export and CSA Spec Only.**	
		Ref	**Note: China Built Machines ANSI Export and China Specs Only.**	
		Ref	**Note: Not Available on 600S Shipyard Machines.**	
1	0100011	AR	Compound, Locking	
2	0630518	2	Screw #10 x 3/4	
3	0641606	4	Bolt 3/8 x 3/4	
4	1320177	2	Clamp	
5	1320302	2	Clamp	
6	1671093	1	Cover, Plug	
7	2030010	1	Extinguisher, Fire	
8	2180832	1	Fitting, Barbed/NPT	
9	2720160	4.5 ft /1.37m	Hose	
10	2902217	1	Weld Leads Kit	
11	3300151	4	Nut 1/4	
12	3311005	2	Nut #10	
13	3311605	4	Nut 3/8	
14	3573400	1	Bracket	
15	3577121	2	Angle	
16	3573642	1	Plate	
20	4240099	AR	Tie-Strap (Not Shown)	
21	4420037	2.36 ft /0.71m	Tape	
22	4460962	1	Plug, Twist Lock	
23	4460971	1	Plug, Twist Lock	
24	4530028	1	Welder Assembly (See WELDER ASSEMBLY for Breakdown)	
25	1001098012	1	Plasma Cutter Assembly (See PLASMA CUTTER ASSEMBLY for Breakdown)	
26	4751400	4	Washer 1/4	
27	4751600	8	Washer 3/8	
29	4846627	1	Support	
31	1001145405	1	Bracket	
32	4811700	2	Washer M6	
33	3290605	2	Nut M6	
34	3421453	3	Pin	
35	3576799	1	Plate, Hold-Down	
36	0100020	1	Sealant	
37	4010608	2	Screw M6 x 16	
38	4751000	2	Washer #10	
	0272448	Ref	**SKYWELDER DECAL INSTALLATION**	B
101	1705355	2	Decal - SkyWelder	
102	1702868	1	Decal - No Hands	
103	1705305	1	Decal - Weld Leads	
104	1705375	1	Decal - 240V - 3 Phase - 60Hz	
105	1705466	NLA	Decal - Weight (Use p/n 1001228988) **(SN 0300171769 through 0300233585, SN B300000970 through B300002006)**	
105	1001228988	1	Decal - Weight **(SN 0300233586 through 0300235167, SN B300002007 through B300002654)**	

ITEM	PART NUMBER	QTY	DESCRIPTION	REV
	0272599	Ref	**SKYCUTTER DECAL INSTALLATION**	B
201	1702868	1	Decal - No Hands	
202	1705305	1	Decal - Weld Leads	
203	1705466	NLA	Decal - Weight (Use p/n 1001228988) **(SN 0300171769 through 0300233585, SN B300000970 through B300002006)**	
203	1001228988	1	Decal - Weight **(SN 0300233586 through 0300235167, SN B300002007 through B300002654)**	
204	1705490	2	Decal - SkyCutter	

FIGURE 4-14. SKYWELDER INSTALLATION (50HZ)

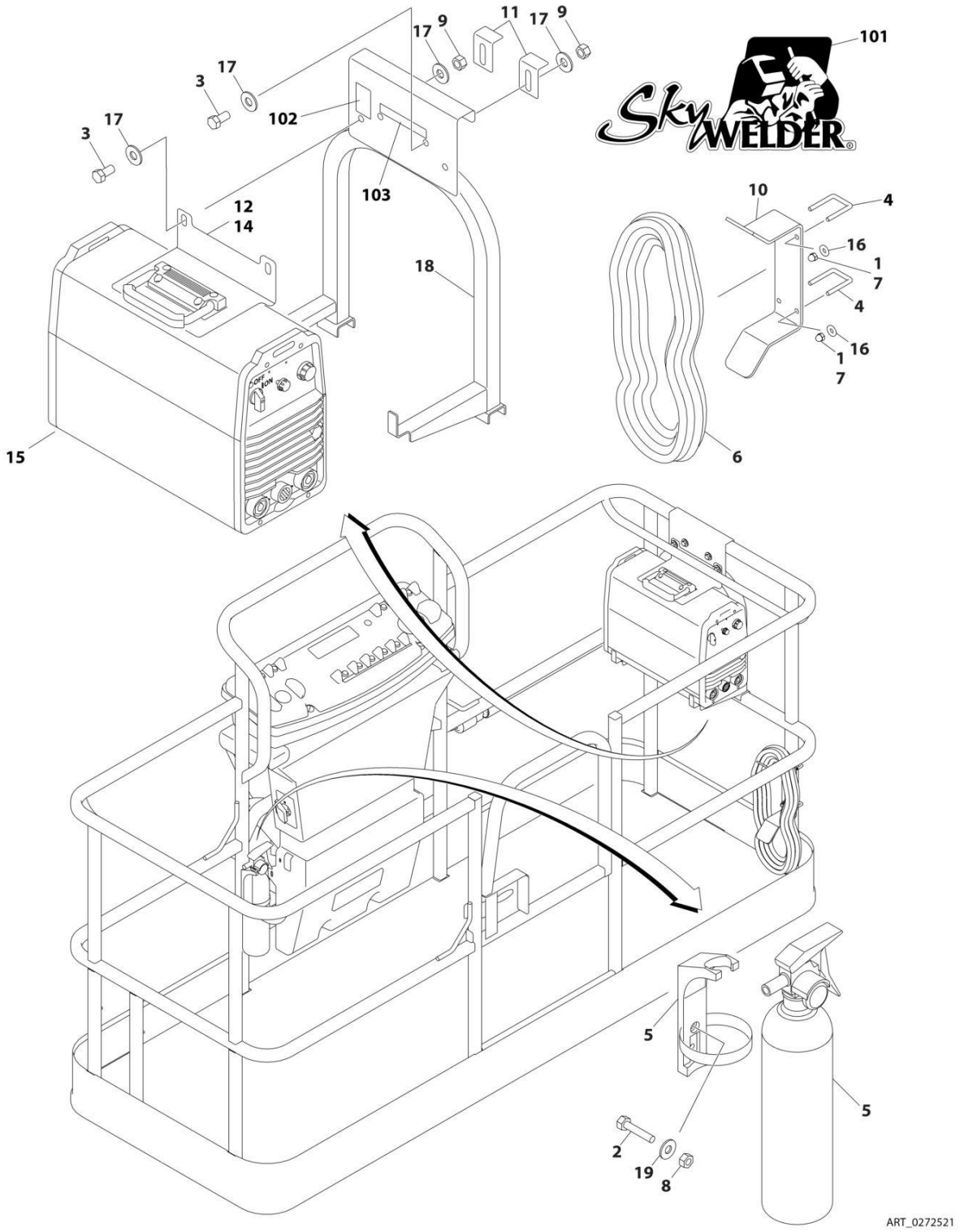

FIGURE 4-14. SKYWELDER INSTALLATION (50HZ)

ITEM	PART NUMBER	QTY	DESCRIPTION	REV
	0272521	Ref	**SKYWELDER INSTALLATION (50HZ)**	F
		Ref	**Note: USA Built Machines ANSI Export, Australian, CE and Japanese Specs Only.**	
		Ref	**Note: China Built Machines ANSI Export, Australian and China Spec Only.**	
1	0100011	AR	Compound, Locking	
2	0630518	2	Screw #10 x 3/4	
3	0641606	4	Bolt 3/8 x 3/4	
4	1320302	2	U-Clamp	
5	2030010	1	Extinguisher, Fire	
6	2902217	1	Weld Leads Kit	
7	3300151	4	Nut 1/4	
8	3311005	2	Nut #10	
9	3311605	4	Nut 3/8	
10	3573400	1	Bracket	
11	3577121	2	Angle	
12	3573642	1	Plate	
13	4240099	AR	Tie-Strap (Not Shown)	
14	4420037	AR	Tape	
15	4530028	1	Welder Assembly (See WELDER ASSEMBLY for Breakdown)	
16	4751400	4	Washer 1/4	
17	4751600	8	Washer 3/8	
18	4846627	1	Support	
19	4751000	2	Washer #10	
	0272588	Ref	**SKYWELDER DECAL INSTALLATION**	B
101	1705355	2	Decal - SkyWelder	
102	1705305	1	Decal - Weld Lead	
103	1705466	NLA	Decal - Weight (Use p/n 1001228988) **(SN 0300171769 through 0300233585, SN B300000970 through B300002006)**	
103	1001228988	1	Decal - Weight **(SN 0300233586 through 0300235167, SN B300002007 through B300002654)**	

FIGURE 4-15. SKYWELDER INSTALLATION (60HZ)

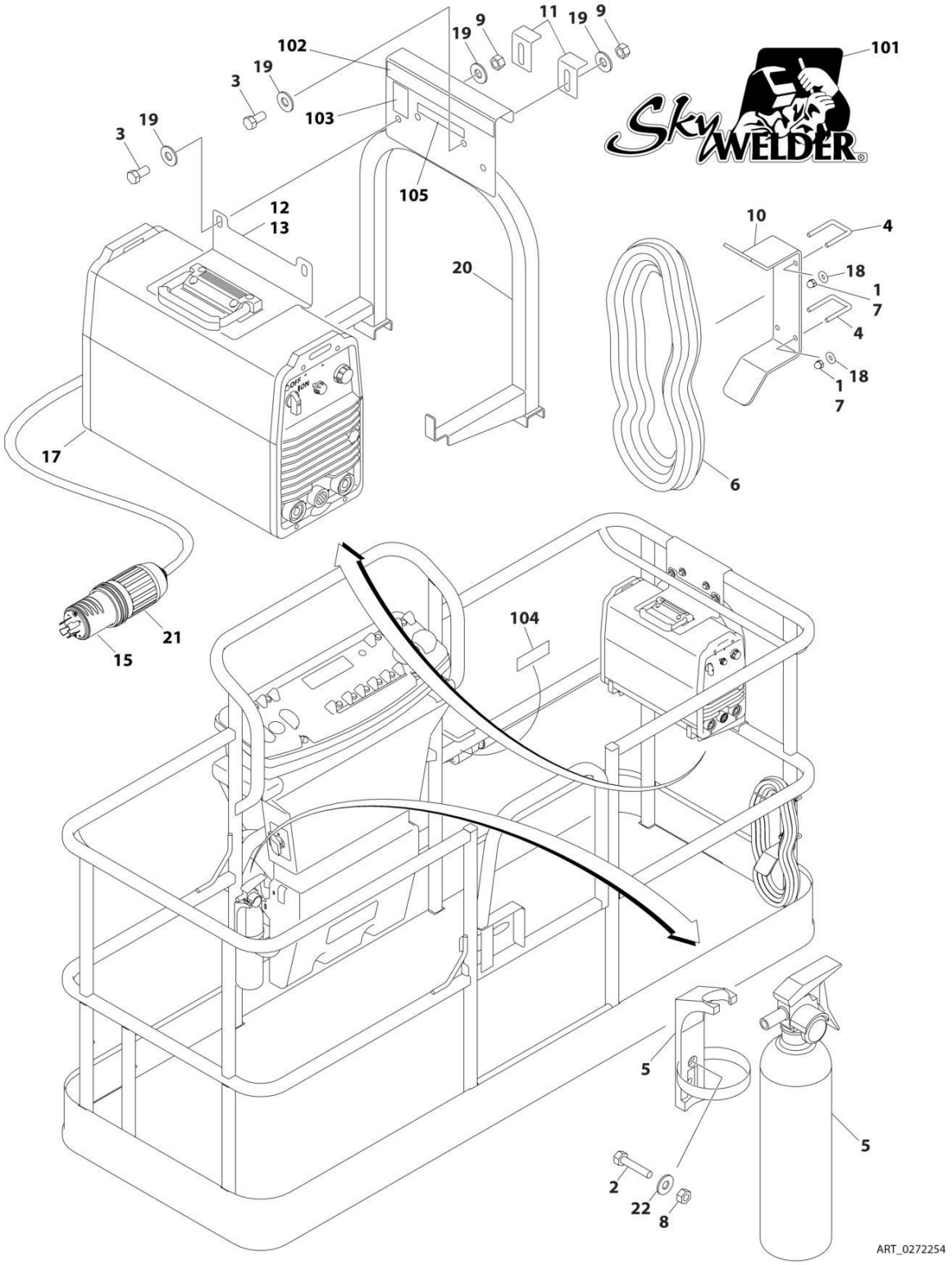

FIGURE 4-15. SKYWELDER INSTALLATION (60HZ)

ITEM	PART NUMBER	QTY	DESCRIPTION	REV
	0272254	Ref	**SKYWELDER INSTALLATION (60HZ)**	I
		Ref	**Note: USA Built Machines ANSI, ANSI Export and CSA Specs Only.**	
		Ref	**Note: China Built Machines ANSI Export and China Spec Only.**	
1	0100011	AR	Compound, Locking	
2	0630518	2	Screw #10 x 3/4	
3	0641606	4	Bolt 3/8 x 3/4	
4	1320302	2	U-Clamp	
5	2030010	1	Extinguisher, Fire	
6	2902217	1	Weld Leads Kit	
7	3300151	4	Nut 1/4	
8	3311005	2	Nut #10	
9	3311605	4	Nut 3/8	
10	3573400	1	Bracket	
11	3577121	2	Angle	
12	3573642	1	Plate	
13	4420037	AR	Tape	
14	4240099	AR	Tie-Strap (Not Shown)	
15	4460962	1	Plug, Male Twistlock	
17	4530028	1	Welder Assembly (See WELDER ASSEMBLY for Breakdown)	
18	4751400	4	Washer 1/4	
19	4751600	8	Washer 3/8	
20	4846627	1	Support	
21	1671093	1	Cover, Plug	
22	4751000	2	Washer #10	
	0272448	Ref	**SKYWELDER DECAL INSTALLATION**	B
101	1705355	2	Decal - SkyWelder	
102	1702868	1	Decal - No Hands	
103	1705305	1	Decal - Weld Lead	
104	1705375	1	Decal - 240V - 3 Phase - 60Hz	
105	1705466	NLA	Decal - Weight (Use p/n 1001228988) **(SN 0300171769 through 0300233585, SN B300000970 through B300002006)**	
105	1001228988	1	Decal - Weight **(SN 0300233586 through 0300235167, SN B300002007 through B300002654)**	

FIGURE 4-16. SKYWELDER PREP PACKAGE (60HZ)

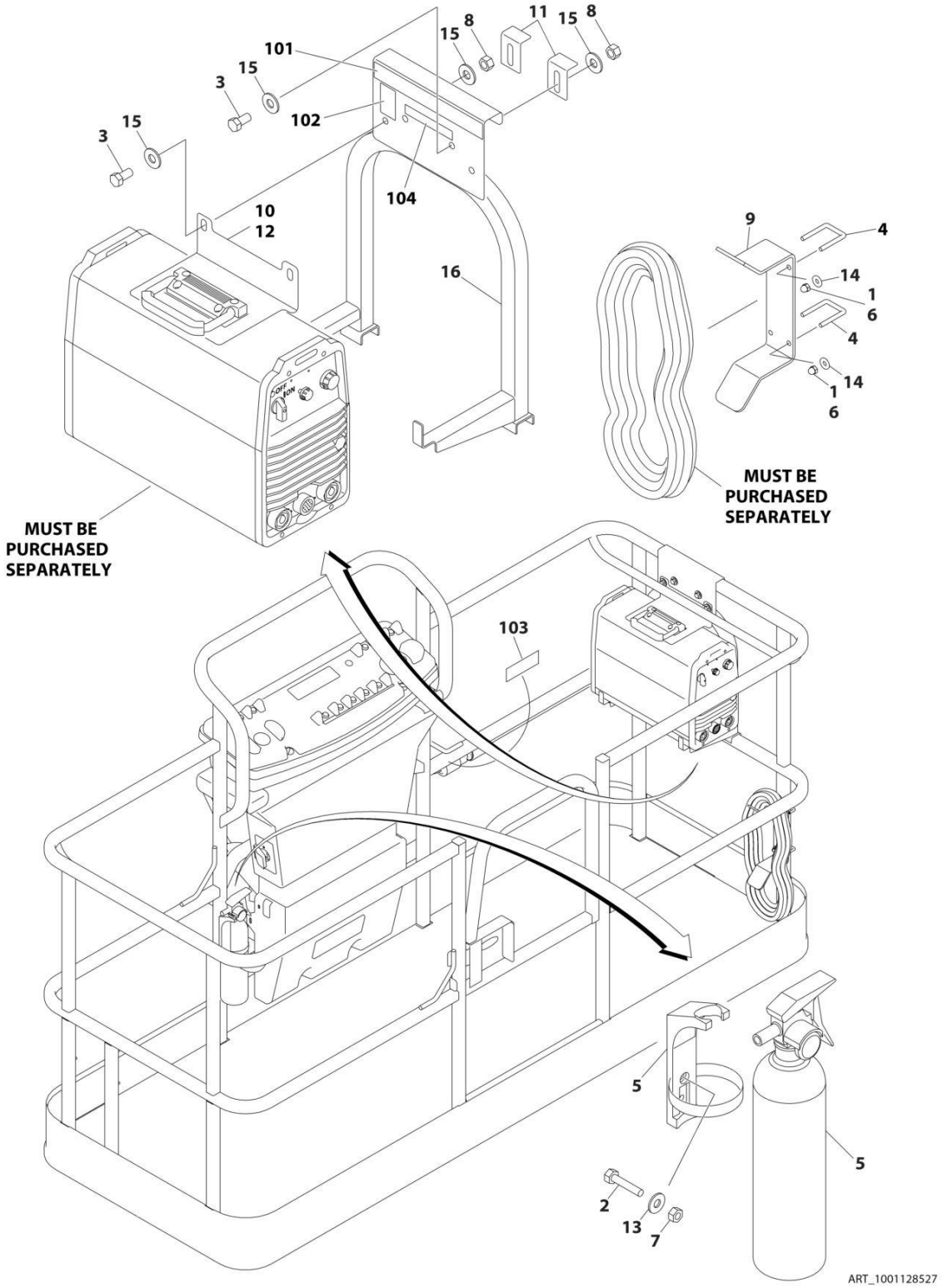

FIGURE 4-16. SKYWELDER PREP PACKAGE (60HZ)

ITEM	PART NUMBER	QTY	DESCRIPTION	REV
	1001128527	Ref	**SKYWELDER PREP PACKAGE (60HZ)**	B
		Ref	**Note: USA Built Machines ANSI, ANSI Export and CSA Specs Only.**	
1	0100011	AR	Compound, Locking	
2	0630518	2	Screw #10 x 3/4	
3	0641606	4	Bolt 3/8 x 3/4	
4	1320302	2	U-Clamp	
5	2030010	1	Extinguisher, Fire	
6	3300151	4	Nut 1/4	
7	3311005	2	Nut #10	
8	3311605	4	Nut 3/8	
9	3573400	1	Bracket	
10	3573642	1	Plate	
11	3577121	2	Angle	
12	4420037	AR	Tape	
13	4751000	2	Washer #10	
14	4751400	4	Washer 1/4	
15	4751600	8	Washer 3/8	
16	4846627	1	Support	
	1001128556	Ref	**SKYWELDER DECAL INSTALLATION**	B
101	1702868	1	Decal - No Hands	
102	1705305	1	Decal - Weld Lead	
103	1705375	1	Decal - 240V - 3 Phase - 60Hz	
104	1705466	NLA	Decal - Weight (use p/n 1001228988) **(SN 0300171769 through 0300233585, SN B300000970 through B300002006)**	
104	1001228988	1	Decal - Weight **(SN 0300233586 through 0300235167, SN B300002007 through B300002654)**	

FIGURE 4-17. WELDER ASSEMBLY

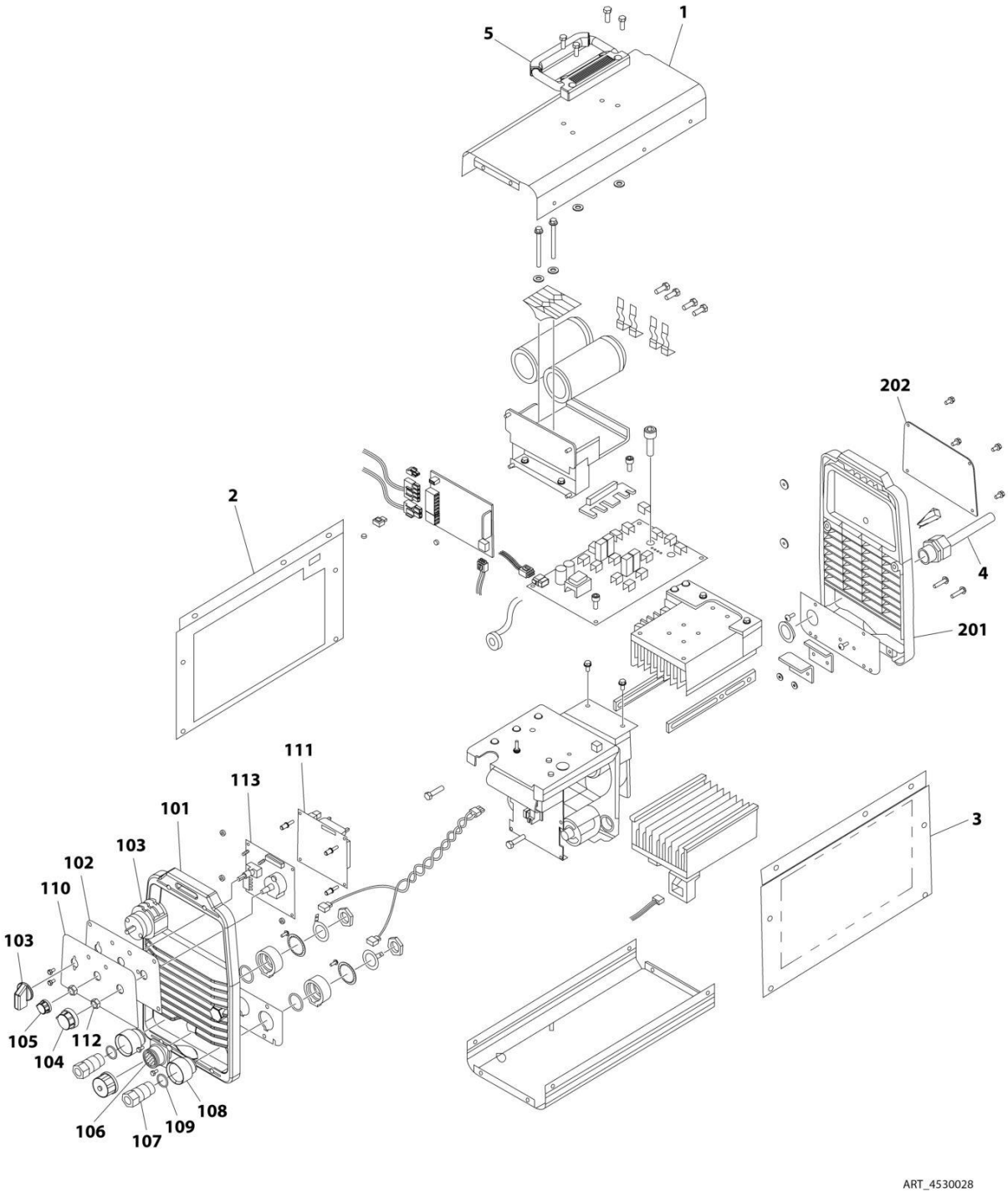

FIGURE 4-17. WELDER ASSEMBLY

ITEM	PART NUMBER	QTY	DESCRIPTION	REV
	4530028	Ref	**WELDER ASSEMBLY**	B
		Ref	**Note: For Other Components, contact your Miller Welder Dealer.**	
1	7027773	1	Cover, Top	
1	7027774	1	Decal - Static Precautionary Warning	
2	See Note	NSS	Panel, LH Side (Note: Part of Item 1. Purchase Item 1)	
3	See Note	NSS	Panel, RH Side (Note: Part of Item 1. Purchase Item 1)	
4	7024467	1	Cable, Power	
4	7027775	1	Decal - Electrical Shock Warning (Not Shown)	
5	7027776	1	Handle, Carrying	
101	7024462	1	Panel, Front	
102	7024463	1	Panel, Console	
103	7024469	1	Switch with Lead	
104	7024470	1	Knob	
105	7024471	1	Knob	
106	7024472	1	Receptacle with Leads and Plugs	
107	7024473	2	Receptacle, Twistlock Female	
108	7024474	2	Insulator	
109	7024475	2	O-Ring	
110	7027777	1	Nameplate	
111	7027779	1	Circuit Card Assembly (Process Control)	
112	7024478	2	Nut	
113	7027778	1	Circuit Card Assembly (Operator Interface)	
201	7024462	1	Panel, Rear	
202	7027780	1	Panel, Cover	

FIGURE 4-18. SKYCUTTER INSTALLATION

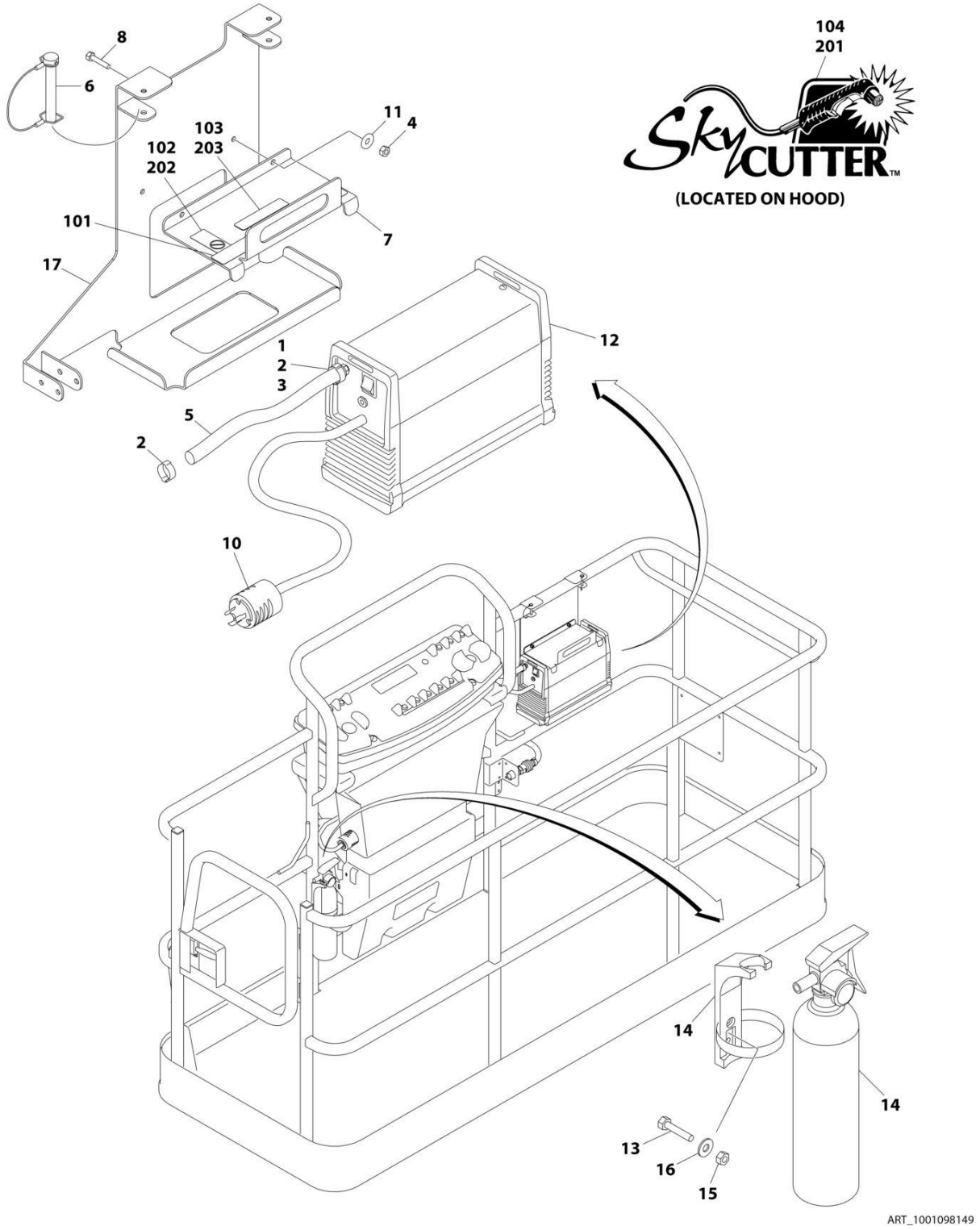

FIGURE 4-18. SKYCUTTER INSTALLATION

ITEM	PART NUMBER	QTY	DESCRIPTION	REV
	1001098149	Ref	**SKYCUTTER INSTALLATION**	D
		Ref	**Note: USA Built Machines ANSI, ANSI Export & CSA Specs Only.**	
		Ref	**Note: China Built Machines ANSI Export and China Spec Only.**	
		Ref	**Note: Not Available on 600S Shipyard Machines.**	
		Ref	**Note: When replacing platform on machines with SkyCutter option, new bracket p/n 1001145405 must be purchased to accommodate SkyCutter components.**	
1	0100020	AR	Sealant	
2	1320177	2	Clamp, Hose	
3	2180832	1	Fitting, NPT/Barbed	
4	3290605	2	Nut M6	
5	2720160	3 ft/0.9m	Hose	
6	3421453	3	Pin	
7	3576799	1	Plate, Hold-Down	
8	4010608	2	Screw M6 x 16	
10	4460971	1	Plug, Twistlock	
11	4811700	2	Washer M6	
12	1001098012	1	Plasma Cutter Assembly (See PLASMA CUTTER ASSEMBLY for Breakdown)	
13	0630518	2	Screw #10 x 3/4	
14	2030010	1	Extinguisher, Fire	
15	3311005	2	Nut #10	
16	4751000	2	Washer #10	
17	1001145405	1	Support	
	0272599	Ref	**SKYCUTTER DECAL INSTALLATION (ANSI, ANSI EXPORT AND CSA SPECS)**	B
101	1702868	1	Decal - No Hands	
102	1705305	1	Decal - Weld Lead	
103	1705466	NLA	Decal - Weight (Use p/n 1001228988) **(SN 0300171769 through 0300233585, SN B300000970 through B300002006)**	
103	1001228988	1	Decal - Weight **(SN 0300233586 through 0300235167, SN B300002007 through B300002654)**	
104	1705490	2	Decal - SkyCutter	
	0272607	Ref	**SKYCUTTER DECAL INSTALLATION (JAPANESE SPECS)**	B
201	1705490	2	Decal - SkyCutter	
202	1705305	1	Decal - Weld Lead	
203	1705466	NLA	Decal - Weight (Use p/n 1001228988) **(SN 0300171769 through 0300233585, SN B300000970 through B300002006)**	
203	1001228988	1	Decal, Weight **(SN 0300233586 through 0300235167, SN B300002007 through B300002654)**	

FIGURE 4-19. PLASMA CUTTER ASSEMBLY

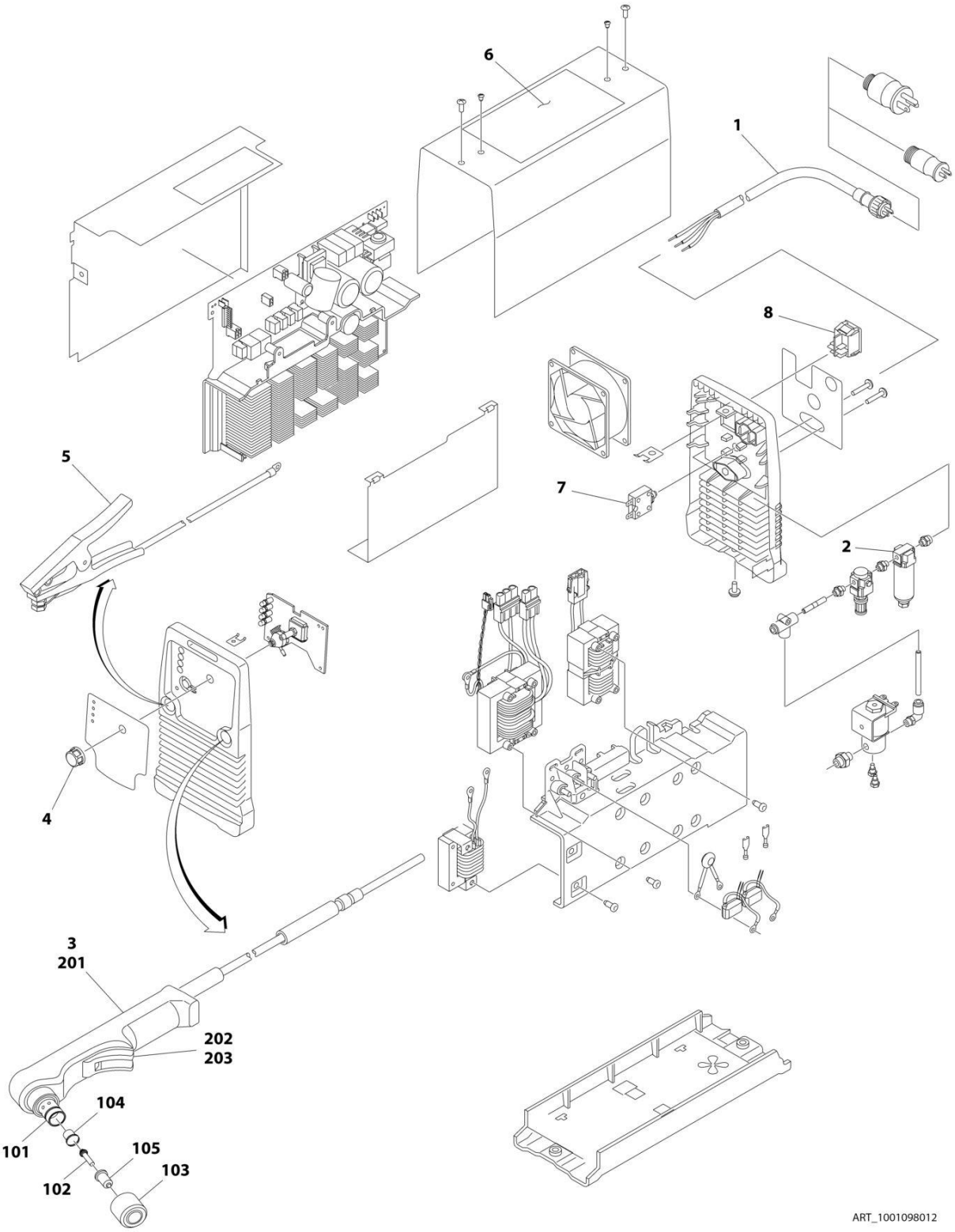

FIGURE 4-19. PLASMA CUTTER ASSEMBLY

ITEM	PART NUMBER	QTY	DESCRIPTION	REV
	1001098012	Ref	**PLASMA CUTTER ASSEMBLY**	A
		Ref	**Note: For Other Components, contact your Miller Welder Dealer.**	
1	70001424	1	Cable, Power	
1	70001425	1	Decal - Voltage Warning	
2	70001427	1	Filter, Regulator	
3	70001428	1	Torch Assembly (See Items 101-203 for Breakdown)	
4	7024471	1	Knob	
5	70001429	1	Clamp with Cable	
6	70001430	1	Decal - Caution	
7	70001431	1	Breaker, Circuit	
8	70001432	1	Switch, Rocker	
	70001428	Ref	**TORCH ASSEMBLY**	
101	7024530	1	O-Ring	
102	7024531	1	Electrode	
103	7024532	1	Cup, Retaining	
104	7024533	1	Swirl Ring	
105	7024534	1	Tip	
201	7024535	1	Handle, Torch	
202	7024536	1	Switch	
203	7024537	1	Trigger	

FIGURE 4-20. PIPE RACKS INSTALLATION

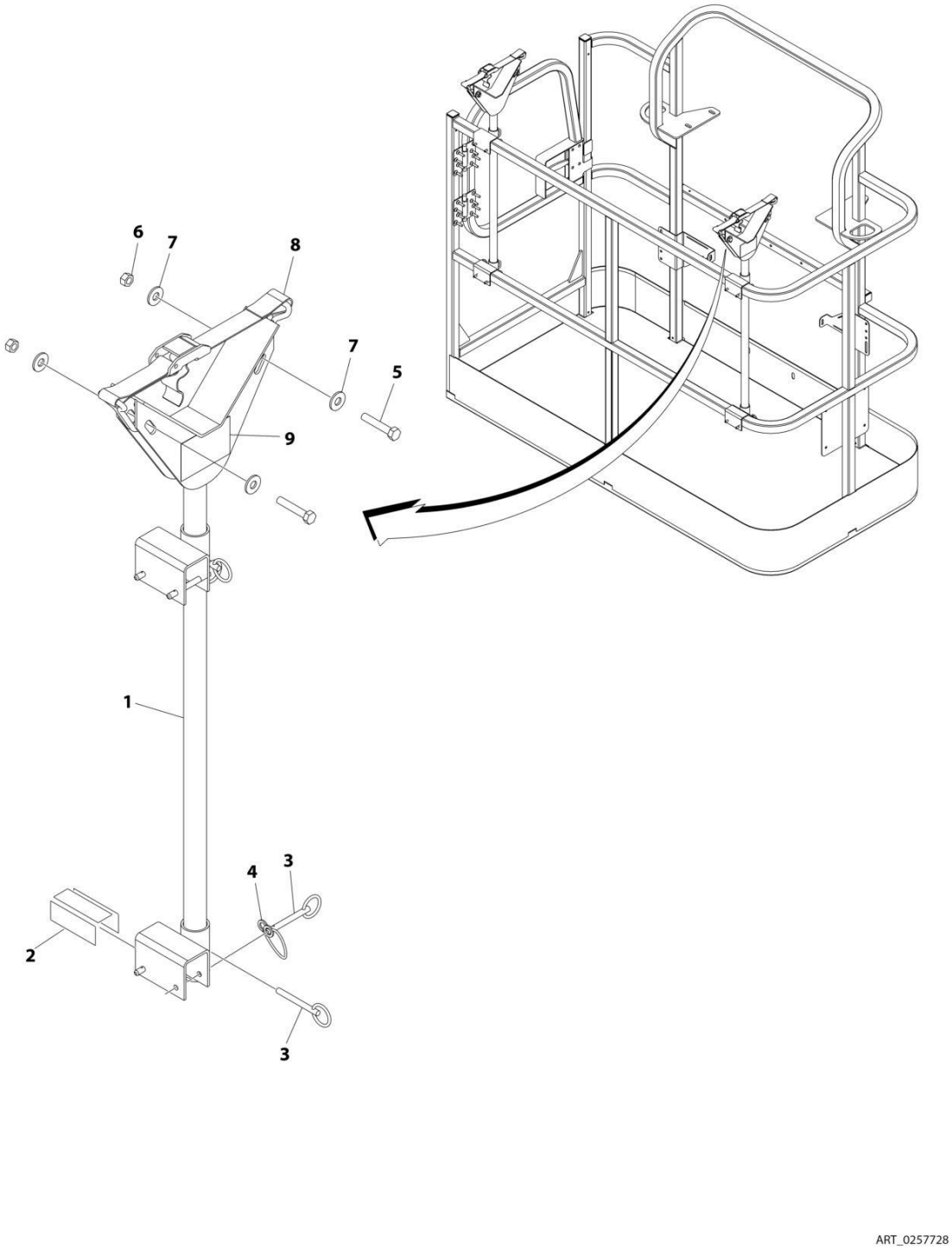

FIGURE 4-20. PIPE RACKS INSTALLATION

ITEM	PART NUMBER	QTY	DESCRIPTION	REV
	0257728	Ref	**PIPE RACK INSTALLATION (ANSI AND CSA SPECS)**	2/C
	0274661	Ref	**PIPE RACK INSTALLATION (AUSTRALIAN SPECS)**	1/A
		Ref	**Note: USA Built Machines ANSI, Australian and CSA Specs Only.**	
1	4845582	2	Rack, Pipe	
2	4420062	AR	Tape	
3	3422661	10	Pin	
4	1060379	4	Lanyard	
5	0641514	4	Bolt 5/16 x 1-3/4	
6	3311505	4	Nut 5/16	
7	4751500	8	Washer 5/16	
8	0480100	2	Tie-Down	
9	1703683	2	Decal - Capacity (ANSI and CSA Specs)	
9	1706510	2	Decal - Capacity (Australian Specs)	

SECTION 5 - CYLINDER

FIGURE 5-1. AXLE LOCKOUT CYLINDER ASSEMBLY

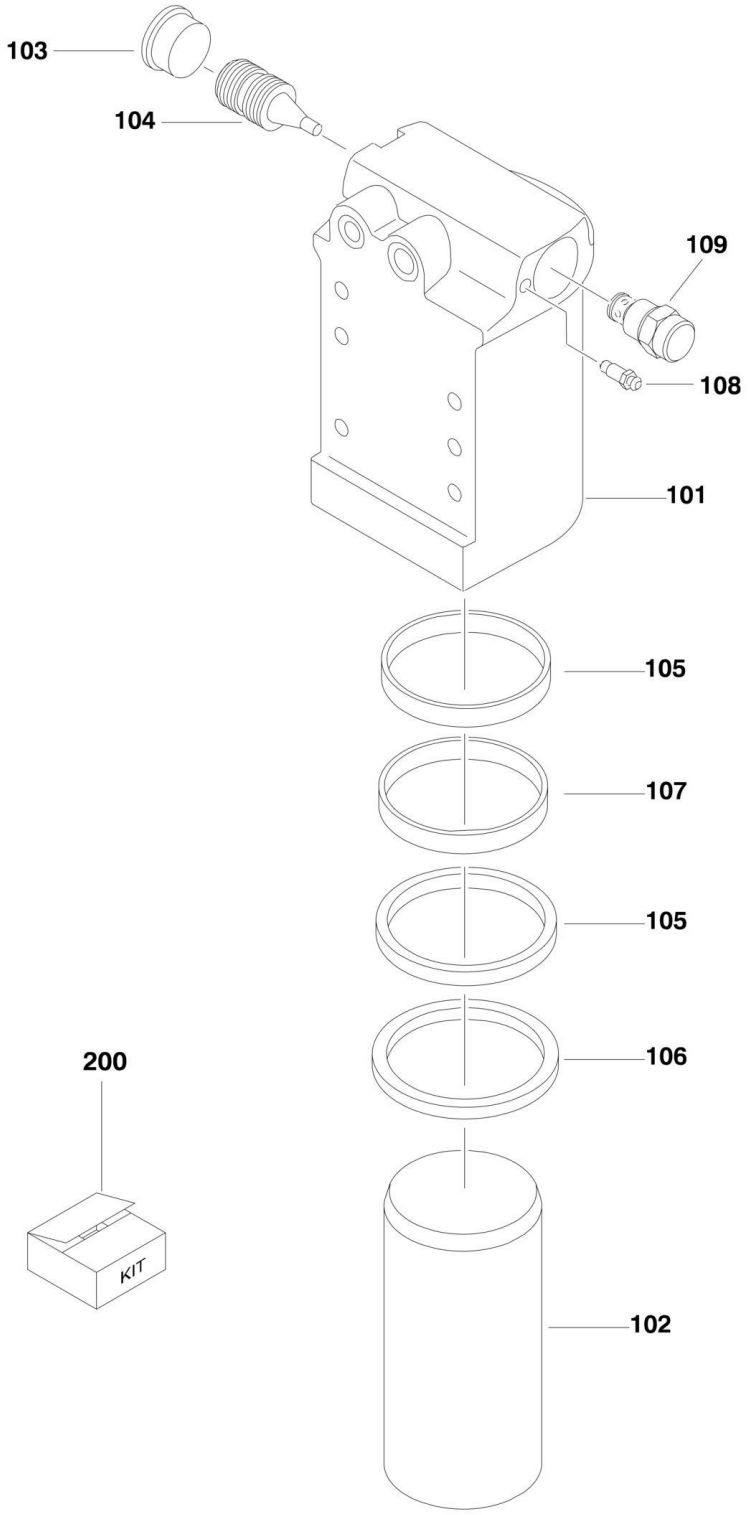

FIGURE 5-1. AXLE LOCKOUT CYLINDER ASSEMBLY

ITEM	PART NUMBER	QTY	DESCRIPTION	REV
	1684465	Ref	**AXLE LOCKOUT CYLINDER ASSEMBLY**	I
		Ref	Note: Original Cylinder may have been replaced with Service Replacement. Identify PN Stamped on Cylinder Before Ordering Parts.	
101	0370026	1	Barrel	
102	1684290	1	Rod	
103	2220890	1	Plug	
104	3480288	1	Piston, Pilot	
105	See Note	NSS	Ring, Wear (Note: Use Item 200)	
106	See Note	NSS	Wiper (Note: Use Item 200)	
107	See Note	NSS	Seal, Rod (Note: Use Item 200)	
108	4640858	1	Bleeder	
109	4641390	1	Cartridge, Valve	
109	7017496	1	Seal Kit - 4641390 Cartridge	
200	2902266	1	Seal Kit (Includes Item 105-107)	

FIGURE 5-2. LEVEL CYLINDER ASSEMBLY - PLATFORM SLAVE (ORIGINAL EQUIPMENT)

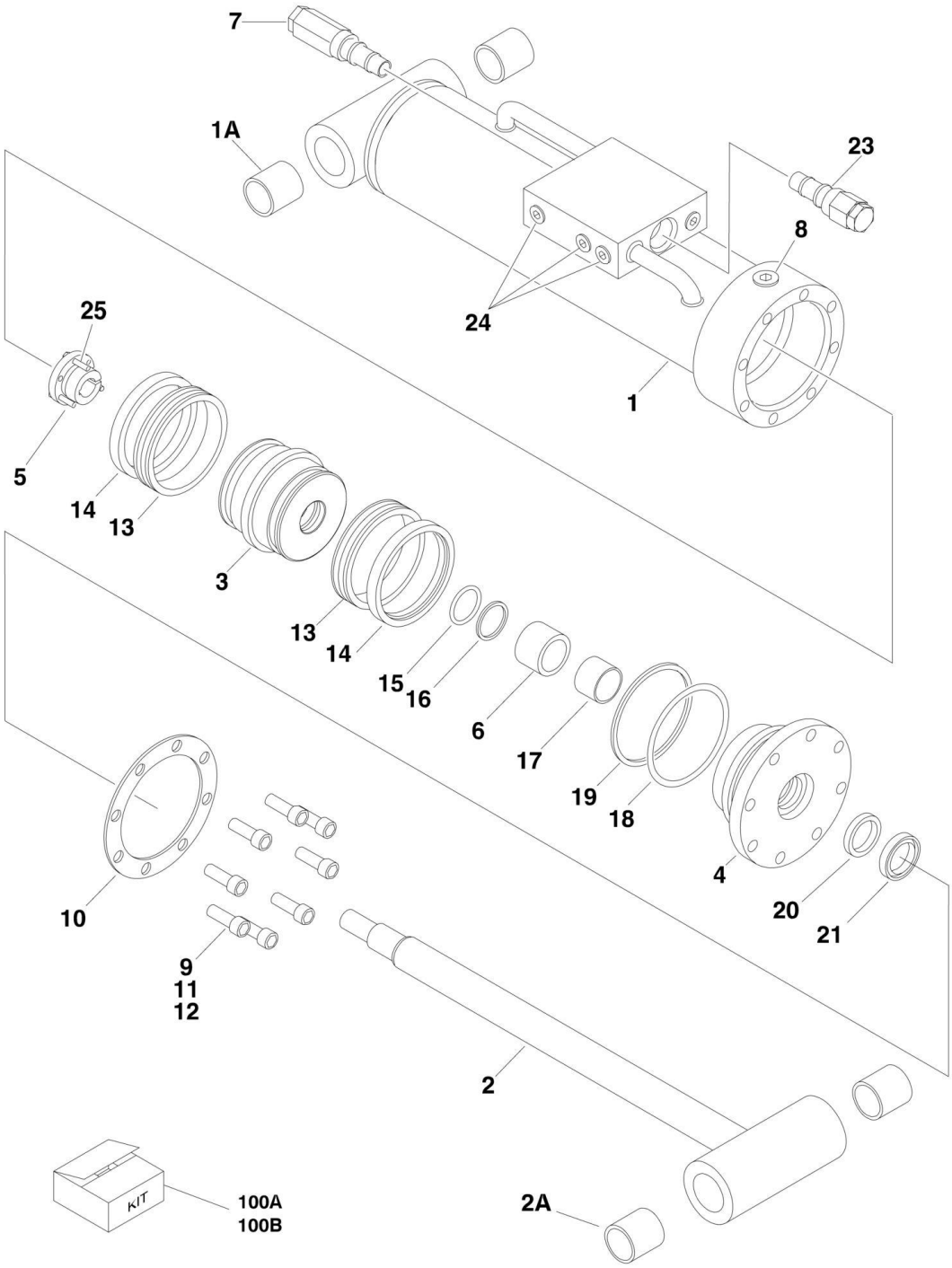

FIGURE 5-2. LEVEL CYLINDER ASSEMBLY - PLATFORM SLAVE (ORIGINAL EQUIPMENT)

ITEM	PART NUMBER	QTY	DESCRIPTION	REV
	1683415	Ref	**LEVEL CYLINDER ASSEMBLY - 600S (SN 0300171769 through 0300229955)**	H
	1001223512	Ref	**LEVEL CYLINDER ASSEMBLY - 600S (SN 0300229956 through 0300235167)**	A
	1683415	Ref	**LEVEL CYLINDER ASSEMBLY - 600S (SN B300000970 through B300002654)**	G
	1683418	Ref	**LEVEL CYLINDER ASSEMBLY - 660SJ (SN 0300171769 through 0300229955)**	J
	1001223331	Ref	**LEVEL CYLINDER ASSEMBLY - 660SJ (SN 0300229956 through 0300235167)**	A
	1683418	Ref	**LEVEL CYLINDER ASSEMBLY - 660SJ (SN B300000970 through B300002654)**	I
		Ref	Note: Original Cylinder May Have Been Replaced with Service Replacement. Identify PN Stamped on Cylinder Before Ordering Parts.	
1		Ref	Barrel Options:	
1	1683977	1	Barrel - 600S (1683415 Cylinder) (Note: Includes Item 1A)	
1	1001223511	1	Barrel - 600S (1001223512 Cylinder) (Note: Includes Item 1A)	
1	1683952	1	Barrel - 660SJ (1683418 Cylinder) (Note: Item 1A not included - Purchase Separately)	
1	1001223332	1	Barrel - 660SJ (1001223331 Cylinder) (Note: Item 1A not included - Purchase Separately)	
1A		Ref	Bushing Options:	
1A	0961947	2	Bushing 600S	
1A	0961951	2	Bushing 660SJ	
2		Ref	Rod Options:	
2	1683976	1	Rod - 600S (Note: Includes Item 2A)	
2	1683963	1	Rod - 660SJ (Note: Item 1A not included - Purchase Separately)	
2A		Ref	Bushing Options:	
2A	0961947	2	Bushing 600S	
2A	0961951	2	Bushing 660SJ	
3		Ref	Piston Options:	
3	3480210	1	Piston 600S	
3	3480188	1	Piston 660SJ	
4		Ref	Head Options:	
4	1683053	1	Head 600S	
4	1683055	1	Head 660SJ	
5		Ref	Bushing, Tapered (Includes Item 25) Options:	
5	0961893	1	Bushing, Tapered 600S	
5	0961894	1	Bushing, Tapered 660SJ	
6	4566468	1	Spacer	
7	4640509	1	Cartridge, Valve	
7	2900792	1	Seal Kit - 4640509 Valve	
8	2220885	1	Plug, O-Ring	
9		Ref	Capscrew Options:	
9	3931516	8	Capscrew 5/16 x 1 - 600S	
9	3931620	8	Capscrew 3/8 x 1-1/4 - 660SJ	
10		Ref	Ring, Washer Options:	
10	3760368	1	Ring, Washer - 600S	
10	3760369	1	Ring, Washer - 660SJ	
11	0100011	AR	Compound, Locking	

ITEM	PART NUMBER	QTY	DESCRIPTION	REV
12	0100038	AR	Primer, Locking	
13	See Note	NSS	Seal (Note: Use Item 100A or 100B)	
14	See Note	NSS	Ring, Lock (Note: Use Item 100A or 100B)	
15	See Note	NSS	O-Ring (Note: Use Item 100A or 100B)	
16	See Note	NSS	Ring, Back-up (Note: Use Item 100A or 100B)	
17	See Note	NSS	Ring, Wear (Note: Use Item 100A or 100B)	
18	See Note	NSS	O-Ring (Note: Use Item 100A or 100B)	
19	See Note	NSS	Ring, Back-up (Note: Use Item 100A or 100B)	
20	See Note	NSS	Seal, Rod (Note: Use Item 100A or 100B)	
21	See Note	NSS	Wiper (Note: Use Item 100A or 100B)	
23	4640932	1	Cartridge, Valve	
23	7011112	1	Seal Kit - 4640932 Valve	
24	2220883	8	Plug, O-Ring	
25		Ref	Bolt Options:	
25	0630534	3	Bolt #10-24NC x 1in 600S	
25	0630535	3	Bolt 1/4in-20NC x 1-1/8in 660SJ	
100		Ref	Seal Kit Options (Includes Items 13-21):	
100A	2901303	1	Seal Kit - 600S	
100B	2901301	1	Seal Kit - 660SJ	

FIGURE 5-3. LEVEL CYLINDER ASSEMBLY - PLATFORM SLAVE (600S) (SERVICE REPLACEMENT)

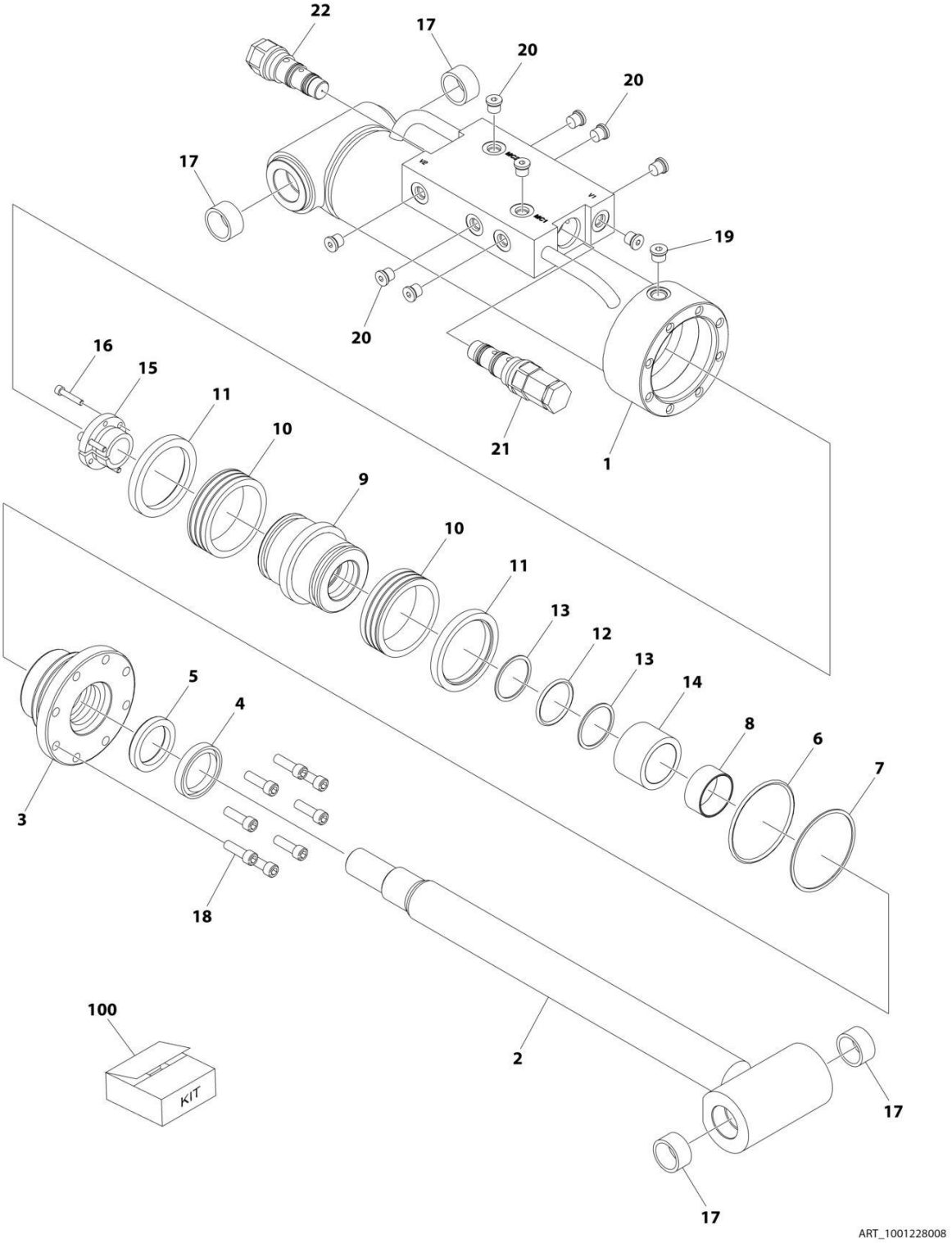

FIGURE 5-3. LEVEL CYLINDER ASSEMBLY - PLATFORM SLAVE (600S) (SERVICE REPLACEMENT)

ITEM	PART NUMBER	QTY	DESCRIPTION	REV
	1001228008	Ref	LEVEL CYLINDER ASSEMBLY - PLATFORM SLAVE	C
		Ref	Note: Original Cylinder may have been replaced with Service Replacement. Identify PN Stamped on Cylinder Before Ordering Parts.	
1	See Note	NSS	Barrel (Note: Use p/n 1001228008)	
2	70006648	1	Rod	
3	70006649	1	Head	
4	See Note	NSS	Wiper (Note: Use Item 100)	
5	See Note	NSS	Seal Rod (Note: Use Item 100)	
6	See Note	NSS	O-Ring (Note: Use Item 100)	
7	See Note	NSS	Ring, Back-up (Note: Use Item 100)	
8	See Note	NSS	Ring, Wear (Note: Use Item 100)	
9	70006650	1	Piston	
10	See Note	NSS	Seal (Note: Use Item 100)	
11	See Note	NSS	Ring, Lock (Note: Use Item 100)	
12	See Note	NSS	O-Ring (Note: Use Item 100)	
13	See Note	NSS	Ring, Back-up (Note: Use Item 100)	
14	70006651	1	Spacer	
15	0961893	1	Bushing, Tapered	
16	0630534	3	Bolt #10 x 1	
17	0961947	4	Bushing	
18	3931516	8	Capscrew, Socket Head	
19	2220885	AR	Plug, O-Ring	
20	2220883	10	Plug, O-Ring	
21	4640932	1	Cartridge, Valve	
21	7011112	1	Seal Kit - 4640932 Valve	
22	4640509	1	Cartridge, Valve	
22	2900792	1	Seal Kit - 4640509 Valve	
100	2901303	1	Seal Kit - 1001228008 Cylinder (Includes Items 4-8 & 10-13)	

FIGURE 5-4. LEVEL CYLINDER ASSEMBLY - PLATFORM SLAVE (660SJ) (SERVICE REPLACEMENT)

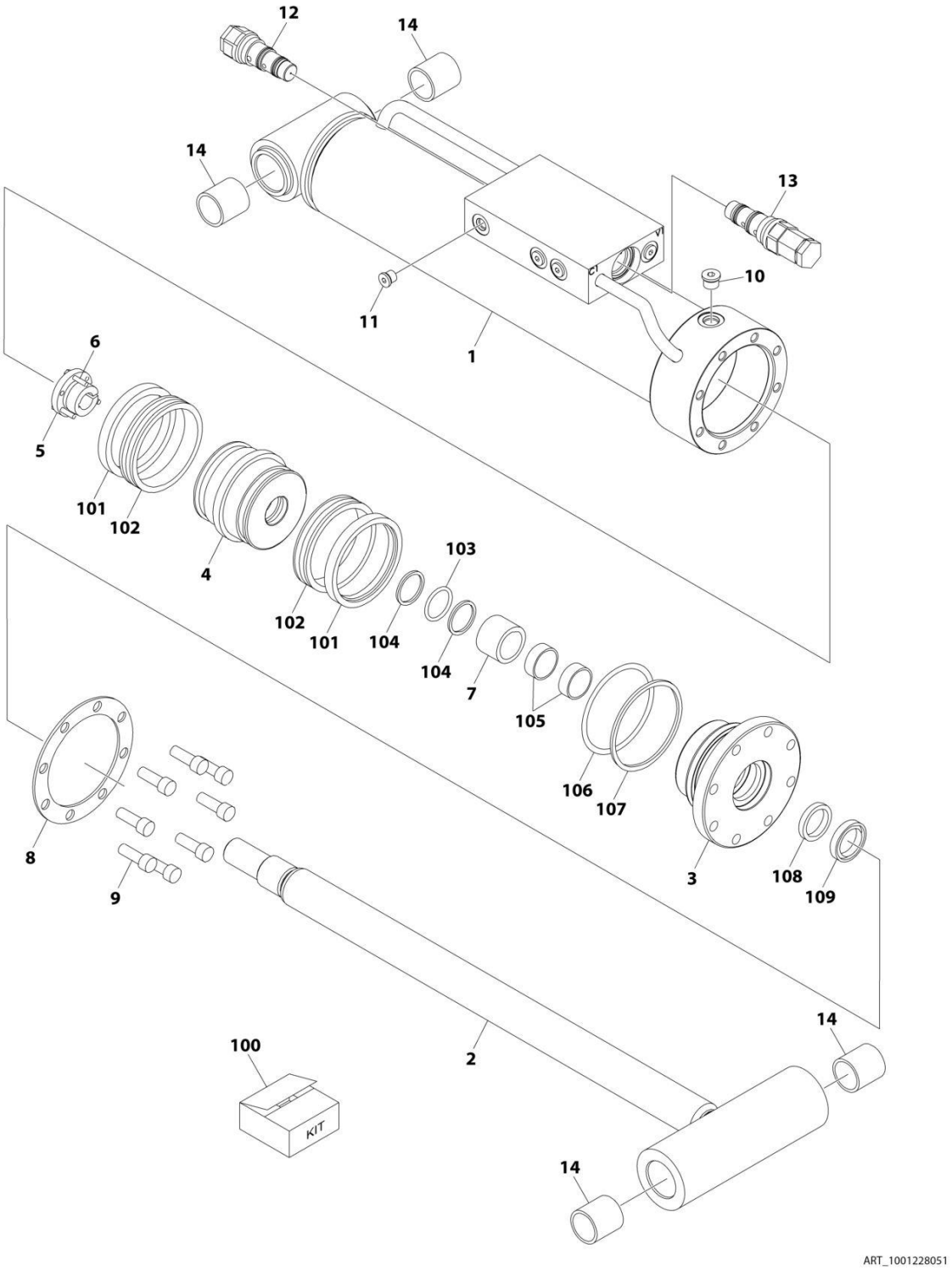

FIGURE 5-4. LEVEL CYLINDER ASSEMBLY - PLATFORM SLAVE (660SJ) (SERVICE REPLACEMENT)

ITEM	PART NUMBER	QTY	DESCRIPTION	REV
	1001228051	Ref	LEVEL CYLINDER ASSEMBLY	A
		Ref	Note: Original Cylinder May Have Been Replaced with Service Replacement. Identify PN Stamped on Cylinder Before Ordering Parts.	
1	See Note	NSS	Barrel (Note: Use p/n 1001228051)	
2	70006823	1	Rod	
3	70006446	1	Head	
4	70006445	1	Piston	
5	70006444	1	Bushing, Tapered	
6	0630535	3	Bolt 1/4 x 1-1/8	
7	70006443	1	Spacer	
8	70006822	1	Ring, Washer	
9	3931620	8	Capscrew 3/8 x 1-1/4	
10	2220885	1	Plug, O-Ring	
11	2220883	8	Plug, O-Ring	
12	4640509	1	Cartridge, Valve	
12	2900792	1	Seal Kit - 4640509 Valve	
13	4640932	1	Cartridge, Valve	
13	7011112	1	Seal Kit - 4640932 Valve	
14	0961951	4	Bushing	
100	1001138796	1	Seal Kit - 1001228051 Cylinder (Includes Items 101-109)	
101	See Note	NSS	Ring, Lock (Note: Use Item 100)	
102	See Note	NSS	Seal (Note: Use Item 100)	
103	See Note	NSS	O-Ring (Note: Use Item 100)	
104	See Note	NSS	Ring, Back-up (Note: Use Item 100)	
105	See Note	NSS	Ring, Wear (Note: Use Item 100)	
106	See Note	NSS	O-Ring (Note: Use Item 100)	
107	See Note	NSS	Ring, Back-up (Note: Use Item 100)	
108	See Note	NSS	Seal, Rod (Note: Use Item 100)	
109	See Note	NSS	Wiper (Note: Use Item 100)	

FIGURE 5-5. LIFT CYLINDER ASSEMBLY - JIB (660SJ) (ORIGINAL EQUIPMENT)

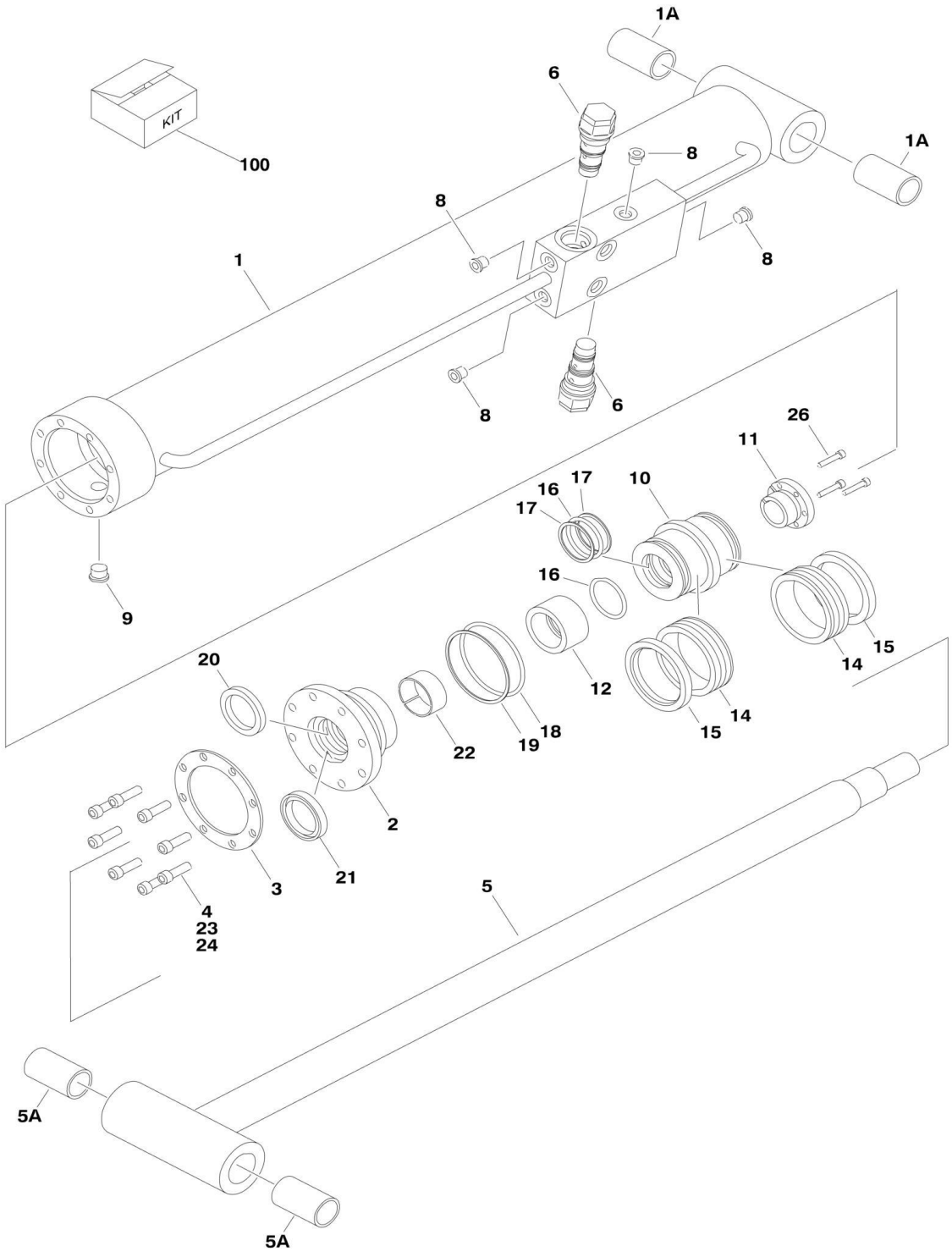

FIGURE 5-5. LIFT CYLINDER ASSEMBLY - JIB (660SJ) (ORIGINAL EQUIPMENT)

ITEM	PART NUMBER	QTY	DESCRIPTION	REV
	1683609	Ref	**JIB LIFT CYLINDER ASSEMBLY - JIB (660SJ) (Original Equipment)**	K
		Ref	Note: Original Cylinder may have been replaced with Service Replacement. Identify PN Stamped on Cylinder Before Ordering Parts.	
1	1684089	1	Barrel	
1A	0962336	2	Bushing	
2	1683053	1	Head	
3	3760368	1	Ring, Washer	
4	3931516	8	Capscrew 5/16in-18NC x 1in	
5	1684090	1	Rod	
5A	0962336	2	Bushing	
6	4640509	2	Cartridge, Valve	
6	2900792	2	Seal Kit - 4640509 Valve	
8	2220883	2	Plug, O-Ring #4	
9	2220885	1	Plug, O-Ring #6	
10	3480210	1	Piston	
11	0961893	1	Bushing, Tapered	
12	4100100	1	Spacer, Tube	
14	See Note	NSS	Seal (Note: Use Item 100)	
15	See Note	NSS	Ring, Lock (Note: Use Item 100)	
16	See Note	NSS	O-Ring (Note: Use Item 100)	
17	See Note	NSS	Ring, Back-up (Note: Use Item 100)	
18	See Note	NSS	O-Ring (Note: Use Item 100)	
19	See Note	NSS	Ring, Back-up (Note: Use Item 100)	
20	See Note	NSS	Seal, Rod (Note: Use Item 100)	
21	See Note	NSS	Wiper (Note: Use Item 100)	
22	See Note	NSS	Ring, Wear (Note: Use Item 100)	
23	0100011	AR	Compound, Locking	
24	0100038	AR	Primer, Locking	
26	0630534	3	Bolt #10-24NC x 1in	
100	2901303	1	Seal Kit (Includes Items 14-22)	

FIGURE 5-6. LIFT CYLINDER ASSEMBLY - JIB (660SJ) (SERVICE REPLACEMENT)

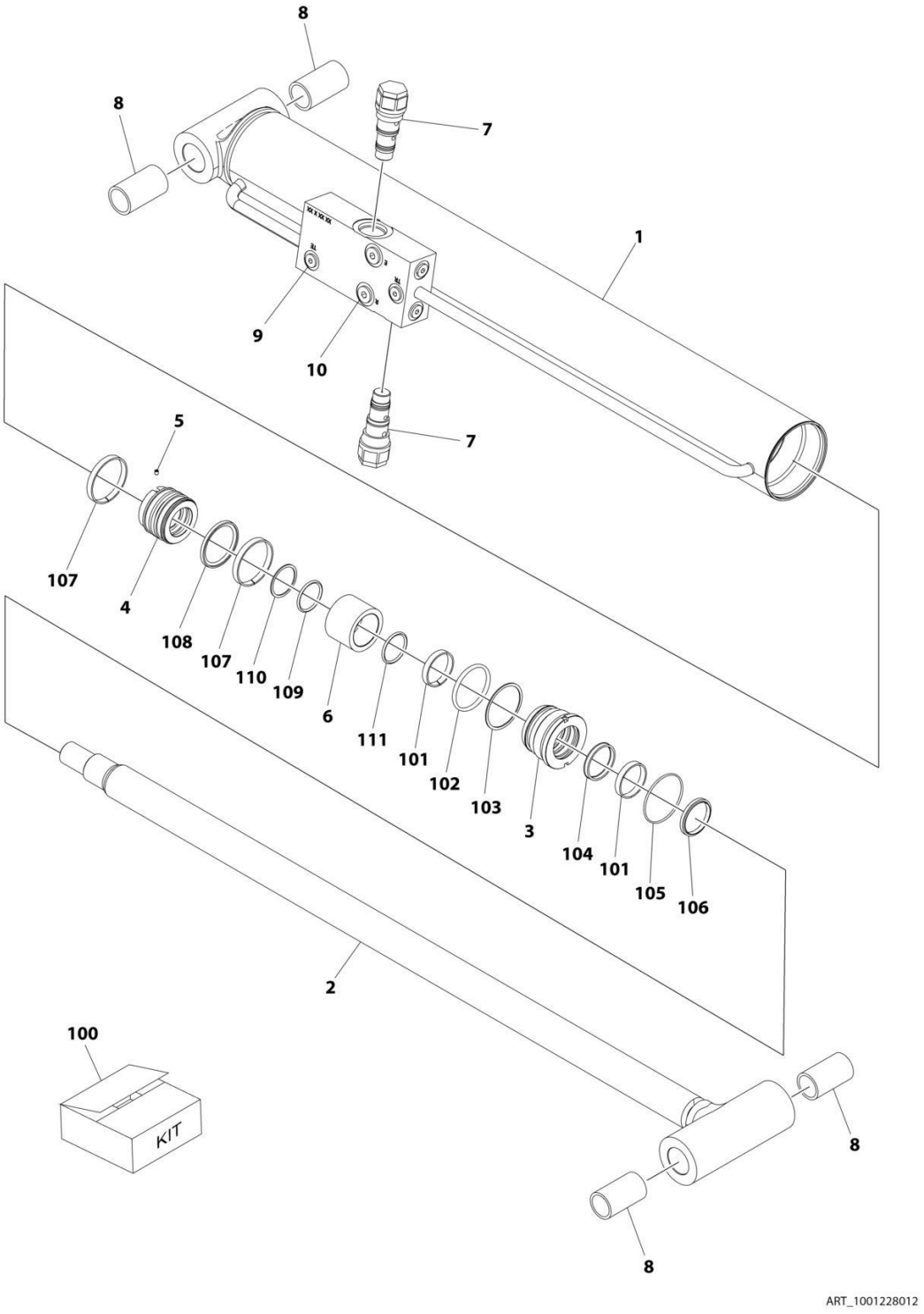

FIGURE 5-6. LIFT CYLINDER ASSEMBLY - JIB (660SJ) (SERVICE REPLACEMENT)

ITEM	PART NUMBER	QTY	DESCRIPTION	REV
	1001228012	Ref	LIFT CYLINDER ASSEMBLY - JIB	C
		Ref	Note: Original Cylinder May Have Been Replaced with Service Replacement. Identify PN Stamped on Cylinder Before Ordering Parts.	
1	See Note	NSS	Barrel (Note: Not Available for Purchase)	
2	70006572	1	Rod	
3	70006571	1	Head	
4	70006570	1	Piston	
5	70023915	1	Screw	
6	70006569	1	Spacer	
7	4640509	2	Cartridge, Valve	
7	2900792	2	Seal Kit - 4640509 Valve	
8	0962336	4	Bushing	
9	2220883	6	Plug, O-Ring	
10	2220885	2	Plug, O-Ring	
100	70006568	1	Seal Kit (Includes Items 101-111)	
101	See Note	NSS	Ring, Wear (Note: Use Item 100)	
102	See Note	NSS	O-Ring (Note: Use Item 100)	
103	See Note	NSS	Ring, Back-up (Note: Use Item 100)	
104	See Note	NSS	Seal, Rod (Note: Use Item 100)	
105	See Note	NSS	O-Ring (Note: Use Item 100)	
106	See Note	NSS	Wiper (Note: Use Item 100)	
107	See Note	NSS	Ring, Wear (Note: Use Item 100)	
108	See Note	NSS	Seal (Note: Use Item 100)	
109	See Note	NSS	O-Ring (Note: Use Item 100)	
110	See Note	NSS	Ring, Back-up (Note: Use Item 100)	
111	See Note	NSS	O-Ring (Note: Use Item 100)	

FIGURE 5-7. LIFT CYLINDER ASSEMBLY - JIB (660SJ) (SERVICE REPLACEMENT)

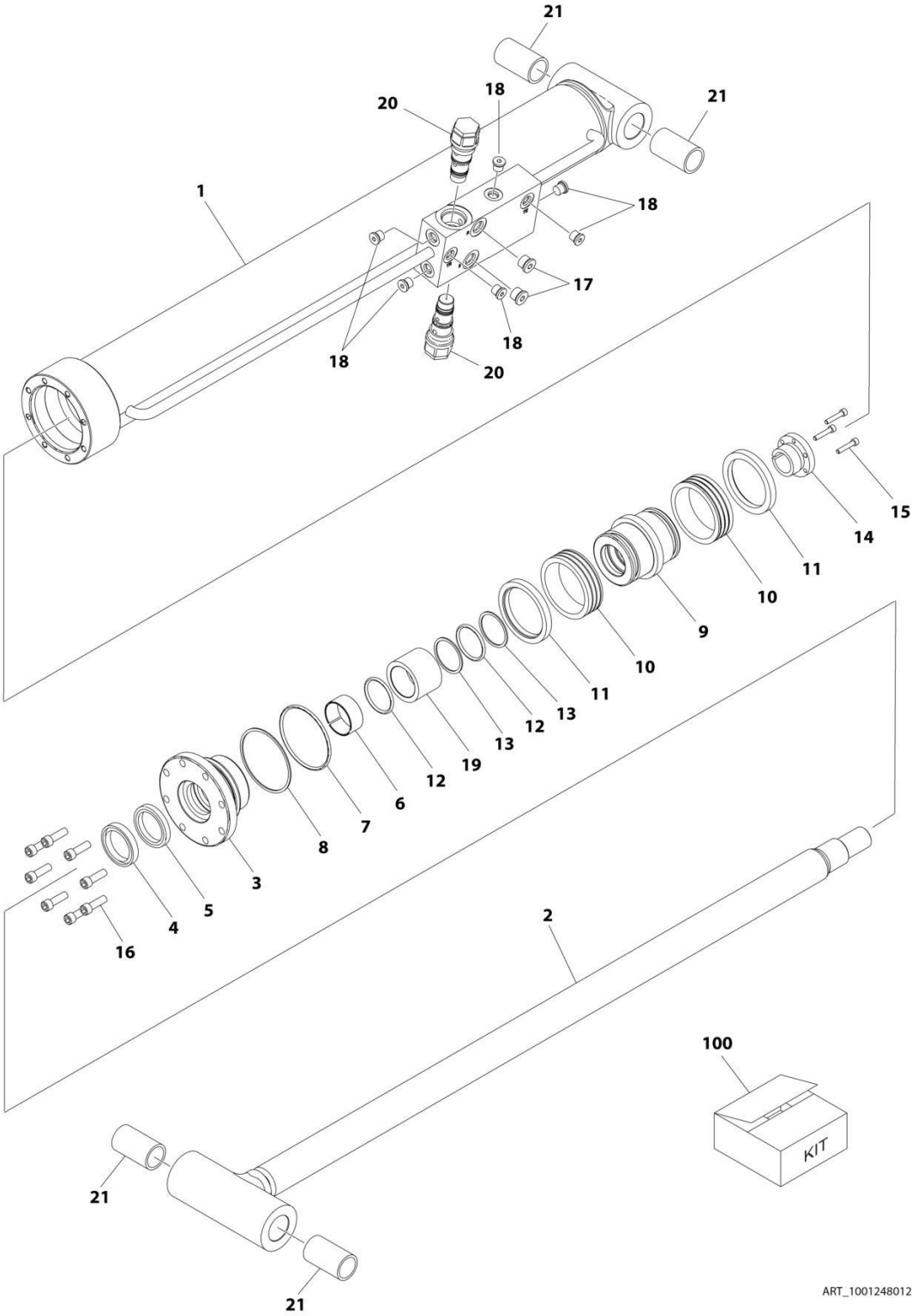

FIGURE 5-7. LIFT CYLINDER ASSEMBLY - JIB (660SJ) (SERVICE REPLACEMENT)

ITEM	PART NUMBER	QTY	DESCRIPTION	REV
	1001248012	Ref	LIFT CYLINDER ASSEMBLY - JIB	B
		Ref	Note: Original Cylinder May Have Been Replaced with Service Replacement. Identify PN Stamped on Cylinder Before Ordering Parts.	
1	See Note	NSS	Barrel (Note: Not Available for Purchase)	
2	70006734	1	Rod	
3	70006649	1	Head	
4	See Note	NSS	Wiper (Note: Use Item 100)	
5	See Note	NSS	Seal, Rod (Note: Use Item 100)	
6	See Note	NSS	Ring, Wear (Note: Use Item 100)	
7	See Note	NSS	O-Ring (Note: Use Item 100)	
8	See Note	NSS	Ring, Back-up (Note: Use Item 100)	
9	70006650	1	Piston	
10	See Note	NSS	Seal (Note: Use Item 100)	
11	See Note	NSS	Ring, Lock (Note: Use Item 100)	
12	See Note	NSS	O-Ring (Note: Use Item 100)	
13	See Note	NSS	Ring, Back-up (Note: Use Item 100)	
14	0961893	1	Bushing, Tapered	
15	0630534	3	Capscrew, Socket Head #10 x 1	
16	70006735	8	Capscrew 5/16	
17	2220885	2	Plug, O-Ring	
18	2220883	6	Plug, O-Ring	
19	70006736	1	Spacer	
20	4640509	2	Cartridge, Valve	
20	2900792	2	Seal Kit - 4640509 Valve	
21	0962336	4	Bushing	
100	1001138795	1	Seal Kit (Includes Items 4-8 & 10-13)	

FIGURE 5-8. LIFT CYLINDER ASSEMBLY - MAIN BOOM

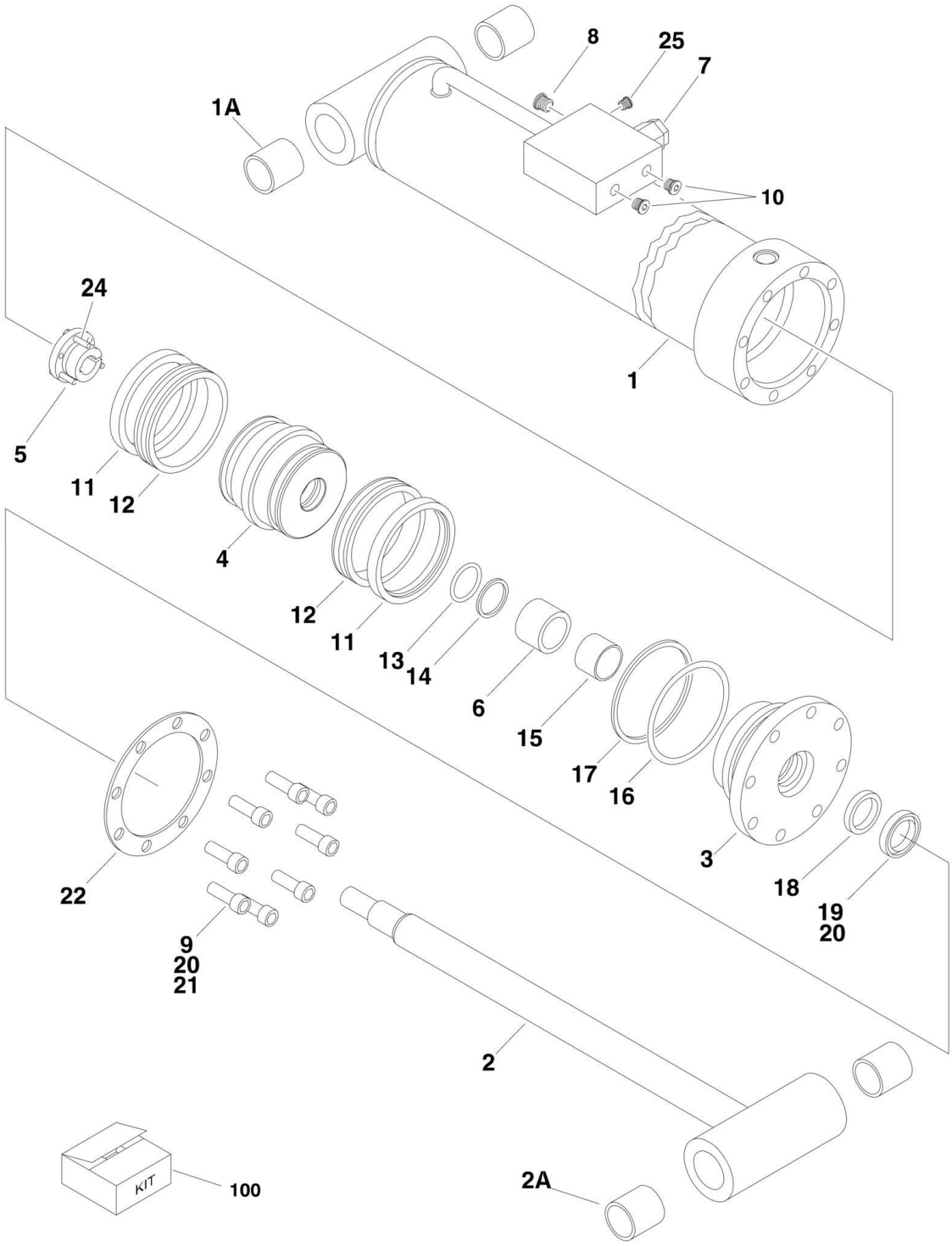

FIGURE 5-8. LIFT CYLINDER ASSEMBLY - MAIN BOOM

ITEM	PART NUMBER	QTY	DESCRIPTION	REV
	1001112468	Ref	**LIFT CYLINDER ASSEMBLY - MAIN BOOM**	B
		Ref	Note: Original Cylinder may have been replaced with Service Replacement. Identify PN Stamped on Cylinder Before Ordering Parts.	
1	1001112467	1	Barrel Weldment	
1A	0961950	2	Bushing, Composite	
2	1683954	1	Rod Weldment	
2A	0961950	2	Bushing, Composite	
3	1683067	1	Head	
4	3480206	1	Piston	
5	0961898	1	Bushing, Tapered (Use item #24 in place of supplied bolts)	
6	4566501	1	Spacer, Tube	
7	4640509	1	Cartridge, Valve	
7	2900792	1	Seal Kit - 4640509 Valve	
8	2220887	1	Plug, O-Ring	
9	3932032	8	Bolt, Socket Head 5/16in-11NC x 2in	
10	2220883	2	Plug, O-Ring	
11	See Note	NSS	Ring, Lock (Note: Use Item 100)	
12	See Note	NSS	Seal, Hydrolock (Note: Use Item 100)	
13	See Note	NSS	O-Ring (Note: Use Item 100)	
14	See Note	NSS	Ring, Back-up (Note: Use Item 100)	
15	See Note	NSS	Ring, Wear (Note: Use Item 100)	
16	See Note	NSS	O-Ring (Note: Use Item 100)	
17	See Note	NSS	Ring, Back-up (Note: Use Item 100)	
18	See Note	NSS	Seal, Rod (Note: Use Item 100)	
19	See Note	NSS	Wiper (Note: Use Item 100)	
20	0100011	AR	Compound, Locking	
21	0100038	AR	Primer, Locking	
22	3760372	1	Washer, Ring	
24	0630536	3	Screw, Socket Head 3/8in-16NC x 1-1/2in	
25	2220235	1	Plug, O-Ring	
100	2901285	1	Seal Kit - 1001112468 Cylinder (Includes Items 11-19)	

FIGURE 5-9. MASTER CYLINDER ASSEMBLY

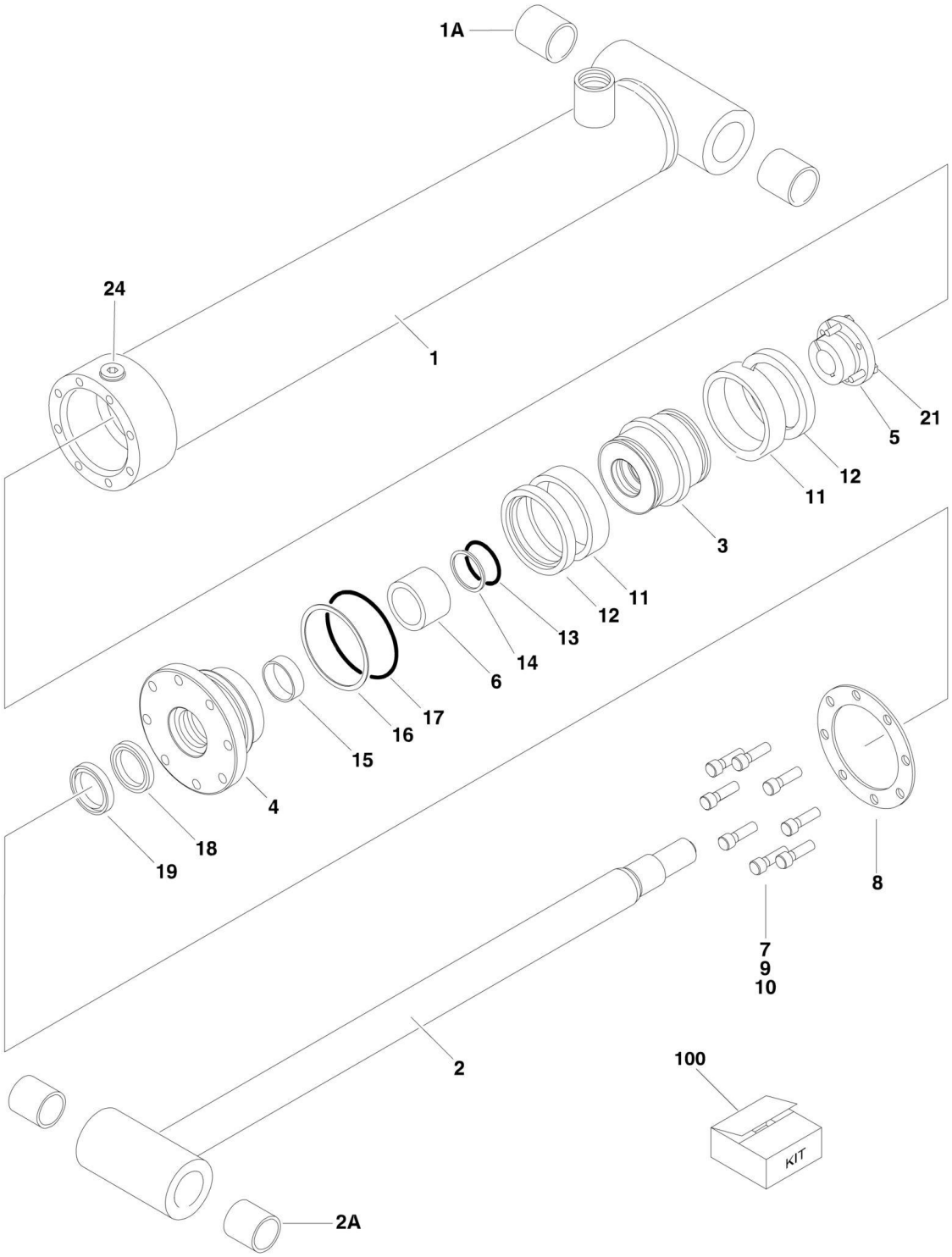

FIGURE 5-9. MASTER CYLINDER ASSEMBLY

ITEM	PART NUMBER	QTY	DESCRIPTION	REV
		Ref	**MASTER CYLINDER ASSEMBLIES**	
	1684414	Ref	**Master Cylinder Assemblies 600S**	F
	1684413	Ref	**Master Cylinder Assemblies 660SJ**	H
		Ref	Note: Original Cylinder may have been replaced with Service Replacement. Identify PN Stamped on Cylinder Before Ordering Parts.	
1		Ref	Barrel Options:	
1	1683972	1	Barrel 600S (Note: Includes Item 1A)	
1	1683949	1	Barrel 660SJ (Note: Item 1A not included - Purchase Separately)	
1A		Ref	Bushing Options:	
1A	0961947	2	Bushing 600S	
1A	0961951	2	Bushing 660SJ	
2		Ref	Rod Options:	
2	3850020	1	Rod 600S (Note: Includes Item 2A):	
2	1683963	1	Rod 660SJ (Note: Item 2A not included - Purchase Separately)	
2A		Ref	Bushing Options:	
2A	0961947	2	Bushing 600S	
2A	0961951	2	Bushing 660SJ	
3		Ref	Piston Options:	
3	3480210	1	Piston 600S	
3	3480188	1	Piston 660SJ	
4		Ref	Head Options:	
4	1683053	1	Head 600S	
4	1683055	1	Head 660SJ	
5		Ref	Bushing, Tapered Options:	
5	0961893	1	Bushing, Tapered 600S	
5	0961894	1	Bushing, Tapered 660SJ	
6	4566468	1	Spacer, Tube	
7		Ref	Capscrew Options:	
7	3931516	8	Capscrew 5/16in-18NC x 1in 600S	
7	3931620	8	Capscrew 3/8in-16NC x 1-1/4in 660SJ	
8		Ref	Ring, Washer Options:	
8	3760368	1	Ring, Washer 600S	
8	3760369	1	Ring, Washer 660SJ	
9	0100011	AR	Compound, Locking	
10	0100038	AR	Primer, Locking	
11	See Note	NSS	Seal (Note: Use Item 100A or 100B)	
12	See Note	NSS	Ring, Lock (Note: Use Item 100A or 100B)	
13	See Note	NSS	O-Ring (Note: Use Item 100A or 100B)	
14	See Note	NSS	Ring, Back-up (Note: Use Item 100A or 100B)	
15	See Note	NSS	Ring, Wear (Note: Use Item 100A or 100B)	
16	See Note	NSS	O-Ring (Note: Use Item 100A or 100B)	
17	See Note	NSS	Ring, Back-up (Note: Use Item 100A or 100B)	
18	See Note	NSS	Seal, Rod (Note: Use Item 100A or 100B)	
19	See Note	NSS	Wiper (Note: Use Item 100A or 100B)	
21		Ref	Screw Options:	
21	0630534	3	Capscrew #10-24NC x 1in 600S	
21	0630535	3	Capscrew 1/4in-20NC x 1-1/8in 660SJ	

ITEM	PART NUMBER	QTY	DESCRIPTION	REV
24	2220885	1	Fitting, Plug (660SJ Only)	
100		Ref	Seal Kit (Includes Items 11-19)	
100A	2901303	1	Seal Kit 600S	
100B	2901301	1	Seal Kit 660SJ	

FIGURE 5-10. STEER CYLINDER ASSEMBLY

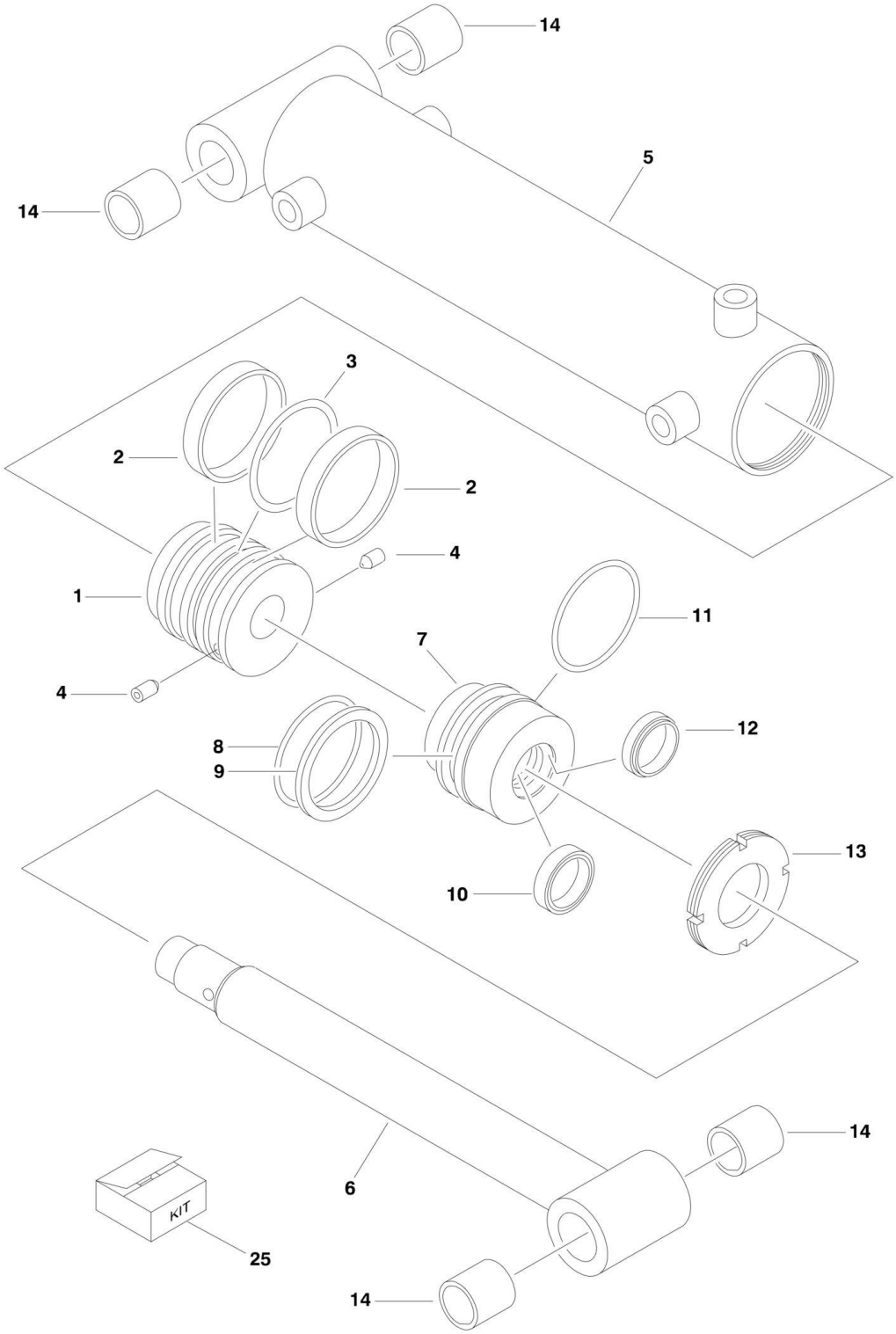

FIGURE 5-10. STEER CYLINDER ASSEMBLY

ITEM	PART NUMBER	QTY	DESCRIPTION	REV
	1001097242	Ref	**STEER CYLINDER ASSEMBLY**	A
		Ref	Note: Original Cylinder may have been replaced with Service Replacement. Identify PN Stamped on Cylinder Before Ordering Parts.	
1	70002752	1	Piston	
1	0100011	AR	Compound, Locking	
1	0100038	AR	Primer, Locking	
2	See Note	NSS	Seal (Note: Use Item 25)	
3	See Note	NSS	O-Ring (Note: Use Item 25)	
4	70002745	2	Setscrew	
5	70002753	1	Barrel	
6	70002754	1	Rod	
7	70002755	1	Head	
8	See Note	NSS	O-Ring (Note: Use Item 25)	
9	See Note	NSS	Ring, Back-up (Note: Use Item 25)	
10	See Note	NSS	Seal (Note: Use Item 25)	
11	See Note	NSS	O-Ring (Note: Use Item 25)	
12	See Note	NSS	Wiper (Note: Use Item 25)	
13	70002756	1	Nut, Spanner	
13	0100011	AR	Compound, Locking	
13	0100038	AR	Primer, Locking	
14	0962356	4	Bushing	
25	70002757	1	Seal Kit (Includes Items 2, 3 & 8-12)	

FIGURE 5-11. TELESCOPE CYLINDER ASSEMBLY

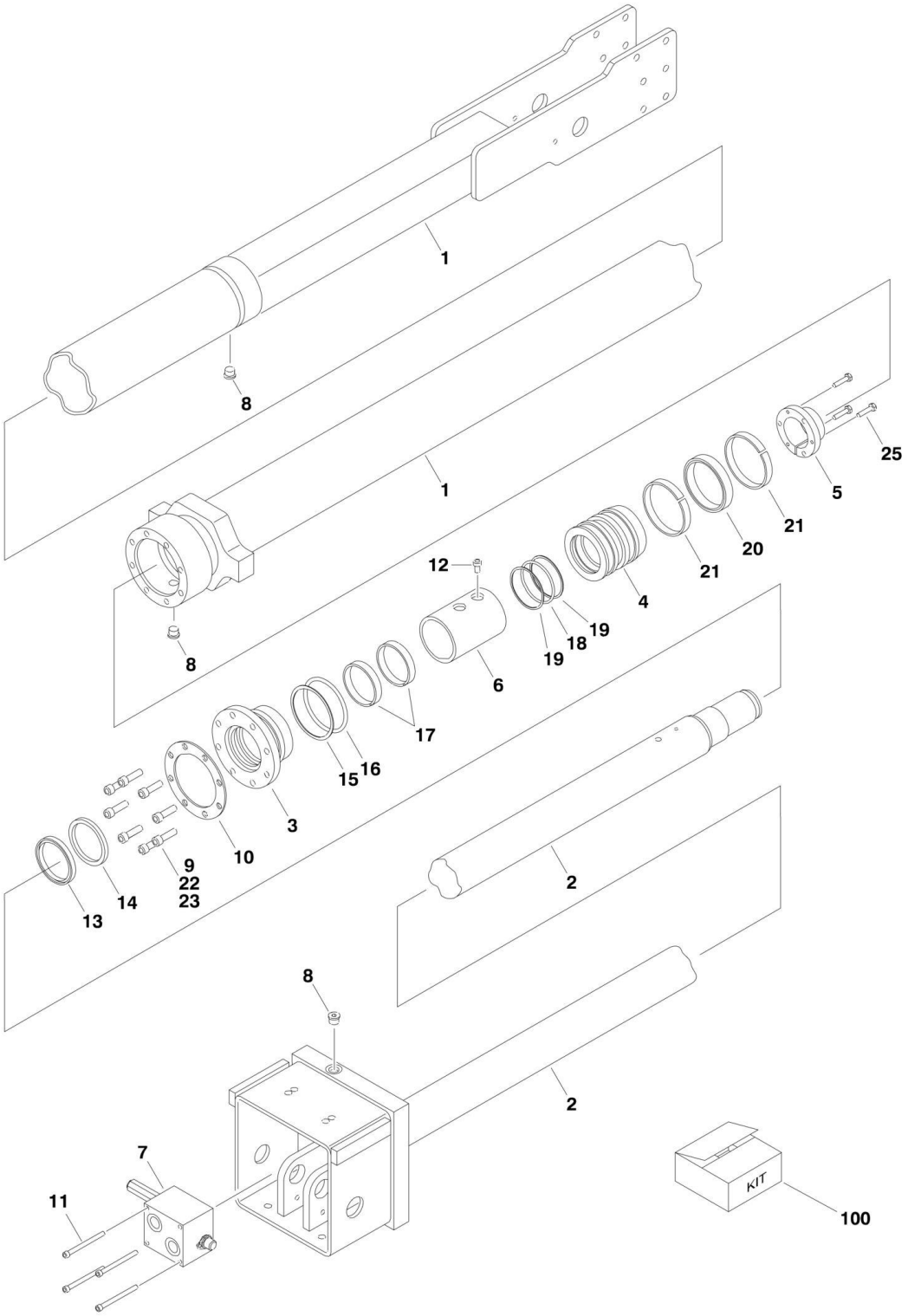

FIGURE 5-11. TELESCOPE CYLINDER ASSEMBLY

ITEM	PART NUMBER	QTY	DESCRIPTION	REV
	1683618	Ref	**TELESCOPE CYLINDER ASSEMBLY**	3-G
		Ref	Note: Original Cylinder may have been replaced with Service Replacement. Identify PN Stamped on Cylinder Before Ordering Parts.	
1	1683619	1	Barrel	
2	1683250	1	Rod	
3	1683057	1	Head	
4	3480205	1	Piston	
5	0961897	1	Bushing, Tapered	
6	4566644	1	Spacer, Tube	
7	4641028	1	Valve Assembly (Note: No Serviceable Parts - Purchase Complete Assembly)	
7	7024397	2	O-Rings Between Valve Block and Cylinder	
8	2220885	6	Plug, O-Ring	
9	3931620	8	Capscrew 3/8in-16NC x 1-1/4in	
10	3760369	1	Ring, Washer	
11	3931448	4	Capscrew 1/4in-20NC x 3in	
12	3931508	1	Capscrew 5/16in-18NC x 1/2in	
13	See Note	NSS	Wiper (Note: Use Item 100)	
14	See Note	NSS	Seal, Rod (Note: Use Item 100)	
15	See Note	NSS	O-Ring (Note: Use Item 100)	
16	See Note	NSS	Ring, Back-up (Note: Use Item 100)	
17	See Note	NSS	Ring, Wear (Note: Use Item 100)	
18	See Note	NSS	O-Ring (Note: Use Item 100)	
19	See Note	NSS	Ring, Back-up (Note: Use Item 100)	
20	See Note	NSS	T-Seal (Note: Use Item 100)	
21	See Note	NSS	Ring, Wear (Note: Use Item 100)	
22	0100011	AR	Compound, Locking	
23	0100038	AR	Primer, Locking	
25	0630535	3	Bolt 1/4in-20NC x 1-1/8in	
100	2901284	1	Seal Kit (Includes Items 13-21)	

SECTION 6 - HYDRAULIC

FIGURE 6-1. HYDRAULIC DIAGRAM - AXLE LOCKOUT

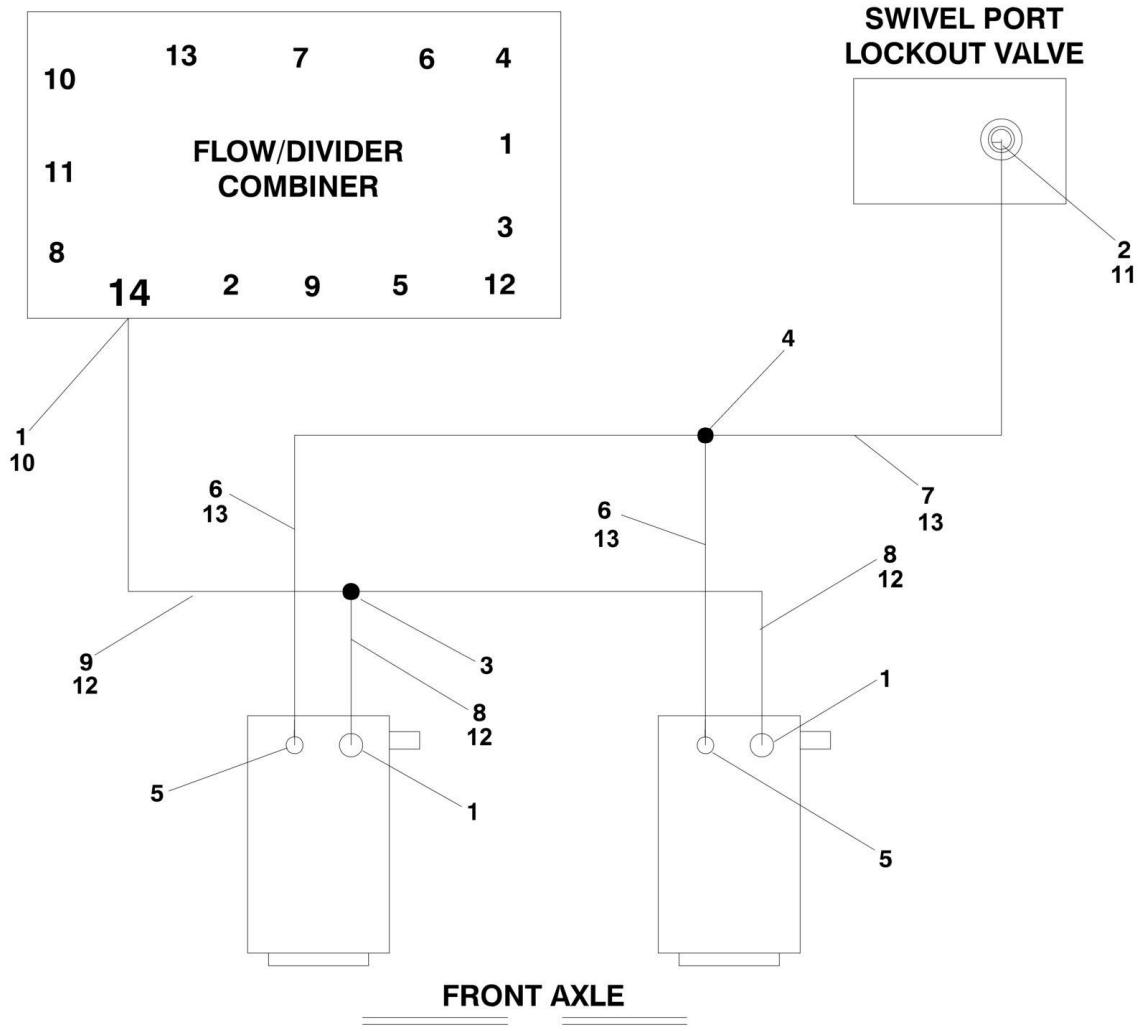

FIGURE 6-1. HYDRAULIC DIAGRAM - AXLE LOCKOUT

ITEM	PART NUMBER	QTY	DESCRIPTION	REV
	1001151349	Ref	**AXLE LOCKOUT DIAGRAM - OSCILLATING AXLE**	C
1	2220371	AR	Fitting, Straight	
2	2220468	1	Fitting, Straight	
3	2220490	1	Fitting, Tee **(SN 0300171769 through 0300206978, SN B300000970 through B300001593)**	
3	See Note	NSS	Fitting, Tee (Note: Part of Item Item 12) **(SN 0300206979 through 0300235167, SN B300001594 through B300002654)**	
4	2220504	1	Fitting, Tee **(SN 0300171769 through 0300206978, SN B300000970 through B300001593)**	
4	See Note	NSS	Fitting, Tee (Note: Part of Item Item 13) **(SN 0300206979 through 0300235167, SN B300001594 through B300002654)**	
5	2220415	2	Fitting, Straight	
6	1001151366	2	Hose **(SN 0300171769 through 0300206978, SN B300000970 through B300001593)**	
7	2751410	1	Hose **(SN 0300171769 through 0300206978, SN B300000970 through B300001593)**	
8	1001151367	2	Hose **(SN 0300171769 through 0300206978, SN B300000970 through B300001593)**	
9	2752462	1	Hose **(SN 0300171769 through 0300206978, SN B300000970 through B300001593)**	
10	2220473	1	Fitting, 90 JIC/ORB **(SN 0300206979 through 0300235167, SN B300001594 through B300002654)**	
11	2220654	1	Fitting, 90 JIC/JIC **(SN 0300206979 through 0300235167, SN B300001594 through B300002654)**	
12	1001188890	1	Hose **(SN 0300206979 through 0300235167, SN B300001594 through B300002654)**	
13	1001188891	1	Hose **(SN 0300206979 through 0300235167, SN B300001594 through B300002654)**	

FIGURE 6-2. HYDRAULIC DIAGRAM - DRIVE AND STEER (2WD/2WS)

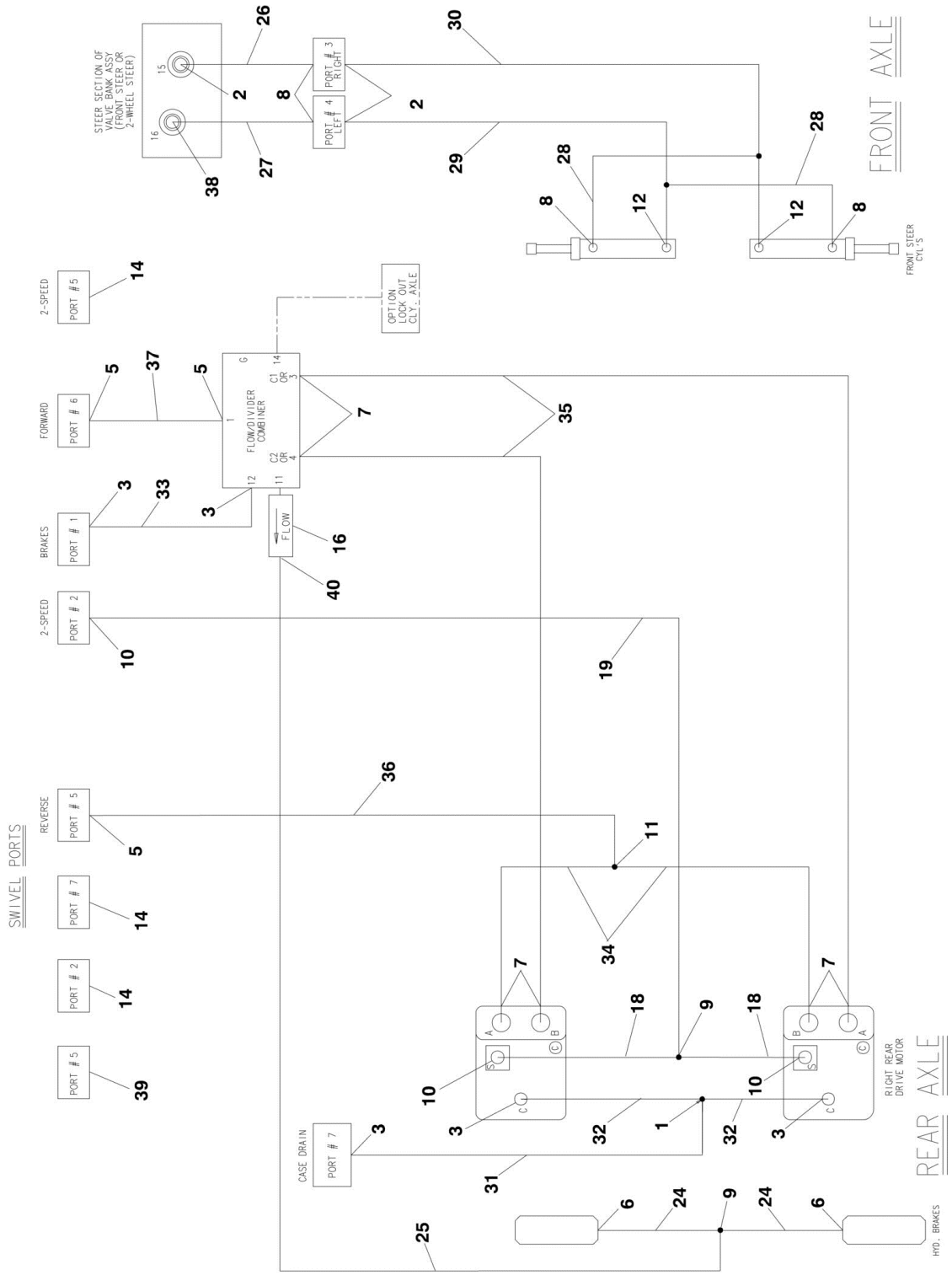

FIGURE 6-2. HYDRAULIC DIAGRAM - DRIVE AND STEER (2WD/2WS)

ITEM	PART NUMBER	QTY	DESCRIPTION	REV
	1001151345	Ref	**DRIVE AND STEER HYDRAULIC DIAGRAM - 2WD/2WS**	D
1	2220362	1	Fitting, Tee	
2	2220371	3	Fitting, Straight	
3	2220373	5	Fitting, Straight	
5	2220377	3	Fitting, Straight	
6	2220415	2	Fitting, Straight	
7	2220451	6	Fitting, Straight	
8	2220473	4	Fitting, 90	
9	2220504	2	Fitting, Tee	
10	2220582	3	Fitting, Straight	
11	2221170	1	Fitting, Tee	
12	2220606	2	Fitting, Tee	
14	2220237	3	Fitting, Plug	
16	4641307	1	Valve, Check	
18	1001151351	2	Hose	
19	2753924	1	Hose	
24	1001151354	2	Hose	
25	1001152406	1	Hose	
26	2752478	1	Hose	
27	2752632	1	Hose	
28	2753397	2	Hose	
29	2752475	1	Hose	
30	2752611	1	Hose	
31	2752928	1	Hose	
32	1001151356	2	Hose	
33	2752929	1	Hose	
34	1001151364	2	Hose	
35	1001151365	2	Hose	
36	2752341	1	Hose	
37	1001152421	1	Hose	
38	2220998	1	Fitting, Straight	
39	2220238	1	Fitting, Plug	
40	2220677	1	Fitting, 45	

FIGURE 6-3. HYDRAULIC DIAGRAM - DRIVE AND STEER (4WD/2WS)

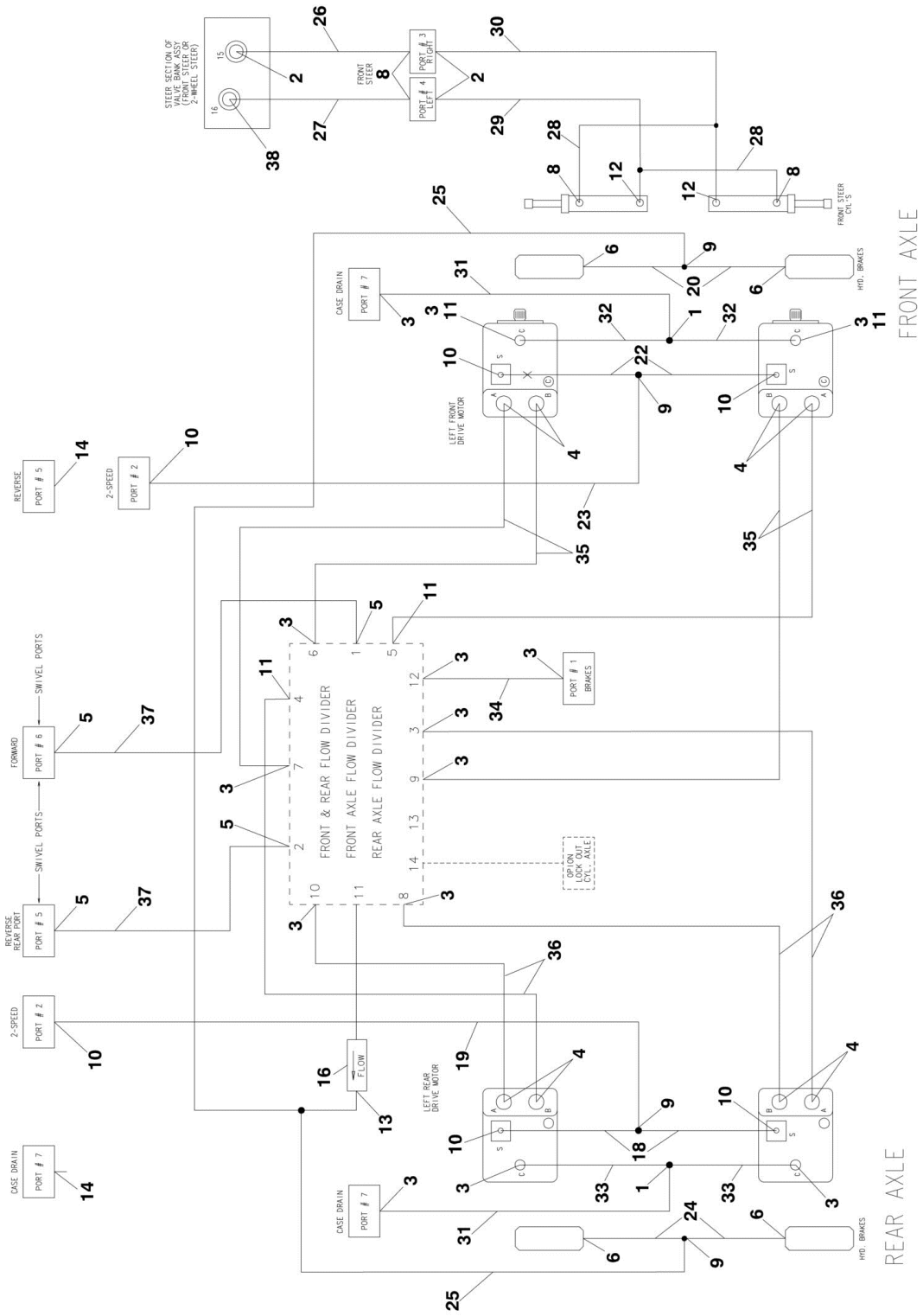

FIGURE 6-3. HYDRAULIC DIAGRAM - DRIVE AND STEER (4WD/2WS)

ITEM	PART NUMBER	QTY	DESCRIPTION	REV
		Ref	**DRIVE AND STEER HYDRAULIC DIAGRAM - 4WD/2WS**	
	1001151346	Ref	**Without Arctic Package**	D
	1001151348	Ref	**With Arctic Package**	D
1	2220362	2	Fitting, Tee	
2	2220371	3	Fitting, Straight	
3	2220373	AR	Fitting, Straight	
4	2220375	8	Fitting, Straight	
5	2220377	4	Fitting, Straight	
6	2220415	4	Fitting, Straight	
8	2220473	4	Fitting, 90	
9	2220504	4	Fitting, Tee	
10	2220582	6	Fitting, Straight	
11	2220596	AR	Fitting, 90	
12	2220606	2	Fitting, Tee	
13	2220861	1	Fitting, Tee	
14	2220237	2	Plug	
16	4641284	1	Valve, Check	
18	1001151351	2	Hose	
19	2753924	1	Hose	
20		Ref	Hose Options:	
20	1001151352	2	Without Arctic Package	
20	1001151359	2	With Arctic Package	
22		Ref	Hose Options:	
22	1001151353	2	Without Arctic Package	
22	1001151360	2	With Arctic Package	
23	2752977	1	Hose	
24	1001151354	2	Hose	
25	1001152406	2	Hose	
26	2752478	1	Hose	
27	2752632	1	Hose	
28	2753397	2	Hose	
29	2752475	1	Hose	
30	2752611	1	Hose	
31	2752928	2	Hose	
32		Ref	Hose Options:	
32	1001151355	2	Without Arctic Package	
32	1001151361	2	With Arctic Package	
33	1001151356	2	Hose	
34	2752929	1	Hose	
35		Ref	Hose Options:	
35	1001151357	4	Without Arctic Package	
35	1001151362	4	With Arctic Package	
36	1001151358	4	Hose	
37	1001152421	2	Hose	
38	2220998	1	Fitting, Straight	

FIGURE 6-4. HYDRAULIC DIAGRAM - STANDARD

FIGURE 6-4. HYDRAULIC DIAGRAM - STANDARD

ITEM	PART NUMBER	QTY	DESCRIPTION	REV
		Ref	**USAGE CHART:**	
		Ref	**USA Built Machines (SN 0300171769 through 0300181891)**	
		Ref	**China Built Machines (SN B300000970 through B300002654)**	
		Ref	**STANDARD HYDRAULIC DIAGRAM**	
		Ref	**USA Built Machines:**	
	1001143450	Ref	**Standard Hydraulic Diagram 600S**	E
	1001143451	Ref	**Standard Hydraulic Diagram 660SJ**	D
		Ref	**China Built Machines:**	
	1001143455	Ref	**Standard Hydraulic Diagram 600S**	A
	1001143456	Ref	**Standard Hydraulic Diagram 660SJ**	A
1	2220377	2	Fitting, Straight	
2		Ref	Hose Options:	
2	2752752	1	USA Built Machines	
2	1001113905	1	China Built Machines	
3	2220380	2	Fitting, Straight	
4	See Note	AR	Fitting (Note: Part of Pump Assembly)	
5	2220578	1	Fitting, 90	
6		Ref	Hose Options:	
6	2752653	1	USA Built Machines	
6	1001113832	1	China Built Machines	
7	2220593	1	Fitting, Straight	
8	2220628	3	Fitting, 90	
9	2220596	1	Fitting, 90	
10	2220474	1	Fitting, 90	
11	2220574	1	Fitting, 90	
12	0100020	AR	Sealant, Pipe	
13	See Note	AR	Fitting (Note: Part of Pump Assembly)	
14	See Note	AR	Fitting (Note: Part of Pump Assembly)	
15		Ref	Hose Options:	
15	2752504	1	USA Built Machines	
15	1001113798	1	China Built Machines	
16		Ref	Hose Options:	
16	2752654	1	USA Built Machines	
16	1001113907	1	China Built Machines	
17	2220582	5	Fitting, Straight	
19	2220415	5	Fitting, Straight	
22		Ref	Hose Options:	
22	2752502	1	USA Built Machines	
22	1001113797	1	China Built Machines	
23	See Note	AR	Fitting (Note: Part of Pump Assembly)	
24		Ref	Hose Options:	
24	2752340	2	USA Built Machines	
24	1001113899	2	China Built Machines	
25	2220407	1	Fitting, 90	
26	2220375	1	Fitting, Straight	
28		Ref	Hose Options:	
28	2753968	1	USA Built Machines	
28	1001113896	1	China Built Machines	
31	2220921	1	Fitting, Reducer	
32	2220498	1	Fitting, 45	

ITEM	PART NUMBER	QTY	DESCRIPTION	REV
33	2220372	4	Fitting, Straight	
34		Ref	Hose Options:	
34	2752631	1	USA Built Machines	
34	1001113821	1	China Built Machines	
35		Ref	Hose Options:	
35	2752632	1	USA Built Machines	
35	1001113822	1	China Built Machines	
36	2220373	6	Fitting, Straight	
37		Ref	Hose Options:	
37	2752515	1	USA Built Machines	
37	1001113801	1	China Built Machines	
39	2220466	5	Fitting, 90	
41		Ref	Hose Options:	
41	2751474	1	USA Built Machines	
41	1001113893	1	China Built Machines	
42	2220947	1	Fitting, Straight	
43		Ref	Hose Options:	
43	2752762	1	USA Built Machines	
43	1001113833	1	China Built Machines	
44	2220873	2	Fitting, Straight Nipple	
45	2220428	AR	Fitting, Quick Coupling	
46	2220429	AR	Fitting, Dust Cap	
48		Ref	Hose Options:	
48	2752763	2	USA Built Machines	
48	1001113834	2	China Built Machines	
49	2221042	2	Fitting, 90	
50	2220948	1	Fitting, Tee	
51	2220738	1	Fitting, Tee	
52		Ref	Hose Options:	
52	2753957	1	USA Built Machines	
52	1001113880	1	China Built Machines	
53		Ref	Hose Options:	
53	2752437	2	USA Built Machines	
53	1001113807	2	China Built Machines	
59		Ref	Hose Options:	
59	2751396	1	USA Built Machines	
59	1001113912	1	China Built Machines	
63	2220950	1	Fitting, 45	
65	2220974	1	Fitting, Long Straight	
66		Ref	Hose Options:	
66		Ref	Hose 600S	
66	2752598	2	USA Built Machines	
66	1001113813	2	China Built Machines	
66		Ref	Hose 660SJ	
66	2752596	2	USA Built Machines	
66	1001113811	2	China Built Machines	
67		Ref	Hose Options:	
67		Ref	Hose 600S	
67	2752599	1	USA Built Machines	
67	1001113814	1	China Built Machines	
67		Ref	Hose 660SJ	

ITEM	PART NUMBER	QTY	DESCRIPTION	REV
67	2752597	1	USA Built Machines	
67	1001113812	1	China Built Machines	
71		Ref	Hose Options:	
71	2752633	1	USA Built Machines	
71	1001113823	1	China Built Machines	
72	2220472	2	Fitting, 90	
75		Ref	Hose Options:	
75	Not Required	0	Hose 600S	
75		Ref	Hose 660SJ USA Built Machines	
75	2752633	2	USA Built Machines	
75	1001113823	2	China Built Machines	
76	2220473	AR	Fitting, 90	
77	See Note	AR	Fitting (Note: Part of Pump Assembly)	
78		Ref	Hose Options:	
78	2752753	1	USA Built Machines	
78	1001113906	1	China Built Machines	
80	2220603	4	Fitting, Straight	
81		Ref	Hose Options:	
81	2752783	1	USA Built Machines	
81	1001113911	1	China Built Machines	
82		Ref	Hose Options:	
82	2752591	2	USA Built Machines	
82	1001113808	2	China Built Machines	
83		Ref	Hose Options:	
83	2752643	1	USA Built Machines	
83	1001113826	1	China Built Machines	
84		Ref	Hose Options:	
84	2753325	1	USA Built Machines	
84	1001113855	1	China Built Machines	
85	2220409	1	Fitting, 45	
88	0100011	AR	Compound, Locking	
89	0100038	AR	Loctite, Primer	
90	2180724	1	Fitting, 90 (660SJ Only)	
91	2180380	1	Fitting, Pipe Plug (660SJ Only)	
92	1703533	2	Decal - Hose Tags (Not Shown)	
93		Ref	Hose Options:	
93	2752633	1	USA Built Machines	
93	1001113823	1	China Built Machines	
94	4240018	7	Tie-Strap (Not Shown)	
95	2220873	1	Fitting, Nipple	
99	2220893	1	Fitting, Adapter	

FIGURE 6-5. HYDRAULIC DIAGRAM - STANDARD

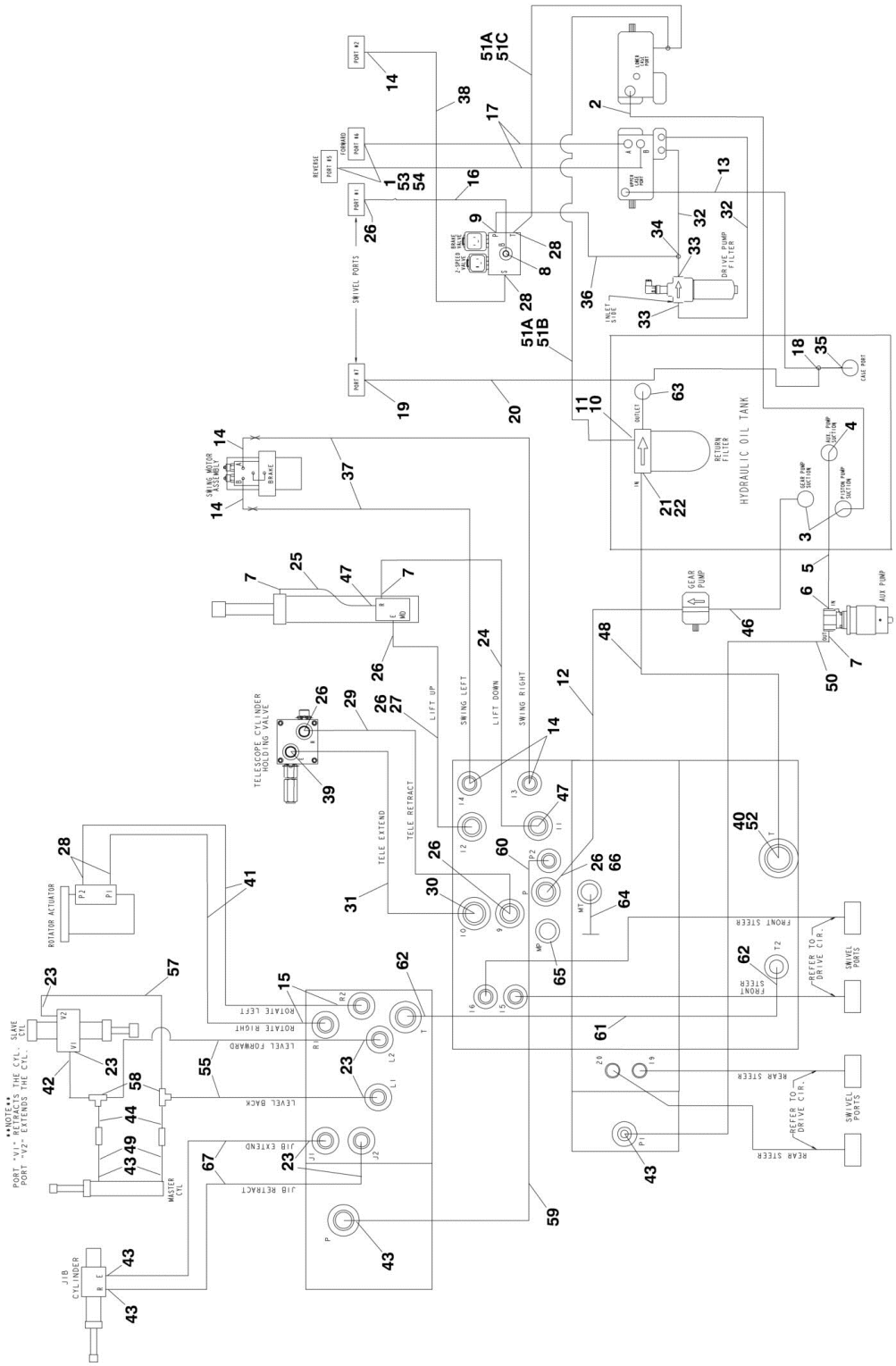

FIGURE 6-5. HYDRAULIC DIAGRAM - STANDARD

ITEM	PART NUMBER	QTY	DESCRIPTION	REV
		Ref	**USAGE CHART:**	
		Ref	**USA Built Machines (SN 0300181891 through 0300235167)**	
		Ref	**STANDARD HYDRAULIC DIAGRAM**	
	1001159705	Ref	**Standard Hydraulic Diagram 600S (SN 0300181891 through 0300208081)**	L
	1001189893	Ref	**Standard Hydraulic Diagram 600S (SN 0300208082 through 0300235167)**	B
	1001159706	Ref	**Standard Hydraulic Diagram 660SJ (SN 0300181891 through 0300208081)**	L
	1001189892	Ref	**Standard Hydraulic Diagram 600SJ (SN 0300208082 through 0300235167)**	A
1	2220377	2	Fitting, Straight	
2	2752752	1	Hose **(SN 0300181891 through 0300183358)**	
2	1001172534	1	Hose **(SN 0300183359 through 0300235167)**	
3	2220380	2	Fitting, Straight	
4	2220578	1	Fitting, 90	
5	2752653	1	Hose	
6	2220593	1	Fitting, Straight	
7	2220628	3	Fitting, 90	
8	2220596	1	Fitting, 90	
9	2220474	1	Fitting, 90	
10	2220574	1	Fitting, 90	
11	0100020	AR	Sealant, Pipe	
12	2752504	1	Hose	
13	2752654	1	Hose	
14	2220582	5	Fitting, Straight	
15	2220415	2	Fitting, Straight	
16	2752502	1	Hose	
17	2752340	2	Hose	
18	2220407	1	Fitting, 90	
19	2220375	1	Fitting, Straight	
20	2753968	1	Hose	
21	2220921	1	Fitting, Reducer	
22	2220498	1	Fitting, 45	
23	2220603	AR	Fitting, Straight	
24	2752631	1	Hose	
25	2752632	1	Hose	
26	2220373	5	Fitting, Straight	
27	2752515	1	Hose	
28	2220466	4	Fitting, 90	
29	2751474	1	Hose	
30	2220947	1	Fitting, Straight	
31	2752762	1	Hose	
32	2752763	2	Hose	
33	2221042	2	Fitting, 90	
34	2220948	1	Fitting, Tee	
35	2220738	1	Fitting, Tee	
36	2753957	1	Hose **(SN 0300181891 through 0300193886)**	
36	1001165921	1	Hose **(SN 0300193887 through 0300194747)**	
36	2753957	1	Hose **(SN 0300194748 through 0300235167)**	

ITEM	PART NUMBER	QTY	DESCRIPTION	REV
37	2752437	2	Hose	
38	2751396	1	Hose	
39	2220950	1	Fitting, 45	
40	2220974	1	Fitting, Long Straight	
41	1001159707	2	Hose	
42	1001155670	1	Hose	
43	2220473	AR	Fitting, 90	
44		Ref	Hose Options:	
44	1001161327	2	Hose **(SN 0300181891 through 0300197716)**	
44	2753049	2	Hose **(SN 0300197717 through 0300235167)**	
45	4240018	7	Tie-Strap (Not Shown)	
46	2752753	1	Hose	
47	2220372	2	Fitting, Straight	
48	2752783	1	Hose	
49	1001161325	2	Hose	
50	2752643	1	Hose	
51	2753325	1	Hose	
51A	2753325	1	Hose (Direct Connection Valve to Filter) **(SN 0300181891 through 0300208081)**	
51A	2753325	1	Hose (Tee Connection Valve to Filter) **(SN 0300208082 through 0300235167)**	
51B	2752433	1	Hose (Tee Connection Valve to Filter) **(SN 0300208082 through 0300235167)**	
52	2220409	1	Fitting, 45 **(SN 0300181891 through 0300183358)**	
52	2220655	1	Fitting, 90 **(SN 0300183359 through 0300235167)**	
53	0100011	AR	Compound, Locking	
54	0100038	AR	Loctite, Primer	
55		Ref	Hose Options:	
55	1001161033	2	Hose 600S	
56	1703533	2	Decal - Hose Tags (Not Shown)	
57	1001155671	1	Hose	
58	2220490	2	Fitting, Tee	
59		Ref	Hose Options:	
59	1001159702	1	Hose 600S	
59	1001159708	1	Hose 660SJ	
60	2220371	1	Fitting, Straight **(SN 0300181891 through 0300186727)**	
60	80233041	1	Valve, Check **(SN 0300186728 through 0300235167)**	
61		Ref	Hose Options:	
61	1001161438	1	Hose 600S	
61	1001159709	1	Hose 660SJ	
62	2220600	2	Fitting, Straight	
63	2220893	1	Fitting, Adapter	
64	2220883	1	Fitting, Adapter **(SN 0300181891 through 0300183358)**	
65	2221086	1	Fitting, Test	
66	2220381	1	Fitting, Straight **(SN 0300183359 through 0300235167)**	
67		Ref	Hose Options:	
67	Not Required	0	Hose 600S	
67	1001159699	2	Hose 660SJ	

FIGURE 6-6. HYDRAULIC DIAGRAM LIST

ITEM	PART NUMBER	QTY	DESCRIPTION	REV
		Ref	**Note: Diagrams that are not shown are available from the JLG Service Department. See Service and Maintenance Manual for Schematics.**	
	1001151349	Ref	**Axle Lockout Hydraulic Diagram**	
	1001151350	Ref	**Drive and Steer Hydraulic Diagram**	
	1001151345	Ref	2WD/2WS Machines	
	1001151346	Ref	4WD/2WS Machines	
	1001151348	Ref	4WD/2WS Machines (With Arctic Package)	
		Ref	4WD/4WS Machines	
		Ref	USA Built Machines	
	1001151347	Ref	USA Built Machines **(SN 0300171769 through 0300181890)**	
	1001161322	Ref	USA Built Machines **(SN 0300181891 through 0300235167)**	
	1001151347	Ref	China Built Machines	
		Ref	**Loop Flushing Hydraulic Diagram**	
	1001152450	Ref	2WD	
	1001152449	Ref	4WD	
		Ref	**Oil Cooler Hydraulic Diagram**	
	1001151282	Ref	Deutz D2011 Engine	
	1001142677	Ref	Deutz DT2.9L4 Engine	
	0272041	Ref	GM Engine	
		Ref	**Standard Hydraulic Diagrams**	
		Ref	**USA Built Machines:**	
	1283363	Ref	**Standard Hydraulic Diagrams (SN 0300171769 through 0300181890)**	
	1001162410	Ref	**Standard Hydraulic Diagrams (SN 0300181891 through 0300235167)**	
		Ref	**Standard Hydraulic Diagrams 600S**	
	1001143450	Ref	**Standard Hydraulic Diagrams (SN 0300171769 through 0300181890)**	
	1001159705	Ref	**Standard Hydraulic Diagrams (SN 0300181891 through 0300235167)**	
		Ref	**Standard Hydraulic Diagrams 660SJ**	
	1001143451	Ref	**Standard Hydraulic Diagrams (SN 0300171769 through 0300181890)**	
	1001159706	Ref	**Standard Hydraulic Diagrams (SN 0300181891 through 0300235167)**	
	1001114070	Ref	**China Built Machines:**	
	1001143455	Ref	**Standard Hydraulic Diagrams 600S**	
	1001143456	Ref	**Standard Hydraulic Diagrams 660SJ**	
		Ref	**Standard Hydraulic Schematic**	
		Ref	**USA Built Machines**	
	2792605	Ref	**Standard Hydraulic Diagrams (SN 0300171769 through 0300181890)**	
	1001157606	Ref	**Standard Hydraulic Diagrams (SN 0300181891 through 0300235167)**	
	2792605	Ref	**China Built Machines**	
		Ref	**Tool Hydraulic Diagrams**	
	2792325	Ref	Tool Hydraulic Diagrams 600S	
	2792327	Ref	Tool Hydraulic Diagrams 660SJ	
	2792630	Ref	**Tow Hydraulic Diagram**	

SECTION 7 - ELECTRICAL

FIGURE 7-1. ELECTRICAL DIAGRAM LIST

ITEM	PART NUMBER	QTY	DESCRIPTION	REV
		Ref	Note: Diagrams that are not shown are available from the JLG Service Department. See Service and Maintenance Manual for Schematics.	
	0275261	Ref	ENGINE BLOCK HEATER ELECTRICAL DIAGRAM (GM ENGINES)	
	1282571	Ref	ENGINE BLOCK HEATER ELECTRICAL DIAGRAM (GM ENGINES)	
		Ref	GENERATOR ELECTRICAL DIAGRAMS	
		Ref	2500W Generator Options:	
	1001112588	Ref	Deutz D2011 Engine Machines with 60Hz Generators	
	1001112743	Ref	Deutz D2011 Engine Machines with 50Hz Generators	
	1001180050	Ref	Deutz TD2.9L4 Engine Machines	
	4933350	Ref	GM Engine Machines	
		Ref	4000W SkyPower Generator	
	1001132055	Ref	60Hz Generators - Deutz D2011 & GM Engine Machines	
	1001132055	Ref	60Hz Generators - Deutz DT2.9L4 Engine Machines (SN 0300171769 through 0300213407, SN B300000970 through B300001593)	
	1001153257	Ref	60Hz Generators - Deutz DT2.9L4 Engine Machines (SN 0300213408 through 0300235167, SN B300001594 through B300002654)	
	1001153025	Ref	50Hz Generators - Deutz D2011 Engine Machines (ANSI Export and Japanese Specs) (SN 0300171769 through 0300204381, SN B300000970 through B300001232)	
	1001194437	Ref	50Hz Generators - Deutz D2011 Engine Machines (ANSI Export & Japan Specs) (SN 0300204382 through 0300235167, SN B300001233 through B300002654)	
	1001159648	Ref	50Hz - Deutz D2011 Engine Machines (Australian Spec)	
	1001153025	Ref	50Hz Generators - Deutz D2011 Engine Machines (CE Specs) (SN 0300171769 through 0300204381)	
	1001160271	Ref	50Hz Generators - Deutz D2011 Engine Machines (UK Spec)	
		Ref	7500W Generator Options:	
	1001112586	Ref	Deutz D2011 Engines (SN 0300171769 through 0300182752)	
	1001157769	Ref	Deutz D2011 Engines (SN 0300182753 through 0300235167)	
	1001122528	Ref	Deutz TD2.9L4 Engines (SN 0300171769 through 0300182752)	
	1001157770	Ref	Deutz TD2.9L4 Engines (SN 0300182753 through 0300235167)	
	4933349	Ref	GM Engines (SN 0300171769 through 0300182752)	
	1001157768	Ref	GM Engines (SN 0300182753 through 0300235167)	
		Ref	LIGHTS ELECTRICAL DIAGRAM	
	4933219	Ref	Headlight/Taillight and Chassis Illumination Lights	
	4933313	Ref	Platform Floodlights	
	0273486	Ref	Platform Worklights	
	0273491	Ref	Platform Worklights	
	4933278	Ref	LSS PLATFORM MODULE ELECTRICAL DIAGRAM	
	See Note	Ref	PLATFORM ELECTRICAL DIAGRAM (Note: Not Available for Purchase)	
	4933218	Ref	PLATFORM SOFT TOUCH SYSTEM ELECTRICAL DIAGRAM	
	4933304	Ref	SKYAIR ELECTRICAL DIAGRAM	
		Ref	STANDARD ELECTRICAL DIAGRAMS	
	1001110364	Ref	Deutz D2011 Engine Machines with Fiberglass Box	

ITEM	PART NUMBER	QTY	DESCRIPTION	REV
	1001154399	Ref	**Deutz D2011 Engine Machines with Steel Box**	
	1001145995	Ref	**Deutz TD2.9L4 Engines with Fiberglass Box**	
	1001164565	Ref	**Deutz TD2.9L4 Engines with Steel Box**	
	1001110363	Ref	**GM Engine Machines with Fiberglass Box**	
	1001154398	Ref	**GM Engine Machines with Steel Box**	
		Ref	**STANDARD ELECTRICAL SCHEMATIC**	
		Ref	**USA Built Machines (Deutz and GM Engine Machines)**	
	1001110345	Ref	**Standard Electrical Schematic (SN 0300171769 through 0300181890)**	
	1001151752	Ref	**Standard Electrical Schematic (SN 0300181891 through 0300195125)**	
	1001178004	Ref	**Standard Electrical Schematic (SN 0300195126 through 0300235167)**	
	1001131992	Ref	**GM Engine Schematic (Engine Schematic Only. P/N 1001110345 is for schematic for complete machine)**	
	1001110345	Ref	**China Built Machines (Deutz Engine Machines)**	

FIGURE 7-2. HARNESS COMPONENTS INSTALLATION

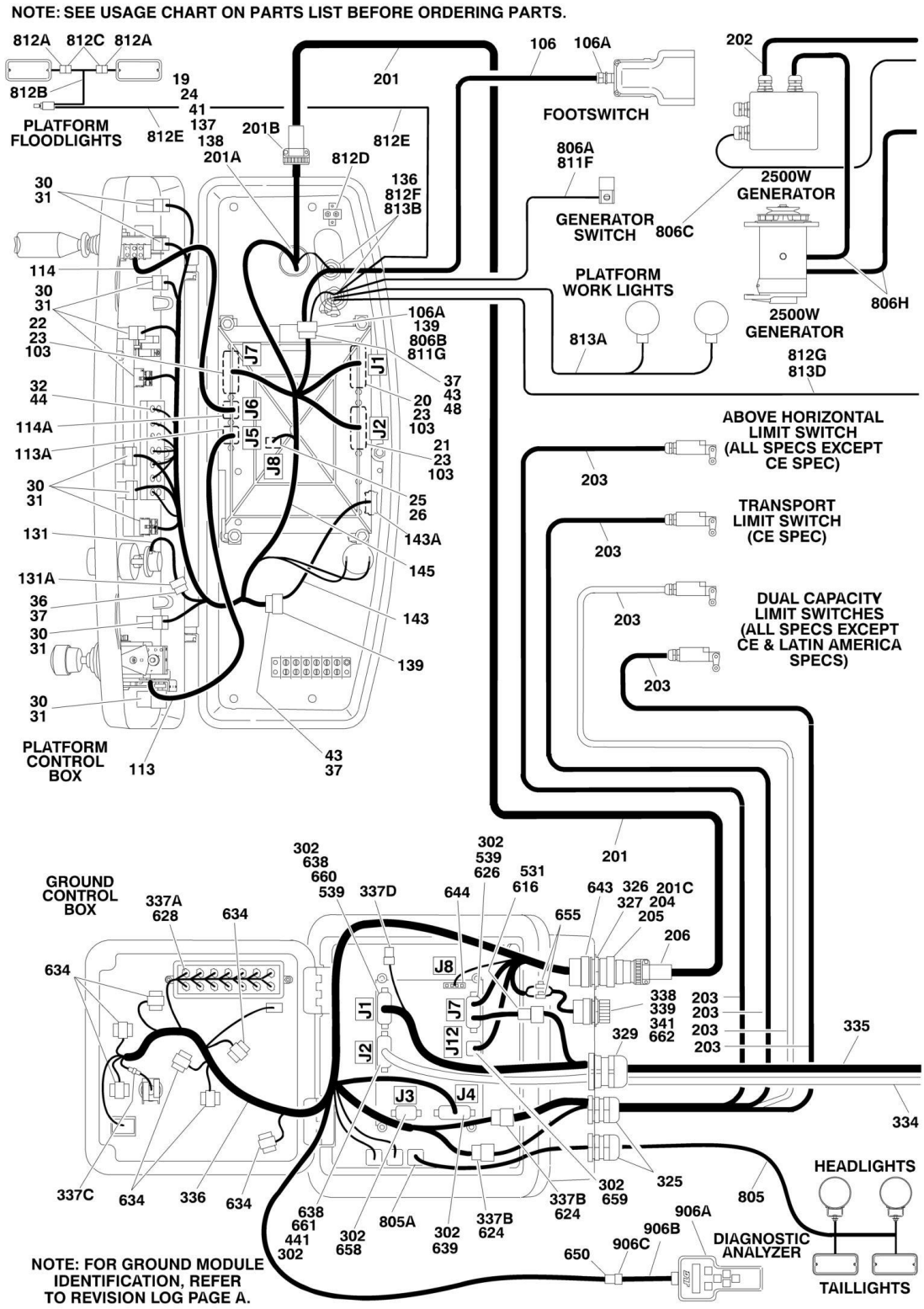

NOTE: SEE USAGE CHART ON PARTS LIST BEFORE ORDERING PARTS.

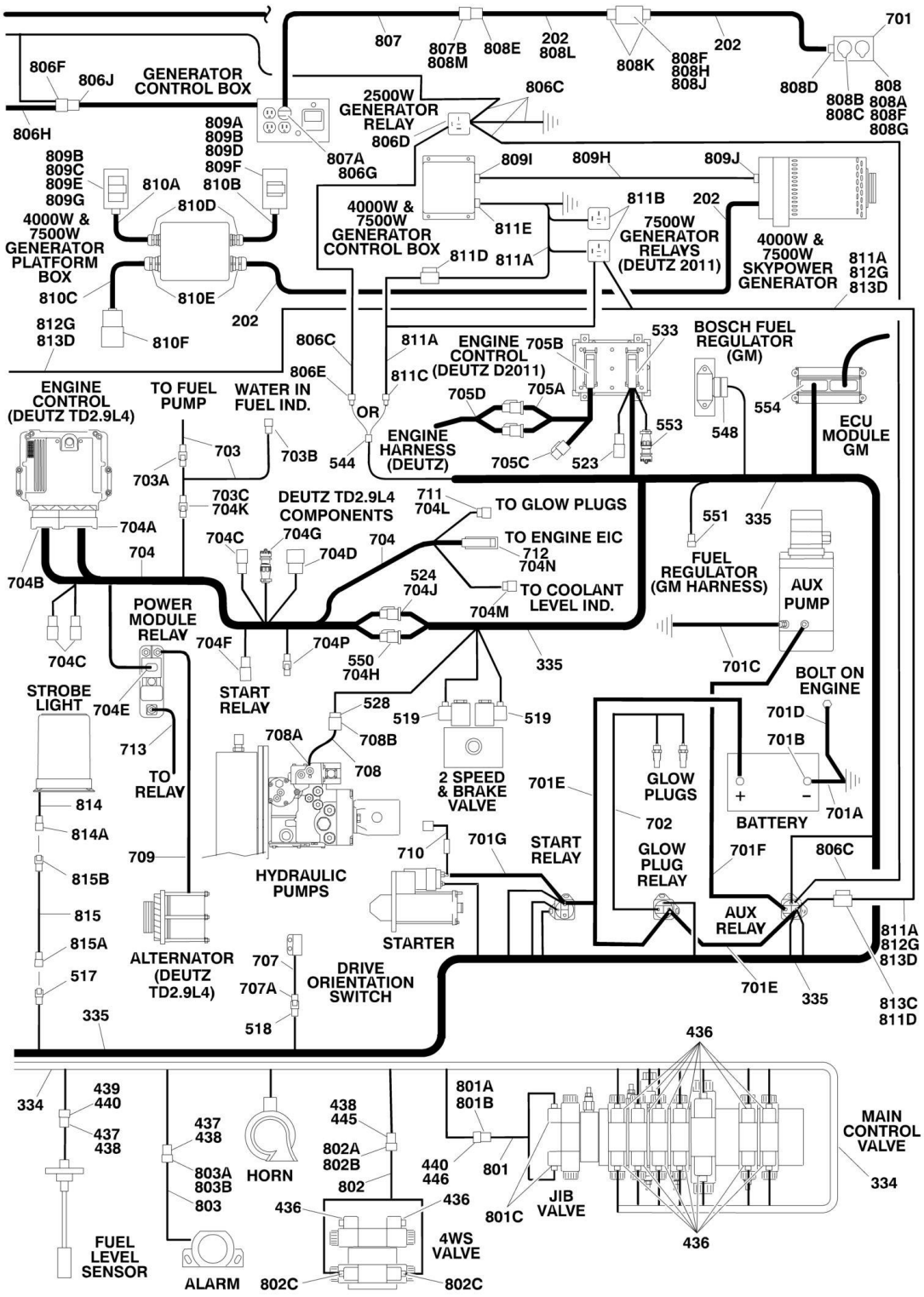

FIGURE 7-2. HARNESS COMPONENTS INSTALLATION

ITEM	PART NUMBER	QTY	DESCRIPTION	REV
		Ref	**USAGE CHART:**	
		Ref	**USA Built Machines (SN 0300171769 through 0300181890)**	
		Ref	**China Built Machines (SN B300000970 through B300002654)**	
	1001107753	Ref	**PLATFORM BOX HARNESS ASSEMBLY (WITHOUT SKYGUARD)**	F
	1001185280	Ref	**PLATFORM BOX HARNESS ASSEMBLY (WITH SKYGUARD)**	B
19	4460866	1	Connector - 19 Position	
20	4460874	1	Connector - 35 Position (Natural)	
21	4460875	1	Connector - 35 Position (Gray)	
22	4460873	1	Connector - 35 Position (Black)	
23	4460871	79	Socket, Female	
24	4460464	7	Pin, Male (16 Gauge)	
25	4460879	1	Terminal, Housing 2 Position	
26	4460887	2	Terminal, (12 Gauge)	
30	4460418	9	Connector - 6 Position	
31	4460419	27	Terminal, Female	
32	4120035	13	Base, Light	
36	4460225	1	Plug, Male- 6 Position	
37	4460227	AR	Pin, Male	
41	4460508	3	Pin, Male (12 Gauge)	
43	4460434	2	Connector - 15 Position	
44	2920129	13	Lamp, Indicator	
47	4460905	26	Plug, Seal	
48	4460267	1	Pin, Male	
50	4460884	1	Connector - 4 Position (Not Shown) (With SkyGuard - To Platform Sensor)	
50	4460944	4	Socket, Female (Not Shown)	
50	4460932	1	Connector, Female - 4 Position (Not Shown) (With SkyGuard)	
52	1001116720	4	Terminal, Female (Not Shown) (With SkyGuard - To Relays 1 & 2)	
53	1001118388	4	Terminal, Female (Not Shown) (With SkyGuard - To Relays 1 & 2)	
54	4460539	1	Receptacle, Female - 3 Position (Not Shown) (With SkyGuard - Connection X001)	
54	4460943	2	Pin, Male (Not Shown)	
55	4460536	1	Plug, Male - 3 Position (Not Shown) (With SkyGuard - Connection X002)	
55	4460944	2	Socket, Female (Not Shown)	
57	4460708	1	Connector, Female - 15 Position (Not Shown) (With SkyGuard)	
57	4460226	3	Socket, Female (Not Shown)	
		Ref	**PLATFORM BOX ASSEMBLY COMPONENTS**	
	1001145895	Ref	**Platform Box Assembly (Without SkyGuard)**	B
	1001190092	Ref	**Platform Box Assembly (With SkyGuard)**	A
103	0100048	AR	Grease, Dielectric	
106	1001117174	1	Footswitch Harness (Includes Footswitch)	
106	1060918	7.5 ft /2.3m	Cable, Electrical - 18/3	
106A	4460071	1	Connector, Strain Relief	
106B	4460226	2	Socket, Female	
106B	4460464	1	Pin, Male	
113	See Note	NSS	Controller Harness Assembly (Lift and Swing) (Note: Purchase Complete Controller)	
113A	7022819	1	Plug, Male - 8 Position (Natural)	

ITEM	PART NUMBER	QTY	DESCRIPTION	REV
113A	4460871	8	Socket, Female	
114	See Note	NSS	Controller Harness/Circuit Board Assembly (Drive and Steer) (Note: Purchase Complete Controller)	
114A	7022825	1	Plug, Male - 8 Position (Black)	
114A	4460871	7	Socket, Female	
131	See Note	NSS	Controller Harness (Speed Control) (Note: Purchase Complete Controller)	
131A	4460224	1	Receptacle, Female - 6 Position	
131A	4460226	6	Socket, Female	
136	4460428	2	Connector, Strain Relief	
137	4460470	1	Nut, Terminal	
138	4460471	1	Lockwasher, Terminal	
139	4460708	2	Connector, Female - 15 Position	
143	4922666	1	Harness, Analyzer Cable	C
143	4460226	4	Socket, Female (Not Shown - Located at J2)	
143A	4460761	1	Connector, Female - 4 Position	
143A	4460227	4	Pin, Male	
145	1001107753	1	Harness, Platform Box (Without SkyGuard) (Includes Items 19-57)	
145	1001185280	1	Harness, Platform Box (With SkyGuard) (Includes Items 19-57)	
		Ref	**BOOM CABLES INSTALLATION**	
		Ref	**Boom Cables Installation 600S**	
		Ref	**USA Built Machines:**	
	0270733	Ref	**ANSI, ANSI Export, Australian, Brazilian, CSA, Japanese Specs without 7500W Generator**	5
	0270734	Ref	**CE and Latin American Specs without 7500W Generator**	6
	0272483	Ref	**ANSI, ANSI Export, Australian, CSA, Japanese Specs with 7500W Generator**	3
	0272484	Ref	**ANSI Export, Brazilian, CE, Japanese, Latin American Specs with 7500W Generator**	3
	0275924	Ref	**ANSI, ANSI Export, CSA Specs without 7500W Generator and Arctic Package**	2
	0275925	Ref	**ANSI, ANSI Export, CSA Specs with 7500W Generator and Arctic Package**	3
		Ref	**China Built Machines:**	
	0270733	Ref	**ANSI Export, Australian and Japanese Specs without 7500W Generator**	5
	0272483	Ref	**ANSI Export and Japanese Specs with 7500W Generator**	3
	0272484	Ref	**ANSI Export, Australian and Japanese Specs with 7500W Generator**	3
	0275924	Ref	**ANSI Export Specs without 7500W Generator and Arctic Package**	2
	0275925	Ref	**ANSI Export Specs with 7500W Generator and Arctic Package**	3
	1001153301	Ref	**ANSI Export and Australian Specs with 4000W Generator**	A
		Ref	**Boom Cables Installation 660SJ**	3
		Ref	**USA Built Machines:**	
	0270736	Ref	**ANSI, ANSI Export, Australian, Brazilian, CSA, Japanese, Latin American Specs without 7500W Generator**	3
	0270735	Ref	**CE Specs without 7500W Generator**	3
	0272485	Ref	**ANSI, ANSI Export, Australian, CSA, Latin American, Japanese Specs with 7500W Generator**	2
	0272486	Ref	**ANSI Export, Brazilian, CE, Japanese Specs with 7500W Generator**	2
	0275339	Ref	**ANSI, ANSI Export, CSA Specs without 7500W Generator**	1

ITEM	PART NUMBER	QTY	DESCRIPTION	REV
			and Arctic Package	
	0275831	Ref	**ANSI, ANSI Export, CSA Specs with 7500W Generator and Arctic Package**	2
		Ref	**China Built Machines:**	
	0270736	Ref	**ANSI Export, Australian and Japanese Specs without 7500W Generator**	A
	0272485	Ref	**ANSI Export and Japanese Specs with 7500W Generator**	2
	0272486	Ref	**ANSI Export, Australian and Japanese Specs with 7500W Generator**	2
	0275831	Ref	**ANSI Export Specs with 7500W Generator and Arctic Package**	2
	0275339	Ref	**ANSI Export Specs without 7500W Generator and Arctic Package**	1
	1001153302	Ref	**ANSI Export and Australian Specs with 4000W Generator**	A
201		Ref	Harness, Main Boom Options:	
201		Ref	Harness, Main Boom 600S	
201	4922468	1	ANSI, ANSI Export, CE, CSA, Australian, Brazilian, Japanese, Latin American Spec	
201	4923657	1	ANSI, ANSI Export, CSA Spec (With Arctic Package)	
201		Ref	Harness, Main Boom 660SJ	
201	4922467	1	ANSI, ANSI Export, Australian, CE, CSA, Brazilian, Japanese, Latin American Spec	
201	4923509	1	ANSI, ANSI Export, CSA Spec (With Arctic Package)	
201	1060896	Ref	Cable Options:	
201	1060896	67 ft /20.4m	Cable 600S	
201	1060896	75 ft /22.8m	Cable 660SJ	
201	4923462	Ref	Cable Options (With Arctic Package):	
201	4923462	67 ft /20.4m	Cable 600S	
201	4923462	75 ft /22.8m	Cable 660SJ	
201A	4460465	11	Socket, Female - #16	
201A	4460865	1	Connector - 19 Position	
201A	4460509	4	Socket, Female - #12	
201A	4460466	4	Seal, Plug	
201B	4460473	1	Clamp, Cable	
201C	4460465	11	Socket, Female - #16	
201C	4460509	4	Socket, Female - #12	
202		Ref	Harness, Generator Options: (Does not include plug ends)	
202		Ref	Harness, Generator 600S without 7500W Generator	
202	4922889	AR	ANSI, ANSI Export, Australian, Brazilian, CSA, Japanese Specs (69.5ft/21.8m of 12/3 ANSI Spec Cable P/N 1060494)	
202	4922884	AR	CE and Latin American Specs (69.5ft/21.8m of 12/3 CE Spec Cable P/N 1060461)	
202	4923660	AR	ANSI, ANSI Export, CSA Specs (69.5ft/21.8m of 12/3 Cable P/N 4923463) (With Arctic Package)	
202	1001153842	AR	Harness, Generator 600S with 4000W Generator (83ft/25.3m of 10/4 Cable p/n 1001131968)	
202	4922792	AR	Harness, Generator 600S with 7500W Generator (83ft/25.3m of 8/5 Cable P/N 1060945) (For Arctic Machines p/n was 4923658)	
202		Ref	Harness, Generator 660SJ without 7500W Generator	

ITEM	PART NUMBER	QTY	DESCRIPTION	REV
202	4922888	AR	ANSI, ANSI Export, Australian, Brazilian, CSA, Japanese, Latin American Specs (77ft/23.5m of 12/3 ANSI Spec Cable P/N 1060494)	
202	4922886	AR	CE Specs (77ft/23.5m of 12/3 CE Spec Cable P/N 1060461)	
202	4923510	AR	ANSI, ANSI Export, CSA Specs (77ft/23.5m of 12/3 Cable P/N 4923463) (With Arctic Package)	
202	1001153844	AR	Harness, Generator 660SJ with 4000W Generator (90.5ft/27.6m of 10/4 Cable p/n 1001131968)	
202	4922791	AR	Harness, Generator 660SJ with 7500W Generator (90.5ft/27.6m of 8/5 Cable P/N 1060945) (For Arctic Machines p/n was 4923630)	
203		Ref	Cable, Limit Switch Options:	
203		Ref	Cable, Limit Switch 600S	
203	1061026	1	ANSI, ANSI Export, Australian, Brazilian, CE, CSA, Latin American, Japanese Specs (25.5ft/7.8m of 18/2 Cable P/N 1060680)	
203	4923659	1	ANSI, ANSI Export, CSA Spec (25.5ft/7.8m of 18/2 Cable P/N 4923466) (With Arctic Package)	
203	1061027	2	ANSI, ANSI Export, Australian, CSA, Brazilian, Japanese Specs (13.5ft/4.2m of 18/2 Cable P/N 1060680)	
203		Ref	Cable, Limit Switch 660SJ	
203	1061027	1	ANSI, ANSI Export, Australian, Brazilian, CSA, Latin American, Japanese Specs (13.5ft/4.2m of 18/2 Cable P/N 1060680)	
203	1061026	1	Brazilian, CE, Japanese Specs (25.5ft/7.8m of 18/2 Cable P/N 1060680)	
203	4923511	1	ANSI, ANSI Export, CSA Spec (13.5ft/4.2m of 18/2 Cable P/N 4923466) (With Arctic Package)	
204	4460865	1	Connector - 19 Position	
205	4460466	4	Seal, Plug	
206	4460473	1	Clamp, Cable	
207	4100026	4 ft/1.2m	Sleeve, Nylon (Required on 600S Only - Not Shown)	
		Ref	**GROUND CONTROL BOX COMPONENTS**	
302	0100048	AR	Grease, Dielectric	
325	4460426	2	Connector, Strain Relief	
326	4460470	1	Nut, Terminal	
327	4460471	1	Lockwasher, Terminal	
329	4460526	1	Connector, Strain Relief	
334	4923206	1	Valve Harness Assembly (See 436-446 for Breakdown)	C
335		Ref	Engine Harness Assembly (See 517-554 for Breakdown):	
335	1001110361	1	Deutz D2011 Engine Machines	
335	1001145046	1	Deutz TD2.9L4 Engine Machines	
335	1001110359	1	GM Engine Machines **(SN 0300171769 through 0300226220)**	
335	1001154388	1	GM Engines Machines **(SN 0300226221 through 0300235167)**	
336		Ref	Ground Control Box Harness Assembly (See Items 616-663 for Breakdown)	
336	1001108602	1	Deutz D2011 Engine Machines	
336	1001145993	1	Deutz TD2.9L4 Engine Machines	
336	1001108602	1	GM Engine Machines	
337		Ref	Ground Control Box Wiring Diagram (Not Shown)	
337	1001110364	1	Deutz D2011 Engine Machines	F
337	1001145995	1	Deutz TD2.9L4 Engine Machines	A
337	1001110363	1	GM Engine Machines	E
337A	2920129	AR	Bulb, Light	

ITEM	PART NUMBER	QTY	DESCRIPTION	REV
337B	4460708	AR	Receptacle, Female - 15 Position	
337B	4460226	AR	Socket, Female	
337B	4922637	1	Harness, Jumper (Not Shown)	
337B	4922636	1	Harness, Jumper (Not Shown)	
337C	1001173590	1	Fuse Assembly - 30 Amp	
337C	2400065	1	Fuse, 30Amp	
337C	2400066	1	Fuse, Holder with Cover	
337D	4460894	1	Plug, Male - 6 Position	
337D	4460892	1	Receptacle, Female - 6 Position	
338	4460496	1	Lockwasher, Terminal	
339	4460497	1	Nut, Terminal	
341	1001106736	1	Cap, Dust	
	4923206	Ref	**VALVE HARNESS ASSEMBLY**	C
436	4460880	15	DIN Connector	
437	4460320	2	Plug, Male - 2 Position	
438	4460267	5	Pin, Male	
439	4460424	1	Receptacle, Female - 2 Position	
440	4460268	5	Socket, Female	
441	4460871	28	Socket, Female	
445	4460326	1	Plug, Male - 3 Position	
446	4460445	1	Receptacle, Female - 3 Position	
		Ref	**ENGINE HARNESS ASSEMBLIES**	
	1001110361	Ref	**Deutz D2011 Engine Machines**	A
	1001145046	Ref	**Deutz TD2.9L4 Engine Machines**	D
	1001110359	Ref	**GM Engine Machines**	B
	1001154388	Ref	**GM Engine Machines (SN 0300226221 through 0300235167)**	C
517	4460424	1	Receptacle, Female - 2 Position	
517	4460268	2	Socket, Female	
518	4460424	1	Receptacle, Female - 2 Position	
518	4460226	2	Socket, Female	
519	4460880	2	DIN Connector without Diode	
523	4461070	1	Receptacle, Female With Resistor (3 Position) (Deutz D2011 Engine Only)	
523	4461095	1	Plug, Male - 3 Position (Deutz D2011 Engine Only)	
523	4460944	3	Socket, Female (Deutz D2011 Engine Only)	
524	4460931	1	Connector, Male - 8 Position (Deutz TD2.9L4 Engines Only	
524	4460464	4	Pin, Male	
524	4460466	4	Seal, Plug	
528	4460460	1	Connector, Male - 4 Position	
528	4460457	AR	Terminal, Female	
528	4460458	AR	Seal, Terminal	
531	4460539	1	Connector, Male - 3 Position	
531	4460944	3	Socket, Female	
533	4461052	1	Connector, Receptacle - 25 Position (Deutz D2011 Engine Only)	
533	4461005	5	Terminal (Gold) (Deutz D2011 Engine Only)	
533	4461006	5	Seal, Terminal (Deutz D2011 Engine Only)	
533	4461060	2	Terminal (Tin) (Deutz D2011 Engine Only)	
533	4461054	2	Seal, Terminal (Deutz D2011 Engine Only)	
533	4461053	1	Cover, Plug (Deutz D2011 Engine Only)	
533	4461008	AR	Plug, Hole (Deutz D2011 Engine Only)	
539	4460871	AR	Socket, Female	
544	4461157	1	Receptacle, Female - 2 Position	

ITEM	PART NUMBER	QTY	DESCRIPTION	REV
544	4460979	2	Pin, Male	
544	4460458	2	Seal, Terminal	
548	4461121	1	Plug, Male - 4 Position (GM Engine Only)	
548	4461122	NLA	Socket, Female (GM Engine Only) (use p/n 1001126484)	
548	4461123	NLA	Seal, Terminal (GM Engine Only) (use p/n 1001126485)	
550	4460899	1	Connector, Male - 6 Position (Deutz TD2.9L4 Engines Only	
550	4460464	5	Pin, Male	
550	4460943	5	Pin, Male (Gold)	
550	4460466	1	Seal, Plug	
551	4461124	1	Receptacle, Female - 4 Position (GM Engine Only)	
551	4460693	4	Pin, Male (GM Engine Only)	
551	4460608	4	Seal, Terminal (GM Engine Only)	
551	4461161	1	Lock, Terminal (GM Engine Only)	
553	2902443	1	Kit, Receptacle (Deutz D2011 Engine Only)	
553	4461071	8	Terminal, Female (Gold) (Deutz D2011 Engine Only)	
553	4461072	1	Connector, Flange Mount (Deutz D2011 Engine Only)	
553	4461073	1	Connector, Dust Cap (Deutz D2011 Engine Only)	
553	4461074	1	Connector, Shell (Deutz D2011 Engine Only)	
554	4461109	1	Plug, Male - 16 Position (GM Engine Only)	
554	4461111	7	Pin, Male (GM Engine Only)	
554	4461113	7	Seal, Terminal (GM Engine Only)	
554	4461222	9	Plug, Cavity (GM Engine Only)	
		Ref	**GROUND CONTROL HARNESS ASSEMBLY**	
	1001108602	Ref	**Deutz D2011 Engine Machines**	E
	1001145993	Ref	**Deutz TD2.9L4 Engine Machines**	A
	1001108602	Ref	**GM Engine Machines**	C
616	4460536	1	Connector, Female - 3 Position	
616	4460943	3	Pin, Male	
621	3990010	2	Diode - 6 Amp (Not Shown)	
624	4460434	2	Plug, Male 15 - Position	
624	4460227	AR	Pin	
626	4460873	1	Plug, Male - 35 Position (Black)	
626	4460871	AR	Socket, Female	
626	4460905	AR	Plug, Seal	
628	4120035	6	Base, Light	
628	4460634	7	Terminal (16 Gauge)	
628	4460635	5	Terminal (12 Gauge)	
634	4460418	AR	Connector, Female - 6 Position	
634	4460419	AR	Socket, Female	
638	4460871	9	Socket, Female	
639	4460876	1	Plug, Male - 35 Position (Blue)	
639	4460871	AR	Socket, Female	
639	4460905	AR	Plug, Seal	
643	4460866	1	Connector - 19 Position	
643	4460464	10	Pin, Male (16 Gauge)	
643	4460508	3	Pin, Male (12 Gauge)	
644	4460878	1	Housing, Terminal - 4 Position	
644	4460887	3	Terminal (12 Gauge)	
650	4460761	1	Connector, Female 4 - Position	
650	4460227	4	Pin, Male	
655	8229242	2	Fuse 5A	

ITEM	PART NUMBER	QTY	DESCRIPTION	REV
655	2400060	2	Holder, Fuse	
658	1001106339	1	Connector, Male - 14 Position	
658	4460871	2	Socket, Female	
658	4460905	AR	Plug, Seal	
659	1001106340	1	Connector, Male - 14 Position	
659	4460871	5	Socket, Female	
660	4460874	1	Connector, Natural	
660	4460871	10	Socket, Female	
660	4460905	AR	Plug, Seal	
661	4460875	1	Connector, Gray	
661	4460871	2	Socket, Female	
662	1001112612	1	Connector - 9 Position	
662	4460871	2	Socket, Female	
663	4460884	1	Connector - 4 Position (Not Shown - To Telematics)	
663	1001192401	1	Cap, Dust (Not Shown)	
663	4460465	4	Socket, Female (Not Shown)	
		Ref	**STANDARD HARNESS COMPONENTS**	
701		Ref	Battery Cable Kit Options:	
701	1001151565	1	Deutz D2011 Engine Machines	A
701	1001144440	1	Deutz TD2.9L4 Engine Machines without Arctic Package	D
701	1001143736	1	Deutz TD2.9L4 Engine Machines with Arctic Package	E
701	2902531	1	GM Engine Machines	A
701A		Ref	Cable, Battery (Black) Options (Battery - to Ground):	
701A	7027051	1	Deutz D2011 Engines Machines	
701A	7027063	1	Deutz TD2.9L4 Engine Machines without Arctic Package	
701A	7027084	1	Deutz TD2.9L4 Engine Machines with Arctic Package	
701A	7016822	1	GM Engine Machines	
701B	8270147	1	Terminal, Battery (Deutz Engines Only)	
701C		Ref	Cable, Battery (Black) Options (Aux Pump to Ground):	
701C	7027052	1	Deutz D2011 Engines Machines	
701C	7027064	1	Deutz TD2.9L4 Engine Machines without Arctic Package	
701C	7027085	1	Deutz TD2.9L4 Engine Machines with Arctic Package	
701C	7027003	1	GM Engine Machines	
701D		Ref	Cable (Black) Options (Engine to Ground):	
701D	7027053	1	Deutz D2011 Engines Machines	
701D	7027065	1	Deutz TD2.9L4 Engine Machines without Arctic Package	
701D	7027086	1	Deutz TD2.9L4 Engine Machines with Arctic Package	
701D	Not Required	1	GM Engine Machines	
701E		Ref	Cable (Red) Options (Battery + to Relays):	
701E	7027054	1	Deutz D2011 Engines Machines	
701E	7027067	1	Deutz TD2.9L4 Engine Machines without Arctic Package	
701E	7027088	1	Deutz TD2.9L4 Engine Machines with Arctic Package	
701E	7027015	1	GM Engine Machines	
701F		Ref	Cable (Red) Options (Aux Relay to Aux Pump)	
701F	7027055	1	Deutz D2011 Engines Machines	
701F	7027066	1	Deutz TD2.9L4 Engine Machines without Arctic Package	
701F	7027087	1	Deutz TD2.9L4 Engine Machines with Arctic Package	
701F	7027016	1	GM Engine Machines	
701G		Ref	Cable (Red) Options (Relay to Starter):	
701G	7027054	1	Deutz Engines Machines	
701G	7027017	1	GM Engines Machines	

ITEM	PART NUMBER	QTY	DESCRIPTION	REV
702		Ref	Harness, Glow Plugs Options:	
702	4923379	1	Deutz D2011 Engines Machines	B
702	Not Required	1	GM Engine Machines	
703	1001222666	AR	Fuel Pump Harness with Ring Terminals (Deutz TD2.9L4 Engines Only)	A
703	1001144660	AR	Fuel Pump Harness with Push-on Terminals (Deutz TD2.9L4 Engines Only)	E
703A	4460897	1	Receptacle, Female - 2 Position	
703A	4460941	2	Pin, Male	
703A	4460891	1	Plug, Male - 2 Position	
703A	4460942	AR	Socket, Female	
703A	8220051	AR	Terminal **(SN B300002081 through B300002654)**	
703B	1001116983	1	Receptacle, Female - 2 Position	
703B	1001116710	2	Terminal	
703B	4461054	2	Seal	
703C	4460932	1	Receptacle, Female - 4 Position	
703C	4460941	2	Pin, Male	
703C	4460464	2	Pin, Male	
704	1001143726	1	Deutz TD2.9L4 Engine Harness	H
704A	1001133956	1	Connector (Includes Cover, Locks and Retention Plate)	
704A	1001126352	6	Terminal	
704A	1001126353	6	Seal, Terminal	
704A	1001126384	19	Terminal	
704A	1001126351	3	Terminal	
704A	1001126356	63	Plug, Seal	
704A	1001126357	2	Plug, Seal	
704B	1001133957	1	Connector (Includes Cover, Locks and Retention Plate)	
704B	1001126384	17	Terminal	
704B	1001126351	13	Terminal	
704B	1001126356	19	Plug, Seal	
704B	1001126357	11	Plug, Seal	
704C	4461070	3	Receptacle, Female With Resistor (3 Position)	
704C	4461095	6	Plug, Male - 3 Position	
704C	4460944	6	Socket, Female	
704C	4460466	2	Seal, Plug	
704D	80484084	1	Receptacle, Female - 8 Position	
704D	8229242	1	Fuse - 5Amp	
704D	80983191	1	Fuse - 10Amp	
704D	1001147264	1	Cap	
704D	1001116727	8	Plug	
704D	4460458	4	Seal	
704E	1001116952	1	Plug, Male - 2 Position	
704E	4460465	2	Socket, Female	
704F	1001138110	1	Plug, Male - 2 Position	
704F	1001138111	2	Socket, Female	
704F	1001138113	2	Seal	
704G	2902443	1	Kit, Receptacle	
704G	4461071	8	Terminal, Female (Gold)	
704G	4461072	1	Connector, Flange Mount	
704G	4461073	1	Connector, Dust Cap	
704G	4461074	1	Connector, Shell	
704H	4460894	1	Plug, Male - 6 Position	

ITEM	PART NUMBER	QTY	DESCRIPTION	REV
704H	4460465	3	Socket, Female	
704H	4460944	2	Socket, Female	
704H	4460466	1	Seal, Plug	
704J	4460930	1	Plug, Male - 8 Position	
704J	4460465	1	Socket, Female	
704J	4460466	7	Seal, Plug	
704K	4460884	1	Plug, Male - 4 Position **(SN 0300171769 through 0300181890)**	
704K	4460884	1	Plug, Male - 4 Position **(SN B300000970 through B300001655)**	
704K	1001220379	1	Plug, Male - 4 Position **(SN B300001656 through B300002654)**	
704K	4460465	2	Socket, Female	
704K	4460942	2	Socket, Female	
704L	1001142938	1	Plug, Male - 2 Position	
704L	1001142940	2	Terminal, Female	
704L	1001142941	2	Seal	
704M	1001133714	1	Plug, Male - 4 Position	
704M	1001133715	3	Terminal, Female	
704M	1001135650	3	Seal	
704M	1001135651	NLA	Plug, Cavity (Use p/n 4461008)	
704N	1001126362	1	Receptacle, Female - 62 Position	
704N	1001126363	33	Terminal	
704N	1001126364	33	Seal	
704N	1001126391	23	Plug	
704N	4461008	4	Plug, Cavity	
704N	1001126365	2	Terminal	
704N	4461054	2	Seal	
704P	4460891	1	Plug, Male - 2 Position (USA Built Machines) **(SN 0300181891 through 0300235167)**	
704P	4460465	2	Socket, Female	
704P	1001171403	1	Resistor Assembly	
704P	4460897	1	Connector, Female - 2 Position	
705		Ref	Deutz Engine Harness Components (Deutz Engine Machines Only) (Note: See 705A-705D for Available Components)	
705A	7027796	1	Deutz Engine Harness	
705B	See Note	NSS	Receptacle, Female - 25 Position (Note: Not Available -Purchase Complete Harness)	
705C	70004060	1	Plug-In, Connector	
705D	70001872	1	Deutz Engine Harness (For other replacement parts refer to Deutz engine dealer)	
706	See Note	NLA	GM Engine Harness (GM Engine Machines Only) (Note: Not Available for Purchase)	
707	4360517	1	Switch, Proximity	
707A	4460320	1	Connector - 2 Position	
707A	4460227	2	Pin, Male	
708	See Note	1	Pump Harness (Note: Not Available for Purchase)	
708A	7007497	1	Plug (Pump End)	
708B	7007498	1	Plug (Engine Harness End)	
709	1001143907	1	Alternator Power Cable (Deutz TD2.9L4 Engines)	
709	1001098764	1	Boot, Red (Deutz TD2.9L4 Engines)	
709	70004103	1	Alternator Interconnect Cable (Deutz D2011 Engines) (Not Shown - Connects to Item 705D)	
710	70004271	1	Starter Interconnect Cable (Deutz D2011 Engines) (Connects to	

ITEM	PART NUMBER	QTY	DESCRIPTION	REV
			Item 705D)	
711	70025231	1	Harness, Glow Plug (Deutz TD2.9L4 Engines)	
711	70025233	1	Plug, Connect (Deutz TD2.9L4 Engines)	
712	70025077	1	Harness, Engine (Deutz TD2.9L4 Engines)	
713	1001141304		Harness, Glow Plug Relay (Deutz TD2.9L4 Engine Machines)	
		Ref	**OPTIONAL HARNESS COMPONENTS**	
801	4921927	1	Jib Valve Harness (660SJ Only)	H
801A	4460326	1	Plug, Male - 3 Position	
801B	4460267	3	Pin, Male	
801C	4460499	2	Connector, DIN with Diode	
802	4921928	1	4WS Valve Harness	3
802A	4460268	3	Socket, Female	
802B	4460445	1	Connector, Female - 3 Position	
802C	4460499	2	Connector, DIN with Diode	
803	0257887	1	Alarm Harness (Includes Alarm)	
803	0140032	1	Alarm	
803	2820035	6 in/15cm	Loom	
803A	4460424	1	Plug, Male - 2 Position	
803B	4460268	2	Socket, Female	
805	See Note	NSS	Headlight and Taillight/Chassis Illumination Harness (Note: Not Available for Purchase)	
805	1060341	Ref	Cable, Electrical 16/2 Options:	
805	1060341	37 ft /11.3m	Headlights and Taillights	
805	1060341	40 ft /12.2m	Chassis Illumination Lights	
805A	3740049	1	Relay	
805A	4460259	3	Terminal	
805A	4460260	4	Housing, Terminal	
805A	4460297	1	Terminal	
805A	4922643	1	Lights Harness for Ground Control Box	1-A
805A	4460226	2	Socket, Female	
806		Ref	2500W Generator Electrical Components	
806	1001112743	AR	50Hz (Deutz Engines)	B
806	1001112588	AR	60Hz (Deutz Engines)	B
806	4933350	AR	60Hz (GM Engine)	B
806A	4922641	1	Harness - On/Off Switch	C
806B	4460226	2	Socket, Female	
806C		Ref	Harness, Powermite Control Box to Relay Options:	
806C	1001112589	1	Deutz Engines	A
806C	4923445	1	GM Engine	A
806D	4460374	1	Connector, Seal Relay	
806D	4460705	4	Terminal	
806E	4460742	1	Connector, Male - 2 Position	
806E	4460743	2	Socket, Female	
806E	4460458	2	Seal	
806F	4460321	1	Connector, Male - 4 Position (60Hz Only)	
806F	4460268	3	Socket, Female (60Hz Only)	
806F	4460906	1	Socket, Female (60Hz Only)	
806G	4460027	1	Receptacle, Twist Lock (110V Only)	
806H	7020193	1	Harness, Generator Power	
806J	4460961	1	Connector, Female - 4 Position	

ITEM	PART NUMBER	QTY	DESCRIPTION	REV
806J	4460705	4	Pin, Male	
807		Ref	Generator to Rear of Boom Harness Options:	
		Ref	**Note: Harness used to connect AC at platform harness to generator receptacle to power platform receptacle.**	
807	4921827	1	110V (ANSI, ANSI Export, Latin America and Japanese Specs)	2
807	1060494	20 ft/6m	Cable, Electrical - 12/3	
807A	4460205	1	Plug, Male	
807A	4460027	1	Receptacle, Twist Lock (110V Only)	
807B	4460134	1	Receptacle, Female	
808		Ref	AC to Platform Receptacle Components Options:	
808	0256113	Ref	110V/60Hz GFI Receptacle (ANSI, ANSI Export and Japanese Specs)	B
808	0256201	Ref	110V/50Hz Receptacle (Plug and Receptacle Supplied Locally) (Australian, Brazilian, Latin America Specs)	B
808	0257175	Ref	220V Receptacle (ANSI and ANSI Export Specs)	B
808		Ref	CE Specs Options Only (CE Spec are USA Built Machines):	
808		Ref	**Without Generator (CE Specs)**	
808	0256201	Ref	110V/50Hz Receptacle (Plug and Receptacle Supplied Locally)	B
808	0275455	NLA	220V with CEE7 Post Ground Receptacle and Plug and Circuit Breaker (2x4 Box) **(SN 0300171769 through 0300181890, SN B300000100 through B300000934)**	G
808	1001162361	Ref	220V with CEE7 Post Ground Receptacle and Plug and Circuit Breaker (2x4 Box) **(SN B300000935 through B300002654)**	C
808	0275456	NLA	220V with CEE7 Side Ground Receptacle and Plug and Circuit Breaker (2x4 Box) **(SN 0300171769 through 0300181890, SN B300000100 through B300000934)**	E
808	1001162353	Ref	220V with CEE7 Side Ground Receptacle and Plug and Circuit Breaker (2x4 Box) **(SN B300000935 through B300002654)**	C
808	0275659	Ref	220V with AFSINT 107 Keyed Ground Receptacle and Plug and Circuit Breaker (2x4 Box)	G
808	0275235	Ref	110V with IEC Yellow Receptacle and Plug and Circuit Breaker	E
808	0275254	Ref	220V with IEC Blue Receptacle and Plug and Circuit Breaker	E
808	0275237	NLA	220V with CEE7 Post Ground Receptacle and Plug and Circuit Breaker (70mm x 70mm Box)	E
808	0275253	NLA	220V with CEE7 Side Ground Receptacle and Plug and Circuit Breaker (70mm x 70mm Box) (Use p/n 1001153312)	F
808		Ref	**With Generator (CE Specs)**	
808	1001100390	Ref	220V with CEE7 Post Ground Receptacle and Plug and Circuit Breaker (2x4 Box)	H
808	1001100391	Ref	220V with CEE7 Side Ground Receptacle and Plug and Circuit Breaker (2x4 Box)	H
808	1001100392	Ref	220V with AFSINT 107 Keyed Ground Receptacle and Plug and Circuit Breaker (2x4 Box)	G
808	1001100394	Ref	220V with IEC Blue Receptacle and Plug and Circuit Breaker	E
808	1001100395	Ref	220V with CEE7 Post Ground Receptacle and Plug and Circuit Breaker (70mm x 70mm Box)	E
808	1001100396	Ref	220V with CEE7 Side Ground Receptacle and Plug and Circuit Breaker (70mm x 70mm Box)	E
808A		Ref	Box, Switch Options:	
808A	0860038	1	0256113 & 0257175 Installations	
808A	Not Required	1	0256201 Installation (Purchase Locally)	
808A	0861731	1	0275455, 0275456, 0275659, 1001100390, 1001100391,	

ITEM	PART NUMBER	QTY	DESCRIPTION	REV
			1001100392, 1001162353 & 1001162361 Installations	
808A	0861781	1	0275235, 0275254, 1001100393 & 1001100394 Installations	
808A	0861782	NLA	0275237, 0275253, 1001100395, 1001100396 & 1001153312 Installations (Note: Use p/n 1001100344 CEE7 Side Ground Service Kit or p/n 1001100343 CEE7 Post Ground Service Kit. Kit include Box p/n 1001141967 & items 808B, 808C, 808E & 808M)	
808A	1001141967	1	1001100343, 1001100344, 1001141970 & 1001141971 Kits	
808B		Ref	Receptacle Options:	
808B	4460346	1	0256113 Installation	
808B	4460125	1	0257175 Installation	
808B	Not Required	1	0256201 Installation (Purchase Locally)	
808B	4461244	1	0275455 & 1001100390 & 1001162361 Installations	
808B	4461245	1	0275456 & 1001100391 & 1001162353 Installations	
808B	4461246	1	0275659 & 1001100392 Installations	
808B	4461198	1	0275235 & 1001100393 Installations	
808B	4461201	1	0275254 & 1001100394 Installations	
808B	4461204	NLA	0275237 & 1001100395 Installations (Use p/n 1001100343)	
808B	4461207	NLA	0275253, 1001100396 & 1001153312 Installations (Use p/n 1001100344)	
808B	1001141968	1	1001100343 & 1001141971 Kits	
808B	1001141969	1	1001100344 & 1001141970 Kits	
808C		Ref	Shield, Cover Options:	
808C	1001110873	1	0256113 Installation	
808C	4060092	1	0257175 Installation	
808C	Not Required	1	0256201 Installation (Purchase Locally)	
808C	4461244	1	0275455 & 1001100390 & 1001162361 Installations	
808C	4461245	1	0275456 & 1001100391 & 1001162353 Installations	
808C	4461246	1	0275659 & 1001100392 Installations	
808C	4461198	1	0275235 & 1001100393 Installations	
808C	4461201	1	0275254 & 1001100394 Installations	
808C	4461204	NLA	0275237 & 1001100395 Installations (Use p/n 1001100343)	
808C	4461207	NLA	0275253, 1001100396 & 1001153312 Installations (Use p/n 1001100344)	
808C	1001141968	1	1001100343 & 1001141971 Kits	
808C	1001141969	1	1001100344 & 1001141970 Kits	
808D		Ref	Connector, Strain Relief Options:	
808D	4460071	1	0256113 & 0257175 Installations	
808D	Not Required	1	0256201 Installation (Purchase Locally)	
808D	4460968	1	0275456, 0275235, 0275254, 0275237, 0275253, 1001100393, 1001100394, 1001100395, 1001100396 & 1001153312 Installations	
808D	4460968	1	0275455, 0275659, 1001100390, 1001100391, 1001100392, 1001100393, 1001152353 & 1001162361 Installations **(SN 0300171769 through 0300181890, SN B300000100 through B300001621)**	
808D	4460662	1	0275455, 0275659, 1001100390, 1001100391, 1001100392, 1001100393, 1001152353 & 1001162361 Installations **(SN B300001622 through B300002654)**	
808E		Ref	Plug, Male Options:	
808E	4460205	1	0256113 Installation	

ITEM	PART NUMBER	QTY	DESCRIPTION	REV
808E	4460233	1	0257175 Installation	
808E	See Note	1	0256201 Installation (Note: Not Available - Purchase Locally)	
808E	4461202	NLA	0275237, 0275455, 1001100390 & 1001100395 Installations & 1001100343 & 1001141971 Kits (Use p/n 4641205)	
808E	4461205	1	0275453, 0275256, 1001100391, 1001100396, 1001162353 & 1001162361 Installations & 1001100344 & 1001141970 Kits	
808E	4461249	1	0275659 & 1001100392 Installations	
808E	4461196	1	0275235 & 1001100393 Installations	
808E	4461199	1	0275254 & 1001100394 Installations	
808F		Ref	Hardware Options:	
808F	0641407	AR	Bolt 1/4in - 20NC x 7/8in	
808F	0641410	AR	Bolt 1/4in - 20NC x 1-1/4in	
808F	0641416	AR	Bolt 1/4in - 20NC x 2in	
808F	0700408	AR	Screw M4 x 16mm	
808F	3290405	AR	Locknut M4	
808F	3311405	AR	Locknut 1/4in - 20NC	
808F	4711400	AR	Flatwasher 1/4in (Narrow)	
808F	4811400	AR	Flatwasher M4	
808F	1320149	AR	Clamp, Stauff	
808F	0100011	AR	Compound, Locking	
808G		Ref	Bracket, Receptacle Box Mounting Options:	
808G	Not Required	0	0256113, 0257175 & 0256201 Installations	
808G	0903484	1	0275455, 0275456, 0275659, 0275235, 0275254, 0275237, 0275253, 1001100390, 1001100391, 1001100392, 1001100393, 1001100394, 1001100395, 100110039, 1001153312 & 1001162361 Installations **(SN 0300171769 through 0300181890)**	
808G	0903484	1	0275455, 0275456, 0275659, 0275235, 0275254, 0275237, 0275253, 1001100390, 1001100391, 1001100392, 1001100393, 1001100394, 1001100395, 100110039, 1001153312, 1001162353 & 1001162361 Installations **(SN B300000100 through B300001178)**	
808G	1001193018	1	0275455, 0275456, 0275659, 0275235, 0275254, 0275237, 0275253, 1001100390, 1001100391, 1001100392, 1001100393, 1001100394, 1001100395, 100110039, 1001153312, 1001162353 & 1001162361 Installations **(SN B300001179 through B300002654)**	
808H		Ref	Bracket, Circuit Breaker Mounting Options:	
808H	Not Required	0	0256113, 0257175 & 0256201 Installations	
808H	1001154592	1	0275455, 0275456, 0275659, 0275235, 0275254, 0275237, 0275253, 1001100390, 1001100391, 1001100392, 1001100393, 1001100394, 1001100395, 1001100396, 1001162353 & 1001162361 Installations	
808H	1001152486	1	1001153312 Installation	
808J		Ref	Kit, Box and Breaker (Required Only on CE Spec Installations Except 0256201 Installation):	
808J	2902549	AR	Without Generator **(SN 0300171769 through 0300181890)**	E
808J	2902549	1	Without Generator **(SN B300000100 through B300000934)**	E
808J	1001152486	1	Without Generator **(SN B300000935 through B300002654)**	B
808J	1001096070	AR	With 110V Generator	E
808J	1001109554	AR	With 220V Generator	C

ITEM	PART NUMBER	QTY	DESCRIPTION	REV
808J		Ref	Circuit Breaker Options:	
808J		Ref	Without Generator	
808J	1001109475	NLA	Circuit Breaker, 16Amp (Use p/n 1001181045) (2902549 Kit)	
808J	1001189172	1	Circuit Breaker, 16Amp (1001152486 Kit)	
808J	1001109482	NLA	Circuit Breaker, 30mAmp (Use p/n 1001181045) (2902549 Kit)	
808J	1001189171	1	Circuit Breaker, 30Amp (1001152486 Kit)	
808J		Ref	With 110V Generator	
808J	1001109475	NLA	Circuit Breaker, 16Amp (Use p/n 1001181045)	
808J	1001109482	NLA	Circuit Breaker, 30mAmp (Use p/n 1001181045)	
808J		Ref	With 220V Generator	
808J	1001109477	NLA	Circuit Breaker, 10Amp (Use p/n 1001181046)	
808J	1001109482	NLA	Circuit Breaker, 30mAmp (Use p/n 1001181046)	
808J	0861880	NSS	Breaker Box (Purchase Kit)	
808J	1001152483	NSS	Breaker Box (Purchase Kit)	
808J	4460956	1	Barrier, Terminal Block End	
808J	4460957	1	Block, Terminal	
808K		Ref	Connector, Strain Relief Options (Required Only on CE Spec Installations Except 0256201 Installation):	
808K	4460633	2	M20 Thread	
808K	1001097150	2	M25 Thread	
808L	1060908	AR	Cable, Extension (Required Only on CE Spec Installations Except 0256201 Installation)	
808L	1060908	6 ft/1.8m	Without Generator	
808L	1060908	12 ft/3.6m	With Generator	
808M		Ref	Receptacle, Female Options:	
808M	4461203	1	1001100390 & 1001100395 Installations & 1001100343 & 1001141971 Kits	
808M	4461206	1	1001100391 & 1001100396 Installations & 1001100344 & 1001141970 Kits	
808M	4461250	1	1001100392 Installation	
808M	4461197	1	1001100393 Installation	
808M	4461200	1	1001100394 Installation	
808N		Ref	Receptacle Box Kit Options (Not Shown):	
808N	0275452	1	Receptacle Box Kit (220V CEE7 Post Ground) (Includes Items 808A, 808B, 808C & 808E) (0275455 & 1001162361Installations)	C
808N	1001100345	1	Receptacle Box Kit (220V CEE7 Post Ground) (Includes Items 808A-808C, 808E & 808M) (1001100390 Installation)	C
808N	0275453	1	Receptacle Box Kit (220V CEE7 Side Ground) (Includes Items 808A, 808B, 808C & 808E) (0275456 & 1001162353 Installation)	1
808N	1001100347	1	Receptacle Box Kit (220V CEE7 Side Ground) (Includes Items 808A-808C, 808E & 808M) (1001100391 Installation)	3
808N	0275454	1	Receptacle Box Kit (220V AFSINT 107 Keyed Ground) (Includes Items 808A, 808B, 808C & 808E) (0275659 Installation)	1
808N	1001100346	1	Receptacle Box Kit (220V AFSINT 107 Keyed Ground) (Includes Items 808A-808C, 808E & 808M) (1001100392 Installation)	2
808N	0275216	1	Receptacle Box Kit (110V IEC Yellow) (Includes Items 808A, 808B, 808C & 808E) (0275235 Installation)	1
808N	1001100341	1	Receptacle Box Kit (110V IEC Yellow) (Includes Items 808A-808C, 808E & 808M) (1001100393 Installation)	2

ITEM	PART NUMBER	QTY	DESCRIPTION	REV
808N	0275217	1	Receptacle Box Kit (220V IEC Blue) (Includes Items 808A, 808B, 808C & 808E) (0275254 Installation)	1
808N	1001100342	1	Receptacle Box Kit (220V IEC Blue) (Includes Items 808A-808C, 808E & 808M) (1001100394 Installation)	2
808N	0275218	NLA	Receptacle Box Kit (220V CEE7 Post Ground) (Includes Items 808A-808C, 808E & 808M) (0275237 Installation) (Use p/n 1001100343)	C
808N	1001091971	NLA	Receptacle Box Kit (220V CEE7 Post Ground) (Includes Items 808A-808C, 808E & 808M) (0275237 Installation) (Use p/n 1001100343)	
808N	0275219	NLA	Receptacle Box Kit (220V CEE7 Side Ground) (Includes Items 808A-808C, 808E & 808M) (0275253 & 1001153312 Installation) (Use p/n 1001100344)	
808N	1001091970	NLA	Receptacle Box Kit (220V CEE7 Side Ground) (Includes Items 808A-808C, 808E & 808M) (0275253 & 1001153312 Installation) (Use p/n 1001100344)	
		Ref	Generator Installations	
		Ref	4000W Generator Installation	
	1001139952	Ref	60Hz and Deutz D2011 Engine	A
	1001139953	Ref	50Hz and Deutz D2011 Engine	B
809		Ref	7500W SkyPower Generator Installation	
809	1001141421	Ref	60Hz & Deutz TD2.9L4 Engine	E
809	1001115387	Ref	60Hz & Deutz D2011 Engine	E
809	1001115389	Ref	50Hz & Deutz D2011 Engine	C
809	0275257	Ref	60Hz & GM Engine	H
809A		Ref	Receptacle, Female Twist-Lock Options (Machines with Deutz D2011 & GM Engines Only): **(SN 0300171769 through 0300181890)**	
809A	4460958	1	60Hz Spec	
809A	See Note	NLA	50Hz Spec (Note: Not Available - Purchase Locally)	
809B		Ref	Gasket Options:	
809B	3960422	AR	60Hz Spec	
809B	See Note	NLA	50Hz Spec (Note: Not Available - Purchase Locally)	
809C		Ref	Cover, Receptacle Options:	
809C	1001110873	1	60Hz Spec	
809C	See Note	NLA	50Hz Spec (Note: Not Available - Purchase Locally)	
809D		Ref	Cover, Receptacle Options (Machines with Deutz D2011 & GM Engines Only): **(SN 0300171769 through 0300181890)**	
809D	1001110872	1	60Hz Spec	
809D	See Note	NLA	50Hz Spec (Note: Not Available - Purchase Locally)	
809E		Ref	Receptacle Options:	
809E	4460346	1	60Hz Spec	
809E	See Note	NLA	50Hz Spec (Note: Not Available - Purchase Locally)	
809F	4460051	1	Connector, Strain Relief (Machines with Deutz D2011 & GM Engines Only) **(SN 0300171769 through 0300181890)**	
809G	4460071	1	Connector, Strain Relief	
809H		Ref	Harness, Generator Options:	
809H	1001152532	1	4000W Generator	
809H	4922925	1	7500W SkyPower Generator	
809I		Ref	Plug, Male Options:	
809I		Ref	4000W Generator	
809I	77363233	1	Plug, Male - 6 Position	
809I	4460465	2	Socket, Female	
809I		Ref	7500W SkyPower Generator	

ITEM	PART NUMBER	QTY	DESCRIPTION	REV
809I	77363233	1	Plug, Male - 6 Position	
809I	80463058	6	Socket, Female	
809J		Ref	Plug, Male Options:	
809J		Ref	4000W Generator	
809J	4460225	1	Plug, Male - 6 Position	
809J	4460226	2	Socket, Female	
809J		Ref	7500W SkyPower Generator	
809J	See Note	NLA	Plug, Male - 6 Position (Note: Not Available for Purchase)	
809J	See Note	NLA	Socket, Female (Note: Not Available for Purchase)	
810		Ref	Generator Junction Box Components	
810		Ref	4000W Generator	
810	1001152457	Ref	60Hz Spec	B
810	1001152458	Ref	50Hz Specs **(SN 0300087000 through 0300181890)**	D
810	1001152458	Ref	50Hz Specs **(SN B300000970 through B300001210)**	D
810		Ref	7500W SkyPower Generator Junction Box Components	
810	0861542	Ref	60Hz Spec (Deutz D2011 Engines) **(SN 0300171769 through 0300181890)**	C
810	1001157592	Ref	60Hz Spec (Deutz D2011 Engines) **(SN B300000970 through B300002654)**	C
810	1001142914	Ref	60Hz Spec (Deutz DT2.9L4 Engines)	A
810	0861542	Ref	60Hz Spec (GM Engines)	C
810	0861567	Ref	50Hz Specs	B
810A		Ref	Cable, Electrical 12/3	
810A	1060494	2 ft/.6m	60Hz Spec **(SN 0300171769 through 0300181890)**	
810A	1060494	2 ft /0.6m	60Hz Spec **(SN B300000970 through B300001245)**	
810A	1001179154	2.5 ft /0.76m	60Hz Spec **(SN B300001246 through B300002654)**	
810A	See Note	2 ft/.6m	50Hz Spec (Note: Not Available - Purchase Locally)	
810B		Ref	Cable, Electrical 10/3 (Machines with Deutz D2011 & GM Engines Only)	
810B	1060708	2.5 ft /.76m	60Hz Spec	
810B	See Note	2.5 ft /.76m	50Hz Spec (Note: Not Available - Purchase Locally)	
810C	1060343	1.5 ft /.46m	Cable, Electrical 10/4 (60Hz Spec Only)	
810D	4460425	2	Connector, Strain Relief	
810D	3520192	1	Plug, Hole (Machines with Deutz TD2.9L4 Engines Only)	
810D	1001152525	1	Plug, Hole **(SN B300000970 through B300002654)**	
810E		Ref	Component Options:	
810E	4460426	2	Connector, Strain Relief (60Hz Spec Only)	
810E	4460426	1	Connector, Strain Relief (50Hz Spec Only)	
810E	3520189	1	Plug (50Hz Spec Only)	
810F	1671092	1	Cover (60Hz Spec Only)	
810F	4460963	1	Connector (60Hz Spec Only)	
811		Ref	4000W Generator Electrical Diagram Components	
811	1001153025	Ref	50Hz - Deutz D2011 Engine Machines (ANSI Export Spec) **(SN B300000970 through B300001234)**	B
811	1001194437	Ref	50Hz - Deutz D2011 Engine Machines (ANSI Export Spec) **(SN B300001235 through B300002654)**	A
811	1001159648	Ref	50Hz - Deutz D2011 Engine Machines (Australian Spec)	B
811		Ref	7500W Generator Electrical Diagram Components	
811	1001112586	Ref	Deutz D2011 Engine Machines **(SN 0300171769 through 0300181890)**	B

ITEM	PART NUMBER	QTY	DESCRIPTION	REV
811	1001157769	Ref	Deutz D2011 Engine Machines **(SN B300000970 through B300002654)**	B
811	1001122528	Ref	Deutz DT2.9L4 Engine Machines	B
811	4933349	Ref	GM Engine Machines	1-A
811A		Ref	Generator Harness Options:	
811A	1001153197	1	Deutz D2011 Engines (4000W Generator)	B
811A	1001112587	1	Deutz D2011 Engines (7500W Generator) **(SN 0300171769 through 0300181890)**	A
811A	1001152429	1	Deutz D2011 Engines (7500W Generator) **(SN B300000970 through B300002654)**	C
811A	1001119968	1	Deutz TD2.9L4 Engines (7500W Generator)	C
811A	4460465	3	Socket, Female (Deutz TD2.9L4 only)	
811B	4460374	2	Plug, Sealed Relay (Deutz D2011 Engines Only) **(SN 0300171769 through 0300181890)**	
811B	4460375	7	Terminal (Deutz D2011 Engines Only) **(SN 0300171769 through 0300181890)**	
811C	4460742	1	Plug, Male - 2 Position	
811C	4460743	2	Socket, Female	
811C	4460458	AR	Seal	
811C	1001116727	AR	Plug, Terminal	
811D		Ref	Component Options:	
811D	2400060	1	Fuseholder (Deutz D2011 Engines)	
811D	2400064	1	Fuse - 5 Amp (Deutz D2011 Engines)	
811D	1001117078	1	Fuseholder (Includes Fuse and Cap) (Deutz DT2.9L4 Engines)	
811D	See Note	NSS	Fuse - 5 Amp (Deutz DT2.9L4 Engines) (Note: Use 1001117078 Assembly or Purchase Fuse Locally)	
811D	1001096134	1	Cover, Fuseholder (Deutz DT2.9L4 Engines)	
811E	4460967	1	Plug, Male - 3 Position	
811E	4460465	3	Socket, Female	
811F	4922641	1	Switch Harness	C
811G	4460226	2	Socket, Female	
811H		Ref	Harness, Ground Options (4000W Generator - 50Hz Only) (Not Shown):	
811H	1001164091	1	ANSI Export Specs	
811H	1001154121	1	Australian Spec	
812	4933313	1	Floodlights Harness Components	1-A
812A	4460320	2	Plug, Male - 2 Position	
812A	4460227	4	Pin, Male	
812B	4922764	1	Floodlight Harness (Lights to Switch)	1-A
812C	4460424	2	Connector, Female - 2 Position	
812C	4460226	4	Socket, Female	
812D	4360232	1	Circuit Breaker - 15 Amp	
812E	1060977	1	Cord, 2 Wire Coiled (Console Box Circuit Breaker to Switch)	
812F	4460425	1	Connector, Strain Relief	
812G		Ref	Harness, Console Box to Aux Relay Options:	
812G	4922888	1	Harness, Console Box to Aux Relay 600S Harness (77ft/23.5m of 12/3 Cable P/N 1060494)	
812G	4922964	1	Harness, Console Box to Aux Relay 660SJ Harness (83ft/25.4m of 12/3 Cable P/N 1060494)	
813		Ref	Platform Worklights Components	
813A	2920140	2	Platform Worklights External Harness (Includes Light and Wire Only)	
813B	4460426	1	Connector, Strain Relief	

ITEM	PART NUMBER	QTY	DESCRIPTION	REV
813C	2400070	1	Fuse	
813C	2400066	1	Holder, Fuse	
813D		Ref	Harness, Console Box to Aux Relay Options:	
813D	4922888	1	Harness, Console Box to Aux Relay 600S Harness (77ft/23.5m of 12/3 Cable P/N 1060494)	
813D	4922964	1	Harness, Console Box to Aux Relay 660SJ Harness (83ft/25.4m of 12/3 Cable P/N 1060494)	
814	2920161	1	Strobe Light Harness (Includes Strobe Light):	B
814A	4460891	1	Plug, Male - 2 Position	
814A	4460465	2	Socket, Female	
815	1001149818	1	Strobe Light Harness	D
815A	4460320	1	Connector, Female - 2 Position	
815A	4460267	2	Pin, Male	
815B	4460897	1	Connector, Female - 2 Position	
815B	4460464	2	Pin, Male	
		Ref	**TOOLS**	
901	7002821	1	Crimper (For Wire to Pin/Socket Connections) (Not Shown)	
902	7002823	1	Extractor (For Removal of Pin/Socket from Connectors) (Not Shown)	
903	4460467	1	Extractor, Pin (Blue 16-18 Gauge) (For Removal of Pin/Socket from Connectors) (Not Shown)	
904	4460510	1	Extractor, Pin (Yellow 12-14 Gauge) (For Removal of Pin/Socket from Connectors) (Not Shown)	
905	7002828	1	Stripper, Wire (Not Shown)	
906	2901443	1	Analyzer Kit (Not Shown)	
906A	1600244	1	Analyzer	
906B	1060633	1	Cable, Analyzer	1-A
906C	4460321	2	Plug, Male	
906C	4460226	8	Socket, Female	
907	1001137005	1	Software Cable Kit (Not Shown)	

FIGURE 7-3. HARNESS COMPONENTS INSTALLATION

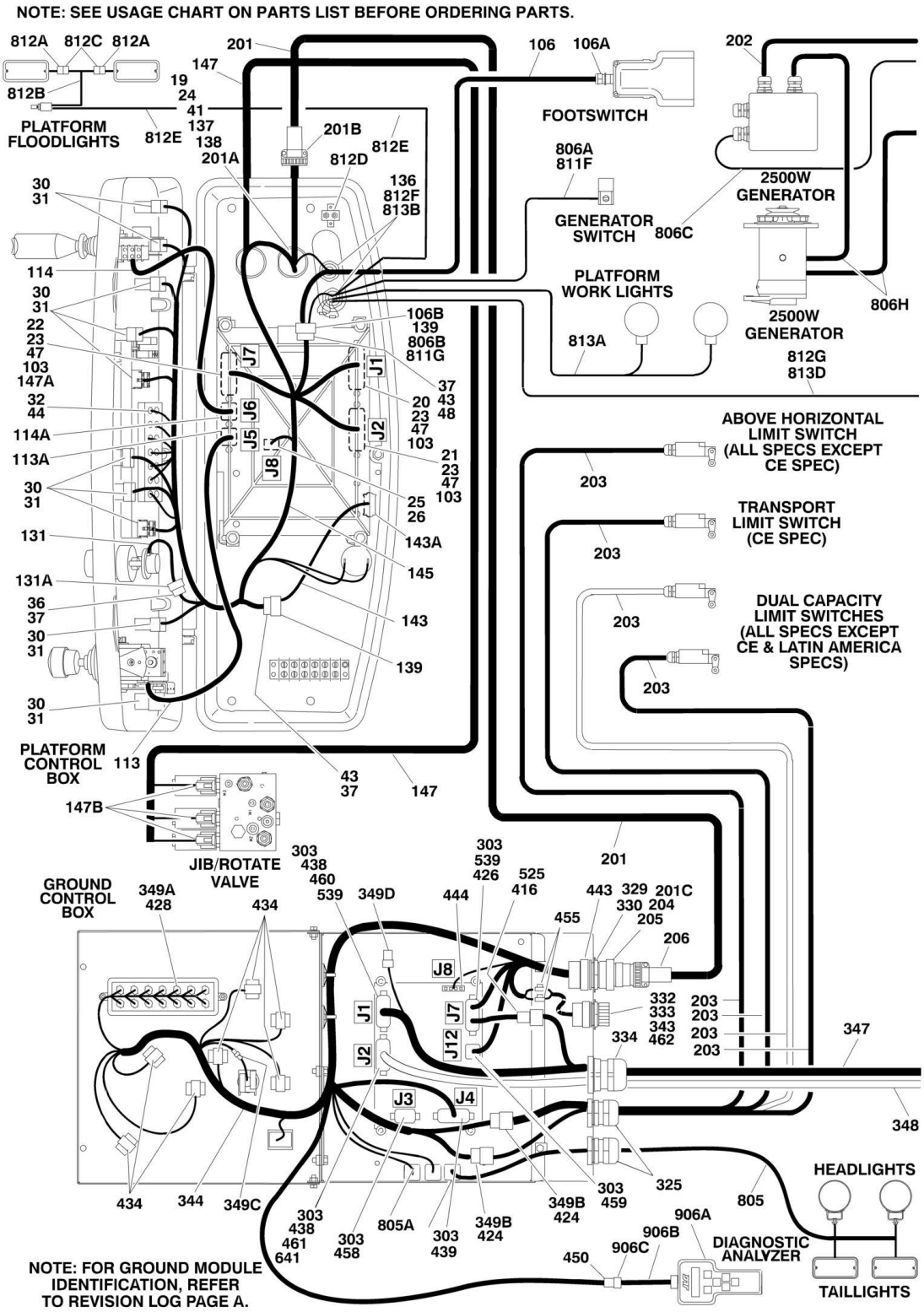

NOTE: SEE USAGE CHART ON PARTS LIST BEFORE ORDERING PARTS.

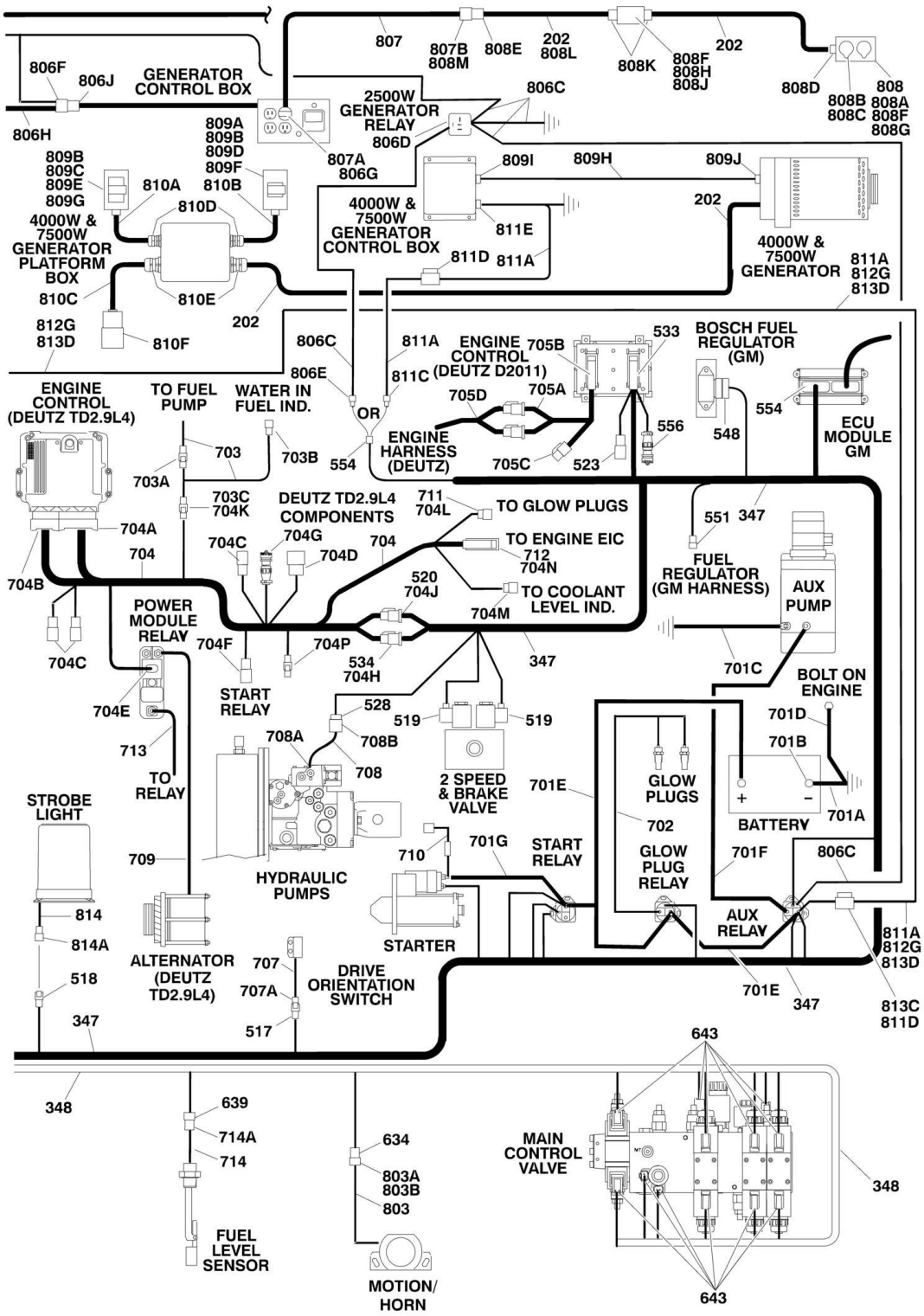

FIGURE 7-3. HARNESS COMPONENTS INSTALLATION

ITEM	PART NUMBER	QTY	DESCRIPTION	REV
		Ref	**USAGE CHART:**	
		Ref	**USA Built Machines (SN 0300181891 through 0300235167)**	
	1001107753	Ref	**PLATFORM BOX HARNESS ASSEMBLY (WITHOUT SKYGUARD)**	F
	1001185280	Ref	**PLATFORM BOX HARNESS ASSEMBLY (WITH SKYGUARD)**	B
19	4460866	1	Connector - 19 Position	
20	4460874	1	Connector - 35 Position (Natural)	
21	4460875	1	Connector - 35 Position (Gray)	
22	4460873	1	Connector - 35 Position (Black)	
23	4460871	79	Socket, Female	
24	4460464	7	Pin, Male (16 Gauge)	
25	4460879	1	Terminal, Housing 2 Position	
26	4460887	2	Terminal, (12 Gauge)	
30	4460418	9	Connector - 6 Position	
31	4460419	27	Terminal, Female	
32	4120035	13	Base, Light	
36	4460225	1	Plug, Male- 6 Position	
37	4460227	AR	Pin, Male	
41	4460508	3	Pin, Male (12 Gauge)	
43	4460434	2	Connector - 15 Position	
44	2920129	13	Lamp, Indicator	
47	4460905	26	Plug, Seal	
48	4460267	1	Pin, Male	
50	4460884	1	Connector - 4 Position (Not Shown) (With SkyGuard - To Platform Sensor)	
50	4460944	4	Socket, Female (Not Shown)	
50	4460932	1	Connector, Female - 4 Position (Not Shown) (With SkyGuard)	
52	1001116720	4	Terminal, Female (Not Shown) (With SkyGuard - To Relays 1 & 2)	
53	1001118388	4	Terminal, Female (Not Shown) (With SkyGuard - To Relays 1 & 2)	
54	4460539	1	Receptacle, Female - 3 Position (Not Shown) (With SkyGuard - Connection X001)	
54	4460943	2	Pin, Male (Not Shown)	
55	4460536	1	Plug, Male - 3 Position (Not Shown) (With SkyGuard - Connection X002)	
55	4460944	2	Socket, Female (Not Shown)	
57	4460708	1	Connector, Female - 15 Position (Not Shown) (With SkyGuard)	
57	4460226	3	Socket, Female (Not Shown)	
		Ref	**PLATFORM BOX ASSEMBLY COMPONENTS**	
	1001159099	Ref	**Platform Box Assembly Components (Without SkyGuard) (SN 0300181891 through 0300183172)**	B
	1001159285	Ref	**Platform Box Assembly Components (Without SkyGuard) (SN 0300183173 through 0300188601)**	B
	1001166673	Ref	**Platform Box Assembly Components (Without SkyGuard) (SN 0300188602 through 0300220044)**	B
	1001202600	Ref	**Platform Box Assembly Components (Without SkyGuard) (SN 0300220045 through 0300235167)**	C
	1001190091	Ref	**Platform Box Assembly (With SkyGuard) (SN 0300200809 through 0300220044)**	C
	1001202599	Ref	**Platform Box Assembly Components (With SkyGuard) (SN 0300220045 through 0300235167)**	C
103	0100048	AR	Grease, Dielectric	
106	1001117174	1	Footswitch Harness (Includes Footswitch)	

ITEM	PART NUMBER	QTY	DESCRIPTION	REV
106	1060918	7.5 ft/2.3m	Cable, Electrical - 18/3	
106A	4460071	1	Connector, Strain Relief	
106B	4460226	2	Socket, Female	
106B	4460464	1	Pin, Male	
113	See Note	NSS	Controller Harness Assembly (Lift and Swing) (Note: Purchase Complete Controller)	
113A	7022819	1	Plug, Male - 8 Position (Natural)	
113A	4460871	8	Socket, Female	
114	See Note	NSS	Controller Harness/Circuit Board Assembly (Drive and Steer) (Note: Purchase Complete Controller)	
114A	7022825	1	Plug, Male - 8 Position (Black)	
114A	4460871	7	Socket, Female	
131	See Note	NSS	Controller Harness (Speed Control) (Note: Purchase Complete Controller)	
131A	4460224	1	Receptacle, Female - 6 Position	
131A	4460226	6	Socket, Female	
136	4460428	2	Connector, Strain Relief	
137	4460470	1	Nut, Terminal	
138	4460471	1	Lockwasher, Terminal	
139	4460708	2	Connector, Female - 15 Position	
143	4922666	1	Harness, Analyzer Cable	C
143	4460226	4	Socket, Female (Not Shown - Located at J2)	
143A	4460761	1	Connector, Female - 4 Position	
143A	4460227	4	Pin, Male	
145	1001107753	1	Harness, Platform Box (Without SkyGuard) (Includes Items 19-57)	
145	1001185280	1	Harness, Platform Box (With SkyGuard) (Includes Items 19-57)	
147	1001139135	1	Harness, Platform Valve	
147A	4460226	AR	Socket, Female	
147B	4460891	6	Plug, Male - 2 Position	
147B	1001116692	12	Socket, Female	
		Ref	**BOOM CABLES INSTALLATION**	
		Ref	**Boom Cables Installation 600S:**	
	0270733	Ref	**ANSI, ANSI Export, Australian, Brazilian, CSA, Japanese Specs without 7500W Generator**	5
	0270734	Ref	**CE and Latin American Specs without 7500W Generator**	6
	1001153301	Ref	**ANSI, ANSI Export, CSA and Japanese Specs with 4000W Generator**	A
	0272483	Ref	**ANSI, ANSI Export, Australian, CSA, Japanese Specs with 7500W Generator**	3
	0272484	Ref	**ANSI Export, Brazilian, CE, Japanese, Latin American Specs with 7500W Generator**	3
	0275924	Ref	**ANSI, ANSI Export, CSA Specs without 7500W Generator and Arctic Package**	2
	0275925	Ref	**ANSI, ANSI Export, CSA Specs with 7500W Generator and Arctic Package**	3
		Ref	**Boom Cables Installation 660SJ:**	
	1001165616	Ref	**ANSI, CSA and Japanese Specs without 7500W Generator**	A
	1001165928	Ref	**ANSI Export, CE and Australian Specs without 7500W Generator**	B
	1001153302	Ref	**ANSI, ANSI Export, CSA and Japanese Specs with 4000W Generator**	A
	1001165925	Ref	**ANSI, ANSI Export, Australian, CSA and Japanese Specs**	A

ITEM	PART NUMBER	QTY	DESCRIPTION	REV
			with 7500W Generator	
	1001165929	Ref	**ANSI Export and CE Specs with 7500W Generator**	A
	1001165927	Ref	**ANSI, ANSI Export and CSA Specs without 7500W Generator and Arctic Package**	A
	1001165926	Ref	**ANSI, ANSI Export and CSA Specs with 7500W Generator and Arctic Package**	A
201		Ref	Harness, Main Boom Options:	
201		Ref	Harness, Main Boom 600S:	
201	4922468	1	ANSI, ANSI Export, CE, CSA, Australian, Brazilian, Japanese, Latin American Spec	
201	4923657	1	ANSI, ANSI Export, CSA Spec (With Arctic Package)	
201		Ref	Harness, Main Boom 660SJ:	
201	4922467	1	ANSI, ANSI Export, Australian, CE, CSA, Brazilian, Japanese, Latin American Spec	
201	4923509	1	ANSI, ANSI Export, CSA Spec (With Arctic Package)	
201	1060896	Ref	Cable Options:	
201	1060896	67 ft /20.4m	Cable 600S	
201	4923462	Ref	Cable Options (With Arctic Package):	
201	4923462	67 ft /20.4m	Cable 600S	
201	4923462	75 ft /22.8m	Cable 660SJ	
201A	4460465	11	Socket, Female - #16	
201A	4460865	1	Connector - 19 Position	
201A	4460509	4	Socket, Female - #12	
201A	4460466	4	Seal, Plug	
201B	4460473	1	Clamp, Cable	
201C	4460465	11	Socket, Female - #16	
201C	4460509	4	Socket, Female - #12	
202		Ref	Harness, Generator Options: (Does not include plug ends)	
202		Ref	Harness, Generator 600S without 7500W Generator	
202	4922889	AR	ANSI, ANSI Export, Australian, Brazilian, CSA, Japanese Specs (69.5ft/21.8m of 12/3 ANSI Spec Cable P/N 1060494)	
202	4922884	AR	CE and Latin American Specs (69.5ft/21.8m of 12/3 CE Spec Cable P/N 1060461)	
202	4923660	AR	ANSI, ANSI Export, CSA Specs (69.5ft/21.8m of 12/3 Cable P/N 4923463) (With Arctic Package)	
202	1001153842	AR	Harness, Generator 600S with 4000W Generator (83ft/25.3m of 10/4 Cable P/N 1001131968)	
202	4922792	AR	Harness, Generator 600S with 7500W Generator (83ft/25.3m of 8/5 Cable P/N 1060945)	
202		Ref	Harness, Generator 660SJ without 7500W Generator	
202	4922888	AR	ANSI, ANSI Export, Australian, Brazilian, CSA, Japanese, Latin American Specs (77ft/23.5m of 12/3 ANSI Spec Cable P/N 1060494)	
202	4922886	AR	CE Specs (77ft/23.5m of 12/3 CE Spec Cable P/N 1060461)	
202	4923510	AR	ANSI, ANSI Export, CSA Specs (77ft/23.5m of 12/3 Cable P/N 4923463) (With Arctic Package)	
202	1001153844	AR	Harness, Generator 660SJ with 4000W Generator (90.5ft/27.6m of 10/4 Cable P/N 1001131968)	
202	4922791	AR	Harness, Generator 660SJ with 7500W Generator (90.5ft/27.6m of 8/5 Cable P/N 1060945)	

ITEM	PART NUMBER	QTY	DESCRIPTION	REV
203		Ref	Cable, Limit Switch Options:	
203		Ref	Cable, Limit Switch 600S:	
203	1061026	1	ANSI, ANSI Export, Australian, Brazilian, CE, CSA, Latin American, Japanese Specs (25.5ft/7.8m of 18/2 Cable P/N 1060680)	
203	4923659	1	ANSI, ANSI Export, CSA Spec (25.5ft/7.8m of 18/2 Cable P/N 4923466) (With Arctic Package)	
203	1061027	2	ANSI, ANSI Export, Australian, CSA, Brazilian, Japanese Specs (13.5ft/4.2m of 18/2 Cable P/N 1060680)	
203		Ref	Cable, Limit Switch 660SJ:	
203	1061027	1	ANSI, ANSI Export, Australian, Brazilian, CSA, Latin American, Japanese Specs (13.5ft/4.2m of 18/2 Cable P/N 1060680)	
203	1061026	1	Brazilian, CE, Japanese Specs (25.5ft/7.8m of 18/2 Cable P/N 1060680)	
203	4923511	1	ANSI, ANSI Export, CSA Spec (13.5ft/4.2m of 18/2 Cable P/N 4923466) (With Arctic Package)	
204	4460865	1	Connector - 19 Position	
205	4460466	4	Seal, Plug	
206	4460473	1	Clamp, Cable	
207	4100026	4 ft/1.2m	Sleeve, Nylon (Required on 600S Only - Not Shown)	
		Ref	**GROUND CONTROL BOX COMPONENTS**	
303	0100048	AR	Grease, Dielectric	
328	4460426	2	Connector, Strain Relief	
329	4460470	1	Nut, Terminal	
330	4460471	1	Lockwasher, Terminal	
332	4460496	1	Lockwasher, Terminal	
333	4460497	1	Nut, Terminal	
334	4460526	1	Connector, Strain Relief	
343	1001106736	1	Cap, Dust	
344		Ref	Ground Control Box Harness Assembly (See Items 416-464 for Breakdown)	
344	1001108602	1	Deutz D2011 Engine Machines (All Spec except CE Spec)	
344	1001108602	1	Deutz D2011 Engine Machines (CE Spec) **(SN 0300181890 through 0300200771)**	E
344	1001185897	1	Deutz D2011 Engine Machines (CE Spec) **(SN 0300200772 through 0300208280)**	C
344	1001192611	1	Deutz D2011 Engine Machines (CE Spec) **(SN 0300208281 through 0300235167)**	B
344	1001145993	1	Deutz TD2.9L4 Engine Machines	B
344	1001108602	1	GM Engine Machines	
347		Ref	Engine Harness Assembly (See 517-554 for Breakdown):	
347	1001154390	1	Deutz D2011 Engine Machines **(SN 0300181890 through 0300208280)**	
347	1001191868	1	Deutz D2011 Engine Machines **(SN 0300208281 through 0300235167)**	
347	1001164563	1	Deutz TD2.9L4 Engine Machines **(SN 0300181890 through 0300208280)**	
347	1001191866	1	Deutz TD2.9L4 Engine Machines **(SN 0300208281 through 0300235167)**	
347	1001154388	1	GM Engine Machines **(SN 0300181891 through 0300208280)**	
347	1001191867	1	GM Engine Machines **(SN 0300208281 through 0300235167)**	
348	1001154393	1	Valve Harness Assembly (See 634-643 for Breakdown)	
349		Ref	Ground Control Box Wiring Diagram (Not Shown)	
349	1001154399	1	Deutz D2011 Engine Machines	B

ITEM	PART NUMBER	QTY	DESCRIPTION	REV
349	1001164565	1	Deutz TD2.9L4 Engine Machines	C
349	1001154398	1	GM Engine Machines	B
349A	2920129	AR	Bulb, Light	
349B	4460708	AR	Receptacle, Female - 15 Position	
349B	4460226	AR	Socket, Female	
349B	4922637	1	Harness, Jumper (Not Shown)	
349B	4922636	1	Harness, Jumper (Not Shown)	
349C	1001173590	1	Fuse Assembly - 30 Amp	
349C	2400065	1	Fuse, 30Amp	
349C	2400066	1	Fuse, Holder with Cover	
349D	4460894	1	Plug, Male - 6 Position	
349D	4460892	1	Receptacle, Female - 6 Position	
		Ref	**GROUND CONTROL HARNESS ASSEMBLY**	
	1001108602	Ref	**Deutz D2011 Engine Machines (All Specs except CE Specs)**	E
	1001108602	Ref	**Deutz D2011 Engine Machines (CE Spec) (SN 0300181890 through 0300200771)**	E
	1001185897	Ref	**Deutz D2011 Engine Machines (CE Spec) (SN 0300200772 through 0300208280)**	C
	1001192611	Ref	**Deutz D2011 Engine Machines (CE Spec) (SN 0300208281 through 0300235167)**	B
	1001145993	Ref	**Deutz TD2.9L4 Engine Machines**	B
	1001108602	Ref	**GM Engine Machines**	E
416	4460536	1	Connector, Female - 3 Position	
416	4460943	3	Pin, Male	
421	3990010	2	Diode - 6 Amp (Not Shown)	
424	4460434	2	Plug, Male 15 - Position	
424	4460227	AR	Pin	
426	4460873	1	Plug, Male - 35 Position (Black)	
426	4460871	AR	Socket, Female	
426	4460905	AR	Plug, Seal	
428	4120035	6	Base, Light	
428	4460634	7	Terminal (16 Gauge)	
428	4460635	5	Terminal (12 Gauge)	
434	4460418	AR	Connector, Female - 6 Position	
434	4460419	AR	Socket, Female	
438	4460871	9	Socket, Female	
439	4460876	1	Plug, Male - 35 Position (Blue)	
439	4460871	AR	Socket, Female	
439	4460905	AR	Plug, Seal	
443	4460866	1	Connector - 19 Position	
443	4460464	10	Pin, Male (16 Gauge)	
443	4460508	3	Pin, Male (12 Gauge)	
444	4460878	1	Housing, Terminal - 4 Position	
444	4460887	3	Terminal (12 Gauge)	
450	4460761	1	Connector, Female 4 - Position	
450	4460227	4	Pin, Male	
455	8229242	2	Fuse 5A	
455	2400060	2	Holder, Fuse	
458	1001106339	1	Connector, Male - 14 Position	
458	4460871	2	Socket, Female	
458	4460905	AR	Plug, Seal	
459	1001106340	1	Connector, Male - 14 Position	

ITEM	PART NUMBER	QTY	DESCRIPTION	REV
459	4460871	5	Socket, Female	
460	4460874	1	Connector, Natural	
460	4460871	10	Socket, Female	
460	4460905	AR	Plug, Seal	
461	4460875	1	Connector, Gray	
461	4460871	2	Socket, Female	
462	1001112612	1	Connector - 9 Position	
462	4460871	2	Socket, Female	
463	4460884	1	Connector - 4 Position (Not Shown - To Telematics)	
463	1001192401	1	Cap, Dust (Not Shown)	
463	4460465	4	Socket, Female (Not Shown)	
464	4460868	1	Connector - 4 Position (Not Shown - To MD1)	
464	4460877	4	Terminal	
		Ref	**ENGINE HARNESS ASSEMBLIES**	
	1001154390	Ref	**Deutz D2011 Engine Machines (SN 0300181890 through 0300208280)**	B
	1001191868	Ref	**Deutz D2011 Engine Machines (SN 0300208281 through 0300235167)**	A
	1001164563	Ref	**Deutz TD2.9L4 Engine Machines (SN 0300181890 through 0300208280)**	B
	1001191866	Ref	**Deutz TD2.9L4 Engine Machines (SN 0300208281 through 0300235167)**	A
	1001154388	Ref	**GM Engine Machines (SN 0300181890 through 0300208280)**	B
	1001191867	Ref	**GM Engine Machines (SN 0300208281 through 0300235167)**	A
517	4460424	1	Receptacle, Female - 2 Position	
517	4460268	2	Socket, Female	
518	4460897	1	Receptacle, Female - 2 Position	
518	4460464	2	Socket, Female	
519	4460880	2	DIN Connector without Diode	
520	4460931	1	Connector, Male - 8 Position (Deutz TD2.9L4 Engines Only	
520	4460464	4	Pin, Male	
520	4460466	4	Seal, Plug	
523	4461070	1	Receptacle, Female With Resistor (3 Position) (Deutz D2011 Engine Only)	
523	4461095	1	Plug, Male - 3 Position (Deutz D2011 Engine Only)	
523	4460944	3	Socket, Female (Deutz D2011 Engine Only)	
525	4460539	1	Connector, Male - 3 Position	
525	4460944	3	Socket, Female	
528	4460460	1	Connector, Male - 4 Position **(SN 0300181890 through 0300208280)**	
528	4460457	AR	Terminal, Female **(SN 0300181890 through 0300208280)**	
528	4460891	1	Plug, Male - 2 Position **(SN 0300208281 through 0300235167)**	
528	4460465	2	Socket, Female **(SN 0300208281 through 0300235167)**	
528	4460458	AR	Seal, Terminal	
533	4461052	1	Connector, Receptacle - 25 Position (Deutz D2011 Engine Only)	
533	4461005	5	Terminal (Gold) (Deutz D2011 Engine Only)	
533	4461006	5	Seal, Terminal (Deutz D2011 Engine Only)	
533	4461060	2	Terminal (Tin) (Deutz D2011 Engine Only)	
533	4461054	2	Seal, Terminal (Deutz D2011 Engine Only)	
533	4461053	1	Cover, Plug (Deutz D2011 Engine Only)	
533	4461008	AR	Plug, Hole (Deutz D2011 Engine Only)	
534	4460899	1	Connector, Male - 6 Position (Deutz TD2.9L4 Engines Only	
534	4460464	5	Pin, Male	

ITEM	PART NUMBER	QTY	DESCRIPTION	REV
534	4460943	5	Pin, Male (Gold)	
534	4460466	1	Seal, Plug	
539	4460871	AR	Socket, Female	
554	4461157	1	Receptacle, Female - 2 Position	
554	4460979	2	Pin, Male	
554	4460458	2	Seal, Terminal	
548	4461121	1	Plug, Male - 4 Position (GM Engine Only)	
548	4461122	4	Socket, Female (GM Engine Only)	
548	4461123	4	Seal, Terminal (GM Engine Only)	
551	4461124	1	Receptacle, Female - 4 Position (GM Engine Only)	
551	4460693	4	Pin, Male (GM Engine Only)	
551	4460608	4	Seal, Terminal (GM Engine Only)	
551	4461161	1	Lock, Terminal (GM Engine Only)	
556	2902443	1	Kit, Receptacle (Deutz D2011 Engine Only)	
556	4461071	8	Terminal, Female (Gold) (Deutz D2011 Engine Only)	
556	4461072	1	Connector, Flange Mount (Deutz D2011 Engine Only)	
556	4461073	1	Connector, Dust Cap (Deutz D2011 Engine Only)	
556	4461074	1	Connector, Shell (Deutz D2011 Engine Only)	
554	4461109	1	Plug, Male - 16 Position (GM Engine Only)	
554	4461111	7	Pin, Male (GM Engine Only)	
554	4461113	7	Seal, Terminal (GM Engine Only)	
554	4461222	9	Plug, Cavity (GM Engine Only)	
	1001154393	Ref	**VALVE HARNESS ASSEMBLY**	B
634	4460539	1	Connector, Male - 3 Position	
634	1001116692	2	Socket, Female	
634	4460466	1	Seal, Plug	
639	4460424	1	Plug, Male - 2 Position	
639	4460268	2	Socket, Female	
640	4460268	3	Socket, Female	
641	4460871	28	Socket, Female	
643	4460891	12	Plug, Male - 2 Position	
643	1001116692	24	Socket, Female	
		Ref	**STANDARD HARNESS COMPONENTS**	
701		Ref	Battery Cable Kit Options:	
701	1001151565	1	Deutz D2011 Engine Machines	A
701	1001144440	1	Deutz TD2.9L4 Engine Machines without Arctic Package	D
701	1001143736	1	Deutz TD2.9L4 Engine Machines with Arctic Package	E
701	2902531	1	GM Engine Machines	A
701A		Ref	Cable, Battery (Black) Options (Battery - to Ground):	
701A	7027051	1	Deutz D2011 Engines Machines	
701A	7027063	1	Deutz TD2.9L4 Engine Machines without Arctic Package	
701A	7027084	1	Deutz TD2.9L4 Engine Machines with Arctic Package	
701A	7016822	1	GM Engine Machines	
701B	8270147	1	Terminal, Battery (Deutz Engines Only)	
701C		Ref	Cable, Battery (Black) Options (Aux Pump to Ground):	
701C	7027052	1	Deutz D2011 Engines Machines	
701C	7027064	1	Deutz TD2.9L4 Engine Machines without Arctic Package	
701C	7027085	1	Deutz TD2.9L4 Engine Machines with Arctic Package	
701C	7027003	1	GM Engine Machines	
701D		Ref	Cable (Black) Options (Engine to Ground):	
701D	7027053	1	Deutz D2011 Engines Machines	

ITEM	PART NUMBER	QTY	DESCRIPTION	REV
701D	7027065	1	Deutz TD2.9L4 Engine Machines without Arctic Package	
701D	7027086	1	Deutz TD2.9L4 Engine Machines with Arctic Package	
701D	Not Required	0	GM Engine Machines	
701E		Ref	Cable (Red) Options (Battery + to Relays):	
701E	7027054	1	Deutz D2011 Engines Machines	
701E	7027067	1	Deutz TD2.9L4 Engine Machines without Arctic Package	
701E	7027088	1	Deutz TD2.9L4 Engine Machines with Arctic Package	
701E	7027015	1	GM Engine Machines	
701F		Ref	Cable (Red) Options (Aux Relay to Aux Pump)	
701F	7027055	1	Deutz D2011 Engines Machines	
701F	7027066	1	Deutz TD2.9L4 Engine Machines without Arctic Package	
701F	7027087	1	Deutz TD2.9L4 Engine Machines with Arctic Package	
701F	7027016	1	GM Engine Machines	
701G		Ref	Cable (Red) Options (Relay to Starter):	
701G	7027054	1	Deutz Engines Machines	
701G	7027017	1	GM Engines Machines	
702		Ref	Harness, Glow Plugs Options:	
702	4923379	1	Deutz D2011 Engines Machines	B
702	Not Required	1	GM Engine Machines	
703	1001222666	1	Fuel Pump Harness with Ring Terminals (Deutz TD2.9L4 Engines Only) **(SN 0300181981 through 0300234519)**	
703	1001144660	1	Fuel Pump Harness with Push-on Terminals (Deutz TD2.9L4 Engines Only) **(SN 0300234520 to Present)**	
703A	4460897	1	Receptacle, Female - 2 Position	
703A	4460941	2	Pin, Male	
703A	4460891	1	Plug, Male - 2 Position	
703A	4460942	2	Socket, Female	
703B	1001116983	1	Receptacle, Female - 2 Position	
703B	1001116710	2	Terminal	
703B	4461054	2	Seal	
703C	4460932	1	Receptacle, Female - 4 Position	
703C	4460941	2	Pin, Male	
703C	4460464	2	Pin, Male	
704	1001143726	1	Deutz TD2.9L4 Engine Harness	K
704A	1001133956	1	Connector (Includes Cover, Locks and Retention Plate)	
704A	1001126352	6	Terminal	
704A	1001126353	6	Seal, Terminal	
704A	1001126384	19	Terminal	
704A	1001126351	3	Terminal	
704A	1001126356	63	Plug, Seal	
704A	1001126357	2	Plug, Seal	
704B	1001133957	1	Connector (Includes Cover, Locks and Retention Plate)	
704B	1001126384	17	Terminal	
704B	1001126351	13	Terminal	
704B	1001126356	19	Plug, Seal	
704B	1001126357	11	Plug, Seal	
704C	4461070	3	Receptacle, Female With Resistor (3 Position)	
704C	4461095	6	Plug, Male - 3 Position	
704C	4460944	6	Socket, Female	
704C	4460466	2	Seal, Plug	
704D	80484084	1	Receptacle, Female - 8 Position	
704D	8229242	1	Fuse - 5Amp	

ITEM	PART NUMBER	QTY	DESCRIPTION	REV
704D	80983191	1	Fuse - 10Amp	
704D	1001147264	1	Cap	
704D	1001116727	8	Plug	
704D	4460458	4	Seal	
704E	1001116952	1	Plug, Male - 2 Position	
704E	4460465	2	Socket, Female	
704F	1001138110	1	Plug, Male - 2 Position	
704F	1001138111	2	Socket, Female	
704F	1001138113	2	Seal	
704G	2902443	1	Kit, Receptacle	
704G	4461071	8	Terminal, Female (Gold)	
704G	4461072	1	Connector, Flange Mount	
704G	4461073	1	Connector, Dust Cap	
704G	4461074	1	Connector, Shell	
704H	4460894	1	Plug, Male - 6 Position	
704H	4460465	3	Socket, Female	
704H	4460944	2	Socket, Female	
704H	4460466	1	Seal, Plug	
704J	4460930	1	Plug, Male - 8 Position	
704J	4460465	1	Socket, Female	
704J	4460466	7	Seal, Plug	
704K	4460884	1	Plug, Male - 4 Position **(SN 0300181891 through 0300224654)**	
704K	1001220379	1	Plug, Male - 4 Position **(SN 0300224655 through 0300235167)**	
704K	4460465	2	Socket, Female	
704K	4460942	2	Socket, Female	
704L	1001142938	1	Plug, Male - 2 Position	
704L	1001142940	2	Terminal, Female	
704L	1001142941	2	Seal	
704M	1001133714	1	Plug, Male - 4 Position	
704M	1001133715	3	Terminal, Female	
704M	1001135650	3	Seal	
704M	1001135651	NLA	Plug, Cavity (Use p/n 4461008)	
704N	1001126362	1	Receptacle, Female - 62 Position	
704N	1001126363	33	Terminal	
704N	1001126364	33	Seal	
704N	1001126391	23	Plug	
704N	4461008	4	Plug, Cavity	
704N	1001126365	2	Terminal	
704N	4461054	2	Seal	
704P	4460891	1	Plug, Male - 2 Position (USA Built Machines) **(SN 0300181891 through 0300235167)**	
704P	4460465	2	Socket, Female	
704P	1001171403	1	Resistor Assembly	
704P	4460897	1	Connector, Female - 2 Position	
705		Ref	Deutz Engine Harness Components (Deutz Engine Machines Only) (Note: See 705A-705D for Available Components)	
705A	7027796	1	Deutz Engine Harness	
705B	See Note	1	Receptacle, Female - 25 Position (Note: Not Available - Purchase Complete Harness)	
705C	70004060	1	Plug-In, Connector	
705D	70001872	1	Deutz Engine Harness (For other replacement parts refer to Deutz engine dealer)	

ITEM	PART NUMBER	QTY	DESCRIPTION	REV
706	See Note	NLA	GM Engine Harness (GM Engine Machines Only) (Note: Not Available for Purchase)	
707	4360517	1	Switch, Proximity	
707A	4460320	1	Connector - 2 Position	
707A	4460227	2	Pin, Male	
708	See Note	NLA	Pump Harness (Note: Not Available for Purchase)	
708A	7007497	1	Plug (Pump End)	
708B	7007498	1	Plug (Engine Harness End)	
709	1001143907	1	Alternator Power Cable (Deutz TD2.9L4 Engines)	
709	1001098764	1	Boot, Red (Deutz TD2.9L4 Engines)	
709	70004103	1	Alternator Interconnect Cable (Deutz D2011 Engines) (Not Shown - Connects to Item 705D)	
710	70004271	1	Starter Interconnect Cable (Deutz D2011 Engines) (Connects to Item 705D)	
711	70025231	1	Harness, Glow Plug (Deutz TD2.9L4 Engines)	
711	70025233	1	Plug, Connect (Deutz TD2.9L4 Engines)	
712	70025077	1	Harness, Engine (Deutz TD2.9L4 Engines)	
713	1001141304		Harness, Glow Plug Relay (Deutz TD2.9L4 Engine Machines)	
714	See Note	NLA	Switch, Fuel Level (Note: Not Available for Purchase)	
714A	4460320	1	Plug, Male - 2 Position	
714A	4460227	2	Pin, Male	
		Ref	**OPTIONAL HARNESS COMPONENTS**	
803	0140044	1	Alarm Harness (Includes Alarm)	
803A	4460536	1	Plug, Male - 3 Position	
803B	1001116693	3	Socket, Female	
805	See Note	NSS	Headlight and Taillight/Chassis Illumination Harness (Note: Not Available for Purchase)	
805	1060341	Ref	Cable, Electrical 16/2 Options:	
805	1060341	37/11.3m	Headlights and Taillights	
805	1060341	40/12.2m	Chassis Illumination Lights	
805A	3740049	1	Relay	
805A	4460259	3	Terminal	
805A	4460260	4	Housing, Terminal	
805A	4460297	1	Terminal	
805A	4922643	1	Lights Harness for Ground Control Box	C
805A	4460226	2	Socket, Female	
806		Ref	2500W Generator Electrical Components	
806	1001112743	Ref	50Hz (Deutz D2011 Engines)	B
806	1001112588	Ref	60Hz (Deutz D2011 Engines)	B
806	1001180287	Ref	60Hz (Deutz TD2.9L4 Engines)	B
806	4933350	Ref	60Hz (GM Engine)	B
806A	4922641	1	Harness - On/Off Switch	D
806B	4460226	2	Socket, Female	
806C		Ref	Harness, Powermite Control Box to Relay Options:	
806C	1001112589	1	Deutz D2011 Engines	A
806C	1001180052	1	Deutz DT2.9L4 Engines	A
806C	4923445	1	GM Engine	A
806D	4460374	1	Connector, Seal Relay	
806D	4460705	4	Terminal	
806D	4460375	4	Terminal (Deutz DT2.9L4 Engines)	
806E	4460742	1	Connector, Male - 2 Position	
806E	4460743	2	Socket, Female	

ITEM	PART NUMBER	QTY	DESCRIPTION	REV
806E	4460458	2	Seal	
806E	4460465	2	Socket, Female (Deutz DT2.9L4 Engines)	
806F	4460321	1	Connector, Male - 4 Position (60Hz Only)	
806F	4460268	3	Socket, Female (60Hz Only)	
806F	4460906	1	Socket, Female (60Hz Only)	
806G	4460027	1	Receptacle, Twist Lock (110V Only)	
806H	7020193	1	Harness, Generator Power	
806J	4460961	1	Connector, Female - 4 Position	
806J	4460705	4	Pin, Male	
807		Ref	Generator to Rear of Boom Harness Options:	
		Ref	**Note: Harness used to connect AC at platform harness to generator receptacle to power platform receptacle.**	
807	4921827	1	110V (ANSI, ANSI Export, Latin America and Japanese Specs)	2
807	1060494	20 ft/6m	Cable, Electrical - 12/3	
807A	4460205	1	Plug, Male	
807A	4460027	1	Receptacle, Twist Lock (110V Only)	
807B	4460134	1	Receptacle, Female	
808		Ref	AC to Platform Receptacle Components Options:	
808	0256113	Ref	110V/60Hz GFI Receptacle (ANSI, ANSI Export and Japanese Specs)	C
808	0256201	Ref	110V/50Hz Receptacle (Plug and Receptacle Supplied Locally) (Australian, Brazilian, Latin America Specs)	C
808	0257175	Ref	220V Receptacle (ANSI and ANSI Export Specs)	C
808	1001194365	Ref	220V Receptacle used with 4000W Generator (ANSI Export, Australian and Japanese Spec)	A
808	1001171131	Ref	240V Receptacle with GFCI used with 4000W Generator (Not Shown)	B
808	1001159121	Ref	240V Receptacle with GFCI used with 7500W Generator (Not Shown)	B
808	1001188331	Ref	RCD Breaker Installation	A
808		Ref	CE Specs Options Only (CE Spec are USA Built Machines):	
808		Ref	**Without Generator (CE Specs)**	
808	0256201	Ref	110V/50Hz Receptacle (Plug and Receptacle Supplied Locally)	B
808	0275235	Ref	110V with IEC Yellow Receptacle and Plug and Circuit Breaker	F
808	0275455	NLA	220V with CEE7 Post Ground Receptacle and Plug and Circuit Breaker (2x4 Box) **(SN 0300181891 through 0300191324)**	G
808	1001162361	Ref	220V with CEE7 Post Ground Receptacle and Plug and Circuit Breaker (2x4 Box) **(SN 0300191325 through 0300235167)**	C
808	0275456	NLA	220V with CEE7 Side Ground Receptacle and Plug and Circuit Breaker (2x4 Box) **(SN 0300181891 through 0300191324)**	E
808	1001162353	Ref	220V with CEE7 Side Ground Receptacle and Plug and Circuit Breaker (2x4 Box) **(SN 0300191325 through 0300235167)**	C
808	0275659	Ref	220V with AFSINT 107 Keyed Ground Receptacle and Plug and Circuit Breaker (2x4 Box)	G
808	0275254	Ref	220V with IEC Blue Receptacle and Plug and Circuit Breaker	F
808	0275237	Ref	220V with CEE7 Post Ground Receptacle and Plug and Circuit Breaker (70mm x 70mm Box)	F
808	1001153312	Ref	220V with CEE7 Side Ground Receptacle and Plug and Circuit Breaker (70mm x 70mm Box)	B

ITEM	PART NUMBER	QTY	DESCRIPTION	REV
808		Ref	**With 2500W Powermite Generator (CE Specs)**	
808	1001100393	Ref	**110V with IEC Yellow Receptacle and Plug and Circuit Breaker**	C
808	1001100390	Ref	220V with CEE7 Post Ground Receptacle and Plug and Circuit Breaker (2x4 Box)	H
808	1001100391	Ref	220V with CEE7 Side Ground Receptacle and Plug and Circuit Breaker (2x4 Box)	H
808	1001100392	Ref	220V with AFSINT 107 Keyed Ground Receptacle and Plug and Circuit Breaker (2x4 Box)	G
808	1001100394	Ref	220V with IEC Blue Receptacle and Plug and Circuit Breaker	F
808	1001100395	Ref	220V with CEE7 Post Ground Receptacle and Plug and Circuit Breaker (70mm x 70mm Box)	F
808	1001100396	Ref	220V with CEE7 Side Ground Receptacle and Plug and Circuit Breaker (70mm x 70mm Box)	F
808		Ref	**With 4000W Generator (CE Specs)**	
808	1001194203	Ref	110V IEC Yellow Receptacle and Plug	B
808	1001194204	Ref	220V IEC Blue Receptacle and Plug	B
808	1001194197	Ref	220V CEE7 Post Ground Receptacle and Plug (2x4 Box)	B
808	1001194198	Ref	220V CEE7 Side Ground Receptacle and Plug (2x4 Box)	B
808	1001194200	Ref	220V AFSINT 107 Keyed Ground Receptacle	B
808A		Ref	Box, Switch Options:	
808A	0860038	1	0256113 & 0257175 Installations	
808A	Not Required	1	0256201 Installation (Purchase Locally)	
808A	0861731	1	0275455, 0275456, 0275659, 1001100390, 1001100391, 1001162361, 1001162353, 1001194197, 1001194198, 1001194200, 1001194365 & 1001100392 Installations	
808A	0861781	1	0275235, 0275254, 1001100393, 1001100394, 1001194203 & 1001194204 Installations	
808A	0861782	NLA	0275237, 0275253, 1001100395, 1001100396 & 1001153312 Installations (Note: Use p/n 1001100344 CEE7 Side Ground Service Kit or p/n 1001100343 CEE7 Post Ground Service Kit. Kit include Box p/n 1001141967 & Items 808B, 808C, 808E & 808M)	
808A	1001141967	1	1001100343, 1001100344, 1001141970 & 1001141971 Kits	
808B		Ref	Receptacle Options:	
808B	4460346	1	0256113 Installation	
808B	4460125	1	0257175 Installation	
808B	Not Required	1	0256201 Installation (Purchase Locally)	
808B	4461244	1	0275455, 1001162361, 1001194197 & 1001100390 Installations	
808B	4461245	1	0275456, 1001162353, 1001194198 & 1001100391 Installations	
808B	4461246	1	0275659, 1001194200 & 1001100392 Installations	
808B	4461198	1	0275235, 1001194203 & 1001100393 Installations	
808B	4461201	1	0275254, 1001194204 & 1001100394 Installations	
808B	4461204	NLA	0275237 & 1001100395 Installations (Use p/n 1001100343)	
808B	4461207	NLA	0275253, 1001100396 & 1001153312 Installations (Use p/n 1001100344)	
808B	1001141968	1	1001100343 & 1001141971 Kits	
808B	1001141969	1	1001100344 & 1001141970 Kits	
808C		Ref	Shield, Cover Options:	
808C	1001110873	1	0256113 Installation	
808C	4060092	1	0257175 Installation	

ITEM	PART NUMBER	QTY	DESCRIPTION	REV
808C	Not Required	1	0256201 Installation (Purchase Locally)	
808C	4461244	1	0275455, 1001162361, 1001194197 & 1001100390 Installations	
808C	4461245	1	0275456, 1001162353, 1001194198 & 1001100391 Installations	
808C	4461246	1	0275659, 1001194200 & 1001100392 Installations	
808C	4461198	1	0275235, 1001194203 & 1001100393 Installations	
808C	4461201	1	0275254, 1001194204 & 1001100394 Installations	
808C	4461204	NLA	0275237 & 1001100395 Installations (Use p/n 1001100343)	
808C	4461207	NLA	0275253, 1001100396 & 1001153312 Installations (Use p/n 1001100344)	
808C	1001141968	1	1001100343 & 1001141971 Kits	
808C	1001141969	1	1001100344 & 1001141970 Kits	
808D		Ref	Connector, Strain Relief Options:	
808D	4460071	1	0256113 & 0257175 Installations	
808D	Not Required	1	0256201 Installation (Purchase Locally)	
808D	4460968	1	0275456, 0275235, 0275254, 0275237, 0275253, 1001100393, 1001100394, 1001100395, 1001100396, 1001194203, 1001194204 & 1001153312 Installations	
808D	4460968	1	0275455, 0275659, 1001100390, 1001100391, 1001100392, 1001162353 & 1001162361 Installations **(SN 0300181891 through 0300223976)**	
808D	4460662	1	0275455, 0275659, 1001100390, 1001100391, 1001100392, 1001162353 & 1001162361 Installations **(SN 0300223977 through 0300235167)**	
808D	4460662	1	1001194197, 1001194198, 1001194200 & 1001194365 Installations	
808E		Ref	Plug, Male Options:	
808E	4460205	1	0256113 Installation	
808E	4460233	1	0257175 Installation	
808E	See Note	NLA	0256201 Installation (Note: Not Available - Purchase Locally)	
808E	4461202	NLA	0275237, 0275455, 1001100390, 1001100395 & 1001162361 Installations & 1001100343 & 1001141971 Kits (Use p/n 4461205)	
808E	4461205	1	0275453, 0275256, 1001100391, 1001100396 & 1001162353 Installations & 1001100344 & 1001141970 Kits	
808E	4461249	1	0275659 & 1001100392 Installations	
808E	4461196	1	0275235 & 1001100393 Installations	
808E	4461199	1	0275254 & 1001100394 Installations	
808F		Ref	Hardware Options:	
808F	0641407	AR	Bolt 1/4in - 20NC x 7/8in	
808F	0641410	AR	Bolt 1/4in - 20NC x 1-1/4in	
808F	0641416	AR	Bolt 1/4in - 20NC x 2in	
808F	0700408	AR	Screw M4 x 16mm	
808F	3290405	AR	Locknut M4	
808F	3311405	AR	Locknut 1/4in - 20NC	
808F	4711400	AR	Flatwasher 1/4in (Narrow)	
808F	4811400	AR	Flatwasher M4	
808F	1320149	AR	Clamp, Stauff	
808F	0100011	AR	Compound, Locking	
808G		Ref	Bracket, Receptacle Box Mounting Options:	
808G	Not Required	0	0256113, 0257175 & 0256201 Installations	

ITEM	PART NUMBER	QTY	DESCRIPTION	REV
808G	0903484	1	0275455, 0275456, 0275659, 0275235, 0275254, 0275237, 0275253, 1001100390, 1001100391, 1001100392, 1001100393, 1001100394, 1001100395, 1001100396 & 1001153312 Installations **(SN 0300181891 through 0300200771)**	
808G	1001193018	1	0275455, 0275456, 0275659, 0275235, 0275254, 0275237, 0275253, 1001100390, 1001100391, 1001100392, 1001100393, 1001100394, 1001100395, 1001100396 & 1001153312 Installations **(SN 0300200772 through 0300235167)**	
808G	1001193018	1	1001194197, 1001194198, 1001194200, 1001194203, 1001194204 & 1001194365 Installations	
808H		Ref	Bracket, Circuit Breaker Mounting Options:	
808H	Not Required	0	0256113, 0257175 & 0256201 Installations	
808H	1001154592	1	0275455, 0275456, 0275659, 0275235, 0275254, 0275237, 0275253, 1001100390, 1001100391, 1001100392, 1001100393, 1001100394, 1001100395, 1001100396, 1001188331 Installations	
808H	1001152486	1	1001153312 Installation	
808J		Ref	Kit, Box and Breaker (Required Only on CE Spec Installations Except 0256201 Installation):	
808J	2902549	AR	Without Generator	E
808J	1001096070	AR	With 110V Generator (Deutz D2011 Engines)	E
808J	1001096070	1	With 110V Generator (Deutz DT2.9L4 Engines) **(SN 0300171769 through 0300213938, SN B300000970 through B300001593)**	E
808J	1001165368	1	With 110V Generator (Deutz DT2.9L4 Engines) **(SN 0300213939 through 0300235167, SN B300001594 through B300002654)**	B
808J	1001109554	AR	With 220V Generator	C
808J		Ref	Circuit Breaker Options:	
808J		Ref	Without Generator	
808J	1001109475	NLA	Circuit Breaker, 16Amp (Use p/n 1001181045) **(SN 0300181890 through 0300204381)**	
808J	1001109482	NLA	Circuit Breaker, 30mAmp (Use p/n 1001181045) **(SN 0300181890 through 0300204381)**	
808J	1001181045	1	Circuit Breaker, 16Amp/30mAmp Combination **(SN 0300204382 through 0300235167)**	
808J		Ref	With 110V Generator	
808J	1001109475	NLA	Circuit Breaker, 16Amp (Use p/n 1001181045) **(SN 0300181890 through 0300204381)**	
808J	1001109482	NLA	Circuit Breaker, 30mAmp (Use p/n 1001181045) **(SN 0300181890 through 0300204381)**	
808J	1001181045	1	Circuit Breaker, 16Amp/30mAmp Combination **(SN 0300204382 through 0300235167)**	
808J		Ref	With 220V Generator	
808J	1001109477	NLA	Circuit Breaker, 10Amp (Use p/n 1001181046) **(SN 0300181890 through 0300204381)**	
808J	1001109482	NLA	Circuit Breaker, 30mAmp (Use p/n 1001181046) **(SN 0300181890 through 0300204381)**	
808J	1001181046	1	Circuit Breaker, 16Amp/30mAmp Combination **(SN 0300204382 through 0300235167)**	
808J	0861880	1	Breaker Box	
808J	4460956	1	Barrier, Terminal Block End	
808J	4460957	1	Block, Terminal	
808K		Ref	Connector, Strain Relief Options (Required Only on CE Spec Installations Except 0256201 Installation):	

ITEM	PART NUMBER	QTY	DESCRIPTION	REV
808K	4460633	2	M20 Thread	
808K	1001097150	2	M25 Thread	
808K	1001101191	1	M25 Thread (1001165368 Breaker Box Only)	
808L		Ref	Cable, Extension (Required Only on CE Spec Installations Except 0256201 Installation)	
808L	1060908	6 ft/1.8m	Without Generator (12/3 Cable)	
808L	1060908	12 ft/3.6m	With Generator (12/3 Cable)	
808L	1060545	12 ft /3.6m	With Generator (10/3 Cable)	
808M		Ref	Receptacle, Female Options:	
808M	4461203	1	1001100390 & 1001100395 Installations & 1001100343 & 1001141971 Kits	
808M	4461206	1	1001100391 & 1001100396 Installations & 1001100344 & 1001141970 Kits	
808M	4461250	1	1001100392 Installation	
808M	4461197	1	1001100393 Installation	
808M	4461200	1	1001100394 Installation	
808N		Ref	Receptacle Box Kit Options (Not Shown):	
808N	0275452	1	Receptacle Box Kit (220V CEE7 Post Ground) (Includes Items 808A, 808B, 808C & 808E) (0275455 & 1001162361 Installations)	C
808N	1001100345	1	Receptacle Box Kit (220V CEE7 Post Ground) (Includes Items 808A-808C, 808E & 808M) (1001100390 Installation)	C
808N	0275453	1	Receptacle Box Kit (220V CEE7 Side Ground) (Includes Items 808A, 808B, 808C & 808E) (0275456 & 1001162353 Installations)	1
808N	1001100347	1	Receptacle Box Kit (220V CEE7 Side Ground) (Includes Items 808A-808C, 808E & 808M) (1001100391 Installation)	3
808N	0275454	1	Receptacle Box Kit (220V AFSINT 107 Keyed Ground) (Includes Items 808A, 808B, 808C & 808E) (0275659 Installation)	1
808N	1001100346	1	Receptacle Box Kit (220V AFSINT 107 Keyed Ground) (Includes Items 808A-808C, 808E & 808M) (1001100392 Installation)	2
808N	0275216	1	Receptacle Box Kit (110V IEC Yellow) (Includes Items 808A, 808B, 808C & 808E) (0275235 Installation)	1
808N	1001100341	1	Receptacle Box Kit (110V IEC Yellow) (Includes Items 808A-808C, 808E & 808M) (1001100393 Installation)	2
808N	0275217	1	Receptacle Box Kit (220V IEC Blue) (Includes Items 808A, 808B, 808C & 808E) (0275254 Installation)	1
808N	1001100342	1	Receptacle Box Kit (220V IEC Blue) (Includes Items 808A-808C, 808E & 808M) (1001100394 Installation)	2
808N	0275218	NLA	Receptacle Box Kit (220V CEE7 Post Ground) (Includes Items 808A-808C, 808E & 808M) (0275237 Installation) (Use p/n 1001100343)	C
808N	1001091971	NLA	Receptacle Box Kit (220V CEE7 Post Ground) (Includes Items 808A-808C, 808E & 808M) (0275237 Installation) (Use p/n 1001100343)	
808N	0275219	NLA	Receptacle Box Kit (220V CEE7 Side Ground) (Includes Items 808A-808C, 808E & 808M) (0275253 & 1001153312 Installations) (Use p/n 1001100344)	
808N	1001091970	NLA	Receptacle Box Kit (220V CEE7 Side Ground) (Includes Items 808A-808C, 808E & 808M) (0275253 & 1001153312 Installations) (Use p/n 1001100344)	
809		Ref	Generator Installations	
809		Ref	4000W Generator Installation	
809	1001139952	Ref	60Hz & Deutz D2011 Engine	B

ITEM	PART NUMBER	QTY	DESCRIPTION	REV
809	1001139953	Ref	50Hz & Deutz D2011 Engine	D
809	1001171125	Ref	60Hz & Deutz TD2.9L4 Engine	A
809	1001180218	Ref	50Hz & Deutz TD2.9L4 Engine	B
809	1001139960	Ref	60Hz & GM Engine	A
809		Ref	7500W SkyPower Generator Installation	
809	1001141421	Ref	60Hz & Deutz TD2.9L4 Engine	E
809	1001115387	Ref	60Hz & Deutz D2011 Engine	F
809	1001115389	Ref	50Hz & Deutz D2011 Engine	E
809	0275257	Ref	60Hz & GM Engine	H
809A		Ref	Receptacle, Female Twist-Lock Options (Machines with 7500W SkyPower Generator, Deutz D2011 & GM Engines Only): **(SN 0300181891 through 0300182752)**	
809A	4460958	1	60Hz Spec	
809A	See Note	1	50Hz Spec (Note: Not Available - Purchase Locally)	
809B		Ref	Gasket Options:	
809B	3960422	AR	60Hz Spec	
809B	See Note	AR	50Hz Spec (Note: Not Available - Purchase Locally)	
809C		Ref	Cover, Receptacle Options:	
809C	1001110873	1	60Hz Spec	
809C	See Note	NLA	50Hz Spec (Note: Not Available - Purchase Locally)	
809D		Ref	Cover, Receptacle Options (Machines with 7500W SkyPower Generator, Deutz D2011 & GM Engines Only): **(SN 0300181891 through 0300182752)**	
809D	1001110872	1	60Hz Spec	
809D	See Note	NLA	50Hz Spec (Note: Not Available - Purchase Locally)	
809E		Ref	Receptacle Options:	
809E	4460346	1	60Hz Spec	
809E	See Note	NLA	50Hz Spec (Note: Not Available - Purchase Locally)	
809F	4460051	1	Connector, Strain Relief (Machines with 7500W SkyPower Generator, Deutz D2011 & GM Engines Only): **(SN 0300181891 through 0300182752)**	
809G	4460071	1	Connector, Strain Relief	
809H		Ref	Harness, Generator Options:	
809H	1001152532	1	4000W Generator	
809H	4922925	1	7500W SkyPower Generator	
809I		Ref	Plug, Male Options:	
809I		Ref	4000W Generator	
809I	77363233	1	Plug, Male - 6 Position	
809I	4460465	2	Socket, Female	
809I		Ref	7500W SkyPower Generator	
809I	77363233	1	Plug, Male - 6 Position	
809I	80463058	6	Socket, Female	
809J		Ref	Plug, Male Options:	
809J		Ref	4000W Generator	
809J	4460225	1	Plug, Male - 6 Position	
809J	4460268	2	Socket, Female	
809J		Ref	7500W SkyPower Generator	
809J	See Note	NLA	Plug, Male - 6 Position (Note: Not Available for Purchase)	
809J	See Note	NLA	Socket, Female (Note: Not Available for Purchase)	
810		Ref	Generator Junction Box Components	
810		Ref	4000W Generator	
810	1001152457	Ref	60Hz Spec	B
810	1001152458	Ref	50Hz Specs **(SN 0300181890 through 0300203537)**	B

ITEM	PART NUMBER	QTY	DESCRIPTION	REV
810		Ref	7500W SkyPower Generator	
810	0861542	Ref	60Hz Spec (Deutz D2011 Engines) **(SN 0300181891 through 0300182752)**	E
810	1001157592	Ref	60Hz Spec (Deutz D2011 Engines) **(SN 0300182753 through 0300235167)**	C
810	1001142914	Ref	60Hz Spec (Deutz DT2.9L4 Engines) **(SN 0300181891 through 0300182752)**	A
810	1001157592	Ref	60Hz Spec (Deutz DT2.9L4 Engines) **(SN 0300182753 through 0300235167)**	C
810	0861542	Ref	60Hz Spec (GM Engines) **(SN 0300181890 through 0300182752)**	E
810	1001157592	Ref	60Hz Spec (GM Engines) **(SN 0300182753 through 0300235167)**	C
810	0861567	Ref	50Hz Specs **(SN 0300181890 through 0300182752)**	B
810	1001157525	Ref	50Hz Specs **(SN 0300182753 through 0300235167)**	B
810A		Ref	Cable, Electrical 12/3	
810A	1060494	2 ft/.6m	60Hz Spec **(SN 0300181891 through 0300205217)**	
810A	1001179154	2.5 ft /0.76m	60Hz Spec **(SN 0300205217 through 0300235167)**	
810A	See Note	2 ft/.6m	50Hz Spec (Note: Not Available - Purchase Locally)	
810B		Ref	Cable, Electrical 10/3 (Machines with 7500W SkyPower Generator, Deutz D2011 & GM Engines Only) **(SN 0300181891 through 0300182752)**	
810B	1060708	2.5 ft/.76m	60Hz Spec	
810B	See Note	2.5 ft/.76m	50Hz Spec (Note: Not Available - Purchase Locally)	
810C	1060343	1.5 ft/.46m	Cable, Electrical 10/4 (Machines with 7500W SkyPower Generator - 60Hz Spec Only)	
810D	4460425	AR	Connector, Strain Relief	
810D	3520192	1	Plug, Hole (Machines with 7500W SkyPower Generator Deutz TD2.9L4 Engines Only) **(SN 0300181891 through 0300182752)**	
810D	1001152525	1	Plug, Hole (Machines with 7500W SkyPower Generator All Deutz Engines) **(SN 0300182753 through 0300235167)**	
810D	3520192	1	Plug, Hole (Machines with 4000W SkyPower Generator, Deutz D2011 Engines Only (CE Spec)	
810D	1001152525	1	Plug, Hole (Machines with 4000W SkyPower Generator, Deutz D2011 & GM Engines Only)	
810E		Ref	Component Options:	
810E		Ref	4000W SkyPower Generator	
810E	4460426	1	Connector, Strain Relief (60Hz Spec Only)	
810E	1001148648	1	Plug (50Hz Spec Only)	
810E		Ref	7500W SkyPower Generator	
810E	4460426	2	Connector, Strain Relief (60Hz Spec Only)	
810E	4460426	1	Connector, Strain Relief (50Hz Spec Only)	
810E	3520189	1	Plug (50Hz Spec Only)	
810F	1671092	1	Cover (Machines with 7500W SkyPower Generator - 60Hz Spec Only)	
810F	4460963	1	Connector (Machines with 7500W SkyPower Generator - 60Hz Spec Only)	
811		Ref	Generator Electrical Diagram Components	
811		Ref	4000W SkyPower Generator	
811	1001132055	Ref	60Hz - Deutz D2011 Engine Machines	A
811	1001132055	Ref	60Hz - Deutz DT2.9L4 Engine Machines **(SN 0300171769 through 0300213407, SN B300000970 through B300001593)**	A

ITEM	PART NUMBER	QTY	DESCRIPTION	REV
811	1001153257	Ref	60Hz - Deutz DT2.9L4 Engine Machines **(SN 0300213408 through 0300235167, SN B300001594 through B300002654)**	A
811	1001153025	Ref	50HZ - Deutz D2011 Engine Machines (ANSI Export and Japanese Specs) **(SN 0300171769 through 0300204381, SN B300000970 through B300001232)**	B
811	1001194437	1	50Hz - Deutz D2011 Engine Machines (ANSI Export & Japan Specs) **(SN 0300204382 through 0300235167, SN B300001233 through B300002654)**	B
811	1001159648	Ref	50HZ - Deutz D2011 Engine Machines (Australian Spec)	B
811	1001153025	1	50Hz - Deutz D2011 Engine Machines (CE Specs) **(SN 0300181891 through 0300204381)**	B
811	1001160271	Ref	50HZ - Deutz D2011 Engine Machines (UK Spec)	B
811	1001132055	Ref	GM Engine Machines	1-A
811		Ref	7500W SkyPower Generator	
811	1001112586	Ref	Deutz D2011 Engine Machines **(SN 0300181891 through 0300182752)**	B
811	1001157769	Ref	Deutz D2011 Engine Machines **(SN 0300182753 through 0300235167)**	B
811	1001122528	Ref	Deutz DT2.9L4 Engine Machines **(SN 0300181891 through 0300182752)**	B
811	1001157770	Ref	Deutz DT2.9L4 Engine Machines **(SN 0300182753 through 0300235167)**	A
811	4933349	Ref	GM Engine Machines **(SN 0300181891 through 0300182752)**	1-A
811	1001157768	Ref	GM Engine Machines **(SN 0300182753 through 0300235167)**	A
811A		Ref	Generator Harness Options:	
811A		Ref	4000W SkyPower Generator	
811A	1001153197	1	Deutz D2011 & GM Engines	B
811A	1001153197	1	Deutz DT2.9L4 Engines **(SN 0300171769 through 0300213407, SN B300000970 through B300001593)**	B
811A	1001153259	1	Deutz DT2.9L4 Engines **(SN 0300213408 through 0300235167, SN B300001594 through B300002654)**	B
811A		Ref	7500W SkyPower Generator	
811A	1001152429	1	Deutz D2011 Engines	C
811A	1001119968	1	Deutz TD2.9L4 Engines	C
811A	4923420	1	GM Engines	A
811A	4460465	3	Socket, Female	
811C	4460742	1	Plug, Male - 2 Position	
811C	4460743	2	Socket, Female	
811C	4460458	AR	Seal	
811C	1001116727	AR	Plug, Terminal	
811D		Ref	Component Options (Machines with 7500W SkyPower Generator Only):	
811D	2400060	1	Fuseholder (Deutz D2011 & GM Engines)	
811D	2400064	1	Fuse - 5 Amp (Deutz D2011 & GM Engines)	
811D	1001117078	1	Fuseholder (Includes Fuse and Cap) (Deutz TD2.9L4 Engines)	
811D	See Note	NSS	Fuse - 5 Amp (Deutz TD2.9L4 Engines) (Note: Use 1001117078 Assembly or Purchase Fuse Locally)	
811D	1001096134	1	Cover, Fuseholder (Deutz TD2.9L4 Engines)	
811E	4460967	1	Plug, Male - 3 Position	
811E	4460465	AR	Socket, Female	
811F	4922641	1	Switch Harness	D
811G	4460226	2	Socket, Female	
811H		Ref	Harness, Ground Options (4000W Generator - 50Hz Only) (Not Shown):	

ITEM	PART NUMBER	QTY	DESCRIPTION	REV
811H	1001164091	1	ANSI Export, CE and Japanese Specs	
811H	1001154121	1	Australian Spec	
811H	Not Required	1	UK Spec	
812	4933313	1	Floodlights Harness Components	1-A
812A	4460320	2	Plug, Male - 2 Position	
812A	4460227	4	Pin, Male	
812B	4922764	1	Floodlight Harness (Lights to Switch)	1-A
812C	4460424	2	Connector, Female - 2 Position	
812C	4460226	4	Socket, Female	
812D	4360232	1	Circuit Breaker - 15 Amp	
812E	1060977	1	Cord, 2 Wire Coiled (Console Box Circuit Breaker to Switch)	
812F	4460425	1	Connector, Strain Relief	
812G		Ref	Harness, Console Box to Aux Relay Options:	
812G	4922888	1	Harness, Console Box to Aux Relay 600S Harness (77ft/23.5m of 12/3 Cable P/N 1060494)	
812G	4922964	1	Harness, Console Box to Aux Relay 660SJ Harness (83ft/25.4m of 12/3 Cable P/N 1060494)	
813		Ref	Platform Worklights Components	
813A	2920140	2	Platform Worklights External Harness (Includes Light and Wire Only)	
813B	4460426	1	Connector, Strain Relief	
813C	2400070	1	Fuse	
813C	2400066	1	Holder, Fuse	
813D		Ref	Harness, Console Box to Aux Relay Options:	
813D	4922888	1	Harness, Console Box to Aux Relay 600S Harness (77ft/23.5m of 12/3 Cable P/N 1060494)	
813D	4922964	1	Harness, Console Box to Aux Relay 660SJ Harness (83ft/25.4m of 12/3 Cable P/N 1060494)	
814	2920161	1	Strobe Light (Amber) Harness (Includes Strobe Light):	B
814A	4460891	1	Plug, Male - 2 Position	
814A	4460465	2	Socket, Female	
814B		Ref	Strobe Light (Blue & Red) Harness Options (Not Shown):	
814B	1001142736	1	Harness, Beacon Control (Module to Light) (Not Shown)	E
814B	1001150944	1	Harness, Beacon Control (Module to Ground Control Box) (Not Shown) **(SN 0300171769 through 0300217293)**	C
		Ref	**TOOLS**	
901	7002821	1	Crimper (For Wire to Pin/Socket Connections) (Not Shown)	
902	7002823	1	Extractor (For Removal of Pin/Socket from Connectors) (Not Shown)	
903	4460467	1	Extractor, Pin (Blue 16-18 Gauge) (For Removal of Pin/Socket from Connectors) (Not Shown)	
904	4460510	1	Extractor, Pin (Yellow 12-14 Gauge) (For Removal of Pin/Socket from Connectors) (Not Shown)	
905	7002828	1	Stripper, Wire (Not Shown)	
906	2901443	1	Analyzer Kit (Not Shown)	
906A	1600244	1	Analyzer	
906B	1060633	1	Cable, Analyzer	1-A
906C	4460321	2	Plug, Male	
906C	4460226	8	Socket, Female	
907	1001137005	1	Software Cable Kit (Not Shown)	

SECTION 8 - DECALS

FIGURE 8-1. DECAL INSTALLATION (ANSI SPEC)

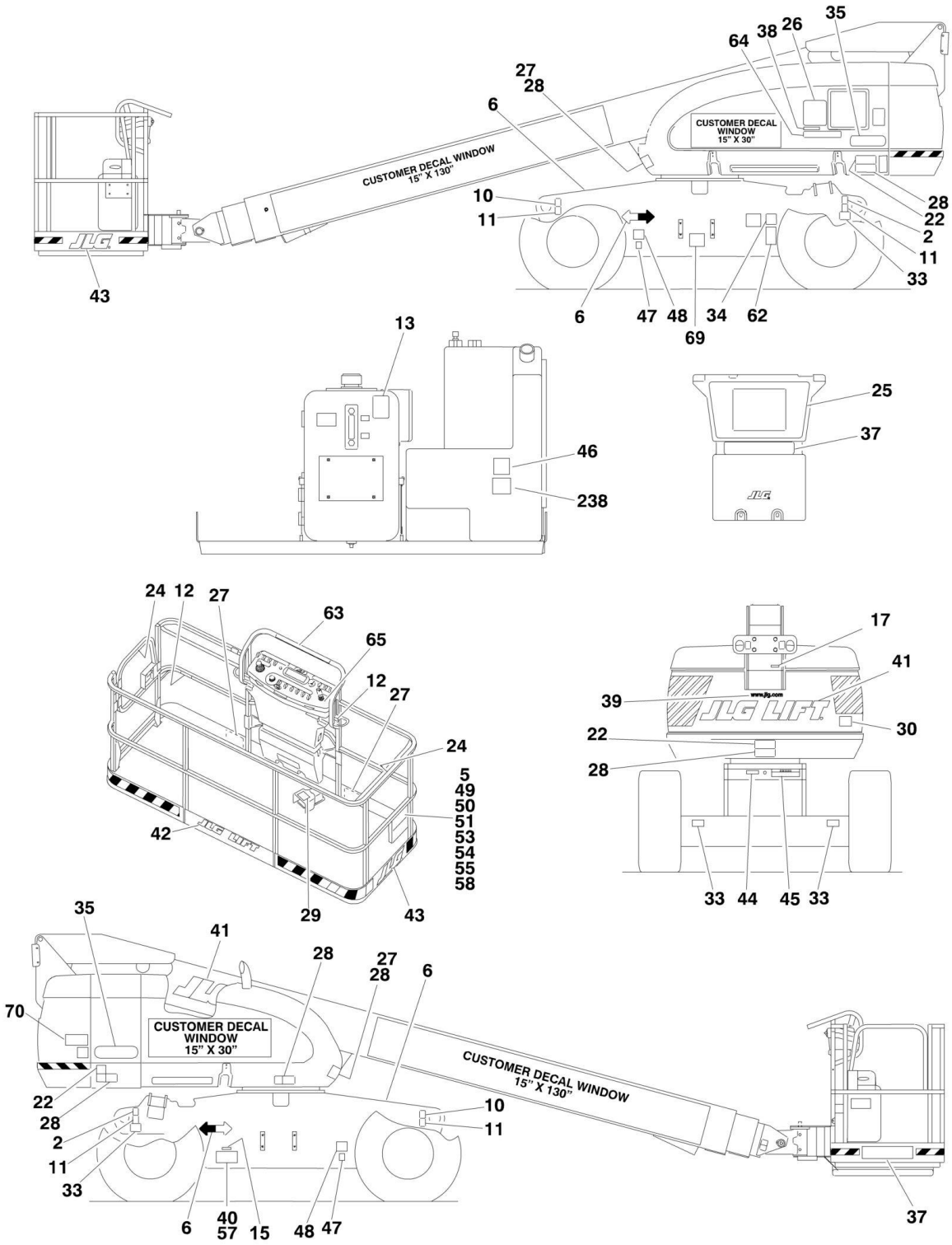

FIGURE 8-1. DECAL INSTALLATION (ANSI SPEC)

ITEM	PART NUMBER	QTY	DESCRIPTION	REV
		Ref	**STANDARD DECAL INSTALLATIONS**	
	0274093	Ref	**Decal - JLG**	C
	0273867	Ref	**Standard Decal Installations 600S ANSI Spec**	H
	0273869	Ref	**Standard Decal Installations 660SJ ANSI Spec**	H
2	1701499	2	Decal - No Tie Down/Lift	
5	1701509	1	Decal - Manual	
6	1701529	4	Decal - Arrow	
10	1703811	2	Decal - Tie Down/Lift	
11	1703814	4	Decal - Tie Down	
12	1704277	3	Decal - Attach Lanyard Here	
13	1704412	1	Decal - Hydraulic Oil	
15	1705514	1	Decal - CSA	
17		Ref	Nameplate Options:	
17	3251243	1	120V-60Hz	
17	3252507	1	220V-50/60Hz	
22	1703953	4	Decal - Warning/Crushing	
24	1702868	2	Decal - No Hands	
25	1703797	1	Decal - Danger/Warning	
26	1705336	1	Decal - Warning Inspection	
27	1703804	4	Decal - Warning Crushing	
28	1703805	4	Decal - Danger Electrocution	
29	3252347	1	Nameplate - Footswitch	
30	3251813	1	Decal - USA	
33		Ref	Decal - Tire Load Options:	
33	1703470	4	Decal - Tire Load (600S)	
33	1703472	4	Decal - Tire Load (660SJ)	
34	See Note	NSS	Decal - Bar Code (Note: Not Available for Purchase)	
35		Ref	Decal - Model Options:	
35	1702815	2	Decal - Model 600S	
35	1702817	2	Decal - Model 660SJ	
37		Ref	Decal - Capacity Options:	
37	1001121800	2	Decal - Capacity 600S	
37	1001121801	2	Decal - Capacity 660SJ	
38		Ref	Decal - Capacity Options:	
38	1001121813	1	Decal - Capacity 600S	
38	1001121814	1	Decal - Capacity 660SJ	
39	1704885	1	Decal - Website	
40	See Note	NSS	Nameplate - Serial Number (Note: Not Available for Purchase.)	
41	1702861	3	Decal - JLG Lift (8in)	
42	1702774	1	Decal - JLG Lift (3-1/2in)	
43	1702773	2	Decal - JLG Lift (5in)	
44	3250872	1	Nameplate - Steer/Tow Selection (Machines with Tow Package Only)	
45		Ref	Decal - Tow Instructions Options: (Machines with Tow Package Only)	
45	1702305	1	2WD	
45	1703403	1	4WD	
46		Ref	Decal - Fuel	
46	1701542	1	Gas Engine Machines	
46	1701505	1	Diesel Engine Machines	

ITEM	PART NUMBER	QTY	DESCRIPTION	REV
47	1701543	2	Decal - LP Gas (GM Engine Only)	
48		Ref	Decal - LP Gas Liquid Options (GM Engine Only):	
48	1700818	2	English Language	
48	1704271	2	English and French Languages	
48	1702720	2	Spanish Language	
49	0100011	AR	Compound, Locking	
50	0641406	4	Bolt 1/4in-20NC x 3/4in	
51	0641408	1	Bolt 1/4in-20NC x 1in	
53	0860520	1	Box, Manual Storage	
54	1060279	1	Cable, Lanyard **(SN 0300171769 through 0300196070)**	
54	1060279	1	Cable, Lanyard **(SN B300000970 through B300001089)**	
55	3311405	AR	Locknut 1/4in-20NC	
57	3820001	4	Rivet	
58	4751400	AR	Flatwasher 1/4in	
62	1001131269	1	Decal - Patent	
63	1001108493	1	Decal - Legend	
64	1706941	1	Decal - Legend	
65	1705351	1	Decal - Drive/Steer Instructions	
69	1001223055	1	Decal - Yearly Inspection **(SN 0300233974 through 0300235167)**	
69	1001223055	1	Decal - Yearly Inspection **(SN B300002046 through B300002654)**	
70	1001229114	1	Decal - Lift Diagram **(SN B300002358 through B300002654)**	
		Ref	**ADDITIONAL DECALS**	
238		Ref	Decal - EPA/Carb Fuel Specs Options:	
238	1001108923	1	Machines with Deutz D2011 Engine	
238	1001125387	1	Machines with Deutz TD2.9L4 Engine	

FIGURE 8-2. DECAL INSTALLATION (COUNTRY SPEC)

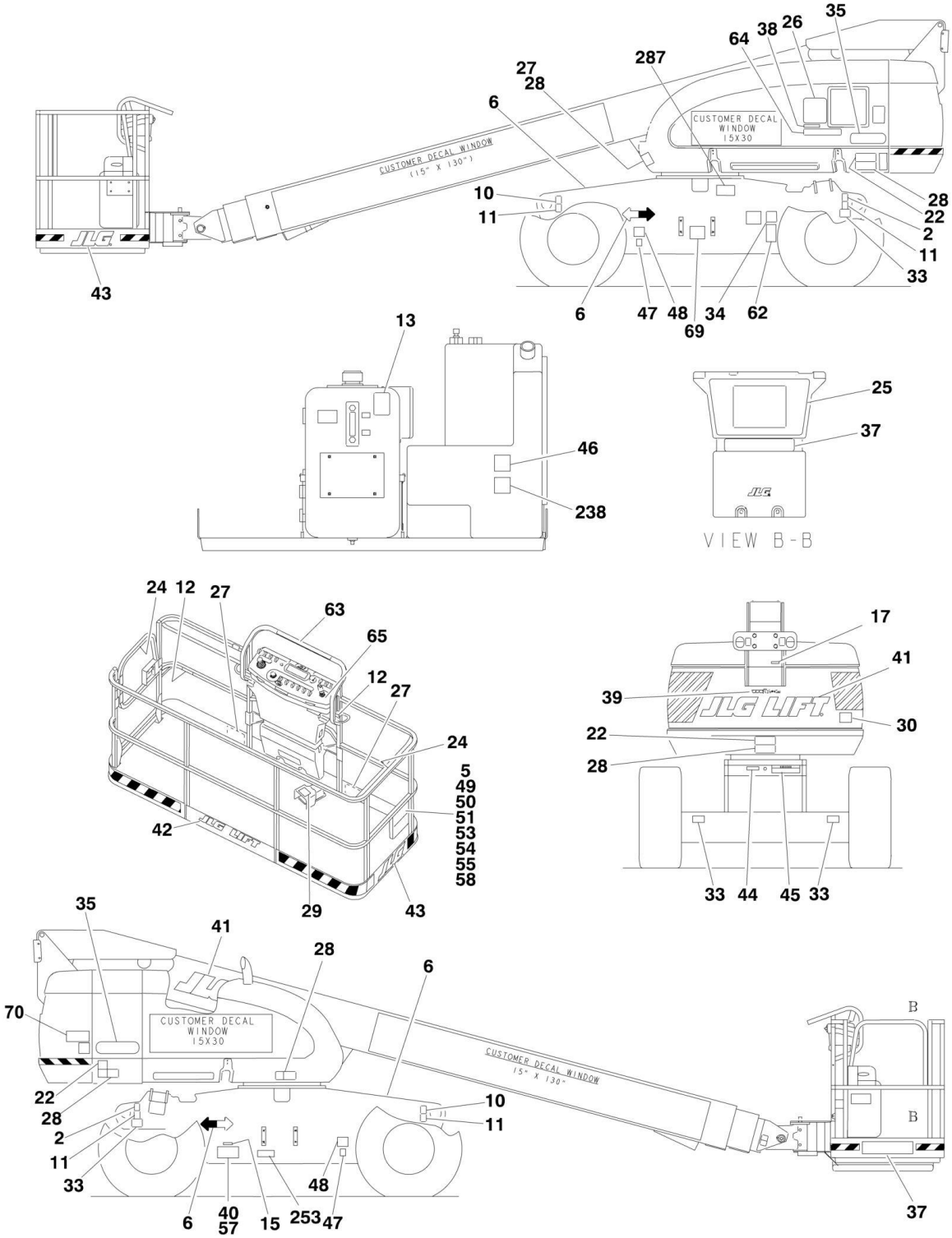

FIGURE 8-2. DECAL INSTALLATION (COUNTRY SPEC)

ITEM	PART NUMBER	QTY	DESCRIPTION	REV
		Ref	**STANDARD DECAL INSTALLATIONS**	
	0274093	Ref	**Decal - JLG**	C
	0273885	Ref	**Standard Decal Installations 600S Brazilian Spec**	F
	0273887	Ref	**Standard Decal Installations 660SJ Brazilian Spec**	F
	0275099	Ref	**Standard Decal Installations 600S Chinese Spec (Traditional)**	F
	1001116839	Ref	**Standard Decal Installations 600S Chinese Spec (Simplified)**	F
	0273871	Ref	**Standard Decal Installations 660SJ Chinese Spec (Traditional)**	F
	1001117939	Ref	**Standard Decal Installations 660SJ Chinese Spec (Simplified)**	F
	0273872	Ref	**Standard Decal Installations 600S CSA Spec**	F
	0273874	Ref	**Standard Decal Installations 660SJ CSA Spec**	G
	0273888	Ref	**Standard Decal Installations 600S Japanese Spec**	F
	0273890	Ref	**Standard Decal Installations 660SJ Japanese Spec**	F
	0273870	Ref	**Standard Decal Installations 600S Korean Spec**	F
	0274925	Ref	**Standard Decal Installations 660SJ Korean Spec**	F
	0273882	Ref	**Standard Decal Installations 600S Latin American Spec**	F
	0273884	Ref	**Standard Decal Installations 660SJ Latin American Spec**	F
2	1701499	2	Decal - No Tie Down/Lift	
5	1701509	1	Decal - Manual	
6	1701529	4	Decal - Arrow	
10	1703811	2	Decal - Tie Down/Lift	
11	1703814	4	Decal - Tie Down	
12	1704277	3	Decal - Attach Lanyard Here	
13	1704412	1	Decal - Hydraulic Oil	
15		Ref	Decal - CSA Options:	
15	1705514	1	CSA Spec Only	
15	Not Required	0	All Other Specs	
17		Ref	Nameplate Options:	
17	3251243	1	120V-60Hz	
17	3252507	1	220V-50/60Hz	
22		Ref	Decal - Warning/Crushing Options:	
22	1705903	4	Brazilian Spec	
22	1703943	4	Chinese Spec (Traditional)	
22	1001116845	4	Chinese Spec (Simplified)	
22	1703942	4	CSA Spec	
22	1703944	4	Japanese Spec	
22	1703945	4	Korean Spec	
22	1703941	4	Latin American Spec	
24		Ref	Decal - No Hands Options:	
24	1705967	2	Brazilian Spec	
24	1001116846	2	Chinese Spec	
24	1704000	2	CSA Spec	
24	Not Required	0	Japanese Spec	
24	1705969	2	Korean Spec	
24	1704001	2	Latin American Spec	
25		Ref	Decal - Danger/Warning Options:	
25	1705895	1	Brazilian Spec	
25	1703925	1	Chinese Spec (Traditional)	
25	1001116847	1	Chinese Spec (Simplified)	
25	1703924	1	CSA Spec	
25	1703926	1	Japanese Spec	

ITEM	PART NUMBER	QTY	DESCRIPTION	REV
25	1703927	1	Korean Spec	
25	1703923	1	Latin American Spec	
26		Ref	Decal - Warning Inspection Options:	
26	1705896	1	Brazilian Spec	
26	1001116849	1	Chinese Spec (Traditional)	
26	1001116848	1	Chinese Spec (Simplified)	
26	1705347	1	CSA Spec	
26	1705344	1	Japanese Spec	
26	1705345	1	Korean Spec	
26	1705917	1	Latin American Spec	
27		Ref	Decal - Warning Crushing Options:	
27	1705898	4	Brazilian Spec	
27	1703949	4	Chinese Spec (Traditional)	
27	1001116850	4	Chinese Spec (Simplified)	
27	1703948	4	CSA Spec	
27	1703950	4	Japanese Spec	
27	1703951	4	Korean Spec	
27	1703947	4	Latin American Spec	
28		Ref	Decal - Danger Electrocution Options:	
28	1705897	4	Brazilian Spec	
28	1001116851	4	Chinese Spec (Traditional)	
28	1703937	4	Chinese Spec (Simplified)	
28	1703936	4	CSA Spec	
28	1703938	4	Japanese Spec	
28	1703939	4	Korean Spec	
28	1703935	4	Latin American Spec	
29		Ref	Nameplate - Footswitch Options:	
29	1705902	1	Brazilian Spec	
29	1703982	1	Chinese Spec (Traditional)	
29	1001116852	1	Chinese Spec (Simplified)	
29	1703984	1	CSA Spec	
29	1703980	1	Japanese Spec	
29	1703981	1	Korean Spec	
29	1703983	1	Latin American Spec	
30		Ref	Decal - USA Options:	
30	3251813	1	All Specs Except Korean and Japanese Specs	
30	Not Required	0	Japanese and Korean Specs	
33		Ref	Decal - Tire Load Options:	
33	1703470	4	Decal - Tire Load (600S)	
33	1703472	4	Decal - Tire Load (660SJ)	
34	See Note	NSS	Decal - Bar Code (Note: Not Available for Purchase)	
35		Ref	Decal - Model Options:	
35	1702815	2	Decal - Model 600S	
35	1702817	2	Decal - Model 660SJ	
37		Ref	Decal - Capacity Options:	
37		Ref	Decal - Capacity 600S:	
37	1001121806	2	Brazilian Spec	
37	1001121809	2	Chinese Spec (Traditional)	
37	1001121811	2	Chinese Spec (Simplified)	
37	1001121802	2	CSA Spec	
37	1001121807	2	Japanese Spec	

ITEM	PART NUMBER	QTY	DESCRIPTION	REV
37	1001122200	2	Korean Spec	
37	1001121804	2	Latin American Spec	
37		Ref	Decal - Capacity 660SJ:	
37	1001121656	2	Brazilian Spec	
37	1001121810	2	Chinese Spec	
37	1001121803	2	CSA Spec	
37	1001121808	2	Japanese Spec	
37	1001121918	2	Korean Spec	
37	1001121805	2	Latin American Spec	
38		Ref	Decal - Capacity Options:	
38		Ref	Decal - Capacity 600S:	
38	1001121819	1	Brazilian Spec	
38	1001121822	1	Chinese Spec (Traditional)	
38	1001121824	1	Chinese Spec (Simplified)	
38	1001121815	1	CSA Spec	
38	1001121820	1	Japanese Spec	
38	1001122201	1	Korean Spec	
38	1001121817	1	Latin American Spec	
38		Ref	Decal - Capacity 660SJ:	
38	1001121655	1	Brazilian Spec	
38	1001121823	1	Chinese Spec	
38	1001121816	1	CSA Spec	
38	1001121821	1	Japanese Spec	
38	1001121921	1	Korean Spec	
38	1001121818	1	Latin American Spec	
39	1704885	1	Decal - Website	
40	See Note	NSS	Nameplate - Serial Number (Note: Not Available for Purchase)	
41	1702861	3	Decal - JLG Lift (8in)	
42	1702774	1	Decal - JLG Lift (3-1/2in)	
43	1702773	2	Decal - JLG Lift (5in)	
44	3250872	1	Nameplate - Steer/Tow Selection (Machines with Tow Package Only)	
45		Ref	Decal - Tow Instructions Options (Machines with Tow Package Only):	
45	1702305	1	2WD	
45	1703403	1	4WD	
46		Ref	Decal - Fuel	
46	1701542	1	Gas Engine Machines	
46	1701505	1	Deutz Engine Machines	
47	1701543	2	Decal - LP Gas (Gas Engine Only)	
48		Ref	Decal - LP Gas Liquid Options (Gas Engine Only):	
48	1700818	2	English Language	
48	1704271	2	English and French Languages	
48	1702720	2	Spanish Language	
49	0100011	AR	Compound, Locking	
50	0641406	4	Bolt 1/4in-20NC x 3/4in	
51	0641408	AR	Bolt 1/4in-20NC x 1in	
53	0860520	1	Box, Manual Storage	
54	1060279	1	Cable, Lanyard **(SN 0300171769 through 0300196070)**	
54	1060279	1	Cable, Lanyard **(SN B300000970 through B300001089)**	
55	3311405	AR	Locknut 1/4in-20NC	
57	3820001	4	Rivet	

ITEM	PART NUMBER	QTY	DESCRIPTION	REV
58	4751400	10	Flatwasher 1/4in	
62		Ref	Decal - Patent Options:	
62	Not Required	1	All Other Specs Except CSA Spec and Latin American Spec	
62	1702573	1	Latin American Spec Only	
62	1001131269	1	CSA Spec	
63	1001108493	1	Decal - Legend	
64	1706941	1	Decal - Legend	
65		Ref	Decal - Drive/Steer Instructions Options:	
65	1705905	1	Brazilian Spec	
65	1001116863	1	Chinese Spec (Traditional)	
65	1705430	1	Chinese Spec (Simplified)	
65	1705429	1	CSA Spec	
65	1705426	1	Japanese Spec	
65	1705427	1	Korean Spec	
65	1705910	1	Latin American Spec	
69		Ref	Decal - Yearly Inspection **(SN 0300233974 through 0300235167, SN B300002046 through B300002654)**	
69	1001224052	1	Brazilian Spec	
69	1001224050	1	Chinese Spec (Traditional)	
69	1001224051	1	Chinese Spec (Simplified)	
69	1001223971	1	CSA Spec	
69	1001224053	1	Japanese Spec	
69	1001224048	1	Korean Spec	
69	1001224049	1	Latin America Spec	
70	1001229114	1	Decal - Lift Diagram **(SN B300002358 through B300002654)**	
238		Ref	Decal - Ultra Low Sulfur Fuel (Machines with Deutz TD2.9L4 Engines Only)	
238	1001139654	Ref	All Specs except CSA Specs	
238	1001125387	Ref	CSA Spec	
253	1001143852	1	Decal - Emissions Compliance (All Specs except CSA Spec)	
287	See Note	NSS	Nameplate - ECO (GB Specs Only) (Note: Not Available for Purchase)	
287	3820001	4	Rivet	

FIGURE 8-3. DECAL INSTALLATION (AUSTRALIAN AND CE SPEC)

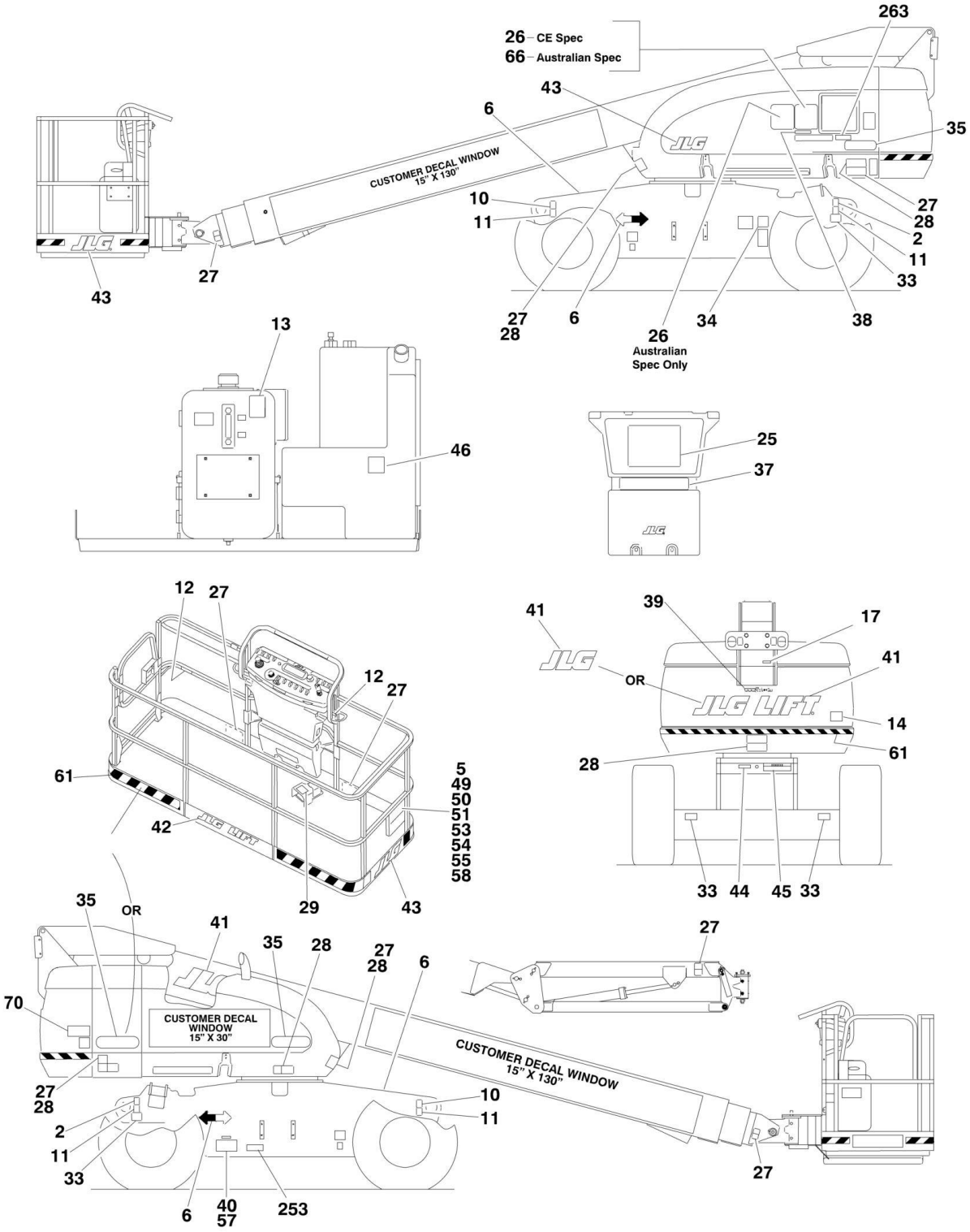

FIGURE 8-3. DECAL INSTALLATION (AUSTRALIAN AND CE SPEC)

ITEM	PART NUMBER	QTY	DESCRIPTION	REV
		Ref	**STANDARD DECAL INSTALLATIONS**	
	1283402	Ref	**Decal Reference Chart (Australian Specs)**	
	1283402	Ref	**Decal Reference Chart (CE Specs) (SN 0300171769 through 0300221221)**	
	1001218689	Ref	**Decal Reference Chart (CE Specs) (SN 0300221222 through 0300235167)**	
	1283402	Ref	**Decal Reference Chart (CE Specs) (SN B300000970 through B300002654)**	
	0274093	Ref	**Decal - JLG**	C
	1001114385	Ref	**Standard Decal Installations 600S (Australian Specs)**	F
	0273875	Ref	**Standard Decal Installations 600S (CE Specs)**	G
	1001114387	Ref	**Standard Decal Installations 660SJ (Australian Specs)**	F
	0273877	Ref	**Standard Decal Installations 660SJ (CE Specs)**	F
2	1701499	2	Decal - No Tie Down/Lift	
5	1701509	1	Decal - Manual	
6	1701529	4	Decal - Arrow	
10	1703811	2	Decal - Tie Down/Lift	
11	1703814	4	Decal - Tie Down	
12	1704277	3	Decal - Attach Lanyard Here	
13	1704412	1	Decal - Hydraulic Oil	
14	1705084	1	Decal - Sound Power Level	
17		Ref	Nameplate Options:	
17	3251243	1	120V-60Hz	
17	3252507	1	220V-50/60Hz	
25	1705921	1	Decal - Tipping/Electrocution	
26	1705822	1	Decal - Electrocution/Safety Manual	
27	1701518	8	Decal - Warning Crushing	
28	1705961	5	Decal - Electrocution	
29	1705828	1	Nameplate - Footswitch	
30	3251813	1	Decal - USA (CE Spec Machines Only) (Not Shown)	
33		Ref	Decal - Tire Load Options:	
33	1703470	4	Decal - Tire Load (600S)	
33	1703472	4	Decal - Tire Load (660SJ)	
34	See Note	NSS	Decal - Bar Code (Note: Not Available for Purchase)	
35		Ref	Decal - Model Options:	
35	1702815	2	Decal - Model 600S	
35	1702817	2	Decal - Model 660SJ	
37	1705978	1	Decal - Capacity	
38	1705978	1	Decal - Capacity	
39	1704885	AR	Decal - Website	
40	See Note	NSS	Nameplate - Serial Number (Note: Not Available for Purchase.)	
41	1702861	3	Decal - JLG Lift (8in)	
41	1001159323	3	Decal - JLG (8in)	
42	1702774	AR	Decal - JLG Lift (3-1/2in)	
43	1702773	AR	Decal - JLG Lift (5in)	
44	3250872	1	Nameplate - Steer/Tow Selection (Machines with Tow Package Only)	
45		Ref	Decal - Tow Instructions Options (Machines with Tow Package Only):	
45	1702305	1	2WD	
45	1703403	1	4WD	

ITEM	PART NUMBER	QTY	DESCRIPTION	REV
46		Ref	Decal - Fuel	
46	1701542	1	Gas Engine Machines	
46	1701505	1	Diesel Engine Machines	
49	0100011	AR	Compound, Locking	
50	0641406	4	Bolt 1/4in-20NC x 3/4in	
51	0641408	AR	Bolt 1/4in-20NC x 1in	
53	0860520	1	Box, Manual Storage	
54	1060279	1	Cable, Lanyard **(SN 0300171769 through 0300196070)**	
54	1060279	1	Cable, Lanyard **(SN B300000970 through B300001089)**	
55	3311405	AR	Locknut 1/4in-20NC	
57	3820001	4	Rivet	
58	4751400	10	Flatwasher 1/4in	
61	4420051	18 ft/5.3m	Decal - Warning Stripe	
66	1001112551	1	Decal - Emergency Controls (Australian Spec Only)	
70	1001229114	1	Decal - Lift Diagram **(SN B300002358 through B300002654)**	
253	1001143852	1	Decal - Emissions Compliance (All Specs except CSA Spec)	
263	1001197408	1	Decal - MSSO (CE Spec) **(SN 0300200772 through 0300235167)**	

SECTION 9 - RECOMMENDED SERVICE PARTS STOCK

FIGURE 9-1. MODEL 600SJ/660SJ STANDARD PARTS

ITEM	PART NUMBER	QTY	DESCRIPTION	REV
	Note	Ref	**Note: The following list will service one machine (built to current production per date on the front cover) with emergency repair parts which can be installed in the field. Parts from the list should be replaced when inventory is depleted to keep service parts stock supplied. For further information, contact your JLG dealer or the JLG Industries Parts Department.**	
		Ref	**STANDARD PARTS**	
	2120210	4	Element Filter	
	2120149	4	Element, Filter	
	7012944	1	Coil	
	7012943	1	Coil	
	7018991	1	Coil	
	70000582	1	Coil	
	7012772	1	Coil	
	7002386	1	Coil	
	4360436	1	Switch, Fuel Level	
	4360517	1	Switch, Proximity	
	3740049	1	Relay	
	4360328	1	Switch, Toggle	
	4360469	1	Switch, Key	
	2860030	1	Key, Replacement	
	4360475	1	Switch, Mushroom	
	4360476	1	Switch, Contact Block	
	4360330	1	Switch, Toggle	
	4360331	1	Switch, Toggle	
	4360407	1	Controller, Speed	
	4360387	1	Switch, Push Button	
	1001129555	1	Controller (Lift and Swing)	
	1001212415	1	Controller (Drive and Steer)	
	2400065	2	Fuse, 30Amp	
	3990010	2	Diode	
	8229242	2	Fuse, 5Amp	
	80983191	2	Fuse, 10Amp	

FIGURE 9-2. MODEL 600SJ/660SJ VARIABLE PARTS

ITEM	PART NUMBER	QTY	DESCRIPTION	REV
	Note	Ref	**Note: The following list will service one machine (built to current production per date on the front cover) with emergency repair parts which can be installed in the field. Parts from the list should be replaced when inventory is depleted to keep service parts stock supplied. For further information, contact your JLG dealer or the JLG Industries Parts Department.**	
		Ref	**VARIABLE PARTS**	
	7016331	1 doz	Filter, Oil (Deutz Engine Machines)	
	7016328	1 doz	Filter, Fuel (Deutz D2011 Engine Machines)	
	7026608	1	Relay (Deutz D2011 Engine Machines)	
	7027795	1	Module, Control (Deutz D2011 Engine Machines)	
	70003783	1 doz	Element, Air Cleaner (Deutz D2011 Engine Machines)	
	3740067	1	Relay (Deutz D2011 Engine Machines)	
	70025153	1 doz	Filter, Fuel (Deutz DT2.9L4 Engine Machines) (Use p/n 1001225430)	
	70025161	1 doz	Filter, Fuel (Deutz DT2.9L4 Engine Machines) (Use p/n 1001225431)	
	3740067	1	Relay (Deutz DT2.9L4 Engine Machines)	
	1001117308	1	Relay (Deutz DT2.9L4 Engine Machines)	
	1001138228	1	Relay (Deutz DT2.9L4 Engine Machines)	
	70025210	1	Module, Control (Deutz DT2.9L4 Engine Machines)	
	91403102	1 doz	Element, Air Cleaner (Deutz DT2.9L4 Engine Machines)	
	7027972	1 doz	Filter, Fuel (GM Engine Machines)	
	7027965	1 doz	Filter, Oil (GM Engine Machines)	
	70002895	1	Module, ECU (GM Engine Machines)	
	70003783	1 doz	Element, Air Cleaner (GM Engine Machines)	
	3740067	1	Relay (GM Engine Machines)	
	7024444	1	Cap, Vented/Breather (Helgensen Brand)	
	70004862	1	Cap, Vented/Breather (Hydac Brand)	
	1001106938	1	Module, Ground Control (USA Built Machines)	
	1001103667	1	Module, Ground Control (China Built Machines)	
	4360578	1	Switch, Limit	
	4360336	1	Switch, Toggle (Machines with Floodlights)	
	3740080	1	Relay (With SkyPower)	
	4360070	1	Breaker, Circuit (Machines with SkyPower)	
	2400064	2	Fuse - 5 Amp (Machines with SkyPower)	
	4360506	1	Switch, Proximity (Australian and CE Specs Only)	
	70002005	1	Power Track Repair Section (600S)	
	70002007	1	Power Track Repair Section (660SJ)	
	2940074	1	Latch (Platform with Gate)	
	1001106355	1	Module, Platform Control	
	4360336	1	Switch, Toggle (Machines with Dual Fuel)	
	4360522	1	Switch, Toggle (Machines with Headlights/Chassis Worklights)	
	4360232	1	Breaker, Circuit (Machines with Platform Floodlights)	
	4360057	1	Switch, Limit (Machines with Soft Touch Option)	
	2400070	2	Fuse (Machines with Platform Worklights)	

SECTION 10 - SPECIAL OPTIONS

FIGURE 10-1. SPECIAL OPTIONS

ITEM	PART NUMBER	QTY	DESCRIPTION	REV
		Ref	**Note: This list is to accommodate machines ordered with special equipment. Options may not be applicable to all models. For more specific parts information contact JLG Parts Department.**	
		Ref	**MISCELLANEOUS SPECIAL OPTIONS**	
	1001229762	Ref	**Air Intake Shut-Off Valve Installation (Deutz DT2.9L4 Engines)**	
		Ref	**Airline to Platform Installation Options:**	
		Ref	**USA Built Machines:**	
	0255388	Ref	1/2in 600S	
	0255389	Ref	1/2in 660SJ	
	1001093286	Ref	1/2in - 600S (Arctic Package Only)	
	0275341	Ref	1/2in - 660SJ (Arctic Package Only)	
	1001102674	Ref	Dual 1/2in 600S	
		Ref	**China Built Machines:**	
	0255388	Ref	1/2in 600S	
	0255389	Ref	1/2in 660SJ	
	1001205016	Ref	**Arctic Package Add-on Kit (Deutz TD2.9L4 without 7500W SkyPower Generator)**	
	1001205017	Ref	**Arctic Package Add-on Kit (Deutz TD2.9L4 with 7500W SkyPower Generator)**	
	1001220152	Ref	**Boom Cable Kit (4000W/60Hz Generators)**	
		Ref	**Boom Wipers Installations**	
	0256273	Ref	Bristle Brush Design	
	1001121605	Ref	Rubber Squeegee Design	
	1001172045	Ref	**Cable Carrier Installation (660SJ China Built Machines)**	
	1001121554	Ref	**Cable Protection Installation (Shipyard Spec Machines Only)**	
		Ref	**ClearSky Telematics (Factory Installed)**	
	Not Available	Ref	**Machines with ABS Hoods**	
		Ref	**Machines with Steel Hoods (SN 0300171769 through 0300234519)**	
		Ref	**Note: For ClearSky Telematics on Machines SN 0300171769 through 0300234519 Refer to ClearSky (Telematics) Manual p/n 3128499 for Service Parts.**	
	1001118963	Ref	**ANSI Spec (SN 0300171769 through 0300234519)**	
	1001134103	Ref	**Australian Specs (SN 0300171769 through 0300234519)**	
	1001127087	Ref	**Brazil and New Zealand Specs (SN 0300171769 through 0300234519)**	
	1001118964	Ref	**CSA Spec (SN 0300171769 through 0300234519)**	
		Ref	**Machines with Steel Hoods (SN 0300234520 through 0300235167)**	
	1001227450	Ref	**Canbus Connection (ANSI and CSA Specs) (SN 0300234520 through 0300235167)**	
	1001228948	Ref	**Canbus Connection (ANSI Export and CE Specs) (SN 0300234520 through 0300235167)**	
	1001229107	Ref	**3-Wire Connection (ANSI and CSA Specs) (SN 0300234520 through 0300235167)**	
	1001233237	1`ref	**3-Wire Connection (ANSI Export and CE Specs) (SN 0300234520 through 0300235167)**	
		Ref	**ClearSky Telematics Kit (Dealer Installed)**	
	1001119939	Ref	**ANSI Specs**	
	1001139151	Ref	**Australian Specs**	

ITEM	PART NUMBER	QTY	DESCRIPTION	REV
	1001234099	Ref	**CE Specs**	
	1001119947	Ref	**CSA Specs**	
		Ref	**Cold Weather Package Installation Options:**	
		Ref	**USA Built Machines:**	
	1001152324	Ref	Deutz D2011 Engine Machines	
	1001151900	Ref	Deutz DT2.9L4 Engine Machines	
	0275262	Ref	GM Engine Machines	
		Ref	**China Built Machines:**	
	1001152324	Ref	Deutz D2011 Engine Machines	
	1001152960	Ref	**Counterweight for Chassis (Required for Turf/Sand Tires)**	
	1001115918	Ref	**Cribbing Installation**	
		Ref	**Cylinder Bellows Installations**	
	0255929	Ref	Boom Bellows Installation (600S)	
	0255930	Ref	Boom Bellows Installation (660SJ)	
	1001151379	Ref	Frame Bellows Installation (2WS)	
	1001151380	Ref	Frame Bellows Installation (4WS)	
	0274233	Ref	**Davco Fuel Filter (Diesel Engines Only) (ANSI Export, Australian, CE and Japanese Specs)**	
		Ref	**Decal Installations Options:**	
		Ref	**USA Built Machines:**	
	1001196622	Ref	Decal - Ahearn	
	1702788	1	Decal - Biodegradable Hydraulic Fluid	
	1703479	1	Decal - Biodegradable Hydraulic Fluid (German Language)	
	1704174	1	Decal - Biodegradable (Synthetic) Hydraulic Fluid	
	1704175	1	Decal - Biodegradable (Synthetic) Hydraulic Fluid (German Language)	
	1001196719	Ref	Decal - Blueline	
	1001154501	Ref	Decal - Boels	
	1001120992	Ref	Decal - ClearSky (ANSI, ANSI Export, Australian, Brazilian and CSA Specs Only)	
	1001214030	Ref	Decal - EAC (CIS & Russian Specs)	
	0274455	Ref	Decal - FedEx (ANSI/CSA/CE Specs)	
	0257195	Ref	Decal - Government Warranty	
	0274528	Ref	Decal - Head and Engquist Equipment L.L.C (H and E) (ANSI Spec)	
	1001221892	Ref	Decal - Herc Rentals	
	1001128985	Ref	Decal - Hertz	
	1001222198	Ref	Decal - Hertz (Canada)	
	1001143076	Ref	Decal - Hewitt The Rental Store (English Language) (ANSI and CSA Specs)	
	1001143511	Ref	Decal - Hewitt The Rental Store (French Language) (ANSI and CSA Specs)	
	1001140624	Ref	Decal - Leavitt	
	0274243	Ref	Decal - National Equipment Services (NES) (ANSI/CSA Specs)	
	1702868	Ref	Decal - No Hands (ANSI Spec) (Platform with Mesh to Top Rail)	
	1705968	Ref	Decal - No Hands (Chinese - Simplified) (Platform with Mesh to Top Rail)	
	1001116846	Ref	Decal - No Hands (Chinese - Traditional) (Platform with Mesh to Top Rail)	
	1704000	Ref	Decal - No Hands (CSA) (Platform with Mesh to Top Rail)	
	1704001	Ref	Decal - No Hands (Spanish) (Platform with Mesh to Top Rail)	
	1705969	Ref	Decal - No Hands (Korean) (Platform with Mesh to Top Rail)	
	1705967	Ref	Decal - No Hands (Portuguese) (Platform with Mesh to Top	

ITEM	PART NUMBER	QTY	DESCRIPTION	REV
			Rail)	
	1001108718	Ref	Decal Kit - Platform (600S) (ANSI Specs)	
	1001108725	Ref	Decal Kit - Platform (660SJ) (ANSI Specs)	
	1001119562	Ref	Decal Kit - Platform Console Box (ANSI Specs)	
	0256487	Ref	Decal - Prop 65 Warning (Deutz Engine Machines) (California Spec)	
	0256488	Ref	Decal - Prop 65 Warning (GM Engine Machines) (California Spec)	
	1001200131	Ref	Decal - Quick Reference (Danish) (Lomax Rentals)	
	1001200129	Ref	Decal - Quick Reference (Dutch) (Lomax Rentals)	
	1001181145	Ref	Decal - Quick Reference (English) (Lomax Rentals)	
	1001200128	Ref	Decal - Quick Reference (French) (Lomax Rentals)	
	1001200130	Ref	Decal - Quick Reference (German) (Lomax Rentals)	
	1001200134	Ref	Decal - Quick Reference (Norwegian) (Lomax Rentals)	
	1001200133	Ref	Decal - Quick Reference (Spanish) (Lomax Rentals)	
	1001200132	Ref	Decal - Quick Reference (Swedish) (Lomax Rentals)	
	1001218719	Ref	Decal - Riwal	
	1001095383	Ref	Decal - RSC (ANSI Spec)	
	0271107	Ref	Decal - Sunbelt (ANSI/CSA Specs) **(SN 0300171769 through 0300205588)**	
	1001197851	Ref	Decal - Sunbelt (ANSI/CSA Specs) **(SN 0300205589 through 0300235167)**	
	0272312	Ref	Decal - Tire Sealant	
	1001151066	Ref	Decal - Titan Rentals (ANSI/CSA Specs)	
	0271893	Ref	Decal - United Rentals (ANSI/CSA Specs)	
	1001098291	Ref	Decal - UPS (ANSI/CSA Specs)	
	1001141470	Ref	Decal - Volvo Rents	
		Ref	**China Built Machines:**	
	1704174	1	Decal - Biodegradable (Synthetic) Hydraulic Fluid	
	1705968	Ref	Decal - No Hands (Chinese - Simplified) (Platform With Mesh to Top Rail)	
	1001116846	Ref	Decal - No Hands (Chinese - Traditional) (Platform With Mesh to Top Rail)	
	1705969	Ref	Decal - No Hands (Korean) (Platform With Mesh to Top Rail)	
	1702868	Ref	Decal - No Hands (ANSI Export Spec) (Platform With Mesh to Top Rail)	
		Ref	**Decal Kits Options:**	
	2902307	Ref	Decal Kit - Country Spec (ANSI and ANSI Export)	
	2902329	Ref	Decal Kit - Country Spec (Australian and CE)	
	2902312	Ref	Decal Kit - Country Spec (Brazil)	
	2902322	Ref	Decal Kit - Country Spec (CSA)	
	1001116844	Ref	Decal Kit - Country Spec (Chinese - Simplified)	
	2902309	Ref	Decal Kit - Country Spec (Chinese - Traditional)	
	2902308	Ref	Decal Kit - Country Spec (Japanese)	
	2902310	Ref	Decal Kit - Country Spec (Korean)	
	2902311	Ref	Decal Kit - Country Spec (Latin America)	
	2900967	NLA	Decal Kit - Complete (Use p/n 1001193634)	
	2902303	Ref	Decal Kit - Master (Common Decals)	
	1001193634	Ref	Decal Kit - Machine	
	1001108718	Ref	Decal Kit - Platform	
	1001119562	Ref	Decal Kit - Platform Console Box	
	2902304	Ref	Decal Kit - Tire Load (600S)	
	2902306	Ref	Decal Kit - Tire Load (660SJ)	

ITEM	PART NUMBER	QTY	DESCRIPTION	REV
		Ref	**Electrical Connector Kits**	
	1001148902	Ref	Amp/Tyco Electrical Connector Kit	
	1001148903	Ref	Deutsch DT Electrical Connector Kit	
	1001148904	Ref	Deutsch HD Electrical Connector Kit	
	1001148905	Ref	Packard Electrical Connector Kit	
	1001148906	Ref	Various Electrical Connectors Kit	
		Ref	**Engine Block Heater Installations:**	
	0274227	Ref	Deutz Engine Machines	
	0275261	Ref	GM Engine Machines	
		Ref	**Fan Cover/Grille Options:**	
	1001185078	Ref	Fan Cover Add-on Kit (Deutz D2011 Engines)	
	1001182599	Ref	Fan Cover Installation (Deutz D2011 Engines)	
	1001093389	Ref	Fan Grille Installation (Deutz D2011 Engines)	
	1001213223	Ref	Fan & Belt Grille Add-on Kit (Deutz 2011 Engines without Generator)	
	1001202122	Ref	Fan & Belt Grille Installation (Deutz 2011 Engines without Generator)	
	1001213222	Ref	Fan & Belt Grille Add-on Kit (Deutz 2011 Engines with Generator)	
	1001202398	Ref	Fan & Belt Grille Installation (Deutz 2011 Engines with Generator)	
	1001149126	Ref	Fan Grille Installation (Deutz DT2.9L4 Engines) (RCP Radiator Only)	
	1001177694	Ref	Fan Grille Installation (Deutz DT2.9L4 Engines) (Modine Radiator Only)	
	1001213219	Ref	Fan & Belt Grille Add-on Kit (Deutz DT2.9L4 Engines without Generator) (Modine Radiator)	
	1001202397	Ref	Fan & Belt Grille Installation (Deutz DT2.9L4 Engines without Generator) (Modine Radiator)	
	1001213220	Ref	Fan & Belt Grille Add-on Kit (Deutz DT2.9L4 Engines without Generator) (RCP Radiator)	
	1001202082	Ref	Fan & Belt Grille Installation (Deutz DT2.9L4 Engines without Generator) (RCP Radiator)	
	1001213227	Ref	Fan & Belt Grille Add-on Kit (Deutz DT2.9L4 Engines with Generator) (Modine Radiator)	
	1001213181	Ref	Fan & Belt Grille Installation (Deutz DT2.9L4 Engines with Generator) (Modine Radiator)	
	1001213221	Ref	Fan & Belt Grille Add-on Kit (Deutz DT2.9L4 Engines with Generator) (RCP Radiator)	
	1001202331	Ref	Fan & Belt Grille Installation (Deutz DT2.9L4 Engines with Generator) (RCP Radiator)	
	1001093389	Ref	Fan Cover Installation (GM Engines)	
		Ref	**Filter Kits:**	
		Ref	**Combined Filter Kit (Hydraulic/Air and Fuel/Engine Oil)**	
	1001166960	1	**Deutz D2011 Engines**	
	1001181148	1	**Deutz TD2.9L4 Engines**	
	1001114037	NLA	**GM Engines (Use p/n 1001114127)**	
		Ref	**Hydraulic/Air Filter Kits**	
	1001167020	1	**Deutz D2011 Engines**	
	1001204458	1	**Deutz DT2.9L4 Engines**	
		Ref	**Fuel/Engine Oil Filter Kits**	
	1001110133	1	**Deutz D2011Engines**	
	1001204460	1	**Deutz DT2.9L4 Engines**	
	1001139099	Ref	**Fire Extinguisher installation (Platform Mounted)**	

ITEM	PART NUMBER	QTY	DESCRIPTION	REV
	1001121554	Ref	**Fire Protection For Hoses and Cables (Shipyard Spec Machines Only)**	
		Ref	**Fluids**	
		Ref	Coolant (GM Engine Machines)	
	2300004	Ref	Machines without Arctic Package	
	2300041	Ref	Machines with Arctic Package	
	3020021	Ref	Engine Coupling Grease	
		Ref	Engine Oil	
	3020016	Ref	Motor Oil (Deutz Engine Machines without Arctic Package)	
	3020044	Ref	Motor Oil (Deutz Engine Machines with Arctic Package)	
	1001115930	Ref	Motor Oil 10W-30 (GM Engine Machines without Arctic Package)	
	1001115931	Ref	Motor Oil 5W-30 Synthetic (GM Engine Machines with Arctic Package)	
		Ref	Grease, Bearing Options:	
	3020029	Ref	Grease, Bearing (Turntable)	
	3020017	Ref	Grease, Bearing (2WD Spindles)	
		Ref	Hydraulic Fluids:	
	2300014	Ref	Mobil 424	
	2300027	Ref	Mobil 224H Bio	
	2300029	Ref	Mobil EAL ISO 46 Bio	
	2300016	Ref	Mobil DTE 10 EXCEL 32	
	2300019	Ref	Quaker State Quintolubric 888-46 Fire Resistant	
	2300039	Ref	Exxon Univis Hvl 26 (Machines with Arctic Package)	
		Ref	**Footswitch Shield (Note: Move Decal to Shield)**	
	1001117294	Ref	**USA Built Machines**	
	3380652	Ref	**China Built Machines**	
	1001202749	Ref	**Fuel Cap Cover Installation (Black) (Note: Lock p/n 1001102157 must be Purchased Separately)**	
	1001191395	Ref	**Fuel Cap Cover Installation (Green) (Diesel Machines) (Note: Lock p/n 1001102157 must be Purchased Separately)**	
	1001191394	Ref	**Fuel Cap Cover Installation (Red) (Gas Machines) (Note: Lock p/n 1001102157 must be Purchased Separately)**	
		Ref	**Generator Add-on Kits**	
	1001175816	Ref	**Generator Add-on Kit (4000W/50Hz) (Deutz D2011)**	
	1001213607	Ref	**Generator Add-on Kit (4000W/60Hz) (Deutz D2011)**	
	1001211799	Ref	**Generator Add-on Kit (4000W/50Hz) (Deutz DT2.9L4)**	
	1001213605	Ref	**Generator Add-on Kit (4000W/60Hz) (Deutz DT2.9L4)**	
	1001217055	Ref	**Generator Add-on Kit (7500W) (Deutz DT2.9L4)**	
	1001116159	Ref	**Generator Add-on Kit (7500W) (Deutz D2011)**	
		Ref	**Hood (Steel) Replacement Kit**	
	1001126286	Ref	**Deutz Engine Machines**	
	1001126287	Ref	**GM Engine Machines**	
		Ref	**Hostile (Extreme) Environment Installation Options:**	
	1001151153	Ref	Hostile (Extreme) Environment Installation - 2WS Diesel Machines	
	1001151154	Ref	Hostile (Extreme) Environment Installation - 4WS Diesel Machines	
	1001204925	Ref	Hostile Environment Add-on Kit (600S)	
	1001204926	Ref	Hostile Environment Add-on Kit (600SJ)	
	1001094475	Ref	**Hourmeter for Generator Installation (4000W & 7500W Generators)**	
	1001229940	Ref	**Hydraulic Tank Locker**	

ITEM	PART NUMBER	QTY	DESCRIPTION	REV
	1001148971	Ref	**Lanyard (Bolt-On) Kit Installation**	
		Ref	**Loop Flushing Installations (Requires Oil Cooler Installation)**	
	1001150568	Ref	**2WD**	
	1001150567	Ref	**4WD**	
		Ref	**Oil Cooler Options (Requires Loop Flushing Installation):**	
	1001151282	Ref	Oil Cooler Installation (Deutz D2011 Engine)	
	1001142677	Ref	Oil Cooler Installation (Deutz TD2.9L4 Engine) (RCP Cooler) **(SN 0300171769 through 0300227212)**	
	1001184569	Ref	Oil Cooler Installation (Deutz TD2.9L4 Engine) (YMER Cooler) **(SN 0300227213 through 0300235167)**	
	0272041	Ref	Oil Cooler Installation (GM Engine)	
	1001200700	Ref	Oil Cooler Replacement Kit (RCP to YMER)	
	1001110982	Ref	**Platform Bumpers Installation (Shipyard Spec Machines)**	
		Ref	**Platform Console Cover Installations**	
	0258703	Ref	Platform Console Cover Installation (Clear Polycarbonate) **(SN 0300171769 through 0300200808)**	
	1001195304	Ref	Platform Console Cover Installation (Clear Polycarbonate) **(SN 0300200809 through 0300235167)**	
	1001205175	Ref	Platform Console Cover Add-on Kit **(SN 0300200809 through 0300235167)**	
	1001110974	Ref	Platform Console Cover Installation (Steel) (All Specs except Chinese and Korean Specs)	
	1001125230	Ref	Platform Console Cover Installation (Steel) (Chinese Specs)	
	1001125229	Ref	Platform Console Cover Installation (Steel) (Korean Specs)	
		Ref	**Platform Entry Kit**	
	1001142504	Ref	Kit, Replace Swing Gate with Drop Bar	
	1001142505	Ref	Kit, Replace Drop Bar with Swing Gate	
		Ref	**Platform Extension (Top Rail)**	
	0272733	Ref	36in x 72in Platforms	
	0272725	Ref	36in x 96in Platforms	
		Ref	**Platform Mesh to Top Rail Add-on Kits:**	
	1001214552	Ref	30in x 4ft (76cm x 1.22m) with Gate	
	1001214559	Ref	30in x 5ft (76cm x 1.52m) with Gate	
	1001214561	Ref	36in x 6ft (91.5cm x 1.83m) with Gate	
	1001214562	Ref	36in x 8ft (91.5cm x 2.44m) with Gate	
		Ref	**Platform Mesh to Top Rail Installations**	
	0273147	Ref	30in x 4ft (76cm x 1.22m)	
	0273146	Ref	30in x 5ft (76cm x 1.52m)	
	0273149	Ref	36in x 6ft (91.5cm x 1.83m)	
	0273145	Ref	36in x 8ft (91.5cm x 2.44m)	
		Ref	**Platform Mesh to Mid Rail Add-on Kits:**	
	1001214478	Ref	30in x 4ft (76cm x 1.22m) with Gate	
	1001214515	Ref	30in x 5ft (76cm x 1.52m) with Gate	
	1001214540	Ref	36in x 6ft (91.5cm x 1.83m) with Gate	
	1001214548	Ref	36in x 8ft (91.5cm x 2.44m) with Gate	
		Ref	**Platform Mesh to Mid Rail Installation**	
	1001140318	Ref	30in x 4ft (76cm x 1.22m)	
	1001140315	Ref	30in x 5ft (76cm x 1.52m)	
	1001138772	Ref	36in x 6ft (91.5cm x 1.83m)	
	1001138773	Ref	36in x 8ft (91.5cm x 2.44m)	
	1001149730	Ref	**Platform Mid Rail Repair Kit**	
	1001209059	Ref	**Platform Work Surface Installation**	
	1001199488	Ref	**Radiator Replacement Kit (RCP to Modine)**	

ITEM	PART NUMBER	QTY	DESCRIPTION	REV
	1001100151	Ref	**Security Lock (Programmable) Installation**	
	2902232	Ref	**SkyGlazier Add-on Kit (ANSI/CSA Specs)**	
		Ref	**SkyGuard Component Options: (SN 0300171769 through 0300200271)**	
	1001206477	Ref	**SkyGuard Complete Add-on Kit (Blue Beacon)**	
	1001143669	NLA	**SkyGuard Complete Add-on Kit (Blue Beacon) (Use p/n 1001206477)**	
	1001210026	Ref	**SkyGuard Complete Add-on Kit (Red Beacon)**	
	1001197016	Ref	**SkyGuard Platform Sensor Kit**	
	1001137672	Ref	**SkyGuard Platform Sensor Kit**	
	1001137440	1	SkyGuard Sensor Harness	
	1001186431	2	Relay	
	1001206311	Ref	**SkyGuard Strobe Light Kit (Blue Beacon)**	
	1001143256	NLA	**SkyGuard Strobe Light Kit (Blue Beacon) (Use p/n 1001206311)**	
	1001210025	Ref	**SkyGuard Strobe Light Kit (Red Beacon)**	
	1001176372	Ref	**SkyGuard Removal Plug Kit**	
	1001121592	Ref	**Soft Touch Add-on Kit (6ft Platform) (ANSI Specs)**	
	1001121593	Ref	**Soft Touch Add-on Kit (8ft Platform) (ANSI Specs)**	
	1001110926	Ref	**Soft Touch (Overhead) Installation (ANSI Export Specs Only)**	
		Ref	**Strobe Light Installations (Amber)**	
	1001152965	Ref	**Platform Mounted**	
	1001154231	Ref	**Platform/Ground Mounted**	
	1001200279	Ref	**Telematics Installation (Customer Supplied)**	
	1001210089	Ref	**Telematics - Cat**	
	1001228363	Ref	**Telematics - Herc**	
	1001209282	Ref	**Telematics - Loxam**	
	1001210090	Ref	**Telematics - Riwal**	
	1001195610	Ref	**Telematics - United Rentals (M6)**	
	1001214463	Ref	**Telematics - United Rentals (M8)**	
	1001228581	Ref	**Telematics Canbus Installation (Customer Supplied)**	
	1001228357	Ref	**Telematics Retrofit Harness Kit (Machines with UGM) (SN 0300171769 through 0300234609)**	
		Ref	**Tools for Service**	
	7002840	1	Anti-Rotation Pin Removal Tool	
	8896941	1	Wire Stripper	
	7002821	1	Wire Crimper (To install wire ends to wires)	
	7002823	1	Pin/Socket Extractor - Universal (To Remove Pins/Sockets from Connectors)	
	4460467	1	Extractor - 16-18 Gauge (For Removal of Pin/Sockets from Deutsch Connectors)	
	4460510	1	Extractor - 12-14 Gauge (For Removal of Pin/Sockets from Deutsch Connectors)	
	7002822	1	Screwdriver, Potentiometer (To Adjust Drive Controllers)	
	7016654	1	Screwdriver, Magnetic	
	7004275	1	Seal Installation Tool - 1in	
	7004276	1	Seal Installation Tool - 1-1/2in	
	7002826	1	Seal Installation Tool - 2in	
	7016655	1	Wire Rope Sheave Gauge	
	7016652	1	Huck Bolt Faster (For Small Huck Bolts Only)	
	1001137005	1	Software Cable Kit	
	2915087	Ref	**Turntable Bearing Kit**	
		Ref	**Weld Leads to Platform Installation Options:**	

ITEM	PART NUMBER	QTY	DESCRIPTION	REV
	0255399	Ref	Weld Leads to Platform Installation 600S	
	0255895	Ref	Weld Leads to Platform Installation 660SJ	
	0273449	Ref	**Wheel Cover Installation**	

PART NUMBER INDEX

0060066 ..... 198, 209
0060067 ..... 193, 209
0080201 88
0100009 ..... 121, 233, 239
0100011 ..... 11, 13, 17, 21, 31, 35, 40, 43, 55, 62, 64, 65, 68, 73, 74, 76, 83, 86, 87, 88, 107, 113, 117, 121, 126, 127, 134, 136, 140, 142, 146, 147, 148, 149, 151, 155, 157, 161, 165, 169, 173, 181, 194, 199, 200, 204, 213, 217, 221, 226, 253, 257, 264, 267, 269, 271, 285, 293, 299, 301, 305, 307, 319, 322, 342, 362, 372, 377, 382
0100019 ..... 55, 136, 143, 148, 155, 161, 165, 169, 175, 181, 187, 194, 199
0100020 ..... 62, 73, 76, 86, 88, 105, 107, 108, 162, 170, 176, 187, 190, 264, 275, 317, 321
0100035 ..... 126, 127, 233, 239
0100038 ..... 11, 286, 293, 299, 301, 305, 307, 319, 322
0100048 ..... 86, 117, 121, 126, 127, 165, 213, 233, 239, 330, 333, 350, 353
0100062 ..... 65, 76, 89, 107
0100071 259
0100079 ..... 108, 165
0100081 ..... 140, 147, 221, 233, 239, 261
0140001 40
0140011 ..... 233, 239
0140032 ..... 126, 339
0140044 ..... 127, 359
0181949 108
0200048 253
0200742 151
0255335 126
0255388 388
0255389 388
0255399 395
0255698 126
0255881 131
0255895 395
0255929 389
0255930 389
0256113 ..... 340, 360
0256201 ..... 340, 360
0256273 388
0256305 126
0256487 390
0256488 390
0256689 67
0256690 67
0256823 ..... 136, 142, 148
0257175 ..... 340, 360
0257195 389
0257728 279
0257887 339
0258703 393
0258945 ..... 236, 241
0270528 35
0270733 ..... 331, 351
0270734 ..... 331, 351
0270735 331
0270736 ..... 331, 332
0270804 221
0270833 126
0271107 390
0271893 390
0272041 ..... 324, 393
0272070 ..... 194, 200
0272254 269
0272312 390
0272418 261
0272427 ..... 236, 241, 253
0272435 ..... 177, 183
0272448 ..... 264, 269
0272483 ..... 331, 351
0272484 ..... 331, 351
0272485 ..... 331, 332
0272486 ..... 331, 332
0272521 267
0272588 267
0272589 177
0272599 ..... 265, 275
0272607 275
0272703 213
0272725 393
0272733 393
0272948 261
0272951 261
0273145 393
0273146 393
0273147 393
0273149 393
0273353 264
0273449 395
0273450 187
0273486 ..... 228, 236, 241, 326
0273491 ..... 228, 236, 241, 326
0273687 187
0273706 ..... 236, 241, 253
0273824 ..... 236, 241, 253
0273867 371
0273869 371
0273870 375
0273871 375
0273872 375
0273874 375
0273875 381
0273877 381
0273882 375
0273884 375
0273885 375
0273887 375
0273888 375
0273890 375
0274093 ..... 371, 375, 381
0274152 21
0274209 228
0274227 391
0274233 389
0274243 389
0274455 389
0274528 389
0274661 279
0274751 134
0274925 375
0275039 157
0275099 375
0275216 ..... 343, 364
0275217 ..... 344, 364
0275218 ..... 344, 364
0275219 ..... 344, 364
0275235 ..... 340, 360
0275237 ..... 340, 360
0275253 340
0275254 ..... 340, 360
0275257 ..... 181, 344, 365
0275261 ..... 326, 391
0275262 389
0275339 ..... 331, 332
0275341 388
0275452 ..... 343, 364
0275453 ..... 343, 364
0275454 ..... 343, 364
0275455 ..... 340, 360
0275456 ..... 340, 360
0275659 ..... 340, 360
0275831 332
0275860 21
0275924 ..... 331, 351
0275925 ..... 331, 351
0340041 88
0362910 35
0363012 31
0370026 283
0400075 ..... 62, 73, 86
0440170 ..... 13, 17
0440171 ..... 13, 17
0440207 55
0480100 279
0480121 151
0480126 ..... 161, 175
0480129 ..... 161, 175
0480142 ..... 157, 169, 181
0561076 205
0561183 204
0561184 204
0561185 204
0561237 200
0561245 204
0561508 205
0630407 76
0630458 ..... 194, 199, 221
0630462 253
0630464 ..... 233, 239
0630467 217
0630485 ..... 141, 142, 147
0630490 ..... 14, 18
0630507 134
0630518 ..... 117, 121, 264, 267, 269, 271, 275
0630534 ..... 286, 289, 293, 297, 301
0630535 ..... 286, 291, 301, 307
0630536 299
0630548 ..... 117, 121
0630568 ..... 235, 240
0641403 ..... 126, 175, 205
0641404 ..... 121, 152, 161, 165, 175, 221, 233, 239
0641405 ..... 157, 169, 175, 181, 213
0641406 ..... 73, 76, 82, 86, 88, 126, 127, 134, 140, 141, 146, 189, 194, 205, 227, 372, 377, 382
0641407 ..... 64, 65, 83, 87, 118, 121, 213, 342, 362
0641408 ..... 86, 141, 142, 146, 147, 175, 227, 372, 377, 382
0641409 65
0641410 ..... 62, 65, 342, 362
0641412 73
0641414 ..... 233, 239, 253, 257, 259
0641416 39, 43, 200, 213, 342, 362
0641418 ..... 86, 226
0641420 226
0641424 200
0641505 ..... 174, 181
0641506 ..... 39, 118, 121, 134, 136, 140, 142, 147, 148, 189
0641507 121
0641508 79, 86, 107, 152, 155, 174
0641510 ..... 65, 157
0641512 65
0641514 ..... 157, 279
0641516 ..... 35, 161, 165, 169, 173, 181
0641518 ..... 76, 228
0641522 221
0641530 31
0641552 31
0641604 ..... 194, 199
0641605 76
0641606 65, 88, 135, 199, 217, 264, 267, 269, 271
0641607 ..... 31, 74, 76, 128, 155
0641608 ..... 13, 17, 40, 43, 63, 73, 76, 83, 86, 88, 105, 107, 134, 135, 140, 141, 142, 146, 147, 193, 199, 221
0641609 ..... 65, 68, 73, 76, 88, 131, 141, 148
0641610 ..... 32, 62, 65, 73, 87, 88, 105, 151, 189, 199, 227
0641611 ..... 140, 146, 200
0641612 ..... 76, 86, 88, 113
0641613 205

0641614 199
0641616 ....162, 165, 176, 189, 204
0641617 108
0641618 .....31, 107, 176, 199
0641634 205
0641638 205
0641644 221
0641648 221
0641708 76
0641710 157
0641772 ..... 151, 155
0641807 221
0641808 ....62, 73, 76, 86, 87, 161, 165, 169, 175, 181
0641810 ..... 140, 187
0641811 ..... 107, 113
0641812 ..64, 76, 87, 155, 194, 200
0641814 11
0641818 .....68, 107, 131
0641820 .....65, 68, 113
0641822 213
0641824 204
0641826 89
0641828 88
0642010 .....35, 62, 73, 86
0642012 ..11, 13, 17, 193, 199, 261
0642024 213
0642026 261
0642212 261
0642612 ..... 127, 128
0642684 .....195, 200, 213
0651406 ..... 39, 43
0681608 ....195, 200, 206, 213
0681610 204
0681618 ..... 140, 146
0681620 76
0681810 21
0681814 231
0681820 ..... 77, 83
0681822 ..... 83, 231
0682016 ..... 21, 55
0682018 .....55, 136, 143, 148
0682020 .....13, 136, 143, 148
0682216 55
0700408 ..... 342, 362
0700615 128
0700616 ..... 142, 147
0700617 ..... 142, 148
0700618 ..... 142, 148
0700808 65
0700810 88
0700814 83
0700820 .....157, 169, 181
0701016 .....157, 169, 181
0720804 108
0721003 .13, 17, 236, 241
0721004 35, 75, 176, 194, 200
0721005 253
0721006 .... 134, 152, 155, 233, 239
0721008 135
0741605 ..... 77, 194, 199
0741607 17, 35, 162, 165, 176, 194, 199
0741610 .....62, 73
0741612 204
0760605 77
0760606 77
0760612 111
0760806 73
0760810 .....73, 77
0761008 75
0761015 79
0761210 77
0771212 .....73, 77
0771414 ..... 65, 68, 77, 83
0771415 ..... 83, 162, 176
0801396 203
0801471 203
0801472 203
0801473 203
0801475 203
0801498 203
0801504 .....203, 204
0801524 203
0811606 204
0811607 204
0811608 205
0811610 .....40, 43
0811614 206
0811812 .....140, 147
0840055 213
0860038 .... 162, 165, 169, 174, 181, 340, 361
0860520 ..... 372, 377, 382
0861537 .....233, 235
0861538 .....176, 181
0861541 .....176, 182
0861542 .... 173, 176, 181, 182, 345, 366
0861567 .... 173, 176, 345, 366
0861572 176
0861642 187
0861731 .....340, 361
0861781 .....341, 361
0861782 .....341, 361
0861880 .....343, 363
0902143 134
0902161 134
0902206 .....127, 128
0902219 134
0902223 134
0902351 134
0902416 134
0902491 134
0902751 233
0902888 .... 161, 165, 169, 175, 181
0902919 213
0902920 213
0903056 113
0903484 .....342, 363
0903510 86
0940049 ..... 135, 140, 146
0940070 .....65, 77, 88
0940071 134
0940088 135
0940092 253
0940094 253
0940102 261
0940103 253
0940133 253
0940134 253
0940177 253
0961845 226
0961893 .....285, 289, 293, 297, 301
0961894 .....285, 301
0961897 307
0961898 299
0961947 .....199, 285, 289, 301
0961950 .....11, 194, 199, 206, 299
0961951 .....194, 199, 204, 206, 285, 291, 301
0961986 .....65, 77, 88
0962006 .....194, 199
0962051 131
0962057 194
0962131 .....13, 17
0962270 231
0962292 17
0962335 199
0962336 .....293, 295, 297
0962348 17
0962356 .....13, 17, 305
0962449 152
0962450 213
0962520 .....161, 165, 169, 176, 181
1001091303 .....39, 45
1001091587 87
1001091794 89
1001091970 .....344, 364
1001091971 .....344, 364
1001093274 228
1001093286 388
1001093382 .....63, 74, 87
1001093389 391
1001094043 .....193, 198
1001094475 392
1001095383 390
1001096070 .....162, 166, 342, 363
1001096134 .....178, 346, 367
1001097150 .....343, 364
1001097242 ....13, 17, 18, 305
1001097348 22
1001097351 22
1001097357 21
1001097358 21
1001097373 21
1001097374 21
1001097387 21
1001097388 21
1001097961 136
1001098012 .....264, 275, 277
1001098149 275
1001098291 390
1001098503 31
1001098764 .....338, 359
1001099196 13
1001099366 261
1001099367 261
1001099387 .....13, 17
1001099391 ..... 39, 40, 43
1001099421 261
1001099422 261
1001099832 221
1001099869 152
1001100120 31
1001100151 394
1001100233 152
1001100234 152
1001100321 151
1001100341 .....343, 364
1001100342 .....344, 364
1001100345 .....343, 364
1001100346 .....343, 364
1001100347 .....343, 364
1001100390 .....340, 361
1001100391 .....340, 361
1001100392 .....340, 361
1001100393 361
1001100394 .....340, 361
1001100395 .....340, 361
1001100396 .....340, 361
1001101060 .....55, 58
1001101191 364
1001101391 135
1001101392 135
1001101421 261
1001101422 261
1001101800 21
1001101801 21
1001101802 21
1001102601 .....117, 122
1001102602 .....117, 122
1001102647 261
1001102674 388
1001103308 123
1001103667 .....117, 122, 386
1001106339 .....336, 354
1001106340 .....336, 354
1001106355 .....234, 240, 386
1001106479 126
1001106481 126
1001106736 .....118, 122, 334, 353
1001106938 .....234, 240, 386
1001106974 113
1001106975 113
1001107753 .....235, 330, 331, 350, 351
1001107926 .....236, 240
1001108256 .....236, 241, 253
1001108341 193
1001108342 198
1001108493 .....372, 378

1001108602 .....118, 122, 123, 333, 335, 353, 354
1001108718 390
1001108725 390
1001108763 .....235, 240
1001108764 .....235, 240
1001108923 372
1001109475 .....343, 363
1001109477 .....343, 363
1001109482 .....343, 363
1001109503 121
1001109554 .....342, 363
1001110133 391
1001110166 .....140, 146
1001110345 327
1001110348 117
1001110349 117
1001110350 117
1001110351 117
1001110352 117
1001110353 117
1001110359 .....118, 333, 334
1001110361 .....118, 333, 334
1001110363 .....327, 333
1001110364 .....326, 333
1001110425 74
1001110434 .....234, 240
1001110872 .....173, 182, 344, 365
1001110873 .....162, 166, 170, 173, 182, 341, 344, 361, 365
1001110926 394
1001110974 393
1001110982 393
1001111017 117
1001111346 227
1001111514 107
1001112467 299
1001112468 .....193, 198, 299
1001112551 382
1001112586 .....177, 326, 345, 367
1001112587 .....177, 346
1001112588 .....326, 339, 359
1001112589 .....339, 359
1001112612 .....336, 355
1001112743 .....326, 339, 359
1001113047 .....140, 146
1001113386 198
1001113407 198
1001113465 .....195, 200
1001113483 213
1001113797 317
1001113798 317
1001113801 318
1001113807 318
1001113808 319
1001113811 318
1001113812 319
1001113813 318
1001113814 318
1001113821 318
1001113822 318
1001113823 319
1001113826 319
1001113832 317
1001113833 318
1001113834 318
1001113855 319
1001113880 318
1001113893 318
1001113896 317
1001113899 317
1001113905 317
1001113906 319
1001113907 317
1001113911 319
1001113912 318
1001113961 249
1001114037 391
1001114070 324
1001114385 381
1001114387 381
1001114595 88
1001114632 88
1001114643 87
1001114644 86
1001114645 87
1001114646 86
1001114668 221
1001114816 221
1001115098 .....194, 200
1001115099 213
1001115236 221
1001115387 .....173, 344, 365
1001115389 .....173, 344, 365
1001115393 173
1001115405 151
1001115409 151
1001115918 389
1001115930 .....88, 392
1001115931 392
1001116159 392
1001116290 .....142, 147, 148
1001116457 141
1001116544 89
1001116545 89
1001116692 .....351, 356
1001116693 359
1001116710 .....337, 357
1001116720 .....330, 350
1001116727 .....337, 346, 358, 367
1001116839 375
1001116844 390
1001116845 375
1001116846 .....375, 389, 390
1001116847 375
1001116848 376
1001116849 376
1001116850 376
1001116851 376
1001116852 376
1001116863 378
1001116952 .....337, 358
1001116983 .....337, 357
1001117078 .....178, 346, 367
1001117172 227
1001117174 .....227, 240, 330, 350
1001117234 .....140, 146
1001117249 140
1001117294 392
1001117307 .....140, 146
1001117308 .....78, 386
1001117523 .....140, 146
1001117525 .....140, 146
1001117598 .....140, 146
1001117799 ....64, 76, 88, 94
1001117939 375
1001118133 108
1001118264 140
1001118388 .....330, 350
1001118416 .....233, 234, 249
1001118417 .....233, 243
1001118550 .....140, 146
1001118735 .....140, 146
1001118963 388
1001118964 388
1001119283 140
1001119562 390
1001119939 388
1001119947 389
1001119968 .....178, 346, 367
1001120328 257
1001120992 389
1001121061 .....140, 147
1001121118 .....140, 147
1001121119 .....141, 147
1001121340 .....177, 178, 183
1001121410 193
1001121554 .....388, 392
1001121592 .....254, 394
1001121593 .....254, 394
1001121605 388
1001121655 377
1001121656 377
1001121657 .....236, 240
1001121800 371
1001121801 371
1001121802 376
1001121803 377
1001121804 377
1001121805 377
1001121806 376
1001121807 376
1001121808 377
1001121809 376
1001121810 377
1001121811 376
1001121813 371
1001121814 371
1001121815 377
1001121816 377
1001121817 377
1001121818 377
1001121819 377
1001121820 377
1001121821 377
1001121822 377
1001121823 377
1001121824 377
1001121891 86
1001121918 377
1001121921 377
1001122200 377
1001122201 377
1001122472 194
1001122528 .....177, 326, 346, 367
1001123000 87
1001125097 .....141, 146
1001125229 393
1001125230 393
1001125387 .....372, 378
1001125492 55
1001125784 122
1001125785 122
1001126286 392
1001126287 392
1001126351 .....337, 357
1001126352 .....337, 357
1001126353 .....337, 357
1001126356 .....337, 357
1001126357 .....337, 357
1001126362 .....338, 358
1001126363 .....338, 358
1001126364 .....338, 358
1001126365 .....338, 358
1001126384 .....337, 357
1001126391 .....338, 358
1001126509 203
1001126596 203
1001126597 203
1001127087 388
1001127195 194
1001127196 194
1001127285 203
1001128479 226
1001128527 271
1001128556 271
1001128598 226
1001128985 389
1001129555 384
1001129858 .....161, 169
1001130041 66
1001131168 .....235, 240
1001131269 .....372, 378
1001131542 76
1001131992 327
1001132055 .....326, 366, 367
1001133714 .....338, 358
1001133715 .....338, 358
1001133956 .....337, 357
1001133957 .....337, 357
1001134103 388
1001134488 78
1001135138 78
1001135650 .....338, 358
1001135651 .....338, 358
1001135679 78
1001136079 78

1001136172 78
1001136834 78
1001136988 174
1001137005 ..... 347, 368, 394
1001137276 78
1001137440 394
1001137458 ..... 40, 43
1001137672 394
1001137673 257
1001138110 ..... 337, 358
1001138111 ..... 337, 358
1001138113 ..... 337, 358
1001138170 78
1001138173 78
1001138175 78
1001138228 ..... 78, 386
1001138248 78
1001138489 79
1001138494 227
1001138514 227
1001138557 78
1001138565 161
1001138566 ..... 161, 166, 169
1001138717 78
1001138772 393
1001138773 393
1001138795 297
1001138796 291
1001138827 78
1001139099 391
1001139135 ..... 235, 240, 351
1001139151 388
1001139240 78
1001139303 78
1001139357 161
1001139409 ..... 78, 83
1001139429 78
1001139654 378
1001139813 ..... 78, 80
1001139819 66
1001139952 ..... 161, 344, 364
1001139953 ..... 161, 344, 365
1001139960 ..... 169, 365
1001140312 80
1001140315 393
1001140318 393
1001140346 165
1001140347 165
1001140429 227
1001140454 78
1001140466 83
1001140487 78
1001140535 79
1001140564 79
1001140624 389
1001141300 241
1001141302 241
1001141304 .79, 339, 359
1001141370 79
1001141419 79
1001141421 ..... 173, 344, 365
1001141470 390
1001141546 79
1001141583 79
1001141584 79
1001141585 79
1001141586 79
1001141693 66
1001141694 66
1001141711 83
1001141967 .....341, 361
1001141968 .....341, 361, 362
1001141969 .....341, 361, 362
1001141995 79
1001142031 83
1001142032 83
1001142501 ..... 74, 75, 79
1001142504 393
1001142505 393
1001142623 79
1001142643 .....166, 175
1001142645 166
1001142646 .....166, 175
1001142677 .....324, 393
1001142683 128
1001142694 128
1001142722 128
1001142733 79
1001142736 .....128, 368
1001142914 .....173, 345, 366
1001142938 .....338, 358
1001142940 .....338, 358
1001142941 .....338, 358
1001143076 389
1001143256 394
1001143390 .....66, 79
1001143431 128
1001143449 83
1001143450 .....317, 324
1001143451 .....317, 324
1001143455 .....317, 324
1001143456 .....317, 324
1001143472 83
1001143483 82
1001143484 82
1001143511 389
1001143525 83
1001143575 83
1001143669 394
1001143726 .79, 337, 357
1001143736 .74, 336, 356
1001143797 79
1001143841 147
1001143852 .....378, 382
1001143860 83
1001143907 .79, 338, 359
1001144018 225
1001144019 226
1001144021 226
1001144022 226
1001144023 225
1001144024 225
1001144026 225
1001144027 225
1001144040 .....63, 74
1001144354 146
1001144433 240
1001144440 .74, 336, 356
1001144527 146
1001144629 225
1001144660 .74, 337, 357
1001145040 117
1001145041 117
1001145046 ..... 118, 333, 334
1001145154 79
1001145172 ..... 107, 108
1001145279 39
1001145280 39
1001145281 39
1001145282 39
1001145405 ..... 264, 275
1001145750 83
1001145751 83
1001145781 ..... 225, 226
1001145895 ..... 227, 233, 330
1001145896 227
1001145993 ..... 118, 123, 333, 335, 353, 354
1001145995 ..... 327, 333
1001145996 68
1001146179 225
1001146180 225
1001146181 226
1001146182 226
1001146368 66
1001147264 ..... 337, 358
1001148138 155
1001148149 74
1001148161 13
1001148162 13
1001148163 .13, 236, 241
1001148164 17
1001148165 17
1001148166 .17, 236, 241
1001148168 11
1001148169 11
1001148170 11
1001148171 11
1001148172 11
1001148178 ..... 17, 18
1001148641 79
1001148648 366
1001148650 205
1001148651 205
1001148652 204
1001148653 206
1001148902 391
1001148903 391
1001148904 391
1001148905 391
1001148906 391
1001148925 ..... 194, 199
1001148971 393
1001149126 391
1001149287 ..... 21, 31
1001149288 ..... 21, 31
1001149289 ..... 21, 31
1001149528 75
1001149703 68
1001149704 66
1001149705 66
1001149706 66
1001149730 393
1001149793 66
1001149807 73
1001149812 75
1001149813 73
1001149814 75
1001149815 73
1001149816 75
1001149818 .....127, 347
1001149908 76
1001149924 261
1001149927 55
1001149928 .....136, 143, 148
1001149952 .....136, 143, 148
1001149955 127
1001149994 .....127, 129
1001150154 64
1001150155 64
1001150156 .....63, 64
1001150158 .....64, 65
1001150179 65
1001150198 107
1001150241 140
1001150243 141
1001150244 .....141, 142, 146, 147
1001150253 .....142, 148
1001150260 .....141, 147
1001150332 .....141, 147
1001150333 .....141, 147
1001150339 .....142, 147
1001150370 .....141, 146
1001150388 107
1001150389 107
1001150390 55
1001150391 55
1001150400 .....136, 142, 143, 148
1001150406 127
1001150423 .....40, 43
1001150561 141
1001150567 393
1001150568 393
1001150569 35
1001150570 35
1001150571 35
1001150845 .....31, 32
1001150890 68
1001150915 66
1001150918 .....63, 75
1001150944 .....128, 368
1001150969 76
1001150971 76
1001150974 79
1001150994 31
1001150995 31
1001150998 65
1001151010 108
1001151066 390
1001151070 63
1001151078 66
1001151153 392
1001151154 392

1001151203 55
1001151206 66
1001151251 66
1001151252 68
1001151253 68
1001151282 .....324, 393
1001151294 141
1001151295 .....68, 141
1001151303 113
1001151304 113
1001151306 .....127, 236, 240
1001151307 .....127, 236, 241
1001151318 79
1001151319 79
1001151341 62
1001151342 62
1001151343 62
1001151345 .....313, 324
1001151346 .....315, 324
1001151347 324
1001151348 .....315, 324
1001151349 .....311, 324
1001151350 324
1001151351 .....313, 315
1001151352 315
1001151353 315
1001151354 .....313, 315
1001151355 315
1001151356 .....313, 315
1001151357 315
1001151358 315
1001151359 315
1001151360 315
1001151361 315
1001151362 315
1001151364 313
1001151365 313
1001151366 311
1001151367 311
1001151379 389
1001151380 389
1001151393 117
1001151501 .....136, 143, 148
1001151565 .63, 336, 356
1001151630 66
1001151631 64
1001151632 64
1001151633 64
1001151634 64
1001151635 65
1001151636 62
1001151637 62
1001151638 62
1001151710 147
1001151752 327
1001151900 389
1001152037 225
1001152174 123
1001152324 389
1001152406 .....313, 315
1001152421 .....313, 315
1001152429 .....177, 346, 367
1001152449 324
1001152450 324
1001152457 .....161, 166, 169, 345, 365
1001152458 .....345, 365
1001152483 343
1001152486 .....342, 363
1001152489 79
1001152525 .....183, 345, 366
1001152532 .....162, 166, 169, 344, 365
1001152560 .....43, 49
1001152564 217
1001152565 217
1001152886 .....43, 49
1001152960 389
1001152965 394
1001153025 .....326, 345, 367
1001153197 .....162, 166, 170, 346, 367
1001153257 .....326, 367
1001153259 .....166, 367
1001153301 .....331, 351
1001153302 .....332, 351
1001153312 360
1001153359 87
1001153636 .....162, 166
1001153842 .....332, 352
1001153844 .....333, 352
1001154121 .....346, 368
1001154231 394
1001154388 .....118, 123, 333, 334, 353, 355
1001154390 .....123, 353, 355
1001154393 .....123, 353, 356
1001154398 .....327, 354
1001154399 .....327, 353
1001154405 73
1001154501 389
1001154592 .....342, 363
1001154651 121
1001154652 121
1001154653 121
1001154654 121
1001154655 121
1001154656 121
1001155043 123
1001155044 .....123, 234, 240
1001155045 .....123, 234, 240
1001155384 78
1001155574 ..... 13, 17, 18
1001155670 322
1001155671 322
1001155823 74
1001156819 87
1001156823 86
1001156824 86
1001156825 86
1001157208 142
1001157209 .....142, 147
1001157220 .....198, 209
1001157221 .....193, 209
1001157429 .....203, 204
1001157430 203
1001157431 203
1001157489 203
1001157490 203
1001157520 .....177, 183
1001157521 .....176, 184
1001157525 .....174, 176, 366
1001157528 .....177, 184
1001157592 .....173, 176, 181, 183, 345, 366
1001157606 324
1001157623 .....203, 204
1001157626 203
1001157768 .....183, 326, 367
1001157769 .....177, 326, 346, 367
1001157770 .....326, 367
1001157867 .....140, 146
1001158007 .....177, 184
1001158008 .....177, 184
1001158206 134
1001158407 203
1001158728 203
1001158729 203
1001159096 227
1001159099 .....227, 233, 350
1001159121 360
1001159256 .....234, 240
1001159285 .....227, 233, 350
1001159286 227
1001159323 381
1001159648 .....326, 345, 367
1001159699 322
1001159702 322
1001159705 .....321, 324
1001159706 .....321, 324
1001159707 322
1001159708 322
1001159709 322
1001159731 .....43, 217
1001160074 127
1001160077 127
1001160095 .....43, 217
1001160096 .....43, 217
1001160098 193
1001160099 198
1001160101 193
1001160192 .....43, 217
1001160271 .....326, 367
1001161033 322
1001161322 324
1001161325 322
1001161327 322
1001161438 322
1001162353 .....340, 360
1001162361 .....340, 360
1001162410 324
1001162413 74
1001162915 148
1001162916 .....146, 147
1001163101 147
1001163131 261
1001163262 39
1001163263 39
1001163264 39
1001163265 39
1001163296 261
1001163297 261
1001163599 .....155, 166, 175
1001164091 .....346, 368
1001164563 .....123, 353, 355
1001164565 .....327, 354
1001165035 73
1001165350 200
1001165368 .....166, 363
1001165549 121
1001165550 121
1001165616 351
1001165842 79
1001165921 321
1001165925 351
1001165926 352
1001165927 352
1001165928 351
1001165929 352
1001166538 .....234, 240, 251
1001166539 .....233, 240, 245
1001166673 .....227, 233, 350
1001166960 391
1001167020 391
1001167042 78
1001169054 80
1001169138 80
1001169234 123
1001169384 198
1001171125 .....165, 365
1001171131 360
1001171403 .....338, 358
1001172045 388
1001172534 321
1001172760 .....233, 240
1001173590 .....334, 354
1001173897 107
1001174093 87
1001174486 86
1001174745 83
1001174746 83
1001175816 392
1001176018 76
1001176019 75
1001176020 73
1001176021 75
1001176022 73
1001176023 76
1001176024 75
1001176025 73
1001176372 394
1001176419 78
1001176469 123
1001177038 83
1001177043 83
1001177157 87
1001177228 87

1001177359 79
1001177399 83
1001177694 391
1001177774 ..... 78, 79
1001177844 79
1001177845 79
1001178004 327
1001178223 80
1001178256 ..... 198, 209
1001178269 ..... 198, 209
1001178876 79
1001179154 ..... 176, 182, 183, 345, 366
1001179837 155
1001180001 155
1001180050 326
1001180052 359
1001180091 122
1001180092 122
1001180218 ..... 165, 365
1001180287 ..... 155, 359
1001180303 ..... 194, 200
1001180620 80
1001181045 363
1001181046 363
1001181057 ..... 193, 209
1001181058 ..... 193, 209
1001181145 390
1001181148 391
1001181243 155
1001181895 80
1001181899 77
1001182138 259
1001182599 391
1001182997 ..... 79, 107
1001184541 ..... 227, 233
1001184569 393
1001185078 391
1001185280 ..... 240, 330, 331, 350, 351
1001185281 240
1001185897 ..... 123, 353, 354
1001186254 ..... 141, 142, 147
1001186306 226
1001186309 226
1001186333 231
1001186334 231
1001186371 226
1001186374 226
1001186375 226
1001186377 226
1001186379 226
1001186382 226
1001186383 225
1001186384 225
1001186386 225
1001186387 225
1001186431 394
1001186517 257
1001186542 98
1001186543 .... 64, 76, 88, 98
1001186544 98
1001186545 .... 64, 76, 88, 98
1001187467 205
1001187468 204
1001187508 257
1001188010 121
1001188011 121
1001188041 123
1001188159 86
1001188161 87
1001188208 86
1001188209 62
1001188210 62
1001188211 62
1001188212 73
1001188213 73
1001188214 73
1001188221 87
1001188222 64
1001188223 64
1001188224 64
1001188225 75
1001188226 75
1001188227 75
1001188305 225
1001188308 225
1001188331 360
1001188858 128
1001188874 123
1001188885 105
1001188887 105
1001188889 257
1001188890 311
1001188891 311
1001188972 .....63, 75
1001189116 240
1001189171 343
1001189172 343
1001189892 321
1001189893 321
1001190091 .....227, 239, 350
1001190092 .....227, 239, 330
1001190115 227
1001190116 227
1001191394 392
1001191395 392
1001191708 259
1001191864 121
1001191865 121
1001191866 .....123, 353, 355
1001191867 .....123, 353, 355
1001191868 .....123, 353, 355
1001191870 121
1001191871 121
1001191872 121
1001191873 121
1001191874 121
1001191914 121
1001192401 .....336, 355
1001192611 .....122, 123, 353, 354
1001193018 .....342, 363
1001193634 390
1001194197 361
1001194198 361
1001194200 361
1001194203 361
1001194204 361
1001194365 360
1001194437 .....326, 345, 367
1001195304 393
1001195610 394
1001195967 83
1001196513 105
1001196622 389
1001196719 389
1001196768 148
1001196770 .....141, 146
1001197016 394
1001197017 253
1001197067 128
1001197408 382
1001197851 390
1001199488 393
1001200128 390
1001200129 390
1001200130 390
1001200131 390
1001200132 390
1001200133 390
1001200134 390
1001200279 394
1001200575 .....235, 240
1001200700 393
1001200910 129
1001201890 .....233, 235
1001201891 240
1001202082 391
1001202122 391
1001202280 105
1001202281 105
1001202331 391
1001202368 83
1001202397 391
1001202398 391
1001202599 .....227, 239, 350
1001202600 .....227, 233, 350
1001202601 .....227, 239
1001202602 .....227, 233
1001202749 392
1001203655 231
1001203656 231
1001204325 80
1001204458 391
1001204460 391
1001204668 105
1001204925 392
1001204926 392
1001205016 388
1001205017 388
1001205043 122
1001205044 122
1001205175 393
1001205495 128
1001206311 394
1001206477 394
1001207004 129
1001207306 128
1001207558 134
1001209059 393
1001209282 394
1001209870 128
1001209887 128
1001210025 394
1001210026 394
1001210089 394
1001210090 394
1001211799 392
1001212223 174
1001212415 384
1001213181 391
1001213219 391
1001213220 391
1001213221 391
1001213222 391
1001213223 391
1001213227 391
1001213605 392
1001213607 392
1001214030 389
1001214039 .....78, 80
1001214044 76
1001214463 394
1001214478 393
1001214515 393
1001214540 393
1001214548 393
1001214552 393
1001214559 393
1001214561 393
1001214562 393
1001214850 .... 73, 75, 82, 83
1001214862 88
1001216015 155
1001216630 214
1001216713 88
1001216714 88
1001216717 87
1001216718 87
1001216722 86
1001216723 86
1001217005 129
1001217055 392
1001217780 .....198, 209
1001218677 .....136, 143, 148
1001218679 .....136, 143, 148
1001218681 .....136, 143, 148
1001218682 .....136, 143, 148
1001218689 381
1001218719 390
1001220152 388
1001220379 .....338, 358
1001220486 .....235, 240
1001221292 221
1001221892 389
1001222198 389
1001222666 . 74, 337, 357
1001223055 372
1001223331 .....198, 285
1001223332 285

1001223511 285
1001223512 .....193, 285
1001223899 200
1001223971 378
1001224048 378
1001224049 378
1001224050 378
1001224051 378
1001224052 378
1001224053 378
1001226098 81
1001227450 388
1001228008 289
1001228012 295
1001228051 291
1001228357 394
1001228363 394
1001228581 394
1001228948 388
1001228988 .....264, 265, 267, 269, 271, 275
1001229107 388
1001229114 .....372, 378, 382
1001229762 388
1001229938 111
1001229939 111
1001229940 .....111, 392
1001233237 388
1001234099 389
1001248012 297
1060279.....372, 377, 382
1060341.....253, 339, 359
1060343.....177, 182, 183, 345, 366
1060379..... 279
1060494.....176, 182, 183, 340, 345, 360, 366
1060545..... 364
1060584..... 35
1060625.....63, 75
1060626.....63, 75
1060633.....347, 368
1060637.....62, 76, 87
1060708.....176, 182, 345, 366
1060896.....332, 352
1060903..... 253
1060908.....343, 364
1060918.....228, 330, 351
1060919..... 231
1060977.....346, 368
1061026.....333, 353
1061027.....333, 353
10702077.....177, 183
10702082.....177, 183
1120304.....14, 18
1120487..... 107
1120552..... 22
1120555..... 261
1220078..... 204
1260017..... 55
1271538..... 213
1282571..... 326
1283363..... 324
1283402..... 381
1300019..... 22
1320012 88
1320016 .....65, 88
1320022 ..... 62, 88, 105
1320061 75
1320127 108
1320136 213
1320149 .....342, 362
1320176 68
1320177 .....264, 275
1320218 108
1320220 108
1320222 86
1320223 ..... 63, 65, 75, 88
1320224 213
1320235 .....194, 199
1320244 205
1320247 221
1320302 .... 264, 267, 269, 271
1320318 ..... 161, 165, 175
1320323 86
1321384 135
1321716 77
1340060 88
1380147 131
1580011 88
1580012 228
1580013 228
1600244 .....347, 368
1600387 213
1670769 200
1670771 134
1670779 134
1670818 126
1670824 126
1670829 .... 117, 121, 234, 239
1670964 217
1671034 200
1671092 .... 177, 182, 183, 345, 366
1671093 .....264, 269
1671228 .....134, 135
1671229 135
1671230 135
1671231 135
1671232 135
1671233 134
1671247 .....134, 135
1683053 ..... 285, 293, 301
1683055 .....285, 301
1683057 307
1683067 299
1683250 307
1683415 .....193, 285
1683418 .....198, 285
1683609 .....198, 293
1683618 .....204, 307
1683619 307
1683949 301
1683952 285
1683954 299
1683963 .....285, 301
1683972 301
1683976 285
1683977 285
1684089 293
1684090 293
1684290 283
1684413 .....198, 301
1684414 .....193, 301
1684465 .....11, 283
1700818 .....372, 377
1701499.....371, 375, 381
1701505 62, 75, 371, 377, 382
1701509.....261, 371, 375, 381
1701518 381
1701529.....371, 375, 381
1701542.....86, 371, 377, 382
1701543.....86, 372, 377
1701643 22
1702305.....371, 377, 381
1702565.....234, 239
1702566.....234, 239
1702567.....234, 239
1702573 378
1702676 228
1702701 22
1702720.....372, 377
1702773.....231, 371, 377, 381
1702774.....371, 377, 381
1702788 389
1702815.....371, 376, 381
1702817.....371, 376, 381
1702861.....371, 377, 381
1702868.....264, 265, 269, 271, 275, 371, 389, 390
1702938.....236, 241, 253
1702941.....63, 75
1702942.....63, 75
1702943.....63, 75
1702944.....63, 75
1703162.....65, 79, 88
1703403.....371, 377, 381
1703470.....371, 376, 381
1703472.....371, 376, 381
1703479 389
1703533.....319, 322
1703683 279
1703797 371
1703804 371
1703805 371
1703811.....136, 143, 148, 371, 375, 381
1703814.....371, 375, 381
1703923 376
1703924 375
1703925 375
1703926 375
1703927 376
1703935 376
1703936 376
1703937 376
1703938 376
1703939 376
1703941 375
1703942 375
1703943 375
1703944 375
1703945 375
1703947 376
1703948 376
1703949 376
1703950 376
1703951 376
1703953 371
1703980 376
1703981 376
1703982 376
1703983 376
1703984 376
1704000 .....375, 389
1704001 .....375, 389
1704174 .....389, 390
1704175 389
1704260 .....234, 239
1704271 .....372, 377
1704272 35
1704277 ..... 371, 375, 381
1704412 ..... 371, 375, 381
1704578 35
1704885 ..... 371, 377, 381
1704972 .....63, 75
1705014 231
1705084 381
1705090 35
1705132 234
1705170 .... 127, 128, 236, 241
1705305 .... 264, 265, 267, 269, 271, 275
1705336 371
1705344 376
1705345 376
1705347 376
1705351 372
1705355 ..... 264, 267, 269
1705358 261
1705364 22
1705374 .... 162, 165, 170, 177, 183
1705375 .... 177, 183, 264, 269, 271
1705376 .....177, 182
1705387 .... 162, 165, 170, 177, 183
1705389 .....162, 165
1705426 378
1705427 378
1705429 378
1705430 378
1705460 .....177, 183
1705461 177
1705466 .... 264, 265, 267, 269, 271, 275
1705489 177
1705490 .....265, 275
1705514 .....371, 375
1705820 35
1705822 381
1705828 381
1705836 187
1705837 187
1705886 187
1705895 375
1705896 376
1705897 376

1705898 376
1705902 376
1705903 375
1705905 378
1705910 378
1705917 376
1705921 381
1705961 381
1705967 ..... 375, 389
1705968 ..... 389, 390
1705969 .....375, 389, 390
1705978 381
1706059 63
1706060 ..... 63, 75
1706061 63
1706062 63
1706063 63
1706064 ..... 63, 75
1706098 ..... 63, 75
1706385 231
1706510 279
1706593 35
1706712 ..... 117, 121
1706941 ..... 372, 378
1706957 35
1706960 35
2030010 ....264, 267, 269, 271, 275
2060025 ..... 65, 88
2080040 ....140, 146, 225, 228
2080044 199
2080072 ..... 141, 147
2120149 .....39, 43, 384
2120164 ..... 39, 43
2120209 ..... 39, 43
2120210 .....39, 43, 384
2180125 108
2180348 ..... 62, 105
2180380 319
2180387 108
2180388 108
2180389 108
2180418 ..... 86, 108
2180724 319
2180832 .....73, 264, 275
2180877 89
2200222 107
2220005 86
2220064 86
2220235 299
2220237 ..... 313, 315
2220238 313
2220252 187
2220261 108
2220313 ..... 62, 73
2220315 77
2220362 ..... 313, 315
2220371 ....311, 313, 315, 322
2220372 ..... 318, 322
2220373 ....313, 315, 318, 321
2220375 .....315, 317, 321
2220376 103
2220377 .....94, 313, 315, 317, 321
2220380 .....317, 321
2220381 322
2220407 .....317, 321
2220409 .....319, 322
2220415 .... 311, 313, 315, 317, 321
2220418 108
2220428 318
2220429 318
2220451 .....65, 313
2220466 .....318, 321
2220468 311
2220472 319
2220473 .... 311, 313, 315, 319, 322
2220474 .....317, 321
2220479 .....94, 98
2220490 .....311, 322
2220498 .....317, 321
2220504 ..... 311, 313, 315
2220574 .....317, 321
2220578 .94, 98, 317, 321
2220582 .... 313, 315, 317, 321
2220593 .....317, 321
2220596 ..... 315, 317, 321
2220600 322
2220603 .....319, 321
2220606 .....313, 315
2220628 .....317, 321
2220646 .....94, 98
2220654 311
2220655 322
2220677 313
2220738 .....318, 321
2220750 187
2220810 103
2220816 105
2220861 315
2220873 .....318, 319
2220883 ..... 29, 286, 289, 291, 293, 295, 297, 299, 322
2220885 ..... 46, 285, 289, 291, 293, 295, 297, 302, 307
2220886 29
2220887 299
2220890 283
2220893 .....319, 322
2220921 .....317, 321
2220947 .94, 98, 318, 321
2220948 .....318, 321
2220950 .....318, 322
2220974 .....318, 322
2220998 .....313, 315
2221024 108
2221034 98
2221042 .....318, 321
2221086 322
2221119 73
2221170 313
2221176 ..... 62, 73, 86
2221197 108
2221270 107
2300004 ..... 77, 86, 392
2300014 392
2300016 392
2300019 392
2300027 392
2300029 392
2300039 392
2300041 ..... 77, 392
2400060 .....178, 183, 336, 346, 354, 367
2400064 .....178, 183, 346, 367, 386
2400065 .....334, 354, 384
2400066 .....334, 347, 354, 368
2400070 .....347, 368, 386
2410014 231
2420172 .....117, 121
2420202 213
2420203 .....151, 155, 157
2460048 .....174, 181
2460051 157
2460055 151
2460056 151
2540038 214
2560136 .....234, 239
2560173 228
2560187 .....142, 147, 148
2580024 .....63, 75
2580050 .....63, 75
2580062 66
2600209 135
2600233 135
2600280 .....141, 142, 147
2600281 225
2720015 77
2720058 .....62, 89, 105
2720144 108
2720160 .....264, 275
2720271 89
2720340 77
2720392 86
2720398 65
2720563 89
2720564 89
2720566 86
2720567 86
2720580 86
2720615 .....75, 77
2750532 .....62, 75, 89
2751396 .....318, 322
2751410 311
2751474 .....318, 321
2752340 .....317, 321
2752341 313
2752433 322
2752437 .....318, 322
2752462 311
2752475 .....313, 315
2752478 .....313, 315
2752502 .....317, 321
2752504 .....317, 321
2752515 .....318, 321
2752591 319
2752596 318
2752597 319
2752598 318
2752599 318
2752611 .....313, 315
2752631 .....318, 321
2752632 .... 313, 315, 318, 321
2752633 319
2752643 .....319, 322
2752653 .....317, 321
2752654 .....317, 321
2752752 .....317, 321
2752753 .....319, 322
2752762 .....318, 321
2752763 .....318, 321
2752783 .....319, 322
2752928 .....313, 315
2752929 .....313, 315
2752977 315
2753049 322
2753325 .....319, 322
2753397 .....313, 315
2753924 .....313, 315
2753957 .....318, 321
2753968 .....317, 321
2760105 .... 117, 121, 234, 239
2780269 .....21, 25
2780271 .....14, 18
2792325 324
2792327 324
2792605 324
2792630 324
2820031 .... 152, 155, 157, 161, 165, 169, 175, 182
2820035 ..... 126, 228, 339
2820078 ..... 136, 142, 148
2820233 135
2820234 135
2820235 135
2840016 131
2860012 152
2860030 ..... 117, 122, 384
2900792 .... 285, 289, 291, 293, 295, 297, 299
2900967 390
2901284 307
2901285 299
2901301 .....286, 302
2901303 .... 286, 289, 293, 302
2901443 .....347, 368
2901763 46
2901986 206
2902065 ..... 65, 66, 77, 80
2902085 152
2902212 261
2902217 ..... 264, 267, 269
2902232 394
2902266 283
2902303 390
2902304 390
2902306 390
2902307 390
2902308 390
2902309 390
2902310 390
2902311 390
2902312 390
2902322 390
2902329 390

2902443.....335, 337, 356, 358
2902531.....87, 336, 356
2902549.....342, 363
2915087..... 394
2920028.....236, 239, 241
2920029.....236, 239, 241
2920110..... 127
2920113..... 127
2920129.....214, 234, 330, 333, 350, 354
2920140.....228, 346, 368
2920157.....127, 228
2920161.....127, 347, 368
2940045.....140, 146
2940074.....225, 386
2940088..... 135
2940173.....141, 142, 147, 148
2940188..... 135
3020008..... 21
3020016.....65, 392
3020017.....14, 392
3020021..... 392
3020029.....55, 392
3020037..... 76
3020039..... 206
3020044.....65, 392
3160349.....21, 29
3160350.....21, 29
3200362..... 89
3200401.....65, 68, 77, 83
3200406..... 65
3250585..... 228
3250872.....35, 371, 377, 381
3251102.....152, 155, 157, 161, 165, 169
3251243.....151, 157, 162, 165, 170, 177, 183, 371, 375, 381
3251813.....371, 376, 381
3252347..... 371
3252507.....152, 371, 375, 381
3252764.....173, 182
3271601.....77, 105
3271605..... 141
3271801.....77, 83
3271805.....113, 231
3272001.....13, 205
3272401..... 205
3272605.....195, 200, 213
3290405.....86, 342, 362
3290505.....86, 152
3290601.....111, 142, 147, 148
3290605.....264, 275
3290606..... 226
3290607..... 128
3291005..... 80
3300106..... 21
3300151.....226, 264, 267, 269, 271
3300205.....117, 121
3300240..... 205
3300241.....204, 205
3300242..... 205
3300243.....195, 200
3300353..... 121, 234, 239
3300364.....140, 146
3300396.... 161, 166, 170, 177, 182, 183
3300408.....117, 121
3300430.....257, 259
3300454..... 194
3310401..... 77
3310601..... 131, 177, 182
3310805.....108, 126
3311001..... 75, 134, 135, 177, 183, 236, 241
3311005.... 126, 127, 128, 152, 155, 157, 162, 165, 170, 176, 182, 234, 239, 264, 267, 269, 271, 275
3311401..... 194, 205, 253
3311402.....194, 199
3311405.... 39, 64, 65, 73, 76, 77, 83, 86, 87, 89, 121, 134, 140, 141, 146, 157, 169, 175, 182, 189, 194, 199, 213, 221, 228, 342, 362, 372, 377, 382
3311501 39, 73, 134, 140, 146, 253
3311505.... 31, 65, 77, 86, 108, 134, 140, 142, 147, 148, 157, 173, 182, 221, 279
3311508.... 161, 165, 169, 173
3311601.... 107, 134, 140, 146, 235, 240
3311605.... 63, 65, 68, 73, 75, 77, 83, 86, 89, 108, 127, 131, 134, 135, 140, 141, 142, 146, 147, 148, 152, 189, 199, 205, 221, 228, 231, 264, 267, 269, 271
3311705.....152, 155
3311801..... 62, 155, 162, 165, 175
3311805.... 62, 65, 68, 76, 87, 89, 131, 134, 195, 200, 213
3312002..... 55
3312005.....213, 261
3312201.....204, 205
3312205..... 261
3312602.....127, 128
3321501..... 135
3322201..... 113
3323403.....14, 18
3340755..... 205
3340757..... 204
3340758..... 205
3340764..... 221
3340800..... 194
3340844..... 204
3340871.....204, 206
3340881..... 204
3340900..... 206
3340911..... 31
3340956..... 261
3340966.....17, 18
3380434..... 228
3380535..... 126
3380652..... 392
3420372..... 35
3420447..... 35
3421453.....264, 275
3421565.....35, 55
3421627..... 55
3422326.....13, 17, 18
3422417..... 205
3422424..... 204
3422446.....62, 73, 87
3422532.....64, 76, 87
3422557.....193, 199
3422561..... 199
3422562..... 193
3422563..... 193
3422564.....193, 198
3422565..... 193
3422566.....193, 198
3422567.....17, 18
3422569..... 193
3422580..... 193
3422583..... 199
3422661..... 279
3422790..... 199
3422813.....17, 18
3422841..... 35
3422847..... 35
3422848.....17, 18
3422860..... 199
3422861..... 199
3422867..... 199
3422900.....13, 17, 18
3422902.....13, 17, 18
3422903.....13, 17, 18
3423184.....11, 193, 198
3430616.....235, 240
3430816..... 131
3450404..... 131
3450806..... 221
3451010.....14, 18
3460334..... 261
3470003.....235, 240
3480188.....285, 301
3480205..... 307
3480206..... 299
3480210.....285, 293, 301
3480288..... 283
3510868..... 231
3510884..... 231
3520028.....151, 155, 157
3520030.....140, 146
3520031..... 123
3520033.....235, 240
3520034..... 200
3520035.....121, 235
3520054.....65, 234, 239
3520071..... 261
3520072.....225, 231
3520182..... 259
3520189.....177, 345, 366
3520192.....177, 345, 366
3536089..... 228
3537445..... 131
3537446..... 131
3538758..... 221
3539219.....117, 121
3539563.....194, 199
3539622..... 205
3539872..... 89
3539877..... 11
3539955..... 136, 142, 148
3539957..... 87
3571712..... 134
3572009..... 35
3572010..... 35
3572011..... 35
3572012..... 35
3572280..... 89
3572423..... 107
3573400.... 264, 267, 269, 271
3573642.... 264, 267, 269, 271
3574091..... 253
3575359..... 253
3576755..... 107
3576799.....264, 275
3577121.... 264, 267, 269, 271
3580134..... 151
3580158..... 151
3580241..... 204
3580243..... 204
3580248..... 204
3580249..... 204
3580276.....151, 155
3580312..... 157, 169, 182
3580314.....169, 182
3580317..... 162, 165, 176
3580318..... 162, 165, 176
3580319..... 162, 165, 176
3580320..... 77, 162, 176
3580324..... 157
3580348..... 157, 169, 182
3600242..... 103
3600381.....92, 94
3600386.....187, 189
3600388.....92, 94
3600394..... 64, 76, 88, 94
3600395... 64, 76, 88, 103
3620040..... 89
3641533.....178, 183
3641569..... 253
3720021..... 187
3740049.... 117, 122, 339, 359, 384
3740067... 65, 74, 89, 386
3740080.... 152, 155, 157, 175, 182, 386
3760170.....35, 55
3760368..... 285, 293, 301
3760369..... 285, 301, 307
3760372..... 299
3790012 87, 88, 200, 228, 235, 236, 239, 240, 241
3790152.....64, 76
3820001.... 372, 377, 378, 382

3820020 225
3841013 221
3841143 ....13, 17, 18, 62, 73, 87, 193, 199, 205
3841258 ....11, 13, 17, 18, 193, 199
3841340 ..... 194, 199
3850020 301
3860050 221
3890005 ..... 204, 205
3890006 204
3890009 205
3890010 204
3890040 231
3900054 231
3900085 ..... 127, 128
3900210 ....140, 142, 146, 147, 148
3900232 ..... 134, 135
3900268 ..... 117, 122
3900272 86
3900283 213
3900293 55
3900316 ....140, 141, 142, 146, 148
3900363 .....142, 147, 148
3910408 77
3910606 ....162, 165, 169, 173, 182
3910608 131
3910610 ..... 177, 182
3910804 ..... 117, 122
3910808 108
3911012 128
3911040 127
3930816 126
3930828 126
3931016 ....161, 165, 169, 174, 181
3931028 126
3931032 49
3931408 126
3931424 ..... 73, 257
3931432 77
3931448 307
3931508 307
3931512 77
3931516 ....285, 289, 293, 301
3931620 ..64, 76, 88, 285, 291, 301, 307
3931628 77
3931632 176
3931840 11
3932032 299
3940604 35
3951608 204
3960343 ..... 14, 18
3960389 64, 88, 134, 140, 146
3960407 65
3960422 ....162, 165, 169, 173, 182, 344, 365
3960438 135
3960461 127
3960462 ..... 135, 146
3960464 135
3960468 ..... 65, 76, 89
3960469 ..... 65, 76, 89
3960470 134
3960526 21
3980007 .....63, 75
3990010 ..... 335, 354, 384
4010608 .....264, 275
4010618 226
4031608 152
4031914 77
4032014 77
4032015 .....161, 175
4060092 .....341, 361
4060802 .... 152, 155, 157, 161, 165, 169, 173, 182, 228
4060803 .....108, 221
4060805 ... 65, 77, 89, 205
4060906 .....117, 122
4060918 .....40, 43
4061049 175
4061054 213
4070410 134
4070411 134
4070412 134
4070863 204
4070864 204
4070895 205
4070896 204
4070897 204
4070898 204
4070929 205
4070939 205
4070940 205
4070944 11
4070945 11
4070976 205
4070987 117
4070991 122
4070994 221
4070995 221
4071004 205
4071005 206
4071007 206
4071009 55
4071059 .....17, 18
4071101 11
4071122 87
4100026 .....333, 353
4100033 .....194, 199
4100100 293
4120035 .... 330, 335, 350, 354
4130396 18
4130399 17
4130400 18
4130409 .....13, 14
4130410 13
4160139 134
4160143 135
4160149 205
4160194 .....140, 146
4220162 .....127, 128
4240018 .... 152, 155, 157, 161, 165, 175, 194, 199, 319, 322
4240032 ..... 127, 128, 129
4240033 .....213, 257
4240099 .....77, 228, 253, 264, 267, 269
4240113 107
4240149 261
4280295 107
4280296 32
4300157 .....162, 175
4340747 187
4341239 89
4341241 89
4360057 .....253, 386
4360070 .....161, 166, 170, 177, 182, 183, 386
4360232 .....236, 241, 346, 368, 386
4360328 .....117, 200, 234, 236, 241, 384
4360330 .....234, 384
4360331 .....228, 236, 241, 384
4360336 .....87, 152, 155, 157, 161, 165, 169, 173, 182, 228, 236, 240, 386
4360387 .....123, 234, 236, 239, 241, 253, 384
4360407 .....235, 239, 384
4360436 .....107, 384
4360469 .....117, 122, 384
4360470 .....117, 122
4360475 .....118, 122, 235, 239, 384
4360476 .....118, 122, 235, 239, 384
4360506 .....205, 386
4360517 .....114, 338, 359, 384
4360522 .....127, 128, 236, 241, 386
4360542 .....151, 155, 157
4360578 .....126, 386
4400275 108
4400400 107
4400420 108
4420014 261
4420037 .....228, 264, 267, 269, 271
4420038 107
4420051 .....35, 382
4420054 126
4420060 .....126, 152
4420062 279
4420066 261
4420068 253
4460007 .....235, 239
4460027 .....151, 155, 157, 339, 340, 360
4460049 253
4460051 .....175, 182, 344, 365
4460071 .....162, 165, 169, 175, 182, 228, 330, 341, 344, 351, 362, 365
4460125 .....341, 361
4460134 .....340, 360
4460190 .....151, 155, 157
4460205 .... 340, 341, 360, 362
4460224 .....331, 351
4460225 .... 330, 345, 350, 365
4460226 .... 213, 246, 251, 330, 331, 334, 339, 345, 346, 347, 350, 351, 354, 359, 367, 368
4460227 .... 330, 331, 335, 338, 346, 350, 351, 354, 359, 368
4460233 .....342, 362
4460234 .... 127, 128, 235, 239, 253
4460259 .....339, 359
4460260 .....339, 359
4460265 .....246, 251
4460267 .... 330, 334, 339, 347, 350
4460268 .... 126, 334, 339, 355, 356, 360, 365
4460297 .....339, 359
4460315 173
4460320 .... 334, 338, 346, 347, 359, 368
4460321 .... 339, 347, 360, 368
4460326 .....334, 339
4460346 .... 162, 165, 169, 173, 182, 341, 344, 361, 365
4460374 .... 178, 183, 339, 346, 359
4460375 .... 178, 183, 346, 359
4460418 .... 330, 335, 350, 354
4460419 .... 330, 335, 350, 354
4460424 .... 126, 334, 339, 346, 355, 356, 368
4460425 .... 161, 166, 170, 177, 182, 183, 253, 345, 346, 366, 368
4460426 .... 118, 122, 161, 166, 170, 177, 182, 183, 228, 236, 241, 333, 345, 346, 353, 366, 368
4460428 .... 187, 235, 239, 331, 351
4460434 .... 330, 335, 350, 354
4460445 .....334, 339
4460457 .....334, 355
4460458 .... 183, 334, 335, 337, 339, 346, 355, 356, 358, 360, 367
4460460 .....334, 355
4460464 .... 330, 334, 335, 337, 347, 350, 351, 354, 355, 357
4460465 .... 178, 183, 213, 332, 336, 337, 338, 344, 346, 347, 352,

355, 358, 360, 365, 367, 368
4460466.....213, 332, 333, 334, 335, 337, 338, 352, 353, 355, 356, 357, 358
4460467.....347, 368, 394
4460470.....118, 122, 235, 239, 331, 333, 351, 353
4460471.....118, 122, 235, 239, 331, 333, 351, 353
4460473.....332, 333, 352, 353
4460488.....118, 122, 129
4460496.....118, 122, 334, 353
4460497.....118, 122, 334, 353
4460499.....46, 53, 339
4460508.....330, 335, 350, 354
4460509.....332, 352
4460510.....347, 368, 394
4460526.....118, 122, 333, 353
4460536.....330, 335, 350, 354, 359
4460539.....330, 334, 350, 355, 356
4460608.....335, 356
4460633.....187, 343, 364
4460634.....335, 354
4460635.....335, 354
4460662.....341, 362
4460693.....335, 356
4460705.....339, 340, 359, 360
4460708.....235, 239, 330, 331, 334, 350, 351, 354
4460742.....178, 183, 339, 346, 359, 367
4460743.....178, 183, 339, 346, 359, 367
4460761.....213, 331, 335, 351, 354
4460836..... 213
4460865.....332, 333, 352, 353
4460866.....330, 335, 350, 354
4460868..... 355
4460871.....243, 249, 330, 331, 334, 335, 336, 350, 351, 354, 355, 356
4460873.....330, 335, 350, 354
4460874.....330, 336, 350, 355
4460875.....330, 336, 350, 355
4460876.....335, 354
4460877..... 355
4460878.....335, 354
4460879.....330, 350
4460880.....334, 355
4460884.....330, 336, 338, 350, 355, 358
4460887 .... 330, 335, 350, 354
4460891 .... 337, 338, 347, 351, 355, 356, 357, 358, 368
4460892 .....334, 354
4460894 .... 334, 337, 354, 358
4460897 .... 337, 338, 347, 355, 357, 358
4460899 .....335, 355
4460905 .... 235, 330, 335, 336, 350, 354, 355
4460906 ..... 157, 339, 360
4460930 .....338, 358
4460931 .....334, 355
4460932 .... 330, 337, 350, 357
4460933 213
4460941 .....337, 357
4460942 .... 337, 338, 357, 358
4460943 .... 330, 335, 350, 354, 356
4460944 .... 330, 334, 337, 338, 350, 355, 357, 358
4460956 .....343, 363
4460957 .....343, 363
4460958 .... 173, 182, 344, 365
4460961 .....339, 360
4460962 .....264, 269
4460963 .... 177, 182, 183, 345, 366
4460967 .... 178, 183, 346, 367
4460968 .... 126, 152, 341, 362
4460971 .....264, 275
4460979 .....335, 356
4461005 .....334, 355
4461006 .....334, 355
4461008 .... 334, 338, 355, 358
4461052 .....334, 355
4461053 .....334, 355
4461054 .... 334, 337, 338, 355, 357, 358
4461060 .....334, 355
4461070 .... 334, 337, 355, 357
4461071 .... 335, 337, 356, 358
4461072 .... 335, 337, 356, 358
4461073 .... 335, 337, 356, 358
4461074 .... 335, 337, 356, 358
4461095 .... 334, 337, 355, 357
4461109 .....335, 356
4461111 .....335, 356
4461113 .....335, 356
4461121 .....335, 356
4461122 .....335, 356
4461123 .....335, 356
4461124 .....335, 356
4461157 .....334, 356
4461161 .....335, 356
4461196 .....342, 362
4461197 .....343, 364
4461198 .....341, 361, 362
4461199 .....342, 362
4461200 .....343, 364
4461201 .....341, 361, 362
4461202 .....342, 362
4461203 .....343, 364
4461204 .....341, 361, 362
4461205 .....342, 362
4461206 .....343, 364
4461207 .....341, 361, 362
4461222 .....335, 356
4461244 .....341, 361, 362
4461245 .....341, 361, 362
4461246 .....341, 361, 362
4461249 .....342, 362
4461250 .....343, 364
4520256 22
4520339 21
4520340 21
4520672 22
4520674 21
4530028 .....264, 267, 269, 273
4566468 .....285, 301
4566501 299
4566644 307
4568119 107
4568133 35
4568735 .....157, 169, 182
4569385 87
4569394 89
4640113 22
4640261 35
4640509 .....285, 289, 291, 293, 295, 297, 299
4640744 103
4640751 77
4640858 283
4640921 .....39, 53
4640922 .....39, 53
4640932 .....286, 289, 291
4640952 89
4641022 107
4641028 307
4641122 22
4641284 315
4641307 313
4641390 283
4711000 .....128, 155, 177, 183, 194, 200
4711400 .....39, 43, 62, 65, 73, 77, 83, 87, 89, 123, 126, 127, 157, 161, 165, 169, 175, 182, 213, 221, 226, 257, 259, 342, 362
4711500 .....31, 39, 73, 75, 77, 108, 142, 147, 148, 173, 182, 217, 221, 235, 240
4711600 .....39, 43, 65, 74, 75, 87, 89, 105, 155, 162, 165, 176, 204, 213, 217, 221, 235, 240
4711700 ..... 105, 155, 158
4711800 ..... 74, 131, 161, 169, 182, 221, 231
4712000 261
4712200 261
4712600 128
4740036 35
4740057 55
4740076 135
4740111 ..... 13, 17, 18
4740155 .....17, 18
4740158 ..... 11, 194, 200
4740171 135
4740229 11
4740256 ..... 13, 17, 18
4740274 ..... 65, 68, 89
4740283 .....14, 18
4740314 .....194, 200
4740362 .....127, 228
4740393 21
4740397 .... 122, 152, 158, 234, 239
4740439 199
4740444 .....118, 122
4740463 ..... 13, 17, 18
4740500 135
4740508 87
4740518 122
4740546 127
4750400 77
4750600 .....177, 182
4750800 108
4751000 ..... 35, 127, 128, 135, 152, 158, 162, 165, 170, 176, 182, 235, 239, 264, 267, 269, 271, 275
4751400 .... 62, 64, 74, 76, 77, 87, 88, 89, 118, 122, 126, 135, 140, 141, 142, 146, 147, 148, 175, 194, 199, 213, 228, 235, 240, 253, 259, 264, 267, 269, 271, 372, 378, 382
4751500 .... 63, 73, 77, 87, 135, 136, 140, 142, 146, 148, 152, 155, 158, 161, 165, 169, 253, 279
4751600 .... 31, 63, 65, 68, 77, 83, 87, 89, 107, 113, 128, 135, 140, 141, 142, 146, 147, 148, 152, 189, 206, 228, 264, 267, 269, 271
4751700 77
4751800 .... 63, 76, 88, 89, 107, 113, 187, 228, 231, 253
4752000 ..... 63, 74, 87
4760600 .....177, 182
4761000 14, 18, 135, 236, 241
4761400 ..... 118, 122, 175

4761500 ..... 174, 182
4761600 ..... 74, 189
4770600 131
4791400 66, 89, 161, 165, 175
4811400 ..... 342, 362
4811600 152
4811700 ....111, 128, 226, 264, 275
4811702 77
4811900 .....77, 158, 169, 176, 182
4811902 80
4812000 77
4812100 ..... 74, 77
4812200 .....66, 68, 77, 83
4812300 .....136, 143, 148
4831900 89
4844815 198
4844816 198
4844817 198
4845356 135
4845411 135
4845582 279
4845671 221
4845819 221
4846218 217
4846295 36
4846296 36
4846319 204
4846561 228
4846573 .....195, 200, 213
4846627 ....264, 267, 269, 271
4846673 253
4846935 ..... 17, 18
4891500 ..... 78, 123
4891600 ....31, 64, 76, 78, 88, 108, 131, 141, 147, 158, 169, 182, 195, 201, 205, 213
4891800 ....11, 21, 78, 83, 107, 131, 155, 165, 175, 195, 201, 205, 213
4892000 13, 55, 136, 143, 148, 213
4892600 ....127, 195, 201, 213
4920385 89
4921827 ..... 340, 360
4921927 ..... 40, 339
4921928 ..... 40, 339
4922467 ..... 332, 352
4922468 ..... 332, 352
4922636 ..... 334, 354
4922637 ..... 334, 354
4922641 ....178, 183, 339, 346, 359, 367
4922643 ..... 339, 359
4922666 ....235, 240, 331, 351
4922705 213
4922764 ..... 346, 368
4922791 ..... 333, 352
4922792 ..... 332, 352
4922869 213
4922884 ..... 332, 352
4922886 .....333, 352
4922888 .... 228, 333, 346, 347, 352, 368
4922889 .....332, 352
4922925 .... 176, 182, 344, 365
4922964 .... 228, 346, 347, 368
4923206 ..... 118, 333, 334
4923379 ..... 66, 337, 357
4923420 .....183, 367
4923445 .....339, 359
4923462 .....332, 352
4923509 .....332, 352
4923510 .....333, 352
4923511 .....333, 353
4923657 .....332, 352
4923659 .....333, 353
4923660 .....332, 352
4933218 326
4933219 326
4933278 326
4933304 326
4933313 ..... 326, 346, 368
4933349 .... 183, 326, 346, 367
4933350 ..... 326, 339, 359
5240800 83
5250810 80
70000123 .....151, 157
70000124 151
70000125 151
70000126 151
70000164 88
70000342 210
70000345 .....68, 81
70000579 45
70000580 45
70000582 .....45, 384
70000583 45
70000619 .....176, 181
70000781 31
70000782 .....25, 58
70000793 .....66, 80
70000794 29
70000795 29
70000800 67
70000851 68
70000863 .....174, 181
70000912 67
70000913 67
70000914 67
70000915 67
70000916 67
70000917 67
70000918 67
70000919 67
70000934 .....39, 43
70001002 66
70001017 68
70001100 .....174, 181
70001119 25
70001126 67
70001248 .....113, 114
70001384 .....174, 181
70001423 67
70001424 277
70001425 277
70001427 277
70001428 277
70001429 277
70001430 277
70001431 277
70001432 277
70001435 67
70001498 68
70001663 189
70001696 .....174, 181
70001697 209
70001847 67
70001850 67
70001866 68
70001868 68
70001870 .....66, 80
70001871 67
70001872 .....67, 338, 358
70001953 .....174, 182
70001966 ...161, 165, 169, 174, 181
70001973 .....175, 181
70001974 .....175, 181
70001976 .....45, 53
70002005 .....221, 386
70002006 221
70002007 386
70002063 31
70002064 .....31, 217, 218
70002065 58
70002066 58
70002067 58
70002068 58
70002069 58
70002070 58
70002071 58
70002072 58
70002073 58
70002074 58
70002075 58
70002085 59
70002086 59
70002088 .....174, 181
7000213 58
70002134 99
70002146 100
70002147 99
70002148 99
70002149 99
70002150 99
70002151 99
70002153 99
70002154 99
70002156 99
70002157 99
7000216 25
7000217 58
70002176 98
70002209 .....40, 43
70002212 .....113, 114
70002234 68
7000228 58
7000229 58
70002291 174
70002297 .....174, 181
7000230 58
70002386 .....217, 218
7000246 58
70002460 .....174, 181
7000248 58
7000253 58
7000255 58
7000257 58
70002715 107
70002716 107
70002718 .....66, 80
70002724 249
70002725 249
70002726 249
70002727 249
70002728 249
70002729 249
70002730 243
70002731 243
70002732 243
70002733 243
70002734 243
70002735 243
70002745 305
70002752 305
70002753 305
70002754 305
70002755 305
70002756 305
70002757 305
7000281 .....26, 58
70002818 .....178, 183
70002819 .....178, 183
70002820 .....178, 183
70002821 .....178, 183
70002822 .....178, 183
70002823 .....178, 183
70002824 .....178, 183
70002825 .....178, 183
70002826 .....178, 183
70002895 .....88, 386
70002902 227
70002903 227
70002904 228
70002905 228
70002906 243
70002948 187
70003003 67
70003019 49
70003408 31
70003454 114
70003456 67
70003457 67
70003468 67
70003469 67
70003470 67
70003472 67
70003473 67
70003475 66
70003631 .....174, 181
70003708 .. 161, 165, 169, 175, 181
70003709 .. 161, 165, 169, 175, 181
70003783 .....66, 386
70003784 .....235, 239
70003790 217
70003932 68

70003995 ..... 40, 43
70003996 ..... 40, 43
70003997 ..... 40, 43
70003998 ..... 40, 43
70003999 ..... 40, 43
70004000 ..... 40, 43
70004052 49
70004056 68
70004058 68
70004059 67
70004060 ..... 67, 338, 358
70004092 ... 161, 165, 169, 174
70004093 174
70004094 174
70004095 175
70004096 174
70004097 174
70004098 ... 161, 166, 169, 175
70004099 ..... 166, 174
70004103 ..... 67, 338, 359
70004149 107
70004169 ... 174, 175, 181, 182
70004171 ... 161, 169, 174, 181
70004184 107
70004268 67
70004269 67
70004270 68
70004271 ..... 67, 338, 359
70004272 68
70004273 67
70004274 80
70004275 81
70004276 82
70004277 82
70004278 82
70004279 81
70004280 80
70004314 210
70004459 49
70004460 49
70004461 49
70004463 49
70004504 82
70004594 49
70004595 49
70004596 49
70004597 49
70004643 221
70004652 49
70004653 49
70004654 49
70004655 49
70004656 49
70004657 49
70004659 49
70004660 49
70004661 49
70004662 49
70004666 49
70004667 49
70004668 49
70004670 49
70004671 49
70004672 49
70004673 49
70004674 49
70004676 ... 161, 166, 169
70004677 161
70004678 ... 161, 166, 169
70004679 ... 161, 166, 169
70004680 ... 161, 166, 169
70004681 ..... 161, 166
70004682 ... 161, 166, 169
70004683 ..... 161, 166
70004684 ..... 161, 169
70004685 ... 161, 166, 169
70004686 166
70004687 166
70004738 251
70004739 251
70004740 251
70004741 251
70004742 251
70004743 251
70004744 251
70004745 251
70004746 251
70004747 251
70004748 251
70004749 251
70004750 251
70004751 251
70004752 245
70004753 245
70004754 245
70004755 245
70004756 245
70004757 245
70004758 245
70004759 245
70004760 245
70004761 245
70004762 245
70004763 245
70004764 245
70004765 245
70004766 245
70004767 245
70004768 245
70004769 245
70004770 245
70004771 245
70004772 246
70004773 246
70004774 246
70004775 246
70004862 386
70005171 80
70005172 81
70005173 81
70005177 81
70005184 82
70005230 251
70005466 98
70005467 98
70005468 98
70005469 99
70005470 99
70005471 99
70005472 99
70005473 99
70005474 100
70005475 100
70005476 100
70005477 99
70005479 68
70005527 82
70005647 82
70005648 82
70005920 80
70005929 82
70005931 82
70005937 82
70005941 80
70005942 80
70006093 174
70006094 174
70006095 174
70006096 174
70006097 175
70006443 291
70006444 291
70006445 291
70006446 291
70006568 295
70006569 295
70006570 295
70006571 295
70006572 295
70006648 289
70006649 ..... 289, 297
70006650 ..... 289, 297
70006651 289
70006734 297
70006735 297
70006736 297
70006822 291
70006823 291
7000695 67
7001433 93
7001498 93
7001913 25
70021895 81
70023592 78
70023593 78
70023859 49
7002386 384
70023867 49
70023915 295
70024457 49
70024473 81
70024486 81
70024488 81
70024494 81
70024503 82
70024504 ..... 81, 82
70024507 82
70024512 82
70024513 81
70024515 82
70024517 81
70024904 80
70024905 80
70024906 80
70024907 81
70024910 81
70024912 81
70024914 82
70024915 82
70024917 82
70024918 82
70024920 ..... 81, 82
70024922 82
70024924 81
70024925 81
70024961 81
70025076 81
70025077 ..... 82, 339, 359
7002508 80
70025082 81
70025084 81
70025088 80
70025091 81
70025111 80
70025120 82
70025135 81
70025136 81
70025140 81
70025142 82
70025143 82
70025144 81
70025146 81
70025149 82
70025151 81
70025152 81
70025153 ..... 81, 386
70025154 81
70025156 82
70025160 81
70025161 ..... 81, 386
70025164 81
70025176 81
70025178 82
70025179 82
70025180 82
70025181 81
70025200 81
70025202 81
70025203 82
70025205 80
70025206 80
70025207 80
70025210 ..... 81, 386
70025212 82
70025231 ..... 81, 339, 359
70025233 ..... 339, 359
70025235 81
70025239 81
70025245 82
70025246 82
70025416 81
70025477 82
70025660 82
70025768 82
70025799 82
70025801 82
70025877 82
70026210 82
7002821 ..... 347, 368, 394
7002822 394
7002823 ..... 347, 368, 394
7002826 394
7002828 ..... 347, 368
7002840 394

7003928 243
7003941 249
7003972 249
7003973 249
7003980 249
7003982 249
7003983 249
7003989 249
7004035 58
7004036 58
7004043 59
7004044 59
7004045 59
7004047 59
7004049 59
7004275 394
7004276 394
7007207 ..... 93, 98
7007208 ..... 93, 98
7007412 ..... 94, 99
7007413 ..... 92, 98
7007414 92
7007415 98
7007417 ..... 92, 98
7007418 ..... 92, 98
7007419 ..... 92, 98
7007420 ..... 98, 99
7007422 99
7007423 ..... 92, 98
7007425 ..... 92, 98
7007430 99
7007431 99
7007434 99
7007435 ..... 92, 98
7007437 ..... 29, 92
7007438 .....29, 92, 98
7007439 .....29, 92, 98
7007441 ..... 92, 99
7007442 ..... 92, 98
7007443 98
7007444 ..... 92, 99
7007446 .....29, 92, 98
7007448 98
7007450 99
7007452 92
7007453 ..... 92, 99
7007454 93
7007457 ..... 93, 98
7007459 98
7007463 ..... 93, 98
7007464 ..... 93, 98
7007465 ..... 93, 99
7007466 93
7007470 92
7007472 93
7007474 93
7007475 93
7007476 ..... 93, 99
7007477 ..... 93, 99
7007478 93
7007484 ..... 93, 99
7007485 ..... 93, 99
7007487 ..... 93, 99
7007488 ..... 93, 99
7007489 103
7007494 93
7007496 93
7007497 ..... 93, 338, 359
7007498 ..... 93, 338, 359
7007633 58
7010103 103
7010104 103
7010105 103
7010116 .....94, 98
7010117 99
7010119 99
7010121 .....93, 98
7010122 .....93, 99
70104570 82
7010492 58
7010542 .....45, 46
7010543 ..... 40, 43, 45, 46
7011112 ..... 286, 289, 291
70124530 82
70124538 82
7012513 ..... 151, 155, 157
7012514 ..... 151, 155, 157
7012518 ..... 40, 43, 45
7012558 ..... 151, 155, 157
7012664 88
7012772 ... 45, 46, 53, 384
7012773 ..... 45, 46, 49, 53
7012774 .....46, 53
7012775 .....45, 46
7012776 53
7012777 53
7012912 .....45, 46
7012914 .....45, 217
7012918 .....45, 217
7012941 .....40, 43
7012943 ..... 40, 43, 384
7012944 ... 40, 43, 45, 384
7012953 ..... 45, 53, 217
7012965 .....53, 217
7012967 ..... 45, 217, 218
7012987 103
7012988 103
7012989 .....45, 217
7012995 .....40, 43
7012998 ..... 45, 46, 53
7013189 113
7016314 107
7016319 127
7016322 131
7016328 .....67, 386
7016331 ..... 67, 81, 386
7016372 127
7016374 131
7016399 228
7016652 394
7016654 394
7016655 394
7016822 ..... 87, 336, 356
7017022 26
7017023 58
7017027 25
7017028 58
7017070 58
7017072 .....25, 58
7017080 58
7017085 58
7017093 25
7017095 25
7017142 210
7017158 210
7017159 210
7017162 209
7017163 209
7017164 209
7017172 209
7017183 209
7017192 210
7017193 209
7017195 209
7017402 .....217, 218
7017406 .....31, 217, 218
7017410 45
7017420 53
7017421 53
7017422 53
7017452 .....217, 218
7017464 45
7017496 283
7018912 .....45, 46, 53
7018941 46
7018942 .....45, 46, 53
7018945 53
7018946 53
7018947 53
7018948 53
7018951 45
7018986 45
7018991 .....45, 384
7019162 249
7019164 249
7019165 249
7019167 249
7019194 249
7019658 107
7019680 .....151, 155, 157
7020020 .....39, 43
7020021 .....39, 43
7020108 .....151, 155, 157
7020109 .....151, 155, 157
7020110 .....151, 155, 157
7020111 .....151, 155, 157
7020175 .....122, 235, 239
7020176 .....122, 235, 239
7020190 .....151, 155, 157
7020192 151
7020193 .....339, 360
7020246 117
7020403 66
7020404 80
7020408 67
7020431 67
7020465 .....67, 80
7020468 67
7020471 68
7020479 68
7020487 66
7020492 81
7021200 .....92, 98
7021201 .....94, 99
7021202 .....92, 98
7021203 .....92, 99
7021206 .....93, 99
7021207 .....93, 98
7021210 .....93, 98
7021212 .....93, 98
7021214 .....93, 98
7021217 .....93, 98
7021218 93
7021219 .....93, 99
7021220 .....93, 99
7021221 .....93, 99
7021222 .....93, 99
7021223 .....92, 99
7021232 ..... 92, 94, 100
7021233 98
7021249 29
7021256 ..... 92, 98, 99
7021275 29
7021310 46
7021375 49
7021625 31
7021653 217
7022302 29
7022311 29
7022313 29
7022314 29
7022326 29
7022328 29
7022368 29
7022371 29
7022372 29
7022397 31
7022399 31
7022808 243
7022815 243
7022819 ..... 243, 330, 351
7022825 .....331, 351
7023318 58
7023910 29
7023911 217
7023912 217
7023917 31
7023933 31
7023935 31
7023936 31
7023977 92
7023979 .....93, 99
7024014 46
7024015 .....45, 46
7024100 59
7024124 25
7024125 25
7024127 25
7024129 25
7024134 26
7024379 59
7024380 59
7024381 59
7024390 59
7024396 59
7024397 307
7024398 68
7024404 113
7024439 108
7024440 108
7024441 108
7024444 .....108, 386
7024445 108
7024446 108
7024453 59
7024454 58
7024455 59
7024456 59

7024457 59
7024458 59
7024462 273
7024463 273
7024467 273
7024469 273
7024470 273
7024471 ..... 273, 277
7024472 273
7024473 273
7024474 273
7024475 273
7024478 273
7024485 ..... 174, 181
7024488 ..... 176, 181
7024489 ..... 176, 181
7024530 277
7024531 277
7024532 277
7024533 277
7024534 277
7024535 277
7024536 277
7024537 277
7024560 68
7024579 ..... 66, 80
7024598 131
7024704 58
7024721 26
7024722 25
7024723 26
7024724 25
7024725 25
7024726 25
7024727 25
7024728 25
7024729 25
7024730 25
7024731 25
7024732 25
7024733 25
7024734 25
7024735 25
7024736 25
7024737 26
7024738 25
7024739 25
7024740 25
7024741 25
7024742 25
7024743 25
7024744 26
7024762 58
7024763 58
7024764 26
7024765 26
7024766 26
7024784 58
7024800 93
7024851 ..... 93, 99
7024853 29
7024862 29
7024865 29
7024867 29
7024871 29
7024874 ..... 92, 98
7024875 ..... 93, 98
7024877 ..... 93, 99
7024892 31
7026188 ..... 175, 181
7026197 113
7026199 ..... 151, 155, 157
7026330 ..... 40, 43
7026503 113
7026504 113
7026505 113
7026506 113
7026507 113
7026509 114
7026511 113
7026597 ..... 174, 181
7026608 386
7026626 ..... 175, 181
7026631 66
7026632 189
7026633 189
7026634 189
7026635 189
7026636 189
7026637 189
7026638 189
7026639 189
7026640 189
7026641 190
7026642 190
7026643 190
7026644 190
7026645 190
7026646 190
7026647 190
7026648 190
7026649 190
7026650 190
7026651 189
7026652 189
7026653 189
7026654 189
7026655 189
7026656 189
7026658 190
7026659 189
7026660 189
7026661 189
7027003 ..... 87, 336, 356
7027015 ..... 87, 336, 357
7027016 ..... 87, 336, 357
7027017 ..... 87, 336, 357
7027051 ..... 63, 336, 356
7027052 ..... 63, 336, 356
7027053 ..... 63, 336, 356
7027054 ..... 63, 336, 357
7027055 ..... 63, 336, 357
7027063 ..... 74, 336, 356
7027064 ..... 74, 336, 356
7027065 ..... 74, 336, 357
7027066 ..... 74, 336, 357
7027067 ..... 74, 336, 357
7027084 ..... 74, 336, 356
7027085 ..... 74, 336, 356
7027086 ..... 74, 336, 357
7027087 ..... 74, 336, 357
7027088 ..... 74, 336, 357
7027236 67
7027276 68
7027419 29
7027740 29
7027773 273
7027774 273
7027775 273
7027776 273
7027777 273
7027778 273
7027779 273
7027780 273
7027781 187
7027782 187
7027783 187
7027784 187
7027790 68
7027791 68
7027792 68
7027795 ..... 67, 386
7027796 ..... 67, 338, 358
7027799 ..... 174, 181
7027887 ..... 151, 155, 157
7027965 ..... 88, 386
7027972 ..... 88, 386
77143013 ..... 117, 122
77363233 ... 344, 345, 365
80233041 322
80424002 58
80424043 59
80434249 49
80463058 ..... 345, 365
80484084 ..... 337, 357
80934561 113
80983191 ... 337, 358, 384
8180311 89
8220051 337
8229242 .... 335, 337, 354, 357, 384
8270147 . 63, 74, 336, 356
8310129 261
8310230 261
83304173 108
83304174 108
83683307 32
8405006 ..... 75, 78
8405007 79
8405009 78
8405104 78
8405204 78
8406101 74
8406102 ..... 74, 78
8406109 78
8406110 78
8406112 74
8410011 78
8410013 ..... 74, 78
88521205 ..... 63, 73, 87
88662523 ..... 141, 147
8896941 394
90206194 ..... 141, 146
91401281 ..... 63, 74, 87
91403102 ..... 79, 386

3121299

An Oshkosh Corporation Company

Corporate Office
JLG Industries, Inc.
1 JLG Drive
McConnellsburg, PA 17233-9533 USA

(717) 485-5161 (Corporate)
(877) 554-5438 (Customer Support)
(717) 485-6417

Visit our website for JLG Worldwide Locations.
www.jlg.com