Illustrated Parts Manual

Models
600S
600SJ
660SJ

SN 0300087000
through 0300171769
SN B300000100
through B300000969

P/N
3121207

September 14, 2018 - Rev AE

ANSI

CE

An Oshkosh Corporation Company

REVISION LOG

NOTES:

LOCATION OF MANUFACTURE

The 600S & 600SJ Boom Lifts are manufactured by JLG Industries in the following countries: USA and China. Refer to the Serial Number Tag to identify the country of manufacture. The country of manufacture may be determined by the Serial Number. Machines manufactured in the USA will have a serial number prefix of 03 (i.e. 03XXXXXXXX). Machines manufactured in the China will have a serial number prefix of B3 (i.e. B3XXXXXXXX).

GROUND MODULE IDENTIFICATION

MODULE ON MACHINES "WITHOUT UGM" (UNIVERSAL GROUND MODULE)

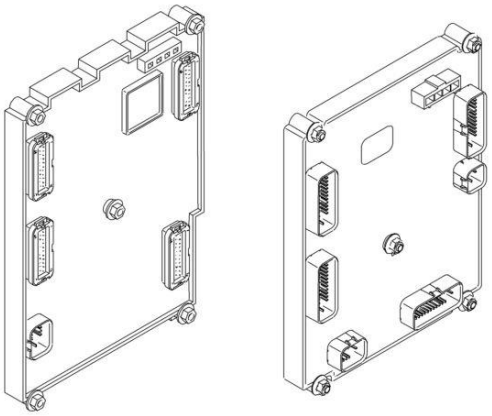

MODULE ON MACHINES "WITH UGM" (UNIVERSAL GROUND MODULE)

NOTE: USA Built Machines with SNs 0300170082 & 0300170091 are also built to the same specs as USA Built Machines SN 0300171769 to Present - Use Parts Manual P/N 3121299.

NOTE: China Built Machines with SNs B300000869, B300000871 & B300000875 are also built to the same specs as China built Machine SN 0300000970 to Present - Use Parts Manual P/N 3121299.

MANUAL REVISION LOG:

June 10, 2005 - A - Original Issue Of Manual (Edited to 0010603 Revision 35)

December 9, 2005 - B - Revised (Edited to 0010603 Revision 45)

May 18, 2006 - C - Revised (Edited to 0010603 Revision 49)

August 10, 2006 - D - Revised (Edited to 0010603 Revision 52)

January 12, 2007 - E - Revised (Edited to 0010603 Revision 55)

May 15, 2007 - F - Revised (Edited to 0010603 Revision 57)

REVISION LOG

September 19, 2007 - G - Revised (Edited to 0010603 Revision 67)
January 15, 2008 - H - Revised (Edited to 0010603 Revision 69)
June 15, 2008 - I - Revised (Edited to 0010603 Revision 69)
December 1, 2008 - J - Revised (Edited to 0010603 Revision 69)
April 15, 2009 - K - Revised (Edited to 0010603 Revision 72)
October 15, 2009 - L - Revised (Edited to 0010603 Revision 94)
May 24, 2010 - M - Revised (Edited to 0010603 Revision 103)
September 1, 2010 - N - Revised (Manual edited to 0010603 Revision 106 & 0010721 Revision 3)
March 15, 2011 - O - Revised (Manual edited to 0010603 Revision 110 & 0010721 Revision 5)
June 10, 2011 - P - Revised (Manual edited to 0010603 Revision 111 & 0010721 Revision 5)
September 14, 2011 - Q - Revised (Manual edited to 0010603 Revision 112 & 0010721 Revision 6)
January 6, 2012 - R - Revised (Manual edited to 0010603 Revision B & 0010721 Revision B)
April 20, 2012 - S - Revised (Manual edited to 0010603 Revision D & 0010721 Revision C)
July 27, 2012 - T - Revised (Manual edited to 0010603 Revision D & 0010721 Revision D)
November 8, 2012 - U - Revised (Manual edited to 0010603 Revision D & 0010721 Revision D)
March 15, 2013 - V - Revised (Manual edited to 0010603 Revision D & 0010721 Revision K)
April 25, 2013 - W - Revised (Manual edited to 0010603 Revision D & 0010721 Revision K)
June 14, 2013 - X - Revised (Manual edited to 0010603 Revision D & 0010721 Revision M)
September 30, 2013 - Y - Revised (Manual edited to 0010603 Revision W & 0010721 Revision M)
February 28, 2014 - Z - Revised (Manual edited to 0010603 Revision W & 0010721 Revision M)
October 6, 2014 - AA - Revised (Manual edited to 0010603 Revision W & 0010721 Revision Q)
October 30, 2015 - AB - Revised Manual (Revision 4)
March 14, 2017 - AC - Revised Manual
February 28, 2018 - AD - Revised Manual
September 14, 2018 - AE - Revised Manual

GENERAL INFORMATION

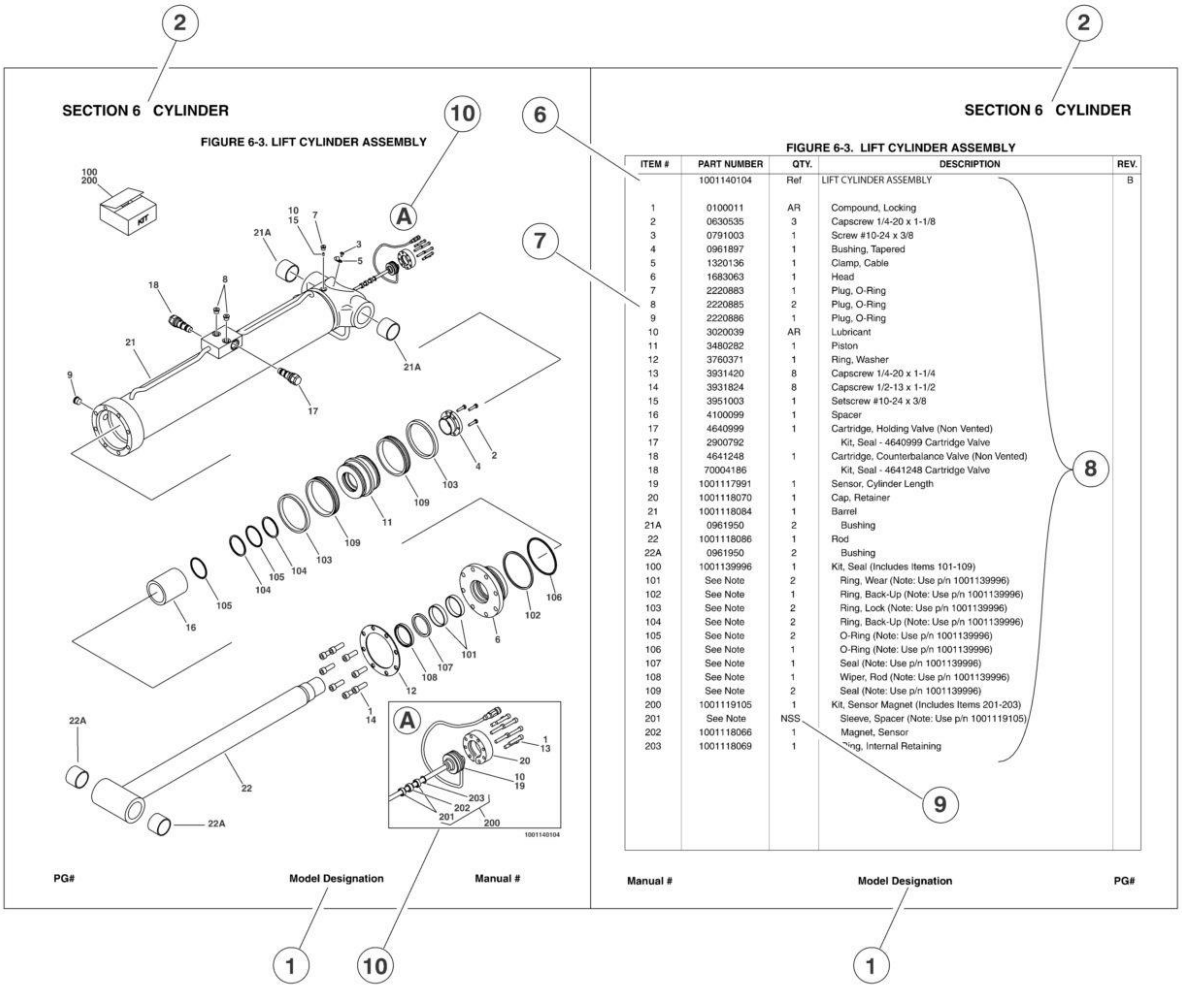

1) MACHINE IDENTIFICATION
Machines are identified by model and in some cases a combination of models, serial number (SN) or regional standard (i.e ANSI, CE,CSA). Components may also be identified by SN or manufacturer. common components that may be identified by these characteristics are engines and hydraulic components.

2) PARTS MANUAL ORGANIZATION
Product information in this manual is organized under section titles. Frame, Cylinder, Hydraulic and Electrical are a few examples. Each section is organized by figure and page number. The information within the Figure is then organized by item number, part number, description and corresponding illustration (s).

3) TABLE OF CONTENTS
A table of contents is found toward the beginning of the manual. Figure number, description and page number are provided for quick reference to the page containing the related information.

4) RECOMMENDED SPARE PARTS
The Recommended Spare Parts, located near the end of the manual, referance most frequently used maintenance parts.

5) PART NUMBER INDEX
A numerical index listing all part numbers and the corresponding page number(s) appears at the back of the manual.

GENERAL INFORMATION

6) NON-SERVICED PARTS

In some instances, it is necessary to display non-serviced parts, assemblies or installations. In the case of assemblies and installations there will be a Ref in the Qty column. In case of parts that are not available for service within assemblies or components, there will be a NSS (Not Sold Separately) or NLA (No Longer Available) listed in the Qty. column of the manual.

7) PARTS LIST ITEM NUMBERS

Numbers shown in the item# column correspond to numbers used in the associated illustration (s). Item numbers which are missing from the sequence in the parts list are not used on that page

8) INDENTED PARTS DESCRIPTION

An indented part description is included in the item under which it is indented.

9) ABB REVIATION AND SYMBOLS

AC ..... Alternating Current
ADE. ..... Advanced Design Electronics
ANSI ..... American National Standards Institute
AR.. ..... As Required
ASSY ..... Assembly
AUX... ..... Auxiliary
AWG ..... American Wire Gauge
B/M. ..... Bill of Material
CE.. ..... European Conformity
CCW ..... Counter Clockwise
cm. ..... Centimeter
CW ..... Clockwise
CSA. ..... Canadian Standards Association
CYL... ..... Cylinder
DIA. ..... Diameter
DC ..... Direct Current
EMS ..... Emergency Stop
ENG ..... Engine
FT (ft). ..... Feet
GA (Ga).. ..... Gauge
HYD ..... Hydraulic
Hz.. ..... Hertz
ID. ..... Inside Diameter
in. ..... inches
ISO ..... International Organization for Standards
JIC ..... Joint Industry Council
KG ..... Kilogram
L.. ..... Liter
LB ..... Pounds
LCD ..... Liquid Crystal Display
LED ..... Light Emitting Diodes
LH... ..... Left Hand
LSS ..... Load Sensing System
M(m)... ..... Metric/Meter
MM (mm) ..... Milimeter
mA. ..... Miliamps
NLA ..... No Longer Available
NPT ..... National Pipe Threads
NSS ..... Not Sold Separately
OD. ..... Outside Diameter
ORB ..... O-Ring Boss
ORFS ..... O-Ring Face Seal
OZ (oz). ..... Ounces
PG ..... Page
P/N. ..... Part Number
qt. ..... Quarts
QTY. ..... Quantity
REF ..... Reference
REV ..... Revision Level
RH... ..... Right Hand
SAE ..... Society of Automotive Engineers
SN.. ..... Serial Number
SPEC(S) ..... Specifications
T/T. ..... Turntable
UGM ..... Universal Ground Module
V. ..... Volts
W. ..... Watts
#... ..... Number

10) ILLUSTRATION REFERANCE LETTERS

When necessary, illustrations may contain referance letters that are intended to track information (i. e. hoses, harnesses) from one point to another or to track visual enlargement of components to show details that may be located in another area on the illustration.

Note: Due to continuous product improvements, JLG Industries, Inc. reserves the right to make specification changes without prior notification. Contact JLG Industries, Inc. for updated information.

TABLE OF CONTENTS

SECTION 1 - FRAME 11

FIGURE 1-1. 2WD FRONT AXLE AND STEERING INSTALLATION 12
FIGURE 1-2. 4WD FRONT AXLE AND STEERING INSTALLATION 16
FIGURE 1-3. 4WS REAR STEERING INSTALLATION 20
FIGURE 1-4. TIRE AND WHEEL DRIVE INSTALLATIONS 22
FIGURE 1-5. DRIVE HUB ASSEMBLY 26
FIGURE 1-6. DRIVE MOTOR ASSEMBLY (USA BUILT MACHINES) (SN 0300087000 through 0300098764) 30
FIGURE 1-7. DRIVE MOTOR ASSEMBLY (USA BUILT MACHINES AND CHINA BUILT MACHINES) (SN 0300098765 through 0300171769, SN B300000100 through B300000969) 32
FIGURE 1-8. DRIVE VALVES AND SHIELDS INSTALLATION (FRAME MOUNTED) 34
FIGURE 1-9. TOW PACKAGE INSTALLATION (OPTIONAL) 38

SECTION 2 - TURNTABLE 41

FIGURE 2-1. CONTROL VALVES INSTALLATIONS 42
FIGURE 2-2. MAIN CONTROL VALVE ASSEMBLY 46
FIGURE 2-3. ACCESSORY VALVE ASSEMBLY 50
FIGURE 2-4. SWING DRIVE, TURNTABLE BEARING AND LOCK INSTALLATIONS 52
FIGURE 2-5. SWING HUB ASSEMBLY (USA BUILT MACHINES) (SN 0300087000 through 0300137441) 56
FIGURE 2-6. SWING MOTOR ASSEMBLY (WHITE ROLLER STATOR) (USA BUILT MACHINES) (ORIGINAL EQUIPMENT) (SN 0300087000 through 0300137441) 58
FIGURE 2-7. SWING MOTOR ASSEMBLY (PARKER) (USA BUILT MACHINES) (SERVICE REPLACEMENT) (SN 0300087000 through 0300137440) 60
FIGURE 2-8. SWING MOTOR/BRAKE/HUB ASSEMBLY (USA BUILT MACHINES AND CHINA BUILT MACHINES) (SN 0300137441 through 0300171769, SN B300000100 through B300000969) 62
FIGURE 2-9. CATERPILLAR ENGINE INSTALLATION (USA BUILT MACHINES) (SN 0300087000 through 0300140223) 66
FIGURE 2-10. CATERPILLAR ENGINE INSTALLATION (USA BUILT MACHINES AND CHINA BUILT MACHINES) (SN 0300140223 through 0300171769, SN B300000100 through B300000969) 76
FIGURE 2-11. DEUTZ ENGINE INSTALLATION 84
FIGURE 2-12. FORD ENGINE INSTALLATION 96
FIGURE 2-13. GM ENGINE INSTALLATION (WITHOUT UGM) 102
FIGURE 2-14. GM ENGINE INSTALLATION (WITH UGM) 108
FIGURE 2-15. PISTON PUMP ASSEMBLY 114
FIGURE 2-16. GEAR PUMP ASSEMBLY 120
FIGURE 2-17. TANK INSTALLATIONS 122
FIGURE 2-18. ROTARY COUPLING INSTALLATION 126
FIGURE 2-19. GROUND CONTROL BOX ASSEMBLY (WITHOUT UGM) 130
FIGURE 2-20. GROUND CONTROL BOX ASSEMBLY (WITH UGM) 134
FIGURE 2-21. ELECTRICAL OPTIONS INSTALLATION (TURNTABLE MOUNTED) 138
FIGURE 2-22. ENGINE TRAY JACK INSTALLATION (OPTIONAL) 142
FIGURE 2-23. HOODS (ABS) AND LIFTING PLATE INSTALLATIONS (USA BUILT MACHINES) (SN 0300087000 through 0300089988) 144
FIGURE 2-24. HOODS (ABS) AND LIFTING PLATE INSTALLATIONS (USA BUILT MACHINES) (SN 0300089988 through 0300171769) 148
FIGURE 2-25. HOODS (STEEL) AND LIFTING PLATE INSTALLATIONS 154
FIGURE 2-26. 2500W GENERATOR INSTALLATION - CATERPILLAR MACHINES (OPTIONAL) 160
FIGURE 2-27. 2500W GENERATOR INSTALLATION - DEUTZ MACHINES (OPTIONAL) 164
FIGURE 2-28. 2500W GENERATOR INSTALLATION - FORD MACHINES (OPTIONAL) 168
FIGURE 2-29. 2500W GENERATOR INSTALLATION - GM MACHINES (OPTIONAL) 172
FIGURE 2-30. 7500W SKYPOWER GENERATOR INSTALLATION - CATERPILLAR AND DEUTZ ENGINES (OPTIONAL) 176
FIGURE 2-31. 7500W SKYPOWER GENERATOR INSTALLATION - FORD ENGINES (OPTIONAL) 184
FIGURE 2-32. 7500W SKYPOWER GENERATOR INSTALLATION - GM ENGINES (OPTIONAL) 188

SECTION 3 - BOOM 193

FIGURE 3-1. BOOM INSTALLATION - 600S 194
FIGURE 3-2. BOOM INSTALLATION - 600SJ & 660SJ 198
FIGURE 3-3. MAIN BOOM ASSEMBLIES 204
FIGURE 3-4. ROTATOR ASSEMBLIES 210
FIGURE 3-5. POWER TRACK INSTALLATIONS 212

SECTION 4 - PLATFORM 215

FIGURE 4-1. PLATFORM COMPONENTS INSTALLATION 216
FIGURE 4-2. PLATFORM COMPONENTS INSTALLATION (FALL ARREST PLATFORM) 222

TABLE OF CONTENTS

FIGURE 4-3. PLATFORM CONSOLE ASSEMBLY (USA BUILT MACHINES) (SN 0300087000 through 0300138728) 224
FIGURE 4-4. PLATFORM CONSOLE ASSEMBLY (USA BUILT MACHINES AND CHINA BUILT MACHINES) (SN 0300138729 through 0300171769, SN B300000100 through B300000969) 228
FIGURE 4-5. CONTROLLER ASSEMBLY (LIFT AND SWING) 232
FIGURE 4-6. CONTROLLER ASSEMBLY (LIFT AND SWING) 234
FIGURE 4-7. CONTROLLER ASSEMBLY (LIFT AND SWING) 236
FIGURE 4-8. CONTROLLER ASSEMBLY (DRIVE AND STEER) 240
FIGURE 4-9. CONTROLLER ASSEMBLY (DRIVE AND STEER) 244
FIGURE 4-10. CONTROLLER ASSEMBLY (DRIVE AND STEER) 246
FIGURE 4-11. SOFT TOUCH SYSTEM INSTALLATION (OPTIONAL) 248
FIGURE 4-12. PLATFORM BUMPER PADDING INSTALLATIONS (OPTIONAL) 252
FIGURE 4-13. SKYGLAZIER INSTALLATION 254
FIGURE 4-14. SKYWELDER INSTALLATION (50HZ) 258
FIGURE 4-15. SKYWELDER INSTALLATION (60HZ) 260
FIGURE 4-16. WELDER ASSEMBLY 262
FIGURE 4-17. SKYCUTTER INSTALLATION 264
FIGURE 4-18. SKYCUTTER INSTALLATION 266
FIGURE 4-19. PLASMA CUTTER ASSEMBLY 270
FIGURE 4-20. PLASMA CUTTER ASSEMBLY 272
FIGURE 4-21. PIPE RACKS INSTALLATION 274
FIGURE 4-22. SKYAIR AIR COMPRESSOR INSTALLATION 276
FIGURE 4-23. AIR COMPRESSOR ASSEMBLY 278

SECTION 5 - CYLINDER 281

FIGURE 5-1. AXLE LOCKOUT CYLINDER ASSEMBLY 282
FIGURE 5-2. LEVEL CYLINDER ASSEMBLY - PLATFORM SLAVE 284
FIGURE 5-3. LEVEL CYLINDER ASSEMBLY - PLATFORM SLAVE - 600S (SERVICE REPLACEMENT) 288
FIGURE 5-4. LEVEL CYLINDER ASSEMBLY - PLATFORM SLAVE - 600SJ & 660SJ (SERVICE REPLACEMENT) 290
FIGURE 5-5. LIFT CYLINDER ASSEMBLY - JIB - 600SJ & 660SJ (ORIGINAL EQUIPMENT) 292
FIGURE 5-6. LIFT CYLINDER ASSEMBLY (JIB) - 600SJ & 660SJ (SERVICE REPLACEMENT) 294
FIGURE 5-7. LIFT CYLINDER ASSEMBLY (JIB) - 600SJ & 660SJ (SERVICE REPLACEMENT) 296
FIGURE 5-8. LIFT CYLINDER ASSEMBLY - MAIN BOOM 298
FIGURE 5-9. MASTER CYLINDER ASSEMBLY 300
FIGURE 5-10. MASTER CYLINDER ASSEMBLY - 600S (SERVICE REPLACEMENT) 304
FIGURE 5-11. MASTER CYLINDER ASSEMBLY - 600SJ/660SJ (SERVICE REPACEMENT) 306
FIGURE 5-12. STEER CYLINDER ASSEMBLY (USA BUILT MACHINES) (SN 0300087000 through 0300142634) 308
FIGURE 5-13. STEER CYLINDER ASSEMBLY (USA BUILT MACHINES AND CHINA BUILT MACHINES) (SN 0300142635 through 0300171769, SN B300000100 through B300000969) 310
FIGURE 5-14. TELESCOPE CYLINDER ASSEMBLIES 312

SECTION 6 - HYDRAULIC 315

FIGURE 6-1. HYDRAULIC DIAGRAM - DRIVE AND STEER (2WD/2WS) 316
FIGURE 6-2. HYDRAULIC DIAGRAM - DRIVE AND STEER (4WD/2WS) 318
FIGURE 6-3. HYDRAULIC DIAGRAM - OSCILLATING AXLE 322
FIGURE 6-4. HYDRAULIC DIAGRAM - STANDARD 324
FIGURE 6-5. HYDRAULIC DIAGRAM LIST 330

SECTION 7 - ELECTRICAL 331

FIGURE 7-1. ELECTRICAL DIAGRAM LIST 332
FIGURE 7-2. HARNESS COMPONENTS INSTALLATION (WITHOUT UGM) 334
FIGURE 7-3. HARNESS COMPONENTS INSTALLATION (WITH UGM) 352
FIGURE 7-4. AC CABLES INSTALLATION (CE GERMAN AND CE UK SPECS) 368

SECTION 8 - DECALS 371

FIGURE 8-1. DECAL INSTALLATION (ANSI SPEC) (USA BUILT MACHINES) (SN 0300087000 through 0300087911) 372
FIGURE 8-2. DECAL INSTALLATION (ANSI SPEC) (USA BUILT MACHINES AND CHINA BUILT MACHINES) (SN 0300087912 through 0300171769, SN B300000100 through B300000969) 376
FIGURE 8-3. DECAL INSTALLATION (COUNTRY SPEC) (USA BUILT MACHINES) (SN 0300087000 through 0300087911) ..380
FIGURE 8-4. DECAL INSTALLATION (COUNTRY SPEC) (USA BUILT MACHINES AND CHINA BUILT MACHINES) (SN 0300087912 through 0300171769, SN B300000100 through B300000969) 386
FIGURE 8-5. DECAL INSTALLATION (AUSTRALIAN AND CE SPEC) (USA BUILT MACHINES) (SN 0300087000 through 0300087911) 394

FIGURE 8-6. DECAL INSTALLATION (AUSTRALIAN AND CE SPEC) (USA BUILT MACHINES AND CHINA BUILT MACHINES) (SN 0300087912 through 0300171769, SN B300000100 through B300000969) 398

SECTION 9 - RECOMMENDED SERVICE PARTS STOCK 401

FIGURE 9-1. MODEL 600SJ/660SJ STANDARD PARTS 402
FIGURE 9-2. MODEL 600SJ/660SJ VARIABLE PARTS 404

SECTION 10 - SPECIAL OPTIONS 405

FIGURE 10-1. SPECIAL OPTIONS 406

PART NUMBER INDEX 413

SECTION 1 - FRAME

FIGURE 1-1. 2WD FRONT AXLE AND STEERING INSTALLATION

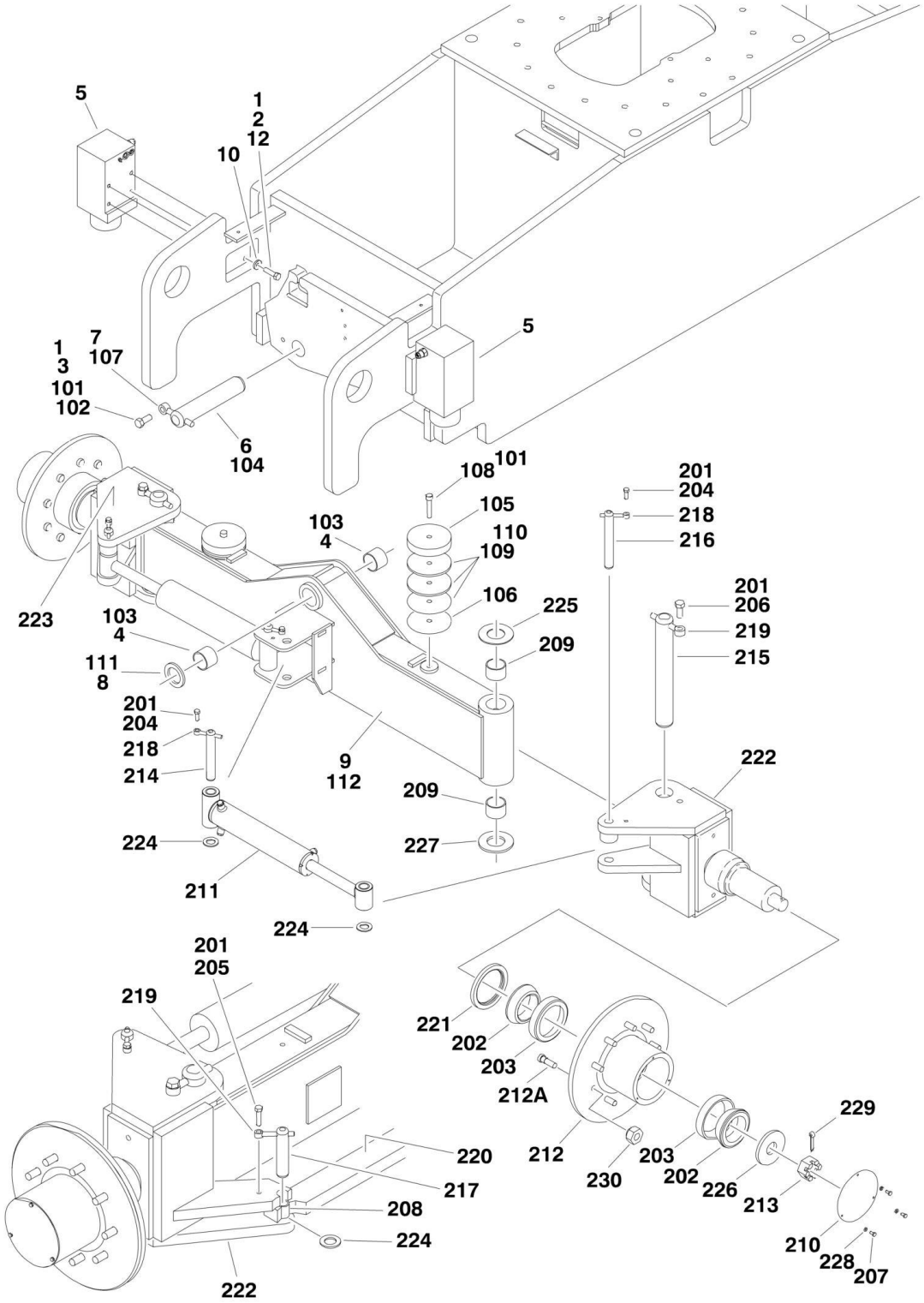

FIGURE 1-1. 2WD FRONT AXLE AND STEERING INSTALLATION

ITEM	PART NUMBER	QTY	DESCRIPTION	REV
		Ref	**Note: 2WD Only Available on USA Built Machines.**	
		Ref	**AXLE INSTALLATIONS - OSCILLATING**	
	0273081	Ref	**Without Tow Package**	F
	0273379	Ref	**With Tow Package**	D
1	0100011	AR	Compound, Locking	
2	0641814	8	Bolt 1/2in-13NC x 1-3/4in	
3	0642012	1	Bolt 5/8in-11NC x 1-1/2in	
4	0961950	2	Bearing	
5		Ref	Lockout Cylinder Assembly Options (See CYLINDER SECTION for Breakdown):	
5	1684280	NLA	Lockout Cylinder Assembly (Use p/n 1001167359) **(SN 0300087000 through 0300089728)**	
5	1684465	2	Lockout Cylinder Assembly **(SN 0300089729 through 0300171769)**	
6	3422592	1	Pin, Pivot	
7	3841258	1	Keeper, Pin	
8	4740158	1	Thrustwasher	
9		Ref	Axle Weldment Options:	
9	4846814	1	Without Tow Package	
9	4846934	1	With Tow Package	
10	4891800	8	Flatwasher 1/2in Hardened	
12	0100038	AR	Primer, Locking	
	0273226	Ref	**AXLE INSTALLATIONS - FIXED**	B
101	0100011	AR	Compound, Locking	
102	0642012	1	Bolt 5/8in-11NC x 1-1/2in	
103	0961950	2	Bearing	
104	3422592	1	Pin, Pivot	
105	3539877	2	Plate, Stop	
106	3539878	2	Plate, Stop	
107	3841258	1	Keeper, Pin	
108	3931840	2	Screw 1/2in-13NC x 2-1/2in	
109	4070944	4	Shim (.06)	
110	4070945	4	Shim (.25)	
111	4740158	1	Thrustwasher	
112		Ref	Axle Weldment Options:	
112		Ref	Without Tow Package Options:	
112	4846814	1	Without Tow Package **(SN 0300087000 through 0300166418)**	
112	1001105321	1	Without Tow Package **(SN 0300166419 through 0300171769)**	
112	See Note	NLA	With Tow Package (Note: Not Available for Purchase)	
		Ref	**STEERING INSTALLATIONS**	
	0273150	Ref	**Without Tow Package**	C
	0273422	Ref	**With Tow Package**	B
201	0100011	AR	Compound, Locking	
202	0440170	4	Cone, Bearing	
203	0440171	4	Cup, Bearing	
204	0641608	4	Bolt 3/8in-16NC x 1in	
205	0641612	2	Bolt 3/8in-16NC x 1-1/2in	
206	0642012	2	Bolt 5/8in-11NC x 1-1/2in	
207	0721003	6	Bolt #10-24NC x 3/8in	
208	0961977	2	Bushing	

SECTION 1 - FRAME

ITEM	PART NUMBER	QTY	DESCRIPTION	REV
209	0962131	4	Bearing	
210	1120304	2	Cap, Hub	
211		Ref	Steer Cylinder Assembly Options (See CYLINDER SECTION for Breakdown):	
211	1683208	2	Steer Cylinder Assembly **(SN 0300087000 through 0300142634)**	
211	1001097242	NLA	Steer Cylinder Assembly **(SN 0300142635 through 0300171769)**	
211	1001129305	2	Steer Cylinder Assembly	
212	2780271	2	Hub	
212A	0630490	18	Stud, Wheel (9 Per Hub)	
213	3323403	2	Nut, Slotted 1-1/2in -12NF	
214	3422326	2	Pin, Steer Cylinder	
215	3422900	2	Kingpin	
216		Ref	Pin, Steer Cylinder Options:	
216	3422902	2	Machines without Tow Package	
216	3422902	1	Machines with Tow Package (Left Side without Tow Link)	
216	3422567	1	Machines with Tow Package (Right Side with Tow Link)	
217	3422903	2	Pin, Tie-Rod	
218	3841143	6	Shaft, Keeper	
219	3841258	2	Shaft, Keeper	
220	3841510	1	Tie-Rod	
221	3960343	2	Seal, Grease	
222	4130396	1	Spindle - Left Side	
223		Ref	Spindle - Right Side Options:	
223	4130397	2	Machines without Tow Package	
223	4130400	1	Machines with Tow Package	
224	4740111	6	Thrustwasher	
225	4740256	2	Thrustwasher	
226	4740283	2	Flatwasher, Hardened	
227	4740463	2	Thrustwasher	
228	4761000	6	Lockwasher #10	
229	3451010	2	Pin, Cotter 5/8in x 2-1/2in	
230	3300106	18	Lugnut (9 per Wheel)	

FIGURE 1-2. 4WD FRONT AXLE AND STEERING INSTALLATION

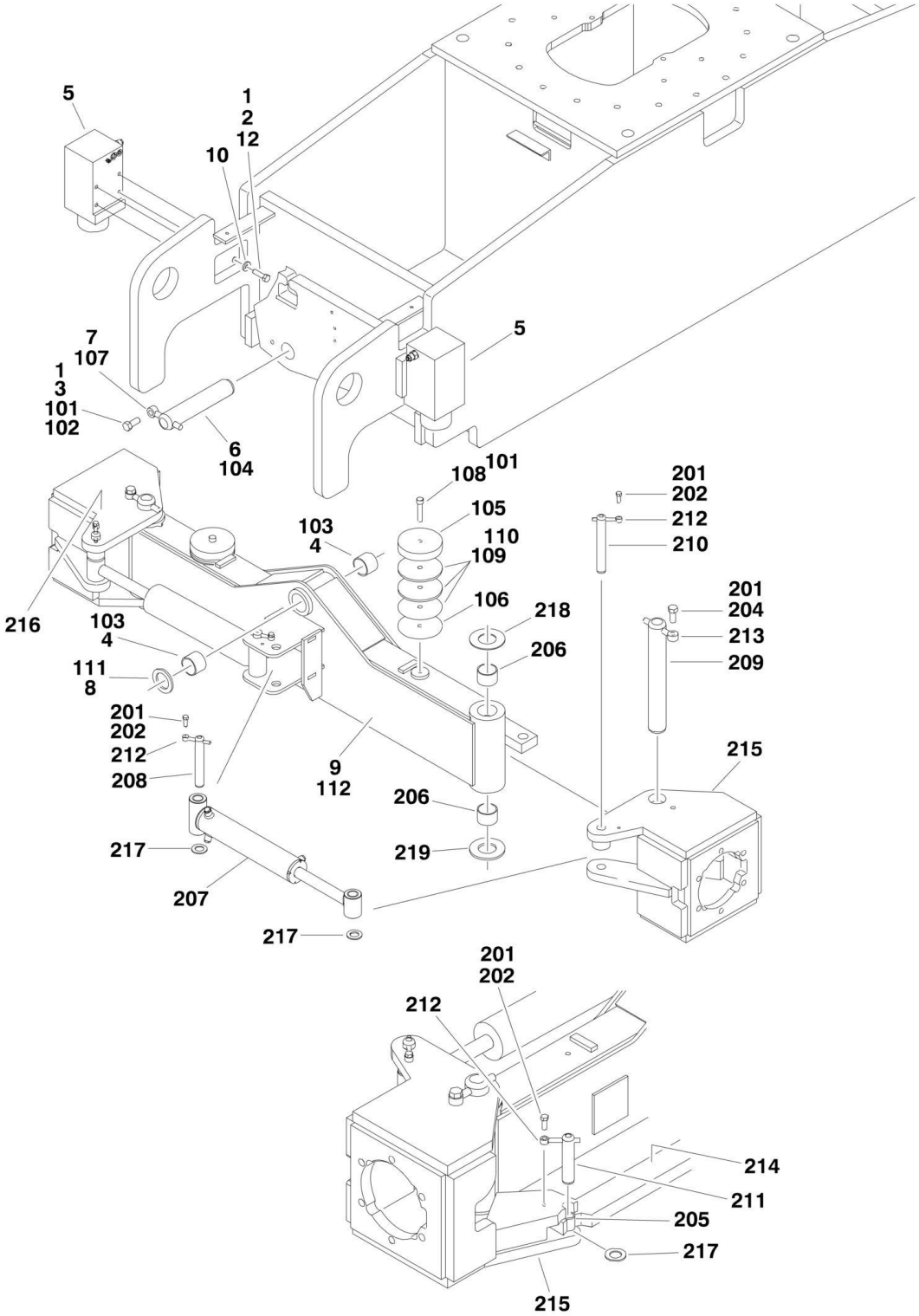

FIGURE 1-2. 4WD FRONT AXLE AND STEERING INSTALLATION

ITEM	PART NUMBER	QTY	DESCRIPTION	REV
		Ref	**AXLE INSTALLATIONS - OSCILLATING**	
	0273081	Ref	**USA Built Machines without Tow Package**	F
	1001113644	Ref	**China Built Machines without Tow Package**	B
	0273379	Ref	**All Machines with Tow Package**	D
1	0100011	AR	Compound, Locking	
2	0641814	8	Bolt 1/2in-13NC x 1-3/4in	
3	0642012	1	Bolt 5/8in-11NC x 1-1/2in	
4	0961950	2	Bearing	
5		Ref	Locknut Cylinder Assembly Options (See CYLINDER SECTION for Breakdown):	
5	1684280	NLA	USA Built Machines (Use p/n 1001167359) **(SN 0300087000 through 0300089728)**	
5	1684465	2	USA Built Machines **(SN 0300089729 through 0300171769)**	
5	1684465	2	China Built Machines **(SN B300000100 through B300000969)**	
6	3422592	1	Pin, Pivot	
7	3841258	1	Keeper, Pin	
8	4740158	1	Thrustwasher	
9		Ref	Axle Weldment Options:	
9	4846814	1	USA Built Machines without Tow Package	
9	1001113597	1	China Built Machines without Tow Package	
9	4846934	1	All Machines with Tow Package	
10	4891800	8	Flatwasher 1/2in Hardened	
12	0100038	AR	Primer, Locking	
	0273226	Ref	**AXLE INSTALLATIONS - FIXED**	A
		Ref	**Note: Only Available on USA Built Machines.**	
101	0100011	AR	Compound, Locking	
102	0642012	1	Bolt 5/8in-11NC x 1-1/2in	
103	0961950	2	Bearing	
104	3422592	1	Pin, Pivot	
105	3539877	2	Plate, Stop	
106	3539878	2	Plate, Stop	
107	3841258	1	Keeper, Pin	
108	3931840	2	Screw 1/2in-13NC x 2-1/2in	
109	4070944	4	Shim (.06)	
110	4070945	4	Shim (.25)	
111	4740158	1	Thrustwasher	
112		Ref	Axle Weldment Options:	
112	4846814	1	Without Tow Package	
112	See Note	NLA	With Tow Package (Note: Not Available for Purchase)	
		Ref	**STEERING INSTALLATIONS**	
	0273080	Ref	**4WD & 2WS - USA Built Machines without Tow Package**	G
	1001113653	Ref	**4WD & 2WS - China Built Machines without Tow Package**	D
	0273394	Ref	**4WD & 2WS - All Machines with Tow Package**	D
	0273357	Ref	**4WD & 4WS - USA Machines without Tow Package**	1
	1001121639	Ref	**4WD & 4WS - China Built Machines without Tow Package**	B
	0275230	Ref	**4WD & 4WS - USA Built Machines with Tow Package**	1
201	0100011	AR	Compound, Locking	
202	0641608	6	Bolt 3/8in-16NC x 1in	
204	0642012	2	Bolt 5/8in-11NC x 1-1/2in	
205	0961977	2	Bushing	

SECTION 1 - FRAME

ITEM	PART NUMBER	QTY	DESCRIPTION	REV
206	0962131	4	Bearing	
207		Ref	Steer Cylinder Assembly Options (See CYLINDER SECTION for Breakdown):	
207	1683208	2	USA Built Machines **(SN 0300087000 through 0300142634)**	
207	1001097242	2	USA Built Machines **(SN 0300142635 through 0300171769)**	
207	1001129305	2	USA Built Machines	
207	1001097242	2	China Built Machines **(SN B300000100 through B300000969)**	
207	1001129305	2	China Built Machines	
208	3422326	2	Pin, Steer Cylinder	
209	3422900	2	Kingpin	
210		Ref	Pin, Steer Cylinder Options:	
210	3422902	2	Machines without Tow Package	
210	3422902	1	Machines with Tow Package (Left Side without Tow Link)	
210	3422567	1	Machines with Tow Package (Right Side with Tow Link)	
211	3422903	2	Pin, Tie-Rod	
212	3841143	6	Shaft, Keeper	
213	3841258	2	Shaft, Keeper	
214		Ref	Tie-Rod Options:	
214	3841510	1	USA Built Machines	
214	1001113674	1	China Built Machines	
215		Ref	Spindle - Left Side Options:	
215		Ref	USA Built Machines	
215	4130394	NLA	Spindle - Left Side (Use p/n 1001099387) **(SN 0300087000 through 0300163150)**	
215	1001099387	1	Spindle - Left Side **(SN 0300163151 through 0300171769)**	
215		Ref	China Built Machines	
215	1001113560	NLA	Spindle - Left Side (Use p/n 1001133061) **(SN 0300087000 through B300000723)**	
215	1001133061	1	Spindle - Left Side **(SN B300000724 through B300000969)**	
216		Ref	Spindle - Right Side Options:	
216		Ref	USA Built Machines without Tow Package	
216	4130395	NLA	Spindle - Right Side (Use p/n 1001099196) **(SN B300000100 through 0300163150)**	
216	1001099196	1	Spindle - Right Side **(SN 0300163151 through 0300171769)**	
216		Ref	China Built Machines without Tow Package	
216	1001113575	NLA	Spindle - Right Side (Use p/n 1001113057) **(SN B300000100 through B300000723)**	
216	1001133057	1	Spindle - Right Side **(SN B300000724 through B300000969)**	
216	4130399	1	All Machines with Tow Package	
217	4740111	6	Thrustwasher	
218	4740256	2	Thrustwasher	
219	4740463	2	Thrustwasher	

FIGURE 1-3. 4WS REAR STEERING INSTALLATION

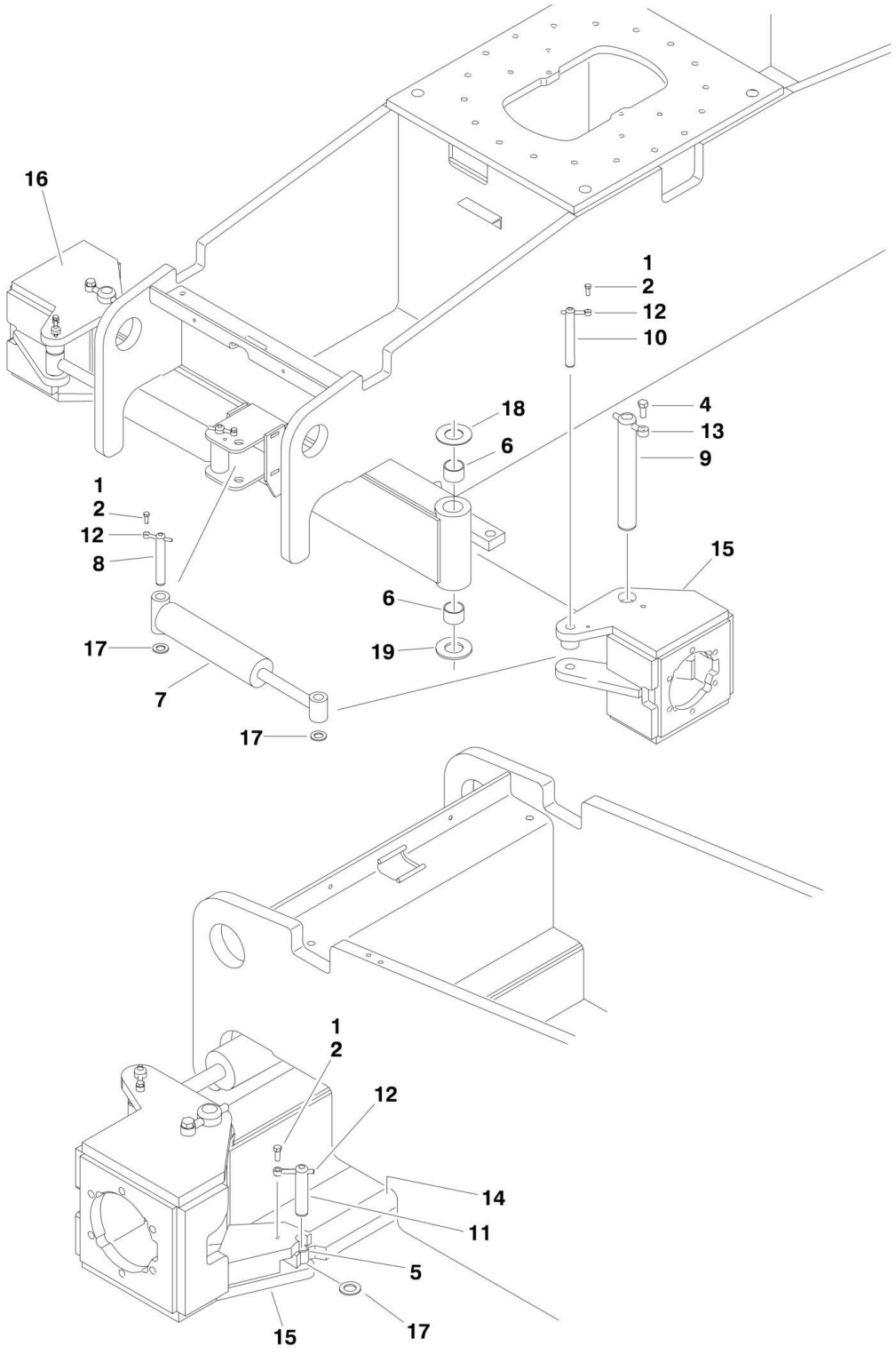

FIGURE 1-3. 4WS REAR STEERING INSTALLATION

ITEM	PART NUMBER	QTY	DESCRIPTION	REV
		Ref	**4WS REAR STEERING INSTALLATIONS**	
	0273356	Ref	**2WD & 4WS Installation - 2WD Machines**	1
	0273357	Ref	**4WD & 4WS - USA Machines without Tow Package**	1
	1001121639	Ref	**4WD & 4WS - China Built Machines without Tow Package**	B
	0275230	Ref	**4WD & 4WS - USA Built Machines with Tow Package**	1
		Ref	**STEERING INSTALLATION**	
	0273080	Ref	**USA Built Machines**	G
	1001121639	Ref	**China Built Machines**	B
1	0100011	AR	Compound, Locking	
2	0641608	6	Bolt 3/8in-16NC x 1in	
4	0642012	2	Bolt 5/8in-11NC x 1-1/2in	
5	0961977	2	Bushing	
6	0962131	4	Bearing	
7		Ref	Steer Cylinder Assembly Options (See CYLINDER SECTION for Breakdown):	
7	1683208	2	USA Built Machines **(SN 0300087000 through 0300142634)**	
7	1001097242	2	USA Built Machines **(SN 0300142635 through 0300171769)**	
7	1001097242	2	China Built Machines **(SN B300000100 through B300000969)**	
8	3422326	2	Pin, Steer Cylinder	
9	3422900	2	Kingpin	
10	3422902	2	Pin, Steer Cylinder	
11	3422903	2	Pin, Tie-Rod	
12	3841143	6	Shaft, Keeper	
13	3841258	2	Shaft, Keeper	
14	3841510	1	Tie-Rod	
15		Ref	Spindle - Left Side Options:	
15		Ref	USA Built Machines	
15	4130394	NLA	Spindle - Left Side (Use p/n 1001099387) **(SN 0300087000 through 0300163150)**	
15	1001099387	1	Spindle - Left Side **(SN 0300163151 through 0300171769)**	
15		Ref	China Built Machines	
15	1001113560	NLA	Spindle - Left Side (Use p/n 1001133061) **(SN 0300087000 through B300000667)**	
15	1001133061	1	Spindle - Left Side **(SN B300000668 through B300000969)**	
16		Ref	Spindle - Right Side Options:	
16		Ref	USA Built Machines without Tow Package	
16	4130395	NLA	Spindle - Right Side (Use p/n 1001099196) **(SN B300000100 through 0300163150)**	
16	1001099196	1	Spindle - Right Side **(SN 0300163151 through 0300171769)**	
16		Ref	China Built Machines without Tow Package	
16	1001113575	NLA	Spindle - Right Side (Use p/n 1001133057) **(SN B300000100 through B300000688)**	
16	1001133057	1	Spindle - Right Side **(SN B300000724 through B300000969)**	
17	4740111	6	Thrustwasher	
18	4740256	2	Thrustwasher	
19	4740463	2	Thrustwasher	

FIGURE 1-4. TIRE AND WHEEL DRIVE INSTALLATIONS

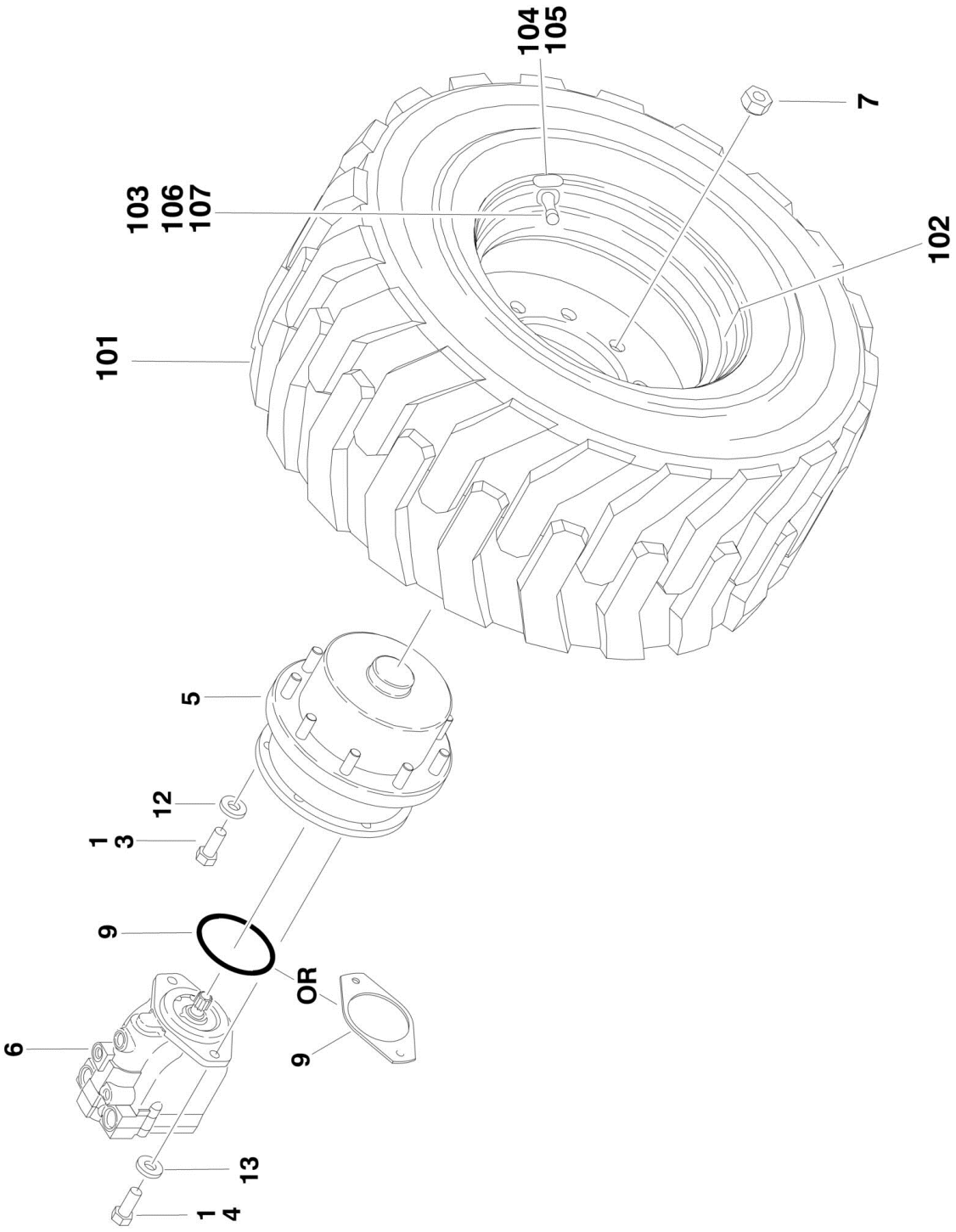

FIGURE 1-4. TIRE AND WHEEL DRIVE INSTALLATIONS

ITEM	PART NUMBER	QTY	DESCRIPTION	REV
		Ref	**WHEEL DRIVE INSTALLATIONS**	
	0273049	Ref	**Wheel Drive Installations 2WD/2WS**	J
	0273367	Ref	**Wheel Drive Installations 2WD/4WS**	A
	0273048	Ref	**Wheel Drive Installations 4WD/2WS**	L
	0273366	Ref	**Wheel Drive Installations 4WD/4WS**	J
		Ref	**Note: 2WD Qty Shown. For 4WD, Double Qty Shown.**	
1	0100011	AR	Compound, Locking	
3	0681810	4	Bolt 1/2in-13NC x 1-1/4in (Grade 8)	
4	0682016	12	Bolt 5/8in-11NC x 2in (Grade 8)	
5	2780269	2	Drive Hub Assembly (See DRIVE HUB ASSEMBLY for Breakdown)	
6		Ref	Drive Motor Assembly Options	
6		Ref	USA Built Machines (See DRIVE MOTOR ASSEMBLY for Breakdown): **(SN 0300087000 through 0300098764)**	
6	3160299	NLA	2WD (Use p/n 3160349)	
6	3160300	NLA	4WD (Use p/n 3160350)	
6		Ref	USA Built Machines (See DRIVE MOTOR ASSEMBLY for Breakdown): **(SN 0300098765 through 0300171769)**	
6	3160349	2	2WD	
6	3160350	2	4WD	
6		Ref	China Built Machines (See DRIVE MOTOR ASSEMBLY for Breakdown): **(SN B300000100 through B300000969)**	
6	3160349	2	2WD	
6	3160350	2	4WD	
7	3300106	18	Nut, Wheel	
9		Ref	Hardware Options:	
9	3790045	1	O-Ring **(SN 0300087000 through 0300102228)**	
9	3960526	1	Gasket **(SN 0300102229 through 0300171769)**	
9	3960526	1	Gasket **(SN B300000100 through B300000969)**	
12	4891800	4	Flatwasher 1/2in Hardened	
13	4740393	12	Flatwasher 5/8in Hardened	
19	3020008	AR	Lubricant - 80W-90 (Not Shown)	
		Ref	**TIRE AND WHEEL INSTALLATIONS OPTIONS**	
		Ref	**USA Built Machines: (SN 0300087000 through 0300138401)**	
	0273001	Ref	**Pneumatic - OTR Tires (Available on All Specs except Australian and CE Specs)**	1
	0273242	Ref	**Pneumatic with Sealant - OTR Tires (Available on ANSI and ANSI Export Specs Only)**	1
	0274322	Ref	**Pneumatic Turf/Sand - OTR Tires (Available on All Specs except Australian and CE Specs)**	1
	0275860	Ref	**Pneumatic Turf/Sand - Galaxy Tires (Available on ANSI and ANSI Export Specs Only)**	1
	0273238	Ref	**Foam-Filled - OTR Tires (Available on All Specs)**	1
	0274152	Ref	**Foam-Filled - OTR Tires (Non-Marking) (Available on All Specs)**	1
		Ref	**USA Built Machines: (SN 0300138402 through 0300171769)**	
	1001101800	Ref	**Pneumatic - OTR Tires (Available on All Specs except Australian and CE Specs)**	C
	1001101802	Ref	**Pneumatic with Sealant - OTR Tires (Available on ANSI and ANSI Export Specs Only)**	C
	0274322	Ref	**Pneumatic Turf/Sand - OTR Tires (Available on All Specs except Australian and CE Specs)**	1

SECTION 1 - FRAME

ITEM	PART NUMBER	QTY	DESCRIPTION	REV
	0275860	Ref	**Pneumatic Turf/Sand - Galaxy Tires (Available on ANSI and ANSI Export Specs Only)**	1
	1001101801	Ref	**Foam-Filled - OTR Tires (Available on All Specs)**	C
	0274152	Ref	**Foam-Filled - OTR Tires (Non-Marking) (Available on All Specs)**	1
		Ref	**China Built Machines: (SN B300000100 through B300000969)**	
	1001101800	Ref	**Pneumatic - OTR Tires (Available on All Specs except Australian and CE Specs)**	C
	1001101801	Ref	**Foam-Filled - OTR Tires (Available on All Specs)**	C
		Ref	Tire and Wheel Assembly Options:	
		Ref	USA Built Machines: **(SN 0300087000 through 0300138401)**	
	0272993	2	Pneumatic - OTR Tire (Right Side)	C
	0272992	2	Pneumatic - OTR Tire (Left Side)	C
	0273244	2	Pneumatic with Sealant - OTR Tire (Right Side)	B
	0273243	2	Pneumatic with Sealant - OTR Tire (Left Side)	B
	4520357	4	Pneumatic Turf/Sand - OTR Tire	B
	4520674	4	Pneumatic Turf/Sand - Galaxy Tire	A
	0273240	2	Foam-Filled - OTR Tire (Right Side)	B
	0273239	2	Foam-Filled - OTR Tire (Left Side)	B
	4520340	2	Foam-Filled - OTR Tire (Non-Marking) (Right Side)	B
	4520339	2	Foam-Filled - OTR Tire (Non-Marking) (Left Side)	B
		Ref	USA Built Machines **(SN 0300138402 through 0300171769)**	
	1001097358	2	Pneumatic - OTR Tire (Right Side)	C
	1001097357	2	Pneumatic - OTR Tire (Left Side)	C
	1001097388	2	Pneumatic with Sealant - OTR Tire (Right Side)	C
	1001097387	2	Pneumatic with Sealant - OTR Tire (Left Side)	C
	4520357	4	Pneumatic Turf/Sand - OTR Tire	B
	4520674	4	Pneumatic Turf/Sand - Galaxy Tire	A
	1001097374	2	Foam-Filled - OTR Tire (Right Side)	D
	1001097373	2	Foam-Filled - OTR Tire (Left Side)	D
	4520340	2	Foam-Filled - OTR Tire (Non-Marking) (Right Side)	B
	4520339	2	Foam-Filled - OTR Tire (Non-Marking) (Left Side)	B
		Ref	China Built Machines **(SN B300000100 through B300000969)**	
	1001097358	2	Pneumatic - OTR Tire (Right Side)	C
	1001097357	2	Pneumatic - OTR Tire (Left Side)	C
	1001097374	2	Foam-Filled - OTR Tire (Right Side)	D
	1001097373	2	Foam-Filled - OTR Tire (Left Side)	D
		Ref	**Note: Assemblies may require ballast/foam filling to manufacturer's specifications prior to installing on a machine. Refer to Operation and Safety or Service and Maintenance Manuals. Purchase individual tire and/ or rim only if able to foam fill tire and wheel assembly, otherwise, purchase complete assembly.**	
101	4520258	4	Tire 15 x 19.5 (1 Per Assembly) (USA Built Machines) **(SN 0300087000 through 0300138401)**	
101	1001097351	4	Tire 39 x 15-22.5 (1 Per Assembly) (USA Built Machines) **(SN 0300138402 through 0300171769)**	
101	1001097351	4	Tire 39 x 15-22.5 (1 Per Assembly) (China Built Machines) **(SN B300000100 through B300000969)**	
101	4520356	4	Tire 18 x 625 - Turf/Sand (1 Per Assembly)	
101	4520256	4	Tire 41/18LL x 22.5 - Turf/Sand (1 Per Assembly)	
102	4860243	4	Rim, Wheel (1 Per Assembly) (USA Built Machines) **(SN 0300087000 through 0300138401)**	

ITEM	PART NUMBER	QTY	DESCRIPTION	REV
102	1001097348	4	Rim, Wheel (1 Per Assembly) (USA Built Machines) **(SN 0300138402 through 0300171769)**	
102	1001097348	4	Rim, Wheel (1 Per Assembly) (China Built Machines) **(SN B300000100 through B300000969)**	
102	4520355	4	Rim, Wheel - Turf/Sand 24.5 x 15 (1 Per Assembly)	
102	4520672	4	Rim, Wheel - Turf/Sand 22.5 x 14 (1 Per Assembly)	
103	4640113	4	Valve, Air (1 Per Assembly)	
104	1702701	4	Decal - 95 PSI	
104	1706846	4	Decal - 75 PSI (Turf/Sand Tires 18 x 625 Only) (was Decal - 60 PSI p/n 1702137)	
104	1701643	4	Decal - 70 PSI (Turf/Sand Tires 41/18LL x 22.5 Only)	
105	1705364	AR	Decal - Tire Sealant (With Sealant Only)	
106	1300019	AR	Chemical, Tire Sealant (Green) (With Sealant Only)	
107	1120552	AR	Cap, Valve Stem (Green) (With Sealant Only)	

FIGURE 1-5. DRIVE HUB ASSEMBLY

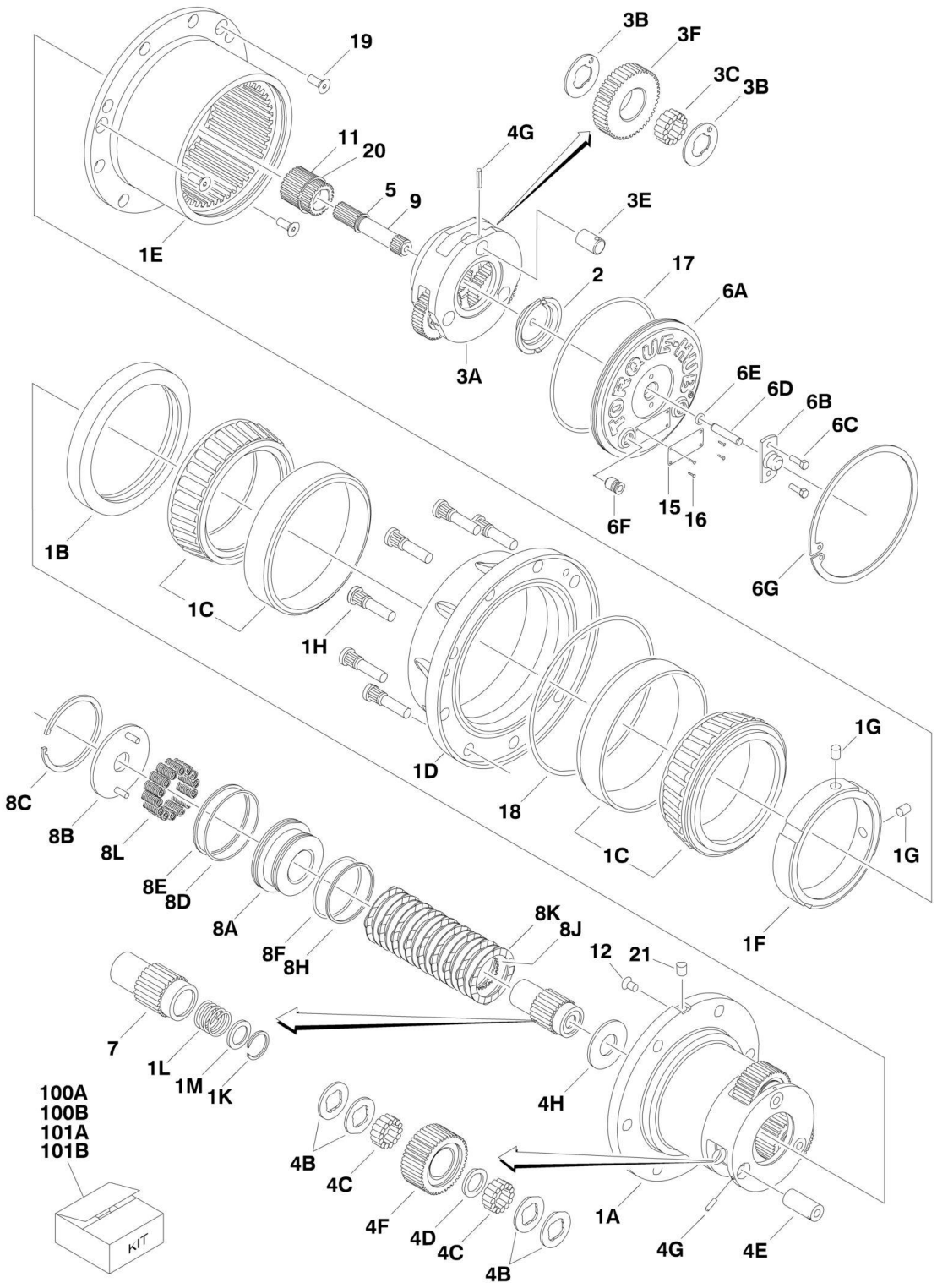

FIGURE 1-5. DRIVE HUB ASSEMBLY

ITEM	PART NUMBER	QTY	DESCRIPTION	REV
	2780269	Ref	**DRIVE HUB/BRAKE ASSEMBLY**	E
1	See Note	NSS	Spindle/Housing Assembly (Note: Use p/n 2780269 Complete Replacement. See 1A-1M for Available Components)	
1A	7024729	1	Spindle	
1B	70001119	1	Seal	
1C	7024735	2	Bearing (Includes Cup and Cone)	
1D	2780269	1	Housing (Note: Not Available for Purchase)	
1E	7024730	1	Ring, Gear	
1F	See Note	NSS	Nut, Bearing (Note: Use Item 100A)	
1G	See Note	NSS	Setscrew 1/4in-28NF x 1/2in (Note: Use Item 100A,100B,101A or 101B)	
1H	7024732	9	Stud, Wheel	
1K	7024125	1	Ring, Retaining	
1L	7024124	1	Spring	
1M	7024129	1	Thrustwasher	
2	7024741	1	Thrustwasher	
3	See Note	NSS	Carrier Assembly (Note: Not Available for Purchase. See 3A-3F for Available Components)	
3A	7024725	1	Carrier	
3B	7024127	6	Thrustwasher	
3C	7024733	42	Bearing, Needle	
3E	7024724	3	Shaft, Planet	
3F	7024727	3	Gear, Planet	
4	See Note	NSS	Planet Gear Sub-Assembly (Note: Not Available for Purchase. See 4A-4H for Available Components)	
4B	7024740	12	Thrustwasher	
4C	7024734	84	Bearing, Needle	
4D	7024736	3	Spacer, Thrust	
4E	7024726	3	Shaft, Planet	
4F	7024728	3	Gear, Planet	
4G	7001913	6	Rollpin	
4H	7024742	1	Thrustwasher	
5	7017027	1	Ring, Retaining	
6	See Note	NSS	Cover Assembly (Note: Not Available for Purchase. See 6A-6G for Available Components)	
6A	7024731	1	Plate, Cover	
6B	7017093	1	Cap, Disengage	
6C	7000216	2	Bolt 1/2in-20NC x 1/2in	
6D	7024739	1	Pin, Dowel	
6E	7017095	1	O-Ring	
6F	7017072	2	Plug, Pipe	
6G	7024738	1	Ring, Retaining	
7	7024722	1	Coupling	
8	See Note	NSS	Brake, Input (Note: Not Available for Purchase. See 8A-8L for Available Components)	
8A	70000782	1	Piston, Brake	
8B	7024743	1	Plate, Pressure	
8C	See Note	NSS	Ring, Retaining (Note: Use Item 101A or 101B)	
8D	See Note	NSS	O-Ring (Note: Use Item 100B or 101A)	
8E	See Note	NSS	Ring, Back-up (Note: Use Item 100B or 101A)	
8F	See Note	NSS	O-Ring (Note: Use Item 100B or 101A)	

SECTION 1 - FRAME

ITEM	PART NUMBER	QTY	DESCRIPTION	REV
8H	See Note	NSS	Ring, Back-up (Note: Use Item 100B or 101A)	
8J	See Note	NSS	Rotor, Brake (Note: Use Item 101A)	
8K	See Note	NSS	Stator, Brake (Note: Use Item 101A)	
8L	See Note	NSS	Spring, Brake (Note: Use Item 101B)	
9	7024721	1	Shaft, Input	
11	7024723	1	Gear, Sun	
12	See Note	NSS	Plug (Note: Not Available - Purchase Locally)	
15	See Note	NSS	Plate, ID (Not Shown) (Note: Not Available for Purchase)	
16	7000281	4	Screw, Drive	
17	7024134	1	O-Ring	
18	See Note	NSS	O-Ring (Note: Use Item 100A)	
19	7017022	3	Screw, Countersunk 3/8in-16NC	
20	7024737	1	Ring, Retaining	
21	See Note	NSS	Plug (Note: Not Available - Purchase Locally)	
100		Ref	Seal Kit Options:	
100A	7024744	1	Hub Seal Kit (Includes Items 1B, 1F, 1G, 17, 18 & 19)	
100B	7024765	1	Brake Seal Kit (Includes Items 1G, 8C, 8D, 8E, 8F & 8H)	
101		Ref	Repair Kit Options:	
101A	7024764	1	Brake Lining Kit (Includes Items 1G, 8C, 8D, 8F, 8E, 8H, 8J & 8K)	
101B	7024766	1	Brake Spring Kit (Includes Items 1G, 8C & 8L)	

FIGURE 1-6. DRIVE MOTOR ASSEMBLY (USA BUILT MACHINES) (SN 0300087000 through 0300098764)

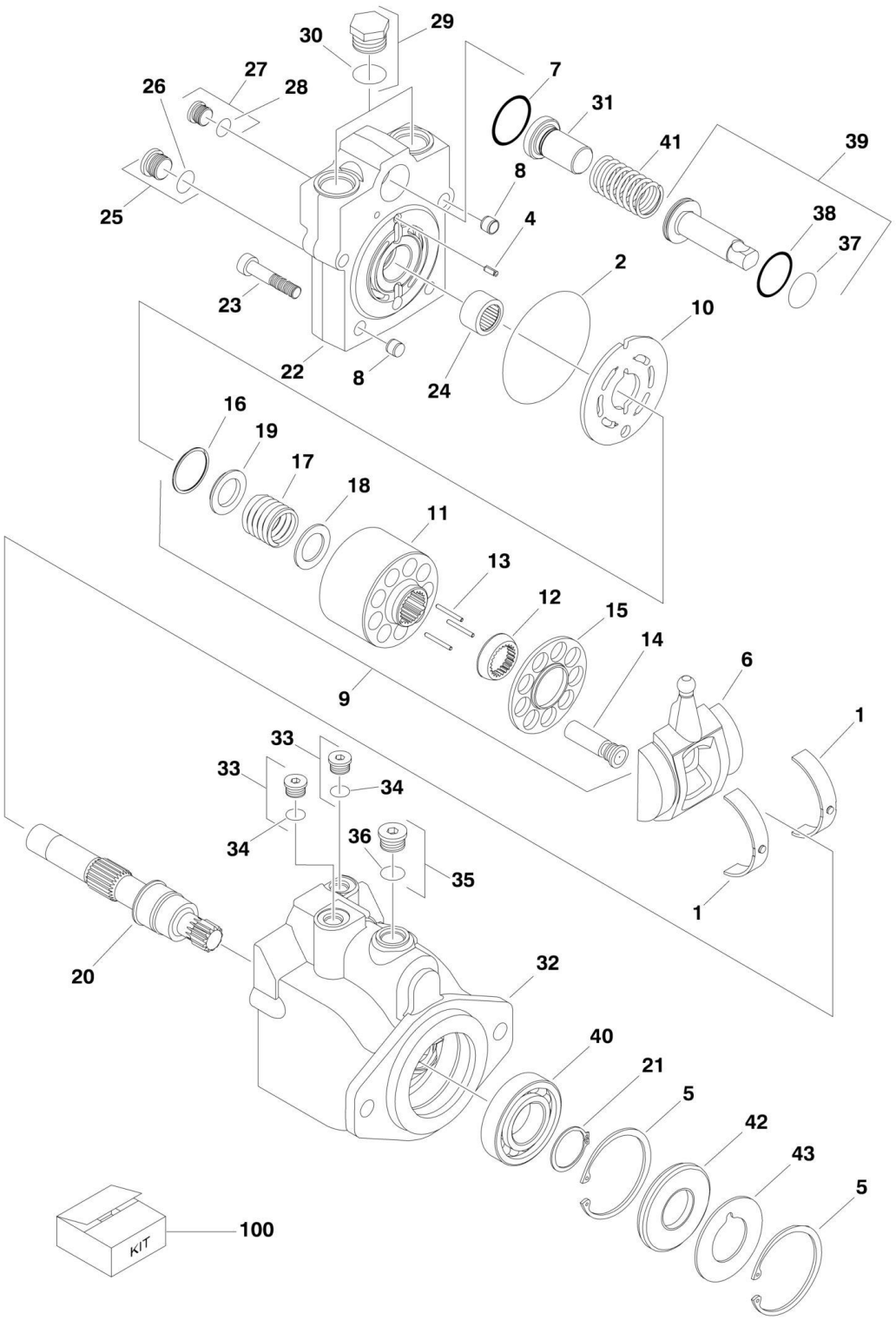

FIGURE 1-6. DRIVE MOTOR ASSEMBLY (USA BUILT MACHINES) (SN 0300087000 through 0300098764)

ITEM	PART NUMBER	QTY	DESCRIPTION	REV
		Ref	**DRIVE MOTOR ASSEMBLY**	
	3160299	Ref	**Drive Motor Assembly 2WD/2WS**	E
	3160300	Ref	**Drive Motor Assembly 2WD/4WS, 4WD/2WS & 4WD/4WS**	E
1	7022302	2	Bearing, Journal	
2	See Note	NSS	O-Ring (Note: Use Item 100)	
3	See Note	NSS	O-Ring (Note: Use Item 100)	
4	7007446	1	Pin	
5	7007438	2	Ring, Retaining	
6	7024861	1	Swash Plate	
7	See Note	NSS	O-Ring (Note: Use Item 100)	
8	7007435	2	Pin	
9	7022320	1	Cylinder Block Kit (Includes Items 11-19)	
10	7024862	1	Plate, Valve	
11	7024863	1	Block, Cylinder	
12	7024864	1	Guide, Slipper Retainer	
13	7021275	3	Pin, Slipper Hold Down	
14	7024865	9	Piston Assembly	
15	7024866	1	Retainer, Slipper	
16	7022311	1	Ring, Retaining	
17	7024867	1	Spring	
18	7024868	1	Washer	
19	7022314	1	Retainer, Spring	
20	7023910	1	Shaft	
21	7007439	1	Ring, Retaining	
22	7024869	1	Cap, End - Axial	
23	7022368	4	Screw	
24	7021249	1	Bearing, Needle	
25	7022321	1	Plug (Includes Item 26)	
26	See Note	NSS	O-Ring (Note: Use Item 25 or 100)	
27	7022318	1	Plug (Includes Item 28)	
28	See Note	NSS	O-Ring (Note: Use Item 27 or 100)	
29	7027419	2	Plug (Includes Item 30)	
30	See Note	NSS	O-Ring (Note: Use Item 29 or 100)	
31		Ref	Seat, Spring Options:	
31	7024853	1	Seat, Spring 2WD/2WS	
31	7022372	1	Seat, Spring 2WD/4WS, 4WD/2WS & 4WD/4WS	
32	7022370	1	Housing	
33	7022318	2	Plug (Includes Item 34)	
34	See Note	NSS	O-Ring (Note: Use Item 33 or 100)	
35	7022321	1	Plug (Includes Item 36)	
36	See Note	NSS	O-Ring (Note: Use Item 35 or 100)	
37	See Note	NSS	O-Ring (Note: Use Item 100)	
38	See Note	NSS	Ring, Seal (Note: Use Item 100)	
39	7024871	1	Piston, Servo	
40	7007437	1	Bearing	
41	7022326	1	Spring	
42	See Note	NSS	Seal, Lip (Note: Use Item 100)	
43	7022371	1	Washer, Support	
100	7022328	1	Seal Kit (Includes Items 2, 3, 7, 26, 28, 30, 34, 36, 37, 38 & 42)	

FIGURE 1-7. DRIVE MOTOR ASSEMBLY (USA BUILT MACHINES AND CHINA BUILT MACHINES) (SN 0300098765 through 0300171769, SN B300000100 through B300000969)

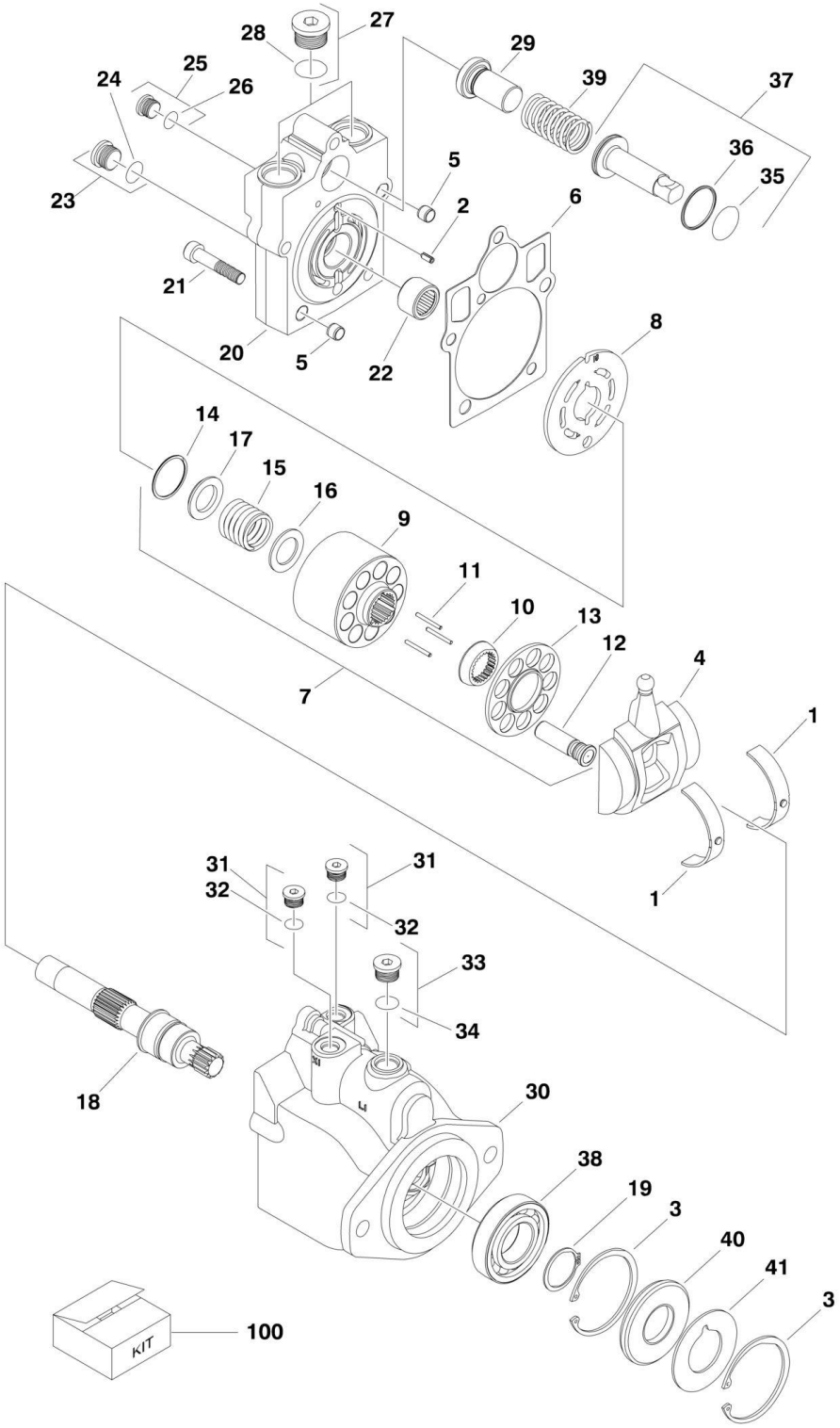

FIGURE 1-7. DRIVE MOTOR ASSEMBLY (USA BUILT MACHINES AND CHINA BUILT MACHINES) (SN 0300098765 through 0300171769, SN B300000100 through B300000969)

ITEM	PART NUMBER	QTY	DESCRIPTION	REV
		Ref	**DRIVE MOTOR ASSEMBLY**	
	3160349	Ref	**Drive Motor Assembly 2WD**	B
	3160350	Ref	**Drive Motor Assembly 4WD**	B
1	7022302	2	Bearing, Journal	
2	7007446	1	Pin	
3	7007438	2	Ring, Retaining	
4	70000794	1	Swash Plate	
5	See Note	NSS	Pin (Note: Not Available for Purchase)	
6	See Note	NSS	Gasket (Note: Use Item 100)	
7	7027740	1	Cylinder Block Kit (Includes Items 9-17)	
8	7024862	1	Plate, Valve	
9	See Note	NSS	Block, Cylinder (Note: Use Item 7)	
10	See Note	NSS	Guide, Slipper Retainer (Note: Use Item 7)	
11	7021275	3	Pin, Slipper Hold Down	
12	7024865	9	Piston Assembly	
13	See Note	NSS	Retainer, Slipper (Note: Use Item 7)	
14	7022311	1	Ring, Retaining	
15	7024867	1	Spring	
16	7022313	1	Washer	
17	7022314	1	Retainer, Spring	
18	7023910	1	Shaft	
19	7007439	1	Ring, Retaining	
20	70000795	1	Cap, End - Axial	
21	7022368	5	Screw	
22	7021249	1	Bearing, Needle	
23	2220886	1	Plug (Includes Item 24)	
24	See Note	NSS	O-Ring (Note: Use Item 23 or 100)	
25	2220883	1	Plug (Includes Item 26)	
26	See Note	NSS	O-Ring (Note: Use Item 25 or 100)	
27	7027419	2	Plug (Includes Item 28)	
28	See Note	NSS	O-Ring (Note: Use Item 27 or 100)	
29		Ref	Seat, Spring Options:	
29	7024853	1	Seat, Spring 2WD/2WS	
29	7022372	1	Seat, Spring 2WD/4WS, 4WD/2WS & 4WD/4WS	
30	See Note	NSS	Housing (Note: Not Available - Purchase Complete Drive Motor Assembly)	
31	2220883	2	Plug (Items Item 32)	
32	See Note	NSS	O-Ring (Note: Use Item 31 or 100)	
33	2220886	1	Plug (Items Item 34)	
34	See Note	NSS	O-Ring (Note: Use Item 33 or 100)	
35	See Note	NSS	O-Ring (Note: Use Item 100)	
36	See Note	NSS	Ring, Seal (Note: Use Item 100)	
37	7024871	1	Piston, Servo	
38	7007437	1	Bearing	
39	7022326	1	Spring	
40	See Note	NSS	Seal, Lip (Note: Use Item 100)	
41	7022371	1	Washer, Support	
100	7022328	1	Seal Kit (Includes Items 6, 24, 26, 28, 32, 34, 35, 36 & 40)	

FIGURE 1-8. DRIVE VALVES AND SHIELDS INSTALLATION (FRAME MOUNTED)

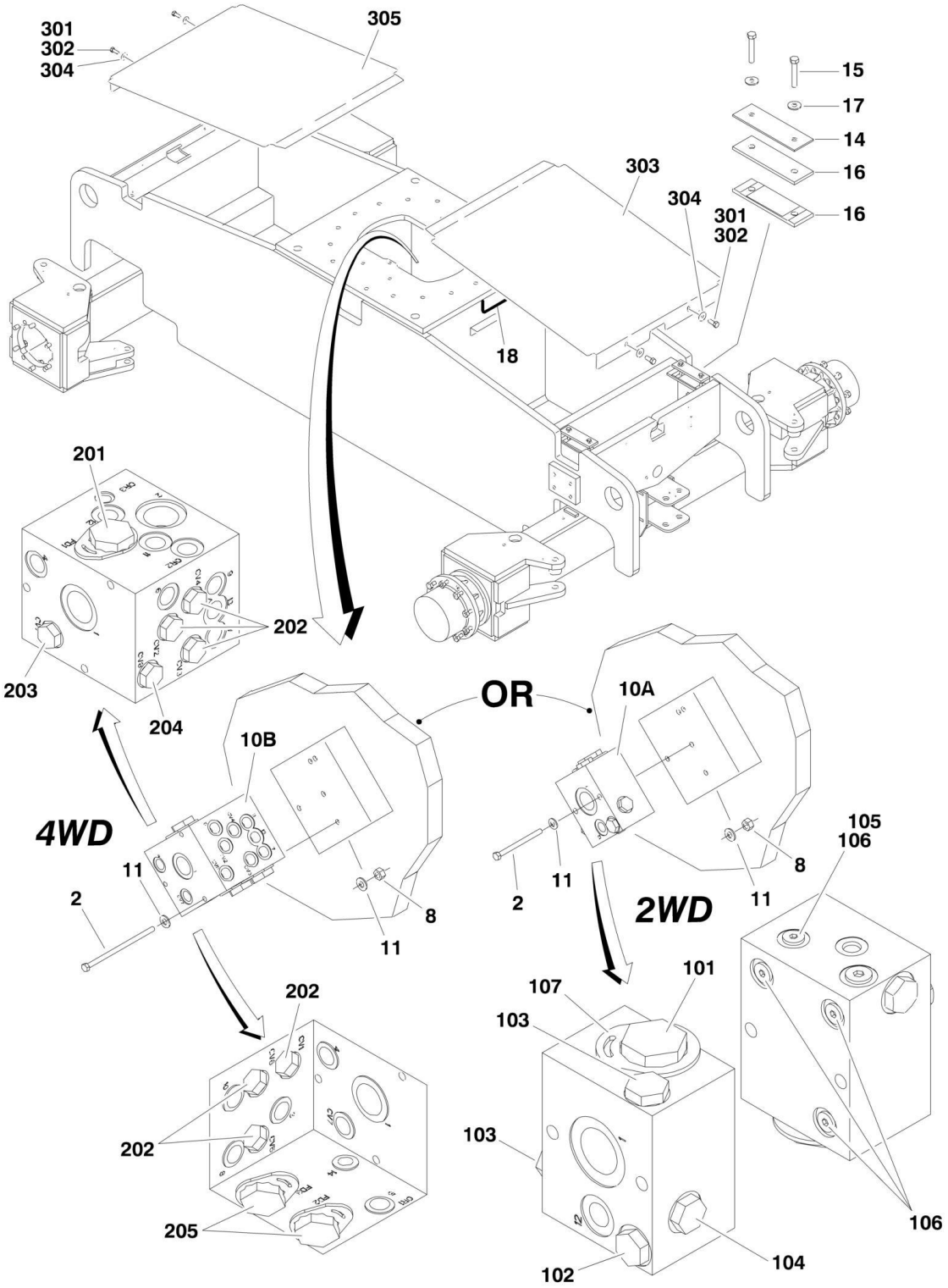

FIGURE 1-8. DRIVE VALVES AND SHIELDS INSTALLATION (FRAME MOUNTED)

ITEM	PART NUMBER	QTY	DESCRIPTION	REV
		Ref	**DRIVE VALVES INSTALLATION OPTIONS:**	
	0273049	Ref	**Drive Valves Installation 2WD/2WS**	I
	0273367	Ref	**Drive Valves Installation 2WD/4WS**	A
	0273048	Ref	**Drive Valves Installation 4WD/2WS**	K
	0273366	Ref	**Drive Valves Installation 4WD/4WS**	I
2		Ref	Bolt 5/16in-18NC Options:	
2	0641532	2	4in Length (2WD)	
2	0641552	3	6-1/2in Length (4WD)	
8	3311505	AR	Locknut 5/16in-18NC	
10		Ref	Flow Divider Valve Assembly Options:	
10A		Ref	2WD (See Items 101-107 for Breakdown) Options:	
10A	4641409	NLA	USA Built Machines (Use p/n 1001100120) **(SN 0300087000 through 0300140853)**	
10A	1001100120	1	USA Built Machines **(SN 0300140854 through 0300171769)**	
10B	4641410	1	4WD (See Items 201-207 for Breakdown)	
10B	4641410	NLA	USA Built Machines (Use p/n 1001098503) **(SN 0300087000 through 0300142840)**	
10B	1001098503	1	USA Built Machines **(SN 0300142841 through 0300171769)**	
10B	1001098503	1	China Built Machines	
11	4711500	AR	Flatwasher 5/16in Thin	
14		Ref	Bar, Clamping	
14	Not Required	0	Bar, Clamping 2WD/2WS	
14	0363012	2	Bar, Clamping 2WD/2WS, 4WD/2WS & 4WD/4WS	
15	0641618	4	Bolt 3/8in-16NC x 2-1/4in	
16	3340911	4	Rubber, Clamp	
17	4751600	4	Flatwasher 3/8in Regular	
18	4060807	13 in /33cm	Flex-Trim (USA Built Machines) (Use p/n 4060808) **(SN 0300129689 through 0300171769)**	
18	4060807	13 in /33cm	Flex-Trim (China Built Machines) (Use p/n 4060808) **(Including B300000100)**	
		Ref	**FLOW DIVIDER ASSEMBLIES (2WD)**	
	4641409	Ref	**USA Built Machines (SN 0300087000 through 0300140853)**	B
	1001100120	Ref	**USA Built Machines (SN 0300140854 through 0300171769)**	A
101	7023933	1	Valve, Cartridge (Flow Divider)	
101	7021625	1	Seal Kit - Flow Divider Cartridge	
102	7024892	1	Valve, Cartridge (Check)	
102	7023936	1	Seal Kit - Check Cartridge	
103	7022397	2	Valve, Cartridge (Check)	
103	7022399	2	Seal Kit - Check Cartridge	
104	7023935	1	Valve, Cartridge (Check)	
104	7023936	1	Seal Kit - Check Cartridge	
105	70002063	1	Orifice **(SN 0300140854 through 0300171769)**	
106	7017406	4	Plug **(SN 0300140854 through 0300171769)**	
107	70000781	1	Lock Down Kit **(SN 0300140854 through 0300171769)**	
		Ref	**FLOW DIVIDER ASSEMBLIES (4WD)**	
	4641410	Ref	**USA Built Machines (SN 0300087000 through 0300142840)**	B
	1001098503	Ref	**USA Built Machines (SN 0300142841 through 0300171769)**	A
	1001098503	Ref	**All China Built Machines**	A
201	7023933	1	Valve, Cartridge (Flow Divider)	
201	7021625	1	Seal Kit - Flow Divider Cartridge	

SECTION 1 - FRAME

ITEM	PART NUMBER	QTY	DESCRIPTION	REV
202	7022397	6	Valve, Cartridge (Check) (Used with p/n 4641410)	
202	70003408	6	Valve, Cartridge (Check) (Used with p/n 1001098503)	
202	7022399	6	Seal Kit - Check Cartridge	
203	7023935	1	Valve, Cartridge (Check)	
203	7023936	1	Seal Kit - Check Cartridge	
204	7024892	1	Valve, Cartridge (Check)	
204	7023936	1	Seal Kit - Check Cartridge	
205	7023917	2	Valve, Cartridge (Flow Divider)	
205	7021625	2	Seal Kit - Flow Divider Cartridge	
206	70002063	1	Plug, Orifice	
207	70002064	2	Plug, Orifice	
		Ref	**FRAME SHIELDS INSTALLATION**	
	0273067	Ref	**2WS**	A
	0273362	Ref	**4WS**	A
301	0100011	AR	Compound, Locking	
302	0641607	AR	Bolt, 3/8in - 16NC x 7/8in	
303	4061058	1	Shield, Frame - Front	
304	4751600	AR	Flatwasher, 3/8in Regular	
305		Ref	Shield, Frame - Rear	
305	Not Required	0	2WS	
305	4061058	1	4WS	

FIGURE 1-9. TOW PACKAGE INSTALLATION (OPTIONAL)

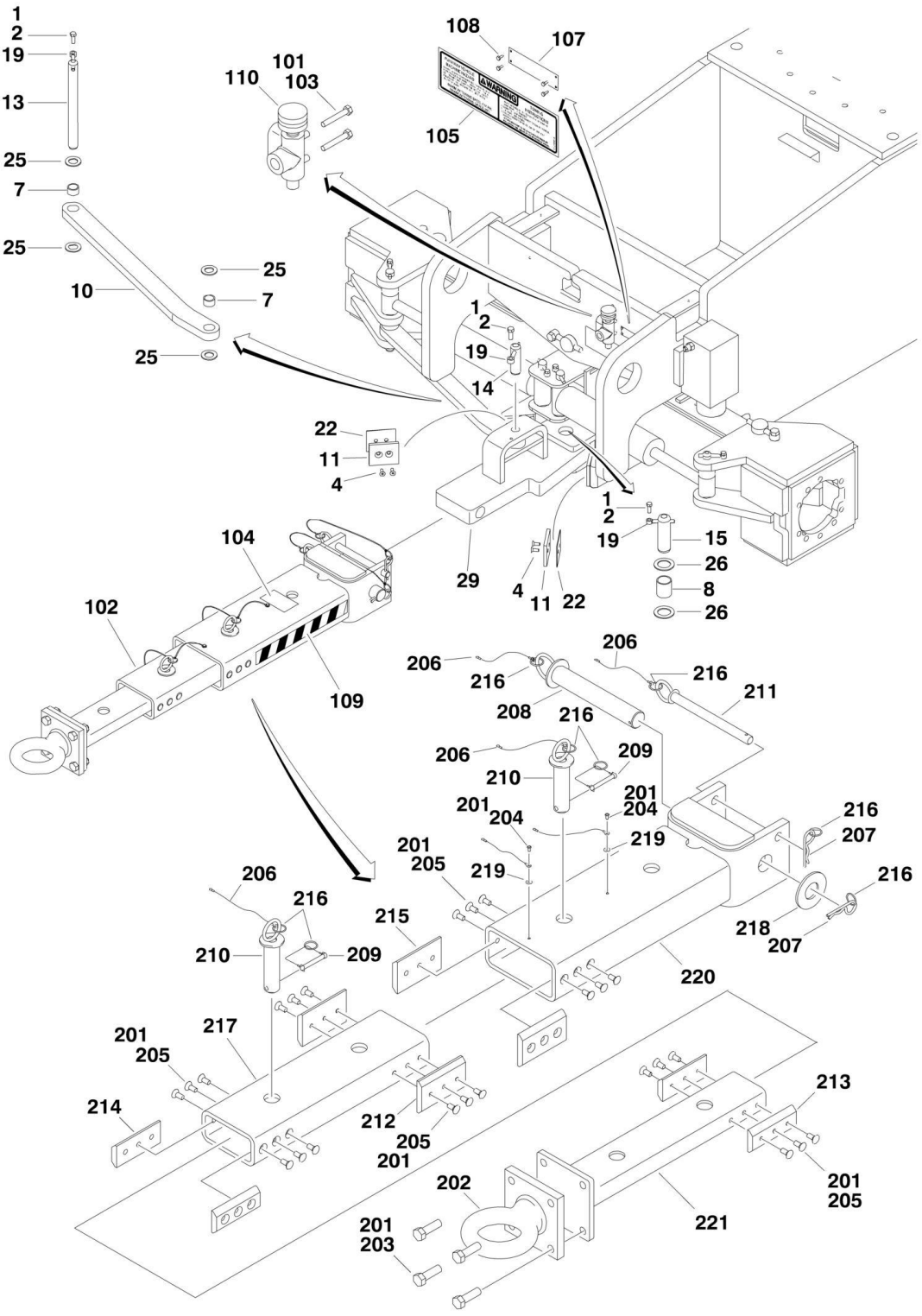

FIGURE 1-9. TOW PACKAGE INSTALLATION (OPTIONAL)

ITEM	PART NUMBER	QTY	DESCRIPTION	REV
		Ref	**TOW PACKAGE INSTALLATION**	
	0273422	Ref	**Tow Package Installation 2WD**	A
	0273394	Ref	**Tow Package Installation 4WD**	D
1	0100011	AR	Compound, Locking	
2	0641608	3	Bolt 3/8in-16NC x 1in	
4	0741607	4	Screw, Countersunk 3/8in-16NC x 7/8in	
7	0962292	2	Bearing	
8	0962348	1	Bearing	
10	3010125	1	Link, Steer	
11	3340966	2	Pad, Stop	
13	3422567	1	Pin	
14	3422813	1	Pin	
15	3422848	1	Pin	
19	3841143	3	Keeper, Pin	
22	4071059	2	Shim	
25	4740111	3	Thrustwasher	
26	4740155	2	Thrustwasher	
29	4846935	1	Bar, Pivot	
		Ref	**TOW BAR INSTALLATION**	
	0273398	Ref	**ANSI Spec**	B
	0273448	Ref	**CSA Spec**	A
	0275619	Ref	**CE Spec**	A
101	0100011	AR	Compound, Locking	
102	0270528	1	Bar Assembly (See Items 201-221 for Breakdown)	
103	0641516	2	Bolt 5/16in-18NC x 2in	
104		Ref	Decal - Crushing Options:	
104	1704578	2	ANSI/CSA Spec	
104	1706960	2	CE Spec	
105		Ref	Decal - Towing Instructions Options:	
105	1705090	1	ANSI Spec	
105	1705820	1	CSA Spec	
105	Not Required	0	CE Spec	
107		Ref	Nameplate - Steer/Tow Select Valve Options:	
107	3250872	1	ANSI Spec	
107	1704272	1	CSA Spec	
107	1706957	1	CE Spec	
108		Ref	Screw, Self-Tapping #6-32NF x 1/2in Options:	
108	3940604	4	ANSI/CSA Spec	
108	Not Required	0	CE Spec	
109	4420051	2 ft/.61m	Tape, Safety	
110	4640261	1	Valve, Select	
	0270528	Ref	**TOW BAR ASSEMBLY**	A
201	0100011	AR	Compound, Locking	
202	0362910	1	Pintle, Draw Eye	
203	0642010	4	Bolt 5/8in-11NC x 1-1/4in	
204	0721004	2	Screw, Hex Machine	
205	0741607	24	Screw, Countersunk 3/8in-16NC x 7/8in	
206	1060584	6	Cable, Lanyard	
207	3420372	2	Pin, Cotter	
208	3420447	1	Pin, Towing	

SECTION 1 - FRAME

ITEM	PART NUMBER	QTY	DESCRIPTION	REV
209	3421565	2	Pin, Snap	
210	3422841	2	Pin	
211	3422847	1	Pin	
212	3572009	2	Plate, Slide Stop	
213	3572010	2	Plate, Slide Stop	
214	3572011	2	Plate, Slide Stop	
215	3572012	2	Plate, Slide Stop	
216	3760170	8	Ring, Split	
217	4568133	1	Tube, Tow Bar	
218	4740036	1	Flatwasher	
219	4751000	2	Flatwasher #10 Regular	
220	4846295	1	Tow Bar Attach Weldment	
221	4846296	1	Pintle Attach Weldment	

SECTION 2 - TURNTABLE

FIGURE 2-1. CONTROL VALVES INSTALLATIONS

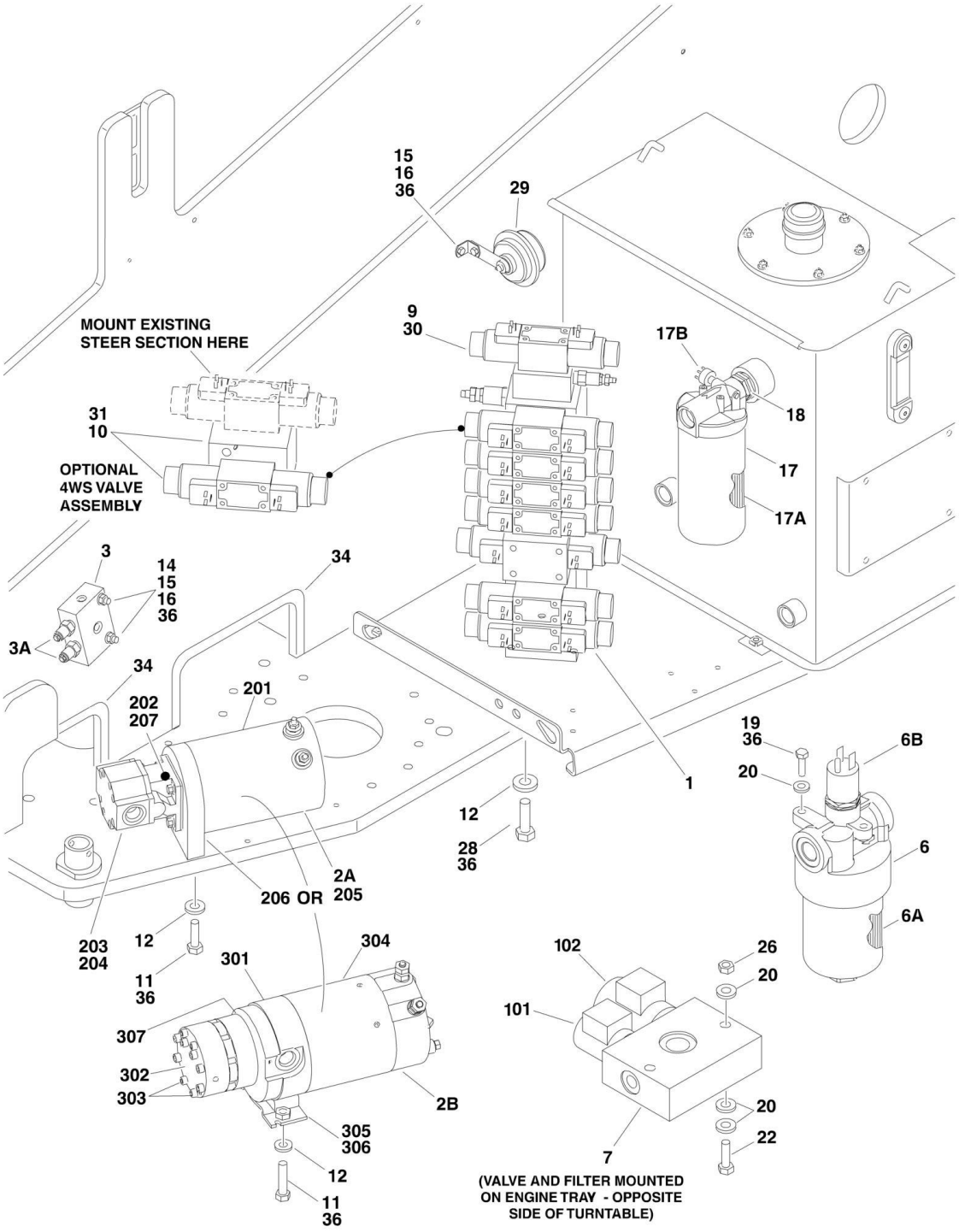

FIGURE 2-1. CONTROL VALVES INSTALLATIONS

ITEM	PART NUMBER	QTY	DESCRIPTION	REV
		Ref	**VALVES INSTALLATIONS**	
		Ref	**USA Built Machines (SN 0300087000 through 0300166418)**	
		Ref	**China Built Machines (SN B300000100 through B300000699)**	
	0274316	Ref	**Valves Installations 600S (2WS)**	B
	0274317	Ref	**Valves Installations 600S (4WS)**	B
	0274318	Ref	**Valves Installations 600SJ (2WS) & 660SJ (2WS)**	B
	0274319	Ref	**Valves Installations 600SJ (4WS) & 660SJ (4WS)**	B
		Ref	**USA Built Machines (SN 0300166419 through 0300171769)**	
		Ref	**China Built Machines (SN B300000700 through B300000969)**	
	1001145279	Ref	**Valves Installations 600S (2WS)**	A
	1001145280	Ref	**Valves Installations 600S (4WS)**	A
	1001145281	Ref	**Valves Installations 600SJ (2WS) & 660SJ (2WS)**	A
	1001145282	Ref	**Valves Installations 600SJ (4WS) & 660SJ (4WS)**	A
	1001143365	Ref	**AUXILIARY PUMP INSTALLATION**	A
1		Ref	Main Control Valve Assembly Options (See MAIN CONTROL VALVE ASSEMBLY for Breakdown):	
1	4641096	1	USA Built Machines **(SN 0300087000 through 0300092879)**	
1	4641451	1	USA Built Machines **(SN 0300092880 through 0300101768)**	
1	1001091303	1	USA Built Machines **(SN 0300101769 through 0300171769)**	
1	1001091303	1	China Built Machines **(SN B300000100 through B300000969)**	
2		Ref	Auxiliary Pump Assembly Options	
2A	3600365	1	USA Built Machines (See Items 201-207 for Breakdown) **(SN 0300087000 through 0300166418)**	
2A	3600365	1	China Built Machines (See Items 201-207 for Breakdown) **(SN B300000100 through B300000699)**	
2B	1001137458	1	USA Built Machines (See Items 301-307 for Breakdown) **(SN 0300166419 through 0300171769)**	
2B	1001137458	1	China Built Machines (See Items 301-307 for Breakdown) **(SN B300000700 through B300000969)**	
3	4640908	1	Counterbalance Valve Assembly (USA Built Machines) **(SN 0300087000 through 0300137441)**	
3A	7011328	2	Cartridge, Counterbalance	
3A	2900770	2	Seal, Kit - 7011328 Cartridge	
6	2120209	1	Hydraulic Pressure Filter Assembly	
6A	2120210	1	Element, Filter	
6B	7020020	1	Indicator, Clogged Filter	
6C	70000934	1	O-Ring, Filter Bowl (Not Shown)	
7		Ref	Valve Assembly (2 Speed/Brake) (See Items 101-103 for Breakdown)	
7	4641108	NLA	USA Built Machines (Use p/n 100109939) **(SN 0300087000 through 0300139624)**	
7	1001099391	1	USA Built Machines **(SN 0300139625 through 0300171769)**	
7	1001099391	1	China Built Machines **(SN B300000100 through B300000969)**	
9		Ref	Valve Kit (Articulating Jib) Options:	
9	Not Required	0	Valve Kit 600S	
9	4640921	1	Valve Kit 600SJ & 660SJ (See ACCESSORY VALVE ASSEMBLY for Breakdown)	
10		Ref	4WS Valve Kit Options:	
10	Not Required	0	2WS Machines	
10	4640922	1	4WS Machines (See ACCESSORY VALVE ASSEMBLY for	

ITEM	PART NUMBER	QTY	DESCRIPTION	REV
			Breakdown)	
11	0641613	2	Bolt 3/8in-16NC x 1-5/8in	
12	4711600	5	Flatwasher 3/8in Thin	
14	4891800	AR	Flatwasher 1/2in Hardened (USA Built Machines) **(SN 0300087000 through 0300137441)**	
15	4711500	AR	Flatwasher 5/16in Thin	
16	3311501	AR	Nut 5/16in-18NC	
17	2120164	1	Return Filter Assembly	
17A	2120149	1	Element, Filter	
17B	7020021	1	Switch, Clog Indicator	
18	2220893	1	Fitting, Adapter (USA Built Machines) **(SN 0300087000 through 0300166419)**	
18	2220893	1	Fitting, Adapter (China Built Machines) **(SN B300000100 through B300000700)**	
19	0651406	3	Bolt 1/4in-28NF x 3/4in	
20	4711400	17	Flatwasher 1/4in Thin	
22	0641416	2	Bolt 1/4in-20NC x 2in	
26	3311405	2	Locknut 1/4in-20NC	
28	0641608	3	Bolt 3/8in-16NC x 1in	
29	0140001	1	Horn	
30		Ref	Harness Assembly (Jib Control) Options (Not Shown - See ELECTRICAL SECTION for Breakdown):	
30	Not Required	0	Harness Assembly 600S	
30	4921927	1	Harness Assembly 600SJ & 660SJ	
31		Ref	Harness Assembly (4WS Control) Options: (Not Shown - See ELECTRICAL SECTION for Breakdown):	
31	Not Required	0	2WS Machines	
31	4921928	1	4WS Machines	
34	4060918	40 in/10m	Flex-Trim	
36	0100011	AR	Compound, Locking	
		Ref	**VALVE ASSEMBLY (DUAL SELECT BRAKE/2 SPEED)**	
		Ref	**Note: Original Equipment Valve may have been replaced with Service Replacement Valve. Identify p/n stamped on valve before ordering parts.**	
	4641108	Ref	**USA Built Machines (Original Equipment) (SN 0300087000 through 0300139624)**	C
	1001099391	Ref	**USA Built Machines (Service Replacement) (SN 0300139625 through 0300171769)**	A
	1001099391	Ref	**China Built Machines (SN B300000100 through B300000969)**	A
101	7012941	1	Cartridge without Coil	
101	7010543	1	Seal Kit - 7012941 Cartridge	
101	7012944	1	Coil	
102	7012995	1	Cartridge without Coil	
102	7012518	1	Seal Kit - 7012995 Cartridge	
102	7012943	1	Coil	
103	70002209	1	Plug, Orifice (Use with Valve Assembly - 1001099391) (Not Shown - Access to orifice is through port T)	
	3600365	Ref	**AUXILIARY PUMP INSTALLATION (USA Built Machines) (SN 0300087000 through 0300166418)**	B
	3600365	Ref	**AUXILIARY PUMP INSTALLATION (China Built Machines) (SN B300000100 through B300000699)**	B
201	7004248	1	Replacement Motor without Endhead	
201	7004290	1	Replacement Motor with Endhead (was p/n 7011067)	
201	7011065	1	Brush Kit	

ITEM	PART NUMBER	QTY	DESCRIPTION	REV
202	7011063	1	Coupling	
203	7011064	1	Replacement Pump	
203	7011066	1	Seal Kit	
204	7011043	4	Bolt (Pump to Endhead)	
205	See Note	NSS	Bolt (Motor to Endhead) (Note: Not Available for Purchase)	
206	7011062	1	Endhead	
207	7011044	1	Gasket (Pump p/n 3600365/3600379)	
	1001137458	Ref	**AUXILIARY PUMP ASSEMBLY (USA Built Machines) (SN 0300166419 through 0300171769)**	A
	1001137458	Ref	**AUXILIARY PUMP ASSEMBLY (China Built Machines) (SN B300000700 through B300000969)**	A
301	70003995	1	Base	
302	70003996	1	Pump	
303	70003997	4	Screw 1/4in-20NC x 3in	
304	70003998	1	Motor	
305	70003999	1	Bracket	
306	70004000	2	Screw 3/8in-16NC x 1in	
	7026330	1	Seal, Shaft	A

FIGURE 2-2. MAIN CONTROL VALVE ASSEMBLY

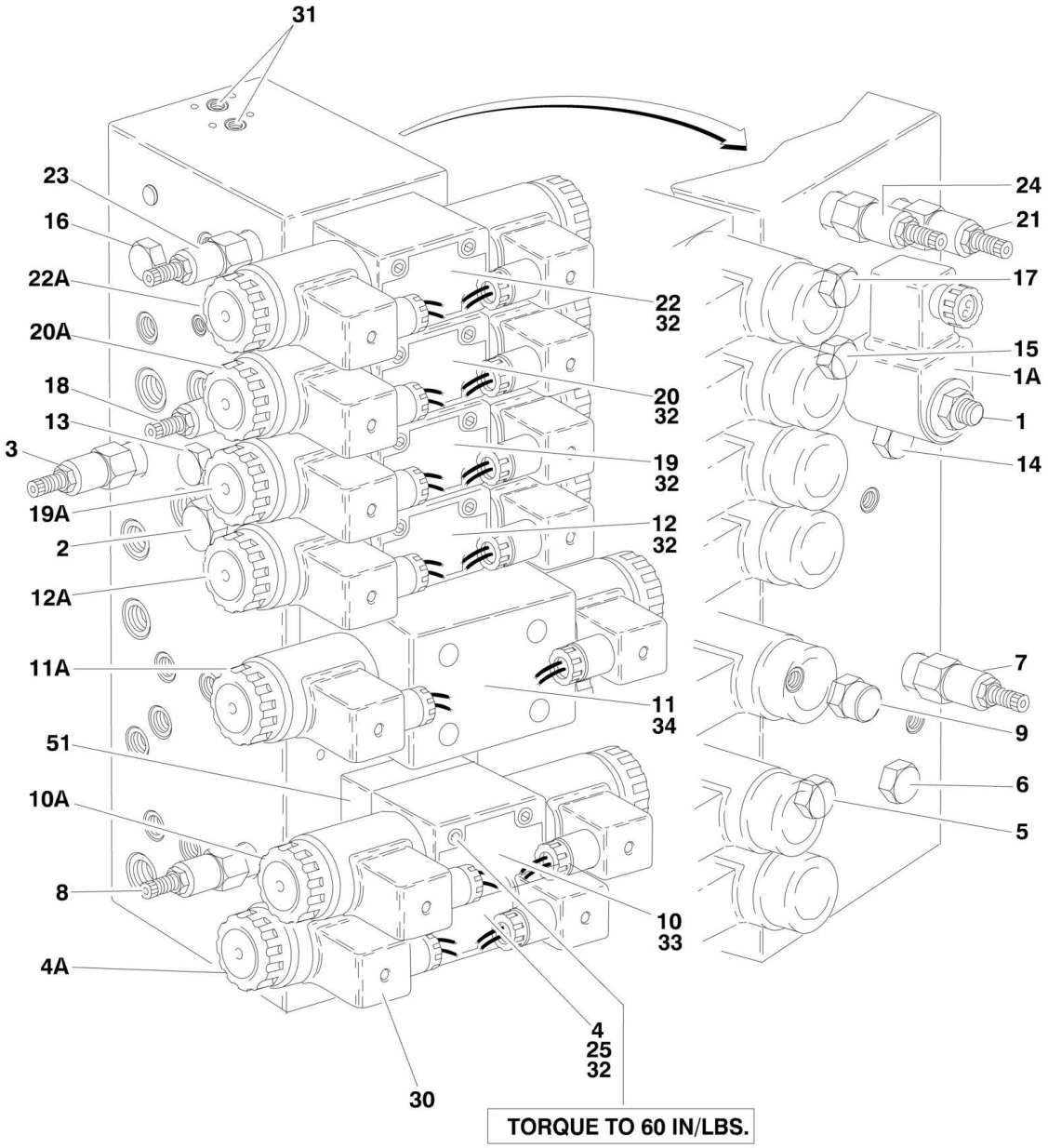

FIGURE 2-2. MAIN CONTROL VALVE ASSEMBLY

ITEM	PART NUMBER	QTY	DESCRIPTION	REV
		Ref	**MAIN CONTROL VALVE ASSEMBLIES**	
	4641096	Ref	**USA Built Machines (SN 0300087000 through 0300092879)**	C
	4641451	Ref	**USA Built Machines (SN 0300092880 through 0300101768)**	A
	1001091303	Ref	**USA Built Machines (SN 0300101769 through 0300171769)**	A
	1001091303	Ref	**China Built Machines (SN B300000100 through B300000969)**	A
1	7017410	1	Cartridge, Without Coil	
1	7012967	1	Seal Kit - 7017410 Cartridge	
1A	7012944	1	Coil	
2	7017464	1	Cartridge, Pressure Sensing	
2	7012518	1	Seal Kit	
3	7012912	1	Cartridge (Main Relief)	
3	7012998	1	Seal Kit	
4	70001976	1	Control Valve Assembly (Platform Level) (was p/n 7012770)	
4	7012773	1	Seal Kit	
4A	7018991	2	Coil	
4A	7018912	2	Nut, Coil	
5	7012914	1	Cartridge, Check Valve	
5	7012918	1	Seal Kit - 7012914 Cartridge	
6	7012914	1	Cartridge, Check Valve	
6	7012918	1	Seal Kit - 7012914 Cartridge	
7	7012912	1	Cartridge, Relief Valve (Platform Level Backward)	
7	7012998	1	Seal Kit - 7012912 Cartridge	
8	7012912	1	Cartridge, Relief Valve (Platform Level Forward)	
8	7012998	1	Seal Kit - 7012912 Cartridge	
9	7012989	1	Cartridge, Flow Control	
9	7012953	1	Seal Kit - 7012989 Cartridge	
10	70001976	1	Control Valve Assembly (Platform Rotate) (was p/n 7012770)	
10	7012773	1	Seal Kit	
10	7018986	4	Capscrew #10 × 3-1/2	
10A	7018991	2	Coil	
10A	7018912	2	Nut, Coil	
11		Ref	Control Valve Assembly Options (Upper Tele):	
11	70000579	1	4641096 Valve (was p/n 7012766)	
11	70000579	1	4641451 & 1001091303 Valves	
		Ref	**Note: Refer to Vendor p/n on Valve Nameplate before ordering Parts. p/n 7012766 is RR00567495 or R900567495. p/n 70000579 is R900930080.**	
11		Ref	Seal Kit Options:	
11	7012769	1	7012766 Valve	
11	70000583	1	70000579 Valve	
11	7018951	4	Capscrew 1/4 × 1-1/2	
11A		Ref	Coil Options:	
11A	7012772	1	7012766 Valve (was p/n 7012768)	
11A	70000582	1	70000579 Valve	
11A		Ref	Nut, Coil Options:	
11A	7018912	1	7012766 Valve	
11A	70000580	1	70000579 Valve	
12	7012775	1	Control Valve Assembly (Flow Control)	
12	7012773	1	Seal Kit	
12	7018942	4	Capscrew #10 × 2	

SECTION 2 - TURNTABLE

ITEM	PART NUMBER	QTY	DESCRIPTION	REV
12A	7012772	2	Coil	
12A	7018912	2	Nut, Coil	
12A	7024015	2	Pipe, Pole	
13	7010542	1	Cartridge, Shuttle	
13	7010543	1	Seal Kit - 7010542 Cartridge	
14	7010542	1	Cartridge, Shuttle	
14	7010543	1	Seal Kit - 7010542 Cartridge	
15	7010542	1	Cartridge, Shuttle	
15	7010543	1	Seal Kit - 7010542 Cartridge	
16	7010542	1	Cartridge, Shuttle	
16	7010543	1	Seal Kit - 7010542 Cartridge	
17	7010542	1	Cartridge, Shuttle	
17	7010543	1	Seal Kit - 7010542 Cartridge	
18	7012912	1	Cartridge, Relief Valve (Upper Lift Down)	
18	7012998	1	Seal Kit - 7012912 Cartridge	
19	7012775	1	Control Valve Assembly (Upper Lift)	
19	7012773	1	Seal Kit	
19	7018942	4	Capscrew #10 × 2	
19A	7012772	2	Coil	
19A	7018912	2	Nut, Coil	
19A	7024015	2	Pipe, Pole	
20	7012775	1	Control Valve Assembly (Swing)	
20	7012773	1	Seal Kit	
20	7018942	4	Capscrew #10 × 2	
20A	7012772	2	Coil	
20A	7018912	2	Nut, Coil	
20A	7024015	2	Pipe, Pole	
21	7012912	1	Cartridge, Relief Valve (Swing)	
21	7012998	1	Seal Kit - 7012912 Cartridge	
22	7012774	1	Control Valve Assembly (Steer)	
22	7012773	1	Seal Kit	
22	7018942	4	Capscrew #10 × 2	
22A	7012772	2	Coil	
22A	7018912	2	Nut, Coil	
22A	7024014	2	Pipe, Pole	
23	7012912	1	Cartridge, Relief Valve (Steer Left)	
23	7012998	1	Seal Kit - 7012912 Cartridge	
24	7012912	1	Cartridge, Relief Valve (Steer Right)	
24	7012998	1	Seal Kit - 7012912 Cartridge	
25	7018941	2	Orifice	
30	4460499	15	Connector, Din with Diode (Part of Valve Harness)	
31	2220885	2	Plug	
32	7018942	20	Capscrew 10-24×2	
33	7018986	4	Capscrew 10-24×3-1/2	
34	7018951	4	Capscrew 10-24×1-1/2	
	2901763	Ref	**ROTATE SANDWICH VALVE KIT**	A
51	7021310	1	Block, Valve	

FIGURE 2-3. ACCESSORY VALVE ASSEMBLY

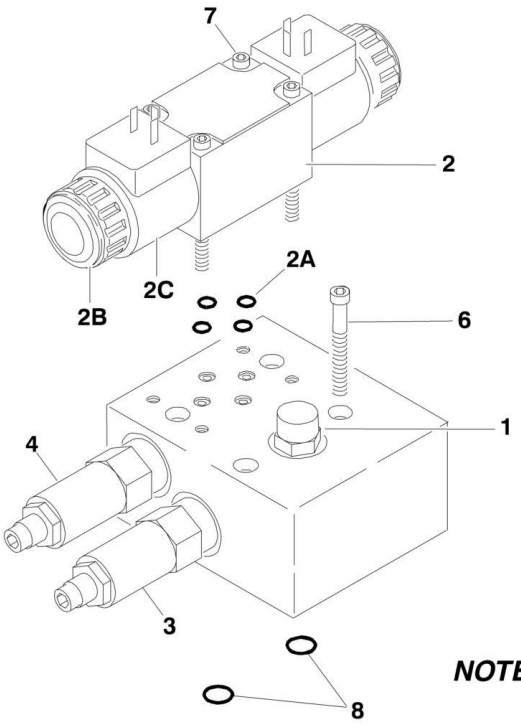

NOTE: TORQUE ITEMS 6, 7,103 & 104 TO 60 IN/LBS.

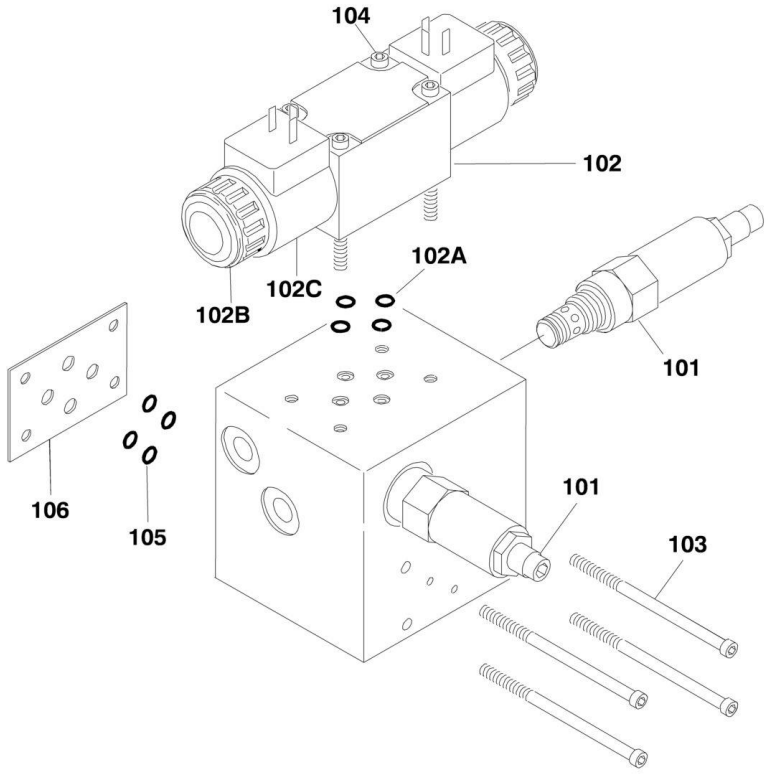

FIGURE 2-3. ACCESSORY VALVE ASSEMBLY

ITEM	PART NUMBER	QTY	DESCRIPTION	REV
		Ref	**ACCESSORY VALVE ASSEMBLIES**	
	4640921	Ref	**ARTICULATING JIB VALVE ASSEMBLY**	D
1	7012965	1	Cartridge, Flow Control	
1	7012953	1	Seal Kit - 7012965 Cartridge	
2	70001976	1	Directional Control Valve Assembly (was p/n 7012770)	
2	7012773	1	Seal Kit	
2A	7018945	4	O-Ring	
2B	7018912	2	Nut	
2C	7012772	2	Coil	
3	7017421	1	Cartridge, Relief	
3	7012998	1	Seal Kit - 7017421 Cartridge	
4	7017422	1	Cartridge, Relief	
4	7012998	1	Seal Kit - 7017422 Cartridge	
5	4460499	2	Connector, DIN with Diode (Not Shown - Part of Valve Harness)	
6	7012777	4	Capscrew, Socket Head 5/16in-18NC x 2-1/4in (Used to Mount Valve Assembly)	
7	7018942	4	Capscrew, Socket Head #10-24NC x 2in	
8	7012776	2	O-Ring (Used to Mount Main Valve)	
	4640922	Ref	**4WS VALVE ASSEMBLY**	B
101	7017420	1	Cartridge, Relief	
101	7012998	1	Seal Kit - 7017420 Cartridge	
102	7012774	1	Directional Control Valve Assembly	
102	7012773	1	Seal Kit	
102A	7018945	4	O-Ring	
102B	7018912	2	Nut	
102C	7012772	2	Coil	
103	7018946	4	Capscrew, Socket Head #10-24NC x 5in (Used to Mount Main Valve)	
104	7018942	4	Capscrew, Socket Head #10-24NC x 2in	
105	7018948	4	O-Ring (Used to Mount Main Valve)	
106	7018947	1	Plate, O-Ring	

FIGURE 2-4. SWING DRIVE, TURNTABLE BEARING AND LOCK INSTALLATIONS

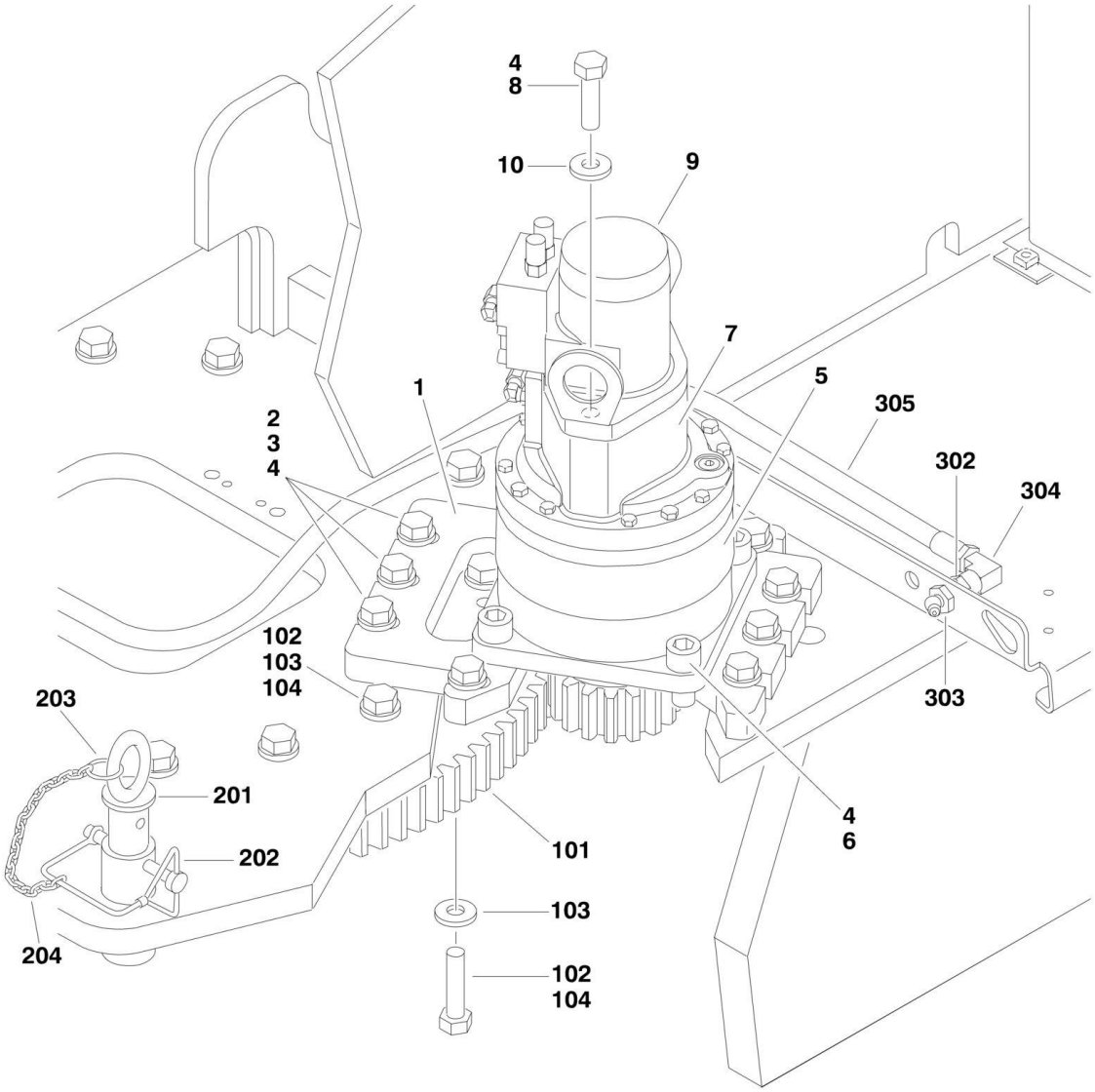

FIGURE 2-4. SWING DRIVE, TURNTABLE BEARING AND LOCK INSTALLATIONS

ITEM	PART NUMBER	QTY	DESCRIPTION	REV
		Ref	**SWING DRIVE INSTALLATION**	
	0270329	Ref	**USA Built Machines (SN 0300087000 through 0300137440)**	D
	1001094828	Ref	**USA Built Machines (SN 0300137441 through 0300171769)**	C
	1001094828	Ref	**China Built Machines (SN B300000100 through B300000969)**	C
1	3537318	1	Plate, Swing Drive Mounting	
2	0642018	10	Bolt 5/8in - 11NC x 2-1/4in	
3	4892000	10	Flatwasher 5/8in Hardened	
4	0100011	AR	Compound, Locking	
5		Ref	Swing Hub Assembly Options:	
5	2780205	1	USA Built Machines (See SWING HUB ASSEMBLY for Breakdown) **(SN 0300087000 through 0300137440)**	
5	See Note	1	USA Built Machines (See SWING MOTOR/BRAKE/HUB ASSEMBLY for Breakdown) **(SN 0300137441 through 0300171769)**	
5	See Note	1	China Built Machines (See SWING MOTOR/BRAKE/HUB ASSEMBLY for Breakdown) **(SN B300000100 through B300000969)**	
6	3932224	4	Capscrew 3/4in-10NC x 1-1/2in	
7		Ref	Brake, Swing Assembly Options:	
7	0920119	1	USA Built Machines **(SN 0300087000 through 0300137440)**	
7	7007933	2	Gasket, Mounting Face	
7	7007990	2	O-Ring, Mounting Face	
7	7018612	1	Repair Kit - 0920119 Brake	
		Ref	**Note: Other than Gasket and O-RIng, Repair Kit is only part available.**	
7	See Note	1	USA Built Machines (See SWING MOTOR/BRAKE/HUB ASSEMBLY for Breakdown) **(SN 0300137441 through 0300171769)**	
7	See Note	1	China Built Machines (See SWING MOTOR/BRAKE/HUB ASSEMBLY for Breakdown) **(SN B300000100 through B300000969)**	
8		Ref	Bolt Options:	
8	0681836	2	USA Built Machines (Bolt 1/2in -13NC x 4-1/2in) **(SN 0300087000 through 0300137440)**	
8	See Note	2	USA Built Machines (See SWING MOTOR/BRAKE/HUB ASSEMBLY for Breakdown) **(SN 0300137441 through 0300171769)**	
8	See Note	2	China Built Machines (See SWING MOTOR/BRAKE/HUB ASSEMBLY for Breakdown) **(SN B300000100 through B300000969)**	
9		Ref	Swing Motor Assembly Options:	
9		Ref	USA Built Machines (Note: Either p/n may be used as replacement) **(SN 0300087000 through 0300137440)**	
9	3160273	NLA	White Roller Stator Motor (Use p/n 1001110169) (See SWING MOTOR ASSEMBLY (WHITE ROLLER STATOR) for Breakdown)	
9	1001110169	1	Parker Motor (See SWING MOTOR ASSEMBLY (Parker) For Breakdown)	
9	See Note	1	USA Built Machines (See SWING MOTOR/BRAKE/HUB ASSEMBLY for Breakdown) **(SN 0300137441 through 0300171769)**	
9	See Note	1	China Built Machines (See SWING MOTOR/BRAKE/HUB ASSEMBLY for Breakdown) **(SN B300000100 through B300000969)**	
10		Ref	Flatwasher Options:	

SECTION 2 - TURNTABLE

ITEM	PART NUMBER	QTY	DESCRIPTION	REV
10	4891800	2	USA Built Machines (1/2in Hardened) **(SN 0300087000 through 0300137440)**	
10	See Note	2	USA Built Machines (See SWING MOTOR/BRAKE/HUB ASSEMBLY for Breakdown) **(SN 0300137441 through 0300171769)**	
10	See Note	2	China Built Machines (See SWING MOTOR/BRAKE/HUB ASSEMBLY for Breakdown) **(SN B300000100 through B300000969)**	
11	1001125492	1	Shim (Not Shown)	
	0254798	Ref	**TURNTABLE BEARING INSTALLATION**	2-B
101	0440207	1	Bearing, Turntable	
102	0682016	36	Bolt 5/8in - 11NC x 2in Grade 8	
103	4892000	36	Flatwasher 5/8in Hardened	
104	0100019	AR	Compound, Locking	
	0239585	Ref	**TURNTABLE LOCK INSTALLATION**	C
201	3421627	1	Pin	
202	3421565	1	Pin, Snap	
203	3760170	2	Ring, Quick Release	
204	1260017	9 in/23cm	Chain	
	0255316	Ref	**REMOTE BEARING LUBE INSTALLATION**	3
302	2180344	1	Fitting, Bulkhead	
303	2160003	1	Fitting, Grease 45	
304	2220063	1	Fitting, 90	
305	2751032	1	Hose, Grease	

FIGURE 2-5. SWING HUB ASSEMBLY (USA BUILT MACHINES) (SN 0300087000 through 0300137441)

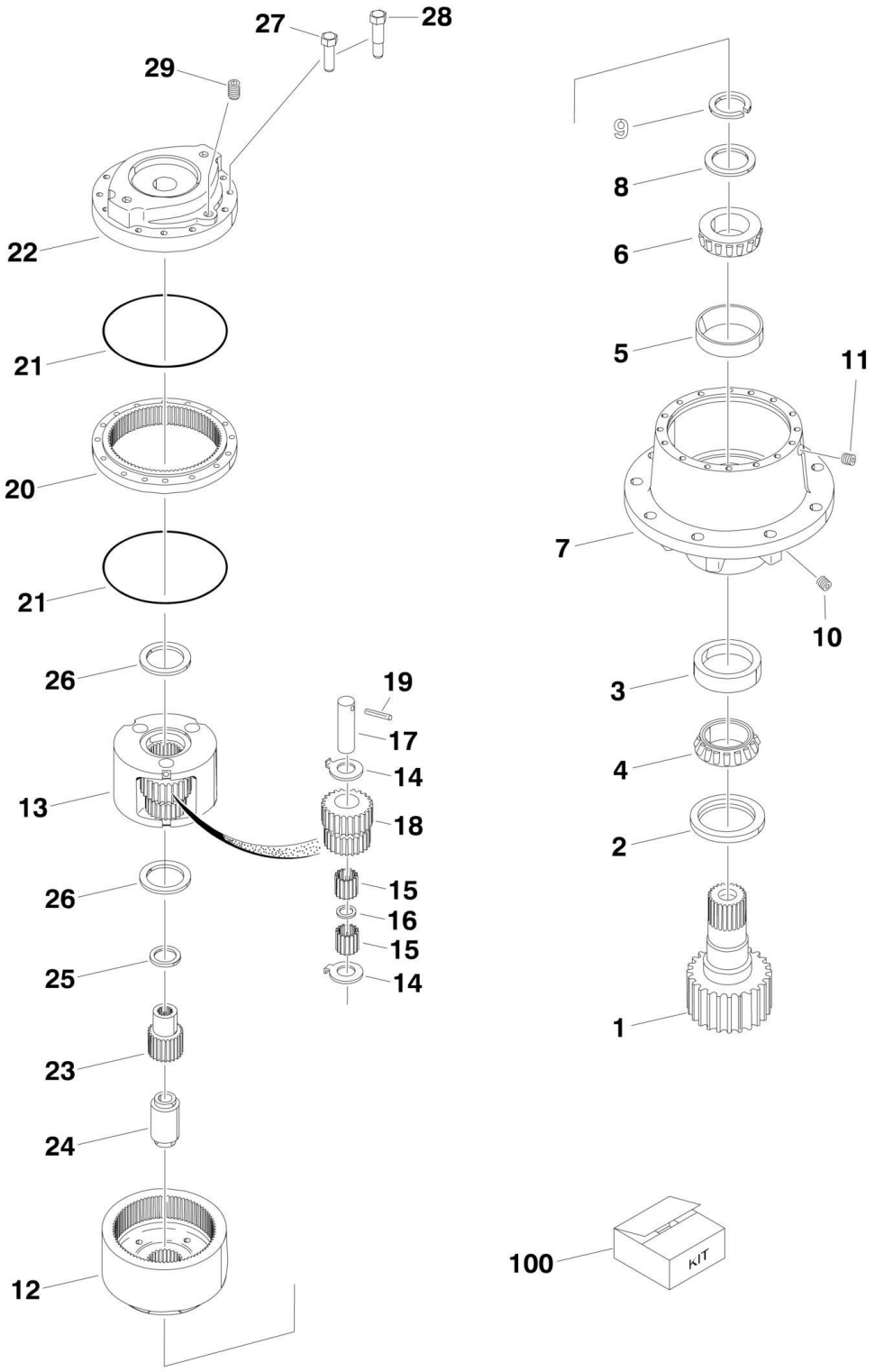

FIGURE 2-5. SWING HUB ASSEMBLY (USA BUILT MACHINES) (SN 0300087000 through 0300137441)

ITEM	PART NUMBER	QTY	DESCRIPTION	REV
	2780205	Ref	**SWING HUB ASSEMBLY**	-
		Ref	**HOUSING ASSEMBLY**	
1	7010492	1	Shaft, Output	
2	7000228	1	Seal, Lip	
3	7000255	1	Cup, Bearing	
4	7000256	1	Cone, Bearing	
5	7000257	1	Cup, Bearing	
6	7000258	1	Cone, Bearing	
7	7017089	1	Housing	
8	7007633	1	Thrustwasher	
9	7000229	1	Ring, Retaining	
10	7010494	2	Pipe, Plug	
11	7001928	2	Pipe, Plug	
12	7000246	2	Gear, In O-Ring	
		Ref	**CARRIER ASSEMBLY**	
13	7001931	1	Carrier	
14	7001985	6	Thrustwasher, Tanged	
15	7001909	96	Bearing, Needle	
16	7000263	3	Spacer, Thrust	
17	7001911	3	Shaft, Planet	
18	7001987	3	Gear, Cluster	
19	7010474	3	Rollpin	
20	7001988	1	Ring Gear	
21		Ref	O-Ring Options:	
21	7000230	1	O-Ring (Black)	
21	7017070	1	O-Ring (White)	
22	7000209	1	Cover, Input	
23	7010488	1	Gear, Sun	
24	7000269	1	Spacer, Input	
25	7000270	1	Thrustwasher	
26	7000253	2	Thrustwasher	
27	7000217	8	Bolt	
28	7000214	4	Bolt, Shoulder	
29	2200222	1	Pipe, Plug	
100	7024100	1	Seal Kit (Includes Items 2, 9, 21 & 26)	

FIGURE 2-6. SWING MOTOR ASSEMBLY (WHITE ROLLER STATOR) (USA BUILT MACHINES) (ORIGINAL EQUIPMENT) (SN 0300087000 through 0300137441)

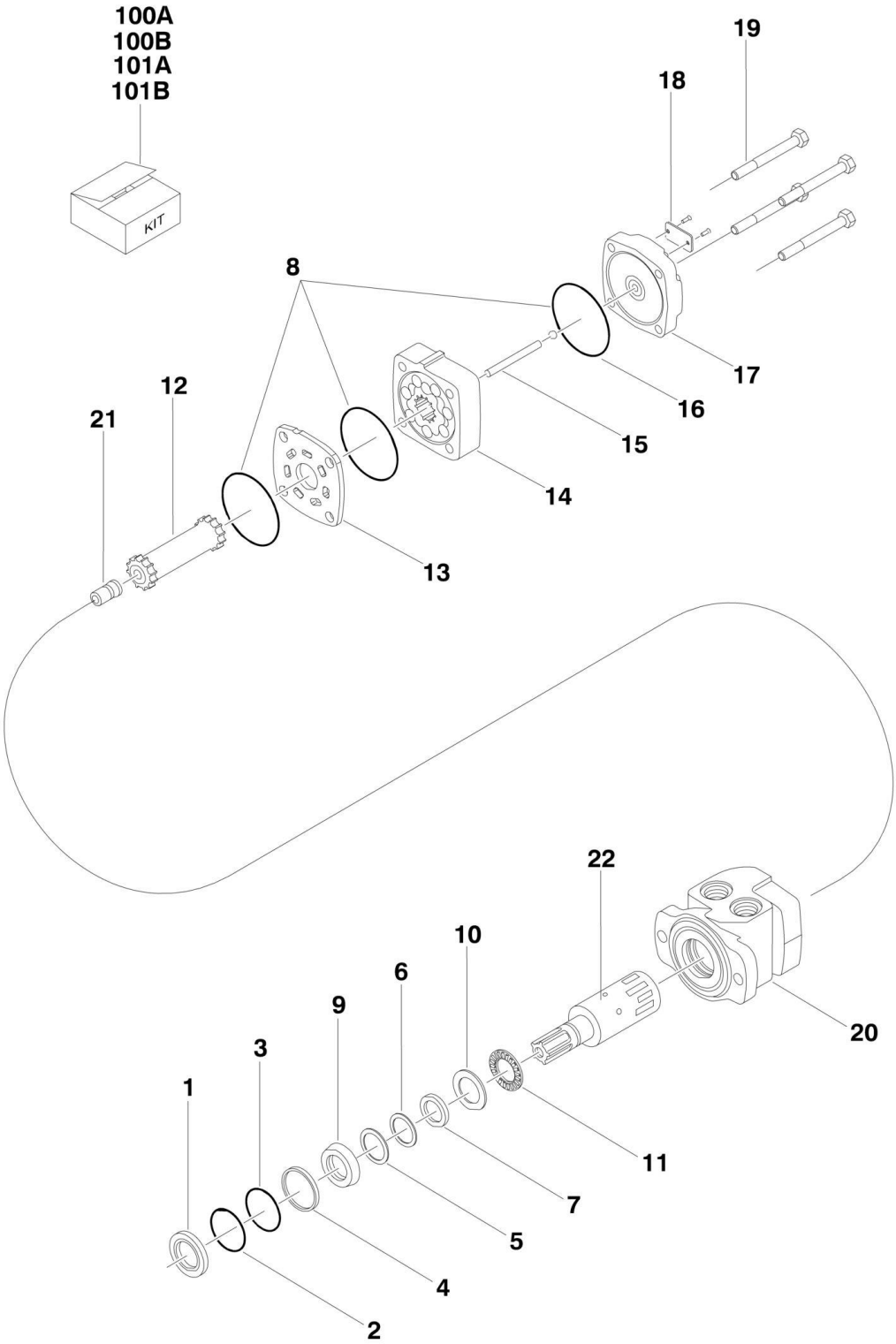

FIGURE 2-6. SWING MOTOR ASSEMBLY (WHITE ROLLER STATOR) (USA BUILT MACHINES) (ORIGINAL EQUIPMENT) (SN 0300087000 through 0300137441)

ITEM	PART NUMBER	QTY	DESCRIPTION	REV
	3160273	Ref	**SWING MOTOR ASSEMBLY (WHITE ROLLER STATOR)**	C
		Ref	**Note: Original Equipment motor p/n 3160273 may have been replaced with Service Replacement motor p/n 1001110169. Visually identify motor before ordering parts. Service Replacement motor shown | on next illustration**	
1	See Note	NSS	Seal, Dust (Note: Use Item 100A)	
2	See Note	NSS	Ring, Split Wire (Note: Use Item 100A)	
3	See Note	NSS	Shim, Metal Back-up (Note: Use Item 100A)	
4	See Note	NSS	Seal, High Pressure (Note: Use Item 100A)	
5	See Note	NSS	Shim, Metal Back-up (Note: Use Item 100A)	
6	See Note	NSS	Seal, Teflon Back-up (Note: Use Item 100A)	
7	See Note	NSS	Seal, Shaft (Note: Use Item 100A)	
8	See Note	NSS	Seal, Body (Note: Use Item 100A)	
9	See Note	NSS	Carrier, Seal (Note: Use Item 100B)	
10	See Note	NSS	Trustwasher (Note: Use Item 100B)	
11	7016422	1	Bearing, Thrust	
12	7005889	1	Link, Drive	
13	7016423	1	Plate, Wear	
14	7005890	1	Rotor Assembly	
15	7005891	1	Pin, Drive Link	
16	See Note	NSS	Ball (Note: Use Item 101A)	
17	See Note	NSS	Cover, End (Note: Use Item 101A)	
18	See Note	NSS	Tag, I.D. (Note: Not Available for Purchase)	
19	7005892	4	Bolt	
20	7016425	1	Housing	
21	7005893	1	Plug, Cooling	
22	7016426	1	Shaft	
100		Ref	Seal Kit Options:	
100A	7005881	1	Seal Kit (Includes Items 1-8)	
100B	7005882	1	Seal Carrier Kit (Includes Items 9 & 10)	
101		Ref	Repair Kit Options:	
101A	7016424	1	End Cover Kit (Includes Items 16 & 17)	
101B	7016427	1	Housing/Shaft Kit (Includes Items 20-22)	

FIGURE 2-7. SWING MOTOR ASSEMBLY (PARKER) (USA BUILT MACHINES) (SERVICE REPLACEMENT) (SN 0300087000 through 0300137440)

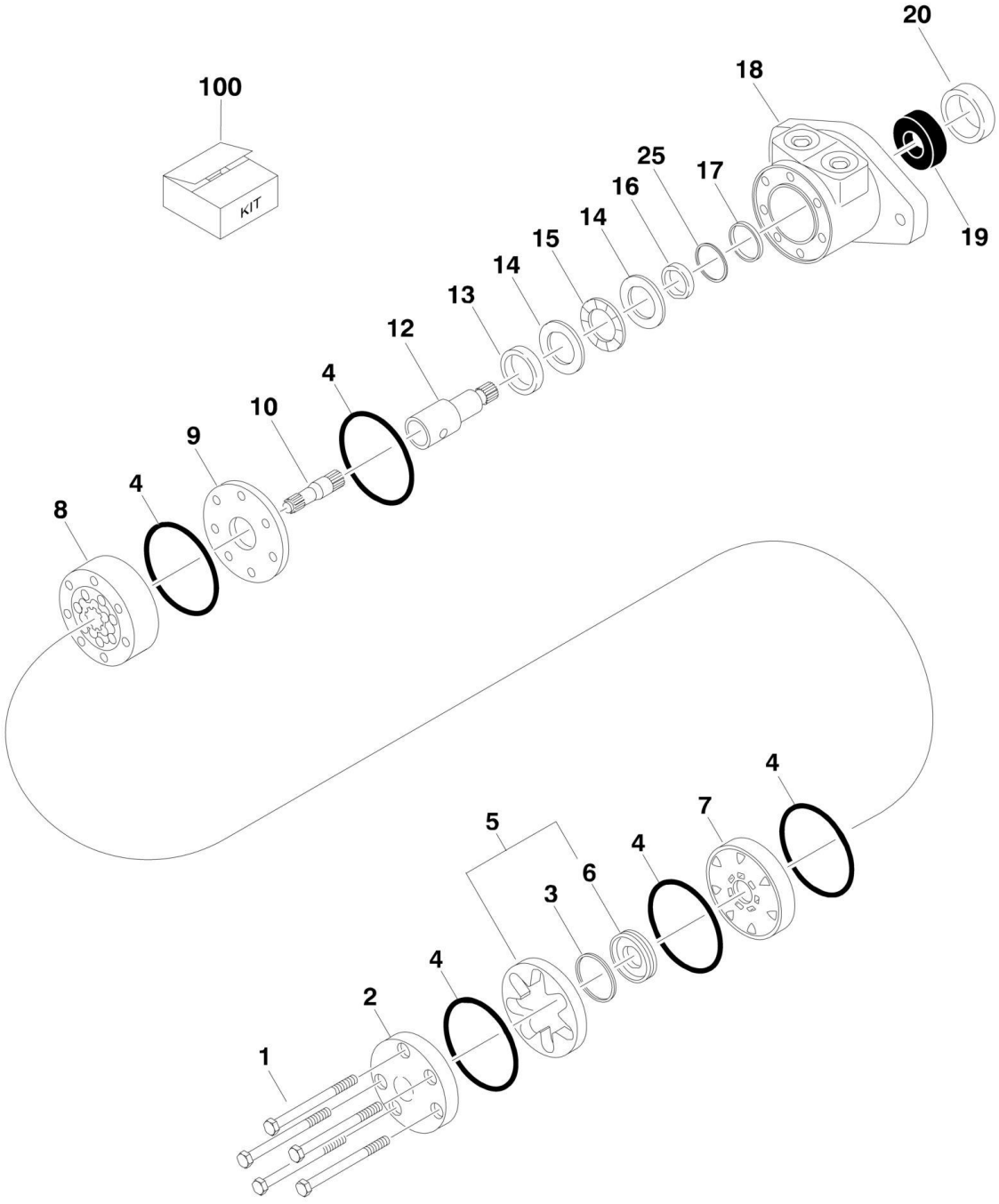

FIGURE 2-7. SWING MOTOR ASSEMBLY (PARKER) (USA BUILT MACHINES) (SERVICE REPLACEMENT) (SN 0300087000 through 0300137440)

ITEM	PART NUMBER	QTY	DESCRIPTION	REV
	1001110169	Ref	**SWING MOTOR ASSEMBLY (PARKER)**	A
		Ref	**Note: Original Equipment motor p/n 3160273 may have been replaced with Service Replacement motor p/n 1001110169. Visually identify motor before ordering parts. Service Replacement motor shown |on next illustration**	
1	70002243	5	Bolt	
2	7004035	1	Cover, End	
3	See Note	NSS	Seal, Commutator (Note: Use Item 100)	
4	See Note	NSS	Seal, Ring (Note: Use Item 100)	
5	7024453	1	Commutator and Ring Assembly	
6	7024453	1	Ring	
7	7024379	1	Manifold	
8	70002208	1	Rotor Set	
9	7024380	1	Plate, Wear	
10	83304150	1	Link, Drive	
12	7024395	1	Shaft, Coupling	
13	7024381	1	Bushing, Bronze	
14	7004043	2	Thrustwasher	
15	7004044	1	Bearing, Thrust	
16	See Note	NSS	Seal, Inner (Note: Use Item 100)	
17	See Note	NSS	Washer, Back-up (Note: Use Item 100)	
18	See Note	NSS	Housing (Note: Not Available - Purchase Complete Motor)	
19	7024390	1	Bearing	
20	See Note	NSS	Seal (Note: Use Item 100)	
25	See Note	NSS	Washer, Back-up (Note: Use Item 100)	
100	7024389	1	Seal Kit (Includes Items 3, 4, 16, 17, 20 & 25)	

FIGURE 2-8. SWING MOTOR/BRAKE/HUB ASSEMBLY (USA BUILT MACHINES AND CHINA BUILT MACHINES) (SN 0300137441 through 0300171769, SN B300000100 through B300000969)

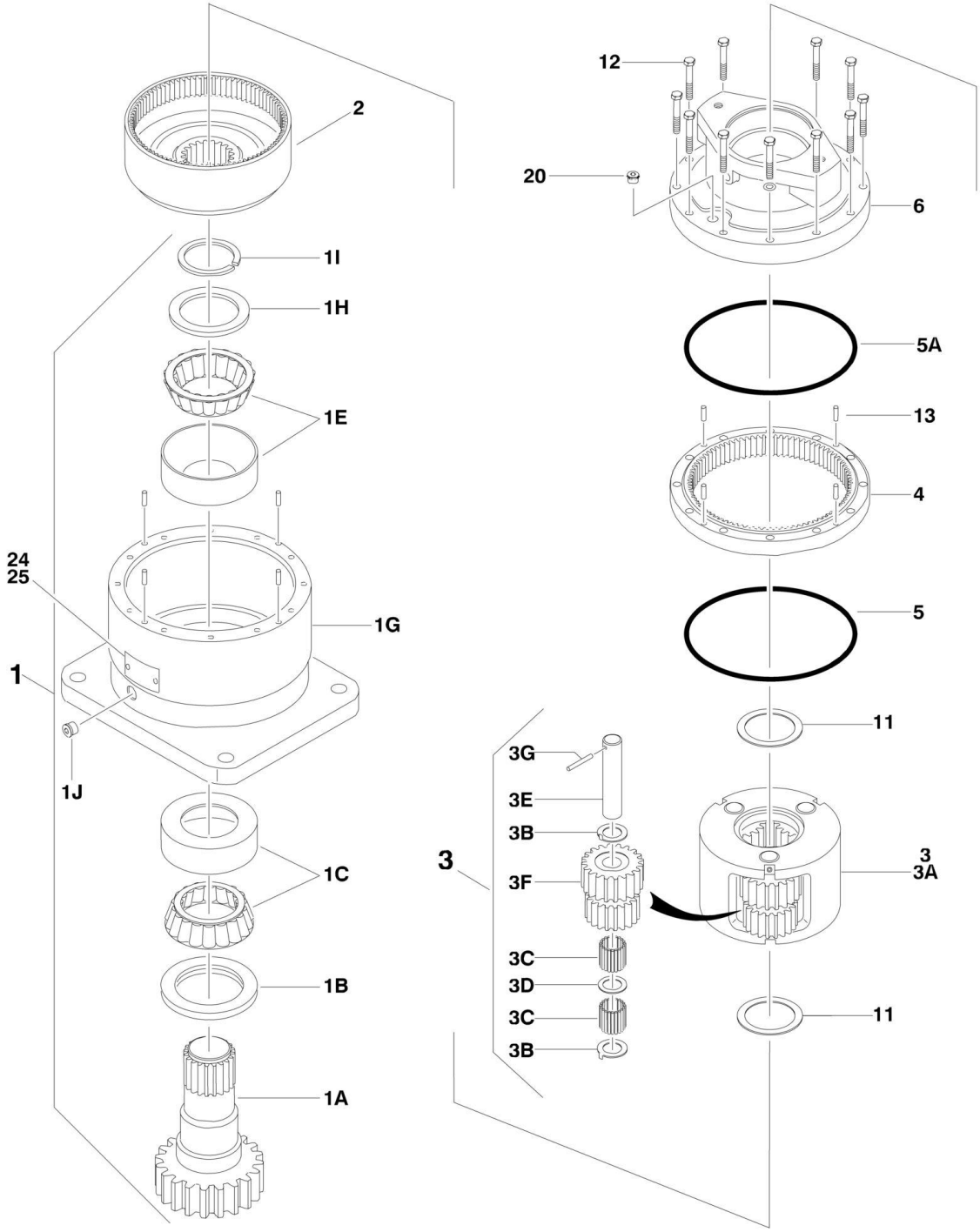

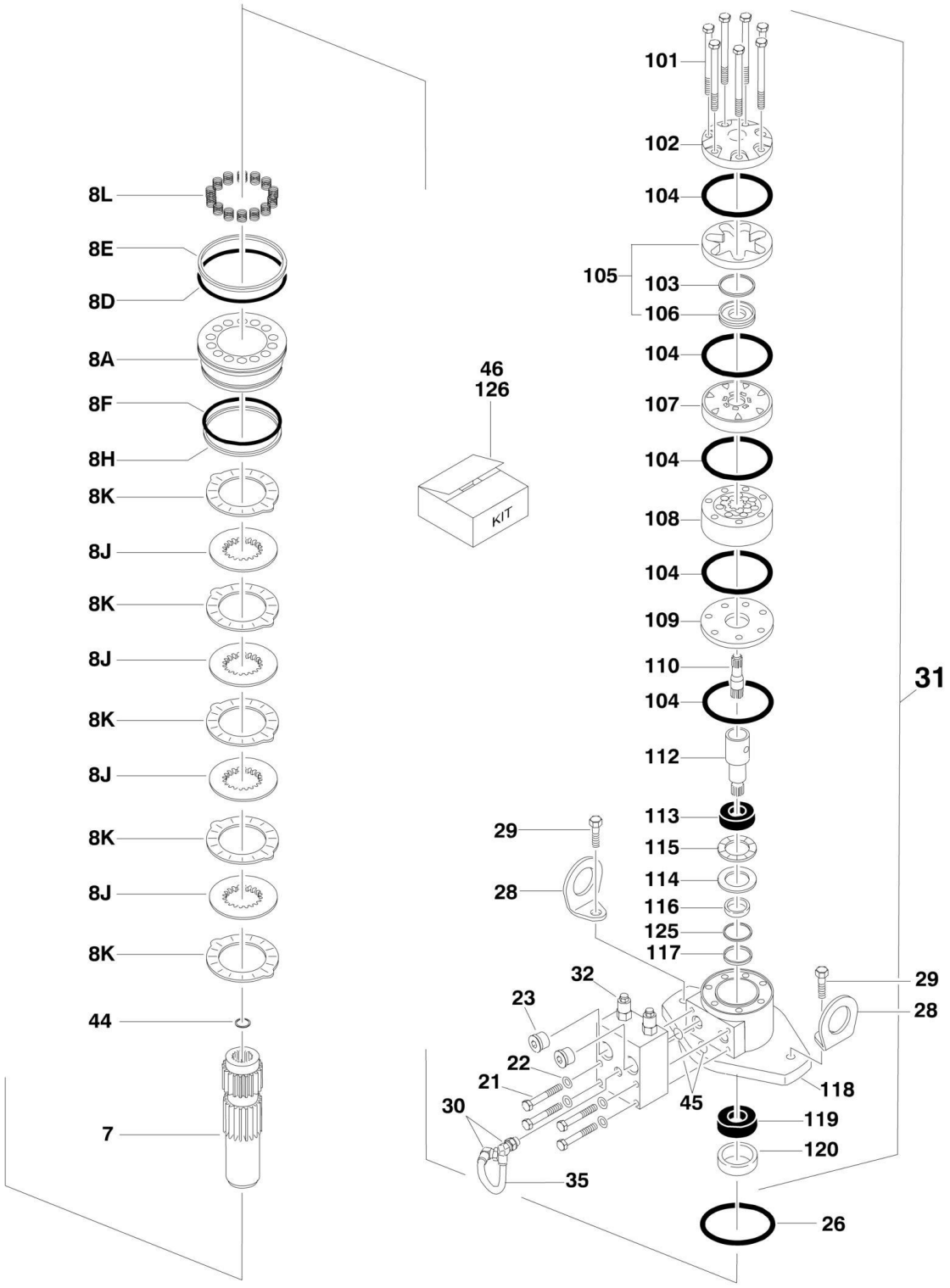
8L
8E
8D
8A
8F
8H
8K
8J
8K
8J
8K
8J
8K
8J
8K
44
7
46
126
KIT
101
102
104
105
103
106
104
107
104
108
104
109
110
104
112
113
115
114
116
125
117
29
28
32
23
22
21
30
35
45
118
119
120
26
31
29
28

FIGURE 2-8. SWING MOTOR/BRAKE/HUB ASSEMBLY (USA BUILT MACHINES AND CHINA BUILT MACHINES) (SN 0300137441 through 0300171769, SN B300000100 through B300000969)

ITEM	PART NUMBER	QTY	DESCRIPTION	REV
	1001101061	Ref	**SWING MOTOR/HUB ASSEMBLIES**	A
1	See Note	NSS	Housing/Shaft Assembly (Note: Use p/n 1001101061 Complete Replacement. See 1A-1J for Available Components)	
1A	7010492	1	Shaft, Output	
1B	7000228	1	Seal, Lip	
1C	7000255	1	Bearing Kit (Includes Cup and Cone)	
1E	7000257	1	Bearing Kit (Includes Cup and Cone)	
1G	See Note	NSS	Housing (Note: Not Available - Purchase Complete Swing Motor/Hub Assembly)	
1H	7007633	1	Thrustwasher	
1I	7000229	1	Ring, Retaining	
1J	7017072	1	Plug, Pipe	
2	7000246	1	Gear, Internal	
3	80424002	1	Carrier Assembly	
3A	7001931	1	Carrier	
3B	7001985	6	Washer, Tanged	
3C	7001909	96	Bearing, Needle	
3D	7000263	3	Thrustwasher	
3E	7001911	3	Shaft, Planet	
3F	7001912	3	Gear, Cluster	
3G	7010474	3	Rollpin	
4	7000248	1	Gear, Ring	
5	7000230	1	O-Ring (Black)	
5A	7017070	1	O-Ring (White)	
6	See Note	NSS	Housing, Brake (Note: Not Available - Purchase Complete Swing Motor/Hub Assembly)	
7	70002065	1	Gear, Sun	
8	See Note	NSS	Brake Components (Note: Not Available for Purchase. See 8A-8L for Available Components)	
8A	70000782	1	Piston, Brake	
8D	70002070	1	O-Ring	
8E	70002071	1	Ring, Back-up	
8F	70002073	1	O-Ring	
8H	70002072	1	Ring, Back-up	
8J	70002067	4	Rotor, Brake	
8K	70002068	5	Stator, Brake	
8L	70002066	14	Spring, Brake	
11	7000253	2	Thrustwasher	
12	7000217	12	Bolt 5/16in-18NC x 2-1/4in (Grade 8)	
13	7017080	4	Pin, Dowel	
20	7017072	1	Plug, Pipe	
21	7024704	4	Bolt 5/16in-18NC x 2in (Grade 8)	
22	See Note	NSS	Lockwasher (Note: Not Available - Purchase Locally)	
23	7017023	2	Plug, Pipe	
24	See Note	NSS	Plate, ID (Note: Not Available for Purchase)	
25	7000281	2	Screw, Drive	
26	7024763	1	O-Ring	
28	See Note	NSS	Lug, Lifting (Note: Not Available for Purchase)	
29	70002069	2	Bolt 1/2in-13NC x 2in (Grade 8)	
30	7017085	2	Elbow	

ITEM	PART NUMBER	QTY	DESCRIPTION	REV
31	70002075	1	Motor Assembly (See Items 101-121 for Breakdown)	
32	7024784	1	Valve (No Serviceable Parts)	
33	7017082	1	Plug, Pipe (Not Shown)	
35	70002074	1	Tube	
44	7017028	1	Ring, Retaining	
45	7000213	2	O-Ring	
46	7024100	1	Seal Kit - Swing Hub (Includes Items 1B, 5, 5A & 11)	
	70002075	Ref	**MOTOR ASSEMBLY**	
101	7024454	6	Bolt	
102	7004035	1	Cover, End	
103	See Note	NSS	Seal, Commutator (Note: Use Item 126)	
104	See Note	NSS	Seal, Ring (Note: Use Item 126)	
105	7024453	1	Commutator and Ring Assembly	
106	7024453	1	Ring	
107	7024379	1	Manifold	
108	7024455	1	Rotor Set	
109	7024380	1	Plate, Wear	
110	7024456	1	Link, Drive	
112	7024458	1	Shaft, Coupling	
113	7024381	1	Bushing, Bronze	
114	7004043	1	Thrustwasher	
115	7004044	1	Bearing, Thrust	
116	See Note	NSS	Seal, Inner (Note: Use Item 126)	
117	See Note	NSS	Washer, Back-up (Note: Use Item 126)	
118	See Note	NSS	Housing (Note: Not Available - Purchase Complete Motor Assembly)	
119	7024390	1	Bearing	
120	See Note	NSS	Seal, Inner (Note: Use Item 126)	
125	See Note	NSS	Washer, Back-up (Note: Use Item 126)	
126	7024396	1	Seal Kit, Motor (Includes Items 103, 104, 116, 117, 120 & 125)	

FIGURE 2-9. CATERPILLAR ENGINE INSTALLATION (USA BUILT MACHINES) (SN 0300087000 through 0300140223)

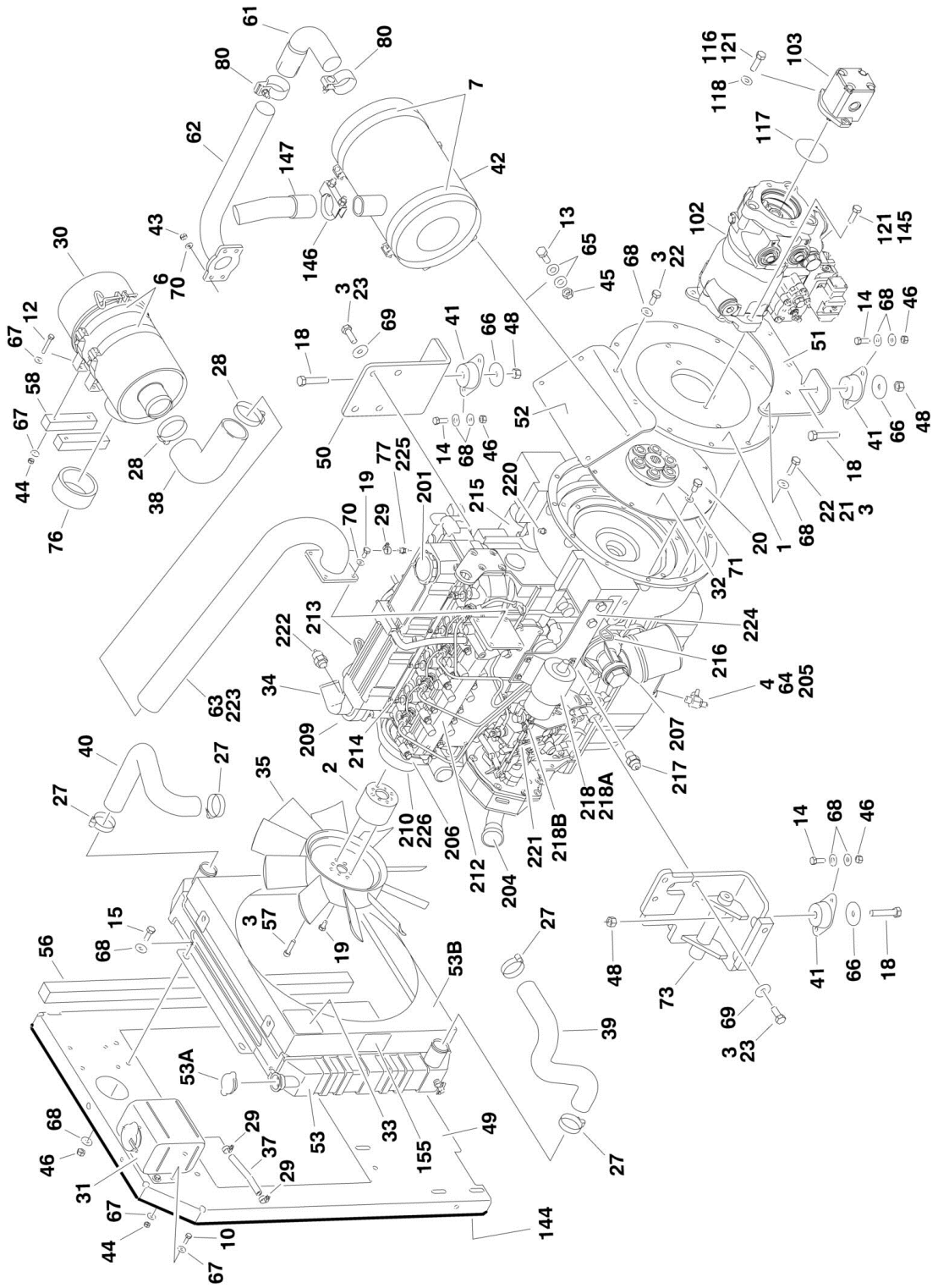

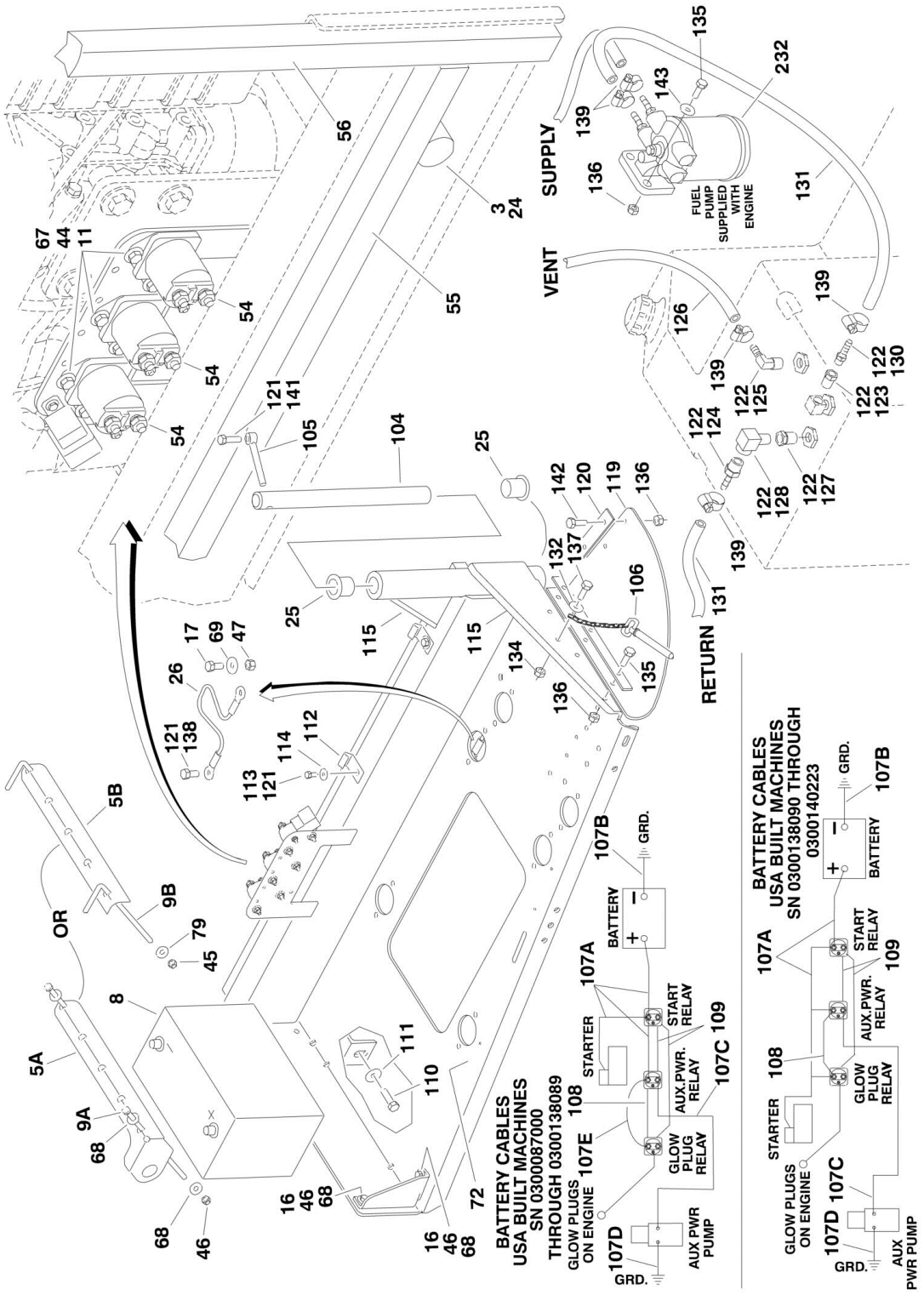
SUPPLY
VENT
RETURN
FUEL PUMP SUPPLIED WITH ENGINE
BATTERY CABLES
USA BUILT MACHINES
SN 0300087000
THROUGH 0300138089
GLOW PLUGS ON ENGINE
BATTERY
STARTER
START RELAY
AUX.PWR. RELAY
GLOW PLUG RELAY
AUX PWR PUMP
GRD.
BATTERY CABLES
USA BUILT MACHINES
SN 0300138090 THROUGH
0300140223

FIGURE 2-9. CATERPILLAR ENGINE INSTALLATION (USA BUILT MACHINES) (SN 0300087000 through 0300140222)

ITEM	PART NUMBER	QTY	DESCRIPTION	REV
		Ref	**CATERPILLAR ENGINE ASSEMBLIES:**	
		Ref	**Caterpillar 3044 Tier III (SN 0300087000 through 0300134793)**	
	0274491	Ref	**Without Arctic Package**	L
	0275256	Ref	**With Arctic Package**	I
		Ref	**Caterpillar C3.4 Tier IVi (SN 03000134794 through 0300140223)**	
	1001105993	Ref	**Without Arctic Package**	D
	1001106338	Ref	**With Arctic Package**	D
1	0080181	1	Adapter, Pump Mounting Plate	
2	0080243	1	Adapter, Fan Spacer	
3	0100011	AR	Compound, Locking	
4	0100020	AR	Sealant, Thread	
5		Ref	Hold-Down, Battery Options:	
5A	0181727	1	Hold-down, Battery **(SN 0300087000 through 0300110250)**	
5B	91401281	1	Hold-down, Battery **(SN 0300110251 through 0300140223)**	
6	0340041	2	Band, Mounting	
7	0340046	2	Band, Muffler	
8	0400075	1	Battery	
9		Ref	Hardware, Battery Hold-down Options:	
9A	0630498	2	Hardware, Battery Hold-down (Bolt) **(SN 0300087000 through 0300110250)**	
9B	1001093382	2	Hardware, Battery Hold-down (J-Hook) **(SN 0300110251 through 0300140223)**	
10	0641406	4	Bolt 1/4in-20NC x 3/4in	
11	0641407	6	Bolt 1/4in-20NC x 7/8in	
12	0701414	4	Bolt 1/4in-20NC x 3/4in	
13	0641507	4	Bolt 5/16in-18NC x 7/8in	
14	0641608	AR	Bolt 3/8in-16NC x 1in	
15	0641609	4	Bolt 3/8in-16NC x 1-1/8in	
16	0641610	4	Bolt 3/8in-16NC x 1-1/4in	
17	0641808	1	Bolt 1/2in-13NC x 1in	
18	0641820	4	Bolt 1/2in-13NC x 2-1/2in	
19	0700808	AR	Bolt M8 x 16mm	
20	0701010	8	Bolt M10 x 20mm	
21	0701012	4	Bolt M10 x 25mm	
22	0701015	8	Bolt M10 x 35mm	
23		Ref	Bolt Options:	
23	0701214	8	Bolt (Bolt M12 x 30mm) **(SN 0300087000 through 0300098803)**	
23	0711214	8	Bolt (Bolt M12 x 30mm) **(SN 0300098804 through 0300111360)**	
23		Ref	Bolt **(SN 03000111361 through 0300140223)**	
23	0711214	5	Bolt M12 x 30mm	
23	0771212	3	Bolt M12 x 25mm	
24	0940070	1	Bumper, Rubber	
25	0961986	2	Bearing, Flange	
26	1060637	1	Lanyard	
27	8405104	4	Clamp, Hose	
28	1320016	2	Clamp, Hose	
29	8405009	2	Clamp, Hose	
30	1340060	1	Air Cleaner Assembly	

ITEM	PART NUMBER	QTY	DESCRIPTION	REV
30	7012664	1	Element, Air Cleaner	
31	1580011	1	Container, Coolant Overflow	
32	1660239	1	Coupling, Pump	
33	1703162	2	Decal - Fan Blade	
34		Ref	Caterpillar Engine Assembly Options:	
34	2000194	NLA	Caterpillar Engine Assembly (Use p/n 1001109762) **(SN 0300087000 through 0300104803)**	
34	2000386	NLA	Caterpillar Engine Assembly (Use p/n 1001109762) **(SN 0300104804 through 0300134793)**	
34	1001100313	1	Caterpillar Engine Assembly **(SN 0300134794 through 0300140223)**	
35	2060025	1	Fan	
37	2720058	0.33 ft/0.1m	Hose	
38	2720434	1	Elbow, Rubber	
39	2720509	1	Hose, Radiator (Bottom)	
40		Ref	Hose, Radiator (Top) Options:	
40	2720510	1	Caterpillar 3044 Tier III **(SN 0300087000 through 0300134793)**	
40	1001107705	1	Caterpillar C3.4 Tier IVi **(SN 0300134794 through 0300140223)**	
41	3200406	4	Mount, Engine	
42		Ref	Muffler Options:	
42	3220113	1	Muffler, Spark Arresting (Standard)	
42	70001017	1	Clamp	
42	3220154	NLA	Muffler, Catalytic (Optional) (Use p/n 1001107116)	
42	70002705	1	Clamp	
42	70002706	1	Plug	
43	3290801	4	Nut m8 x 1.25	
44	3311405	14	Locknut 1/4in-20NC	
45		Ref	Locknut Options:	
45	3311505	AR	Locknut 5/16in-18NC	
45	88521205	AR	Locknut with Nylon Lock 5/16in-18NC	
46	3311605	AR	Locknut Options:	
47	3311801	1	Nut 1/2in-13NC	
48	3311805	4	Locknut 1/2in-13NC	
49	3539872	1	Plate, Radiator Mounting	
50	3574206	1	Plate, Motor Mount	
51	3574207	1	Plate, Engine Mount (Rear)	
52	3574208	1	Bracket, Muffler	
53	3620047	1	Radiator	
53A	7027412	1	Cap	
53B	70004182	1	Shroud, Fan	
54	3740067	3	Relay, Solenoid Assembly	
55	3960468	1	Seal, Foam Gasket	
56	3960469	1	Seal, Foam Gasket	
57	4031911	4	Bolt M8 x 35mm	
58	4220191	2	Block, Spacer	
61	4567073	1	Tube, Exhaust	
62	4568721	1	Exhaust Tube Weldment	
63	4569177	1	Tube, Air Intake Weldment **(SN 0300087000 through 0300104804)**	
64	1001105833	NLA	Valve, Oil Drain (Use p/n 4640750)	

ITEM	PART NUMBER	QTY	DESCRIPTION	REV
65	4711500	8	Flatwasher 5/16in Thin	
66	4740274	4	Washer, Snubbing	
67	4751400	28	Flatwasher 1/4in Regular	
68	4751600	AR	Flatwasher 3/8in Regular	
69		Ref	Flatwasher Options:	
69	4751800	8	Flatwasher 1/2in Regular **(SN 0300087000 through 0300098803)**	
69	4812100	8	Flatwasher M12 **(SN 0300098804 through 0300140223)**	
70	4811900	AR	Flatwasher M8	
71	4832000	8	Lockwasher M10	
72	4846790	1	Tray Engine	
73	4846805	1	Mount, Engine/Generator - Left	
74	4922737	1	Harness, Relay Ground (Not Shown) **(SN 0300087000 through 0300134794)**	
75	0721006	1	Bolt #10-24NC x 3/4in	
76	2720515	1	Seal, Air Cleaner	
77	2220767	1	Fitting	
79	4751500	2	Flatwasher 5/16in Regular	
80	70001017	2	Clamp	
		Ref	**Note: Arctic Package Items 91-97 Not Shown - Used on Arctic Machines Only.**	
91	1060626	1	Cord, 3-Way Extension (Located on Left Front of Engine)	
92	1320223	2	Clamp	
93	2300041	2.6 gal /9.96L	Coolant	
94	2580024	1	Heater, Battery (Located on Battery)	
95	2580055	1	Heater, Block (Located on Left Side of Engine)	
96	3020044	2.5 gal /9.4L	Oil, Motor 0W-40	
97	3980007	1	Seat, Battery (Located Under Battery)	
		Ref	**CATERPILLAR ENGINE INSTALLATIONS**	
		Ref	**Caterpillar 3044 Tier III (SN 0300087000 through 0300134793)**	
	0274492	Ref	**2WD (Without Arctic Package)**	3
	0274493	Ref	**4WD (Without Arctic Package)**	4
	0275342	Ref	**4WD (With Arctic Package)**	2
		Ref	**Caterpillar C3.4 Tier IVi (SN 0300134794 through 0300140223)**	
	1001107236	Ref	**2WD (Without Arctic Package)**	3-B
	1001107229	Ref	**4WD (Without Arctic Package)**	3-B
	1001107237	Ref	**4WD (With Arctic Package)**	3-B
102		Ref	Piston Pump Assembly Options (See PISTON PUMP ASSEMBLY for Breakdown):	
102	3600388	1	2WD Pump without Fittings	
102	3600394	1	2WD Pump with Fittings	
102	3600381	1	4WD Pump without Fittings	
102	3600396	1	4WD Pump with Fittings	
103		Ref	Gear Pump Assembly Options (See GEAR PUMP ASSEMBLY for Breakdown):	
103	3600242	1	Pump without Fittings	
103	3600395	1	Pump with Fittings	
104	3422446	1	Pin, Pivot	
105	3841143	1	Keeper, Pin	
106	3422532	1	Pin, Hitch	
107	2902296	1	Battery Cable Kit	

ITEM	PART NUMBER	QTY	DESCRIPTION	REV
		Ref	**Note: 2902296 Rev A version is no longer available. Verify weather machine is equipped with 2 or 3 relays on the engine tray. If there are 3 relays, purchase latest revision of 2902296 kit. If there are 2 relays, purchase individual items as replacement.**	
107A	1001116241	1	Cable, Battery (Red) (Machines with 2 Relays on Engine Tray) (was p/n 7027000)	
107A	1001116240	1	Cable, Battery (Red) (Machines with 3 Relays on Engine Tray) (was p/n 7027000)	
107B	7027004	1	Cable, Battery (Black)	
107C	7027002	1	Cable (Red)	
107D	7027003	1	Cable (Black)	
107E	7027001	1	Cable (Red) (No Longer Part of 2902296 Kit - Use) **(SN 0300087000 through 0300138090)**	
108	1060904	1	Cable, Battery	
109	4922737	1	Harness, Relay Ground	
110	0642010	1	Bolt 5/8in-11NC x 1-1/4in	
111	4752000	1	Flatwasher 5/8in Regular	
112	1320223	AR	J-Clip 1/2in	
113	0641606	3	Bolt 3/8in-16NC x 3/4in	
114	4711600	3	Flatwasher 3/8in Thin	
115	4060805	2 ft /0.7mm	Flex-Trim 1/4in	
116	3931620	2	Bolt 3/8in-16NC x 1-1/4in	
117	3790152	1	O-Ring	
118	4891600	2	Flatwasher 3/8in Hardened	
119	3380429	1	Panel, Rubber	
120	3539957	2	Plate, Support	
121	0100011	AR	Compound, Locking	
122	0100020	AR	Sealant, Thread	
123		Ref	Fitting, Reducer Options:	
123	2220273	2	Fitting, Reducer **(SN 0300087000 through 0300134793)**	
123	Item 130	2	Fitting, Reducer **(SN 0300134794 through 0300140223)**	
124		Ref	Fitting, Straight Options:	
124	2180536	2	Fitting, Straight **(SN 0300087000 through 0300134793)**	
124	2221176	2	Fitting, Straight **(SN 0300134794 through 0300140223)**	
125	2220313	1	Fitting, 90	
126	2750532	6 ft/1.8m	Hose 3/8in	
127		Ref	Fitting, Reducer Options:	
127	2220250	1	Fitting, Reducer **(SN 0300087000 through 0300134793)**	
127	Item 124	1	Fitting, Reducer **(SN 0300134794 through 0300140223)**	
128		Ref	Fitting, 90 Options:	
128	2220549	1	Fitting, 90 **(SN 0300087000 through 0300093957)**	
128	2220459	1	Fitting, 90 **(SN 0300093958 through 0300134793)**	
128	Item 124	1	Fitting, 90 **(SN 0300134794 through 0300140223)**	
129	2720271	15 ft/4.6m	Hose 3/16in	
130		Ref	Fitting, Barbed Options:	
130	2220794	1	Fitting, Barbed **(SN 0300087000 through 0300134793)**	
130	2180348	1	Fitting, Barbed **(SN 0300134794 through 0300140223)**	
131	2720058	16 ft/4.9m	Hose	
132	4751400	4	Flatwasher 1/4in Regular	
133	0641608	2	Bolt 3/8in-16NC x 1in	
134	3311405	1	Locknut 1/4in-20NC	

ITEM	PART NUMBER	QTY	DESCRIPTION	REV
135	0641507	5	Bolt 5/16in-18NC x 1-1/4in	
136	3311505	8	Locknut 5/16in-18NC	
137	0641407	1	Bolt 1/4in-20NC x 7/8in	
138	0641808	1	Bolt 1/2in-13NC x 1in	
139	1320022	7	Clamp, Hose	
140	1701505	1	Decal - Diesel (Not Shown - Located on Hood)	
141	0641610	1	Bolt 3/8in-16NC x 1-1/4in	
142	0641514	3	Bolt 5/16in-18NC x 1-3/4in	
143	4751500	3	Flatwasher 5/16in Regular	
144	3960389	5 ft/1.5m	Seal, Hood	
145	0641812	2	Bolt 1/2in-13NC x 1-3/4in	
146	1320176	1	Clamp **(SN 0300093958 through 0300140223)**	
147	3460544	1	Pipe, Exhaust **(SN 0300093958 through 0300140223)**	
		Ref	**Note: Arctic Package Items 148 - 153 Not Shown - Used on Arctic Machines Only.**	
148	1702943	1	Decal - Hydraulic Tank Heater	
149	2580050	1	Heater, Hydraulic Tank	
150	1702941	1	Decal - Battery Heater	
151	1702944	1	Decal - Heater Cord	
152	1702942	1	Decal - Engine Block Heater	
153	1060625	1	Cable, Immersion Heater	
155		Ref	Decal - Warning Explosion/Fire Options:	
155	1704972	1	ANSI Spec	
155	1706098	1	Australian and CE Spec	
155	1706059	1	Brazilian Spec	
155	1706060	1	Chinese Spec	
155	1706064	1	CSA Spec	
155	1706062	1	Japanese Spec	
155	1706061	1	Korean Spec	
155	1706063	1	Spanish Language	
		Ref	**ENGINE COMPONENTS**	
	2000194	Ref	**Caterpillar 3044 Tier III (SN 0300087000 through 0300104803)**	E
	2000386	Ref	**Caterpillar 3044 Tier III (SN 0300104804 through 0300134793)**	B
	1001100313	Ref	**Caterpillar C3.4 Tier IVi (SN 0300134794 through 0300140223)**	C
201	7026800	1	Cap Oil Filler	
202	7026802	1	Flywheel	
202	7026803	1	Gear, Flywheel	
203	7026804	1	Gasket (Not Shown - Between Flywheel Housing and Engine Block)	
203	7026805	1	Seal (Not Shown - Rear of Flywheel Housing)	
204	7026806	1	Cap, Filler	
204	7026807	1	Seal, Oil (Located in Front Housing)	
205	7026808	1	Plug, Oil Pan	
205	7026809	1	Gasket, Oil Plug	
206	7026810	1	V-Belt	
207	7026811	1	Filter, Oil	
207	7026812	1	O-Ring (Between Bolt and Oil Filter Bracket)	
207	7026813	1	O-Ring (Between Oil Filter Bracket and Engine Block)	
208	7026819	1	Engine Cooler Assembly (Not Shown)	
208	7026816	2	O-Ring (Between Cover and Cooler)	
208	7026817	4	O-Ring (Between Cover and Cooler)	
208	7026818	1	Gasket (Between Cover and Engine Block)	

ITEM	PART NUMBER	QTY	DESCRIPTION	REV
209	7026822	1	Thermostat	
209	7026821	1	Gasket (Between Regulator and Thermostat Housing)	
209	7026820	1	Gasket (Between Regulator and Engine Head)	
210		Ref	Pump, Water Options:	
210		Ref	Caterpillar Engine p/n 2000194	
210	7026823	1	Caterpillar Engine SNs (Not Machine SN) **(Prior to SN 3440833)**	
210	70001120	1	Caterpillar Engine SNs (Not Machine SN) **(SN 3440833 through B300000969)**	
210	70001120	1	Caterpillar Engine p/ns 2000386 & 1001100313	
210	7026824	1	Gasket, Water Pump Cover (Use with p/n 7026823 Pump)	
210	7026825	1	Gasket, Water Pump (Use with p/n 7026823 Pump)	
210	70002765	1	Hose, By-Pass (Not Shown)	
211	7026826	1	Gasket, Exhaust Manifold	
211	7026827	1	Gasket, Exhaust	
211	70002852	4	Stud, Exhaust Manifold	
212	7026829	1	Gasket, Intake Manifold	
212	7026828	1	Gasket, Intake	
213	7026831	1	Alternator	
214	7026832	4	Plug, Glow	
215	7026833	1	Starter	
216		Ref	Dipstick Oil Level Options:	
216	7026834	1	Dipstick for 2000194 Engines	
216	7026888	1	Dipstick for 2000386 Engines	
216	70002844	1	Dipstick for 1001100313 Engines	
216	70002843	1	Seal, Dipstick Tube	
217	7026814	1	Relief Valve, Oil Pressure	
217	7026815	1	Gasket, Relief Valve	
217	1001097554	1	Sensor, Oil Pressure (Not Shown)	
218	1600361	1	Actuator/Linkage Assembly - Throttle	
218A	1600361	1	Actuator and Electrical Connector Kit (was p/n 7026842)	
218A	7026835	1	Connector, Actuator	
218B	7026843	1	Linkage Kit	
220	7026841	1	Sensor, Speed Sensor	
220	7026836	1	Connector, Speed Sensor	
221	70002849	1	Pump, Fuel Injection	
221	70002847	1	O-Ring, Fuel Injection Pump Flange	
221	70002848	1	Gasket, Fuel Injection Pump	
221	70002850	1	Solenoid, Fuel Shut-Off	
222	7026840	1	Sensor, Water Temperature	
222	7026882	1	Seal, Sensor	
223	4569371	1	Tube, Air Intake Weldment (2000386 & 1001100313 Engines)	
224	0902910	1	Mounting Bracket, Actuator (Use p/n 7026887)	
224	0903220	1	Mounting Bracket, Actuator (Use p/n 7026887)	
225	70001051	1	Valve, Air Intake Check	
226	70001742	1	Pulley, Water Pump	
227	2580055	1	Block Heater Kit (Not Shown) (was p/n 7026845)	
227	7026838	1	Gasket, Block Heater (Not Shown)	
227	70002841	1	Cord, Electrical (Not Shown)	
228	70002766	1	Head, Cylinder (Not Shown)	
228	7026801	1	Gasket, Valve Cover (Not Shown)	
228	70002764	1	Gasket, Rear Head (Not Shown)	

SECTION 2 - TURNTABLE

ITEM	PART NUMBER	QTY	DESCRIPTION	REV
228	70002767	1	Gasket, Head (Not Shown)	
228	70002761	AR	Bolt, Head (Not Shown)	
228	70002762	AR	Seat, Valve (Not Shown)	
229	70002845	1	Pump, Oil (Not Shown)	
229	70002846	1	O-Ring, Oil Pump (Not Shown)	
231	70002851	1	Gasket Kit - Complete (Not Shown	
232	7026839	1	Pump, Fuel Supply	
232	70002763	1	Gasket, Fuel Line (Not Shown)	
232	7026830	1	Element, Fuel Filter	
232	70002834	1	Bowl, Water Collection	
232	70002835	1	Seal Kit - Water Separator	
232	70002833	1	Ring, Fuel Pump Retaining	

FIGURE 2-10. CATERPILLAR ENGINE INSTALLATION (USA BUILT MACHINES AND CHINA BUILT MACHINES) (SN 0300140223 through 0300171769, SN B300000100 through B300000969)

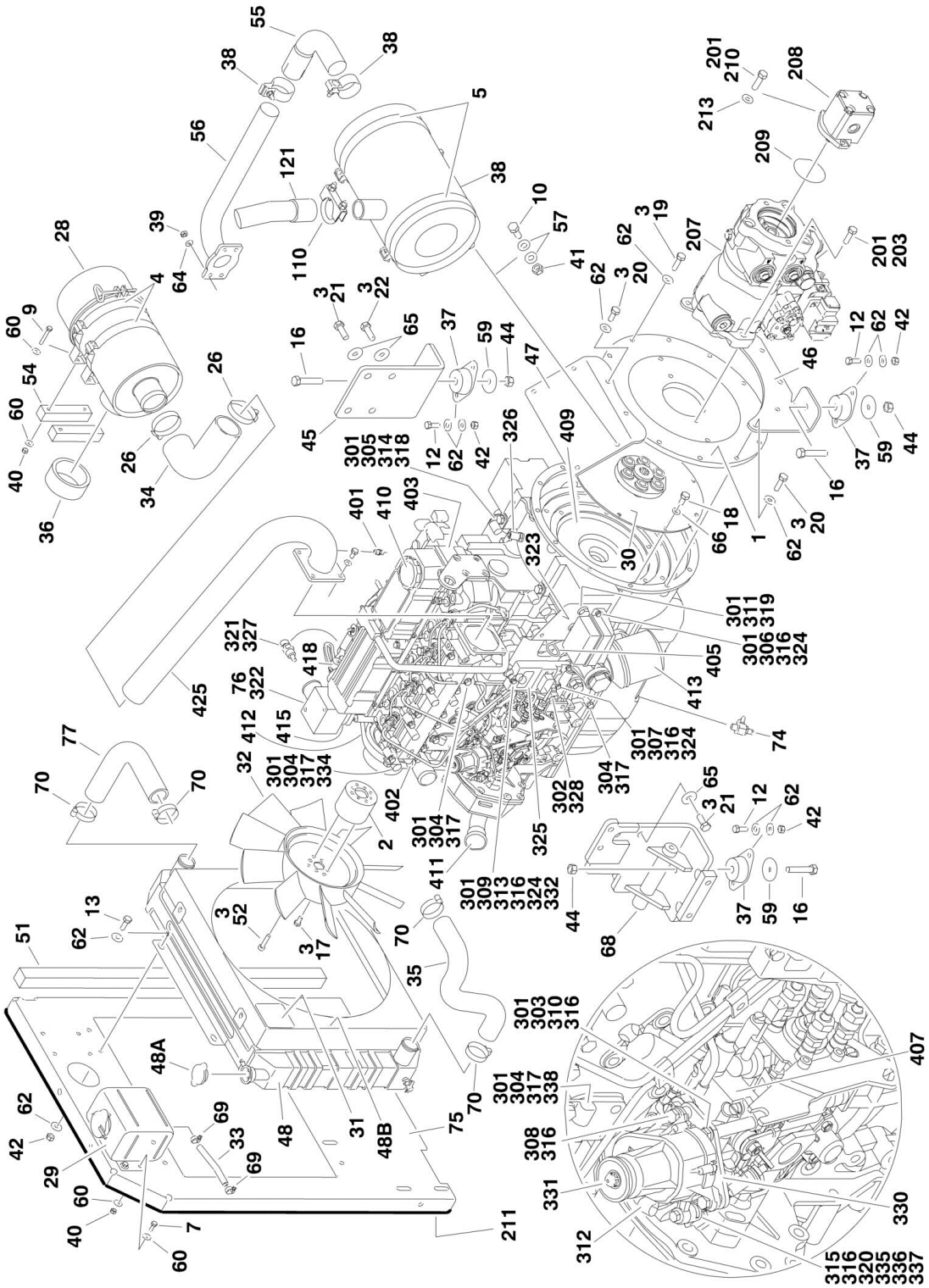

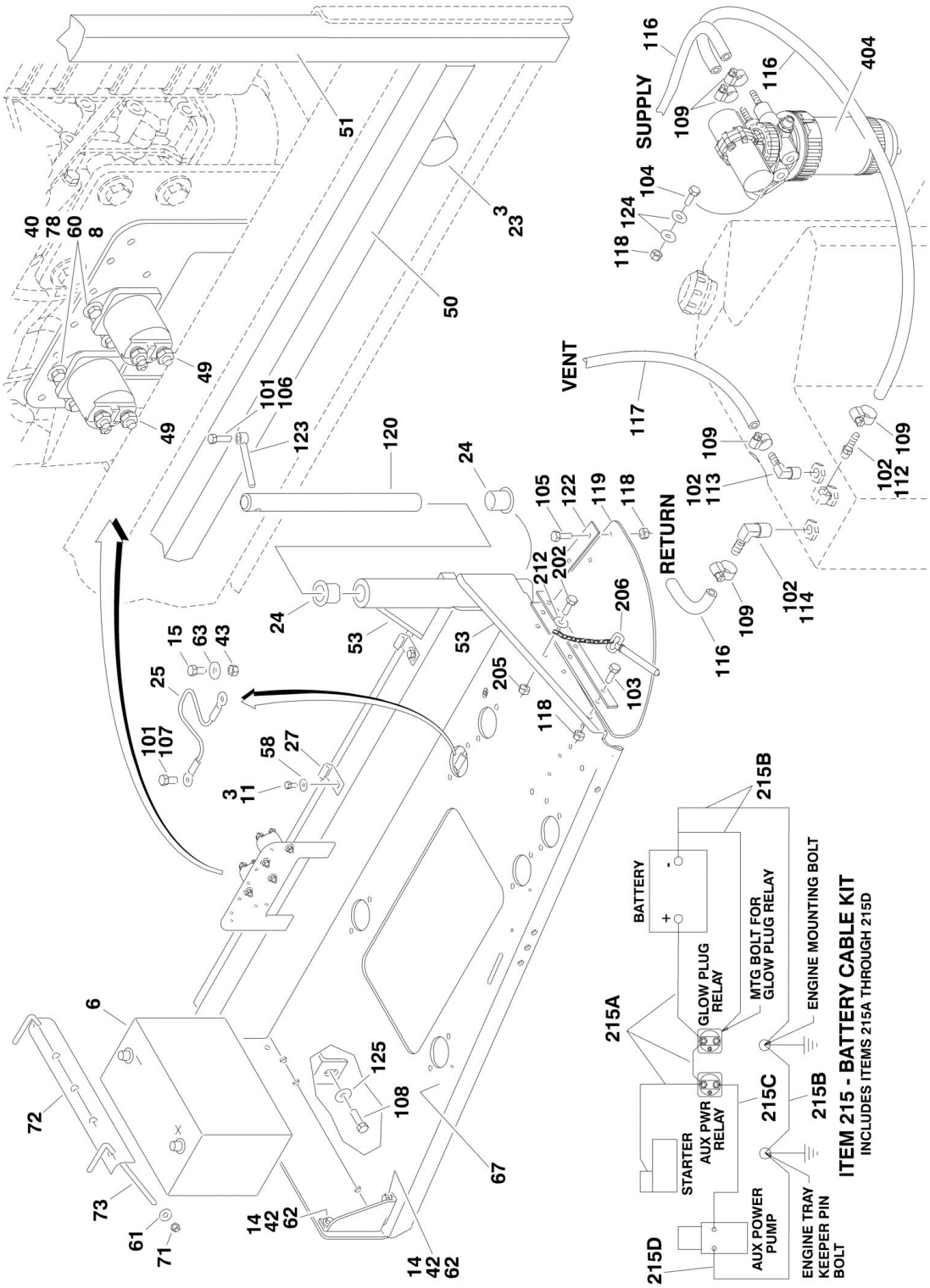
ITEM 215 - BATTERY CABLE KIT
INCLUDES ITEMS 215A THROUGH 215D
BATTERY
GLOW PLUG RELAY
MTG BOLT FOR GLOW PLUG RELAY
ENGINE MOUNTING BOLT
STARTER
AUX PWR RELAY
AUX POWER PUMP
ENGINE TRAY KEEPER PIN BOLT
SUPPLY
RETURN
VENT

FIGURE 2-10. CATERPILLAR ENGINE INSTALLATION (USA BUILT MACHINES AND CHINA BUILT MACHINES) (SN 0300140223 through 0300171769, SN B300000100 through B300000969)

ITEM	PART NUMBER	QTY	DESCRIPTION	REV
	1001109065	Ref	**CATERPILLAR TIER IVI ENGINE ASSEMBLIES**	D
1	0080181	1	Adapter, Pump Mounting Plate	
2	0080243	1	Adapter, Fan Spacer	
3	0100011	AR	Compound, Locking	
4	0340041	2	Band, Mounting	
5	0340046	2	Band, Muffler	
6	0400075	1	Battery	
7	0641406	4	Bolt 1/4in-20NC x 3/4in	
8	0641407	4	Bolt 1/4in-20NC x 7/8in	
9	0701414	4	Bolt 1/4in-20NC x 3/4in	
10	0641507	4	Bolt 5/16in-18NC x 7/8in	
11	0641606	2	Bolt 3/8in-16NC x 3/4in	
12	0641608	8	Bolt 3/8in-16NC x 1in	
13	0641609	4	Bolt 3/8in-16NC x 1-1/8in	
14	0641610	4	Bolt 3/8in-16NC x 1-1/4in	
15	0641808	1	Bolt 1/2in-13NC x 1in	
16	0641820	4	Bolt 1/2in-13NC x 2-1/2in	
17	0700808	4	Bolt M8 x 16mm	
18	0701010	8	Bolt M10 x 20mm	
19	0701012	4	Bolt M10 x 25mm	
20	0701015	8	Bolt M10 x 35mm	
21	0711214	5	Bolt M12 x 30mm	
22	0771212	3	Bolt M12 x 25mm	
23	0940070	1	Bumper, Rubber	
24	0961986	2	Bearing, Flange	
25	1060637	1	Lanyard	
26	1320016	2	Clamp, Hose	
27	1320223	4	Clamp	
28	1340060	1	Air Cleaner Assembly	
28	7012664	1	Element, Air Cleaner	
29	1580011	1	Container, Coolant Overflow	
30	1660239	1	Coupling, Pump	
31	1703162	2	Decal - Fan Blade	
32	2060025	1	Fan	
33	2720058	0.33 ft /0.1m	Hose	
34	2720434	1	Elbow, Rubber	
35	2720509	1	Hose, Radiator (Bottom)	
36	2720515	1	Seal, Air Cleaner	
37	3200406	4	Mount, Engine	
38		Ref	Muffler Options:	
38	3220113	1	Muffler, Spark Arresting (Standard)	
38	70001017	1	Clamp (Used on p/n 3220113)	
38	1001107116	1	Muffler, Catalytic (Optional)	
38	70002705	1	Clamp	
38	70002706	1	Plug	
39	3290801	4	Nut M8	
40	3311405	12	Locknut 1/4in-20NC	
41	3311505	4	Locknut 5/16in-18NC	

ITEM	PART NUMBER	QTY	DESCRIPTION	REV
42	3311605	16	Locknut 3/8in-16NC	
43	3311801	1	Nut 1/2in-13NC	
44	3311805	4	Locknut 1/2in-13NC	
45	3574206	1	Plate, Motor Mount	
46	3574207	1	Plate, Engine Mount (Rear)	
47	3574208	1	Bracket, Muffler	
48	3620047	1	Radiator	
48A	7027412	1	Cap	
48B	70004182	1	Shroud, Fan	
49	3740067	2	Relay, Solenoid Assembly	
50	3960468	1	Seal, Foam Gasket	
51	3960469	1	Seal, Foam Gasket	
52	4031911	4	Bolt M8 x 35mm	
53	4060805	2 ft /0.7mm	Flex-Trim 1/4in	
54	4220191	2	Block, Spacer	
55	4567073	1	Tube, Exhaust	
56	4568721	1	Exhaust Tube Weldment	
57	4711500	8	Flatwasher 5/16in Thin	
58	4711600	2	Flatwasher 3/8in Thin	
59	4740274	4	Washer, Snubbing	
60	4751400	24	Flatwasher 1/4in Regular	
61	4751500	2	Flatwasher 5/16in Regular	
62	4751600	44	Flatwasher 3/8in Regular	
63	4751800	1	Flatwasher 1/2in Regular	
64	4811900	4	Flatwasher M8	
65	4812100	8	Flatwasher M12	
66	4832000	8	Lockwasher M10	
67	4846790	1	Tray Engine	
68	4846805	1	Mount, Engine/Generator - Left	
69	8405009	2	Clamp, Hose	
70	8405104	4	Clamp, Hose	
71	88521205	2	Locknut 5/16in-18NC	
72	91401281	1	Hold-down, Battery	
73	1001093382	2	Rod, Hold-Down	
74	1001105833	NLA	Valve, Oil Drain (Use p/n 4640750)	
74	0100020	AR	Sealant, Pipe	
75	1001109595	1	Plate, Radiator Mounting	
76	1001112077	1	Caterpillar Tier IVi Engine Assembly	
77	1001107705	1	Hose, Radiator (Top)	
78	4791400	4	Starwasher 1/4in	
		Ref	**CATERPILLAR TIER IVi ENGINE INSTALLATIONS**	
	1001110210	Ref	**2WD Without Arctic Package**	D
	1001110211	Ref	**4WD Without Arctic Package**	D
	1001110209	Ref	**4WD With Arctic Package**	D
101	0100011	AR	Compound, Locking	
102	0100020	AR	Sealant, Thread	
103	0641507	3	Bolt 5/16in-18NC x 7/8in	
104	0641510	2	Bolt 5/16in-18NC x 1-1/4in	
105	3900272	3	Bolt 5/16in-18NC x 1-3/4in	
106	0641610	1	Bolt 3/8in-16NC x 1-1/4in	
107	0641808	1	Bolt 1/2in-13NC x 1in	

ITEM	PART NUMBER	QTY	DESCRIPTION	REV
108	0642010	1	Bolt 5/8in-11NC x 1-1/4in	
109	1320022	7	Clamp, Hose	
110	1320176	1	Clamp	
111	1701505	1	Decal - Diesel (Not Shown - Located on Hood)	
112	2180348	1	Fitting	
113	2220313	1	Fitting,90	
114	2221176	1	Fitting	
115		Ref	Fluid, Anti-Freeze Options (Not Shown):	
115	2300004	2.6 gal /9.8L	Machines without Arctic Package	
115	2300041	2.6 gal /9.8L	Machines with Arctic Package	
116	2720058	30 ft/9.1m	Hose	
117	2750532	6 ft/1.8m	Hose 3/8in	
118	3311505	8	Locknut 5/16in-18NC	
119	3380429	1	Panel, Rubber	
120	3422446	1	Pin, Pivot	
121	3460544	1	Pipe, Exhaust	
122	3539957	2	Plate, Hold Down	
123	3841143	1	Keeper, Pin	
124	4751500	4	Flatwasher 5/16in Regular	
125	4752000	1	Flatwasher 5/8in Regular	
		Ref	**Note: Arctic Package Items 127-130 Not Shown - Used on Arctic Machines Only.**	
127	1060625	1	Cable, Immersion Heater	
128	1320223	1	J-Clip 1/2in	
129	1702943	1	Decal - Hydraulic Tank Heater (Located on bottom of Hydraulic Oil Tank)	
130	2580050	1	Heater, Hydraulic Tank	
		Ref	**CATERPILLAR TIER IVi ENGINE WITH PUMPS ASSEMBLIES**	
	1001110202	Ref	**2WD Without Arctic Package**	B
	1001110203	Ref	**4WD Without Arctic Package**	B
	1001110201	Ref	**4WD With Arctic Package**	B
201	0100011	AR	Compound, Locking	
202	0641407	1	Bolt 1/4in-20NC x 7/8in	
203	0641812	2	Bolt 1/2in-18NC x 1-3/4in	
204		Ref	Oil, Motor Options (Not Shown):	
204	3020016	2.5 gal /9.5L	Oil, Motor 15W-40 (Without Arctic Package)	
204	3020044	2.5 gal /9.5L	Oil, Motor 0W-40 (With Arctic Package)	
205	3311405	1	Locknut 1/4in-20NC	
206	3422532	1	Pin, Hitch	
207		Ref	Piston Pump Assembly Options (See PISTON PUMP ASSEMBLY for Breakdown):	
207	3600394	1	Piston Pump Assembly 2WD	
207	1001117799	1	Piston Pump Assembly 4WD	
208	3600395	1	Gear Pump Assembly (See Gear Pump Assembly for Breakdown)	
209	3790152	1	O-Ring	
210	3931620	2	Bolt 3/8in-16NC x 1-1/4in	
211	3960389	5 ft/1.5m	Seal, Hood	
212	4751400	1	Flatwasher 1/4in Regular	

ITEM	PART NUMBER	QTY	DESCRIPTION	REV
213	4891600	2	Flatwasher 3/8in Hardened	
215	1001112763	1	Battery Cable Kit	B
215A	7027028	1	Cable, Battery (Red)	
215B	7027029	1	Cable, Battery (Black)	
215C	7027002	1	Cable (Red)	
215D	7027033	1	Cable (Black)	
		Ref	**Note: Arctic Package Items 216 - 226 Not Shown - Used on Arctic Machines Only.**	
216	0641608	2	Bolt 3/8in-16NC x 1in	
217	1060626	1	Cord, 3-Way Extension (Located on Left Front of Engine)	
218	1320223	2	Clamp	
219	1702941	1	Decal - Battery Heater (Located on Battery Heater)	
220	1702942	1	Decal - Engine Block Heater (Located on Right Side of Engine)	
221	1702944	1	Decal - Heater Cord (Located on Left Front of Engine)	
222	2580024	1	Heater, Battery (Located on Battery)	
223	2580055	1	Heater, Block (Located on Left Side of Engine)	
224	3311605	2	Locknut 3/8in-16NC	
225	3980007	1	Seat, Battery (Located Under Battery)	
226	4751600	2	Flatwasher 3/8in Regular	
	1001112077	Ref	**CATERPILLAR TIER IVI ENGINE WITH ECM ASSEMBLY**	E
301	0100011	AR	Compound, Locking	
302	0100020	AR	Sealant, Thread	
303	0700620	1	Bolt M6 x 60mm	
304	0700808	5	Bolt M8 x 16mm	
305	0701010	2	Bolt M10 x 20mm	
306	0760606	2	Bolt M6 x 12mm	
307	0760610	2	Bolt M6 x 20mm	
308	0760612	NLA	Bolt M6 x 25mm (Use p/n 4031709)	
309	8303541	1	Screw M6 x 35mm	
310	0700616	2	Bolt M6 x 40mm	
311	0761210	2	Bolt M12 x 20mm	
312	8406009	1	Clamp, Cable	
313	1320224	1	Clamp, Cable	
314	8406105	2	Clip, Tube	
315	3290507	1	Locknut M5	
316	4811700	12	Flatwasher M6	
317	4811900	5	Flatwasher M8	
318	4812000	2	Flatwasher M10	
319	4812100	2	Flatwasher M12	
320	4811600	1	Flatwasher M5	
321	1001097553	1	Washer, Coolant Sensor	
322	1001109064	1	Caterpillar Tier IVi Engine Assembly	
323	1001112057	1	Bracket	
324	1001112059	5	Bumper	
325	1001112067	1	ECM	
326	1001112068	1	Sensor, Speed	
327	1001112069	1	Sensor, Temperature	
328	1001112070	1	Switch, Oil Pressure	
329	1001112071	1	Harness, Engine (Not Shown - See ELECTRICAL SECTION for Breakdown)	
330	1001112072	1	Bracket	
331	1001112073	1	Actuator	

SECTION 2 - TURNTABLE

ITEM	PART NUMBER	QTY	DESCRIPTION	REV
331	1001112849	1	Linkage Assembly	
332	1001112570	1	Spacer	
334	1320263	1	Clamp, Cable	
335	1001112075	1	Bolt	
336	1001112592	1	Bearing	
337	1001116595	1	Spacer	
338	8406109	1	Clip, Tube	
	1001109064	Ref	**ENGINE COMPONENTS**	B
401	70001051	1	Valve, Crankcase Actuator Shut-Off	
402	70001120	1	Pump, Water	
402	70001742	1	Pulley, Water Pump	
402	70002765	1	Hose, By-Pass (Not Shown)	
403	See Note	NSS	Head, Cylinder (Note: Not Available for Purchase)	
403	7026801	1	Gasket, Valve Cover	
403	70002764	1	Gasket, Rear Head	
403	70002762	15	Seat, Valve	
403	70002761	17	Bolt, Head	
404	7026839	1	Pump, Fuel Supply	
404	7026830	1	Element, Fuel Filter	
404	70002834	1	Bowl, Water Collection	
404	70002835	1	Seal Kit - Water Separator	
404	70002833	1	Ring, Fuel Pump Retaining	
405	70002844	1	Dipstick Oil Level	
405	70002843	1	Seal, Dipstick Tube	
406	70002845	1	Pump, Oil (Not Shown)	
406	70002846	1	O-Ring, Oil Pump (Not Shown)	
407	70002849	1	Pump, Fuel Injection	
407	70002847	1	O-Ring, Fuel Injection Pump Flange	
407	70002848	1	Gasket, Fuel Injection Pump	
407	70002850	1	Solenoid, Fuel Shut-Off	
409	7026802	1	Flywheel	
409	7026803	1	Gear, Flywheel	
409	7026804	1	Gasket (Not Shown - Between Flywheel Housing and Engine Block)	
409	7026805	1	Seal, Rear Main (Not Shown - Rear of Flywheel Housing)	
409	7026807	1	Seal, Front Main (Located in Front Housing)	
410	7026800	1	Cap Oil Filler (Top of Valve Cover)	
411	7026806	1	Cap, Filler (Front Side of Engine)	
412	7026810	1	V-Belt	
413	7026811	1	Filter, Oil	
413	7026812	1	O-Ring (Between Bolt and Oil Filter Bracket)	
413	7026813	1	O-Ring (Between Oil Filter Bracket and Engine Block)	
414	7026819	1	Engine Cooler Assembly (Not Shown)	
414	7026816	2	O-Ring (Between Cover and Cooler)	
414	7026817	4	O-Ring (Between Cover and Cooler)	
415	7026822	1	Thermostat	
415	7026821	1	Gasket (Between Regulator and Thermostat Housing)	
415	7026820	1	Gasket (Between Regulator and Engine Head)	
416	7026814	1	Relief Valve, Oil Pressure (Not Shown)	
416	7026815	1	Gasket, Relief Valve	
417	See Note	NSS	Injector, Fuel (Not Shown) (Note: Not Available for Purchase)	
417	70002763	4	Gasket, Fuel Line (Not Shown)	

ITEM	PART NUMBER	QTY	DESCRIPTION	REV
418	7026831	1	Alternator	
419	7026832	1	Plug, Glow (Not Shown)	
420	7026833	1	Starter (Not Shown - Located on other side of engine)	
421	7026826	1	Gasket, Exhaust Manifold to Cylinder Head (Not Shown)	
421	7026827	1	Gasket, Exhaust Manifold to Exhaust Pipe (Not Shown)	
421	70002852	4	Stud, Exhaust Manifold (Not Shown)	
422	7026829	1	Gasket, Intake Manifold to Cylinder Head (Not Shown)	
422	7026828	1	Gasket, Intake Manifold to Intake Tube (Not Shown)	
423	7026808	1	Plug, Oil Pan (Not Shown)	
423	7026809	1	Gasket, Oil Plug	
424	70002851	1	Gasket Kit (Not Shown)	
425	4569371	1	Tube, Intake	

FIGURE 2-11. DEUTZ ENGINE INSTALLATION

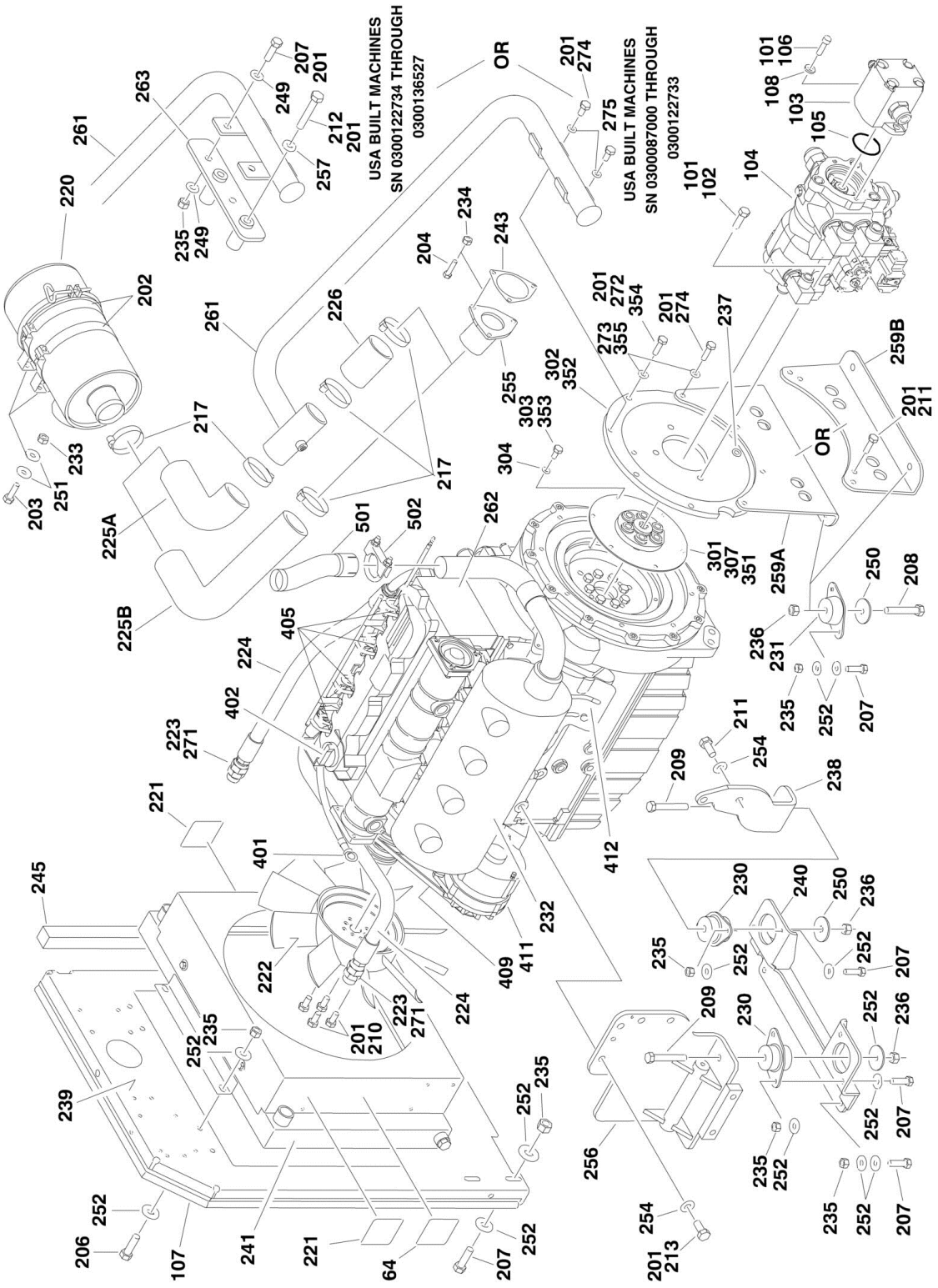

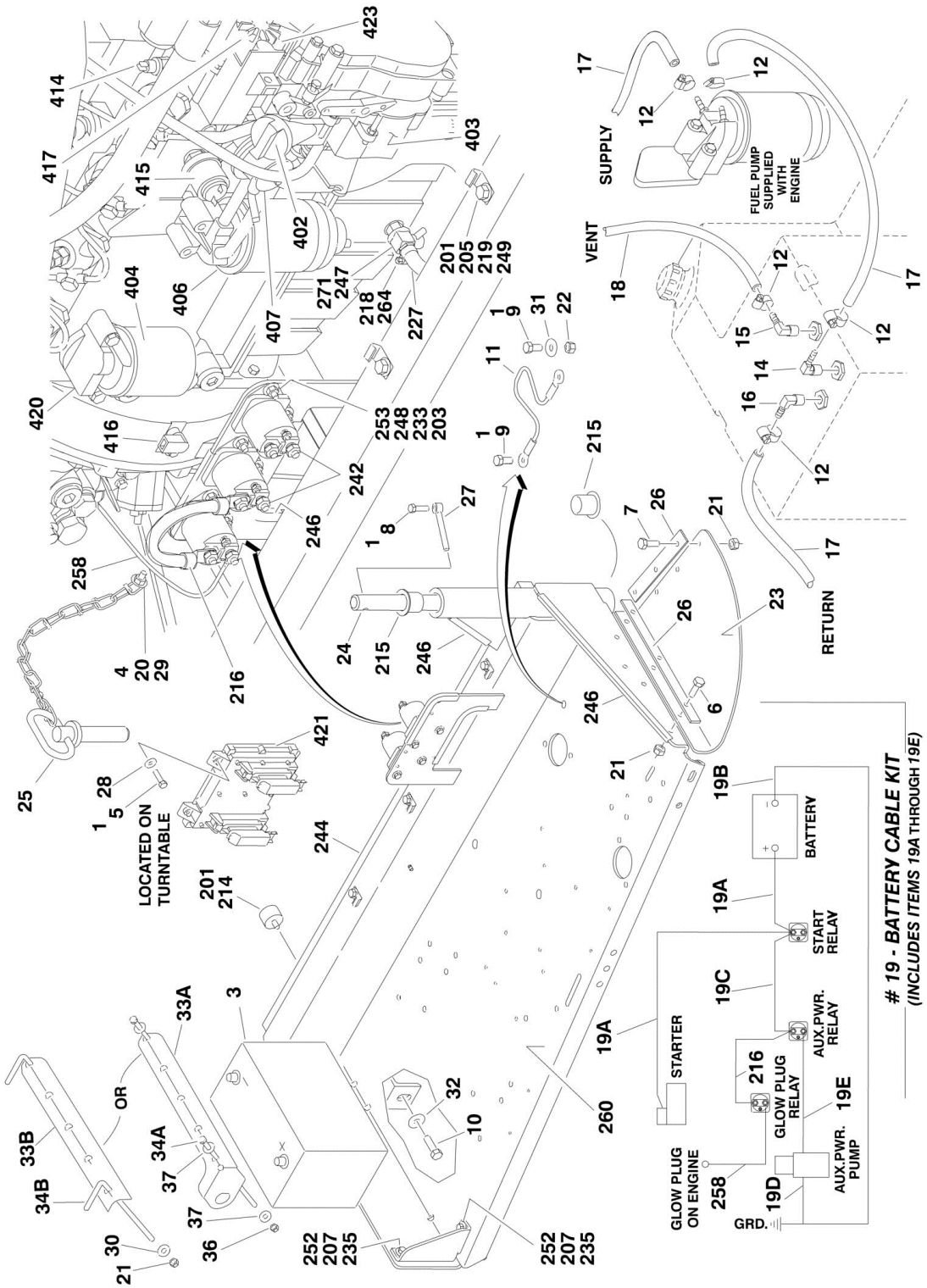
LOCATED ON TURNTABLE
OR
SUPPLY
VENT
RETURN
FUEL PUMP SUPPLIED WITH ENGINE
BATTERY
START RELAY
AUX.PWR. RELAY
GLOW PLUG RELAY
AUX.PWR. PUMP
STARTER
GLOW PLUG ON ENGINE
GRD.
19 - BATTERY CABLE KIT
(INCLUDES ITEMS 19A THROUGH 19E)

FIGURE 2-11. DEUTZ ENGINE INSTALLATION

ITEM	PART NUMBER	QTY	DESCRIPTION	REV
		Ref	**DEUTZ ENGINE INSTALLATIONS**	
		Ref	**2WD Without Arctic Package**	
		Ref	**USA Built Machines**	
	0274298	Ref	**Tier II Engines (SN 0300087000 through 0300126188)**	G
	1001099216	Ref	**Tier III/IVi Engines (SN 0300126189 through 0300169952)**	E
	1001099216	Ref	**Tier III/IVi Engines (All Specs except ANSI, CSA and Japanese Specs) (SN 0300169953 through 0300171769)**	E
	1001137762	Ref	**Tier IVi-Flex Engines (ANSI, CSA and Japanese Specs) (SN 0300169953 through 0300171769)**	B
		Ref	**4WD Without Arctic Package**	
		Ref	**USA Built Machines**	
	0274297	Ref	**Tier II Engines (SN 0300087000 through 0300126188)**	H
	1001094104	Ref	**Tier III/IVi Engines (SN 0300126189 through 0300169952)**	E
	1001094104	Ref	**Tier III/IVi Engines (All Specs except ANSI, CSA and Japanese Specs) (SN 0300169953 through 0300171769)**	E
	1001137763	Ref	**Tier IVi-Flex Engines (ANSI, CSA and Japanese Specs) (SN 0300169953 through 0300171769)**	B
		Ref	**China Built Machines**	
	1001094104	Ref	**Tier III/IVi Engines (SN B300000100 through B300000969)**	E
		Ref	**4WD With Arctic Package**	
		Ref	**USA Built Machines**	
	0275343	Ref	**Tier II Engines (SN 0300087000 through 0300126188)**	E
	1001099215	Ref	**Tier III/IVi Engines (SN 0300126189 through 0300169952)**	E
	1001099215	Ref	**Tier III/IVi Engines (All Specs except ANSI, CSA and Japanese Specs) (SN 0300169953 through 0300171769)**	E
	1001137764	Ref	**Tier IVi-Flex Engines (ANSI, CSA and Japanese Specs) (SN 0300169953 through 0300171769)**	B
		Ref	**China Built Machines**	
	1001099215	Ref	**Tier III/IVi Engines (SN B300000100 through B300000969)**	E
1	0100011	AR	Compound, Locking	
2	0100020	AR	Sealant, Pipe (Not Shown)	
3	0400075	1	Battery	
4	0641407	1	Bolt 1/4in-20NC x 7/8in	
5	0641410	4	Bolt 1/4in-20NC x 1-1/4in	
6	0641508	3	Bolt 5/16in-18NC x 1in	
7	3900272	3	Bolt 5/16in-18NC x 1-3/4in	
8	0641610	1	Bolt 3/8in-16NC x 1-1/4in	
9	0641808	2	Bolt 1/2in-13NC x 1in	
10	0642010	1	Bolt 5/8in-11NC x 1-1/4in	
11	1060637	1	Cable, Lanyard	
12	1320022	AR	Clamp, Hose	
13	1701505	1	Decal - Diesel (Not Shown - Located on Hood)	
14	2180348	1	Fitting, Straight Barbed	
15	2220313	1	Fitting, 90	
16	2221176	1	Fitting, 90 Barbed	
17	2720058	26 ft/7.9m	Hose	
18	2750532	6 ft/1.8m	Hose	
19	2902296	1	Battery Cable Kit	B
		Ref	**Note: 2902296 Rev A version is no longer available. Verify whether machine is equipped with 2 or 3 relays on the engine tray. If there are 3 relays, purchase latest revision of 2902296 kit. If there are 2 relays, purchase individual**	

ITEM	PART NUMBER	QTY	DESCRIPTION	REV
			items as replacement.	
19A		Ref	Cable, Battery (Red)	
19A	1001116241	1	Machines with 2 Relays on Engine Tray (was p/n 7027000)	
19A	1001116240	1	Machines with 3 Relays on Engine Tray (was p/n 7027000)	
19B	7027004	1	Cable, Battery (Black)	
19C	7027001	1	Cable (Red) (No Longer Part of 2902296 Kit - Used on USA Built Machines) **(SN 0300087000 through 0300138090)**	
19D	7027003	1	Cable (Black)	
19E	7027002	1	Cable (Red)	
20	3311405	1	Locknut 1/4in-20NC	
21		Ref	Locknut Options:	
21	3311505	AR	Locknut 5/16in-18NC	
21	88521205	AR	Locknut with Nylon Lock 5/16in-18NC	
22	3311801	1	Nut 1/2in-13NC	
23	3380429	1	Panel, Rubber	
24	3422446	1	Pin, Pivot	
25	3422532	1	Pin, Hitch with Chain	
26	3539957	2	Plate, Hold-Down	
27	3841143	1	Pin, Keeper	
28	4711400	4	Flatwasher 1/4in Thin	
29	4751400	1	Flatwasher 1/4in Regular	
30	4751500	AR	Flatwasher 5/16in Regular	
31	4751800	1	Flatwasher 1/2in Regular	
32	4752000	1	Flatwasher 5/8in Regular	
33		Ref	Hold-Down, Battery Options:	
33A	0181727	1	USA Built Machines **(SN 0300087000 through 0300110250)**	
33B	91401281	1	USA Built Machines **(SN 0300110251 through 0300171769)**	
33B	91401281	1	China Built Machines **(SN B300000100 through B300000969)**	
34		Ref	Hardware, Battery Hold-down Options:	
34A	0630498	2	USA Built Machines(Bolt) **(SN 0300087000 through 0300110250)**	
34B	1001093382	2	USA Built Machines (J-Hook) **(SN 0300110251 through 0300171769)**	
34B	1001093382	2	China Built Machines (J Hook) **(SN B300000100 through B300000969)**	
36	3311605	AR	Locknut 3/8in-16NC	
36	88521205	AR	Locknut 5/16in-18NC	
37	4751600	AR	Flatwasher 3/8in Regular	
		Ref	**Note: Arctic Package Items (Used on Arctic Machines Only) - Items 51-62 Not Shown.**	
51	1060626	1	Cord, 3 Way Extension (Located on Left Front of Engine)	
52	1702941	1	Decal - Battery Heater (Located on Battery Heater)	
53	1702942	1	Decal - Engine Block Heater (Located on Right Side of Engine)	
54	1702943	1	Decal - Hyd Tank Heater (Located on bottom of Hyd Oil Tank)	
55	1702944	1	Decal - Heater Cord (Located on Left Front of Engine)	
56	2580024	1	Heater, Battery (Located on Battery)	
57	2580050	1	Heater, Hydraulic Tank (Located on Bottom of Hyd Oil Tank)	
58	3980007	1	Seat, Battery (Located on Battery)	
59	0641507	1	Bolt 5/16in-18NC x 7/8in	
60	0641608	1	Bolt 3/8in-16NC x 1in	
61	1060625	1	Cable, Immersion Heater (Located on bottom of Hyd Oil Tank)	

ITEM	PART NUMBER	QTY	DESCRIPTION	REV
62	1320223	2	Clamp	
64		Ref	Decal - Warning Explosion/Fire Options:	
64	1704972	1	ANSI Spec	
64	1706098	1	Australian and CE Spec	
64	1706059	1	Brazilian Spec	
64	1706060	1	Chinese Spec	
64	1706064	1	CSA Spec	
64	1706062	1	Japanese Spec	
64	1706061	1	Korean Spec	
64	1706063	1	Spanish Language	
		Ref	**ENGINE AND PUMP ASSEMBLIES**	
		Ref	**2WD Without Arctic Package**	
		Ref	**USA Built Machines**	
	2000281	Ref	**Tier II Engines (SN 0300087000 through 0300126188)**	D
	1001099217	Ref	**Tier III/IVi Engines (SN 0300126189 through 0300169952)**	E
	1001099217	Ref	**Tier III/IVi Engines (All Specs except ANSI, CSA and Japanese Specs) (SN 0300169953 through 0300171769)**	E
	1001137761	Ref	**Tier IVi-Flex Engines (ANSI, CSA and Japanese Specs) (SN 0300169953 through 0300171769)**	B
		Ref	**4WD Without Arctic Package**	
		Ref	**USA Built Machines**	
	2000280	Ref	**Tier II Engines (SN 0300087000 through 0300126188)**	E
	1001094103	Ref	**Tier III/IVi Engines (SN 0300126189 through 0300169952)**	G
	1001094103	Ref	**Tier III/IVi Engines (All Specs except ANSI, CSA and Japanese Specs) (SN 0300169953 through 0300171769)**	G
	1001137750	Ref	**Tier IVi-Flex Engines (ANSI, CSA and Japanese Specs) (SN 0300169953 through 0300171769)**	B
		Ref	**China Built Machines**	
	1001094103	Ref	**Tier III/IVi Engines (SN B300000100 through B300000969)**	E
		Ref	**4WD With Arctic Package**	
		Ref	**USA Built Machines**	
	2000366	Ref	**Tier II Engines (SN 0300087000 through 0300126188)**	C
	1001098475	Ref	**Tier III/IVi Engines (SN 0300126189 through 0300169952)**	F
	1001098475	Ref	**Tier III/IVi Engines (All Specs except ANSI, CSA and Japanese Specs) (SN 0300169953 through 0300171769)**	F
	1001137753	Ref	**Tier IVi-Flex Engines (ANSI, CSA and Japanese Specs) (SN 0300169953 through 0300171769)**	B
		Ref	**China Built Machines**	
	1001098475	Ref	**Tier III/IVi Engines (SN B300000100 through B300000969)**	F
101	0100011	AR	Compound, Locking	
102	0641812	2	Bolt 1/2in-13NC x 1-1/2in	
103	3600395	1	Gear Pump Assembly with Fittings (See GEAR PUMP ASSEMBLY for Breakdown)	
104		Ref	Piston Pump Assembly with Fittings Options (See PISTON PUMP ASSEMBLY for Breakdown):	
104	3600394	1	2WD	
104	3600396	1	4WD (USA Built Machines) **(SN 0300087000 through 0300139335)**	
104	1001117799	1	4WD (USA Built Machines) **(SN 0300139336 through 0300171769)**	
104	1001117799	1	4WD (China Built Machines) **(SN B300000100 through B300000969)**	
105	3790152	1	O-Ring	
106	3931620	2	Capscrew 3/8in-16NC x 1-1/4in	

ITEM	PART NUMBER	QTY	DESCRIPTION	REV
107	3960389	5 ft/1.5m	Seal	
108	4891600	2	Flatwasher 3/8in Hardened	
109	3020016	3.75 gal /14.19L	Oil, Motor (Not Shown)	
		Ref	**ENGINE ASSEMBLIES**	
		Ref	**Machines Without Arctic Package**	
		Ref	**USA Built Machines**	
	2000279	Ref	**Tier II Engines (SN 0300087000 through 0300092725)**	E
	2000342	Ref	**Tier II Engines (SN 0300092726 through 0300126188)**	B
	1001094102	Ref	**Tier III/IVi Engines (SN 0300126189 through 0300169952)**	I
	1001094102	Ref	**Tier III/IVi Engines (All Specs except ANSI, CSA and Japanese Specs) (SN 0300169953 through 0300171769)**	I
	1001137749	Ref	**Tier IVi-Flex Engines (ANSI, CSA and Japanese Specs) (SN 0300169953 through 0300171769)**	B
		Ref	**China Built Machines**	
	1001094102	Ref	**Tier III/IVi Engines (SN B300000100 through B300000969)**	I
		Ref	**Machines With Arctic Package**	
		Ref	**USA Built Machines**	
	2000365	Ref	**Tier II Engines (SN 0300087000 through 0300126188)**	B
	1001098476	Ref	**Tier III/IVi Engines (SN 0300126189 through 0300169952)**	I
	1001098476	Ref	**Tier III/IVi Engines (All Specs except ANSI, CSA and Japanese Specs) (SN 0300169953 through 0300171769)**	I
	1001137752	Ref	**Tier IVi-Flex Engines (ANSI, CSA and Japanese Specs) (SN 0300169953 through 0300171769)**	B
		Ref	**China Built Machines**	
	1001098476	Ref	**Tier III/IVi Engines (SN B300000100 through B300000969)**	I
	0256690	Ref	**MUFFLER INSTALLATION - CATALYTIC**	-
201	0100011	AR	Compound, Locking	
202	0340041	2	Band, Air Cleaner	
203	0641407	AR	Bolt 1/4in-20NC x 7/8in	
204	0641510	3	Bolt 5/16in-18NC x 1-1/4in	
205	0641606	3	Bolt 3/8in-16NC x 3/4in	
206		Ref	Bolt Options:	
206	0641610	AR	Bolt 3/8in-16NC x 1-1/4in	
206	0641609	AR	Bolt 3/8in-16NC x 1-1/8in	
207		Ref	Bolt Options:	
207	0641608	AR	Bolt 3/8in-16NC x 1in	
207	0641610	AR	Bolt 3/8in-16NC x 1-1/4in	
208	0641818	2	Bolt 1/2in-13NC x 2-1/4in	
209	0641826	2	Bolt 1/2in-13NC x 3-1/4in	
210	0700808	4	Bolt 8mm x 16mm	
211	0701414	AR	Bolt 14mm x 30mm	
212	0711025	AR	Bolt 10mm x 85mm (USA Built Machines) **(SN 0300087000 through 0300136527)**	
213	0711414	AR	Bolt 14mm x 30mm	
214	0940070	1	Bumper	
215	0961986	2	Bushing, Flanged	
216	1060904	1	Cable, Jumper (USA Built Machines) **(SN 0300092726 through 0300171769)**	
216	1060904	1	Cable, Jumper (China Built Machines) **(SN B300000100 through B300000969)**	
217	1320016	AR	Clamp	
218	1320022	1	Clamp, Hose (USA Built Machines) **(SN 0300087000 through**	

ITEM	PART NUMBER	QTY	DESCRIPTION	REV
			0300136527)	
219	1320223	4	J-Clip	
220	1340060	1	Air Cleaner Assembly Filter Element	
220	7012664	1	Element, Filter (Not Shown)	
221	1703162	2	Decal - Caution Fan Blade	
222	2060025	1	Fan	
223	2220451	2	Fitting, Straight	
224	2720398	2	Hose, Oil Cooler	
225		Ref	Elbow, Rubber Options:	
225A	2720434	1	Elbow USA Built Machines **(SN 0300087000 through 0300136526)**	
225B	1001091179	1	Elbow USA Built Machines **(SN 0300136527 through 0300171769)**	
225B	1001091179	1	Elbow China Built Machines **(SN B300000100 through B300000969)**	
226	2720449	1	Hose, Air Cleaner (USA Built Machines) **(SN 0300087000 through 0300136527)**	
227		Ref	Hose Options:	
227	2750532	1 ft/30cm	Hose - 3/8in	
227	1001091892	6 in/15cm	Hose - 5/8in	
229		Ref	Oil, Motor Options (Not Shown):	
229	3020016	3.75 gal /14.19L	Without Arctic Package	
229	3020044	3.75 gal /14.19L	With Arctic Package	
230	3200362	2	Mount, Motor	
231	3200406	2	Mount, Motor	
232		Ref	Muffler Options:	
232	3220103	1	Muffler, Spark Arresting (Standard)	
232	3220104	1	Muffler, Catalytic (Optional)	
232		Ref	Muffler Components:	
232		Ref	Clamp Options:	
232	1320176	1	Saddle Clamp Used on Spark Arresting	
232	70001017	1	Band Clamp Used on Catalytic	
232	7024398	1	Tube, Exhaust	
232	7024560	1	Plug, Brass	
233	3311405	AR	Locknut 1/4in-20NC	
234	3311505	3	Locknut 5/16in-18NC	
235	3311605	AR	Locknut 3/8in-16NC	
236	3311805	4	Locknut 1/2in-13NC	
237	3520054	2	Plug, Hole **(SN 0300126189 through 0300171769)**	
238	3537416	1	Plate, Engine Mounting (Front Right Side)	
239	3539872	1	Plate, Radiator Mounting	
240	3539971	1	Plate, Engine Mounting (Front Bottom)	
241	3620033	NLA	Radiator (Use p/n 1001150998)(USA Built Machine) **(SN 0300087000 through 0300171410)**	
241	1001150998	1	Radiator, (USA Built Machine) **(SN 0300171411 through 0300171769)**	
241	3620033	NLA	Radiator (Use p/n 1001150998) (China Built Machine) **(SN B300000100 through B300000868)**	
241	1001150998	1	Radiator, (China Built Machine) **(SN B300000869 through B300000969)**	
242	3740067	Ref	Relay Options:	
242	3740067	2	Relay USA Built Machines **(SN 0300087000 through**	

ITEM	PART NUMBER	QTY	DESCRIPTION	REV
			0300092725)	
242	3740067	3	Relay USA Built Machines **(SN 0300092726 through 0300171769)**	
242	3740067	3	Relay China Built Machines **(SN B300000100 through B300000969)**	
243	3960407	1	Gasket, Air Intake	
244	3960468	1	Seal	
245	3960469	1	Seal	
246	4060805	37 in/1m	Flex-Trim	
247	1001104308	NLA	Valve, Oil Drain (Use p/n 4640751)	
248		Ref	Flatwasher Options:	
248	4751400	6	Flatwasher 1/4in Regular	
248	4711400	6	Flatwasher 1/4in Thin	
249	4711600	AR	Flatwasher 3/8in Thin	
250	4740274	4	Washer, Snubbing	
251	4751400	AR	Flatwasher 1/4in Regular	
252	4751600	AR	Flatwasher 3/8in Regular	
253	4791400	AR	Starwasher 1/4in	
254		Ref	Flatwasher Options:	
254	4711900	6	Flatwasher 9/16in Thin	
254	4812200	6	Flatwasher M14	
255	4845395	1	Adapter, Air Intake	
256	4846566	1	Plate, Engine Mounting (Front Left Side)	
257	4891600	AR	Flatwasher 3/8in Regular	
258	4923379	1	Harness, Glow Plug (USA Built Machines) **(SN 0300092726 through 0300171769)**	
258	4923379	1	Harness, Glow Plug (China Built Machines) **(SN B300000100 through B300000969)**	
259		Ref	Plate, Engine Mounting (Rear) Options:	
259A	3534978	1	Tier II Engines (USA Built Machines) **(SN 0300087000 through 0300126188)**	
259B	1001093943	1	Tier III Engines/Tier IVi-Flex Engines (USA Built Machines) **(SN 0300126189 through 0300171769)**	
259B	1001093943	1	Tier III & IVi Engines (China Built Machines) **(SN B300000100 through B300000969)**	
260		Ref	Tray, Engine Options:	
260	4845404	1	Tier II Engines (USA Built Machines) **(SN 0300087000 through 0300126188)**	
260	1001094321	1	Tier III Engines/Tier IVi-Flex Engines (USA Built Machines) **(SN 0300126189 through 0300171769)**	
260	1001094321	1	Tier III & IVi Engines (China Built Machines) **(SN B300000100 through B300000969)**	
261		Ref	Tube, Tuning	
261	4569171	1	Tier II Engines (USA Built Machines) **(SN 0300087000 through 0300126188)**	
261	1001094521	1	Tier III Engines (USA Built Machines) **(SN 0300126189 through 0300136526)**	
261	Not Required	0	Tier III & IVi Engines/Tier IVi-Flex Engines (USA Built Machines) **(SN 0300136527 through 0300171769)**	
261	Not Required	0	Tier III & IVi Engines (China Built Machines) **(SN B300000100 through B300000969)**	
262		Ref	Engine, Deutz - F4M2011 Options:	
262	2000274	1	USA Built Machines (Tier II) **(SN 0300087000 through 0300092725)**	
262	2000339	1	USA Built Machines (Tier II) **(SN 0300092726 through**	

ITEM	PART NUMBER	QTY	DESCRIPTION	REV
			0300126188)	
262	1001098211	1	USA Built Machines (Tier III & IVi) **(SN 0300126189 through 0300169952)**	
262	1001098211	1	USA Built Machines All Specs except ANSI, CSA and Japanese Specs (Tier III & IVi) **(SN 0300169953 through 0300171769)**	
262	1001137748	1	USA Built Machines ANSI, CSA and Japanese Specs (Tier IVi-Flex) **(SN 0300169953 through 0300171769)**	
262	1001098211	1	China Built Machines (Tier III & IVi) **(SN B300000100 through B300000969)**	
263	1001098916	1	Support, Resonator (USA Built Machines) **(SN 0300126189 through 0300136527)**	
264	1320022	1	Clamp	
271	0100020	AR	Sealant, Pipe	
272	0701012	2	Bolt 10mm x 25mm (USA Built Machines) **(SN 0300087000 through 0300126189)**	
273	4711700	AR	Flatwasher 7/16in Thin (USA Built Machines) **(SN 0300087000 through 0300126189)**	
274	0701015	6	Bolt 10mm x 35mm (USA Built Machine) **(SN 0300087000 through 0300126189)**	
275	4751700	2	Flatwasher 7/16in Regular (USA Built Machines) **(SN 0300087000 through 0300126189)**	
		Ref	**Note: Arctic Package Item 276 Not Shown - Used on Arctic Machines Only.**	
276	2580062	1	Heater, Engine Block	
	0256847	Ref	**PUMP COUPLING INSTALLATION - TIER II ENGINES (USA BUILT MACHINES) (SN 300087000 through 0300126188)**	2
301	1660234	1	Coupling, Hayes	
302	0080163	1	Plate, Pump Adapter	
303	0700810	6	Bolt M8 x 20mm	
304	4831900	6	Lockwasher M8	
307	3020021	AR	Grease, Coupling (Not Shown)	
	2902065	Ref	**PUMP COUPLING INSTALLATION - TIER III ENGINES/TIER IVI-FLEX ENGINES (USA BUILT MACHINES) (SN 0300126189 through 0300171769)**	I
	2902065	Ref	**PUMP COUPLING INSTALLATION - TIER III ENGINES/TIER IVI-FLEX ENGINES (CHINA BUILT MACHINES) (SN B300000100 through B300000969)**	I
351	70000793	1	Coupling	
352	See Note	NSS	Plate, Pump Adapter (Not Shown) (Note: Use p/n 2902065)	
353	See Note	NSS	Bolt M10 x 20mm Grade 10.9 (Note: Not Available - Purchase Locally)	
354	See Note	NSS	Bolt M10 x 30mm Grade 10.9 (Note: Not Available - Purchase Locally)	
355	See Note	NSS	Flatwasher M10 (Note: Not Available - Purchase Locally)	
		Ref	**ENGINE COMPONENTS**	
		Ref	**USA Built Machines**	
	2000274	Ref	**Tier II Engines (SN 0300087000 through 0300092725)**	B
	2000339	Ref	**Tier II Engines (SN 0300092726 through 0300126188)**	B
	1001098211	Ref	**Tier III & IVi Engines (SN 0300126189 through 0300169952)**	B
	1001098211	Ref	**Tier III & IVi Engines (All Specs except ANSI, CSA and Japanese Specs) (SN 0300169953 through 0300171769)**	B
	1001137748	Ref	**Tier IVi-Flex Engines (ANSI, CSA and Japanese Specs) (SN 0300169953 through 0300171769)**	B
		Ref	**China Built Machines**	
	1001098211	Ref	**Tier III & IVi Engines (SN B300000100 through B300000969)**	C

ITEM	PART NUMBER	QTY	DESCRIPTION	REV
401	7026631	1	Dipstick	
401	7020487	1	Seal, Dipstick	
402	7020465	1	Cap, Filler	
403		Ref	Pump, Oil Lube Options:	
403	7020484	1	Pump for 2000274 & 2000339 Tier II Engines	
403	70001850	1	Pump for 1001098211 Tier III & 1001137748 Tier IVi-Flex Engines	
403	7020468	1	Seal Between Oil Pump and Engine Block (Not Shown)	
404	7016331	1	Filter, Oil	
404	70001423	1	Bracket, Oil Filter	
405	70003478	4	Injector, Fuel	
405		Ref	Pump, Injector Options:	
405		Ref	Pump Options for 2000274 & 2000339 Tier II Engines	
405	7027246	4	Series A Injector	
405	7027608	4	Series B Injector	
405	7027609	4	Series C Injector	
405	7027610	4	Series D Injector	
405	7000663	4	Pump Options for 1001098211 Tier III & IVi & 1001137748 Tier IVi-Flex Engines	
405	70000912	4	Series A Injector	
405	70000913	4	Series B Injector	
405	70000914	4	Series C Injector	
405	70000915	4	Series D Injector	
405		Ref	Gasket Options (1 Per Injector):	
405	7020447	4	Gasket for 2000274 & 2000339 Tier II Engines	
405	See Note	NSS	Gasket for 1001098211 Tier III & IVi & 1001137748 Tier IVi-Flex Engines (Note: Not Available for Purchase)	
406	7016328	1	Filter, Fuel	
407		Ref	Pump Fuel Supply Options:	
407	70000916	1	Pump for 2000274 & 2000339 Tier II Engines (was p/n 7027238)	
407	70000916	1	Pump for 1001098211 Tier III & IVi & 1001137748 Tier IVi-Flex Engines	
407	70001435	1	Repair Kit for 70000916 Pump	
407	70000919	1	Hand Pump Used on 70000916 Pump	
407	70000918	1	Seal, Hand Pump Used on 70000916 Pump	
407		Ref	O-Seal Options Between Fuel Pump and Engine Block (Not Shown):	
407	7020411	1	O-Seal for 2000274 & 2000339 Tier II Engines	
407	70000917	1	O-Seal for 1001098211 Tier III & IVi & 1001137748 Tier IVi-Flex Engines	
408	7020449	4	Gasket, Intake Manifold (Not Shown)	
409	7020408	1	V-Belt	
410	7020471	4	Gasket, Exhaust Manifold to Engine Block (Not Shown)	
410	70002200	8	Stud (Not Shown)	
410	70003476	8	Nut (Not Shown)	
410	7020471	4	Gasket, Exhaust Manifold to Exhaust Muffler (Not Shown)	
411		Ref	Alternator Options:	
411	7000663	1	Alternator for 2000274 & 2000339 Tier II Engines (was p/n 7020410)	
411	7000663	1	Alternator for 1001098211 Tier III & IVi & 1001137748 Tier IVi-Flex Engines	
411		Ref	Regulator, Voltage Options (Not Shown):	

ITEM	PART NUMBER	QTY	DESCRIPTION	REV
411	7020464	1	Regulator for 2000274 & 2000339 Tier II Engines	
411	70001868	1	Regulator for 1001098211 Tier III & IVi & 1001137748 Tier IVi-Flex Engines	
411	70001866	1	Seal, Gasket for 7000663 Voltage Regulator (Not Shown)	
411	70002234	1	Bracket, Adjusting (Not Shown):	
412	7020479	1	Starter	
412	7026608	1	Relay	
412	70001498	1	Shield, Starter Heat	
413	See Note	NSS	Plug- In Connector (Not Shown) (Note: Not Available for Purchase)	
414	7027791	1	Transmitter, Temperature	
414	See Note	NSS	Ring, Sealing (Note: Not Available for Purchase)	
415	7027790	1	Sensor, Oil Pressure	
416	7024565	1	Sensor, Speed	
417	7027792	1	Actuator, Throttle	
417	7026607	2	Spring, Actuator (was p/n 7027276)	
418	7020459	1	Thermostat (Located at rear of engine block - Not Shown)	
418	7020460	1	Spring, Compression	
419		Ref	Flywheel Options (Not Shown):	
419	70000264	1	USA Built Machines **(SN 0300087000 through 0300126188)**	
419	70001870	1	USA Built Machines **(SN 0300126189 through 0300171769)**	
419	70001870	1	China Built Machines **(SN B300000100 through B300000969)**	
419	7024579	1	Ring Gear (Located on Flywheel - Not Shown)	
420	7027236	1	Sender, Temperature	
421	7027795	1	Module, Control (Note: Re-calibration Required when Replaced)	
421	7027796	1	Harness. EMR2 Module	
422	70000345	4	Plug, Glow (Not Shown - Use with p/n 2000339, 1001098211 & 1001137748 Engines Only)	
423		Ref	Solenoid, Start Options:	
423	7027239	1	Solenoid for 2000274 & 2000339 Tier II Engines	
423	See Note	NSS	Solenoid for 1001098211 Tier III & IVi & 1001137748 Tier IVi-Flex Engines (Note: Not Available for Purchase)	
424	70001847	1	Breather Valve (Not Shown - Located On Front Cover) (USA Built Machines) **(SN 0300126189 through 0300171769)**	
424	70001847	1	Breather Valve (Not Shown - Located On Front Cover) (China Built Machines) **(SN B300000100 through B300000969)**	
424	70001126	1	Seal, Breather Valve (USA Built Machines) **(SN 0300126189 through 0300171769)**	
424	70001126	1	Seal, Breather Valve (China Built Machines) **(SN B300000100 through B300000969)**	
425		Ref	Harness. Engine Options (Not Shown):	
425	7027794	1	USA Built Machines **(SN 0300087000 through 0300126188)**	
425	70001872	1	USA Built Machines **(SN 0300126189 through 0300171769)**	
425	70001872	1	China Built Machines **(SN B300000100 through B300000969)**	
425	7027793	1	Plug, Connector	
426		Ref	Gasket, Head Options (Not Shown):	
426		Ref	Gasket for 2000274 & 2000339 Tier II Engines	
426	70003001	1	Gasket - 1 Notch	
426	70003002	1	Gasket - 2 Notch	
426	70003003	1	Gasket - 3 Notch	
426	See Note	NSS	Gasket for 1001098211 Tier III & IVi & 1001137748 Tier IVi-	

ITEM	PART NUMBER	QTY	DESCRIPTION	REV
			Flex Engines (Note: Not Available for Purchase)	
427	70003623	1	Kit, Timing Belt/Idler (Not Shown)	
	1001148678	Ref	**EXHAUST EXTENSION INSTALLATION**	B
501	1001145996	1	Pipe, Exhaust	
502	1320176	1	Clamp	

FIGURE 2-12. FORD ENGINE INSTALLATION

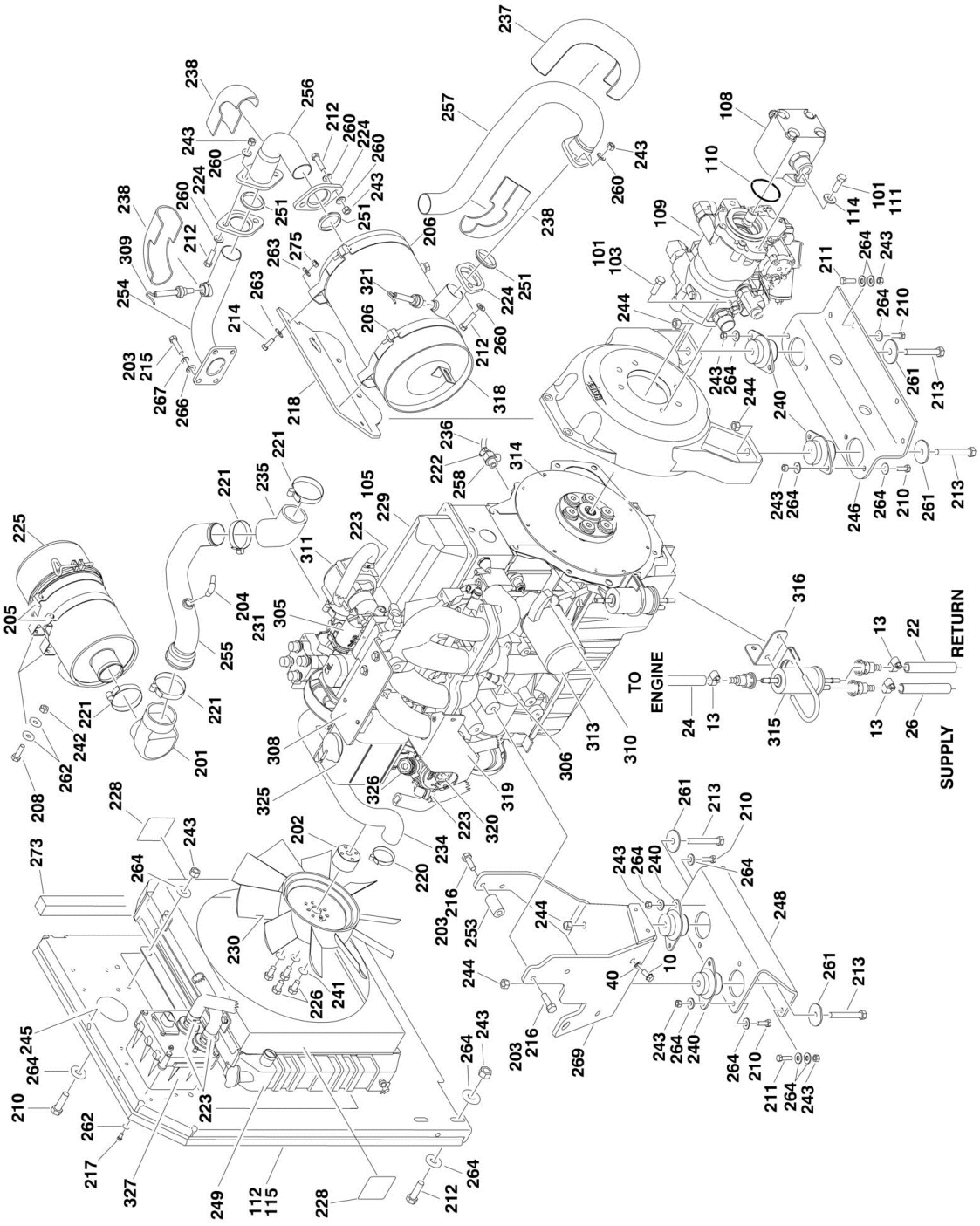

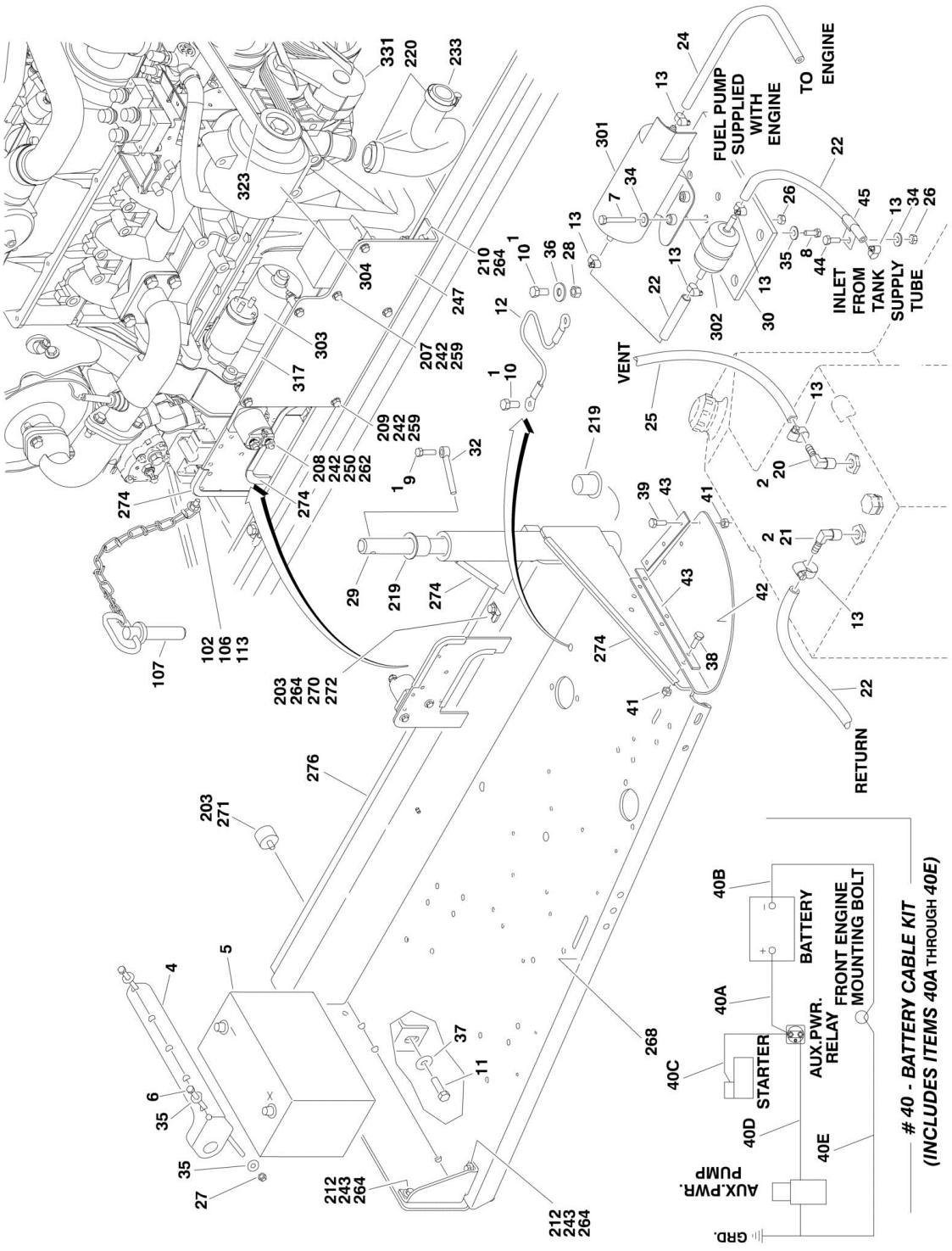
FUEL PUMP SUPPLIED WITH ENGINE
TO ENGINE
INLET FROM TANK
SUPPLY TUBE
VENT
RETURN
BATTERY
FRONT ENGINE MOUNTING BOLT
AUX.PWR. RELAY
STARTER
AUX.PWR. PUMP
GRD.
40 - BATTERY CABLE KIT
(INCLUDES ITEMS 40A THROUGH 40E)

FIGURE 2-12. FORD ENGINE INSTALLATION

ITEM	PART NUMBER	QTY	DESCRIPTION	REV
		Ref	**Note: Only Available on USA Built Machines.**	
		Ref	**ENGINE INSTALLATIONS**	
	0274490	Ref	**Engine Installations 2WD**	C
	0274489	Ref	**Engine Installations 4WD**	C
1	0100011	AR	Compound, Locking	
2	0100020	AR	Sealant	
3	0100048	AR	Grease, Dielectric	
4	0181727	1	Angle, Battery Hold-Down	
5	0400075	1	Battery	
6	0630498	2	Bolt, Battery Hold-Down	
7	0641408	2	Bolt 1/4in-20NC x 1in	
8	0641606	1	Bolt 3/8in-16NC x 3/4in	
9	0641608	1	Bolt 3/8in-16NC x 1in	
10	0641808	2	Bolt 1/2in-13NC x 1in	
11	0642010	1	Bolt 5/8in-11NC x 1-1/4in	
12	1060637	1	Cable, Lanyard	
13	1320022	7	Clamp (Not Shown - Located on Turntable to clamp fuel line)	
14	1701542	1	Decal - Gas (Not Shown - Located on Hood)	
15	1701543	1	Decal - LP (Not Shown - Located on Frame)	
20	2220313	1	Fitting, 90	
21	2221176	1	Fitting, 90	
22	2720058	12 ft/3.7m	Hose, Fuel Line	
24	2720472	1	Hose, Fuel Line	
25	2720532	5 ft/1.5m	Hose, Fuel Line	
26	3311405	3	Locknut 1/4in-20NC	
27	3311605	2	Locknut 3/8in-16NC	
28	3311801	1	Nut 1/2in-13NC	
29	3422446	1	Pin	
30	3572414	1	Plate, Fuel Pump Mount	
32	3841143	1	Pin, Keeper	
34	4751400	3	Flatwasher 1/4in Regular	
35	4751600	5	Flatwasher 3/8in Regular	
36	4751800	1	Flatwasher 1/2in Regular	
37	4752000	1	Flatwasher 5/8in Regular	
38	0641508	3	Bolt 5/16in-18NC x 1in	
39	0641514	3	Bolt 5/16in-18NC x 1-3/4in	
40	2902297	1	Battery Cable Kit	A
40A	7027006	1	Cable, Battery (Red)	
40B	7027005	1	Cable, Battery (Black)	
40C	7027007	1	Cable (Red)	
40D	7027002	1	Cable (Red)	
40E	7027003	1	Cable (Black)	
41	3311505	6	Locknut 5/16in-18NC	
42	3380429	1	Panel, Rubber	
43	3539957	2	Plate	
44	0641406	1	Bolt 1/4in-20NC x 3/4in	
45	1320222	1	Clamp	
		Ref	**ENGINE AND PUMP ASSEMBLIES**	
	2000298	Ref	**Engine and Pump Assemblies 2WD**	B
	2000297	Ref	**Engine and Pump Assemblies 4WD**	B

ITEM	PART NUMBER	QTY	DESCRIPTION	REV
101	0100011	AR	Compound, Locking	
102	0641407	1	Bolt 1/4in-20NC x 7/8in	
103	0641812	2	Bolt 1/2in-13NC x 1-1/2in	
105	3020016	AR	Oil, Motor 15W-40	
106	3311405	1	Locknut 1/4in-20NC	
107	3422532	1	Pin, Hitch	
108		Ref	Piston Pump Assembly with Fittings Options (See PISTON PUMP ASSEMBLY for Breakdown):	
108	3600394	1	2WD	
108	3600396	1	4WD	
109	3600395	1	Gear Pump Assembly with Fittings (See GEAR PUMP ASSEMBLY for Breakdown)	
110	3790152	1	O-Ring	
111	3931620	2	Bolt 3/8in-16NC x 1-1/4in	
112	3960389	5 ft/1.5m	Seal	
113	4751400	1	Flatwasher 1/4in Regular	
114	4891600	2	Flatwasher 3/8in Hardened	
115	2300004	2.63 gal /9.96L	Fluid, Anti Freeze	
	2000296	Ref	**ENGINE ASSEMBLY**	C
201	0080201	1	Adapter 90 Elbow	
202	0080214	1	Adapter, Fan Spacer	
203	0100011	AR	Compound, Locking	
204	0100020	AR	Sealant, Pipe	
205	0340041	2	Band, Air Cleaner	
206	0340046	2	Band, Muffler	
207	0641406	2	Bolt 1/4in-20NC x 3/4in	
208	0641408	6	Bolt 1/4in-20NC x 1in	
209	0641414	4	Bolt 1/4in-20NC x 1-3/4in	
210	0641608	14	Bolt 3/8in-16NC x 1in	
211	0641610	10	Bolt 3/8in-16NC x 1-1/4in	
212	0641612	8	Bolt 3/8in-16NC x 1-1/2in	
213	0641828	4	Bolt 1/2in-13NC x 3-1/2in	
214	0641507	4	Bolt 5/16in-18NC x 7/8in	
215	0701012	4	Bolt 10mm x 25mm	
216	0701014	4	Bolt 10mm x 30mm	
217	0760606	4	Bolt 6mm x 12mm	
218	0903079	1	Bracket, Muffler	
219	0961986	2	Bushing, Flanged	
220	1320012	4	Clamp	
221	1320016	3	Clamp	
222	1320022	1	Clamp, Hose	
223	1320033	8	Clamp, Hose	
224	1321138	3	Plate, Exhaust Flange	
225	1340060	1	Air Cleaner Assembly Filter Element	
225	7012664	1	Element, Filter (Not Shown)	
226	0700819	4	Bolt 8mm x 55mm	
227	4920385	7 ft/2.1m	Wire, Safety (Not Shown)	
228	1703162	2	Decal - Caution Fan Blade	
229	2000272	1	Engine (See Items 301-327 for Engine Components)	
230	2060025	1	Fan	
231	2180467	1	Fitting	

ITEM	PART NUMBER	QTY	DESCRIPTION	REV
233	2720435	1	Hose, Radiator (Bottom)	
234	2720436	1	Hose, Radiator (Upper)	
235	2720514	1	Hose, 45 Elbow	
236	2750532	6 in/15cm	Hose, Oil Drain	
237	2820172	1	Insulation, Exhaust (Shield)	
238	2820173	3	Insulation, Exhaust (Elbow)	
240	3200362	4	Mount, Motor	
241	4831900	4	Lockwasher M8	
242	3311405	12	Locknut 1/4in-20NC	
243	3311605	30	Locknut 3/8in-16NC	
244	3311805	4	Locknut 1/2in-13NC	
245	3539872	1	Plate, Radiator Mounting	
246	3572280	1	Plate, Engine Mount	
247	3574162	1	Plate, ECM/Relay Mount	
248	3574504	1	Plate, Engine Mount	
249	3620040	1	Radiator	
250	3740067	1	Relay	
251	3960591	3	Gasket, Exhaust	
253	4566605	1	Tube, Spacer	
254	4567879	1	Tube, Exhaust	
255	4569173	1	Tube, Intake	
256	4569083	1	Tube, Exhaust	
257	3460398	1	Pipe, Exhaust	
258	4640989	1	Valve, Oil Drain	
259	4711400	12	Flatwasher 1/4in Thin	
260	4711600	12	Flatwasher 3/8in Thin	
261	4740274	4	Washer, Snubbing	
262	4751400	14	Flatwasher 1/4in Regular	
263	4751500	8	Flatwasher 5/16in Regular	
264	4751600	51	Flatwasher 3/8in Regular	
266	4812000	4	Flatwasher M10	
267	4832000	4	Lockwasher M10	
268	4845404	1	Tray, Engine	
269	4846806	1	Plate, Engine Mounting	
270	0641606	1	Bolt 3/8in-16NC x 3/4in	
271	0940070	1	Bumper	
272	1320223	3	J-Clip	
273	3960469	1	Seal	
274	4060805	37 in/1m	Flex-Trim	
275	3311505	4	Locknut 5/16in-18NC	
276	3960468	1	Seal	
	2000272	Ref	**ENGINE COMPONENTS**	B
301	3600377	1	Fuel Pump and Isolator Assembly (was p/ns 7022133 & 7027407)	
301	7022134	1	Harness, Fuel Pump (Not Shown)	
302	91083218	1	Filter, Fuel (was p/n 7022135)	
303	7012679	1	Starter (was p/n 7027408)	
304	7019977	1	Alternator with Regulator and Pulley	
304	7000897	1	Alternator without Regulator and Pulley	
305	7023683	1	Actuator, Throttle	
305	7027404	1	Gasket, Actuator (Not Shown)	
306	7019996	1	Sensor, Air Temperature (was p/n 7023661)	

ITEM	PART NUMBER	QTY	DESCRIPTION	REV
307	7023681	1	Harness, Engine Control (was p/n 7027403) (Not Shown)	
308	7022139	1	Sensor, MAP	
309	7023682	1	Sensor, EGR	
310	2420187	1	Dipstick (was p/n 7022140)	
310	4564281	1	Tube, Dipstick	
311	7027400	1	Mixer Assembly	
313	7021868	1	Filter, Oil (was p/n 7022147, 7022173 & 7014501)	
314	1660250	1	Coupling, Pump	
314	7019976	1	Flywheel (Not Shown)	
314	7022180	1	Ring Gear (Not Shown)	
315	7019993	1	Pressure Regulator and Filter Assembly	
316	0902539	1	Bracket	
317	1600374	1	Module, EPM	
317	7027413	1	Harness, EPM Jumper	
318	3220134	1	Muffler	
319	0903010	1	Bracket, LP Regulator	
320	7023698	1	Regulator, LP	
321	7019994	1	Sensor, EGR (was p/n 7027406)	
322	70002307	1	Gasket, Exhaust (Manifold to Pipe)	
322	7022143	1	Gasket, Exhaust (Manifold to Cylinder Head) (was p/n (7027401) Not Shown)	
323	7027402	1	Belt, Drive	
324	7027405	4	Spark Plug (Not Shown)	
325	1580011	1	Bottle, Overflow	
326	7027409	1	LP Filter Shutoff with Leads	
327	7023699	1	Megajector	
327	7027410	1	Harness, Megajector	
327	70001690	1	Hose Kit - Megajector	
328	7019925	1	PCV Valve (Not Shown)	
329	7022155	1	Sensor, Water Temperature (Not Shown)	
330	7022150	1	Belt, Timing (Not Shown - Located Inside Front Cover)	
331	70002567		Tensioner, Belt	

FIGURE 2-13. GM ENGINE INSTALLATION (WITHOUT UGM)

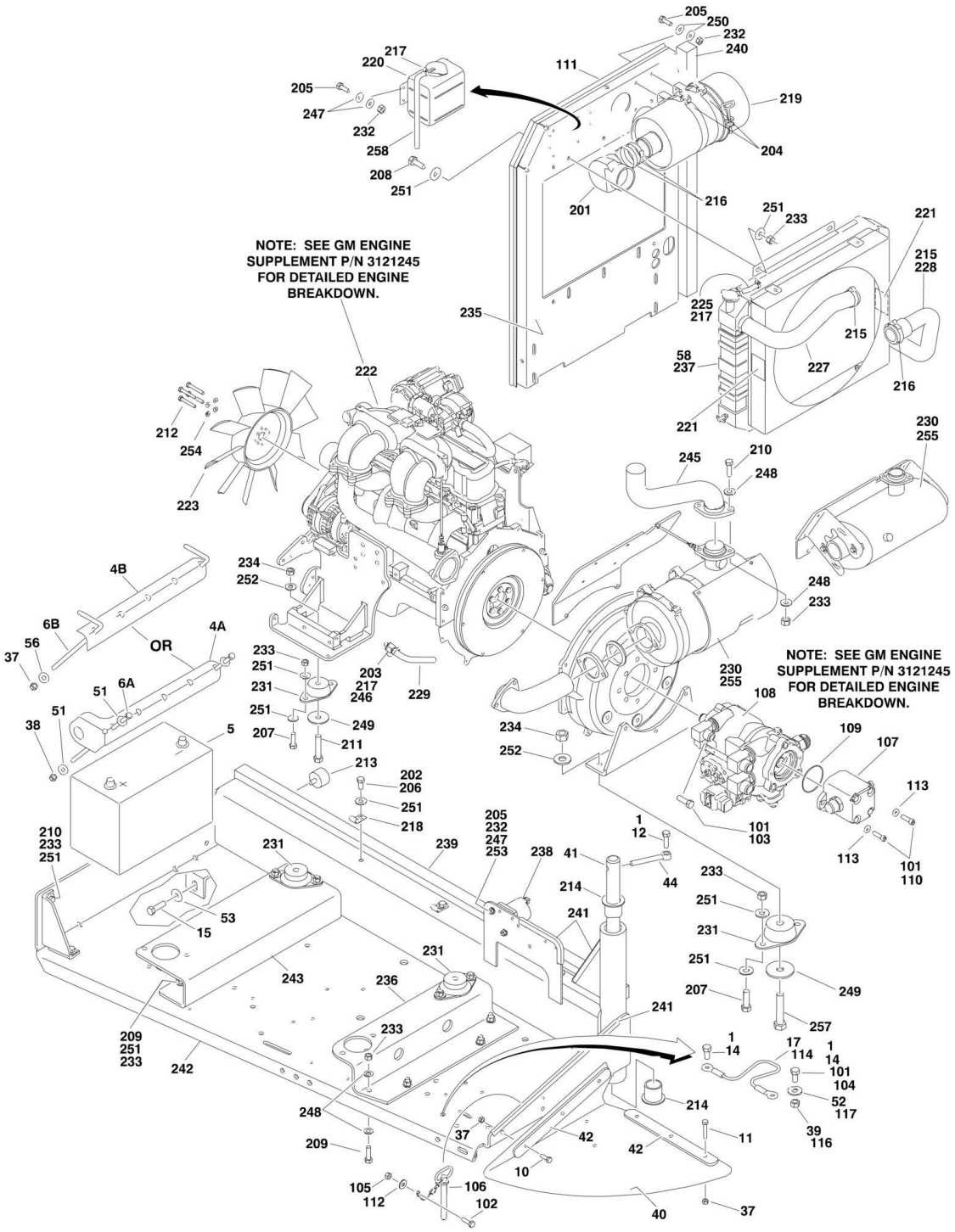

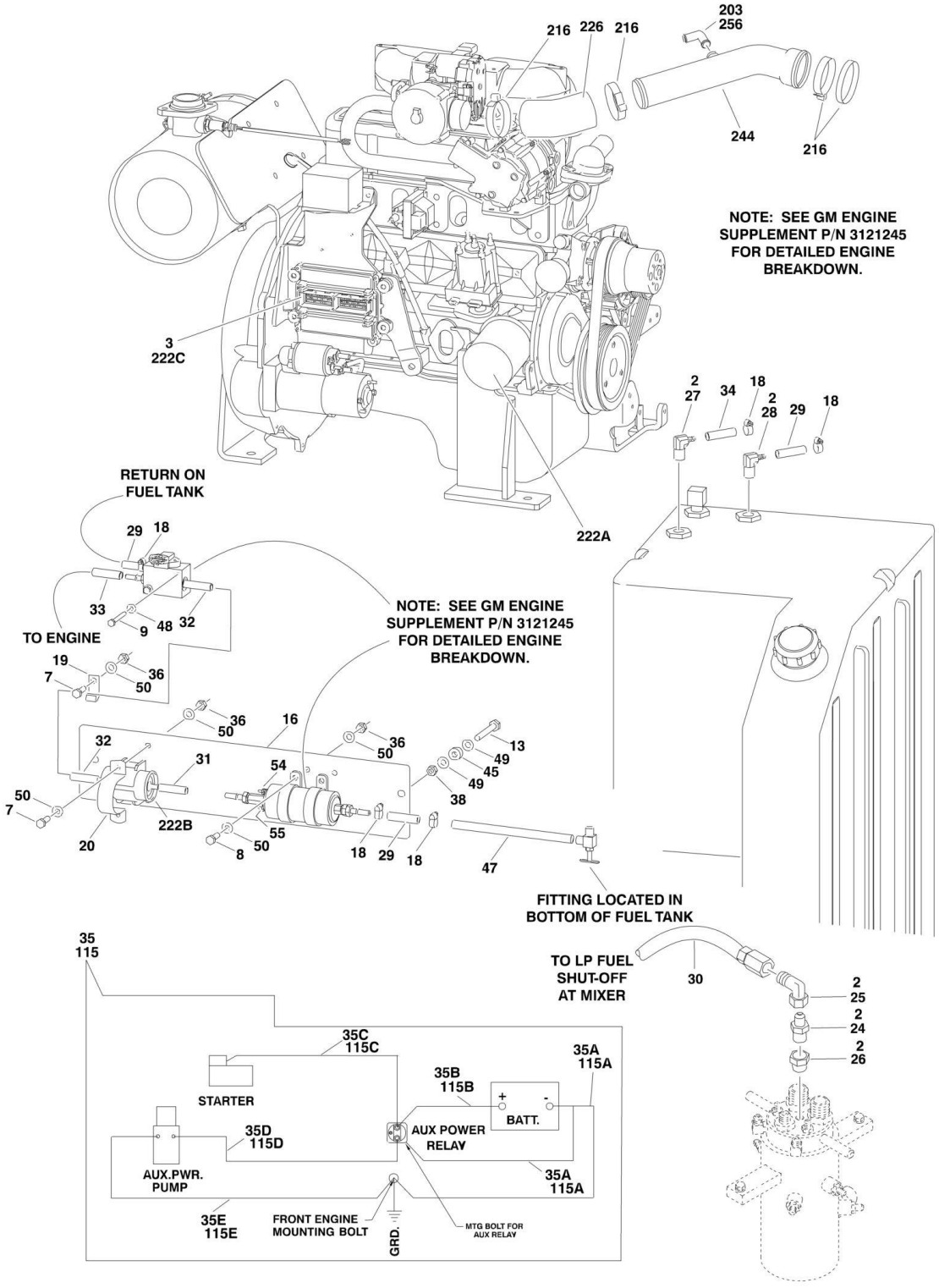
203
256
216
226
216
244
216
NOTE: SEE GM ENGINE SUPPLEMENT P/N 3121245 FOR DETAILED ENGINE BREAKDOWN.
3
222C
222A
2
27
34
18
2
28
29
18
RETURN ON FUEL TANK
29
18
33
9
48
32
TO ENGINE
NOTE: SEE GM ENGINE SUPPLEMENT P/N 3121245 FOR DETAILED ENGINE BREAKDOWN.
19
7
36
50
36
50
16
36
50
32
31
54
13
49
45
49
38
50
7
20
222B
8
50
55
18
29
18
47
FITTING LOCATED IN BOTTOM OF FUEL TANK
35
115
TO LP FUEL SHUT-OFF AT MIXER
30
2
25
2
24
2
26
35C
115C
35A
115A
35B
115B
STARTER
BATT.
AUX POWER RELAY
35D
115D
AUX.PWR. PUMP
35A
115A
35E
115E
FRONT ENGINE MOUNTING BOLT
GRD.
MTG BOLT FOR AUX RELAY

FIGURE 2-13. GM ENGINE INSTALLATION (WITHOUT UGM)

ITEM	PART NUMBER	QTY	DESCRIPTION	REV
		Ref	**Note: Only Available on USA Built Machines.**	
		Ref	**Note: For Module (with/without UGM) Identification, refer to Revision Log page A.**	
		Ref	**GM ENGINE INSTALLATIONS:**	
	0275282	Ref	**2WD (SN 0300087000 through 0300109244)**	C
	1001091631	Ref	**2WD (SN 0300109245 through 0300171769)**	D
	0275266	Ref	**4WD (SN 0300087000 through 0300109244)**	D
	1001091630	Ref	**4WD (SN 0300109245 through 0300171769)**	D
1	0100011	AR	Compound, Locking	
2	0100020	AR	Sealant, Pipe	
3	0100048	AR	Grease, Dielectric	
4		Ref	Hold-Down, Battery Options:	
4A	0181727	1	Hold-down, Battery **(SN 0300087000 through 0300110250)**	
4B	91401281	1	Hold-down, Battery **(SN 0300110251 through 0300171769)**	
5	0400075	1	Battery (Wet)	
6		Ref	Bolt, Battery Hold-down Options:	
6A	0630498	2	Bolt, Battery Hold-down **(SN 0300087000 through 0300110250)**	
6B	1001093382	2	Bolt, Battery Hold-down **(SN 0300110251 through 0300171769)**	
7	0641406	3	Bolt 1/4in-20NC x 3/4in	
8	0641408	2	Bolt 1/4in-20NC x 1in	
9	0641416	2	Bolt 1/4in-20NC x 2in	
10	0641508	3	Bolt 5/16in-18NC x 1in	
11	0641514	3	Bolt 5/16in-18NC x 1-3/4in	
12	0641608	1	Bolt 3/8in-16NC x 1in	
13	0641612	2	Bolt 3/8in-16NC x 1-1/2in	
14	0641808	AR	Bolt 1/2in-13NC x 1in	
15	0642010	1	Bolt 5/8in-11NC x 1-1/4in	
16	0903510	1	Bracket, Fuel Pump Filter	
17	1060637	1	Cable, Lanyard **(SN 0300087000 through 0300109245)**	
18	1320022	AR	Clamp, Fuel Line	
19	1320222	1	Clamp	
20	1320323	1	Clamp	
21	1701542	1	Decal, Gas (Not Shown)	
22	1701543	1	Decal, LPG (Not Shown)	
24	2180418	1	Fitting, Straight	
25	2220005	1	Fitting, Straight	
26	2220064	1	Fitting, Adapter	
27	2220313	1	Fitting, 90 Barbed **(SN 0300087000 through 0300109245)**	
28	2221176	1	Fitting, 90	
29		Ref	Hose, Fuel Line Options:	
29	2720058	7 ft/2.1m	Hose, Fuel Line **(SN 0300087000 through 0300109244)**	
29	1001091587	7 ft/2.1m	Hose, Fuel Line (Use p/n 1001156819) **(SN 0300109245 through 0300171769)**	
30	2720392	1	Hose, LP	
31	2720566	NLA	Hose, High Pressure Fuel Line (6in/15cm Length) (Use p/n 1001156823)	
32	2720567	NLA	Hose, High Pressure Fuel Line (4ft/1.2m Length) (Use p/n 1001156824)	
33	2720580	NLA	Hose (Use p/n 1001156825)	

ITEM	PART NUMBER	QTY	DESCRIPTION	REV
34	2750532	5 ft/1.5m	Hose **(SN 0300087000 through 0300109245)**	
35	2902531	1	Battery Cable Kit **(SN 0300087000 through 0300109245)**	B
35A	7016822	1	Cable (Battery - to Ground)	
35B	7027015	1	Cable (Battery + to Auxiliary Relay)	
35C	7027016	1	Cable (Auxiliary Relay to Starter)	
35D	7027017	1	Cable (Auxiliary Relay to Auxiliary Pump)	
35E	7027003	1	Cable (Auxiliary Pump to Ground)	
36	3311405	5	Locknut 1/4in-20NC	
37		Ref	Locknut Options:	
37	3311505	AR	Locknut 5/16in-18NC	
37	88521205	AR	Locknut with Nylon Lock 5/16in-18NC	
38	3311605	AR	Locknut 3/8in-16NC	
39	3311805	1	Locknut 1/2in-13NC **(SN 0300087000 through 0300109245)**	
40	3380429	1	Panel, Rubber	
41	3422446	1	Pin	
42	3539957	2	Plate, Hold Down	
43	3790012	1	O-Ring (Not Shown - Located in Console Box)	
44	3841143	1	Keeper	
45	4071122	2	Shim	
46	4360336	1	Switch, Toggle (Not Shown - Located in Console Box)	
47	4569385	1	Tube, Fuel Line	
48	4711400	2	Flatwasher 1/4in Thin	
49	4711600	4	Flatwasher 3/8in Thin	
50	4751400	9	Flatwasher 1/4in Regular	
51	4751600	4	Flatwasher 3/8in Regular **(SN 0300087000 through 0300110250)**	
52	4751800	1	Flatwasher 1/2in Regular **(SN 0300087000 through 0300109245)**	
53	4752000	1	Flatwasher 5/8in Regular	
54	3290405	1	Locknut M4 x 0.7	
55	3290505	1	Locknut M5 x 0.8	
56	4751500	2	Flatwasher 5/16in Regular **(SN 0300110251 through 0300171769)**	
58	2300004	2.63 gal /9.96L	Coolant	
		Ref	**GM ENGINE AND PUMP SUB-ASSEMBLY**	
	2000374	Ref	**2WD (SN 0300087000 through 0300109244)**	C
	1001091635	Ref	**2WD (SN 0300109245 through 0300171769)**	E
	2000373	Ref	**4WD (SN 0300087000 through 0300109244)**	C
	1001091634	Ref	**4WD (SN 0300109245 through 0300171769)**	D
101	0100011	AR	Compound, Locking	
102	0641407	1	Bolt 1/4in-20NC x 7/8in	
103	0641812	2	Bolt 1/2in-13NC x 1-1/2in	
104	0641808	1	Bolt 1/2in-13NC x 1in **(SN 0300109245 through 0300171769)**	
105	3311405	1	Locknut 1/4in-20NC	
106	3422532	1	Pin, Hitch	
107	3600395	1	Gear Pump Assembly with Fittings (See GEAR PUMP ASSEMBLY for Breakdown)	
108		Ref	Piston Pump Assembly with Fittings Options (See PISTON PUMP ASSEMBLY for Breakdown):	
108	3600394	1	2WD	
108	3600396	1	4WD	
109	3790152	1	O-Ring	

SECTION 2 - TURNTABLE

ITEM	PART NUMBER	QTY	DESCRIPTION	REV
110	3931620	2	Bolt 3/8in-16NC x 1-1/4in	
111	3960389	1	Seal	
112	4751400	1	Flatwasher 1/4in Regular	
113	4891600	2	Flatwasher 3/8in Hardened	
114	1060637	1	Cable, Lanyard **(SN 0300109245 through 0300171769)**	
115	2902531	1	Battery Cable Kit **(SN 0300087000 through 0300109245)**	B
115A	7016822	1	Cable (Battery - to Ground)	
115B	7027015	1	Cable (Battery + to Auxiliary Relay)	
115C	7027016	1	Cable (Auxiliary Relay to Starter)	
115D	7027017	1	Cable (Auxiliary Relay to Auxiliary Pump)	
115E	7027003	1	Cable (Auxiliary Pump to Ground)	
116	3311805	1	Locknut 1/2in-13NC **(SN 0300109245 through 0300171769)**	
117	4751800	1	Flatwasher 1/2in Regular **(SN 0300109245 through 0300171769)**	
		Ref	**GM ENGINE ASSEMBLY**	
	2000375	Ref	**GM Engine Assembly (SN 0300087000 through 0300109244)**	E
	1001091632	Ref	**GM Engine Assembly (SN 0300109245 through 0300171769)**	E
201	0080201	1	Fitting, 90	
202	0100011	AR	Compound, Locking	
203	0100020	AR	Sealant	
204	0340041	2	Band, Mounting	
205	0641406	10	Bolt 1/4in-20NC x 3/4in	
206	0641606	3	Bolt 3/8in-16NC x 3/4in	
207	0641608	8	Bolt 3/8in-16NC x 1in	
208	0641609	4	Bolt 3/8in-16NC x 1-1/8in	
209	0641610	10	Bolt 3/8in-16NC x 1-1/4in	
210	0641612	4	Bolt 3/8in-16NC x 1-1/2in	
211	0641828	2	Bolt 1/2in-13NC x 3-1/2in	
212	0700810	4	Bolt M8 x 20mm	
213	0940070	1	Bumper	
214	0961986	2	Bearing, Flanged	
215	1320012	3	Clamp	
216	1320016	5	Clamp	
217	1320022	AR	Clamp	
218	1320223	3	Clamp	
219	1340060	1	Air Cleaner Assembly	
219	7012664	1	Element, Air Cleaner	
220	1580011	1	Container, Coolant Overflow	
221	1703162	2	Decal - Caution Fan	
222		Ref	Engine, GM 3.0L Options:	
222	2000354	1	Engine, GM 3.0L **(SN 0300087000 through 0300109244)**	
222	1001091583	1	Engine, GM 3.0L **(SN 0300109245 through 0300171769)**	
222A	7027965	1	Filter, Oil	
222B	7027972	1	Filter, Fuel	
222C	7027994	1	Module, Control (ECU)	
222D	7027996	4	Plug, Spark (Not Shown)	
223	2060025	1	Fan	
225	2720058	4 in/10cm	Hose	
226	2720514	1	Hose	
227	2720563	1	Hose, Radiator (Top)	
228	2720564	1	Hose, Radiator (Bottom)	
229		Ref	Hose Options:	

ITEM	PART NUMBER	QTY	DESCRIPTION	REV
229	2750532	1 ft/30cm	Hose - 3/8in	
229	1001091892	6 in/15cm	Hose - 5/8in	
230		Ref	Muffler, Insulation Options:	
230	2820180	1	Muffler, Insulation **(SN 0300087000 through 0300109244)**	
230	1001091794	1	Muffler, Insulation **(SN 0300109245 through 0300171769)**	
231	3200362	4	Mount, Engine	
232	3311405	10	Locknut 1/4in-20NC	
233	3311605	26	Locknut 3/8in-16NC	
234	3311805	4	Locknut 1/2in-13NC	
235	3539872	1	Plate, Radiator Mounting	
236	3572280	1	Plate, Engine Mount	
237	3620040	1	Radiator	
237	7019656	1	Cap, Radiator	
238	3740067	1	Relay	
239	3960468	1	Seal	
240	3960469	1	Seal	
241	4060805	3 ft/0.9m	Seal	
242	4341239	1	Tray, Engine	
243	4341241	1	Mount, Engine (Front)	
244	4569342	1	Tube, Intake	
245	4569394	1	Pipe, Exhaust	
246		Ref	Valve, Oil Drain Options:	
246	4640952	1	Valve, Oil Drain **(SN 0300087000 through 0300136526)**	
246	1001105872	NLA	Valve, Oil Drain (Use p/n 4640952) **(SN 0300136527 through 0300171769)**	
247	4711400	12	Flatwasher 1/4in Thin	
248	4711600	12	Flatwasher 3/8in Thin	
249	4740274	4	Flatwasher, Snubbing	
250	4751400	8	Flatwasher 1/4in Regular	
251	4751600	43	Flatwasher 3/8in Regular	
252	4751800	2	Flatwasher 1/2in Regular	
253	4791400	2	Starwasher 1/4in	
254	4831900	4	Lockwasher M8	
255	4920385	10 ft/3m	Wire, Safety	
256	2180877	1	Fitting, 90 **(SN 0300095114 through 0300171769)**	
257	0641826	2	Bolt 1/2in-13NC x 3-1/4in	
258	2720271	18 in /36cm	Hose	

FIGURE 2-14. GM ENGINE INSTALLATION (WITH UGM)

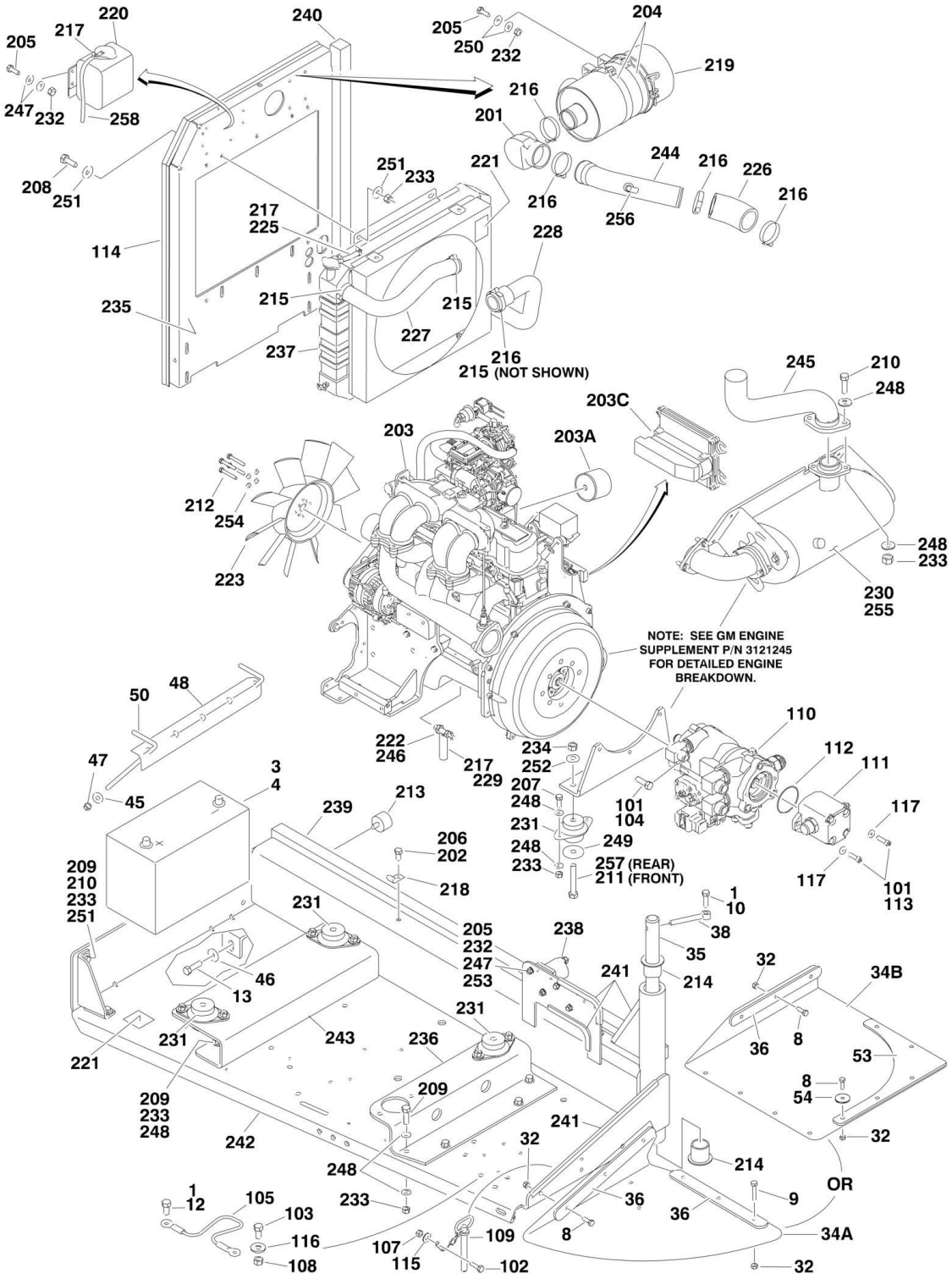

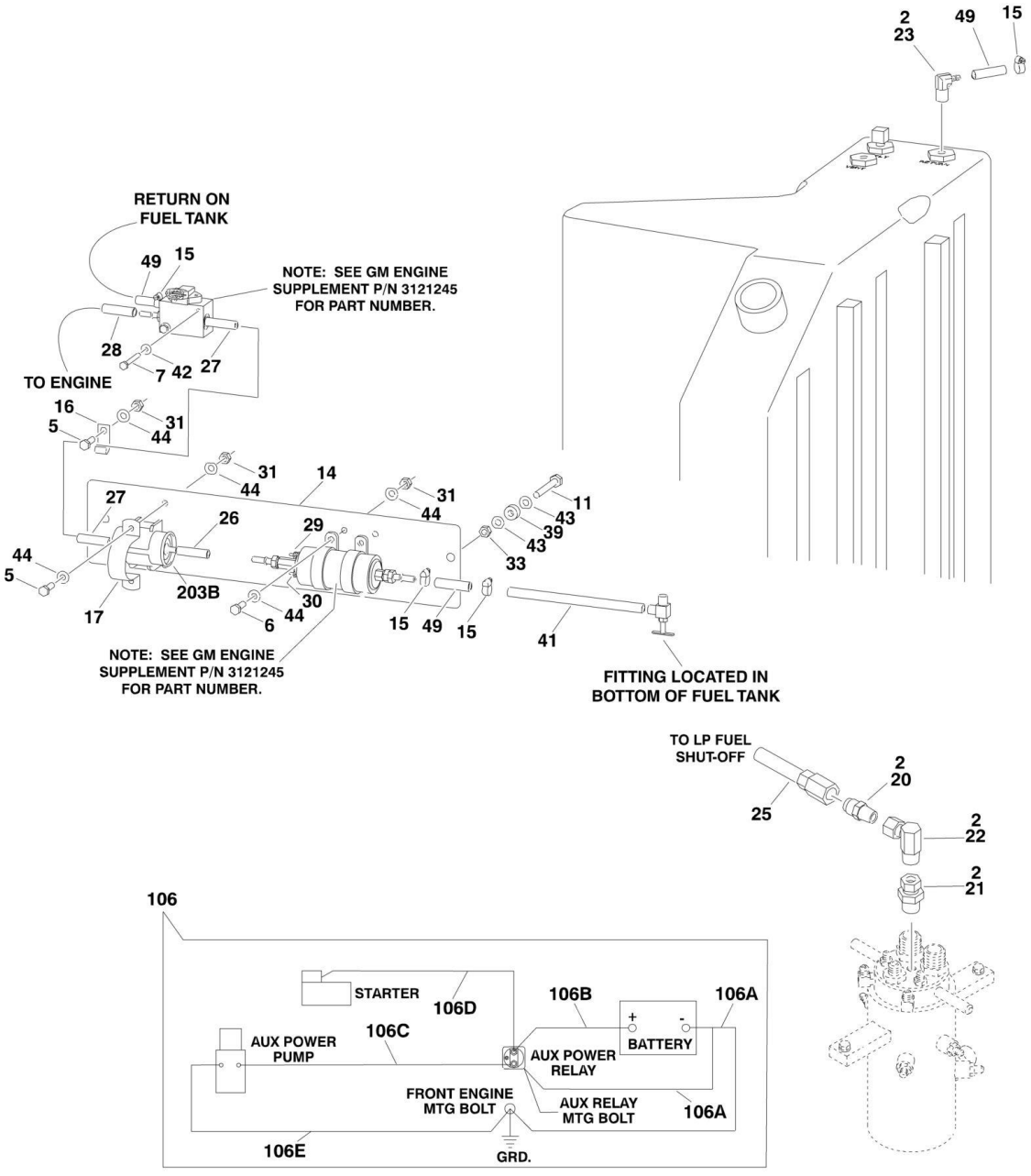
2
23
49
15
RETURN ON
FUEL TANK
49
15
NOTE: SEE GM ENGINE
SUPPLEMENT P/N 3121245
FOR PART NUMBER.
28
7
42
27
TO ENGINE
16
5
31
44
31
44
14
27
26
29
31
44
11
43
39
43
33
44
5
17
203B
30
6
44
15
49
15
41
NOTE: SEE GM ENGINE
SUPPLEMENT P/N 3121245
FOR PART NUMBER.
FITTING LOCATED IN
BOTTOM OF FUEL TANK
TO LP FUEL
SHUT-OFF
2
20
25
2
22
2
21
106
STARTER
106D
106B
106A
+
-
BATTERY
AUX POWER
PUMP
106C
AUX POWER
RELAY
FRONT ENGINE
MTG BOLT
AUX RELAY
MTG BOLT
106A
106E
GRD.

FIGURE 2-14. GM ENGINE INSTALLATION (WITH UGM)

ITEM	PART NUMBER	QTY	DESCRIPTION	REV
		Ref	**Note: Only Available on USA Built Machines.**	
		Ref	**Note: For Module (with/without UGM) Identification, refer to Revision Log page A.**	
		Ref	**GM ENGINE INSTALLATIONS:**	
	1001114644	Ref	**GM Engine Installations 2WD**	D
	1001114646	Ref	**GM Engine Installations 4WD**	D
1	0100011	AR	Compound, Locking	
2	0100020	AR	Sealant, Pipe	
3	0100048	AR	Grease, Dielectric	
4	0400075	1	Battery (Wet)	
5	0641406	3	Bolt 1/4in-20NC x 3/4in	
6	0641408	2	Bolt 1/4in-20NC x 1in	
7	0641416	2	Bolt 1/4in-20NC x 2in	
8	0641508	6	Bolt 5/16in-18NC x 1in	
9	0641514	NLA	Capscrew 5/16in-18NC x 1-3/4in	
10	0641608	1	Bolt 3/8in-16NC x 1in	
11	0641612	2	Bolt 3/8in-16NC x 1-1/2in	
12	0641808	1	Bolt 1/2in-13NC x 1in	
13	0642010	1	Bolt 5/8in-11NC x 1-1/4in	
14	0903510	1	Bracket, Fuel Pump Filter	
15	1320022	4	Clamp, Fuel Line	
16	1320222	1	Clamp	
17	1320323	1	Clamp	
18	1701542	1	Decal, Gas (Not Shown)	
19	1701543	1	Decal, LPG (Not Shown)	
20	2180418	1	Fitting, Straight	
21	2220005	1	Fitting, Straight	
22	2220064	1	Fitting, Adapter	
23	2221176	1	Fitting, 90	
24	2300004	2.7 gal /10.2L	Coolant (Not Shown)	
25	2720392	1	Hose, LP	
26	2720566	NLA	Hose, High Pressure Fuel Line (6in/15cm Length) (Use p/n 1001156823)	
27	2720567	NLA	Hose, High Pressure Fuel Line (4ft/1.2m Length) (Use p/n 1001156824)	
28	2720580	NLA	Hose (Use p/n 100156825)	
29	3290405	1	Locknut M4 x 0.7	
30	3290505	1	Locknut M5 x 0.8	
31	3311405	5	Locknut 1/4in-20NC	
32	3311505	8	Locknut 5/16in-18NC	
33	3311605	2	Locknut 3/8in-16NC	
34		Ref	Panel, Rubber Options:	
34A	3380429	1	Panel **(SN 0300087000 through 0300143245)**	
34B	1001121891	1	Panel **(SN 0300143246 through 0300171769)**	
35	3422446	1	Pin	
36	3539957	AR	Plate, Hold Down	
37	3790012	1	O-Ring (Not Shown - Located in Console Box)	
38	3841143	1	Keeper	
39	4071122	2	Shim	

ITEM	PART NUMBER	QTY	DESCRIPTION	REV
40	4360336	1	Switch, Toggle (Not Shown - Located in Console Box)	
41	4569385	1	Tube, Fuel Line	
42	4711400	2	Flatwasher 1/4in Thin	
43	4711600	4	Flatwasher 3/8in Thin	
44	4751400	9	Flatwasher 1/4in Regular	
45	4751500	2	Flatwasher 5/16in Regular	
46	4752000	1	Flatwasher 5/8in Regular	
47	88521205	2	Locknut with Nylon Lock 5/16in-18NC	
48	91401281	1	Hold-down, Battery	
49	1001091587	7 ft/2.1m	Hose, Fuel Line (Use p/n 1001156819)	
50	1001093382	2	Bolt, Battery Hold-down	
53	1001123000	1	Bracket, Baffle Support **(SN 0300143246 through 0300171769)**	
54	4740508	3	Flatwasher, Special **(SN 0300143246 through 0300171769)**	
		Ref	**GM ENGINE AND PUMP SUB-ASSEMBLY**	
	1001114643	Ref	**GM Engine and Pump Sub-Assembly 2WD**	D
	1001114645	Ref	**GM Engine and Pump Sub-Assembly 4WD**	D
101	0100011	AR	Compound, Locking	
102	0641407	1	Bolt 1/4in-20NC x 7/8in	
103	0641808	1	Bolt 1/2in-13NC x 1in	
104	0641812	2	Bolt 1/2in-13NC x 1-1/2in	
105	1060637	1	Cable, Lanyard	
106	2902531	1	Battery Cable Kit	B
106A	7016822	1	Cable (Battery - to Ground)	
106B	7027015	1	Cable (Battery + to Auxiliary Relay)	
106C	7027016	1	Cable (Relay to Auxiliary Pump)	
106D	7027017	1	Cable (Relay to Starter)	
106E	7027003	1	Cable (Relay to Auxiliary Pump)	
107	3311405	1	Locknut 1/4in-20NC	
108	3311805	1	Locknut 1/2in-13NC	
109	3422532	1	Pin, Hitch	
110		Ref	Piston Pump Assembly with Fittings Options (See PISTON PUMP ASSEMBLY for Breakdown):	
110	3600394	1	2WD	
110	1001117799	1	4WD	
111	3600395	1	Gear Pump Assembly with Fittings (See GEAR PUMP ASSEMBLY for Breakdown)	
112	3790012	1	O-Ring	
113	3931620	2	Bolt 3/8in-16NC x 1-1/4in	
114	3960389	5 ft/1.5m	Seal	
115	4751400	1	Flatwasher 1/4in Regular	
116	4751800	1	Flatwasher 1/2in Regular	
117	4891600	2	Flatwasher 3/8in Hardened	
119	1001115930	4.5 qt /4.3L	Oil, Engine (Not Shown)	
	1001114632	Ref	**GM ENGINE ASSEMBLY**	D
201	0080201	2	Fitting, 90	
202	0100011	AR	Compound, Locking	
203	1001114595	1	Engine, GM 3.0L (See GM Engine Supplement p/n 3121245 for Breakdown of Additional Components)	
203	70000164	4	Plug, Spark (Not Shown)	
203A	7027965	1	Filter, Oil	
203B	7027972	1	Filter, Fuel	

SECTION 2 - TURNTABLE

ITEM	PART NUMBER	QTY	DESCRIPTION	REV
203C	70002895	1	Module, Control (ECU)	
204	0340041	2	Band, Mounting	
205	0641406	10	Bolt 1/4in-20NC x 3/4in	
206	0641606	4	Bolt 3/8in-16NC x 3/4in	
207	0641608	9	Bolt 3/8in-16NC x 1in	
208	0641609	4	Bolt 3/8in-16NC x 1-1/8in	
209	0641610	10	Bolt 3/8in-16NC x 1-1/4in	
210	0641612	4	Bolt 3/8in-16NC x 1-1/2in	
211	0641828	2	Bolt 1/2in-13NC x 3-1/2in	
212	0700810	4	Bolt M8 x 20mm	
213	0940070	1	Bumper	
214	0961986	2	Bearing, Flanged	
215	1320012	3	Clamp	
216	1320016	5	Clamp	
217	1320022	4	Clamp	
218	1320223	3	Clamp	
219	1340060	1	Air Cleaner Assembly	
219	7012664	1	Element, Air Cleaner	
220	1580011	1	Container, Coolant Overflow	
221	1703162	2	Decal - Caution Fan	
222	0100020	AR	Sealant	
223	2060025	1	Fan	
225	2720058	1 ft/0.3m	Hose	
226	1001116544	1	Duct, Elbow	
227	2720563	1	Hose, Radiator (Top)	
228	2720564	1	Hose, Radiator (Bottom)	
229	2750532	1 ft/0.3m	Hose	
230	1001091794	1	Insulation, Muffler	
231	3200362	4	Mount, Engine	
232	3311405	10	Locknut 1/4in-20NC	
233	3311605	26	Locknut 3/8in-16NC	
234	3311805	4	Locknut 1/2in-13NC	
235	3539872	1	Plate, Radiator Mount	
236	3572280	1	Plate, Engine Mount	
237	3620040	1	Radiator	
237	7019656	1	Cap, Radiator	
238	3740067	1	Relay	
239	3960468	1	Seal	
240	3960469	1	Seal	
241	4060805	3 ft/0.9m	Seal	
242	4341239	1	Tray, Engine	
243	4341241	1	Mount, Engine (Front)	
244	1001116545	1	Tube, Intake	
245	4569394	1	Tube, Exhaust	
246	4640952	1	Valve, Oil Drain	
247	4711400	12	Flatwasher 1/4in Thin	
248	4711600	36	Flatwasher 3/8in Thin	
249	4740274	4	Flatwasher, Snubbing	
250	4751400	8	Flatwasher 1/4in Regular	
251	4751600	16	Flatwasher 3/8in Regular	
252	4751800	4	Flatwasher 1/2in Regular	

ITEM	PART NUMBER	QTY	DESCRIPTION	REV
253	4791400	2	Starwasher 1/4in	
254	4831900	4	Lockwasher M8	
255	4920385	10 ft/3m	Wire, Safety	
256	2180877	1	Fitting 90	
257	0641826	2	Bolt 1/2in-13NC x 3-1/4in	
258	2720271	18 in /46cm	Hose	

FIGURE 2-15. PISTON PUMP ASSEMBLY

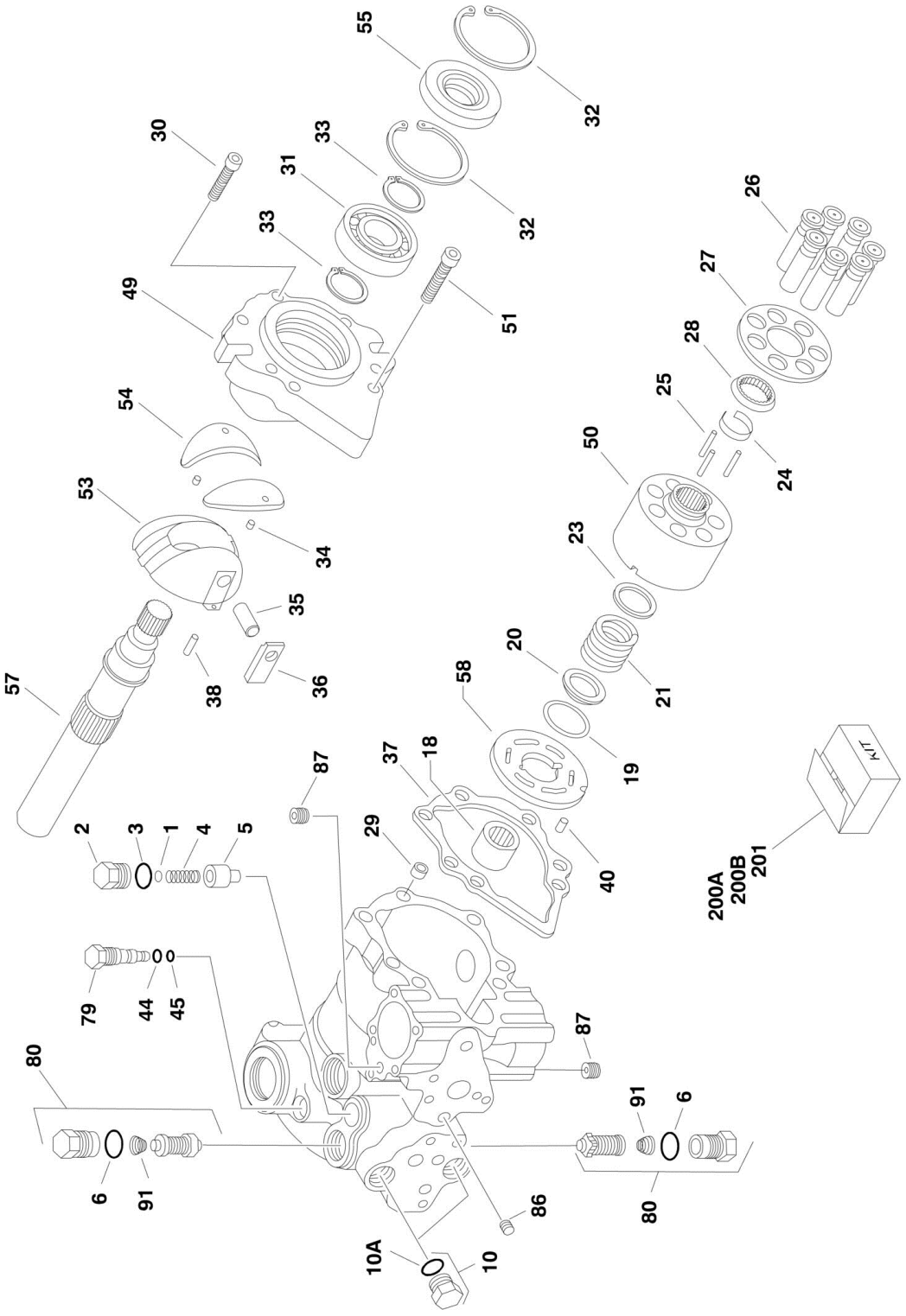

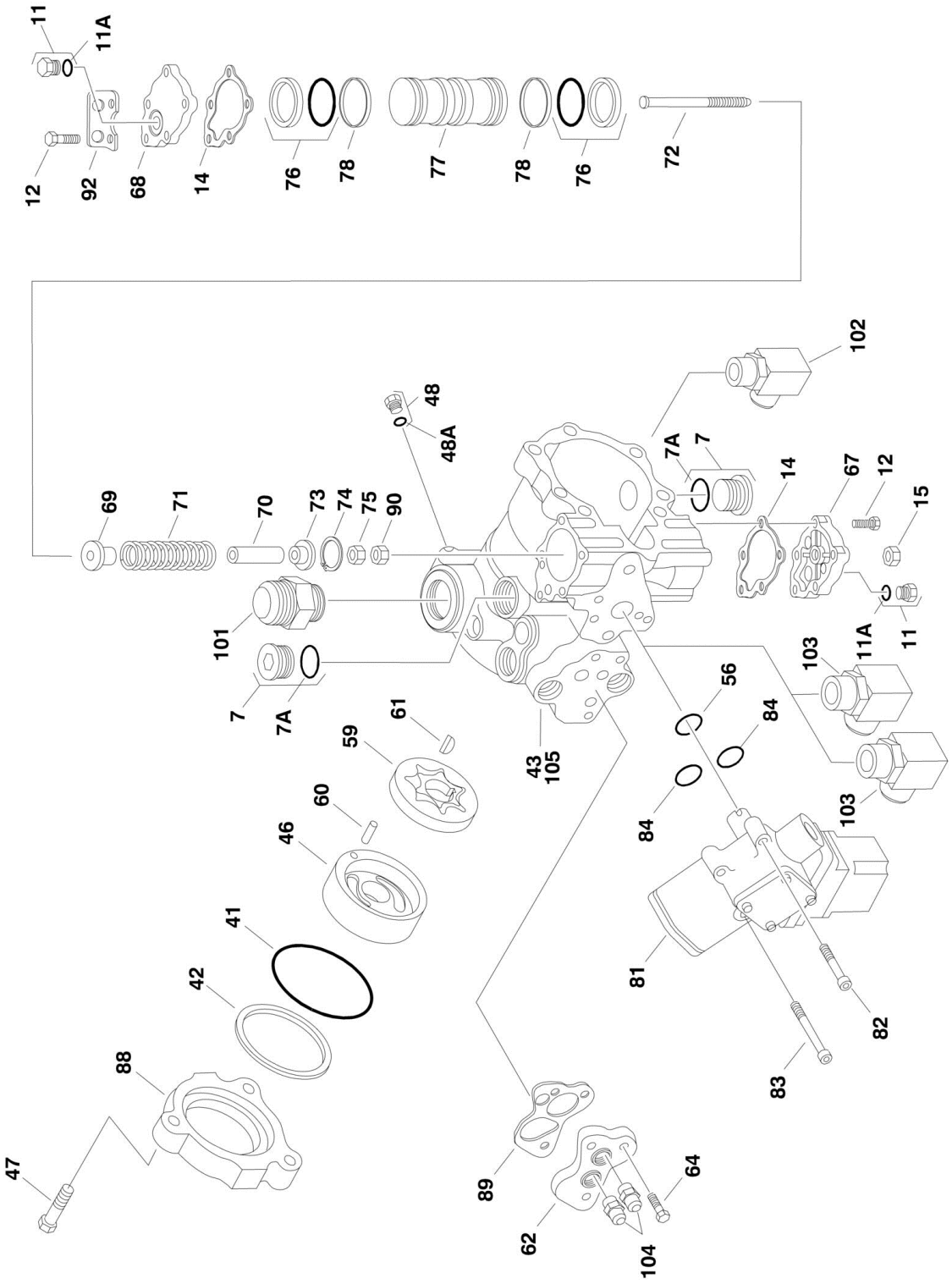
11
11A
12
92
68
14
76
78
77
78
76
72
102
48
48A
7A
7
14
67
12
15
69
71
70
73
74
75
90
101
11
11A
103
7
7A
56
84
61
59
43
105
84
103
60
46
41
81
42
82
88
83
47
89
64
62
104

FIGURE 2-15. PISTON PUMP ASSEMBLY

ITEM	PART NUMBER	QTY	DESCRIPTION	REV
		Ref	**PISTON PUMP ASSEMBLY**	
	3600388	Ref	**Piston Pump Assembly 2WD**	A
	3600381	Ref	**Piston Pump Assembly 4WD**	A
1	7007413	1	Shim Kit	
2	7024874	1	Plug (Pump Assembly p/n 3600388) (2WD)	
2	7007414	1	Plug (Pump Assembly p/n 3600381) (4WD)	
3	See Note	NSS	O-Ring (Note: Use Item 200A)	
4	7021200	1	Spring, Relief Valve	
5	7007417	1	Valve, Relief	
6	See Note	NSS	O-Ring (Note: Use Item 200A)	
7	7007419	2	Plug	
7A	7007418	2	O-Ring	
10	7007470	2	Plug	
10A	7021256	2	O-Ring	
11	7007470	2	Plug	
11A	7021256	2	O-Ring	
12	7021223	10	Screw	
14	See Note	NSS	Gasket, Servo Cover (Note: Use Item 200A)	
15	7007423	1	Nut, Special	
18	7007425	1	Bearing, Needle	
19	See Note	NSS	Ring, Retaining (Note: Use Item 201)	
20	See Note	NSS	Washer (Note: Use Item 201)	
21	See Note	NSS	Spring (Note: Use Item 201)	
23	See Note	NSS	Washer (Note: Use Item 201)	
24	See Note	NSS	Retainer (Note: Use Item 201)	
25	See Note	NSS	Pin, Slipper Holddown (Note: Use Item 201)	
26	See Note	NSS	Piston Assembly (Note: Use Item 201)	
27	See Note	NSS	Retainer, Slipper (Note: Use Item 201)	
28	See Note	NSS	Guide, Retainer (Note: Use Item 201)	
29	7007435	1	Pin, Spring	
30	7021202	1	Screw	
31	7007437	1	Bearing, Ball	
32	7007438	2	Ring, Retainer	
33	7007439	2	Ring	
34	7021203	2	Pin, Spring	
35	7007441	1	Handle, Pin	
36	7007442	1	Sleeve, Bearing	
37	See Note	NSS	Gasket, Front Cover (Note: Use Item 200A)	
38	7007444	1	Pin	
40	7007446	1	Pin	
41	See Note	NSS	O-Ring (Note: Use Item 200A)	
42	See Note	NSS	Ring, Load Temper (Note: Use Item 200A)	
43	7023977	1	Housing, Pump	
44	See Note	NSS	Ring, Back-up (Note: Use Item 200A)	
45	See Note	NSS	O-Ring (Note: Use Item 200A)	
46	7007452	1	Cover, Gerotor	
47	7007453	3	Bolt, Hex	
48	7007208	1	Plug	
48A	7007207	1	O-Ring	
49	7024875	1	Cover, Front (Pump Assembly p/n 3600388) (2WD)	

ITEM	PART NUMBER	QTY	DESCRIPTION	REV
49	7007454	1	Cover, Front (Pump Assembly p/n 3600381) (4WD)	
50	See Note	NSS	Block, Cylinder (Note: Use Item 201)	
51	7021207	6	Screw	
53	7007457	1	Swash Plate	
54	7021210	1	Journal, Bearing (Pump Assembly p/n 3600388) (2WD)	
54	7021212	1	Journal, Bearing (Pump Assembly p/n 3600381) (4WD)	
55	7007459	1	Seal, Lip	
56	See Note	NSS	O-Ring (Note: Use Item 200A)	
57	7010121	1	Shaft, Main Pump	
58	7021214	1	Plate, Valve	
59	7007463	1	Gerotor Assembly	
60	7007464	1	Pin	
61	7007465	1	Key, Woodruff	
62	7007466	1	Adaptor, Remote Filtration (Without By-Pass)	
64	7021218	3	Screw	
67	7021220	1	Cover, Servo (Without Adjuster)	
68	7021219	1	Cover, Servo (Without Adjuster)	
69	7023979	1	Guide, Spring	
70	7007484	1	Stop, Servo	
71	7007485	1	Spring	
72	7021221	1	Screw	
73	7007487	1	Guide, Spring	
74	7007488	1	Ring, Retaining	
75	7021222	1	Locknut	
76	See Note	2	Ring, Piston (Note: Use Item 200A or 200B)	
77	7007494	1	Piston, Servo	
78	See Note	2	O-Ring (Note: Use Item 200A or 200B)	
79	7024877	1	Valve, Bypass (Pump Assembly p/n 3600388) (2WD)	
79	7007472	1	Valve, Bypass (Pump Assembly p/n 3600381) (4WD)	
80	7010122	2	Valve, Pressure Relief (Includes Item 6) (Pump Assembly p/n 3600388) (2WD)	
80	7024851	2	Valve, Pressure Relief (Includes Item 6) (Pump Assembly p/n 3600381) (4WD)	
81	7007474	1	Control, Dual Oil-Filled	
81	7007496	1	Coil Assembly (Pilot)	
81	7007497	1	Plug (Pump)	
81	7007498	1	Plug (Valve Harness)	
82	7001498	2	Screw	
83	7007478	2	Screw	
84	7001433	2	O-Ring	
86	7007475	1	Plug, Orifice/Screen (.156)	
87	7007477	2	Plug, Orifice (.37)	
88	7007476	1	Adapter, Auxiliary Pump	
89	7021217	1	Spacer/Gasket	
90	7021206	1	Nut	
91	7024800	2	Spring	
92	7021201	1	Bracket, Lifting	
		Ref	**PISTON PUMP AND FITTING ASSEMBLIES**	
	3600394	Ref	**Piston Pump and Fitting Assemblies 2WD**	D
	3600396	Ref	**4WD (USA Built Machines) (SN 0300087000 through 0300139335)**	C
	1001117799	Ref	**4WD (USA Built Machines) (SN 0300139336 through**	A

ITEM	PART NUMBER	QTY	DESCRIPTION	REV
			0300171769)	
	1001117799	Ref	**4WD (China Built Machines) (SN B300000100 through B300000969)**	A
101	2220377	1	Fitting, Straight	
101	2220479	1	Fitting, Straight	
102	2220578	1	Fitting, 90	
103	2220646	2	Fitting, 90	
104	2220947	2	Fitting, Straight	
105		Ref	Pump Options (Includes Items 1-92)	
105	3600388	1	Pump 2WD	
105	3600381	1	Pump 4WD	
		Ref	**KIT OPTIONS:**	
200		Ref	Seal Kit Options:	
200A	7021232	1	Seal Kit - Complete (Includes Items 3, 6, 14, 37, 41, 42, 44, 45, 55, 56, 76, 78, 84 & 89)	
200B	7007412	1	Seal Kit - Servo Piston (Includes Items 76 & 78)	
201	7010116	1	Cylinder Block Kit (Includes Items 19-28 & 50)	

FIGURE 2-16. GEAR PUMP ASSEMBLY

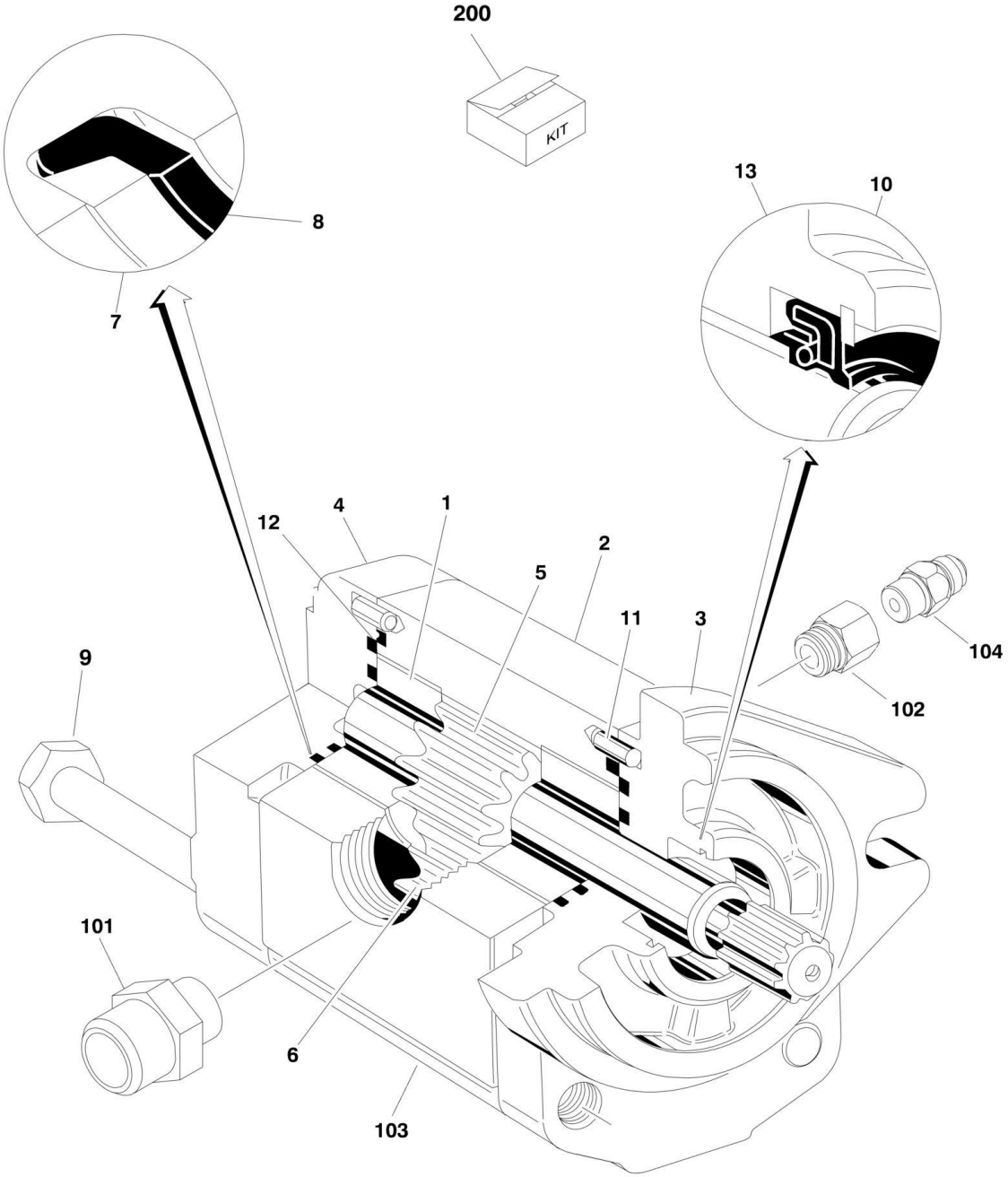

FIGURE 2-16. GEAR PUMP ASSEMBLY

ITEM	PART NUMBER	QTY	DESCRIPTION	REV
	3600242	Ref	**GEAR PUMP ASSEMBLY**	
1	7010105	2	Bearing/Bushing	
2	See Note	NSS	Housing (Note: Use p/n 3600242 Complete Replacement)	
3	See Note	NSS	Flange (Note: Use p/n 3600242 Complete Replacement)	
4	7010103	1	Cover	
5	7012987	1	Gear, Drive	
6	7012988	1	Gear, Idler	
7	See Note	NSS	Ring, Anti-Extrusion (Note: Use Item 200)	
8	See Note	NSS	Seal (Note: Use Item 200)	
9	See Note	NSS	Bolt (Note: Not Available for Purchase)	
10	7010104	1	Ring, Retaining	
11	See Note	NSS	Pin, Dowel (Note: Not Available for Purchase)	
12	See Note	NSS	Seal, O-Ring (Note: Use Item 200)	
13	See Note	NSS	Seal, Shaft (Note: Use Item 200)	
	3600395	Ref	**GEAR PUMP AND FITTING ASSEMBLY**	A
101	2220376	1	Fitting, Straight	
102	2220810	1	Fitting, Reducer	
103	3600242	1	Pump (Includes Items 1-13)	
104	4640744	1	Fitting, Check Valve	
		Ref	**KIT OPTIONS**	
200	7007489	1	Seal Kit (Includes Items 7, 8, 12 & 13)	

FIGURE 2-17. TANK INSTALLATIONS

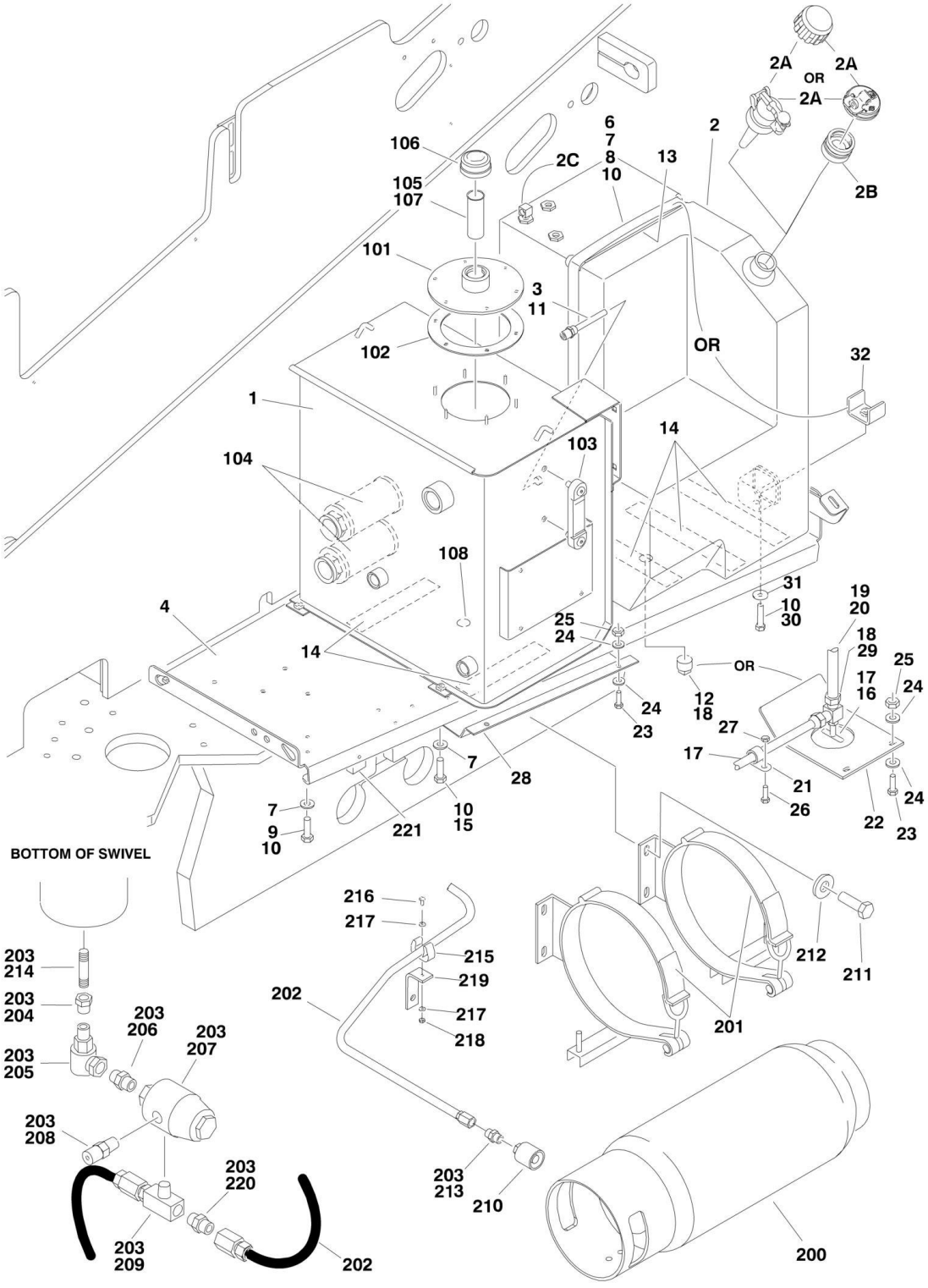

FIGURE 2-17. TANK INSTALLATIONS

ITEM	PART NUMBER	QTY	DESCRIPTION	REV
		Ref	**TANKS INSTALLATIONS**	
	0254849	Ref	**Diesel Machines**	12-G
	0271250	Ref	**Dual Fuel Machines (USA Built Machines) (SN 0300087000 through 0300140980)**	I
	1001116341	Ref	**Dual Fuel Machines (USA Built Machines) (SN 0300140981 through 0300171769)**	A
1	4400449	1	Hydraulic Tank Assembly (See Items 101-108 for Breakdown)	
2		Ref	Tank, Fuel Options:	
2	4400400	1	Diesel Machines	
2	4400400	1	Dual Fuel Machines (USA Built Machines) **(SN 0300087000 through 0300109244)**	
2	1001091562	NLA	Dual Fuel Machines (USA Built Machines) (Use p/n 1001111514) **(SN 0300109245 through 0300140980)**	
2	1001111514	1	Dual Fuel Machines **(SN 0300140981 through 0300171769)**	
2A		Ref	Cap Options:	
2A		Ref	Diesel Machines	
2A	7016314	1	Standard Black Cap - Non-Locking	
2A	1120362	1	Optional Cap with Fuel Gauge (Not Included with Tank)	
2A	1120487	1	Optional Blue Cap (Not Included with Tank)	
2A		Ref	Dual Fuel Machines	
2A	7016314	1	Standard Black Cap (USA Built Machines) **(SN 0300087000 through 0300109244)**	
2A	70001103	1	Standard Black Cap (USA Built Machines) **(SN 0300109245 through 0300140980)**	
2A	70002715	1	Standard Black Cap (USA Built Machines) **(SN 0300140981 through 0300171769)**	
2A	1120484	1	Optional Red Cap - Ford Engine Machines Only (Not Included with Tank)	
2B	70002716	1	Adapter (USA Built Gas Machines) **(SN 0300140001 through 0300171769)**	
2C		Ref	Tube, Fuel Pick-up (With Fitting) Options:	
2C	7019658	1	Dual Fuel Engine Machines (USA Built Machines) **(SN 0300087000 through 0300109244)**	
2C	70004184	1	Dual Fuel Engine Machines **(SN 0300109245 through 0300140980)**	
2C	70004149	1	Dual Fuel Engine Machines **(SN 0300140981 through 0300171769)**	
2C	7019658	1	Diesel Engine Machines	
3	4360436	1	Switch, Fuel Level	
4		Ref	Hydraulic Tray Weldment Options:	
4	4845393	1	USA Built Machines **(SN 0300087000 through 0300117083)**	
4	1001091911	1	USA Built Machines **(SN 0300117084 through 0300171769)**	
4	1001091911	1	China Built Machines **(SN B300000100 through B300000969)**	
6	4240113	1	Strap, Tank	
7	4751600	AR	Flatwasher 3/8in Regular	
8	3311601	AR	Nut 3/8in-16NC	
9	0641614	6	Bolt 3/8in-16NC x 1-3/4in	
10	0100011	AR	Compound, Locking	
11	0100079	AR	Sealant, Pipe	
12	2200233	1	Plug (Diesel Machines Only)	
13	4280295	25 in /44cm	Strip, Protective	

ITEM	PART NUMBER	QTY	DESCRIPTION	REV
14	4420038	70 in /1.78m	Tape, Rubber	
15	0641608	4	Bolt 3/8in-16NC x 1in	
		Ref	**Note: Items 16-32 Used on Dual Fuel Machines Only**	
16	4641022	1	Valve, Needle	
17	4568116	1	Tube, Fuel	
18	0100020	AR	Sealant	
19	0100062	AR	Retaining Compound #680	
20	4568119	1	Tube, Fuel	
21	1320245	1	Clamp	
22	3572423	1	Plate, Valve, Needle	
23	0641508	AR	Bolt 5/16in-18NC x 1in	
24	4711500	AR	Flatwasher 5/16in Thin	
25	3311505	AR	Locknut 5/16in-18NC	
26	0641412	1	Bolt 1/4in-20NC x 1-1/2in	
27	3311405		Locknut 1/4in-20NC	
28	3576755	1	Cover, Fuel Pump	
29	2221270	1	Fitting, Brass	
30	0641818	2	Bolt 1/2in-13NC x 2-1/4in (USA Built Machines) **(SN 0300140981 through 0300171769)**	
30	0641818	2	Bolt 1/2in-13NC x 2-1/4in (China Built Machines) **(SN B30000100 through B300000969)**	
31	4751800	2	Flatwasher 1/2in Regular (USA Built Machines) **(SN 0300140981 through 0300171769)**	
31	4751800	2	Flatwasher 1/2in Regular (China Built Machines) **(SN B30000100 through B300000969)**	
32	1001118133	2	Bracket (USA Built Machines) **(SN 0300140981 through 0300171769)**	
32	1001118133	2	Bracket (China Built Machines) **(SN B30000100 through B300000969)**	
	4400449	Ref	**HYDRAULIC TANK ASSEMBLY**	G
101	7024439	1	Cover	
102	7024440	1	Gasket	
103	7024441	1	Gauge, Sight	
104	7024442	2	Strainer	
105	7024443	1	Filler Neck	
106	7024444	1	Cap, Vented	
107	7024445	1	Strainer	
108	7024446	1	Plug, Magnetic	
	0255524	Ref	**LP TANK BRACKETS INSTALLATION (USA BUILT MACHINES ONLY)**	9-F
200		Ref	Tank, LP - 43.5 Lbs Options:	
200	4400275	1	Aluminum	
200	4400420	1	Steel	
201	1320220	2	Clamp	
201	1320127	2	Clamp, Toggle (1 Per Clamp)	
202	2720144	2	Hose	
203	0100020	AR	Sealant, Pipe	
204		Ref	Fitting, Reducer Options:	
204	2221019	1	Fitting, Reducer **(SN 0300087000 through 0300136526)**	
204	2221197	1	Fitting, Reducer **(SN 0300136527 through 0300171769)**	
205	2180125	1	Fitting, 90 Swivel	
206	2220261	AR	Fitting, Nipple	

ITEM	PART NUMBER	QTY	DESCRIPTION	REV
207	2180388	1	Fitting, Bulkhead	
208	2180389	1	Valve, Relief	
209	2220418	1	Fitting, Tee Options:	
210	2180387	2	Fitting, Straight	
211	0641606	8	Bolt 3/8in-16NC x 3/4in	
212	4751600	8	Flatwasher 3/8in Regular	
213	2180418	2	Fitting, Connector	
214	2221018	1	Fitting, Nipple **(SN 0300087000 through 0300136527)**	
215	1320218	2	Clamp, Spring	
216	3910808	2	Screw, Round Head #8-32NC x 1/2in	
217	4750800	4	Flatwasher #8 Regular	
218	3310805	2	Locknut #8-32NC	
219	0181949	2	Angle, Support	
220	2221024	2	Fitting, Union Ball Check	
221	0362519	4	Bar	

FIGURE 2-18. ROTARY COUPLING INSTALLATION

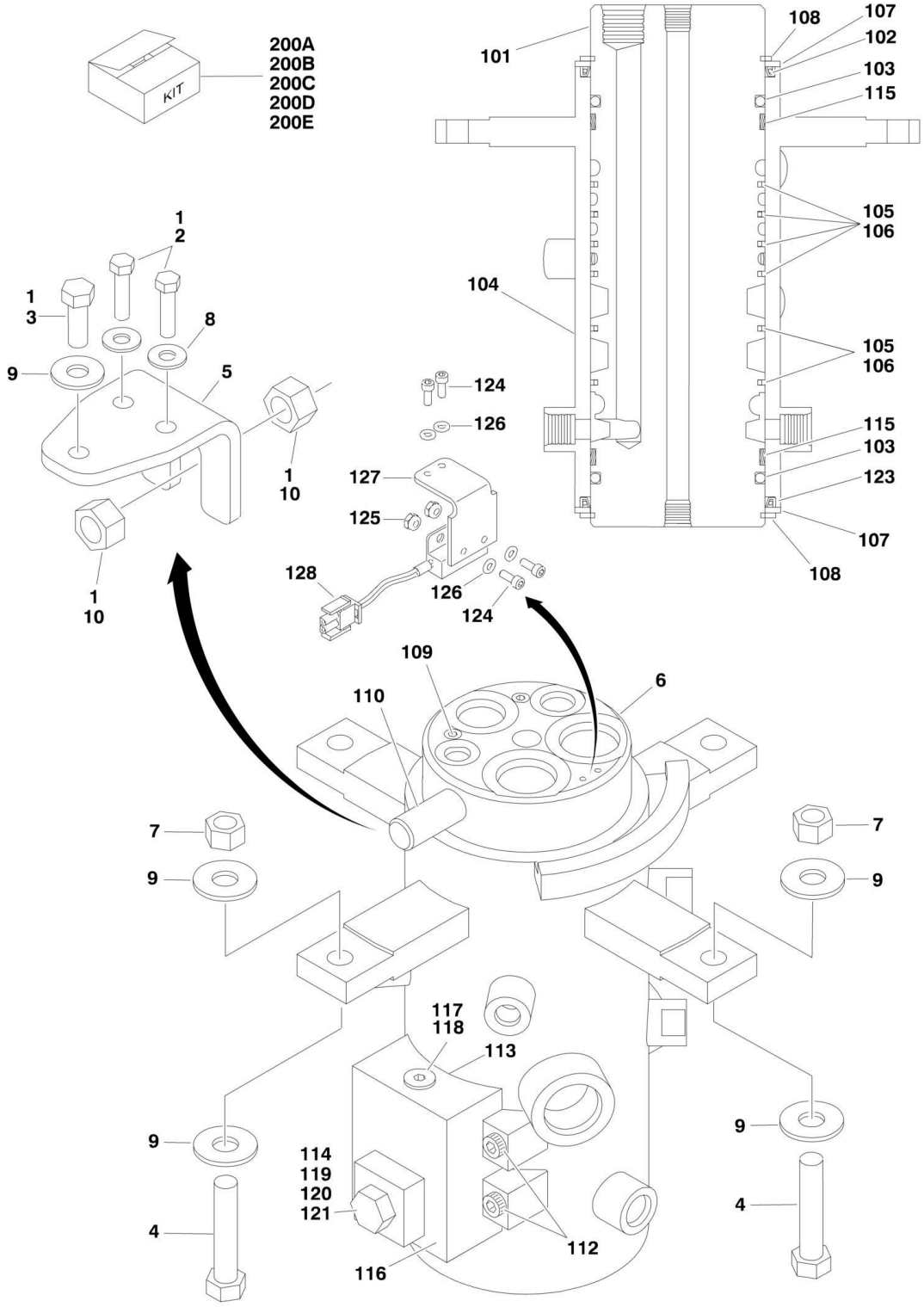

FIGURE 2-18. ROTARY COUPLING INSTALLATION

ITEM	PART NUMBER	QTY	DESCRIPTION	REV
		Ref	**ROTARY COUPLING INSTALLATIONS**	
		Ref	**2WS - USA Built Machines:**	
	0273052	Ref	**Rotary Coupling Installations (SN 0300087000 through 0300138728)**	G
	1001107498	Ref	**Rotary Coupling Installations (SN 0300138729 through 0300171769)**	A
		Ref	**2WS - China Built Machines:**	
	1001107498	Ref	**Rotary Coupling Installations (SN B300000100 through B300000969)**	A
		Ref	**4WS - USA Built Machines:**	
	0273161	Ref	**Rotary Coupling Installations (SN 0300087000 through 0300138728)**	G
	1001107499	Ref	**Rotary Coupling Installations (SN 0300138729 through 0300171769)**	A
		Ref	**4WS - China Built Machines:**	
	1001107499	Ref	**Rotary Coupling Installations (SN B300000100 through B300000969)**	A
1	0100011	AR	Compound, Locking	
2	0641612	2	Bolt 3/8in-16NC x 1-1/2in	
3	0641811	1	Bolt 1/2in-13NC x 1-3/8in	
4	0641820	2	Bolt 1/2in-13NC x 2-1/2in	
5	0903056	1	Bracket	
6		Ref	Coupling, Rotary Options (See Items 101-123 for Breakdown):	
6		Ref	2WS - USA Built Machines:	
6	1660257	NLA	Coupling, Rotary (Use p/n 1660303) **(SN 0300087000 through 0300113929)**	
6	1660303	1	Coupling, Rotary **(SN 0300113930 through 0300138728)**	
6	1001106974	1	Coupling, Rotary **(SN 0300138729 through 0300171769)**	
6		Ref	2WS - China Built Machines:	
6	1001106974	1	Coupling, Rotary **(SN B300000100 through B300000969)**	
6		Ref	4WS - USA Built Machines:	
6	1660258	NLA	Coupling, Rotary (Use p/n 1660304) **(SN 0300087000 through 0300113929)**	
6	1660304	1	Coupling, Rotary **(SN 0300113930 through 0300138728)**	
6	1001106975	1	Coupling, Rotary **(SN 0300138729 through 0300171769)**	
6		Ref	4WS - China Built Machines:	
6	1001106975	1	Coupling, Rotary **(SN B300000100 through B300000969)**	
7	3271805	2	Locknut 1/2in-13NC	
8	4751600	2	Flatwasher 3/8in Regular	
9	4751800	5	Flatwasher 1/2in Regular	
10	3322201	2	Nut 3/4in-16NC	
		Ref	**ROTARY COUPLING ASSEMBLIES**	
		Ref	**2WS - USA Built Machines:**	
	1660257	Ref	**Rotary Coupling Assemblies (Use p/n 1660303) (SN 0300087000 through 0300113929)**	D
	1660303	Ref	**Rotary Coupling Assemblies (SN 0300113930 through 0300138728)**	B
	1001106974	Ref	**Rotary Coupling Assemblies (SN 0300138729 through 0300171769)**	A
		Ref	**2WS - China Built Machines:**	
	1001106974	Ref	**Rotary Coupling Assemblies (SN B300000100 through B300000969)**	A

ITEM	PART NUMBER	QTY	DESCRIPTION	REV
		Ref	**4WS - USA Built Machines:**	
	1660258	Ref	**Rotary Coupling Assemblies (SN 0300087000 through 0300113929)**	D
	1660304	Ref	**Rotary Coupling Assemblies (SN 0300113930 through 0300138728)**	B
	1001106975	Ref	**Rotary Coupling Assemblies (SN 0300138729 through 0300171769)**	A
		Ref	**4WS - China Built Machines:**	
	1001106975	Ref	**Rotary Coupling Assemblies (SN B300000100 through B300000969)**	A
101	See Note	NSS	Body (Note: Not Available - Purchase Complete Rotary Coupling Assembly)	
102		Ref	Seal Options:	
102	7026189	1	2WS (P/N 1660257 Coupling)	
102	70001248	1	2WS (p/ns 1660303 & 1001106974 Coupling)	
102	See Note	1	4WS (Note: Use Item 200C, 200D or 200E)	
103	See Note	2	O-Ring (Note: Use Item 200A, 200B, 200C, 200D or 200E)	
104	See Note	NSS	Housing (Note: Not Available - Purchase Complete Rotary Coupling Assembly)	
105		Ref	Seal, Cap	
105	See Note	NSS	2WS (Note: Use Item 200A or 200B)	
105	See Note	NSS	4WS (Note: Use Item 200C, 200D or 200E)	
106		Ref	O-RING	
106	See Note	NSS	2WS (Note: Use Item 200A or 200B)	
106	See Note	NSS	4WS (Note: Use Item 200C, 200D or 200E)	
107		Ref	Ring Options:	
107	7026503	2	2WS	
107	7026511	2	4WS	
108		Ref	Ring, Retaining Options:	
108	7026504	Ref	Ring, Retaining 2WS	
108	7026504	2	Ring, Retaining 2WS (1660257 Coupling)	
108	7026504	1	Ring, Retaining 4WS (1660303 & 1001106974 Coupling)	
108	7013189	Ref	Ring, Retaining 4WS	
108	7013189	2	Ring, Retaining 4WS (1660258 Coupling)	
108	7013189	1	Ring, Retaining 4WS (1660304 & 1001106975 Coupling)	
109		Ref	Plug Options:	
109		Ref	2WS	
109	See Note	NSS	1660257 Coupling (Note: Not Available - Purchase Locally)	
109	80934561	2	1660303 & 1001106974 Coupling	
109		Ref	4WS	
109	See Note	NSS	1660258 Coupling (Note: Not Available - Purchase Locally)	
109	80934561	4	1660304 & 1001106975 Coupling	
110	See Note	NSS	Lug, Torque (Note: Not Available for Purchase)	
112	7026197	4	Bolt 5/16in-18NC x 1-1/4in	
113	See Note	NSS	O-Ring (Note: Use Item 200A, 200B, 200C, 200D or 200E)	
114	See Note	NSS	O-Ring (Note: Use Item 200A, 200B, 200C, 200D or 200E)	
115	See Note	NSS	Bearing (Note: Use Item 200A, 200B, 200C, 200D or 200E)	
116	7024404	1	Block Valve Assembly	
117	7026505	1	Plug	
118	7026506	1	Valve, Check	
119	7026507	1	Plug	
120		Ref	Plunger, Valve Options:	
120	7026508	1	1660257 & p/n 1660258 Couplings	

ITEM	PART NUMBER	QTY	DESCRIPTION	REV
120	7024404	1	1660303, 1660304, 1001106974 & 1001106975 Couplings	
121	7026509	1	Spring, Compression	
122	See Note	NSS	Protective Netting (Not Shown) (1660303, 1660304, 1001106974 & 1001106975 Couplings) (Note: Not Available for Purchase)	
123		Ref	Seal Options:	
123	7026189	1	1660257 COUPLINGS	
123	70001248	1	1660303 & 1001106974 Couplings	
123	See Note	NSS	1660258, 1660304 & 1001106975 Couplings (Note: Use Item 200C, 200D or 200E)	
124	See Note	NSS	Screw, Socket Head #10-24NC x 1/2in (Note: Not Available - Purchase Locally)	
125	See Note	NSS	Locknut #10-24NC (Note: Not Available - Purchase Locally)	
126	See Note	NSS	Flatwasher #10 Regular (Note: Not Available - Purchase Locally)	
127	70003454	1	Bracket, Switch Mounting	
128	4360517	1	Switch, Proximity	
		Ref	**KIT OPTIONS**	
200		Ref	Seal Kit Options:	
200A	7026510	1	1660257 Coupling (Includes Items 103, 105, 106, 113, 114 & 115. Items 102 & 123 must be purchased separately)	
200B	70001248	1	1660303 & 1001106974 Couplings (Includes Items 102, 103, 105, 106, 113, 114, 115 & 123)	
200C	7026512	1	1660258 Coupling (Includes Items 102, 103, 105, 106, 113, 114, 115 & 123)	
200D	70001249	1	1660304 Coupling (Includes Items 102, 103, 105, 106, 113, 114, 115 & 123)	
200E	70002212	1	1001106975 Coupling (Includes Items 102, 103, 105, 106, 113, 114, 115 & 123)	

FIGURE 2-19. GROUND CONTROL BOX ASSEMBLY (WITHOUT UGM)

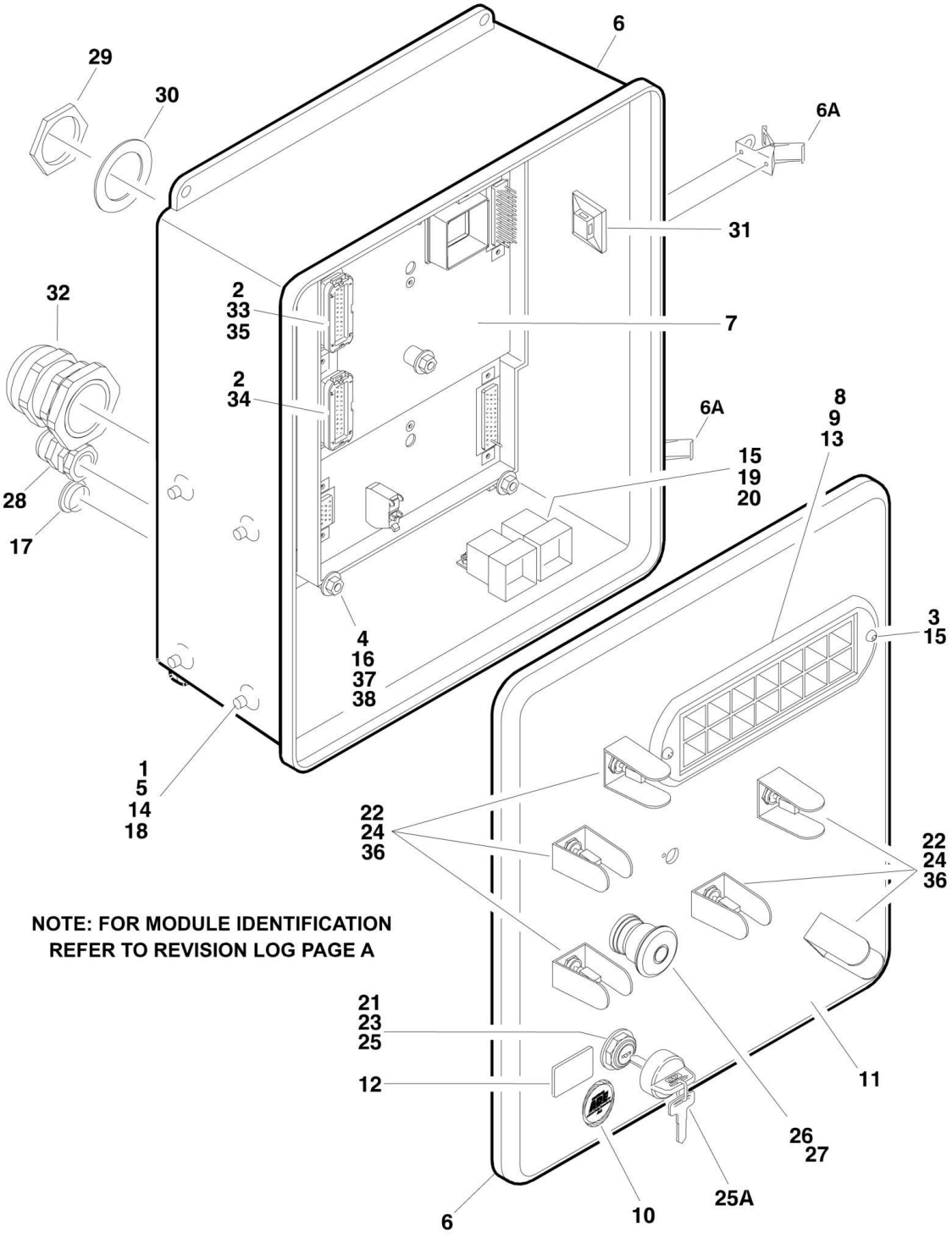

FIGURE 2-19. GROUND CONTROL BOX ASSEMBLY (WITHOUT UGM)

ITEM	PART NUMBER	QTY	DESCRIPTION	REV
		Ref	**Note: Only Available on USA Built Machines.**	
		Ref	**Note: For Module Identification (Non-UGM/UGM), refer to Revision Log page A.**	
		Ref	**GROUND CONTROL BOX ASSEMBLIES**	
		Ref	**Ground Control Box Assemblies 600S (SN 0300087000 through 0300099059)**	
	0861696	Ref	**Caterpillar Engine (ANSI and ANSI Export Specs)**	B
	0861698	Ref	**Caterpillar Engine (Australian and CE Specs)**	B
	0861685	Ref	**Deutz Engine (ANSI and ANSI Export Specs)**	B
	0861687	Ref	**Deutz Engine (Australian and CE Specs)**	B
	0861694	Ref	**Ford Engine (ANSI and ANSI Export Specs)**	B
	0861788	Ref	**GM Engine (ANSI and ANSI Export Specs)**	B
		Ref	**Ground Control Box Assemblies 600S (SN 0300099060 through 0300171769)**	
	1810071	Ref	**Caterpillar Engine (ANSI and ANSI Export Specs)**	D
	1810072	Ref	**Caterpillar Engine (Australian and CE Specs)**	D
	1810069	Ref	**Deutz Engine (ANSI and ANSI Export Specs)**	C
	1810070	Ref	**Deutz Engine (Australian and CE Specs)**	C
	1810068	Ref	**GM Engine (ANSI and ANSI Export Specs)**	C
		Ref	**Ground Control Box Assemblies 600SJ & 660SJ (SN 0300087000 through 0300099059)**	
	0861697	Ref	**Caterpillar Engine (ANSI and ANSI Export Specs)**	B
	0861699	Ref	**Caterpillar Engine (Australian and CE Specs)**	B
	0861686	Ref	**Deutz Engine (ANSI and ANSI Export Specs)**	B
	0861688	Ref	**Deutz Engine (Australian and CE Specs)**	B
	0861695	Ref	**Ford Engine (ANSI and ANSI Export Specs)**	C
	0861789	Ref	**GM Engine (ANSI and ANSI Export Specs)**	B
		Ref	**Ground Control Box Assemblies 600SJ & 660SJ (SN 0300099060 through 0300171769)**	
	1810076	Ref	**Caterpillar Engine (ANSI and ANSI Export Specs)**	D
	1810077	Ref	**Caterpillar Engine (Australian and CE Specs)**	D
	1810074	Ref	**Deutz Engine (ANSI and ANSI Export Specs)**	C
	1810075	Ref	**Deutz Engine (Australian and CE Specs)**	C
	1810073	Ref	**GM Engine (ANSI and ANSI Export Specs)**	C
1	0100011	AR	Compound, Locking	
2	0100048	AR	Grease, Dielectric	
3	0630518	2	Capscrew, Button Head	
4	0630548	5	Bolt	
5	0641506	4	Bolt 5/16in-18NC x 3/4in	
6	0861389	1	Box, Fiberglass	
6A	7020246	2	Latch	
7		Ref	Module, Ground Control Options:	
		Ref	Note: Re-calibration Required when Replaced.	
7	1600364	1	Caterpillar and Ford Engines **(SN 0300087000 through 0300099059)**	
7	1600411	NLA	Caterpillar Engines (Use p/n 1001149676) **(SN 0300099060 through 0300171769)**	
7	1600411	NLA	Deutz and GM Engines (Use p/n 1001149676)	
7	2915014	1	Update Kit (Includes Module, Cables, Programming Instructions and CD Software) (Use with 1600364)	
8	1670829	1	Bezel	

ITEM	PART NUMBER	QTY	DESCRIPTION	REV
9		Ref	Decal - Ground Control Display Options:	
9	1705753	1	Decal - Ground Control Display **(SN 0300087000 through 0300099059)**	
9	1706712	1	Decal - Ground Control Display **(SN 0300099060 through 0300171769)**	
10	1705132	1	Decal - ADE **(SN 0300087000 through 0300099060)**	
11		Ref	Decal - Faceplate Options:	
11		Ref	Decal - Faceplate 600S Options:	
11	1703465	1	Decal - Faceplate **(SN 0300087000 through 0300099059)**	
11	1706914	1	Decal - Faceplate **(SN 0300099060 through 0300135020)**	
11	1001102601	1	Decal - Faceplate **(SN 0300135021 through 0300171769)**	
11		Ref	Decal - Faceplate 600SJ/660SJ Options:	
11	1703466	1	Decal - Faceplate **(SN 0300087000 through 0300099059)**	
11	1706915	1	Decal - Faceplate **(SN 0300099060 through 0300135020)**	
11	1001102602	1	Decal - Faceplate **(SN 0300135021 through 0300171769)**	
12	2420172	1	Gauge, Hourmeter	
13	2760105	1	Housing, Display Light	
14	3300205	4	Nut, Retainer	
15	3300408	4	Locknut, Plastic Insert	
16	3311401	10	Nut 1/4in-20NC	
17	3520035	1	Plug, Cap	
18	3539219	1	Plate, Reinforcement	
19	3740049	Ref	Relay Options:	
19	3740049	3	Caterpillar Engines	
19	3740049	2	Deutz, Ford and GM Engines	
20	3900268	2	Screw, Flange #10 x 1/2in	
21	3910804	6	Screw #8-32NC x 1/4in	
22	4060906	Ref	Shield, Toggle Switch Options:	
22		Ref	Shield, Toggle Switch 600S **(SN 0300087000 through 0300135021)**	
22	4060906	7	Shield, Toggle Switch 600SJ & 660SJ **(SN 0300087000 through 0300135020)**	
22	4060906	1	All Models **(SN 0300135021 through 0300171769)**	
23	4070987	1	Shim (.015in)	
24	4360328	Ref	Switch, Toggle	
24	4360328	6	Switch, Toggle 600S	
24	4360328	7	Switch, Toggle 600SJ & 660SJ	
25		Ref	Switch, Key Options:	
25	4360469	1	ANSI and ANSI Export Specs	
25	4360470	1	Australian and CE Specs	
25A	2860030	1	Key Replacement	
26	4360475	1	Switch, Emergency Stop	
27	4360476	1	Switch, Contact Block	
28	4460426	1	Connector, Strain Relief	
29	4460470	1	Nut, Terminal	
30	4460471	1	Lockwasher, Terminal	
31	4460488	AR	Mounting Base, Terminal	
32	4460526	1	Connector, Strain Relief	
33	4460874	1	Connector (Natural)	
34	4460875	1	Connector (Gray)	
35	4460905	4	Connector, Amp Seal Plug	
36	4740444	Ref	Flatwasher, Special	

ITEM	PART NUMBER	QTY	DESCRIPTION	REV
36	4740444	6	Flatwasher, Special 600S	
36	4740444	7	Flatwasher, Special 600SJ & 660SJ	
37	4751400	20	Flatwasher 1/4in Regular	
38	4761400	15	Lockwasher 1/4in	
39	4923206	1	Valve Harness Assembly (Not Shown - See ELECTRICAL SECTION for Breakdown)	
40		Ref	Ground Control Box Harness Assembly (Not Shown - See ELECTRICAL SECTION for Breakdown)	
40	4923229	1	Caterpillar and Ford Engine **(SN 0300087000 through 0300099060)**	
40	4923213	1	Deutz and GM Engine **(SN 0300087000 through 0300099059)**	
40	4923577	1	Caterpillar, Deutz and GM Engine **(SN 0300099060 through 0300137194)**	
40	1001108126	1	Caterpillar, Deutz and GM Engine **(SN 0300137195 through 0300171769)**	
41		Ref	Engine Harness Assembly (Not Shown - See ELECTRICAL SECTION for Breakdown)	
41	4923227	1	Caterpillar Engine **(SN 0300087000 through 0300099059)**	
41	4923576	1	Caterpillar Engine **(SN 0300099060 through 0300171769)**	
41	4923212	1	Deutz Engine	
41	4923226	1	Ford Engine	
41	4923492	1	GM Engine	

FIGURE 2-20. GROUND CONTROL BOX ASSEMBLY (WITH UGM)

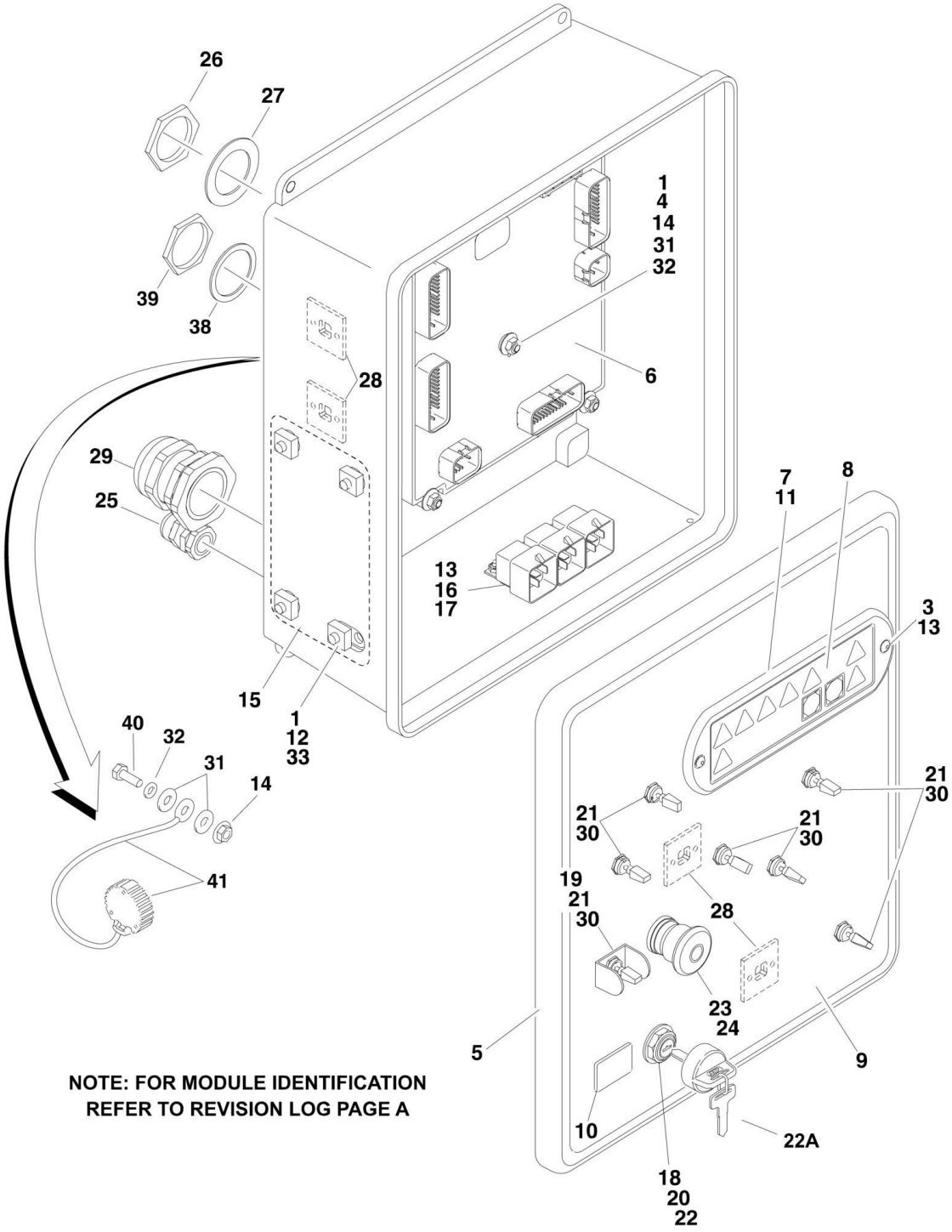

FIGURE 2-20. GROUND CONTROL BOX ASSEMBLY (WITH UGM)

ITEM	PART NUMBER	QTY	DESCRIPTION	REV
		Ref	**Note: For Module Identification (Non-UGM/UGM), refer to Revision Log page A.**	
		Ref	**GROUND CONTROL BOX ASSEMBLIES**	
		Ref	**Ground Control Box Assemblies 600S:**	
	1001110354	Ref	**Caterpillar Engine (ANSI and ANSI Export Specs)**	C
	1001110356	Ref	**Caterpillar Engine (Australian Specs USA Built Machines) (SN 0300087000 through 0300149409)**	C
	1001110356	Ref	**Caterpillar Engine (Australian Specs China Built Machines) (SN B300000100 through B300000309)**	C
	1001110354	Ref	**Caterpillar Engine (Australian Specs USA Built Machines) (SN 0300149410 through 0300171769)**	C
	1001110354	Ref	**Caterpillar Engine (Australian Specs China Built Machines) (SN B300000310 through B300000969)**	C
	1001110356	Ref	**Caterpillar Engine (CE Specs)**	C
	1001110349	Ref	**Deutz Engine (ANSI and ANSI Export Specs)**	C
	1001110352	Ref	**Deutz Engine (Australian Specs USA Built Machines) (SN 0300087000 through 0300149409)**	C
	1001110352	Ref	**Deutz Engine (Australian Specs China Built Machines) (SN B300000100 through B300000309)**	C
	1001110349	Ref	**Deutz Engine (Australian Specs USA Built Machines) (SN 0300149410 through 0300171769)**	C
	1001110349	Ref	**Deutz Engine (Australian Specs China Built Machines) (SN B300000310 through B300000969)**	C
	1001110352	Ref	**Deutz Engine (CE Specs)**	C
	1001110348	Ref	**GM Engine (ANSI and ANSI Export Specs)**	C
		Ref	**Ground Control Box Assemblies 660SJ:**	
	1001110355	Ref	**Caterpillar Engine (ANSI and ANSI Export Specs)**	C
	1001110357	Ref	**Caterpillar Engine (Australian Specs USA Built Machines) (SN 0300087000 through 0300149409)**	C
	1001110357	Ref	**Caterpillar Engine (Australian Specs China Built Machines) (SN B300000100 through B300000309)**	C
	1001110355	Ref	**Caterpillar Engine (Australian Specs USA Built Machines) (SN 0300149410 through 0300171769)**	C
	1001110355	Ref	**Caterpillar Engine (Australian Specs China Built Machines) (SN B300000310 through B300000969)**	C
	1001110357	Ref	**Caterpillar Engine (CE Specs)**	C
	1001110351	Ref	**Deutz Engine (ANSI and ANSI Export Specs)**	C
	1001110353	Ref	**Deutz Engine (Australian Specs USA Built Machines) (SN 0300087000 through 0300149409)**	C
	1001110353	Ref	Deutz Engine (Australian Specs China Built Machines) **(SN B300000100 through B300000309)**	C
	1001110351	Ref	**Deutz Engine (Australian Specs USA Built Machines) (SN 0300149410 through 0300171769)**	C
	1001110351	Ref	**Deutz Engine (Australian Specs China Built Machines) (SN B300000310 through B300000969)**	C
	1001110353	Ref	**Deutz Engine (CE Specs)**	C
	1001110350	Ref	**GM Engine (ANSI and ANSI Export Specs)**	C
1	0100011	AR	Compound, Locking	
2	0100048	AR	Grease, Dielectric	
3	0630518	2	Capscrew, Button Head	
4	0630548	5	Bolt	
5	1001111017	1	Box, Fiberglass	
5A	7020246	2	Latch	

ITEM	PART NUMBER	QTY	DESCRIPTION	REV
6	1001103667	1	Module, Ground Control (Note: Re-calibration Required when Replaced)	
7	1670829	1	Bezel	
8	1706712	1	Decal - Ground Control Display	
9		Ref	Decal - Faceplate Options:	
9	1001102601	1	Decal - Faceplate 600S	
9	1001102602	1	Decal - Faceplate 660SJ	
10	2420172	1	Gauge, Hourmeter	
11	2760105	1	Housing, Display Light	
12	3300205	4	Nut, Retainer	
13	3300408	4	Locknut, Plastic Insert	
14	77143013	11	Nut 1/4in-20NC, Whiz Lock	
15	3539219	1	Plate, Reinforcement	
16	3740049	Ref	Relay Options:	
16	3740049	3	Relay Caterpillar Engines	
16	3740049	2	Relay Deutz, Ford and GM Engines	
17	3900268	AR	Screw, Flange #10 x 1/2in	
18	3910804	6	Screw #8-32NC x 1/4in	
19	4060906	1	Shield, Toggle Switch	
20		Ref	Shim Options:	
20	4070987	1	Shim (.125in)	
20	1001151393	1	Shim (.063in)	
21	4360328	Ref	Switch, Toggle	
21	4360328	6	Switch, Toggle 600S	
21	4360328	7	Switch, Toggle 660SJ	
22		Ref	Switch, Key Options:	
22	4360469	1	ANSI and ANSI Export Specs	
22	4360470	1	Australian Specs USA Built Machines **(SN 0300087000 through 0300149409)**	
22	4360470	1	Australian Specs China Built Machines **(SN B300000100 through B300000309)**	
22	4360469	1	Australian Specs USA Built Machines **(SN 0300149410 through 0300171769)**	
22	4360469	1	Australian Specs China Built Machines **(SN B300000310 through B300000969)**	
22	4360470	1	CE Specs	
22A	2860030	1	Key Replacement	
23	4360475	1	Switch, Emergency Stop	
24	4360476	1	Switch, Contact Block	
25	4460426	1	Terminal, Strain Relief	
26	4460470	1	Nut, Terminal	
27	4460471	1	Lockwasher, Terminal	
28	4460488	6	Mounting Base, Terminal	
29	4460526	1	Connector, Strain Relief	
30	4740444	AR	Washer, Special	
31	4751400	12	Flatwasher 1/4in Regular	
32	4761400	6	Lockwasher 1/4in	
33	0641506	4	Bolt 5/16in-18NC x 3/4in	
34	4923206	1	Harness, Valve (See ELECTRICAL SECTION for Breakdown) (Not Shown)	
35		Ref	Harness, Engine (See ELECTRICAL SECTION for Breakdown) (Not Shown)	
35	1001110362	1	Caterpillar Engine	

ITEM	PART NUMBER	QTY	DESCRIPTION	REV
35	1001110361	1	Deutz Engine	
35	1001110359	1	GM Engine	
36	1001108602	1	Harness, Ground Control Box (See ELECTRICAL SECTION for Breakdown) (Not Shown)	
38	4460496	1	Lockwasher, Terminal	
39	4460497	1	Nut, Terminal	
40	0641407	1	Bolt 1/4in-20NC x 7/8in	
41	1001106736	1	Cap, Dust	

FIGURE 2-21. ELECTRICAL OPTIONS INSTALLATION (TURNTABLE MOUNTED)

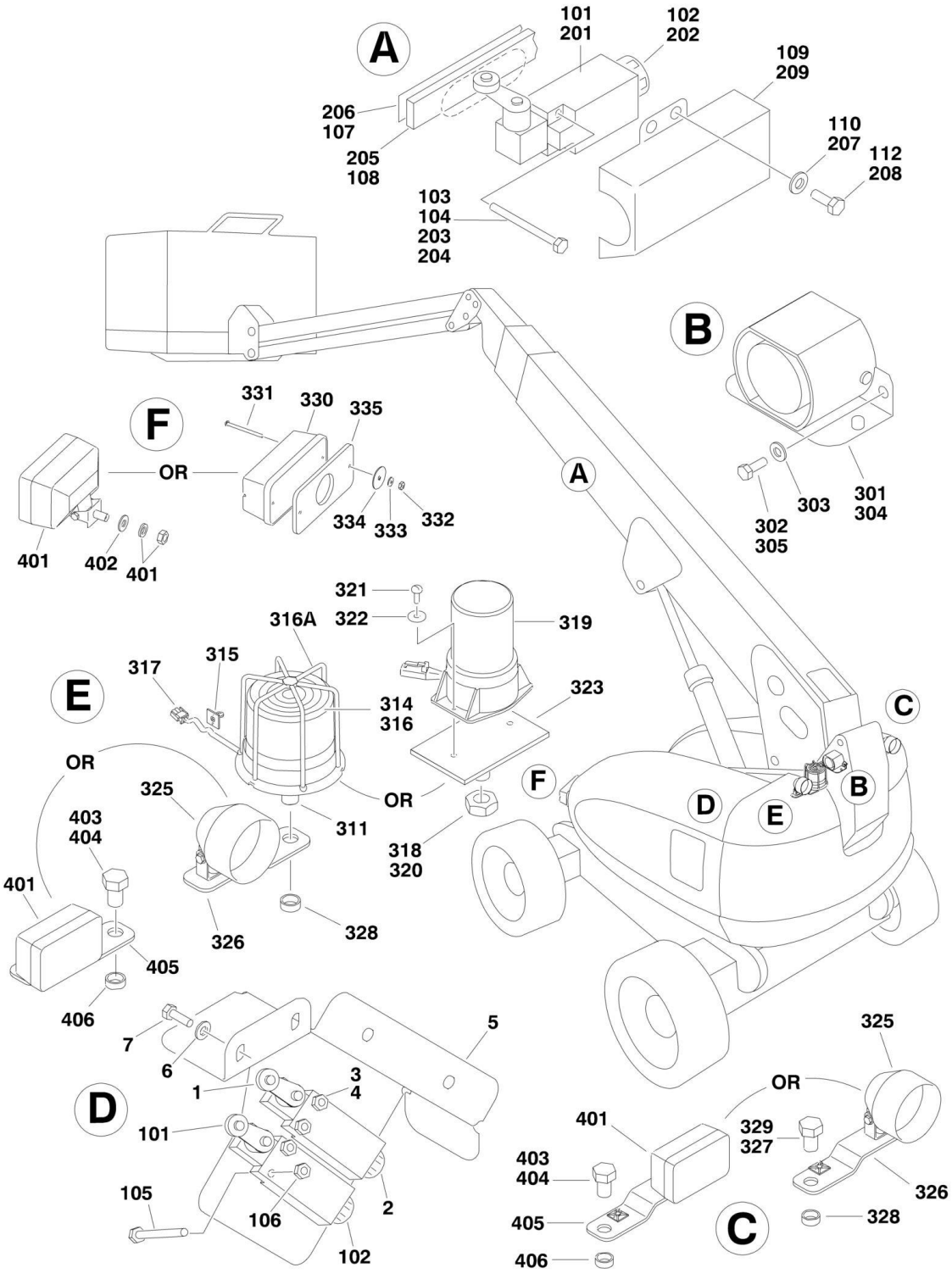

FIGURE 2-21. ELECTRICAL OPTIONS INSTALLATION (TURNTABLE MOUNTED)

ITEM	PART NUMBER	QTY	DESCRIPTION	REV
	0255335	Ref	**LIMIT SWITCH INSTALLATION - ABOVE HORIZONTAL (ALL SPECS EXCEPT CE SPEC)**	G
1	4360578	1	Switch, Limit	
2	4460968	1	Connector, Strain Relief	
3		Ref	Capscrew Options:	
3	3931028	2	Capscrew, Socket Head #8-32NC x 1-3/4in	
3	3930828	2	Capscrew, Socket Head #10-24NC x 1-3/4in	
4		Ref	Locknut Options:	
4	3310805	2	Locknut #8-32NC	
4	3311005	2	Locknut #10-24NC	
5	1670818	1	Cover, Limit Switch	
6	4751400	4	Flatwasher 1/4in Regular	
7	3931408	4	Capscrew 1/4in-20NC x 1in	
	0255698	Ref	**LIMIT SWITCHES INSTALLATION - DUAL CAPACITY (600S ALL SPECS EXCEPT CE AND LATIN AMERICAN SPECS)**	7-D
101	4360578	1	Switch, Limit	
102	4460968	2	Connector, Strain Relief	
103	0100035	AR	Compound, Locking	
104	3930816	2	Capscrew, Socket Head #8-32NC x 1in	
105	3930828	2	Capscrew, Socket Head #8-32NC x 1-3/4in	
106	3310805	2	Locknut #8-32NC	
107	4420054	9 ft/2.7m	Tape, Double Sided	
108		Ref	Bar, Fiberglass Options:	
108	0362528	NLA	USA Built Machines (Use p/n 1001106479) **(SN 0300087000 through 0300138728)**	
108	1001106479	1	USA Built Machines **(SN 0300138729 through 0300171769)**	
108	1001106479	1	China Built Machines **(SN B300000100 through B300000969)**	
109	1670824	1	Cover, Limit Switch	
110	4751400	4	Flatwasher 1/4in Regular	
112	0641403	4	Bolt 1/4in-20NC x 3/8in	
		Ref	**TRANSPORT SWITCH INSTALLATION (CE SPEC)**	
	0256305	Ref	**Transport Switch Installation 600S & 660SJ**	6
	0256306	Ref	**Transport Switch Installation 600SJ**	6
		Ref	**Note: Only Available on USA Built Machines.**	
201	4360578	1	Switch, Limit	
202	4460968	1	Connector, Strain Relief	
203	3930828	2	Capscrew, Socket Head #8-32NC x 1-3/4in	
204	3310805	2	Locknut #8-32NC	
205		Ref	Bar, Fiberglass Options:	
205	0362609	NLA	Bar, Fiberglass 600S & 660SJ (Use p/n 1001106481) **(SN 0300087000 through 0300138728)**	
205	1001106481	1	Bar, Fiberglass 600S & 660SJ **(SN 0300138729 through 0300171769)**	
205	0362610	NLA	Bar, Fiberglass 600SJ (Use p/n 1001106482) **(SN 0300087000 through 0300138728)**	
205	1001106482	1	Bar, Fiberglass 600SJ **(SN 0300138729 through 0300171769)**	
206	4420060	AR	Tape, Double-Sided	
207	4751400	4	Flatwasher 1/4in Regular	
208	0641403	4	Bolt 1/4in-20NC x 3/8in	
209	3380535	1	Cover, Limit Switch	
	0270833	Ref	**ALARM INSTALLATIONS**	C

ITEM	PART NUMBER	QTY	DESCRIPTION	REV
301	0257887	1	Alarm/Harness Assembly	
301	0140032	1	Alarm	
301	2820035	6 in/15cm	Loom	
301	4460424	1	Plug	
301	4460268	2	Socket	
302	0641406	2	Bolt 1/4in-20NC x 3/4in	
303	4711400	2	Flatwasher 1/4in Thin	
304	0100048	AR	Sealant, Silicone	
305	0100011	AR	Compound, Locking	
	0270805	Ref	**STROBE LIGHT INSTALLATION (AMBER) (OPTIONAL) (USA BUILT MACHINES) (SN 0300087000 through 0300169422)**	D
	0270805	Ref	**STROBE LIGHT INSTALLATION (AMBER) (OPTIONAL) (CHINA BUILT MACHINES) (SN B300000100 through B300000969)**	D
		Ref	**Note: If machines is equipped with BLUE Strobe Light, see SPECIAL OPTIONS SECTION SkyGuard Kit.**	
311		Ref	Adapter Options:	
311	0630491	1	Adapter used with ECCO Model 6640	
311	0080241	1	Adapter used with ECCO Model 6650	
314	0100011	AR	Compound, Locking	
314	0100048	AR	Sealant, Silicone	
315	4240032	1	Wire-Tile	
316	0272507	1	Strobe Light/Guard/Harness Assembly (Includes Items 311 & 316A)	
316		Ref	Bulb, Replacement Options:	
316	7016380	1	Bulb for ECCO Model 6640	
316	70001941	1	Bulb for ECCO Model 6650	
316A		Ref	Guard Options:	
316A	4060907	1	Guard used with ECCO Model 6640	
316A	2920215	1	Guard used with ECCO Model 6650	
317	4460234	1	Clamp	
	1001149955	Ref	**STROBE LIGHT INSTALLATION (AMBER) (OPTIONAL) (USA BUILT MACHINES) (SN 0300169423 through 0300171769)**	B
	1001150406	Ref	**STROBE LIGHT INSTALLATION (AMBER)**	A
		Ref	**Note: If machines is equipped with BLUE Strobe Light, see SPECIAL OPTIONS SECTION SkyGuard Kit.**	
318	0100035	AR	Compound, Locking	
319	2920161	1	Strobe Light/Harness Assembly	
319	7016319	1	Bulb	
319	7016372	1	Lens	
320	3312602	1	Nut, Jam 1in-8NC	
321	3900085	2	Screw #10-32 x 1/2in	
322	4751000	2	Flatwasher 1/4in Thin	
323	1001149994	1	Mount Strobe	
324	1001149818	1	Harness, Strobe Light (Not Shown - See ELECTRICAL SECTION for Breakdown)	
	0271552	Ref	**LIGHTS INSTALLATIONS (OPTIONAL)**	C
325	2920110	2	Headlight	
326	0902206	2	Bracket, Mounting	
327	0642612	1	Bolt 1in-8NC x 1-1/2in	
328	4220162	2	Spacer	
329	0100011	AR	Compound, Locking	
330	2920113	2	Taillight	
331	3911040	4	Screw, Machine #10-24NC x 2-1/2in	

ITEM	PART NUMBER	QTY	DESCRIPTION	REV
332	3311005	4	Nut #10-24NC	
333	4751000	4	Flatwasher #10 Regular	
334	4740362	4	Washer, Fender	
335	3960461	2	Gasket	
337	4240032	AR	Tie-Strap (Not Shown)	
338	4460234	AR	Mount, Tie-Strap (Not Shown)	
339		Ref	Switch Options (Not Shown - Located on Console):	
339	4360336	1	Toggle Switch	
339	4360522	1	Push Button Switch	
340	3790012	1	O-Ring (Not Shown - Located on Console) (Use with #339 Toggle Switch)	
341	3820001	11	Rivet, Pop (Not Shown) (USA Built Machines) **(SN 0300087000 through 0300136518)**	
342	1705170	1	Decal - Lights (Not Shown - Located on Console) (USA Built Machines) **(SN 0300136519 through 0300171769)**	
342	1705170	1	Decal - Lights (Not Shown - Located on Console) (China Built Machines) **(SN B300000100 through B300000969)**	
	0274210	Ref	**CHASSIS ILLUMINATION LIGHT INSTALLATION**	B
401	2920157	4	Lamp, Worklight	
402	4740546	4	Washer, Rubber	
403	0100011	AR	Compound, Locking	
404	0642612	2	Bolt 1in-8NC x 1-1/2in	
405	0902206	2	Bracket, Light Mounting	
406	4220162	2	Spacer	
408	3790012	1	O-Ring (Not Shown - Located at Platform Console Box) **(SN 0300087000 through 0300136519)**	
409		Ref	Switch Options (Not Shown - Located on Console):	
409	4360336	1	Toggle Switch	
409	4360522	1	Push Button Switch	
410	4240032	AR	Strap, Tie (Not Shown)	
411	4460234	AR	Mount, Cable (Not Shown)	
412	3820001	11	Rivet, Pop (Not Shown) (USA Built Machines) **(SN 0300087000 through 0300136518)**	
413	1705170	1	Decal - Lights (Not Shown - Located on Console) (USA Built Machines) **(SN 0300136519 through 0300171769)**	
413	1705170	1	Decal - Lights (Not Shown - Located on Console) (China Built Machines) **(SN B300000100 through B300000969)**	

FIGURE 2-22. ENGINE TRAY JACK INSTALLATION (OPTIONAL)

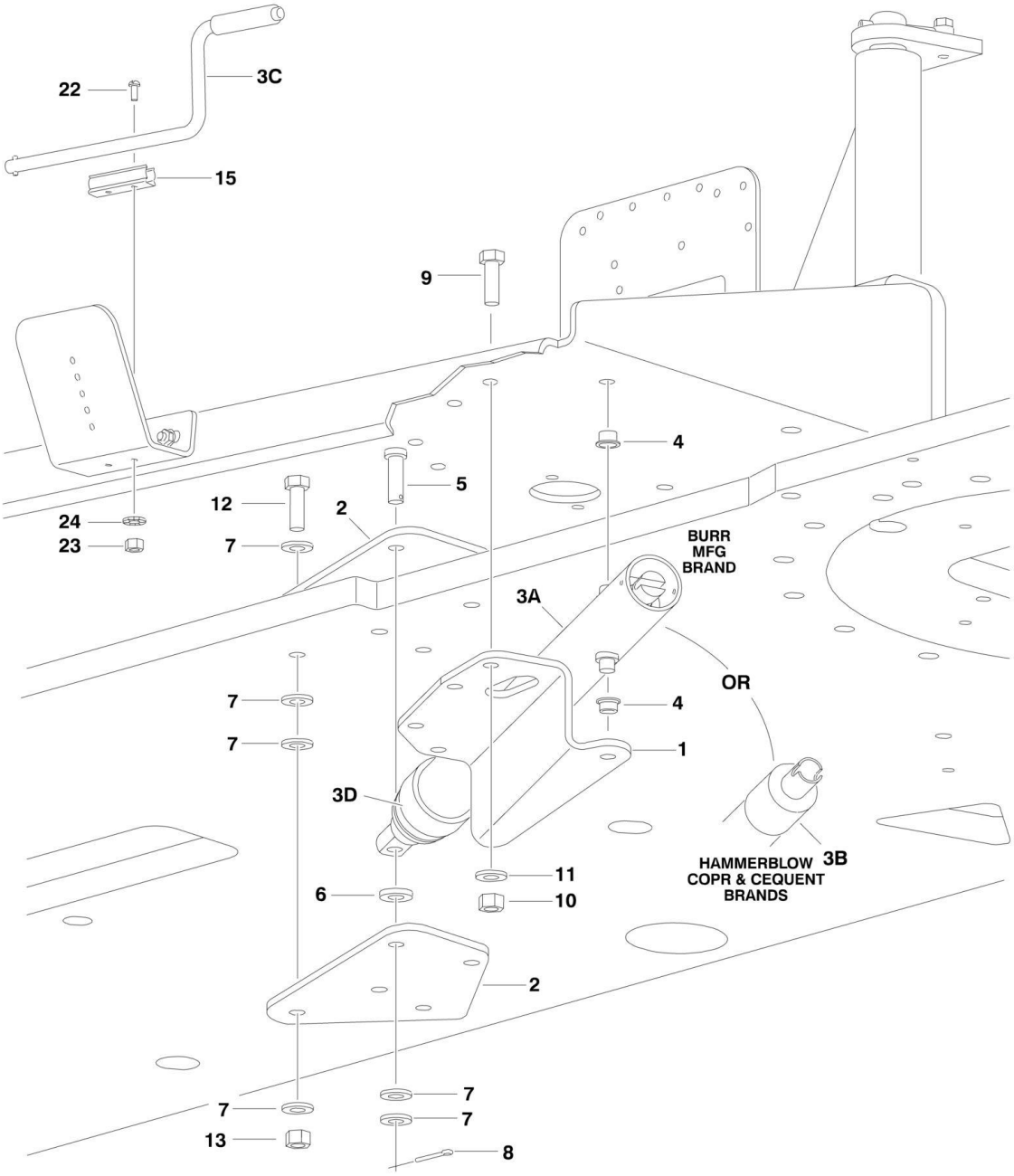

FIGURE 2-22. ENGINE TRAY JACK INSTALLATION (OPTIONAL)

ITEM	PART NUMBER	QTY	DESCRIPTION	REV
	0255881	Ref	**ENGINE TRAY JACK INSTALLATION**	3-G
1	3537445	1	Bracket	
2	3537446	2	Bracket	
3	2840016	1	Hydraulic Jack Assembly Options:	F
3A	2840016	1	Burr Manufacturing Brand	
3B	2840016	1	Hammerblow Corp and Cequent Brands	
3C		Ref	Handle Options:	
3C	7016374	1	Burr Manufacturing Brand	
3C	7024598	1	Hammerblow Corp and Cequent Brands	
3D	7016322	1	Wiper (Burr Manufacturing Brand Only)	
4	0962051	2	Bushing, Flanged	
5	3430816	1	Pin, Clevis	
6	4891800	1	Flatwasher 1/2in Hardened	
7	4711800	6	Flatwasher 1/2in Thin	
8	3450404	1	Pin, Cotter 1/8in x 1in	
9	0641609	4	Bolt 3/8in-16NC x 1-1/8in	
10	3311605	4	Locknut 3/8in-16NC	
11	4891600	4	Flatwasher 3/8in Hardened	
12	0641818	4	Bolt 1/2in-13NC x 2-1/4in	
13	3311805	4	Locknut 1/2in-13NC	
15	1380147	1	Clip, Spring	
22	3910608	2	Screw #6-32NC x 1in	
23	3310601	2	Nut #6-32NC	
24	4770600	2	Starwasher #6	

FIGURE 2-23. HOODS (ABS) AND LIFTING PLATE INSTALLATIONS (USA BUILT MACHINES) (SN 0300087000 through 0300089988)

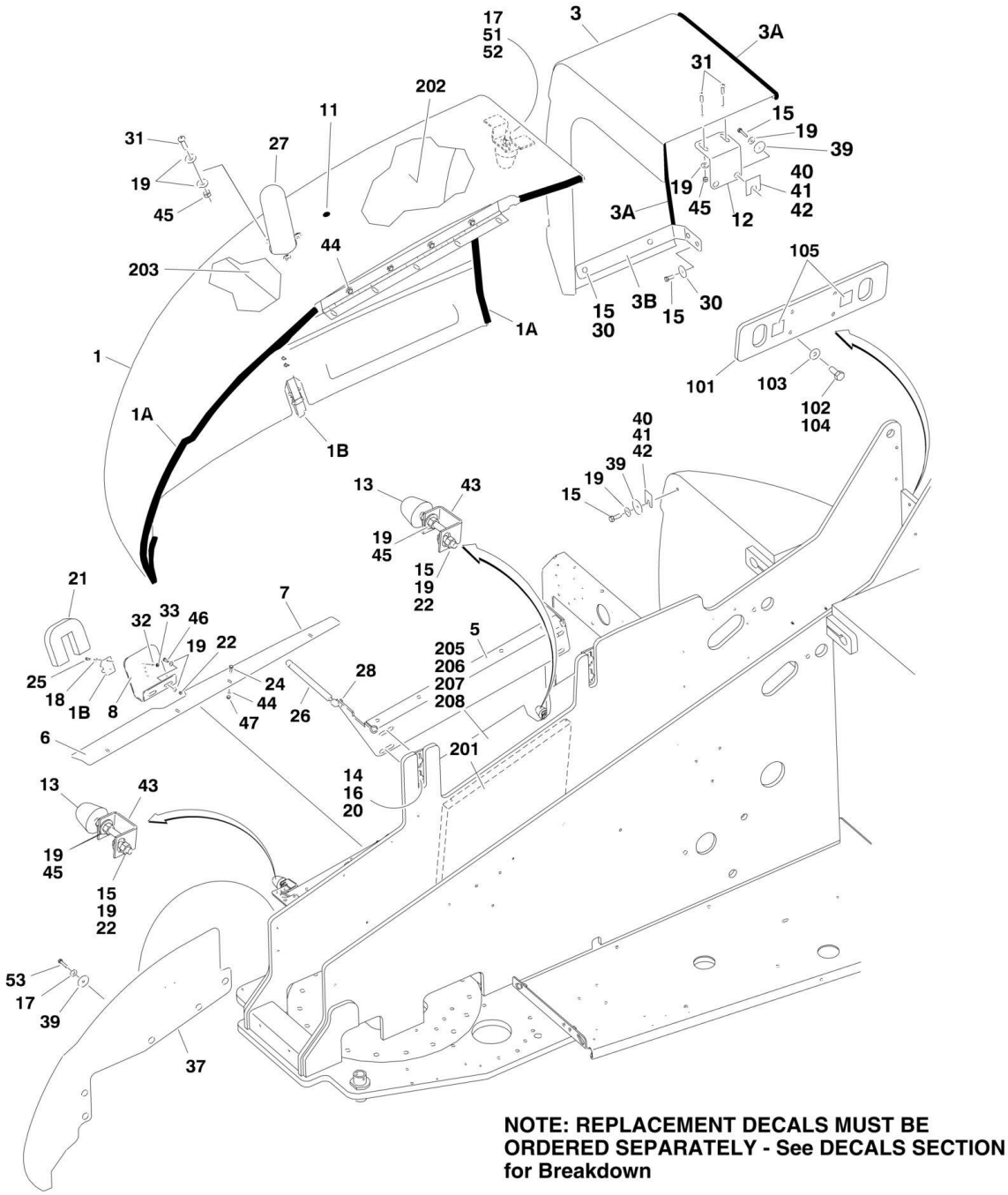

NOTE: REPLACEMENT DECALS MUST BE ORDERED SEPARATELY - See DECALS SECTION for Breakdown

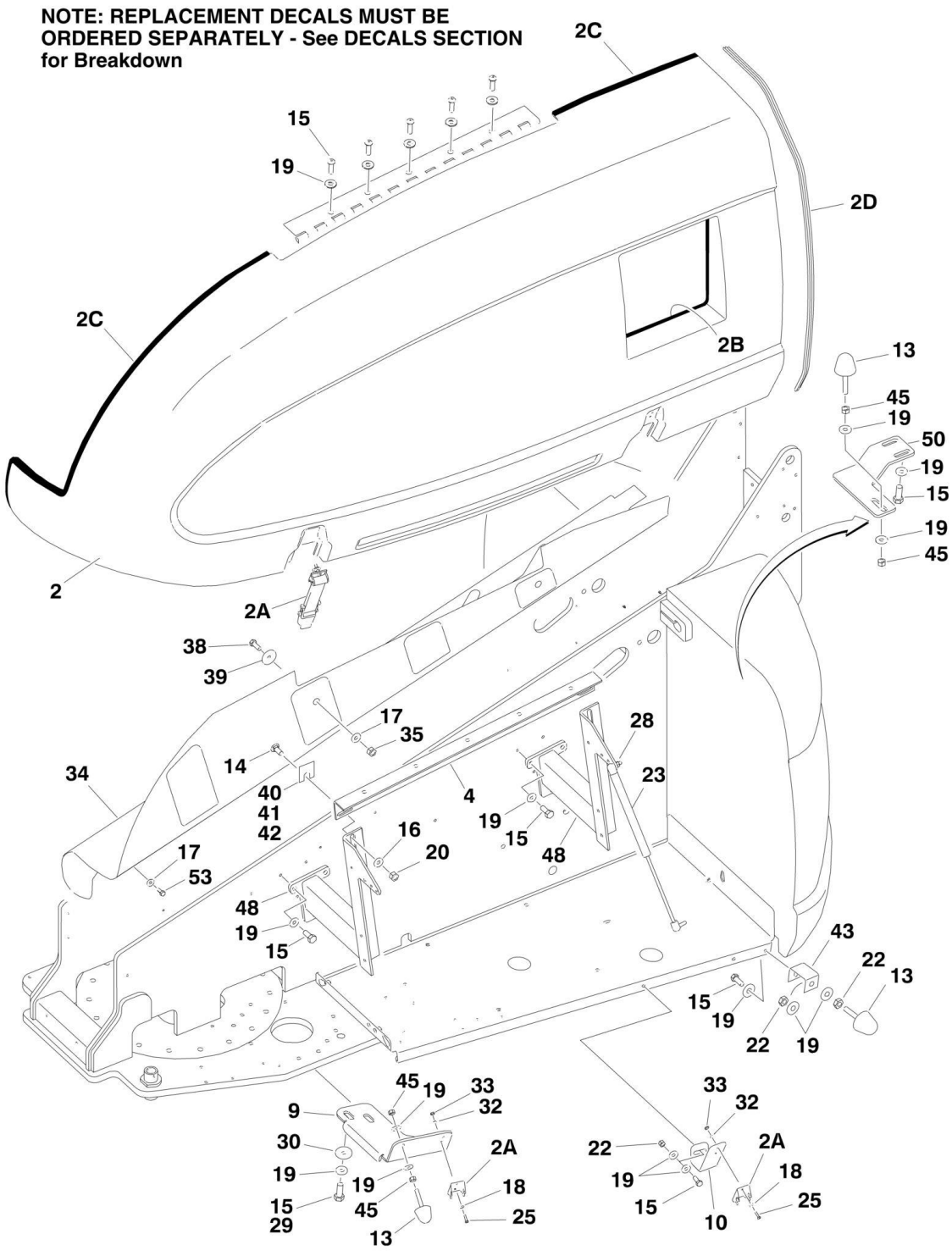
NOTE: REPLACEMENT DECALS MUST BE ORDERED SEPARATELY - See DECALS SECTION for Breakdown
2C
15
19
2D
2C
2B
13
45
19
50
19
15
19
45
2
2A
38
39
17
35
28
34
14
40
41
42
4
23
19
15
48
16
20
17
53
48
19
15
43
22
13
15
19
22
19
45
19
33
32
9
30
19
15
29
19
45
13
2A
18
25
33
32
22
19
15
2A
18
25
10

FIGURE 2-23. HOODS (ABS) AND LIFTING PLATE INSTALLATIONS (USA BUILT MACHINES) (SN 0300087000 through 0300089987)

ITEM	PART NUMBER	QTY	DESCRIPTION	REV
		Ref	**NOTE: Steel Hood Replacement Kits are available for machines built with Deutz engines (Purchase p/n 1001126286) and Caterpillar/GM engines (Purchase p/n 1001126287). No kits are available for machines built with Ford Engines.**	
	0256830	Ref	**HOODS INSTALLATIONS**	11-J
1	2680449	1	Hood Assembly - Engine Side	
		Ref	**Note: Replacement Decals must be Purchased Separately - See DECALS SECTION.**	
1	2600209		Hinge	
1A	3960464	65 in /1.67m	Seal	
1A	3960462	61 in /1.55m	Seal	
1B	2940088	1	Latch	
2	2680448	1	Hood Assembly - Tank Side	
		Ref	**Note: Replacement Decals must be Purchased Separately - See DECALS SECTION.**	
2	2600233		Hinge	
2A	2940088	2	Latch	
2B	3960438	53 in /1.35m	Seal	
2C	3960464	83 in /2.11m	Seal	
2D	3960462	55 in/1.4m	Seal	
3	2680450	1	Hood Assembly- Engine Spacer	
		Ref	**Note: Replacement Decals must be Purchased Separately - See DECALS SECTION.**	
3A	3960453	68 in /1.73m	Seal	
3B	7023366	1	Bracket	
4	0902416	1	Bracket, Hood Mounting	
5	0902351	1	Bracket, Hood Mounting	
6	3539934	1	Plate, Seal	
7	3960389	3.5 ft/1m	Seal	
8	0902491	1	Bracket, Latch	
9	0902223	1	Bracket, Latch	
10	0902143	1	Bracket, Latch	
11	3520033	2	Plug, Hole	
12	0902161	1	Bracket, Hood Spacer Mounting	
13	0940071	5	Bumper	
14	0630507	6	Bolt, Carriage 1/2in-13NC x 1-1/4in	
15	0641608	AR	Bolt 3/8in-16NC x 1in	
16	4740171	6	Flatwasher, Hardened	
17	4751500	9	Flatwasher 5/16in Regular	
18	4751000	12	Flatwasher #10 Regular	
19	4751600	AR	Flatwasher 3/8in Regular	
20	3311805	6	Locknut 1/2in-13NC	
21	3960470	1	Seal	
22	3311605	5	Locknut 3/8in-16NC	
23	4160139	2	Spring, Gas (Tank Side)	
24	0641406	4	Bolt 1/4in-20NC x 3/4in	

ITEM	PART NUMBER	QTY	DESCRIPTION	REV
25	0721006	6	Screw #10-24NC x 3/4in	
26	4160143	2	Spring, Gas (Engine Side)	
27	4845411	1	Outlet, Exhaust	
28	3311505	4	Locknut 5/16in-18NC	
29	0100011	AR	Compound, Locking	
30	4740076	4	Washer, Fender	
31	3900232	5	Screw, Button Head 3/8in-16NC x 1-1/4in	
32	4761000	6	Lockwasher #10	
33	3311001	6	Nut #10-24NC	
34	1670771	1	Cover	
35	3311501	AR	Nut 5/16in-18NC	
36	0641512	2	Bolt 5/16in-18NC x 1-1/2in	
37	1670779	1	Cover, Side	
38	0641506	AR	Bolt 5/16in-18NC x 3/4in	
39	4740076	AR	Washer, Fender	
40	4070410	AR	Shim 1/16in	
41	4070411	AR	Shim 1/8in	
42	4070412	AR	Shim 3/16in	
43	0902219	2	Bracket, Bumper	
44	4751400	4	Flatwasher 1/4in Regular	
45	3311601	AR	Nut 3/8in-16NC	
46	0641609	2	Bolt 3/8in-16NC x 1-1/8in	
47	3311405	4	Locknut 1/4in-20NC	
48	4845356	2	Hood Mount Weldment	
50	0902384	1	Bracket, Hood Mount	
51	0940088	1	Hood, Bumper	
52	3321501	2	Nut 5/16in-24NF	
53	0641506	10	Bolt 5/16in-18NC x 3/4in	
	0256122	Ref	**LIFTING PLATE INSTALLATION**	1-B
101	3539590	1	Plate, Lifting	
102	0682014	4	Bolt 5/8in-11NC x 1-3/4in (Grade 8)	
103	4892000	4	Flatwasher 5/8in Hardened	
104	0100019	AR	Compound, Locking	
105	1701500	2	Decal - Tie Down/Lift	
	0256823	Ref	**NOISE REDUCTION INSTALLATION (DIESEL MACHINES)**	2
201	2820078	1	Foam, Acoustical	
202	2820079	1	Foam, Acoustical	
203	2820119	1	Foam, Acoustical	
205	3539955	1	Plate, Baffle	
206	0641506	2	Bolt 5/16in-18NC x 3/4in	
207	4751500	2	Flatwasher 5/16in Regular	
208	0100011	AR	Compound, Locking	

FIGURE 2-24. HOODS (ABS) AND LIFTING PLATE INSTALLATIONS (USA BUILT MACHINES) (SN 0300089988 through 0300171769)

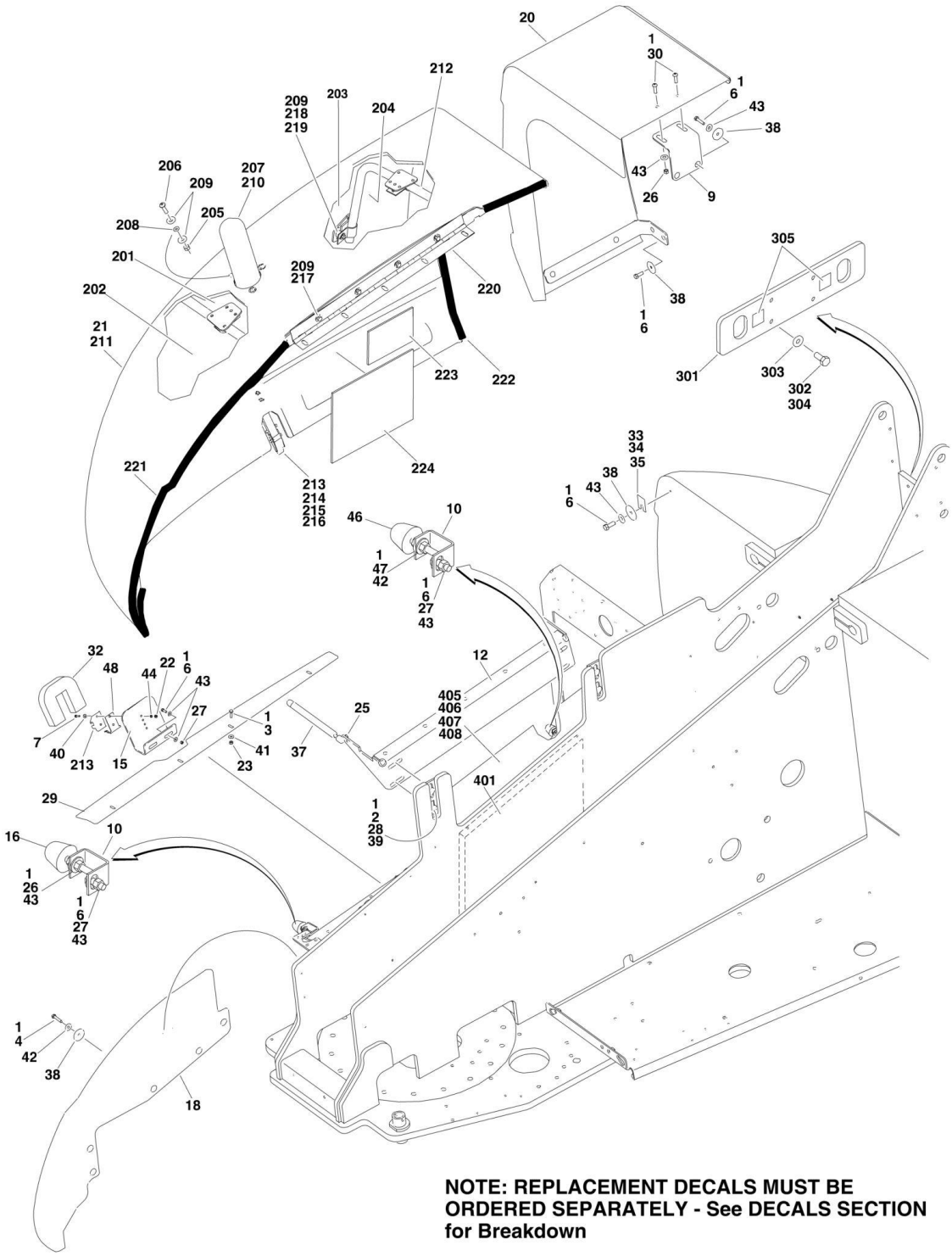

NOTE: REPLACEMENT DECALS MUST BE ORDERED SEPARATELY - See DECALS SECTION for Breakdown

NOTE: REPLACEMENT DECALS MUST BE ORDERED SEPARATELY - See DECALS SECTION for Breakdown

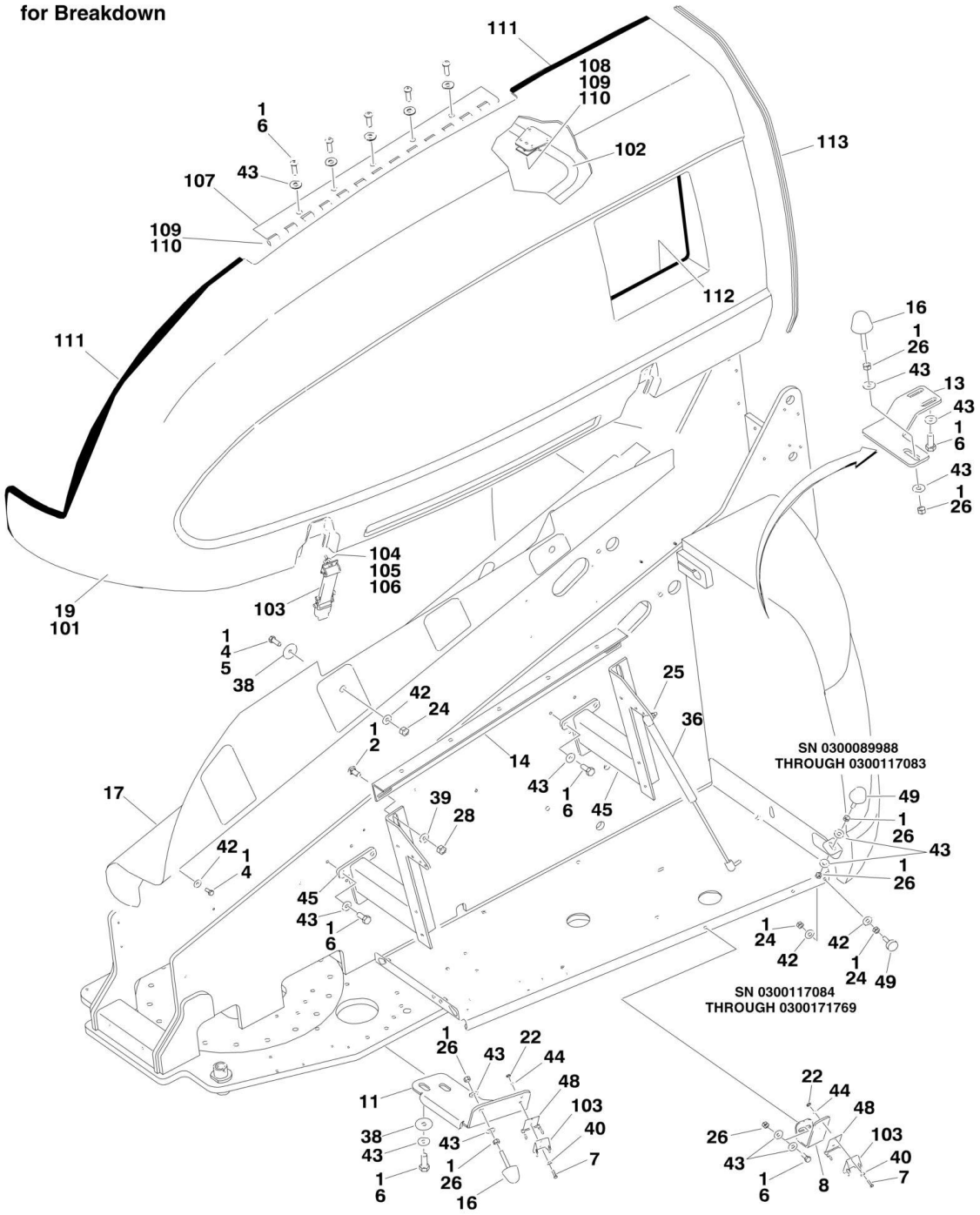

FIGURE 2-24. HOODS (ABS) AND LIFTING PLATE INSTALLATIONS (USA BUILT MACHINES) (SN 0300089988 through 0300171769)

ITEM	PART NUMBER	QTY	DESCRIPTION	REV
		Ref	**Note: Only Available on USA Built Machines.**	
		Ref	**Note: Steel Hood Replacement Kits are available for machines built with Deutz engines (Purchase p/n 1001126286) and Caterpillar/GM engines (Purchase p/n 1001126287). No kits are available for machines built with Ford Engines.**	
		Ref	**HOODS INSTALLATIONS**	
	0274751	Ref	**Caterpillar and Deutz Engines**	H
	0274755	Ref	**Ford Engines**	C
	0275285	Ref	**GM Engines**	G
1	0100011	AR	Compound, Locking	
2	0630507	6	Bolt, Carriage 1/2in-13NC x 1-1/4in	
3	0641406	4	Bolt 1/4in-20NC x 3/4in	
4	0641506	AR	Bolt 5/16in-18NC x 3/4in	
5	0641512	2	Bolt 5/16in-18NC x 1-1/2in **(SN 0300089988 through 0300051120)**	
6	0641608	AR	Bolt 3/8in-16NC x 1in	
7	0721006	6	Bolt #10-24NC x 3/4in	
8	0902143	1	Bracket	
9	0902161	1	Bracket, Hood Spacer	
10	0902219	2	Bracket, Bumper	
11	0902223	1	Bracket, Latch	
12	0902351	1	Bracket, Hood Mount	
13		Ref	Bracket, Hood Mount Options:	
13	0902384	1	Caterpillar and Deutz Engines **(SN 0300089988 through 0300138402)**	
13	0902384	1	Ford and GM Engines	
14	0902416	1	Bracket, Hood Mount	
15	0902491	1	Bracket, Hood Latch	
16	0940071	AR	Bumper	
17	1670771	1	Cover	
18	1670779	1	Cover, Engine/Turntable	
19	1671228	1	Hood Assembly - Tank Side (See Items 101-113 For Breakdown)	
20	1671233	1	Hood, Engine Spacer	
21		Ref	Hood Assembly - Engine Side Options (See Items 201-224 For Breakdown)	
21	1671247	1	Caterpillar and Deutz Engines	
21	1671227	1	Ford Engines	
21	1671312	1	GM Engines	
22	3311001	6	Nut #10-24NC	
23	3311405	4	Locknut 1/4in-20NC	
24	3311501	AR	Nut 5/16in-18NC	
25	3311505	3	Locknut 5/16in-18NC	
26	3311601	AR	Nut 3/8in-16NC	
27	3311605	5	Locknut 3/8in-16NC	
28	3311805	6	Locknut 1/2in-13NC	
29	3571712	1	Plate, Seal	
30	3900232	2	Screw, Button Head 3/8in-16NC x 1-1/4in	
31	3960389	3.5 ft /1.1m	Seal	
32	3960470	1	Seal	

ITEM	PART NUMBER	QTY	DESCRIPTION	REV
33	4070410	AR	Shim 1/16in	
34	4070411	AR	Shim 1/8in	
35	4070412	AR	Shim 3/16in	
36	4160139	2	Spring, Gas (Tank Side)	
37	4160143	1	Spring, Gas (Engine Side)	
38	4740076	AR	Washer, Fender	
39	4740171	6	Flatwasher, Hardened	
40	4751000	6	Flatwasher #10 Regular	
41	4751400	4	Flatwasher 1/4in Regular	
42	4751500	AR	Flatwasher 5/16in Regular	
43	4751600	AR	Flatwasher 3/8in Regular	
44	4761000	6	Lockwasher #10	
45	4845356	2	Hood Mount Weldment	
46	0940088	1	Bumper	
47	3321501	2	Nut 5/16in-24NF **(SN 030091753 through 0300171769)**	
48	2940188	3	Latch, Spring Clip **(SN 030099060 through 0300171769)**	
49		Ref	Hardware Options:	
49	0940071	1	Bumper **(SN 0300089988 through 0300117083)**	
49	0940049	1	Stopper, Hood **(SN 0300117084 through 0300171769)**	
	1671228	Ref	**HOOD ASSEMBLY - TANK SIDE**	A
101	1671231	1	Shell, Tank Side	
102	1671232	1	Frame, Tank Side	
103	2940088	2	Latch	
104	0721008	4	Bolt #10-24NC x 1in	
105	4751000	4	Flatwasher #10 Regular	
106	3311001	4	Nut #10-24NC	
107	2600233	1	Hinge	
108	1321384	4	Hold Down	
109	0641606	9	Bolt 3/8in-16NC x 3/4in	
110	4751600	9	Flatwasher 3/8in Regular	
111	3960464	7 ft/2.1m	Seal	
112	3960438	5 ft/1.5m	Seal	
113	3960462	4.5 ft /1.4m	Seal	
		Ref	**HOOD ASSEMBLY - ENGINE SIDE**	
	1671247	Ref	**Caterpillar and Deutz Engines**	D
	1671227	Ref	**Ford Engines**	B
	1671312	Ref	**GM Engines**	H
201		Ref	Foam, Acoustical Options:	
201	2820080	1	Caterpillar and Deutz Engines **(SN 0300089988 through 0300124420)**	
201	1001101391	1	Caterpillar and Deutz Engines **(SN 0300124421 through 0300171769)**	
201	1001101323	1	GM Engines **(SN 0300124421 through 0300171769)**	
202		Ref	Insulation, Rear Options:	
202	2820233	1	Caterpillar and Deutz Engines	
202	1001101324	1	GM Engines **(SN 0300136961 through 0300171769)**	
203	2820234	1	Insulation, Center (Caterpillar and Deutz Engines Only)	
204	2820235	1	Insulation, Rear (Caterpillar and Deutz Engines Only)	
205	3311605	3	Locknut 3/8in-16NC	
206	3900232	3	Screw, Button Head 3/8in-16NC x 1-1/4in	
207		Ref	Gasket, Heat Options:	

ITEM	PART NUMBER	QTY	DESCRIPTION	REV
207	4061010	1	Caterpillar and Deutz Engine **(SN 0300089988 through 0300124420)**	
207	1001101392	1	Caterpillar and Deutz Engine **(SN 0300124421 through 0300171769)**	
207	4061010	1	Ford and GM Engine Machines **(SN 0300089988 through 0300124421)**	
208	4740500	3	Washer, Special	
209	4751600	AR	Flatwasher 3/8in Regular	
210		Ref	Exhaust Stack Options:	
210	4845411	1	Caterpillar and Deutz Engines	
210	3460399	1	Ford Engines	
210	3460552	1	GM Engines	
211	1671229	NLA	Shell, Engines Side (Note: Use Item 21)	
212	1671230	1	Frame, Engine Side	
213	2940088	1	Latch	
214	0721008	2	Bolt #10-24NC x 1in	
215	4751000	2	Flatwasher #10 Regular	
216	3311001	2	Nut #10-24NC	
217	0641608	AR	Bolt 3/8in-16NC x 1in	
218	1321384	4	Hold Down	
219	0641606	4	Bolt 3/8in-16NC x 3/4in	
220	2600209	1	Hinge	
221	3960464	5.5 ft /1.7m	Seal	
222	3960462	5.1 ft /1.6m	Seal	
223	2820176	NLA	Insulation, Heat Options (Ford and GM Engines) (Use p/n 1001101323) **(SN 0300092152 through 0300134794)**	
224	2820153	1	Insulation, Heat Shield (GM Engines Only) **(SN 0300089988 through 0300134794)**	
250		Ref	Hood Kit (Engine Side) Options (Not Shown):	
		Ref	**Note: Replacement Decals must be Purchased Separately - See DECALS SECTION.**	
250	1001097961	1	Caterpillar and Deutz Engine Machines (Includes Items 201-204, 207, 208 & 211)	B
250	1001097960	1	GM Engine Machines (Includes Items 207, 202, 208 & 211)	B
	0256122	Ref	**LIFTING PLATE INSTALLATION**	1-B
301	3539590	1	Plate, Lifting	
302	0682014	4	Bolt 5/8in-11NC x 1-3/4in Grade 8	
303	4892000	4	Flatwasher 5/8in Hardened	
304	0100019	AR	Compound, Locking	
305	1701500	2	Decal - Tie Down/Lift	
	0256823	Ref	**NOISE REDUCTION INSTALLATION (DIESEL MACHINES)**	3
401	2820078	1	Foam, Acoustical	
405	3539955	1	Plate, Baffle	
406	0641506	2	Bolt 5/16in-18NC x 3/4in	
407	4751500	2	Flatwasher 5/16in Regular	
408	0100011	AR	Compound, Locking	

FIGURE 2-25. HOODS (STEEL) AND LIFTING PLATE INSTALLATIONS

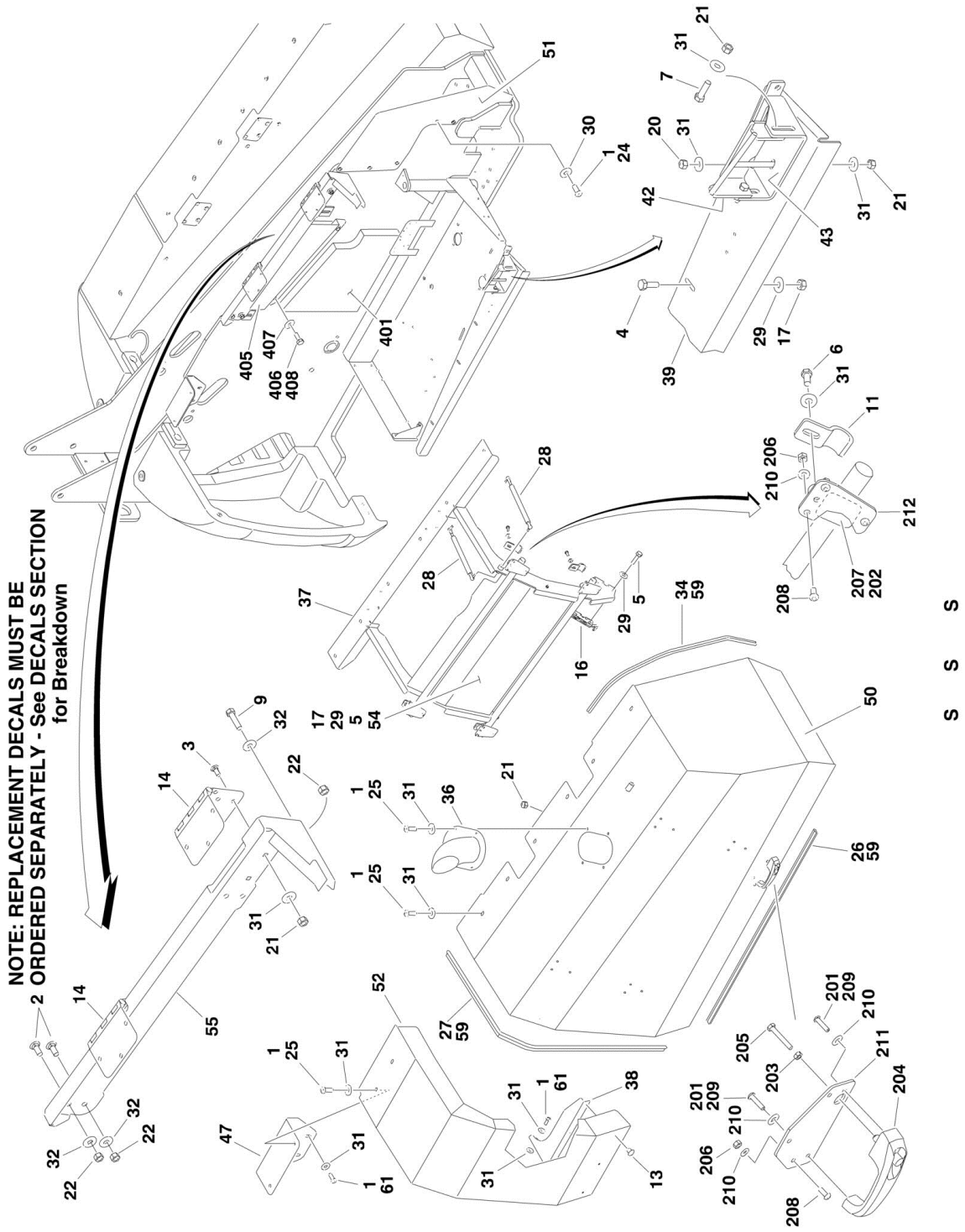

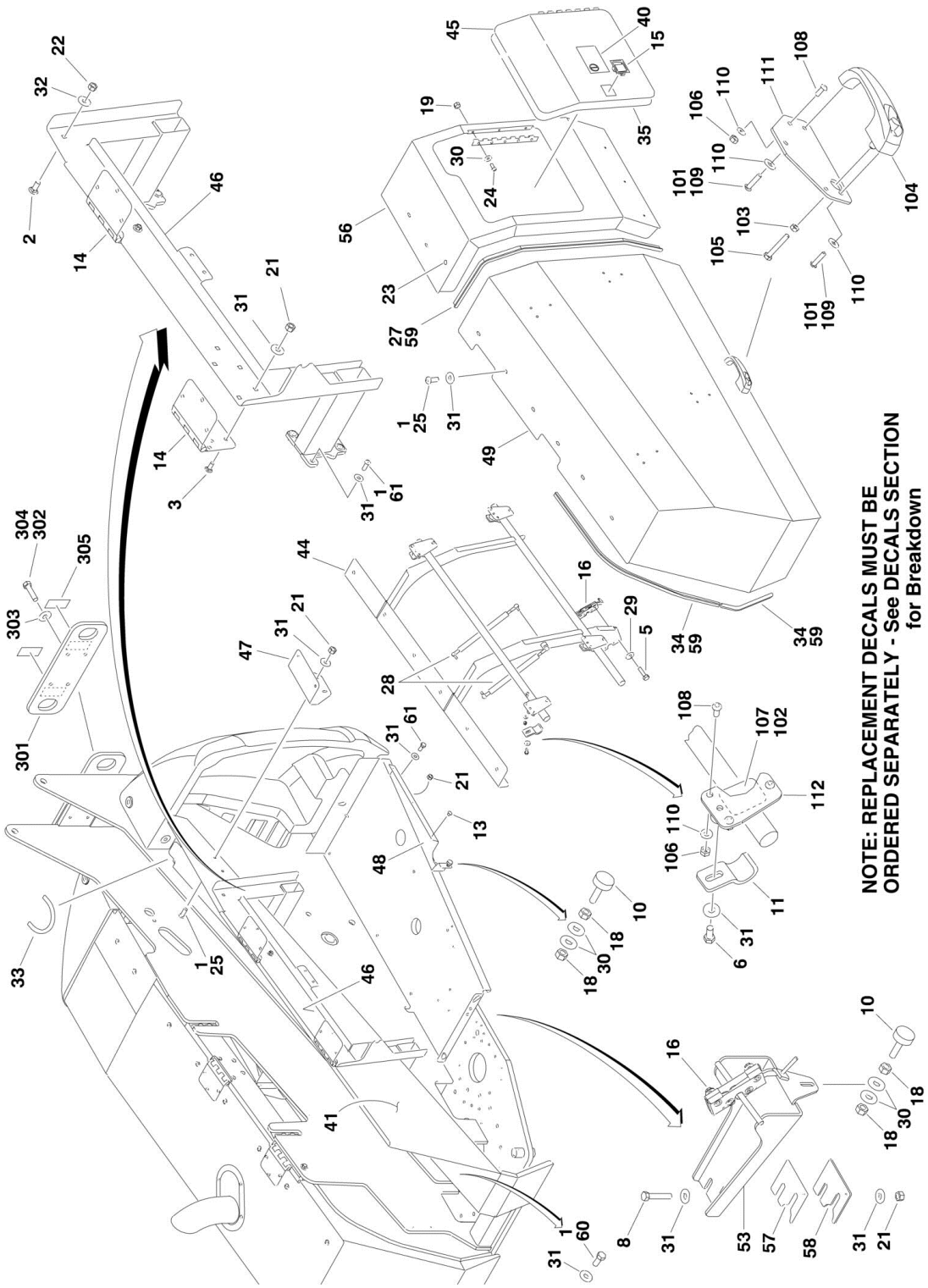
NOTE: REPLACEMENT DECALS MUST BE
ORDERED SEPARATELY - See DECALS SECTION
for Breakdown

FIGURE 2-25. HOODS (STEEL) AND LIFTING PLATE INSTALLATIONS

ITEM	PART NUMBER	QTY	DESCRIPTION	REV
		Ref	**HOODS INSTALLATIONS**	
	1001118718	Ref	**Caterpillar Engines**	D
	1001117429	Ref	**GM Engines**	E
	1001117429	Ref	**Deutz Engines (SN 0300087000 through 0300166770)**	E
	1001148678	Ref	**Deutz Engines (SN 0300166771 through 0300171769)**	C
1	0100011	AR	Compound, Locking	
2	0630507	4	Bolt, Carriage 1/2in-13NC x 1-1/4in	
3	0630485	19	Bolt, Carriage	
4	0641406	4	Bolt 1/4in-20NC x 3/4in	
5	0641408	AR	Bolt 1/4in-20NC x 1in	
6	0641607	8	Bolt 3/8in-16NC x 7/8in	
7	0641610	2	Bolt 3/8in-16NC x 1-1/4in	
7	0641611	2	Bolt 3/8in-16NC x 1-3/8in	
8	0641616	2	Bolt 3/8in-16NC x 2in	
9	0641818	1	Bolt 1/2in-13NC x 2-1/4in	
10	0940049	2	Stopper, Hood	
11	1321384	8	Clamp, Hood	
12	1701505	1	Decal - Diesel Fuel **(SN 0300087000 through 0300143696)**	
13	2080040	6	Fastener, Huck	
14	2600280	4	Hinge, Offset	
15	2940045	1	Latch, Paddle	
16	2940173	2	Latch, Rotary	
17	3311405	AR	Locknut 1/4in-20NC	
18	3311501	4	Nut 5/16in-18NC	
19	3300364	3	Nut, Tinnerman 5/16in-18NC	
20	3311601	1	Nut 3/8in-16NC	
21	3311605	46	Locknut 3/8in-16NC	
22	3311805	5	Locknut 1/2in-13NC	
23	3520030	1	Plug, Hole	
24	3900210	8	Screw, Button Head 5/16in-18 x 3/4in	
25	3900316	34	Screw, Button Head 3/8in-16NC x 1in	
26	3960389	50 in/1.3m	Seal	
27	3960462	9.5 ft /2.9m	Seal	
28	4160194	4	Spring, Gas	
29	4751400	AR	Flatwasher 1/4in Regular	
30	4751500	17	Flatwasher 5/16in Regular	
31	4751600	89	Flatwasher 3/8in Regular	
32	4740171	6	Flatwasher 1/2in Hardened	
33	90206194	10 in /24cm	Trim-Lok	
34	1001110166	8 ft/2.5m	Seal	
35	1001113047	77 in/2m	Seal	
36	1001116456	NLA	Pipe, Exhaust (Use p/n 1001116457)	
37	1001116562	1	Support	
38	1001117234	1	Bracket, Hood	
39	1001117249	1	Plate, Seal	
40	1001117307	1	Decal - Emergency Stop	
41	1001117430	1	Trough, Powertrack	
42	1001117523	1	Bracket, Striker Plate	

ITEM	PART NUMBER	QTY	DESCRIPTION	REV
43	1001117525	1	Bracket, Striker Plate	
44	1001117543	1	Support	
45	1001117598	1	Door	
46	1001117612	1	Mount, Hood	
47	1001118264	2	Bracket, Hood Mounting	
48	1001118550	1	Bracket, Hood Support	
49	1001118715	1	Hood Assembly - Tank Side (See Items 101-112 for Breakdown)	
		Ref	**Note: Replacement Decals must be Purchased Separately - See DECALS SECTION.**	
50	1001118716	1	Hood Assembly - Engine Side (See Items 201-212 for Breakdown)	
		Ref	**Note: Customer must transfer Item 54 Heat Shield to Hood Assembly before putting machine back in service.**	
		Ref	**Note: Replacement Decals must be Purchased Separately - See DECALS SECTION.**	
51	1001118735	1	Plate, Filler	
52	1001119283	1	Hood, Fixed Engine Side	
		Ref	**Note: Replacement Decals must be Purchased Separately - See DECALS SECTION.**	
53	1001125097	1	Bracket, Striker	
54		Ref	Shield, Heat	
54	Not Required	0	Caterpillar Engines	
54	1001120508	1	Deutz and GM Engines	
55	1001121059	1	Bracket, Hinge Support	
56	1001121061	1	Hood, Fixed Tank Side	
		Ref	**Note: Replacement Decals must be Purchased Separately - See DECALS SECTION.**	
57	1001121118	AR	Shim 3mm	
58	1001121119	AR	Shim 1.5mm	
59	0100081	AR	Adhesive	
60	0641506	5	Bolt 5/16in-18NC x 3/4in	
61	0641608	14	Bolt 3/8in-16NC x 1in	
	1001118715	Ref	**HOOD TANK SIDE**	E
101	0100011	AR	Compound, Locking	
102	0100081	AR	Adhesive	
103	0700616	1	Bolt M6 x 40mm	
104	2560187	1	Handle, Push Button	
105	3290601	1	Nut M6	
106	3311505	15	Locknut 5/16in-18NC	
107	3340877	4	Pad	
108	3900210	15	Screw, Button Head 5/16in-18NC x 3/4in	
109	3900363	2	Screw, Button Head M6 x 25mm	
110	4711500	17	Flatwasher 5/16in Thin	
111	1001116290	1	Plate, Latch Mounting	
112	1001116292	4	Mount, Clamp	
	1001118716	Ref	**HOOD ENGINE SIDE**	D
201	0100011	AR	Compound, Locking	
202	0100081	AR	Adhesive	
203	0700616	1	Bolt M6 x 40mm	
204	2560187	1	Handle, Push Button	
205	3290601	1	Nut M6	
206	3311505	15	Locknut 5/16in-18NC	
207	3340877	4	Pad	

ITEM	PART NUMBER	QTY	DESCRIPTION	REV
208	3900210	15	Screw, Button Head 5/16in-18NC x 3/4in	
209	3900363	2	Screw, Button Head M6 x 25mm	
210	4711500	17	Flatwasher 5/16in Thin	
211	1001116290	1	Plate, Latch Mounting	
212	1001116292	4	Mount, Clamp	
	0256122	Ref	**LIFTING PLATE INSTALLATION**	1-B
301	3539590	1	Plate, Lifting	
302	0682014	4	Bolt 5/8in-11NC x 1-3/4in (Grade 8)	
303	4892000	4	Flatwasher, Hardened 5/8in	
304	0100019	AR	Compound, Locking	
305	1701500	2	Decal - Tie Down/Lift	
	0256823	Ref	**NOISE REDUCTION INSTALLATION (DIESEL MACHINES)**	3
401	2820078	1	Foam, Acoustical	
405	3539955	1	Plate, Baffle	
406	0641506	2	Bolt 5/16in-18NC x 3/4in	
407	4751500	2	Flatwasher 5/16in Regular	
408	0100011	AR	Compound, Locking	

FIGURE 2-26. 2500W GENERATOR INSTALLATION - CATERPILLAR MACHINES (OPTIONAL)

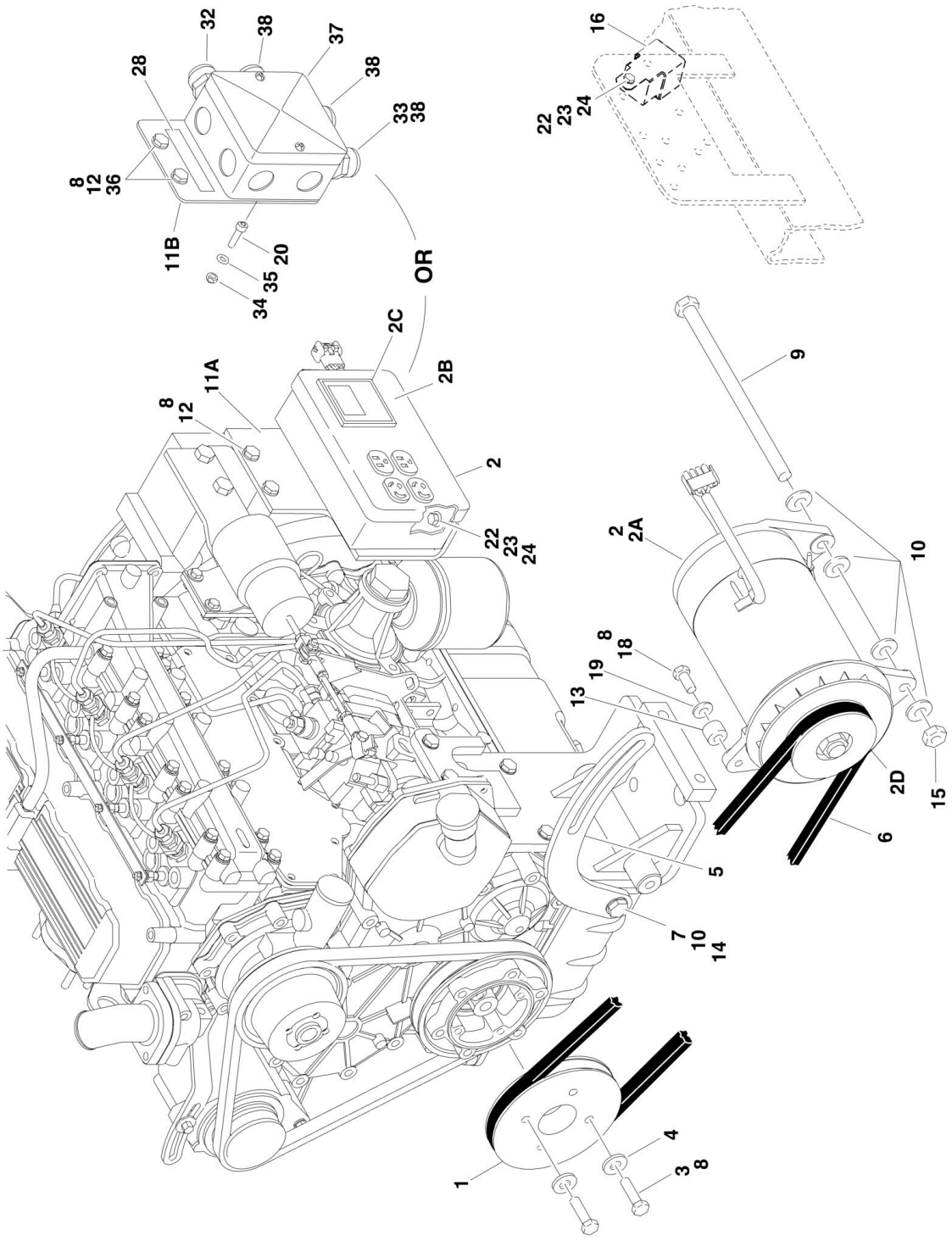

FIGURE 2-26. 2500W GENERATOR INSTALLATION - CATERPILLAR MACHINES (OPTIONAL)

ITEM	PART NUMBER	QTY	DESCRIPTION	REV
		Ref	**GENERATOR INSTALLATION OPTIONS:**	
		Ref	**USA Built Machines (SN 0300087000 through 0300132802)**	
	0274081	Ref	**110V/60Hz**	1-A
	1001102547	Ref	**110V/50HZ**	B
	0274087	Ref	**220V/50Hz**	1-A
		Ref	**USA Built Machines (SN 0300132803 through 0300140359)**	
	0274081	Ref	**110V/60Hz**	1-A
	1001102547	Ref	**110V/50HZ**	B
	1001102548	Ref	**220V/50HZ**	B
		Ref	**USA Built Machines (SN 0300140360 through 0300171769)**	
	1001115404	Ref	**110V/60Hz**	A
	1001115413	Ref	**110V/50HZ**	B
	1001115414	Ref	**220V/50Hz**	A
		Ref	**CHINA Built Machines (SN B300000100 through B300000969)**	
	1001115404	Ref	**110V/60Hz**	A
	1001115414	Ref	**220V/50Hz**	A
1	3580322	1	Pulley	
2		Ref	Generator and Control Box Assembly Options:	
2	2460055	1	110V/60Hz	
2	2460057	1	110V/50Hz USA Built Machines **(SN 0300087000 through 0300132802)**	
2	See Note	NSS	110V/50Hz USA Built Machines (Note: Not Available for Purchase) **(SN 0300132803 through 0300171769)**	
2	2460056	1	220V/50Hz USA Built Machines **(SN 0300087000 through 0300132802)**	
2	See Note	NSS	220V/50Hz USA Built Machines (Note: Not Available for Purchase) **(SN 0300132803 through 0300171769)**	
2	See Note	NSS	220V/50Hz China Built Machines (Note: Not Available for Purchase) **(SN B300000100 through B300000969)**	
2A	7012558	1	Generator Only - 110V/60Hz	
2A	2460049	1	Generator Only - 110V/50Hz (was p/n 7019679 & 70000129)	
2A	1001100321	1	Generator Only - 220V/50Hz (was p/n 7019679 & 70000128)	
		Ref	**Note: Replacement Generator come standard with p/n 3580134 pulley. This pulley may not be correct for all applications. Refer to pulley options below.**	
2A		Ref	Armature with Slip Rings Options:	
2A	7026199	1	Armature with Slip Rings - 110V/60Hz	
2A	70000122	1	Armature with Slip Rings - 110V/50Hz	
2A	70000123	1	Armature with Slip Rings - 220V/50Hz	
2A	7012513	4	Cap, Brush Holder	
2A	7020108	4	Brush	
2A	7020109	4	Holder, Brush	
2A	7012514	1	Fan	
2A	7020110	1	Bell, Front	
2A	7020111	1	Bell, Rear	
2A	7020190	2	Bearing	
2B	7019680	1	Box, Control - 110V/60Hz (was p/n 7003657)	
2B	7019680	1	Box, Control - 110V/50Hz (USA Built Machines Only) (was p/n 7003657) **(SN 030087000 through 0300132803)**	
2B	70000127	1	Box, Control - 220V/50Hz (was p/n 7019680) (USA Built Machines Only) **(SN 0300087000 through 0300132803)**	
2B		Ref	Receptacle Options:	

SECTION 2 - TURNTABLE

ITEM	PART NUMBER	QTY	DESCRIPTION	REV
2B	4460190	1	Receptacle, Standard (110V Only)	
2B	4460027	1	Receptacle, Twistlock (110V Only)	
2B	70000124	1	Receptacle, Double (220V/50Hz Only)	
2B	70000125	1	Receptacle, Single (220V/50Hz Only)	
2B		Ref	Breaker, Circuit Options:	
2B	7020194	1	110V Breaker, Circuit	
2B	70000126	1	220V Breaker, Circuit	
2B	3520028	1	Plug, Hole	
2C		Ref	Voltmeter Options:	
2C	2420203	1	Voltmeter - 110V (was p/n 7010699)	
2C	7020192	1	Voltmeter - 220V	
2D		Ref	Pulley Options:	
2D	3580276	1	Pulley - 60Hz	
2D	3580134	1	Pulley - 50Hz	
2D	7027887	1	Key, Woodruff	
3	0700816	4	Bolt 8mm x 40mm	
4	4751900	4	Flatwasher 9/16in Regular	
5	0200819	1	Arm, Adjusting	
6		Ref	V-Belt Options:	
6	0480121	1	60Hz	
6	0480120	1	50Hz	
7	0641610	1	Bolt 3/8in-16NC x 1-1/4in	
8	0100011	AR	Compound, Locking	
9	0641772	1	Bolt 7/16in-14NC x 9in	
10	4751600	6	Flatwasher 3/8in Regular	
11		Ref	Plate, Box Mounting Options:	
11A	3574684	1	Plate with Control Box	
11B	1001102644	1	Plate with Junction Box	
12	0761210	2	Bolt M12 x 20mm	
13	0962563	1	Bushing, Spacer	
14	3311605	1	Locknut 3/8in-16NC	
15	3311705	1	Locknut 7/16in-14NC	
16	3740080	1	Relay	
18	0641508	1	Bolt 5/16in-18NC x 1in	
19	4751500	1	Flatwasher 5/16in Regular	
20	4031608	2	Capscrew M5 x 20mm	
21	4240018	AR	Tie-Strap (Not Shown)	
22	0721006	3	Bolt #10-24NC x 3/4in	
23	3311005	3	Locknut #10-24NC	
24	4751000	6	Flatwasher #10 Regular	
25	4360336	1	Switch, Toggle (Not Shown - Located at Platform)	
26	4740397	1	Washer, Spacer (Not Shown - Located at Platform)	
27	4060802	1	Guard, Switch (Not Shown - Located at Platform)	
28		Ref	Decal - Voltage Options (Not Shown - Located at Platform):	
28	See Note	NSS	110V/60Hz (Note: Not Available for Purchase)	
28	1705325	1	110V/50Hz	
28	3252507	1	220V/50Hz	
29	2820031	4 in/10cm	Heat Shrink (Not Shown - Located at Platform)	
30	3251102	1	Decal (Not Shown - Located at Platform)	
32		Ref	Light, Red Options:	
32	1001100233	1	110V/50Hz	

ITEM	PART NUMBER	QTY	DESCRIPTION	REV
32	1001100234	1	220V/50Hz	
33	0962449	1	Bushing	
34	3290505	2	Locknut M5	
35	4811600	2	Flatwasher M5	
36	4812100	2	Flatwasher M12	
37	1001099869	1	Junction Box Assembly	
38	4460968	3	Connector, Strain Relief	

FIGURE 2-27. 2500W GENERATOR INSTALLATION - DEUTZ MACHINES (OPTIONAL)

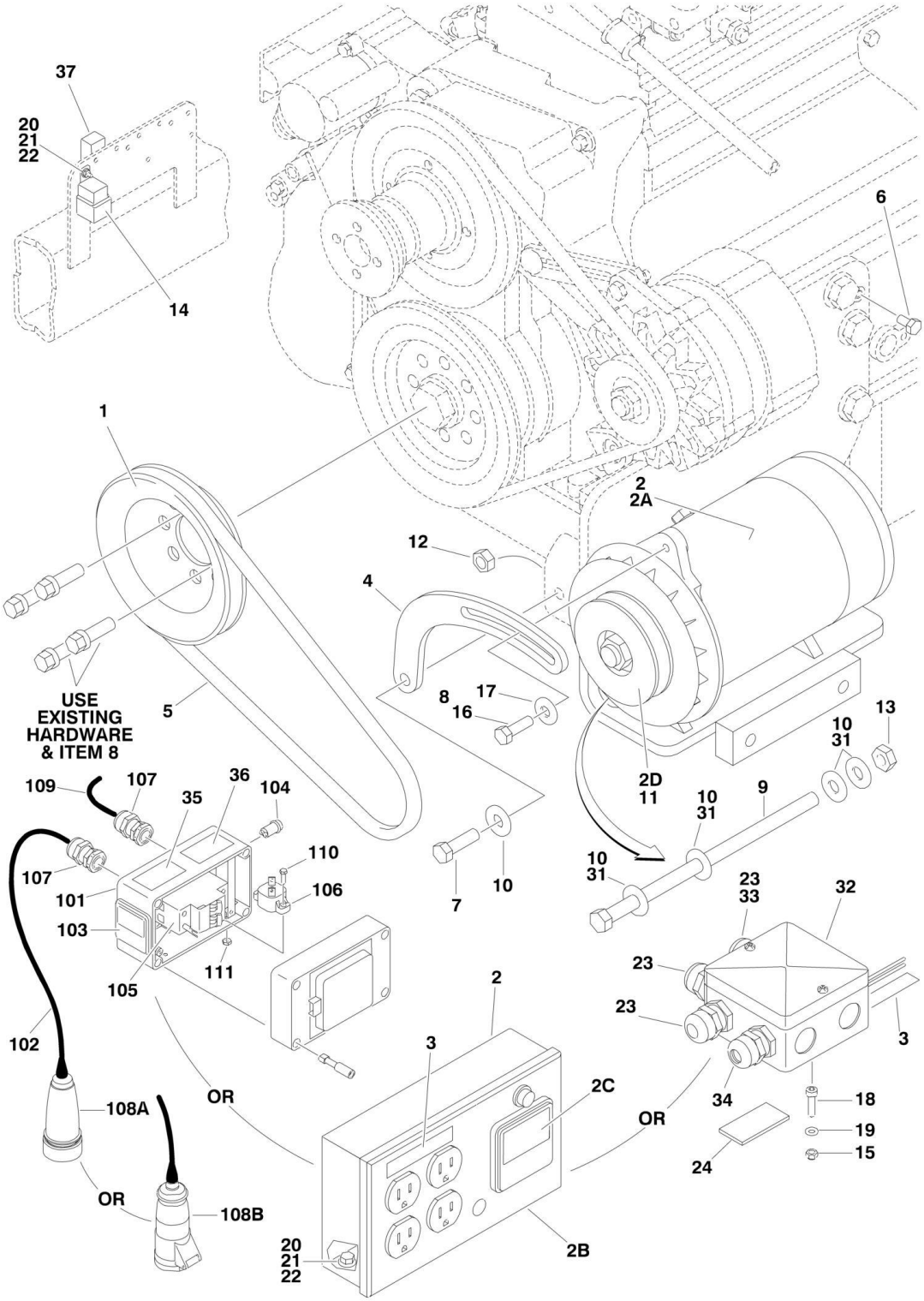

FIGURE 2-27. 2500W GENERATOR INSTALLATION - DEUTZ MACHINES (OPTIONAL)

ITEM	PART NUMBER	QTY	DESCRIPTION	REV
		Ref	**GENERATOR INSTALLATIONS**	
		Ref	**USA Built Machines: (SN 0300087000 through 0300139049)**	
	0274082	Ref	**110V/60Hz (Available on all Specs except CE Spec)**	3-C
	0274090	Ref	**110V/50Hz (Available on ANSI Export, Australian and CE Specs) (SN 0300087000 through 0300133734)**	1-A
	0273045	Ref	**110V/50Hz (Available on CE Spec - UK Only) (SN 0300087000 through 0300133734)**	1-A
	0273085	Ref	**110V/50Hz (Available on CE Spec - Germany Only) (SN 0300087000 through 0300133734)**	1-A
	1001100308	Ref	**110V/50Hz (Available on ANSI Export, Australian and CE Specs) (SN 0300133734 through 0300139050)**	D
	0274086	Ref	**220V/50Hz (Available on ANSI Export, Australian and CE Specs) (SN 0300087000 through 0300133734)**	1-A
	1001099868	Ref	**220V/50Hz (Available on ANSI Export, Australian and CE Specs) (SN 0300133734 through 0300139050)**	D
		Ref	**USA Built Machines: (SN 0300139050 through 0300171769)**	
	1001115405	Ref	**110V/60Hz (Available on all Specs except CE Spec)**	A
	1001115410	Ref	**110V/50Hz (Available on ANSI Export, Australian and CE Specs)**	A
	1001115409	Ref	**220V/50Hz (Available on ANSI Export, Australian and CE Specs)**	A
		Ref	**China Built Machines: (SN B300000100 through B300000969)**	
	1001115405	Ref	**110V/60Hz (Available on all Specs except CE Spec)**	A
	1001115409	Ref	**220V/50Hz (Available on ANSI Export, Australian and CE Specs)**	A
		Ref	**Note : See SPECIAL OPTIONS Section for Machines with 4000W Generator**	
1	3580158	1	Pulley	
2		Ref	Generator Component Options:	
2	2460055	1	110V/60Hz Generator and Control Box Assembly (0274082 Installation)	
2	2460057	1	110V/50Hz Generator and Control Box Assembly (0274090 Installation)	
2	2460049	1	110V/50Hz Generator Only (1001099869, 1001115410, 0273045 & 0273085 Installations which Uses Junction Box or Switch Box)	
2	2460056	1	220V/50Hz Generator and Control Box Assembly (0274086 Installation)	
2	1001100321	1	220V/50Hz Generator Only (1001100308 & 1001115409 Installations which Uses Junction Box)	
2A	7012558	1	Generator Only - 110V/60Hz	
2A	2460049	1	Generator Only - 110V/50Hz (was p/n 7019679 & 70000129)	
2A	1001100321	1	Generator Only - 220V/50Hz (was p/n 7019679 & 70000128)	
		Ref	**Note: Replacement Generator come standard with p/n 3580134 pulley. This pulley may not be correct for all applications. Refer to pulley options below.**	
2A		Ref	Armature with Slip Rings Options:	
2A	7026199	1	Armature with Slip Rings - 110V/60Hz	
2A	70000122	1	Armature with Slip Rings - 110V/50Hz	
2A	70000123	1	Armature with Slip Rings - 220V/50Hz	
2A	7012513	4	Cap, Brush Holder	
2A	7020108	4	Brush	
2A	7020109	4	Holder, Brush	

SECTION 2 - TURNTABLE

ITEM	PART NUMBER	QTY	DESCRIPTION	REV
2A	7012514	1	Fan	
2A	7020110	1	Bell, Front	
2A	7020111	1	Bell, Rear	
2A	7020190	2	Bearing	
2B	7019680	1	Box, Control - 110V/60Hz & 110V/50Hz (0274082 & 0274090 Installations Only) (was p/n 7003657)	
2B	70000127	1	Box, Control - 220V/50Hz (0274086 Installation Only) (was p/n 7019680)	
2B		Ref	Receptacle Options:	
2B	4460190	1	Receptacle, Standard (110V Only)	
2B	4460027	1	Receptacle, Twistlock (110V Only)	
2B	70000124	1	Receptacle, Double (220V/50Hz Only)	
2B	70000125	1	Receptacle, Single (220V/50Hz Only)	
2B		Ref	Breaker, Circuit Options:	
2B	7020194	1	110V Breaker, Circuit	
2B	70000126	1	220V Breaker, Circuit	
2B	3520028	1	Plug, Hole	
2C		Ref	Voltmeter Options:	
2C	2420203	1	Voltmeter - 110V (was p/n 7010699)	
2C	7020192	1	Voltmeter - 220V	
2D		Ref	Pulley Options:	
2D	3580276	1	Pulley - 60Hz	
2D	3580134	1	Pulley - 50Hz	
2D	7027887	1	Key, Woodruff	
3		Ref	Decal Options:	
3	3251243	1	120V 60Hz	
3	1705325	1	120V 50Hz	
3	Not Required	0	220V/50Hz	
4		Ref	Arm, Adjusting Options:	
4	0200742	1	All Installations except 0273045 & 0273085	
4	0200741	1	0273045 & 0273085 Installations Only	
5		Ref	V-Belt Options:	
5	0480121	1	All Installations except 0273045 & 0273085	
5	0480120	1	0273045 & 0273085 Installations Only	
6	0641404	1	Bolt 1/4in-20NC x 1/2in	
7	0641610	1	Bolt 3/8in-16NC x 1-1/4in	
8	0100011	AR	Compound, Locking	
9	0641772	1	Bolt 7/16in-14NC x 9in	
10	4751600	6	Flatwasher 3/8in Regular	
11	2860012	1	Key, Woodruff	
12	3311605	1	Locknut 3/8in-16NC	
13	3311705	1	Locknut 7/16in-14NC	
14	3740080	1	Relay	
15	3290505	1	Locknut M5	
16	0641508	1	Bolt 5/16in-18NC x 1in	
17	4751500	AR	Flatwasher 5/16in Regular	
18	4031608	1	Capscrew M5 x 20mm	
19	4811600	1	Flatwasher M5	
20	0721006	AR	Bolt #10-24NC x 3/4in	
21	3311005	AR	Locknut #10-24NC	
22	4751000	9	Flatwasher #10 Regular	
23	4460968	3	Bushing, Strain Relief (10011099868, 1001100308, 1001115410	

ITEM	PART NUMBER	QTY	DESCRIPTION	REV
			Installations Only)	
24	4420060	AR	Tape, Double Sided	
25	4360336	1	Switch, Toggle (Not Shown - Located at Platform)	
26	4740397	1	Bushing (Not Shown - Located at Platform)	
27	4060802	1	Guard, Switch (Not Shown - Located at Platform)	
28		Ref	Decal - Voltage Options (Not Shown - Located at Platform):	
28	See Note	NSS	110V/60Hz (Note: Not Available for Purchase)	
28	1705325	1	110V/50Hz	
28	3252507	1	220V/50Hz	
29	2820031	4 in/10cm	Heat Shrink (Not Shown - Located at Platform)	
30		Ref	Decal, Generator ON/OFF Options (Not Shown - Located at Platform):	
30	3251102	1	All Installations except 0273045 & 0273085	
30	1705728	1	0273045 & 0273085 Installations Only	
31	4070585	AR	Shim .010in	
32	1001099869	1	Box, Junction (10011099868, 1001100308, 1001115409 & 1001115410 Installations Only)	
33	0962449	1	Bushing, Silicone (10011099868, 1001100308, 1001115409 & 1001115410 Installations Only)	
34		Ref	Light, Red Options:	
34	1001100234	1	10011099868 & 1001115409 Installations Only (USA Built Machines) **(SN 0300087000 through 0300139049)**	
34	1001100233	1	1001100308 & 1001115410 Installations Only (USA Built Machines) **(SN 0300139050 through 0300171769)**	
34	1001100233	1	1001100308 & 1001115410 Installations Only (China Built Machines) **(SN B300000100 through B300000969)**	
35	1705715	1	Decal - 115VAC (0273045 & 0273085 Installations Only)	
36	1705714	1	Decal - Danger (0273045 & 0273085 Installations Only)	
37	4360294	1	Breaker, Circuit - 30Amp (0273045 & 0273085 Installations Only)	
	2902085	1	Installation Kit - Powermite Generator (Includes Generator Mounting Bracket, p/n 0480121 Belt and Mounting Hardware)	
		Ref	**GENERATOR CONTROL BOX ASSEMBLY (0273045 & 0273085 INSTALLATIONS ONLY)**	
	0861599	Ref	**UK Spec**	A
	0861607	Ref	**German Spec**	A
101	0861602	1	Box, Control	
102	1060461	20 ft/6m	Cable Electrical 12/3	
103	2420203	1	Voltmeter	
104	2920162	1	Lamp	
105		Ref	Breaker Circuit Options:	
105	4360541	1	Breaker Circuit (UK Spec)	
105	4360540	1	Residual Current Device (German Spec)	
106	4360542	1	Breaker Circuit 20Amp	
107	4460968	2	Connector, Strain Relief	
108		Ref	Plug Options:	
108A	4460991	1	Plug, Female (UK Spec)	
108B	4460999	1	Plug, Terminal (German Spec)	
109	4922912	1	Harness	
110	0721005	2	Screw #10-24NC x 5/8in	
111	3311001	2	Nut #10-24NC	

FIGURE 2-28. 2500W GENERATOR INSTALLATION - FORD MACHINES (OPTIONAL)

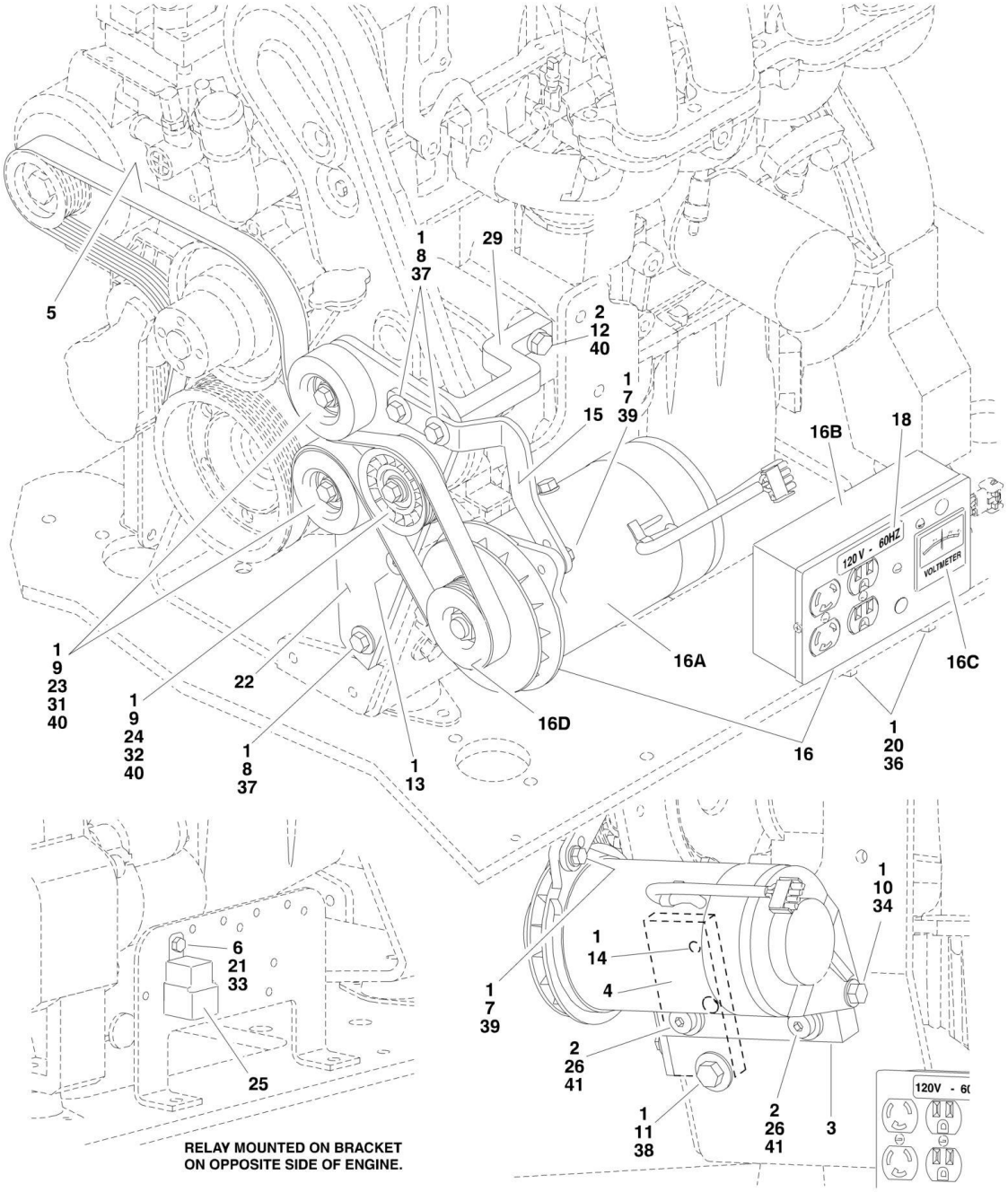

FIGURE 2-28. 2500W GENERATOR INSTALLATION - FORD MACHINES (OPTIONAL)

ITEM	PART NUMBER	QTY	DESCRIPTION	REV
		Ref	**Note: Only Available on USA Built Machines.**	
		Ref	**GENERATOR INSTALLATION OPTIONS:**	
	0273507	Ref	**110V/60Hz**	C
	0273511	Ref	**220V/50Hz**	D
1	0100011	AR	Compound, Locking	
2	0100019	AR	Compound, Locking	
3	0363082	1	Bar, Generator Adjuster	
4	0363097	1	Bar, Pulley Mounting	
5	0480135	1	V-Belt	
6	0641405	1	Bolt 1/4in-20NC x 5/8in	
7	0641508	1	Bolt 5/16in-18NC x 1in	
8	0641611	3	Bolt 3/8in-16NC x 1-3/8in	
9	0641612	3	Bolt 3/8in-16NC x 1-1/2in	
10	0641718	2	Bolt 7/16in-14NC x 2-1/4in	
11	0641810	1	Bolt 1/2in-13NC x 1-1/4in	
12	0701015	1	Bolt 10mm x 35mm	
13	0741606	1	Screw, Countersunk 3/8in-16NC x 3/4in	
14	0741808	1	Screw, Countersunk 1/2in-13NC x 1in	
15	0902952	1	Bracket, Generator Mounting	
16		Ref	Generator and Control Box Assembly Options:	
16	2460051	1	110Volt Assembly	
16	2460052	1	220Volt Assembly	
16A		Ref	Generator Only Options:	
16A	7012558	1	110V/60Hz Assembly	
16A	1001100321	1	220V/50Hz Assembly (Was p/n 70000128)	
		Ref	**Note: Replacement Generators come standard with p/n 3580134 pulley. This pulley may not be correct for all applications. Refer to pulley options below.**	
16A		Ref	Armature with Slip Rings Options:	
16A	7026199	1	Armature with Slip Rings - 110V/60Hz	
16A	70000123	1	Armature with Slip Rings - 220V/50Hz	
16A	7020109	4	Holder, Brush	
16A	7020108	4	Brush	
16A	7012513	4	Cap, Brush Holder	
16A	7012514	1	Fan	
16A	7020110	1	Bell, Front	
16A	7020111	1	Bell, Rear	
16A	7020190	2	Bearing	
16B		Ref	Box, Control Options:	
16B	7019680	1	Box, Control - 110V/60Hz (was p/n 7003657)	
16B	70000127	1	Box, Control - 220V/50Hz	
16B		Ref	Receptacle Options:	
16B	4460190	1	Receptacle, Standard (110V Only)	
16B	4460027	1	Receptacle, Twistlock (110V Only)	
16B	70000124	1	Receptacle, Double (220V/50Hz Only)	
16B	70000125	1	Receptacle, Single (220V/50Hz Only)	
16B		Ref	Breaker, Circuit Options:	
16B	7020194	1	110V Breaker, Circuit	
16B	70000126	1	220V Breaker, Circuit	
16B	3520028	1	Plug, Hole	

SECTION 2 - TURNTABLE

ITEM	PART NUMBER	QTY	DESCRIPTION	REV
16C		Ref	Voltmeter Options:	
16C	2420203	1	110V Voltmeter (was p/n 7010699)	
16C	7020192	1	220V Voltmeter	
16D		Ref	Pulley Options:	
16D	3580324	1	110Volt Assembly	
16D	3580325	1	220Volt Assembly	
16D	7027887	1	Key, Woodruff	
17	2820031	AR	Heat Shrink (Not Shown - Located at Platform)	
18		Ref	Decal	
18	1702590	1	110V Generator	
18	3251243	1	220V Generator	
19		Ref	Nameplate Options (Not Shown - Located at Platform):	
19	3252764	1	110V Generator	
19	3251102	1	220V Generator	
20	3311005	2	Locknut #10-24NC	
21	3311405	1	Locknut 1/4in-20NC	
22	3574225	1	Plate, Pulley Mounting	
23	3580312	2	Pulley, Idler	
24	3580313	1	Pulley, Grooved Idler	
25	3740080	1	Relay, Bosch	
26	3900322	2	Screw, Shoulder	
27	4060802	1	Guard, Switch (Not Shown - Located at Platform)	
28	4240018	AR	Tie-Strap	
29	4340738	1	Support, Idler Pulley	
30	4360336	1	Switch, Toggle (Not Shown - Located at Platform)	
31	4568734	2	Spacer, Tube (Idler Pulley Non-Grooved)	
32	4568735	1	Spacer, Tube (Idler Pulley Grooved)	
33	4711400	1	Flatwasher 1/4in Thin	
34	4711700	2	Flatwasher 7/16in Thin	
35	4740397	1	Spacer	
36	4751000	2	Flatwasher #10 Regular	
37	4751600	3	Flatwasher 3/8in Regular	
38	4751800	1	Flatwasher 1/2in Regular	
39	4891500	1	Flatwasher 5/16in Hardened	
40	4891600	4	Flatwasher 3/8in Hardened	
41	4892000	2	Flatwasher 5/8in Hardened	

FIGURE 2-29. 2500W GENERATOR INSTALLATION - GM MACHINES (OPTIONAL)

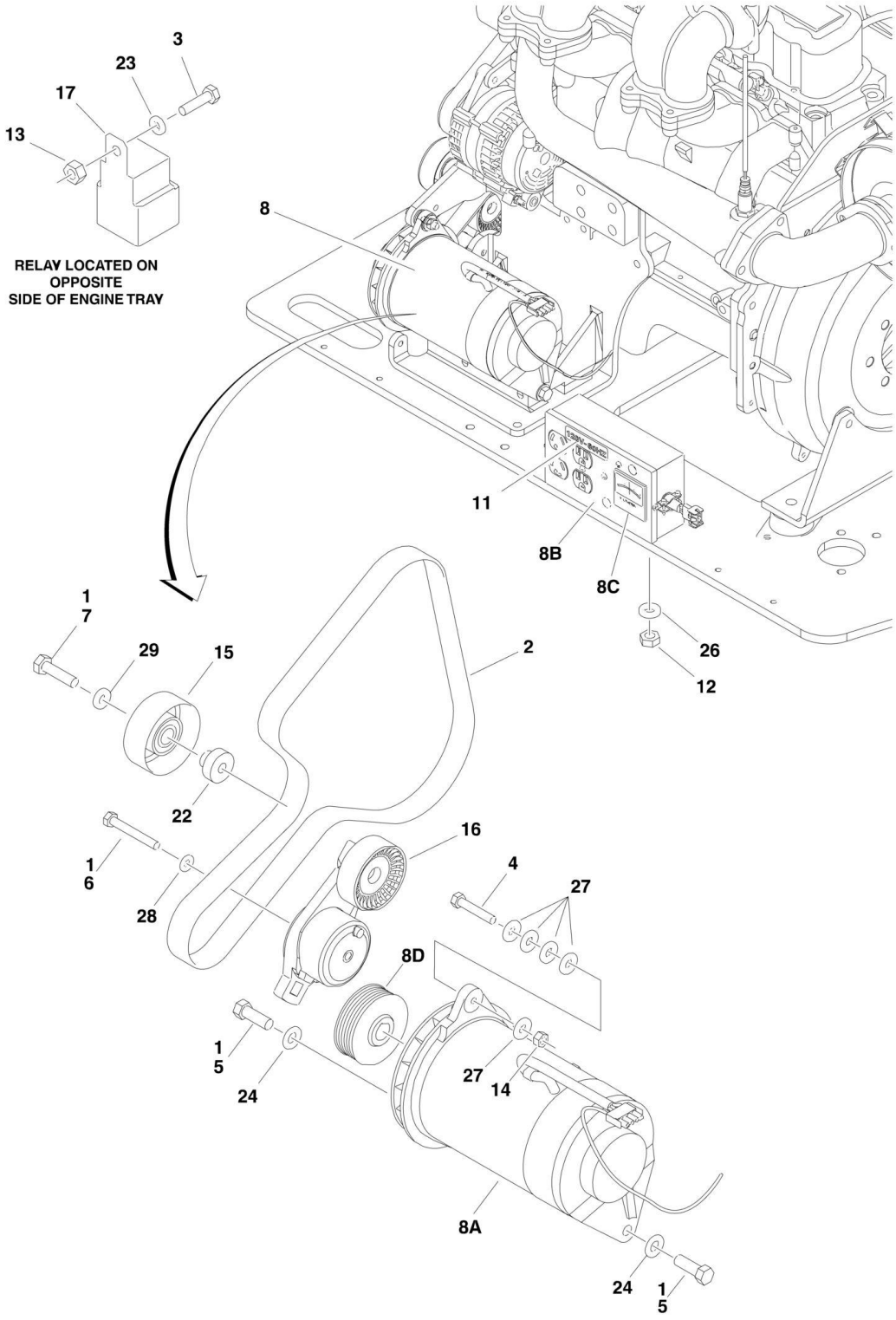

FIGURE 2-29. 2500W GENERATOR INSTALLATION - GM MACHINES (OPTIONAL)

ITEM	PART NUMBER	QTY	DESCRIPTION	REV
		Ref	**Note: Only Available on USA Built Machines.**	
		Ref	**GENERATOR INSTALLATION OPTIONS:**	
	0275039	Ref	**110V Generator**	E
	See Note	Ref	**220V Generator (Note: Not Available for Purchase)**	
		Ref	**Note: Refer to Sky Power Accessories Manual p/n 3124242 for the Miller 7500W Generator.**	
1	0100011	AR	Compound, Locking	
2	0480142	1	V-Belt	
3	0641405	1	Bolt 1/4in-20NC x 5/8in	
4		Ref	Bolt Options:	
4	0641514	1	Bolt 5/16in-18NC x 1-3/4in **(SN 0300087000 through 0300094704)**	
4	0641510	1	Bolt 5/16in-18NC x 1-1/4in **(SN 0300094705 through 0300171769)**	
5	0641710	2	Bolt 7/16in-14NC x 1-1/4in	
6	0700820	1	Bolt 8mm x 60mm	
7	0701016	1	Bolt 10mm x 340mm	
8		Ref	Generator and Control Box Assembly Options:	
8	2460051	1	110Volt Assembly	
8	2460052	1	220Volt Assembly	
8A		Ref	Generator Options:	
8A	7012558	1	110Volt Assembly	
8A	1001100321	1	220Volt Assembly (Was p/n 70000128)	
		Ref	**Note: Replacement Generators come standard with p/n 3580134 pulley. This pulley may not be correct for all applications. Refer to pulley options below.**	
8A		Ref	Armature with Slip Rings Options:	
8A	7026199	1	Armature with Slip Rings - 110V/60Hz	
8A	70000123	1	Armature with Slip Rings - 220V/50Hz	
8A	7020109	4	Holder, Brush	
8A	7020108	4	Brush	
8A	7012513	4	Cap, Brush Holder	
8A	7012514	1	Fan	
8A	7020110	1	Bell, Front	
8A	7020111	1	Bell, Rear	
8A	7020190	2	Bearing	
8B		Ref	Box, Control Options:	
8B	7019680	1	Box, Control - 110V/60Hz (was p/n 7003657)	
8B	70000127	1	Box, Control - 220V/50Hz	
8B		Ref	Breaker, Circuit Options:	
8B	7020194	1	110V Breaker, Circuit	
8B	70000126	1	220V Breaker, Circuit	
8B	70000124	1	Receptacle, Double (220V/50Hz Only)	
8B	70000125	1	Receptacle, Single (220V/50Hz Only)	
8B	3520028	1	Plug, Hole	
8C		Ref	Voltmeter Options:	
8C	2420203	1	110V Voltmeter (was p/n 7010699)	
8C	7020192	1	220V Voltmeter	
8D		Ref	Pulley Options:	
8D	3580324	1	110Volt Assembly	
8D	3580325	1	220Volt Assembly	

SECTION 2 - TURNTABLE

ITEM	PART NUMBER	QTY	DESCRIPTION	REV
8D	7027887	1	Key, Woodruff	
9	2820031	AR	Heat Shrink (Not Shown - Located at Platform)	
10	33251102	1	Nameplate - Generator (Not Shown - Located at Platform)	
11		Ref	Decal	
11	3251243	1	110 Volt Generator	
11	1702590	1	220 Volt Generator	
12	3311005	2	Locknut # 10-24NC	
13	3311405	1	Locknut 1/4in-20NC	
14	3311505	1	Locknut 5/16in-18NC **(SN 0300087000 through 0300094705)**	
15	3580312	1	Pulley, Idler	
16	3580348	1	Tensioner, Belt	
17	3740080	1	Relay, Bosch	
18	4060802	1	Guard, Switch (Not Shown - Located at Platform)	
19	4240018	AR	Tie-Strap (Not Shown)	
20	4360336	1	Switch, Toggle (Not Shown - Located at Platform)	
21	4460906	3	Terminal (Not Shown)	
22	4568735	1	Spacer, Tube (Idler Pulley Grooved)	
23	4711400	1	Flatwasher 1/4in Thin	
24	4711700	2	Flatwasher 7/16in Thin	
25	4740397	1	Spacer (Not Shown - Located at Platform)	
26	4751000	2	Flatwasher #10 Regular	
27	4751500	AR	Flatwasher 5/16in Regular	
28	4811900	1	Flatwasher M8	
29	4891600	1	Flatwasher 3/8in Hardened	

FIGURE 2-30. 7500W SKYPOWER GENERATOR INSTALLATION - CATERPILLAR AND DEUTZ ENGINES (OPTIONAL)

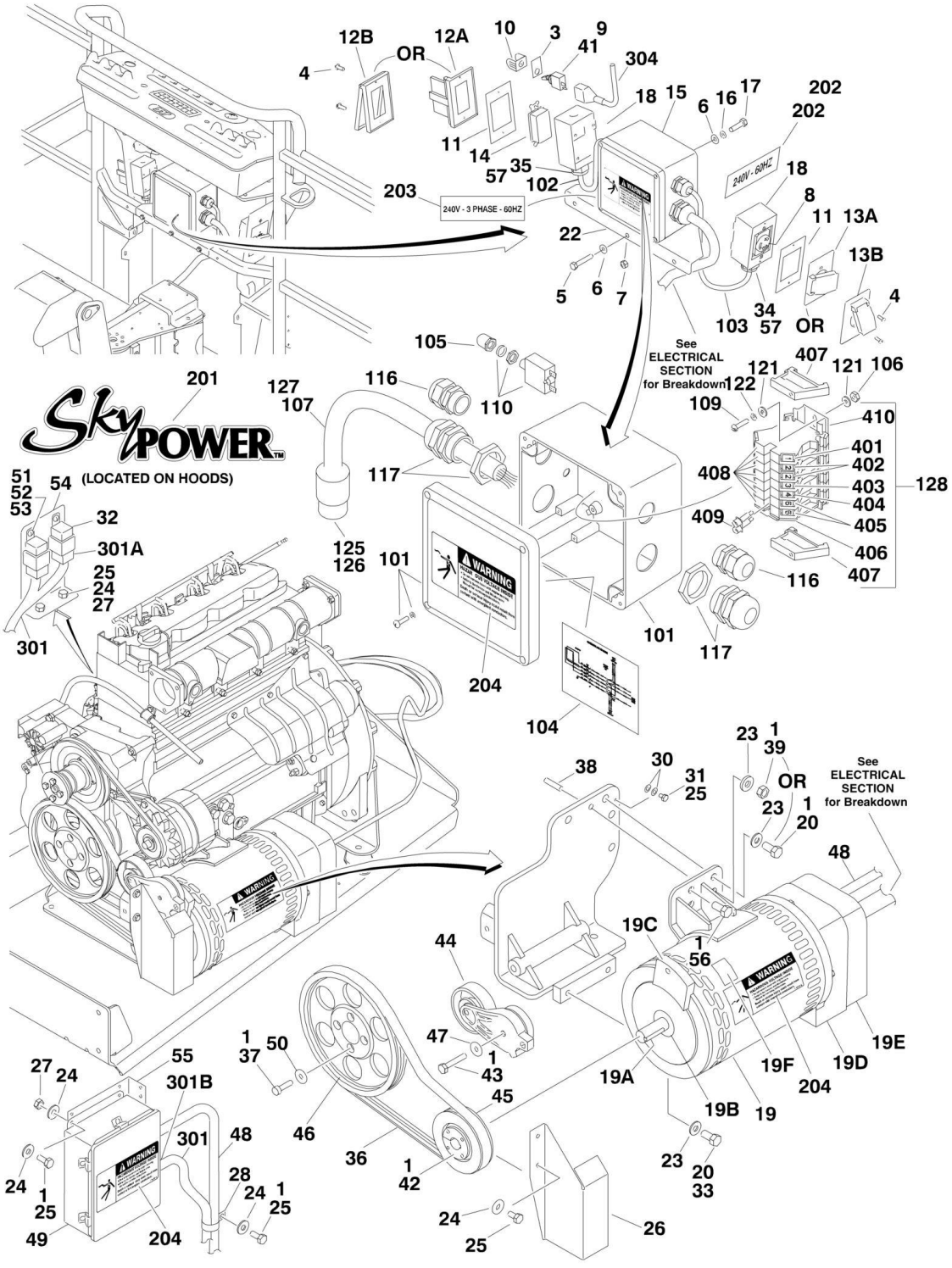

FIGURE 2-30. 7500W SKYPOWER GENERATOR INSTALLATION - CATERPILLAR AND DEUTZ ENGINES (OPTIONAL)

ITEM	PART NUMBER	QTY	DESCRIPTION	REV
		Ref	**7500W SKYPOWER GENERATOR INSTALLATION**	
		Ref	**USA Built Machines: (SN 0300087000 through 0300139049)**	
	0273540	Ref	**60Hz and Caterpillar Engine**	J
	0273541	Ref	**50Hz and Caterpillar Engine**	I
	0272255	Ref	**60Hz and Deutz Engine**	L
	0272640	Ref	**60Hz and Deutz Engine (Brazilian Spec Only)**	H
	0272492	Ref	**50Hz and Deutz Engine**	J
		Ref	**USA Built Machines (SN 0300139050 through 0300171769)**	
	1001115398	Ref	**60Hz and Caterpillar Engine**	C
	1001115400	Ref	**50Hz and Caterpillar Engine**	C
	1001115387	Ref	**60Hz and Deutz Engine**	B
	1001115393	Ref	**60Hz and Deutz Engine (Brazilian Spec Only)**	B
	1001115389	Ref	**50Hz and Deutz Engine**	B
		Ref	**China Built Machines (SN B300000100 through B300000969)**	
	1001115398	Ref	**60Hz and Caterpillar Engine**	C
	1001115400	Ref	**50Hz and Caterpillar Engine**	C
	1001115387	Ref	**60Hz and Deutz Engine**	B
	1001115389	Ref	**50Hz and Deutz Engine**	B
		Ref	**Note: See ELECTRICAL SECTION for Boom Cable Installation.**	
		Ref	**Note : See SPECIAL OPTIONS Section for Machines with 4000W Generator**	
1	0100011	AR	Compound, Locking	
3	3252764	1	Nameplate	
4	3910606	8	Screw #6-32NC x 3/8in	
5	0641516	3	Bolt 5/16in-18NC x 2in	
6	4711500	AR	Flatwasher 5/16in Thin	
7		Ref	Nut Options:	
7	3311505	3	Locknut 5/16in-18NC (Standard)	
7	3311508	3	Locknut 5/16in-18NC (Serrated Flange)	
8		Ref	Receptacle, Female Twist-Lock Options (220-240V Single):	
8	4460958	1	60Hz	
8	See Note	NLA	50Hz (Note: Not Available - Purchase Locally)	
9	4360336	1	Switch, Toggle	
10	4060802	1	Guard, Switch	
11		Ref	Gasket Options:	
11	3960422	2	60Hz	
11	See Note	NLA	50Hz (Note: Not Available - Purchase Locally)	
12		Ref	Cover, Receptacle Options:	
12	See Note	NLA	50Hz (Note: Not Available - Purchase Locally)	
12A	4060700	1	60HZ - Cover Side Hinged	
12B	1001110873	1	60HZ - Cover Top Hinged	
13		Ref	Cover, Receptacle Options:	
13	See Note	NLA	50Hz (Note: Not Available - Purchase Locally)	
13A	4061043	1	60HZ - Cover Side Hinged	
13B	1001110872	1	60HZ - Cover Top Hinged	
14		Ref	Receptacle, Female Options (110-120V):	
14	4460346	1	60Hz	
14	See Note	NLA	50Hz (Note: Not Available - Purchase Locally)	

ITEM	PART NUMBER	QTY	DESCRIPTION	REV
14	4460315	2	Terminal, Spade (60HZ Machines Only)	
15		Ref	Junction Box Assembly Options (See Items 101-126 for Breakdown):	
15	0861542	1	60Hz Spec **(SN 0300087000 through 0300171769)**	
15	0861542	1	60Hz Spec **(SN B300000100 through B300000866)**	
15	1001157592	1	60Hz Spec (Not Shown) **(SN B300000867 through B300000969)**	
15	0861567	1	50Hz Spec **(SN 0300087000 through 0300171769)**	
15	0861567	1	50Hz Spec **(SN B300000100 through B300000866)**	
15	1001157525	1	50Hz Spec (Not Shown) **(SN B300000867 through B300000969)**	
16	4761500	AR	Lockwasher 5/16in	
17		Ref	Bolt Options:	
17	0641505	4	Bolt 5/16in-18NC x 5/8in	
17	0641508	4	Bolt 5/16in-18NC x 1in	
18		Ref	Box, Switch Options:	
18	0860038	2	60Hz Spec	
18	See Note	NLA	50Hz Spec (Note: Not Available - Purchase Locally)	
19		Ref	Generator Assembly Options:	
19	2460050	1	Caterpillar Engine	
19	2460048	1	Deutz Engine	
19	70001100	1	Rotor (Includes p/n 70001384 & 70000863) (Not Shown)	
19	70001384	1	Bearing, Ball Radial (Not Shown)	
19	70000863	1	Fan (Not Shown)	
19		Ref	Stator Options (Not Shown):	
19	70001969	1	2460050 Generator	
19	70002088	1	2460048 Generator	
19	70002297	1	Stud	
19	70003631	1	Brushholder Assembly (Not Shown) (was p/n 7024484)	
19A	70004171	1	Key (was p/n 7024561)	
19B	70001966	1	Bearing, Ball Radial (Located in Belt Tensioner Endbell)	
19C	70001953	1	Endbell, Belt Tensioner	
19D		Ref	Endbell, Brush Block Options (was p/n 70001385):	
19D	70004170	1	Caterpillar Engine Machines	
19D	70004169	1	Deutz Engine Machines	
19E		Ref	Shroud Options:	
19E	70004170	1	Caterpillar Engine (was p/ns 70001970 & 70001971)	
19E	70004169	1	Deutz Engine (was p/n 70002290)	
19E	7027799	1	Block, Connector 6 Position (Not Shown)	
19E	70002460	1	Nut, Brass (Attaches p/n 7027799 to Cover) (Not Shown)	
19E	7024485	1	Breaker, Circuit 30Amp (Not Shown)	
19E	70001696	1	Boot, Breaker (was p/n 7024486 - Not Shown)	
19E	7026597	1	Connector, with Leads (Not Shown)	
19E	7026626	1	Housing Plug and Pins (Not Shown)	
19E	7026188	1	Clamp, Cable (Not Shown)	
19E	70003708	1	Retaining Ring Internal (Not Shown)	
19E	70003709	1	Retaining Ring External (Not Shown)	
19E		Ref	Plate, End Panel Options:	
19E	70004170	1	Caterpillar Engine (was p/n 70001972)	
19E	70004169	1	Deutz Engine (was p/n 70002255)	
19E	70001974	1	Decal - Terminal Connections	
19F	70001973	1	Decal - Warning Moving Parts	

ITEM	PART NUMBER	QTY	DESCRIPTION	REV
20		Ref	Bolt 1/2in-13NC Options:	
20	0641808	4	Caterpillar Engine	
20	0641808	2	Deutz Engine	
22	0902888	1	Bracket, Box Mounting	
23		Ref	Flatwasher 1/2in Options:	
23	4711800	AR	Thin	
23	4891800	AR	Hardened	
24		Ref	Flatwasher 1/4in Options:	
24	4711400	AR	Flatwasher 1/4in Thin	
24	4751400	AR	Flatwasher 1/4in Regular	
24	4761400	AR	Lockwasher 1/4in	
25		Ref	Bolt Options:	
25	0641404	AR	Bolt 1/4in-20NC x 1/2in	
25	0641405	AR	Bolt 1/4in-20NC x 5/8in	
25	0641408	AR	Bolt 1/4in-20NC x 1in	
26		Ref	Shield Options:	
26	Not Required	0	Caterpillar Engine (USA Built Machines) **(SN 0300087000 through 030014393)**	
26	Not Required	0	Caterpillar Engine (China Built Machines) **(Prior to SN B300000231)**	
26	1001118599	1	Caterpillar Engine (USA Built Machines) (Not Shown) **(SN 0300143937 through 0300168215)**	
26	1001118599	1	Caterpillar Engine (China Built Machines) (Not Shown) **(SN B300000231 through B300000735)**	
26	4061049	1	Deutz Engine (Shown) (USA Built Machines) **(SN 0300143937 through 0300171769)**	
26	4061049	1	Deutz Engine (Shown) (China Built Machines) **(SN B300000100 through B300000762)**	
27	3311405	AR	Nut 1/4in-20NC	
28	1320224	NLA	Clamp (Use p/n 1320318)	
29	4240018	AR	Tie-Strap (Not Shown)	
30	4791400	2	Starwasher 1/4in	
31	0641403	AR	Bolt 1/4in-20NC x 3/8in	
32	3740080	1	Relay	
33	0100019	AR	Compound, Locking	
34		Ref	Connector, Strain Relief Options:	
34	4460051	1	60Hz	
34	See Note	NLA	50Hz (Note: Not Available - Purchase Locally)	
35		Ref	Connector, Strain Relief	
35	4460071	1	60Hz	
35	See Note	NLA	50Hz (Note: Not Available - Purchase Locally)	
36		Ref	Belt, Drive Options:	
36	0480129	1	60Hz Generators:	
36		Ref	50Hz Generators:	
36	0480125	1	Caterpillar Engine	
36	0480126	1	Deutz Engine	
37		Ref	Bolt Options:	
37	0700815	4	Caterpillar Engine (Bolt M8 x 35mm)	
37	4032015	4	Deutz Engine (Capscrew M10 x 55mm)	
38	4300157	1	Stud	
39	3311801	1	Nut 1/2in-13NC	
40	0100062	1	Loctite (Not Shown)	
41	2820031	1	Insulator	

ITEM	PART NUMBER	QTY	DESCRIPTION	REV
42	0962520	1	Bushing, Split Taper (Was p/n 7024562)	
43		Ref	Bolt 3/8in-16NC Options:	
43	3931632	1	Capscrew, Socket Head 3/8in-16NC x 2in	
43	0641618	1	Bolt, Hex Head 3/8in-16NC x 2-1/4in	
44	3580317	1	Tensioner, Belt (Was p/n 7024482)	
45		Ref	Pulley Options:	
45	3580318	1	60Hz Generator (Was p/n 7024563)	
45	3580319	1	50Hz Generator (Was p/n 7026187)	
46		Ref	Pulley Options:	
46	3580321	1	Caterpillar Engine	
46	3580320	1	Deutz Engine	
47	4711600	AR	Flatwasher 3/8in Thin	
48	4922925	1	Harness, Generator	
49		Ref	CONTROL BOX ASSEMBLY OPTIONS:	
49	0861538	1	60Hz Generator (Was p/n 7024487)	
49	0861572	1	50Hz Generator (Was p/n 7024487)	
49	7024488	1	Card, Circuit - Generator Power	
49	See Note	NLA	Fuse (Note: Not Available - Purchase Locally)	
49	70000619	1	Harness, Control Box (Internal)	
49	7024489	1	Card, Circuit - Control	
		Ref	**Note: Same Circuit Card (p/n 7024489) is used for both 60Hz & 50Hz. When replacing card, rocker switch on card must be set for required application.**	
50	4811900	AR	Flatwasher M8	
51	0721004	2	Screw, Machine #10-24NC 1/2in	
52	4751000	4	Flatwasher #10 Regular	
53	3311005	2	Locknut #10-24NC	
54	Not Required	0	Bracket, Relay Mounting	
55	Not Required	0	Bracket, Control Box Mounting	
56	0771415	AR	Bolt M14 x 35mm	
57	0100020	AR	Sealant, Pipe	
		Ref	**JUNCTION BOX ASSEMBLY**	
	0861542	Ref	**60HZ SPECS**	D
	0861567	Ref	**50Hz Specs**	B
101	0861541	1	Box, Junction	
102		Ref	Cable, Electrical 12/3	
102	1060494	2 ft/.6m	60Hz Spec	
102	See Note	2 ft/.6m	50Hz Spec (Note: Not Available - Purchase Locally)	
103		Ref	Cable, Electrical 10/3	
103	1060708	2.5 ft /0.76m	60Hz Spec	
103	See Note	2.5 ft/0.76m	50Hz Spec (Note: Not Available - Purchase Locally)	
104	1705376	1	Decal - Wiring Schematic	
105	3300396	1	Cover, Fuse	
106	3310601	2	Nut 6-32NC	
107	1060343	1.5 ft /0.46m	Cable, Electrical 10/4 (60Hz Spec Only)	
108	3641533	1	Rail, Relay	
109	3910610	2	Bolt 6-32NC x 5/8in	
110	4360070	1	Circuit Breaker - 15Amp	
116	4460425	2	Connector, Strain Relief	

ITEM	PART NUMBER	QTY	DESCRIPTION	REV
117	4460426	2	Connector, Strain Relief	
121	4750600	4	Flatwasher, #6 Regular	
122	4760600	2	Lockwasher #6	
125	1671092	1	Cover (60Hz Spec Only)	
126	4460963	1	Connector (60Hz Spec Only)	
127	3520189	1	Plug (50Hz Spec Only)	
128		Ref	Terminal Block Assembly Options (See Items 401-410 for Breakdown):	
128	NPN	1	Gray Terminal Block Assembly	
128	1001121340	1	Tan Terminal Block Assembly	
		Ref	**DECAL INSTALLATION**	
	0272435	Ref	**60Hz Specs**	B
	0272589	Ref	**50Hz Specs**	A
201	1705460	2	Decal - SkyPower	
202	1705374	1	Decal - 240V - 60Hz (60Hz Spec Only)	
203		Ref	Decal - 240V - 3 Phase Options:	
203	1705375	1	60Hz Spec	
203	1705461	1	50Hz Spec	
204		Ref	Decal, Hazardous Voltage Options:	
204	1705387	3	60Hz Spec	
204	1705489	3	50Hz Spec	
		Ref	**ELECTRICAL DIAGRAM COMPONENTS**	
	4933264	Ref	**USA Built Machines (SN 0300087000 through 0300139049)**	C
	1001112586	Ref	**USA Built Machines (SN 0300139050 through 0300171769)**	A
	1001112586	Ref	**China Built Machines (SN B300000100 through B300000969)**	A
301		Ref	Generator Harness Options:	
301	4922757	1	Generator Harness **(SN 0300087000 through 0300139049)**	3-C
301	1001112587	1	Generator Harness **(SN 0300139050 through 0300171769)**	A
301	1001112587	1	China Built Machines **(SN B300000100 through B300000969)**	A
301A	4460374	2	Plug, Sealed Relay	
301A	4460375	7	Terminal	
301B	4460967	1	Plug, Male - 3 Position	
301B	4460465	3	Socket, Female	
301C	2400060	1	Fuseholder (Not Shown)	
301C	2400064	1	Fuse - 5Amp (Not Shown)	
304	4922641	1	Switch Harness	
		Ref	**TERMINAL BLOCK ASSEMBLY**	
	NPN	Ref	**Gray Terminal Block Assembly (Complete Assembly Not Available - Purchase Individual Components)**	
	1001121340	Ref	**Tan Terminal Block Assembly**	A
401		Ref	Marker Strip #1 Options:	
401	4460411	2	Gray Terminal Block Assembly	
401	70002818	2	Tan Terminal Block Assembly	
402		Ref	Marker Strip #2 Options:	
402	4460412	4	Gray Terminal Block Assembly	
402	70002819	4	Tan Terminal Block Assembly	
403		Ref	Marker Strip #3 Options:	
403	4460413	2	Gray Terminal Block Assembly	
403	70002820	2	Tan Terminal Block Assembly	
404		Ref	Marker Strip #4 Options:	
404	4460414	2	Gray Terminal Block Assembly	
404	70002821	2	Tan Terminal Block Assembly	

ITEM	PART NUMBER	QTY	DESCRIPTION	REV
405		Ref	Marker Strip #5 Options:	
405	4460415	4	Gray Terminal Block Assembly	
405	70002822	4	Tan Terminal Block Assembly	
406		Ref	Terminal, End Barrier Options:	
406	4460956	1	Gray Terminal Block Assembly	
406	70002823	1	Tan Terminal Block Assembly	
407		Ref	Terminal, End Block Options:	
407	4460607	2	Gray Terminal Block Assembly	
407	70002824	2	Tan Terminal Block Assembly	
408		Ref	Terminal, Block Options:	
408	4460957	7	Gray Terminal Block Assembly	
408	70002825	7	Tan Terminal Block Assembly	
409		Ref	Terminal, Cross Connector Jumper Options:	
409	4461001	2	Gray Terminal Block Assembly	
409	70002826	2	Tan Terminal Block Assembly	
410	3641533	1	Rail, Relay	

FIGURE 2-31. 7500W SKYPOWER GENERATOR INSTALLATION - FORD ENGINES (OPTIONAL)

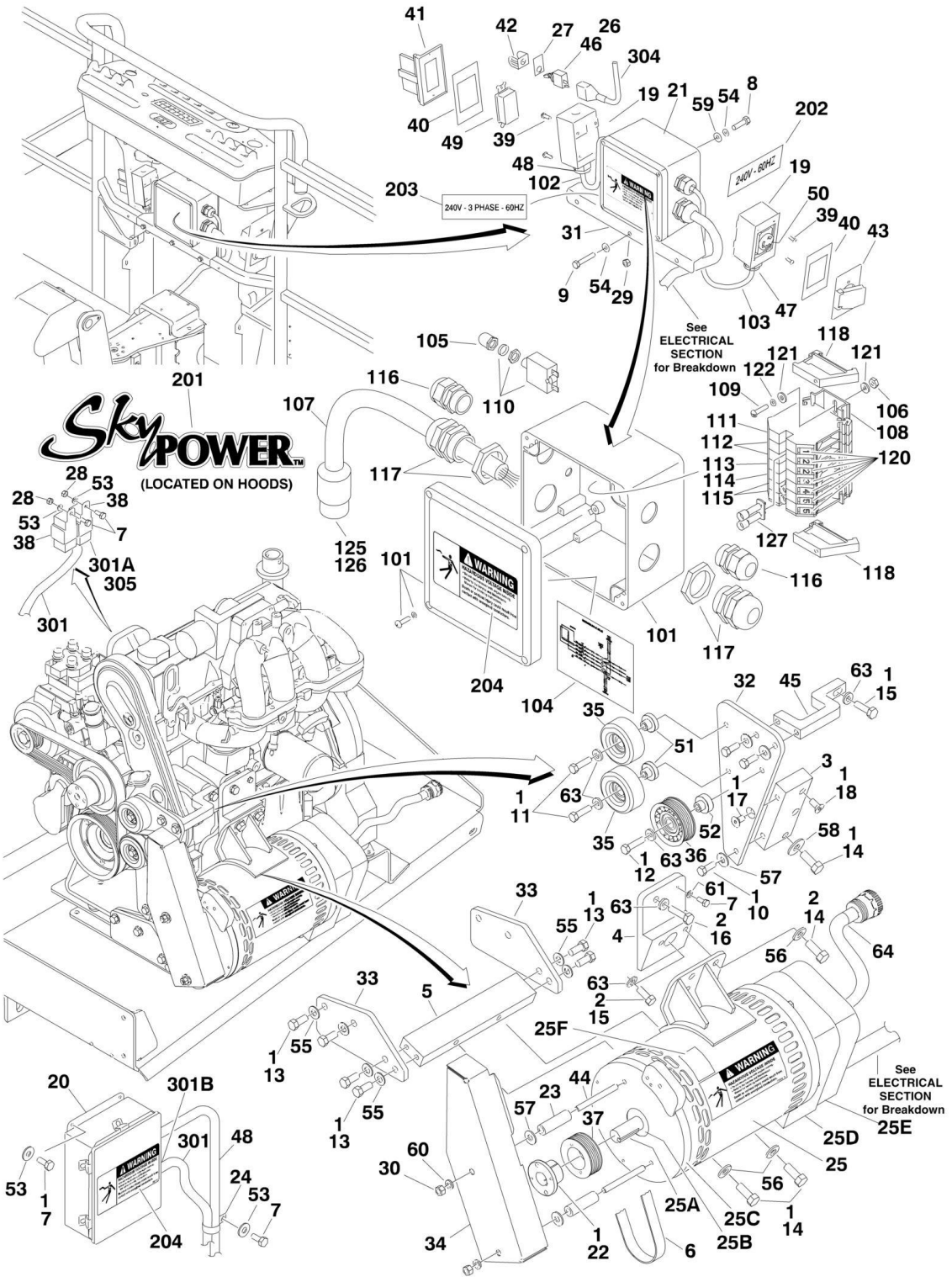

FIGURE 2-31. 7500W SKYPOWER GENERATOR INSTALLATION - FORD ENGINES (OPTIONAL)

ITEM	PART NUMBER	QTY	DESCRIPTION	REV
		Ref	**Note: Only Available on USA Built Machines.**	
	0272817	Ref	**7500W SKYPOWER GENERATOR INSTALLATION**	H
		Ref	**Note: See ELECTRICAL SECTION for Boom Cable Installation.**	
1	0100011	AR	Compound, Locking	
2	0100019	AR	Compound, Locking	
3	0363097	1	Bar, Pulley Mount	
4	0363201	1	Bar, Generator Mount (Top)	
5	0363202	1	Bar, Generator Mount (Bottom)	
6	0480130	1	Belt, Generator	
7	0641405	8	Bolt 1/4in-20NC x 5/8in	
8	0641505	4	Bolt 5/16in-18NC x 5/8in	
9	0641516	3	Bolt 5/16in-18NC x 2in	
10	0641608	3	Bolt 3/8in-16NC x 1in	
11	0641611	2	Bolt 3/8in-16NC x 1-3/8in	
12	0641612	1	Bolt 3/8in-16NC x 1-1/2in	
13	0641708	8	Bolt 7/16in-14NC x 1in	
14	0641810	5	Bolt 1/2in-13NC x 1-1/4in	
15	0701015	2	Bolt M10 x 35mm	
16	0701016	1	Bolt M10 x 40mm	
17	0741606	1	Screw, Flathead Countersunk 3/8in-16NC x 3/4in	
18	0741808	1	Screw, Flathead Countersunk 1/2in-13NC x 1in	
19	0860038	2	Box, Switch	
20	0861538	1	Control Box Assembly (Was p/n 7024487):	
20	7024488	1	Card, Circuit - Generator Power	
20	See Note	NSS	Fuse (Note: Not Available - Purchase Locally)	
20	7024489	1	Card, Circuit - Control (Includes Harness)	
20	70000619	1	Harness, Control Box (Internal)	
21	0861542	1	Junction Box Assembly (See Items 201-222 for Breakdown)	
22	0962520	1	Bushing, Split Taper	
23	0962521	2	Spacer, Tube	
24	1320224	1	Clamp	
25	2460048	1	Generator Assembly	
25	70001100	1	Rotor (Includes p/n 70001384 & 70000863) (Not Shown)	
25	70001384	1	Bearing, Ball Radial (Not Shown)	
25	70000863	1	Fan (Not Shown)	
25	70002088	1	Stator Options (Not Shown):	
25	70002297	1	Stud	
25	70003631	1	Brushholder Assembly (Not Shown) (was p/n 7024484)	
25A	70004171	1	Key (was p/n 7024561)	
25B	70001966	1	Bearing, Ball Radial (Located in Belt Tensioner Endbell)	
25C	70001953	1	Endbell, Belt Tensioner	
25D	70004169	1	Endbell, Brush Block (was p/n 70001385)	
25E	70004169	1	Shroud (was p/n 70002290)	
25E	7027799	1	Block, Connector 6 Position (Not Shown)	
25E	70002460	1	Nut, Brass (Attaches p/n 7027799 to Cover) (Not Shown)	
25E	7024485	1	Breaker, Circuit 30Amp (Not Shown)	
25E	70001696	1	Boot, Breaker (was p/n 7024486 - Not Shown)	
25E	7026597	1	Connector, with Leads (Not Shown)	
25E	7026626	1	Housing Plug and Pins (Not Shown)	
25E	7026188	1	Clamp, Cable (Not Shown)	

SECTION 2 - TURNTABLE

ITEM	PART NUMBER	QTY	DESCRIPTION	REV
25E	70004169	1	Plate, End Panel (was p/n 70002255)	
25E	70001974	1	Decal - Terminal Connections	
25F	70001973	1	Decal - Warning Moving Parts	
26	2820031	1	Insulator	
27	3252764	1	Nameplate	
28	3311405	6	Locknut 1/4in-20NC	
29	3311505	3	Locknut 5/16in-18NC	
30	3311601	2	Nut 3/8in-16NC	
31	0902888	1	Bracket, Box Mounting	
32	3574225	1	Plate, Pulley Mounting	
33	3574229	2	Plate, Gusset Generator Mounting	
34	3574262	1	Plate, Shield	
35	3580312	2	Pulley, Idler	
36	3580313	1	Pulley, Idler Grooved	
37	3580314	1	Pulley, Drive Grooved	
38	3740080	2	Relay	
39	3910606	8	Screw #6-32NC x 3/8in	
40	3960422	2	Gasket	
41		Ref	Cover, Receptacle Options:	
41	4060700	1	Cover, Receptacle **(SN 0300087000 through 0300138240)**	
41	1001110873	1	Cover, Receptacle **(SN 0300138241 through 0300171769)**	
42	4060802	1	Guard, Switch	
43		Ref	Cover, Receptacle Options:	
43	4061043	1	Cover, Receptacle **(SN 0300087000 through 0300138240)**	
43	1001110872	1	Cover, Receptacle **(SN 0300138241 through B300000969)**	
44	4300111	2	Stud, Chain Assembly	
45	4340738	1	Support, Idler Pulley Mount	
46	4360336	1	Switch, Toggle	
47	4460051	1	Connector, Strain Relief	
48	4460071	1	Connector, Strain Relief	
49	4460346	1	Receptacle	
50	4460958	1	Receptacle, Female Twist-Lock	
51	4568734	2	Tube, Spacer Pulley	
52	4568735	1	Tube, Spacer Pulley Grooved	
53	4711400	11	Flatwasher 1/4in Thin	
54	4711500	10	Flatwasher 5/16in Thin	
55	4711700	8	Flatwasher 7/16in Thin	
56	4711800	4	Flatwasher 1/2in Thin	
57	4751600	5	Flatwasher 3/8in Regular	
58	4751800	1	Flatwasher 1/2in Regular	
59	4761500	4	Lockwasher 5/16in	
60	4761600	2	Lockwasher 3/8in	
61	4791400	1	Starwasher 1/4in	
63	4891600	6	Flatwasher 3/8in Hardened	
64	4922925	1	Harness, Generator	
	0861542	Ref	**JUNCTION BOX ASSEMBLY**	C
101	0861541	1	Box, Junction	
102	1060494	2 ft/.6m	Cable, Electrical 12/3	
103	1060708	2.5 ft /0.76m	Cable, Electrical 10/3	
104	1705376	1	Decal - Wiring Schematic	
105	3300396	1	Cover, Fuse	

ITEM	PART NUMBER	QTY	DESCRIPTION	REV
106	3310601	2	Nut 6-32NC	
107	1060343	1.5 ft /0.46m	Cable, Electrical 10/4	
108	3641533	1	Rail, Relay	
109	3910610	2	Bolt 6-32NC x 5/8in	
110	4360070	1	Circuit Breaker - 15Amp	
111	4460411	2	Marker Strip #1	
112	4460412	4	Marker Strip #2	
113	4460413	2	Marker Strip #3	
114	4460414	2	Marker Strip #4	
115	4460415	4	Marker Strip #5	
116	4460425	2	Strain Relief, Terminal	
117	4460426	2	Connector, Strain Relief	
118	4460607	2	Terminal, End Stop	
119	4460956	1	Terminal, Block End	
120	4460957	7	Terminal, Block	
121	4750600	4	Flatwasher, #6 Regular	
122	4760600	2	Lockwasher #6	
125	1671092	1	Cover	
126	4460963	1	Connector	
127	4461001	2	Cross Connector - 2 Position	
	0272435	Ref	**DECAL INSTALLATION**	A
201	1705460	2	Decal - SkyPower	
202	1705374	1	Decal - 240V - 60Hz	
203	1705375	1	Decal - 240V - 3 Phase	
204	1705387	3	Decal, Hazardous Voltage	
	4933283	Ref	**ELECTRICAL DIAGRAM COMPONENTS**	1-A
301	4922905	1	Generator Harness	2-B
301A	4460374	2	Plug, Sealed Relay	
301A	4460375	7	Terminal	
301B	4460967	1	Plug, Male - 3 Position	
301B	4460465	3	Socket, Female	
301C	2400060	2	Fuseholder (Not Shown)	
301C	2400064	2	Fuse - 5Amp (Not Shown)	
304	4922641	1	Switch Harness	
305	4460375	1	Terminal	

FIGURE 2-32. 7500W SKYPOWER GENERATOR INSTALLATION - GM ENGINES (OPTIONAL)

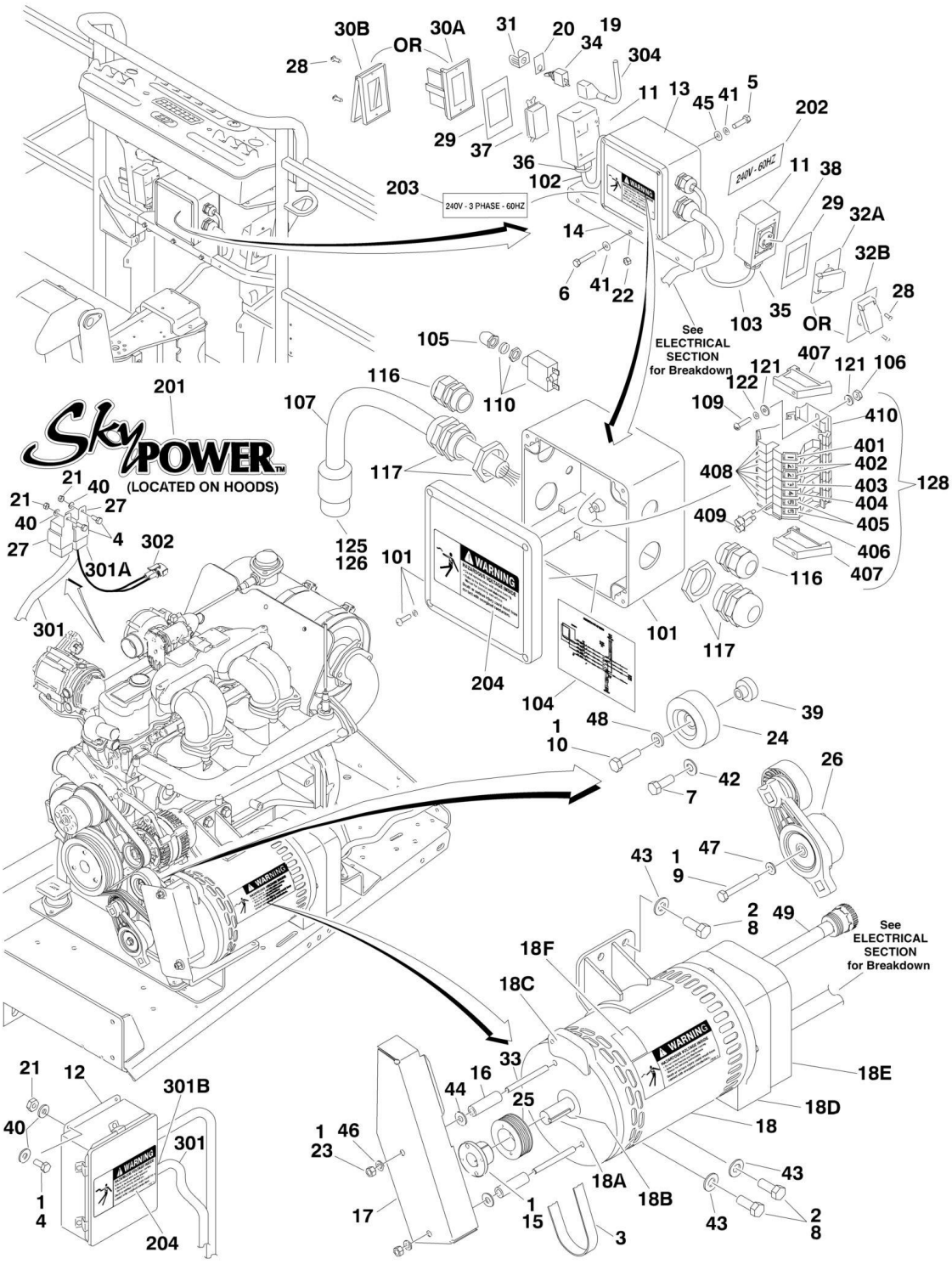

FIGURE 2-32. 7500W SKYPOWER GENERATOR INSTALLATION - GM ENGINES (OPTIONAL)

ITEM	PART NUMBER	QTY	DESCRIPTION	REV
		Ref	**Note: Only Available on USA Built Machines.**	
	0275257	Ref	**7500W SKYPOWER GENERATOR INSTALLATION**	F
		Ref	**Note: See ELECTRICAL SECTION for Boom Cable Installation.**	
1	0100011	AR	Compound, Locking	
2	0100019	AR	Compound, Locking	
3	0480142	1	Belt, Generator	
4	0641405	6	Bolt 1/4in-20NC x 5/8in	
5	0641505	4	Bolt 5/16in-18NC x 5/8in	
6	0641516	3	Bolt 5/16in-18NC x 2in	
7	0641608	AR	Bolt 3/8in-16NC x 1in	
8		Ref	Bolt Options:	
8	0641810	4	Bolt 1/2in-13NC x 1-1/4in	
8	0641808	4	Bolt 1/2in-13NC x 1in	
9	0700820	1	Bolt M8 x 60mm	
10	0701016	1	Bolt M10 x 40mm	
11	0860038	2	Box, Switch	
12	0861538	1	Control Box Assembly	
12	7024488	1	Card, Circuit - Generator Power	
12	See Note	NSS	Fuse (Note: Not Available - Purchase Locally)	
12	7024489	1	Card, Circuit - Control	
12	70000619	1	Harness, Control Box (Internal)	
13	0861542	1	Junction Box Assembly (See Items 101-127 for Breakdown)	
14	0902888	1	Bracket, Box Mounting	
15	0962520	1	Bushing, Split Taper	
16	0962521	2	Spacer, Tube **(SN 0300087000 through 0300171769)**	
17	1671311	1	Cover, Generator Belt **(SN 0300087000 through 0300171769)**	
18	2460048	1	Generator Assembly	
18	70001100	1	Rotor (Includes p/n 70001384 & 70000863) (Not Shown)	
18	70001384	1	Bearing, Ball Radial (Not Shown)	
18	70000863	1	Fan (Not Shown)	
18	70002088	1	Stator Options (Not Shown):	
18	70002297	1	Stud	
18	70003631	1	Brushholder Assembly (Not Shown) (was p/n 7024484)	
18A	70004171	1	Key (was p/n 7024561)	
18B	70001966	1	Bearing, Ball Radial (Located in Belt Tensioner Endbell)	
18C	70001953	1	Endbell, Belt Tensioner	
18D	70004169	1	Endbell, Brush Block (was p/n 70001385)	
18E	70004169	1	Shroud (was p/n 70002290)	
18E	7027799	1	Block, Connector 6 Position (Not Shown)	
18E	70002460	1	Nut, Brass (Attaches p/n 7027799 to Cover) (Not Shown)	
18E	7024485	1	Breaker, Circuit 30Amp (Not Shown)	
18E	70001696	1	Boot, Breaker (was p/n 7024486 - Not Shown)	
18E	7026597	1	Connector, with Leads (Not Shown)	
18E	7026626	1	Housing Plug and Pins (Not Shown)	
18E	7026188	1	Clamp, Cable (Not Shown)	
18E	70004169	1	Plate, End Panel (was p/n 70002255)	
18E	70001974	1	Decal - Terminal Connections	
18F	70001973	1	Decal - Warning Moving Parts	
19	2820031	1	Insulator	
20	3252764	1	Nameplate	

ITEM	PART NUMBER	QTY	DESCRIPTION	REV
21	3311405	6	Locknut 1/4in-20NC	
22	3311505	3	Locknut 5/16in-18NC	
23	3311601	2	Nut 3/8in-16NC **(SN 0300087000 through 0300171769)**	
24	3580312	2	Pulley, Idler	
25	3580314	1	Pulley, Drive Grooved	
26	3580348	1	Tensioner, Belt with Pulley	
27	3740080	2	Relay	
28	3910606	8	Screw #6-32NC x 3/8in	
29	3960422	2	Gasket	
30		Ref	Cover, Receptacle Options:	
30A	4060700	1	Cover, Side Hinged	
30B	1001110873	1	Cover, Top Hinged	
31	4060802	1	Guard, Switch	
32		Ref	Cover, Receptacle Options:	
32A	4061043	1	Cover, Side Hinged	
32B	1001110872	1	Cover, Top Hinged	
33	4300111	2	Stud, Chain Assembly **(SN 0300087000 through 0300171769)**	
34	4360336	1	Switch, Toggle	
35	4460051	1	Connector, Strain Relief	
36	4460071	1	Connector, Strain Relief	
37	4460346	1	Receptacle	
38	4460958	1	Receptacle, Female Twist-Lock	
39	4568735	1	Tube, Spacer Pulley Grooved	
40	4711400	10	Flatwasher 1/4in Thin	
41	4711500	10	Flatwasher 5/16in Thin	
42	4711600	AR	Flatwasher 3/8in Thin	
43	4711800	4	Flatwasher 1/2in Thin	
44	4751600	2	Flatwasher 3/8in Regular **(SN 0300087000 through 0300171769)**	
45	4761500	4	Lockwasher 5/16in	
46	4761600	2	Lockwasher 3/8in **(SN 0300087000 through 0300171769)**	
47	4811900	1	Flatwasher M8	
48	4891600	1	Flatwasher 3/8in Hardened	
49	4922925	1	Harness, Generator	
	0861542	Ref	**JUNCTION BOX ASSEMBLY**	D
101	0861541	1	Box, Junction	
102	1060494	2 ft/.6m	Cable, Electrical 12/3	
103	1060708	2.5 ft /0.76m	Cable, Electrical 10/3	
104	1705376	1	Decal - Wiring Schematic	
105	3300396	1	Cover, Fuse	
106	3310601	2	Nut 6-32NC	
107	1060343	1.5 ft /0.46m	Cable, Electrical 10/4	
108	3641533	1	Rail, Relay	
109	3910610	2	Bolt 6-32NC x 5/8in	
110	4360070	1	Circuit Breaker - 15Amp	
116	4460425	2	Strain Relief, Terminal	
117	4460426	2	Connector, Strain Relief	
121	4750600	4	Flatwasher, #6 Regular	
122	4760600	2	Lockwasher #6	
125	1671092	1	Cover	
126	4460963	1	Connector	

ITEM	PART NUMBER	QTY	DESCRIPTION	REV
128		Ref	Terminal Block Assembly Options (See Items 401-410 for Breakdown):	
128	NPN	1	Gray Terminal Block Assembly	
128	1001121340	1	Tan Terminal Block Assembly	
	0272435	Ref	**DECAL INSTALLATION**	A
201	1705460	2	Decal - SkyPower	
202	1705374	1	Decal - 240V - 60Hz	
203	1705375	1	Decal - 240V - 3 Phase	
204	1705387	3	Decal, Hazardous Voltage	
	4933349	Ref	**ELECTRICAL DIAGRAM COMPONENTS**	A
301	4923420	1	Generator Harness	A
301A	4460374	2	Plug, Sealed Relay	
301A	4460375	8	Terminal	
301B	4460967	1	Plug, Male - 3 Position	
301B	4460465	3	Socket, Female	
301C	2400060	2	Fuseholder (Not Shown)	
301C	2400064	2	Fuse - 5Amp (Not Shown)	
302	4460742	1	Connector - 2 Position	
302	4460743	2	Socket, Female	
302	4460458	2	Seal	
304	4922641	1	Switch Harness	
		Ref	**TERMINAL BLOCK ASSEMBLY**	
	NPN	Ref	**Gray Terminal Block Assembly (Complete Assembly Not Available - Purchase Individual Components)**	
	1001121340	Ref	**Tan Terminal Block Assembly**	A
401		Ref	Marker Strip #1 Options:	
401	4460411	2	Gray Terminal Block Assembly	
401	70002818	2	Tan Terminal Block Assembly	
402		Ref	Marker Strip #2 Options:	
402	4460412	4	Gray Terminal Block Assembly	
402	70002819	4	Tan Terminal Block Assembly	
403		Ref	Marker Strip #3 Options:	
403	4460413	2	Gray Terminal Block Assembly	
403	70002820	2	Tan Terminal Block Assembly	
404		Ref	Marker Strip #4 Options:	
404	4460414	2	Gray Terminal Block Assembly	
404	70002821	2	Tan Terminal Block Assembly	
405		Ref	Marker Strip #5 Options:	
405	4460415	4	Gray Terminal Block Assembly	
405	70002822	4	Tan Terminal Block Assembly	
406		Ref	Terminal, End Barrier Options:	
406	4460956	1	Gray Terminal Block Assembly	
406	70002823	1	Tan Terminal Block Assembly	
407		Ref	Terminal, End Block Options:	
407	4460607	2	Gray Terminal Block Assembly	
407	70002824	2	Tan Terminal Block Assembly	
408		Ref	Terminal, Block Options:	
408	4460957	7	Gray Terminal Block Assembly	
408	70002825	7	Tan Terminal Block Assembly	
409		Ref	Terminal, Cross Connector Jumper Options:	
409	4461001	2	Gray Terminal Block Assembly	
409	70002826	2	Tan Terminal Block Assembly	

ITEM	PART NUMBER	QTY	DESCRIPTION	REV
410	3641533	1	Rail, Relay	

SECTION 3 - BOOM

FIGURE 3-1. BOOM INSTALLATION - 600S

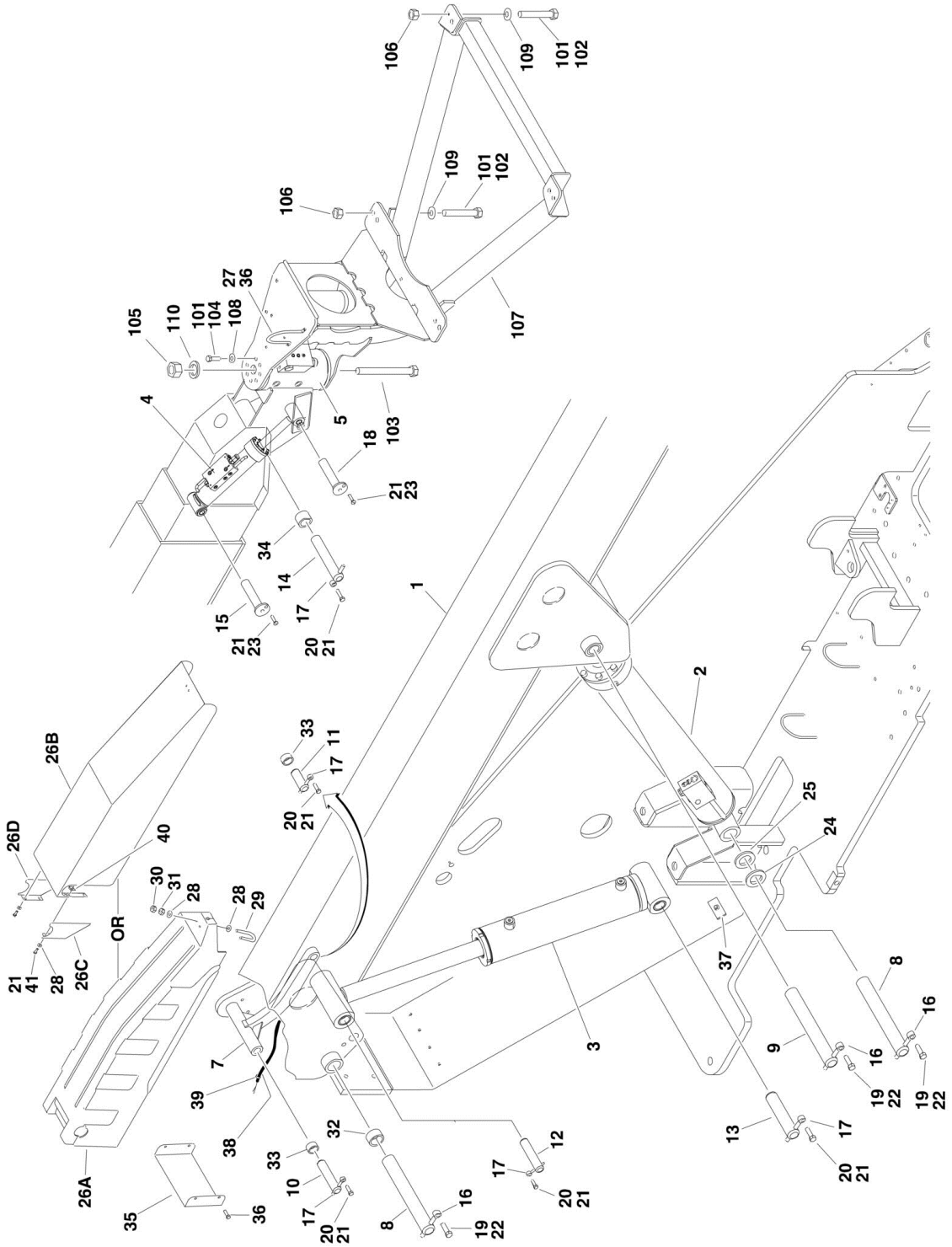

FIGURE 3-1. BOOM INSTALLATION - 600S

ITEM	PART NUMBER	QTY	DESCRIPTION	REV
		Ref	**BOOM AND CYLINDERS INSTALLATION**	
		Ref	**USA Built Machines (SN 0300087000 through 0300137550)**	
	0273369	Ref	**ANSI and ANSI Export Specs**	3
	0272132	Ref	**Australian and CE Specs**	6
	1001108341	Ref	**USA Built Machines (SN 0300137551 through 0300171769)**	F
	1001121410	Ref	**USA Built Machines with Shipyard Package**	E
	1001108341	Ref	**China Built Machines (SN B300000100 through B300000969)**	F
1	See Note	1	Boom Assembly (See MAIN BOOM ASSEMBLIES for Breakdown)	
2		Ref	Boom Lift Cylinder Assembly Options (See CYLINDER SECTION for Breakdown):	
2	1683666	NLA	USA Built Machines (Use p/n 1001112468) **(SN 0300087000 through 0300138401)**	
2	1001112468	1	USA Built Machines **(SN 0300138402 through 0300171769)**	
2	1001112468	1	China Built Machines **(SN B300000100 through B300000969)**	
3		Ref	Master Cylinder Assembly Options (See CYLINDER SECTION for Breakdown):	
3	1683266	1	USA Built Machines (Use p/n 1001228002) (Original Equipment) **(SN 0300087000 through 0300096978)**	
3	1001228002	1	USA Built Machines (Service Replacement)	
3	1684414	1	USA Built Machines **(SN 0300096979 through 0300171769)**	
3	1684414	1	China Built Machines **(SN B300000100 through B300000816)**	
3	1001140593	1	China Built Machines **(SN B300000817 through B300000858)**	
3	1684414	1	China Built Machines **(SN B300000859 through B300000969)**	
4		Ref	Platform Level Cylinder Assembly Options (See CYLINDER SECTION for Breakdown)	
4	1683415	NLA	USA Built Machines (Use p/n 1001228008) (Original Equipment)	
4	1001223512	NLA	USA Built Machines (Use p/n 1001228008) (Service Replacement)	
4	1001228008	1	USA Built Machines (Service Replacement)	
4	1683415	1	China Built Machines **(SN B300000100 through B300000816)**	
4	1001140591	1	China Built Machines **(SN B300000817 through B300000858)**	
4	1683415	NLA	China Built Machines (Use p/n 1001228008) **(SN B300000859 through B300000969)**	
4	1001223512	NLA	China Built Machines (Use p/n 1001228008) (Service Replacement)	
4	1001228008	1	China Built Machines (Service Replacement)	
5	0060067	NLA	Rotator Assembly (Use p/n 1001181057) (See ROTATOR ASSEMBLIES for Breakdown)	
7	4844944	NLA	Link, Push (Use p/n 1001094043)	
8	3422564	2	Pin (Cylinder Pivot - T/T End and Boom Pivot)	
9		Ref	Pin (Lift Cylinder Pivot - Boom End) Options:	
9	3422568	1	USA Built Machines **(SN 0300087000 through 0300096978)**	
9	3423184	1	USA Built Machines **(SN 0300096979 through 0300171769)**	
9	3423184	1	China Built Machines **(SN B300000100 through B300000969)**	
10	3422566	1	Pin (Link - T/T End)	
11	3422557	1	Pin (Link - Boom End)	
12		Ref	Pin (Master Cylinder - Boom End) Options:	
12	3422567	1	USA Built Machines **(SN 0300087000 through 0300096978)**	
12	3422563	1	USA Built Machines **(SN 0300096979 through 0300171769)**	
12	3422563	1	China Built Machines **(SN B300000100 through B300000969)**	

ITEM	PART NUMBER	QTY	DESCRIPTION	REV
13	3422565	1	Pin (Master Cylinder - T/T End)	
14	3422562	1	Pin (Rotator)	
15	3422569	1	Pin (Level Cylinder - Boom End)	
16	3841258	3	Keeper, Pin	
17	3841143	5	Keeper, Pin	
18	3422580	1	Pin (Level Cylinder - Rotator End)	
19	0642012	3	Bolt 5/8in-11NC x 1-1/2in	
20	0641608	5	Bolt 3/8in-16NC x 1in	
21	0100011	AR	Compound, Locking	
22	0100019	AR	Compound, Locking	
23	0741607	2	Screw, Countersunk 3/8in-16NC x 7/8in	
24	4740314	AR	Thrustwasher	
25	4740158	AR	Thrustwasher	
26		Ref	Cover, Boom Options:	
26A	1671055	NLA	Cover, Black Poly (Use p/n 1001148925)	
26B	1001122472	1	Cover, Steel (Machines with Shipyard Package Only)	
26C	1001127195	1	Bracket, LH Cover (Machines with Shipyard Package Only)	
26D	1001127196	1	Bracket, RH Cover (Machines with Shipyard Package Only)	
27	3841340	1	Loop, Hose	
28	4751400	4	Flatwasher 1/4in Regular (China Built Machines) **(SN B300000100 through B300000778)**	
29	0630458	1	U-Bolt (China Built Machines) **(SN B300000100 through B300000778)**	
30	3311402	4	Nut, Jam 1/4in-20NC (China Built Machines) **(SN B300000100 through B300000778)**	
31	3311405	2	Locknut 1/4in-20NC (China Built Machines) **(SN B300000100 through B300000778)**	
32	0961950	2	Bushing	
33	0962006	3	Bushing	
34	0961951	2	Bushing	
35	3539563	1	Cover (China Built Machines) **(SN B300000100 through B300000778)**	
36	0641604	AR	Bolt 3/8in-16NC x 1/2in	
37	1320235	1	Clamp, Stauff	
38	4100033	2 ft/.3m	Sleeve	
39	4240033	2	Tie-Strap	
40	3300454	4	Nut, Special	
41	0641406	4	Bolt 1/4in-20NC x 3/4in	
		Ref	**SUPPORT INSTALLATIONS (SIDE ENTRY PLATFORM)**	
	0272070	Ref	**Machines without Load Sensing and without SkyGlazier.**	D
	See Note	Ref	**Machines without Load Sensing and with SkyGlazier (Note: Refer to JLG Supplement p/n 3124242 for Components)**	
	See Note	Ref	**Machines with Load Sensing and without SkyGlazier (Note: Refer to JLG Supplement p/n 3124287 for Components)**	
	See Note	Ref	**Machines with Load Sensing and with SkyGlazier (Note: Refer to JLG Supplement p/n 3124287 for Components)**	
101	0100011	AR	Compound, Locking	
102	0641812	8	Bolt 1/2in-13NC x 1-1/2in	
103	0642684	1	Bolt 1in-8NC x 10-1/2in	
104	0681608	8	Bolt 3/8in-16NC x 1in (Grade 8)	
105	3272605	1	Locknut 1in-8NC	
106	3311805	8	Locknut 1/2in-13NC	
107	4846573	1	Support, Platform	

ITEM	PART NUMBER	QTY	DESCRIPTION	REV
108	4891600	8	Flatwasher 3/8in Hardened	
109	4891800	8	Flatwasher 1/2in Hardened	
110	4892600	1	Flatwasher 1in Hardened	

FIGURE 3-2. BOOM INSTALLATION - 600SJ & 660SJ

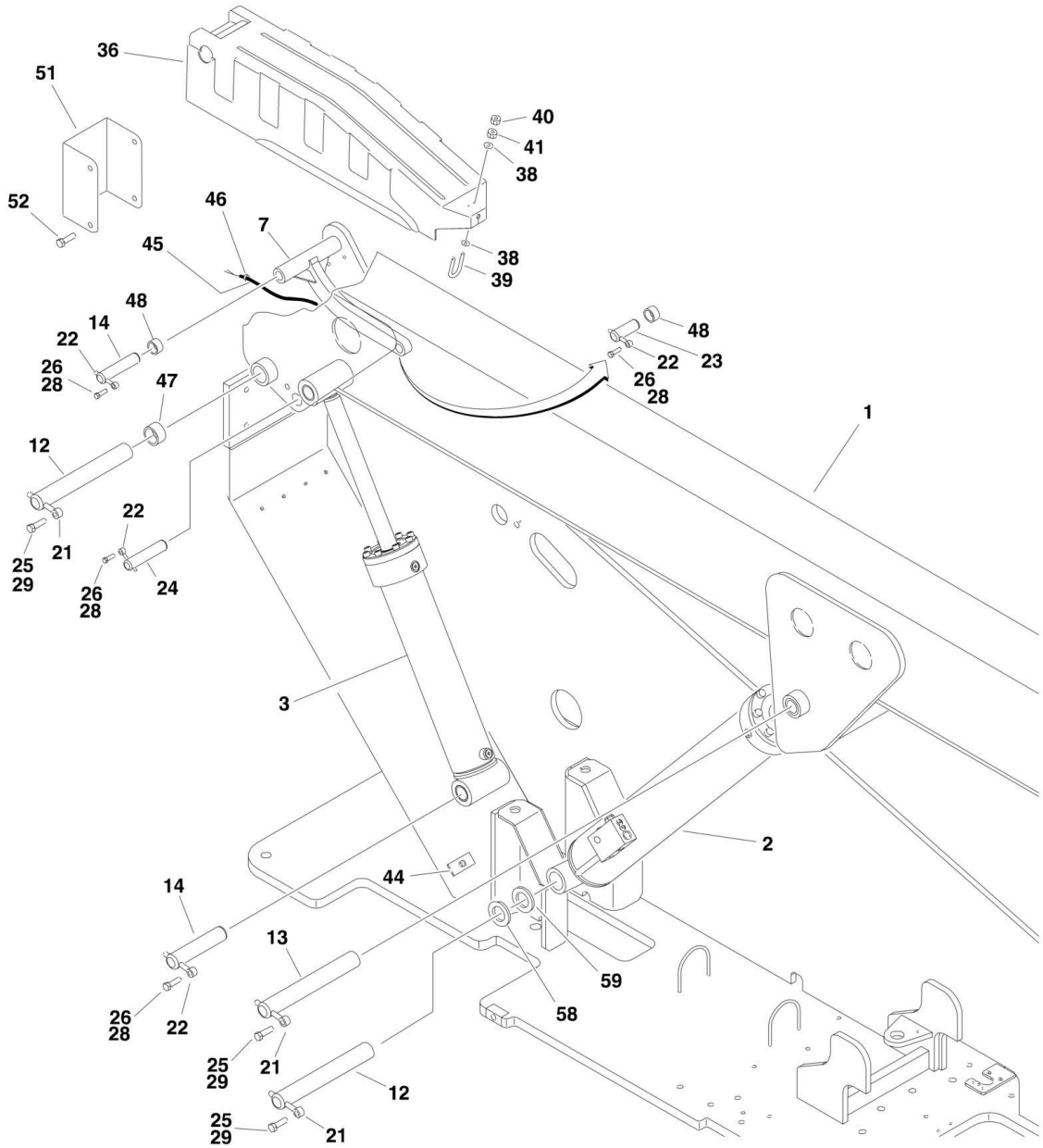

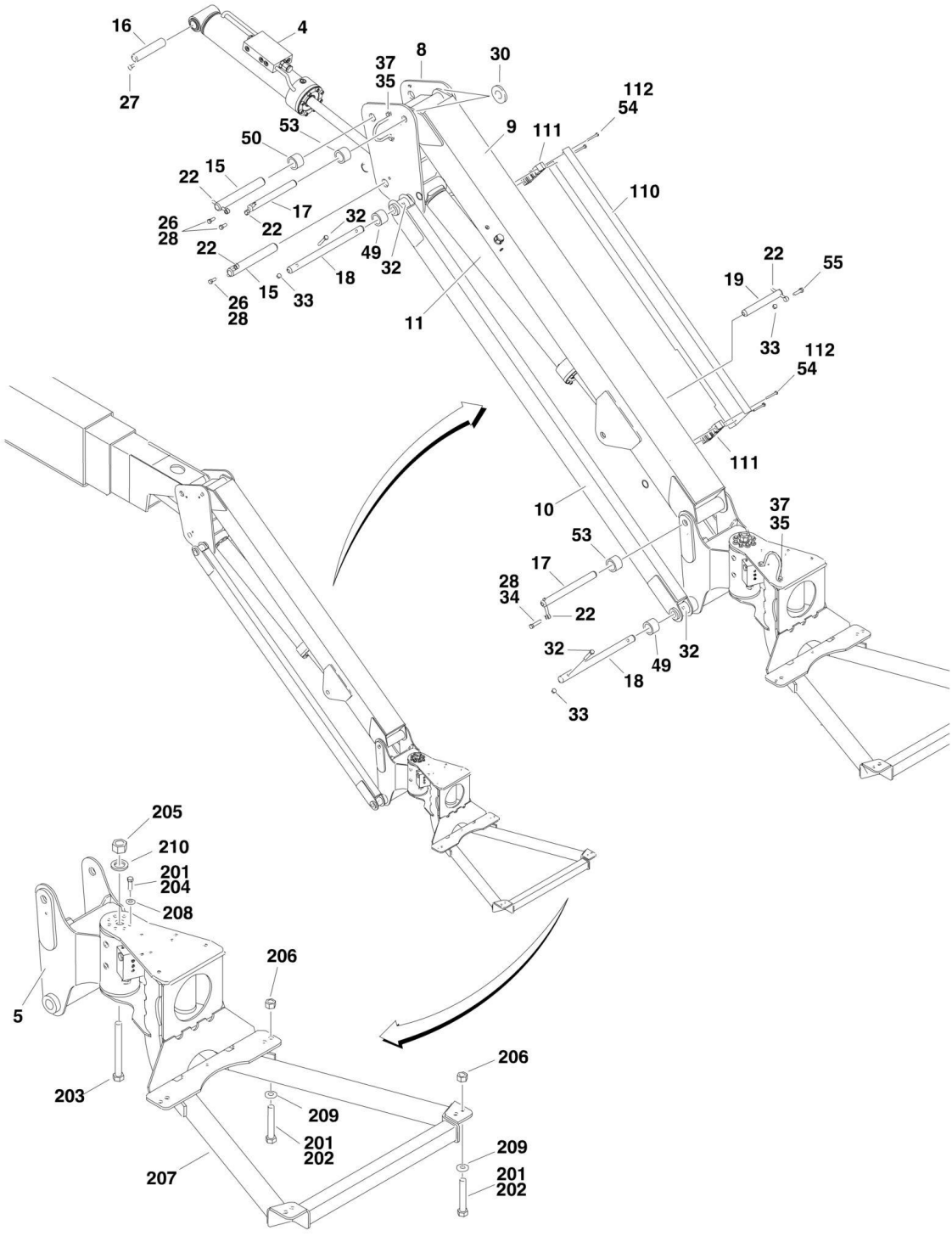
16
4
27
37
35
8
30
112
54
53
9
111
50
15
22
110
17
32
26
28
22
22
49
32
18
15
33
26
28
11
22
55
19
33
112
54
111
10
37
35
53
17
28
34
22
32
49
32
18
33
205
210
201
204
208
206
5
206
203
209
201
202
209
207
201
202

FIGURE 3-2. BOOM INSTALLATION - 600SJ & 660SJ

ITEM	PART NUMBER	QTY	DESCRIPTION	REV
		Ref	**BOOM AND CYLINDERS INSTALLATIONS - 600SJ & 660SJ**	
		Ref	**USA Built Machines (SN 0300087000 through 0300137550)**	
	0272139	Ref	**Boom and Cylinders Installations 600SJ ANSI and ANSI Export Specs**	7
	0272134	Ref	**Boom and Cylinders Installations 600SJ Australian and CE Specs**	8
	0272137	Ref	**Boom and Cylinders Installations 660SJ ANSI and ANSI Export Specs**	7
	0272130	Ref	**Boom and Cylinders Installations 660SJ Australian and CE Specs**	8
	1001108342	Ref	**USA Built Machines (SN 0300137551 through 0300171769)**	C
	1001115359 AND 1001115357 AND 1001113429	Ref	**China Built Machines (SN B300000100 through B300000969)**	D-D-D
1	See Note	1	Boom Assembly (See MAIN BOOM ASSEMBLIES for Breakdown)	
2		Ref	Boom Lift Cylinder Assembly Options (See CYLINDER SECTION for Breakdown):	
2	1683666	NLA	USA Built Machines (Use p/n 1001112468) **(SN 0300087000 through 0300138401)**	
2	1001112468	1	USA Built Machines **(SN 0300138402 through 0300171769)**	
2	1001112468	1	China Built Machines **(SN B300000100 through B300000969)**	
3		Ref	Master Cylinder Assembly Options (See CYLINDER SECTION for Breakdown):	
3	1683263	NLA	USA Built Machines (Use p/n 1001228052) (Original Equipment) **(SN 0300087000 through 0300096978)**	
3	1001228052	1	USA Built Machines (Service Replacement)	
3	1684413	NLA	USA Built Machines **(SN 0300096979 through 0300171769)**	
3	1684413	NLA	China Built Machines **(SN B300000100 through B300000969)**	
4	1683418	NLA	Platform Level Cylinder Assembly (Use p/n 1001228051) (Original Equipment) (See CYLINDER SECTION for Breakdown)	
4	1001223331	NLA	Platform Level Cylinder Assembly (Use p/n 1001228051) (Service Replacement) (See CYLINDER SECTION for Breakdown)	
4	1001228051	NLA	Platform Level Cylinder Assembly (Service Replacement) (See CYLINDER SECTION for Breakdown)	
5	0060066	NLA	Rotator Assembly (Use p/n 1001178269) (See ROTATOR ASSEMBLIES for Breakdown)	
7	4844944	NLA	Link, Push (Use p/n 1001094043)	
8		Ref	Pivot Options:	
8	4844815	1	USA Built Machines	
8	1001113423	1	China Built Machines	
9		Ref	Tube, Top Jib Options:	
9	4844816	1	USA Built Machines	
9	1001113386	1	China Built Machines	
10		Ref	Tube, Bottom Jib Options:	
10	4844817	2	USA Built Machines	
10	1001113407	2	China Built Machines	
11	1683609	NLA	Jib Lift Cylinder Assembly (Use p/n 1001228012) (See CYLINDER SECTION for Breakdown) (Original Equipment)	
11	1001228012	NLA	Jib Lift Cylinder Assembly (Use p/n 1001248012) (See CYLINDER SECTION for Breakdown) (Service Replacement)	
11	1001248012	1	Jib Lift Cylinder Assembly (See CYLINDER SECTION for Breakdown) (Service Replacement)	

ITEM	PART NUMBER	QTY	DESCRIPTION	REV
12	3422564	2	Pin (Boom Pivot and Lift Cylinder Pivot - T/T End)	
13		Ref	Pin (Boom Lift Cylinder - Boom End) Options:	
13	3422568	1	USA Built Machines **(SN 0300087000 through 0300096978)**	
13	3423184	1	USA Built Machines **(SN 0300096979 through 0300171769)**	
14	3422566	2	Pin (Link - T/T End and Master Cylinder - T/T End)	
15	3422561	2	Pin (Jib Cylinder - Pivot End and Pivot - Boom End)	
16	3422583	1	Pin (Jib Level Cylinder - Boom End)	
17	3422860	2	Pin (Top Tube - Pivot End)	
18	3422861	2	Pin (Bottom Tube - Both Ends)	
19	3422867	1	Pin (Jib Lift Cylinder - Top Tube End)	
21	3841258	3	Keeper, Pin	
22	3841143	9	Keeper, Pin	
23	3422557	1	Pin (Link - Boom)	
24		Ref	Pin (Master Cylinder - Boom End) Options:	
24	3422574	1	USA Built Machines **(SN 0300087000 through 0300096978)**	
24	3422790	1	USA Built Machines **(SN 0300096979 through 0300171769)**	
24	3422790	1	China Built Machines **(SN B300000100 through B300000969)**	
25	0642012	3	Bolt 5/8in-11NC x 1-1/2in	
26	0641608	7	Bolt 3/8in-16NC x 1in	
27	0741607	1	Screw, Countersunk 3/8in-16NC x 7/8in	
28	0100011	AR	Compound, Locking	
29	0100019	AR	Compound, Locking	
30	4740439	2	Thrustwasher	
32	0641618	4	Bolt 3/8in-16NC x 2-1/4in	
33	3311605	5	Locknut 3/8in-16NC	
34		Ref	Bolt Options:	
34	0641614	1	Bolt 3/8in-16NC x 1-3/4in	
34	0641610	1	Bolt 3/8in-16NC x 1-1/4in	
35	3841340	Ref	Clamp, Loop Options:	
35	3841340	1	USA Built Machines **(SN 0300137551 through 0300156719)**	
35	3841340	1	China Built Machines **(SN B300000100 through B300000541)**	
35	3841340	2	USA Built Machines **(SN 0300156720 through 0300171769)**	
35	3841340	2	China Built Machines **(SN B300000542 through B300000969)**	
36	1671055	1	Cover, Boom	
37	0641606	AR	Bolt 3/8in-16NC x 3/4in	
38	4751400	4	Flatwasher 1/4in Regular	
39	0630458	1	U-Bolt	
40	3311402	4	Nut, Jam 1/4in-20NC	
41	3311405	2	Locknut 1/4in-20NC	
44	1320235	1	Clamp, Stauff	
45	4100033	2 ft/.6m	Sleeve, Abrasion	
46	4240033	2	Tie-Strap	
47	0961950	2	Bushing	
48	0962006	3	Bushing	
49	0961947	6	Bushing	
50	0961951	2	Bushing	
51	3539563	1	Cover	
52	0641604	4	Bolt 3/8in-16NC x 1/2in	
53	0962335	4	Bushing	
54	2080044	4	Rivnut	
55	0641611	1	Bolt 3/8in-16NC x 1-3/8in	

ITEM	PART NUMBER	QTY	DESCRIPTION	REV
56	4360328	1	Switch, Toggle (Not Shown - Located at Platform Console Box)	
57	3790012	1	O-Ring (Not Shown - Used with Item 56)	
58	4740314	AR	Thrustwasher	
59	4740158	AR	Thrustwasher	
61	3520034	4	Plug, Nylon Hole (Not Shown)	
		Ref	**BOOM CABLES INSTALLATION**	
110	1670769	1	Cover	
111	0561237	2	Clamp, Block	
112	0641416	4	Bolt 1/4in-20NC x 2in	
		Ref	**SUPPORT INSTALLATIONS (SIDE ENTRY PLATFORM)**	
	0272070	Ref	**USA Built Machines without Load Sensing and without SkyGlazier.**	C
	1001115098	Ref	**China Built Machines without Load Sensing and without SkyGlazier.**	A
	See Note	Ref	**Machines without Load Sensing and with SkyGlazier (Note: For Replacement Parts, Contact JLG Customer Service and Request Manual p/n 3124242)**	
	See Note	Ref	**Machines with Load Sensing and without SkyGlazier (Note: For Replacement Parts, Contact JLG Customer Service and Request Manual p/n 3124287)**	
	See Note	Ref	**Machines with Load Sensing and with SkyGlazier (Note: For Replacement Parts, Contact JLG Customer Service and Request Manual p/n 3124287)**	
201	0100011	AR	Compound, Locking	
202	0641812	8	Bolt 1/2in-13NC x 1-1/2in	
203	0642684	1	Bolt 1in-8NC x 10-1/2in	
204	0681608	8	Bolt 3/8in-16NC x 1in (Grade 8)	
205	3272605	1	Locknut 1in-8NC	
206	3311805	8	Locknut 1/2in-13NC	
207		Ref	Support, Platform Options:	
207	4846573	1	USA Built Machines without Load Sensing and without SkyGlazier	
207	1001113465	1	China Built Machines without Load Sensing and without SkyGlazier	
207	See Notes Above	1	All Machines with Load Sensing and/or SkyGlazier Options	
208	4891600	8	Flatwasher 3/8in Hardened	
209	4891800	8	Flatwasher 1/2in Hardened	
210	4892600	1	Flatwasher 1in Hardened	

FIGURE 3-3. MAIN BOOM ASSEMBLIES

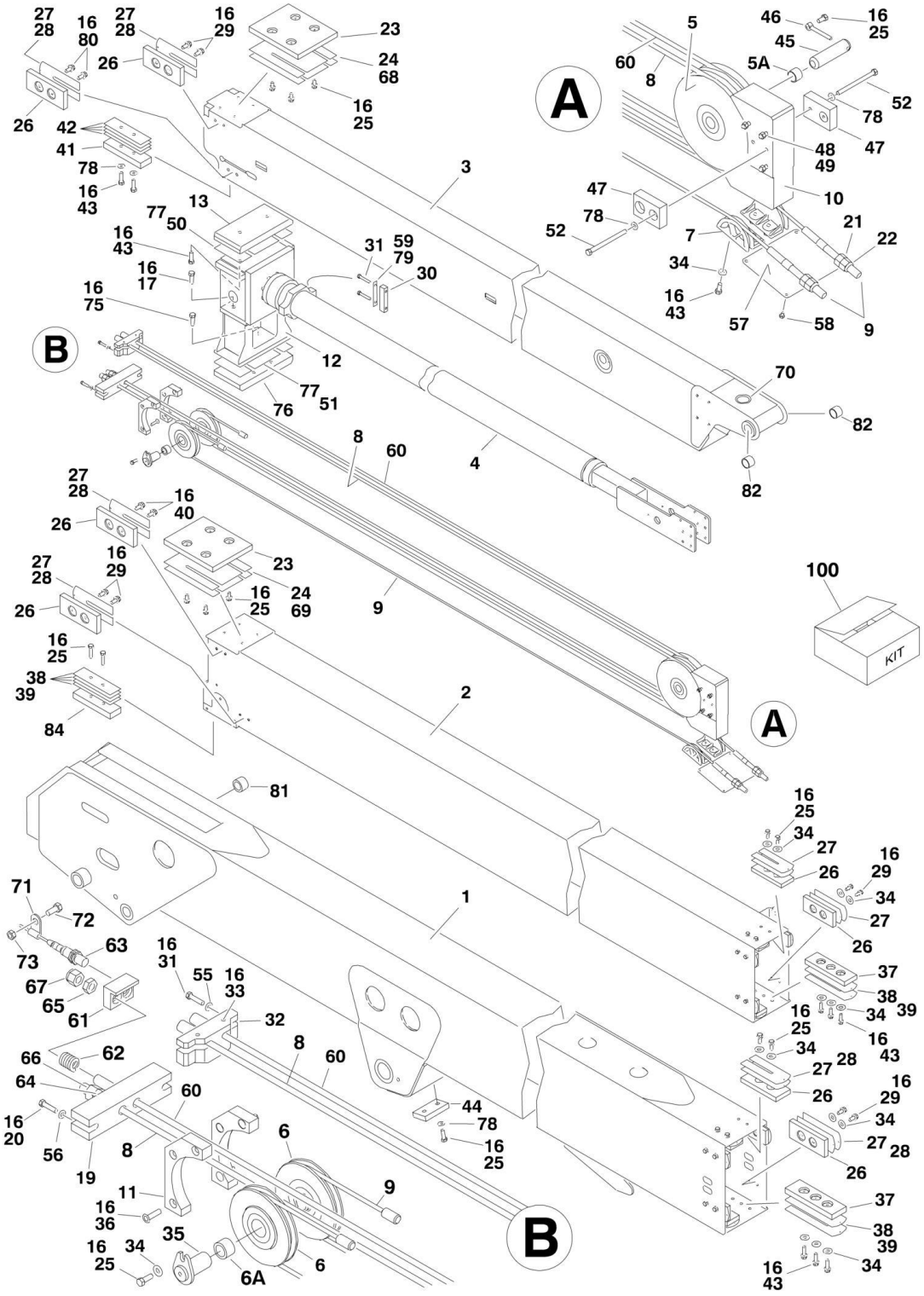

FIGURE 3-3. MAIN BOOM ASSEMBLIES

ITEM	PART NUMBER	QTY	DESCRIPTION	REV
		Ref	**MAIN BOOM ASSEMBLY OPTIONS:**	
		Ref	**ANSI and ANSI Export Specs (USA Built Machines):**	
	0801381	Ref	**Main Boom Assembly 600S (SN 0300087000 through 0300096978)**	4-D
	0801471	Ref	**Main Boom Assembly 600S (SN 0300096979 through 0300171769)**	H
	0801389	Ref	**Main Boom Assembly 600SJ (SN 0300087000 through 0300096978)**	4-D
	0801480	Ref	**Main Boom Assembly 600SJ (SN 0300096979 through 0300171769)**	E
	0801388	Ref	**Main Boom Assembly 660SJ (SN 0300087000 through 0300096978)**	4-D
	0801475	Ref	**Main Boom Assembly 660SJ (SN 0300096979 through 0300171769)**	H
		Ref	**ANSI and ANSI Export Specs (China Built Machines):**	
	0801471	Ref	**Main Boom Assembly 600S (SN B300000100 through B300000214)**	H
	1001127285	Ref	**Main Boom Assembly 600S (SN B300000215 through B300000969)**	C
	0801475	Ref	**Main Boom Assembly 660SJ (SN 0300096979 through B300000214)**	H
	1001126509	Ref	**Main Boom Assembly 660SJ (SN B300000215 through B300000969)**	C
		Ref	**Australian and CE Specs (USA Built Machines):**	
	0801383	Ref	**Main Boom Assembly 600S (SN 0300087000 through 0300096978)**	4-D
	0801472	Ref	**Main Boom Assembly 600S (SN 0300096979 through 0300171769)**	H
	0801387	Ref	**Main Boom Assembly 600SJ (SN 0300087000 through 0300096978)**	4-D
	0801474	Ref	**Main Boom Assembly 600SJ (SN 0300096979 through 0300171769)**	G
	0801386	Ref	**Main Boom Assembly 660SJ (SN 0300087000 through 0300096978)**	4-D
	0801473	Ref	**Main Boom Assembly 660SJ (SN 0300096979 through 0300171769)**	G
		Ref	**Australian and CE Specs (China Built Machines):**	
	0801472	Ref	**Main Boom Assembly 600S (SN B300000100 through B300000214)**	H
	1001126597	Ref	**Main Boom Assembly 600S (SN B300000215 through B300000969)**	C
	0801473	Ref	**Main Boom Assembly 660SJ (SN 0300096979 through B30000214)**	G
	1001126596	Ref	**Main Boom Assembly 660SJ (SN B300000215 through B300000969)**	C
1		Ref	Base Weldment Options:	
1		Ref	USA Built Machines:	
1	0801011	1	Base Weldment 600S & 660SJ **(SN 0300087000 through 0300096978)**	
1	0801396	1	Base Weldment 600S & 660SJ **(SN 0300096979 through 0300171769)**	
1	0801036	1	Base Weldment 600SJ **(SN 0300087000 through 0300096978)**	
1	0801467	1	Base Weldment 600SJ **(SN 0300096979 through 0300171769)**	

SECTION 3 - BOOM

ITEM	PART NUMBER	QTY	DESCRIPTION	REV
1		Ref	China Built Machines:	
1	0801396	1	Base Weldment **(SN B300000100 through B300000214)**	
1	1001125631	1	Base Weldment **(SN B300000215 through B300000239)**	
1	0801396	1	Base Weldment **(SN B3000000240 through B300000969)**	
2		Ref	Mid Weldment Options:	
2		Ref	USA Built Machines:	
2	0801372	NLA	Mid Weldment 600S & 660SJ (Use p/n 0801524) **(SN 0300087000 through 0300100775)**	
2	0801524	1	Mid Weldment 600S & 660SJ **(SN 0300100776 through 0300171769)**	
2	0801373	NLA	Mid Weldment 600SJ (Use p/n 0801525) **(SN 0300087000 through 0300100775)**	
2	0801525	1	Mid Weldment 600SJ **(SN 0300100776 through 0300171769)**	
2		Ref	China Built Machines:	
2	0801524	1	Mid Weldment **(SN B300000100 through B300000214)**	
2	1001126126	1	Mid Weldment **(SN B300000215 through B300000239)**	
2	0801524	1	Mid Weldment **(SN B300000240 through B300000969)**	
3		Ref	Fly Weldment Options:	
3		Ref	USA Built Machines:	
3	0801065	1	Fly Weldment 600S **(SN 0300087000 through 0300096978)**	
3	0801498	1	Fly Weldment 600S **(SN 0300096979 through 0300171769)**	
3	0801038	1	Fly Weldment 600SJ **(SN 0300087000 through 0300096978)**	
3	0801615	1	Fly Weldment 600SJ **(SN 0300096979 through 0300171769)**	
3	0801014	1	Fly Weldment 660SJ **(SN 0300087000 through 0300096978)**	
3	0801504	1	Fly Weldment 660SJ **(SN 0300096979 through 0300171769)**	
3		Ref	China Built Machines:	
3	0801498	1	Fly Weldment 600S **(SN B300000100 through B300000214)**	
3	1001126145	1	Fly Weldment 600S **(SN B300000215 through B300000239)**	
3	0801498	1	Fly Weldment 600S **(SN B300000240 through B300000969)**	
3	0801504	1	Fly Weldment 660SJ **(SN B300000100 through B300000214)**	
3	1001126154	1	Fly Weldment 660SJ **(SN B300000215 through B300000239)**	
3	0801504	1	Fly Weldment 660SJ **(SN B300000240 through B300000969)**	
4		Ref	Telescope Cylinder Assembly Options (See CYLINDER SECTION for Breakdown):	
4	1683618	1	Telescope Cylinder Assembly 600S & 660SJ	
4	1683620	1	Telescope Cylinder Assembly 600SJ	
5	3580241	1	Sheave Assembly (Extend)	2-B
5A	0961951	2	Bushing	
6	3580243	2	Sheave Assembly (Retract)	1-A
6A	0961951	2	Bushing (1 Per Sheave)	
7	1220078	2	Block, Sheave	
8		Ref	Cable (Extend) Options:	
8	3890005	1	Cable 600S & 660SJ (ANSI and ANSI Export Specs)	
8	3890010	1	Cable 600S & 660SJ (Australian and CE Specs)	

ITEM	PART NUMBER	QTY	DESCRIPTION	REV
8	3890007	1	Cable 600SJ (ANSI and ANSI Export Specs)	
8	3890011	1	Cable 600SJ (Australian and CE Specs)	
9		Ref	Cable (Retract) Options:	
9	3890006	2	Cable 600S & 660SJ	
9	3890008	2	Cable 600SJ	
10	3580248	1	Guard, Sheave (Extend)	
11	3580249	2	Guard, Sheave (Retract)	
12	4846319	1	Support, Wear Pad	
13	3340844	1	Pad, Wear	
16	0100011	AR	Compound, Locking	
17	0681610	4	Bolt 3/8in-16NC x 1-1/4in (Grade 8)	
19		Ref	Block, Cable Options:	
19	0561184	1	ANSI and ANSI Export Specs	
19	0561245	1	Australian and CE Specs	
20	0641824	2	Bolt 1/2in-13NC x 3in	
21	3312201	2	Nut 3/4in-10NC	
22	3300241	2	Locknut, Special 3/4in-10NC	
23	3340757	2	Pad, Wear	
24	4070896	4	Shim (.06) (Without Slide-In Slots)	
25	0641607	NLA	Bolt 3/8in-16NC x 7/8in (Use p/n 0811607)	
26		Ref	Pad, Wear Options:	
26	3340881	20	USA Built Machines **(SN 0300087000 through 0300168792)**	
26	3340881	20	China Built Machines **(SN B300000100 through B300000741)**	
26	1001148652	20	USA Built Machines **(SN 0300168793 through 0300171769)**	
26	1001148652	20	China Built Machines **(SN B300000742 through B300000969)**	
27	4070897	28	Shim (.05)	
28	4070898	24	Shim (.12)	
29	0641606	NLA	Bolt 3/8in-16NC x 3/4in (Use p/n 0811606)	
30	0561185	2	Block	
31	0641616	6	Bolt 3/8in-16NC x 2in	
32	0561183	1	Block, Cable	
33	3951608	2	Setscrew 3/8in-16NC x 1in	
34	4711600	AR	Flatwasher 3/8in Thin	
35	3422424	2	Pin (Retract Sheave)	
36	0741612	6	Screw, Countersunk 3/8in-16NC x 1-1/2in	
37	3340871	4	Pad, Wear	
38	4070863	AR	Shim (.12)	
39	4070864	AR	Shim (.05)	
40	0641613	AR	Bolt 3/8in-16NC x 1-5/8in	
41		Ref	Pad, Wear Options:	
41	3340758	2	USA Built Machines **(SN 0300087000 through 0300168792)**	
41	3340758	2	China Built Machines **(SN B300000100 through B300000741)**	
41	1001148650	2	USA Built Machines **(SN 0300168793 through 0300171769)**	
41	1001148650	2	China Built Machines **(SN B300000742 through B300000969)**	
42	4070895	8	Shim (.06)	
43	0641608	NLA	Bolt 3/8in-16NC x 1in (Use p/n 0811608)	
44	0561076	1	Block	
45	3422417	2	Pin (Extend Sheave)	

ITEM	PART NUMBER	QTY	DESCRIPTION	REV
46	3841143	1	Keeper, Pin	
47		Ref	Pad, Wear Options:	
47	3340755	2	USA Built Machines **(SN 0300087000 through 0300168792)**	
47	3340755	2	China Built Machines **(SN B300000100 through B300000741)**	
47	1001148651	2	USA Built Machine **(SN 0300168793 through 0300171769)**	
47	1001148651	2	China Built Machines **(SN B300000742 through B300000969)**	
48	0641634	4	Bolt 3/8in-16NC x 4-1/4in	
49	3311605	4	Locknut 3/8in-16NC	
50	4070976	1	Shim (.12)	
51	4071004	1	Shim (.25)	
52	0641638	2	Bolt 3/8in-16NC x 4-3/4in	
55	4891600	6	Flatwasher 3/8in Hardened	
56	4891800	2	Flatwasher 1/2in Hardened	
57	3539622	1	Plate, Cover	
58	0641403	4	Bolt 1/4in-20NC x 3/8in	
59	4070929	AR	Shim	
60		Ref	Cable (Extend) Options:	
60	3890005	1	Cable 600S & 660SJ (ANSI and ANSI Export Specs)	
60	3890009	1	Cable 600S & 660SJ (Australian and CE Specs)	
60	3890007	1	Cable 600SJ (ANSI and ANSI Export Specs)	
60	3890012	1	Cable 600SJ (Australian and CE Specs)	
61	0561508	1	Plate, Spring Mounting (Australian and CE Specs Only)	
62	4160149	1	Spring (Australian and CE Specs Only)	
63	4360506	1	Switch, Proximity (Australian and CE Specs Only)	
64		Ref	Nut Options:	
64	3300241	1	Locknut, Special 3/4in-10NC (ANSI and ANSI Export Specs)	
64	3300399	NLA	Nut, Jam 7/8in-9NC (Australian and CE Specs) (Use p/n 3272401)	
65		Ref	Nut Options	
65	3300241	1	Locknut, Special 3/4in-10NC (ANSI and ANSI Export Specs)	
65	3300400	NLA	Nut, Jam 5/8in-11NC (Australian and CE Specs) (Use p/n 3272001)	
66		Ref	Locknut Options:	
66	3312201	1	Nut 3/4in-10NC (ANSI and ANSI Export Specs)	
66	3300242	1	Locknut 7/8in-9NC (Australian and CE Specs)	
67		Ref	Locknut Options:	
67	3312201	1	Nut 3/4in-10NC (ANSI and ANSI Export Specs)	
67	3300240	1	Locknut 5/8in-11NC (Australian and CE Specs)	
68	4070939	AR	Shim 16Ga (With Slide-In Slots)	
69	4070940	AR	Shim 16Ga (With Slide-In Slots)	
70	4060805	6 in/16cm	Flex-Trim	
71	1320244	1	Clamp (Australian and CE Specs Only)	
72	0641406	1	Bolt 1/4in-20NC x 3/4in (Australian and CE Specs Only)	
73	3311401	NLA	Locknut 1/4in-20NC (Australian and CE Specs Only) (Use p/n 3311405)	
74	1670836	8	Cover, Boom (Not Shown) (USA Built Machines) **(SN 0300087000 through 0300134293)**	
75	0681608	4	Bolt 3/8in-16NC x 1in	
76	3340900	1	Pad, Wear	
77	4071005	AR	Shim	
78	4751600	12	Flatwasher 3/8in Regular	

ITEM	PART NUMBER	QTY	DESCRIPTION	REV
79	4071007	AR	Shim	
80	0641614	NLA	Bolt 3/8in-16NC x 1-3/4in (Use p/n 0811614)	
81	0961950	2	Bushing	
82	0961951	2	Bushing (600SJ & 660SJ Only)	
83	3020039	AR	Lubricant (Not Shown)	
84		Ref	Pad, Wear Options;	
84	3340871	1	USA Built Machines **(SN 0300087000 through 0300168792)**	
84	3340871	1	China Built Machines **(SN B300000100 through B300000741)**	
84	1001148653	1	USA Built Machines **(SN 0300168793 through 0300171769)**	
84	1001148653	1	China Built Machines **(SN B300000742 through B300000969)**	
100	2901986	1	Kit, Wear Pad Support (Includes Items 12, 51, 75, 76 & 77)	

FIGURE 3-4. ROTATOR ASSEMBLIES

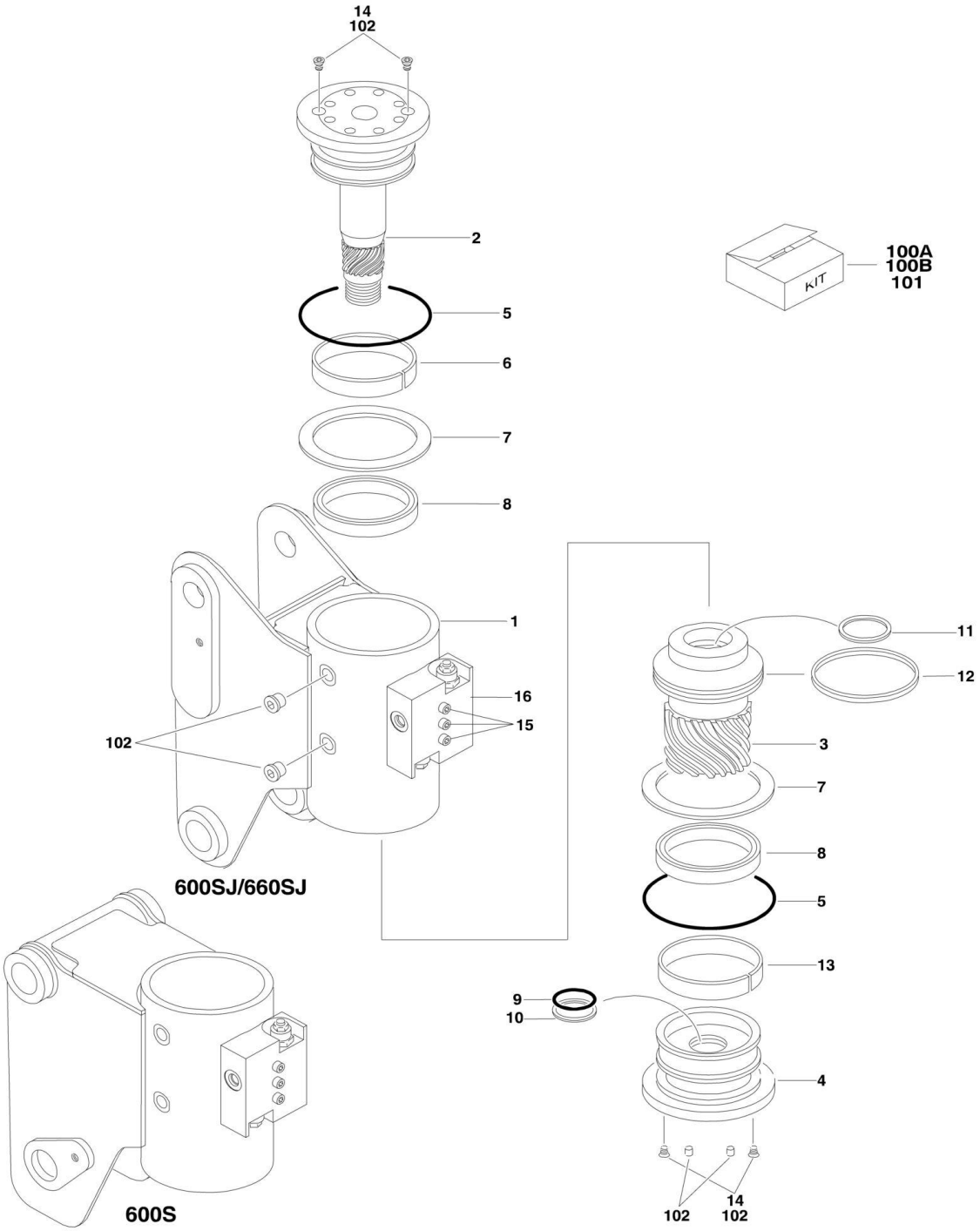

FIGURE 3-4. ROTATOR ASSEMBLIES

ITEM	PART NUMBER	QTY	DESCRIPTION	REV
		Ref	**ROTATOR ASSEMBLIES**	
	0060067	Ref	**Rotator Assemblies 600S (Original Equipment)**	B
	1001181057	Ref	**Rotator Assemblies 600S (Service Replacement)**	A
	0060066	Ref	**Rotator Assemblies 600SJ & 660SJ (Original Equipment)**	D
	1001178269	Ref	**Rotator Assemblies 600SJ & 660SJ (Service Replacement)**	A
1	See Note	NSS	Housing/Ring Gear Assembly (Note: Not Available - Purchase Complete Rotator Assembly)	
2	7017162	1	Shaft Weldment	
2	7017195	2	Bushing, Shaft	
3	7017163	1	Piston/Sleeve Assembly	
4	7017164	1	Cap, End	
5	See Note	NSS	O-Ring (Note: Use Item 100A or 100B)	
6	See Note	NSS	Bearing, Shaft (Note: Use Item 101)	
7	See Note	NSS	Thrustwasher (Note: Use Item 101)	
8	See Note	NSS	Packing, Bearing (Note: Use Item 100A or 100B)	
9	See Note	NSS	Seal, Cap (Note: Use Item 100A or 100B)	
10	See Note	NSS	Ring, Back-up Cap (Note: Use Item 100A or 100B)	
11	See Note	NSS	Seal, Rod (Note: Use Item 100A or 100B)	
12	See Note	NSS	Seal, Piston (Note: Use Item 100A or 100B)	
13	See Note	NSS	Bearing, Cap (Note: Use Item 101)	
14	70001697	4	Screw, Countersunk 1/4in-20NC x 3/8in (Grade 8)	
15	See Note	NSS	Capscrew 1/4in-20NC x 1-1/2 (Grade 8) (Note: Not Available for Purchase)	
16	7017183	1	Valve Assembly	
16	7017193	1	Cartridge, Valve	
16	See Note	NSS	Seal Kit - 7017193 Valve (Note: Use p/n 7017193)	
16	See Note	NSS	Cartridge, Valve (Not Shown - Located on Side of Block) (Note: Use p/n 7017183)	
16	See Note	NSS	Seal Kit - Valve Located on Side of Block (Note: Use p/n 7017183)	
		Ref	**KIT OPTIONS**	
100		Ref	Seal Kit Options (Includes Items 5, 8-12 & 102):	
100A	7017158	1	Seal Kit - Standard (0060066/0060067 Assemblies)	
100B	70000342	1	Seal Kit - Low Temperature (1001178269/1001181057 Assemblies)	
101	7017159		Bearing Kit (Includes Items 6, 7 & 13)	
102	7017142	1	Hardware Kit (Includes Items 14, 2 Setscrews & 2 Plugs)	

FIGURE 3-5. POWER TRACK INSTALLATIONS

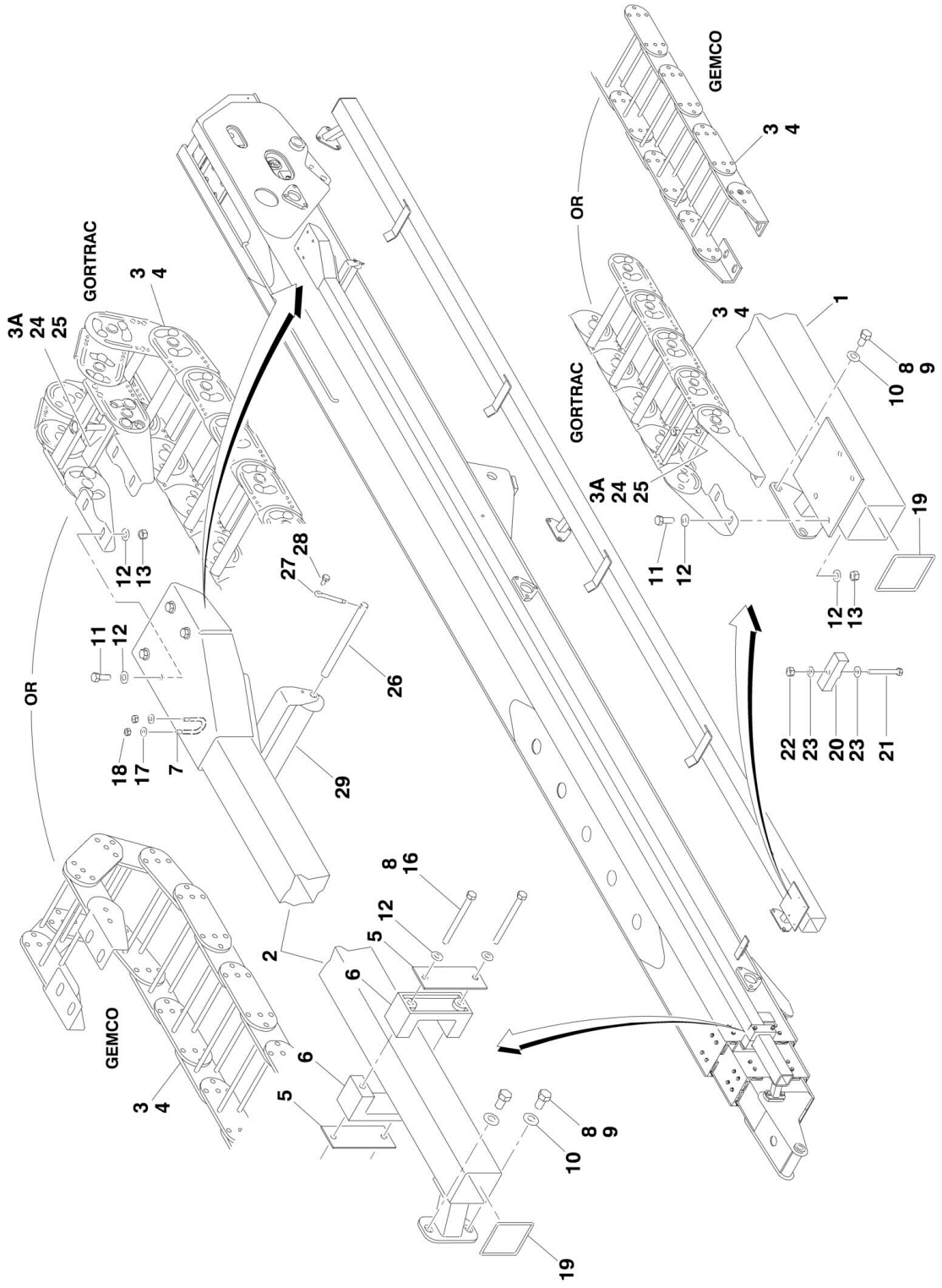

FIGURE 3-5. POWER TRACK INSTALLATIONS

ITEM	PART NUMBER	QTY	DESCRIPTION	REV
		Ref	**POWER TRACK INSTALLATIONS**	
	0270804	Ref	**Power Track Installations 600S/660SJ USA Built Machines**	5
	1001115236	Ref	**Power Track Installations 600S/660SJ China Built Machines**	A
	0271372	Ref	**Power Track Installations 600SJ**	4
1		Ref	Support, Power Track Options:	
1	4845819	1	Support, Power Track 600S/660SJ USA Built Machines	
1	1001114668	1	Support, Power Track 600S/660SJ China Built Machines	
1	4846392	1	Support, Power Track 600SJ	
2		Ref	Tube, Push Options:	
2	4845671	1	Tube, Push 600S/660SJ USA Built Machines	
2	1001114816	1	Tube, Push 600S/660SJ China Built Machines	
2	4846391	1	Tube, Push 600SJ	
3	1180345	NLA	Power Track Assembly 600S/660SJ (USA Built Machines) (Use p/n 1001099832) **(SN 0300087000 through 0300134960)**	
3	1001099832	1	Power Track Assembly 600S/660SJ (USA Built Machines) **(SN 0300134961 through 0300171769)**	
3	1001099832	1	Power Track Assembly 600S/660SJ (China Built Machines) **(SN B300000100 through B300000969)**	
3		Ref	Note: Use Detail on Illustration to identify power track brand, before ordering replacement parts.	
3		Ref	Gemco Replacement Parts (600S/660SJ):	
3	7016530	AR	Repair Section (Includes 18 Link Pin, 4 Radius Links, 2 Carrier Links, 1 Rod Carrier, 1 Spring Loaded Rod, 1 Carrier Weldment & 12 Bearing Plates)	
3	7006143	2	Feet Mounting (Kit Includes 1 LH, 1 RH and 2 Spacers)	
3	7006138	AR	Pin Kit (Includes 1 Pin, 1 Retaining Ring & 4 Washers)	
3		Ref	Gortrac Replacement Parts (600S/660SJ):	
3	70002005	AR	Repair Section	
3	70002006	1	Mounting Bracket Kit	
3A	70004643	2	Clamp with Hardware	
4	1180359	NLA	Power Track Assembly 600SJ (USA Built Machines) (Use p/n 1001099839) **(SN 0300087000 through 0300134960)**	
4	1001099839	1	Power Track Assembly 600SJ (USA Built Machines) **(SN 0300134961 through 0300171769)**	
4	1001099839	1	Power Track Assembly 600SJ (China Built Machines) **(SN B300000100 through B300000969)**	
4		Ref	Note: Use Detail on Illustration to identify power track brand, before ordering replacement parts.	
4		Ref	Gemco Replacement Parts (600SJ):	
4	7016530	AR	Repair Section (Includes 18 Link Pin, 4 Radius Links, 2 Carrier Links, 1 Rod Carrier, 1 Spring Loaded Rod, 1 Carrier Weldment & 12 Bearing Plates)	
4	7006143	2	Feet Mounting (Kit Includes 1 LH, 1 RH and 2 Spacers)	
4	7006138	AR	Pin Kit (Includes 1 Pin, 1 Retaining Ring & 4 Washers)	
4		Ref	Gortrac Replacement Parts (600SJ):	
4	70002007	AR	Repair Section	
4	70002006	1	Mounting Bracket Kit	
5	3538758	AR	Plate	
6	3340764	2	Pad, Wear	
7	0630458	1	U-Bolt	
8	0100011	AR	Compound, Locking	
9	0641807	11	Bolt 1/2in-13NC x 7/8in	

ITEM	PART NUMBER	QTY	DESCRIPTION	REV
10	4711800	11	Flatwasher 1/2in Thin	
11	0641608	8	Bolt 3/8in-16NC x 1in	
12	4711600	18	Flatwasher 3/8in Thin	
13	3311605	8	Locknut 3/8in-16NC	
16		Ref	Bolt 3/8in-16NC Options:	
16	0641644	2	Bolt 3/8in-16NC x 5-1/2in	
16	0641648	2	Bolt 3/8in-16NC x 6in	
17	4711400	2	Flatwasher 1/4in Thin	
18	3311405	2	Locknut 1/4in-20NC	
19	4060803	AR	Shield, Trim	
20	1320247	1	Clamp, Nylon	
21	0641522	1	Bolt 5/16in-18NC x 2-3/4in	
22	3311505	1	Locknut 5/16in-18NC	
23	4711500	2	Flatwasher 5/16in Thin	
24	4070994	2	Shim	
25	4070995	2	Shim	
25	0100081	AR	Adhesive	
26	3841013	1	Roller, Rod	
27	3450806	1	Pin, Cotter	
28	0641404	1	Bolt 1/4in-20NC x 1/2in	
29	3860050	1	Roller	

SECTION 4 - PLATFORM

FIGURE 4-1. PLATFORM COMPONENTS INSTALLATION

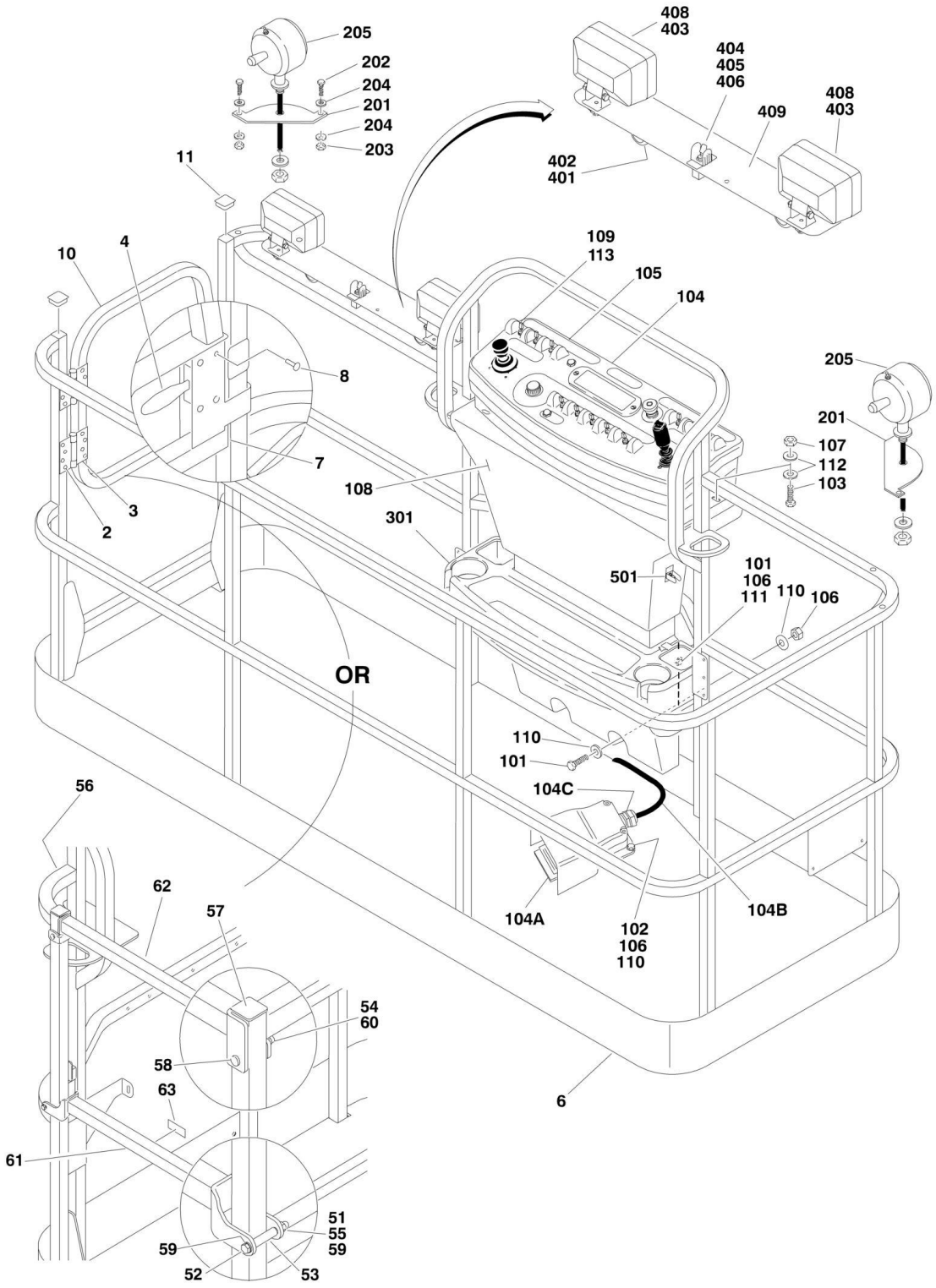

FIGURE 4-1. PLATFORM COMPONENTS INSTALLATION

ITEM	PART NUMBER	QTY	DESCRIPTION	REV
		Ref	**PLATFORM ASSEMBLY WITH GATE:**	
		Ref	**USA Built Machines:**	
	3510830	Ref	**Platform 30in x 4ft (76cm x 1.22m) (Use p/n 1001144027) (SN 0300087000 through 0300168214)**	B-M
	1001144027	Ref	**Platform 30in x 4ft (76cm x 1.22m) (SN 0300168215 through 0300171769)**	B
	3510831	Ref	**Platform 30in x 5ft (76cm x 1.52m) with No Mesh) (Use p/n 1001144026) (SN 0300087000 through 0300168214)**	B-L
	1001144026	Ref	**Platform 30in x 5ft (76cm x 1.52m) with No Mesh) (SN 0300168215 through 0300171769)**	B
	3510833	Ref	**Platform 36in x 6ft (91.5cm x 1.83m) with No Mesh) (Use p/n 1001144024) (SN 0300087000 through 0300168214)**	B-I
	1001144024	Ref	**Platform 36in x 6ft (91.5cm x 1.83m) with No Mesh) (SN 0300168215 through 0300171769)**	B
	3510822	Ref	**Platform 36in x 8ft (91.5cm x 2.44m) with No Mesh) (Use p/n 1001144023) (SN 0300087000 through 0300168214)**	B-J
	1001144023	Ref	**Platform 36in x 8ft (91.5cm x 2.44m) with No Mesh) (SN 0300168215 through 0300171769)**	B
		Ref	**China Built Machines:**	
	1001114335	Ref	**36in x 72in (0.9m x 1.83m) with No Mesh) (Use p/n 1001146180) (SN B300000100 through B300000667)**	B-D
	1001146180	Ref	**36in x 72in (0.9m x 1.83m) with No Mesh) (SN B300000668 through B300000969)**	B
	1001114391	Ref	**36in x 96in (0.9m x 2.44m) with No Mesh) (Use p/n 1001146179) (SN B300000100 through B300000667)**	B-D
	1001146179	Ref	**36in x 96in (0.9m x 2.44m) with No Mesh) (SN B300000668 through B300000969)**	B
		Ref	**Note: Original Equipment platform may have been replaced with Service Replacement platform. Identify platform before ordering parts.**	
		Ref	**Note: For Platforms with Mesh to the Top Rail, customer must order Platforms and Mesh separately. See SPECIAL OPTIONS SECTION for Mesh Installations.**	
		Ref	**Note: Replacement Decals Must Be Ordered Separately - See DECALS SECTION.**	
		Ref	**Note: When replacing 8ft/2.44m platform with Soft Touch option, new Soft Touch Rail p/n 4846673 must be purchased to accommodate limit switch locations.**	
		Ref	**Note: When replacing platform on machines with SkyCutter option, new bracket p/n 1001145405 must be purchased to accommodate SkyCutter components.**	
2	2080040	16	Fastener, Huck	
3	2600281	2	Hinge, Self-Closing	
4	2940074	1	Latch	
6	See Note	NSS	Platform Weldment (Note: Purchase Complete Platform Assembly)	
7		Ref	Cap-Plug Options:	
7	3520072	1	USA Built Machines	
7		Ref	China Built Machines	
7	3520072	1	Cap-Plug **(SN B300000100 through B300000667)**	
7	1001152037	1	Cap-Plug **(SN B300000668 through B300000969)**	
8	3820020	4	Rivet	
10		Ref	Gate Weldment Options:	
10		Ref	USA Built Machines	

SECTION 4 - PLATFORM

ITEM	PART NUMBER	QTY	DESCRIPTION	REV
10	4846452	1	Gate for Platform p/ns 3510822, 3510830, 3510831, 3510833	
10	1001144629	1	Gate for Platform p/ns 1001144023, 1001144024, 1001144026, 1001144027	
10		Ref	China Built Machines	
10	1001114341	1	Gate for Platform p/ns 1001114335, 1001114391	
10	1001144629	1	Gate for Platform p/ns 1001146180, 1001146179	
11		Ref	Cap-Plug Options:	
11	3520198	1	USA Built Machines	
11		Ref	China Built Machines	
11	3520198	1	Cap-Plug **(SN B300000100 through B300000667)**	
11	1001145781	1	Cap-Plug **(SN B300000668 through B300000969)**	
		Ref	**PLATFORM ASSEMBLY WITH DROP-BAR**	
		Ref	**USA Built Machines:**	
	1001138431	Ref	**Platform 30in x 4ft (76cm x 1.22m) with No Mesh) (Use p/n 1001144018) (SN 0300087000 through 0300168214)**	B-B
	1001144018	Ref	**Platform 30in x 4ft (76cm x 1.22m) with No Mesh) (SN 0300168215 through 0300171769)**	B
	1001138432	Ref	**Platform 30in x 5ft (76cm x 1.52m) with No Mesh) (Use p/n 1001144019) (SN 0300087000 through 0300168214)**	B-B
	1001144019	Ref	**Platform 30in x 5ft (76cm x 1.52m) with No Mesh) (SN 0300168215 through 0300171769)**	B
	1001138434	Ref	**Platform 36in x 6ft (91.5cm x 1.83m) with No Mesh) (Use p/n 1001144021) (SN 0300087000 through 0300168214)**	B-B
	1001144021	Ref	**Platform 36in x 6ft (91.5cm x 1.83m) with No Mesh) (SN 0300168215 through 0300171769)**	B
	1001128598	Ref	**Platform 36in x 6ft (91.5cm x 1.83m) with Mesh to Mid Rail and Dropbar (Not Shown)**	B
	1001128479	Ref	**Platform 36in x 6ft (91.5cm x 1.83m) with Mesh to Mid Rail Dropbar and Platform Bumpers (Not Shown)**	B
	1001138430	Ref	**Platform 36in x 8ft (91.5cm x 2.44m) with No Mesh) (Use p/n 1001144022) (SN 0300087000 through 0300168214)**	B-B
	1001144022	Ref	**Platform 36in x 8ft (91.5cm x 2.44m) with No Mesh) (SN 0300168215 through 0300171769)**	B
		Ref	**China Built Machines:**	
	1001139373	Ref	**Platform 36in x 6ft (91.5cm x 1.83m) with No Mesh) (Use p/n 1001146182) (SN B300000100 through B300000667)**	B-B
	1001146182	Ref	**Platform 36in x 6ft (91.5cm x 1.83m) with No Mesh) (SN B300000668 through B300000969)**	B
	1001139374	Ref	**Platform 36in x 8ft (91.5cm x 2.44m) with No Mesh) (Use p/n 1001146181) (SN B300000100 through B300000667)**	B-B
	1001146181	Ref	**Platform 36in x 8ft (91.5cm x 2.44m) with No Mesh) (SN B300000668 through B300000969)**	A
		Ref	**Note: Original Equipment platform may have been replaced with Service Replacement platform. Identify platform before ordering parts.**	
		Ref	**Note: Replacement Decals Must Be Ordered Separately - See DECALS SECTION.**	
		Ref	**Note: When replacing 8ft/2.44m platform with Soft Touch option, new Soft Touch Rail p/n 4846673 must be purchased to accommodate limit switch locations.**	
		Ref	**Note: When replacing platform on machines with SkyCutter option, new bracket p/n 1001145405 must be purchased to accommodate SkyCutter components.**	
51	0100011	AR	Compound, Locking	
52	0641418	2	Bolt 1/4in-20NC x 2-1/4in	

ITEM	PART NUMBER	QTY	DESCRIPTION	REV
53	0961845	2	Bushing	
54	3290606	2	Nut M6	
55	3300151	2	Nut, Acorn	
56	See Note	NSS	Platform Weldment (Note: Purchase Platform Assembly)	
57		Ref	Cap-Plug Options:	
57	3520198	2	USA Built Machines	
57		Ref	China Built Machines	
57	3520198	2	Cap-Plug **(SN B300000100 through B300000667)**	
57	1001145781	2	Cap-Plug **(SN B300000668 through B300000969)**	
58	4010618	2	Screw M6 x 50mm	
59	4711400	4	Flatwasher 1/4in Thin	
60	4811700	2	Flatwasher M6	
61		Ref	Bar, Drop Options:	
61	1001138494	1	Drop Bar (Machines without Shipyard Package)	
61	1001111346	1	Drop Bar (Machines with Shipyard Package) (Not Shown)	
62	1001138514	1	Rail (Top)	
63	1001140429	1	Decal - Drop-Bar	
		Ref	**CONSOLE BOX INSTALLATIONS**	
		Ref	**All Specs except CE UK Spec and CE German Spec**	
	0271940	Ref	**USA Built Machines (SN 0300087000 through 0300138728)**	B
	1001108791	Ref	**USA Built Machines without UGM (SN 0300138729 through 0300171769)**	A
	1001114447	Ref	**USA Built Machines with UGM (Use p/n 1001145896) (SN 0300138729 through 0300171769)**	A-D
	1001114447	Ref	**China Built Machines (Use p/n 1001145896) (SN B300000100 through B300000969)**	C
		Ref	**CE UK Spec and CE German Spec Only**	
	0273058	Ref	**USA Built Machines (SN 0300087000 through 0300138728)**	B
	1001108792	Ref	**USA Built Machines without UGM (SN 0300138729 through 0300171769)**	A
	1001114447	Ref	**USA Built Machines with UGM (Use p/n 1001145896) (SN 0300138729 through 0300171769)**	A-D
101	0641406	4	Bolt 1/4in-20NC x 3/4in	
102	0641408	3	Bolt 1/4in-20NC x 1in	
103	0641610	4	Bolt 3/8in-16NC x 1-1/4in	
104		Ref	Platform Console Box Assembly Options:	
104		Ref	Platform Console Box Assembly (See PLATFORM CONSOLE ASSEMBLY for Breakdown) **(SN 0300087000 through 0300138728)**	
104	0861511	1	Without UGM	
104		Ref	Platform Console Box Assembly (USA Built Machines) (See PLATFORM CONSOLE ASSEMBLY for Breakdown) **(SN 0300138729 through 0300171769)**	
104		Ref	Platform Console Box Assembly (China Built Machines) (See PLATFORM CONSOLE ASSEMBLY for Breakdown) **(SN B300000100 through B300000969)**	
104	1001108790	1	Without UGM	
104	1001114449	NLA	With UGM (USA Built Machines) (Use p/n 1001145895)	
104	1001114449	NLA	With UGM (China Built Machines) (Use p/n 1001145895)	
104A		Ref	Footswitch Assembly Options (Includes Footswitch and Items 104B & 104C):	
104A	0272970	1	USA Built Machines **(SN 0300087000 through 0300167682)**	B
104A	0272970	1	China Built Machines **(SN B300000100 through**	B

ITEM	PART NUMBER	QTY	DESCRIPTION	REV
			B300000969)	
104A	1001117174	1	USA Built Machines **(SN 0300167683 through 0300171769)**	B
		Ref	**Note: Assembly p/n 0272970 may use either p/n 4360031 or p/n 1001117320. If Original Equipment on machines was replaced as an "assembly," p/n 1001117320 may have been used as part of the Service Replacement. Identify component before ordering parts. (SN 0300087000 through 0300143938)**	
104A		Ref	Footswitch Options:	
104A	4360031	1	Footswitch (USA Built Machines) (Original Equipment) **(SN 0300087000 through 0300143937)**	
104A	4360031	1	Footswitch (China Built Machines) **(Prior to SN B300000232)**	
104A	7000625	2	Block for 4360031 Footswitch	
104A	1001117320	1	Footswitch (USA Built Machines) (Service Replacement) **(SN 0300143938 through 0300167682)**	
104A	1001117320	1	Footswitch (China Built Machines) (Service Replacement) **(SN B300000232 through B300000969)**	
104A	70003483	1	Block for 1001117320 Footswitch	
104A	1001117172	1	Footswitch (USA Built Machines) **(SN 0300167683 through 0300171769)**	
104A	70002902	1	Block, Contact for 1001117172 Footswitch	
104A	70002903	1	Gasket for 1001117172 Footswitch	
104A	70002905	1	Cover for 1001117172 Footswitch	
104A	70002904	1	Bolt Replacement Kit for 1001117172 Footswitch	
104B	1060918	7 ft/2.14m	Cable, Electrical - 18/3	
104C	4460071	1	Connector, Strain Relief	
105	1702676	1	Decal - Horn	
106	3311405	7	Locknut 1/4in-20NC	
107	3311605	4	Locknut 3/8in-16NC	
108		Ref	Panel, Decal Mount Options:	
108	3380434	1	All Specs except CE UK Spec and CE German Spec (Without UGM)	
108	3380476	1	CE UK Spec and CE German Spec Only (Without UGM)	
108	3380434	1	All Specs (With UGM)	
109	4360331	1	Switch, Toggle	
110	4740362	7	Flatwasher 1/4in Fender	
111	4751400	4	Flatwasher 1/4in Regular	
112	4751600	8	Flatwasher 3/8in Regular	
113	3790012	1	O-Ring	
		Ref	**WORKLIGHTS INSTALLATIONS (OPTIONAL)**	
	0273486	Ref	**Worklights Installations 600S**	D
	0273490	Ref	**Worklights Installations 600SJ**	D
	0273491	Ref	**Worklights Installations 660SJ**	D
201	3536089	2	Plate, Mounting	
202		Ref	Hardware Options:	
202	0641414	4	Bolt 1/4in-20NC x 1-3/4in **(SN 0300087000 through 0300112345)**	
202	2080040	4	Huck Fastener **(SN 0300112346 through 0300171769)**	
203	3311405	4	Locknut 1/4in-20NC **(SN 0300087000 through 0300112346)**	
204	4711400	8	Flatwasher 1/4in Thin **(SN 0300087000 through 0300112346)**	
205	2920140	2	Worklight	
205	7016399	2	Bulb, Replacement (1 Per Worklight)	

ITEM	PART NUMBER	QTY	DESCRIPTION	REV
206	4240099	10	Tie-Strap (Not Shown)	
207	2820035	9 ft/2.7m	Loom, Vinyl (Not Shown)	
209	4460426	1	Connector, Strain Relief (Not Shown - Located at Console Box)	
		Ref	**TRAY INSTALLATIONS (OPTIONAL)**	
301	1580012	1	Tray, Storage (Center)	
302	1580013	1	Tray, Storage (Rail Mounted - Not Shown)	
		Ref	**FLOODLIGHT INSTALLATION (OPTIONAL)**	
	0274209	Ref	**Floodlight Installation 600S & 600SJ**	A
	1001093274	Ref	**Floodlight Installation 660SJ**	A
401	0641518	2	Bolt 5/16in-18NC x 2-1/4in	
402	2560173	2	Handle	
403	2920157	2	Lamp, Work Light	
404	3250585	1	Nameplate - Light On	
405	4060802	1	Guard, Switch	
406	4360336	1	Switch, Toggle	
407	4420037	1	Tape, Insulation (Not Shown)	
408	4751800	2	Flatwasher 1/2in Regular	
409	4846561	1	Mount, Light	
410		Ref	Harness 12/3 Options (Not Shown):	
410	4922888	1	Harness 12/3, 600S & 600SJ	
410	4922964	1	Harness 12/3, 660SJ	
		Ref	**2500W GENERATOR INSTALLATION (OPTIONAL)**	
501	4360336	1	Switch, Toggle	
501	4740397	1	Bushing	
501	4060802	1	Guard, Switch	
501	3251102	1	Decal - Generator On/Off	

FIGURE 4-2. PLATFORM COMPONENTS INSTALLATION (FALL ARREST PLATFORM)

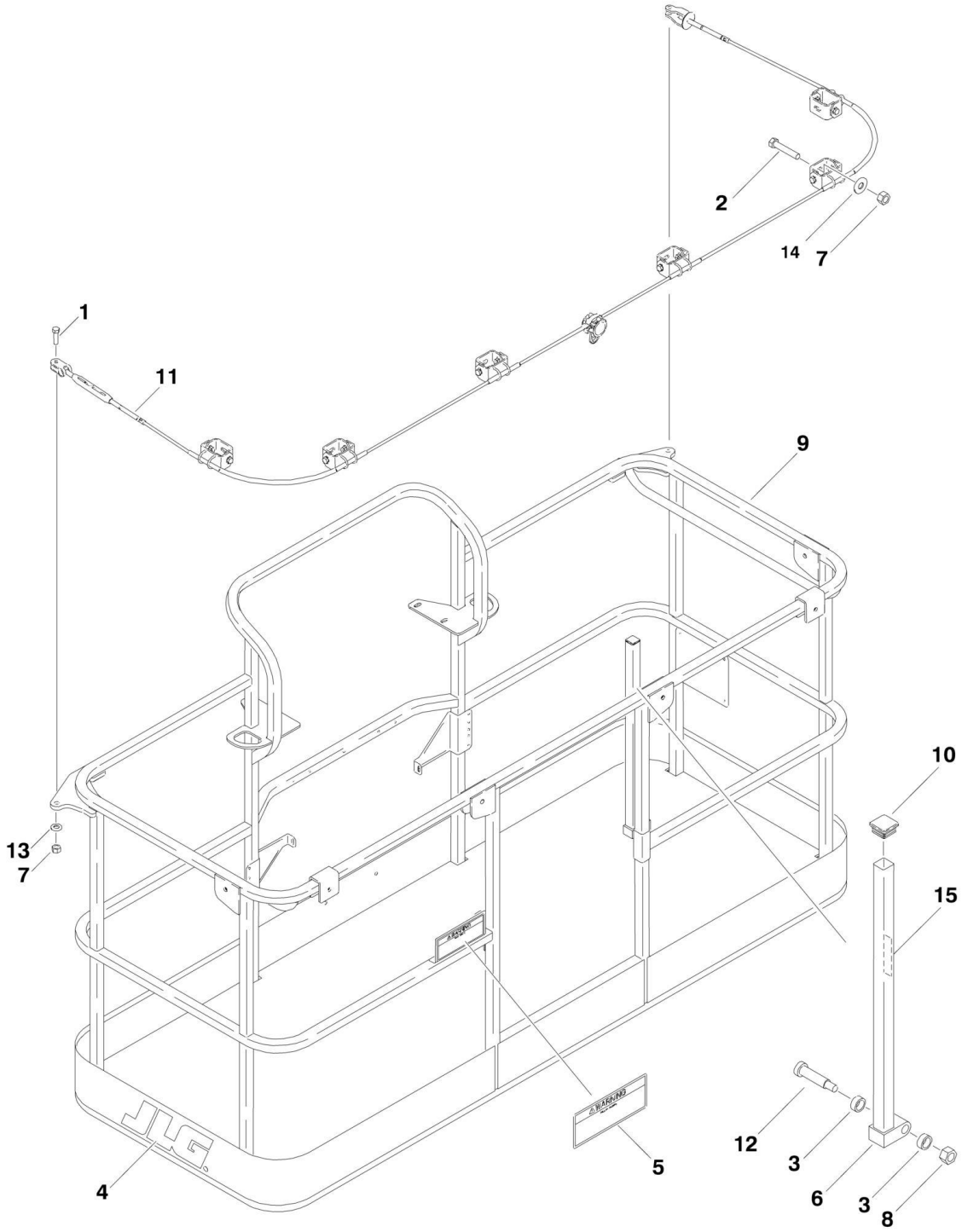

FIGURE 4-2. PLATFORM COMPONENTS INSTALLATION (FALL ARREST PLATFORM)

ITEM	PART NUMBER	QTY	DESCRIPTION	REV
		Ref	**Note: Only Available on USA Built Machines Only**	
		Ref	**PLATFORM ASSEMBLY (FALL ARREST)**	
	3510884	Ref	**ANSI Spec (3ft x 6ft)**	D
	3510868	Ref	**ANSI Spec (3ft x 8ft)**	E
	3510877	Ref	**Australian Specs**	D
		Ref	**Note: Fall Arrest Not Available on CE Spec Platform Assembly.**	
1	0681814	2	Bolt 1/2in-13NC x 1-3/4in (Grade 8)	
2	0681822	6	Bolt 1/2in-13NC x 2-3/4in (Grade 8)	
3	0962270	2	Bearing, Oilite	
4	1702773	1	Decal - JLG	
5		Ref	Decal - Safety Options:	
5	1705014	1	ANSI Spec	
5	1706501	1	Australian and CE Specs	
6	2410014	1	Gate Weldment	
7	3271805	8	Locknut 1/2in-13NC (Grade 8)	
8	3311605	1	Locknut 3/8in-16NC	
9	See Note	NSS	Platform Weldment (Note: Purchase Platform Assembly)	
10	3520072	1	Cap-Plug	
11		Ref	Cable, Fall Arrest Options:	
11	1060919	1	ANSI Spec (3ft x 6ft)	
11	3890040	1	ANSI Spec (3ft x 8ft)	
11	3890040	1	Australian and CE Specs	
12	3900054	1	Bolt 1/2in-13NC x 1-3/4in	
13	4711800	2	Flatwasher 1/2in Thin	
14	4751800	6	Flatwasher 1/2in Regular	
15		Ref	Decal - Drop Bar Options:	
15	1706385	1	ANSI Spec	
15	1706493	1	Australian and CE Specs	

FIGURE 4-3. PLATFORM CONSOLE ASSEMBLY (USA BUILT MACHINES) (SN 0300087000 through 0300138728)

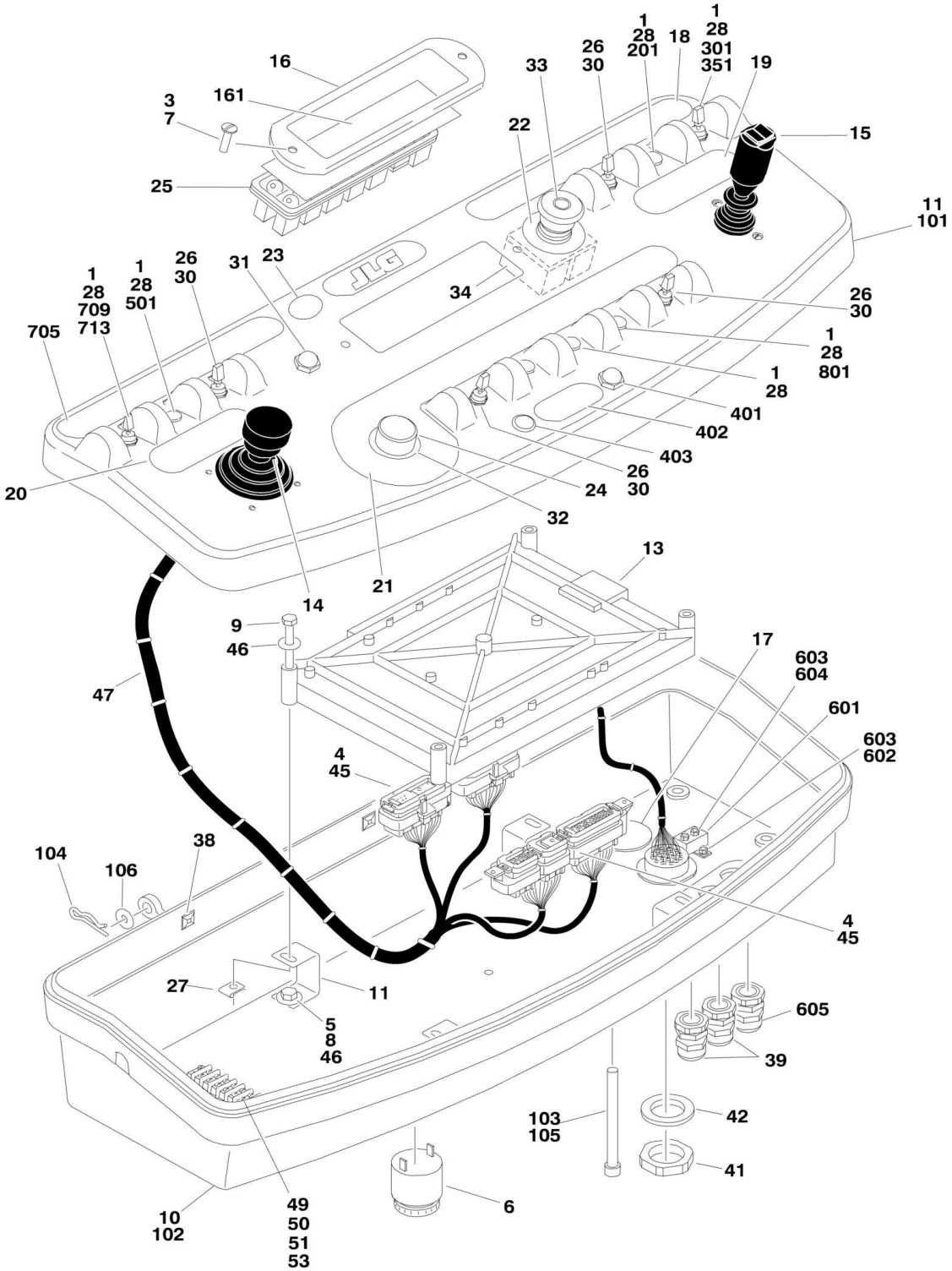

FIGURE 4-3. PLATFORM CONSOLE ASSEMBLY (USA BUILT MACHINES) (SN 0300087000 through 0300138728)

ITEM	PART NUMBER	QTY	DESCRIPTION	REV
	0861511	Ref	**CONSOLE BOX AND FOOTSWITCH ASSEMBLIES**	J
1	0100009	AR	Sealant	
3	0100035	AR	Compound, Locking	
4	0100048	AR	Grease, Dielectric	
5	0100081	AR	Loctite #454	
6	0140011	1	Alarm	
7	0630464	2	Screw, Button Head #10-24NC x 1/2in	
8	0641404	4	Bolt 1/4in-20NC x 1/2in	
9	0641414	4	Bolt 1/4in-20NC x 1-3/4in	
10	0861537	1	Box, Console (See Items 201-206 for Breakdown)	
11	0902751	4	Bracket, Module Support	
13	1600375	1	Controller, Module (Re-calibration Required when Replaced)	
14	1600317	NLA	Controller Assembly (Lift and Swing) (See CONTROLLER ASSEMBLY (LIFT AND SWING) for Breakdown) (Use p/n 1001129555)	
15	1600318	NLA	Controller Assembly (Drive and Steer) (See CONTROLLER ASSEMBLY (DRIVE AND STEER) for Breakdown) (Use p/n 1001212415)	
16	1670829	1	Bezel	
17	1671037	NLA	Cover (Use p/n 1001110434)	
18		Ref	Decal (Stop) Options:	
18	1704997	1	Decal **(SN 0300087000 through 0300136518)**	
18	1001107527	1	Decal **(SN 0300136519 through 0300138729)**	
19	1702565	1	Decal (Drive and Steer)	
20	1702566	1	Decal (Lift and Swing)	
21	1702567	1	Decal (Function Speed)	
22	1704260	1	Decal - EMS	
23	1705132	1	Decal - ADE	
24	2560136	1	Handle, Knob	
25	2760105	1	Housing, Display Light	
26	3790012	4	O-Ring	
27	3300353	4	Nut, Tinnerman	
28	3520054	6	Plug, Hole 1/2in	
30	4360328	4	Switch, Toggle	
31	4360387	1	Switch, Pushbutton	
32	4360407	1	Controller, Speed	
32	See Note	NSS	Gasket "Top Hat" (Included with Switch) (Note: Not Available - Purchase Complete Controller)	
32	70003784	1	Seal	
33	4360475	1	Switch, Emergency Stop	
33	7020175	1	Cap, Red	
33	7020176	1	Contact Block	
34	4360476	1	Block, Contact	
38	4460234	AR	Terminal, Wire Tie Mounting	
39	4460428	2	Connector, Strain Relief	
41	4460470	1	Nut, Terminal	
42	4460471	1	Lockwasher, Terminal	
44	4460708	2	Connector, Female - 15 Position (Not Shown - See ELECTRICAL SECTION for Location)	
45	4460905	5	Connector, Amp Seal Plug	

ITEM	PART NUMBER	QTY	DESCRIPTION	REV
46	4751400	8	Flatwasher 1/4in Regular	
47		Ref	Harness, Platform Box (See ELECTRICAL SECTION for Breakdown)	
47	4922639	1	Harness, Platform Box **(SN 0300087000 through 0300136518)**	
47	1001107753	1	Harness, Platform Box **(SN 0300136519 through 0300138729)**	
48	4922666	1	Harness, Analyzer Cable (Not Shown - See ELECTRICAL SECTION for Breakdown)	
49	0721006	2	Screw #10-24NC x 3/4in	
50	3311005	2	Locknut #10-24NC	
51	4460007	1	Bar, Buss	
53	4751000	2	Flatwasher #10 Regular	
	0861537	Ref	**CONSOLE BOX ASSEMBLY**	E
101	See Note	NSS	Console Top (Note: Not Available - Purchase Complete Console Box Assembly)	
102	See Note	NSS	Console Bottom (Note: Not Available - Purchase Complete Console Box Assembly)	
103	3311601	1	Nut 3/8in-16NC	
104		Ref	Hardware Options:	
104	3420156	2	Pin, Cotter **(SN 0300087000 through 0300088139)**	
104	3470003	2	Pin, Hair **(SN 0300088140 through 0300138729)**	
105	0630568	1	Screw 3/8in-16NC x 4-1/2in	
106	4711500	2	Flatwasher 5/16in Thin	
		Ref	**LIGHT PANEL DECAL INSTALLATION**	
	0256631	Ref	**ANSI and CSA Specs**	2
	0256633	Ref	**ANSI Export, Australian, Brazilian, Japanese and Latin America Specs**	2
	0256632	Ref	**CE, ANSI Export, Australian and Japanese Specs**	2
161		Ref	Decal - Display Options:	
161	1702387	1	ANSI and CSA Specs	
161	1703085	1	ANSI Export, Australian, Brazilian, Japanese and Latin America Specs	
161	1703084	1	CE, ANSI Export, Australian and Japanese Specs	
	0270764	Ref	**DUAL FUEL SWITCH INSTALLATION (FORD ENGINES ONLY)**	4
201	4360336	1	Switch, Toggle	
201	3790012	1	O-Ring	
	0271552	Ref	**HEAD AND TAIL LIGHTS INSTALLATIONS (OPTIONAL)**	C
301		Ref	Switch Options (Not Shown - Located on Console):	
301	4360336	1	Switch, Toggle **(SN 0300087000 through 0300136518)**	
301	4360522	1	Switch, Push Button **(SN 0300136519 through 0300138729)**	
301	3790012	1	O-Ring (Not Shown - Located on Console Only) **(SN 0300087000 through 0300136519)**	
	0274210	Ref	**CHASSIS ILLUMINATION LIGHT INSTALLATION**	B
351		Ref	Switch Options (Not Shown - Located on Console):	
351	4360336	1	Switch, Toggle **(SN 0300087000 through 0300136518)**	
351	4360522	1	Switch, Push Button **(SN 0300136519 through 0300138729)**	
351	3790012	1	O-Ring (Not Shown - Located on Console Only) **(SN 0300087000 through 0300136519)**	
		Ref	**SOFT TOUCH SYSTEM INSTALLATION (OPTIONAL)**	
	0273824	Ref	**6ft Platforms**	A
	0274927	Ref	**6ft Platforms with Fall Arrest (SN 0300087000 through 0300136518)**	A
	1001108256	Ref	**6ft Platforms with Fall Arrest (SN 0300136519 through 0300138729)**	A
	0272427	Ref	**8ft Platform**	C

ITEM	PART NUMBER	QTY	DESCRIPTION	REV
	0273706	Ref	**8ft Platforms with Fall Arrest**	A
401	4360387	1	Switch, Pushbutton	
402	1702938	1	Decal - Soft Touch Override	
403	2920028	1	Light, Indicator	
403	2920029	1	Bulb, Light	
	0258945	Ref	**4WS COMPONENTS INSTALLATION**	A
501	4360331	1	Switch, Toggle	
501	3790012	1	O-Ring	
		Ref	**PLATFORM WORKLIGHT INSTALLATION (OPTIONAL)**	
	0273486	Ref	**Platform Worklight Installation 600S**	C
	0273490	Ref	**Platform Worklight Installation 600SJ**	C
	0273491	Ref	**Platform Worklight Installation 660SJ**	C
601	4360232	1	Breaker, Circuit - 15Amp	
602	0721003	2	Bolt #10-24NC x 3/8in	
603	4761000	4	Lockwasher #10	
604	3311001	2	Nut #10-24NC	
605	4460426	1	Connector, Strain Relief	
	0271940	Ref	**CONSOLE BOX INSTALLATIONS**	B
705	1702676	1	Decal - Horn	
709	4360331	1	Switch, Toggle	
713	3790012	1	O-Ring	
		Ref	**JIB SWITCH INSTALLATION (600SJ & 660SJ ONLY)**	
801	4360328	1	Switch, Toggle	
801	3790012	1	O-Ring	

FIGURE 4-4. PLATFORM CONSOLE ASSEMBLY (USA BUILT MACHINES AND CHINA BUILT MACHINES) (SN 0300138729 through 0300171769, SN B300000100 through B300000969)

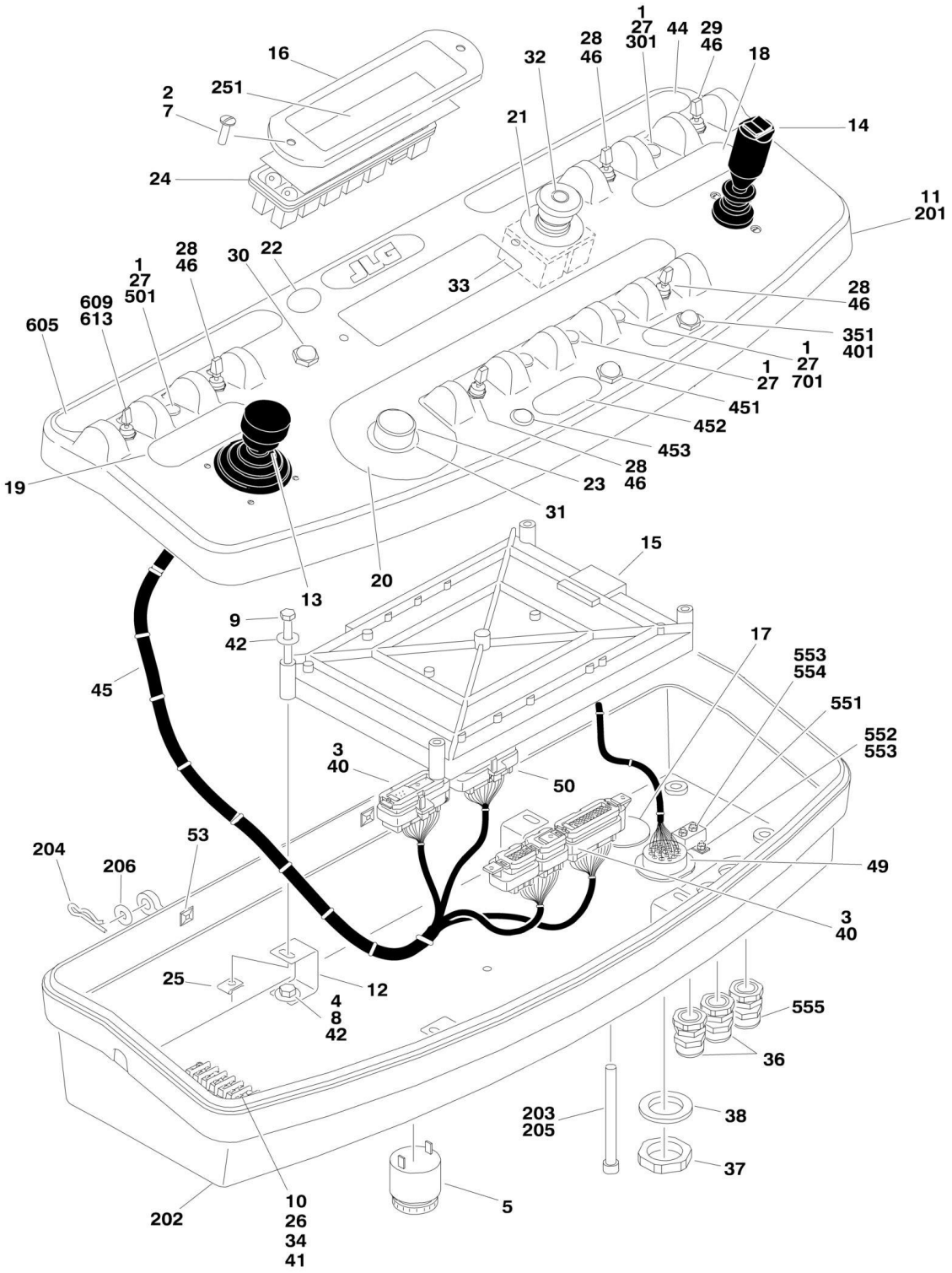

FIGURE 4-4. PLATFORM CONSOLE ASSEMBLY (USA BUILT MACHINES AND CHINA BUILT MACHINES) (SN 0300138729 through 0300171769, SN B300000100 through B300000969)

ITEM	PART NUMBER	QTY	DESCRIPTION	REV
		Ref	**Note: Machines "Without UGM" are ALL USA Built Machines.**	
		Ref	**Note: Platform Console Module is different based on the Ground Control Module (i.e. with UGM or without UGM). For Ground Module identification, see Revision Log Page A.**	
		Ref	**CONSOLE BOX AND FOOTSWITCH ASSEMBLIES**	
	1001108790	Ref	**Without UGM**	C
	1001114449	Ref	**With UGM (USA Built Machines) (use p/n 1001145895)**	B-F
	1001114449	Ref	**With UGM (China Built Machines) (Use p/n 1001145895)**	B-F
1	0100009	AR	Sealant	
2	0100035	AR	Compound, Locking	
3	0100048	AR	Grease, Dielectric	
4	0100081	AR	Loctite #454	
5	0140011	1	Alarm	
7	0630464	2	Screw, Button Head #10-24NC x 1/2in	
8	0641404	4	Bolt 1/4in-20NC x 1/2in	
9	0641414	4	Bolt 1/4in-20NC x 1 3/4in	
10	0721006	2	Screw #10-24NC x 3/4in	
11	0861537	1	Box, Console (See Items 201-206 for Breakdown)	
12	0902751	4	Bracket, Module Support	
13		Ref	Controller Assembly (Lift and Swing) Options (See CONTROLLER ASSEMBLY (LIFT AND SWING) for Breakdown)	
13	1600317	NLA	Controller USA Built Machine (Use p/n 1001129555) **(SN 0300087000 through 0300146163)**	
13	1001118417	NLA	Controller USA Built Machines (Use p/n 100112955) **(SN 0300146164 through 0300171769)**	
13	1600317	NLA	Controller China Built Machines (Use p/n 1001129555) **(SN B300000100 through B300000270)**	
13	1001118417	NLA	Controller China Built Machines (Use p/n 1001129555) **(SN B300000271 through B300000969)**	
14		Ref	Controller Assembly (Drive and Steer) Options (See CONTROLLER ASSEMBLY (DRIVE AND STEER) for Breakdown):	
14	1600318	NLA	Controller USA Built Machines (Use p/n 1001212415) **(SN 0300087000 through 0300146163)**	
14	1001118416	NLA	Controller USA Built Machines (Use p/n 1001212415) **(SN 0300146164 through 0300171769)**	
14	1600318	NLA	Controller China Built Machines (Use p/n 1001212415) **(SN B300000100 through B300000270)**	
14	1001118416	NLA	Controller China Built Machines (Use p/n 1001212415) **(SN B300000271 through B300000969)**	
15		Ref	Controller, Module Options:	
		Ref	Note: Re-calibration Required when Replaced.	
15	1600375	1	Without UGM	
15	1001106355	1	With UGM	
16	1670829	1	Bezel	
17	1671037	NLA	Cover (Use p/n 1001110434)	
18	1702565	1	Decal (Drive and Steer)	
19	1702566	1	Decal (Lift and Swing)	
20	1702567	1	Decal (Function Speed)	
21	1704260	1	Decal (EMS)	
22	1705132	1	Decal (ADE)	

ITEM	PART NUMBER	QTY	DESCRIPTION	REV
23	2560136	1	Handle, Knob	
24	2760105	1	Housing, Display Light	
24	2920129	12	Bulb, Light	
25	3300353	4	Nut, Tinnerman	
26	3311005	2	Locknut #10-24NC	
27	3520054	5	Plug, Hole 1/2in	
28	4360328	4	Switch, Toggle	
29	4360330	1	Switch, Toggle	
30	4360387	1	Switch, Pushbutton	
31	4360407	1	Controller, Speed	
31	See Note	NSS	Gasket "Top Hat" (Included with Switch) (Note: Not Available - Purchase Complete Controller)	
31	70003784	1	Seal	
32	4360475	1	Switch, Emergency Stop	
32	7020175	1	Cap, Red	
32	7020176	1	Contact Block	
33	4360476	1	Block, Contact	
34	4460007	1	Bar, Buss	
35	4460234	3	Mount, Wire Tie (Not Shown - Used on bottom of Console Lid)	
36	4460428	2	Connector, Strain Relief	
37	4460470	1	Nut, Strain Relief	
38	4460471	1	Lockwasher, Strain Relief	
39	4460708	2	Connector, Female - 15 Position (Not Shown - Used on Console Box End of Footswitch Cable and Analyzer Harness)	
40	4460905	AR	Connector, Amp Seal Plug	
41	4751000	2	Flatwasher #10 Regular	
42	4751400	8	Flatwasher 1/4in Regular	
43	4922666	1	Harness, Analyzer Cable (Not Shown - See ELECTRICAL SECTION for Breakdown)	
44	1001107677	NLA	Decal (Stop) (Use p/n 1001131168)	
45	1001107753	1	Harness, Platform Box (See ELECTRICAL SECTION for Breakdown)	
46	3790012	5	O-Ring	
		Ref	Decal Kit - Console Box Options:	
	1001119562	1	ANSI Spec (Includes Items 18-22, 44 & 251)	
	See Note	NSS	All Other Specs (Note: Not Available for Purchase)	
	0861537	Ref	**CONSOLE BOX ASSEMBLY**	G
201	See Note	NSS	Console Top (Note: Not Available - Purchase Complete Console Box Assembly)	
202	See Note	NSS	Console Bottom (Note: Not Available - Purchase Complete Console Box Assembly)	
203	3311601	1	Nut 3/8in-16NC	
204	3470003	2	Pin, Hair	
205	0630568	1	Screw 3/8in-16NC x 4-1/2in	
206	4711500	2	Flatwasher 5/16in Thin	
		Ref	**LIGHT PANEL DECAL INSTALLATION**	
	1001108763	Ref	**ANSI, ANSI Export, CSA, Brazilian, Japanese and Latin America Specs**	B
	1001108764	Ref	**CE, ANSI Export, Australian and Japanese Specs**	A
251		Ref	Decal - Display Options:	
251	1001107927	1	ANSI, ANSI Export, CSA, Brazilian, Japanese and Latin America Specs (USA Built Machines) **(SN 0300138729 through 0300142585)**	

ITEM	PART NUMBER	QTY	DESCRIPTION	REV
251	1001121657	1	ANSI, ANSI Export, CSA, Brazilian, Japanese and Latin America Specs (USA Built Machines) **(SN 0300142586 through 0300171769)**	
251	1001121657	1	ANSI, ANSI Export, CSA, Brazilian, Japanese and Latin America Specs (China Built Machines) **(SN B300000100 through B300000969)**	
251	1001107926	1	CE, ANSI Export, Australian and Japanese Specs	
		Ref	**DUAL FUEL SWITCH INSTALLATION**	
301	4360336	1	Switch, Toggle	
301	3790012	1	O-Ring	
	0271552	Ref	**HEAD AND TAIL LIGHTS INSTALLATIONS (OPTIONAL)**	C
351	4360522	1	Switch, Toggle (Not Shown - Located on Console)	
	0274210	Ref	**CHASSIS ILLUMINATION LIGHT INSTALLATION**	B
401	4360522	1	Switch, Toggle (Not Shown - Located on Console)	
		Ref	**SOFT TOUCH SYSTEM INSTALLATION (OPTIONAL)**	
	0273824	Ref	**6ft Platforms**	B
	1001108256	Ref	**6ft Platforms with Fall Arrest**	A
	0272427	Ref	**8ft Platforms**	E
	0273706	Ref	**8ft Platforms with Fall Arrest**	B
451	4360387	1	Switch, Pushbutton	
452	1702938	1	Decal - Soft Touch Override	
453	2920028	1	Light, Indicator	
453	2920029	1	Bulb, Light	
		Ref	**4WS COMPONENTS INSTALLATION**	
	0273357	Ref	**USA Built Machines**	1
	0258945	Ref	**China Built Machines**	A
501	4360331	1	Switch, Toggle	
501	3790012	1	O-Ring	
		Ref	**PLATFORM WORKLIGHT INSTALLATION (OPTIONAL)**	
	0273486	Ref	**Platform Worklight Installation 600S**	C
	0273490	Ref	**Platform Worklight Installation 600SJ**	C
	0273491	Ref	**Platform Worklight Installation 660SJ**	C
551	4360232	1	Breaker, Circuit - 15Amp	
552	0721003	2	Bolt #10-24NC x 3/8in	
553	4761000	4	Lockwasher #10	
554	3311001	2	Nut #10-24NC	
555	4460426	1	Connector, Strain Relief	
		Ref	**CONSOLE BOX INSTALLATIONS**	
	1001108791	Ref	**All Specs except CE UK Spec and CE German Spec (Without UGM)**	A
	1001108792	Ref	**CE UK Spec and CE German Spec Only (Without UGM)**	A
	1001114447	Ref	**All Specs (With UGM) (USA Built Machines) (Use p/n 1001145896)**	A-D
	1001114447	Ref	**All Specs (With UGM) (China Built Machines)**	D
605	1702676	1	Decal - Horn	
609	4360331	1	Switch, Toggle	
613	3790012	1	O-Ring	
		Ref	**JIB SWITCH INSTALLATION (600SJ & 660SJ ONLY)**	
701	4360328	1	Switch, Toggle	
701	3790012	1	O-Ring	

FIGURE 4-5. CONTROLLER ASSEMBLY (LIFT AND SWING)

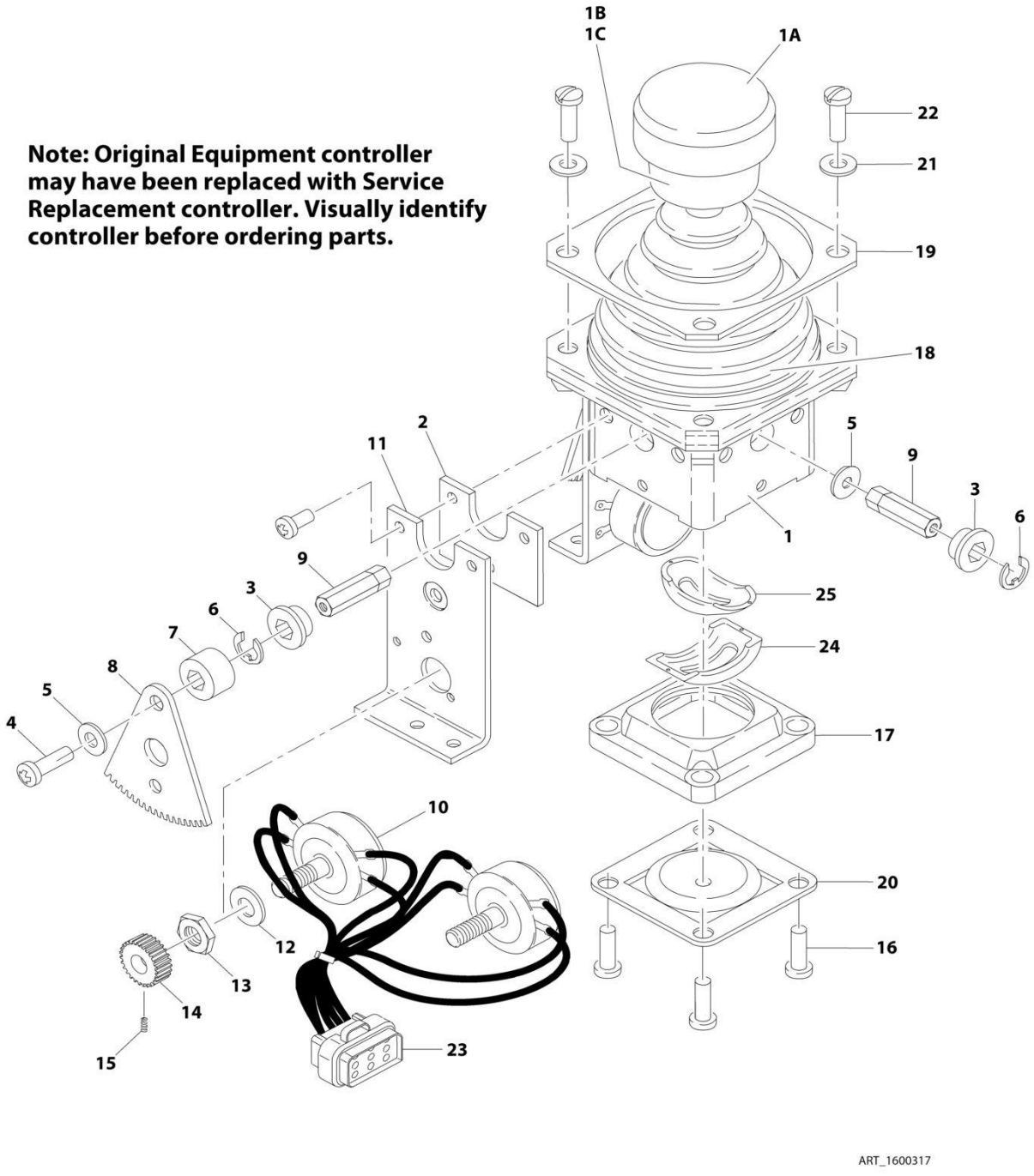

FIGURE 4-5. CONTROLLER ASSEMBLY (LIFT AND SWING)

ITEM	PART NUMBER	QTY	DESCRIPTION	REV
		Ref	**Note: Original Equipment controller may have been replaced with Service Replacement controller. Visually identify controller before ordering parts.**	
		Ref	**CONTROLLER ASSEMBLIES**	
	1600317	Ref	**Controller Assembly (USA Built Machines) (SN 0300087000 through 0300146162)**	C
	1600317	Ref	**Controller Assembly (China Built Machines) (SN B300000100 through B300000270)**	C
		Ref	**Note: Use p/n 1001129555 Kit as Replacement.**	
1	7019141	1	Mechanical Assembly (Includes Base, Handle Stem and Items 1A, 1B, 1C & 18)	
1A	7019197	1	Handle Cap and Rod	
1B	7003928	1	Spring	
1C	7022808	1	Cap, Lift	
2	7019171	2	Plate	
3	7019111	4	Bearing, Gear	
4	7019143	2	Screw	
5	7019144	2	Spacer, Cam	
6	7019145	4	E-Clip	
7	7019174	2	Spacer	
8	7003977	2	Gear, Drive	
9		Ref	Shaft Options:	
9	7019147	2	Shaft, Short	
9	7019177	2	Shaft, Long	
10	7022818	2	Potentiometer	
11	7019142	2	Plate	
12	7003992	2	Washer	
13	7003993	2	Nut	
14	7003976	2	Gear, Slave	
15	7019149	2	Setscrew	
16	7022816	4	Screw	
17	7019150	1	Gate	
18	7022814	1	Boot	
19	7022815	1	Bezel	
20	See Note	NSS	Center, Detent (Note: Use p/n 1001129555)	
21	7003953	4	Washer	
22	7022817	4	Screw	
23	7022819	1	Plug, Male 8 Position (Natural)	
23	4460871	8	Socket, Female	
24	7019122	1	Gimble, Outer	
25	7019123	1	Gimble, Inner	

FIGURE 4-6. CONTROLLER ASSEMBLY (LIFT AND SWING)

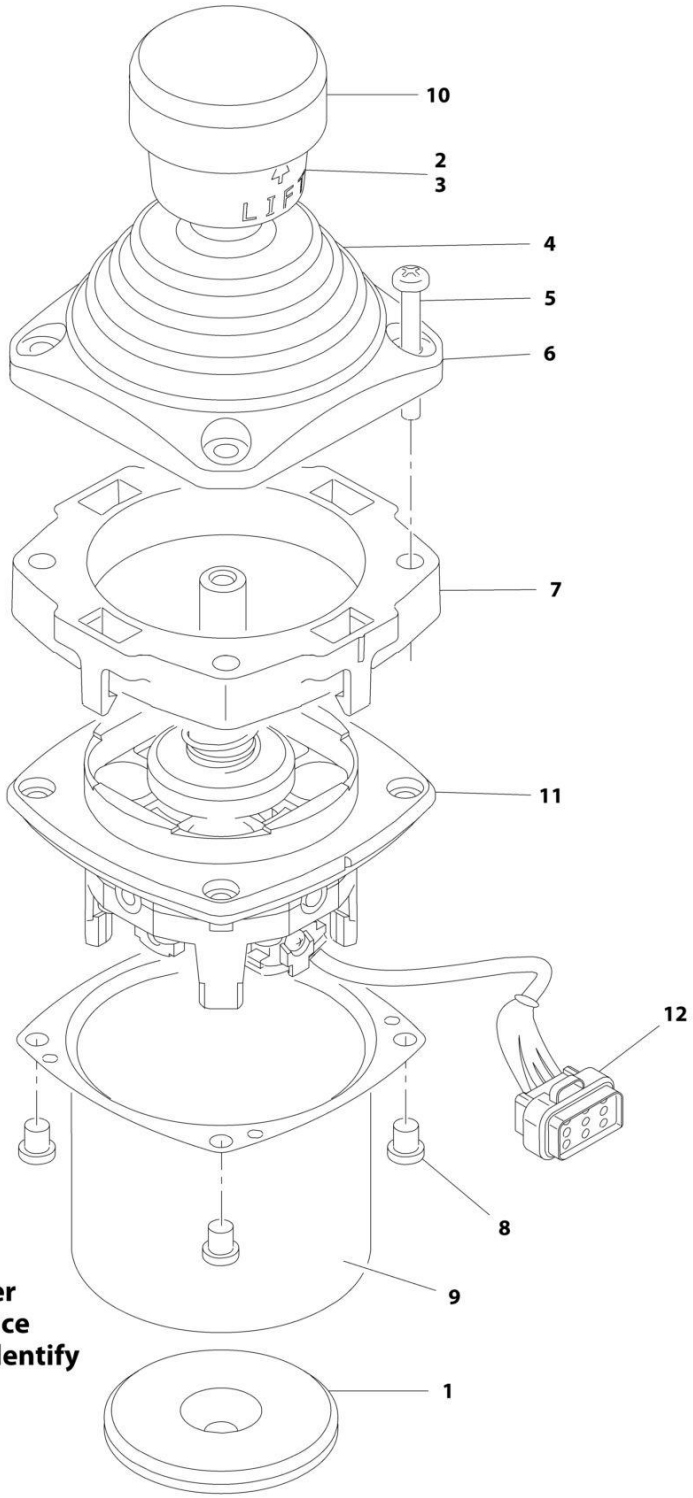

Note: Original Equipment controller may have been replaced with Service Replacement controller. Visually identify controller before ordering parts.

FIGURE 4-6. CONTROLLER ASSEMBLY (LIFT AND SWING)

ITEM	PART NUMBER	QTY	DESCRIPTION	REV
		Ref	**Note: Original Equipment controller may have been replaced with Service Replacement controller. Visually Identify controller before ordering parts.**	
	1001118417	Ref	**CONTROLLER ASSEMBLY (LIFT AND SWING) (SN 0300146164 through 0300171769)**	A
	1001118417	Ref	**CONTROLLER ASSEMBLY (LIFT AND SWING) (SN B300000271 through B300000969)**	E
		Ref	**Note: Use p/n 1001129555 as Replacement.**	
1	70002730	1	Gasket	
2	7003928	1	Spring	
3	7022808	1	Cap, Lift	
4	70002731	1	Boot	
5	70002732	4	Screw	
6	7022815	1	Bezel	
7	70002733	1	Adapter	
8	70002734	4	Screw	
9	70002735	1	Can, Enclosure	
10	70002906	1	Cap	
11	See Note	NSS	Mechanical Assembly (Note: Use p/n 1001129555)	
12	7022819	1	Connector - 8 Position	
12	4460871	6	Socket, Female	

FIGURE 4-7. CONTROLLER ASSEMBLY (LIFT AND SWING)

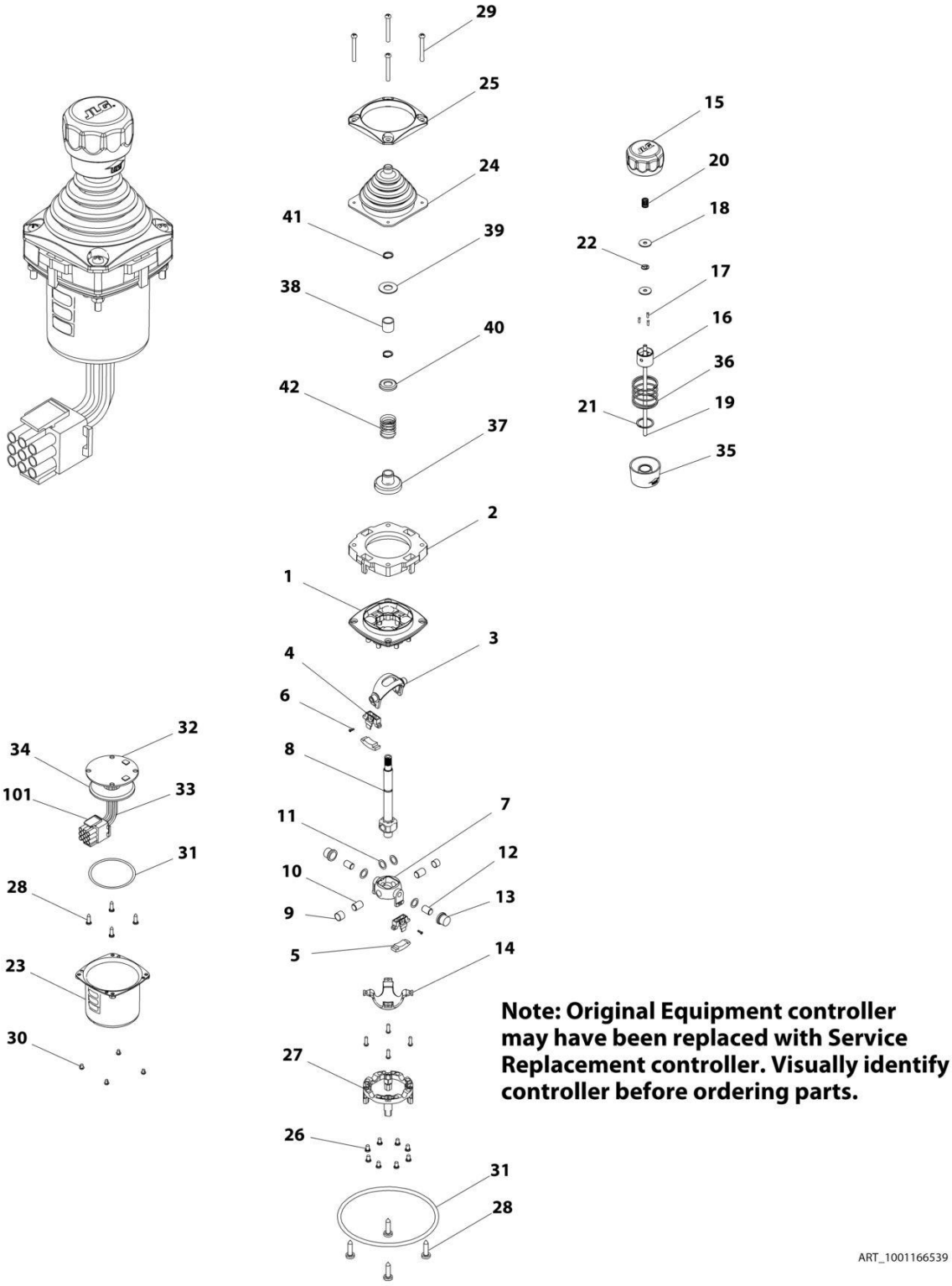

FIGURE 4-7. CONTROLLER ASSEMBLY (LIFT AND SWING)

ITEM	PART NUMBER	QTY	DESCRIPTION	REV
		Ref	**Note: Original Equipment controller may have been replaced with Service Replacement controller. Visually identify controller before ordering parts.**	
	1001166539	Ref	**CONTROLLER ASSEMBLY (LIFT AND SWING) (SERVICE REPLACEMENT)**	D
		Ref	**Note: Use p/n 1001129555 as Replacement.**	
1	See Note	1	Main Cast Body (Note: Not Available - Purchase Complete Assembly)	
2	70004752	1	Adapter	
3	See Note	NSS	Pivot Arm, Plastic (Note: Not Available - Purchase Complete Assembly)	
4	See Note	NSS	Holder, Magnet (Note: Not Available - Purchase Complete Assembly)	
5	See Note	NSS	Arc, Magnet (Note: Not Available - Purchase Complete Assembly)	
6	See Note	NSS	Screw (Note: Not Available for Purchase)	
7	See Note	NSS	Pivot Arm, Cast (Note: Not Available - Purchase Complete Assembly)	
8	See Note	NSS	Shaft, Main (Note: Not Available - Purchase Complete Assembly)	
9	See Note	NSS	Bearing (Note: Not Available - Purchase Complete Assembly)	
10	See Note	NSS	Pin (Note: Not Available - Purchase Complete Assembly)	
11	See Note	NSS	Shim (Note: Not Available - Purchase Complete Assembly)	
12	See Note	NSS	Pin (Note: Not Available - Purchase Complete Assembly)	
13	See Note	NSS	Bearing (Note: Not Available - Purchase Complete Assembly)	
14	See Note	NSS	Dome, Centering (Note: Not Available - Purchase Complete Assembly)	
15	70004753	1	Cap	
16	70004754	1	Insert, Cap	
17	70004755	3	Pin	
18	70004756	2	Washer	
19	70004757	1	Pin, Centering	
20	70004758	1	Spring	
21	70004759	1	Ring, Retaining	
22	70004760	1	E-Ring	
23	70004761	1	Can, Enclosure	
24	70004762	1	Boot	
25	70004763	1	Bezel	
26	See Note	NSS	Screw (Note: Not Available for Purchase)	
27	See Note	NSS	Base Mounting (Note: Not Available - Purchase Complete Assembly)	
28	See Note	NSS	Screw (Note: Not Available for Purchase)	
29	70004764	4	Screw	
30	70004765	4	Screw	
31	70004766	1	O-Ring	
32	See Note	NSS	Plate (Note: Not Available - Purchase Complete Assembly)	
33	See Note	NSS	Harness (Note: Not Available - Purchase Complete Assembly)	
34	70004767	1	Grommet, Rubber	
35	70004768	1	Housing	
36	70004769	1	Spring	
37	70004770	1	Stopper	
38	70004771	1	Spacer	
39	70004772	1	Washer	
40	70004773	1	Disc	

ITEM	PART NUMBER	QTY	DESCRIPTION	REV
41	70004774	2	Ring, Retaining	
42	70004775	1	Spring	
101	4460265	1	Connector - 9 Position	
101	4460226	6	Socket, Female	

FIGURE 4-8. CONTROLLER ASSEMBLY (DRIVE AND STEER)

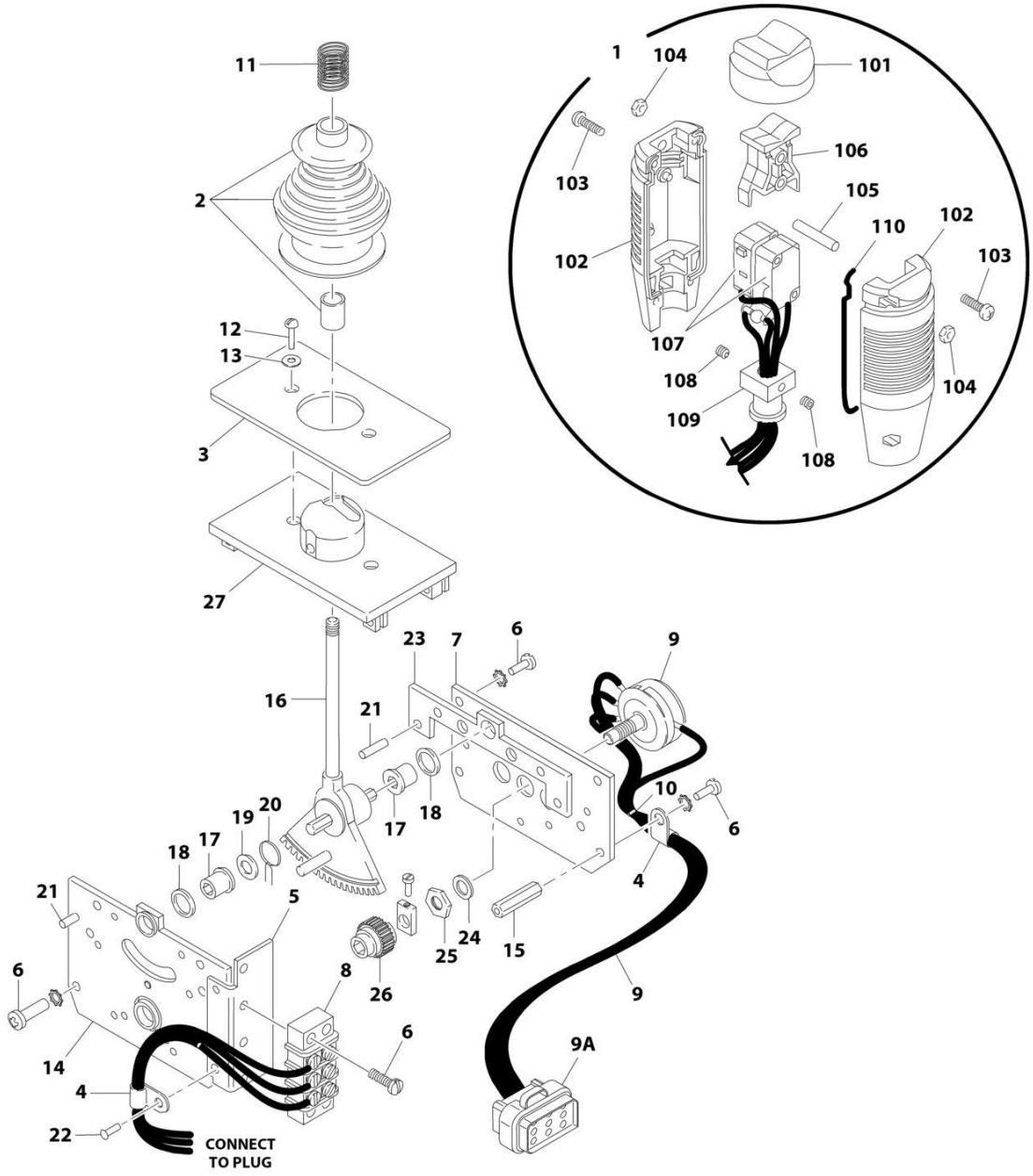

Note: Original Equipment controller may have been replaced with Service Replacement controller. Visually identify controller before ordering parts.

ART_1600318

FIGURE 4-8. CONTROLLER ASSEMBLY (DRIVE AND STEER)

ITEM	PART NUMBER	QTY	DESCRIPTION	REV
		Ref	**Note: Original Equipment controller may have been replaced with Service Replacement controller. Visually identify controller before ordering parts.**	
		Ref	**CONTROLLER ASSEMBLIES**	
	1600318	Ref	**Controller Assembly (USA Built Machines) (SN 0300087000 through 0300146162)**	C
	1600318	Ref	**Controller Assembly (China Built Machines) (SN B300000100 through B300000270)**	C
		Ref	**Note: Use p/n 1001212415 as Replacement.**	
1	7022812	1	Handle Assembly (See Items 101-110 for Breakdown)	
2	7019161	1	Boot and Sleeve	
3	7003933	1	Gasket	
4	7019154	2	Clamp, Wire	
5	7022823	1	Bracket, Mounting	
6	7003994	1	Screw	
7	7022822	1	Plate, Pot Mounting	
8	7003986	1	Strip, Terminal - 3 Position	
9	7022824	1	Electric Assembly	
9A	1001113961	1	Plug, Male - 8 Position (Black) (was p/n 7022825)	
9A	4460871	7	Socket, Female	
10	7019151	AR	Tie-Strap	
11	7019162	1	Spring	
12	7003969	2	Screw	
13	7003941	2	Washer	
14	See Note	NSS	Plate, Mounting (Left Side) (Note: Use p/n 1001166538)	
15	7019115	2	Stand-Off	
16	7019155	1	Shaft 8mm	
17	7019111	2	Bearing	
18	7019110	2	Spacer, Head Gear	
19	7019112	1	Washer	
20	7003946	1	Spring, Return	
21	7019103	4	Pin	
22	See Note	NSS	Rivet (Note: Not Available - Purchase Locally)	
23	7019168	1	Plate, Mounting (Right Side)	
24	7003992	1	Washer	
25	7003993	1	Nut	
26	7003935	1	Gear, Slave	
27	7019160	1	Plate, Base	
28	7019114	1	Coupling, Potentiometer	
29	See Note	NSS	Cup Point Screw (Note: Not Available - Purchase Locally)	
		Ref	**HANDLE ASSEMBLY**	
101	7003972	1	Boot, Switch	
102	7003973	2	Half, Handle	
103	7003980	4	Screw	
104	7019167	4	Nut	
105	7019164	1	Axle	
106	7019165	1	Rocker	
107	See Note	NSS	Wiring for Controller Assembly p/n 1600318 (Note: Use p/n 1001166538)	
107	7019166	2	Switch, Micro	
108	7003983	2	Setscrew	

ITEM	PART NUMBER	QTY	DESCRIPTION	REV
109	7019194	1	Coupling	
110	7003989	2	Gasket	

FIGURE 4-9. CONTROLLER ASSEMBLY (DRIVE AND STEER)

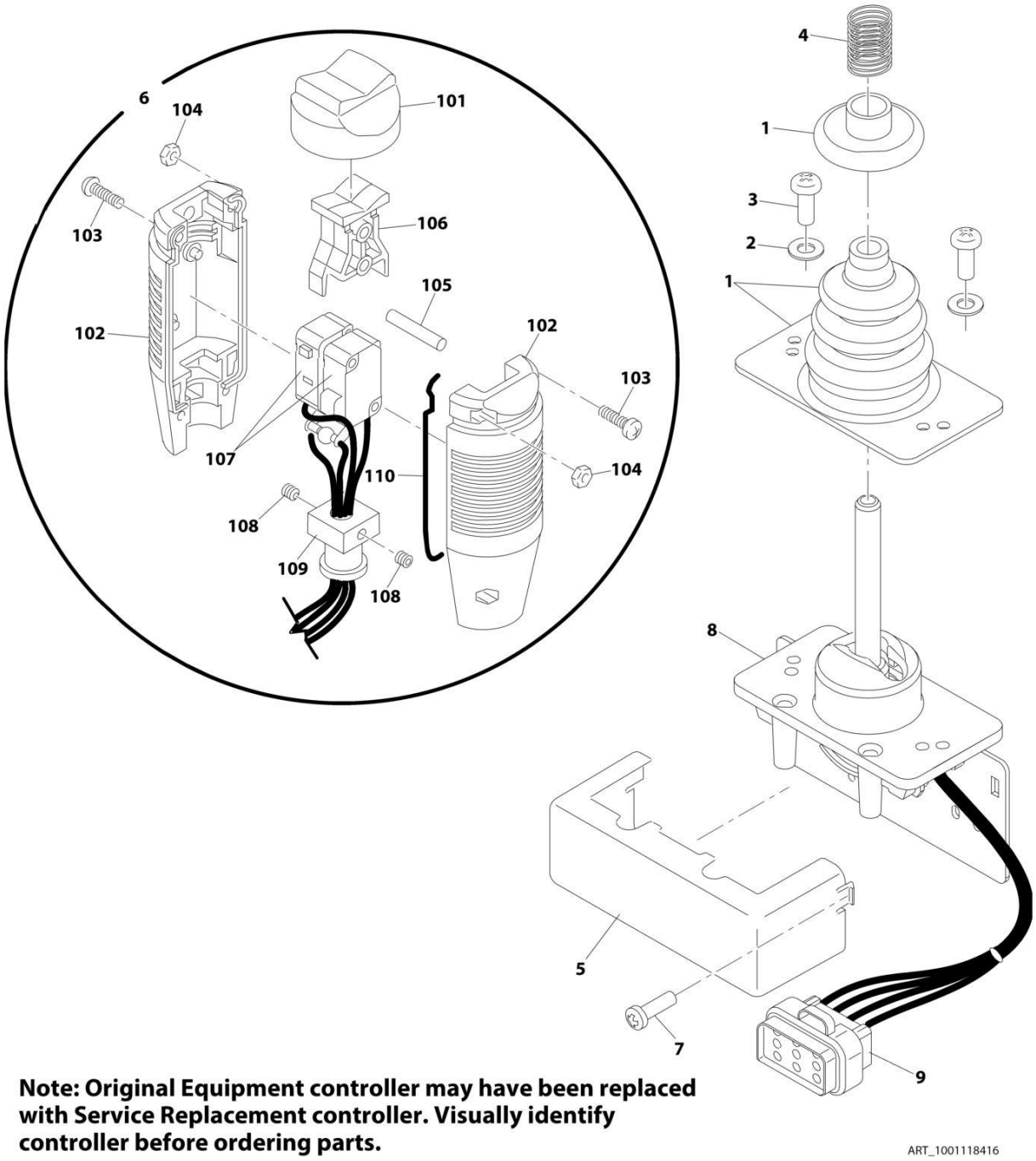

Note: Original Equipment controller may have been replaced with Service Replacement controller. Visually identify controller before ordering parts.

FIGURE 4-9. CONTROLLER ASSEMBLY (DRIVE AND STEER)

ITEM	PART NUMBER	QTY	DESCRIPTION	REV
		Ref	**Note: Original Equipment controller may have been replaced with Service Replacement controller. Visually identify controller before ordering parts.**	
	1001118416	Ref	**CONTROLLER ASSEMBLY (DRIVE AND STEER) (SN 0300146163 through 0300171769)**	D
	1001118416	Ref	**CONTROLLER ASSEMBLY (DRIVE AND STEER) (SN B300000271 through B300000969)**	D
		Ref	**Note: Use p/n 1001212415 as Replacement.**	
1	70002724	1	Boot and Control Lock Assembly	
2	7003941	2	Washer	
3	70002725	2	Screw	
4	7019162	1	Spring	
5	70002726	1	Enclosure	
6	70002727	1	Handle Assembly (See Items 101-110 for Breakdown)	
7	70002728	1	Screw	
8	See Note	NSS	Mechanical Assembly (Note: Use p/n 1001166538)	
9	1001113961	1	Plug, Male - 8 Position (Black) (was p/n 7022825)	
9	4460871	7	Socket, Female	
	70002727	Ref	**HANDLE ASSEMBLY**	
101	7003972	1	Boot, Switch	
102	7003973	2	Half, Handle	
103	7003980	4	Screw	
104	7019167	4	Nut	
105	7019164	1	Axle	
106	7019165	1	Rocker	
107	70002729	1	Wiring Assembly	
107	7003982	2	Switch, Micro	
108	7003983	2	Set Screw	
109	7019194	1	Coupling	
110	7003989	2	Gasket	

FIGURE 4-10. CONTROLLER ASSEMBLY (DRIVE AND STEER)

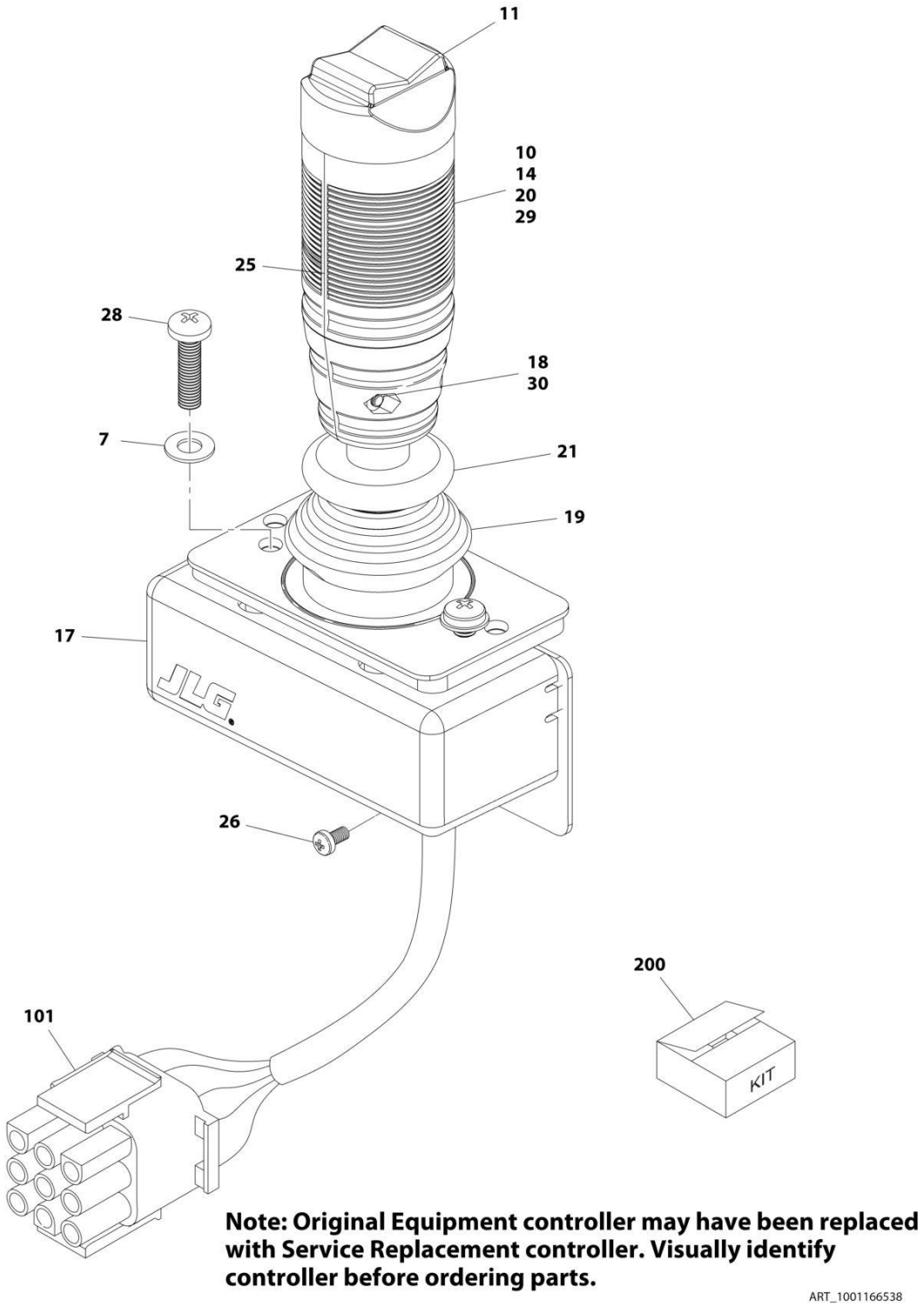

FIGURE 4-10. CONTROLLER ASSEMBLY (DRIVE AND STEER)

ITEM	PART NUMBER	QTY	DESCRIPTION	REV
		Ref	**Note: Original Equipment controller may have been replaced with Service Replacement controller. Visually identify controller before ordering parts.**	
	1001166538	Ref	**CONTROLLER ASSEMBLY (DRIVE AND STEER) (SERVICE REPLACEMENT)**	F
		Ref	**Note: Use p/n 1001212415 as Replacement.**	
7	70004738	2	Washer	
10	70004739	1	Roller	
11	70004740	1	Boot, Switch	
14	70004741	2	Half, Handle	
17	70004742	1	Enclosure	
18	70004743	4	Nut	
19	70004744	NLA	Boot, Controller (Note: Use Item 200)	
20	70004745	NLA	Tube, Locking (Note: Use Item 200)	
21	70004746	NLA	Disc, Locking (Note: Use Item 200)	
25	70004747	2	Seal, Rope	
26	70004748	1	Screw, M3 x 6	
28	70004749	2	Screw, M5 x 20	
29	70004750	1	Pin, Dowel	
30	70004751	4	Screw, M3 x 16	
101	4460265	1	Connector - 9 Position	
101	4460226	7	Socket, Female	
200	70005230	1	Boot Kit (Includes Items 19-21)	

FIGURE 4-11. SOFT TOUCH SYSTEM INSTALLATION (OPTIONAL)

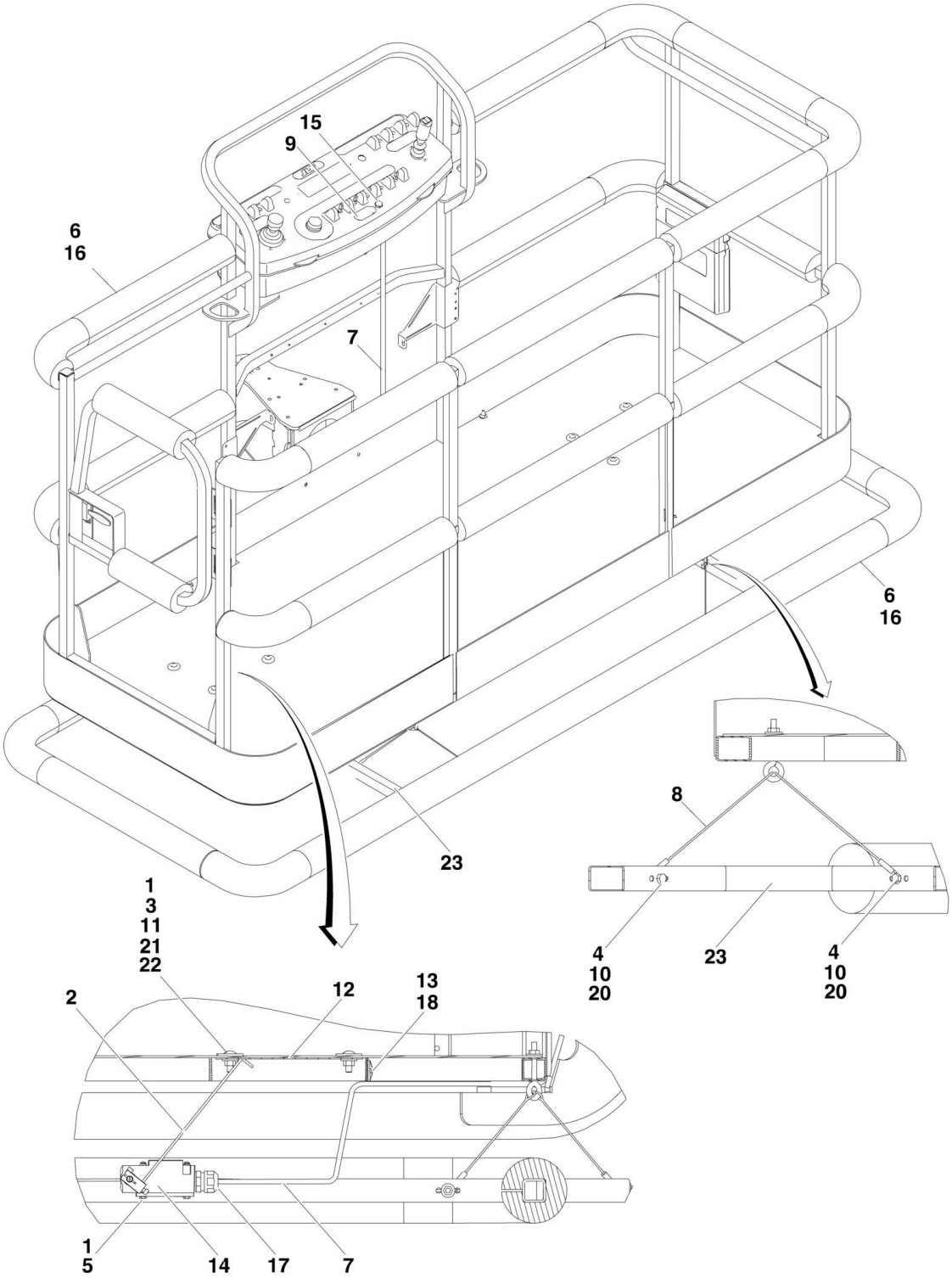

FIGURE 4-11. SOFT TOUCH SYSTEM INSTALLATION (OPTIONAL)

ITEM	PART NUMBER	QTY	DESCRIPTION	REV
		Ref	**SOFT TOUCH SYSTEM INSTALLATIONS**	
	0273824	Ref	**6ft Platforms (Side Entry Platform)**	A
	0272427	Ref	**8ft Platforms (Side Entry Platform)**	E
	0274927	Ref	**6Ft/1.8m Platforms (Fall Arrest Platform) (USA Built Machines) (SN 0300087000 through 0300136518)**	A
	1001108256	Ref	**6Ft/1.8m Platforms (Fall Arrest Platform) (USA Built Machines) (SN 0300136519 through 0300171769)**	A
	0273706	Ref	**8Ft/2.4m Platforms (Fall Arrest Platform)**	A
		Ref	**Note: For Overhead Soft Touch, See SPECIAL OPTIONS SECTION.**	
1	0100011	AR	Compound, Locking	
2	0200048	2	Arm, Switch	
3	0630462	8	Bolt, Carriage	
4	0641414	8	Bolt 1/4in-20NC x 1-3/4in	
5	0721005	4	Bolt #10-24NC x 5/8in	
6		Ref	Bumper Kits (Includes Corners and Enough Straight Material for One Platform)	
6	0940134	1	6ft Platforms (Side Entry Platform)	
6	0940103	1	8ft Platforms (Side Entry Platform)	
6	0940177	1	6Ft/1.8m Platforms (Fall Arrest Platform)	
6	0940133	1	8Ft/2.4m Platforms (Fall Arrest Platform)	
6	0940092	1	Bumper (Corner) Options:	
6	0940092	12	Standard Side Entry Platform	
6	0940092	8	Fall Arrest Platforms	
6	0940094	AR	Bumper	
7	1060341	Ref	Cable, Electrical - 16/2 Options:	
7	1060341	22 ft/6.7m	6ft Platform	
7	1060341	23 ft/7m	8ft Platform	
8	1060903	4	Wire Rope and Eyebolt Assembly	
9	1702938	1	Decal - Soft Touch Override	
10	3311401	8	Nut 1/4in-20NC	
11	3311501	8	Nut 5/16in-18NC	
12		Ref	Plate, Switch Strike Options:	
12	3575359	2	6ft Platform	
12	3574091	2	8ft Platform	
13	4240099	7	Tie-Strap	
14	4360057	2	Switch, Limit	
15	4360387	1	Switch, Push Button	
16	4420068	1	Tape, Adhesive	
17	4460049	2	Connector, Strain Relief	
18	4460234	7	Tie-Strap	
19	4460425	1	Connector, Strain Relief	
20	4751400	8	Flatwasher 1/4in Regular	
21	4751500	12	Flatwasher 5/16in Regular	
22	4751800	8	Flatwasher 1/2in Regular	
23		Ref	Rail, Soft Touch Options:	
23	3641569	1	6ft Platform	
23	4846673	1	8ft Platform	
100		Ref	Soft Touch Add-on Kit Options (Includes required components to add option to existing machines) (Not Shown):	
		Ref	**Note: May not be available for all machines depending on**	

ITEM	PART NUMBER	QTY	DESCRIPTION	REV
			existing options. Contact JLG Parts Dept before ordering.	
100	1001121592	1	3ft x 6ft (.9m x 1.83m) Platform	
100	1001121593	1	3ft x 6ft (.9m x 2.44m) Platform	

FIGURE 4-12. PLATFORM BUMPER PADDING INSTALLATIONS (OPTIONAL)

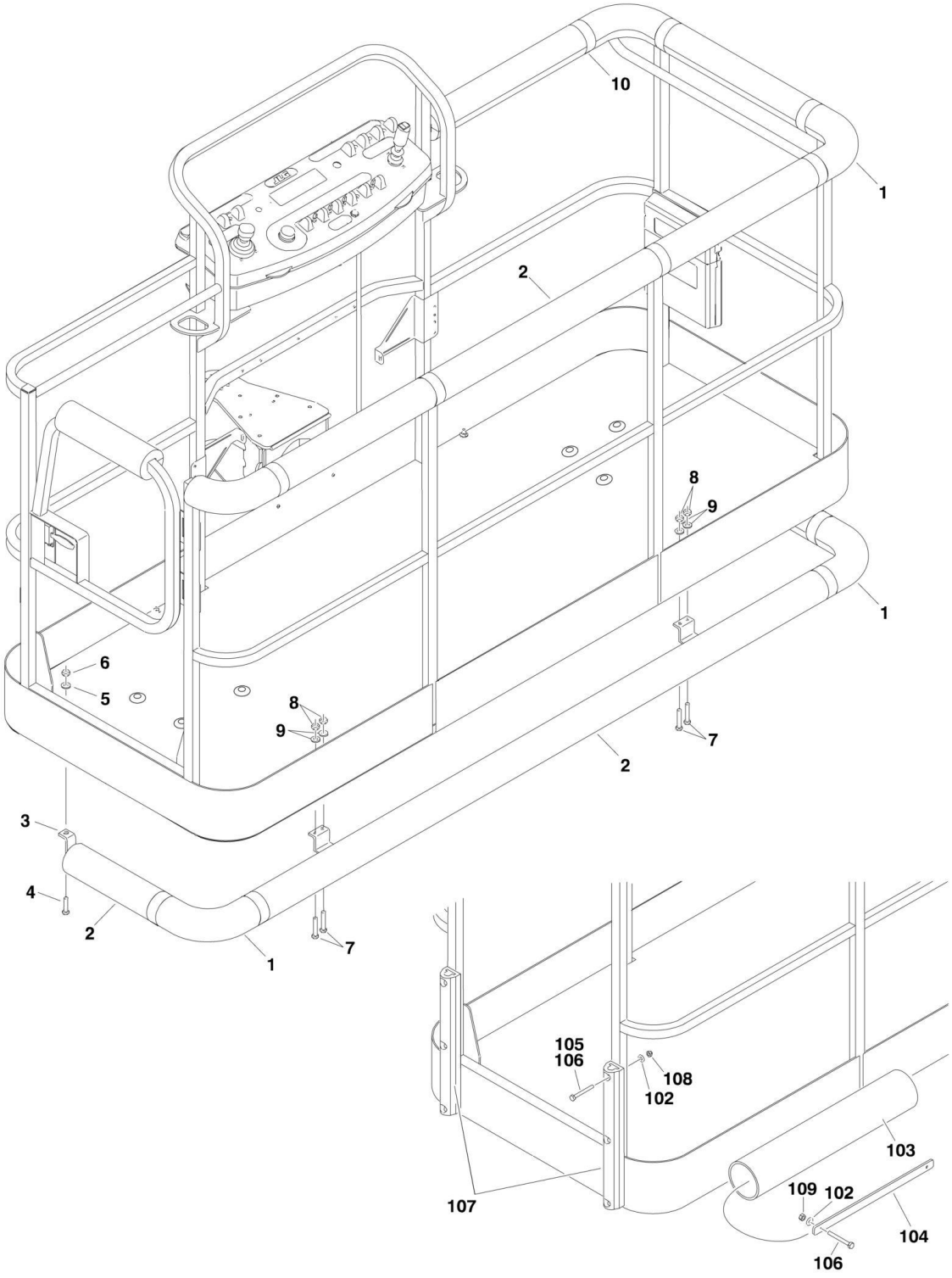

FIGURE 4-12. PLATFORM BUMPER PADDING INSTALLATIONS (OPTIONAL)

ITEM	PART NUMBER	QTY	DESCRIPTION	REV
	0273542	Ref	**PADDING INSTALLATION**	A
1	0940092	4	Bumper, Pad (Corner)	
2	0940094	9 ft/2.7m	Bumper, Pad (Square Tubing)	
3	0940131	1	Bumper, Rail	
4	0641516	2	Bolt 5/16in-18NC x 2in	
5	4751500	2	Flatwasher 5/16in	
6	3311505	2	Locknut 5/16in-18NC	
7	0641813	4	Bolt 1/2in-13NC x 1-5/8in	
8	3311805	4	Locknut 1/2in-13NC	
9	4891800	4	Flatwasher 1/2in (Hardened)	
10	4420068	30 ft/9.1m	Tape	
	1001110982	Ref	**BUMPER INSTALLATION**	D
102	4711400	10	Flatwasher1/4in Thin	
103	1001110979	3	Bumper	
104	1001110980	3	Clamp, Bumper	
105	0100011	AR	Compound, Locking	
106	0641418	10	Bolt 1/4in-20NC x 2-1/4in	
107	0940159	2	Bumper	
108	3300430	4	Nut, Acorn 1/4in-20NC	
109	3311405	6	Locknut 1/4in-20NC	

FIGURE 4-13. SKYGLAZIER INSTALLATION

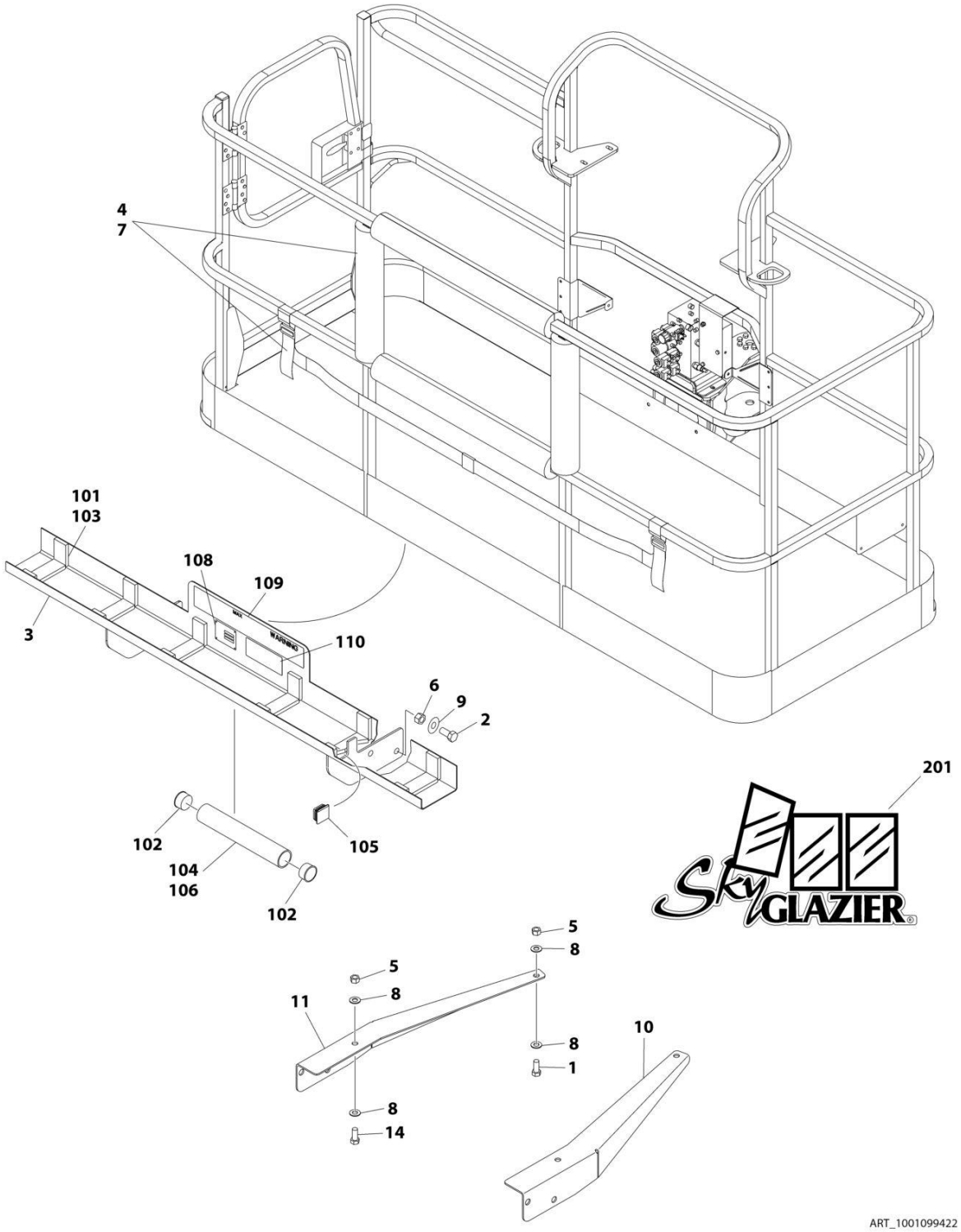

FIGURE 4-13. SKYGLAZIER INSTALLATION

ITEM	PART NUMBER	QTY	DESCRIPTION	REV
	0272395	Ref	**SKYGLAZIER INSTALLATION (ANSI AND CSA SPECS) (USA BUILT MACHINES) (SN 0300087000 through 0300124131)**	3
	1001099376	Ref	**SKYGLAZIER INSTALLATION (ANSI AND CSA SPECS) (USA BUILT MACHINES) (SN 0300124132 through 0300131101)**	B
	1001101422	Ref	**SKYGLAZIER INSTALLATION (ANSI AND CSA SPECS) (USA BUILT MACHINES) (SN 0300131102 through 0300171769)**	C
	1001101422	Ref	**SKYGLAZIER INSTALLATION (AUSTRALIAN SPECS WITHOUT LSS)**	C
	1001102647	Ref	**SKYGLAZIER INSTALLATION (AUSTRALIAN SPECS WITH LSS)**	C
	0272955	Ref	**SKYGLAZIER INSTALLATION (BRAZIL SPECS) (USA BUILT MACHINES) (SN 0300087000 through 0300124131)**	3
	1001099422	Ref	**SKYGLAZIER INSTALLATION (BRAZIL SPECS) (SN 0300124132 through 0300171769)**	C
	0272387	Ref	**SKYGLAZIER INSTALLATION (LATIN AMERICAN SPECS) (USA BUILT MACHINES) (SN 0300087000 through 0300124131)**	3
	1001099421	Ref	**SKYGLAZIER INSTALLATION (LATIN AMERICAN SPECS) (SN 0300124132 through 0300171769)**	C
		Ref	Note: Only Available on 600S for Brazil and Latin American Specs. Available on 600S & 660SJ for ANSI, ANSI Export, Australian and CSA Specs.	
1	0642012	2	Bolt 5/8 x 1-1/2	
1	0642026	2	Bolt 5/8 x 3-1/4	
2	0642212	4	Bolt 3/4 x 1-1/2	
3	0272391	NLA	Tray Assembly (Use p/n 1001101421) (All Spec except Brazil and Latin American Specs) (See Items 101-110 for Breakdown) **(SN 0300087000 through 0300131101)**	
3	1001101421	1	Tray Assembly (All Spec except Brazil and Latin American Specs) (See Items 101-110 for Breakdown) **(SN 0300131102 through 0300171769)**	
3	0272951	1	Tray Assembly (Brazil Spec) (See Items 101-110 for Breakdown)	
3	0272948	1	Tray Assembly (Latin American Spec) (See Items 101-110 for Breakdown)	
4	2902212	1	Bumpers and Strap Kit	
4	0940102	1	Bumper Only	
4	4240149	1	Strap Only	
5	3312005	4	Nut 5/8	
5	1001149924	AR	Nut, Plastic 5/8	
6	3312205	4	Nut 3/4	
7	4420014	AR	Tape	
8	4712000	6	Washer 5/8	
9	4712200	8	Washer 3/4	
10	1001099366	1	Support	
11	1001099367	1	Support	
14	8310129	2	Bolt 5/8 x 2-1/2	
14	0642026	2	Bolt 5/8 x 3-1/4	
14	8310230	2	Bolt 5/8 x 4	
	0272391	Ref	**TRAY ASSEMBLY (ALL SPECS EXCEPT BRAZIL AND LATIN AMERICAN SPECS) (SN 0300087000 through 0300131101)**	3
	1001101421	Ref	**TRAY ASSEMBLY (ALL SPECS EXCEPT BRAZIL AND LATIN AMERICAN SPECS) (SN 0300131102 through 0300171769)**	E
	0272951	Ref	**TRAY ASSEMBLY (BRAZIL SPECS)**	E
	0272948	Ref	**TRAY ASSEMBLY (LATIN AMERICAN SPECS)**	E
101	0100081	AR	Adhesive	

SECTION 4 - PLATFORM

ITEM	PART NUMBER	QTY	DESCRIPTION	REV
102	1120555	2	Cap, Tube	
103	3340956	1	Pad Kit	
104	3460334	1	Tube	
105	3520071	2	Plug	
106	4420066	AR	Tape, Double Sided	
108	See Note	NSS	Nameplate - Serial Number (Note: Not Available for Purchase)	
109	1001163131	1	Decal - Glazier Capacity (All Specs except Brazil and Latin American Specs)	
109	1001163297	2	Decal - Glazier Capacity (Brazil Specs)	
109	1001163296	2	Decal - Glazier Capacity (Latin American Specs)	
110	1701509	2	Decal - Manual	
	0272418	Ref	SKYGLAZIER DECAL INSTALLATION	
201	1705358	2	Decal - SkyGlazier	

FIGURE 4-14. SKYWELDER INSTALLATION (50HZ)

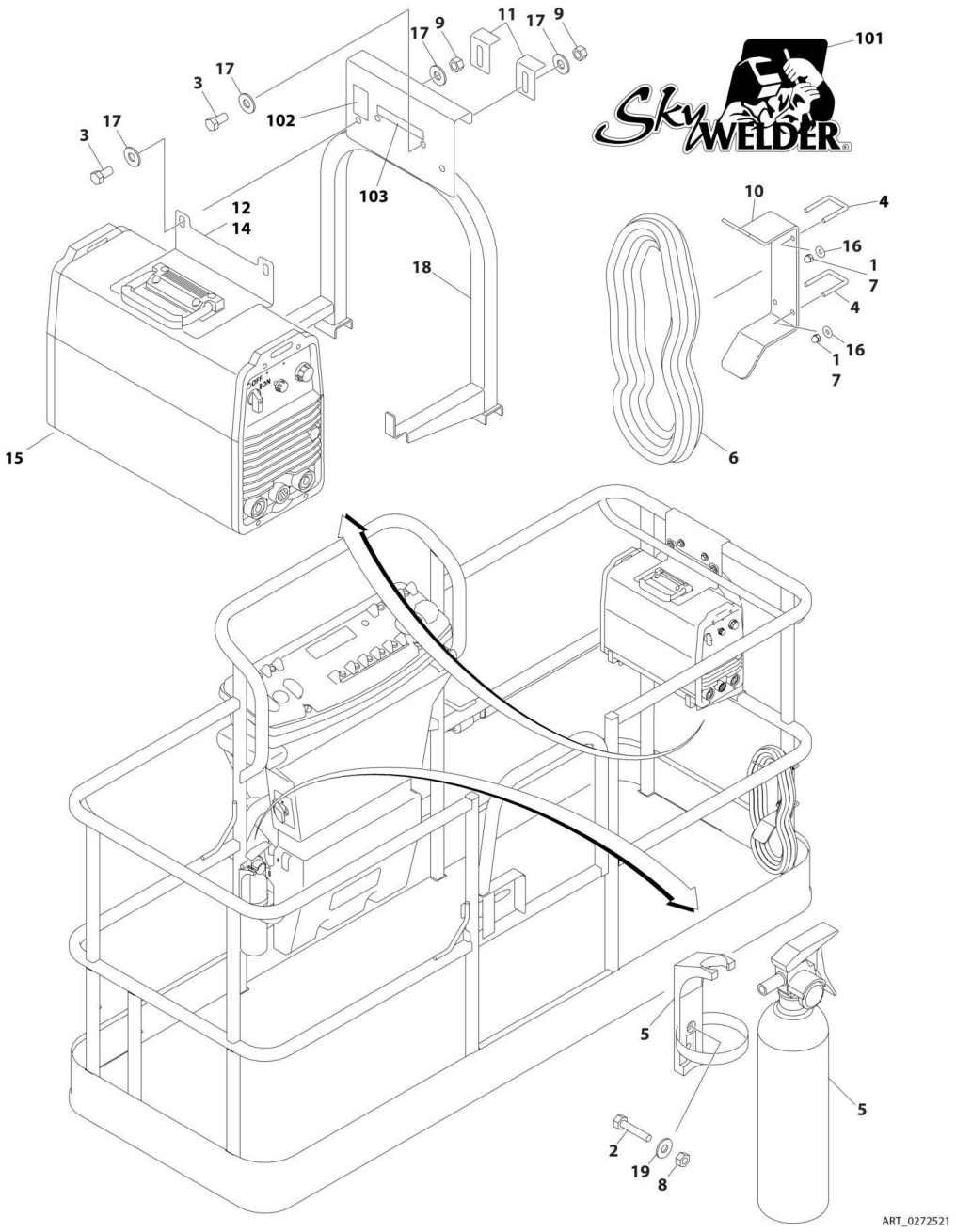

FIGURE 4-14. SKYWELDER INSTALLATION (50HZ)

ITEM	PART NUMBER	QTY	DESCRIPTION	REV
	0272521	Ref	**SKYWELDER INSTALLATION (50HZ)**	F
		Ref	**Note: USA Built Machines ANSI Export, Australian, CE and Japanese Specs Only.**	
		Ref	**Note: China Built Machines ANSI Export, Australian and China Spec Only**	
1	0100011	AR	Compound, Locking	
2	0630518	2	Screw #10 x 3/4	
3	0641606	4	Bolt 3/8 x 3/4	
4	1320302	2	U-Clamp	
5	2030010	1	Extinguisher, Fire	
6	2902217	1	Weld Leads Kit	
7	3300151	4	Nut 1/4	
8	3311005	2	Nut #10	
9	3311605	4	Nut 3/8	
10	3573400	1	Bracket	
11	3577121	2	Angle	
12	3573642	1	Plate	
13	4240099	AR	Tie-Strap (Not Shown)	
14	4420037	AR	Tape	
15	4530028	1	Welder Assembly (See WELDER ASSEMBLY for Breakdown)	
16	4751400	4	Washer 1/4	
17	4751600	8	Washer 3/8	
18	4846627	1	Support	
19	4751000	2	Washer #10	
	0272588	Ref	**SKYWELDER DECAL INSTALLATION**	B
101	1705355	2	Decal - SkyWelder	
102	1705305	1	Decal - Weld Lead	
103	1705466	NLA	Decal - Weight (Use p/n 1001228988)	

FIGURE 4-15. SKYWELDER INSTALLATION (60HZ)

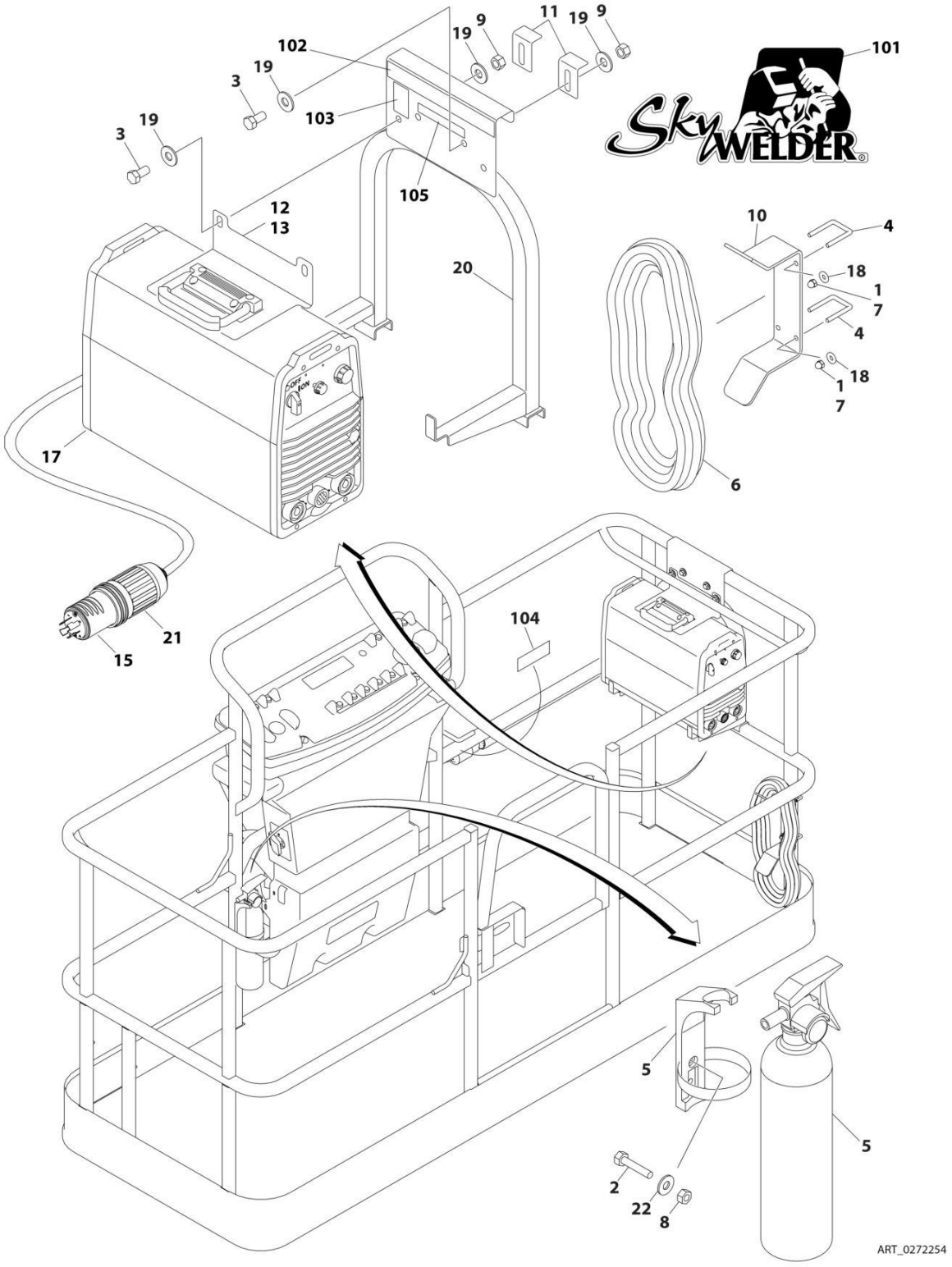

FIGURE 4-15. SKYWELDER INSTALLATION (60HZ)

ITEM	PART NUMBER	QTY	DESCRIPTION	REV
	0272254	Ref	**SKYWELDER INSTALLATION (60HZ)**	I
		Ref	**Note: USA Built Machines ANSI, ANSI Export and CSA Specs Only.**	
		Ref	**Note: China Built Machines ANSI Export and China Spec Only.**	
1	0100011	AR	Compound, Locking	
2	0630518	2	Screw #10 x 3/4	
3	0641606	4	Bolt 3/8 x 3/4	
4	1320302	2	U-Clamp	
5	2030010	1	Extinguisher, Fire	
6	2902217	1	Weld Leads Kit	
7	3300151	4	Nut 1/4	
8	3311005	2	Nut #10	
9	3311605	4	Nut 3/8	
10	3573400	1	Bracket	
11	3577121	2	Angle	
12	3573642	1	Plate	
13	4420037	AR	Tape	
14	4240099	AR	Tie-Strap (Not Shown)	
15	4460962	1	Plug, Male Twistlock	
17	4530028	1	Welder Assembly (See WELDER ASSEMBLY for Breakdown)	
18	4751400	4	Washer 1/4	
19	4751600	8	Washer 3/8	
20	4846627	1	Support	
21	1671093	1	Cover, Plug	
22	4751000	2	Washer #10	
	0272448	Ref	**SKYWELDER DECAL INSTALLATION**	B
101	1705355	2	Decal - SkyWelder	
102	1702868	1	Decal - No Hands	
103	1705305	1	Decal - Weld Lead	
104	1705375	1	Decal - 240V - 3 Phase - 60Hz	
105	1705466	NLA	Decal - Weight (Use p/n 1001228988)	

FIGURE 4-16. WELDER ASSEMBLY

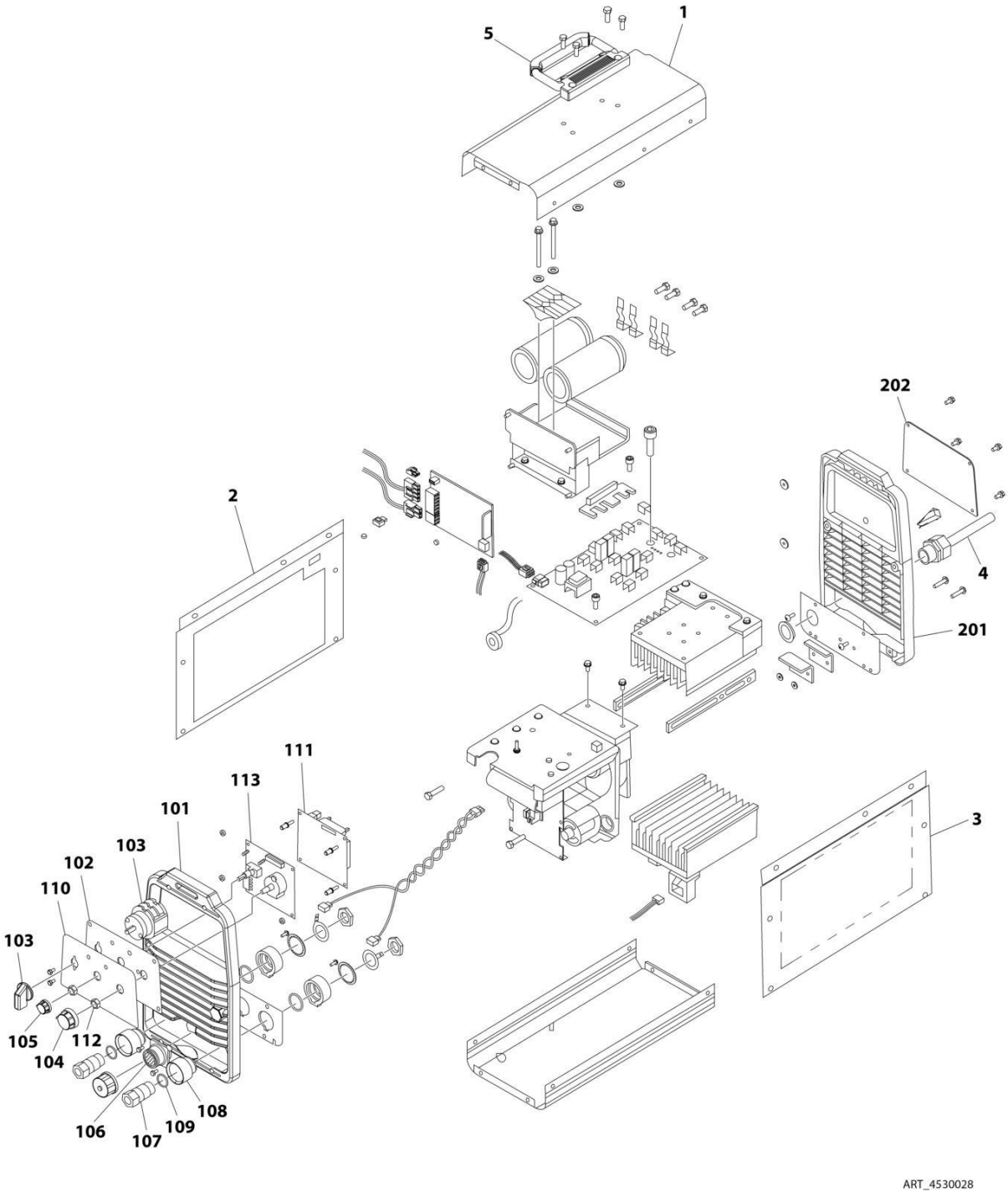

FIGURE 4-16. WELDER ASSEMBLY

ITEM	PART NUMBER	QTY	DESCRIPTION	REV
	4530028	Ref	**WELDER ASSEMBLY**	B
		Ref	**Note: For Other Components, contact your Miller Welder Dealer.**	
1	7027773	1	Cover, Top	
1	7027774	1	Decal - Static Precautionary Warning	
2	See Note	NSS	Panel, LH Side (Note: Part of Item 1. Purchase Item 1)	
3	See Note	NSS	Panel, RH Side (Note: Part of Item 1. Purchase Item 1)	
4	7024467	1	Cable, Power	
4	7027775	1	Decal - Electrical Shock Warning (Not Shown)	
5	7027776	1	Handle, Carrying	
101	7024462	1	Panel, Front	
102	7024463	1	Panel, Console	
103	7024469	1	Switch with Lead	
104	7024470	1	Knob	
105	7024471	1	Knob	
106	7024472	1	Receptacle with Leads and Plugs	
107	7024473	2	Receptacle, Twistlock Female	
108	7024474	2	Insulator	
109	7024475	2	O-Ring	
110	7027777	1	Nameplate	
111	7027779	1	Circuit Card Assembly (Process Control)	
112	7024478	2	Nut	
113	7027778	1	Circuit Card Assembly (Operator Interface)	
201	7024462	1	Panel, Rear	
202	7027780	1	Panel, Cover	

FIGURE 4-17. SKYCUTTER INSTALLATION

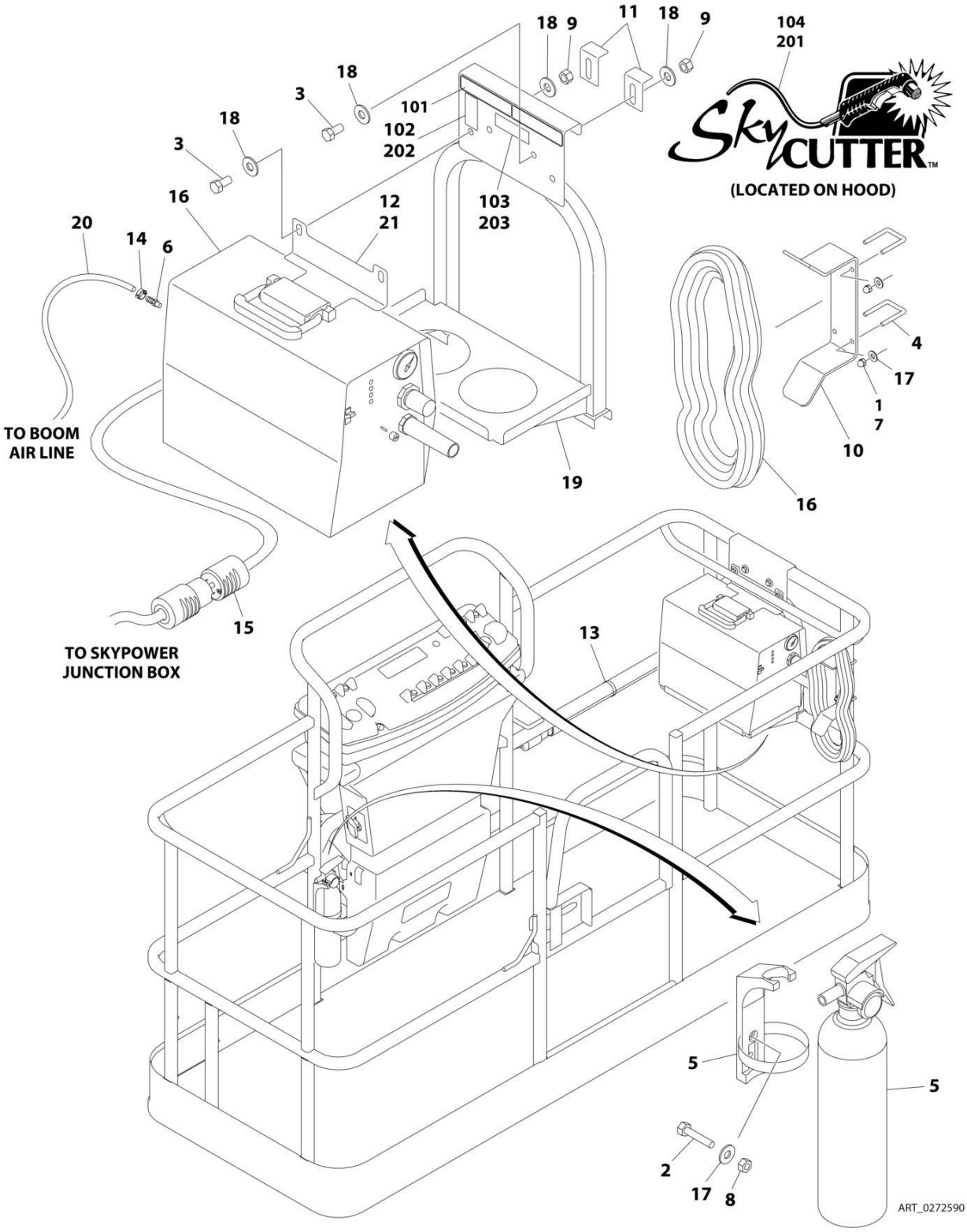

FIGURE 4-17. SKYCUTTER INSTALLATION

ITEM	PART NUMBER	QTY	DESCRIPTION	REV
		Ref	**SKYCUTTER INSTALLATION**	
	0272590	Ref	**SkyCutter Installation - 60Hz Power Supply**	D
	0272606	Ref	**SkyCutter Installation - 50Hz Power Supply**	D
		Ref	**Note: When replacing platform on machines with SkyCutter option, new bracket p/n 1001145405 must be purchased to accommodate SkyCutter components.**	
1	0100011	AR	Compound, Locking	
2	0641406	2	Bolt 1/4 x 3/4	
3	0641606	4	Bolt 3/8 x 3/4	
4	1320302	2	Clamp	
5	2030010	1	Extinguisher, Fire	
6	2180832	1	Fitting, NPT/Barbed	
7	3300151	4	Nut 1/4	
8	3311405	2	Nut 1/4	
9	3311605	4	Nut 3/8	
10	3573400	1	Bracket, Cable	
11	3573641	2	Plate, Clamp (Use p/n 3577121)	
12	3573643	1	Plate, Top Support	
13	4240099	AR	Tie, Wire	
14	1320177	2	Clamp, Hose	
15	4460971	1	Plug, Twistlock	
16	4530024	1	Plasma Cutter Assembly - 60Hz Power Supply (See PLASMA CUTTER ASSEMBLY for Breakdown)	
16	4530025	1	Plasma Cutter Assembly - 50Hz Power Supply (See PLASMA CUTTER ASSEMBLY for Breakdown)	
17	4751400	6	Washer 1/4	
18	4751600	8	Washer 3/8	
19	4846571	1	Support	
20	2720160	4 ft/1.2m	Hose	
21	4420037	AR	Tape, Insulation	
	0272599	Ref	**SKYCUTTER DECAL INSTALLATION (ANSI, ANSI Export and CSA Specs)**	A
101	1702868	1	Decal - No Hands (60Hz Power Supply Only)	
102	1705305	1	Decal - Weld Lead	
103	1705466	1	Decal - Weight	
104	1705490	2	Decal - SkyCutter	
	0272607	Ref	**SKYCUTTER DECAL INSTALLATION (JAPANESE SPECS)**	A
201	1705490	2	Decal - SkyCutter	
202	1705305	1	Decal - Weld Lead	
203	1705466	1	Decal - Weight	

FIGURE 4-18. SKYCUTTER INSTALLATION

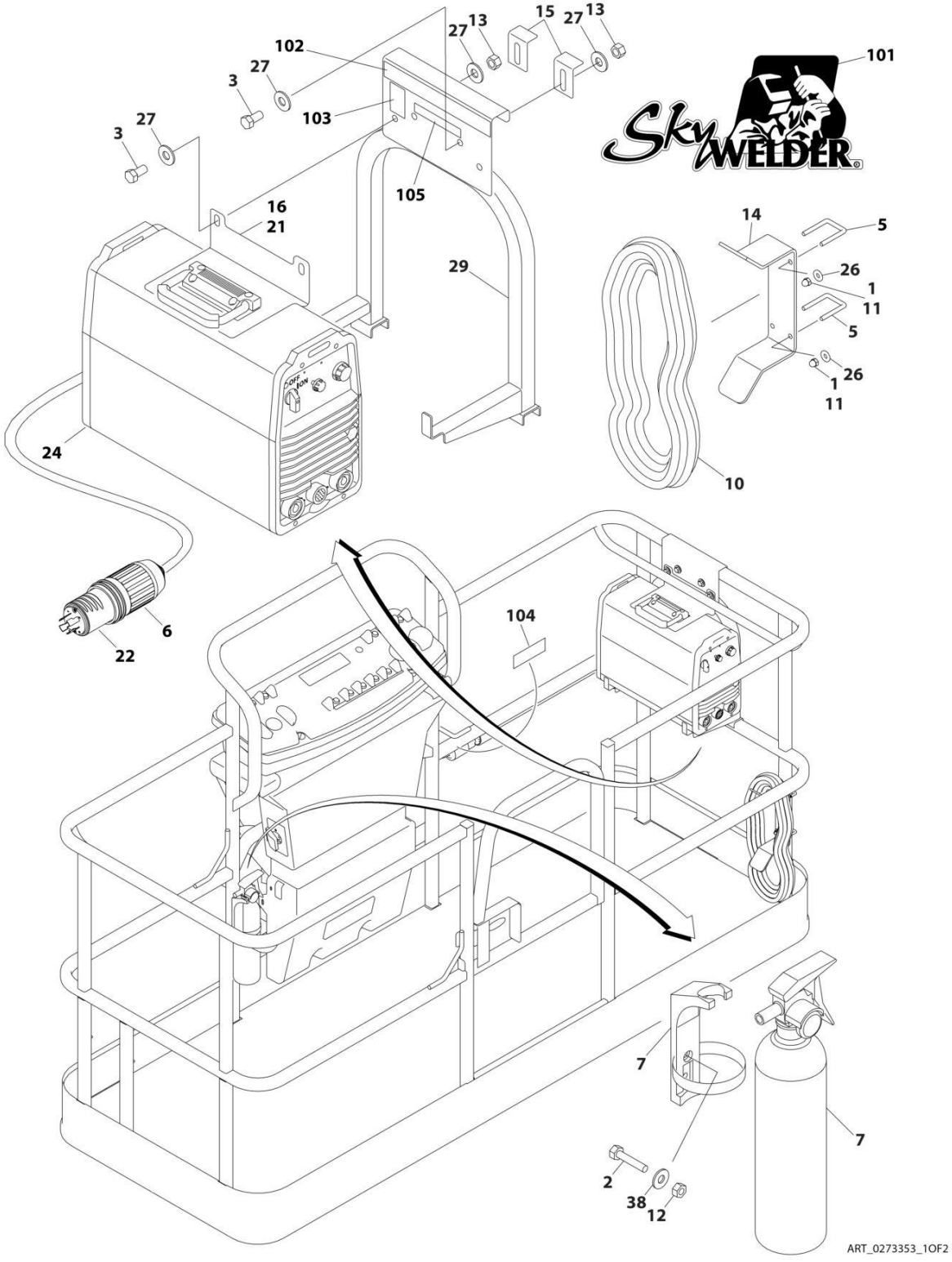

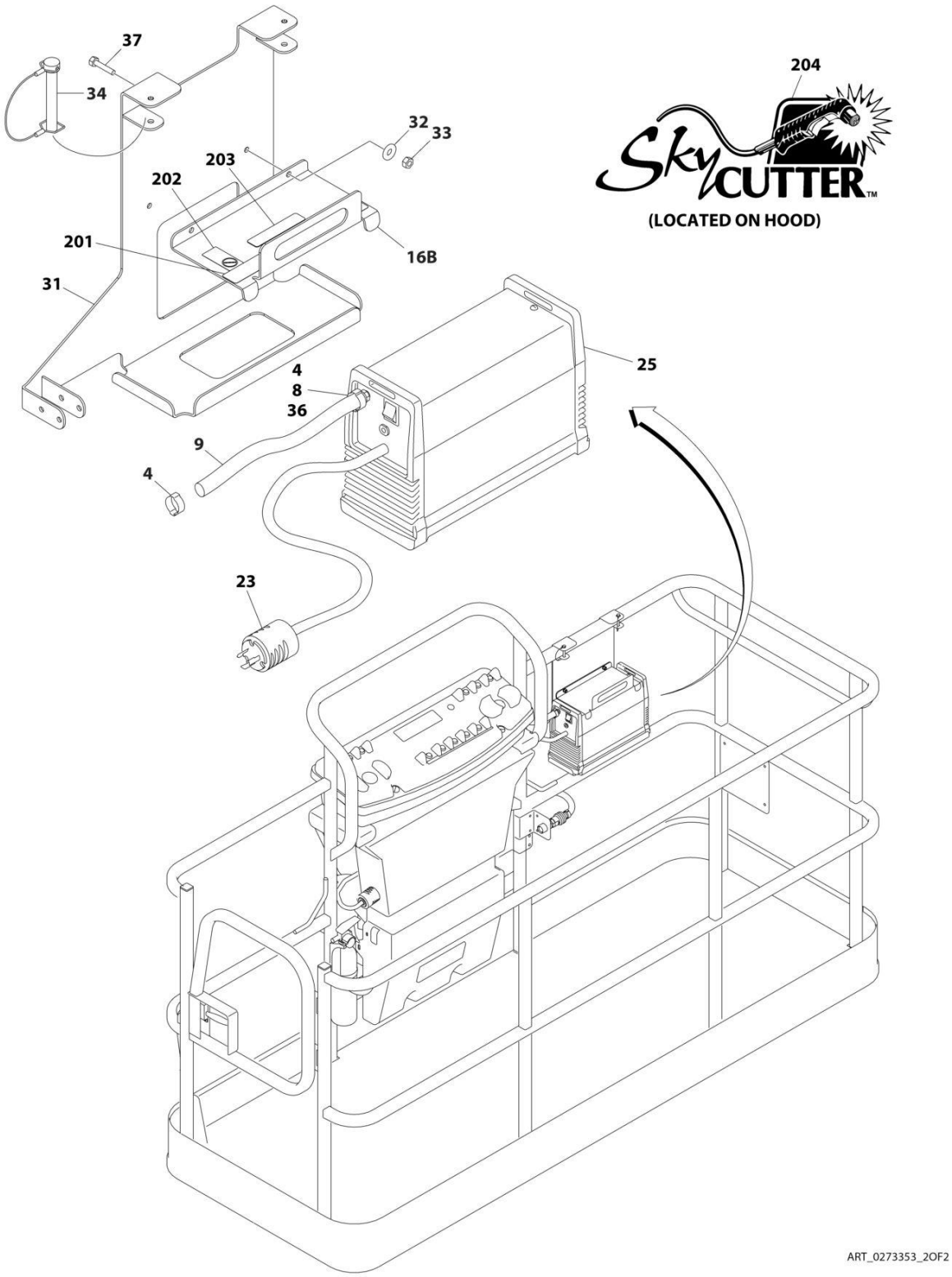
37
34
32
33
203
202
201
16B
31
204
SkyCUTTER™
(LOCATED ON HOOD)
4
8
36
25
9
4
23
ART_0273353_2OF2

FIGURE 4-18. SKYCUTTER INSTALLATION

ITEM	PART NUMBER	QTY	DESCRIPTION	REV
		Ref	**SKYCUTTER INSTALLATIONS**	
	1001098149	Ref	**50Hz/60Hz Power Supply**	D
	0273353	Ref	**60Hz SkyWelder/SkyCutter Combo**	G
		Ref	**Note: USA Built Machines ANSI, ANSI Export and CSA Spec Only.**	
		Ref	**Note: China Built Machines ANSI Export and China Specs Only.**	
		Ref	**Note: Not Available on 600S Shipyard Machines.**	
1	0100011	AR	Compound, Locking	
2	0641406	2	Bolt 1/4 x 3/4	
2	0630518	2	Screw #10 x 3/4	
3	0641606	4	Bolt 3/8 x 3/4	
4	1320177	2	Clamp	
5	1320302	2	Clamp	
6	1671093	1	Cover, Plug (SkyWelder/SkyCutter Combo Only)	
7	2030010	1	Extinguisher, Fire	
8	2180832	1	Fitting, Barbed/NPT	
9		Ref	Hose Options:	
9	2720160	4.5 ft/ 1.37m	0273353 Installation	
9	2720160	3 ft/ 0.9m	1001098149 Installation	
10	2902217	1	Weld Leads Kit	
11	3300151	4	Nut 1/4	
12	3311405	2	Nut 1/4	
12	3311005	2	Nut #10	
13	3311605	4	Nut 3/8	
14	3573400	1	Bracket	
15	3573641	NLA	Angle (Use p/n 3577121)	
16		Ref	Plate Options:	
16A	3573642	1	0273353 Installation	
16B	3576799	1	1001098149 Installation	
20	4240099	AR	Tie-Strap (Not Shown)	
21	4420037	2.36 ft/ 0.71m	Tape	
22		Ref	Plug, Twist Lock Options:	
22	4460971	1	1001098149 Installation	
22	4460962	1	0273353 Installation	
23	4460971	1	Plug, Twist Lock	
24	4530028	1	Welder Assembly (See WELDER ASSEMBLY for Breakdown)	
25	1001098012	1	Plasma Cutter Assembly (See PLASMA CUTTER ASSEMBLY for Breakdown)	
26	4751400	4	Washer 1/4	
27	4751600	8	Washer 3/8	
29	4846627	1	Support	
31	4341301	1	Bracket (Use p/n 1001145405)	
32	4811700	2	Washer M6	
33	3290605	2	Nut M6	
34	3421453	3	Pin	
36	0100020	1	Sealant	
37	4010608	2	Screw M6 x 16	
38	4751400	2	Washer 1/4	

ITEM	PART NUMBER	QTY	DESCRIPTION	REV
38	4751000	2	Washer #10	
	0272448	Ref	**SKYWELDER DECAL INSTALLATION**	
101	1705355	2	Decal - SkyWelder	
102	1702868	1	Decal - No Hands	
103	1705305	1	Decal - Weld Leads	
104	1705375	1	Decal - 240V - 3 Phase - 60Hz	
105	1705466	NLA	Decal - Weight (Use p/n 1001228988)	
	0272599	Ref	**SKYCUTTER DECAL INSTALLATION**	
201	1702868	1	Decal - No Hands	
202	1705305	1	Decal - Weld Leads	
203	1705466	NLA	Decal - Weight (Use p/n 1001228988)	
204	1705490	2	Decal - SkyCutter	

FIGURE 4-19. PLASMA CUTTER ASSEMBLY

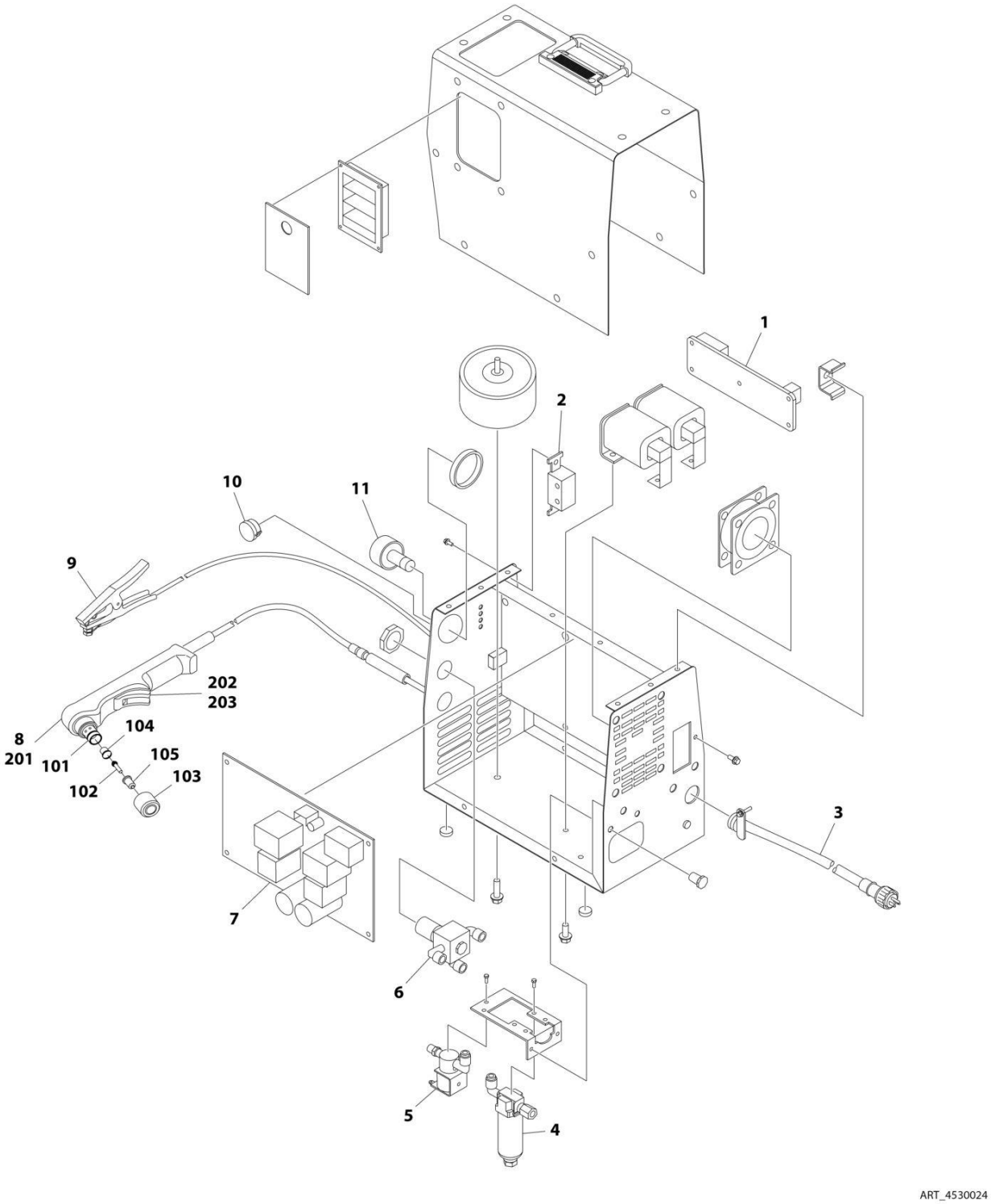

FIGURE 4-19. PLASMA CUTTER ASSEMBLY

ITEM	PART NUMBER	QTY	DESCRIPTION	REV
		Ref	**PLASMA CUTTER ASSEMBLY**	
	4530024	Ref	**Plasma Cutter Assembly - 60Hz Power Supply**	D
	4530025	Ref	**Plasma Cutter Assembly - 50Hz Power Supply**	D
		Ref	**Note: For other components see your Miller Welder Dealer.**	
1	7024519	1	Circuit Card - 60Hz Power Supply	
1	7024538	1	Circuit Card - 50Hz Power Supply	
2	7024520	1	Switch	
3	7024521	10 ft/3m	Cable, Power - 60Hz Power Supply	
3	7024539	10 ft/3m	Cable, Power - 50Hz Power Supply	
4	7024522	1	Filter, Air	
5	7024523	1	Valve, Air - 60Hz Power Supply	
5	7024540	1	Valve, Air - 50Hz Power Supply	
6	7024524	1	Regulator, Air	
7	7024525	1	Circuit Card - 60Hz Power Supply	
7	7024541	1	Circuit Card - 50Hz Power Supply	
8	7024526	1	Torch Assembly (See Items 101-203 for Breakdown)	
9	7024527	1	Clamp	
10	7024528	1	Knob	
11	7024529	1	Gauge, Air	
	7024526	Ref	**TORCH ASSEMBLY**	
101	7024530	1	O-Ring	
102	7024531	1	Electrode	
103	7024532	1	Cup, Retaining	
104	7024533	1	Swirl Ring	
105	7024534	1	Tip	
201	7024535	1	Handle, Torch	
202	7024536	1	Switch	
203	7024537	1	Trigger	

FIGURE 4-20. PLASMA CUTTER ASSEMBLY

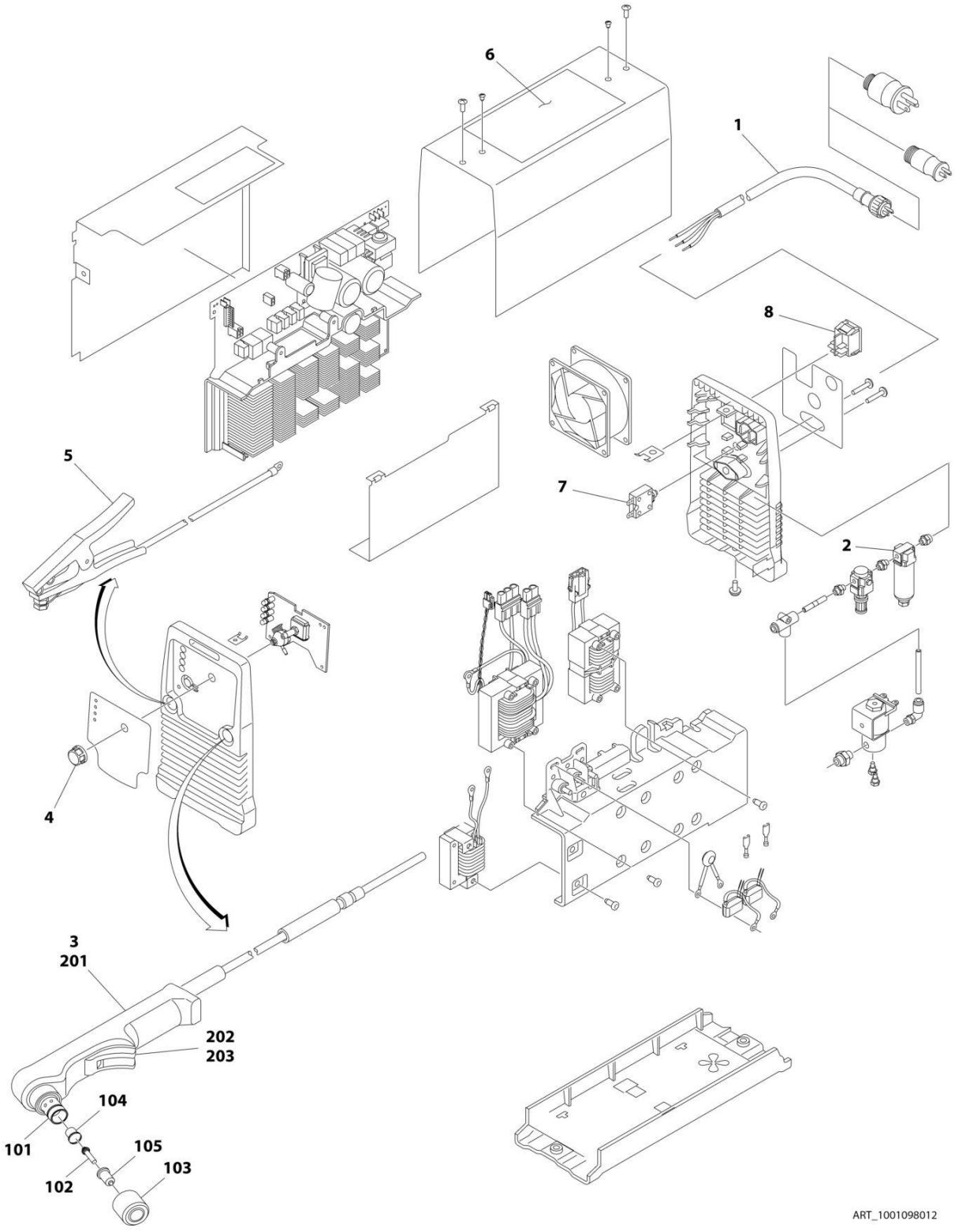

FIGURE 4-20. PLASMA CUTTER ASSEMBLY

ITEM	PART NUMBER	QTY	DESCRIPTION	REV
	1001098012	Ref	**PLASMA CUTTER ASSEMBLY**	A
		Ref	**Note: For Other Components, contact your Miller Welder Dealer.**	
1	70001424	1	Cable, Power	
1	70001425	1	Decal - Voltage Warning	
2	70001427	1	Filter, Regulator	
3	70001428	1	Torch Assembly (See Items 101-203 for Breakdown)	
4	7024471	1	Knob	
5	70001429	1	Clamp with Cable	
6	70001430	1	Decal - Caution	
7	70001431	1	Breaker, Circuit	
8	70001432	1	Switch, Rocker	
	70001428	Ref	**TORCH ASSEMBLY**	
101	7024530	1	O-Ring	
102	7024531	1	Electrode	
103	7024532	1	Cup, Retaining	
104	7024533	1	Swirl Ring	
105	7024534	1	Tip	
201	7024535	1	Handle, Torch	
202	7024536	1	Switch	
203	7024537	1	Trigger	

FIGURE 4-21. PIPE RACKS INSTALLATION

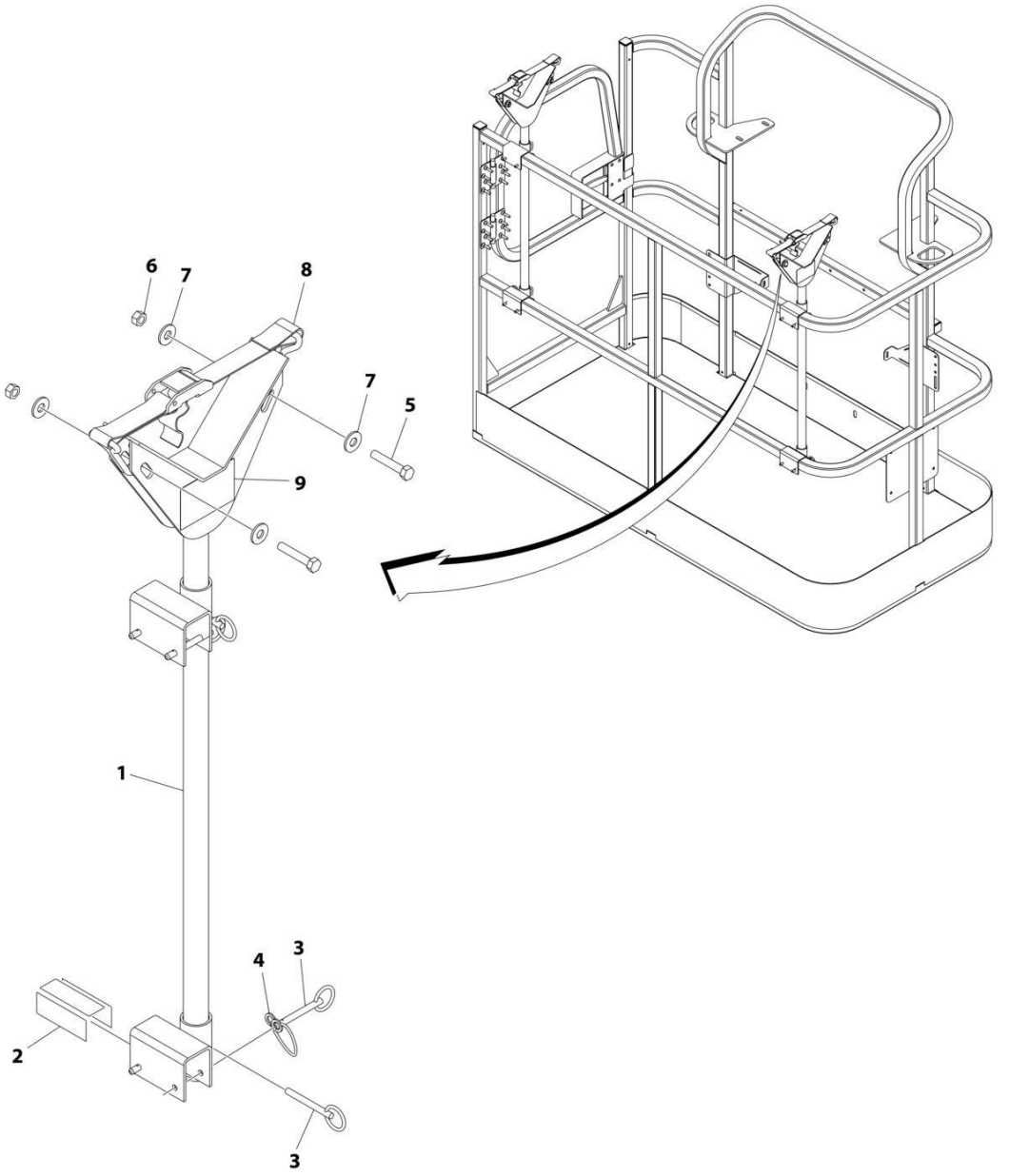

FIGURE 4-21. PIPE RACKS INSTALLATION

ITEM	PART NUMBER	QTY	DESCRIPTION	REV
	0257728	Ref	**PIPE RACK INSTALLATION (ANSI AND CSA SPECS)**	2/C
	0274661	Ref	**PIPE RACK INSTALLATION (AUSTRALIAN SPECS)**	1/A
		Ref	**Note: USA Built Machines ANSI, Australian and CSA Specs Only.**	
1	4845582	2	Rack, Pipe	
2	4420062	AR	Tape	
3	3422661	10	Pin	
4	1060379	4	Lanyard	
5	0641514	4	Bolt 5/16 x 1-3/4	
6	3311505	4	Nut 5/16	
7	4751500	8	Washer 5/16	
8	0480100	2	Tie-Down	
9	1703683	2	Decal - Capacity (ANSI and CSA Specs)	
9	1706510	2	Decal - Capacity (Australian Specs)	

FIGURE 4-22. SKYAIR AIR COMPRESSOR INSTALLATION

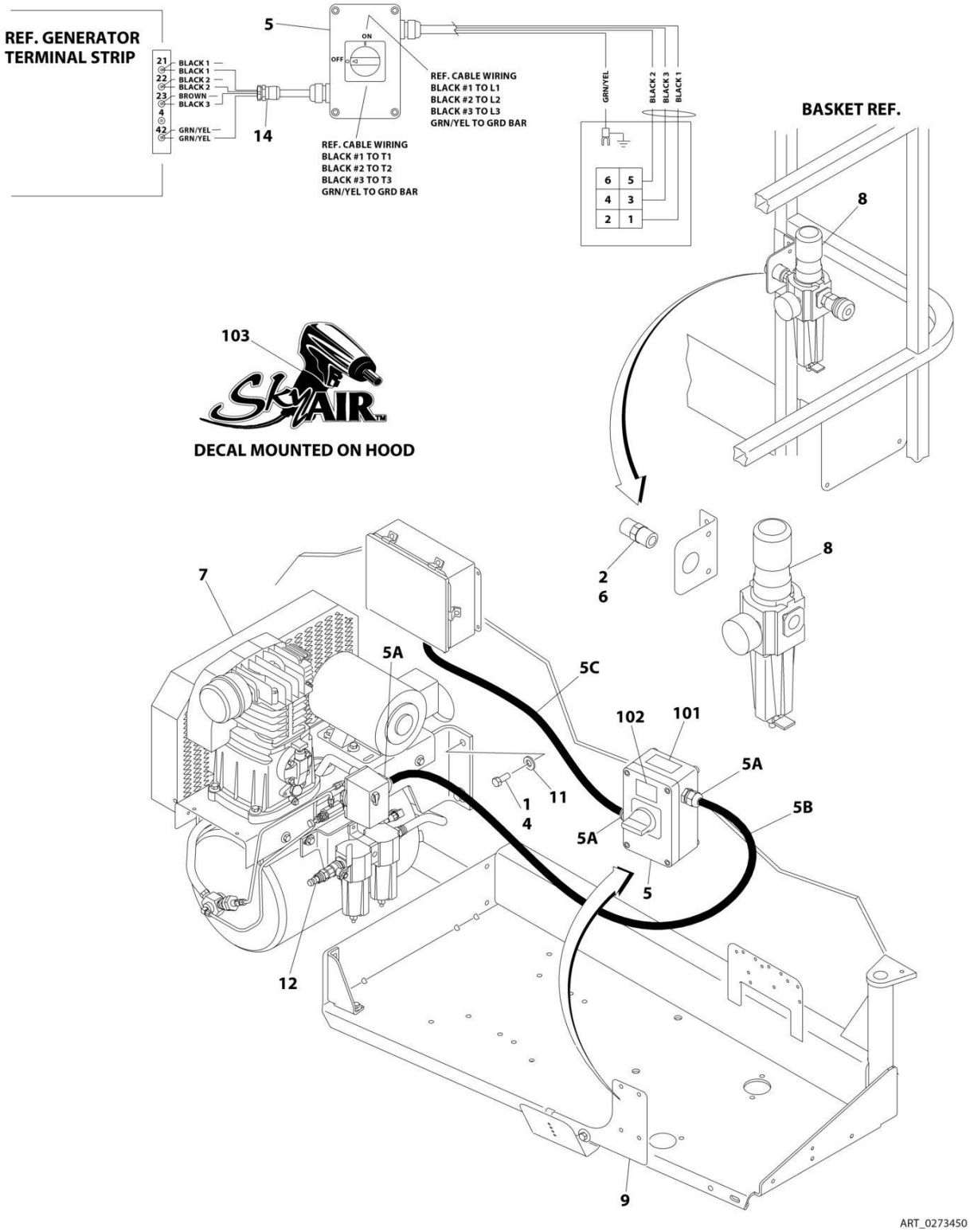

FIGURE 4-22. SKYAIR AIR COMPRESSOR INSTALLATION

ITEM	PART NUMBER	QTY	DESCRIPTION	REV
	0273450	Ref	**SKYAIR AIR COMPRESSOR INSTALLATION**	D
		Ref	**Note: ANSI, ANSI Export, China and CSA Specs Only.**	
		Ref	**Note: Not Available on 600S Shipyard Machines.**	
		Ref	**Note: Only Available on 60Hz Machines.**	
1	0100019	AR	Compound, Locking	
2	0100020	AR	Sealant	
4	0641810	4	Bolt 1/2 x 1-1/4	
5	0861642	1	Control Box Assembly	
5A	4460633	3	Connector, Strain Relief	
5B	70002948	AR	Cable, Electrical - 12/4 (13ft/4m)	
5C	70002948	AR	Cable, Electrical - 12/4 (30in/76cm)	
6	2220252	1	Fitting, Adapter	
7	3600386	1	Compressor Assembly (See AIR COMPRESSOR ASSEMBLY for Breakdown)	
8	3720021	1	Filter/Regulator Assembly	
8	7027781	1	Service Kit (Includes Gaskets and Seals)	
8	7027782	1	Filter	
8	7027784	1	Gauge	
8	7027783	1	Valve, Drain	
9	4340747	1	Bracket, Control Box	
11	4751800	4	Washer 1/2	
12	2220750	1	Fitting	
14	4460428	1	Connector, Strain Relief	
	0273687	Ref	**DECAL INSTALLATION**	A
101	1705836	1	Decal - Hazard Voltage	
102	1705837	1	Decal - Air Compressor	
103	1705886	2	Decal - SkyAir	

FIGURE 4-23. AIR COMPRESSOR ASSEMBLY

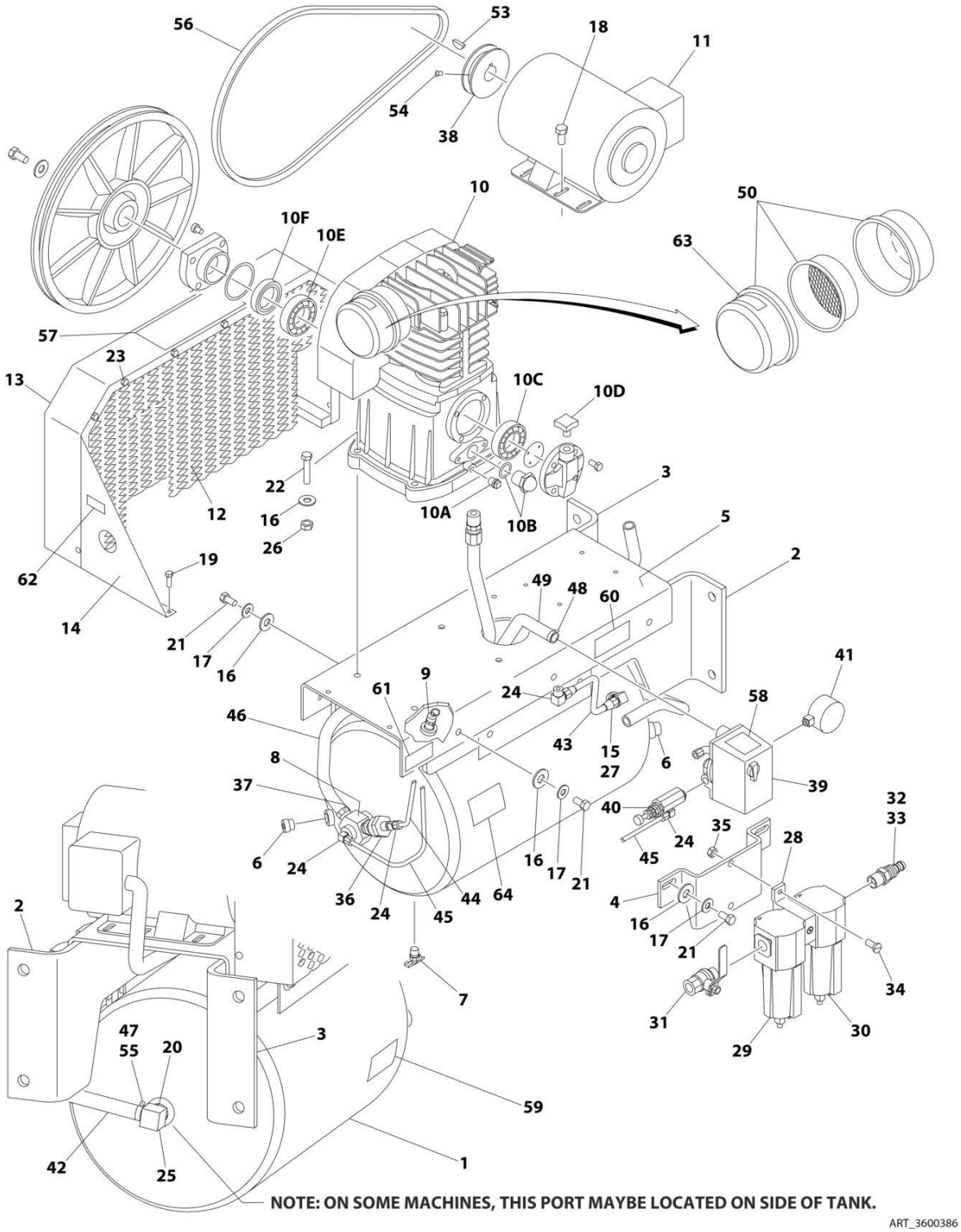

ART_3600386

FIGURE 4-23. AIR COMPRESSOR ASSEMBLY

ITEM	PART NUMBER	QTY	DESCRIPTION	REV
	3600386	Ref	**AIR COMPRESSOR ASSEMBLY**	B
1	7026632	1	Tank	
2	See Note	1	Bracket, Mounting (Note: Not Available for Purchase)	
3	See Note	1	Bracket, Mounting (Note: Not Available for Purchase)	
4	See Note	1	Bracket, Regulator Mounting (Note: Not Available for Purchase)	
5	See Note	1	Deck (Note: Not Available for Purchase)	
6	See Note	2	Plug (Note: Not Available for Purchase)	
7	7026633	1	Valve, Drain	
8	7026634	1	Valve, Check	
9	7026635	1	Valve, Safety	
10	7026636	1	Pump Assembly	
10	7026659	1	Gasket and Seal Kit	
10A	7026651	1	Plug, Oil Drain	
10B	7026652	1	Gauge, Oil Sight	
10C	7026653	1	Bearing	
10D	7026654	1	Cap, Oil Fill	
10E	7026655	1	Bearing	
10F	7026656	1	Seal	
11	7026637	1	Motor Assembly	
11	See Note	1	Brush Kit (Note: Not Available for Purchase)	
12	See Note	1	Screen, Inner (Note: Not Available for Purchase)	
13	See Note	1	Guard, Belt (Note: Not Available for Purchase)	
14	See Note	2	Support (Note: Not Available for Purchase)	
15	See Note	1	Bushing (Note: Not Available for Purchase)	
16	4751600	18	Washer 3/8	
17	4761600	10	Washer 3/8	
18	0641506	4	Bolt 5/16 x 3/4	
19	0641406	8	Bolt 1/4 x 3/4	
20	See Note	1	Bushing (Note: Not Available for Purchase)	
21	0641610	10	Bolt 3/8 x 1-1/4	
22	0641616	4	Bolt 3/8 x 2	
23	See Note	10	Bolt 1/4 x 1/2 (Note: Not Available for Purchase)	
24	See Note	4	Fitting (Note: Not Available for Purchase)	
25	See Note	1	Fitting, Barbed (Note: Not Available for Purchase)	
26	3311605	4	Nut 3/8	
27	See Note	1	Fitting, Compression (Note: Not Available for Purchase)	
28	See Note	1	Bracket, Mounting (Note: Not Available for Purchase)	
29	7026660	1	Filter, Oil Removal	
30	7026661	1	Filter, Water Removal	
31	70001663	1	Valve, Ball Shut-Off	
32	See Note	1	Bushing (Note: Not Available for Purchase)	
33	See Note	1	Fitting, Barbed (Note: Not Available for Purchase)	
34	See Note	2	Screw 1/4 x 1 (Note: Not Available for Purchase)	
35	3311405	2	Nut 1/4	
36	See Note	1	Unloader (Note: Not Available for Purchase)	
37	See Note	1	Fitting (Note: Not Available for Purchase)	
38	See Note	1	Pulley (Note: Not Available for Purchase)	
39	7026638	1	Switch, Pressure	
40	7026639	1	Valve, Pilot	
41	7026640	1	Gauge	

ITEM	PART NUMBER	QTY	DESCRIPTION	REV
42	See Note	1	Hose (Note: Not Available for Purchase)	
43	See Note	1	Tube, Feed (Note: Not Available for Purchase)	
44	See Note	1	Tube (Note: Not Available for Purchase)	
45	See Note	1	Tube (Note: Not Available for Purchase)	
46	See Note	1	Aftercooler (Note: Not Available for Purchase)	
47	See Note	2	Clamp (Note: Not Available for Purchase)	
48	See Note	2	Clamp (Note: Not Available for Purchase)	
49	See Note	1	Harness, Wiring (Note: Not Available for Purchase)	
50	7026658	1	Filter Assembly	
50	7026641	1	Element, Filter	
51	See Note	23 oz	Oil, Compressor (Note: Not Available for Purchase) (Not Shown)	
52	0100020	AR	Sealant (Not Shown)	
53	See Note	1	Key (Note: Not Available for Purchase)	
54	See Note	2	Setscrew (Note: Not Available for Purchase)	
55	See Note	2	Cover, Clamp End (Note: Not Available for Purchase)	
56	7026642	1	Belt	
57	7026643	1	Decal - Unit Warning	
58	7026644	1	Decal - Pressure Switch Warning	
59	7026645	1	Decal - Drain Tank Warning	
60	7026646	1	Decal - Compressor Maintenance	
61	7026647	1	Decal - Initial Oil Fill	
62	7026648	1	Decal - Hot Surfaces Warning	
63	7026649	1	Decal - Paper Element Cleaning	
64	7026650	1	Decal - Dual Control	

SECTION 5 - CYLINDER

FIGURE 5-1. AXLE LOCKOUT CYLINDER ASSEMBLY

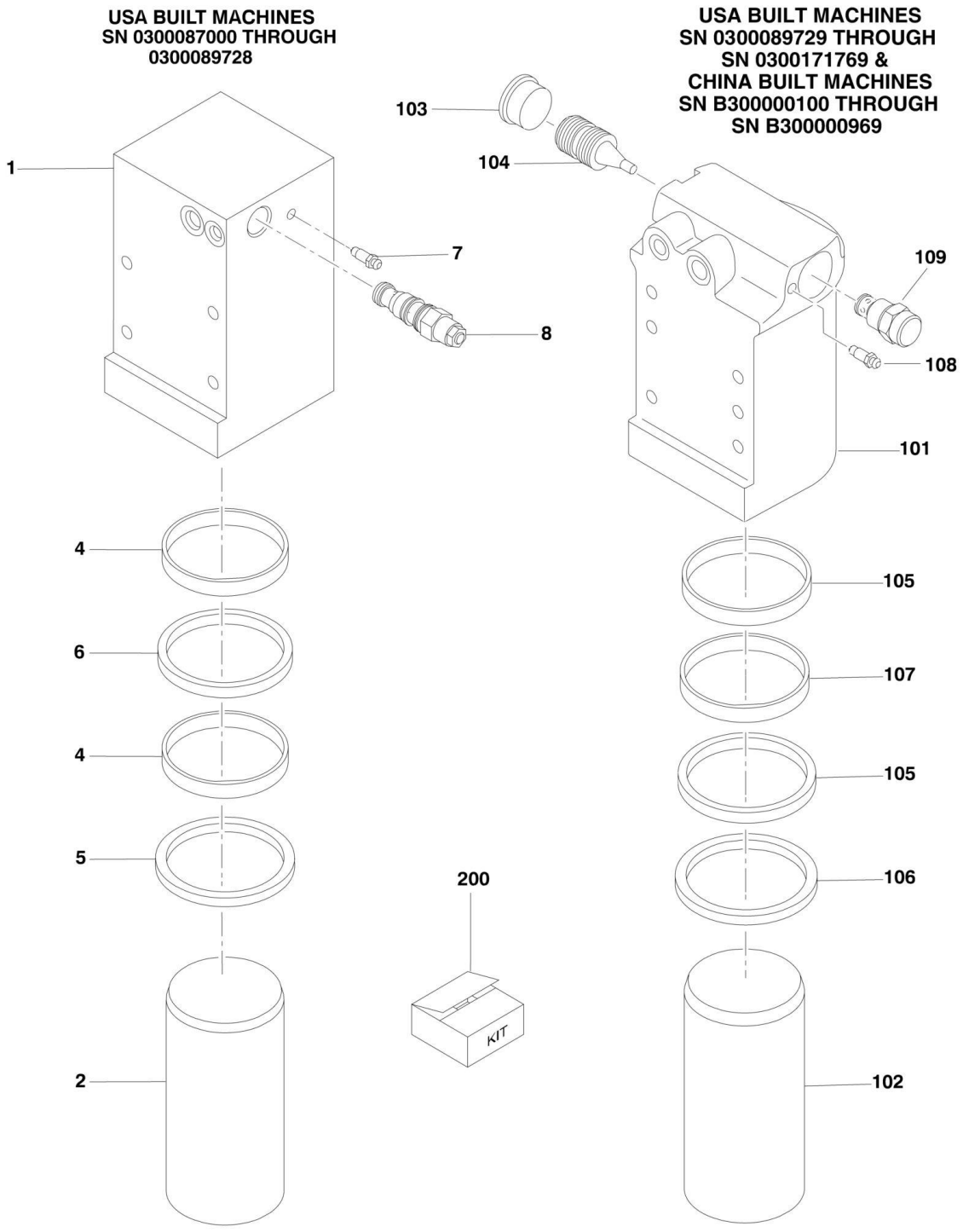

FIGURE 5-1. AXLE LOCKOUT CYLINDER ASSEMBLY

ITEM	PART NUMBER	QTY	DESCRIPTION	REV
	1684280	Ref	**AXLE LOCKOUT CYLINDER ASSEMBLY (USA BUILT MACHINES) (SN 0300087000 through 0300089728)**	G
		Ref	**Note: Service Kit p/n 1001167359 may have been installed as a Service Replacement. Kit uses p/n 1684465 Cylinder. In kit has been installed, Use Item 101-109 for Service**	
1	1684289	1	Barrel	
2	1684290	1	Rod	
4	See Note	NSS	Ring, Wear (Note: Use Item 200)	
5	See Note	NSS	Wiper (Note: Use Item 200)	
6	See Note	NSS	Seal, Rod (Note: Use Item 200)	
7	4640476	1	Bleeder	
8	4641319	1	Cartridge, Valve	
8	7024879	1	Seal Kit - 4641319 Cartridge	
	1684465	Ref	**AXLE LOCKOUT CYLINDER ASSEMBLY (USA BUILT MACHINES) (SN 0300089729 through 0300171769)**	G
	1684465	Ref	**AXLE LOCKOUT CYLINDER ASSEMBLY (CHINA BUILT MACHINES) (SN B300000100 through B300000969)**	G
101	0370026	1	Barrel	
102	1684290	1	Rod	
103	2220890	1	Plug	
104	3480288	1	Piston, Pilot	
105	See Note	NSS	Ring, Wear (Note: Use Item 200)	
106	See Note	NSS	Wiper (Note: Use Item 200)	
107	See Note	NSS	Seal, Rod (Note: Use Item 200)	
108	4640858	1	Bleeder	
109	4641390	1	Cartridge, Valve	
109	7017496	1	Seal Kit - 4641390 Cartridge	
		Ref	**SEAL KIT OPTIONS**	
200	2902266	1	Seal Kit (Includes Items 4-6 or 105-107. Seals are the same)	

FIGURE 5-2. LEVEL CYLINDER ASSEMBLY - PLATFORM SLAVE

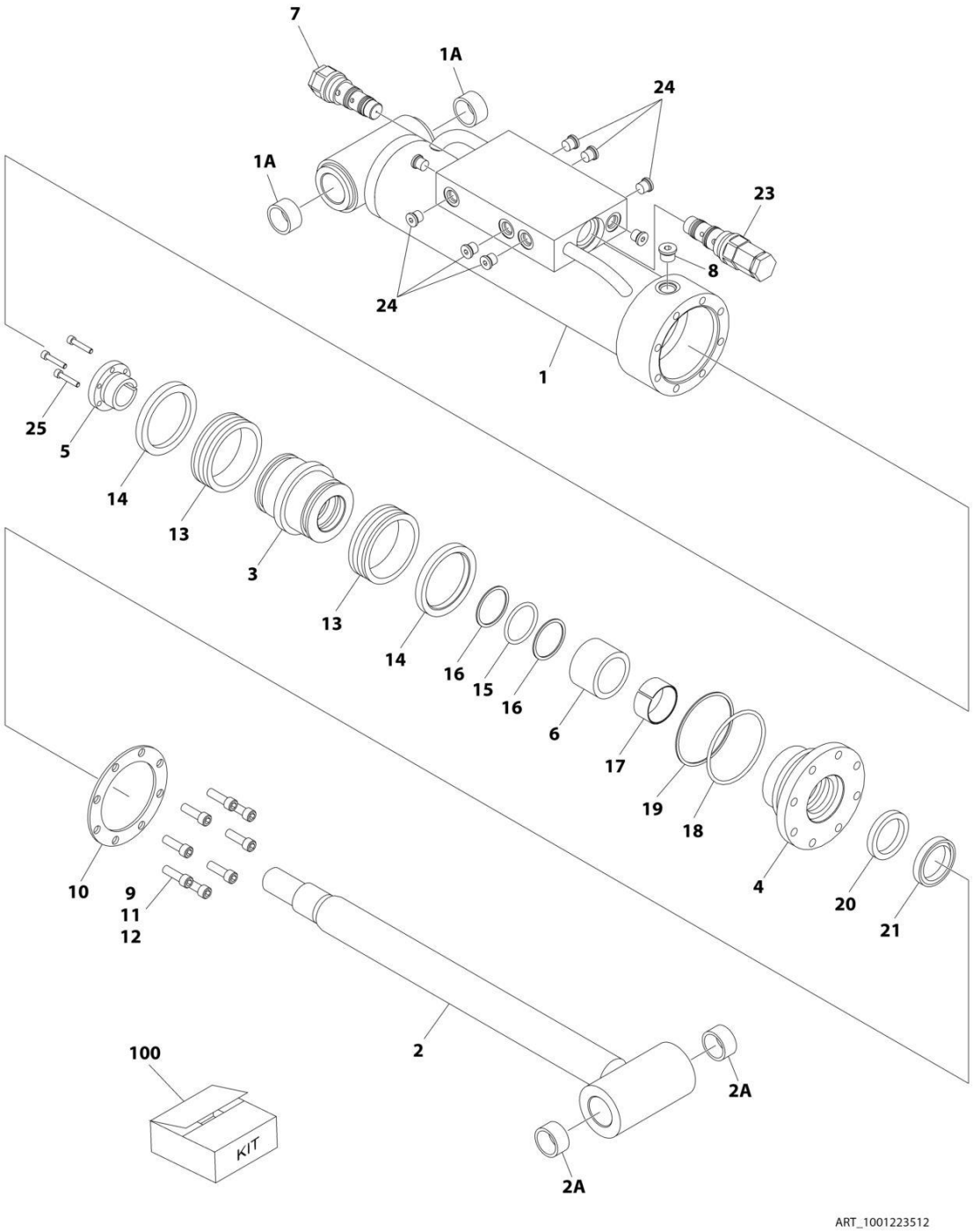

FIGURE 5-2. LEVEL CYLINDER ASSEMBLY - PLATFORM SLAVE

ITEM	PART NUMBER	QTY	DESCRIPTION	REV
	1683415	Ref	**LEVEL CYLINDER ASSEMBLY - 600S (ORIGINAL EQUIPMENT)**	G
	1001223512	Ref	**LEVEL CYLINDER ASSEMBLY - 600S (SERVICE REPLACEMENT)**	A
	1683418	Ref	**LEVEL CYLINDER ASSEMBLY - 600SJ & 660SJ (ORIGINAL EQUIPMENT)**	I
	1001223331	Ref	**LEVEL CYLINDER ASSEMBLY - 600SJ & 660SJ (SERVICE REPLACEMENT)**	A
		Ref	**Note: 600S Only China Built Machines SN B300000817 to SN B300000859 use cylinder p/n 1001140591. For replacement components contact JLG Parts Dept**	
		Ref	**Note: Original Cylinder May Have Been Replaced with Service Replacement. Identify PN Stamped on Cylinder Before Ordering Parts.**	
1		Ref	Barrel Weldment	
1	1683977	1	Barrel Weldment 600S (Note: Includes Item 1A)	
1	1001223511	1	Barrel Weldment 600S (1001223512 Cylinder) (Note: Includes Item 1A)	
1	1683952	1	Barrel Weldment 600SJ & 660SJ (Note: Item 1A not included - Purchase Separately)	
1	1001223332	1	Barrel Weldment 660SJ (1001223331 Cylinder) (Note: Item 1A not included - Purchase Separately)	
1A		Ref	Bushing Options:	
1A	0961947	2	Bushing 600S	
1A	0961951	2	Bushing 600SJ & 660SJ	
2		Ref	Rod Weldment Options:	
2	1683976	1	Rod Weldment 600S (Note: Includes Item 2A)	
2	1683963	1	Rod Weldment 600SJ & 660SJ (Note: Item 1A not included - Purchase Separately)	
2A		Ref	Bushing Options:	
2A	0961947	2	Bushing 600S	
2A	0961951	2	Bushing 600SJ & 660SJ	
3		Ref	Piston Options:	
3	3480210	1	Piston 600S	
3	3480188	1	Piston 600SJ & 660SJ	
4		Ref	Head Options:	
4	1683053	1	Head 600S	
4	1683055	1	Head 600SJ & 660SJ	
5		Ref	Bushing, Tapered (Includes Item 25) Options:	
5	0961893	1	Bushing, Tapered 600S	
5	0961894	1	Bushing, Tapered 600SJ & 660SJ	
6	4566468	1	Spacer	
7	4640509	1	Cartridge, Valve	
7	2900792	1	Seal Kit - 4640509 Valve	
8	2220885	1	Plug, O-Ring	
9		Ref	Capscrew, Socket Head Options:	
9	3931516	8	Capscrew, Socket Head 600S - Capscrew 5/16in-18NC x 1in	
9	3931620	8	Capscrew, Socket Head 600SJ & 660SJ - Capscrew 3/8in-16NC x 1-1/4in	
10		Ref	Ring, Washer Options:	
10	3760368	1	Ring, Washer 600S	
10	3760369	1	Ring, Washer 600SJ & 660SJ	
11	0100011	AR	Compound, Locking	

SECTION 5 - CYLINDER

ITEM	PART NUMBER	QTY	DESCRIPTION	REV
12	0100038	AR	Primer, Locking	
13	See Note	NSS	Seal (Note: Use Item 100A or 100B)	
14	See Note	NSS	Ring, Lock (Note: Use Item 100A or 100B)	
15	See Note	NSS	O-Ring (Note: Use Item 100A or 100B)	
16	See Note	NSS	Ring, Back-up (Note: Use Item 100A or 100B)	
17	See Note	NSS	Ring, Wear (Note: Use Item 100A or 100B)	
18	See Note	NSS	O-Ring (Note: Use Item 100A or 100B)	
19	See Note	NSS	Ring, Back-up (Note: Use Item 100A or 100B)	
20	See Note	NSS	Seal, Rod (Note: Use Item 100A or 100B)	
21	See Note	NSS	Wiper (Note: Use Item 100A or 100B)	
23	4640932	1	Cartridge, Valve	
23	7011112	1	Seal Kit - 4640932 Valve	
24	2220883	8	Plug, O-Ring	
25		Ref	Bolt Options:	
25	0630534	3	Bolt 600S - Bolt #10-24NC x 1in	
25	0630535	3	Bolt 600SJ & 660SJ - Bolt 1/4in-20NC x 1-1/8in	
100		Ref	Seal Kit Options (Includes Items 13-21):	
100A	2901303	1	Seal Kit 600S Seal Kit	
100B	2901301	1	Seal Kit 600SJ & 660SJ Seal Kit	

FIGURE 5-3. LEVEL CYLINDER ASSEMBLY - PLATFORM SLAVE - 600S (SERVICE REPLACEMENT)

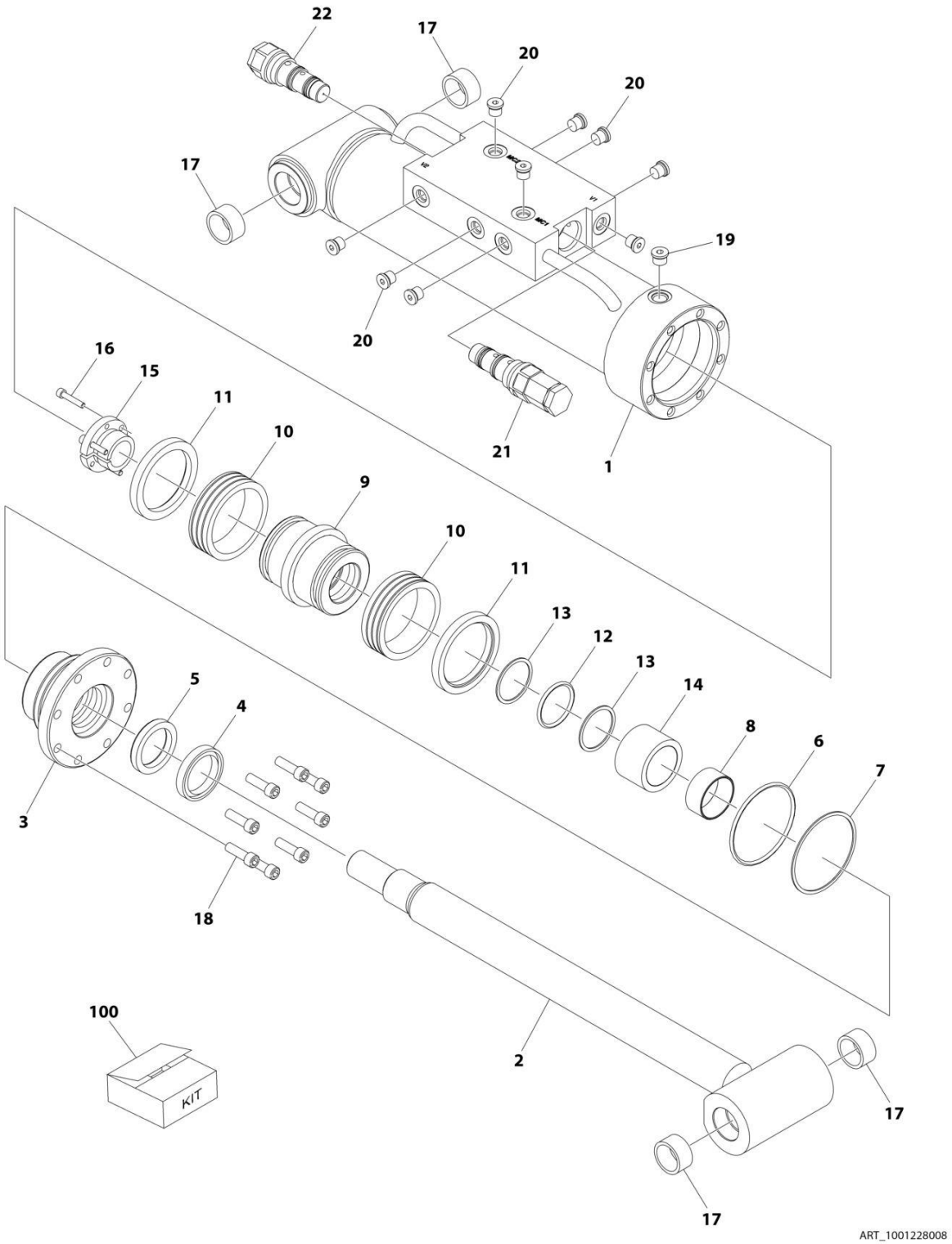

FIGURE 5-3. LEVEL CYLINDER ASSEMBLY - PLATFORM SLAVE - 600S (SERVICE REPLACEMENT)

ITEM	PART NUMBER	QTY	DESCRIPTION	REV
	1001228008	Ref	LEVEL CYLINDER ASSEMBLY - PLATFORM SLAVE	C
		Ref	Note: Original Cylinder may have been replaced with Service Replacement. Identify PN Stamped on Cylinder Before Ordering Parts.	
1	See Note	NSS	Barrel (Note: Use p/n 1001228008)	
2	70006648	1	Rod	
3	70006649	1	Head	
4	See Note	NSS	Wiper (Note: Use Item 100)	
5	See Note	NSS	Seal Rod (Note: Use Item 100)	
6	See Note	NSS	O-Ring (Note: Use Item 100)	
7	See Note	NSS	Ring, Back-up (Note: Use Item 100)	
8	See Note	NSS	Ring, Wear (Note: Use Item 100)	
9	70006650	1	Piston	
10	See Note	NSS	Seal (Note: Use Item 100)	
11	See Note	NSS	Ring, Lock (Note: Use Item 100)	
12	See Note	NSS	O-Ring (Note: Use Item 100)	
13	See Note	NSS	Ring, Back-up (Note: Use Item 100)	
14	70006651	1	Spacer	
15	0961893	1	Bushing, Tapered	
16	0630534	3	Bolt #10 x 1	
17	0961947	4	Bushing	
18	3931516	8	Capscrew, Socket Head	
19	2220885	AR	Plug, O-Ring	
20	2220883	10	Plug, O-Ring	
21	4640932	1	Cartridge, Valve	
21	7011112	1	Seal Kit - 4640932 Valve	
22	4640509	1	Cartridge, Valve	
22	2900792	1	Seal Kit - 4640509 Valve	
100	2901303	1	Seal Kit - 1001228008 Cylinder (Includes Items 4-8 & 10-13)	

FIGURE 5-4. LEVEL CYLINDER ASSEMBLY - PLATFORM SLAVE - 600SJ & 660SJ (SERVICE REPLACEMENT)

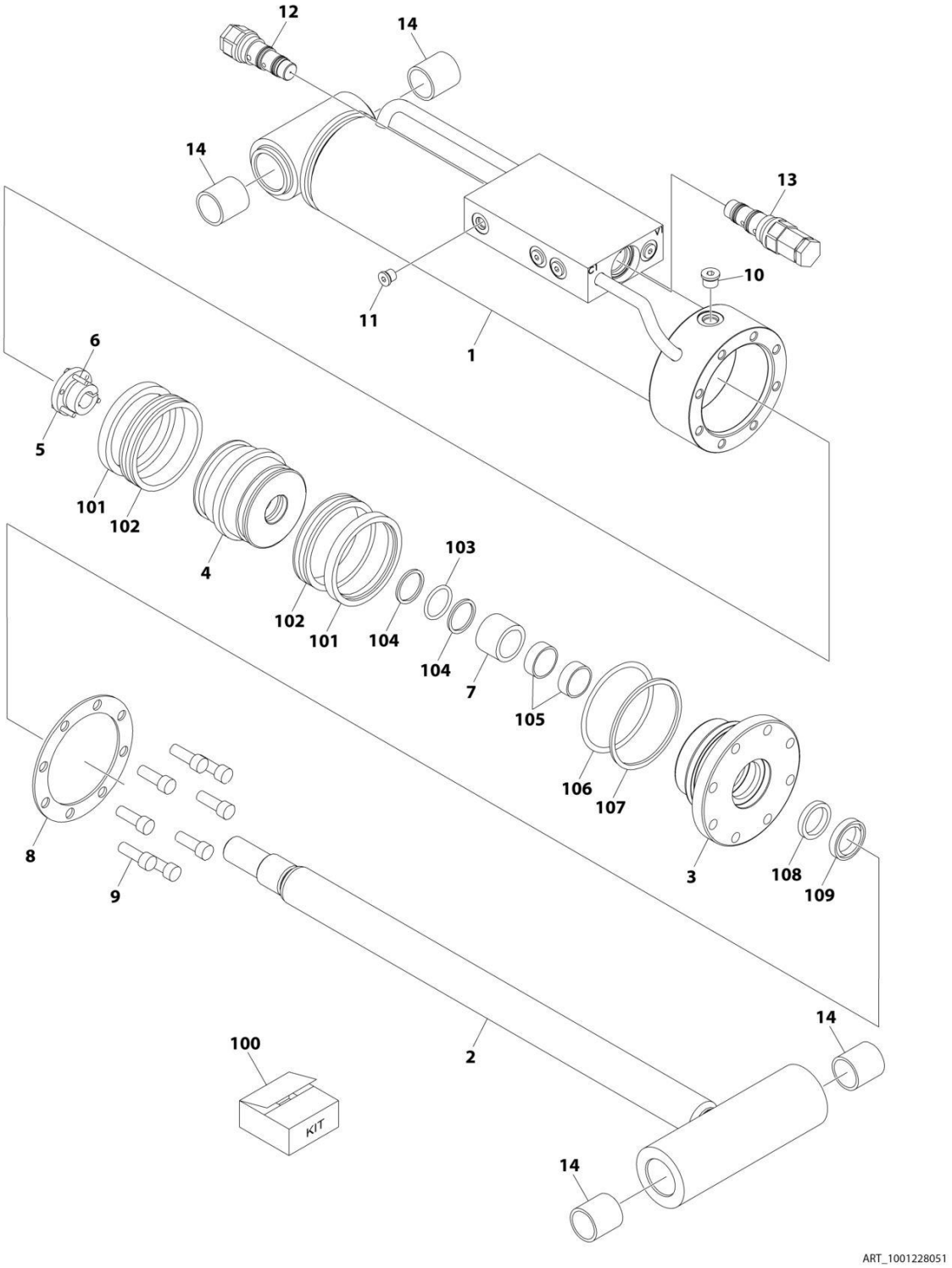

FIGURE 5-4. LEVEL CYLINDER ASSEMBLY - PLATFORM SLAVE - 600SJ & 660SJ (SERVICE REPLACEMENT)

ITEM	PART NUMBER	QTY	DESCRIPTION	REV
	1001228051	Ref	LEVEL CYLINDER ASSEMBLY	A
		Ref	Note: Original Cylinder May Have Been Replaced with Service Replacement. Identify PN Stamped on Cylinder Before Ordering Parts.	
1	See Note	NSS	Barrel (Note: Use p/n 1001228051)	
2	70006823	1	Rod	
3	70006446	1	Head	
4	70006445	1	Piston	
5	70006444	1	Bushing, Tapered	
6	0630535	3	Bolt 1/4 x 1-1/8	
7	70006443	1	Spacer	
8	70006822	1	Ring, Washer	
9	3931620	8	Capscrew 3/8 x 1-1/4	
10	2220885	1	Plug, O-Ring	
11	2220883	8	Plug, O-Ring	
12	4640509	1	Cartridge, Valve	
12	2900792	1	Seal Kit - 4640509 Valve	
13	4640932	1	Cartridge, Valve	
13	7011112	1	Seal Kit - 4640932 Valve	
14	0961951	4	Bushing	
100	1001138796	1	Seal Kit - 1001228051 Cylinder (Includes Items 101-109)	
101	See Note	NSS	Ring, Lock (Note: Use Item 100)	
102	See Note	NSS	Seal (Note: Use Item 100)	
103	See Note	NSS	O-Ring (Note: Use Item 100)	
104	See Note	NSS	Ring, Back-up (Note: Use Item 100)	
105	See Note	NSS	Ring, Wear (Note: Use Item 100)	
106	See Note	NSS	O-Ring (Note: Use Item 100)	
107	See Note	NSS	Ring, Back-up (Note: Use Item 100)	
108	See Note	NSS	Seal, Rod (Note: Use Item 100)	
109	See Note	NSS	Wiper (Note: Use Item 100)	

FIGURE 5-5. LIFT CYLINDER ASSEMBLY - JIB - 600SJ & 660SJ (ORIGINAL EQUIPMENT)

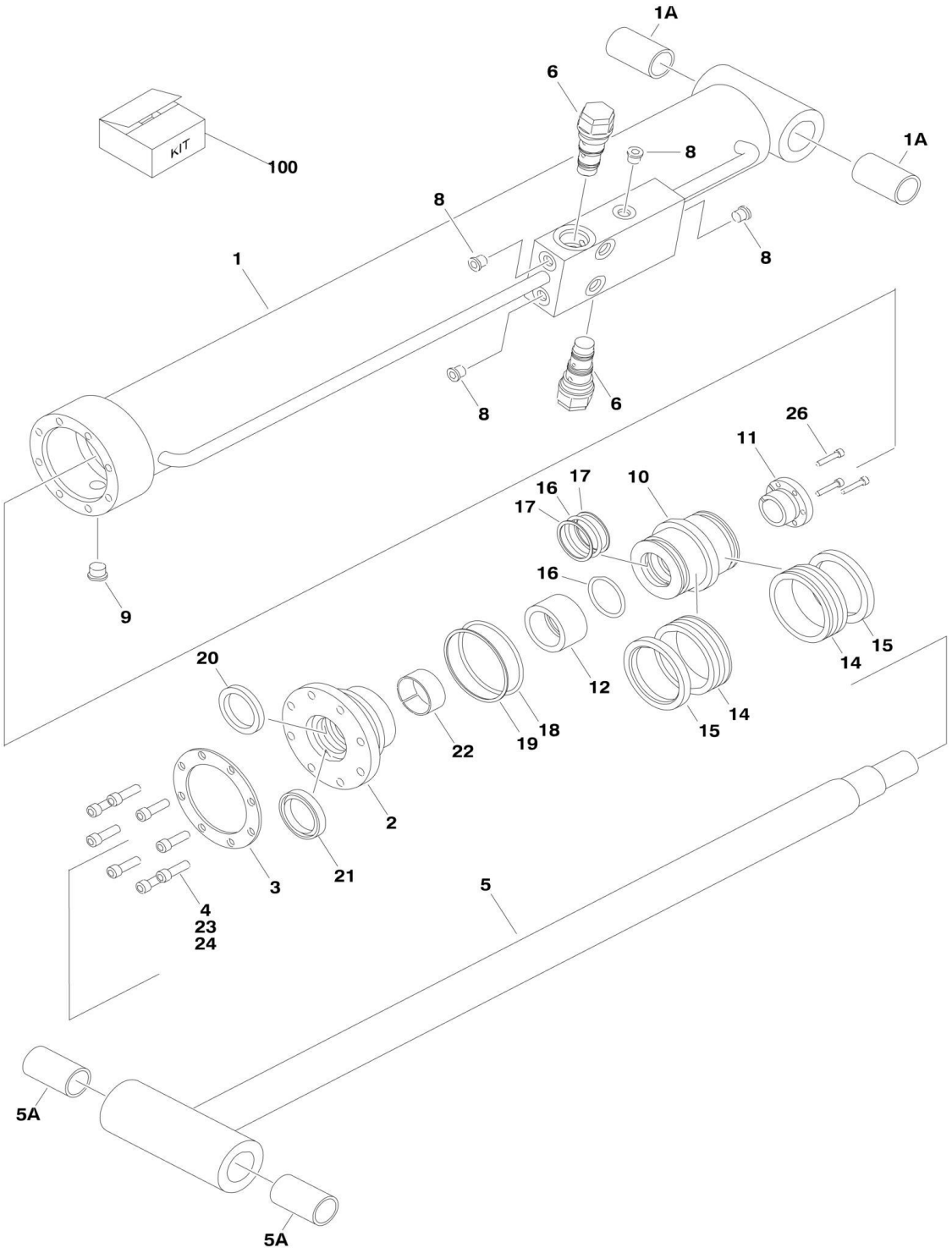

FIGURE 5-5. LIFT CYLINDER ASSEMBLY - JIB - 600SJ & 660SJ (ORIGINAL EQUIPMENT)

ITEM	PART NUMBER	QTY	DESCRIPTION	REV
	1683609	Ref	**JIB LIFT CYLINDER ASSEMBLY - 600SJ & 660SJ**	K
1	1684089	1	Barrel	
1A	0962336	2	Bushing	
2	1683053	1	Head	
3	3760368	1	Ring, Washer	
4	3931516	8	Capscrew, Socket Head 5/16in-18NC x 1in	
5	1684090	1	Rod	
5A	0962336	2	Bushing	
6	4640509	2	Cartridge, Valve	
6	2900792	2	Seal Kit - 4640509 Valve	
8	2220883	2	Plug, O-Ring #4	
9	2220885	1	Plug, O-Ring #6	
10	3480210	1	Piston	
11	0961893	1	Bushing, Tapered	
12	4100100	1	Spacer, Tube	
14	See Note	NSS	Seal (Note: Use Item 100)	
15	See Note	NSS	Ring, Lock (Note: Use Item 100)	
16	See Note	NSS	O-Ring (Note: Use Item 100)	
17	See Note	NSS	Ring, Back-up (Note: Use Item 100)	
18	See Note	NSS	O-Ring (Note: Use Item 100)	
19	See Note	NSS	Ring, Back-up (Note: Use Item 100)	
20	See Note	NSS	Seal, Rod (Note: Use Item 100)	
21	See Note	NSS	Wiper (Note: Use Item 100)	
22	See Note	NSS	Ring, Wear (Note: Use Item 100)	
23	0100011	AR	Compound, Locking	
24	0100038	AR	Primer, Locking	
26	0630534	3	Bolt #10-24NC x 1in	
100	2901303	1	Seal Kit (Includes Items 14-22)	

FIGURE 5-6. LIFT CYLINDER ASSEMBLY (JIB) - 600SJ & 660SJ (SERVICE REPLACEMENT)

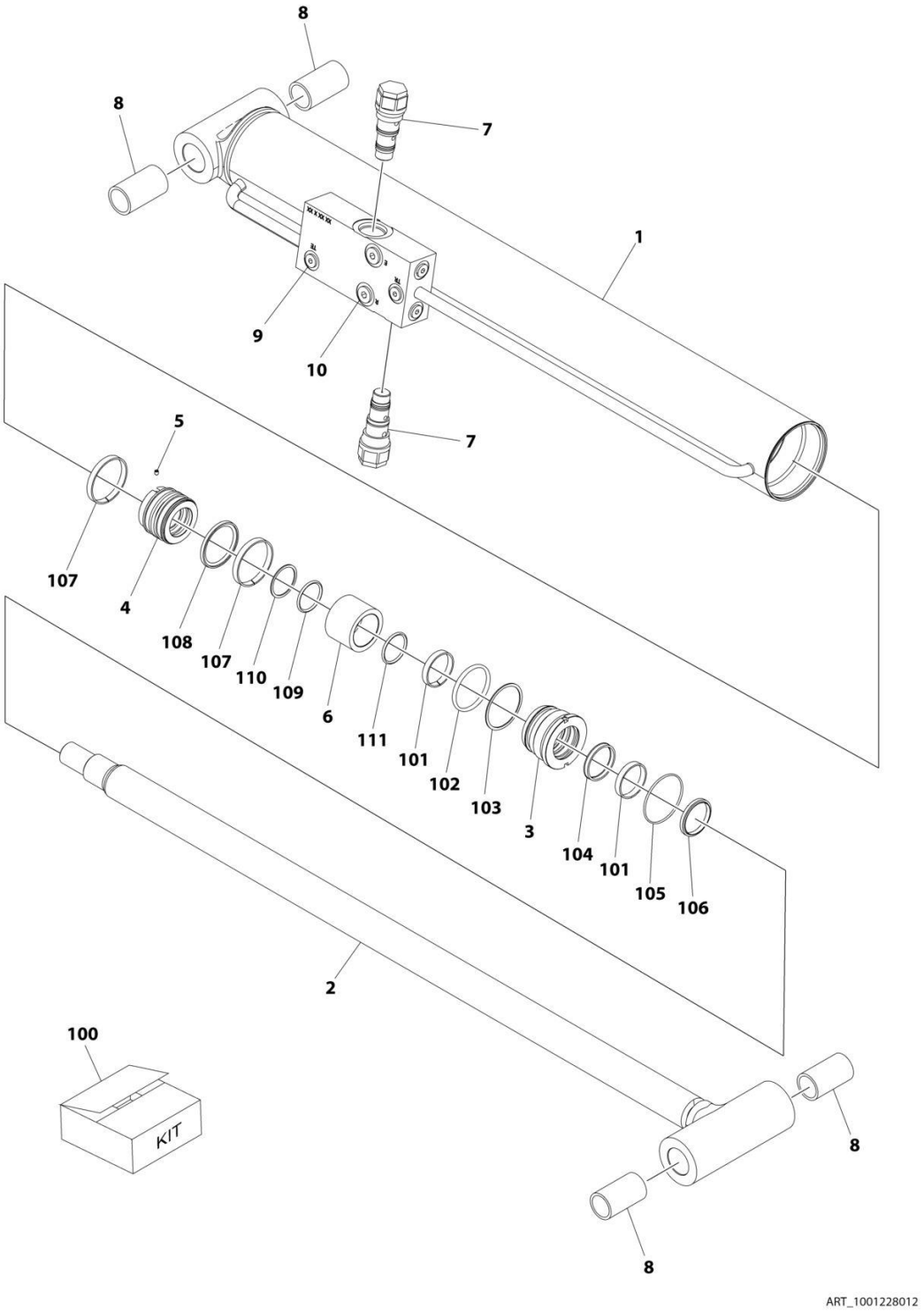

FIGURE 5-6. LIFT CYLINDER ASSEMBLY (JIB) - 600SJ & 660SJ (SERVICE REPLACEMENT)

ITEM	PART NUMBER	QTY	DESCRIPTION	REV
	1001228012	Ref	LIFT CYLINDER ASSEMBLY - JIB	C
		Ref	Note: Original Cylinder May Have Been Replaced with Service Replacement. Identify PN Stamped on Cylinder Before Ordering Parts.	
1	See Note	NSS	Barrel (Note: Not Available for Purchase)	
2	70006572	1	Rod	
3	70006571	1	Head	
4	70006570	1	Piston	
5	70023915	1	Screw	
6	70006569	1	Spacer	
7	4640509	2	Cartridge, Valve	
7	2900792	2	Seal Kit - 4640509 Valve	
8	0962336	4	Bushing	
9	2220883	6	Plug, O-Ring	
10	2220885	2	Plug, O-Ring	
100	70006568	1	Seal Kit (Includes Items 101-111)	
101	See Note	NSS	Ring, Wear (Note: Use Item 100)	
102	See Note	NSS	O-Ring (Note: Use Item 100)	
103	See Note	NSS	Ring, Back-up (Note: Use Item 100)	
104	See Note	NSS	Seal, Rod (Note: Use Item 100)	
105	See Note	NSS	O-Ring (Note: Use Item 100)	
106	See Note	NSS	Wiper (Note: Use Item 100)	
107	See Note	NSS	Ring, Wear (Note: Use Item 100)	
108	See Note	NSS	Seal (Note: Use Item 100)	
109	See Note	NSS	O-Ring (Note: Use Item 100)	
110	See Note	NSS	Ring, Back-up (Note: Use Item 100)	
111	See Note	NSS	O-Ring (Note: Use Item 100)	

FIGURE 5-7. LIFT CYLINDER ASSEMBLY (JIB) - 600SJ & 660SJ (SERVICE REPLACEMENT)

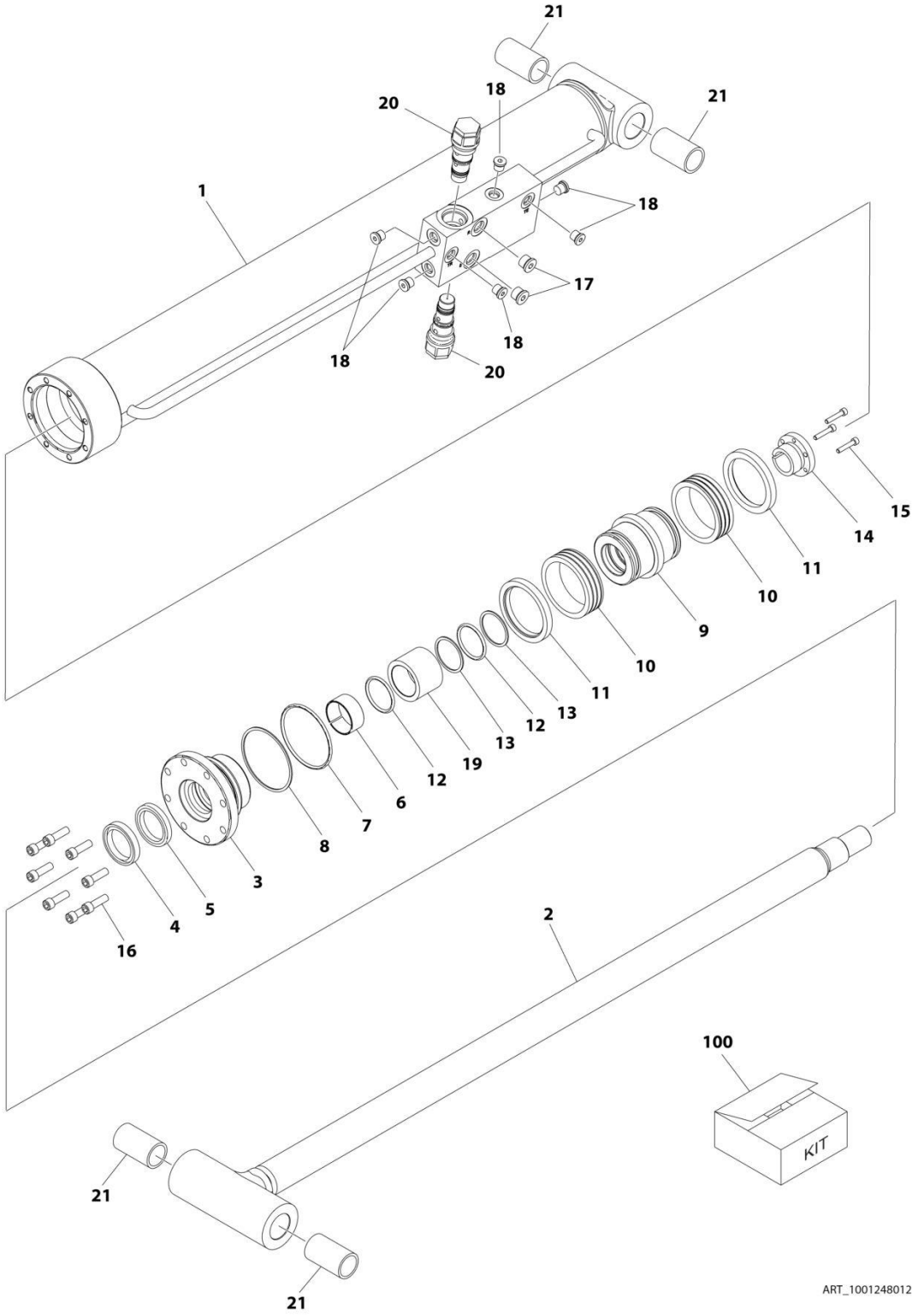

FIGURE 5-7. LIFT CYLINDER ASSEMBLY (JIB) - 600SJ & 660SJ (SERVICE REPLACEMENT)

ITEM	PART NUMBER	QTY	DESCRIPTION	REV
	1001248012	Ref	LIFT CYLINDER ASSEMBLY - JIB	B
		Ref	Note: Original Cylinder May Have Been Replaced with Service Replacement. Identify PN Stamped on Cylinder Before Ordering Parts.	
1	See Note	NSS	Barrel (Note: Not Available for Purchase)	
2	70006734	1	Rod	
3	70006649	1	Head	
4	See Note	NSS	Wiper (Note: Use Item 100)	
5	See Note	NSS	Seal, Rod (Note: Use Item 100)	
6	See Note	NSS	Ring, Wear (Note: Use Item 100)	
7	See Note	NSS	O-Ring (Note: Use Item 100)	
8	See Note	NSS	Ring, Back-up (Note: Use Item 100)	
9	70006650	1	Piston	
10	See Note	NSS	Seal (Note: Use Item 100)	
11	See Note	NSS	Ring, Lock (Note: Use Item 100)	
12	See Note	NSS	O-Ring (Note: Use Item 100)	
13	See Note	NSS	Ring, Back-up (Note: Use Item 100)	
14	0961893	1	Bushing, Tapered	
15	0630534	3	Capscrew, Socket Head #10 x 1	
16	70006735	8	Capscrew 5/16	
17	2220885	2	Plug, O-Ring	
18	2220883	6	Plug, O-Ring	
19	70006736	1	Spacer	
20	4640509	2	Cartridge, Valve	
20	2900792	2	Seal Kit - 4640509 Valve	
21	0962336	4	Bushing	
100	1001138795	1	Seal Kit (Includes Items 4-8 & 10-13)	

FIGURE 5-8. LIFT CYLINDER ASSEMBLY - MAIN BOOM

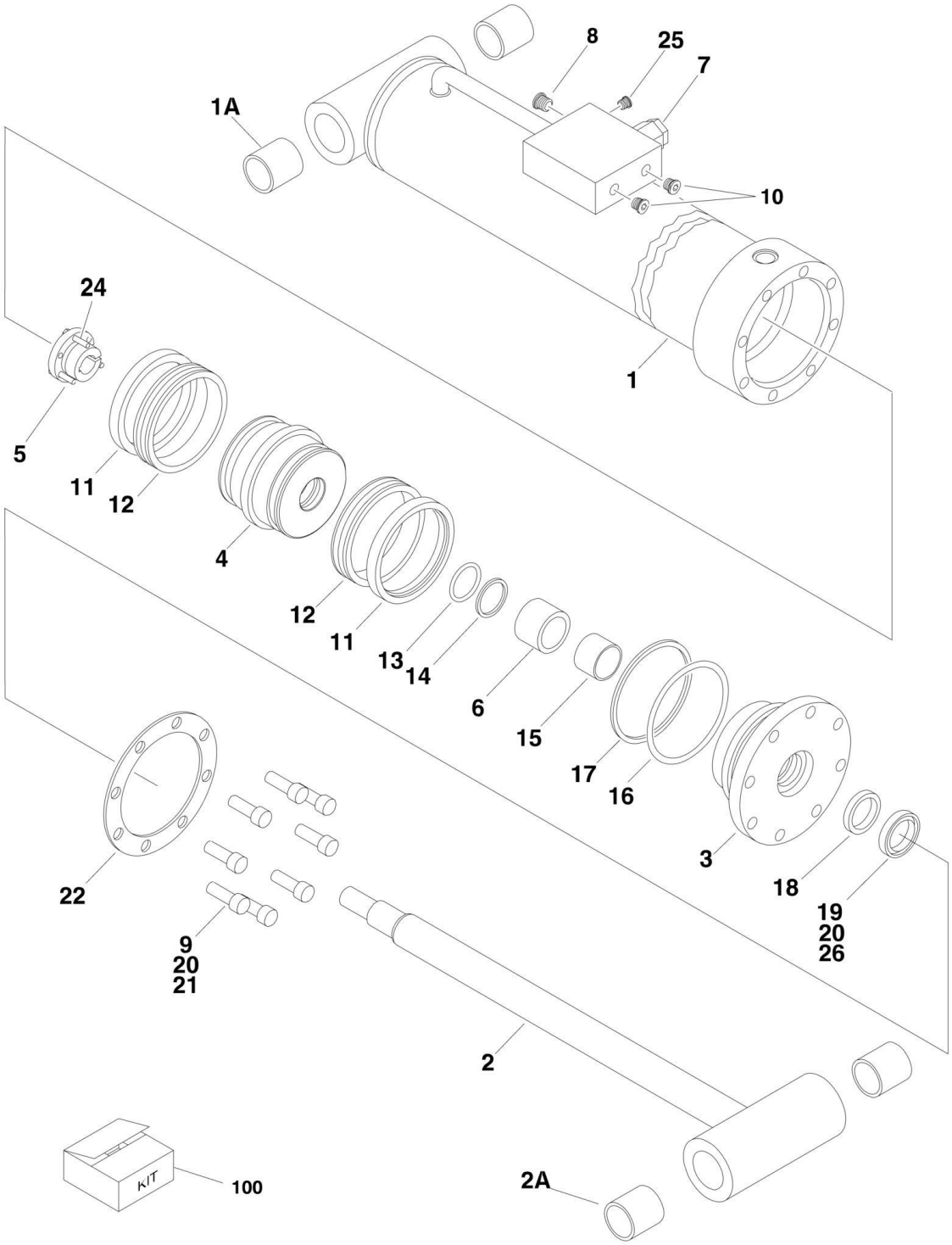

FIGURE 5-8. LIFT CYLINDER ASSEMBLY - MAIN BOOM

ITEM	PART NUMBER	QTY	DESCRIPTION	REV
		Ref	**Note: Original Equipment Cylinder may have been replaced with Service Replacement Cylinder. Identify p/n stamped on cylinder before ordering parts.**	
		Ref	**LIFT CYLINDER ASSEMBLY - MAIN BOOM OPTIONS:**	
	1683666	Ref	**USA Built Machines (SN 0300087000 through 0300138401)**	H
	1001112468	Ref	**USA Built Machines (SN 0300138402 through 0300171769)**	B
	1001112468	Ref	**China Built Machines (SN B300000100 through B300000969)**	B
		Ref	**Note: For complete service replacement of p/n 1683666 order p/n 1001112468.**	
1		Ref	Barrel Weldment Options:	
1	1683955	NLA	USA Built Machines (Use p/n 1001112467) **(SN 0300087000 through 0300138401)**	
1	1001112467	1	USA Built Machines **(SN 0300138402 through 0300171769)**	
1	1001112467	1	China Built Machines **(SN B300000100 through B300000969)**	
1A	0961950	2	Bushing	
2	1683954	1	Rod Weldment	
2A	0961950	2	Bushing	
3	1683067	1	Head	
4	3480206	1	Piston	
5	0961898	1	Bushing, Tapered (Use Item #24 in place of supplied bolts)	
6	4566501	1	Spacer, Tube	
7	4640509	1	Cartridge, Valve	
7	2900792	1	Seal Kit - 4640509 Valve	
8	2220887	1	Plug, O-Ring	
9	3932032	8	Bolt, Socket Head 5/16in-11NC x 2in	
10	2220883	2	Plug, O-Ring	
11	See Note	NSS	Ring, Lock (Note: Use Item 100)	
12	See Note	NSS	Seal, Hydrolock (Note: Use Item 100)	
13	See Note	NSS	O-Ring (Note: Use Item 100)	
14	See Note	NSS	Ring, Back-up (Note: Use Item 100)	
15	See Note	NSS	Ring, Wear (Note: Use Item 100)	
16	See Note	NSS	O-Ring (Note: Use Item 100)	
17	See Note	NSS	Ring, Back-up (Note: Use Item 100)	
18	See Note	NSS	Seal, Rod (Note: Use Item 100)	
19	See Note	NSS	Wiper (Note: Use Item 100)	
20	0100011	AR	Compound, Locking	
21	0100038	AR	Primer, Locking	
22	3760372	1	Washer, Ring	
24	0630536	3	Screw, Socket Head 3/8in-16NC x 1-1/2in	
25	2220235	1	Plug, O-Ring	
26	0100063	AR	Loctite #609 **(SN 0300087000 through 0300090183)**	
100	2901285	1	Seal Kit - 1683666 & 1001112468 Cylinder (Includes Items 11-19)	

FIGURE 5-9. MASTER CYLINDER ASSEMBLY

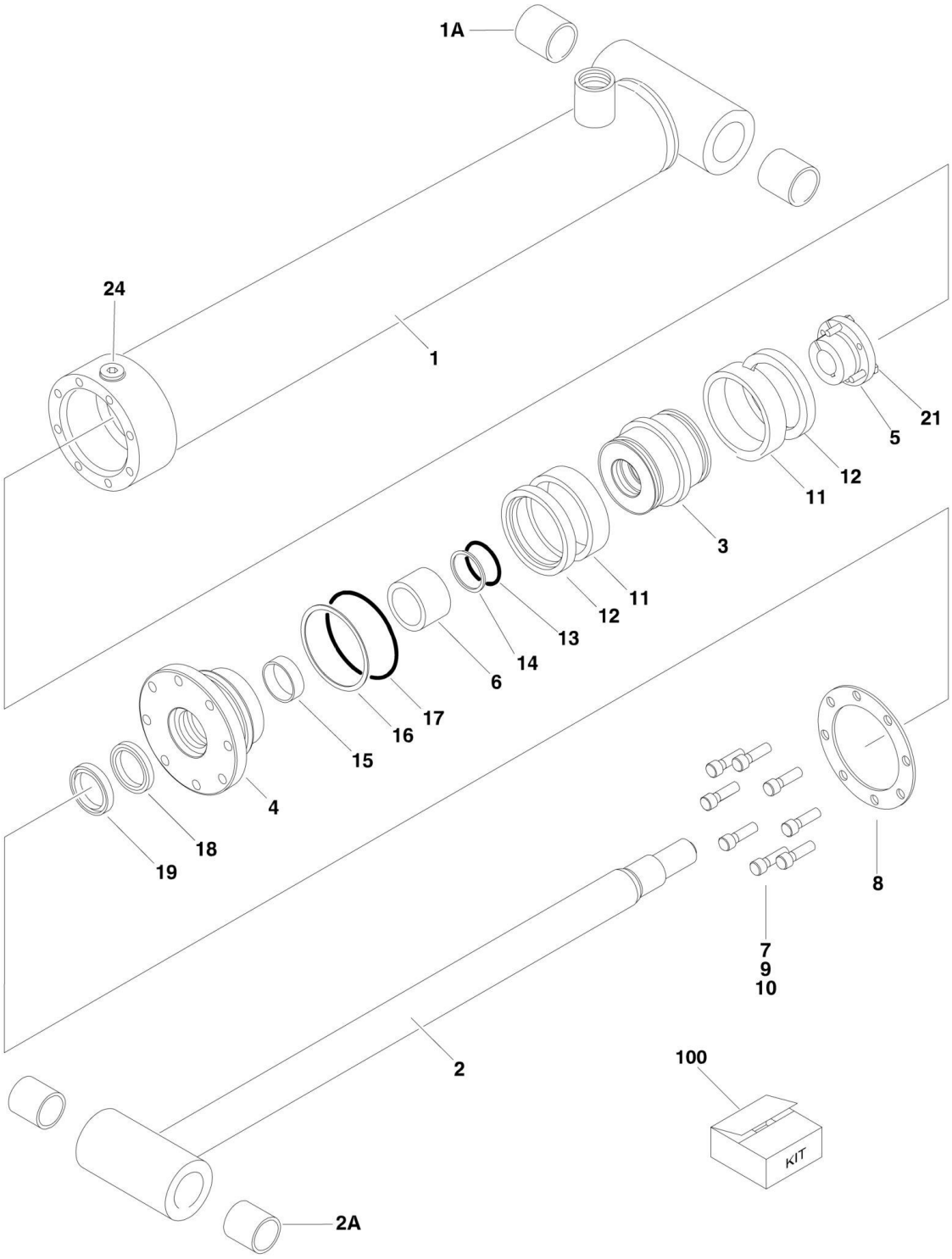

FIGURE 5-9. MASTER CYLINDER ASSEMBLY

ITEM	PART NUMBER	QTY	DESCRIPTION	REV
		Ref	**MASTER CYLINDER ASSEMBLY**	
		Ref	**Master Cylinder Assemblies 600S:**	
	1683266	Ref	**USA Built Machines (Original Equipment) (SN 0300087000 through 0300096978)**	F
	1684414	Ref	**USA Built Machines (SN 0300096979 through 0300171769)**	E
	1684414	Ref	**China Built Machines (SN B300000100 through B300000969)**	E
		Ref	**Note: 600S Only China Built Machines SN B300000817 to SN B300000859 use cylinder p/n 1001140593. For replacement components contact JLG Parts Dept**	
		Ref	**Master Cylinder Assemblies 600SJ/660SJ:**	
	1683263	Ref	**USA Built Machines (Original Equipment) (SN 0300087000 through 0300096978)**	K
	1684413	Ref	**USA Built Machines (Original Equipment) (SN 0300096979 through 0300171769)**	I
	1684413	Ref	**China Built Machines (Original Equipment) (SN B300000100 through B300000969)**	I
1		Ref	Barrel Options:	
1	1683972	1	Barrel 600S (Note: Includes Item 1A)	
1	1683949	1	Barrel 600SJ/660SJ (Note: Item 1A not included - Purchase Separately)	
1A		Ref	Bushing Options:	
1A	0961947	2	Bushing 600S Bushing	
1A	0961951	2	Bushing 600SJ/660SJ Bushing	
2		Ref	Rod Options:	
2		Ref	Rod 600S Rod (Note: Includes Item 2A):	
2	1683973	1	USA Built Machines **(SN 0300087000 through 0300096978)**	
2	3850020	1	USA Built Machines **(SN 0300096979 through 0300171769)**	
2	3850020	1	China Built Machines **(SN B300000100 through B300000969)**	
2		Ref	Rod 600SJ/660SJ (Note: Item 2A not included - Purchase Separately):	
2	1683962	1	USA Built Machines **(SN 0300087000 through 0300096978)**	
2	3850019	NLA	USA Built Machines (Use p/n 1683963) **(SN 0300096979 through 0300131101)**	
2	1683963	1	USA Built Machines **(SN 0300131102 through 0300171769)**	
2	1683963	1	China Built Machines **(SN B300000100 through B300000969)**	
2A		Ref	Bushing Options:	
2A	0961947	2	Bushing 600S Bushing	
2A	0961951	2	Bushing 600SJ/660SJ Bushing	
3		Ref	Piston Options:	
3	3480210	1	Piston 600S	
3	3480188	1	Piston 600SJ/660SJ	
4		Ref	Head Options:	
4	1683053	1	Head 600S	
4	1683055	1	Head 600SJ/660SJ	
5		Ref	Bushing, Tapered Options:	
5	0961893	1	Bushing, Tapered 600S	
5	0961894	1	Bushing, Tapered 600SJ/660SJ	
6	4566468	1	Spacer, Tube	
7		Ref	Capscrew Options:	
7	3931516	8	Capscrew 600S - Capscrew 5/16in-18NC x 1in	

SECTION 5 - CYLINDER

ITEM	PART NUMBER	QTY	DESCRIPTION	REV
7	3931620	8	Capscrew 600SJ/660SJ - Capscrew 3/8in-16NC x 1-1/4in	
8		Ref	Ring, Washer Options:	
8	3760368	1	Ring, Washer 600S	
8	3760369	1	Ring, Washer 600SJ/660SJ	
9	0100011	AR	Compound, Locking	
10	0100038	AR	Primer, Locking	
11	See Note	NSS	Seal (Note: Use Item 100A or 100B)	
12	See Note	NSS	Ring, Lock (Note: Use Item 100A or 100B)	
13	See Note	NSS	O-Ring (Note: Use Item 100A or 100B)	
14	See Note	NSS	Ring, Back-up (Note: Use Item 100A or 100B)	
15	See Note	NSS	Ring, Wear (Note: Use Item 100A or 100B)	
16	See Note	NSS	O-Ring (Note: Use Item 100A or 100B)	
17	See Note	NSS	Ring, Back-up (Note: Use Item 100A or 100B)	
18	See Note	NSS	Seal, Rod (Note: Use Item 100A or 100B)	
19	See Note	NSS	Wiper (Note: Use Item 100A or 100B)	
21		Ref	Screw Options:	
21	0630534	3	Screw 600S - Screw, Socket Head #10-24NC x 1in	
21	0630535	3	Screw 600SJ/660SJ - Screw, Socket Head 1/4in-20NC x 1-1/8in	
24	2220885	1	Fitting, Plug (600SJ/660SJ - 1683263 Cylinder Only)	
100		Ref	Seal Kit (Includes Items 11-19)	
100A	2901303		Seal Kit 600S Seal Kit	
100B	2901301		Seal Kit 600SJ/660SJ Seal Kit	

FIGURE 5-10. MASTER CYLINDER ASSEMBLY - 600S (SERVICE REPLACEMENT)

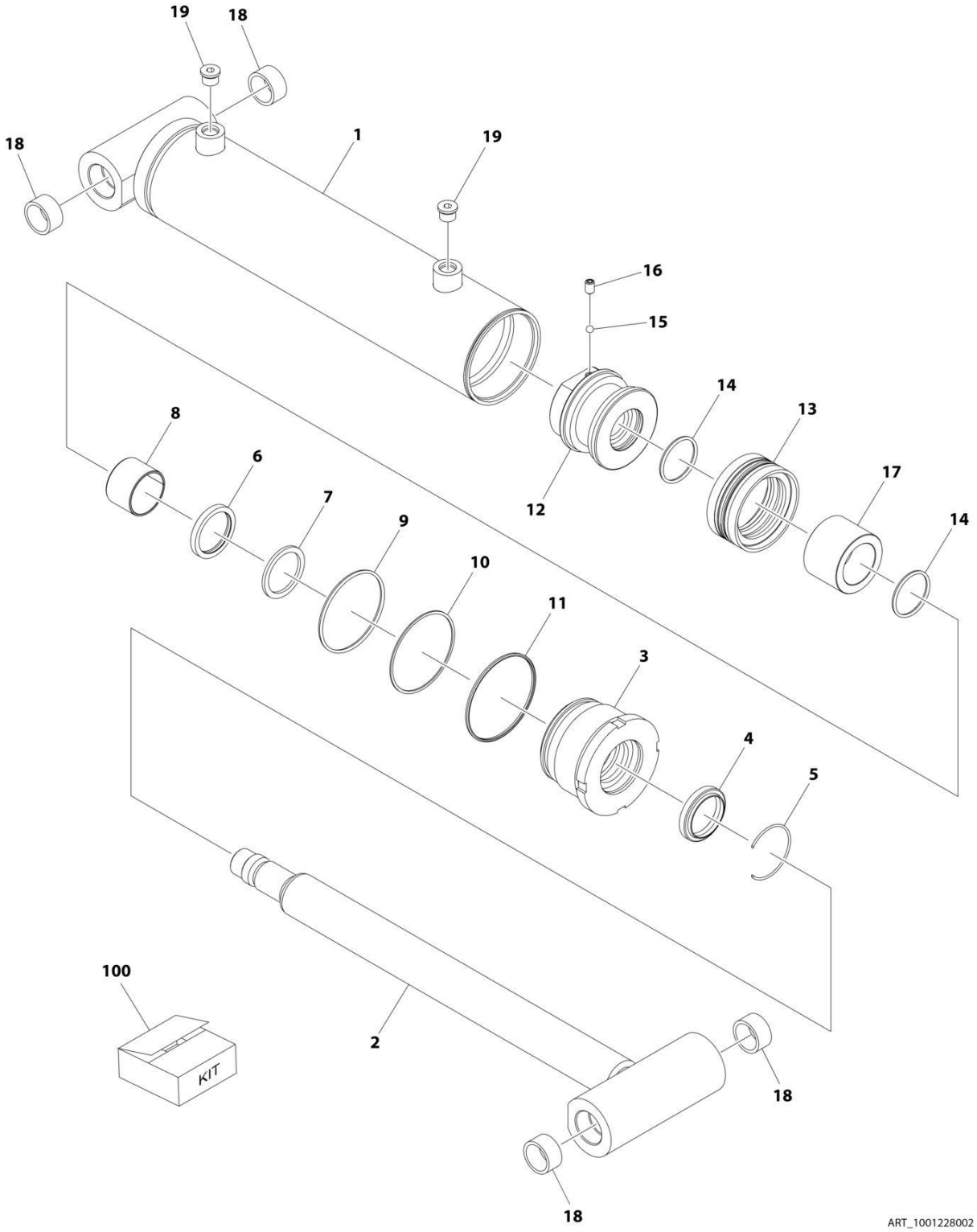

FIGURE 5-10. MASTER CYLINDER ASSEMBLY - 600S (SERVICE REPLACEMENT)

ITEM	PART NUMBER	QTY	DESCRIPTION	REV
	1001228002	Ref	MASTER CYLINDER ASSEMBLY	B
		Ref	Note: Original Cylinder May Have Been Replaced with Service Replacement. Identify PN Stamped on Cylinder Before Ordering Parts.	
1	See Note	NSS	Barrel (Note: Not Available for Purchase)	
2	70006774	1	Rod	
3	70006599	1	Head	
4	See Note	NSS	Wiper Rod (Note: Use Item 100)	
5	70002373	1	Ring, Retaining	
6	See Note	NSS	Seal, Rod (Note: Use Item 100)	
7	See Note	NSS	Ring, Back-up (Note: Use Item 100)	
8	See Note	NSS	Ring, Wear (Note: Use Item 100)	
9	See Note	NSS	O-Ring (Note: Use Item 100)	
10	See Note	NSS	Ring, Back-up (Note: Use Item 100)	
11	See Note	NSS	O-Ring (Note: Use Item 100)	
12	70006597	1	Piston	
13	See Note	NSS	Seal Piston (Note: Use Item 100)	
14	See Note	NSS	O-Ring (Note: Use Item 100)	
15	70022564	1	Ball	
16	70006601	1	Setscrew	
17	70006775	1	Spacer	
18	0961947	4	Bushing	
19	70023371	2	Plug, O-Ring	
100	70006776	1	Seal Kit (Includes Items 4, 6-11, 13 & 14)	

FIGURE 5-11. MASTER CYLINDER ASSEMBLY - 600SJ/660SJ (SERVICE REPACEMENT)

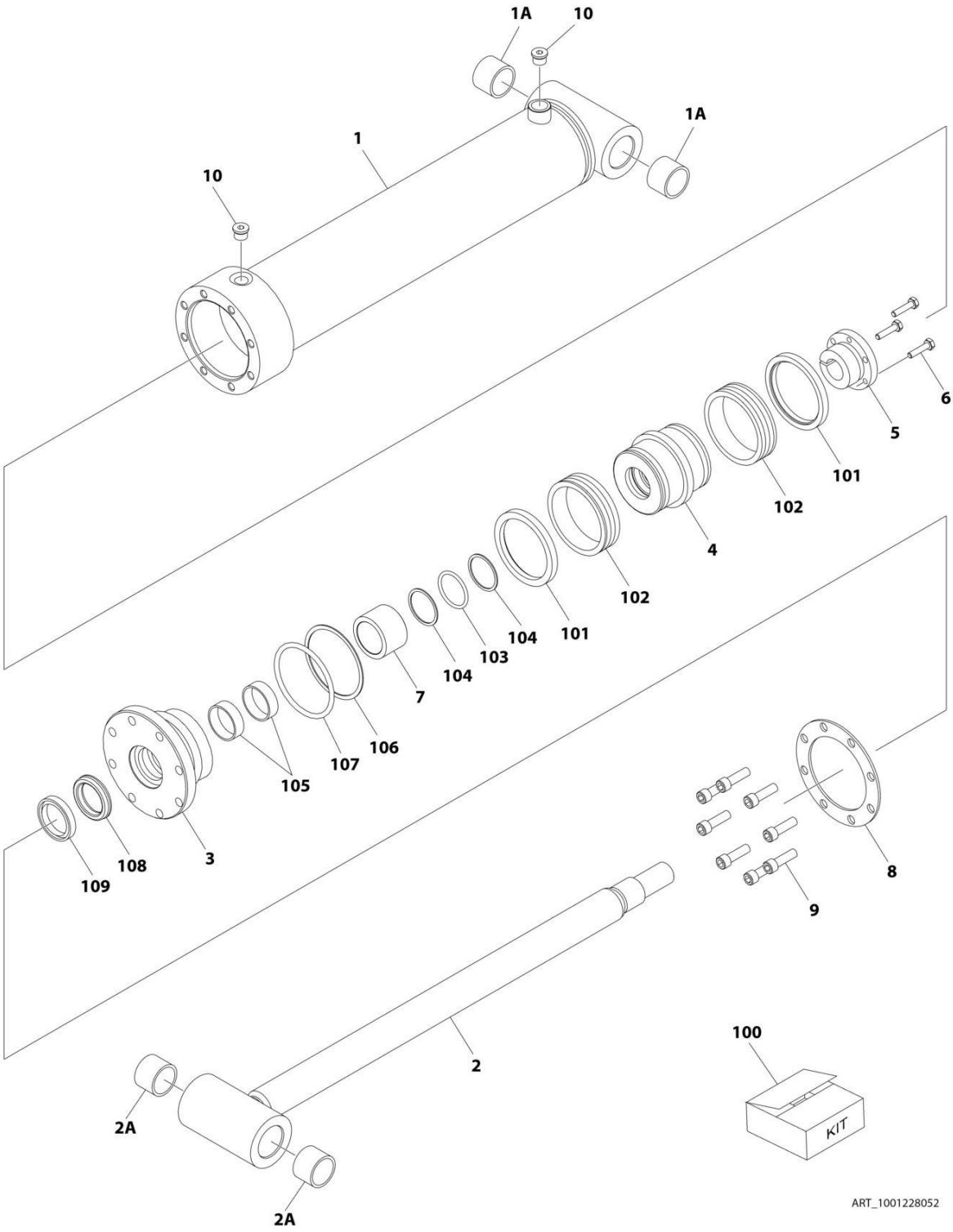

FIGURE 5-11. MASTER CYLINDER ASSEMBLY - 600SJ/660SJ (SERVICE REPACEMENT)

ITEM	PART NUMBER	QTY	DESCRIPTION	REV
	1001228052	Ref	**MASTER CYLINDER ASSEMBLY - 600SJ/660SJ (SERVICE REPACEMENT)**	A
		Ref	Note: Original Cylinder May Have Been Replaced with Service Replacement. Identify PN Stamped on Cylinder Before Ordering Parts.	
1	See Note	NSS	Barrel Weldment (Note: Not Available for Purchase)	
1A	0961951	2	Bushing	
2	70006447	1	Rod Weldment	
2A	0961951	2	Bushing	
3	70006446	1	Head	
4	70006445	1	Piston	
5	70006444	1	Bushing, Tapered	
6	0630535	3	Capscrew 1/4 x 1-1/8	
7	70006443	1	Spacer	
8	70006442	1	Ring, Washer	
9	3931620	8	Capscrew 3/8 x 1-1/4	
10	2220885	2	Plug, O-Ring	
100	1001138796	1	Seal Kit (Includes Items 12-21)	
101	See Note	NSS	Ring, Wear (Note: Use Item 100)	
102	See Note	NSS	Seal, Piston (Note: Use Item 100)	
103	See Note	NSS	O-Ring (Note: Use Item 100)	
104	See Note	NSS	Ring, Back-up (Note: Use Item 100)	
105	See Note	NSS	Ring, Wear (Note: Use Item 100)	
106	See Note	NSS	O-Ring (Note: Use Item 100)	
107	See Note	NSS	Ring, Back-up (Note: Use Item 100)	
108	See Note	NSS	Seal, Rod (Note: Use Item 100)	
109	See Note	NSS	Wiper, Rod (Note: Use Item 100)	

FIGURE 5-12. STEER CYLINDER ASSEMBLY (USA BUILT MACHINES) (SN 0300087000 through 0300142634)

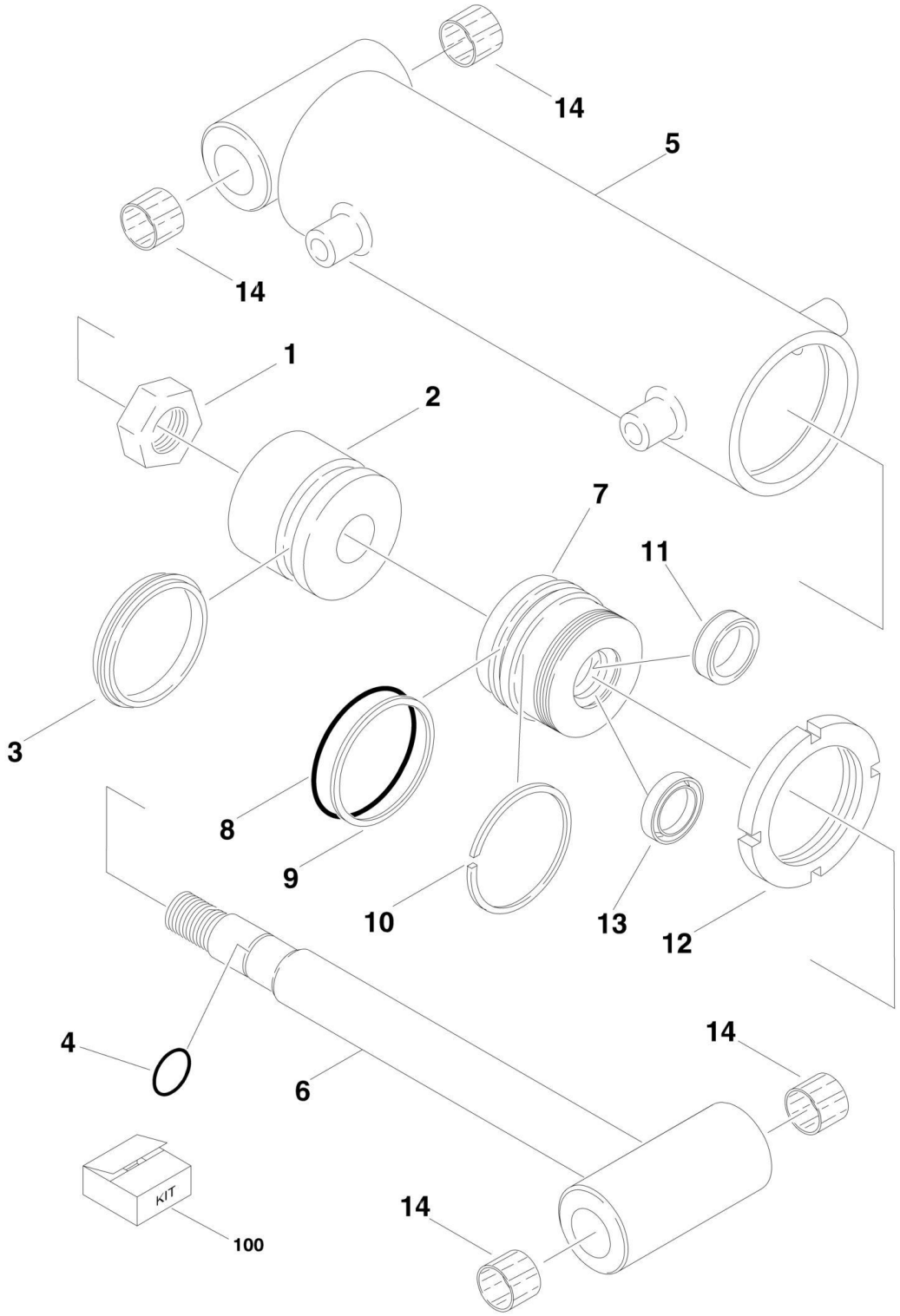

FIGURE 5-12. STEER CYLINDER ASSEMBLY (USA BUILT MACHINES) (SN 0300087000 through 0300142634)

ITEM	PART NUMBER	QTY	DESCRIPTION	REV
	1683208	Ref	**STEER CYLINDER ASSEMBLY**	C
1	7001626	1	Locknut	
2	7001627	1	Piston	
3	See Note	NSS	Seal (Note: Use Item 100)	
4	See Note	NSS	O-Ring (Note: Use Item 100)	
5	See Note	NSS	Barrel Weldment (Note: Not Available - Purchase Complete Steer Cylinder Assembly)	
6	7001633	1	Rod Weldment	
7	7001629	1	Head	
8	See Note	NSS	O-Ring (Note: Use Item 100)	
9	See Note	NSS	Ring, Back-up (Note: Use Item 100)	
10	See Note	NSS	Ring, Retainer (Note: Use Item 100)	
11	See Note	NSS	Seal, Lip (Note: Use Item 100)	
12	7001630	1	Nut, Spanner	
13	See Note	NSS	Wiper (Note: Use Item 100)	
14	0961977	4	Bushings	
100	7001625	1	Seal Kit - 1683208 (Includes Items 3, 4, 8-11 & 13)	

FIGURE 5-13. STEER CYLINDER ASSEMBLY (USA BUILT MACHINES AND CHINA BUILT MACHINES) (SN 0300142635 through 0300171769, SN B300000100 through B300000969)

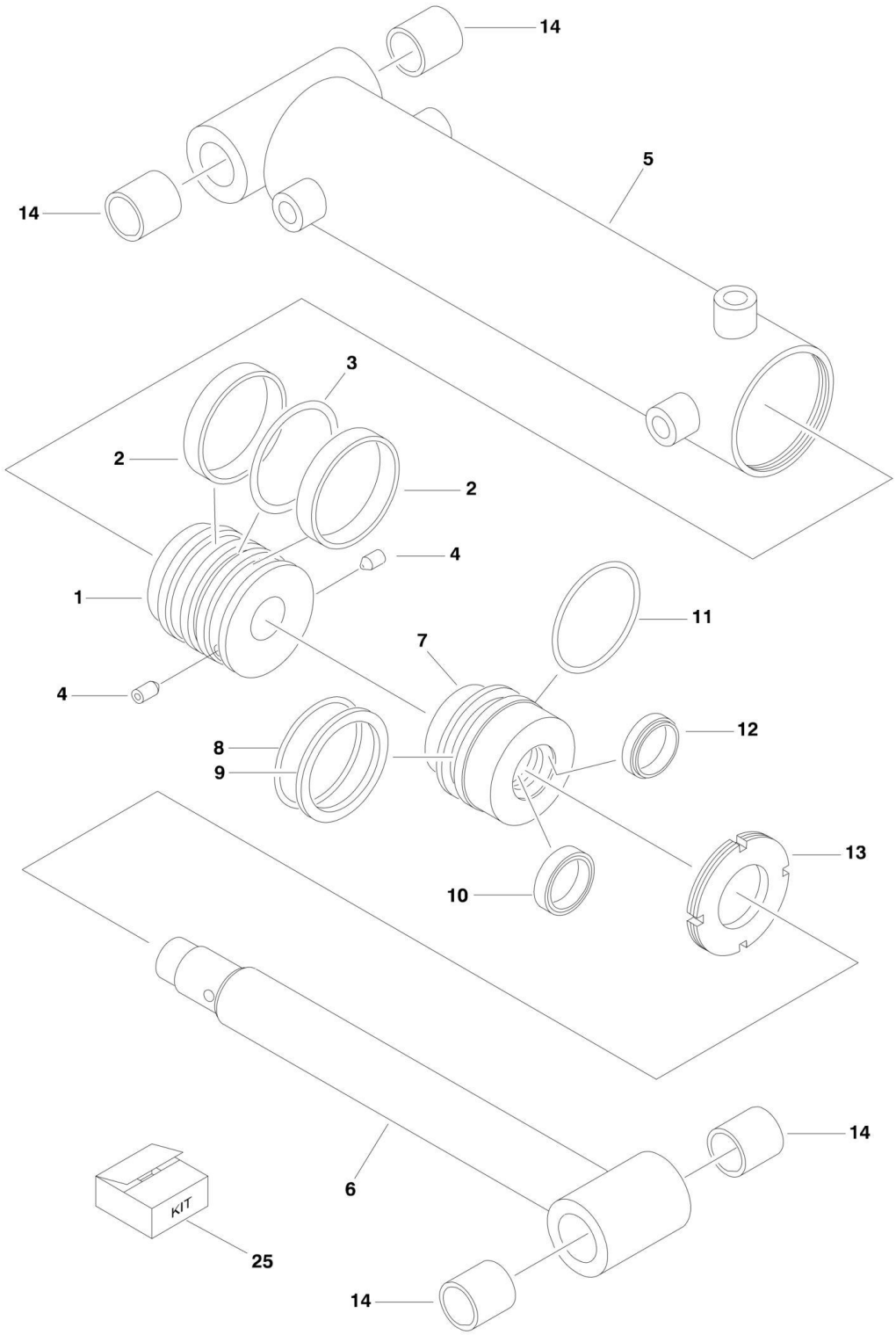

FIGURE 5-13. STEER CYLINDER ASSEMBLY (USA BUILT MACHINES AND CHINA BUILT MACHINES) (SN 0300142635 through 0300171769, SN B300000100 through B300000969)

ITEM	PART NUMBER	QTY	DESCRIPTION	REV
		Ref	**STEER CYLINDER ASSEMBLIES**	
		Ref	**USA Built Machines (See STEER CYLINDER ASSEMBLY for Breakdown) (SN 0300087000 through 0300142634)**	
	1001097242	Ref	**USA Built Machines (SN 0300142635 through 0300171769)**	A
	1001097242	Ref	**China Built Machines (SN B300000100 through B300000969)**	A
1	70002752	1	Piston	
1	0100011	AR	Compound, Locking	
1	0100038	AR	Primer, Locking	
2	See Note	NSS	Seal (Note: Use Item 25)	
3	See Note	NSS	O-Ring (Note: Use Item 25)	
4	70002745	2	Setscrew	
5	70002753	1	Barrel	
6	70002754	1	Rod	
7	70002755	1	Head	
8	See Note	NSS	O-Ring (Note: Use Item 25)	
9	See Note	NSS	Ring, Back-up (Note: Use Item 25)	
10	See Note	NSS	Seal (Note: Use Item 25)	
11	See Note	NSS	O-Ring (Note: Use Item 25)	
12	See Note	NSS	Wiper (Note: Use Item 25)	
13	70002756	1	Nut, Spanner	
13	0100011	AR	Compound, Locking	
13	0100038	AR	Primer, Locking	
14	0962356	4	Bushing	
25	70002757	1	Seal Kit (Includes Items 2, 3 & 8-12)	

FIGURE 5-14. TELESCOPE CYLINDER ASSEMBLIES

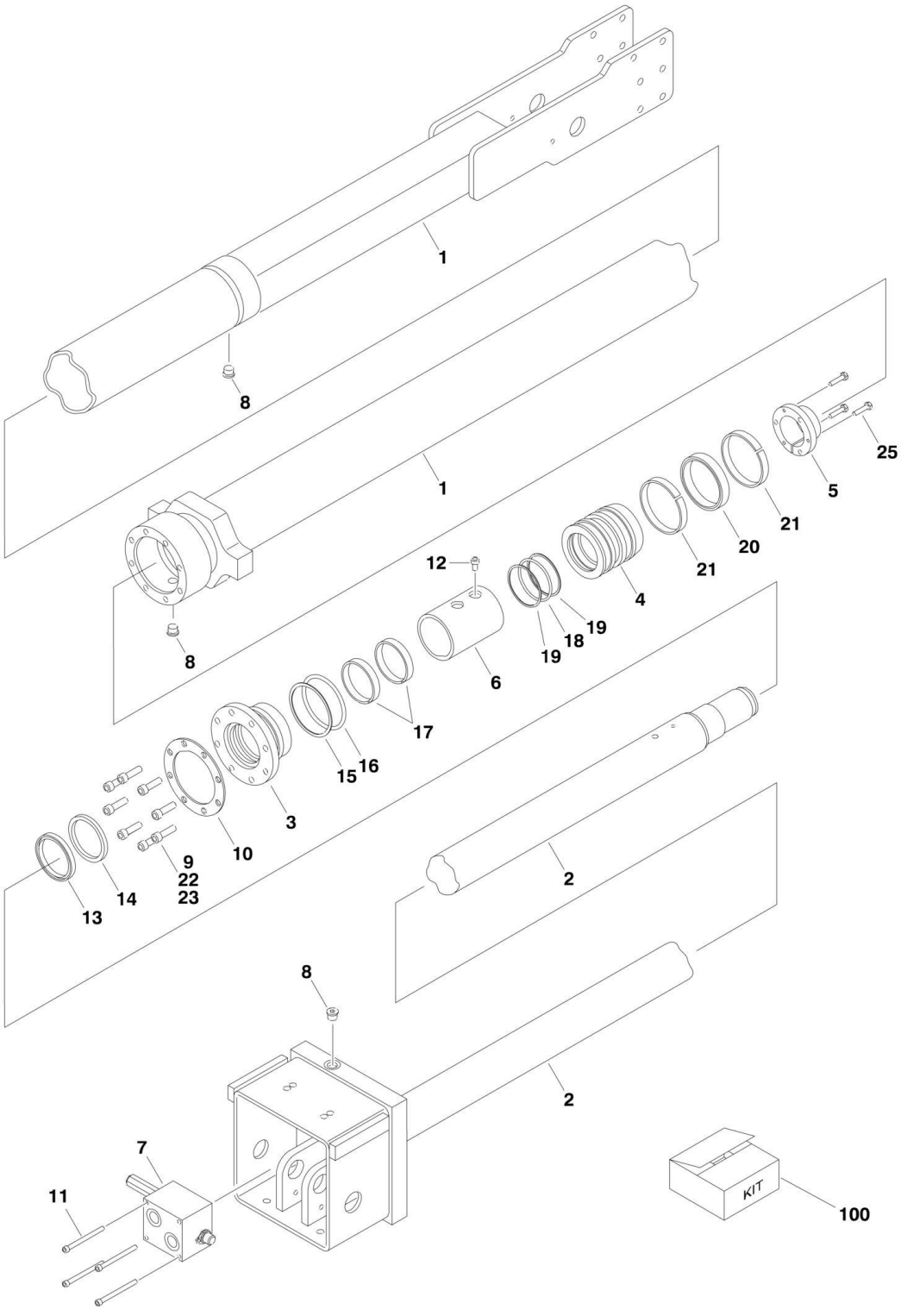

FIGURE 5-14. TELESCOPE CYLINDER ASSEMBLIES

ITEM	PART NUMBER	QTY	DESCRIPTION	REV
		Ref	**TELESCOPE CYLINDER ASSEMBLIES**	
	1683618	Ref	**Telescope Cylinder Assemblies 600S & 660SJ**	3-G
	1683620	Ref	**Telescope Cylinder Assemblies 600SJ**	F
1		Ref	Barrel Options:	
1	1683619	1	Barrel 600S & 660SJ	
1	1683621	1	Barrel 600SJ	
2		Ref	Rod Options:	
2	1683250	1	Rod 600S & 660SJ	
2	1683359	1	Rod 600SJ	
3	1683057	1	Head	
4	3480205	1	Piston	
5	0961897	1	Bushing, Tapered	
6	4566644	1	Spacer, Tube	
7	4641028	1	Valve Assembly (No serviceable parts - sold as assembly only)	
7	7024397	2	O-Rings Between Valve Block and Cylinder	
8	2220885	6	Plug, O-Ring	
9	3931620	8	Capscrew 3/8in-16NC x 1-1/4in	
10	3760369	1	Ring, Washer	
11	3931448	4	Capscrew 1/4in-20NC x 3in	
12	3931508	1	Capscrew 5/16in-18NC x 1/2in	
13	See Note	NSS	Wiper (Note: Use Item 100)	
14	See Note	NSS	Seal, Rod (Note: Use Item 100)	
15	See Note	NSS	O-Ring (Note: Use Item 100)	
16	See Note	NSS	Ring, Back-up (Note: Use Item 100)	
17	See Note	NSS	Ring, Wear (Note: Use Item 100)	
18	See Note	NSS	O-Ring (Note: Use Item 100)	
19	See Note	NSS	Ring, Back-up (Note: Use Item 100)	
20	See Note	NSS	T-Seal (Note: Use Item 100)	
21	See Note	NSS	Ring, Wear (Note: Use Item 100)	
22	0100011	AR	Compound, Locking	
23	0100038	AR	Primer, Locking	
25	0630535	3	Bolt 1/4in-20NC x 1-1/8in	
100	2901284	1	Seal Kit (Includes Items 13-21)	

SECTION 6 - HYDRAULIC

FIGURE 6-1. HYDRAULIC DIAGRAM - DRIVE AND STEER (2WD/2WS)

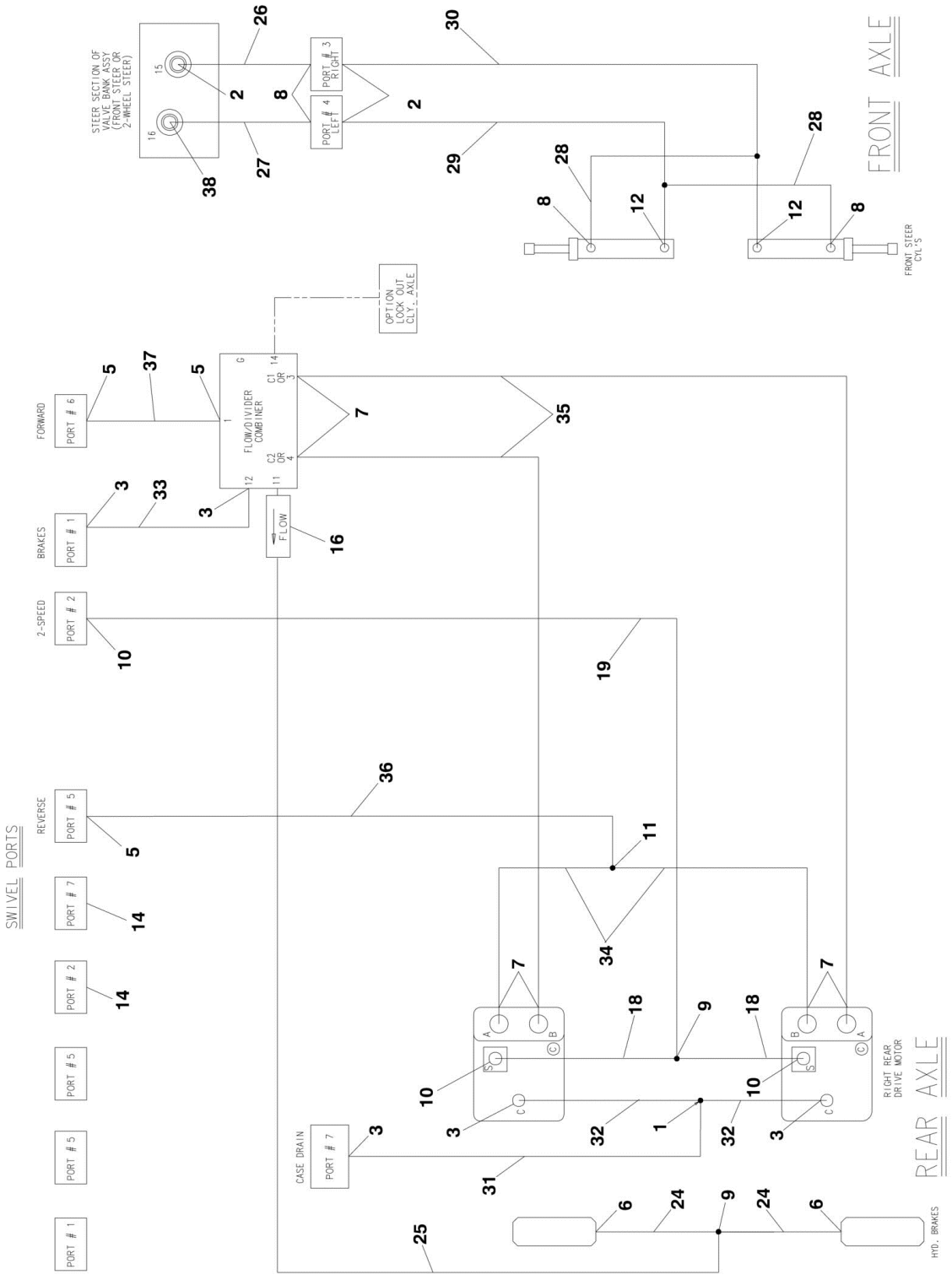

FIGURE 6-1. HYDRAULIC DIAGRAM - DRIVE AND STEER (2WD/2WS)

ITEM	PART NUMBER	QTY	DESCRIPTION	REV
		Ref	**Note: 2WD Only Available on USA Built Machines**	
	2792616	Ref	**DRIVE AND STEER HYDRAULIC DIAGRAM - 2WD/2WS**	5-O
1	2220362	1	Fitting, Tee	
2	2220371	3	Fitting, Straight	
3	2220373	5	Fitting, Straight	
5	2220377	3	Fitting, Straight	
6	2220415	2	Fitting, Straight	
7	2220451	6	Fitting, Straight	
8	2220473	4	Fitting, 90	
9	2220504	2	Fitting, Tee	
10	2220582	3	Fitting, Straight	
11	2221170	1	Fitting, Tee	
12	2220606	2	Fitting, Tee	
14	2220307	2	Fitting, Plug	
16	4641307	1	Valve, Check	
18	2753925	2	Hose	
19	2753924	1	Hose	
24	2752592	2	Hose	
25	2752910	1	Hose	
26	2752478	1	Hose	
27	2752632	1	Hose	
28	2753397	2	Hose	
29	2752475	1	Hose	
30	2752611	1	Hose	
31	2752928	1	Hose	
32	2753929	2	Hose	
33	2752929	1	Hose	
34	2753969	2	Hose	
35	2753967	2	Hose	
36	2752341	1	Hose	
37	2753435	1	Hose	
38		Ref	Fitting, Straight Options:	
38	2220371	1	Fitting, Straight **(SN 0300087000 through 0300104455)**	
38	2220998	1	Fitting, Straight **(SN 0300104456 through 0300171769)**	

FIGURE 6-2. HYDRAULIC DIAGRAM - DRIVE AND STEER (4WD/2WS)

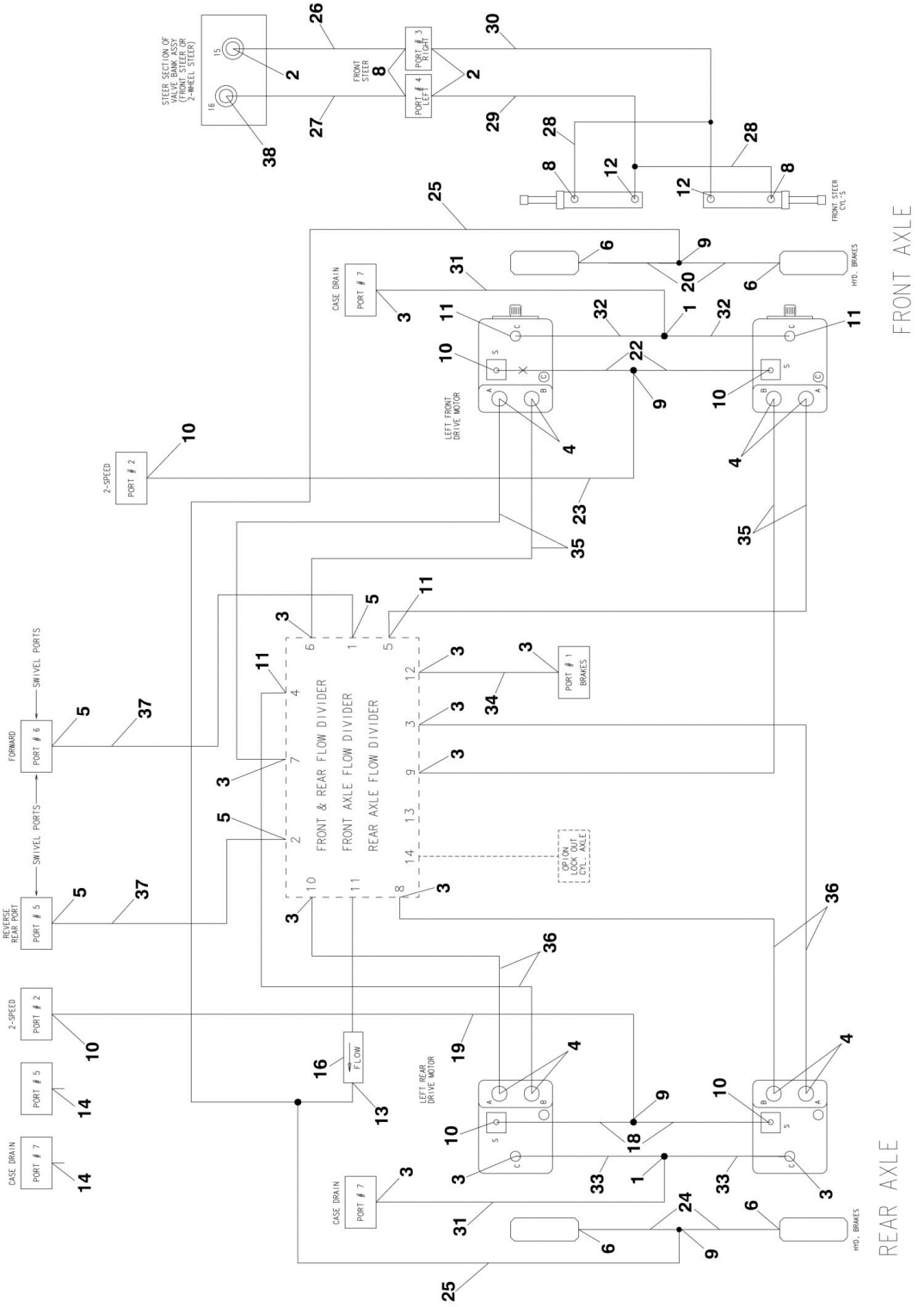

FIGURE 6-2. HYDRAULIC DIAGRAM - DRIVE AND STEER (4WD/2WS)

ITEM	PART NUMBER	QTY	DESCRIPTION	REV
		Ref	**DRIVE AND STEER HYDRAULIC DIAGRAM - 4WD/2WS**	
	2792607	Ref	**USA Built Machines**	B-O
	1001114074	Ref	**China Built Machines**	C
1	2220362	2	Fitting, Tee	
2	2220371	3	Fitting, Straight	
3	2220373	12	Fitting, Straight	
4	2220375	8	Fitting, Straight	
5	2220377	4	Fitting, Straight	
6	2220415	4	Fitting, Straight	
8	2220473	4	Fitting, 90	
9	2220504	4	Fitting, Tee	
10	2220582	6	Fitting, Straight	
11	2220596	4	Fitting, 90	
12	2220606	2	Fitting, Tee	
13	2220861	1	Fitting, Tee	
14	2220237	2	Plug	
16	4641284	1	Valve, Check	
18		Ref	Hose Options:	
18	2753925	2	USA Built Machines	
18	1001113864	2	China Built Machines	
19		Ref	Hose Options:	
19	2753924	1	USA Built Machines	
19	1001113862	1	China Built Machines	
20		Ref	Hose Options:	
20	2753926	2	USA Built Machines	
20	1001113866	2	China Built Machines	
22		Ref	Hose Options:	
22	2752574	2	USA Built Machines	
22	1001113805	2	China Built Machines	
23		Ref	Hose Options:	
23	2752977	1	USA Built Machines	
23	1001113838	1	China Built Machines	
24		Ref	Hose Options:	
24	2752592	2	USA Built Machines	
24	1001113809	2	China Built Machines	
25		Ref	Hose Options:	
25	2752910	1	USA Built Machines	
25	1001113890	1	China Built Machines	
26		Ref	Hose Options:	
26	2752478	1	USA Built Machines	
26	1001113794	1	China Built Machines	
27		Ref	Hose Options:	
27	2752632	1	USA Built Machines	
27	1001113838	1	China Built Machines	
28		Ref	Hose Options:	
28	2753397	2	USA Built Machines	
28	1001113854	2	China Built Machines	
29		Ref	Hose Options:	
29	2752475	1	USA Built Machines	
29	1001113793	1	China Built Machines	

ITEM	PART NUMBER	QTY	DESCRIPTION	REV
30		Ref	Hose Options:	
30	2752611	1	USA Built Machines	
30	1001113818	1	China Built Machines	
31		Ref	Hose Options:	
31	2752928	2	USA Built Machines	
31	1001113835	2	China Built Machines	
32		Ref	Hose Options:	
32	2753928	2	USA Built Machines	
32	1001113868	2	China Built Machines	
33		Ref	Hose Options:	
33	2753929	2	USA Built Machines	
33	1001113878	2	China Built Machines	
34		Ref	Hose Options:	
34	2752929	1	USA Built Machines	
34	1001113836	1	China Built Machines	
35		Ref	Hose Options:	
35	2753931	4	USA Built Machines	
35	1001113895	4	China Built Machines	
36		Ref	Hose Options:	
36	2753930	4	USA Built Machines	
36	1001113894	4	China Built Machines	
37		Ref	Hose Options:	
37	2752331	2	USA Built Machines	
37	1001113898	2	China Built Machines	
38		Ref	Fitting, Straight Options:	
38	2220371	1	USA Built Machines **(SN 0300087000 through 0300104455)**	
38	2220998	1	USA Built Machines **(SN 0300104456 through 0300171769)**	
38	2220998	1	China Built Machines **(SN B300000100 through B300000969)**	

FIGURE 6-3. HYDRAULIC DIAGRAM - OSCILLATING AXLE

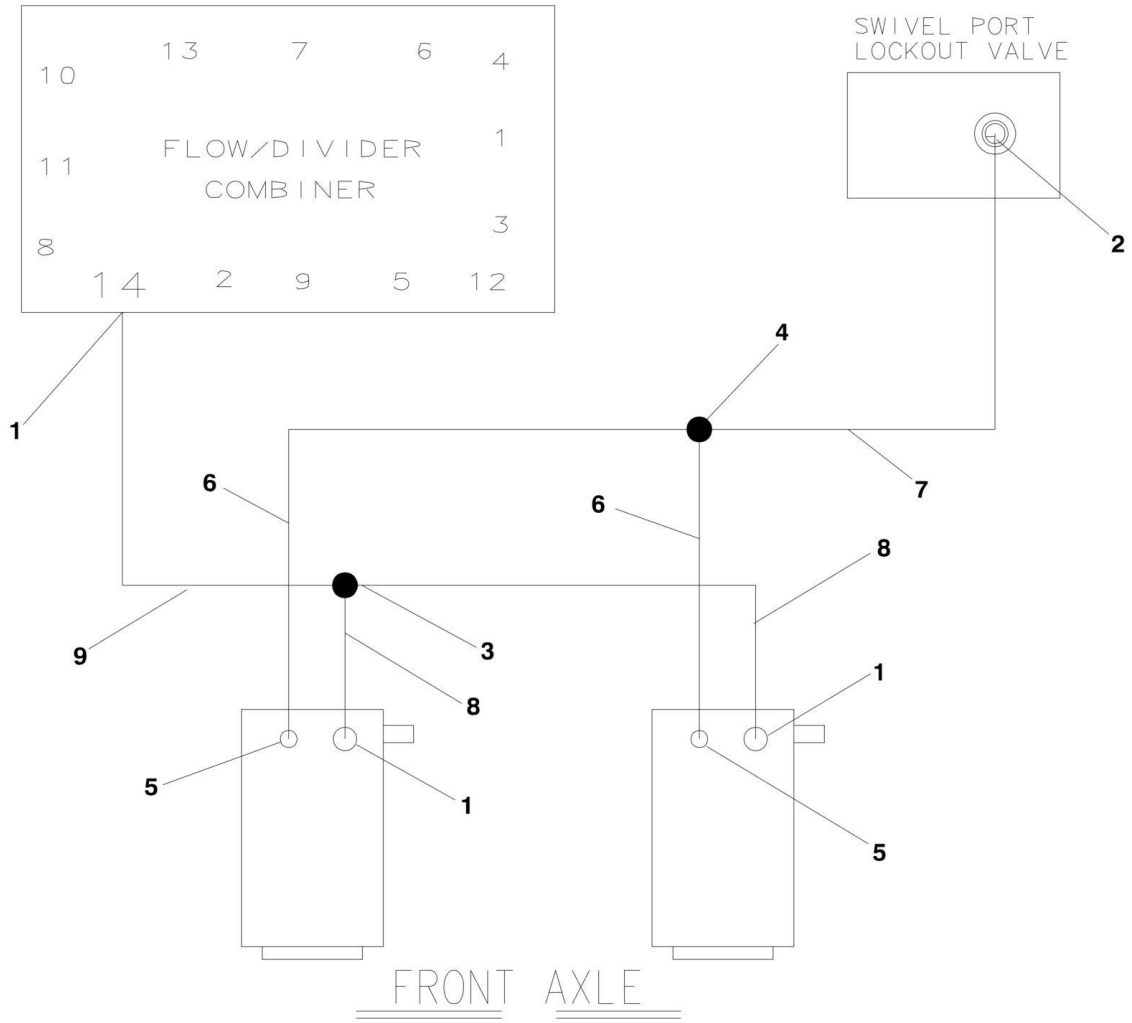

FIGURE 6-3. HYDRAULIC DIAGRAM - OSCILLATING AXLE

ITEM	PART NUMBER	QTY	DESCRIPTION	REV
		Ref	**AXLE LOCKOUT HYDRAULIC DIAGRAM - OSCILLATING AXLE**	
	2792612	Ref	**USA Built Machines**	1-O
	1001114075	Ref	**China Built Machines**	B
1	2220371	3	Fitting, Straight	
2	2220468	1	Fitting, Straight	
3	2220490	1	Fitting, Tee	
4	2220504	1	Fitting, Tee	
5	2220415	2	Fitting, Straight	
6		Ref	Hose Options:	
6	2751434	2	USA Built Machines	
6	1001113914	2	China Built Machines	
7		Ref	Hose Options:	
7	2751410	1	USA Built Machines	
7	1001113913	1	China Built Machines	
8		Ref	Hose Options:	
8	2753933	2	USA Built Machines	
8	1001113879	2	China Built Machines	
9		Ref	Hose Options:	
9	2752462	1	USA Built Machines	
9	1001113789	NLA	China Built Machines (Use p/n 2752462) **(SN B300000100 through B300000883)**	
9	2752462	1	China Built Machine **(SN B300000884 through B300000969)**	

FIGURE 6-4. HYDRAULIC DIAGRAM - STANDARD

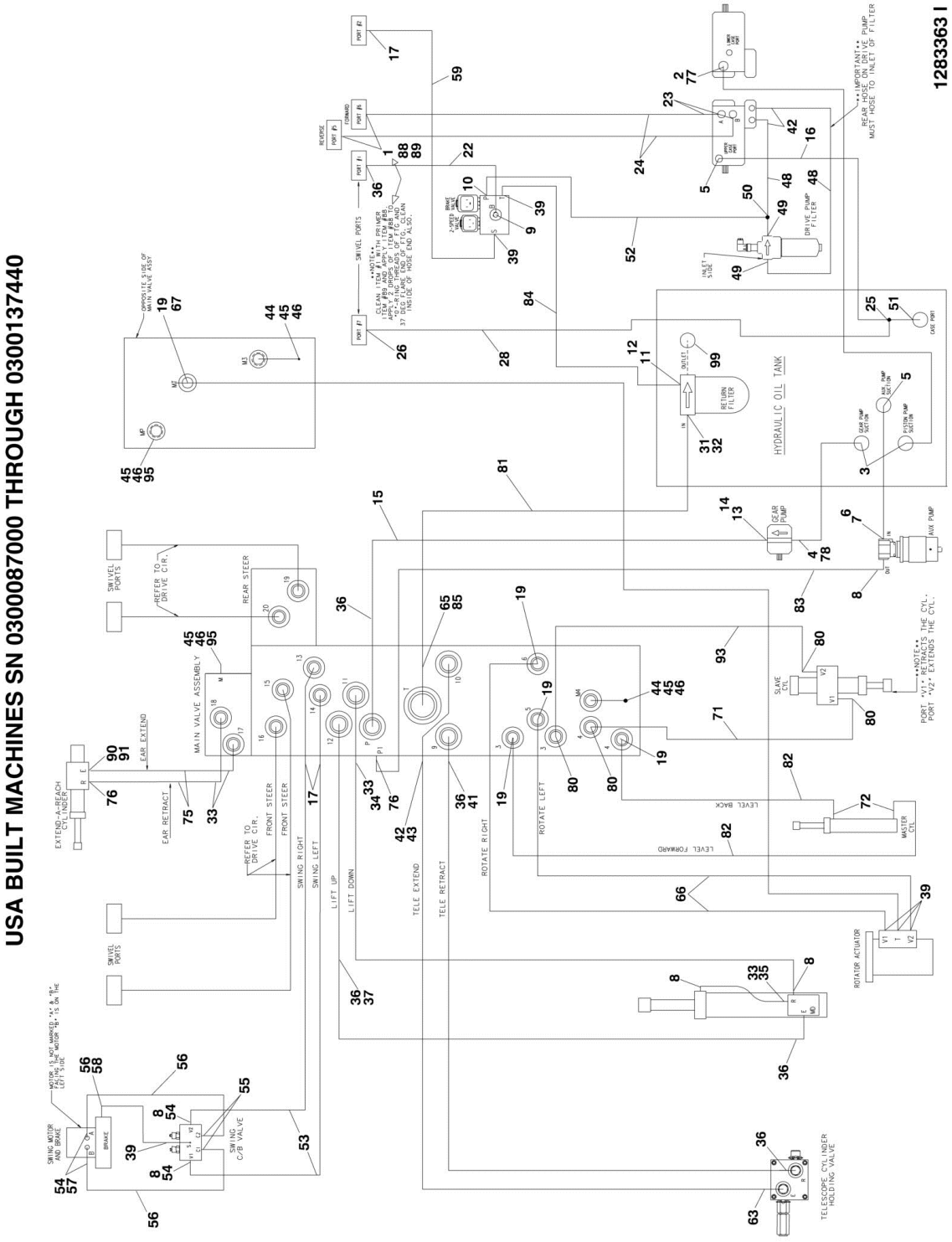

USA BUILT MACHINES SN 0300137441 THROUGH 0300171769
CHINA BUILT MACHINES SN B300000100 THROUGH B300000969

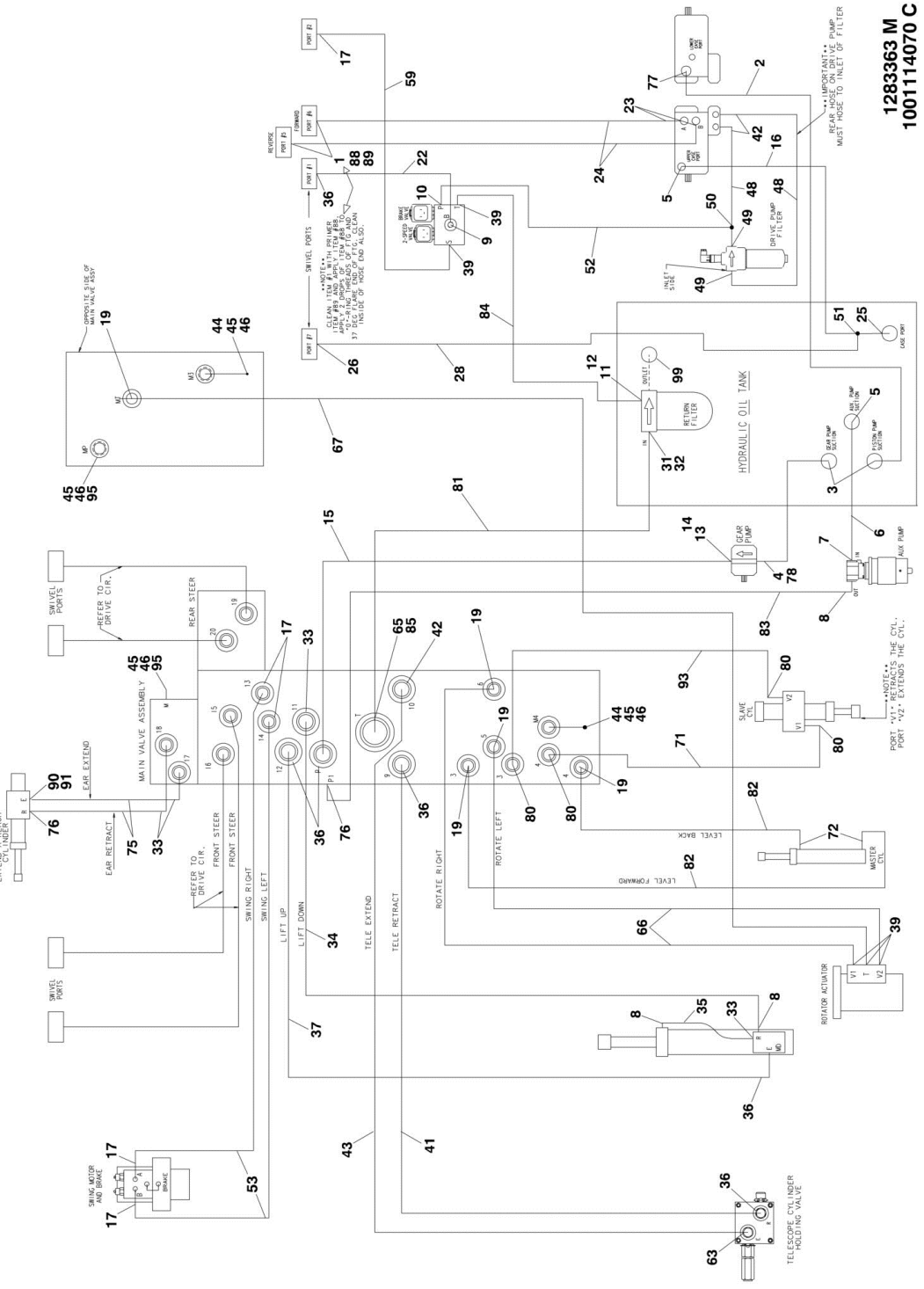

FIGURE 6-4. HYDRAULIC DIAGRAM - STANDARD

ITEM	PART NUMBER	QTY	DESCRIPTION	REV
		Ref	**STANDARD HYDRAULIC DIAGRAM**	
		Ref	**USA Built Machines**	
	2792608	Ref	**Standard Hydraulic Diagram 600S (SN 0300087000 through 0300166807)**	B-O
	1001143450	Ref	**Standard Hydraulic Diagram 600S (SN 0300166808 through 0300171769)**	C
	2792614	Ref	**Standard Hydraulic Diagram 600SJ**	11-O
	2792613	Ref	**Standard Hydraulic Diagram 660SJ (SN 0300087000 through 0300166807)**	B-O
	1001143451	Ref	**Standard Hydraulic Diagram 660SJ (SN 0300166808 through 0300171769)**	C
		Ref	**China Built Machines**	
	1001114072	Ref	**Standard Hydraulic Diagram 600S (SN B300000100 through B3000007699)**	1-B
	1001143455	Ref	**Standard Hydraulic Diagram 600S (SN B300000700 through B300000969)**	B
	1001114073	Ref	**Standard Hydraulic Diagram 660SJ (SN B300000100 through B300000699)**	1-B
	1001143456	Ref	**Standard Hydraulic Diagram 660SJ (SN B300000700 through B300000969)**	B
1	2220377	2	Fitting, Straight	
2		Ref	Hose Options:	
2	2752752	1	USA Built Machines	
2	1001113905	1	China Built Machines	
3	2220380	2	Fitting, Straight	
4	2220376	1	Fitting, Straight (Part of Pump Assembly)	
5	2220578	AR	Fitting, 90	
6		Ref	Hose Options:	
6	2752653	1	USA Built Machines	
6	1001113832	1	China Built Machines	
7		Ref	Fitting, Straight Options:	
7	2220408	1	USA Built Machines **(SN 0300087000 through 0300166807)**	
7	2220408	1	China Built Machines **(SN B300000100 through B30000699)**	
7	2220593	1	USA Built Machines **(SN 0300166808 through 0300171769)**	
7	2220593	1	China Built Machines **(SN B30000700 through B300000969)**	
8	2220628	AR	Fitting, 90	
9	2220596	1	Fitting, 90	
10	2220474	1	Fitting, 90	
11	2220574	1	Fitting, 90	
12	0100020	AR	Sealant, Pipe	
13	2220810	1	Fitting, Reducer (Part of Pump Assembly)	
14	4640744	1	Fitting, Check Valve (Part of Pump Assembly)	
15		Ref	Hose Options:	
15	2752504	1	USA Built Machines	
15	1001113798	NLA	China Built Machines (Use p/n 2752504) **(SN B300000100 through B300000883)**	
15	2752504	1	China Built Machine **(SN B300000884 through B300000969)**	
16		Ref	Hose Options:	
16	2752654	1	USA Built Machines	
16	1001113907	1	China Built Machines	
17	2220582	AR	Fitting, Straight	
19	2220415	5	Fitting, Straight	

ITEM	PART NUMBER	QTY	DESCRIPTION	REV
22		Ref	Hose Options:	
22	2752502	1	USA Built Machines	
22	1001113797	1	China Built Machines	
23	2220646	2	Fitting, 90 (Part of Pump Assembly)	
24		Ref	Hose Options:	
24	2752340	2	USA Built Machines	
24	1001113899	NLA	China Built Machines (Use p/n 2752340) **(SN B300000100 through B300000883)**	
24	2752340	2	China Built Machine **(SN B300000884 through B300000969)**	
25	2220407	1	Fitting, 90	
26	2220375	1	Fitting, Straight	
28		Ref	Hose Options:	
28	2753968	1	USA Built Machines	
28	1001113896	1	China Built Machines	
31	2220921	1	Fitting, Reducer	
32	2220498	1	Fitting, 45	
33	2220372	AR	Fitting, Straight	
34		Ref	Hose Options:	
34	2752631	1	USA Built Machines	
34	1001113821	1	China Built Machines	
35		Ref	Hose Options:	
35	2752632	1	USA Built Machines	
35	1001113822	1	China Built Machines	
36	2220373	6	Fitting, Straight	
37		Ref	Hose Options:	
37	2752515	1	USA Built Machines	
37	1001113801	NLA	China Built Machines (Use p/n 2752515) **(SN B300000100 through B300000883)**	
37	2752515	1	China Built Machine **(SN B300000884 through B300000969)**	
39	2220466	AR	Fitting, 90	
41		Ref	Hose Options:	
41	2751474	1	USA Built Machines	
41	1001113893	NLA	China Built Machines (Use p/n 2751474) **(SN B300000100 through B300000883)**	
41	2751474	1	China Built Machine **(SN B300000884 through B300000969)**	
42	2220947	AR	Fitting, Straight	
43		Ref	Hose Options:	
43	2752762	1	USA Built Machines	
43	1001113833	NLA	China Built Machines (Use p/n 2752762) **(SN B300000100 through B300000883)**	
43	2752762	1	China Built Machine **(SN B300000884 through B300000969)**	
44	2220873	2	Fitting, Straight Nipple	
45	2220428	AR	Fitting, Quick Coupling	
46	2220429	AR	Fitting, Dust Cap	
47	2220618	1	Fitting, Reducer (USA Built Machines) **(SN 0300087000 through 0300166419)**	
48		Ref	Hose Options:	
48	2752763	2	USA Built Machines	
48	1001113834	NLA	China Built Machines (Use p/n 2752763) **(SN B300000100 through B300000883)**	
48	2752763	2	China Built Machine **(SN B300000884 through B300000969)**	
49	2221042	2	Fitting, 90	
50	2220948	1	Fitting, Tee	

ITEM	PART NUMBER	QTY	DESCRIPTION	REV
51	2220738	1	Fitting, Tee	
52		Ref	Hose Options:	
52	2753957	1	USA Built Machines	
52	1001113880	1	China Built Machines	
53		Ref	Hose Options:	
53	2752588	2	USA Built Machines **(SN 0300087000 through 0300137440)**	
53	2752437	2	USA Built Machines **(SN 0300137441 through 0300171769)**	
53	1001113807	2	China Built Machines **(SN B300000100 through B300000969)**	
54	2220609	AR	Fitting, Reducer (USA Built Machines) **(SN 0300087000 through 0300137441)**	
55	2220468	2	Fitting, Straight (USA Built Machines) **(SN 0300087000 through 0300137441)**	
56	2752981	3	Hose (USA Built Machines) **(SN 0300087000 through 0300137441)**	
57	2220497	2	Fitting, Straight (USA Built Machines) **(SN 0300087000 through 0300137441)**	
58	2220502	1	Fitting, 45 (USA Built Machines) **(SN 0300087000 through 0300137441)**	
59		Ref	Hose Options:	
59	2751396	1	USA Built Machines	
59	1001113912	1	China Built Machines	
63	2220950	1	Fitting, 45	
65	2220974	1	Fitting, Long Straight	
66		Ref	Hose Options:	
66	2752598	2	Hose 600S & 600SJ USA Built Machines	
66	1001113813	NLA	Hose 600S & 600SJ China Built Machines (Use p/n 2752598) **(SN B300000100 through B300000883)**	
66	2752598	2	Hose 600S & 600SJ China Built Machines **(SN B300000884 through B300000969)**	
66	2752596	2	Hose 660SJ USA Built Machines	
66	1001113811	NLA	Hose 660SJ China Built Machines (Use p/n 2752596) **(SN B300000100 through B300000883)**	
66	2752596	2	Hose 660SJ China Built Machines **(SN B300000884 through B300000969)**	
67		Ref	Hose Options:	
67	2752599	1	Hose 600S & 600SJ USA Built Machines	
67	1001113814	NLA	Hose 600S & 600SJ China Built Machines (Use p/n 2752599) **(SN B300000100 through B300000883)**	
67	2752599	1	Hose 600S & 600SJ China Built Machines **(SN B300000884 through B300000969)**	
67	2752597	1	Hose 660SJ USA Built Machines	
67	1001113812	NLA	Hose 660SJ China Built Machines (Use p/n 2752597) **(SN B300000100 through B300000883)**	
67	2752597	1	Hose 660SJ China Built Machines **(SN B300000884 through B300000969)**	
71		Ref	Hose Options:	
71	2752633	AR	Hose 600S & 660SJ USA Built Machines	
71	2751868	AR	Hose 600SJ USA Built Machines **(SN 0300087000 through 0300087911)**	
71	2753048	AR	Hose 600SJ USA Built Machines **(SN 0300087912 through 0300171769)**	
71	1001113823	NLA	Hose 600S/660SJ China Built Machines (Use p/n 2752633) **(SN B300000100 through B300000883)**	
71	2752633	AR	Hose 600S/660SJ China Built Machines **(SN B300000884**	

ITEM	PART NUMBER	QTY	DESCRIPTION	REV
			through B300000969)	
72	2220472	AR	Fitting, 90	
75		Ref	Hose Options:	
75	Not Required	0	Hose 600S	
75	2753048	2	Hose 600SJ USA Built Machines	
75	2752633	2	Hose 660SJ USA Built Machines	
75	1001113823	NLA	Hose 660SJ China Built Machines (Use p/n 2752633) **(SN B300000100 through B300000883)**	
75	2752633	2	Hose 660SJ China Built Machines **(SN B300000884 through B300000969)**	
76	2220473	AR	Fitting, 90	
77	2220479	1	Fitting, Straight (Part of Pump Assembly)	
78		Ref	Hose Options:	
78	2752753	1	USA Built Machines	
78	1001113906	NLA	China Built Machines (Use p/n 2752753) **(SN B300000100 through B300000883)**	
78	2752753	1	China Built Machines **(SN B300000884 through B300000969)**	
80	2220603	4	Fitting, Straight	
81		Ref	Hose Options:	
81	2752783	1	USA Built Machines	
81	1001113911	1	China Built Machines	
82		Ref	Hose Options:	
82	2752591	2	USA Built Machines	
82	1001113808	2	China Built Machines	
83		Ref	Hose Options:	
83	2752643	1	USA Built Machines	
83	1001113826	1	China Built Machines	
84		Ref	Hose Options:	
84	2753325	1	USA Built Machines	
84	1001113855	1	China Built Machines	
85	2220409	1	Fitting, 45	
88	0100011	AR	Compound, Locking	
89	0100038	AR	Loctite, 3 Primer	
90	2180724	1	Fitting, 90 (600SJ & 660SJ Only)	
91	2180380	1	Fitting, Pipe Plug (600SJ & 660SJ Only)	
92	1703533	2	Decal - Hose Tags (Not Shown)	
93		Ref	Hose Options:	
93	2752633	1	Hose 600S & 660SJ USA Built Machines	
93	1001113823	NLA	Hose 600S & 660SJ China Built Machines (Use p/n 2752633) **(SN B300000100 through B300000883)**	
93	2752633	1	Hose 600S & 660SJ China Built Machines **(SN B300000884 through B300000969)**	
93	2752633	1	Hose 600SJ USA Built Machines **(SN 0300087000 through 0300087911)**	
93	2753048	1	Hose 600SJ USA Built Machines **(SN 0300087912 through 0300171769)**	
94	4240018	7	Tie-Strap (Not Shown)	
95	2220873	1	Fitting, Nipple	
99	2220893	AR	Fitting, Adapter	

FIGURE 6-5. HYDRAULIC DIAGRAM LIST

ITEM	PART NUMBER	QTY	DESCRIPTION	REV
		Ref	**Note: Information on diagrams not shown is available from JLG Service/Parts Departments.**	
		Ref	**Drive and Steer Hydraulic Diagrams:**	
	1283363	Ref	USA Built Machines:	
	2792616	Ref	2WD/2WS Machines	
	2792617	Ref	2WD/4WS Machines	
	2792607	Ref	4WD/2WS Machines	
	2792615	Ref	4WD/4WS Machines	
	2792749	Ref	4WD/2WS Machines (With Arctic Package)	
		Ref	China Built Machines:	
	1001114074	Ref	4WD/2WS Machines	
	1001114070	Ref	4WD/2WS Machines	
	2792749	Ref	4WD/2WS Machines (With Arctic Package)	
	1283363	Ref	4WD/2WS Machines (With Arctic Package)	
	2792615	Ref	4WD/4WS Machines **(SN B300000100 through B300000630)**	
	1283363	Ref	4WD/4WS Machines **(SN B300000100 through B300000630)**	
	1001138035	Ref	4WD/4WS Machines **(SN B300000631 through B300000969)**	
	1001114070	Ref	4WD/4WS Machines **(SN B300000631 through B300000969)**	
		Ref	**Axle Lockout Hydraulic Diagram**	
	2792612	Ref	USA Built Machines:	
	1283363	Ref	USA Built Machines:	
	1001114075	Ref	China Built Machines:	
	1001114070	Ref	China Built Machines:	
		Ref	**Loop Flushing Hydraulic Diagram**	
	2792660	Ref	Loop Flushing Hydraulic Diagram 2WD	
	2792659	Ref	Loop Flushing Hydraulic Diagram 4WD	
		Ref	**Oil Cooler Hydraulic Diagrams**	
		Ref	**Deutz Engine Machines**	
	0256762	Ref	USA Built Machines **(SN 0300087000 through 0300137649)**	
	1282665	Ref	USA Built Machines **(SN 0300087000 through 0300137649)**	
	1001108701	Ref	USA Built Machines **(SN 0300137650 through 0300171769)**	
	0272041	Ref	**Ford/GM Engine Machines**	
	1283309	Ref	**Ford/GM Engine Machines**	
		Ref	**Standard Hydraulic Diagrams:**	
	1283363	Ref	USA Built Machines:	
	2792608	Ref	Standard Hydraulic Diagrams 600S	
	2792614	Ref	Standard Hydraulic Diagrams 600SJ	
	2792613	Ref	Standard Hydraulic Diagrams 660SJ	
	1001114070	Ref	China Built Machines:	
	1001114072	Ref	Standard Hydraulic Diagrams 600S	
	1001114073	Ref	Standard Hydraulic Diagrams 660SJ	
	2792605	Ref	**Standard Hydraulic Schematic**	
		Ref	**Tool Hydraulic Diagrams:**	
	2792325	Ref	Tool Hydraulic Diagrams 600S	
	2792326	Ref	Tool Hydraulic Diagrams 600SJ	
	2792327	Ref	Tool Hydraulic Diagrams 660SJ	
	2792630	Ref	**Tow Hydraulic Diagram**	

SECTION 7 - ELECTRICAL

FIGURE 7-1. ELECTRICAL DIAGRAM LIST

ITEM	PART NUMBER	QTY	DESCRIPTION	REV
		Ref	**Note: Diagrams are available from the JLG Service Department. See Service and Maintenance Manual for Schematics.**	
	4933217	Ref	**ENGINE BLOCK HEATER ELECTRICAL DIAGRAM (FORD ENGINES)**	
	1282571	Ref	**ENGINE BLOCK HEATER ELECTRICAL DIAGRAM (FORD ENGINES)**	
		Ref	**COLD WEATHER PACKAGE ELECTRICAL DIAGRAM**	
	0273575	Ref	**Caterpillar Engines**	
	1282571	Ref	**Caterpillar Engines**	
	0271912	Ref	**Deutz Engines**	
	1283264	Ref	**Deutz Engines**	
	0275262	Ref	**GM Engines**	
	1282571	Ref	**GM Engines**	
		Ref	**GENERATOR ELECTRICAL DIAGRAMS**	
		Ref	**2500W Generator Options:**	
	4933300	Ref	**Caterpillar and Deutz Engine Machines with 60Hz Generators (USA Built Machines) (SN 0300087000 through 0300139049)**	
	1001112588	Ref	**Caterpillar and Deutz Engine Machines with 60Hz Generators (USA Built Machines) (SN 0300139050 through 0300171769)**	
	1001112588	Ref	**Caterpillar and Deutz Engine Machines with 60Hz Generators (China Built Machines) (SN B300000100 through B300000969)**	
	4933300	Ref	**Caterpillar and Deutz Engine Machines with 50Hz Generators except CE UK and CE Germany Specs (USA Built Machines) (SN 0300087000 through 0300133733)**	
	4933287	Ref	**CE UK Spec (USA Built Machines) (SN 0300087000 through 0300133733)**	
	4933284	Ref	**CE Germany Spec (USA Built Machines) (SN 0300087000 through 0300133733)**	
	1001100027	Ref	**Caterpillar and Deutz Engine Machines with 50Hz Generators (USA Built Machines) (SN 0300133734 through 0300139049)**	
	1001112743	Ref	**Caterpillar and Deutz Engine Machines with 50Hz Generators (USA Built Machines) (SN 0300139050 through 0300171769)**	
	1001112743	Ref	**Caterpillar and Deutz Engine Machines with 50Hz Generators (China Built Machines) (SN B300000100 through 0300171769)**	
	4933300	Ref	**Ford Engines**	
	4933350	Ref	**GM Engines**	
		Ref	**4000W Generator Options:**	
	1001153025	Ref	**ANSI Export & Japanese Specs**	
	1001159648	Ref	**Australian Spec**	
		Ref	**7500W Generator Options:**	
	4933264	Ref	**Caterpillar and Deutz Engines (USA Built Machines) (SN 0300087000 through 0300139049)**	
	1001112586	Ref	**Caterpillar and Deutz Engines (USA Built Machines) (SN 0300139050 through 0300171769)**	
	1001112586	Ref	**Caterpillar and Deutz Engines (China Built Machines) (SN B300000100 through B300000969)**	

ITEM	PART NUMBER	QTY	DESCRIPTION	REV
	4933283	Ref	**Ford Engines**	
	4933349	Ref	**GM Engines**	
	4933217	Ref	**GLOW PLUG DIAGRAM**	
		Ref	**LIGHTS ELECTRICAL DIAGRAM**	
	4933219	Ref	**Headlight/Taillight and Chassis Illumination Lights**	
	4933313	Ref	**Platform Floodlights**	
	0273491	Ref	**Platform Worklights**	
	See Note	Ref	**PLATFORM ELECTRICAL DIAGRAM (Note: Not Available for Purchase)**	
	4933218	Ref	**PLATFORM SOFT TOUCH SYSTEM ELECTRICAL DIAGRAM**	
		Ref	**STANDARD ELECTRICAL DIAGRAMS**	
		Ref	**Note: For Ground Module Identification, refer to Revision Log page A.**	
		Ref	**Note: All units "Without UGM" are USA Built Machines.**	
		Ref	**Without UGM:**	
	4933328	Ref	**Caterpillar Engine Machines (SN 0300087000 through 0300099059)**	
	4933383	Ref	**Caterpillar Engine Machines (SN 0300099060 through 0300171769)**	
	4933318	Ref	**Deutz Engine Machines (SN 0300087000 through 0300099059)**	
	4933366	Ref	**Deutz Engine Machines (SN 0300099060 through 0300171769)**	
	4933327	Ref	**Ford Engine Machines**	
	4933355	Ref	**GM Engine Machines (SN 0300087000 through 0300099059)**	
	4933365	Ref	**GM Engine Machines (SN 0300099060 through 0300171769)**	
		Ref	**With UGM:**	
	1001110365	Ref	**Caterpillar Engine Machines**	
	1001110364	Ref	**Deutz Engine Machines**	
	1001110359	Ref	**GM Engine Machines**	
		Ref	**STANDARD ELECTRICAL SCHEMATIC**	
		Ref	**USA Built Machines:**	
	1870132	Ref	**Caterpillar Engine Machines without UGM (SN 0300087000 through 0300099059)**	
	1870215	Ref	**Caterpillar Engine Machines without UGM (SN 0300099060 through 0300171769)**	
	1001110345	Ref	**Caterpillar Engine Machines with UGM**	
	1870191	Ref	**Deutz Engine Machines without UGM (SN 0300087000 through 0300099059)**	
	1870215	Ref	**Deutz Engine Machines without UGM (SN 0300099060 through 0300171769)**	
	1001110345	Ref	**Deutz Engine Machines with UGM**	
	1870132	Ref	**Ford Engine Machines**	
	1870191	Ref	**GM Engine Machines without UGM (SN 0300087000 through 0300099059)**	
	1870215	Ref	**GM Engine Machines without UGM (SN 0300099060 through 0300171769)**	
	1001110345	Ref	**GM Engine Machines with UGM**	
	1001131992	Ref	**GM Engine Schematic (Engine Schematic Only. p/n 1001110345 is for schematic for complete machine)**	
	1001110345	Ref	**China Built Machines**	
	0270805	Ref	**STROBE LIGHT ELECTRICAL DIAGRAM**	
	1283235	Ref	**STROBE LIGHT ELECTRICAL DIAGRAM**	

FIGURE 7-2. HARNESS COMPONENTS INSTALLATION (WITHOUT UGM)

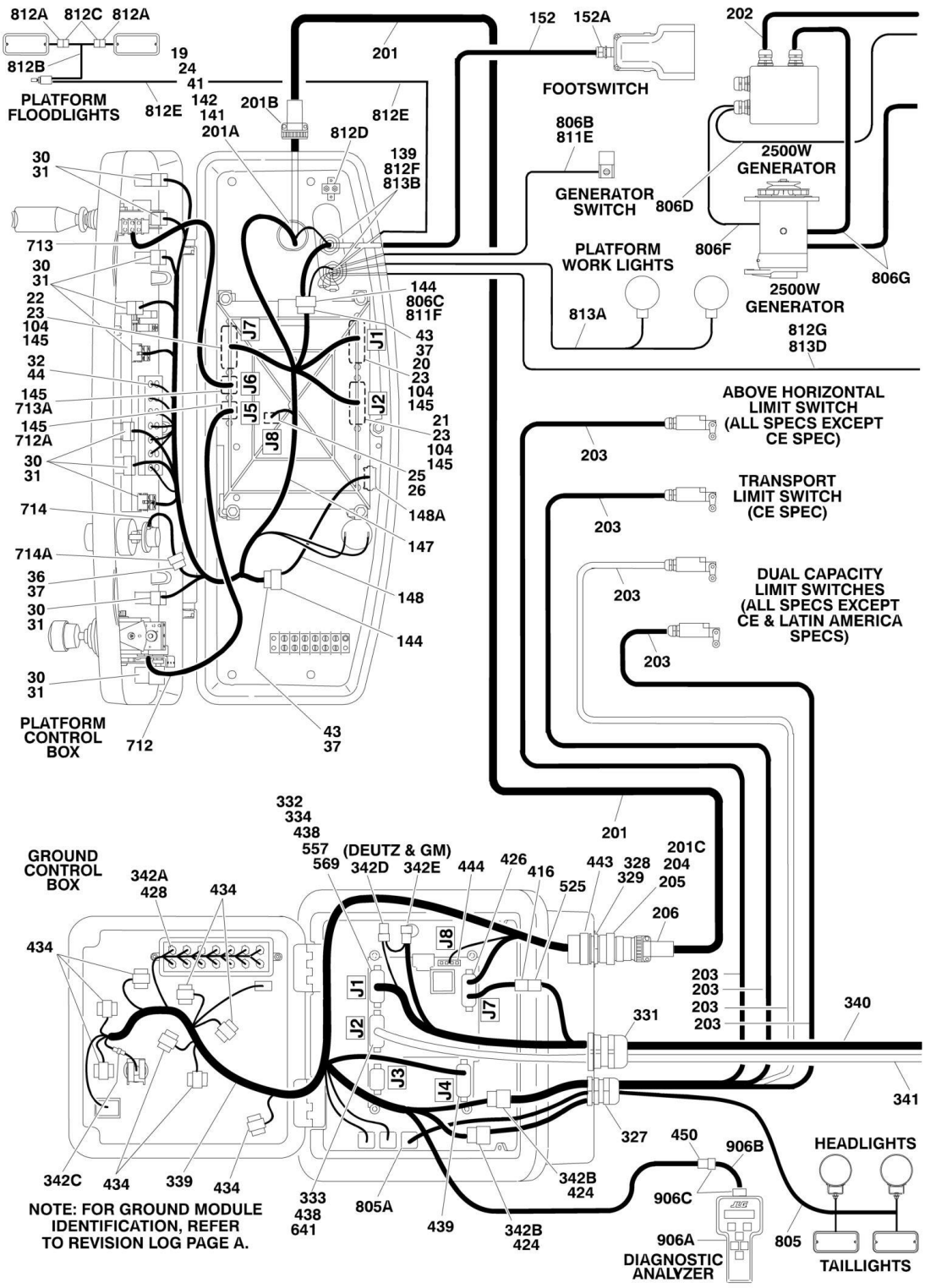

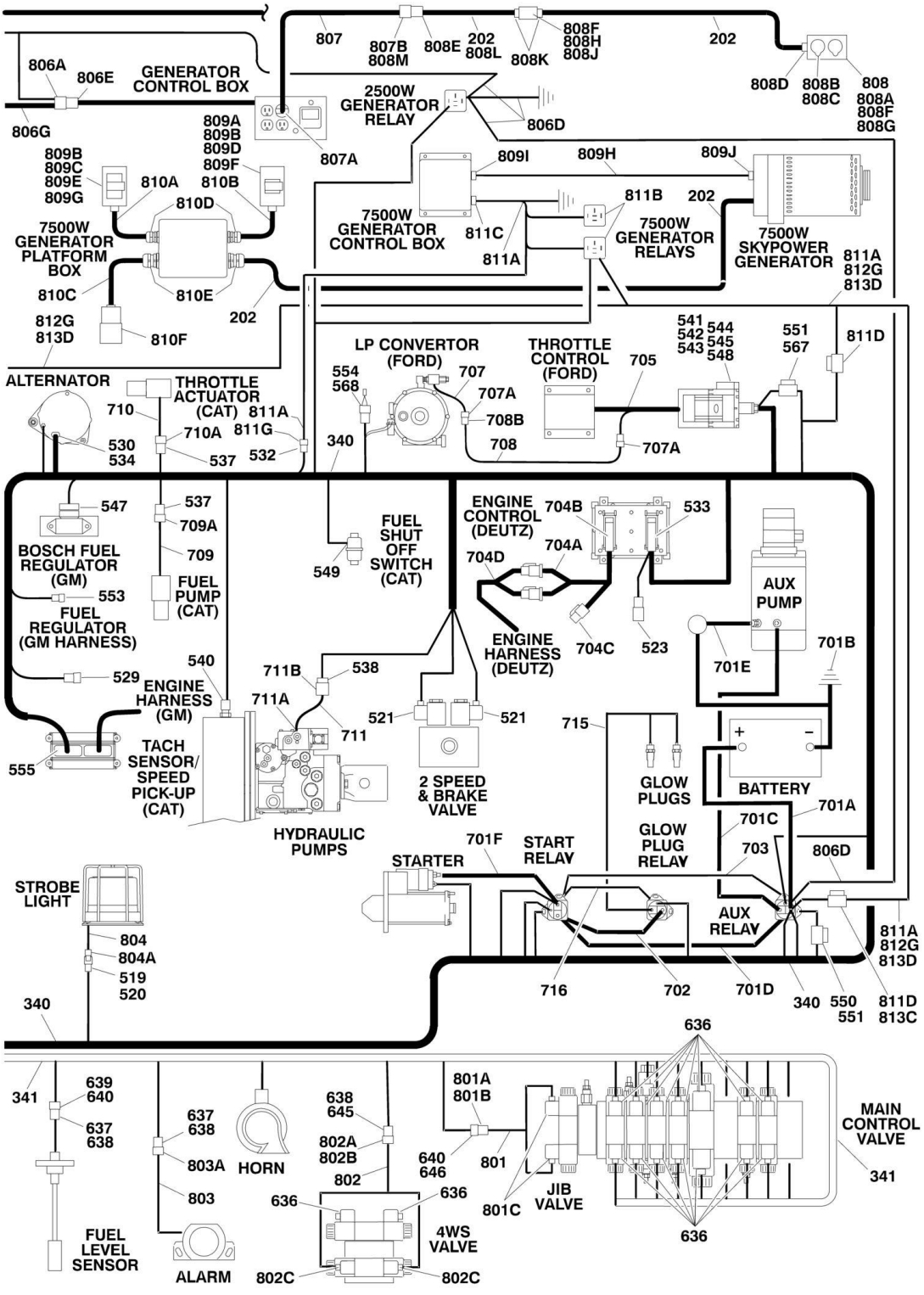
807
807B
808M
808E
202
808L
808K
808F
808H
808J
202
808D
808B
808C
808
808A
808F
808G
806A
806E
GENERATOR
CONTROL BOX
806G
2500W
GENERATOR
RELAY
806D
809A
809B
809D
809F
810B
807A
809I
809H
809J
809B
809C
809E
809G
810A
810D
7500W
GENERATOR
PLATFORM
BOX
7500W
GENERATOR
CONTROL BOX
811C
811A
811B
202
7500W
GENERATOR
RELAYS
7500W
SKYPOWER
GENERATOR
811A
812G
813D
810C
810E
202
812G
813D
810F
541
542
543
544
545
548
551
567
811D
LP CONVERTOR
(FORD)
THROTTLE
CONTROL
(FORD)
705
ALTERNATOR
THROTTLE
ACTUATOR
(CAT)
554
568
707
707A
708B
708
707A
710
811A
811G
710A
530
534
537
532
340
547
537
709A
709
FUEL
SHUT
OFF
SWITCH
(CAT)
ENGINE
CONTROL
(DEUTZ)
704B
533
704A
704D
BOSCH FUEL
REGULATOR
(GM)
549
AUX
PUMP
553
FUEL
PUMP
(CAT)
FUEL
REGULATOR
(GM HARNESS)
ENGINE
HARNESS
(DEUTZ)
704C
523
701E
701B
529
540
711B
538
ENGINE
HARNESS
(GM)
711A
521
521
715
711
555
TACH
SENSOR/
SPEED
PICK-UP
(CAT)
2 SPEED
& BRAKE
VALVE
GLOW
PLUGS
BATTERY
701A
701C
HYDRAULIC
PUMPS
701F
START
RELAY
GLOW
PLUG
RELAY
703
806D
STARTER
STROBE
LIGHT
AUX
RELAY
804
804A
519
520
811A
812G
813D
716
702
701D
340
550
551
811D
813C
340
636
341
639
640
637
638
637
638
638
645
801A
801B
MAIN
CONTROL
VALVE
803A
HORN
802A
802B
640
646
801
802
636
636
801C
JIB
VALVE
341
803
FUEL
LEVEL
SENSOR
4WS
VALVE
636
ALARM
802C
802C

FIGURE 7-2. HARNESS COMPONENTS INSTALLATION (WITHOUT UGM)

ITEM	PART NUMBER	QTY	DESCRIPTION	REV
		Ref	**Note: For Ground Module Identification, Refer to Revision Log Page A**	
		Ref	**Note: All Units "Without UGM" are USA Built Machines.**	
		Ref	**PLATFORM BOX HARNESS ASSEMBLY**	
	4922639	Ref	**Platform Box Harness Assembly (SN 0300087000 through 0300136518)**	8-I
	1001107753	Ref	**Platform Box Harness Assembly (SN 0300136519 through 0300171769)**	C
19	4460866	1	Connector - 19 Position	
20	4460874	1	Connector - 35 Position (Natural)	
21	4460875	1	Connector - 35 Position (Gray)	
22	4460873	1	Connector - 35 Position (Black)	
23	4460871	79	Socket, Female	
24	4460464	7	Pin, Male (16 Gauge)	
25	4460879	1	Terminal, Housing 2 Position	
26	4460887	2	Terminal, (12 Gauge)	
30	4460418	9	Connector - 6 Position	
31	4460419	27	Terminal, Female	
32	4120035	13	Base, Light	
36	4460225	1	Plug, Male- 6 Position	
37	4460227	6	Pin, Male	
41	4460508	3	Pin, Male (12 Gauge)	
43	4460434	2	Connector - 15 Position	
44	2920129	13	Lamp, Indicator	
		Ref	**PLATFORM BOX ASSEMBLY COMPONENTS**	
104	0100048	AR	Grease, Dielectric	
139	4460428	2	Connector, Strain Relief	
141	4460470	1	Nut, Terminal	
142	4460471	1	Lockwasher, Terminal	
144	4460708	2	Connector, Female - 15 Position	
145	4460905	5	Seal, Plug	
147		Ref	Harness, Platform Console Box Options (Includes Items 1-44):	
147	4922639	1	Harness, Platform Console Box **(SN 0300087000 through 0300136518)**	
147	1001107753	1	Harness, Platform Console Box **(SN 0300136519 through 0300171769)**	
148	4922666	1	Harness, Analyzer Cable	2-B
148	4460226	4	Socket, Female (Not Shown - Located at J2)	
148A	4460761	1	Connector, Female - 4 Position	
148A	4460227	4	Pin, Male	
152	See Note	NSS	Footswitch Harness (Note: Not Available for Purchase)	
152	1060918	8 ft/2.4m	Cable, Electrical - 18/3	
152A	4460071	1	Connector, Strain Relief	
		Ref	**BOOM CABLES INSTALLATION**	
		Ref	**Note: See SPECIAL OPTIONS Section for Machines with 4000W generator.**	
		Ref	**Boom Cables Installation 600S:**	
	0270733	Ref	**ANSI, ANSI Export, Brazilian, CSA, Japanese Specs without 7500W Generator**	5
	0270734	Ref	**CE and Latin American Specs without 7500W Generator**	6

ITEM	PART NUMBER	QTY	DESCRIPTION	REV
	0272483	Ref	**ANSI, ANSI Export, Australian, CSA Specs with 7500W Generator**	3
	0272484	Ref	**Brazilian, CE, Japanese, Latin American Specs with 7500W Generator**	3
	0275924	Ref	**ANSI, ANSI Export, CSA Specs without 7500W Generator and Arctic Package**	2
	0275925	Ref	**ANSI, ANSI Export, CSA Specs with 7500W Generator and Arctic Package**	3
		Ref	**Boom Cables Installation 600SJ:**	
	0270738	Ref	**ANSI, ANSI Export, Australian, Brazilian, CSA, Japanese, Latin American Specs without 7500W Generator**	3
	0270737	Ref	**CE Specs without 7500W Generator**	3
	0272488	Ref	**ANSI, ANSI Export, Australian, CSA, Latin American Specs with 7500W Generator**	2
	0272487	Ref	**Brazilian, CE, Japanese Specs with 7500W Generator**	2
	0275926	Ref	**ANSI, ANSI Export, CSA Specs without 7500W Generator and Arctic Package**	1
	0275927	Ref	**ANSI, ANSI Export, CSA Specs with 7500W Generator and Arctic Package**	2
		Ref	**Boom Cables Installation 660SJ:**	3
	0270736	Ref	**ANSI, ANSI Export, Australian, Brazilian, CSA, Japanese, Latin American Specs without 7500W Generator**	3
	0270735	Ref	**CE Specs without 7500W Generator**	3
	0272485	Ref	**ANSI, ANSI Export, Australian, CSA, Latin American Specs with 7500W Generator**	2
	0272486	Ref	**Brazilian, CE, Japanese Specs with 7500W Generator**	2
	0275339	Ref	**ANSI, ANSI Export, CSA Specs without 7500W Generator and Arctic Package**	1
	0275831	Ref	**ANSI, ANSI Export, CSA Specs with 7500W Generator and Arctic Package**	2
201		Ref	Harness, Main Boom Options:	
201		Ref	Harness, Main Boom 600S:	
201	4922468	1	ANSI, ANSI Export, CE, CSA, Australian, Brazilian, Japanese, Latin American Spec (Harness - 600S)	
201	4923657	1	ANSI, ANSI Export, CSA Spec (With Arctic Package) (Harness - 600S)	
201		Ref	Harness, Main Boom 600SJ:	
201	4922466	1	ANSI, ANSI Export, Australian, CE, CSA, Brazilian, Japanese, Latin American Spec (Harness - 660SJ)	
201	4923653	1	ANSI, ANSI Export, CSA Spec (With Arctic Package) (Harness - 660SJ)	
201		Ref	Harness, Main Boom 660SJ:	
201	4922467	1	ANSI, ANSI Export, Australian, CE, CSA, Brazilian, Japanese, Latin American Spec (Harness - 660SJ)	
201	4923509	1	ANSI, ANSI Export, CSA Spec (With Arctic Package)(Harness - 660SJ)	
201	1060896	AR	Cable Options:	
201	1060896	67 ft /20.4m	Cable 600S	
201	1060896	69 ft/21m	Cable 600SJ	
201	1060896	75 ft/22.8	Cable 660SJ	
201	4923462	AR	Cable Options (With Arctic Package):	
201	4923462	67 ft /20.4m	Cable 600S	
	4923462	69.5 ft /21.8m	Cable 600SJ	

ITEM	PART NUMBER	QTY	DESCRIPTION	REV
201	4923462	75 ft /22.8m	Cable 660SJ	
201A	4460465	11	Socket, Female - #16	
201A	4460865	1	Connector - 19 Position	
201A	4460509	4	Socket, Female - #12	
201A	4460466	4	Seal, Plug	
201B	4460473	1	Clamp, Cable	
201C	4460465	11	Socket, Female - #16	
201C	4460509	4	Socket, Female - #12	
202		Ref	Harness, Generator Options: (Does not include plug ends)	
202		Ref	Harness, Generator 600S without 7500W Generator	
202	4922889	AR	ANSI, ANSI Export, Australian, Brazilian, CSA, Japanese Specs (69.5ft/21.8m of 12/3 ANSI Spec Cable p/n 1060494)	
202	4922884	AR	CE and Latin American Specs (69.5ft/21.8m of 12/3 CE Spec Cable p/n 1060461)	
202	4923660	AR	ANSI, ANSI Export, CSA Specs (69.5ft/21.8m of 12/3 Cable p/n 4923463) (With Arctic Package)	
202	4922792	AR	600S with 7500W Generator (83ft/25.3m of 8/5 Cable p/n 1060945) (For Arctic Machines p/n was 4923658)	
202		Ref	600SJ without 7500W Generator	
202	4922887	AR	ANSI, ANSI Export, Australian, Brazilian, CSA, Japanese, Latin American Specs (71ft/21.6m of 12/3 ANSI Spec Cable p/n 1060494)	
202	4922885	AR	CE Specs (71ft/21.6m of 12/3 CE Spec Cable p/n 1060461)	
202	4923656	AR	ANSI, ANSI Export, CSA Specs (71ft/21.6m of 12/3 Cable p/n 4923463) (With Arctic Package)	
202	4922790	AR	Harness, Generator 600SJ with 7500W Generator (85ft/25.9m of 8/5 Cable p/n 1060945) (For Arctic Machines, p/n was 4923654)	
202		Ref	Harness, Generator 660SJ without 7500W Generator	
202	4922888	AR	ANSI, ANSI Export, Australian, Brazilian, CSA, Japanese, Latin American Specs (77ft/23.5m of 12/3 ANSI Spec Cable p/n 1060494)	
202	4922886	AR	CE Specs (77ft/23.5m of 12/3 CE Spec Cable p/n 1060461)	
202	4923510	AR	ANSI, ANSI Export, CSA Specs (77ft/23.5m of 12/3 Cable p/n 4923463) (With Arctic Package)	
202	4922791	AR	Harness, Generator 660SJ with 7500W Generator (90.5ft/27.6m of 8/5 Cable p/n 1060945) (For Arctic Machines p/n Was 4923630)	
203		Ref	Cable, Limit Switch Options:	
203		Ref	Cable, Limit Switch 600S:	
203	1061026	1	ANSI, ANSI Export, Australian, Brazilian, CE, CSA, Latin American, Japanese Specs (25.5ft/7.8m of 18/2 Cable p/n 1060680)	
203	4923659	1	ANSI, ANSI Export, CSA Spec (25.5ft/7.8m of 18/2 Cable p/n 4923466) (With Arctic Package)	
203	1061027	2	ANSI, ANSI Export, Australian, CSA, Brazilian, Japanese Specs (13.5ft/4.2m of 18/2 Cable p/n 1060680)	
203		Ref	Cable, Limit Switch 600SJ:	
203	1061026	1	Brazilian, CE, Japanese Specs (25.5ft/7.8m of 18/2 Cable p/n 1060680)	
203	1061027	1	ANSI, ANSI Export, Australian, Brazilian, CSA, Japanese, Latin American Specs (13.5ft/4.2m of 18/2 Cable p/n 1060680)	
203	4923655	1	ANSI, ANSI Export, CSA Spec (13.5ft/4.2m of 18/2 Cable p/n 4923466) (With Arctic Package)	

ITEM	PART NUMBER	QTY	DESCRIPTION	REV
203		Ref	Cable, Limit Switch 660SJ:	
203	1061027	1	ANSI, ANSI Export, Australian, Brazilian, CSA, Latin American, Japanese Specs (13.5ft/4.2m of 18/2 Cable p/n 1060680)	
203	1061026	1	Brazilian, CE, Japanese Specs (25.5ft/7.8m of 18/2 Cable p/n 1060680)	
203	4923511	1	ANSI, ANSI Export, CSA Spec (13.5ft/4.2m of 18/2 Cable p/n 4923466) (With Arctic Package)	
204	4460865	1	Connector - 19 Position	
205	4460466	4	Seal, Plug	
206	4460473	1	Clamp, Cable	
207	4100026	AR	Sleeve, Nylon (Required on 600S Only - Not Shown)	
207	4100026	10 ft/3.0m	Sleeve, Nylon **(SN 0300087000 through 0300137882)**	
207	4100026	4 ft/1.2m	Sleeve, Nylon **(SN 0300137883 through 0300171769)**	
		Ref	**GROUND CONTROL BOX COMPONENTS**	
302	0100048	AR	Grease, Dielectric (Not Shown)	
327	4460426	2	Connector, Strain Relief	
328	4460470	1	Nut, Terminal	
329	4460471	1	Lockwasher, Terminal	
331	4460526	1	Connector, Strain Relief	
332	4460874	1	Connector (Natural)	
333	4460875	1	Connector (Gray)	
334	4460905	4	Connector, Amp Seal Plug	
339		Ref	Ground Control Box Harness Assembly Options (See Items 401-453 for Breakdown):	
339	4923229	1	Caterpillar and Ford Engine **(SN 0300087000 through 0300099059)**	
339	4923213	1	Deutz and GM Engine **(SN 0300087000 through 0300099059)**	
339	4923577	1	Caterpillar, Deutz and GM Engine **(SN 0300099060 through 0300137194)**	
339	1001108126	1	Caterpillar, Deutz and GM Engine **(SN 0300137195 through 0300171769)**	
340		Ref	Engine Harness Assembly (See 501 to 569 for Breakdown):	
340	4923227	1	Caterpillar Engine Machines **(SN 0300087000 through 0300099059)**	
340	4923576	1	Caterpillar Engine Machines **(SN 0300099060 through 0300171769)**	
340	3990001	1	Diode **(SN 0300090378 through 0300171769)**	
340	4923212	1	Deutz Engine Machines	
340	4923226	1	Ford Engine Machines	
340	4923492	1	GM Engine Machines	
341	4923206	1	Valve Harness Assembly (See 601 to 646 for Breakdown):	2-B
342		Ref	Ground Control Box Wiring Diagram (Not Shown)	
342	4933328	1	Caterpillar Engine **(SN 0300087000 through 0300099059)**	3-C
342	4933383	1	Caterpillar Engine **(SN 0300099060 through 0300171769)**	A
342	4933318	1	Deutz Engine **(SN 0300087000 through 0300099059)**	F
342	4933366	1	Deutz Engine **(SN 0300099060 through 0300171769)**	A
342	4933327	1	Ford Engine	2-B
342	4933355	1	GM Engine **(SN 0300087000 through 0300099059)**	D
342	4933365	1	GM Engine **(SN 0300099060 through 0300171769)**	A
342A	2920129	AR	Bulb, Light	
342B	4460708	AR	Receptacle, Female - 15 Position	
342B	4460226	AR	Socket, Female	
342B	4922637	1	Harness, Jumper (Not Shown)	

ITEM	PART NUMBER	QTY	DESCRIPTION	REV
342B	4922636	1	Harness, Jumper (Not Shown) **(SN 0300099060 through 0300171769)**	
342C	2400065	1	Fuse, 30Amp	
342C	2400066	1	Fuse, Holder with Cover	
342D	4460894	1	Plug, Male - 6 Position (Deutz/GM Engines Only)	
342D	4460892	1	Receptacle, Female - 6 Position (Deutz/GM Engines Only)	
342E	4460539	1	Plug, Male - 3 Position (Caterpillar Only)	
342E	2902443	1	Receptacle Kit (Deutz Only)	
342E	4461071	8	Socket, Female	
342E	4461072	1	Receptacle	
342E	4461073	1	Cap, Dust	
342E	4461074	1	Shell, Black	
342F	4923591	1	Harness, Jumper (Not Shown - Located on Module J7-6 to J7-17 Caterpillar Only) **(SN 0300099060 through 0300171769)**	
		Ref	**GROUND CONTROL HARNESS ASSEMBLY**	
	4923229	Ref	**Caterpillar and Ford Engines (SN 0300087000 through 0300099059)**	2-B
	4923213	Ref	**Deutz and GM Engines (SN 0300087000 through 0300099059)**	E
	4923577	Ref	**Caterpillar, Deutz and GM Engines (SN 0300099060 through 0300137194)**	D
	1001108126	Ref	**Caterpillar, Deutz and GM Engines (SN 0300137195 through 0300171769)**	C
416	4460536	1	Connector, Female - 3 Position (Caterpillar/Deutz/GM Engines Only)	
416	4460943	3	Pin, Male (Caterpillar/Deutz/GM Engines Only)	
421	3990010	2	Diode - 6Amp (Not Shown)	
424	4460434	AR	Plug, Male 15 - Position Options:	
424	4460434	1	Ford Engines	
424	4460434	2	Caterpillar/Deutz/GM Engines	
424	4460227	AR	Pin	
426	4460873	1	Plug, Male - 35 Position (Black)	
426	4460871	AR	Socket, Female	
426	4460905	AR	Plug, Seal	
428	4120035	AR	Base, Light	
428	4460634	AR	Terminal (16 Gauge)	
428	4460635	AR	Terminal (12 Gauge)	
434	4460418	AR	Connector, Female - 6 Position	
434	4460419	AR	Socket, Female	
438	4460871	9	Socket, Female	
439	4460876	1	Plug, Male - 35 Position (Blue)	
439	4460871	AR	Socket, Female	
439	4460905	AR	Plug, Seal	
443	4460866	1	Connector - 19 Position	
443	4460464	10	Pin, Male (16 Gauge)	
443	4460508	3	Pin, Male (12 Gauge)	
444	4460878	1	Housing, Terminal - 4 Position	
444	4460887	3	Terminal (12 Gauge)	
450	4460761	1	Connector, Female 4 - Position	
450	4460227	4	Pin, Male	
		Ref	**ENGINE HARNESS ASSEMBLIES**	
	4923227	Ref	**Caterpillar Engine Machines (SN 0300087000 through 0300099059)**	3-C
	4923576	Ref	**Caterpillar Engine Machines (SN 0300099060 through**	D

ITEM	PART NUMBER	QTY	DESCRIPTION	REV
			0300171769)	
	4923212	Ref	**Deutz Engine Machines**	F
	4923226	Ref	**Ford Engine Machines**	3-C
	4923492	Ref	**GM Engine Machines**	D
519	4460424	1	Receptacle, Female - 2 Position	
520	4460268	2	Socket, Female	
521	4460880	2	DIN Connector without Diode	
522	4460891	2	Connector, Male - 2 Position (Caterpillar Engine Only)	
522	4460465	7	Socket, Female	
523	4461070	1	Receptacle, Female with Resistor (3 Position) (Deutz Engines Only)	
523	4461095	1	Plug, Male - 3 Position (Deutz Engines Only)	
523	4460944	3	Socket, Female (Deutz Engines Only)	
525	4460539	1	Connector, Male - 3 Position (Deutz Engine Only)	
525	4460944	3	Socket, Female (Deutz Engine Only)	
530	4460582	3	Terminal (Ford Engine Only)	
530	4460580	1	Lock, Terminal (Ford Engine Only)	
530	4460579	1	Housing - 3 Position (Ford Engine Only)	
532	4461157	1	Receptacle, Female - 2 Position (GM Engine Only)	
532	4460979	2	Pin, Male (GM Engine Only)	
532	4460458	2	Seal, Terminal (GM Engine Only)	
533	4461052	1	Connector, Receptacle - 25 Position (Deutz Engine Only)	
533	4461005	5	Terminal (Gold) (Deutz Engine Only)	
533	4461006	5	Seal, Terminal (Deutz Engine Only)	
533	4461060	2	Terminal (Tin) (Deutz Engine Only)	
533	4461054	2	Seal, Terminal (Deutz Engine Only)	
533	4461053	1	Cover, Plug (Deutz Engine Only)	
534	4460996	1	Connector, Female - 3 Position (Caterpillar Engines Only)	
534	4460995	2	Terminal, Spade (Caterpillar Engines Only)	
537	4460891	2	Plug, Male - 2 Position (Caterpillar Engines Only)	
537	4460465	4	Socket, Female (Caterpillar Engines Only)	
538	4460460	1	Connector, Male - 4 Position	
538	4460457	AR	Terminal, Female	
538	4460458	AR	Seal, Terminal	
540	4460539	1	Plug, Male - 3 Position (Caterpillar Engines Only)	
540	4460465	3	Socket, Female (Caterpillar Engines Only)	
541	4460713	1	Connector, Housing 42 Position (Ford Engine Only)	
542	4460725	1	Connector Wedge Lock, Center (Ford Engine Only)	
543	4460726	2	Connector Wedge Lock, Side (Ford Engine Only)	
544	4460800	29	Connector, Plug (Ford Engine Only)	
545	4460799	7	Pin, Male (Ford Engine Only)	
547	4461121	1	Plug, Male - 4 Position (GM Engine Only)	
547	4461122	4	Socket, Female (GM Engine Only)	
547	4461123	4	Seal, Terminal (GM Engine Only)	
548	4460728	3	Pin, Male (Ford Engine Only)	
549	4460792	1	Plug, Male - 1 Position (Caterpillar Engines Only)	
549	4460339	3	Terminal (Caterpillar Engines Only)	
553	4461124	1	Receptacle, Female - 4 Position (GM Engine Only)	
553	4460693	4	Pin, Male (GM Engine Only)	
553	4460608	4	Seal, Terminal (GM Engine Only)	
553	4461161	1	Lock, Terminal (GM Engine Only)	
554	4460742	1	Plug, Male - 2 Position (Ford Engine Only)	

ITEM	PART NUMBER	QTY	DESCRIPTION	REV
554	4460457	2	Terminal, Female (Ford Engine Only)	
554	4460458	2	Seal, Terminal (Ford Engine Only)	
555	4461109	1	Plug, Male - 16 Position (GM Engine Only)	
555	4461111	7	Pin, Male (GM Engine Only)	
555	4461113	AR	Seal, Terminal (GM Engine Only)	
555	4461222	9	Terminal, Cavity Plug (GM Engine Only)	
557	4460871	AR	Socket, Female	
567	2400065	1	Fuse, 30Amp (Ford Engine Only)	
568	3730120	1	Resistor Assembly (Ford Engine Only)	
568	4460978	1	Receptacle, Male - 2 Position	
568	4460979	2	Pin, Male	
568	4460458	2	Seal, Terminal	
568	3730121	1	Resistor	
569	4460226	2	Socket, Female (Deutz Engine Only) **(SN 0300088140 through 0300171769)**	
	4923206	Ref	**VALVE HARNESS ASSEMBLY**	2-B
636	4460880	15	DIN Connector	
637	4460320	2	Plug, Male - 2 Position	
638	4460267	5	Pin, Male	
639	4460424	1	Receptacle, Female - 2 Position	
640	4460268	5	Socket, Female	
641	4460871	28	Socket, Female	
645	4460326	1	Plug, Male - 3 Position	
646	4460445	1	Receptacle, Female - 3 Position	
		Ref	**STANDARD HARNESS COMPONENTS**	
701		Ref	Battery Cable Kit Options:	
701	2902296	1	Caterpillar and Deutz Engines Machines	C
701	2902297	1	Ford Engine Machines	
701	2902531	1	GM Engine Machines	A
701A		Ref	Cable, Battery (Red) Options:	
701A		Ref	Caterpillar and Deutz Engines Machines Options:	
701A	1001116241	1	Machines with 2 Relays on Engine Tray (was p/n 7027000)	
701A	1001116240	1	Machines with 3 Relays on Engine Tray (was p/n 7027000)	
701A	7027006	1	Ford Engine Machines	
701A	7027015	1	GM Engine Machines	
701B		Ref	Cable, Battery (Black) Options:	
701B	7027004	1	Caterpillar and Deutz Engines Machines	
701B	7027005	1	Ford Engine Machines	
701B	7016822	1	GM Engine Machines	
701C		Ref	Cable (Red) Options:	
701C	7027002	1	Caterpillar, Deutz and Ford Engines Machines	
701D		Ref	Cable (Red) Options:	
701D	7027001	1	Caterpillar and Deutz Engine Machines **(SN 0300087000 through 0300138089)**	
701D	See Note	NLA	Caterpillar and Deutz Engine Machines **(SN 0300138090 through 0300171769)**	
		Ref	**Note: Incorporated in Item 701A SN 0300138090 to Present.**	
701D	Not Required	0	Ford Engines Machines	
701D	7027017	1	GM Engines Machines	
701E	7027003	1	Cable (Black)	
701F		Ref	Cable, Battery (Red) Options:	

ITEM	PART NUMBER	QTY	DESCRIPTION	REV
701F		Ref	Caterpillar and Deutz Engines Machines	
701F	1001116241	1	Machines with 2 Relays on Engine Tray (was p/n 7027000)	
701F	1001116240	1	Machines with 3 Relays on Engine Tray (was p/n 7027000)	
701F	7027007	1	Ford Engine Machines	
701F	7016822	1	GM Engine Machines	
702	1060904	1	Cable, Battery (Caterpillar Engine Machines Only)	
703	14922737	1	Harness, Relay Ground (Caterpillar Engine Machines Only)	
704		Ref	Deutz Engine Harness Components (Deutz Engine Machines Only)	
704A	7027796	1	Deutz Engine Harness	
704B	See Note	NSS	Receptacle, Female - 25 Position (Note: Not Available - Purchase Complete Harness)	
704C	7027793	1	Plug-In, Connector	
704D		Ref	Deutz Engine Harness Options (For other replacement parts refer to Deutz engine dealer):	
704D	7027794	1	Deutz Tier I and Tier II **(SN 0300087000 through 0300126188)**	
704D	70001872	1	Deutz Tier III **(SN 0300126189 through 0300171769)**	
705	7027403	1	Ford Engine Harness (For other replacement parts refer to Ford engine dealer)	
706	7027991	1	GM Engine Harness (Not Shown - For other replacement parts refer to GM industrial engine dealer)	
706	7027989	1	Connector - 10 Position (Not Shown)	
706	See Note	NSS	Box, Fuse Box (Not Shown) (Note: Part of Harness Not Available for Purchase)	
706	70002627	1	Cover, Fuse Box (Not Shown)	
706	70001950	2	Relay (Power and Fuel Pump) (Not Shown)	
706	70001951	1	Relay (Starter) (Not Shown)	
706	70001931	1	Fuse - 60Amp (Alternator) (Not Shown)	
706	See Note	NLA	Fuse - 20Amp (Not Shown) (Note: Not Available - Purchase Locally)	
706	See Note	NLA	Fuse - 15Amp (Not Shown) (Note: Not Available - Purchase Locally)	
706	See Note	NLA	Fuse - 10Amp (Not Shown) (Note: Not Available - Purchase Locally)	
706	See Note	NLA	Fuse - 5Amp (Not Shown) (Note: Not Available - Purchase Locally)	
707	See Note	NLA	Dual Fuel Shut-Off Filter Harness (Note: Not Available for Purchase)	
707A	7023679	1	Electrical Connector Kit (Includes [1] 2 Position Connector, 2 Pins & 2 Seals)	
708	4922968	1	Dual Fuel Shut-Off Filter Extension Harness (Not Shown)	
708A	4460742	1	Connector, Male - 2 Position	
708A	4460458	2	Seal, Terminal	
708B	4460978	1	Receptacle, Male - 2 Position	
708B	4460979	2	Pin, Male	
708B	4460458	2	Seal, Terminal	
709	See Note	NLA	Fuel Pump Harness (Caterpillar Engines Only) (Note: Not Available for Purchase)	
709	4460897	1	Receptacle, Female - 2 Position (Caterpillar Engines Only)	
709	4460464	2	Pin, Male (Caterpillar Engines Only)	
710	See Note	NLA	Throttle Actuator Harness (Caterpillar Engines Only) (Note: Not Available for Purchase)	
710	4460897	1	Receptacle, Female - 2 Position (Caterpillar Engines Only)	
710	4460464	2	Pin, Male (Caterpillar Engines Only)	

ITEM	PART NUMBER	QTY	DESCRIPTION	REV
711	See Note	NSS	Pump Harness (Note: Not Available for Purchase)	
711A	7007497	1	Plug (Pump End)	
711B	7007498	1	Plug (Engine Harness End)	
712	See Note	NSS	Controller Harness Assembly (Lift and Swing) (Note: Purchase Complete Controller)	
712A	7022819	1	Plug, Male - 8 Position (Natural)	
712A	4460871	8	Socket, Female	
713	See Note	NSS	Controller Harness/Circuit Board Assembly (Drive and Steer) (Note: Purchase Complete Controller)	
713A	7022825	1	Plug, Male - 8 Position (Black)	
713A	4460871	7	Socket, Female	
714	See Note	NSS	Controller Harness (Speed Control) (Note: Purchase Complete Controller)	
714A	4460224	1	Receptacle, Female - 6 Position	
714A	4460226	6	Socket, Female	
715	4923379	1	Harness, Glow Plug (Deutz Engine Machines) **(SN 0300092726 through 0300171769)**	B
716	1060904	1	Cable, Jumper (Deutz Engine Machines) **(SN 0300092726 through 0300171769)**	
		Ref	**OPTIONAL HARNESS COMPONENTS**	
801A	4460326	1	Plug, Male - 3 Position	
801B	4460267	3	Pin, Male	
801C	4460499	2	Connector, DIN with Diode	
802	4921928	1	4WS Valve Harness	3
802A	4460268	3	Socket, Female	
802B	4460445	1	Connector, Female - 3 Position	
802C	4460499	2	Connector, DIN with Diode	
803	0257887	1	Alarm Harness (Includes Alarm)	
803	0140032	1	Alarm	
803	2820035	6 in/15cm	Loom	
803A	4460424	1	Plug, Male - 2 Position	
803B	4460268	2	Socket, Female	
804	0272507	1	Strobe Light Harness Options (Includes Strobe Light):	
804A	4460320	1	Connector, Female - 2 Position	
804B	4460267	2	Pin, Male	
805	See Note	NSS	Headlight and Taillight/Chassis Illumination Harness (Note: Not Available for Purchase)	
805	1060341	AR	Cable, Electrical 16/2 Options:	
805	1060341	37/11.3m	Headlights and Taillights	
805	1060341	40/12.2m	Chassis Illumination Lights	
805A	3740049	1	Relay	
805A	4460259	3	Terminal	
805A	4460260	4	Housing, Terminal	
805A	4460297	1	Terminal	
805A	4922643	1	Lights Harness for Ground Control Box	1-A
805A	4460226	2	Socket, Female	
806		Ref	2500W Generator Electrical Components Options:	
806	4933350	Ref	GM Engine Machines	1-A
806	4933300	Ref	Deutz and Caterpillar with 60Hz Generators	2-A
806	1001100027	Ref	Deutz and Caterpillar with 50Hz Generators	5-E
806A	4460321	1	Connector, Male - 4 Position	
806A	4460906	4	Socket, Female	
806B	4922641	1	Harness - On/Off Switch	

ITEM	PART NUMBER	QTY	DESCRIPTION	REV
806C	4460226	2	Socket, Female	
806D		Ref	2500W Control Box to Relay Harness Options:	
806D	4922970	1	Caterpillar, Deutz and Ford Engines Machines	
806D	4923445	1	GM Engines Machines	
806E	4460961	1	Connector, Female - 4 Position	
806E	4460705	4	Pin, Male	
806F	1001100305	1	Ground Harness (50Hz Only)	C
806G	7020193	1	2500W Generator Power Cable	
807		Ref	Generator to Rear of Boom Harness Options:	
		Ref	**Note: Harness used to connect AC at platform harness to generator receptacle to power platform receptacle.**	
807	4921827	1	110V (ANSI, ANSI Export and Japanese Specs)	2
807	4921954	1	220V (ANSI and ANSI Export Specs)	2
807	4921956	1	110V/220V (Australian, CE, Latin America and Brazilian Specs)	-
807		Ref	Cable, Electrical - 12/3 Options:	
807	1060494	20 ft/6m	110V (ANSI, ANSI Export and Japanese Specs)	
807	1060494	26 ft/8m	220V (ANSI and ANSI Export Specs)	
807	1060461	20 ft/6m	110V/220V (Australian, CE, Latin America and Brazilian Specs)	
807A		Ref	Plug, Male Options:	
807A	4460205	1	110V (ANSI, ANSI Export and Japanese Specs)	
807A	4460233	1	220V (ANSI and ANSI Export Specs)	
807A	Not Required	0	110V/220V (Australian, CE, Latin American and Brazilian Specs) (Purchase Locally)	
807A	4460027	1	Receptacle, Twist Lock (110V Only)	
807B		Ref	Receptacle, Female Options:	
807B	4460134	1	110V (ANSI, ANSI Export and Japanese Specs)	
807B	4460701	1	220V (ANSI and ANSI Export Specs)	
807B	Not Required	0	110V/220V (Australian, Latin American and Brazilian Specs) (Purchase Locally)	
807B	See Note	NSS	110V/220V (CE Spec) (Note: See Item 808M)	
808		Ref	AC to Platform Receptacle Components Options:	
808	0256113	Ref	110V/60Hz GFI Receptacle (ANSI, ANSI Export and Japanese Specs)	5
808	0256201	Ref	110V/50Hz Receptacle (Plug and Receptacle Supplied Locally) (Australian, Brazilian, Latin America Specs)	4
808	0257175	Ref	220V Receptacle (ANSI and ANSI Export Specs)	4
808		Ref	CE Specs Options Only:	
808		Ref	Without Generator:	
808	0256201	Ref	110V/50Hz Receptacle (Plug and Receptacle Supplied Locally)	3
808	0273076	Ref	110V/50Hz Receptacle (See HARNESS COMPONENTS INSTALLATION (WITH UGM) for Components)	A
808	0273078	Ref	CE Germany Specs (See HARNESS COMPONENTS INSTALLATION (WITH UGM) for Components)	A
808	0275455	Ref	220V with CEE7 Post Ground Receptacle and Plug and Circuit Breaker (2x4 Box)	D
808	0275456	Ref	220V with CEE7 Side Ground Receptacle and Plug and Circuit Breaker (2x4 Box)	D
808	0275659	Ref	220V with AFSINT 107 Keyed Ground Receptacle and Plug and Circuit Breaker (2x4 Box)	D
808	0275235	Ref	110V with IEC Yellow Receptacle and Plug and Circuit Breaker	D
808	0275254	Ref	220V with IEC Blue Receptacle and Plug and Circuit Breaker	D

ITEM	PART NUMBER	QTY	DESCRIPTION	REV
808	0275237	Ref	220V with CEE7 Post Ground Receptacle and Plug and Circuit Breaker (70mm x 70mm Box)	D
808	0275253	Ref	220V with CEE7 Side Ground Receptacle and Plug and Circuit Breaker (70mm x 70mm Box) (Use p/n 1001153312)	A-D
808		Ref	With Generator:	
808	1001100390	Ref	220V with CEE7 Post Ground Receptacle and Plug and Circuit Breaker (2x4 Box)	D
808	1001100391	Ref	220V with CEE7 Side Ground Receptacle and Plug and Circuit Breaker (2x4 Box)	D
808	1001100392	Ref	220V with AFSINT 107 Keyed Ground Receptacle and Plug and Circuit Breaker (2x4 Box)	C
808	1001100393	Ref	110V with IEC Yellow Receptacle and Plug and Circuit Breaker	C
808	1001100394	Ref	220V with IEC Blue Receptacle and Plug and Circuit Breaker	C
808	1001100395	Ref	220V with CEE7 Post Ground Receptacle and Plug and Circuit Breaker (70mm x 70mm Box)	C
808	1001100396	Ref	220V with CEE7 Side Ground Receptacle and Plug and Circuit Breaker (70mm x 70mm Box)	C
808A		Ref	Box, Switch Options:	
808A	0860038	1	0256113 & 0257175 Installations	
808A	Not Required	0	0256201 Installation (Purchase Locally)	
808A	0861731	1	0275455, 0275456, 0275659, 1001100390, 1001100391 & 1001100392 Installations	
808A	0861781	1	0275235, 0275254, 1001100393 & 1001100394 Installations	
808A	0861782	NLA	0275237, 0275253, 1001100395, 1001100396 & 1001153312 Installations (Note: Use p/n 1001100344 CEE7 Side Ground Service Kit or p/n 1001100343 CEE7 Post Ground Service Kit. Kit Include Box p/n 1001141967 & Items 808B, 808C, 808E & 808M)	
808A	1001141967	1	1001100343, 1001100344, 1001141970 & 1001141971 Kits	
808B		Ref	Receptacle Options:	
808B	4460346	1	0256113 Installation	
808B	4460125	1	0257175 Installation	
808B	Not Required	0	0256201 Installation (Purchase Locally)	
808B	4461244	1	0275455 & 1001100390 Installations	
808B	4461245	1	0275456 & 1001100391 Installations	
808B	4461246	1	0275659 & 1001100392 Installations	
808B	4461198	1	0275235 & 1001100393 Installations	
808B	4461201	1	0275254 & 1001100394 Installations	
808B	4461204	NLA	0275237 & 1001100395 Installations (Use p/n 1001100343)	
808B	4461207	NLA	0275253, 1001100396 & 1001153312 Installations (Use p/n 1001100344)	
808B	1001141968	1	1001100343 & 1001141971 Kits	
808B	1001141969	1	1001100344 & 1001141970 Kits	
808C		Ref	Shield, Cover Options:	
808C	4060700	1	0256113 Installation **(SN 0300087000 through 0300138240)**	
808C	1001110873	1	0256113 Installation **(SN 0300138241 through 0300171769)**	
808C	4060092	1	0257175 Installation	
808C	Not Required	0	0256201 Installation (Purchase Locally)	
808C	4461244	1	0275455 & 1001100390 Installations	

ITEM	PART NUMBER	QTY	DESCRIPTION	REV
808C	4461245	1	0275456 & 1001100391 Installations	
808C	4461246	1	0275659 & 1001100392 Installations	
808C	4461198	1	0275235 & 1001100393 Installations	
808C	4461201	1	0275254 & 1001100394 Installations	
808C	4461207	NLA	0275237 & 1001100395 Installations (Use p/n 1001100343)	
808C	4461207	NLA	0275253, 1001100396 & 1001153312 Installations (Use p/n 1001100344)	
808C	1001141968	12	1001100343 & 1001141971 Kits	
808C	1001141969	1	1001100344 & 1001141970 Kits	
808D		Ref	Connector, Strain Relief Options:	
808D	4460071	1	0256113 & 0257175 Installations	
808D	Not Required	0	0256201 Installation (Purchase Locally)	
808D	4460968	1	0275455, 0275456, 0275659, 0275235, 0275254, 0275237, 0275253, 1001100390, 1001100391, 1001100392, 1001100393, 1001100394, 1001100395, 1001100396 & 1001153312 Installations	
808E		Ref	Plug, Male Options:	
808E	4460205	1	0256113 Installation	
808E	4460233	1	0257175 Installation	
808E	Not Available		0256201 Installation (Purchase Locally)	
808E	4461202	1	0275237, 0275455, 1001100390 & 1001100395 Installations & 1001100343 & 1001141971 Kits	
808E	4461205	1	0275453, 0275256, 1001100391 & 1001100396 Installations & 1001100344 & 1001141970 Kits	
808E	4461249	1	0275659 & 1001100392 Installations	
808E	4461196	1	0275235 & 1001100393 Installations	
808E	4461199	1	0275254 & 1001100394 Installations	
808F		Ref	Hardware Options:	
808F	0641405	AR	Bolt 1/4in - 20NC x 5/8in	
808F	0641407	AR	Bolt 1/4in - 20NC x 7/8in	
808F	0641410	AR	Bolt 1/4in - 20NC x 1-1/4in	
808F	0641416	AR	Bolt 1/4in - 20NC x 2in	
808F	0700408	AR	Screw M4 x 16mm	
808F	3290405	AR	Locknut M4	
808F	3311405	AR	Locknut 1/4in - 20NC	
808F	4711400	AR	Flatwasher 1/4in (Narrow)	
808F	4811400	AR	Flatwasher M4	
808F	1320149	AR	Clamp, Stauff	
808F	0100011	AR	Compound, Locking	
808G		Ref	Bracket, Receptacle Box Mounting Options:	
808G	Not Required	0	0256113, 0257175 & 0256201 Installations	
808G	0903484	1	0275455, 0275456, 0275659, 0275235, 0275254, 0275237, 0275253, 1001100390, 1001100391, 1001100392, 1001100393, 1001100394, 1001100395, 1001100396 & 1001153312 Installations	
808H		Ref	Bracket, Circuit Breaker Mounting Options:	
808H	Not Required	0	0256113, 0257175 & 0256201 Installations	
808H	0903611	1	0275455, 0275456, 0275659, 0275235, 0275254, 0275237, 0275253, 1001100390, 1001100391, 1001100392, 1001100393, 1001100394, 1001100395, 1001100396 & 1001153312 Installations	
808	1001154592	1	1001153312 Installation	
808J		Ref	Kit, Box and Breaker (Required Only on CE Spec	

ITEM	PART NUMBER	QTY	DESCRIPTION	REV
			Installations except 0256201 Installation):	
808J	2902549	AR	Without Generator	D
808J	1001096070	AR	With 110V Generator	D
808J	1001109554	AR	With 220V Generator	B
808J		Ref	Circuit Breaker Options:	
808J		Ref	Without Generator	
808J	2400093	NLA	Circuit Breaker, 16Amp/30mAmp Combination (Use p/n 1001181045) **(SN 0300087000 through 0300136310)**	
808J	1001109475	NLA	Circuit Breaker, 16Amp (Use p/n 1001181045 16Amp/30mAmp Combination) **(SN 0300136311 through 0300171769)**	
808J	1001109482	NLA	Circuit Breaker, 30mAmp (Use p/n 1001181045 16Amp/30mAmp Combination) **(SN 0300136311 through 0300171769)**	
808J		Ref	With 110V Generator	
808J	1001109475	NLA	Circuit Breaker, 16Amp (Use p/n 1001181045 16Amp/30mAmp Combination)	
808J	1001109482	NLA	Circuit Breaker, 30mAmp (Use p/n 1001181045 16Amp/30mAmp Combination)	
808J		Ref	With 220V Generator	
808J	1001109477	NLA	Circuit Breaker, 10Amp (Use p/n 1001181046 10Amp/30mAmp Combination)	
808J	1001109482	NLA	Circuit Breaker, 30mAmp (Use p/n 1001181046 10Amp/30mAmp Combination)	
808J	0861880	1	Breaker Box	
808J	4460956	1	Barrier, Terminal Block End	
808J	4460957	1	Block, Terminal	
808K		Ref	Connector, Strain Relief Options (Required Only on CE Spec Installations except 0256201 Installation):	
808K	4460633	2	M20 Thread	
808K	1001097150	2	M25 Thread	
808L	1060908	AR	Cable, Extension (Required Only on CE Spec Installations except 0256201 Installation)	
808L	1060908	6 ft/1.8m	Without Generator	
	1060908	12 ft 3.6m	With Generator	
808M		Ref	Receptacle, Female Options:	
808M	4461203	1	1001100390 & 1001100395 Installations & 1001100343 & 1001141971 Kits	
808M	4461206	1	1001100391 & 1001100396 Installations & 1001100344 & 1001141970 Kits	
808M	4461250	1	1001100392 Installation	
808M	4461197	1	1001100393 Installation	
808M	4461200	1	1001100394 Installation	
	0275452		Receptacle Box Kit (220V CEE7 Post Ground) (Includes Items 808A, 808B, 808C & 808E) (0275455 Installation)	1
	1001100345		Receptacle Box Kit (220V CEE7 Post Ground) (Includes Items 808A-808C, 808E & 808M) (1001100390 Installation)	2
	0275453		Receptacle Box Kit (220V CEE7 Side Ground) (Includes Items 808A, 808B, 808C & 808E) (0275456 Installation)	1
	1001100347		Receptacle Box Kit (220V CEE7 Side Ground) (Includes Items 808A-808C, 808E & 808M) (1001100391 Installation)	3
	0275454		Receptacle Box Kit (220V AFSINT 107 Keyed Ground) (Includes Items 808A, 808B, 808C & 808E) (0275659 Installation)	1
	1001100346		Receptacle Box Kit (220V AFSINT 107 Keyed Ground)	2

ITEM	PART NUMBER	QTY	DESCRIPTION	REV
			(Includes Items 808A-808C, 808E & 808M) (1001100392 Installation)	
	0275216		Receptacle Box Kit (110V IEC Yellow) (Includes Items 808A, 808B, 808C & 808E) (0275235 Installation)	1
	1001100341		Receptacle Box Kit (110V IEC Yellow) (Includes Items 808A-808C, 808E & 808M) (1001100393 Installation)	2
	0275217		Receptacle Box Kit (220V IEC Blue) (Includes Items 808A, 808B, 808C & 808E) (0275254 Installation)	1
	1001100342		Receptacle Box Kit (220V IEC Blue) (Includes Items 808A-808C, 808E & 808M) (1001100394 Installation)	2
	0275218		Receptacle Box Kit (220V CEE7 Post Ground) (Includes Items 808A-808C, 808E & 808M) (0275237 Installation) (Use p/n 1001100343)	B-B
	1001100343		Receptacle Box Kit (220V CEE7 Post Ground) (Includes Items 808A-808C, 808E & 808M) (1001100395 Installation)	B
	0275219		Receptacle Box Kit (220V CEE7 Side Ground) (Includes Items 808A-808C, 808E & 808M) (0275253 & 1001153312 Installations) (Use p/n 100110344)	B-B
	1001100344		Receptacle Box Kit (220V CEE7 Side Ground) (Includes Items 808A-808C, 808E & 808ME) (1001100396 Installation)	B
809		Ref	7500W SkyPower Generator Installation	
809	0273540	Ref	60Hz and Caterpillar Engine	H
809	0273541	Ref	50Hz Spec and Caterpillar Engine	H
809	0272255	Ref	60Hz and Deutz Engine	I
809	0272640	Ref	60Hz and Deutz Engine (Brazilian Spec Only)	G
809	0272492	Ref	50Hz Spec and Deutz Engine	H
809	0272817	Ref	60Hz Spec and Ford Engine	H
809	0275257	Ref	60Hz Spec and GM Engine	E
		Ref	**Note: SkyPower Generator is Standard On ANSI and CSA Specs. Optional on All Other Specs.**	
		Ref	**Note: See SPECIAL OPTIONS Section for Machines with 4000W generator.**	
809A		Ref	Receptacle, Female Twist-Lock Options:	
809A	4460958	1	60Hz Spec	
809A	See Note	NLA	50Hz Spec (Note: Not Available - Purchase Locally)	
809B		Ref	Gasket Options:	
809B	3960422	2	60Hz Spec	
809B	See Note	NLA	50Hz Spec (Note: Not Available - Purchase Locally)	
809C		Ref	Cover, Receptacle Options:	
809C	4060700	1	60Hz Spec **(SN 0300087000 through 0300138109)**	
809C	1001110873	1	60Hz Spec **(SN 0300138110 through 0300171769)**	
809C	See Note	1	50Hz Spec (Note: Not Available - Purchase Locally)	
809D		Ref	Cover, Receptacle Options:	
809D	4061043	1	60Hz Spec **(SN 0300087000 through 0300138109)**	
809D	1001110872	1	60Hz Spec **(SN 0300138110 through 0300171769)**	
809D	See Note	NLA	50Hz Spec (Note: Not Available - Purchase Locally)	
809E		Ref	Receptacle Options:	
809E	4460346	1	60Hz Spec	
809E	See Note	1	50Hz Spec (Note: Not Available - Purchase Locally)	
809F	4460051	1	Connector, Strain Relief	
809G	4460071	1	Connector, Strain Relief	
809H	4922925	1	Harness, Generator	
809I	See Note	NLA	Plug, Male - 6 Position (Note: Not Available - Purchase Locally)	
809I	See Note	NLA	Socket, Female (Note: Not Available - Purchase Locally)	

ITEM	PART NUMBER	QTY	DESCRIPTION	REV
809J	4460225	1	Plug, Male - 6 Position	
809J	4460226	6	Socket, Female	
810		Ref	7500W SkyPower Generator Junction Box Components	
810	0861542	Ref	60Hz Spec	C
810	0861567	Ref	50Hz Specs	B
		Ref	**Note: See SPECIAL OPTIONS Section for Machines with 4000W generator.**	
810A		Ref	Cable, Electrical 12/3	
810A	1060494	2 ft/.6m	60Hz Spec	
810A	See Note	2 ft/.6m	50Hz Spec (Note: Not Available - Purchase Locally)	
810B		Ref	Cable, Electrical 10/3	
810B	1060708	2.5 ft /0.76m	60Hz Spec	
810B	See Note	2.5 ft/0.76m	50Hz Spec (Note: Not Available - Purchase Locally)	
810C	1060343	1.5 ft /0.46m	Cable, Electrical 10/4 (60Hz Spec Only)	
810D	4460425	2	Connector, Strain Relief	
810E		Ref	Component Options:	
810E	4460426	2	Connector, Strain Relief (60Hz Spec Only)	
810E	4460426	1	Connector, Strain Relief (50Hz Spec Only)	
810E	3520189	1	Plug (50Hz Spec Only)	
810F	1671092	1	Cover (60Hz Spec Only)	
810F	4460963	1	Connector (60Hz Spec Only)	
811		Ref	7500W Generator Electrical Diagram Components	
811	4933264	Ref	Caterpillar and Deutz Engine Machines	C
811	4933283	Ref	Ford Engine Machines	2-B
811	4933349	Ref	GM Engine Machines	1-A
		Ref	**Note: See SPECIAL OPTIONS Section for Machines with 4000W generator.**	
811A		Ref	Generator Harness Options:	
811A	4922757	1	Caterpillar and Deutz Engine Machines	3-C
811A	4922905	1	Ford Engine Machines	1-A
811A	4923420	1	GM Engine Machines	A
811B	4460374	2	Plug, Sealed Relay	
811B	4460375	7	Terminal	
811C	4460967	1	Plug, Male - 3 Position	
811C	4460465	3	Socket, Female	
811D	2400060	AR	Fuseholder Options:	
811D		Ref	Caterpillar, Deutz and GM Engine Machines	
811D		Ref	Ford Engine Machines	
811D	2400064	AR	Fuse - 5Amp Options:	
811D		Ref	Caterpillar, Deutz and GM Engine Machines	
811D		Ref	Ford Engine Machines	
811E	4922641	1	Switch Harness	
811F	4460226	2	Socket, Female	
811G	4460742	1	Plug, Male - 2 Position (GM Engine Only)	
811G	4460743	2	Socket, Female (GM Engine Only)	
812	4933313	1	Floodlights Harness Components	1-A
812A	4460320	2	Plug, Male - 2 Position	
812A	4460227	4	Pin, Male	
812B	4922764	1	Floodlight Harness (Lights to Switch)	1-A

ITEM	PART NUMBER	QTY	DESCRIPTION	REV
812C	4460424	2	Connector, Female - 2 Position	
812C	4460226	4	Socket, Female	
812D	4360232	1	Circuit Breaker - 15Amp	
812E	1060977	1	Cord, 2 Wire Coiled (Console Box Circuit Breaker to Switch)	
812F	4460425	1	Connector, Strain Relief	
812G		Ref	Harness, Console Box to Aux Relay Options:	
812G	4922888	1	Harness, Console Box to Aux Relay 600S & 600SJ Harness (77ft/23.5m of 12/3 Cable p/n 1060494)	
812G	4922964	1	Harness, Console Box to Aux Relay 660SJ Harness (83ft/25.4m of 12/3 Cable p/n 1060494)	
813		Ref	Platform Worklights Components	
813A	2920140	2	Platform Worklights External Harness (Includes Light and Wire Only)	
813B	4460426	1	Connector, Strain Relief	
813C	2400070	1	Fuse	
813C	2400066	1	Holder, Fuse	
813D		Ref	Harness, Console Box to Aux Relay Options:	
813D	4922888	1	Harness, Console Box to Aux Relay 600S & 600SJ Harness (77ft/23.5m of 12/3 Cable p/n 1060494)	
813D	4922964	1	Harness, Console Box to Aux Relay 660SJ Harness (83ft/25.4m of 12/3 Cable p/n 1060494)	
		Ref	**TOOLS**	
901	7002821	1	Crimper (For Wire to Pin/Socket Connections) (Not Shown)	
902	7002823	1	Extractor (For Removal of Pin/Socket from Connectors) (Not Shown)	
903	4460467	1	Extractor, Pin (Blue 16-18 Gauge) (For Removal of Pin/Socket from Connectors) (Not Shown)	
904	4460510	1	Extractor, Pin (Yellow 12-14 Gauge) (For Removal of Pin/Socket from Connectors) (Not Shown)	
905	7002828	1	Stripper, Wire (Not Shown)	
906	2901443	1	Analyzer Kit (Not Shown)	
906A	1600244	1	Analyzer	
906B	1060633	1	Cable, Analyzer	1-A
906C	4460321	2	Plug, Male	
906C	4460226	8	Socket, Female	

FIGURE 7-3. HARNESS COMPONENTS INSTALLATION (WITH UGM)

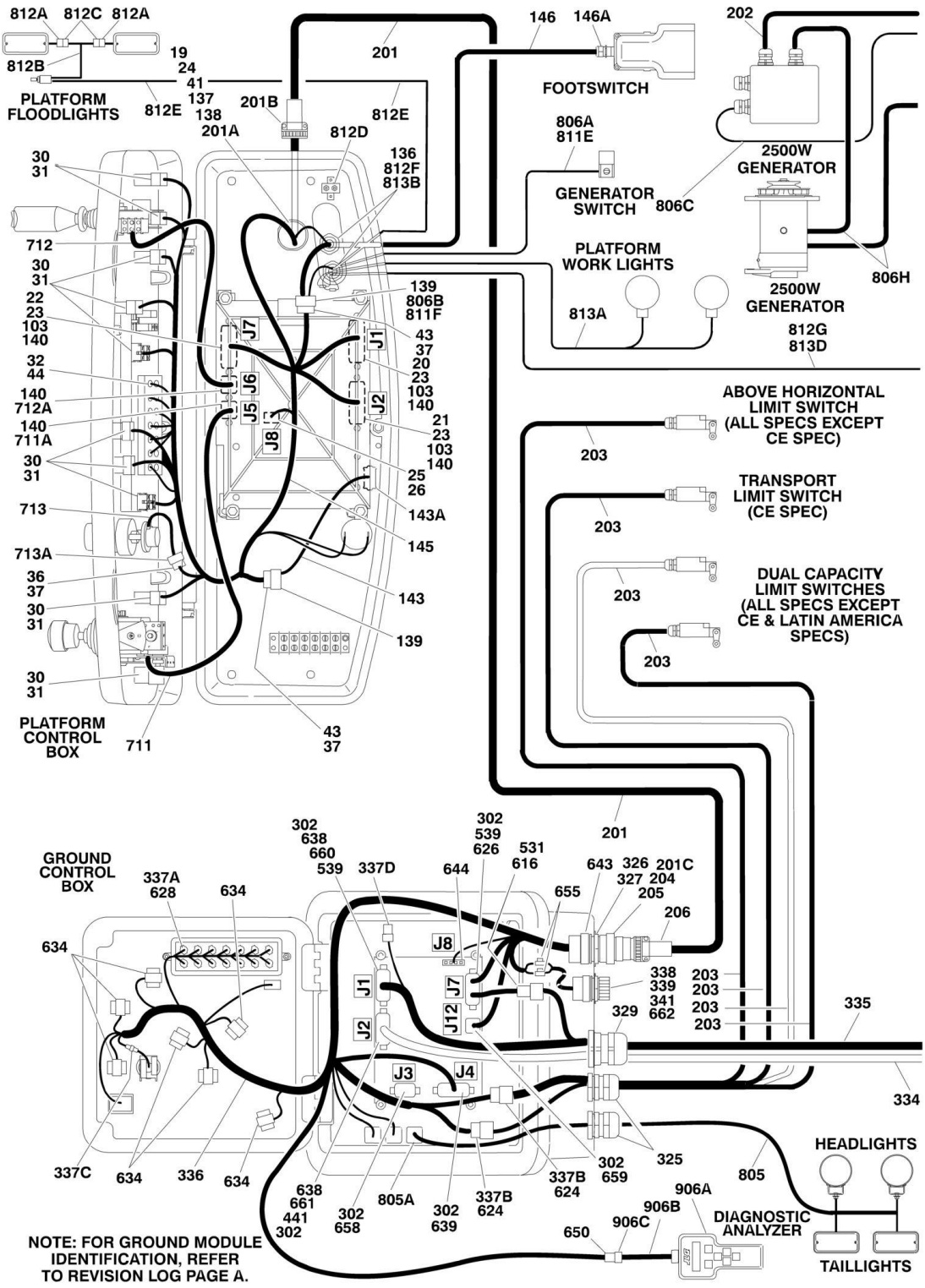

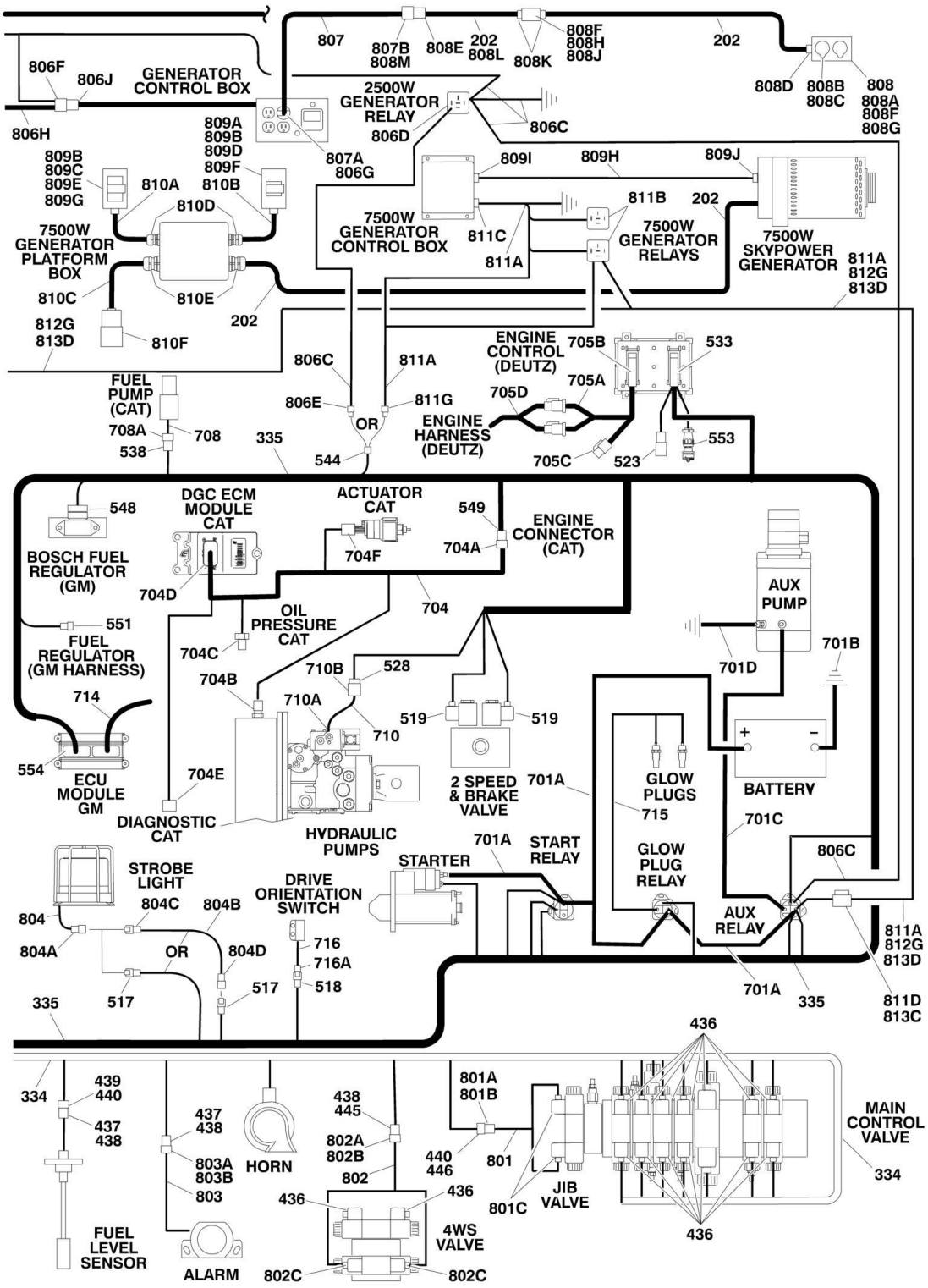
807
807B
808M
808E
202
808L
808K
808F
808H
808J
202
808D
808B
808C
808
808A
808F
808G
806F
806J
GENERATOR
CONTROL BOX
806H
2500W
GENERATOR
RELAY
806D
806C
809A
809B
809D
809F
807A
806G
809I
809H
809J
809B
809C
809E
809G
810A
810B
810D
811B
202
7500W
GENERATOR
CONTROL BOX
811C
811A
7500W
GENERATOR
RELAYS
7500W
SKYPOWER
GENERATOR
811A
812G
813D
7500W
GENERATOR
PLATFORM
BOX
810C
810E
202
812G
813D
810F
ENGINE
CONTROL
(DEUTZ)
705B
533
806C
811A
705A
FUEL
PUMP
(CAT)
806E
811G
705D
OR
ENGINE
HARNESS
(DEUTZ)
708A
708
335
544
705C
523
553
538
548
DGC ECM
MODULE
CAT
ACTUATOR
CAT
549
ENGINE
CONNECTOR
(CAT)
BOSCH FUEL
REGULATOR
(GM)
704F
704A
704D
704
AUX
PUMP
551
OIL
PRESSURE
CAT
FUEL
REGULATOR
(GM HARNESS)
704C
701D
701B
710B
528
704B
714
710A
519
519
710
554
ECU
MODULE
GM
704E
2 SPEED
& BRAKE
VALVE
701A
GLOW
PLUGS
BATTERY
DIAGNOSTIC
CAT
HYDRAULIC
PUMPS
715
701C
STARTER
701A
START
RELAY
GLOW
PLUG
RELAY
806C
STROBE
LIGHT
DRIVE
ORIENTATION
SWITCH
804C
804B
AUX
RELAY
804
716
811A
812G
813D
804A
OR
804D
716A
701A
335
811D
813C
517
517
518
335
436
334
439
440
437
438
438
445
801A
801B
MAIN
CONTROL
VALVE
437
438
HORN
802A
802B
440
446
801
334
803A
803B
802
JIB
VALVE
803
436
436
801C
436
FUEL
LEVEL
SENSOR
4WS
VALVE
ALARM
802C
802C

FIGURE 7-3. HARNESS COMPONENTS INSTALLATION (WITH UGM)

ITEM	PART NUMBER	QTY	DESCRIPTION	REV
		Ref	**Note: For Ground Module Identification, Refer to Revision Log Page A**	
	1001107753	Ref	**PLATFORM BOX HARNESS ASSEMBLY**	D
19	4460866	1	Terminal, 19 Pin Receptacle	
20	4460874	1	Connector - 35 Position (Natural)	
21	4460875	1	Connector - 35 Position (Gray)	
22	4460873	1	Connector - 35 Position (Black)	
23	4460871	79	Socket, Female	
24	4460464	7	Pin, Male (16 Gauge)	
25	4460879	1	Terminal, Housing 2 Position	
26	4460887	2	Terminal, (12 Gauge)	
30	4460418	9	Connector - 6 Position	
31	4460419	27	Terminal, Female	
32	4120035	13	Base, Light	
36	4460225	1	Plug, Male- 6 Position	
37	4460227	6	Pin, Male	
41	4460508	3	Pin, Male (12 Gauge)	
43	4460434	2	Connector - 15 Position	
44	2920129	13	Lamp, Indicator	
		Ref	**PLATFORM BOX ASSEMBLY COMPONENTS**	
103	0100048	AR	Grease, Dielectric	
136	4460428	2	Connector, Strain Relief	
137	4460470	1	Nut, Terminal	
138	4460471	1	Lockwasher, Terminal	
139	4460708	2	Connector, Female - 15 Position	
140	4460905	5	Seal, Plug	
143	4922666	1	Harness, Analyzer Cable	2-B
143	4460226	4	Socket, Female (Not Shown - Located at J2)	
143A	4460761	1	Connector, Female - 4 Position	
143A	4460227	4	Pin, Male	
145	1001107753	1	Harness, Platform Console Box Options (Includes Items 1-44):	
146	See Note	NSS	Footswitch Harness (Note: Not Available for Purchase)	
146	1060918	7 ft/2.1m	Cable, Electrical - 18/3	
146A	4460071	1	Connector, Strain Relief	
		Ref	**BOOM CABLES INSTALLATION**	
		Ref	**Boom Cables Installation 600S:**	
	0270733	Ref	**ANSI, ANSI Export, Brazilian, CSA, Japanese Specs without 7500W Generator**	5
	0270734	Ref	**CE and Latin American Specs without 7500W Generator**	6
	0272483	Ref	**ANSI, ANSI Export, Australian, CSA Specs with 7500W Generator**	3
	0272484	Ref	**Brazilian, CE, Japanese, Latin American Specs with 7500W Generator**	3
	0275924	Ref	**ANSI, ANSI Export, CSA Specs without 7500W Generator and Arctic Package**	2
	0275925	Ref	**ANSI, ANSI Export, CSA Specs with 7500W Generator and Arctic Package**	3
		Ref	**Boom Cables Installation 660SJ:**	3
	0270736	Ref	**ANSI, ANSI Export, Australian, Brazilian, CSA, Japanese, Latin American Specs without 7500W Generator**	3
	0270735	Ref	**CE Specs without 7500W Generator**	3

ITEM	PART NUMBER	QTY	DESCRIPTION	REV
	0272485	Ref	**ANSI, ANSI Export, Australian, CSA, Latin American Specs with 7500W Generator**	2
	0272486	Ref	**Brazilian, CE, Japanese Specs with 7500W Generator**	2
	0275339	Ref	**ANSI, ANSI Export, CSA Specs without 7500W Generator and Arctic Package**	1
	0275831	Ref	**ANSI, ANSI Export, CSA Specs with 7500W Generator and Arctic Package**	2
201		Ref	Harness, Main Boom Options:	
201		Ref	Harness, Main Boom 600S:	
201	4922468	1	ANSI, ANSI Export, CE, CSA, Australian, Brazilian, Japanese, Latin American Spec	
201	4923657	1	ANSI, ANSI Export, CSA Spec (With Arctic Package)	
201		Ref	Harness, Main Boom 660SJ:	
201	4922467	1	ANSI, ANSI Export, Australian, CE, CSA, Brazilian, Japanese, Latin American Spec	
201	4923509	1	ANSI, ANSI Export, CSA Spec (With Arctic Package)	
201	1060896	AR	Cable Options:	
201	1060896	67 ft /20.4m	Cable 600S	
201	1060896	75 ft /22.8m	Cable 600SJ	
201	4923462	AR	Cable Options (With Arctic Package):	
201	4923462	67 ft /20.4m	Cable 600S	
201	4923462	75 ft /22.8m	Cable 660SJ	
201A	4460465	11	Socket, Female - #16	
201A	4460865	1	Plug, Connector (19 Pin)	
201A	4460509	4	Socket, Female - #12	
201A	4460466	4	Seal, Plug	
201B	4460473	1	Clamp, Cable	
201C	4460465	11	Socket, Female - #16	
201C	4460509	4	Socket, Female - #12	
202		Ref	Harness, Generator Options: (Does not include plug ends)	
202		Ref	Harness, Generator 600S without 7500W Generator	
202	4922889	AR	ANSI, ANSI Export, Australian, Brazilian, CSA, Japanese Specs (69.5ft/21.8m of 12/3 ANSI Spec Cable p/n 1060494)	
202	4922884	AR	CE and Latin American Specs (69.5ft/21.8m of 12/3 CE Spec Cable p/n 1060461)	
202	4923660	AR	ANSI, ANSI Export, CSA Specs (69.5ft/21.8m of 12/3 Cable p/n 4923463) (With Arctic Package)	
202	4922792	AR	Harness, Generator 600S with 7500W Generator (83ft/25.3m of 8/5 Cable p/n 1060945) (For Arctic Machines p/n was 4923658)	
202		Ref	Harness, Generator 660SJ without 7500W Generator	
202	4922888	AR	ANSI, ANSI Export, Australian, Brazilian, CSA, Japanese, Latin American Specs (77ft/23.5m of 12/3 ANSI Spec Cable p/n 1060494)	
202	4922886	AR	CE Specs (77ft/23.5m of 12/3 CE Spec Cable p/n 1060461)	
202	4923510	AR	ANSI, ANSI Export, CSA Specs (77ft/23.5m of 12/3 Cable p/n 4923463) (With Arctic Package)	
202	4922791	AR	Harness, Generator 660SJ with 7500W Generator (90.5ft/27.6m of 8/5 Cable p/n 1060945) (For Arctic Machines p/n was 4923630)	
203		Ref	Cable, Limit Switch Options:	

ITEM	PART NUMBER	QTY	DESCRIPTION	REV
203		Ref	Cable, Limit Switch 600S:	
203	1061026	1	ANSI, ANSI Export, Australian, Brazilian, CE, CSA, Latin American, Japanese Specs (25.5ft/7.8m of 18/2 Cable p/n 1060680)	
203	4923659	1	ANSI, ANSI Export, CSA Spec (25.5ft/7.8m of 18/2 Cable p/n 4923466) (With Arctic Package)	
203	1061027	2	ANSI, ANSI Export, Australian, CSA, Brazilian, Japanese Specs (13.5ft/4.2m of 18/2 Cable p/n 1060680)	
203		Ref	Cable, Limit Switch 660SJ:	
203	1061027	1	ANSI, ANSI Export, Australian, Brazilian, CSA, Latin American, Japanese Specs (13.5ft/4.2m of 18/2 Cable p/n 1060680)	
203	1061026	1	Brazilian, CE, Japanese Specs (25.5ft/7.8m of 18/2 Cable p/n 1060680)	
203	4923511	1	ANSI, ANSI Export, CSA Spec (13.5ft/4.2m of 18/2 Cable p/n 4923466) (With Arctic Package)	
204	4460865	1	Plug, Connector (19 Pin)	
205	4460466	4	Seal, Plug	
206	4460473	1	Clamp, Cable	
207	4100026	Ref	Sleeve, Nylon (Required on 600S Only - Not Shown)	
207	4100026	10 ft/3.0m	USA Built Machines **(SN 0300087000 through 0300137882)**	
207	4100026	4 ft/1.2m	USA Built Machines **(SN 0300137883 through 0300171769)**	
207	4100026	4 ft/1.2m	China Built Machines **(SN B300000100 through B300000969)**	
		Ref	**GROUND CONTROL BOX COMPONENTS**	
302	0100048	AR	Grease, Dielectric	
325	4460426	2	Connector, Strain Relief	
326	4460470	1	Nut, Terminal	
327	4460471	1	Lockwasher, Terminal	
329	4460526	1	Connector, Strain Relief	
334	4923206	1	Valve Harness Assembly (See 401 to 446 for Breakdown)	C
335		Ref	Engine Harness Assembly (See 501 to 554 for Breakdown):	
335	1001110362	1	Caterpillar Engine Machines	
335	1001110361	1	Deutz Engine Machines	
335	1001110359	1	GM Engine Machines	
336	1001108602	1	Ground Control Box Harness Assembly (See Items 601-662 for Breakdown)	
337		Ref	Ground Control Box Wiring Diagram (Not Shown)	
337	1001110365	1	Caterpillar Engine	D
337	1001110364	1	Deutz Engine	D
337	1001110363	1	GM Engine	C
337A	2920129	AR	Bulb, Light	
337B	4460708	AR	Receptacle, Female - 15 Position	
337B	4460226	AR	Socket, Female	
337B	4922637	1	Harness, Jumper (Not Shown)	
337B	4922636	1	Harness, Jumper (Not Shown)	
337C	2400065	1	Fuse, 30Amp	
337C	2400066	1	Fuse, Holder with Cover	
337D	4460894	1	Plug, Male - 6 Position	
337D	4460892	1	Receptacle, Female - 6 Position	
338	4460496	1	Lockwasher, Terminal	
339	4460497	1	Nut, Terminal	
341	1001106736	1	Cap, Dust	
	4923206	Ref	**VALVE HARNESS ASSEMBLY**	2-B

ITEM	PART NUMBER	QTY	DESCRIPTION	REV
436	4460880	15	DIN Connector	
437	4460320	2	Plug, Male - 2 Position	
438	4460267	5	Pin, Male	
439	4460424	1	Receptacle, Female - 2 Position	
440	4460268	5	Socket, Female	
441	4460871	28	Socket, Female	
445	4460326	1	Plug, Male - 3 Position	
446	4460445	1	Receptacle, Female - 3 Position	
		Ref	**ENGINE HARNESS ASSEMBLIES**	
	1001110362	Ref	**Caterpillar Engine Machines**	B
	1001110361	Ref	**Deutz Engine Machines**	A
	1001110359	Ref	**GM Engine Machines**	A
517	4460424	1	Receptacle, Female - 2 Position	
517	4460268	2	Socket, Female	
518	4460424	1	Receptacle, Female - 2 Position	
518	4460226	2	Socket, Female	
519	4460880	2	DIN Connector without Diode	
523	4461070	1	Receptacle, Female with Resistor (3 Position) (Deutz Engine Only)	
523	4461095	1	Plug, Male - 3 Position (Deutz Engine Only)	
523	4460944	3	Socket, Female (Deutz Engine Only)	
528	4460460	1	Connector, Male - 4 Position	
528	4460457	AR	Terminal, Female	
528	4460458	AR	Seal, Terminal	
531	4460539	1	Connector, Male - 3 Position	
531	4460944	3	Socket, Female	
533	4461052	1	Connector, Receptacle - 25 Position (Deutz Engine Only)	
533	4461005	5	Terminal (Gold) (Deutz Engine Only)	
533	4461006	5	Seal, Terminal (Deutz Engine Only)	
533	4461060	2	Terminal (Tin) (Deutz Engine Only)	
533	4461054	2	Seal, Terminal (Deutz Engine Only)	
533	4461053	1	Cover, Plug (Deutz Engine Only)	
533	4461008	AR	Plug, Hole (Deutz Engine Only)	
538	4460891	1	Plug, Male - 2 Position (Caterpillar Engines Only)	
538	4460465	2	Socket, Female (Caterpillar Engines Only)	
539	4460871	AR	Socket, Female	
544	4461157	1	Receptacle, Female - 2 Position	
544	4460979	2	Pin, Male	
544	4460458	2	Seal, Terminal	
548	4461121	1	Plug, Male - 4 Position (GM Engine Only)	
548	4461122	4	Socket, Female (GM Engine Only)	
548	4461123	4	Seal, Terminal (GM Engine Only)	
549	4460899	1	Connector - 6 Position (Caterpillar Engines Only)	
549	4460464	5	Pin, Male (Caterpillar Engines Only)	
549	4460466	1	Seal, Plug (Caterpillar Engines Only)	
551	4461124	1	Receptacle, Female - 4 Position (GM Engine Only)	
551	4460693	4	Pin, Male (GM Engine Only)	
551	4460608	4	Seal, Terminal (GM Engine Only)	
551	4461161	1	Lock, Terminal (GM Engine Only)	
553	2902443	1	Kit, Receptacle (Deutz Engine Only)	
553	4461071	8	Terminal, Female (Gold) (Deutz Engine Only)	
553	4461072	1	Connector, Flange Mount (Deutz Engine Only)	

ITEM	PART NUMBER	QTY	DESCRIPTION	REV
553	4461073	1	Connector, Dust Cap (Deutz Engine Only)	
553	4461074	1	Connector, Shell (Deutz Engine Only)	
554	4461109	1	Plug, Male - 16 Position (GM Engine Only)	
554	4461111	7	Pin, Male (GM Engine Only)	
554	4461113	7	Seal, Terminal (GM Engine Only)	
554	4461222	9	Plug, Cavity (GM Engine Only)	
	1001108602	Ref	**GROUND CONTROL HARNESS ASSEMBLY**	C
616	4460536	1	Connector, Female - 3 Position (Caterpillar/Deutz/GM Engines Only)	
616	4460943	3	Pin, Male (Caterpillar/Deutz/GM Engines Only)	
621	3990010	2	Diode - 6Amp (Not Shown)	
624	4460434	2	Plug, Male 15 - Position	
624	4460227	AR	Pin	
626	4460873	1	Plug, Male - 35 Position (Black)	
626	4460871	AR	Socket, Female	
626	4460905	AR	Plug, Seal	
628	4120035	6	Base, Light	
628	4460634	7	Terminal (16 Gauge)	
628	4460635	5	Terminal (12 Gauge)	
634	4460418	AR	Connector, Female - 6 Position	
634	4460419	AR	Socket, Female	
638	4460871	9	Socket, Female	
639	4460876	1	Plug, Male - 35 Position (Blue)	
639	4460871	AR	Socket, Female	
639	4460905	AR	Plug, Seal	
643	4460866	1	Connector - 19 Pin	
643	4460464	10	Pin, Male (16 Gauge)	
643	4460508	3	Pin, Male (12 Gauge)	
644	4460878	1	Housing, Terminal - 4 Position	
644	4460887	3	Terminal (12 Gauge)	
650	4460761	1	Connector, Female 4 - Position	
650	4460227	4	Pin, Male	
655	8229242	2	Fuse 5A	
655	2400060	2	Holder, Fuse	
658	1001106339	1	Connector, Male - 14 Position	
658	4460871	2	Socket, Female	
658	4460905	AR	Plug, Seal	
659	1001106340	1	Connector, Male - 14 Position	
659	4460871	5	Socket, Female	
660	4460874	1	Connector, Natural	
660	4460871	10	Socket, Female	
660	4460905	AR	Plug, Seal	
661	4460875	1	Connector, Gray	
661	4460871	2	Socket, Female	
662	1001112612	1	Connector - 9 Position	
662	4460871	2	Socket, Female	
		Ref	**STANDARD HARNESS COMPONENTS**	
701		Ref	Battery Cable Kit Options:	
701	1001112763	1	Caterpillar Engines Machines (2 Relays on Engine Tray)	A
701	2902296	1	Deutz Engines Machines (3 Relays on Engine Tray)	C
701	2902531	1	GM Engine Machines	A
701A		Ref	Cable, Battery (Red) Options:	

ITEM	PART NUMBER	QTY	DESCRIPTION	REV
701A	7027028	1	Caterpillar Engines Machines	
701A	1001116240	1	Deutz Engines Machines	
701A	7027015	1	GM Engine Machines	
701B		Ref	Cable, Battery (Black) Options:	
701B	7027029	1	Caterpillar Engines Machines	
701B	7027004	1	Deutz Engines Machines	
701B	7016822	1	GM Engine Machines	
701C	7027002	1	Cable (Red)	
701D		Ref	Cable (Black) Options:	
701D	7027033	1	Caterpillar Engines Machines	
701D	7027003	1	Deutz Engines Machines	
704	1001112071	1	Caterpillar Engine Harness Components (Caterpillar Engine Machines Only)	A
704	70004318	1	Fuse 5Amp (at Fuse Box F1)	
704	70004319	3	Fuse 10Amp (at Fuse Box F2, F3 & F4)	
704	70004316	1	Relay, Starter (at Fuse Box)	
704	70004317	2	Relay, Shut-Off and Glow Plug Control 25Amp (at Fuse Box)	
704A	4460894	1	Plug, Male - 6 Position	
704A	4460465	5	Socket, Female	
704A	4460466	1	Seal, Plug	
704B	4460891	1	Plug, Male - 2 Position	
704B	4460465	2	Socket, Female	
704C	4460891	1	Plug, Male - 2 Position	
704C	4460465	2	Socket, Female	
704D	70020808	1	Plug, Male - 23 Position	
704D	70020809	16	Socket, Female	
704E	See Note	NSS	Connector - 8 Position (Note: Not Available for Purchase)	
704F	See Note	NSS	Connector - 5 Position (Note: Not Available for Purchase)	
705	See Note	Ref	Deutz Engine Harness Components (Deutz Engine Machines Only) (Note: Not Available for Purchase. See 705A-705D for Available Components)	
705A	7027796	1	Deutz Engine Harness	
705B	See Note	NSS	Receptacle, Female - 25 Position (Note: Not Available - Purchase Complete Harness)	
705C	7027793	1	Plug-In, Connector	
705D	70001872	1	Deutz Engine Harness (For other replacement parts refer to Deutz engine dealer)	
708	See Note	NSS	Fuel Pump Harness (Caterpillar Engines Only) (Note: Not Available for Purchase)	
708A	4460897	1	Receptacle, Female - 2 Position (Caterpillar Engines Only)	
708A	4460464	2	Pin, Male (Caterpillar Engines Only)	
710	See Note	NSS	Pump Harness (Note: Not Available for Purchase)	
710A	7007497	1	Plug (Pump End)	
710B	7007498	1	Plug (Engine Harness End)	
711	See Note	NSS	Controller Harness Assembly (Lift and Swing) (Note: Purchase Complete Controller)	
711A	7022819	1	Plug, Male - 8 Position (Natural)	
711A	4460871	8	Socket, Female	
712	See Note	NSS	Controller Harness/Circuit Board Assembly (Drive and Steer) (Note: Purchase Complete Controller)	
712A	7022825	1	Plug, Male - 8 Position (Black)	
712A	4460871	7	Socket, Female	
713	See Note	NSS	Controller Harness (Speed Control) (Note: Purchase Complete	

ITEM	PART NUMBER	QTY	DESCRIPTION	REV
			Controller)	
713A	4460224	1	Receptacle, Female - 6 Position	
713A	4460226	6	Socket, Female	
714	See Note	AR	GM Engine Harness Components (GM Engine Machines Only) (Note: Not Available for Purchase)	
715	4923379	1	Harness, Glow Plugs (Deutz Engine Machines Only)	B
716	4360517	1	Switch, Proximity	
716A	4460320	1	Connector - 2 Position	
716A	4460227	2	Pin, Male	
		Ref	**OPTIONAL HARNESS COMPONENTS**	
801	4921927	1	Jib Valve Harness (660SJ Only)	3
801A	4460326	1	Plug, Male - 3 Position	
801B	4460267	3	Pin, Male	
801C	4460499	2	Connector, DIN with Diode	
802	4921928	1	4WS Valve Harness	3
802A	4460268	3	Socket, Female	
802B	4460445	1	Connector, Female - 3 Position	
802C	4460499	2	Connector, DIN with Diode	
803	0257887	1	Alarm Harness (Includes Alarm)	
803	0140032	1	Alarm	
803	2820035	6 in/15cm	Loom	
803A	4460424	1	Plug, Male - 2 Position	
803B	4460268	2	Socket, Female	
804		Ref	Strobe Light Harness Options (Includes Strobe Light):	B
804	0272507	1	USA Built Machines **(SN 0300087000 through 0300169422)**	
804	2920161	1	USA Built Machines **(SN 0300169423 through 0300171769)**	
804	0272507	1	China Built Machines **(SN B300000100 through B300000969)**	
804A	4460320	1	Connector, Female - 2 Position (0272507 Strobe Light)	
804A	4460267	2	Pin, Male (0272507 Strobe Light)	
804A	4460891	1	Plug, Male - 2 Position (2920161 Strobe Light)	
804A	4460465	2	Socket, Female (2920161 Strobe Light)	
804B	1001149818	1	Strobe Light Extension Harness (USA Built Machines Only) **(SN 0300169423 through 0300171769)**	
804C	4460897	1	Receptacle, Female - 2 Position	
804C	4460464	2	Pin, Male	
804D	4460320	2	Plug, Male - 2 Position	
804D	4460267	4	Pin, Male	
805	See Note	NSS	Headlight and Taillight/Chassis Illumination Harness (Note: Not Available for Purchase)	
805	1060341	AR	Cable, Electrical 16/2 Options:	
805	1060341	37 ft /11.3m	Headlights and Taillights	
805	1060341	40 ft /12.2m	Chassis Illumination Lights	
805A	3740049	1	Relay	
805A	4460259	3	Terminal	
805A	4460260	4	Housing, Terminal	
805A	4460297	1	Terminal	
805A	4922643	1	Lights Harness for Ground Control Box	1-A
805A	4460226	2	Socket, Female	
806		Ref	2500W Generator Electrical Components	
806	1001112743	AR	50Hz (Caterpillar and Deutz Engines)	B

ITEM	PART NUMBER	QTY	DESCRIPTION	REV
806	1001112588	AR	60Hz (Caterpillar and Deutz Engines)	A
806	4933350	AR	60Hz (GM Engine)	B
806A	4922641	1	Harness - On/Off Switch	A
806B	4460226	2	Socket, Female	
806C		Ref	Harness, Powermite Control Box to Relay Options:	
806C	1001112589	1	Caterpillar and Deutz Engines	A
806C	4923445	1	GM Engine	A
806D	4460374	1	Connector, Seal Relay	
806D	4460705	4	Terminal	
806E	4460742	1	Connector, Male - 2 Position	
806E	4460743	2	Socket, Female	
806E	4460458	2	Seal	
806F	4460321	1	Connector, Male - 4 Position (60Hz Only)	
806F	4460906	4	Socket, Female (60Hz Only)	
806G	4460027	1	Receptacle, Twist Lock (110V Only)	
806H	7020193	1	Harness, Generator Power	
806J	4460961	1	Connector, Female - 4 Position	
806J	4460705	4	Pin, Male	
807		Ref	Generator to Rear of Boom Harness Options:	
		Ref	**Note: Harness used to connect AC at platform harness to generator receptacle to power platform receptacle.**	
807	4921827	1	110V (ANSI, ANSI Export, Latin America and Japanese Specs)	2
807	1060494	20 ft/6m	Cable, Electrical - 12/3	
807A	4460205	1	Plug, Male	
807A	4460027	1	Receptacle, Twist Lock (110V Only)	
807B	4460134	1	Receptacle, Female	
808		Ref	AC to Platform Receptacle Components Options:	
808	0256113	Ref	110V/60Hz GFI Receptacle (ANSI, ANSI Export and Japanese Specs)	B
808	0256201	Ref	110V/50Hz Receptacle (Plug and Receptacle Supplied Locally) (Australian, Brazilian, Latin America Specs)	B
808	0257175	Ref	220V Receptacle (ANSI and ANSI Export Specs)	B
808		Ref	CE Specs Options Only (CE Spec are USA Built Machines):	
808		Ref	Without Generator:	
808	0256201	Ref	110V/50Hz Receptacle (Plug and Receptacle Supplied Locally)	B
808	0273076	Ref	110V/50Hz Receptacle (See AC CABLES INSTALLATION (CE GERMAN AND CE UK SPECS) for Components)	A
808	0273078	Ref	CE Germany Specs (See AC CABLES INSTALLATION (CE GERMAN AND CE UK SPECS) for Components)	A
808	0275455	Ref	220V with CEE7 Post Ground Receptacle and Plug and Circuit Breaker (2x4 Box)	D
808	0275456	Ref	220V with CEE7 Side Ground Receptacle and Plug and Circuit Breaker (2x4 Box)	D
808	0275659	Ref	220V with AFSINT 107 Keyed Ground Receptacle and Plug and Circuit Breaker (2x4 Box)	D
808	0275235	Ref	110V with IEC Yellow Receptacle and Plug and Circuit Breaker	D
808	0275254	Ref	220V with IEC Blue Receptacle and Plug and Circuit Breaker	D
808	0275237	Ref	220V with CEE7 Post Ground Receptacle and Plug and Circuit Breaker (70mm x 70mm Box)	D
	0275253	Ref	220V with CEE7 Side Ground Receptacle and Plug and Circuit Breaker (70mm x 70mm Box) (Use p/n 1001153312)	A-D
808		Ref	With Generator:	

ITEM	PART NUMBER	QTY	DESCRIPTION	REV
808	1001100390	Ref	220V with CEE7 Post Ground Receptacle and Plug and Circuit Breaker (2x4 Box)	D
808	1001100391	Ref	220V with CEE7 Side Ground Receptacle and Plug and Circuit Breaker (2x4 Box)	D
808	1001100392	Ref	220V with AFSINT 107 Keyed Ground Receptacle and Plug and Circuit Breaker (2x4 Box)	C
808	1001100393	Ref	110V with IEC Yellow Receptacle and Plug and Circuit Breaker	C
808	1001100394	Ref	220V with IEC Blue Receptacle and Plug and Circuit Breaker	C
808	1001100395	Ref	220V with CEE7 Post Ground Receptacle and Plug and Circuit Breaker (70mm x 70mm Box)	C
808	1001100396	Ref	220V with CEE7 Side Ground Receptacle and Plug and Circuit Breaker (70mm x 70mm Box)	C
808A		Ref	Box, Switch Options:	
808A	0860038	1	0256113 & 0257175 Installations	
808A	Not Required	0	0256201 Installation (Purchase Locally)	
808A	0861731	1	0275455, 0275456, 0275659, 1001100390, 1001100391 & 1001100392 Installations	
808A	0861781	1	0275235, 0275254, 1001100393 & 1001100394 Installations	
808A	0861782	NLA	0275237, 0275253, 1001100395, 1001100396 & 1001153312 Installations (Note: Use p/n 1001100344 CEE7 Side Ground Service Kit or p/n 1001100343 CEE7 Post Ground Service Kit. Kit include Box p/n 1001141967 & Items 808B, 808C, 808E & 808M)	
808A	1001141967	1	1001100343, 1001100344, 1001141970 & 1001141971 Kits	
808B		Ref	Receptacle Options:	
808B	4460346	1	0256113 Installation	
808B	4460125	1	0257175 Installation	
808B	Not Required	0	0256201 Installation (Purchase Locally)	
808B	4461244	1	0275455 & 1001100390 Installations	
808B	4461245	1	0275456 & 1001100391 Installations	
808B	4461246	1	0275659 & 1001100392 Installations	
808B	4461198	1	0275235 & 1001100393 Installations	
808B	4461201	1	0275254 & 1001100394 Installations	
808B	4461204	NLA	0275237 & 1001100395 Installations (Use p/n 100110343)	
808B	4461207	NLA	0275253, 1001100396 & 1001153312 Installations (Use p/n 1001100344)	
808B	1001141968	1	1001100343 & 1001141971 Kits	
808B	1001141969	1	1001100344 & 1001141970 Kits	
808C		Ref	Shield, Cover Options:	
808C	4060700	1	0256113 Installation **(SN 0300087000 through 0300138240)**	
808C	1001110873	1	0256113 Installation **(SN 0300138241 through 0300171769)**	
808C	4060092	1	0257175 Installation	
808C	Not Required	0	0256201 Installation (Purchase Locally)	
808C	4461244	1	0275455 & 1001100390 Installations	
808C	4461245	1	0275456 & 1001100391 Installations	
808C	4461246	1	0275659 & 1001100392 Installations	
808C	4461198	1	0275235 & 1001100393 Installations	
808C	4461201	1	0275254 & 1001100394 Installations	
808C	4461204	NLA	0275237 & 1001100395 Installations (Use p/n 1001100343)	

ITEM	PART NUMBER	QTY	DESCRIPTION	REV
808C	4461207	NLA	0275253, 1001100396 & 1001153312 Installations (Use p/n 1001100344)	
808C	1001141968	1	1001100343 & 1001141971 Kits	
808C	1001141969	1	1001100344 & 1001141970 Kits	
808D		Ref	Connector, Strain Relief Options:	
808D	4460071	1	0256113 & 0257175 Installations	
808D	Not Required	0	0256201 Installation (Purchase Locally)	
808D	4460968	1	0275455, 0275456, 0275659, 0275235, 0275254, 0275237, 0275253, 1001100390, 1001100391, 1001100392, 1001100393, 1001100394, 1001100395, 1001100396 & 1001153312 Installations	
808E		Ref	Plug, Male Options:	
808E	4460205	1	0256113 Installation	
808E	4460233	1	0257175 Installation	
808E	See Note	NLA	0256201 Installation (Note: Not Available - Purchase Locally)	
808E	4461202	1	0275237, 0275455, 1001100390 & 1001100395 Installations & 1001100343 & 1001141971 Kits	
808E	4461205	1	0275453, 0275256, 1001100391 & 1001100396 Installations & 1001100344 & 1001141970 Kits	
808E	4461249	1	0275659 & 1001100392 Installations	
808E	4461196	1	0275235 & 1001100393 Installations	
808E	4461199	1	0275254 & 1001100394 Installations	
808F		Ref	Hardware Options:	
808F	0641405	AR	Bolt 1/4in - 20NC x 5/8in	
808F	0641407	AR	Bolt 1/4in - 20NC x 7/8in	
808F	0641410	AR	Bolt 1/4in - 20NC x 1-1/4in	
808F	0641416	AR	Bolt 1/4in - 20NC x 2in	
808F	0700408	AR	Screw M4 x 16mm	
808F	3290405	AR	Locknut M4	
808F	3311405	AR	Locknut 1/4in - 20NC	
808F	4711400	AR	Flatwasher 1/4in (Narrow)	
808F	4811400	AR	Flatwasher M4	
808F	1320149	AR	Clamp, Stauff	
808F	0100011	AR	Compound, Locking	
808G		Ref	Bracket, Receptacle Box Mounting Options:	
808G	Not Required	0	0256113, 0257175 & 0256201 Installations	
808G	0903484	1	0275455, 0275456, 0275659, 0275235, 0275254, 0275237, 0275253, 1001100390, 1001100391, 1001100392, 1001100393, 1001100394, 1001100395, 1001100396 & 1001153312 Installations	
808H		Ref	Bracket, Circuit Breaker Mounting Options:	
808H	Not Required	0	0256113, 0257175 & 0256201 Installations	
808H	0903611	1	0275455, 0275456, 0275659, 0275235, 0275254, 0275237, 0275253, 1001100390, 1001100391, 1001100392, 1001100393, 1001100394, 1001100395 & 1001100396 Installations	
808H	1001152486	1	1001153312 Installation	
808J		Ref	Kit, Box and Breaker (Required Only on CE Spec Installations except 0256201 Installation):	
808J	2902549	AR	Without Generator	D
808J	1001096070	AR	With 110V Generator	D
808J	1001109554	AR	With 220V Generator	B
808J		Ref	Circuit Breaker Options:	

ITEM	PART NUMBER	QTY	DESCRIPTION	REV
808J		Ref	Without Generator	
808J	2400093	NLA	Circuit Breaker, 16Amp/30mAmp Combination (Use p/n 1001181045) **(SN 0300087000 through 0300136310)**	
808J	1001109475	NLA	Circuit Breaker, 16Amp (Use p/n 1001181045 16Amp/30mAmp Combination) **(SN 0300136311 through 0300171769)**	
808J	1001109482	NLA	Circuit Breaker, 30mAmp (Use p/n 1001181045 16Amp/30mAmp Combination) **(SN 0300136311 through 0300171769)**	
808J		Ref	With 110V Generator	
808J	1001109475	NLA	Circuit Breaker, 16Amp (Use p/n 1001181045 16Amp/30mAmp Combination)	
808J	1001109482	NLA	Circuit Breaker, 30mAmp (Use p/n 1001181045 16Amp/30mAmp Combination)	
808J		Ref	With 220V Generator	
808J	1001109477	NLA	Circuit Breaker, 10Amp (Use p/n 1001181046 10Amp/30mAmp Combination)	
808J	1001109482	NLA	Circuit Breaker, 30mAmp (Use p/n 1001181046 10Amp/30mAmp Combination)	
808J	0861880	1	Breaker Box	
808J	4460956	1	Barrier, Terminal Block End	
808J	4460957	1	Block, Terminal	
808K		Ref	Connector, Strain Relief Options (Required Only on CE Spec Installations except 0256201 Installation):	
808K	4460633	2	M20 Thread	
808K	1001097150	2	M25 Thread	
808L	1060908	AR	Cable, Extension (Required Only on CE Spec Installations except 0256201 Installation)	
808L	1060908	6 ft/1.8m	Without Generator	
808L	1060908	12 ft/3.6m	With Generator	
808M		Ref	Receptacle, Female Options:	
808M	4461203	1	1001100390 & 1001100395 Installations & 1001100343 & 1001141971 Kits	
808M	4461206	1	1001100391 & 1001100396 Installations & 1001100344 & 1001141970 Kits	
808M	4461250	1	1001100392 Installation	
808M	4461197	1	1001100393 Installation	
808M	4461200	1	1001100394 Installation	
	0275452	1	Receptacle Box Kit (220V CEE7 Post Ground) (Includes Items 808A, 808B, 808C & 808E) (0275455 Installation)	1
	1001100345	1	Receptacle Box Kit (220V CEE7 Post Ground) (Includes Items 808A-808C, 808E & 808M) (1001100390 Installation)	2
	0275453	1	Receptacle Box Kit (220V CEE7 Side Ground) (Includes Items 808A, 808B, 808C & 808E) (0275456 Installation)	1
	1001100347	1	Receptacle Box Kit (220V CEE7 Side Ground) (Includes Items 808A-808C, 808E & 808M) (1001100391 Installation)	3
	0275454	1	Receptacle Box Kit (220V AFSINT 107 Keyed Ground) (Includes Items 808A, 808B, 808C & 808E) (0275659 Installation)	1
	1001100346	1	Receptacle Box Kit (220V AFSINT 107 Keyed Ground) (Includes Items 808A-808C, 808E & 808M) (1001100392 Installation)	2
	0275216	1	Receptacle Box Kit (110V IEC Yellow) (Includes Items 808A, 808B, 808C & 808E) (0275235 Installation)	1
	1001100341	1	Receptacle Box Kit (110V IEC Yellow) (Includes Items 808A-808C, 808E & 808M) (1001100393 Installation)	2

ITEM	PART NUMBER	QTY	DESCRIPTION	REV
	0275217	1	Receptacle Box Kit (220V IEC Blue) (Includes Items 808A, 808B, 808C & 808E) (0275254 Installation)	1
	1001100342	1	Receptacle Box Kit (220V IEC Blue) (Includes Items 808A-808C, 808E & 808M) (1001100394 Installation)	2
	0275218	NLA	Receptacle Box Kit (220V CEE7 Post Ground) (Includes Items 808A-808C, 808E & 808M) (0275237 Installation) (Use p/n 1001100343)	B
	1001091971	NLA	Receptacle Box Kit (220V CEE7 Post Ground) (Includes Items 808A-808C, 808E & 808M) (1001100395 Installation) (Use p/n 1001100343 Kit)	B
	0275219	NLA	Receptacle Box Kit (220V CEE7 Side Ground) (Includes Items 808A-808C, 808E & 808M) (0275253 & 1001153312 Installations) (Use p/n 1001100344)	B
	1001091970	NLA	Receptacle Box Kit (220V CEE7 Side Ground) (Includes Items 808A-808C, 808E & 808M) (1001100396 Installation) (Use p/n 1001100344 Kit)	B
809		Ref	7500W SkyPower Generator Installation	
809	1001115398	Ref	60Hz and Caterpillar Engine	A
809	1001115400	Ref	50Hz Spec and Caterpillar Engine	A
809	1001115387	Ref	60Hz and Deutz Engine	A
809	1001115393	Ref	60Hz and Deutz Engine (Brazilian Spec Only)	A
809	1001115389	Ref	50Hz and Deutz Engine	A
809	0275257	Ref	60Hz and GM Engine	E
		Ref	**Note: SkyPower Generator is Standard On ANSI and CSA Specs. Optional on All Other Specs.**	
809A		Ref	Receptacle, Female Twist-Lock Options:	
809A	4460958	1	60Hz Spec	
809A	See Note	NLA	50Hz Spec (Note: Not Available - Purchase Locally)	
809B		Ref	Gasket Options:	
809B	3960422	2	60Hz Spec	
809B	See Note	NLA	50Hz Spec (Note: Not Available - Purchase Locally)	
809C		Ref	Cover, Receptacle Options:	
809C	1001110873	1	60Hz Spec	
809C	See Note	1	50Hz Spec (Note: Not Available - Purchase Locally)	
809D		Ref	Cover, Receptacle Options:	
809D	1001110872	1	60Hz Spec	
809D	See Note	NLA	50Hz Spec (Note: Not Available - Purchase Locally)	
809E		Ref	Receptacle Options:	
809E	4460346	1	60Hz Spec	
809E	See Note	NLA	50Hz Spec (Note: Not Available - Purchase Locally)	
809F	4460051	1	Connector, Strain Relief	
809G	4460071	1	Connector, Strain Relief	
809H	4922925	1	Harness, Generator	
809I	See Note	NSS	Plug, Male - 6 Position (Note: Not Available for Purchase)	
809I	See Note	NSS	Socket, Female (Note: Not Available for Purchase)	
809J	4460225	1	Plug, Male - 6 Position	
809J	4460226	6	Socket, Female	
810		Ref	7500W SkyPower Generator Junction Box Components	
810	0861542	Ref	60Hz Spec	C
810	0861567	Ref	50Hz Specs	B
810A		Ref	Cable, Electrical 12/3	
810A	1060494	2 ft/.6m	60Hz Spec	
810A	See Note	2 ft/.6m	50Hz Spec (Note: Not Available - Purchase Locally)	
810B		Ref	Cable, Electrical 10/3	

ITEM	PART NUMBER	QTY	DESCRIPTION	REV
810B	1060708	2.5 ft /0.76m	60Hz Spec	
810B	See Note	2.5 ft/0.76m	50Hz Spec (Note: Not Available - Purchase Locally)	
810C	1060343	1.5 ft /0.46m	Cable, Electrical 10/4 (60Hz Spec Only)	
810D	4460425	2	Connector, Strain Relief	
810E		Ref	Component Options:	
810E	4460426	2	Connector, Strain Relief (60Hz Spec Only)	
810E	4460426	1	Connector, Strain Relief (50Hz Spec Only)	
810E	3520189	1	Plug (50Hz Spec Only)	
810F	1671092	1	Cover (60Hz Spec Only)	
810F	4460963	1	Connector (60Hz Spec Only)	
811		Ref	7500W Generator Electrical Diagram Components	
811	1001112586	Ref	Caterpillar and Deutz Engine Machines	A
811	4933349	Ref	GM Engine Machines	1-A
811A		Ref	Generator Harness Options:	
811A	1001112587	1	Caterpillar and Deutz Engine Machines (USA Built Machines)	A
811A	1001152429	1	Caterpillar and Deutz Engine Machines (China Built Machines)	C
811A	4923420	1	GM Engine Machines	A
811B	4460374	2	Plug, Sealed Relay	
811B	4460375	7	Terminal	
811C	4460967	1	Plug, Male - 3 Position	
811C	4460465	3	Socket, Female	
811D	2400060	1	Fuseholder	
811D	2400064	1	Fuse - 5Amp	
811E	4922641	1	Switch Harness	
811F	4460226	2	Socket, Female	
811G	4460742	1	Plug, Male - 2 Position	
811G	4460743	2	Socket, Female	
812	4933313	1	Floodlights Harness Components	1-A
812A	4460320	2	Plug, Male - 2 Position	
812A	4460227	4	Pin, Male	
812B	4922764	1	Floodlight Harness (Lights to Switch)	1-A
812C	4460424	2	Connector, Female - 2 Position	
812C	4460226	4	Socket, Female	
812D	4360232	1	Circuit Breaker - 15Amp	
812E	1060977	1	Cord, 2 Wire Coiled (Console Box Circuit Breaker to Switch)	
812F	4460425	1	Connector, Strain Relief	
812G		Ref	Harness, Console Box to Aux Relay Options:	
812G	4922888	1	Harness, Console Box to Aux Relay 600S Harness (77ft/23.5m of 12/3 Cable P/N 1060494)	
812G	4922964	1	Harness, Console Box to Aux Relay 660SJ Harness (83ft/25.4m of 12/3 Cable P/N 1060494)	
813		Ref	Platform Worklights Components	
813A	2920140	2	Platform Worklights External Harness (Includes Light and Wire Only)	
813B	4460426	1	Connector, Strain Relief	
813C	2400070	1	Fuse	
813C	2400066	1	Holder, Fuse	
813D		Ref	Harness, Console Box to Aux Relay Options:	
813D	4922888	1	Harness, Console Box to Aux Relay 600S Harness (77ft/23.5m	

ITEM	PART NUMBER	QTY	DESCRIPTION	REV
			of 12/3 Cable P/N 1060494)	
813D	4922964	1	Harness, Console Box to Aux Relay 660SJ Harness (83ft/25.4m of 12/3 Cable P/N 1060494)	
		Ref	**TOOLS**	
901	7002821	1	Crimper (For Wire to Pin/Socket Connections) (Not Shown)	
902	7002823	1	Extractor (For Removal of Pin/Socket from Connectors) (Not Shown)	
903	4460467	1	Extractor, Pin (Blue 16-18 Gauge) (For Removal of Pin/Socket from Connectors) (Not Shown)	
904	4460510	1	Extractor, Pin (Yellow 12-14 Gauge) (For Removal of Pin/Socket from Connectors) (Not Shown)	
905	7002828	1	Stripper, Wire (Not Shown)	
906	2901443	1	Analyzer Kit (Not Shown)	
906A	1600244	1	Analyzer	
906B	1060633	1	Cable, Analyzer	1-A
906C	4460321	2	Plug, Male	
906C	4460226	8	Socket, Female	

FIGURE 7-4. AC CABLES INSTALLATION (CE GERMAN AND CE UK SPECS)

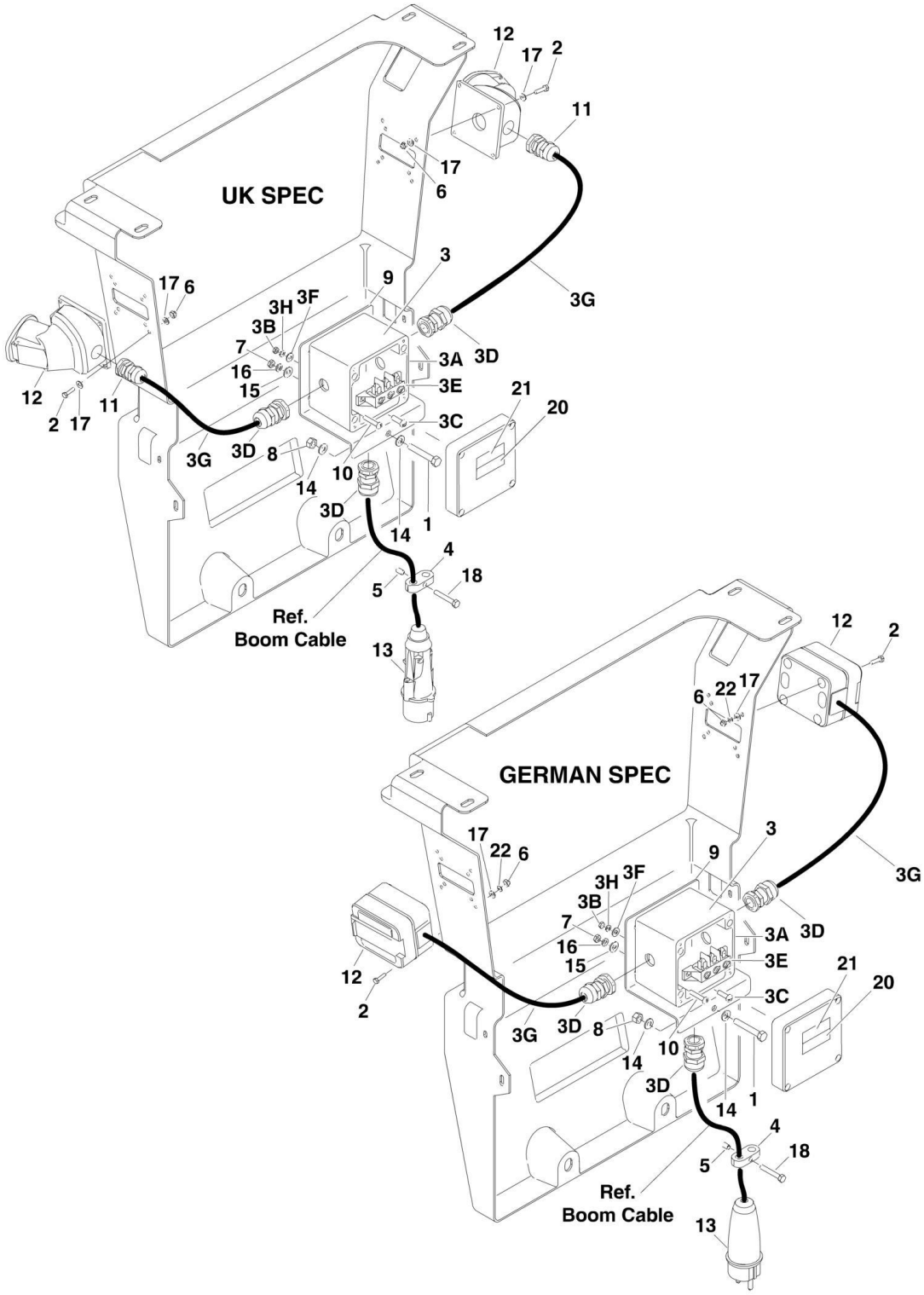

FIGURE 7-4. AC CABLES INSTALLATION (CE GERMAN AND CE UK SPECS)

ITEM	PART NUMBER	QTY	DESCRIPTION	REV
		Ref	**Note: Available Only on USA Built Machines**	
		Ref	**AC CABLES INSTALLATIONS**	
	0273076	Ref	**UK Spec**	B
	0273078	Ref	**German Spec**	B
1	0641516	1	Bolt 5/16in-18NC x 2in	
2		Ref	Bolt Options:	
2	0700408	8	Bolt (Metric) 4mm x 16mm (UK Spec)	
2	3910808	8	Bolt #8-32NC x 1/2in (German Spec)	
3	0861606	1	Junction Box Assembly	
3A	0861604	1	Box, Junction	
3B	3311001	2	Nut #10-24NC	
3C	3911010	2	Screw #10-24NC x 5/8in	
3D	4460968	3	Connector, Strain Relief	
3E	4460987	1	Terminal	
3F	4751000	2	Flatwasher #10 (Wide)	
3G	4922909	2	Harness	
3H	4761000	2	Lockwasher #10	
4	1320149	1	Clamp	
5		Ref	Hardware Options:	
5	2080046	1	Rivnut **(SN 0300087000 through 0300117083)**	
5	0100011	AR	Compound, Locking **(SN 0300117084 through 0300171769)**	
6		Ref	Nut Options:	
6	3290405	8	Locknut (Metric) 4mm x.7 (UK Spec)	
6	3310801	8	Nut #8-32NC (German Spec)	
7	3311001	4	Nut #10-24NC	
8	3311505	1	Locknut 5/16in-18NC	
9	3574443	1	Plate, Box Bracket	
10	3911016	4	Screw #10-24NC x 1in	
11	4460968	2	Connector, Strain Relief (UK Spec Only)	
12		Ref	Terminal Options:	
12	4460988	2	Plug, Female - UK Spec	
12	4460997	2	Receptacle - German Spec	
13		Ref	Plug Options:	
13	4460990	1	UK Spec	
13	4460998	1	German Spec	
14	4711500	2	Flatwasher 5/16in (Narrow)	
15	4751000	4	Flatwasher #10	
16	4761000	4	Lockwasher #10	
17		Ref	Flatwasher (Metric) 4mm	
17	4811400	16	Flatwasher (Metric) 4mm (UK Spec)	
17	4750800	8	Flatwasher #8 (Wide) (German Spec)	
18	0641410	1	Bolt 1/4in-20NC x 1-1/4in	
20	1705714	1	Decal - Danger	
21	1705715	1	Decal - 115V AC	
22	4760800	8	Lockwasher #8 (German Spec Only)	

SECTION 8 - DECALS

SECTION 8 - DECALS

FIGURE 8-1. DECAL INSTALLATION (ANSI SPEC) (USA BUILT MACHINES) (SN 0300087000 through 0300087911)

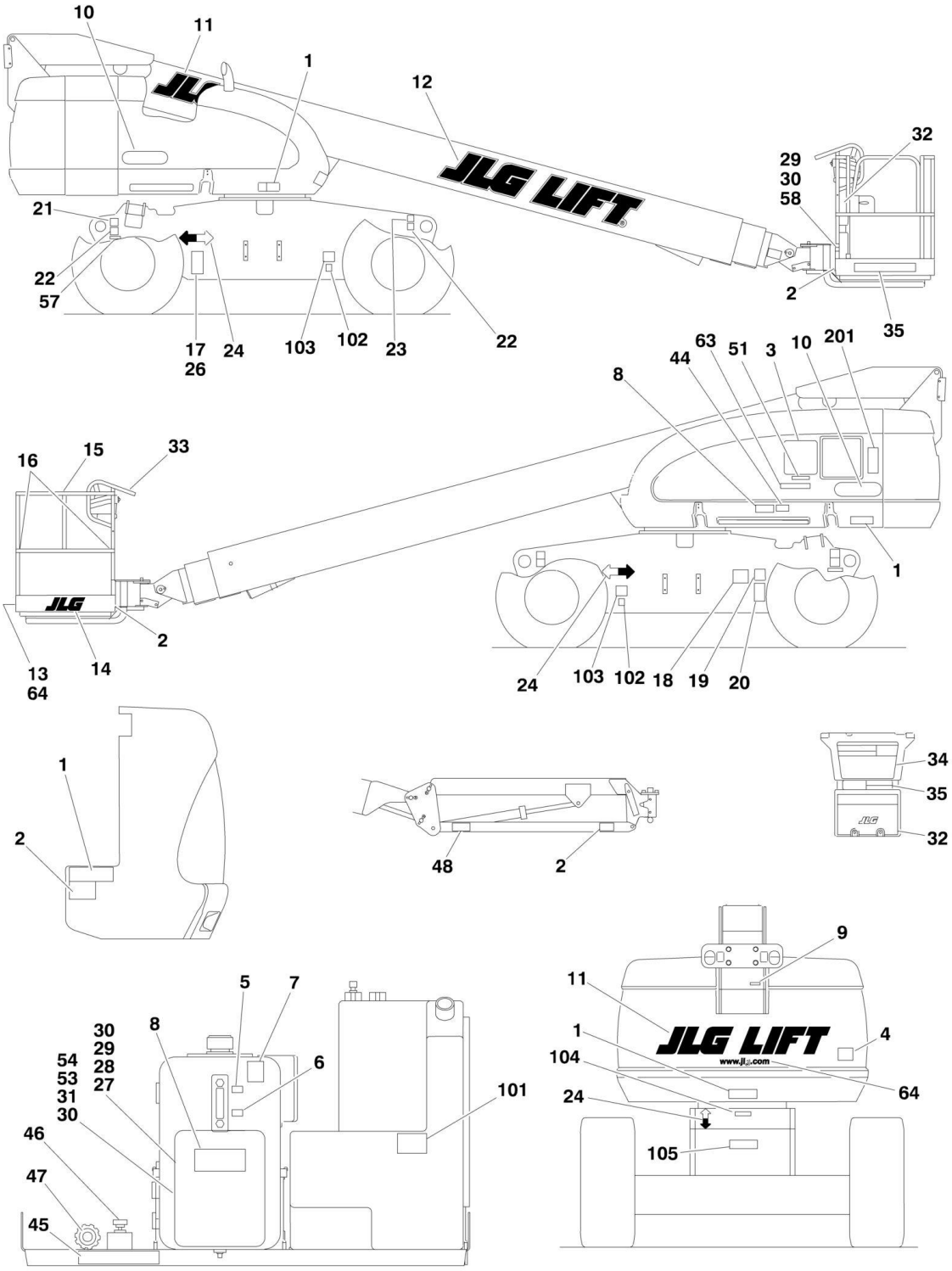

FIGURE 8-1. DECAL INSTALLATION (ANSI SPEC) (USA BUILT MACHINES) (SN 0300087000 through 0300087911)

ITEM	PART NUMBER	QTY	DESCRIPTION	REV
		Ref	**STANDARD DECAL INSTALLATIONS**	
	0271014	Ref	**Decal - JLG**	3
	0255329	Ref	**Standard Decal Installations 600S ANSI Spec**	17
	0255333	Ref	**Standard Decal Installations 600SJ ANSI Spec**	17
	0255331	Ref	**Standard Decal Installations 660SJ ANSI Spec**	18
1	1703805	4	Decal - Danger/Electrocution	
2	1703804	AR	Decal - Warning/Crushing	
3	1703798	1	Decal - Danger/Warning	
4	3251813	1	Decal - USA	
5	1701502	1	Decal - High Oil Level	
6	1701503	1	Decal - Low Oil Level	
7	1701504	1	Decal - Hydraulic Oil	
8	1701509	1	Decal - Manual	
9		Ref	Nameplate Options:	
9	3251243	1	120V-60Hz	
9	3252507	1	220V-50/60Hz	
10		Ref	Decal - Model Options:	
10	1702815	2	Decal - Model 600S	
10	1702816	2	Decal - Model 600SJ	
10	1702817	2	Decal - Model 660SJ	
11	1702861	3	Decal - JLG Lift (8in)	
12	1702862	1	Decal - JLG Lift (12in)	
13	1702774	1	Decal - JLG Lift (3-1/2in)	
14	1702773	2	Decal - JLG (5in)	
15	1702868	2	Decal - No Hands	
16	1704277	AR	Decal - Attach Lanyard Here	
17	See Note	NSS	Nameplate - Serial Number (Note: Not Available for Purchase)	
18	1702153	1	Decal - Inspection	
19	See Note	NSS	Decal - Bar Code (Note: Not Available for Purchase)	
20	1700584	1	Decal - Patent	
21	1701499	2	Decal - No Tie Down /Lift	
22	1702300	4	Decal - Tie Down /Lift	
23	1701500	2	Decal - Tie Down /Lift	
24	1701529	4	Decal- Arrow	
26	3820001	4	Rivet	
27	0641408	4	Bolt 1/4in-20NC x 1in	
28	1060279	1	Cable, Lanyard	
29	3311405	AR	Locknut 1/4in-20NC	
30	4751400	AR	Flatwasher 1/4in	
31	0860520	1	Box, Manual Storage	
32	3380434	1	Panel, Pedestal	
33	1702784	1	Decal - Legend	
34	1703797	1	Decal - Danger/Warning	
35		Ref	Decal - 500LBS Max Capacity Options:	
35	1704096	2	Standard - 600S	
35	1701645	2	Standard - 600SJ & 660SJ	
44 to 48	Not Required	0	Not Required	
51		Ref	Decal - 500LBS Max Capacity Options:	
51	1702966	1	Standard (600S)	

SECTION 8 - DECALS

ITEM	PART NUMBER	QTY	DESCRIPTION	REV
51	1702688	1	Standard (600SJ & 660SJ)	
53	0641406	4	Bolt 1/4in-20NC x 3/4in	
54	0100011	AR	Compound, Locking	
57	1703470	4	Decal - Tire Load	
58	0641414	2	Bolt 1/4in-20NC x 1-3/4in	
63	1703808	1	Decal - Legend	
64	1704885	2	Decal - Website	
		Ref	**DECAL INSTALLATION (OPTIONAL PARTS)**	
101		Ref	Decal - Fuel	
101	1701542	1	Ford Engine Machines	
101	1701505	1	Deutz Engine Machines	
102	1701543	1	Decal - LP Gas (Dual Fuel and LP Only Machines)	
103	1700818	1	Decal - LP Gas Liquid Withdrawal System (Dual Fuel and LP Only Machines)	
104	3250872	1	Nameplate - Steer/Tow Selection (Machines with Tow Package Only)	
105		Ref	Decal - Tow Instructions Options: (Machines with Tow Package Only)	
105	1702305	1	Decal - Tow Instructions 2WD	
105	1703403	1	Decal - Tow Instructions 4WD	
	0272341	Ref	**DECAL INSTALLATION TIRE SEALANT**	1
201	1705363	1	Decal - Tire Sealant Large	

FIGURE 8-2. DECAL INSTALLATION (ANSI SPEC) (USA BUILT MACHINES AND CHINA BUILT MACHINES) (SN 0300087912 through 0300171769, SN B300000100 through B300000969)

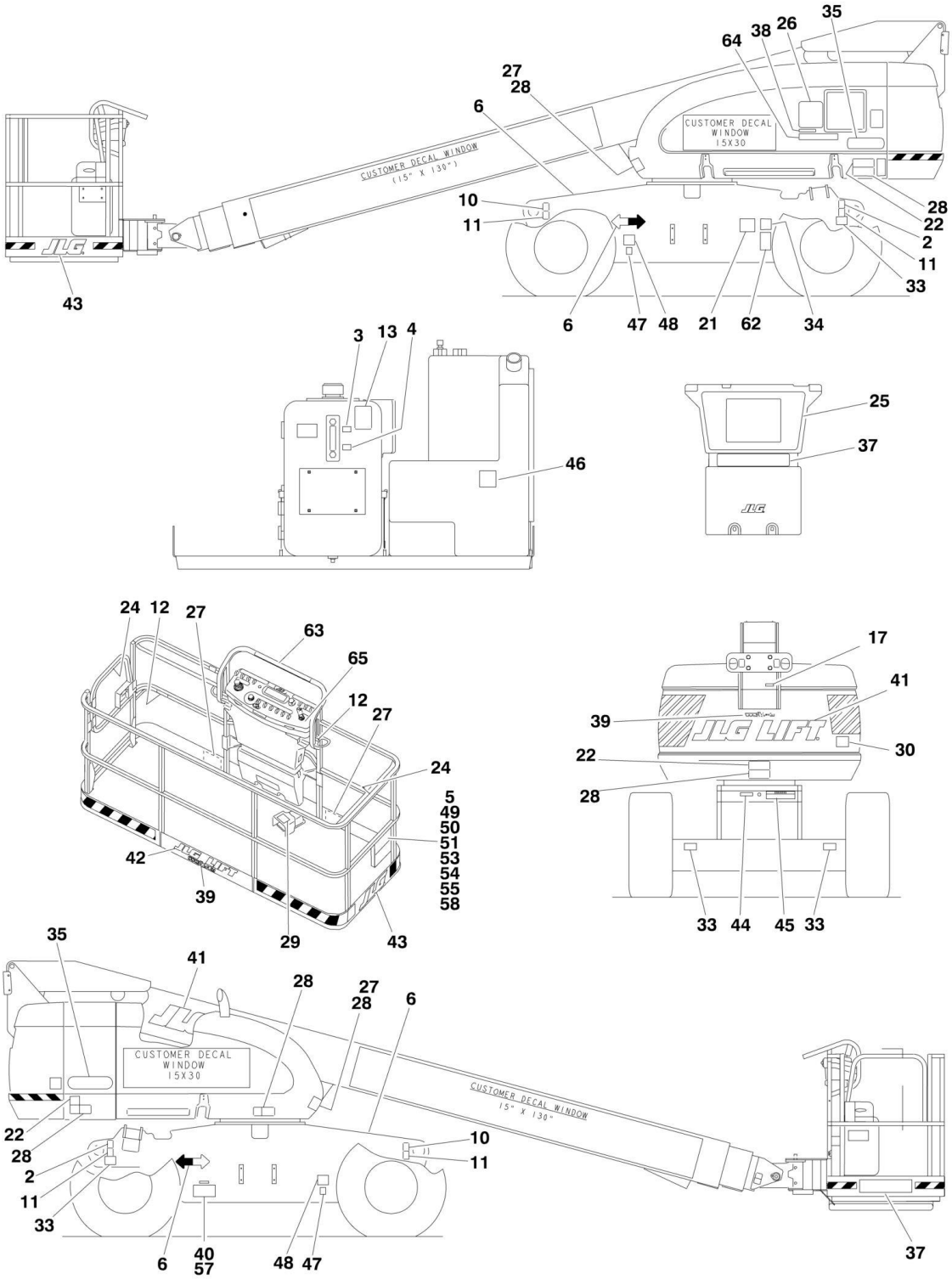

FIGURE 8-2. DECAL INSTALLATION (ANSI SPEC) (USA BUILT MACHINES AND CHINA BUILT MACHINES) (SN 0300087912 through 0300171769, SN B300000100 through B300000969)

ITEM	PART NUMBER	QTY	DESCRIPTION	REV
		Ref	**STANDARD DECAL INSTALLATIONS**	
	0274093	Ref	**Decal - JLG**	2
	0273867	Ref	**Standard Decal Installations 600S ANSI Spec**	10
	0273868	Ref	**Standard Decal Installations 600SJ ANSI Spec**	7
	0273869	Ref	**Standard Decal Installations 660SJ ANSI Spec**	9
1	1001108923	1	Decal - EPA/Carb Fuel Spec (Diesel Machines USA Built Machines) **(SN 0300134794 through 0300171769)**	
1	1001108923	1	Decal - EPA/Carb Fuel Spec (Diesel Machines China Built Machines) **(SN B300000100 through B300000969)**	
2	1701499	2	Decal - No Tie Down /Lift	
3	1701502	1	Decal - High Oil Level (USA Built Machines) **(SN 0300087912 through 0300133154)**	
4	1701503	1	Decal - Low Oil Level (USA Built Machines) **(SN 0300087912 through 0300133154)**	
5	1701509	1	Decal - Manual	
6	1701529	4	Decal- Arrow	
10	1703811	2	Decal - Tie Down /Lift	
11	1703814	4	Decal - Tie Down	
12	1704277	3	Decal - Attach Lanyard Here	
13	1704412	1	Decal - Hydraulic Oil	
17		Ref	Nameplate Options:	
17	3251243	1	120V-60Hz	
17	3252507	1	220V-50/60Hz	
21	1702153	1	Decal - Inspection (USA Built Machines) **(SN 0300087912 through 0300133154)**	
22	1703953	4	Decal - Warning/Crushing	
24	1702868	2	Decal - No Hands	
25	1703797	1	Decal - Danger/Warning	
26	1705336	1	Decal - Warning Inspection	
27	1703804	4	Decal - Warning Crushing	
28	1703805	4	Decal - Danger Electrocution	
29	3252347	1	Nameplate - Footswitch	
30	3251813	1	Decal - USA	
33		Ref	Decal - Tire Load Options:	
33	1703470	4	Decal - Tire Load (600S)	
33	1703471	4	Decal - Tire Load (600SJ)	
33	1703472	4	Decal - Tire Load (660SJ)	
34	See Note	NSS	Decal - Bar Code (Note: Not Available for Purchase)	
35		Ref	Decal - Model Options:	
35	1702815	2	Decal - Model 600S	
35	1702816	2	Decal - Model 600SJ	
35	1702817	2	Decal - Model 660SJ	
37		Ref	Decal - Capacity Options:	
37		Ref	USA Built Machines:	
37		Ref	Decal - Capacity 600S	
37	1704096	2	Decal - Capacity **(SN 0300087912 through 0300143325)**	
37	1001121800	2	Decal - Capacity **(SN 0300143326 through 0300171769)**	
37		Ref	Decal - Capacity 600SJ & 660SJ	
37	1701645	2	Decal - Capacity **(SN 0300087912 through 0300143325)**	
37	1001121801	2	Decal - Capacity **(SN 0300143326 through 0300171769)**	

SECTION 8 - DECALS

ITEM	PART NUMBER	QTY	DESCRIPTION	REV
37		Ref	China Built Machines:	
37		Ref	Decal - Capacity 600S	
37	1704096	2	Decal - Capacity **(SN B300000100 through B300000188)**	
37	1001121800	2	Decal - Capacity **(SN B300000189 through B300000969)**	
37		Ref	Decal - Capacity 600SJ & 660SJ	
37	1701645	2	Decal - Capacity **(SN B300000100 through B300000188)**	
37	1001121801	2	Decal - Capacity **(SN B300000189 through B300000969)**	
38		Ref	Decal - Capacity Options:	
38		Ref	USA Built Machines:	
38		Ref	Decal - Capacity 600S	
38	1704104	1	Decal - Capacity **(SN 0300087912 through 0300099059)**	
38	1707014	1	Decal - Capacity **(SN 0300099060 through 0300143325)**	
38	1001121813	1	Decal - Capacity **(SN 0300143326 through 0300171769)**	
38		Ref	Decal - Capacity 600SJ & 660SJ	
38	1702688	1	Decal - Capacity **(SN 0300087912 through 0300099059)**	
38	1707013	1	Decal - Capacity **(SN 0300099060 through 0300143325)**	
38	1001121814	1	Decal - Capacity **(SN 0300143326 through 0300171769)**	
38		Ref	China Built Machines	
38		Ref	Decal - Capacity 600S	
38	1707014	1	Decal - Capacity **(SN B300000100 through B300000188)**	
38	1001121813	1	Decal - Capacity **(SN B300000189 through B300000969)**	
38		Ref	Decal - Capacity 660SJ	
38	1707013	1	Decal - Capacity **(SN B300000100 through B300000188)**	
38	1001121814	1	Decal - Capacity **(SN B300000189 through B300000969)**	
39	1704885	2	Decal - Website	
40	See Note	NSS	Nameplate - Serial Number (Note: Not Available for Purchase)	
41	1702861	3	Decal - JLG Lift (8in)	
42	1702774	1	Decal - JLG Lift (3-1/2in)	
43	1702773	2	Decal - JLG Lift (5in)	
44	3250872	1	Nameplate - Steer/Tow Selection (Machines with Tow Package Only)	
45		Ref	Decal - Tow Instructions Options: (Machines with Tow Package Only)	
45	1702305	1	Decal - Tow Instructions 2WD	
45	1703403	1	Decal - Tow Instructions 4WD	
46		Ref	Decal - Fuel	
46	1701542	1	Ford and GM Engine Machines	
46	1701505	1	Caterpillar and Deutz Engine Machines	
47	1701543	2	Decal - LP Gas (Ford Engine Only)	
48		Ref	Decal - LP Gas Liquid Options (Gas Engine Only):	
48	1700818	2	English Language	
48	1704271	2	English and French Languages	
48	1702720	2	Spanish Language	
49	0100011	AR	Compound, Locking	
50	0641406	4	Bolt 1/4in-20NC x 3/4in	
51	0641408	1	Bolt 1/4in-20NC x 1in	
53	0860520	1	Box, Manual Storage	
54	1060279	1	Cable, Lanyard	
55	3311405	AR	Locknut 1/4in-20NC	
57	3820001	4	Rivet	
58	4751400	AR	Flatwasher 1/4in	
62		Ref	Decal - Patent Options:	

ITEM	PART NUMBER	QTY	DESCRIPTION	REV
62	1700584	1	USA Built Machines **(SN 0300087912 through 0300151357)**	
62	1700584	1	China Built Machines **(SN B300000100 through B300000357)**	
62	1001131269	1	USA Built Machines **(SN 0300151358 through 0300171769)**	
62	1001131269	1	China Built Machines **(SN B300000358 through B300000969)**	
63		Ref	Decal - Legend Options:	
63	1702784	1	USA Built Machines **(SN 0300087912 through 0300099059)**	
63	1706931	1	USA Built Machines **(SN 0300099060 through 0300138728)**	
63	1001108493	1	USA Built Machines **(SN 0300138729 through 0300171769)**	
63	1001108493	1	China Built Machines **(SN B300000100 through B300000969)**	
64		Ref	Decal - Legend	
64	1703808	1	USA Built Machines **(SN 0300087912 through 0300099059)**	
64	1706941	1	USA Built Machines **(SN 0300099060 through 0300171769)**	
64	1706941	1	China Built Machines **(SN B300000100 through B300000969)**	
65	1705351	1	Decal - Drive/Steer Instructions (USA Built Machines) **(SN 03000138729 through 0300171769)**	
65	1705351	1	Decal - Drive/Steer Instructions (China Built Machines) **(SN B300000100 through B300000969)**	

FIGURE 8-3. DECAL INSTALLATION (COUNTRY SPEC) (USA BUILT MACHINES) (SN 0300087000 through 0300087911)

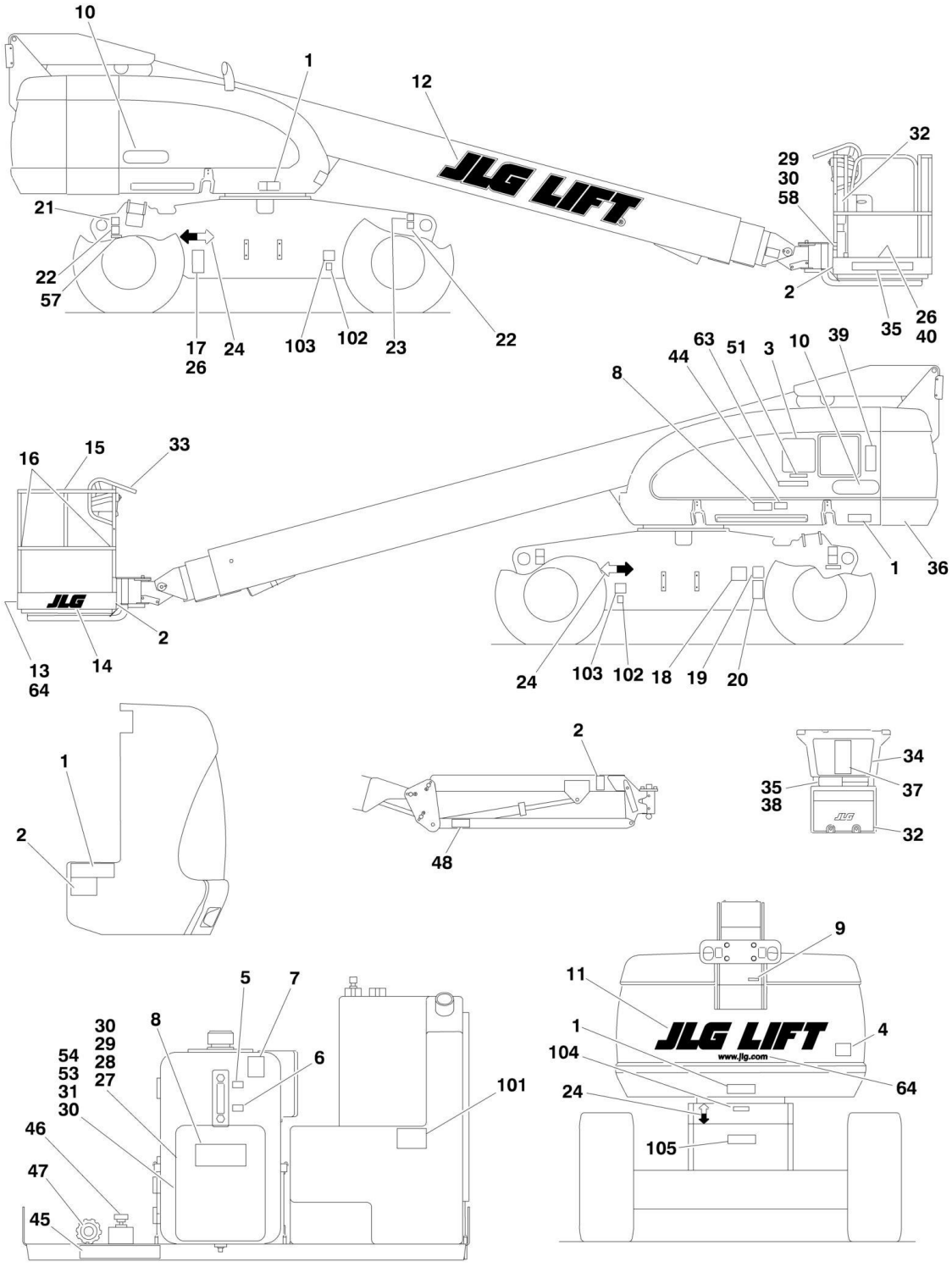

FIGURE 8-3. DECAL INSTALLATION (COUNTRY SPEC) (USA BUILT MACHINES) (SN 0300087000 through 0300087911)

ITEM	PART NUMBER	QTY	DESCRIPTION	REV
		Ref	**DECAL INSTALLATIONS**	
	0255330	Ref	**Decal Installations 600S Common Decals**	12
	0255334	Ref	**Decal Installations 600SJ Common Decals**	12
	0255332	Ref	**Decal Installations 660SJ Common Decals**	13
	0257493	Ref	**Decal Installations 600S Brazilian Spec**	5
	0257494	Ref	**Decal Installations 600SJ & 660SJ Brazilian Spec**	5
	0259328	Ref	**Decal Installations 600S CSA Spec**	11
	0259329	Ref	**Decal Installations 600SJ CSA Spec**	13
	0259330	Ref	**Decal Installations 660SJ CSA Spec**	13
	0273537	Ref	**Decal Installations 660SJ English, Chinese Spec**	3
	0273536	Ref	**Decal Installations 600S English, Korean Spec**	3
	0256258	Ref	**Decal Installations 600S Japanese Spec**	3
	0256575	Ref	**Decal Installations 600SJ & 660SJ Japanese Spec**	4
	0256673	Ref	**Decal Installations 600S Latin American Spanish Spec**	15
	0256663	Ref	**Decal Installations 600SJ Latin American Spanish Spec**	9
	0256672	Ref	**Decal Installations 660SJ Latin American Spanish Spec**	11
1		Ref	Decal - Electrocution Options:	
1	Not Required	0	Brazilian Spec and Japanese Spec	
1	1703937	4	Chinese Spec	
1	1703936	4	CSA Spec	
1	1703939	4	Korean Spec	
1	1702585	4	Latin American Spec	
2		Ref	Decal - Crushing Options:	
2	1701518	5	Brazilian Spec and Japanese Spec	
2	1703949	3	Chinese Spec	
2	1703948	3	CSA Spec	
2	1703951	3	Korean Spec	
2	1702583	3	Latin American Spec	
3		Ref	Decal - Danger/Warning Options:	
3	Not Required	0	Brazilian Spec and Japanese Spec	
3	1703931	1	Chinese Spec	
3	1703930	1	CSA Spec	
3	1703933	1	Korean Spec	
3	1702971	1	Latin American Spec	
4		Ref	Decal - USA Options:	
4	Not Required	0	Brazilian, Chinese, Japanese Spec and Korean Spec	
4	3251813	1	CSA and Latin American Spec	
5	1701502	1	Decal - High Oil Level	
6	1701503	1	Decal - Low Oil Level	
7	1701504	1	Decal - Hydraulic Oil	
8	1701509	1	Decal - Manual	
9		Ref	Decal - AC to Platform Options:	
9	Not Required	0	Brazilian, Chinese, Japanese Spec and Korean Spec	
9	1703453	1	AC (Latin American Spec)	
9	3251243	1	120V-60Hz	
9	3252507	1	220V-50/60Hz	
10		Ref	Decal - Model Designation Options:	
10	1702815	2	Decal - Model Designation 600S	
10	1702816	2	Decal - Model Designation 600SJ	

SECTION 8 - DECALS

ITEM	PART NUMBER	QTY	DESCRIPTION	REV
10	1702817	2	Decal - Model Designation 660SJ	
11	1702861	1	Decal - JLG Lift (8in)	
12	1702862	1	Decal - JLG Lift (12in)	
13	1702774	1	Decal - JLG Lift (3-1/2in)	
14	1702773	2	Decal - JLG (5in)	
15		Ref	Decal - No Hands Options:	
15	1703899	2	Brazilian Spec	
15	1704000	2	CSA Spec	
15	Not Required	0	Chinese, Japanese Spec and Korean Spec	
15	1702975	1	Latin American Spec	
16		Ref	Decal - Attach Lanyard Here Options:	
16	1704277	AR	Brazilian, Chinese, CSA, Korean and Latin American Spec	
16	Not Required	0	Japanese Specs	
17	See Note	NSS	Nameplate - Serial Number (Note: Not Available for Purchase)	
18		Ref	Decal - Inspection Options:	
18	Not Required	0	Brazilian, Chinese, Japanese Spec and Korean Spec	
18	1704006	2	CSA Spec	
18	1702552	1	Latin American Spec	
19	See Note	NSS	Decal - Bar Code (Note: Not Available for Purchase)	
20		Ref	Decal - Patent Options:	
20	1700584	1	Brazilian, Chinese, Japanese Spec and Korean Spec	
20	1702573	1	Latin American Spec	
21	1701499	2	Decal - No Tie Down /Lift	
22	1702300	4	Decal - Tie Down /Lift	
23	1701500	2	Decal - Tie Down /Lift	
24	1701529	4	Decal- Arrow	
25		Ref	Decal - Warning Options:	
25	Not Required	0	Brazilian, Chinese, Japanese Spec and Korean Spec	
25	1702581	1	Latin American Spec	
26	3820001	AR	Rivet	
27	0641408	1	Bolt 1/4in-20NC x 1in	
28	1060279	1	Cable, Lanyard	
29	3311405	AR	Locknut 1/4in-20NC	
30	4751400	AR	Flatwasher 1/4in	
31	0860520	1	Box, Manual Storage	
32	3380434	1	Panel, Pedestal **(SN 0300068000 through 0300076512)**	
33		Ref	Decal - Legend Options:	
33	Not Required	0	Brazilian, Chinese, Japanese Spec and Korean Spec	
33	1702784	2	CSA Spec	
33	1702972	1	Latin American Spec	
34		Ref	Decal - Danger/Warning Options:	
34	Not Required	0	Brazilian Spec and Japanese Spec	
34	1703925	1	Chinese Spec	
34	1703924	2	CSA Spec	
34	1703927	1	Korean Spec	
34	1702973	1	Latin American Spec	
35		Ref	Decal - Maximum Capacity Options:	
35	Not Required	0	Brazilian Spec and Japanese Spec	
35	1703996	1	Chinese Spec - 660SJ	
35	1704099	2	CSA Spec - 600S	
35	1703996	2	CSA Spec - 600SJ/660SJ	

ITEM	PART NUMBER	QTY	DESCRIPTION	REV
35	1704103	1	Korean Spec - 600S	
35	1704100	2	Latin American Spec - 600S	
35	1702974	2	Latin American Spec - 600SJ/660SJ	
37		Ref	Nameplate - Capacity Options:	
37	1703536	1	Brazilian Spec	
37	1701924	1	Japanese Spec	
37	Not Required	0	Chinese, CSA, Korean and Latin American Spec	
38		Ref	Nameplate - Caution Options:	
38	1703538	1	Brazilian Spec	
38	1703188	1	Japanese Spec	
38	Not Required	0	Chinese, CSA, Korean and Latin American Spec	
39		Ref	Nameplate - Caution Options:	
39	1703548	1	Brazilian Spec	
39	1701923	1	Japanese Spec	
39	Not Required	0	Chinese, CSA, Korean and Latin American Spec	
40		Ref	Decal - Footswitch Options:	
40	3252540	1	Brazilian Spec	
40	1703982	1	Chinese Spec	
40	3252347	1	CSA Spec (Part of Footswitch)	
40	3252220	1	Japanese Spec	
40	1703981	1	Korean Spec	
40	3252489	1	Latin American Spec	
44 to 48	Not Required	0	Not Required	
51		Ref	Decal - Capacity Options:	
51	Not Required	0	Brazilian Spec and Japanese Spec	
51	1704112	1	Chinese Spec - 660SJ	
51	1704107	1	CSA Spec (600S)	
51	1704112	1	CSA Spec (600SJ & 660SJ)	
51	1704111	1	Korean Spec - 600S	
51	1704108	1	Latin American Spec	
53	0641406	4	Bolt 1/4in-20NC x 3/4in	
54	0100011	AR	Compound, Locking	
57		Ref	Decal - Tire Load Options:	
57	1703470	4	Brazilian, CSA, Spec and Latin American Spec	
57	1703472	4	Chinese Spec	
57	1703470	4	Korean Spec - 600S	
58	0641414	2	Bolt 1/4in-20NC x 1-3/4in	
63		Ref	Decal - Legend Options:	
63	Not Required	0	Brazilian, Chinese, Japanese, Korean and Latin American Specs	
63	1703808	1	CSA Spec	
64	1704885	2	Decal - Website	
		Ref	**DECAL INSTALLATION (OPTIONAL PARTS)**	
101		Ref	Decal - Fuel Options:	
101	1701505	1	Diesel	
101	1701542	1	Gas	
102	1701543	1	Decal - LP Gas (Dual Fuel Machines Only)	
103		Ref	Decal - Liquid Withdrawal System Options: (Dual Fuel Machines Only)	
103	Not Required	0	Brazilian Spec and Japanese Spec	
103	1700818	2	Chinese and Korean Spec	
103	1704271	2	CSA Spec	

SECTION 8 - DECALS

ITEM	PART NUMBER	QTY	DESCRIPTION	REV
103	1702720	2	Latin American Spec	
104		Ref	Nameplate - Steer/Tow Selection (Machines with Tow Package Only)	
104	Not Required	0	Brazilian, Chinese, Japanese, Korean and Latin American Spec	
104	1704272	1	CSA Spec	
105		Ref	Decal - Tow Instructions Options (Machines with Tow Package Only):	
105	Not Required	0	Brazilian, Chinese, Japanese, Korean and Latin American Spec	
105	1704273	1	CSA Spec 2WD	
105	1704276	1	CSA Spec 4WD	

FIGURE 8-4. DECAL INSTALLATION (COUNTRY SPEC) (USA BUILT MACHINES AND CHINA BUILT MACHINES) (SN 0300087912 through 0300171769, SN B300000100 through B300000969)

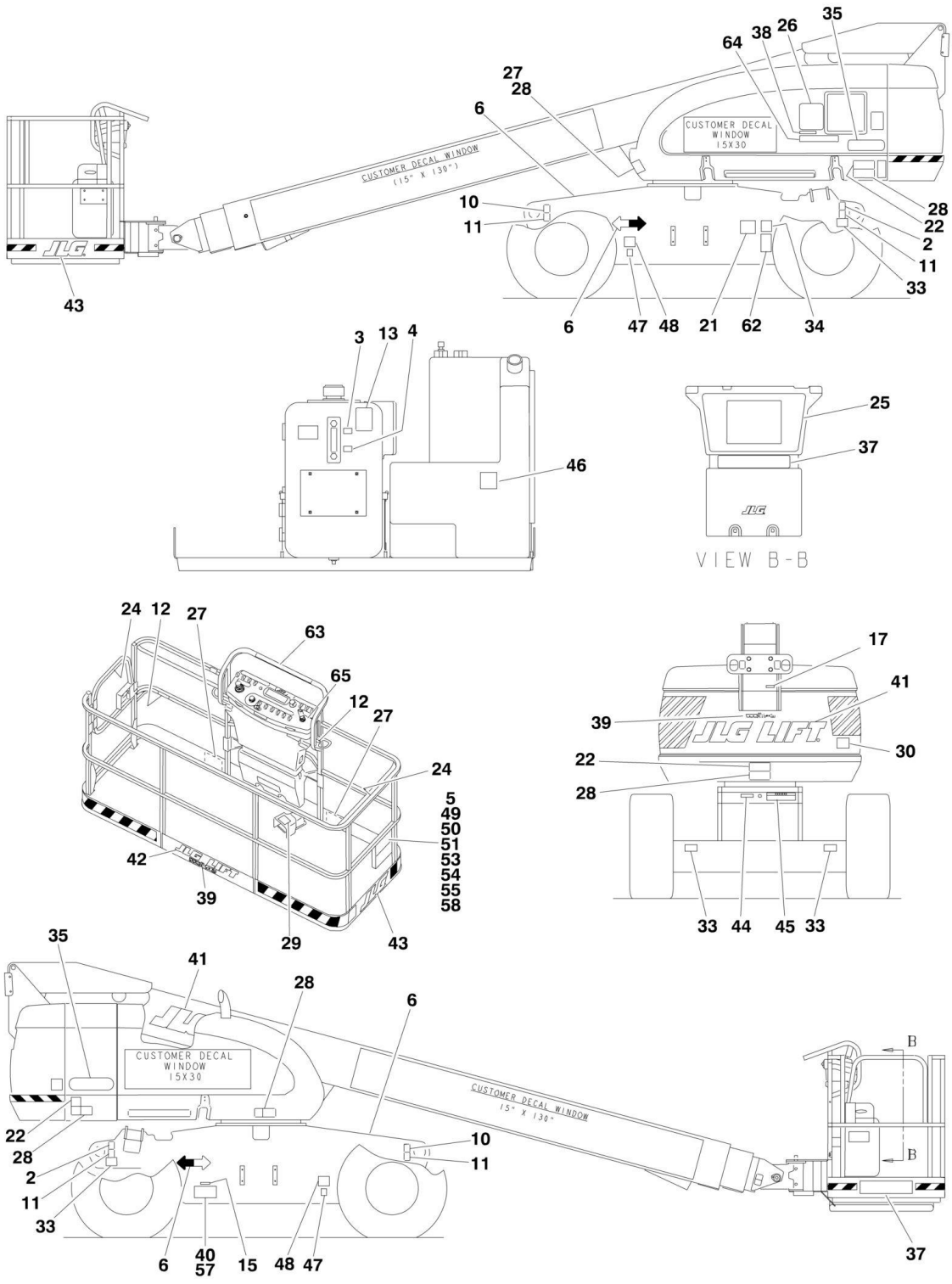

FIGURE 8-4. DECAL INSTALLATION (COUNTRY SPEC) (USA BUILT MACHINES AND CHINA BUILT MACHINES) (SN 0300087912 through 0300171769, SN B300000100 through B300000969)

ITEM	PART NUMBER	QTY	DESCRIPTION	REV
		Ref	**STANDARD DECAL INSTALLATIONS**	
	0274093	Ref	**Decal - JLG**	2
	0273885	Ref	**Standard Decal Installations 600S Brazilian Spec**	B
	0273886	Ref	**Standard Decal Installations 600SJ Brazilian Spec**	8
	0273887	Ref	**Standard Decal Installations 660SJ Brazilian Spec**	B
	0275099	Ref	**Standard Decal Installations 600S Chinese Spec (Traditional)**	10
	1001116839	Ref	**Standard Decal Installations 600S Chinese Spec (Simplified)**	4
	See Note	Ref	**Standard Decal Installations 600SJ Chinese Spec (Note: Not Available for Purchase)**	
	0273871	Ref	**Standard Decal Installations 660SJ Chinese Spec (Traditional)**	B
	1001117939	Ref	**Standard Decal Installations 660SJ Chinese Spec (Simplified)**	4
	0273872	Ref	**Standard Decal Installations 600S CSA Spec**	B
	0273873	Ref	**Standard Decal Installations 600SJ CSA Spec**	7
	0273874	Ref	**Standard Decal Installations 660SJ CSA Spec**	C
	0273888	Ref	**Standard Decal Installations 600S Japanese Spec**	B
	0273889	Ref	**Standard Decal Installations 600SJ Japanese Spec**	7
	0273890	Ref	**Standard Decal Installations 660SJ Japanese Spec**	B
	0273870	Ref	**Standard Decal Installations 600S Korean Spec**	B
	1001112941	Ref	**Standard Decal Installations 600SJ Korean Spec**	2
	0274925	Ref	**Standard Decal Installations 660SJ Korean Spec**	11
	0273882	Ref	**Standard Decal Installations 600S Latin American Spec**	B
	0273883	Ref	**Standard Decal Installations 600SJ Latin American Spec**	8
	0273884	Ref	**Standard Decal Installations 660SJ Latin American Spec**	B
2	1701499	2	Decal - No Tie Down /Lift	
3	1701502	1	Decal - High Oil Level (USA Built Machines) **(SN 0300087912 through 0300133154)**	
4	1701503	1	Decal - Low Oil Level (USA Built Machines) **(SN 0300087912 through 0300133154)**	
5	1701509	1	Decal - Manual	
6	1701529	4	Decal- Arrow	
10	1703811	2	Decal - Tie Down /Lift	
11	1703814	4	Decal - Tie Down	
12	1704277	3	Decal - Attach Lanyard Here	
13	1704412	1	Decal - Hydraulic Oil	
15		Ref	Decal - CSA Options:	
15	1705514	1	CSA Spec Only	
15	Not Required	0	All Other Specs	
17		Ref	Nameplate Options:	
17	3251243	1	120V-60Hz	
17	3252507	1	220V-50/60Hz	
21		Ref	Decal - Inspection Options:	
21		Ref	Brazilian Spec	
21	1705901	1	USA Built Machines **(SN 0300087912 through 0300151358)**	
21	1705901	1	China Built Machines **(SN B300000100 through B300000358)**	
21	Not Required	0	Chinese Spec	
21		Ref	CSA Spec Options:	
21	1704006	1	USA Built Machines **(SN 0300087912 through 0300151358)**	
21	1704006	1	China Built Machines **(SN B300000100 through B300000358)**	

ITEM	PART NUMBER	QTY	DESCRIPTION	REV
21	Not Required	0	Japanese Spec	
21	Not Required	0	Korean Spec	
21		Ref	Latin American Spec Options	
21	1704007	1	USA Built Machines **(SN 0300087912 through 0300151358)**	
21	1704007	1	China Built Machines **(SN B300000100 through B300000358)**	
22		Ref	Decal - Warning/Crushing Options:	
22	1705903	4	Brazilian Spec	
22	1703943	4	Chinese Spec (Traditional)	
22	1001116845	4	Chinese Spec (Simplified)	
22	1703942	4	CSA Spec	
22	1703944	4	Japanese Spec	
22	1703945	4	Korean Spec	
22	1703941	4	Latin American Spec	
24		Ref	Decal - No Hands Options:	
24	1705967	2	Brazilian Spec	
24		Ref	Chinese Spec Options:	
24	1705968	1	USA Built Machines **(SN 0300087912 through 0300140842)**	
24	1001116846	1	USA Built Machines **(SN 0300140843 through 0300171769)**	
24	1001116846	1	China Built Machines **(SN B300000100 through B300000969)**	
24	1704000	2	CSA Spec	
24	Not Required	0	Japanese Spec	
24	1705969	2	Korean Spec	
24	1704001	2	Latin American Spec	
25		Ref	Decal - Danger/Warning Options:	
25	1705895	1	Brazilian Spec	
25	1703925	1	Chinese Spec (Traditional)	
25	1001116847	1	Chinese Spec (Simplified)	
25	1703924	1	CSA Spec	
25	1703926	1	Japanese Spec	
25	1703927	1	Korean Spec	
25	1703923	1	Latin American Spec	
26		Ref	Decal - Warning Inspection Options:	
26	1705896	1	Brazilian Spec	
26		Ref	Chinese Spec (Traditional)	
26	1705348	1	USA Built Machines **(SN 0300087912 through 0300140842)**	
26	1001116849	1	USA Built Machines **(SN 0300140843 through 0300171769)**	
26	1001116849	1	China Built Machines **(SN B300000100 through B300000969)**	
26	1001116848	1	Chinese Spec (Simplified)	
26	1705347	1	CSA Spec	
26	1705344	1	Japanese Spec	
26	1705345	1	Korean Spec	
26	1705917	1	Latin American Spec	
27		Ref	Decal - Warning Crushing Options:	
27	1705898	4	Brazilian Spec	
27	1703949	4	Chinese Spec (Traditional)	
27	1001116850	4	Chinese Spec (Simplified)	
27	1703948	4	CSA Spec	
27	1703950	4	Japanese Spec	
27	1703951	4	Korean Spec	

ITEM	PART NUMBER	QTY	DESCRIPTION	REV
27	1703947	4	Latin American Spec	
28		Ref	Decal - Danger Electrocution Options:	
28	1705897	4	Brazilian Spec	
28		Ref	Chinese Spec (Traditional)	
28	1703937	4	USA Built Machines **(SN 0300087912 through 0300140842)**	
28	1001116851	4	USA Built Machines **(SN 0300140843 through 0300171769)**	
28	1001116851	4	China Built Machines **(SN B300000100 through B300000969)**	
28	1703937	4	Chinese Spec (Simplified)	
28	1703936	4	CSA Spec	
28	1703938	4	Japanese Spec	
28	1703939	4	Korean Spec	
28	1703935	4	Latin American Spec	
29		Ref	Nameplate - Footswitch Options:	
29	1705902	1	Brazilian Spec	
29	1703982	1	Chinese Spec (Traditional)	
29	1001116852	1	Chinese Spec (Simplified)	
29	1703984	1	CSA Spec	
29	1703980	1	Japanese Spec	
29	1703981	1	Korean Spec	
29	1703983	1	Latin American Spec	
30		Ref	Decal - USA Options:	
30	3251813	1	All Specs except Korean and Japanese Specs (USA Built Machines)	
30	Not Required	0	All Specs (China Built Machines)	
30	3251813	1	Japanese Specs (USA Built Machines) **(SN 0300087000 through 0300151357)**	
30	Not Required	0	Japanese Specs (USA Built Machines) **(SN 0300151358 through 0300171769)**	
30	Not Required	0	Japanese Specs (All Chinese Built Machines)	
30	Not Required	0	Korean Specs	
33		Ref	Decal Kit - Tire Load Options:	
33	1703470	4	Decal - Tire Load (600S)	
33	1703471	4	Decal Kit - Tire Load Decal - Tire Load (600SJ)	
33	1703472	4	Decal - Tire Load (660SJ)	
34	See Note	NSS	Decal - Bar Code (Note: Not Available for Purchase)	
35		Ref	Decal - Model Options:	
35	1702815	2	Decal - Model 600S	
35	1702816	2	Decal - Model 600SJ	
35	1702817	2	Decal - Model 660SJ	
37		Ref	Decal - Capacity Options:	
37		Ref	Decal - Capacity 600S:	
37		Ref	USA Built Machines **(SN 0300087912 through 0300143325)**	
37		Ref	China Built Machines **(SN B300000100 through B300000188)**	
37	1706380	2	Brazilian Spec	
37	1704101	2	Chinese Spec (Traditional)	
37	1001116853	2	Chinese Spec (Simplified)	
37	1704099	2	CSA Spec	
37	1704102	2	Japanese Spec	
37	1704103	2	Korean Spec	
37	1704098	2	Latin American Spec	

ITEM	PART NUMBER	QTY	DESCRIPTION	REV
37		Ref	USA Built Machines **(SN 0300143326 through 0300171769)**	
37		Ref	China Built Machines **(SN B300000189 through B300000969)**	
37	1001121806	2	Brazilian Spec	
37	1001121809	2	Chinese Spec (Traditional)	
37	1001121811	2	Chinese Spec (Simplified)	
37	1001121802	2	CSA Spec	
37	1001121807	2	Japanese Spec	
37	1001122200	2	Korean Spec	
37	1001121804	2	Latin American Spec	
37		Ref	Decal - Capacity 600SJ & 660SJ:	
37		Ref	USA Built Machines: **(SN 0300087912 through 0300099059)**	
37	1703996	2	Brazilian, Chinese, CSA, Japanese, Korean and Latin American Spec	
37		Ref	USA Built Machines **(SN 0300099060 through 0300143325)**	
37		Ref	China Built Machines **(SN B300000100 through B300000969)**	
37	1707057	2	Brazilian Spec	
37	1707060	2	Chinese Spec	
37	1707055	2	CSA Spec	
37	1707059	2	Japanese Spec	
37	1707058	2	Korean Spec	
37	1707056	2	Latin American Spec	
37		Ref	USA Built Machines **(SN 0300143326 through 0300171769)**	
37		Ref	China Built Machines **(SN B300000189 through B300000969)**	
37	1001121656	2	Brazilian Spec	
37	1001121810	2	Chinese Spec	
37	1001121803	2	CSA Spec	
37	1001121808	2	Japanese Spec	
37	1001121918	2	Korean Spec	
37	1001121805	2	Latin American Spec	
38		Ref	Decal - Capacity Options:	
38		Ref	Decal - Capacity 600S:	
38		Ref	USA Built Machines: **(SN 0300087912 through 0300099059)**	
38	1706381	1	Brazilian Spec	
38	1704109	1	Chinese Spec	
38	1704107	1	CSA Spec	
38	1704110	1	Japanese Spec	
38	1704111	1	Korean Spec	
38	1704106	1	Latin American Spec	
38		Ref	USA Built Machines **(SN 0300099060 through 0300143325)**	
38		Ref	China Built Machines **(SN B300000100 through B300000188)**	
38	1707051	1	Brazilian Spec	
38	1707045	1	Chinese Spec (Traditional)	
38	1001116854	1	Chinese Spec (Simplified)	
38	1707046	1	CSA Spec	
38	1707053	1	Japanese Spec	
38	1707043	1	Korean Spec	
38	1707048	1	Latin American Spec	
38		Ref	USA Built Machines **(SN 0300143326 through 0300171769)**	

ITEM	PART NUMBER	QTY	DESCRIPTION	REV
38		Ref	China Built Machines **(SN B300000189 through B300000969)**	
38	1001121819	1	Brazilian Spec	
38	1001121822	1	Chinese Spec (Traditional)	
38	1001121824	1	Chinese Spec (Simplified)	
38	1001121815	1	CSA Spec	
38	1001121820	1	Japanese Spec	
38	1001122201	1	Korean Spec	
38	1001121817	1	Latin American Spec	
38		Ref	Decal - Capacity 600SJ & 660SJ:	
38		Ref	USA Built Machines: **(SN 0300087912 through 0300099059)**	
38	1704112	1	Brazilian, Chinese, CSA, Japanese, Korean and Latin American Spec	
38		Ref	USA Built Machines **(SN 0300099060 through 0300143325)**	
38		Ref	China Built Machines **(SN B300000100 through B300000969)**	
38	1707052	1	Brazilian Spec	
38	1707044	1	Chinese Spec	
38	1707047	1	CSA Spec	
38	1707054	1	Japanese Spec	
38	1707042	1	Korean Spec	
38	1707049	1	Latin American Spec	
38		Ref	USA Built Machines **(SN 0300143326 through 0300171769)**	
38		Ref	China Built Machines **(SN B300000189 through B300000969)**	
38	1001121655	1	Brazilian Spec	
38	1001121823	1	Chinese Spec	
38	1001121816	1	CSA Spec	
38	1001121821	1	Japanese Spec	
38	1001121921	1	Korean Spec	
38	1001121818	1	Latin American Spec	
39	1704885	AR	Decal - Website	
40	See Note	NSS	Nameplate - Serial Number (Note: Not Available for Purchase)	
41	1702861	3	Decal - JLG Lift (8in)	
42	1702774	1	Decal - JLG Lift (3-1/2in)	
43	1702773	2	Decal - JLG Lift (5in)	
44	3250872	1	Nameplate - Steer/Tow Selection (Machines with Tow Package Only)	
45		Ref	Decal - Tow Instructions Options (Machines with Tow Package Only)	
45	1702305	1	Decal - Tow Instructions 2WD	
45	1703403	1	Decal - Tow Instructions 4WD	
46		Ref	Decal - Fuel	
46	1701542	1	Ford and GM Engine Machines	
46	1701505	1	Caterpillar and Deutz Engine Machines	
47	1701543	2	Decal - LP Gas (Gas Engine Only)	
48		Ref	Decal - LP Gas Liquid Options (Gas Engine Only):	
48	1700818	2	English Language	
48	1704271	2	English and French Languages	
48	1702720	2	Spanish Language	
49	0100011	AR	Compound, Locking	
50	0641406	4	Bolt 1/4in-20NC x 3/4in	
51	0641408	1	Bolt 1/4in-20NC x 1in	

SECTION 8 - DECALS

ITEM	PART NUMBER	QTY	DESCRIPTION	REV
53	0860520	1	Box, Manual Storage	
54	1060279	1	Cable, Lanyard	
55	3311405	5	Locknut 1/4in-20NC	
57	3820001	4	Rivet	
58	4751400	10	Flatwasher 1/4in	
62		Ref	Decal - Patent Options:	
62	1700584	1	All Other Specs except CSA Spec and Latin American Spec (USA Built Machines) **(SN 0300087912 through 0300143326)**	
62	1700584	1	All Other Specs except CSA Spec and Latin American Spec (China Built Machines) **(SN B300000100 through B300000189)**	
62	1702573	1	Latin American Spec Only	
62		Ref	CSA Spec	
62	1700584	1	USA Built Machines **(SN 0300087912 through 0300143325)**	
62	1700584	1	China Built Machines **(SN B300000100 through B300000189)**	
62	1001131269	1	USA Built Machines **(SN 0300143326 through 0300171769)**	
62	1001131269	1	China Built Machines **(SN B300000189 through B300000969)**	
63		Ref	Decal - Legend Options:	
63	1702784	1	USA Built Machines **(SN 0300087912 through 0300099059)**	
63	1706931	1	USA Built Machines **(SN 0300099060 through 0300138728)**	
63	1001108493	1	USA Built Machines **(SN 0300138729 through 0300171769)**	
63	1001108493	1	China Built Machines **(SN B300000100 through B300000969)**	
64		Ref	Decal - Legend	
64	1703808	1	USA Built Machines **(SN 0300087912 through 0300099059)**	
64	1706941	1	USA Built Machines **(SN 0300099060 through 0300171769)**	
64	1706941	1	China Built Machines **(SN B300000100 through B300000969)**	
65		Ref	Decal - Drive/Steer Instructions Options (USA Built Machines) **(SN 0300138729 through 0300171769)**	
65		Ref	Decal - Drive/Steer Instructions Options (China Built Machines) **(SN B300000100 through B300000969)**	
65	1705905	1	Brazilian Spec	
65		Ref	Chinese Spec (Traditional)	
65	1705430	1	USA Built Machines **(SN 0300087912 through 0300140842)**	
65	1001116863	1	USA Built Machines **(SN 0300140843 through 0300171769)**	
65	1001116863	1	China Built Machines **(SN B300000100 through B300000969)**	
65	1705430	1	Chinese Spec (Simplified)	
65	1705429	1	CSA Spec	
65	1705426	1	Japanese Spec	
65	1705427	1	Korean Spec	
65	1705910	1	Latin American Spec	

FIGURE 8-5. DECAL INSTALLATION (AUSTRALIAN AND CE SPEC) (USA BUILT MACHINES) (SN 0300087000 through 0300087911)

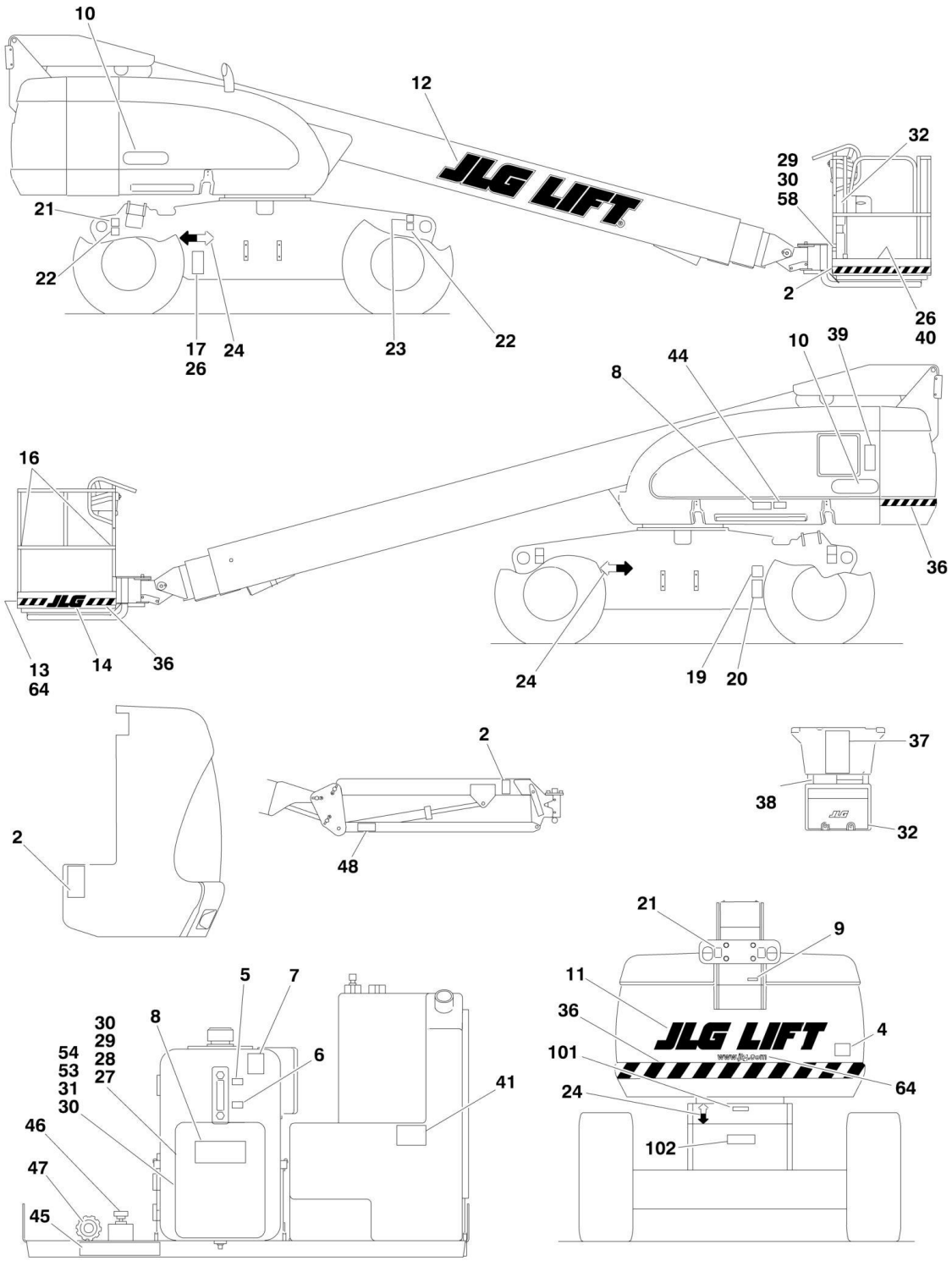

FIGURE 8-5. DECAL INSTALLATION (AUSTRALIAN AND CE SPEC) (USA BUILT MACHINES) (SN 0300087000 through 0300087911)

ITEM	PART NUMBER	QTY	DESCRIPTION	REV
		Ref	**STANDARD DECAL INSTALLATIONS**	
	0271014	Ref	**Decal - JLG**	3
	0255330	Ref	**Standard Decal Installations 600S Common Parts**	11
	0255334	Ref	**Standard Decal Installations 600SJ Common Parts**	9
	0255332	Ref	**Standard Decal Installations 660SJ Common Parts**	12
	0256622	Ref	**Standard Decal Installations 600S Australian Spec**	9
	0256634	Ref	**Standard Decal Installations 600SJ & 660SJ Australian Spec**	9
	0256256	Ref	**Standard Decal Installations 600S Dutch Spec**	5
	0256573	Ref	**Standard Decal Installations 600SJ & 660SJ Dutch Spec**	5
	0256253	Ref	**Standard Decal Installations 600S French Spec**	6
	0256570	Ref	**Standard Decal Installations 600SJ & 660SJ French Spec**	6
	0256254	Ref	**Standard Decal Installations 600S German Spec**	5
	0256571	Ref	**Standard Decal Installations 600SJ & 660SJ German Spec**	5
	0256255	Ref	**Standard Decal Installations 600S Italian Spec**	6
	0256572	Ref	**Standard Decal Installations 600SJ & 660SJ Italian Spec**	6
	0273194	Ref	**Standard Decal Installations 600S Norwegian Spec**	3
	0256257	Ref	**Standard Decal Installations 600S Spanish Spec**	5
	0256574	Ref	**Standard Decal Installations 600SJ & 660SJ Spanish Spec**	5
	0256252	Ref	**Standard Decal Installations 600S UK Spec**	6
	0256569	Ref	**Standard Decal Installations 600SJ & 660SJ UK Spec**	6
	0257733	Ref	**Warning Stripes Installation (CE Specs)**	1
2	1701518	3	Decal - Crushing	
4		Ref	Decal Options:	
4	1705084	1	CE Spec	
4	Not Required	0	Australian Spec	
5	1701502	1	Decal - High Oil Level	
6	1701503	1	Decal - Low Oil Level	
7	1701504	1	Decal - Hydraulic Oil	
8	1701509	1	Decal - Manual	
9		Ref	Decal - 240/50HZ Options:	
9	Not Required	0	CE Spec	
9	3251242	1	Australian Spec	
10		Ref	Decal - Model Options:	
10	1702815	2	Decal - Model 600S	
10	1702816	2	Decal - Model 600SJ	
10	1702817	2	Decal - Model 660SJ	
11	1702861	3	Decal - JLG Lift (8in)	
12	1702862	1	Decal - JLG Lift (12in)	
13	1702774	1	Decal - JLG Lift (3-1/2in)	
14	1702773	2	Decal - JLG (5in)	
16		Ref	Decal - Attach Lanyard Here Options:	
16	Not Required	0	CE Spec	
16	1704277	4	Australian Spec	
17	See Note	NSS	Nameplate - Serial Number (Note: Not Available for Purchase)	
19	See Note	NSS	Decal - Bar Code (Note: Not Available for Purchase)	
20	1700584	1	Decal - Patent	
21	1701499	2	Decal - No Tie Down /Lift	
22	1702300	4	Decal - Tie Down /Lift	
23	1701500	2	Decal - Tie Down /Lift	

SECTION 8 - DECALS

ITEM	PART NUMBER	QTY	DESCRIPTION	REV
24	1701529	4	Decal- Arrow	
26	3820001	4	Rivet	
27	0641408	1	Bolt 1/4in-20NC x 1in	
28	1060279	1	Cable, Lanyard	
29	3311405	AR	Locknut 1/4in-20NC	
30	4751400	AR	Flatwasher 1/4in	
31	0860520	1	Box, Manual Storage	
32	3380434	1	Panel, Pedestal	
36	4420051	17.4 ft /5.3m	Decal - Warning Stripes	
37		Ref	Nameplate - Capacity Options:	
37	1703992	1	Australian Spec	
37	1701596	1	Dutch Spec	
37	1690697	1	French Spec	
37	1690697	1	German Spec	
37	1690697	1	Italian Spec	
37	1690697	1	Norwegian Spec	
37	1690697	1	Spanish Spec	
37	1690697	1	UK Spec	
38		Ref	Nameplate - Caution Options:	
38	Not Required	0	Not Required	
38	1703186	1	Dutch Spec	
38	1703184	1	French Spec	
38	1703190	1	German Spec	
38	1703185	1	Italian Spec	
38	1705250	1	Norwegian Spec	
38	1703187	1	Spanish Spec	
38	1703183	1	UK Spec	
39		Ref	Nameplate - Caution Options:	
39	1691483	1	Australian Spec	
39	1701596	1	Dutch Spec	
39	1693289	1	French Spec	
39	1693291	1	German Spec	
39	1701602	1	Italian Spec	
39	1705232	1	Norwegian Spec	
39	1701798	1	Spanish Spec	
39	1691483	1	UK Spec	
40		Ref	Nameplate - Footswitch Options:	
40	3252347	1	Australian Spec	
40	1703518	1	Dutch Spec	
40	1693292	1	French Spec	
40	1693294	1	German Spec	
40	1701600	1	Italian Spec	
40	1705275	1	Norwegian Spec	
40	1701791	1	Spanish Spec	
40	3252347	1	UK Spec	
41	1701505	1	Decal - Fuel (Diesel)	
44 to 48	Not Required	0	Not Required	
53	0641406	4	Bolt 1/4in-20NC x 3/4in	
54	0100011	AR	Compound, Locking	
57		Ref	Decal - Wheel Load Options:	
57	1703470	4	Decal - Wheel Load 600S	

ITEM	PART NUMBER	QTY	DESCRIPTION	REV
57	1703471	4	Decal - Wheel Load 600SJ	
57	1703472	4	Decal - Wheel Load 600SJ	
58	0641414	2	Bolt 1/4in-20NC x 1-3/4in	
64	1704885	2	Decal - Website	
		Ref	**OPTIONAL DECALS**	
101	3250872	1	Nameplate - Steer/Tow Selection (Machines with Tow Package Only)	
102		Ref	Decal - Tow Instructions Options: (Machines with Tow Package Only)	
102	1702305	1	2WD (Machines with Tow Package Only)	
102	1703403	1	4WD (Machines with Tow Package Only)	

FIGURE 8-6. DECAL INSTALLATION (AUSTRALIAN AND CE SPEC) (USA BUILT MACHINES AND CHINA BUILT MACHINES) (SN 0300087912 through 0300171769, SN B300000100 through B300000969)

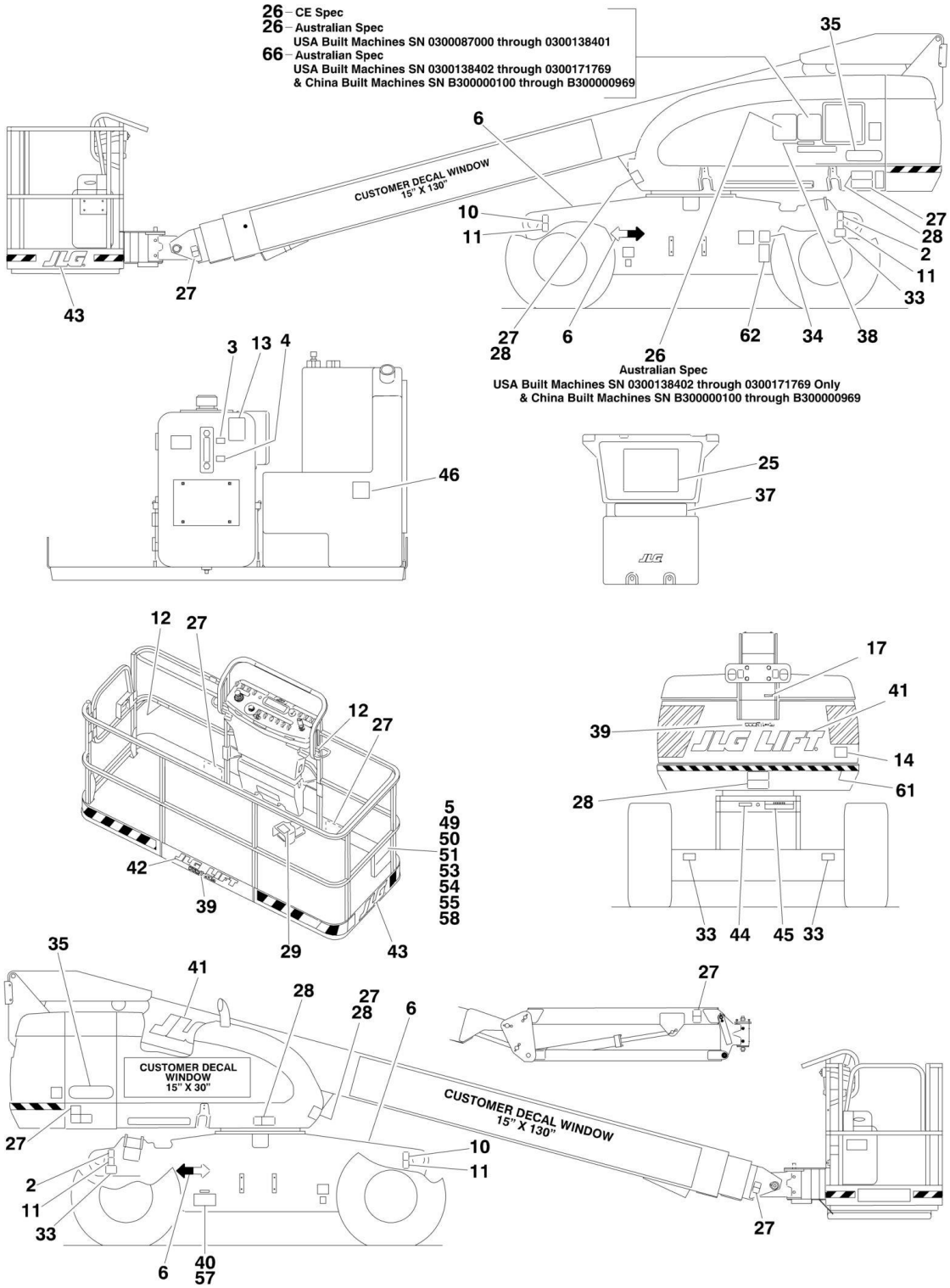

FIGURE 8-6. DECAL INSTALLATION (AUSTRALIAN AND CE SPEC) (USA BUILT MACHINES AND CHINA BUILT MACHINES) (SN 0300087912 through 0300171769, SN B300000100 through B300000969)

ITEM	PART NUMBER	QTY	DESCRIPTION	REV
		Ref	**STANDARD DECAL INSTALLATIONS**	
	0274093	Ref	**Decal - JLG**	2
	0273875	Ref	**Standard Decal Installations 600S (Australian Specs) (USA Built Machines) (SN 0300087912 through 0300138401)**	C
	1001114385	Ref	**Standard Decal Installations 600S (Australian Specs) (USA Built Machines) (SN 0300138402 through 0300171769)**	B
	1001114385	Ref	**Standard Decal Installations 600S (Australian Specs) (China Built Machines) (SN B300000100 through B300000969)**	B
	0273875	Ref	**Standard Decal Installations 600S (CE Specs)**	B
	0273876	Ref	**Standard Decal Installations 600SJ (Australian Specs) (USA Built Machines) (SN 0300087912 through 0300138401)**	5
	1001114386	Ref	**Standard Decal Installations 600SJ (Australian Specs) (USA Built Machines) (SN 0300138402 through 0300171769)**	1
	0273876	Ref	**Standard Decal Installations 600SJ (CE Specs)**	4
	0273877	Ref	**Standard Decal Installations 660SJ (Australian Specs) (USA Built Machines) (SN 0300087912 through 0300138401)**	B
	1001114387	Ref	**Standard Decal Installations 660SJ (Australian Specs) (USA Built Machines) (SN 0300138402 through 0300171769)**	B
	1001114387	Ref	**Standard Decal Installations 660SJ (Australian Specs) (China Built Machines) (SN B300000100 through B300000969)**	B
	0273877	Ref	**Standard Decal Installations 660SJ (CE Specs)**	5
2	1701499	2	Decal - No Tie Down /Lift	
3	1701502	1	Decal - High Oil Level (USA Built Machines) **(SN 0300087912 through 0300133154)**	
4	1701503	1	Decal - Low Oil Level (USA Built Machines) **(SN 0300087912 through 0300133154)**	
5	1701509	1	Decal - Manual	
6	1701529	4	Decal- Arrow	
10	1703811	2	Decal - Tie Down /Lift	
11	1703814	4	Decal - Tie Down	
12	1704277	3	Decal - Attach Lanyard Here	
13	1704412	1	Decal - Hydraulic Oil	
14	1705084	1	Decal - Sound Power Level	
17		Ref	Nameplate Options:	
17	3251243	1	120V-60Hz	
17	3252507	1	220V-50/60Hz	
25	1705921	1	Decal - Tipping/Electrocution	
26	1705822	1	Decal - Electrocution/Safety Manual	
27	1701518	8	Decal - Warning Crushing	
28	1705961	5	Decal - Electrocution	
29	1705828	1	Nameplate - Footswitch	
30	3251813	1	Decal - USA (CE Spec Machines Built in USA Only) (Not Shown) **(SN 0300151358 through 0300171769)**	
33		Ref	Decal - Tire Load Options:	
33	1703470	4	Decal - Tire Load (600S)	
33	1703471	4	Decal - Tire Load (600SJ)	
33	1703472	4	Decal - Tire Load (660SJ)	
34	See Note	NSS	Decal - Bar Code (Note: Not Available for Purchase)	
35		Ref	Decal - Model Options:	
35	1702815	2	Decal - Model 600S	

SECTION 8 - DECALS

ITEM	PART NUMBER	QTY	DESCRIPTION	REV
35	1702816	2	Decal - Model 600SJ	
35	1702817	2	Decal - Model 660SJ	
37	1705978	1	Decal - Capacity	
38	1705978	1	Decal - Capacity	
39	1704885	AR	Decal - Website	
40	See Note	NSS	Nameplate - Serial Number (Note: Not Available for Purchase)	
41	1702861	3	Decal - JLG Lift (8in)	
42	1702774	1	Decal - JLG Lift (3-1/2in)	
43	1702773	2	Decal - JLG Lift (5in)	
44	3250872	1	Nameplate - Steer/Tow Selection (Machines with Tow Package Only)	
45		Ref	Decal - Tow Instructions Options (Machines with Tow Package Only)	
45	1702305	1	Decal - Tow Instructions 2WD	
45	1703403	1	Decal - Tow Instructions 4WD	
46		Ref	Decal - Fuel	
46	1701542	1	Ford and GM Engine Machines	
46	1701505	1	Caterpillar and Deutz Engine Machines	
49	0100011	AR	Compound, Locking	
50	0641406	4	Bolt 1/4in-20NC x 3/4in	
51	0641408	1	Bolt 1/4in-20NC x 1in	
53	0860520	1	Box, Manual Storage	
54	1060279	1	Cable, Lanyard	
55	3311405	5	Locknut 1/4in-20NC	
57	3820001	4	Rivet	
58	4751400	10	Flatwasher 1/4in	
61	4420051	18 ft/5.3m	Decal - Warning Stripe	
62		Ref	Decal - Patent Options	
62	1700584	1	USA Built Machines **(SN 0300087912 through 0300143325)**	
62	1700584	1	China Built Machines **(SN B300000100 through B300000188)**	
62	1001131269	1	USA Built Machines **(SN 0300143326 through 0300161210)**	
62	1001131269	1	China Built Machines **(SN B300000189 through B300000631)**	
66	1001112551	1	Decal - Emergency Controls (Australian Spec Only) (USA Built Machines) **(SN 0300138402 through 0300171769)**	
66	1001112551	1	Decal - Emergency Controls (Australian Spec Only) (China Built Machines) **(SN B300000100 through B300000969)**	

SECTION 9 - RECOMMENDED SERVICE PARTS STOCK

SECTION 9 - RECOMMENDED SERVICE PARTS STOCK

FIGURE 9-1. MODEL 600SJ/660SJ STANDARD PARTS

ITEM	PART NUMBER	QTY	DESCRIPTION	REV
	Note	Ref	**Note: The following list will service one machine (built to current production per date on the front cover) with emergency repair parts which can be installed in the field. Parts from the list should be replaced when inventory is depleted to keep service parts stock supplied. For further information, contact your JLG dealer or the JLG Industries Parts Department.**	
		Ref	**STANDARD PARTS**	
	2120210	4	Element Filter	
	2120149	4	Element, Filter	
	7020020	1	Switch, Indicator	
	7020021	1	Switch, Indicator	
	7012944	1	Coil	
	7012943	1	Coil	
	7018991	1	Coil	
	70000582	1	Coil	
	7012772	1	Coil	
	7012664	1 doz	Element, Air Cleaner	
	3740067	1	Relay	
	4360436	1	Switch, Fuel Level	
	7024444	1	Breather, Hydraulic Tank	
	3740049	1	Relay	
	4360328	1	Switch, Toggle	
	2860030	1	Key, Replacement	
	4360475	1	Switch, Mushroom	
	4360476	1	Switch, Contact Block	
	2940074	1	Latch	
	4360331	1	Switch, Toggle	
	4360407	1	Controller, Speed	
	4360330	1	Switch, Toggle	
	1001212415	1	Controller (Drive and Steer)	
	4360387	1	Switch, Push Button	
	1001129555	1	Controller (Lift and Swing)	
	2400065	2	Fuse, 30Amp	
	3990010	2	Diode	

FIGURE 9-2. MODEL 600SJ/660SJ VARIABLE PARTS

ITEM	PART NUMBER	QTY	DESCRIPTION	REV
	Note	Ref	**Note: The following list will service one machine (built to current production per date on the front cover) with emergency repair parts which can be installed in the field. Parts from the list should be replaced when inventory is depleted to keep service parts stock supplied. For further information, contact your JLG dealer or the JLG Industries Parts Department.**	
		Ref	**VARIABLE PARTS**	
	7026830	1 doz	Filter, Fuel (Caterpillar Engine Machines)	
	7026811	1 doz	Filter, Oil (Caterpillar Engine Machines)	
	1001112067	1	Module, Engine Control (Caterpillar Engine Machines)	
	7016328	1 doz	Filter, Fuel (Deutz Engine Machines)	
	7016331	1 doz	Filter, Oil (Deutz Engine Machines)	
	7026608	1	Relay (Deutz Engine Machines)	
	7027795	1	Module, Control (Deutz Engine Machines)	
	91083218	1 doz	Filter, Fuel (Ford Engine Machines)	
	7021868	1 doz	Filter, Oil (Ford Engine Machines)	
	1600374	1	Module, EPM (Ford Engine Machines)	
	7027972	1 doz	Filter, Fuel (GM Engine Machines)	
	7027965	1 doz	Filter, Oil (GM Engine Machines)	
	70002895	1	Module, ECU (GM Engine Machines)	
	4360517	1	Switch, Proximity	
	4360469	1	Switch, Key (ANSI, ANSI Export and Australian Specs)	
	4360470	1	Switch, Key (CE Specs)	
	1001103667	1	Module - ADE (Ground Control) (Caterpillar, Deutz and GM Engine)	
	4360578	1	Switch, Limit	
	3740080	1	Relay (Machines with Generator)	
	4360336	1	Switch, Toggle (Machines with Generator)	
	4360506	1	Switch, Proximity (Australian and CE Specs Only)	
	70002005	1	Powertrack Repair Section (600S)	
	70002007	1	Powertrack Repair Section (660SJ)	
	4360336	1	Switch, Toggle (Machines with Floodlights)	
	1600375	1	Module - ADE (Platform Control	
	4360331	1	Switch, Toggle (Machines with 4WS Options)	
	4360336	1	Switch, Toggle (Machines with Dual Fuel)	
	4360522	1	Switch, Toggle (Machines with Headlights/Chassis Worklights)	
	4360070	1	Breaker, Circuit (Machines with SkyPower)	
	2400064	2	Fuse - 5 Amp (Machines with SkyPower	
	4360232	1	Breaker, Circuit (Machines with Platform Floodlights)	
	4360057	1	Switch, Limit (Machines with Soft Touch Option)	
	2400070	2	Fuse (Machines with Platform Worklights)	

SECTION 10 - SPECIAL OPTIONS

SECTION 10 - SPECIAL OPTIONS

FIGURE 10-1. SPECIAL OPTIONS

ITEM	PART NUMBER	QTY	DESCRIPTION	REV
	Note	Ref	**Note: This list is to accommodate machines ordered with special equipment. Options may not be applicable to all models. For more specific parts information contact JLG Parts Department.**	
		Ref	**MISCELLANEOUS SPECIAL OPTIONS**	
	1340061	Ref	**Air Cleaner Pre-Cleaner**	
		Ref	**Airline to Platform Installation Options:**	
	0255388	Ref	1/2in 600S & 600SJ	
	0255389	Ref	1/2in 660SJ	
	1001093286	Ref	1/2in - 600S & 600SJ (Arctic Package Only)	
	0275341	Ref	1/2in - 660SJ (Arctic Package Only)	
	1001102674	Ref	Dual 1/2in 600S	
	0274219	Ref	**Battery Disconnect Switch**	
		Ref	**Boom Wipers Installations**	
	0256273	Ref	Bristle Brush Design	
	1001121605	Ref	Rubber Squeegee Design	
	0273834	Ref	**Cable Installation - 600S (Fog Cannon)**	
		Ref	**Cable and Clamp Installation for 4000W Generator (China Built Machine Only)**	
	1001153301	Ref	**Cable and Clamp Installation for 4000W Generator - 60Hz (600S ANSI Export Spec Only)**	
	1001153302	Ref	**Cable and Clamp Installation for 4000W Generator - 60Hz (660SJ ANSI Export Spec Only)**	
	0270733	Ref	**Cable and Clamp Installation for 4000W Generator - 60Hz (600S ANSI Export, Australian & Japanese Specs)**	
	0270736	Ref	**Cable and Clamp Installation for 4000W Generator - 60Hz (660SJ ANSI Export, Australian & Japanese Specs)**	
	1001220152	Ref	**Cable Add-on Kit (4000W/60Hz Generator)**	
		Ref	**Cable Tray Carrier Installation (Australian Spec Only)**	
	1001116419	Ref	**30in Platform**	
	1001116420	Ref	**36in Platform**	
	0256789	Ref	**Camera Mount Assembly**	
		Ref	**ClearSky Telematics (Factory Installed)**	
		Ref	**Note: Refer to ClearSky (Telematics) Manual p/n 3128499 for Service Parts.**	
		Ref	**ADE Machines (ABS Hoods)**	
	1001102841	Ref	**ANSI Spec**	
	1001102842	Ref	**ANSI Export and Japanese Specs**	
	1001104985	Ref	**CSA Spec**	
		Ref	**ADE/UGM Machines (ABS Hoods)**	
	1001112990	Ref	**ANSI Spec**	
	1001112991	Ref	**ANSI Export and Japanese Specs**	
	1001112992	Ref	**CSA Spec**	
		Ref	**ADE/UGM Machines (Steel Hoods)**	
	1001118963	Ref	**ANSI SPEC**	
	1001134103	Ref	**Australian Specs**	
	1001127087	Ref	**Brazil and New Zealand Specs**	
	1001118964	Ref	**CSA SPEC**	
		Ref	**ClearSky Telematics Kit (Dealer Installed)**	
		Ref	**ANSI Spec**	

ITEM	PART NUMBER	QTY	DESCRIPTION	REV
	1001117251	Ref	**Pre-UGM**	
	1001119939	Ref	**UGM**	
		Ref	**Australian Spec**	
	1001139132	Ref	**Pre-UGM**	
	1001139151	Ref	**UGM**	
		Ref	**CSA Spec**	
	1001117258	Ref	**Pre-UGM**	
	1001119947	Ref	**UGM**	
		Ref	**Cold Weather Package Installation Options:**	
	0273575	Ref	Caterpillar Engine	
	0271912	Ref	Deutz	
	0255386	Ref	Ford	
	0275262	Ref	GM	
		Ref	**Container - Tray Storage Options:**	
	1580012	1	Center	
	1580013	1	Rail	
	1001093389	Ref	**Cover, Fan**	
	1001115918	Ref	**Cribbing Installation**	
		Ref	**Cylinder Bellows Installations**	
	0255929	Ref	**Boom Bellows Installation (600S)**	
	0255930	Ref	**Boom Bellows Installation (600SJ & 660SJ)**	
	0255354	Ref	**Frame Bellows Installation (2WS)**	
	0255356	Ref	**Frame Bellows Installation (4WS)**	
		Ref	**Decal Installations Options:**	
	1702788	1	Decal - Biodegradable Hydraulic Fluid Decal	
	1703479	1	Decal - Biodegradable Hydraulic Fluid (German Language)	
	1704174	1	Decal - Biodegradable (Synthetic) Hydraulic Fluid Decal	
	1704175	1	Decal - Biodegradable (Synthetic) Hydraulic Fluid (German Language)	
	1001154501	Ref	Decal - Boels Rentals	
	1001116251	Ref	Decal - ClearSky (ANSI Spec) (ABS Hoods)	
	1001116252	Ref	Decal - ClearSky (CSA Spec) (ABS Hoods)	
	1001120992	Ref	Decal - ClearSky (CSA Spec) (Steel Hoods)	
	0253550	Ref	Decal - CSA	
	0274455	Ref	Decal - FedEx (ANSI/CSA/CE Specs)	
	0257195	Ref	Decal - Government Warranty	
	0273246	Ref	Decal - Hertz (ANSI/CSA Specs) **(SN 0300087000 through 0300147521)**	
	1001128985	Ref	Decal - Hertz (ANSI/CSA Specs) **(SN 0300147522 through 0300171769)**	
	0274528	Ref	Decal - Head and Engquist Equipment (H&E) (ANSI Spec)	
	1001143076	Ref	Decal - Hewitt The Rental Store (English Language) (ANSI and CSA Specs)	
	1001143511	Ref	Decal - Hewitt The Rental Store (French Language) (ANSI and CSA Specs)	
	0256957	Ref	Decal - Lanyard Attach (GM K-1 Spec)	
	1001140624	Ref	Decal - Leavitt	
	0274243	Ref	Decal - National Equipment Services (NES) (ANSI/CSA Specs)	
	0270465	Ref	Decal - Nations Rent (ANSI/CSA Specs)	
		Ref	Decal - No Hands (Chinese Language) Options (Platform with Mesh to Top Rail):	
	1705968	Ref	Decal - No Hands (Chinese Language) (USA Built Machines) **(SN 0300087000 through 0300140842)**	

ITEM	PART NUMBER	QTY	DESCRIPTION	REV
	1001116846	Ref	Decal - No Hands (Chinese Language) (USA Built Machines) **(SN 0300140843 through 0300171769)**	
	1001116846	Ref	Decal - No Hands (Chinese Language) (China Built Machines) **(SN B300000100 through 0300171769)**	
	1704000	Ref	Decal - No Hands (French Language) (Platform with Mesh to Top Rail)	
	1702868	Ref	Decal - No Hands (English Language) (Platform with Mesh to Top Rail)	
	1705969	Ref	Decal - No Hands Decal (Korean Language) (Platform with Mesh to Top Rail)	
	1705967	Ref	Decal - No Hands (Portugese Language) (Platform with Mesh to Top Rail)	
	1704001	Ref	Decal - No Hands (Spanish Language) (Platform with Mesh to Top Rail)	
	0256487	Ref	Decal - Prop 65 Warning (Diesel Machines) (California Spec)	
	0256488	Ref	Decal - Prop 65 Warning (Gasoline Machines) (California Spec)	
	1001095383	Ref	Decal - RSC (ANSI Spec)	
	0271107	Ref	Decal - Sunbelt (ANSI/CSA Specs)	
	1001151066	Ref	Decal - Titan Rentals (ANSI/CSA Specs)	
	0271893	Ref	Decal - United Rentals (ANSI/CSA Specs)	
	1001098291	Ref	Decal - UPS (ANSI/CSA Specs)	
	1001141470	Ref	Decal - Volvo Rents	
		Ref	**Decal Kits Options:**	
	2902307	Ref	Decal Kit - Country Spec (ANSI and ANSI Export)	
	2900974	Ref	Decal Kit - Country Spec (Australian) **(SN 0300087000 through 0300087911)**	
	2902329	Ref	Decal Kit - Country Spec (Australian) **(SN 0300087912 through 0300171769)**	
	2900937	Ref	Decal Kit - Country Spec (Brazil) (600S) **(SN 0300087000 through 0300087911)**	
	2910045	Ref	Decal Kit - Country Spec (Brazil) (660SJ) **(SN 0300087000 through 0300087911)**	
	2902312	Ref	Decal Kit - Country Spec (Brazil) **(SN 0300087912 through 0300171769)**	
	2900937	Ref	Decal Kit - Country Spec (CE) (600S) **(SN 0300087000 through 0300087911)**	
	2902329	Ref	Decal Kit - Country Spec (CE) (600S/660SJ) **(SN 0300087912 through 0300171769)**	
	2902322	Ref	Decal Kit - Country Spec (CSA)	
	1001116844	Ref	Decal Kit - Country Spec (Chinese - Simplified)	
	2902309	Ref	Decal Kit - Country Spec (Chinese - Traditional)	
	2900937	Ref	Decal Kit - Country Spec (Japanese) (600S) **(SN 0300087000 through 0300087911)**	
	2902308	Ref	Decal Kit - Country Spec (Japanese) (600S/660SJ) **(SN 0300087912 through 0300171769)**	
	2902310	Ref	Decal Kit - Country Spec (Korean)	
	2902311	Ref	Decal Kit - Country Spec (Latin America)	
	2900967	NLA	Decal Kit - Complete (Use p/n 1001193633 or 1001193634)	
	2902303	Ref	Decal Kit - Master (Common Decals)	
	1001193633	Ref	Decal Kit - Machine **(SN 0300087000 through 0300087911)**	
	1001193634	Ref	Decal Kit - Machine **(SN 0300087912 through 0300171769)**	
	1001108718	Ref	Decal Kit - Platform (600S)	
	1001238895	Ref	Decal Kit - Platform (600SJ/660SJ)	
	1001119562	Ref	Decal Kit - Platform Console Box	
	2902304	Ref	Decal Kit - Tire Load (600S)	

ITEM	PART NUMBER	QTY	DESCRIPTION	REV
	2902305	Ref	Decal Kit - Tire Load (600SJ)	
	2902306	Ref	Decal Kit - Tire Load (660SJ)	
	2902394	Ref	**Drive/Steer Cutout Kit**	
	1001109259	Ref	**Drive Orientation Kit - 660SJ, 2WS (Australian Spec Only)**	
		Ref	**Electrical Connector Kits**	
	1001148902	Ref	Amp/Tyco Electrical Connector Kit	
	1001148903	Ref	Deutsch DT Electrical Connector Kit	
	1001148904	Ref	Deutsch HD Electrical Connector Kit	
	1001148905	Ref	Packard Electrical Connector Kit	
	1001148906	Ref	Various Electrical Connectors Kit	
		Ref	**Engine Block Heater Installations:**	
	2580055	Ref	**Caterpillar Engine Machines**	
	0274227	Ref	**Deutz Engine Machines**	
	0258696	Ref	**Ford Engine Machines**	
	0275261	Ref	**GM Engine Machines**	
	1001093389	Ref	**Engine Fan Shield Installation**	
	1001153289	Ref	**Exhaust Pipe Extension (Deutz Tier IVi Engine and Steel Hoods Only)**	
		Ref	**Filter Kits:**	
		Ref	**Combined Filter Kit (Hydraulic/Air and Fuel/Engine Oil)**	
	1001114123	NLA	**Caterpillar Engines (Use p/n 1001110991)**	
	1001114124	NLA	**Caterpillar Engines (Use p/n 1001110991)**	
	1001110990	1	**Deutz Engines**	
	1001114041	NLA	**Ford LRG-425 Engines (Use p/n 1001114042)**	
	1001114037	NLA	**GM Engines (Use p/n 1001114127)**	
	1001109692	1	**Hydraulic/Air Filter**	
	1001110133	1	**Fuel/Engine Oil Filter (Deutz Engines Only)**	
	1001125824	Ref	**Fire Extinguisher Brackets Installation (Frame Mounted)**	
	1001139099	Ref	**Fire Extinguisher Installation (Platform Mounted)**	
	1001121554	Ref	**Fire Protection for Hoses and Cables**	
	0274233	Ref	**Fuel Filter Installation (Davco Filter)**	
		Ref	**Footswitch Shield (Note: Move Decal to Shield)**	
	4060959	Ref	**USA Built Machines (SN 0300087000 through 0300093957)**	
	3380652	Ref	**USA Built Machines (SN 0300093958 through 0300167682)**	
	1001117294	Ref	**USA Built Machines (SN 0300167683 through 0300171769)**	
	1001175815	Ref	**Generator 4000W/50Hz Add-on Kit (Deutz D2011)**	
	1001213606	Ref	**Generator 4000W/60Hz Add-on Kit (Deutz D2011)**	
	2902232	Ref	**Glazier Tray Kit (9K Helac) (w/Platform)**	
	1001101422	Ref	**Glazier Tray Kit (w/o Platform)**	
	0271548	Ref	**Glow Plugs Installation (Deutz Engine Machines) Options:**	
	2901691	Ref	**Kit, Intake Glow Plugs Installed In Intake (Deutz Engine Machines)**	
		Ref	**Hood (Steel) Replacement Kit**	
	1001126287	Ref	**Caterpillar and GM Engine Machines**	
	1001126286	Ref	**Deutz Engine Machines**	
	Not Available	Ref	**Ford Engines Machines**	
		Ref	**Hose Kit Options:**	
	1001187491	Ref	**Hose Kit - Upper Boom (600S)**	
	1001187496	Ref	**Hose Kit - Upper Boom (600SJ) (SN 0300087912 through 0300171769)**	
	1001187498	Ref	**Hose Kit - Upper Boom (660SJ)**	
		Ref	**Hostile (Extreme) Environment Options:**	

ITEM	PART NUMBER	QTY	DESCRIPTION	REV
	1001238927	Ref	Hostile (Extreme) Environment Installation (2WS) (600S)	
	1001238928	Ref	Hostile (Extreme) Environment Installation (4WS) (600S)	
	1001238929	Ref	Hostile (Extreme) Environment Installation (2WS) (660SJ)	
	1001238930	Ref	Hostile (Extreme) Environment Installation (4WS) (660SJ)	
	1001122603	Ref	Hostile (Extreme) Environment Installation (2WS) (600S Shipyard)	
	1001121411	Ref	Hostile (Extreme) Environment Installation (4WS) (600S Shipyard)	
	1001094475	Ref	**Hourmeter for Generator Installation**	
		Ref	**Hydraulic Fluids Options:**	
	2300014	Ref	Mobil 424	
	2300027	Ref	Mobil 224H Bio	
	2300029	Ref	Mobil EAL ISO 46 Bio	
	2300016	Ref	Mobil DTE 10 Excel 32	
	2300019	Ref	Quaker State Quintolubric 888-46 Fire Res	
	2300039	Ref	Exxon Univis HVI 26	
	1001189615	Ref	**Kingpin Removal Kit**	
	1001148971	Ref	**Lanyard (Bolt-on) Kit Installation**	
		Ref	**Loop Flushing Installations (Requires Oil Cooler Installation)**	
	0273741	Ref	**Loop Flushing Installations 2WD**	
	0273738	Ref	**Loop Flushing Installations 4WD**	
	1001147699	Ref	**Manual Storage Box Relocation Kit**	
		Ref	**Oil Cooler Installations (Requires Loop Flushing Installation)**	
		Ref	Deutz Engine Machines	
	0256762	Ref	USA Built Machines **(SN 0300087000 through 0300137649)**	
	1282665	Ref	USA Built Machines **(SN 0300087000 through 0300137649)**	
	1001108701	Ref	USA Built Machines **(SN 0300137650 through 0300171769)**	
	1001108701	Ref	China Built Machines **(SN B300000100 through B300000969)**	
	0272041	Ref	Ford and GM Engine Machines	
	1283309	1	Ford and GM Engine Machines	
		Ref	**Platform Console Cover Installations**	
	0258703	Ref	Flat Cover	
	1001110974	Ref	Curved Cover (All Specs except Chines and Korean Specs)	
	1001125229	Ref	Curved Cover (Korean Spec)	
	1001125230	Ref	Curved Cover (Chinese Spec)	
		Ref	**Platform Entry Kit**	
	1001142504	Ref	**Kit, Replace Swing Gate with Drop Bar**	
	1001142505	Ref	**Kit, Replace Drop Bar with Swing Gate**	
		Ref	**Platform Huck Fasteners Replacement Hardware**	
	0641416	AR	Bolt 1/4in-20NC x 2in	
	3311405	AR	Locknut 1/4in-20NC	
	4711400	AR	Flatwasher 1/4in	
	3300151	AR	Acorn Nut 1/4in-20NC	
		Ref	**Platform Mesh to Mid Rail Installation (Side-Entry)**	
	1001140318	Ref	**30in x 48in Platform**	
	1001140315	Ref	**30in x 60in Platform**	
	1001138772	Ref	**30in x 72in Platform**	
	1001138773	Ref	**36in x 96in Platform**	
		Ref	**Platform Mesh to Top Rail Installation (Side-Entry)**	
	0273147	Ref	**30in x 48in Platform**	
	0273146	Ref	**30in x 60in Platform**	
	0273148	Ref	**30in x 72in Platform**	

ITEM	PART NUMBER	QTY	DESCRIPTION	REV
	0273149	Ref	**36in x 72in Platform**	
	0273145	Ref	**36in x 96in Platform**	
	1001149730	Ref	**Platform Mid Rail Repair Kit**	
		Ref	**Platform Top Rail Extension (With Side Entry)**	
	0272733	Ref	**3ftx6ft Platforms**	
	0272725	Ref	**3ftx8ft Platforms**	
	2910073	Ref	**Power Track Hose and Clamp Kit**	
	1320247	1	Clamp, Nylon	
	0641522	1	Bolt 5/16in-18NC x 2-3/4in	
	3311505	1	Locknut 5/16in-18NC	
	4711500	2	Flatwasher 5/16in	
	2753084	1	Hose	
	1001100151	Ref	**Security Lock (Programmable) Installation**	
	1001116159	Ref	**Sky Power Kit, Deutz 7500W (600S/660SJ)**	
		Ref	**SkyGuard Component Options:**	
	1001149560	Ref	SkyGuard Complete Add-on Kit (Non-UGM Machines)	
	1001143669	Ref	SkyGuard Complete Add-on Kit (UGM Machines)	
	1001137672	Ref	SkyGuard Platform Sensor Kit (UGM Machines) (Old Style Platform)	
	1001197016	Ref	SkyGuard Platform Sensor Kit (UGM Machines) (New Style Platform)	
	1001137440	1	SkyGuard Sensor Harness	
	1001186431	2	Relay	
	1001143256	NLA	SkyGuard Blue Beacon Kit (Use p/n 1001206311)	
	1001206311	Ref	SkyGuard Blue Beacon Kit	
	1001110926	Ref	**Soft Touch (Overhead) Installation (Chinese/Korean Specs Only)**	
		Ref	**Strobe Light Installations (Amber)**	
	1001152965	Ref	**Platform Mounted**	
	1001154231	Ref	**Platform/Ground Mounted**	
	1001228357	Ref	**Telematics Retrofit Harness Kit**	
	1001136698	Ref	**Tiedown Lug Kit (600S & 660SJ Only)**	
	0272302	Ref	**Tire Sealant Installation**	
	0272312	Ref	**Tire Sealant Decal Installation**	
	2902203	1	Kit, Tire Sealant Decal	
		Ref	**Tools for Service**	
	7002840	1	Anti-rotation Pin Removal Tool	
	8896941	1	Wire Stripper	
	7002821	1	Wire Crimper (To install wire ends to wires)	
	7002823	1	Pin/Socket Extractor - Universal (To Remove Pins/Sockets from Connectors)	
	4460467	1	Extractor - 16-18 Gauge (For Removal of Pin/Sockets from Deutsch Connectors)	
	4460510	1	Extractor - 12-14 Gauge (For Removal of Pin/Sockets from Deutsch Connectors)	
	7002822	1	Screwdriver, Potentiometer (To Adjust Drive Controllers)	
	7016654	1	Screwdriver, Magnetic	
	7004275	1	Seal Installation Tool - 1in	
	7004276	1	Seal Installation Tool - 1-1/2in	
	7002826	1	Seal Installation Tool - 2in	
	7016655	1	Wire Rope Sheave Gauge	
	7016652	1	Huck Bolt Faster (For Small Huck Bolts Only)	
	1001137005	1	Software Cable Kit	

SECTION 10 - SPECIAL OPTIONS

ITEM	PART NUMBER	QTY	DESCRIPTION	REV
		Ref	**Tool (Hydraulic) Installations Options:**	
	0272347	Ref	Tool (Hydraulic) Installations 600S	
	02723482348	Ref	Tool (Hydraulic) Installations 600SJ	
	0272349	Ref	Tool (Hydraulic) Installations 660SJ	
	2915087	Ref	**Turntable Bearing Kit**	
	0258918	Ref	**Utility Rack Installation**	
	1001238894	Ref	**Wear Pad Kit (SN 0300087000 through 03000168792)**	
	1001238896	Ref	**Wear Pad Kit (SN 0300168793 through 03000171769)**	
		Ref	**Weld Leads to Platform Installation Options:**	
	0255399	Ref	Weld Leads to Platform Installation 600S & 600SJ	
	0255895	Ref	Weld Leads to Platform Installation 660SJ	
	0273449	Ref	**Wheel Cover Installation**	
	2910172	Ref	**Wire Rope Kit (ANSI Specs Only)**	

PART NUMBER INDEX

SECTION 10 - SPECIAL OPTIONS

0060066 ..... 200, 211
0060067 ..... 195, 211
0080163 92
0080181 ..... 68, 78
0080201 ..... 99, 106, 111
0080214 99
0080241 140
0080243 ..... 68, 78
0100009 ..... 225, 229
0100011 ..... 13, 17, 21, 23, 36, 39, 44, 53, 68, 71, 78, 79, 80, 81, 86, 88, 89, 98, 99, 104, 105, 106, 110, 111, 123, 127, 131, 135, 140, 141, 147, 150, 152, 156, 157, 158, 162, 166, 169, 173, 177, 185, 189, 196, 201, 202, 207, 213, 218, 249, 253, 259, 261, 265, 268,285, 293, 299, 302, 311, 313, 329, 347, 363, 369, 374, 378, 383, 391, 396, 400
0100019 ..... 54, 147, 152, 158, 169, 179, 185, 189, 196, 201, 277
0100020 ..... 68, 71, 79, 81, 86, 92, 98, 99, 104, 106, 110, 112, 124, 180, 268, 277, 280, 326
0100035 ..... 139, 140, 225, 229
0100038 13, 17, 286, 293, 299, 302, 311, 313, 329
0100048 ..... 98, 104, 110, 131, 135, 140, 225, 229, 336, 339, 354, 356
0100062 ..... 124, 179
0100063 299
0100079 123
0100081 ..... 157, 214, 225, 229, 255
0140001 44
0140011 ..... 225, 229
0140032 ..... 140, 344, 360
0181727 ..... 68, 87, 98, 104
0181949 125
0200048 249
0200741 166
0200742 166
0200819 162
0239585 54
0253550 407
0254798 54
0254849 123
0255316 54
0255329 373
0255330 ..... 381, 395
0255331 373
0255332 ..... 381, 395
0255333 373
0255334 ..... 381, 395
0255335 139
0255354 407
0255356 407
0255386 407
0255388 406
0255389 406
0255399 412
0255524 124
0255698 139
0255881 143
0255895 412
0255929 407
0255930 407
0256113 ..... 345, 361
0256122 ..... 147, 152, 158
0256201 ..... 345, 361
0256252 395
0256253 395
0256254 395
0256255 395
0256256 395
0256257 395
0256258 381
0256273 406
0256305 139
0256306 139
0256487 408
0256488 408
0256569 395
0256570 395
0256571 395
0256572 395
0256573 395
0256574 395
0256575 381
0256622 395
0256631 226
0256632 226
0256633 226
0256634 395
0256663 381
0256672 381
0256673 381
0256690 89
0256762 ..... 330, 410
0256789 406
0256823 ..... 147, 152, 158
0256830 146
0256847 92
0256957 407
0257175 ..... 345, 361
0257195 407
0257493 381
0257494 381
0257728 275
0257733 395
0257887 ..... 140, 344, 360
0258696 409
0258703 410
0258918 412
0258945 ..... 227, 231
0259328 381
0259329 381
0259330 381
0270329 53
0270465 407
0270528 39
0270733 ..... 336, 354, 406
0270734 ..... 336, 354
0270735 ..... 337, 354
0270736 ..... 337, 354, 406
0270737 337
0270738 337
0270764 226
0270804 213
0270805 ..... 140, 333
0270833 139
0271014 ..... 373, 395
0271107 408
0271250 123
0271372 213
0271548 409
0271552 ..... 140, 226, 231
0271893 408
0271912 ..... 332, 407
0271940 ..... 219, 227
0272041 ..... 330, 410
0272070 ..... 196, 202
0272130 200
0272132 195
0272134 200
0272137 200
0272139 200
0272254 261
0272255 ..... 177, 349
0272302 411
0272312 411
0272341 374
0272347 412
02723482348 412
0272349 412
0272387 255
0272391 255
0272395 255
0272418 256
0272427 ..... 226, 231, 249
0272435 ..... 181, 187, 191
0272448 ..... 261, 269
0272483 ..... 337, 354
0272484 ..... 337, 354
0272485 ..... 337, 355
0272486 ..... 337, 355
0272487 337
0272488 337
0272492 ..... 177, 349
0272507 ..... 140, 344, 360
0272521 259
0272588 259
0272589 181
0272590 265
0272599 ..... 265, 269
0272606 265
0272607 265
0272640 ..... 177, 349
0272725 411
0272733 411
0272817 ..... 185, 349
0272948 255
0272951 255
0272955 255
0272970 219
0272992 24
0272993 24
0273001 23
0273045 165
0273048 ..... 23, 35
0273049 ..... 23, 35
0273052 127
0273058 219
0273067 36
0273076 ..... 345, 361, 369
0273078 ..... 345, 361, 369
0273080 ..... 17, 21
0273081 ..... 13, 17
0273085 165
0273145 411
0273146 410
0273147 410
0273148 410
0273149 411
0273150 13
0273161 127
0273194 395
0273226 ..... 13, 17
0273238 23
0273239 24
0273240 24
0273242 23
0273243 24
0273244 24
0273246 407
0273353 268
0273356 21
0273357 ..... 17, 21, 231
0273362 36
0273366 ..... 23, 35
0273367 ..... 23, 35
0273369 195
0273379 ..... 13, 17
0273394 ..... 17, 39
0273398 39
0273422 ..... 13, 39
0273448 39
0273449 412
0273450 277
0273486 ..... 220, 227, 231
0273490 ..... 220, 227, 231
0273491 ..... 220, 227, 231, 333
0273507 169
0273511 169
0273536 381
0273537 381
0273540 ..... 177, 349
0273541 ..... 177, 349
0273542 253
0273575 ..... 332, 407
0273687 277
0273706 ..... 227, 231, 249
0273738 410
0273741 410
0273824 ..... 226, 231, 249
0273834 406
0273867 377
0273868 377
0273869 377
0273870 387
0273871 387
0273872 387
0273873 387

0273874 387
0273875 399
0273876 399
0273877 399
0273882 387
0273883 387
0273884 387
0273885 387
0273886 387
0273887 387
0273888 387
0273889 387
0273890 387
0274081 161
0274082 165
0274086 165
0274087 161
0274090 165
0274093 .....377, 387, 399
0274152 ..... 23, 24
0274209 221
0274210 .....141, 226, 231
0274219 406
0274227 409
0274233 409
0274243 407
0274297 86
0274298 86
0274316 43
0274317 43
0274318 43
0274319 43
0274322 23
0274455 407
0274489 98
0274490 98
0274491 68
0274492 70
0274493 70
0274528 407
0274661 275
0274751 150
0274755 150
0274925 387
0274927 ..... 226, 249
0275039 173
0275099 387
0275216 ..... 349, 364
0275217 ..... 349, 365
0275218 ..... 349, 365
0275219 ..... 349, 365
0275230 ..... 17, 21
0275235 ..... 345, 361
0275237 ..... 346, 361
0275253 ..... 346, 361
0275254 ..... 345, 361
0275256 68
0275257 .....189, 349, 365
0275261 409
0275262 ..... 332, 407
0275266 104
0275282 104
0275285 150
0275339 ..... 337, 355
0275341 406
0275342 70
0275343 86
0275452 .....348, 364
0275453 .....348, 364
0275454 .....348, 364
0275455 .....345, 361
0275456 .....345, 361
0275619 39
0275659 .....345, 361
0275831 .....337, 355
0275860 .....23, 24
0275924 .....337, 354
0275925 .....337, 354
0275926 337
0275927 337
0340041 .... 68, 78, 89, 99, 106, 112
0340046 ..... 68, 78, 99
0362519 125
0362528 139
0362609 139
0362610 139
0362910 39
0363012 35
0363082 169
0363097 .....169, 185
0363201 185
0363202 185
0370026 283
0400075 .... 68, 78, 86, 98, 104, 110
0440170 13
0440171 13
0440207 54
0480100 275
0480120 .....162, 166
0480121 .....162, 166
0480125 179
0480126 179
0480129 179
0480130 185
0480135 169
0480142 .....173, 189
0561076 207
0561183 207
0561184 207
0561185 207
0561237 202
0561245 207
0561508 208
0630458 ..... 196, 201, 213
0630462 249
0630464 .....225, 229
0630485 156
0630490 14
0630491 140
0630498 ... 68, 87, 98, 104
0630507 ..... 146, 150, 156
0630518 .... 131, 135, 259, 261, 268
0630534 .... 286, 289, 293, 297, 302
0630535 .... 286, 291, 302, 307, 313
0630536 299
0630548 .....131, 135
0630568 .....226, 230
0641403 ..... 139, 179, 208
0641404 .....166, 179, 214, 225, 229
0641405 .....169, 173, 179, 185, 189, 347, 363
0641406 .....68, 78, 98, 99, 104, 106, 110, 112, 140, 146, 150, 156, 196, 208, 219, 265, 268, 279, 374, 378, 383, 391, 396, 400
0641407 .....68, 72, 78, 80, 86, 89, 99, 105, 111, 137, 347, 363
0641408 98, 99, 104, 110, 156, 179, 219, 373, 378, 382, 391, 396, 400
0641410 .....86, 347, 363, 369
0641412 124
0641414 .....99, 220, 225, 229, 249, 374, 383, 397
0641416 .....44, 104, 110, 202, 347, 363, 410
0641418 .....218, 253
0641505 .....178, 185, 189
0641506 .....131, 136, 147, 150, 152, 157, 158, 279
0641507 .....68, 72, 78, 79, 87, 99
0641508 86, 98, 104, 110, 124, 162, 166, 169, 178
0641510 .....79, 89, 173
0641512 .....147, 150
0641514 72, 98, 104, 110, 173, 275
0641516 .....39, 177, 185, 189, 253, 369
0641518 221
0641522 .....214, 411
0641532 35
0641552 35
0641604 .....196, 201
0641606 .....71, 78, 89, 98, 100, 106, 112, 125, 151, 152, 201, 207, 259, 261, 265, 268
0641607 .....36, 156, 207
0641608 .....13, 17, 21, 39, 44, 68, 71, 78, 81, 87, 89, 98, 99, 104, 106, 110, 112, 124, 146, 150, 152, 157, 185, 189, 196, 201, 207, 214
0641609 ...68, 78, 89, 106, 112, 143, 147
0641610 .....68, 72, 78, 79, 86, 89, 99, 106, 112, 156, 162, 166, 201, 219, 279
0641611 .....156, 169, 185, 201
0641612 13, 99, 104, 106, 110, 112, 127, 169, 185
0641613 .....44, 207
0641614 .....123, 201, 209
0641616 .....156, 207, 279
0641618 .....35, 180, 201
0641634 208
0641638 208
0641644 214
0641648 214
0641708 185
0641710 173
0641718 169
0641772 .....162, 166
0641807 213
0641808 .... 68, 72, 78, 79, 86, 98, 104, 105, 110, 111, 179, 189
0641810 .... 169, 185, 189, 277
0641811 127
0641812 .... 72, 80, 88, 99, 105, 111, 196, 202
0641813 253
0641814 .....13, 17
0641818 ..... 89, 124, 143, 156
0641820 ..... 68, 78, 127
0641824 207
0641826 ..... 89, 107, 113
0641828 ..... 99, 106, 112
0642010 .... 39, 71, 80, 86, 98, 104, 110
0642012 .. 13, 17, 21, 196, 201, 255
0642018 53
0642026 255
0642212 255
0642612 .....140, 141
0642684 .....196, 202
0651406 44
0681608 ..... 196, 202, 208
0681610 207
0681810 23
0681814 223
0681822 223
0681836 53
0682014 ..... 147, 152, 158
0682016 .....23, 54
0700408 ..... 347, 363, 369
0700616 .....81, 157
0700620 81
0700808 ..... 68, 78, 81, 89
0700810 ..... 92, 106, 112
0700815 179
0700816 162
0700819 99
0700820 .....173, 189
0701010 ..... 68, 78, 81
0701012 ..... 68, 78, 92, 99
0701014 99
0701015 .. 68, 78, 92, 169, 185
0701016 ..... 173, 185, 189
0701214 68
0701414 ..... 68, 78, 89
0711025 89
0711214 .....68, 78
0711414 89
0721003 ..... 13, 227, 231
0721004 .....39, 180
0721005 .....167, 249

SECTION 10 - SPECIAL OPTIONS

0721006.....70, 147, 150, 162, 166, 226, 229
0721008.....151, 152
0741606.....169, 185
0741607.....39, 196, 201
0741612.....207
0741808.....169, 185
0760606.....81, 99
0760610.....81
0760612.....81
0761210.....81, 162
0771212.....68, 78
0771415.....180
0801011.....205
0801014.....206
0801036.....205
0801038.....206
0801065.....206
0801372.....206
0801373.....206
0801381.....205
0801383.....205
0801386.....205
0801387.....205
0801388.....205
0801389.....205
0801396.....205, 206
0801467.....205
0801471.....205
0801472.....205
0801473.....205
0801474.....205
0801475.....205
0801480.....205
0801498.....206
0801504.....206
0801524.....206
0801525.....206
0801615.....206
0860038.....178, 185, 189, 346, 362
0860520.....373, 378, 382, 392, 396, 400
0861389.....131
0861511.....219, 225
0861537.....225, 226, 229, 230
0861538.....180, 185, 189
0861541.....180, 186, 190
0861542.....178, 180, 185, 186, 189, 190, 350, 365
0861567.....178, 180, 350, 365
0861572.....180
0861599.....167
0861602.....167
0861604.....369
0861606.....369
0861607.....167
0861642.....277
0861685.....131
0861686.....131
0861687.....131
0861688.....131
0861694.....131
0861695.....131
0861696.....131
0861697.....131
0861698.....131
0861699.....131
0861731.....346, 362
0861781.....346, 362
0861782.....346, 362
0861788.....131
0861789.....131
0861880.....348, 364
0902143.....146, 150
0902161.....146, 150
0902206.....140, 141
0902219.....147, 150
0902223.....146, 150
0902351.....146, 150
0902384.....147, 150
0902416.....146, 150
0902491.....146, 150
0902539.....101
0902751.....225, 229
0902888.....179, 186, 189
0902910.....73
0902952.....169
0903010.....101
0903056.....127
0903079.....99
0903220.....73
0903484.....347, 363
0903510.....104, 110
0903611.....347, 363
0920119.....53
0940049.....151, 156
0940070.....68, 78, 89, 100, 106, 112
0940071.....146, 150, 151
0940088.....147, 151
0940092.....249, 253
0940094.....249, 253
0940102.....255
0940103.....249
0940131.....253
0940133.....249
0940134.....249
0940159.....253
0940177.....249
0961845.....219
0961893.....285, 289, 293, 297, 301
0961894.....285, 301
0961897.....313
0961898.....299
0961947.....201, 285, 289, 301, 305
0961950 13, 17, 196, 201, 209, 299
0961951.....196, 201, 206, 209, 285, 291, 301, 307
0961977.....13, 17, 21, 309
0961986.....68, 78, 89, 99, 106, 112
0962006.....196, 201
0962051.....143
0962131.....14, 18, 21
0962270.....223
0962292.....39
0962335.....201
0962336.....293, 295, 297
0962348.....39
0962356.....311
0962449.....163, 167
0962520.....180, 185, 189
0962521.....185, 189
0962563.....162
1001091179.....90
1001091303.....43, 47
1001091562.....123
1001091583.....106
1001091587.....104, 111
1001091630.....104
1001091631.....104
1001091632.....106
1001091634.....105
1001091635.....105
1001091794.....107, 112
1001091892.....90, 107
1001091911.....123
1001091970.....365
1001091971.....365
1001093274.....221
1001093286.....406
1001093382.....68, 79, 87, 104, 111
1001093389.....407, 409
1001093943.....91
1001094102.....89
1001094103.....88
1001094104.....86
1001094321.....91
1001094475.....410
1001094521.....91
1001094828.....53
1001095383.....408
1001096070.....348, 363
1001097150.....348, 364
1001097242.....14, 18, 21, 311
1001097348.....25
1001097351.....24
1001097357.....24
1001097358.....24
1001097373.....24
1001097374.....24
1001097387.....24
1001097388.....24
1001097553.....81
1001097554.....73
1001097960.....152
1001097961.....152
1001098012.....268, 273
1001098149.....268
1001098211.....92
1001098291.....408
1001098475.....88
1001098476.....89
1001098503.....35
1001098916.....92
1001099196.....18, 21
1001099215.....86
1001099216.....86
1001099217.....88
1001099366.....255
1001099367.....255
1001099376.....255
1001099387.....18, 21
1001099391.....43, 44
1001099421.....255
1001099422.....255
1001099832.....213
1001099839.....213
1001099868.....165
1001099869.....163, 167
1001100027.....332, 344
1001100120.....35
1001100151.....411
1001100233.....162, 167
1001100234.....163, 167
1001100305.....345
1001100308.....165
1001100313.....69, 72
1001100321.....161, 165, 169, 173
1001100341.....349, 364
1001100342.....349, 365
1001100343.....349
1001100344.....349
1001100345.....348, 364
1001100346.....348, 364
1001100347.....348, 364
1001100390.....346, 362
1001100391.....346, 362
1001100392.....346, 362
1001100393.....346, 362
1001100394.....346, 362
1001100395.....346, 362
1001100396.....346, 362
1001101061.....64
1001101323.....151
1001101324.....151
1001101391.....151
1001101392.....152
1001101421.....255
1001101422.....255, 409
1001101800.....23, 24
1001101801.....24
1001101802.....23
1001102547.....161
1001102548.....161
1001102601.....132, 136
1001102602.....132, 136
1001102644.....162
1001102647.....255
1001102674.....406
1001102841.....406
1001102842.....406
1001103667.....136, 404
1001104308.....91
1001104985.....406
1001105321.....13
1001105833.....69, 79
1001105872.....107
1001105993.....68
1001106338.....68
1001106339.....358
1001106340.....358
1001106355.....229
1001106479.....139
1001106481.....139
1001106482.....139
1001106736.....137, 356
1001106974.....127
1001106975.....127, 128

1001107116 78
1001107229 70
1001107236 70
1001107237 70
1001107498 127
1001107499 127
1001107527 225
1001107677 230
1001107705 ..... 69, 79
1001107753 ..... 226, 230, 336, 354
1001107926 231
1001107927 230
1001108126 ..... 133, 339, 340
1001108256 ..... 226, 231, 249
1001108341 195
1001108342 200
1001108493 ..... 379, 392
1001108602 ..... 137, 356, 358
1001108701 ..... 330, 410
1001108718 408
1001108763 230
1001108764 230
1001108790 ..... 219, 229
1001108791 ..... 219, 231
1001108792 ..... 219, 231
1001108923 377
1001109064 ..... 81, 82
1001109065 78
1001109259 409
1001109475 ..... 348, 364
1001109477 ..... 348, 364
1001109482 ..... 348, 364
1001109554 ..... 348, 363
1001109595 79
1001109692 409
1001110133 409
1001110166 156
1001110169 ..... 53, 61
1001110201 80
1001110202 80
1001110203 80
1001110209 79
1001110210 79
1001110211 79
1001110345 333
1001110348 135
1001110349 135
1001110350 135
1001110351 135
1001110352 135
1001110353 135
1001110354 135
1001110355 135
1001110356 135
1001110357 135
1001110359 ..... 137, 333, 356, 357
1001110361 ..... 137, 356, 357
1001110362 ..... 136, 356, 357
1001110363 356
1001110364 ..... 333, 356
1001110365 ..... 333, 356
1001110872 ..... 177, 186, 190, 349, 365
1001110873 ..... 177, 186, 190, 346, 349, 362, 365
1001110926 411
1001110974 410
1001110979 253
1001110980 253
1001110982 253
1001110990 409
1001111017 135
1001111346 219
1001111514 123
1001112057 81
1001112059 81
1001112067 ..... 81, 404
1001112068 81
1001112069 81
1001112070 81
1001112071 ..... 81, 359
1001112072 81
1001112073 81
1001112075 82
1001112077 ..... 79, 81
1001112467 299
1001112468 ..... 195, 200, 299
1001112551 400
1001112570 82
1001112586 ..... 181, 332, 366
1001112587 ..... 181, 366
1001112588 ..... 332, 361
1001112589 361
1001112592 82
1001112612 358
1001112743 ..... 332, 360
1001112763 ..... 81, 358
1001112849 82
1001112941 387
1001112990 406
1001112991 406
1001112992 406
1001113047 156
1001113386 200
1001113407 200
1001113423 200
1001113465 202
1001113560 ..... 18, 21
1001113575 ..... 18, 21
1001113597 17
1001113644 17
1001113653 17
1001113674 18
1001113789 323
1001113793 319
1001113794 319
1001113797 327
1001113798 326
1001113801 327
1001113805 319
1001113807 328
1001113808 329
1001113809 319
1001113811 328
1001113812 328
1001113813 328
1001113814 328
1001113818 320
1001113821 327
1001113822 327
1001113823 ..... 328, 329
1001113826 329
1001113832 326
1001113833 327
1001113834 327
1001113835 320
1001113836 320
1001113838 319
1001113854 319
1001113855 329
1001113862 319
1001113864 319
1001113866 319
1001113868 320
1001113878 320
1001113879 323
1001113880 328
1001113890 319
1001113893 327
1001113894 320
1001113895 320
1001113896 327
1001113898 320
1001113899 327
1001113905 326
1001113906 329
1001113907 326
1001113911 329
1001113912 328
1001113913 323
1001113914 323
1001113961 ..... 241, 245
1001114037 409
1001114041 409
1001114070 330
1001114072 ..... 326, 330
1001114073 ..... 326, 330
1001114074 ..... 319, 330
1001114075 ..... 323, 330
1001114123 409
1001114124 409
1001114335 217
1001114341 218
1001114385 399
1001114386 399
1001114387 399
1001114391 217
1001114447 ..... 219, 231
1001114449 ..... 219, 229
1001114595 111
1001114632 111
1001114643 111
1001114644 110
1001114645 111
1001114646 110
1001114668 213
1001114816 213
1001115098 202
1001115236 213
1001115387 ..... 177, 365
1001115389 ..... 177, 365
1001115393 ..... 177, 365
1001115398 ..... 177, 365
1001115400 ..... 177, 365
1001115404 161
1001115405 165
1001115409 165
1001115410 165
1001115413 161
1001115414 161
1001115918 407
1001115930 111
1001116159 411
1001116240 ..... 71, 87, 342, 343, 359
1001116241 ..... 71, 87, 342, 343
1001116251 407
1001116252 407
1001116290 ..... 157, 158
1001116292 ..... 157, 158
1001116341 123
1001116419 406
1001116420 406
1001116456 156
1001116544 112
1001116545 112
1001116562 156
1001116595 82
1001116839 387
1001116844 408
1001116845 388
1001116846 ..... 388, 408
1001116847 388
1001116848 388
1001116849 388
1001116850 388
1001116851 389
1001116852 389
1001116853 389
1001116854 390
1001116863 392
1001117172 220
1001117174 220
1001117234 156
1001117249 156
1001117251 407
1001117258 407
1001117294 409
1001117307 156
1001117320 220
1001117429 156
1001117430 156
1001117523 156
1001117525 157
1001117543 157
1001117598 157
1001117612 157
1001117799 ..... 80, 88, 111, 117, 118
1001117939 387
1001118133 124
1001118264 157
1001118416 ..... 229, 245
1001118417 ..... 229, 235
1001118550 157
1001118599 179
1001118715 157
1001118716 157

1001118718 156
1001118735 157
1001118963 406
1001118964 406
1001119283 157
1001119562 .....230, 408
1001119939 407
1001119947 407
1001120508 157
1001120992 407
1001121059 157
1001121061 157
1001121118 157
1001121119 157
1001121340 .....181, 191
1001121410 195
1001121411 410
1001121554 409
1001121592 250
1001121593 250
1001121605 406
1001121639 .....17, 21
1001121655 391
1001121656 390
1001121657 231
1001121800 .....377, 378
1001121801 .....377, 378
1001121802 390
1001121803 390
1001121804 390
1001121805 390
1001121806 390
1001121807 390
1001121808 390
1001121809 390
1001121810 390
1001121811 390
1001121813 378
1001121814 378
1001121815 391
1001121816 391
1001121817 391
1001121818 391
1001121819 391
1001121820 391
1001121821 391
1001121822 391
1001121823 391
1001121824 391
1001121891 110
1001121918 390
1001121921 391
1001122200 390
1001122201 391
1001122472 196
1001122603 410
1001123000 111
1001125097 157
1001125229 410
1001125230 410
1001125492 54
1001125631 206
1001125824 409
1001126126 206
1001126145 206
1001126154 206
1001126286 409
1001126287 409
1001126509 205
1001126596 205
1001126597 205
1001127087 406
1001127195 196
1001127196 196
1001127285 205
1001128479 218
1001128598 218
1001128985 407
1001129305 .....14, 18
1001129555 402
1001131269 .....379, 392, 400
1001131992 333
1001133057 .....18, 21
1001133061 .....18, 21
1001134103 406
1001136698 411
1001137005 411
1001137440 411
1001137458 .....43, 45
1001137672 411
1001137748 92
1001137749 89
1001137750 88
1001137752 89
1001137753 88
1001137761 88
1001137762 86
1001137763 86
1001137764 86
1001138035 330
1001138430 218
1001138431 218
1001138432 218
1001138434 218
1001138494 219
1001138514 219
1001138772 410
1001138773 410
1001138795 297
1001138796 .....291, 307
1001139099 409
1001139132 407
1001139151 407
1001139373 218
1001139374 218
1001140315 410
1001140318 410
1001140429 219
1001140591 195
1001140593 195
1001140624 407
1001141470 408
1001141967 .....346, 362
1001141968 .....346, 347, 362, 363
1001141969 .....346, 347, 362, 363
1001142504 410
1001142505 410
1001143076 407
1001143256 411
1001143365 43
1001143450 326
1001143451 326
1001143455 326
1001143456 326
1001143511 407
1001143669 411
1001144018 218
1001144019 218
1001144021 218
1001144022 218
1001144023 217
1001144024 217
1001144026 217
1001144027 217
1001144629 218
1001145279 43
1001145280 43
1001145281 43
1001145282 43
1001145781 .....218, 219
1001145996 95
1001146179 217
1001146180 217
1001146181 218
1001146182 218
1001147699 410
1001148650 207
1001148651 208
1001148652 207
1001148653 209
1001148678 .....95, 156
1001148902 409
1001148903 409
1001148904 409
1001148905 409
1001148906 409
1001148971 410
1001149560 411
1001149730 411
1001149818 .....140, 360
1001149924 255
1001149955 140
1001149994 140
1001150406 140
1001150998 90
1001151066 408
1001151393 136
1001152037 217
1001152429 366
1001152486 363
1001152965 411
1001153025 332
1001153289 409
1001153301 406
1001153302 406
1001154231 411
1001154501 407
1001154592 347
1001157525 178
1001157592 178
1001159648 332
1001163131 256
1001163296 256
1001163297 256
1001166538 247
1001166539 237
1001175815 409
1001178269 211
1001181057 211
1001186431 411
1001187491 409
1001187496 409
1001187498 409
1001189615 410
1001193633 408
1001193634 408
1001197016 411
1001206311 411
1001212415 402
1001213606 409
1001220152 406
1001223331 .....200, 285
1001223332 285
1001223511 285
1001223512 .....195, 285
1001228002 .....195, 305
1001228008 .....195, 289
1001228012 .....200, 295
1001228051 .....200, 291
1001228052 .....200, 307
1001228357 411
1001238894 412
1001238895 408
1001238896 412
1001238927 410
1001238928 410
1001238929 410
1001238930 410
1001248012 .....200, 297
1060279 .... 373, 378, 382, 392, 396, 400
1060341 ..... 249, 344, 360
1060343 .... 180, 187, 190, 350, 366
1060379 275
1060461 .....167, 345
1060494 .... 180, 186, 190, 345, 350, 361, 365
1060584 39
1060625 ..... 72, 80, 87
1060626 ..... 70, 81, 87
1060633 .....351, 367
1060637 .... 68, 78, 86, 98, 104, 106, 111
1060708 .... 180, 186, 190, 350, 366
1060896 .....337, 355
1060903 249
1060904 .71, 89, 343, 344
1060908 .....348, 364
1060918 ..... 220, 336, 354
1060919 223
1060977 .....351, 366
1061026 ..... 338, 339, 356
1061027 ..... 338, 339, 356
1120304 14
1120362 123
1120484 123
1120487 123
1120552 25
1120555 256
1180345 213
1180359 213
1220078 206
1260017 54

1282571 332
1282665 ..... 330, 410
1283235 333
1283264 332
1283309 ..... 330, 410
1283363 330
1300019 25
1320012 .....99, 106, 112
1320016 ....68, 78, 89, 99, 106, 112
1320022 ....72, 80, 86, 89, 92, 98, 99, 104, 106, 110, 112
1320033 99
1320127 124
1320149 .....347, 363, 369
1320176 .....72, 80, 90, 95
1320177 ..... 265, 268
1320218 125
1320220 124
1320222 .....98, 104, 110
1320223 ....70, 71, 78, 80, 81, 88, 90, 100, 106, 112
1320224 .....81, 179, 185
1320235 ..... 196, 201
1320244 208
1320245 124
1320247 ..... 214, 411
1320263 82
1320302 ....259, 261, 265, 268
1320323 ..... 104, 110
1321138 99
1321384 .....151, 152, 156
1340060 ....68, 78, 90, 99, 106, 112
1340061 406
1380147 143
14922737 343
1580011 69, 78, 101, 106, 112
1580012 ..... 221, 407
1580013 ..... 221, 407
1600244 ..... 351, 367
1600317 .....225, 229, 233
1600318 .....225, 229, 241
1600361 73
1600364 131
1600374 ..... 101, 404
1600375 .....225, 229, 404
1600411 131
1660234 92
1660239 ..... 69, 78
1660250 101
1660257 127
1660258 ..... 127, 128
1660303 127
1660304 ..... 127, 128
1670769 202
1670771 ..... 147, 150
1670779 ..... 147, 150
1670818 139
1670824 139
1670829 ....131, 136, 225, 229
1670836 208
1671037 .....225, 229
1671055 .....196, 201
1671092 .... 181, 187, 190, 350, 366
1671093 .....261, 268
1671227 .....150, 151
1671228 .....150, 151
1671229 152
1671230 152
1671231 151
1671232 151
1671233 150
1671247 .....150, 151
1671311 189
1671312 .....150, 151
1683053 ..... 285, 293, 301
1683055 .....285, 301
1683057 313
1683067 299
1683208 ... 14, 18, 21, 309
1683250 313
1683263 .....200, 301
1683266 .....195, 301
1683359 313
1683415 .....195, 285
1683418 .....200, 285
1683609 .....200, 293
1683618 .....206, 313
1683619 313
1683620 .....206, 313
1683621 313
1683666 ..... 195, 200, 299
1683949 301
1683952 285
1683954 299
1683955 299
1683962 301
1683963 .....285, 301
1683972 301
1683973 301
1683976 285
1683977 285
1684089 293
1684090 293
1684280 ..... 13, 17, 283
1684289 283
1684290 283
1684413 .....200, 301
1684414 .....195, 301
1684465 ..... 13, 17, 283
1690697 396
1691483 396
1693289 396
1693291 396
1693292 396
1693294 396
1700584 .... 373, 379, 382, 392, 395, 400
1700818 .... 374, 378, 383, 391
1701499 .... 373, 377, 382, 387, 395, 399
1701500 .... 147, 152, 158, 373, 382, 395
1701502 .... 373, 377, 381, 387, 395, 399
1701503 .....373, 377, 381, 387, 395, 399
1701504 .....373, 381, 395
1701505 ...72, 80, 86, 156, 374, 378, 383, 391, 396, 400
1701509 .....256, 373, 377, 381, 387, 395, 399
1701518 .....381, 395, 399
1701529 .....373, 377, 382, 387, 396, 399
1701542 .....98, 104, 110, 374, 378, 383, 391, 400
1701543 .....98, 104, 110, 374, 378, 383, 391
1701596 396
1701600 396
1701602 396
1701643 25
1701645 .....373, 377, 378
1701791 396
1701798 396
1701923 383
1701924 383
1702153 .....373, 377
1702300 .....373, 382, 395
1702305 .....374, 378, 391, 397, 400
1702387 226
1702552 382
1702565 .....225, 229
1702566 .....225, 229
1702567 .....225, 229
1702573 .....382, 392
1702581 382
1702583 381
1702585 381
1702590 .....170, 174
1702676 .....220, 227, 231
1702688 .....374, 378
1702701 25
1702720 .....378, 384, 391
1702773 .....223, 373, 378, 382, 391, 395, 400
1702774 .....373, 378, 382, 391, 395, 400
1702784 .....373, 379, 382, 392
1702788 407
1702815 .....373, 377, 381, 389, 395, 399
1702816 .....373, 377, 381, 389, 395, 400
1702817 .....373, 377, 382, 389, 395, 400
1702861 .....373, 378, 382, 391, 395, 400
1702862 .....373, 382, 395
1702868 .....261, 265, 269, 373, 377, 408
1702938 .....227, 231, 249
1702941 .....72, 81, 87
1702942 .....72, 81, 87
1702943 .....72, 80, 87
1702944 .....72, 81, 87
1702966 373
1702971 381
1702972 382
1702973 382
1702974 383
1702975 382
1703084 226
1703085 226
1703162 .... 69, 78, 90, 99, 106, 112
1703183 396
1703184 396
1703185 396
1703186 396
1703187 396
1703188 383
1703190 396
1703403 .... 374, 378, 391, 397, 400
1703453 381
1703465 132
1703466 132
1703470 .... 374, 377, 383, 389, 396, 399
1703471 .... 377, 389, 397, 399
1703472 .... 377, 383, 389, 397, 399
1703479 407
1703518 396
1703533 329
1703536 383
1703538 383
1703548 383
1703683 275
1703797 .....373, 377
1703798 373
1703804 .....373, 377
1703805 .....373, 377
1703808 .... 374, 379, 383, 392
1703811 ..... 377, 387, 399
1703814 ..... 377, 387, 399
1703899 382
1703923 388
1703924 .....382, 388
1703925 .....382, 388
1703926 388
1703927 .....382, 388
1703930 381
1703931 381
1703933 381
1703935 389
1703936 .....381, 389
1703937 .....381, 389
1703938 389
1703939 .....381, 389
1703941 388
1703942 388
1703943 388
1703944 388
1703945 388
1703947 389
1703948 .....381, 388
1703949 .....381, 388
1703950 388
1703951 .....381, 388
1703953 377
1703980 389

1703981 ..... 383, 389
1703982 ..... 383, 389
1703983 389
1703984 389
1703992 396
1703996 ..... 382, 390
1704000 ..... 382, 388, 408
1704001 ..... 388, 408
1704006 ..... 382, 387
1704007 388
1704096 ..... 373, 377, 378
1704098 389
1704099 ..... 382, 389
1704100 383
1704101 389
1704102 389
1704103 ..... 383, 389
1704104 378
1704106 390
1704107 ..... 383, 390
1704108 383
1704109 390
1704110 390
1704111 ..... 383, 390
1704112 ..... 383, 391
1704174 407
1704175 407
1704260 ..... 225, 229
1704271 ..... 378, 383, 391
1704272 ..... 39, 384
1704273 384
1704276 384
1704277 ..... 373, 377, 382, 387, 395, 399
1704412 ..... 377, 387, 399
1704578 39
1704885 ..... 374, 378, 383, 391, 397, 400
1704972 ..... 72, 88
1704997 225
1705014 223
1705084 ..... 395, 399
1705090 39
1705132 ..... 132, 225, 229
1705170 141
1705232 396
1705250 396
1705275 396
1705305 ..... 259, 261, 265, 269
1705325 ..... 162, 166, 167
1705336 377
1705344 388
1705345 388
1705347 388
1705348 388
1705351 379
1705355 ..... 259, 261, 269
1705358 256
1705363 374
1705364 25
1705374 ..... 181, 187, 191
1705375 ..... 181, 187, 191, 261, 269
1705376 ..... 180, 186, 190
1705387 ..... 181, 187, 191
1705426 392
1705427 392
1705429 392
1705430 392
1705460 ..... 181, 187, 191
1705461 181
1705466 ..... 259, 261, 265, 269
1705489 181
1705490 ..... 265, 269
1705514 387
1705714 ..... 167, 369
1705715 ..... 167, 369
1705728 167
1705753 132
1705820 39
1705822 399
1705828 399
1705836 277
1705837 277
1705886 277
1705895 388
1705896 388
1705897 389
1705898 388
1705901 387
1705902 389
1705903 388
1705905 392
1705910 392
1705917 388
1705921 399
1705961 399
1705967 ..... 388, 408
1705968 ..... 388, 407
1705969 ..... 388, 408
1705978 400
1706059 ..... 72, 88
1706060 ..... 72, 88
1706061 ..... 72, 88
1706062 ..... 72, 88
1706063 ..... 72, 88
1706064 ..... 72, 88
1706098 ..... 72, 88
1706380 389
1706381 390
1706385 223
1706493 223
1706501 223
1706510 275
1706712 ..... 132, 136
1706846 25
1706914 132
1706915 132
1706931 ..... 379, 392
1706941 ..... 379, 392
1706957 39
1706960 39
1707013 378
1707014 378
1707042 391
1707043 390
1707044 391
1707045 390
1707046 390
1707047 391
1707048 390
1707049 391
1707051 390
1707052 391
1707053 390
1707054 391
1707055 390
1707056 390
1707057 390
1707058 390
1707059 390
1707060 390
1810068 131
1810069 131
1810070 131
1810071 131
1810072 131
1810073 131
1810074 131
1810075 131
1810076 131
1810077 131
1870132 333
1870191 333
1870215 333
2000194 ..... 69, 72
2000272 ..... 99, 100
2000274 ..... 91, 92
2000279 89
2000280 88
2000281 88
2000296 99
2000297 98
2000298 98
2000339 ..... 91, 92
2000342 89
2000354 106
2000365 89
2000366 88
2000373 105
2000374 105
2000375 106
2000386 ..... 69, 72
2030010 ..... 259, 261, 265, 268
2060025 ..... 69, 78, 90, 99, 106, 112
2080040 ..... 156, 217, 220
2080044 201
2080046 369
2120149 ..... 44, 402
2120164 44
2120209 43
2120210 ..... 43, 402
2160003 54
2180125 124
2180344 54
2180348 ..... 71, 80, 86
2180380 329
2180387 125
2180388 125
2180389 125
2180418 ..... 104, 110, 125
2180467 99
2180536 71
2180724 329
2180832 ..... 265, 268
2180877 ..... 107, 113
2200222 57
2200233 123
2220005 ..... 104, 110
2220063 54
2220064 ..... 104, 110
2220235 299
2220237 319
2220250 71
2220252 277
2220261 124
2220273 71
2220307 317
2220313 ..... 71, 80, 86, 98, 104
2220362 ..... 317, 319
2220371 ..... 317, 319, 320, 323
2220372 327
2220373 ..... 317, 319, 327
2220375 ..... 319, 327
2220376 ..... 121, 326
2220377 ..... 118, 317, 319, 326
2220380 326
2220407 327
2220408 326
2220409 329
2220415 ..... 317, 319, 323, 326
2220418 125
2220428 327
2220429 327
2220451 ..... 90, 317
2220459 71
2220466 327
2220468 ..... 323, 328
2220472 329
2220473 ..... 317, 319, 329
2220474 326
2220479 ..... 118, 329
2220490 323
2220497 328
2220498 327
2220502 328
2220504 ..... 317, 319, 323
2220549 71
2220574 326
2220578 ..... 118, 326
2220582 ..... 317, 319, 326
2220593 326
2220596 ..... 319, 326
2220603 329
2220606 ..... 317, 319
2220609 328
2220618 327
2220628 326
2220646 ..... 118, 327
2220738 328
2220750 277
2220767 70
2220794 71
2220810 ..... 121, 326
2220861 319
2220873 ..... 327, 329
2220883 ..... 33, 286, 289, 291, 293, 295, 297, 299

2220885 .....48, 285, 289, 291, 293, 295, 297, 302, 307, 313
2220886 33
2220887 299
2220890 283
2220893 ..... 44, 329
2220921 327
2220947 ..... 118, 327
2220948 327
2220950 328
2220974 328
2220998 ..... 317, 320
2221018 125
2221019 124
2221024 125
2221042 327
2221170 317
2221176 ....71, 80, 86, 98, 104, 110
2221197 124
2221270 124
2300004 .80, 99, 105, 110
2300014 410
2300016 410
2300019 410
2300027 410
2300029 410
2300039 410
2300041 ..... 70, 80
2400060 ....181, 187, 191, 350, 358, 366
2400064 ....181, 187, 191, 350, 366, 404
2400065 ....340, 342, 356, 402
2400066 ....340, 351, 356, 366
2400070 .....351, 366, 404
2400093 ..... 348, 364
2410014 223
2420172 ..... 132, 136
2420187 101
2420203 ....162, 166, 167, 170, 173
2460048 .....178, 185, 189
2460049 ..... 161, 165
2460050 178
2460051 ..... 169, 173
2460052 ..... 169, 173
2460055 ..... 161, 165
2460056 ..... 161, 165
2460057 ..... 161, 165
2560136 ..... 225, 230
2560173 221
2560187 157
2580024 .....70, 81, 87
2580050 .....72, 80, 87
2580055 ...70, 73, 81, 409
2580062 92
2600209 ..... 146, 152
2600233 ..... 146, 151
2600280 156
2600281 217
2680448 146
2680449 146
2680450 146
2720058 .... 69, 71, 78, 80, 86, 98, 104, 106, 112
2720144 124
2720160 .....265, 268
2720271 ..... 71, 107, 113
2720392 .....104, 110
2720398 90
2720434 ..... 69, 78, 90
2720435 100
2720436 100
2720449 90
2720472 98
2720509 .....69, 78
2720510 69
2720514 .....100, 106
2720515 .....70, 78
2720532 98
2720563 .....106, 112
2720564 .....106, 112
2720566 .....104, 110
2720567 .....104, 110
2720580 .....104, 110
2750532 .... 71, 80, 86, 90, 100, 105, 107, 112
2751032 54
2751396 328
2751410 323
2751434 323
2751474 327
2751868 328
2752331 320
2752340 327
2752341 317
2752437 328
2752462 323
2752475 .....317, 319
2752478 .....317, 319
2752502 327
2752504 326
2752515 327
2752574 319
2752588 328
2752591 329
2752592 .....317, 319
2752596 328
2752597 328
2752598 328
2752599 328
2752611 .....317, 320
2752631 327
2752632 ..... 317, 319, 327
2752633 .....328, 329
2752643 329
2752653 326
2752654 326
2752752 326
2752753 329
2752762 327
2752763 327
2752783 329
2752910 .....317, 319
2752928 .....317, 320
2752929 .....317, 320
2752977 319
2752981 328
2753048 .....328, 329
2753084 411
2753325 329
2753397 .....317, 319
2753435 317
2753924 .....317, 319
2753925 .....317, 319
2753926 319
2753928 320
2753929 .....317, 320
2753930 320
2753931 320
2753933 323
2753957 328
2753967 317
2753968 327
2753969 317
2760105 .....132, 136, 225, 230
2780205 .....53, 57
2780269 .....23, 27
2780271 14
2792325 330
2792326 330
2792327 330
2792605 330
2792607 .....319, 330
2792608 .....326, 330
2792612 .....323, 330
2792613 .....326, 330
2792614 .....326, 330
2792615 330
2792616 .....317, 330
2792617 330
2792630 330
2792659 330
2792660 330
2792749 330
2820031 .....162, 167, 170, 174, 179, 186, 189
2820035 .....140, 221, 344, 360
2820078 .....147, 152, 158
2820079 147
2820080 151
2820119 147
2820153 152
2820172 100
2820173 100
2820176 152
2820180 107
2820233 151
2820234 151
2820235 151
2840016 143
2860012 166
2860030 .....132, 136, 402
2900770 43
2900792 .....285, 289, 291, 293, 295, 297, 299
2900937 408
2900967 408
2900974 408
2901284 313
2901285 299
2901301 .....286, 302
2901303 .....286, 289, 293, 302
2901443 .....351, 367
2901691 409
2901763 48
2901986 209
2902065 92
2902085 167
2902203 411
2902212 255
2902217 ..... 259, 261, 268
2902232 409
2902266 283
2902296 .70, 86, 342, 358
2902297 .....98, 342
2902303 408
2902304 408
2902305 409
2902306 409
2902307 408
2902308 408
2902309 408
2902310 408
2902311 408
2902312 408
2902322 408
2902329 408
2902394 409
2902443 .....340, 357
2902531 .... 105, 106, 111, 342, 358
2902549 .....348, 363
2910045 408
2910073 411
2910172 412
2915014 131
2915087 412
2920028 .....227, 231
2920029 .....227, 231
2920110 140
2920113 140
2920129 .... 230, 336, 339, 354, 356
2920140 ..... 220, 351, 366
2920157 .....141, 221
2920161 .....140, 360
2920162 167
2920215 140
2940045 156
2940074 .....217, 402
2940088 ..... 146, 151, 152
2940173 156
2940188 151
3010125 39
3020008 23
3020016 ..... 80, 89, 90, 99
3020021 92
3020039 209
3020044 ..... 70, 80, 90
3160273 .....53, 59
3160299 .....23, 31
3160300 .....23, 31
3160349 .....23, 33
3160350 .....23, 33
3200362 ..... 90, 100, 107, 112
3200406 ..... 69, 78, 90
3220103 90
3220104 90
3220113 .....69, 78

SECTION 10 - SPECIAL OPTIONS

3220134 101
3220154 69
3250585 221
3250872 .....39, 374, 378, 391, 397, 400
3251102 .....162, 167, 170, 221
3251242 395
3251243 .....166, 170, 174, 373, 377, 381, 387, 399
3251813 .....373, 377, 381, 389, 399
3252220 383
3252347 .....377, 383, 396
3252489 383
3252507 .....162, 167, 373, 377, 381, 387, 399
3252540 383
3252764 .....170, 177, 186, 189
3271805 .....127, 223
3272605 .....196, 202
3290405 .....105, 110, 347, 363, 369
3290505 .....105, 110, 163, 166
3290507 81
3290601 157
3290605 268
3290606 219
3290801 .....69, 78
3300106 .....14, 23
3300151 .....219, 259, 261, 265, 268, 410
3300205 .....132, 136
3300240 208
3300241 .....207, 208
3300242 208
3300353 .....225, 230
3300364 156
3300396 .....180, 186, 190
3300399 208
3300400 208
3300408 .....132, 136
3300430 253
3300454 196
3310601 .....143, 180, 187, 190
3310801 369
3310805 .....125, 139
3311001 .....147, 150, 151, 152, 167, 227, 231, 369
3311005 .....139, 141, 162, 166, 170, 174, 180, 226, 230, 259, 261, 268
3311401 .....132, 208, 249
3311402 .....196, 201
3311405 .....44, 69, 71, 78, 80, 87, 90, 98, 99, 100, 105, 107, 110, 111, 112, 124, 147, 150, 156, 170, 174, 179, 186, 190, 196, 201, 214, 220, 253, 265, 268, 279, 347, 363, 373, 378, 382, 392, 396, 400, 410
3311501 ..... 44, 147, 150, 156, 249
3311505 .... 35, 69, 72, 78, 80, 87, 90, 98, 100, 105, 110, 124, 147, 150, 157, 174, 177, 186, 190, 214, 253, 275, 369, 411
3311508 177
3311601 .... 123, 147, 150, 156, 186, 190, 226, 230
3311605 .... 69, 79, 81, 87, 90, 98, 100, 105, 107, 110, 112, 143, 146, 150, 151, 156, 162, 166, 201, 208, 214, 220, 223, 259, 261, 265, 268, 279
3311705 .....162, 166
3311801 .... 69, 79, 87, 98, 179
3311805 .. 69, 79, 90, 100, 105, 106, 107, 111, 112, 143, 146, 150, 156, 196, 202, 253
3312005 255
3312201 .....207, 208
3312205 255
3312602 140
3321501 .....147, 151
3322201 127
3323403 14
33251102 174
3340755 208
3340757 207
3340758 207
3340764 213
3340844 207
3340871 .....207, 209
3340877 157
3340881 207
3340900 208
3340911 35
3340956 256
3340966 39
3380429 .... 71, 80, 87, 98, 105, 110
3380434 .... 220, 373, 382, 396
3380476 220
3380535 139
3380652 409
3420156 226
3420372 39
3420447 39
3421453 268
3421565 .....40, 54
3421627 54
3422326 ..... 14, 18, 21
3422417 207
3422424 207
3422446 .... 70, 80, 87, 98, 105, 110
3422532 .... 70, 80, 87, 99, 105, 111
3422557 .....195, 201
3422561 201
3422562 196
3422563 195
3422564 .....195, 201
3422565 196
3422566 .....195, 201
3422567 ....14, 18, 39, 195
3422568 .....195, 201
3422569 196
3422574 201
3422580 196
3422583 201
3422592 .....13, 17
3422661 275
3422790 201
3422813 39
3422841 40
3422847 40
3422848 39
3422860 201
3422861 201
3422867 201
3422900 .....14, 18, 21
3422902 .....14, 18, 21
3422903 .....14, 18, 21
3423184 .....195, 201
3430816 143
3450404 143
3450806 214
3451010 14
3460334 256
3460398 100
3460399 152
3460544 .....72, 80
3460552 152
3470003 .....226, 230
3480188 .....285, 301
3480205 313
3480206 299
3480210 .....285, 293, 301
3480288 283
3510822 217
3510830 217
3510831 217
3510833 217
3510868 223
3510877 223
3510884 223
3520028 .....162, 166, 169, 173
3520030 156
3520033 146
3520034 202
3520035 132
3520054 .....90, 225, 230
3520071 256
3520072 .....217, 223
3520189 .....181, 350, 366
3520198 .....218, 219
3534978 91
3536089 220
3537318 53
3537416 90
3537445 143
3537446 143
3538758 213
3539219 .....132, 136
3539563 .....196, 201
3539590 ..... 147, 152, 158
3539622 208
3539872 69, 90, 100, 107, 112
3539877 .....13, 17
3539878 .....13, 17
3539934 146
3539955 ..... 147, 152, 158
3539957 .... 71, 80, 87, 98, 105, 110
3539971 90
3571712 150
3572009 40
3572010 40
3572011 40
3572012 40
3572280 ..... 100, 107, 112
3572414 98
3572423 124
3573400 .... 259, 261, 265, 268
3573641 .....265, 268
3573642 ..... 259, 261, 268
3573643 265
3574091 249
3574162 100
3574206 .....69, 79
3574207 .....69, 79
3574208 .....69, 79
3574225 .....170, 186
3574229 186
3574262 186
3574443 369
3574504 100
3574684 162
3575359 249
3576755 124
3576799 268
3577121 .....259, 261
3580134 .....162, 166
3580158 165
3580241 206
3580243 206
3580248 207
3580249 207
3580276 .....162, 166
3580312 .... 170, 174, 186, 190
3580313 .....170, 186
3580314 .....186, 190
3580317 180
3580318 180
3580319 180
3580320 180
3580321 180
3580322 161
3580324 .....170, 173
3580325 .....170, 173
3580348 .....174, 190
3600242 .....70, 121
3600365 .....43, 44
3600377 100
3600381 ..... 70, 116, 118
3600386 .....277, 279
3600388 ..... 70, 116, 118
3600394 .... 70, 80, 88, 99, 105, 111, 117

3600395 ....70, 80, 88, 99, 105, 111, 121
3600396 ..70, 88, 99, 105, 117
3620033 90
3620040 .....100, 107, 112
3620047 ..... 69, 79
3641533 ....180, 182, 187, 190, 192
3641569 249
3720021 277
3730120 342
3730121 342
3740049 ....132, 136, 344, 360, 402
3740067 ....69, 79, 90, 91, 100, 107, 112, 402
3740080 ....162, 166, 170, 174, 179, 186, 190, 404
3760170 ..... 40, 54
3760368 .....285, 293, 302
3760369 .....285, 302, 313
3760372 299
3790012 ....105, 110, 111, 141, 202, 220, 225, 226, 227, 230, 231
3790045 23
3790152 ....71, 80, 88, 99, 105
3820001 ....141, 373, 378, 382, 392, 396, 400
3820020 217
3841013 214
3841143 ....14, 18, 21, 39, 70, 80, 87, 98, 105, 110, 196, 201, 208
3841258 ....13, 14, 17, 18, 21, 196, 201
3841340 ..... 196, 201
3841510 .....14, 18, 21
3850019 301
3850020 301
3860050 214
3890005 ..... 206, 208
3890006 207
3890007 ..... 207, 208
3890008 207
3890009 208
3890010 206
3890011 207
3890012 208
3890040 223
3900054 223
3900085 140
3900210 .....156, 157, 158
3900232 .....147, 150, 151
3900268 ..... 132, 136
3900272 ..... 79, 86
3900316 156
3900322 170
3900363 ..... 157, 158
3910606 .....177, 186, 190
3910608 143
3910610 .....180, 187, 190
3910804 ..... 132, 136
3910808 ..... 125, 369
3911010 369
3911016 369
3911040 140
3930816 139
3930828 139
3931028 139
3931408 139
3931448 313
3931508 313
3931516 .... 285, 289, 293, 301
3931620 .... 71, 80, 88, 99, 106, 111, 285, 291, 302, 307, 313
3931632 180
3931840 .....13, 17
3932032 299
3932224 53
3940604 39
3951608 207
3960343 14
3960389 .... 72, 80, 89, 99, 106, 111, 146, 150, 156
3960407 91
3960422 .... 177, 186, 190, 349, 365
3960438 .....146, 151
3960453 146
3960461 141
3960462 .... 146, 151, 152, 156
3960464 ..... 146, 151, 152
3960468 .. 69, 79, 91, 100, 107, 112
3960469 .. 69, 79, 91, 100, 107, 112
3960470 .....146, 150
3960526 23
3960591 100
3980007 ..... 70, 81, 87
3990001 339
3990010 ..... 340, 358, 402
4010608 268
4010618 219
4031608 .....162, 166
4031911 .....69, 79
4032015 179
4060092 .....346, 362
4060700 .... 177, 186, 190, 346, 349, 362
4060802 .... 162, 167, 170, 174, 177, 186, 190, 221
4060803 214
4060805 .. 71, 79, 91, 100, 107, 112, 208
4060807 35
4060906 .....132, 136
4060907 140
4060918 44
4060959 409
4061010 152
4061043 .... 177, 186, 190, 349
4061049 179
4061058 36
4070410 .....147, 151
4070411 .....147, 151
4070412 .....147, 151
4070585 167
4070863 207
4070864 207
4070895 207
4070896 207
4070897 207
4070898 207
4070929 208
4070939 208
4070940 208
4070944 .....13, 17
4070945 .....13, 17
4070976 208
4070987 .....132, 136
4070994 214
4070995 214
4071004 208
4071005 208
4071007 209
4071059 39
4071122 .....105, 110
4100026 .....339, 356
4100033 .....196, 201
4100100 293
4120035 .....336, 340, 354, 358
4130394 .....18, 21
4130395 .....18, 21
4130396 14
4130397 14
4130399 18
4130400 14
4160139 .....146, 151
4160143 .....147, 151
4160149 208
4160194 156
4220162 .....140, 141
4220191 .....69, 79
4240018 .....162, 170, 174, 179, 329
4240032 .....140, 141
4240033 .....196, 201
4240099 .....221, 249, 259, 261, 265, 268
4240113 123
4240149 255
4280295 123
4300111 .....186, 190
4300157 179
4340738 .....170, 186
4340747 277
4341239 .....107, 112
4341241 .....107, 112
4341301 268
4360031 220
4360057 .....249, 404
4360070 .....180, 187, 190, 404
4360232 .....227, 231, 351, 366, 404
4360294 167
4360328 .....132, 136, 202, 225, 227, 230, 231, 402
4360330 .....230, 402
4360331 .....220, 227, 231, 402, 404
4360336 .... 105, 111, 141, 162, 167, 170, 174, 177, 186, 190, 221, 226, 231, 404
4360387 .... 225, 227, 230, 231, 249, 402
4360407 ..... 225, 230, 402
4360436 .....123, 402
4360469 ..... 132, 136, 404
4360470 ..... 132, 136, 404
4360475 .... 132, 136, 225, 230, 402
4360476 .... 132, 136, 225, 230, 402
4360506 .....208, 404
4360517 ..... 129, 360, 404
4360522 .... 141, 226, 231, 404
4360540 167
4360541 167
4360542 167
4360578 .....139, 404
4400275 124
4400400 123
4400420 124
4400449 .....123, 124
4420014 255
4420037 .... 221, 259, 261, 265, 268
4420038 124
4420051 ..... 39, 396, 400
4420054 139
4420060 .....139, 167
4420062 275
4420066 256
4420068 .....249, 253
4460007 .....226, 230
4460027 .... 162, 166, 169, 345, 361
4460049 249
4460051 .... 179, 186, 190, 349, 365
4460071 .... 179, 186, 190, 220, 336, 347, 349, 354, 363, 365
4460125 .....346, 362
4460134 .....345, 361
4460190 ..... 162, 166, 169
4460205 .... 345, 347, 361, 363
4460224 .....344, 360
4460225 .... 336, 350, 354, 365
4460226 .... 238, 247, 336, 339, 342, 344, 345, 350, 351, 354, 356, 357, 360, 361, 365, 366, 367
4460227 .... 336, 340, 350, 354, 358, 360, 366
4460233 ..... 345, 347, 363
4460234 .... 140, 141, 225, 230, 249
4460259 .....344, 360
4460260 .....344, 360
4460265 .....238, 247

4460267.....342, 344, 357, 360
4460268.....140, 341, 342, 344, 357, 360
4460297.....344, 360
4460315.....178
4460320.....342, 344, 350, 357, 360, 366
4460321.....344, 351, 361, 367
4460326.....342, 344, 357, 360
4460339.....341
4460346.....177, 186, 190, 346, 349, 362, 365
4460374.....181, 187, 191, 350, 361, 366
4460375.....181, 187, 191, 350, 366
4460411.....181, 187, 191
4460412.....181, 187, 191
4460413.....181, 187, 191
4460414.....181, 187, 191
4460415.....182, 187, 191
4460418.....336, 340, 354, 358
4460419.....336, 340, 354, 358
4460424.....140, 341, 342, 344, 351, 357, 360, 366
4460425.....180, 187, 190, 249, 350, 351, 366
4460426.....132, 136, 181, 187, 190, 221, 227, 231, 339, 350, 351, 356, 366
4460428.....225, 230, 277, 336, 354
4460434.....336, 340, 354, 358
4460445.....342, 344, 357, 360
4460457.....341, 342, 357
4460458.....191, 341, 342, 343, 357, 361
4460460.....341, 357
4460464.....336, 340, 343, 354, 357, 358, 359, 360
4460465.....181, 187, 191, 338, 341, 350, 355, 357, 359, 360, 366
4460466.....338, 339, 355, 356, 357, 359
4460467.....351, 367, 411
4460470.....132, 136, 225, 230, 336, 339, 354, 356
4460471.....132, 136, 225, 230, 336, 339, 354, 356
4460473.....338, 339, 355, 356
4460488.....132, 136
4460496.....137, 356
4460497.....137, 356
4460499.48, 51, 344, 360
4460508.....336, 340, 354, 358
4460509.....338, 355
4460510.....351, 367, 411
4460526.....132, 136, 339, 356
4460536.....340, 358
4460539.....340, 341, 357
4460579.....341
4460580.....341
4460582.....341
4460607.....182, 187, 191
4460608.....341, 357
4460633.....277, 348, 364
4460634.....340, 358
4460635.....340, 358
4460693.....341, 357
4460701.....345
4460705.....345, 361
4460708.....225, 230, 336, 339, 354, 356
4460713.....341
4460725.....341
4460726.....341
4460728.....341
4460742.....191, 341, 343, 350, 361, 366
4460743.....191, 350, 361, 366
4460761.....336, 340, 354, 358
4460792.....341
4460799.....341
4460800.....341
4460865.....338, 339, 355, 356
4460866.....336, 340, 354, 358
4460871.....233, 235, 241, 245, 336, 340, 342, 344, 354, 357, 358, 359
4460873.....336, 340, 354, 358
4460874.....132, 336, 339, 354, 358
4460875.....132, 336, 339, 354, 358
4460876.....340, 358
4460878.....340, 358
4460879.....336, 354
4460880.....341, 342, 357
4460887.....336, 340, 354, 358
4460891.....341, 357, 359, 360
4460892.....340, 356
4460894.....340, 356, 359
4460897.....343, 359, 360
4460899.....357
4460905.....132, 225, 230, 336, 339, 340, 354, 358
4460906.....174, 344, 361
4460943.....340, 358
4460944.....341, 357
4460956.....182, 187, 191, 348, 364
4460957.....182, 187, 191, 348, 364
4460958.....177, 186, 190, 349, 365
4460961.....345, 361
4460962.....261, 268
4460963.....181, 187, 190, 350, 366
4460967.....181, 187, 191, 350, 366
4460968.....139, 163, 166, 167, 347, 363, 369
4460971.....265, 268
4460978.....342, 343
4460979.....341, 342, 343, 357
4460987.....369
4460988.....369
4460990.....369
4460991.....167
4460995.....341
4460996.....341
4460997.....369
4460998.....369
4460999.....167
4461001.....182, 187, 191
4461005.....341, 357
4461006.....341, 357
4461008.....357
4461052.....341, 357
4461053.....341, 357
4461054.....341, 357
4461060.....341, 357
4461070.....341, 357
4461071.....340, 357
4461072.....340, 357
4461073.....340, 358
4461074.....340, 358
4461095.....341, 357
4461109.....342, 358
4461111.....342, 358
4461113.....342, 358
4461121.....341, 357
4461122.....341, 357
4461123.....341, 357
4461124.....341, 357
4461157.....341, 357
4461161.....341, 357
4461196.....347, 363
4461197.....348, 364
4461198.....346, 347, 362
4461199.....347, 363
4461200.....348, 364
4461201.....346, 347, 362
4461202.....347, 363
4461203.....348, 364
4461204.....346, 362
4461205.....347, 363
4461206.....348, 364
4461207.....346, 347, 362, 363
4461222.....342, 358
4461244.....346, 362
4461245.....346, 347, 362
4461246.....346, 347, 362
4461249.....347, 363
4461250.....348, 364
4520256.....24
4520258.....24
4520339.....24
4520340.....24
4520355.....25
4520356.....24
4520357.....24
4520672.....25
4520674.....24
4530024.....265, 271
4530025.....265, 271
4530028.....259, 261, 263, 268
4564281.....101
4566468.....285, 301
4566501.....299
4566605.....100
4566644.....313
4567073.....69, 79
4567879.....100
4568116.....124
4568119.....124
4568133.....40
4568721.....69, 79
4568734.....170, 186
4568735.....170, 174, 186, 190
4569083.....100
4569171.....91
4569173.....100
4569177.....69
4569342.....107
4569371.....73, 83
4569385.....105, 111
4569394.....107, 112
4640113.....25
4640261.....39
4640476.....283
4640509.....285, 289, 291, 293, 295, 297, 299
4640744.....121, 326
4640858.....283
4640908.....43
4640921.....43, 51
4640922.....43, 51
4640932.....286, 289, 291
4640952.....107, 112
4640989.....100
4641022.....124
4641028.....313
4641096.....43, 47
4641108.....43, 44
4641284.....319
4641307.....317
4641319.....283
4641390.....283
4641409.....35
4641410.....35
4641451.....43, 47
4711400..44, 87, 91, 100, 105, 107, 111, 112, 140, 170, 174, 179, 186, 190, 214, 219, 220, 253, 347, 363, 410
4711500.....35, 44, 70, 79, 124, 157, 158, 177, 186, 190, 214, 226, 230, 369, 411
4711600.....44, 71, 79, 91, 100, 105, 107, 111, 112, 180, 190, 207, 214

4711700 .....92, 170, 174, 186
4711800 ....143, 179, 186, 190, 214, 223
4711900 91
4712000 255
4712200 255
4740036 40
4740076 ..... 147, 151
4740111 .....14, 18, 21, 39
4740155 39
4740158 .13, 17, 196, 202
4740171 .....146, 151, 156
4740256 .....14, 18, 21
4740274 ..70, 79, 91, 100, 107, 112
4740283 14
4740314 ..... 196, 202
4740362 ..... 141, 220
4740393 23
4740397 ....162, 167, 170, 174, 221
4740439 201
4740444 .....132, 133, 136
4740463 .....14, 18, 21
4740500 152
4740508 111
4740546 141
4750600 .....181, 187, 190
4750800 ..... 125, 369
4751000 .....40, 140, 141, 146, 151, 152, 162, 166, 170, 174, 180, 226, 230, 259, 261, 269, 369
4751400 ....70, 71, 79, 80, 87, 91, 98, 99, 100, 105, 106, 107, 111, 112, 133, 136, 139, 147, 151, 156, 179, 196, 201, 220, 226, 230, 249, 259, 261, 265, 268, 373, 378, 382, 392, 396, 400
4751500 ....70, 72, 79, 80, 87, 100, 105, 111, 146, 147, 151, 152, 156, 158, 162, 166, 174, 249, 253, 275
4751600 ....35, 36, 70, 79, 81, 87, 91, 98, 100, 105, 107, 112, 123, 125, 127, 146, 151, 152, 156, 162, 166, 170, 186, 190, 208, 220, 259, 261, 265, 268, 279
4751700 92
4751800 ....70, 79, 87, 98, 105, 106, 107, 111, 112, 124, 127, 170, 186, 221, 223, 249, 277
4751900 162
4752000 ....71, 80, 87, 98, 105, 111
4760600 .....181, 187, 190
4760800 369
4761000 ..... 14, 147, 151, 227, 231, 369
4761400 ..... 133, 136, 179
4761500 ..... 178, 186, 190
4761600 ..... 186, 190, 279
4770600 143
4791400 79, 91, 107, 113, 179, 186
4811400 ..... 347, 363, 369
4811600 ..... 81, 163, 166
4811700 ..... 81, 219, 268
4811900 .. 70, 79, 81, 174, 180, 190
4812000 .....81, 100
4812100 ... 70, 79, 81, 163
4812200 91
4831900 ..... 92, 100, 107, 113
4832000 ..... 70, 79, 100
4844815 200
4844816 200
4844817 200
4844944 .....195, 200
4845356 .....147, 151
4845393 123
4845395 91
4845404 .....91, 100
4845411 .....147, 152
4845582 275
4845671 213
4845819 213
4846295 40
4846296 40
4846319 207
4846391 213
4846392 213
4846452 218
4846561 221
4846566 91
4846571 265
4846573 .....196, 202
4846627 ..... 259, 261, 268
4846673 249
4846790 .....70, 79
4846805 .....70, 79
4846806 100
4846814 .....13, 17
4846934 .....13, 17
4846935 39
4860243 24
4891500 170
4891600 .... 71, 81, 89, 91, 99, 106, 111, 143, 170, 174, 186, 190, 197, 202, 208
4891800 .... 13, 17, 23, 44, 54, 143, 179, 197, 202, 208, 253
4892000 53, 54, 147, 152, 158, 170
4892600 .....197, 202
4920385 ..... 99, 107, 113
4921827 .....345, 361
4921927 .....44, 360
4921928 ..... 44, 344, 360
4921954 345
4921956 345
4922466 337
4922467 .....337, 355
4922468 .....337, 355
4922636 .....340, 356
4922637 .....339, 356
4922639 .....226, 336
4922641 .....181, 187, 191, 344, 350, 361, 366
4922643 .....344, 360
4922666 .....226, 230, 336, 354
4922737 .....70, 71
4922757 .....181, 350
4922764 .....350, 366
4922790 338
4922791 .....338, 355
4922792 .....338, 355
4922884 .....338, 355
4922885 338
4922886 .....338, 355
4922887 338
4922888 .....221, 338, 351, 355, 366
4922889 .....338, 355
4922905 .....187, 350
4922909 369
4922912 167
4922925 .....180, 186, 190, 349, 365
4922964 .....221, 351, 366, 367
4922968 343
4922970 345
4923206 .....133, 136, 339, 342, 356
4923212 .....133, 339, 341
4923213 .....133, 339, 340
4923226 .....133, 339, 341
4923227 .....133, 339, 340
4923229 .....133, 339, 340
4923379 .....91, 344, 360
4923420 .....191, 350, 366
4923445 .....345, 361
4923462 .....337, 338, 355
4923492 .....133, 339, 341
4923509 .....337, 355
4923510 .....338, 355
4923511 .....339, 356
4923576 .....133, 339, 340
4923577 .....133, 339, 340
4923591 340
4923653 337
4923655 338
4923656 338
4923657 .....337, 355
4923659 .....338, 356
4923660 .....338, 355
4933217 .....332, 333
4933218 333
4933219 333
4933264 .....181, 332, 350
4933283 .....187, 333, 350
4933284 332
4933287 332
4933300 .....332, 344
4933313 .....333, 350, 366
4933318 .....333, 339
4933327 .....333, 339
4933328 .....333, 339
4933349 .... 191, 333, 350, 366
4933350 ..... 332, 344, 361
4933355 .....333, 339
4933365 .....333, 339
4933366 .....333, 339
4933383 .....333, 339
70000122 .....161, 165
70000123 .. 161, 165, 169, 173
70000124 .. 162, 166, 169, 173
70000125 .. 162, 166, 169, 173
70000126 .. 162, 166, 169, 173
70000127 .. 161, 166, 169, 173
70000164 111
70000264 94
70000342 211
70000345 94
70000579 47
70000580 47
70000582 .....47, 402
70000583 47
70000619 ... 180, 185, 189
70000781 35
70000782 .....27, 64
70000793 92
70000794 33
70000795 33
70000863 ... 178, 185, 189
70000912 93
70000913 93
70000914 93
70000915 93
70000916 93
70000917 93
70000918 93
70000919 93
70000934 43
70001017 ... 69, 70, 78, 90
70001051 .....73, 82
70001100 ... 178, 185, 189
70001103 123
70001119 27
70001120 .....73, 82
70001126 94
70001248 .....128, 129
70001249 129
70001384 ... 178, 185, 189
70001423 93
70001424 273
70001425 273
70001427 273
70001428 273
70001429 273
70001430 273
70001431 273
70001432 273
70001435 93
70001498 94
70001663 279
70001690 101

70001696....178, 185, 189
70001697..... 211
70001742.....73, 82
70001847..... 94
70001850..... 93
70001866..... 94
70001868..... 94
70001870..... 94
70001872.....94, 343, 359
70001931..... 343
70001941..... 140
70001950..... 343
70001951..... 343
70001953....178, 185, 189
70001966....178, 185, 189
70001969..... 178
70001973....178, 186, 189
70001974....178, 186, 189
70001976.....47, 51
70002005.....213, 404
70002006..... 213
70002007.....213, 404
70002063.....35, 36
70002064..... 36
70002065..... 64
70002066..... 64
70002067..... 64
70002068..... 64
70002069..... 64
70002070..... 64
70002071..... 64
70002072..... 64
70002073..... 64
70002074..... 65
70002075..... 65
70002088....178, 185, 189
7000209..... 57
7000213..... 65
7000214..... 57
7000216..... 27
7000217.....57, 64
70002200..... 93
70002208..... 61
70002209..... 44
70002212..... 129
70002234..... 94
70002243..... 61
7000228.....57, 64
7000229.....57, 64
70002297....178, 185, 189
7000230.....57, 64
70002307..... 101
70002373..... 305
7000246.....57, 64
70002460....178, 185, 189
7000248..... 64
7000253.....57, 64
7000255.....57, 64
7000256..... 57
70002567..... 101
7000257.....57, 64
7000258..... 57
70002627..... 343
7000263.....57, 64
7000269..... 57
7000270..... 57
70002705.....69, 78
70002706.....69, 78
70002715.....123
70002716.....123
70002724.....245
70002725.....245
70002726.....245
70002727.....245
70002728.....245
70002729.....245
70002730.....235
70002731.....235
70002732.....235
70002733.....235
70002734.....235
70002735.....235
70002745.....311
70002752.....311
70002753.....311
70002754.....311
70002755.....311
70002756.....311
70002757.....311
70002761.....74, 82
70002762.....74, 82
70002763.....74, 82
70002764.....73, 82
70002765.....73, 82
70002766.....73
70002767.....74
7000281.....28, 64
70002818.....181, 191
70002819.....181, 191
70002820.....181, 191
70002821.....181, 191
70002822.....182, 191
70002823.....182, 191
70002824.....182, 191
70002825.....182, 191
70002826.....182, 191
70002833.....74, 82
70002834.....74, 82
70002835.....74, 82
70002841.....73
70002843.....73, 82
70002844.....73, 82
70002845.....74, 82
70002846.....74, 82
70002847.....73, 82
70002848.....73, 82
70002849.....73, 82
70002850.....73, 82
70002851.....74, 83
70002852.....73, 83
70002895.....112, 404
70002902.....220
70002903.....220
70002904.....220
70002905.....220
70002906.....235
70002948.....277
70003001.....94
70003002.....94
70003003.....94
70003408.....36
70003454.....129
70003476.....93
70003478.....93
70003483..... 220
70003623..... 95
70003631....178, 185, 189
70003708..... 178
70003709..... 178
70003784.....225, 230
70003995..... 45
70003996..... 45
70003997..... 45
70003998..... 45
70003999..... 45
70004000..... 45
70004149..... 123
70004169...178, 185, 186, 189
70004170..... 178
70004171....178, 185, 189
70004182.....69, 79
70004184..... 123
70004316..... 359
70004317..... 359
70004318..... 359
70004319..... 359
70004643..... 213
70004738..... 247
70004739..... 247
70004740..... 247
70004741..... 247
70004742..... 247
70004743..... 247
70004744..... 247
70004745..... 247
70004746..... 247
70004747..... 247
70004748..... 247
70004749..... 247
70004750..... 247
70004751..... 247
70004752..... 237
70004753..... 237
70004754..... 237
70004755..... 237
70004756..... 237
70004757..... 237
70004758..... 237
70004759..... 237
70004760..... 237
70004761..... 237
70004762..... 237
70004763..... 237
70004764..... 237
70004765..... 237
70004766..... 237
70004767..... 237
70004768..... 237
70004769..... 237
70004770..... 237
70004771..... 237
70004772..... 237
70004773..... 237
70004774..... 238
70004775..... 238
70005230..... 247
7000625..... 220
70006442..... 307
70006443.....291, 307
70006444.....291, 307
70006445.....291, 307
70006446.....291, 307
70006447.....307
70006568.....295
70006569.....295
70006570.....295
70006571.....295
70006572.....295
70006597.....305
70006599.....305
70006601.....305
7000663.....93
70006648.....289
70006649.....289, 297
70006650.....289, 297
70006651.....289
70006734.....297
70006735.....297
70006736.....297
70006774.....305
70006775.....305
70006776.....305
70006822.....291
70006823.....291
7000897.....100
7001433.....117
7001498.....117
7001625.....309
7001626.....309
7001627.....309
7001629.....309
7001630.....309
7001633.....309
7001909.....57, 64
7001911.....57, 64
7001912.....64
7001913.....27
7001928.....57
7001931.....57, 64
7001985.....57, 64
7001987.....57
7001988.....57
70020808.....359
70020809.....359
70022564.....305
70023371.....305
70023915.....295
7002821..... 351, 367, 411
7002822.....411
7002823..... 351, 367, 411
7002826.....411
7002828.....351, 367
7002840.....411
7003928.....233, 235
7003933.....241
7003935.....241
7003941.....241, 245
7003946.....241
7003953.....233
7003969.....241
7003972.....241, 245
7003973.....241, 245
7003976.....233
7003977.....233
7003980.....241, 245
7003982.....245
7003983.....241, 245

7003986 241
7003989 ..... 242, 245
7003992 ..... 233, 241
7003993 ..... 233, 241
7003994 241
7004035 ..... 61, 65
7004043 ..... 61, 65
7004044 ..... 61, 65
7004248 44
7004275 411
7004276 411
7004290 44
7005881 59
7005882 59
7005889 59
7005890 59
7005891 59
7005892 59
7005893 59
7006138 213
7006143 213
7007207 116
7007208 116
7007412 118
7007413 116
7007414 116
7007417 116
7007418 116
7007419 116
7007423 116
7007425 116
7007435 ..... 31, 116
7007437 ..... 31, 33, 116
7007438 ..... 31, 33, 116
7007439 ..... 31, 33, 116
7007441 116
7007442 116
7007444 116
7007446 ..... 31, 33, 116
7007452 116
7007453 116
7007454 117
7007457 117
7007459 117
7007463 117
7007464 117
7007465 117
7007466 117
7007470 116
7007472 117
7007474 117
7007475 117
7007476 117
7007477 117
7007478 117
7007484 117
7007485 117
7007487 117
7007488 117
7007489 121
7007494 117
7007496 117
7007497 ..... 117, 344, 359
7007498 ..... 117, 344, 359
7007633 ..... 57, 64
7007933 53
7007990 53
7010103 121
7010104 121
7010105 121
7010116 118
7010121 117
7010122 117
7010474 ..... 57, 64
7010488 57
7010492 ..... 57, 64
7010494 57
7010542 48
7010543 ..... 44, 48
7011043 45
7011044 45
7011062 45
7011063 45
7011064 45
7011065 44
7011066 45
7011112 ..... 286, 289, 291
7011328 43
7012513 ..... 161, 165, 169, 173
7012514 ..... 161, 166, 169, 173
7012518 ..... 44, 47
7012558 ..... 161, 165, 169, 173
7012664 ..... 69, 78, 90, 99, 106, 112, 402
7012679 100
7012769 47
7012772 ..... 47, 48, 51, 402
7012773 ..... 47, 48, 51
7012774 ..... 48, 51
7012775 ..... 47, 48
7012776 51
7012777 51
7012912 ..... 47, 48
7012914 47
7012918 47
7012941 44
7012943 ..... 44, 402
7012944 ..... 44, 47, 402
7012953 ..... 47, 51
7012965 51
7012967 47
7012987 121
7012988 121
7012989 47
7012995 44
7012998 ..... 47, 48, 51
7013189 128
7016314 123
7016319 140
7016322 143
7016328 ..... 93, 404
7016331 ..... 93, 404
7016372 140
7016374 143
7016380 140
7016399 220
7016422 59
7016423 59
7016424 59
7016425 59
7016426 59
7016427 59
7016530 213
7016652 411
7016654 411
7016655 411
7016822 ..... 105, 106, 111, 342, 343, 359
7017022 28
7017023 64
7017027 27
7017028 65
7017070 ..... 57, 64
7017072 ..... 27, 64
7017080 64
7017082 65
7017085 64
7017089 57
7017093 27
7017095 27
7017142 211
7017158 211
7017159 211
7017162 211
7017163 211
7017164 211
7017183 211
7017193 211
7017195 211
7017406 35
7017410 47
7017420 51
7017421 51
7017422 51
7017464 47
7017496 283
7018612 53
7018912 ..... 47, 48, 51
7018941 48
7018942 ..... 47, 48, 51
7018945 51
7018946 51
7018947 51
7018948 51
7018951 ..... 47, 48
7018986 ..... 47, 48
7018991 ..... 47, 402
7019103 241
7019110 241
7019111 ..... 233, 241
7019112 241
7019114 241
7019115 241
7019122 233
7019123 233
7019141 233
7019142 233
7019143 233
7019144 233
7019145 233
7019147 233
7019149 233
7019150 233
7019151 241
7019154 241
7019155 241
7019160 241
7019161 241
7019162 ..... 241, 245
7019164 ..... 241, 245
7019165 ..... 241, 245
7019166 241
7019167 ..... 241, 245
7019168 241
7019171 233
7019174 233
7019177 233
7019194 ..... 242, 245
7019197 233
7019656 ..... 107, 112
7019658 123
7019680 ..... 161, 166, 169, 173
7019925 101
7019976 101
7019977 100
7019993 101
7019994 101
7019996 100
7020020 ..... 43, 402
7020021 ..... 44, 402
7020108 ..... 161, 165, 169, 173
7020109 ..... 161, 165, 169, 173
7020110 ..... 161, 166, 169, 173
7020111 ..... 161, 166, 169, 173
7020175 ..... 225, 230
7020176 ..... 225, 230
7020190 ..... 161, 166, 169, 173
7020192 ..... 162, 166, 170, 173
7020193 ..... 345, 361
7020194 ..... 162, 166, 169, 173
7020246 ..... 131, 135
7020408 93
7020411 93
7020447 93
7020449 93
7020459 94
7020460 94
7020464 94
7020465 93
7020468 93
7020471 93
7020479 94
7020484 93
7020487 93
7021200 116
7021201 117
7021202 116
7021203 116
7021206 117
7021207 117
7021210 117
7021212 117
7021214 117
7021217 117
7021218 117
7021219 117
7021220 117

7021221 117
7021222 117
7021223 116
7021232 118
7021249 ..... 31, 33
7021256 116
7021275 ..... 31, 33
7021310 48
7021625 ..... 35, 36
7021868 ..... 101, 404
7022134 100
7022139 101
7022143 101
7022150 101
7022155 101
7022180 101
7022302 ..... 31, 33
7022311 ..... 31, 33
7022313 33
7022314 ..... 31, 33
7022318 31
7022320 31
7022321 31
7022326 ..... 31, 33
7022328 ..... 31, 33
7022368 ..... 31, 33
7022370 31
7022371 ..... 31, 33
7022372 ..... 31, 33
7022397 ..... 35, 36
7022399 ..... 35, 36
7022808 ..... 233, 235
7022812 241
7022814 233
7022815 ..... 233, 235
7022816 233
7022817 233
7022818 233
7022819 ..... 233, 235, 344, 359
7022822 241
7022823 241
7022824 241
7022825 ..... 344, 359
7023366 146
7023679 343
7023681 101
7023682 101
7023683 100
7023698 101
7023699 101
7023910 ..... 31, 33
7023917 36
7023933 35
7023935 ..... 35, 36
7023936 ..... 35, 36
7023977 116
7023979 117
7024014 48
7024015 48
7024100 ..... 57, 65
7024124 27
7024125 27
7024127 27
7024129 27
7024134 28
7024379 ..... 61, 65
7024380 ..... 61, 65
7024381 ..... 61, 65
7024389 61
7024390 ..... 61, 65
7024395 61
7024396 65
7024397 313
7024398 90
7024404 ..... 128, 129
7024439 124
7024440 124
7024441 124
7024442 124
7024443 124
7024444 ..... 124, 402
7024445 124
7024446 124
7024453 ..... 61, 65
7024454 65
7024455 65
7024456 65
7024458 65
7024462 263
7024463 263
7024467 263
7024469 263
7024470 263
7024471 ..... 263, 273
7024472 263
7024473 263
7024474 263
7024475 263
7024478 263
7024485 ..... 178, 185, 189
7024488 ..... 180, 185, 189
7024489 ..... 180, 185, 189
7024519 271
7024520 271
7024521 271
7024522 271
7024523 271
7024524 271
7024525 271
7024526 271
7024527 271
7024528 271
7024529 271
7024530 ..... 271, 273
7024531 ..... 271, 273
7024532 ..... 271, 273
7024533 ..... 271, 273
7024534 ..... 271, 273
7024535 ..... 271, 273
7024536 ..... 271, 273
7024537 ..... 271, 273
7024538 271
7024539 271
7024540 271
7024541 271
7024560 90
7024565 94
7024579 94
7024598 143
7024704 64
7024721 28
7024722 27
7024723 28
7024724 27
7024725 27
7024726 27
7024727 27
7024728 27
7024729 27
7024730 27
7024731 27
7024732 27
7024733 27
7024734 27
7024735 27
7024736 27
7024737 28
7024738 27
7024739 27
7024740 27
7024741 27
7024742 27
7024743 27
7024744 28
7024763 64
7024764 28
7024765 28
7024766 28
7024784 65
7024800 117
7024851 117
7024853 ..... 31, 33
7024861 31
7024862 ..... 31, 33
7024863 31
7024864 31
7024865 ..... 31, 33
7024866 31
7024867 ..... 31, 33
7024868 31
7024869 31
7024871 ..... 31, 33
7024874 116
7024875 116
7024877 117
7024879 283
7024892 ..... 35, 36
7026188 ..... 178, 185, 189
7026189 ..... 128, 129
7026197 128
7026199 ..... 161, 165, 169, 173
7026330 45
7026503 128
7026504 128
7026505 128
7026506 128
7026507 128
7026508 128
7026509 129
7026510 129
7026511 128
7026512 129
7026597 ..... 178, 185, 189
7026607 94
7026608 ..... 94, 404
7026626 ..... 178, 185, 189
7026631 93
7026632 279
7026633 279
7026634 279
7026635 279
7026636 279
7026637 279
7026638 279
7026639 279
7026640 279
7026641 280
7026642 280
7026643 280
7026644 280
7026645 280
7026646 280
7026647 280
7026648 280
7026649 280
7026650 280
7026651 279
7026652 279
7026653 279
7026654 279
7026655 279
7026656 279
7026658 280
7026659 279
7026660 279
7026661 279
7026800 ..... 72, 82
7026801 ..... 73, 82
7026802 ..... 72, 82
7026803 ..... 72, 82
7026804 ..... 72, 82
7026805 ..... 72, 82
7026806 ..... 72, 82
7026807 ..... 72, 82
7026808 ..... 72, 83
7026809 ..... 72, 83
7026810 ..... 72, 82
7026811 ..... 72, 82, 404
7026812 ..... 72, 82
7026813 ..... 72, 82
7026814 ..... 73, 82
7026815 ..... 73, 82
7026816 ..... 72, 82
7026817 ..... 72, 82
7026818 72
7026819 ..... 72, 82
7026820 ..... 73, 82
7026821 ..... 73, 82
7026822 ..... 73, 82
7026823 73
7026824 73
7026825 73
7026826 ..... 73, 83
7026827 ..... 73, 83
7026828 ..... 73, 83
7026829 ..... 73, 83
7026830 ..... 74, 82, 404
7026831 ..... 73, 83
7026832 ..... 73, 83
7026833 ..... 73, 83
7026834 73
7026835 73
7026836 73
7026838 73
7026839 ..... 74, 82
7026840 73

7026841 73
7026843 73
7026882 73
7026888 73
7027001 .....71, 87, 342
7027002 ....71, 81, 87, 98, 342, 359
7027003 ..71, 87, 98, 105, 106, 111, 342, 359
7027004 .71, 87, 342, 359
7027005 ..... 98, 342
7027006 ..... 98, 342
7027007 ..... 98, 343
7027015 ....105, 106, 111, 342, 359
7027016 .....105, 106, 111
7027017 ....105, 106, 111, 342
7027028 ..... 81, 359
7027029 ..... 81, 359
7027033 ..... 81, 359
7027236 94
7027239 94
7027246 93
7027400 101
7027402 101
7027403 343
7027404 100
7027405 101
7027409 101
7027410 101
7027412 .....69, 79
7027413 101
7027419 .....31, 33
7027608 93
7027609 93
7027610 93
7027740 33
7027773 263
7027774 263
7027775 263
7027776 263
7027777 263
7027778 263
7027779 263
7027780 263
7027781 277
7027782 277
7027783 277
7027784 277
7027790 94
7027791 94
7027792 94
7027793 .....94, 343, 359
7027794 .....94, 343
7027795 .....94, 404
7027796 .....94, 343, 359
7027799 .....178, 185, 189
7027887 .....162, 166, 170, 174
7027965 .....106, 111, 404
7027972 .....106, 111, 404
7027989 343
7027991 343
7027994 106
7027996 106
77143013 136
80424002 64
80934561 128
8229242 358
8303541 81
8310129 255
8310230 255
83304150 61
8405009 .....68, 79
8405104 .....68, 79
8406009 81
8406105 81
8406109 82
88521205 69, 79, 87, 105, 111
8896941 411
90206194 156
91083218 .....100, 404
91401281 68, 79, 87, 104, 111



3121207



An Oshkosh Corporation Company

Corporate Office
JLG Industries, Inc.
1 JLG Drive
McConnellsburg, PA 17233-9533 USA

(717) 485-5161 (Corporate)
(877) 554-5438 (Customer Support)
(717) 485-6417

Visit our website for JLG Worldwide Locations.
www.jlg.com