Illustrated Parts Manual

Models
600S
600SJ
660SJ

SN 0300068000
THROUGH 0300087000

P/N
3121856

September 14, 2018 - Rev AJ

CE

An Oshkosh Corporation Company

REVISION LOG

November 30, 2002 - A - Original Issue Of Manual (Edited to 0010574 Revision 18)

January 17, 2003 - B - Revised Manual (Edited to 0010574 Revision 29)

May 1, 2003 - C - Revised Manual (Edited to 0010574 Revision 34)

December 11, 2003 - D - Revised Manual (Edited to 0010574 Revision 44 & 0010603 Revision 1)

May 12, 2004 - E - Revised Manual (Edited to 0010603 Revision 6)

August 26, 2004 - F - Revised Manual (Edited to 0010603 Revision 17)

January 20, 2005 - G - Revised Manual (Edited to 0010603 Revision 19)

June 1, 2005 - H - Revised Manual (Edited to 0010603 Revision 35)

November 10, 2005 - I - Revised Manual

May 18, 2006 - J - Revised Manual

August 9, 2006 - K - Revised Manual

January 15, 2007 - L - Revised Manual

May 15, 2007 - M - Revised Manual

September 19, 2007 - N - Revised Manual

January 15, 2008 - O - Revised Manual

June 15, 2008 - P - Revised Manual

December 1, 2008 - Q - Revised Manual

April 15, 2009 - R - Revised Manual

October 15, 2009 - S - Revised Manual

May 24, 2010 - T - Revised Manual

March 15, 2011 - U - Revised Manual

June 10, 2011 - V - Revised Manual

September 14, 2011 - W - Revised Manual

January 6, 2012 - X - Revised Manual

April 20, 2012 - Y - Revised Manual

July 27, 2012 - Z - Revised Manual

November 8, 2012 - AA - Revised Manual

March 15, 2013 - AB - Revised Manual

April 25 , 2013 - AC - Revised Manual

June 14, 2013 - AD - Revised Manual

REVISION LOG

September 30, 2013 - AE - Revised Manual
February 28, 2014 - AF - Revised Manual
October 30, 2015 - AG - Revised Manual (Revision 4)
March 14, 2017 - AH - Revised Manual
February 9, 2018 - AI - Revised Manual
September 14, 2018 - AJ - Revised Manual

GENERAL INFORMATION

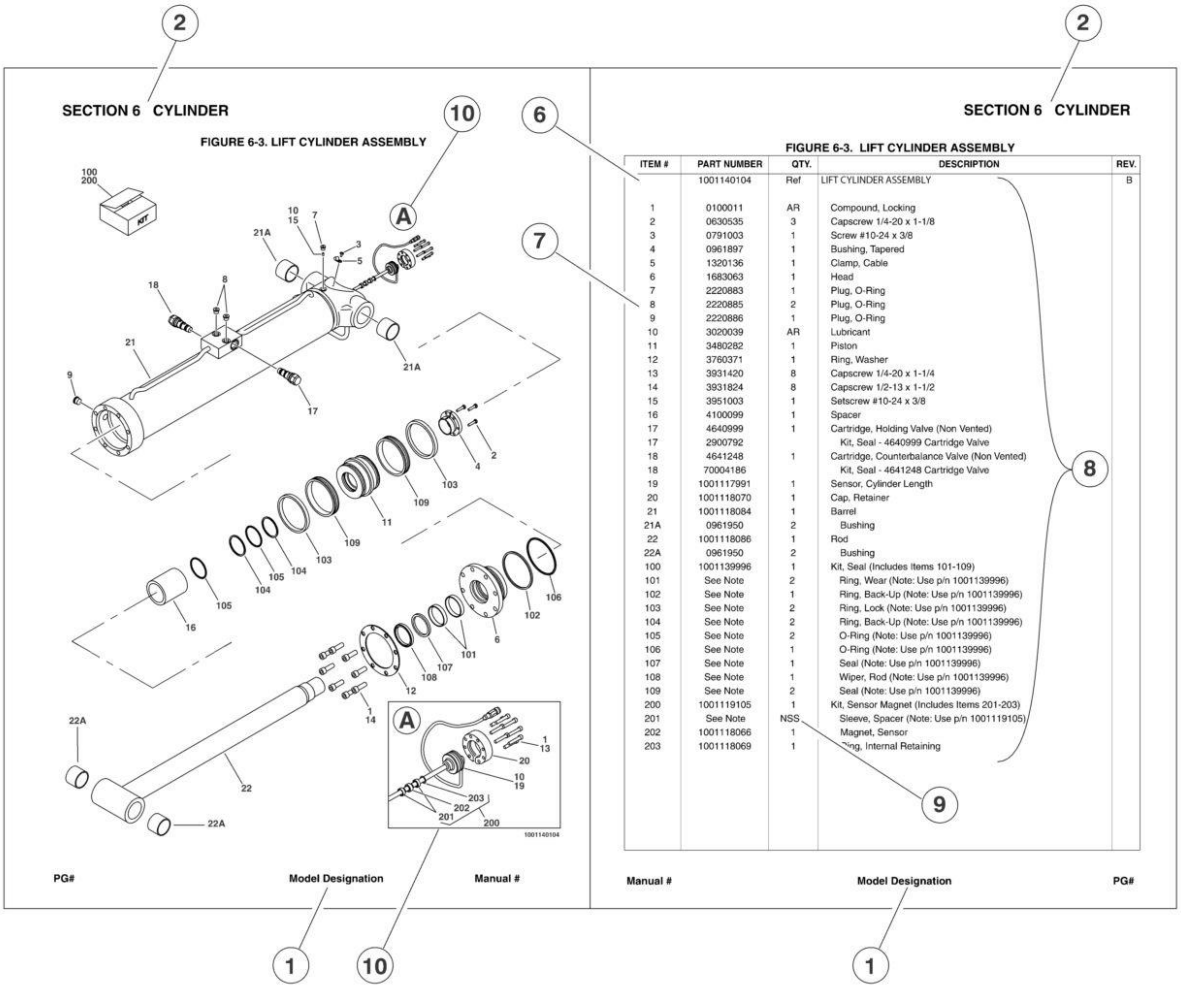

1) MACHINE IDENTIFICATION
Machines are identified by model and in some cases a combination of models, serial number (SN) or regional standard (i.e ANSI, CE,CSA). Components may also be identified by SN or manufacturer. common components that may be identified by these characteristics are engines and hydraulic components.

2) PARTS MANUAL ORGANIZATION
Product information in this manual is organized under section titles. Frame, Cylinder, Hydraulic and Electrical are a few examples. Each section is organized by figure and page number. The information within the Figure is then organized by item number, part number, description and corresponding illustration (s).

3) TABLE OF CONTENTS
A table of contents is found toward the beginning of the manual. Figure number, description and page number are provided for quick reference to the page containing the related information.

4) RECOMMENDED SPARE PARTS
The Recommended Spare Parts, located near the end of the manual, referance most frequently used maintenance parts.

5) PART NUMBER INDEX
A numerical index listing all part numbers and the corresponding page number(s) appears at the back of the manual.

GENERAL INFORMATION

6) NON-SERVICED PARTS
In some instances, it is necessary to display non-serviced parts, assemblies or installations. In the case of assemblies and installations there will be a Ref in the Qty column. In case of parts that are not available for service within assemblies or components, there will be a NSS (Not Sold Separately) or NLA (No Longer Available) listed in the Qty. column of the manual.

7) PARTS LIST ITEM NUMBERS
Numbers shown in the item# column correspond to numbers used in the associated illustration (s). Item numbers which are missing from the sequence in the parts list are not used on that page

8) INDENTED PARTS DESCRIPTION
An indented part description is included in the item under which it is indented.

9) ABB REVIATION AND SYMBOLS

AC ..... Alternating Current
ADE. ..... Advanced Design Electronics
ANSI ..... American National Standards Institute
AR.. ..... As Required
ASSY ..... Assembly
AUX... ..... Auxiliary
AWG ..... American Wire Gauge
B/M.. ..... Bill of Material
CE.. ..... European Conformity
CCW ..... Counter Clockwise
cm. ..... Centimeter
CW ..... Clockwise
CSA. ..... Canadian Standards Association
CYL... ..... Cylinder
DIA. ..... Diameter
DC ..... Direct Current
EMS ..... Emergency Stop
ENG ..... Engine
FT(ft).. ..... Feet
GA(Ga).. ..... Gauge
HYD ..... Hydraulic
Hz.. ..... Hertz
ID.. ..... Inside Diameter
in... ..... inches
ISO ..... International Organization for Standards
JIC ..... Joint Industry Council
KG ..... Kilogram
L.. ..... Liter
LB ..... Pounds
LCD ..... Liquid Crystal Display
LED ..... Light Emitting Diodes
LH... ..... Left Hand
LSS ..... Load Sensing System
M(m)... ..... Metric/Meter
MM (mm) ..... Milimeter
mA. ..... Miliamps
NLA..... No Longer Available
NPT ..... National Pipe Threads
NSS ..... Not Sold Separately
OD.. ..... Outside Diameter
ORB ..... O-Ring Boss
ORFS ..... O-Ring Face Seal
OZ (oz). ..... Ounces
PG ..... Page
P/N. ..... Part Number
qt. ..... Quarts
QTY. ..... Quantity
REF ..... Reference
REV ..... Revision Level
RH... ..... Right Hand
SAE..... Society of Automotive Engineers
SN.. ..... Serial Number
SPEC(S)..... Specifications
T/T. ..... Turntable
UGM ..... Universal Ground Module
V. ..... Volts
W... ..... Watts
#... ..... Number

10) ILLUSTRATION REFERANCE LETTERS
When necessary, illustrations may contain referance letters that are intended to track information (i. e. hoses, harnesses) from one point to another or to track visual enlargement of components to show details that may be located in another area on the illustration.

Note: Due to continuous product improvements, JLG Industries, Inc. reserves the right to make specification changes without prior notification. Contact JLG Industries, Inc. for updated information.

TABLE OF CONTENTS

SECTION 1 - FRAME 9

FIGURE 1-1. 2WD FRONT AXLE AND STEERING INSTALLATION (SN 0300068000 through 0300075605) 10
FIGURE 1-2. 2WD FRONT AXLE AND STEERING INSTALLATION (SN 0300075606 through 0300087000) 14
FIGURE 1-3. 4WD FRONT AXLE AND STEERING INSTALLATION (SN 0300068000 through 0300075605) 18
FIGURE 1-4. 4WD FRONT AXLE AND STEERING INSTALLATION (SN 0300075606 through 0300087000) 22
FIGURE 1-5. 4WS REAR STEERING INSTALLATION (SN 0300068000 through 0300075605) 26
FIGURE 1-6. 4WS REAR STEERING INSTALLATION (SN 0300075606 through 0300087000) 28
FIGURE 1-7. TIRE AND WHEEL DRIVE INSTALLATIONS 30
FIGURE 1-8. DRIVE HUB ASSEMBLY (SN 0300068000 through 0300075605) 34
FIGURE 1-9. DRIVE HUB ASSEMBLY (SN 0300075606 through 0300087000) 36
FIGURE 1-10. DRIVE MOTOR ASSEMBLY (SN 0300068000 through 0300075605) 40
FIGURE 1-11. DRIVE MOTOR ASSEMBLY (ORIGINAL EQUIPMENT) (SN 0300075606 through 0300087000) 42
FIGURE 1-12. DRIVE MOTOR ASSEMBLY (SERVICE REPLACEMENT) 46
FIGURE 1-13. DRIVE VALVES AND SHIELDS INSTALLATION (FRAME MOUNTED) (SN 0300068000 through 0300075605) . 48
FIGURE 1-14. DRIVE VALVES AND SHIELDS INSTALLATION (FRAME MOUNTED) (SN 0300075606 through 0300087000) . 50
FIGURE 1-15. TOW PACKAGE INSTALLATION (OPTIONAL) (SN 0300068000 through 0300075605) 54
FIGURE 1-16. TOW PACKAGE INSTALLATION (OPTIONAL) (SN 0300075606 through 0300087000) 56

SECTION 2 - TURNTABLE 59

FIGURE 2-1. CONTROL VALVES INSTALLATIONS 60
FIGURE 2-2. MAIN CONTROL VALVE ASSEMBLY 64
FIGURE 2-3. ACCESSORY VALVE ASSEMBLY 68
FIGURE 2-4. SWING DRIVE, TURNTABLE BEARING AND LOCK INSTALLATIONS 70
FIGURE 2-5. SWING HUB ASSEMBLY 72
FIGURE 2-6. SWING MOTOR ASSEMBLY 74
FIGURE 2-7. CATERPILLAR ENGINE INSTALLATION 78
FIGURE 2-8. DEUTZ ENGINE INSTALLATION (SN 0300068000 through 0300077489) 86
FIGURE 2-9. DEUTZ ENGINE INSTALLATION (SN 0300077490 through 0300087000) 92
FIGURE 2-10. PISTON PUMP ASSEMBLY (SN 0300068000 through 0300075605) 100
FIGURE 2-11. PISTON PUMP ASSEMBLY (SN 0300075606 through 0300087000) 104
FIGURE 2-12. GEAR PUMP ASSEMBLY 110
FIGURE 2-13. TANK INSTALLATIONS 112
FIGURE 2-14. ROTARY COUPLING INSTALLATION (SN 0300068000 through 0300075605) 114
FIGURE 2-15. ROTARY COUPLING INSTALLATION (SN 0300075606 through 0300087000) 116
FIGURE 2-16. GROUND CONTROL BOX ASSEMBLY 120
FIGURE 2-17. ELECTRICAL OPTIONS INSTALLATION (TURNTABLE MOUNTED) 124
FIGURE 2-18. ENGINE TRAY JACK INSTALLATION (OPTIONAL) 128
FIGURE 2-19. HOODS AND LIFTING PLATE INSTALLATIONS 130
FIGURE 2-20. 2500W GENERATOR INSTALLATION CATERPILLAR MACHINES (OPTIONAL) 134
FIGURE 2-21. 2500W GENERATOR INSTALLATION - DEUTZ MACHINES (OPTIONAL) 138
FIGURE 2-22. 2500W GENERATOR INSTALLATION - DEUTZ MACHINES (UK SPEC AND GERMAN SPEC) (OPTIONAL) . 142
FIGURE 2-23. 7500W SKYPOWER GENERATOR INSTALLATION - CATERPILLAR AND DEUTZ ENGINES (OPTIONAL) ... 144

SECTION 3 - BOOM 149

FIGURE 3-1. BOOM INSTALLATION - 600S 150
FIGURE 3-2. BOOM INSTALLATION - 600SJ & 660SJ 154
FIGURE 3-3. MAIN BOOM ASSEMBLIES 160
FIGURE 3-4. ROTATOR ASSEMBLIES (FRONT ENTRY PLATFORM) 164
FIGURE 3-5. ROTATOR ASSEMBLIES (SIDE ENTRY PLATFORM) 168
FIGURE 3-6. POWER TRACK INSTALLATIONS 170

SECTION 4 - PLATFORM 173

FIGURE 4-1. PLATFORM COMPONENTS INSTALLATION (AUSTRALIAN SPEC WITH FRONT ENTRY PLATFORM) 174
FIGURE 4-2. PLATFORM COMPONENTS INSTALLATION (CE SPEC WITH FRONT ENTRY PLATFORM) 178
FIGURE 4-3. PLATFORM COMPONENTS INSTALLATION (SIDE ENTRY PLATFORM) 182
FIGURE 4-4. PLATFORM COMPONENTS INSTALLATION (FALL ARREST PLATFORM) 186
FIGURE 4-5. PLATFORM CONSOLE ASSEMBLY 188
FIGURE 4-6. CONTROLLER ASSEMBLY (LIFT AND SWING) (ORIGINAL EQUIPMENT) 194
FIGURE 4-7. CONTROLLER ASSEMBLY (LIFT AND SWING) (SERVICE REPLACEMENT) 196
FIGURE 4-8. CONTROLLER ASSEMBLY (LIFT AND SWING) (SERVICE REPLACEMENT) 198
FIGURE 4-9. CONTROLLER ASSEMBLY (DRIVE AND STEER) (ORIGINAL EQUIPMENT) 202
FIGURE 4-10. CONTROLLER ASSEMBLY (DRIVE AND STEER) (SERVICE REPLACEMENT) 204

TABLE OF CONTENTS

FIGURE 4-11. CONTROLL ASSEMBLY (DRIVE AND STEER) (SERVICE REPLACEMENT) 206
FIGURE 4-12. SOFT TOUCH SYSTEM INSTALLATION (OPTIONAL) 208
FIGURE 4-13. PLATFORM PADDING INSTALLATION (OPTIONAL) (SIDE ENTRY PLATFORM) 210
FIGURE 4-14. SKYWELDER INSTALLATION (50HZ) 212
FIGURE 4-15. SKYCUTTER INSTALLATION - 50HZ POWER SUPPLY 214
FIGURE 4-16. PLASMA CUTTER ASSEMBLY - 50HZ POWER SUPPLY 216

SECTION 5 - CYLINDER 219

FIGURE 5-1. AXLE LOCKOUT CYLINDER ASSEMBLY (SN 0300068000 through 0300075605) 220
FIGURE 5-2. AXLE LOCKOUT CYLINDER ASSEMBLY (SN 0300075606 through 0300087000) 222
FIGURE 5-3. LEVEL CYLINDER ASSEMBLY (PLATFORM SLAVE) - 600S (ORIGINAL EQUIPMENT) 224
FIGURE 5-4. LEVEL CYLINDER ASSEMBLY (PLATFORM SLAVE) - 600S (SERVICE REPLACEMENT) 226
FIGURE 5-5. LEVEL CYLINDER ASSEMBLY (PLATFORM SLAVE) - 600S (SERVICE REPLACEMENT) 228
FIGURE 5-6. LEVEL CYLINDER ASSEMBLY (PLATFORM SLAVE) - 600SJ & 660SJ (ORIGINAL EQUIPMENT) 230
FIGURE 5-7. LEVEL CYLINDER ASSEMBLY (PLATFORM SLAVE) - 600SJ & 660SJ (SERVICE REPLACEMENT) 232
FIGURE 5-8. LEVEL CYLINDER ASSEMBLY (PLATFORM SLAVE) - 600SJ & 660SJ (SERVICE REPLACEMENT) 234
FIGURE 5-9. LIFT CYLINDER ASSEMBLY (BOOM) 236
FIGURE 5-10. LIFT CYLINDER ASSEMBLY (JIB) - 600SJ & 660SJ (ORIGINAL EQUIPMENT) 240
FIGURE 5-11. LIFT CYLINDER ASSEMBLY (JIB) - 600SJ & 660SJ (SERVICE REPLACEMENT) 242
FIGURE 5-12. LIFT CYLINDER ASSEMBLY (JIB) - 600SJ & 660SJ (SERVICE REPLACEMENT) 244
FIGURE 5-13. MASTER CYLINDER ASSEMBLY (ORIGINAL EQUIPMENT) 246
FIGURE 5-14. MASTER CYLINDER ASSEMBLY - 600S (SERVICE REPLACEMENT) 250
FIGURE 5-15. MASTER CYLINDER ASSEMBLY - 600SJ/660SJ (SERVICE REPACEMENT) 252
FIGURE 5-16. STEER CYLINDER ASSEMBLY 254
FIGURE 5-17. TELESCOPE CYLINDER ASSEMBLY 256
FIGURE 5-18. CYLINDER BELLOWS INSTALLATION (OPTIONAL) 258

SECTION 6 - HYDRAULIC 261

FIGURE 6-1. HYDRAULIC DIAGRAM - DRIVE AND STEER (2WD/2WS) 262
FIGURE 6-2. HYDRAULIC DIAGRAM - DRIVE AND STEER (4WD/2WS) (SN 0300068000 through 0300075605) 266
FIGURE 6-3. HYDRAULIC DIAGRAM - DRIVE AND STEER (4WD/2WS) (SN 0300075606 through 0300087000) 270
FIGURE 6-4. HYDRAULIC DIAGRAM - OSCILLATING AXLE 272
FIGURE 6-5. HYDRAULIC DIAGRAM - STANDARD (SN 0300068000 through 0300075605) 274
FIGURE 6-6. HYDRAULIC DIAGRAM - STANDARD (SN 0300075606 through 0300087000) 278
FIGURE 6-7. HYDRAULIC DIAGRAM LIST 282

SECTION 7 - ELECTRICAL 285

FIGURE 7-1. ELECTRICAL DIAGRAM LIST 286
FIGURE 7-2. HARNESS COMPONENTS INSTALLATION 288
FIGURE 7-3. AC CABLE INSTALLATION (UK AND GERMAN SPEC) 298

SECTION 8 - DECALS 301

FIGURE 8-1. DECAL INSTALLATION - CE AND AUSTRALIAN SPEC (SN 0300068000 through 0300087000) 302
FIGURE 8-2. DECAL INSTALLATION - MODEL 660SJ (RUSSIAN SPEC) 306

SECTION 9 - RECOMMENDED SERVICE PARTS STOCK 309

FIGURE 9-1. MODEL 600S/600SJ/660SJ STANDARD PARTS 310
FIGURE 9-2. MODEL 600S/600SJ/660SJ VARIABLE PARTS 312

SECTION 10 - SPECIAL OPTIONS 313

FIGURE 10-1. SPECIAL OPTIONS 314

PART NUMBER INDEX 319

SECTION 1 - FRAME

FIGURE 1-1. 2WD FRONT AXLE AND STEERING INSTALLATION (SN 0300068000 through 0300075605)

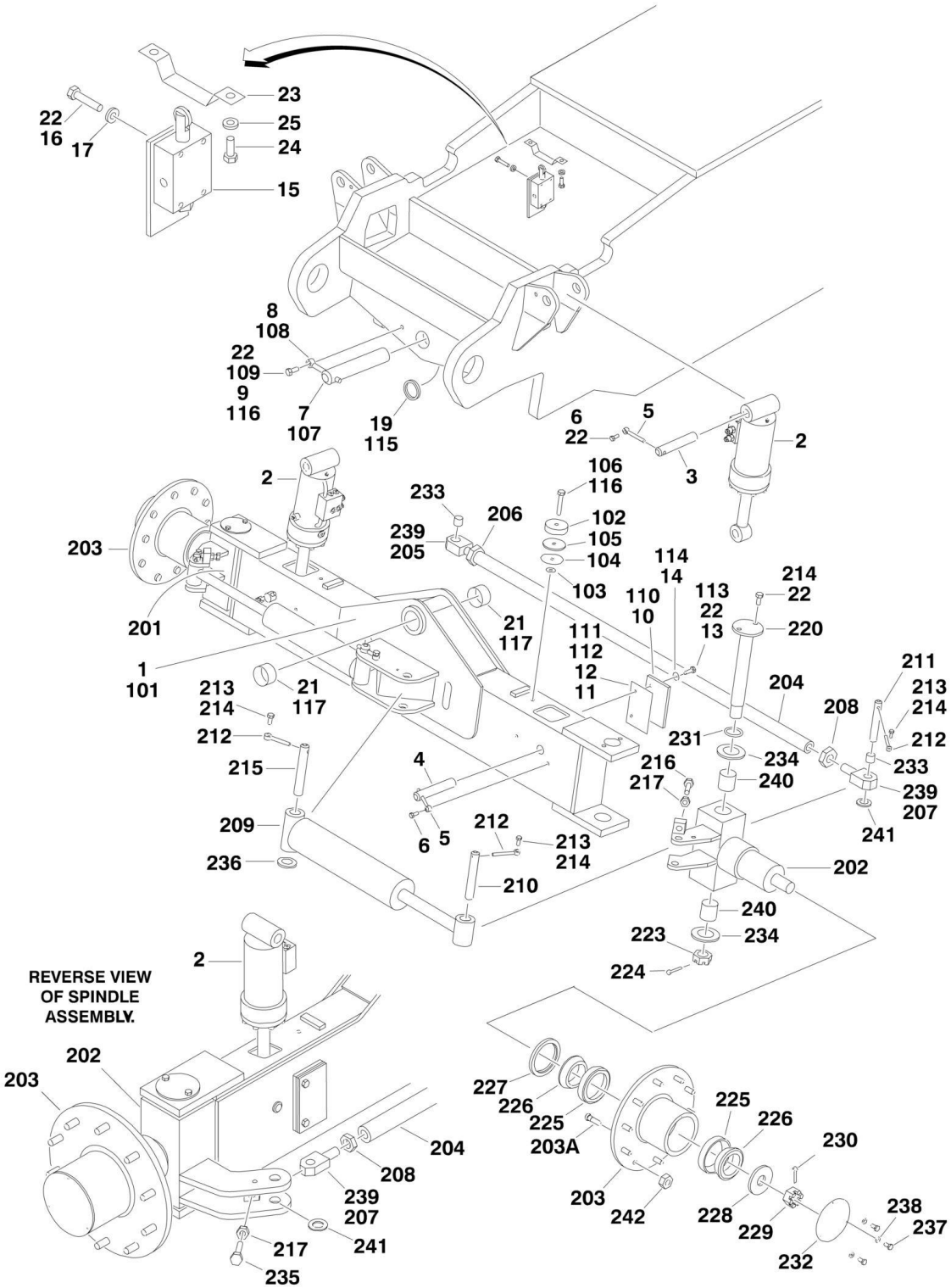

FIGURE 1-1. 2WD FRONT AXLE AND STEERING INSTALLATION (SN 0300068000 through 0300075605)

ITEM	PART NUMBER	QTY	DESCRIPTION	REV
	0256394	Ref	**AXLE INSTALLATIONS - OSCILLATING**	5
1	4844777	1	Axle Weldment	
2	1683078	2	Lockout Cylinder Assembly (See CYLINDER SECTION for Breakdown)	
3	3422333	2	Pin, Pivot	
4	3422332	2	Pin, Cylinder	
5	3841143	4	Keeper, Pin	
6	0641608	4	Bolt 3/8in-16NC x 1in	
7	3422591	1	Pin, Axle Pivot	
8	3841258	1	Keeper, Pin	
9	0642012	1	Bolt 5/8in-11NC x 1-1/2in	
10	3538047	2	Plate, Wear	
11	4070878	AR	Shim 1/16in	
12	4070879	AR	Shim 1/8in	
13	0641612	4	Bolt 3/8in-16NC x 1-1/2in	
14	4711600	4	Flatwasher 3/8in Thin	
15	4640871	1	Valve, Cam	
15	7012693	1	Seal Kit - 4640871 Valve	
15	7002840	1	Pin Removal Tool	
16	0641414	4	Bolt 1/4in-20NC x 1-3/4in	
17	4711400	4	Flatwasher 1/4in Thin	
19	4740158	1	Thrustwasher	
21	0961950	2	Bushing	
22	0100011	AR	Compound, Locking	
23	1100086	1	Cam	
24	0641814	2	Bolt 1/2in-13NC x 1-3/4in	
25	4751800	AR	Flatwasher 1/2in Regular	
	0256621	Ref	**AXLE INSTALLATIONS - FIXED**	4
101	4844777	1	Axle Weldment	
102	3539877	2	Plate, Stop	
103	3539878	2	Plate, Stop	
104	4070944	AR	Shim (.06)	
105	4070945	AR	Shim (.25)	
106	3931840	2	Screw 1/2in-13NC x 2-1/2in	
107	3422591	1	Pin, Pivot	
108	3841258	1	Keeper, Pin	
109	0642012	1	Bolt 5/8in-11NC x 1-1/2in	
110	3538047	2	Plate, Wear	
111	4070878	AR	Shim 1/16in	
112	4070879	AR	Shim 1/8in	
113	0641608	4	Bolt 3/8in-16NC x 1in	
114	4711600	4	Flatwasher 3/8in Thin	
115	4740158	1	Thrustwasher	
116	0100019	AR	Compound, Locking	
117	0961950	2	Bushing	
	0257732	Ref	**STEERING INSTALLATION**	2-A
201	4130353	1	Spindle - Right Side	
202	4130354	1	Spindle - Left Side	
203	2780188	2	Hub	

SECTION 1 - FRAME

ITEM	PART NUMBER	QTY	DESCRIPTION	REV
203A	0630078	20	Stud, Wheel (10 Per Hub)	
204	3841236	1	Tie-Rod	
205	0561138	1	End, Tie-Rod (Right Side/RH Threads)	
206	3323002	1	Nut, Jam 1-1/4in-12NF (RH Threads)	
207	0561139	1	End, Tie-Rod (Left Side/LH Threads)	
208	3300229	1	Nut, Jam 1-1/4in-12NF (LH Threads)	
209	1683208	2	Steer Cylinder Assembly (See CYLINDER SECTION for Breakdown)	
210	3422351	2	Pin, Steer Cylinder	
211	3422352	2	Pin, Tie-Rod	
212	3841143	6	Shaft, Keeper	
213	0641608	6	Bolt 3/8in-16NC x 1in	
214	0100011	AR	Compound, Locking	
215	3422326	2	Pin, Steer Cylinder	
216	0682014	2	Bolt 5/8in-11NC x 1-3/4in (Grade 8)	
217	3312002	4	Nut, Jam 5/8in-11NC	
220	3422335	2	Kingpin	
222	0681610	4	Bolt 3/8in-16NC x 1-1/4in (Grade 8)	
223	3324203	2	Nut, Slotted 2in-4 1/2NF	
224	3451012	2	Pin, Cotter 5/8in x 3in	
225	0440171	4	Cup, Bearing - Inner	
226	0440170	4	Cone, Bearing - Inner	
227	3960343	2	Seal, Grease	
228	4740283	2	Flatwasher, Hardened	
229	3323403	2	Nut, Slotted 1-1/2in-6NF	
230	3451010	2	Pin, Cotter 5/8in x 2-1/2in	
231	3780187	4	O-Ring	
232	1120304	2	Cap, Hub	
233	0961977	2	Bearing	
234		Ref	Thrustwasher Options:	
234	4740463	2	Thrustwasher Top	
234	4740256	2	Thrustwasher Bottom	
235	0682012	2	Bolt 5/8in-11NC x 1-1/2in (Grade 8)	
236	4740111	4	Thrustwasher	
237	0721003	6	Bolt #10-24NC x 3/8in	
238	4761000	6	Lockwasher #10	
239	0100063	AR	Loctite RC609	
240	0962036	4	Bushing, Bronze	
241	4740067	2	Thrustwasher	
242	3300007	20	Lugnut (10 per wheel)	

FIGURE 1-2. 2WD FRONT AXLE AND STEERING INSTALLATION (SN 0300075606 through 0300087000)

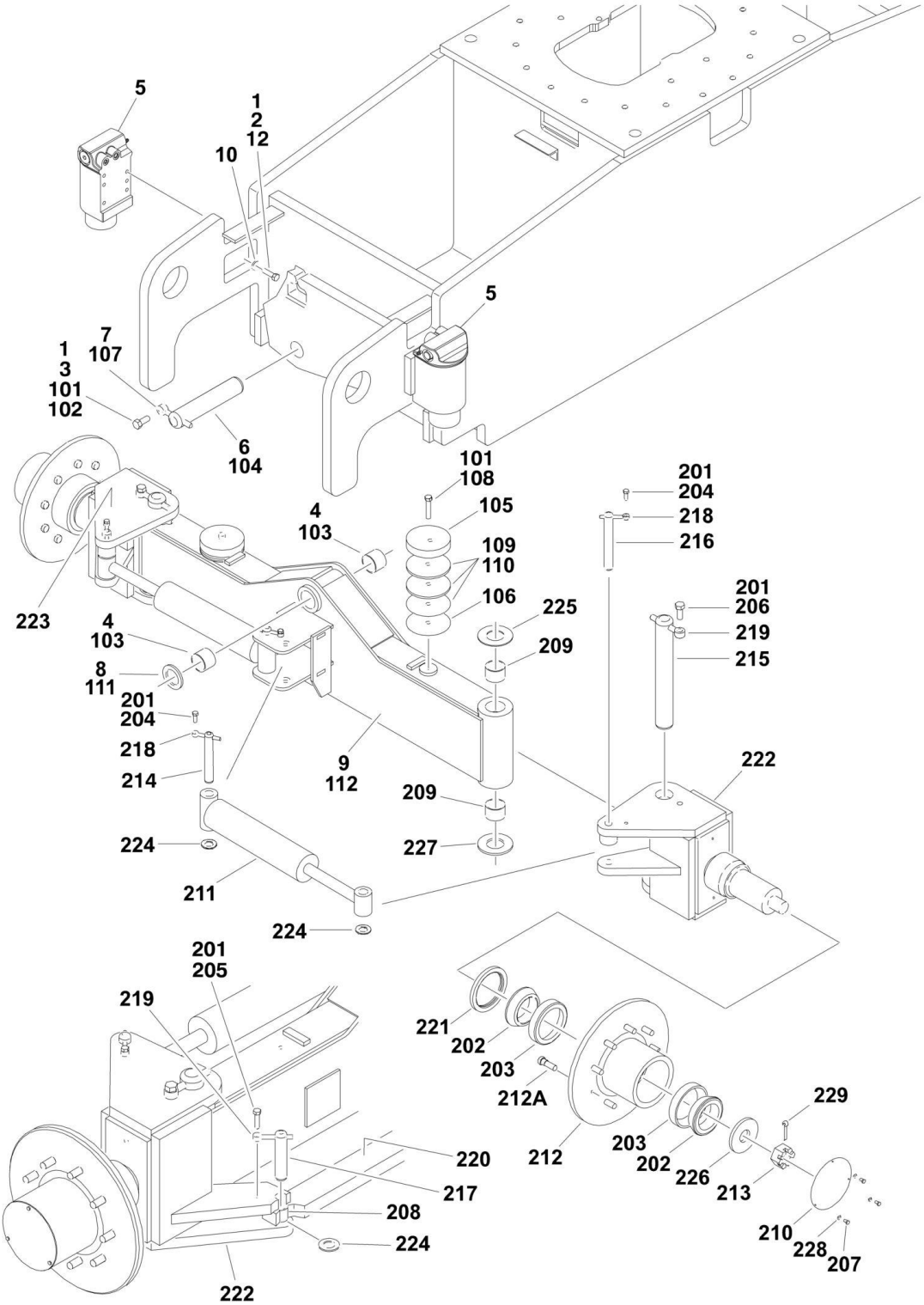

FIGURE 1-2. 2WD FRONT AXLE AND STEERING INSTALLATION (SN 0300075606 through 0300087000)

ITEM	PART NUMBER	QTY	DESCRIPTION	REV
		Ref	**AXLE INSTALLATIONS - OSCILLATING**	
	0273081	Ref	**Without Tow Package**	E
	0273379	Ref	**With Tow Package**	C
1	0100011	AR	Compound, Locking	
2	0641814	8	Bolt 1/2in-13NC x 1-3/4in	
3	0642012	1	Bolt 5/8in-11NC x 1-1/2in	
4	0961950	2	Bearing	
5	1684280	NLA	Lockout Cylinder Assembly (Use p/n 1001167359) (See CYLINDER SECTION for Breakdown) (Original Equipment)	
5	1001167359	1	Cylinder Replacement Kit (Kit Replaces p/n 1684280 with p/n 1684465 Cylinder)	
6	3422592	1	Pin, Pivot	
7	3841258	1	Keeper, Pin	
8	4740158	1	Thrustwasher	
9		Ref	Axle Weldment Options:	
9	4846814	1	Without Tow Package	
9	4846934	1	With Tow Package	
10	4891800	8	Flatwasher 1/2in Hardened	
12	0100038	AR	Primer #7471	
	0273226	Ref	**AXLE INSTALLATIONS - FIXED**	A
101	0100011	AR	Compound, Locking	
102	0642012	1	Bolt 5/8in-11NC x 1-1/2in	
103	0961950	2	Bearing	
104	3422592	1	Pin, Pivot	
105	3539877	2	Plate, Stop	
106	3539878	2	Plate, Stop	
107	3841258	1	Keeper, Pin	
108	3931840	2	Screw 1/2in-13NC x 2-1/2in	
109	4070944	4	Shim (.06)	
110	4070945	4	Shim (.25)	
111	4740158	1	Thrustwasher	
112		Ref	Axle Weldment Options:	
112	4846814	1	Without Tow Package	
112	See Note	1	With Tow Package (Note: Not Available for Purchase)	
		Ref	**STEERING INSTALLATIONS**	
	0273150	Ref	**Without Tow Package**	B
	0273422	Ref	**With Tow Package**	A
201	0100011	AR	Compound, Locking	
202	0440170	4	Cone, Bearing	
203	0440171	4	Cup, Bearing	
204	0641608	4	Bolt 3/8in-16NC x 1in	
205	0641612	2	Bolt 3/8in-16NC x 1-1/2in	
206	0642012	2	Bolt 5/8in-11NC x 1-1/2in	
207	0721003	6	Bolt #10-24NC x 3/8in	
208	0961977	2	Bushing	
209	0962131	4	Bearing	
210	1120304	2	Cap, Hub	
211	1683208	2	Steer Cylinder Assembly (See CYLINDER SECTION for Breakdown)	

SECTION 1 - FRAME

ITEM	PART NUMBER	QTY	DESCRIPTION	REV
212	2780271	2	Hub	
212A	0630490	18	Stud, Wheel (9 Per Hub)	
213	3324203	2	Nut, Slotted 2in-4 1/2NF	
214	3422326	2	Pin, Steer Cylinder	
215	3422900	2	Kingpin	
216		Ref	Pin, Steer Cylinder Options:	
216	3422902	2	Machines without Tow Package	
216	3422902	1	Machines with Tow Package (Left Side without Tow Link)	
216	3422567	1	Machines with Tow Package (Right Side with Tow Link)	
217	3422903	2	Pin, Tie-Rod	
218	3841143	6	Shaft, Keeper	
219	3841258	2	Shaft, Keeper	
220	3841510	1	Tie-Rod	
221	3960343	2	Seal, Grease	
222	4130396	1	Spindle - Left Side	
223		Ref	Spindle - Right Side Options:	
223	4130397	2	Machines without Tow Package	
223	4130400	1	Machines with Tow Package	
224	4740111	6	Thrustwasher	
225	4740256	2	Thrustwasher	
226	4740283	2	Flatwasher, Hardened	
227	4740263	2	Thrustwasher	
228	4761000	6	Lockwasher #10	
229	3451010	2	Pin, Cotter 5/8in x 2-1/2in	

FIGURE 1-3. 4WD FRONT AXLE AND STEERING INSTALLATION (SN 0300068000 through 0300075605)

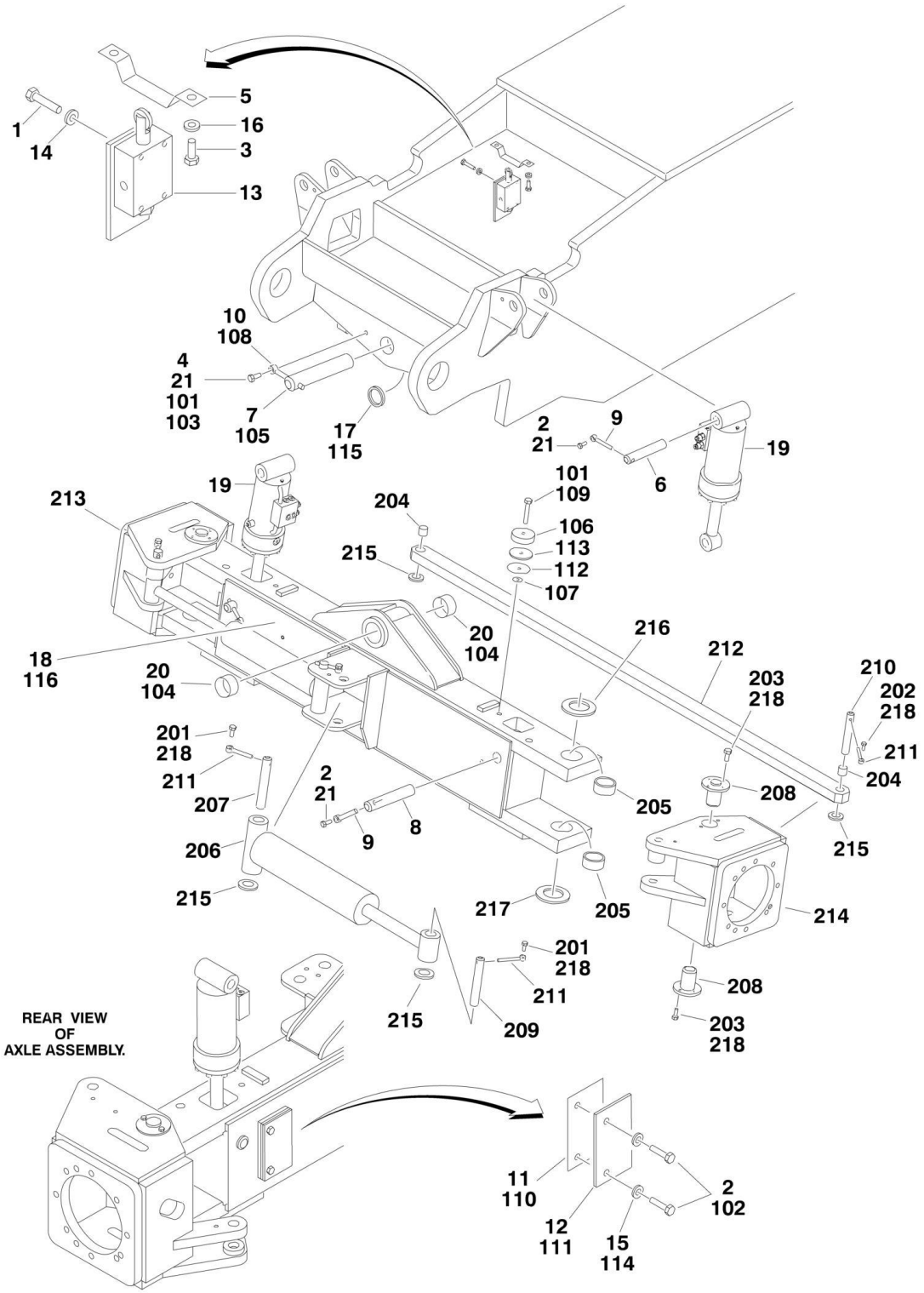

FIGURE 1-3. 4WD FRONT AXLE AND STEERING INSTALLATION (SN 0300068000 through 0300075605)

ITEM	PART NUMBER	QTY	DESCRIPTION	REV
		Ref	**FRAME OPTIONS:**	
	2360376	1	Frame Weldment - 600S - 2WS	
	2360415	1	Frame Weldment - 600SJ - 2WS	
	2360414	1	Frame Weldment - 660SJ - 2WS	
	2360451	1	Frame Weldment - 600S - 4WS	
	2360453	1	Frame Weldment - 600SJ - 4WS	
	2360452	1	Frame Weldment - 660SJ - 4WS	
	0271003	Ref	**AXLE INSTALLATIONS - OSCILLATING**	B
1	0641414	4	Bolt 1/4in-20NC x 1 3/4in	
2	0641608	8	Bolt 3/8in-16NC x 1in	
3	0641814	2	Bolt 1/2in-13NC x 1-3/4in	
4	0642012	1	Bolt 5/8in-11NC x 1-1/2in	
5	1100086	1	Cam	
6	3422333	2	Pin, Pivot	
7	3422591	1	Pin, Axle Pivot	
8	3422904	2	Pin, Cylinder	
9	3841143	4	Keeper, Pin	
10	3841258	1	Keeper, Pin	
11	4070878	2	Shim 1/16in	
12	4070879	2	Shim 1/8in	
13	4640871	1	Valve, Cam	
13	7012693	1	Seal Kit - 4640871 Valve	
13	7002840	1	Pin Removal Tool	
14	4711400	4	Flatwasher 1/4in Thin	
15	4711600	4	Flatwasher 3/8in Thin	
16	4711800	4	Flatwasher 1/2in Thin	
17	4740158	1	Thrustwasher	
18	4846288	1	Axle Weldment	
19	1683078	2	Lockout Cylinder Assembly (See CYLINDER SECTION for Breakdown)	
20	0961950	2	Bushing	
21	0100011	AR	Compound, Locking	
	0271004	Ref	**AXLE INSTALLATIONS - FIXED**	A
101	0100011	AR	Compound, Locking	
102	0641608	4	Bolt 3/8in-16NC x 1in	
103	0642012	1	Bolt 5/8in-11NC x 1-1/2in	
104	0961950	2	Bushing	
105	3422591	1	Pin, Pivot	
106	3539877	2	Plate, Stop	
107	3539878	2	Plate, Stop	
108	3841258	1	Keeper, Pin	
109	3931840	2	Screw 1/2in-13NC x 2-1/2in	
110	4070878	2	Shim 1/16in	
111	4070879	2	Shim 1/8in	
112	4070944	AR	Shim (.06)	
113	4070945	AR	Shim (.25)	
114	4711600	4	Flatwasher 3/8in Thin	
115	4740158	1	Thrustwasher	
116	4846288	1	Axle Weldment	

SECTION 1 - FRAME

ITEM	PART NUMBER	QTY	DESCRIPTION	REV
	0270868	Ref	**STEERING INSTALLATION**	A
201	0641608	4	Bolt 3/8in-16NC x 1in	
202	0641612	2	Bolt 3/8in-16NC x 1-1/2in	
203	0681610	8	Bolt 3/8in-16NC x 1-1/4in (Grade 8)	
204	0961977	2	Bearing	
205	0962131	4	Bushing	
206	1683208	2	Steer Cylinder Assembly (See CYLINDER SECTION for Breakdown)	
207	3422326	2	Pin	
208	3422753	4	Kingpin	
209	3422902	2	Pin, Steer Cylinder	
210	3422903	2	Pin	
211	3841143	6	Shaft, Keeper	
212	3841510	1	Tie-Rod	
213	4130381	1	Spindle - Right Side	
214	4130382	1	Spindle - Left Side	
215	4740111	6	Thrustwasher	
216	4740256	2	Thrustwasher	
217	4740463	2	Thrustwasher	
218	0100011	AR	Compound, Locking	

FIGURE 1-4. 4WD FRONT AXLE AND STEERING INSTALLATION (SN 0300075606 through 0300087000)

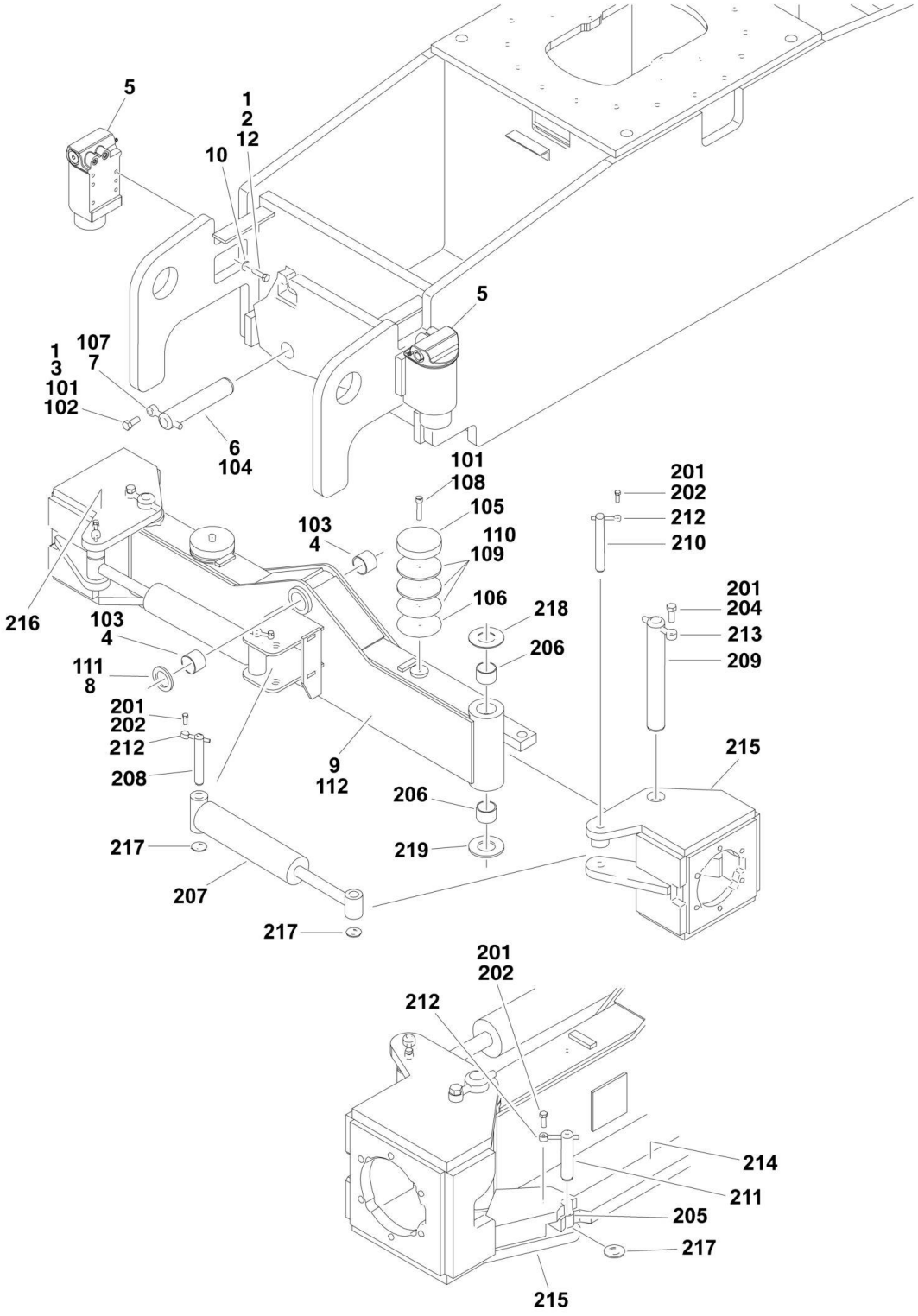

FIGURE 1-4. 4WD FRONT AXLE AND STEERING INSTALLATION (SN 0300075606 through 0300087000)

ITEM	PART NUMBER	QTY	DESCRIPTION	REV
		Ref	**FRAME OPTIONS:**	
	2360615	1	Frame Weldment - 600S - 2WS	
	2360623	1	Frame Weldment - 600SJ - 2WS	
	2360624	1	Frame Weldment - 660SJ - 2WS	
	2360634	1	Frame Weldment - 600S - 4WS	
	2360635	1	Frame Weldment - 600SJ - 4WS	
	2360636	1	Frame Weldment - 660SJ - 4WS	
		Ref	**AXLE INSTALLATIONS - OSCILLATING**	
	0273081	Ref	**Without Tow Package**	E
	0273379	Ref	**With Tow Package**	C
1	0100011	AR	Compound, Locking	
2	0641814	8	Bolt 1/2in-13NC x 1-3/4in	
3	0642012	1	Bolt 5/8in-11NC x 1-1/2in	
4	0961950	2	Bearing	
5	1684280	NLA	Lockout Cylinder Assembly (Use p/n 1001167359) (See CYLINDER SECTION for Breakdown) (Original Equipment)	
5	1001167359	2	Cylinder Replacement Kit (Kit Replaces p/n 1684280 with p/n 1684465 Cylinder)	
6	3422592	1	Pin, Pivot	
7	3841258	1	Keeper, Pin	
8	4740158	1	Thrustwasher	
9		Ref	Axle Weldment Options:	
9	4846814	1	Without Tow Package	
9	4846934	1	With Tow Package	
10	4891800	8	Flatwasher 1/2in Hardened	
12	0100038	AR	Primer	
	0273226	Ref	**AXLE INSTALLATIONS - FIXED**	A
101	0100011	AR	Compound, Locking	
102	0642012	1	Bolt 5/8in-11NC x 1-1/2in	
103	0961950	2	Bearing	
104	3422592	1	Pin, Pivot	
105	3539877	2	Plate, Stop	
106	3539878	2	Plate, Stop	
107	3841258	1	Keeper, Pin	
108	3931840	2	Screw 1/2in-13NC x 2-1/2in	
109	4070944	4	Shim (.06)	
110	4070945	4	Shim (.25)	
111	4740158	1	Thrustwasher	
112		Ref	Axle Weldment Options:	
112	4846814	1	Without Tow Package	
112	See Note	1	With Tow Package (Note: Not Available for Purchase)	
		Ref	**STEERING INSTALLATIONS**	
	0273080	Ref	**Without Tow Package**	E
	0273394	Ref	**With Tow Package**	B
201	0100011	AR	Compound, Locking	
202	0641608	6	Bolt 3/8in-16NC x 1in	
204	0642012	2	Bolt 5/8in-11NC x 1-1/2in	
205	0961977	2	Bushing	
206	0962131	4	Bearing	

SECTION 1 - FRAME

ITEM	PART NUMBER	QTY	DESCRIPTION	REV
207	1683208	2	Steer Cylinder Assembly (See CYLINDER SECTION for Breakdown)	
208	3422326	2	Pin, Steer Cylinder	
209	3422900	2	Kingpin	
210		Ref	Pin, Steer Cylinder Options:	
210	3422902	2	Machines without Tow Package	
210	3422902	1	Machines with Tow Package (Left Side without Tow Link)	
210	3422567	1	Machines with Tow Package (Right Side with Tow Link)	
211	3422903	2	Pin, Tie-Rod	
212	3841143	6	Shaft, Keeper	
213	3841258	2	Shaft, Keeper	
214	3841510	1	Tie-Rod	
215	4130394	1	Spindle - Left Side	
216		Ref	Spindle - Right Side Options:	
216	4130395	2	Machines without Tow Package	
216	4130399	1	Machines with Tow Package	
217	4740111	6	Thrustwasher	
218	4740256	2	Thrustwasher	
219	4740463	2	Thrustwasher	

FIGURE 1-5. 4WS REAR STEERING INSTALLATION (SN 0300068000 through 0300075605)

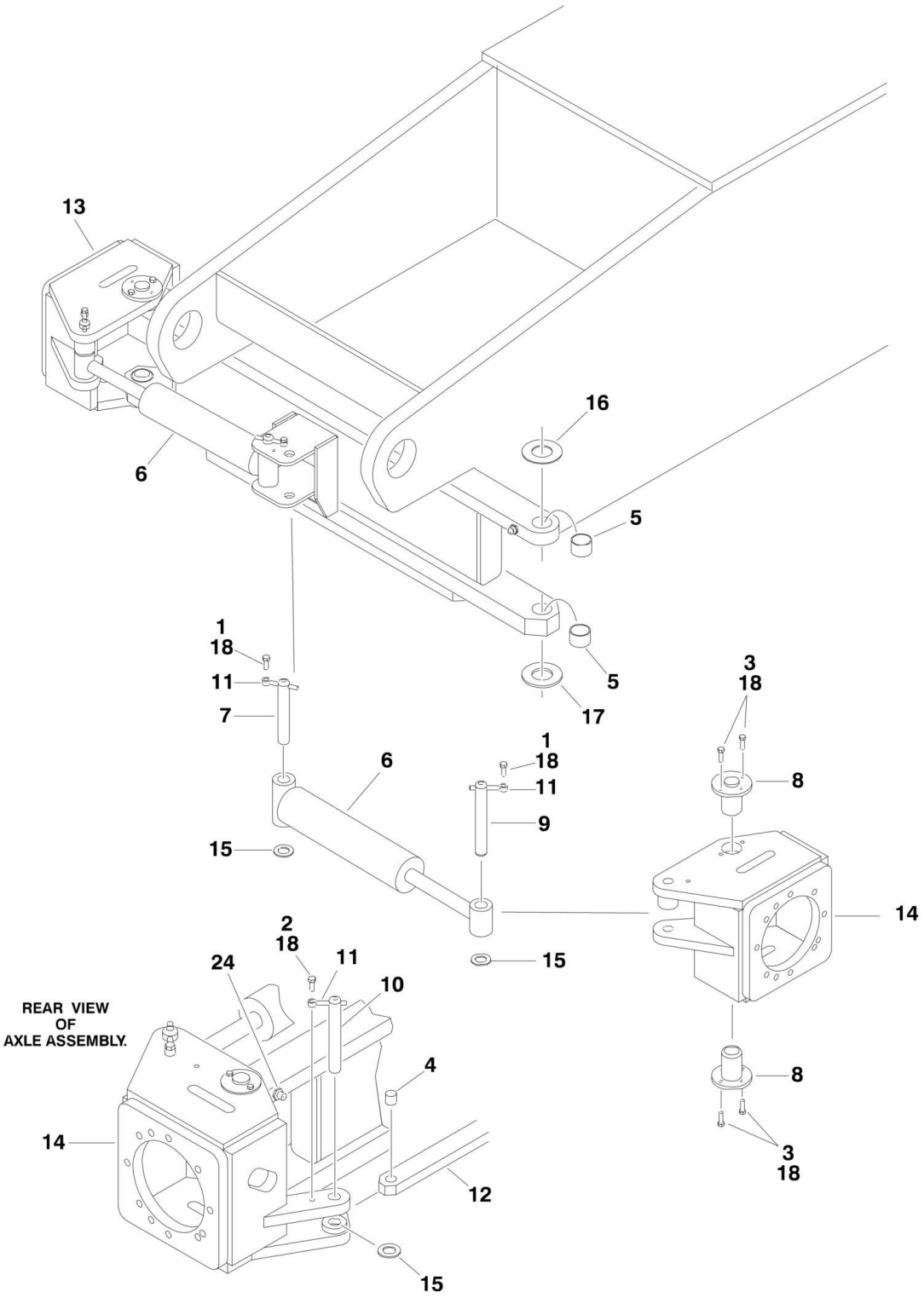

FIGURE 1-5. 4WS REAR STEERING INSTALLATION (SN 0300068000 through 0300075605)

ITEM	PART NUMBER	QTY	DESCRIPTION	REV
		Ref	**4WS REAR STEERING INSTALLATIONS OPTIONS:**	
	0257744	Ref	**4WS Installation - 2WD Machines**	2
	0271005	Ref	**4WS Installation - 4WD Machines**	1
	0270868	Ref	**STEERING INSTALLATION**	A
1	0641608	4	Bolt 3/8in-16NC x 1in	
2	0641612	2	Bolt 3/8in-16NC x 1-1/2in	
3	0681610	8	Bolt 3/8in-16NC x 1-1/4in (Grade 8)	
4	0961977	2	Bearing	
5	0962131	4	Bushing	
6	1683208	2	Steer Cylinder Assembly (See CYLINDER SECTION for Breakdown)	
7	3422326	2	Pin	
8	3422753	4	Kingpin	
9	3422902	2	Pin, Steer Cylinder	
10	3422903	2	Pin	
11	3841143	6	Shaft, Keeper	
12	3841510	1	Tie-Rod	
13	4130381	1	Spindle - Right Side	
14	4130382	1	Spindle - Left Side	
15	4740111	6	Thrustwasher	
16	4740256	2	Thrustwasher	
17	4740463	2	Thrustwasher	
18	0100011	AR	Compound, Locking	

FIGURE 1-6. 4WS REAR STEERING INSTALLATION (SN 0300075606 through 0300087000)

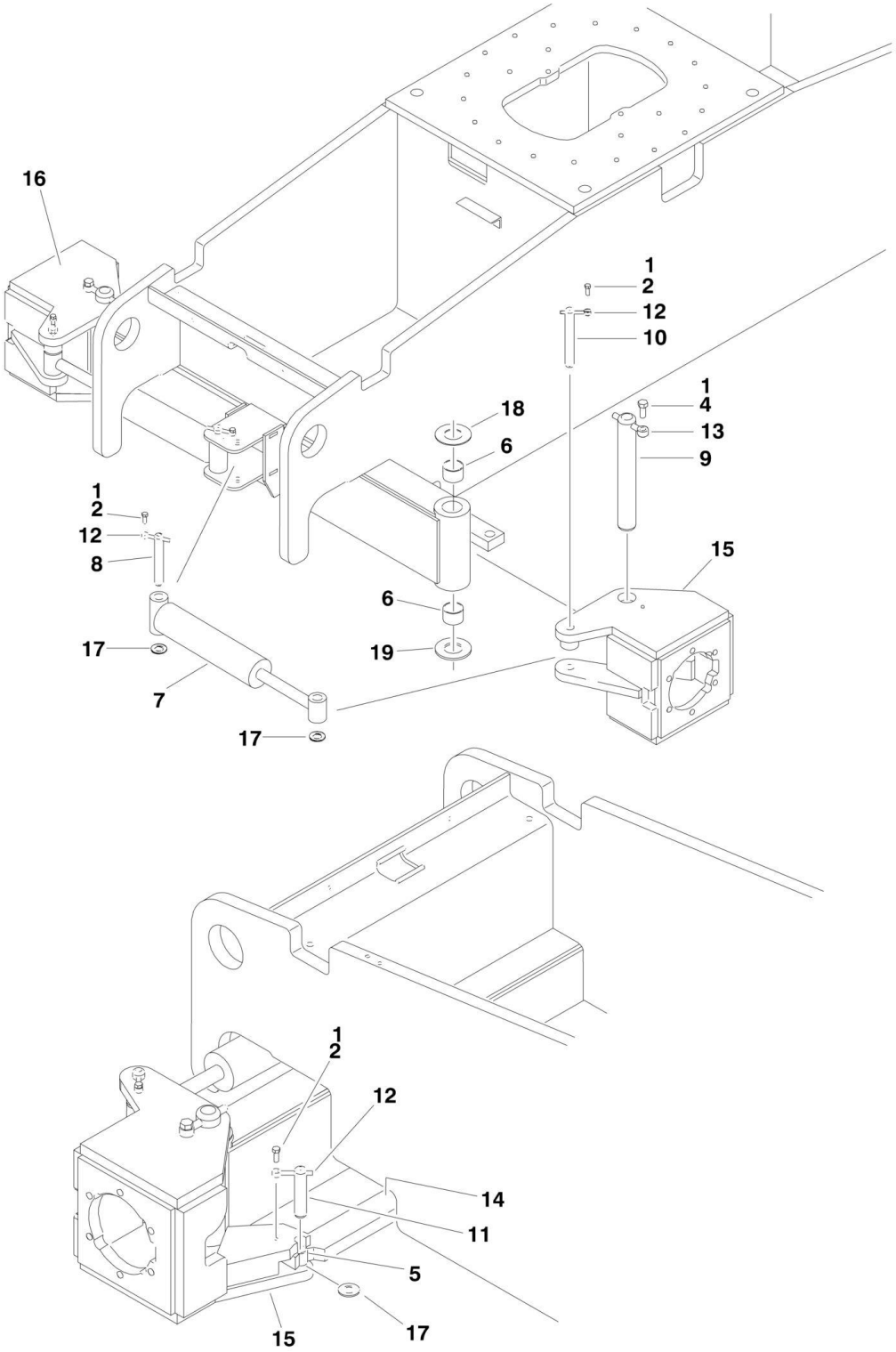

FIGURE 1-6. 4WS REAR STEERING INSTALLATION (SN 0300075606 through 0300087000)

ITEM	PART NUMBER	QTY	DESCRIPTION	REV
		Ref	**4WS REAR STEERING INSTALLATIONS OPTIONS:**	
	0273356	Ref	**4WS Installation - 2WD Machines**	1
	0273357	Ref	**4WS Installation - 4WD Machines**	1
	0273080	Ref	**STEERING INSTALLATION**	D
1	0100011	AR	Compound, Locking	
2	0641608	6	Bolt 3/8in-16NC x 1in	
4	0642012	2	Bolt 5/8in-11NC x 1-1/2in	
5	0961977	2	Bushing	
6	0962131	4	Bearing	
7	1683208	2	Steer Cylinder Assembly (See CYLINDER SECTION for Breakdown)	
8	3422326	2	Pin, Steer Cylinder	
9	3422900	2	Kingpin	
10	3422902	2	Pin, Steer Cylinder	
11	3422903	2	Pin, Tie-Rod	
12	3841143	6	Shaft, Keeper	
13	3841258	2	Shaft, Keeper	
14	3841510	1	Tie-Rod	
15	4130394	1	Spindle - Left Side	
16	4130395	1	Spindle - Right Side	
17	4740111	6	Thrustwasher	
18	4740256	2	Thrustwasher	
19	4740463	2	Thrustwasher	

FIGURE 1-7. TIRE AND WHEEL DRIVE INSTALLATIONS

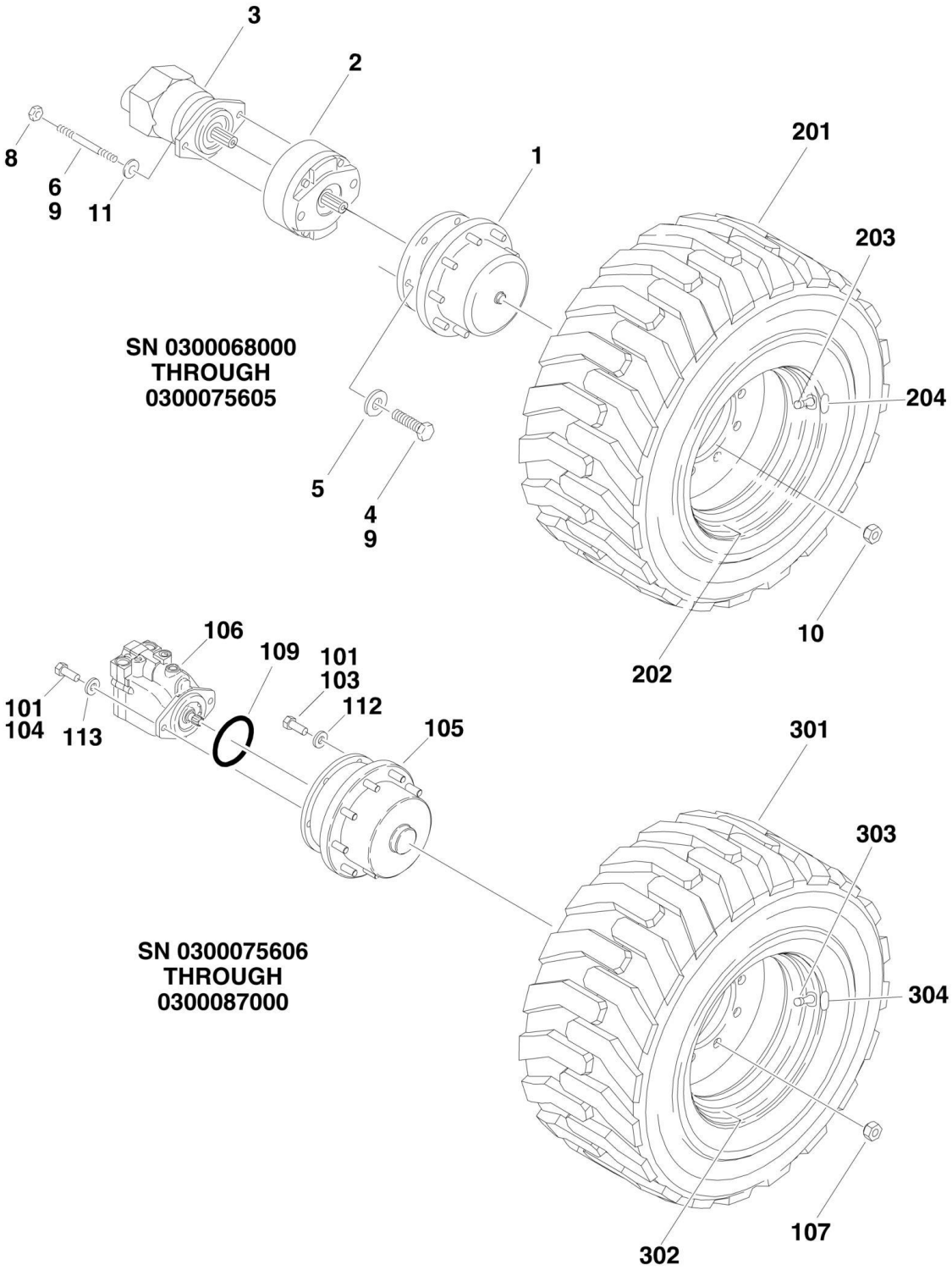

FIGURE 1-7. TIRE AND WHEEL DRIVE INSTALLATIONS

ITEM	PART NUMBER	QTY	DESCRIPTION	REV
		Ref	**WHEEL DRIVE INSTALLATIONS (SN 0300068000 through 0300075605)**	
	0270121	Ref	**Wheel Drive Installations 2WD**	3-B
	0270120	Ref	**Wheel Drive Installations 4WD**	3-B
		Ref	**Note: 2WD Qty Shown. For 4WD, Double Qty Shown.**	
1	2780261	2	Drive Hub Assembly (See DRIVE HUB ASSEMBLY for Breakdown)	
2	0920117	NLA	Drive Brake Assembly (Use p/n 0920119)	
2	7000731	2	Gasket (Located between the Hub, Motor and Brake - Not Shown)	
2	7018612	2	Repair Kit - 0920117 & 0920119 Brakes (1 Per Assembly)	
		Ref	**Note: Other then Gasket, Repair Kit is Only Part Available.**	
3	3160204	2	Drive Motor Assembly (See DRIVE MOTOR ASSEMBLY for Breakdown)	
		Ref	**Note: Adjustment required when replacing complete motor - See Service Manual for adjustment.**	
4	0682016	16	Bolt 5/8in-11NC x 2in (Grade 8)	
5	4892000	16	Flatwasher 5/8in Hardened	
6	4300097	4	Stud 1/2in-13NC x 5-1/8in	
8	3311801	4	Nut 1/2in - 13 NC	
9	0100011	AR	Compound, Locking	
10	3300007	20	Nut, Wheel	
11	4891800	4	Flatwasher 1/2in Hardened	
		Ref	**WHEEL DRIVE INSTALLATIONS (SN 0300075606 through 0300087000)**	
	0273049	Ref	**Wheel Drive Installations 2WD/2WS**	D
	0273367	Ref	**Wheel Drive Installations 2WD/4WS**	A
	0273048	Ref	**Wheel Drive Installations 4WD/2WS**	F
	0273366	Ref	**Wheel Drive Installations 4WD/4WS**	E
		Ref	**Note: 2WD Qty Shown. For 4WD, Double Qty Shown.**	
101	0100011	AR	Compound, Locking	
103	0681810	4	Bolt 1/2in-13NC x 1-1/4in (Grade 8)	
104	0682016	12	Bolt 5/8in-11NC x 2in (Grade 8)	
105	2780269	2	Drive Hub Assembly (See DRIVE HUB ASSEMBLY for Breakdown)	
106		Ref	Drive Motor Assembly Options:	
106	3160299	NLA	2WD/2WS (Use p/n 3160349) (For p/n 3160299 - See DRIVE MOTOR ASSEMBLY (ORIGINAL EQUIPMENT) for Breakdown) (For 3160349 Motor - See DRIVE MOTOR ASSEMBLY (SERVICE REPALCEMENT) for Breakdown)	
106	3160300	NLA	2WD/4WS, 4WD/2WS & 4WD/4WS (Use p/n 3160350) (For p/n 3160300 - See DRIVE MOTOR ASSEMBLY (ORIGINAL EQUIPMENT) for Breakdown) (For 3160350 Motor - See DRIVE MOTOR ASSEMBLY (SERVICE REPLACEMENT) for Breakdown)	
107	3300106	18	Nut, Wheel	
109	3790045	1	O-Ring	
112	4891800	4	Flatwasher 1/2in Hardened	
113		Ref	Flatwasher 5/8in Hardened Options:	
113	4892000	12	Flatwasher 5/8in Hardened **(SN 0300068000 through 0300076042)**	
113	4740393	12	Flatwasher 5/8in Hardened **(SN 0300076043 through 0300087000)**	

SECTION 1 - FRAME

ITEM	PART NUMBER	QTY	DESCRIPTION	REV
		Ref	**TIRE AND WHEEL INSTALLATIONS OPTIONS**	
		Ref	**Tire and Wheel Installations: (SN 0300068000 through 0300075605)**	
	0271619	Ref	**Foam-Filled - OTR Tires**	1
		Ref	Tire and Wheel Assembly Options: **(SN 0300068000 through 0300075605)**	
	0271616	2	Foam-Filled - OTR Tire (Left Side)	B
	0271617	2	Foam-Filled - OTR Tire (Right Side)	B
		Ref	**Note: Foam-Filled Tire and Wheel Assemblies sold as assemblies only.**	
201	4520258	4	Tire 15 x 19.5 (1 Per Assembly)	
202	4860148	4	Rim, Wheel (1 Per Assembly)	
203	4640113	4	Valve, Air (1 Per Assembly)	
204	Not Required	0	Not Required	
		Ref	**TIRE AND WHEEL INSTALLATIONS OPTIONS**	
		Ref	**Tire and Wheel Installations: (SN 0300075606 through 0300087000)**	
	0273238	Ref	**Foam-Filled - OTR Tires**	1
	0274152	Ref	**Foam-Filled - OTR Tires (Non-Marking)**	1
		Ref	Tire and Wheel Assembly Options: **(SN 0300075606 through 0300087000)**	
	0273240	2	Foam-Filled - OTR Tire (Right Side)	B
	0273239	2	Foam-Filled - OTR Tire (Left Side)	B
	4520340	2	Foam-Filled - OTR Tire (Non-Marking) (Right Side)	B
	4520339	2	Foam-Filled - OTR Tire (Non-Marking) (Left Side)	B
		Ref	**Note: Assemblies may require ballast/foam filling to manufacturer's specifications prior to installing on a machine. Refer to Operation and Safety or Service and Maintenance Manuals. Purchase individual tire and/or rim only if able to foam fill tire and wheel assembly, otherwise, purchase complete assembly.**	
301	4520258	4	Tire 15 x 19.5 (1 Per Assembly)	
302	4860243	4	Rim, Wheel (1 Per Assembly)	
303	4640113	4	Valve, Air (1 Per Assembly)	
304	Not Required	0	Not Required	

FIGURE 1-8. DRIVE HUB ASSEMBLY (SN 0300068000 through 0300075605)

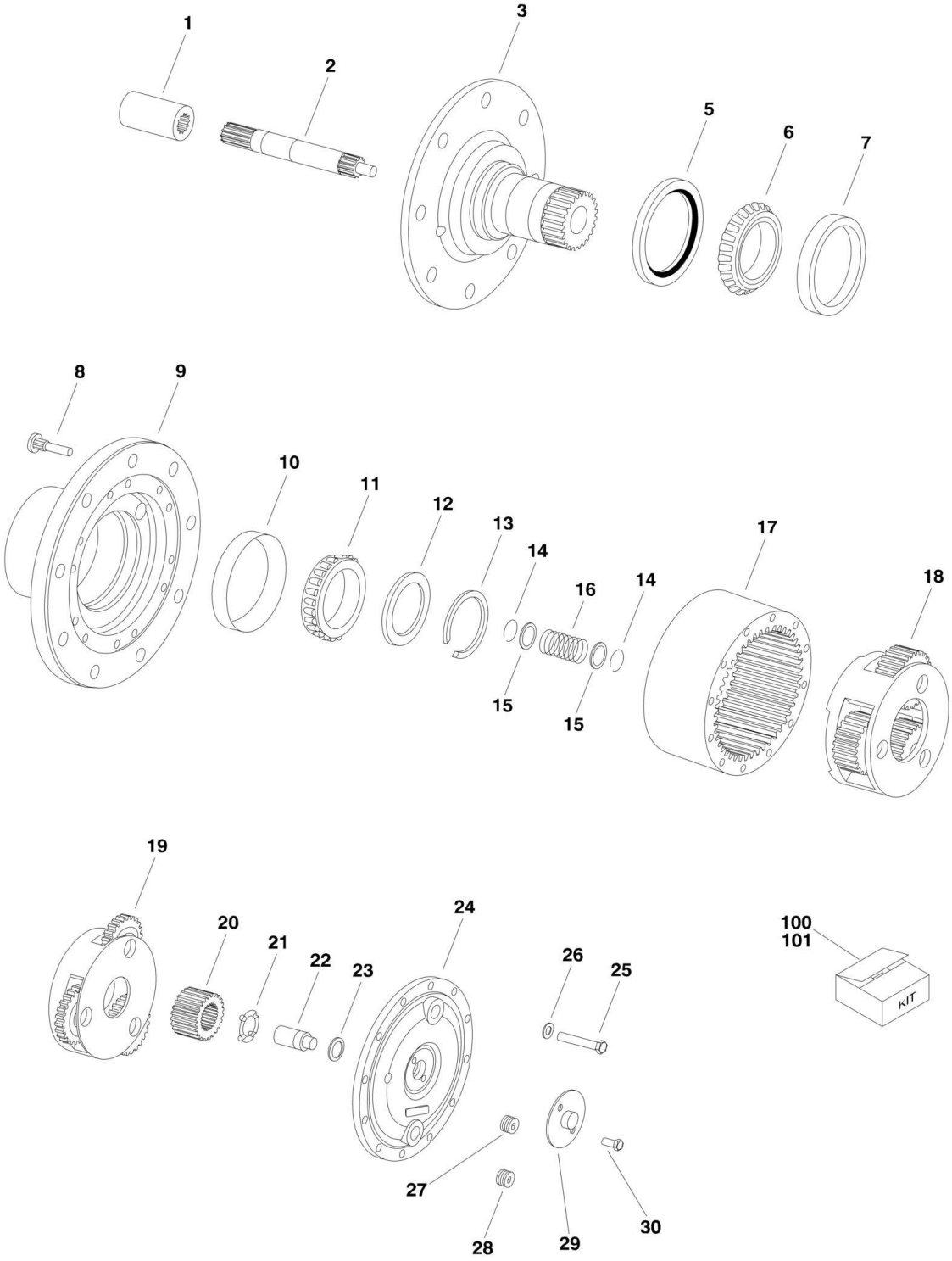

FIGURE 1-8. DRIVE HUB ASSEMBLY (SN 0300068000 through 0300075605)

ITEM	PART NUMBER	QTY	DESCRIPTION	REV
	2780261	Ref	**DRIVE HUB ASSEMBLY**	A
1	7014700	1	Coupling - 13 Teeth	
2	7014701	1	Shaft, Input - 13 Teeth	
3	7014731	1	Spindle	
5	7014703	1	Seal, Oil	
6	7014704	1	Cone, Bearing	
7	7014705	1	Cup, Bearing	
8	7014737	10	Bolt, Wheel	
9	7014734	1	Hub	
10	7014707	1	Cup, Bearing	
11	7014708	1	Cone, Bearing	
12	7001711	1	Thrustwasher	
13	7014709	1	Ring, Retaining Kit (Includes qty 6 Retaining Rings)	
14	7014711	2	Ring, Retaining	
15	7014712	2	Thrustwasher	
16	7014710	1	Spring	
17	7014732	1	Gear, Ring	
18	7014736	1	Secondary Carrier Assembly	
19	7014735	1	Primary Carrier Assembly	
20	7014733	1	Gear, Sun - 15 Teeth	
21	7014722	1	Thrustwasher	
22	7014717	1	Plunger, Disengage	
23	7014718	1	O-Ring	
24	7014719	1	Cover, Hub	
25	7014721	12	Bolt	
26	7014720	12	Flatwasher	
27	7014725	1	Plug, Magnetic	
28	7014726	1	Plug, Pipe	
29	7014723	1	Cover, Disengage	
30	7014724	2	Bolt	
100	7014730	1	Seal Kit (Includes Items 5 & 13)	
101	7014729	1	Bearing and Seal Kit (Includes Items 5, 6, 7, 10, 11 & 13)	

FIGURE 1-9. DRIVE HUB ASSEMBLY (SN 0300075606 through 0300087000)

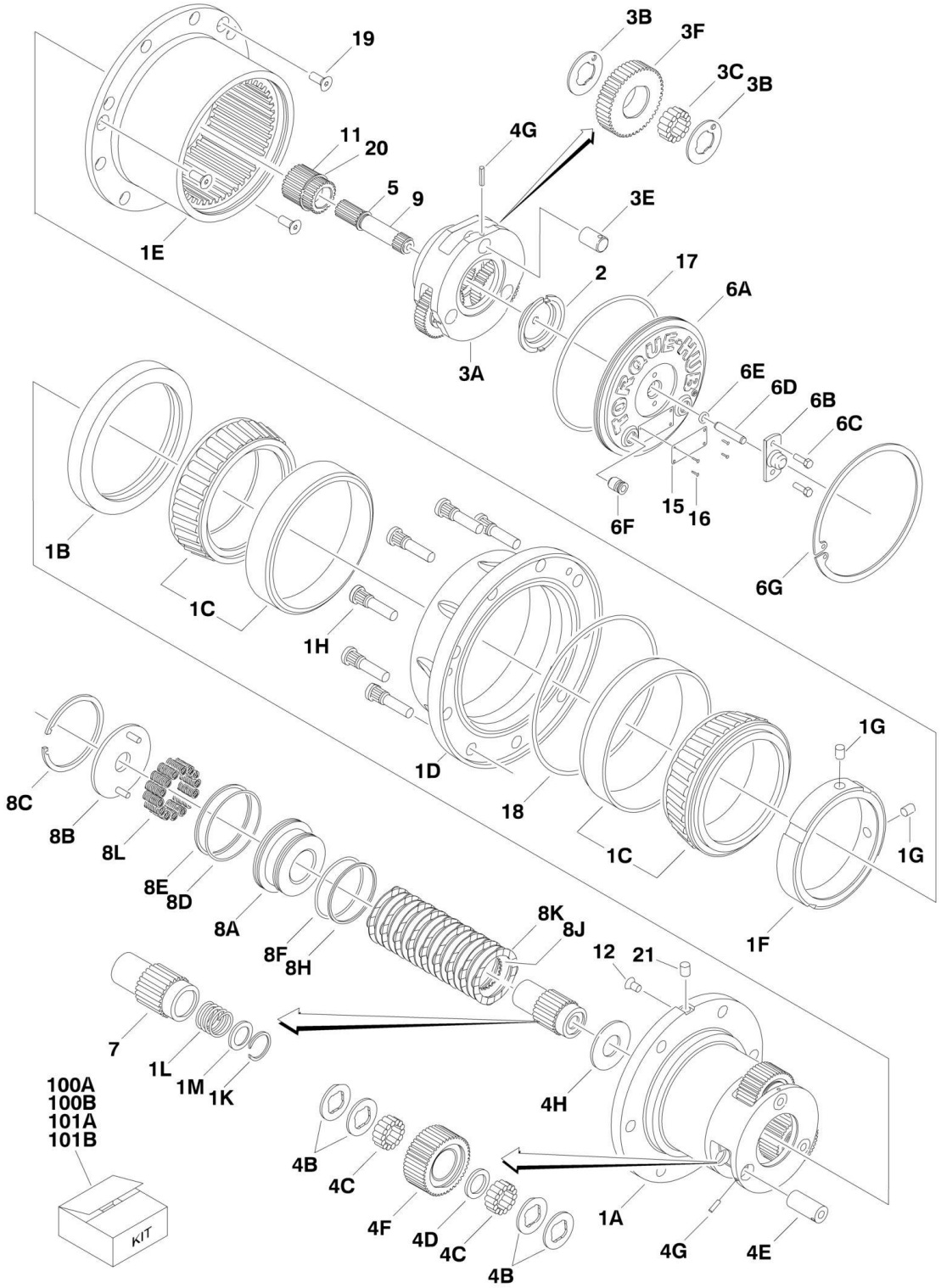

FIGURE 1-9. DRIVE HUB ASSEMBLY (SN 0300075606 through 0300087000)

ITEM	PART NUMBER	QTY	DESCRIPTION	REV
	2780269	Ref	**DRIVE HUB/BRAKE ASSEMBLY**	B
1	See Note	NLA	Spindle/Housing Assembly (Note: Not Available - Purchase p/n 2780269 Complete Replacement. See 1A-1M for Available Components)	
1A	7024729	1	Spindle	
1B	70001119	1	Seal	
1C	7024735	2	Bearing (Includes Cup and Cone)	
1D	2780269	1	Housing (Note: Not Available for Purchase)	
1E	7024730	1	Ring, Gear	
1F	7024744	1	Nut, Bearing	
1G	See Note	NLA	Setscrew 1/4in-28NF x 1/2in (Note: Use Item 100A, 100B, 101A or 101B)	
1H	7024732	9	Stud, Wheel	
1K	7024125	1	Ring, Retaining	
1L	7024124	1	Spring	
1M	7024129	1	Thrustwasher	
2	7024741	1	Thrustwasher	
3	See Note	NLA	Carrier Assembly (Note: Not Available for Purchase. See 3A-3F for Available Components)	
3A	7024725	1	Carrier	
3B	7024127	6	Thrustwasher	
3C	7024733	42	Bearing, Needle	
3E	7024724	3	Shaft, Planet	
3F	7024727	3	Gear, Planet	
4	See Note	NLA	Planet Gear Sub-Assembly (Note: Not Available for Purchase. See 4A-4H for Available Components)	
4B	7024740	12	Thrustwasher	
4C	7024734	84	Bearing, Needle	
4D	7024736	3	Spacer, Thrust	
4E	7024726	3	Shaft, Planet	
4F	7024728	3	Gear, Planet	
4G	7001913	6	Roll Pin	
4H	7024742	1	Thrustwasher	
5	7017027	1	Ring, Retaining	
6	See Note	NLA	Cover Assembly (Note: Not Available for Purchase. See 6A-6G for Available Components)	
6A	7024731	1	Plate, Cover	
6B	7017093	1	Cap, Disengage	
6C	7000216	2	Bolt 1/2in-20NC x 1/2in	
6D	7024739	1	Pin, Dowel	
6E	7017095	1	O-Ring	
6F	7017072	2	Plug, Pipe	
6G	7024738	1	Ring, Retaining	
7	7024722	1	Coupling	
8	See Note	NLA	Brake, Input (Note: Not Available for Purchase. See 8A-8L for Available Components)	
8A	70000782	1	Piston, Brake	
8B	7024743	1	Plate, Pressure	
8C	See Note	NSS	Ring, Retaining (Note: Use Item 101A or 101B)	
8D	See Note	NSS	O-Ring (Note: Use Item 100B or 101A)	
8E	See Note	NSS	Ring, Back-up (Note: Use Item 100B or 101A)	

SECTION 1 - FRAME

ITEM	PART NUMBER	QTY	DESCRIPTION	REV
8F	See Note	NSS	O-Ring (Note: Use Item 100B or 101A)	
8H	See Note	NSS	Ring, Back-up (Note: Use Item 100B or 101A)	
8J	7024764	8	Rotor, Brake	
8K	7024764	9	Stator, Brake	
8L	7024766	AR	Spring, Brake	
9	7024721	1	Shaft, Input	
11	7024723	1	Gear, Sun	
12	See Note	NSS	Plug (Note: Not Available - Purchase Locally)	
15	See Note	NSS	Plate, ID (Not Shown) (Note: Not Available for Purchase)	
16	7000281	4	Screw, Drive	
17	7024134	1	O-Ring	
18	7024744	1	O-Ring	
19	7017022	3	Screw, Countersunk 3/8in-16NC	
20	7024737	1	Ring, Retaining	
21	See Note	NSS	Plug (Note: Not Available - Purchase Locally)	
100		Ref	Seal Kit Options:	
100A	7024744	1	Hub Seal Kit (Includes Items 1B, 1F, 1G, 17, 18 & 19)	
100B	7024765	1	Brake Seal Kit (Includes Items 1G, 8C, 8D, 8E, 8F & 8H)	
101		Ref	Repair Kit Options:	
101A	7024764	1	Brake Lining Kit (Includes Items 1G, 8C, 8D, 8F, 8E, 8H, 8J & 8K)	
101B	7024766	1	Brake Spring Kit (Includes Items 1G, 8C & 8L)	

FIGURE 1-10. DRIVE MOTOR ASSEMBLY (SN 0300068000 through 0300075605)

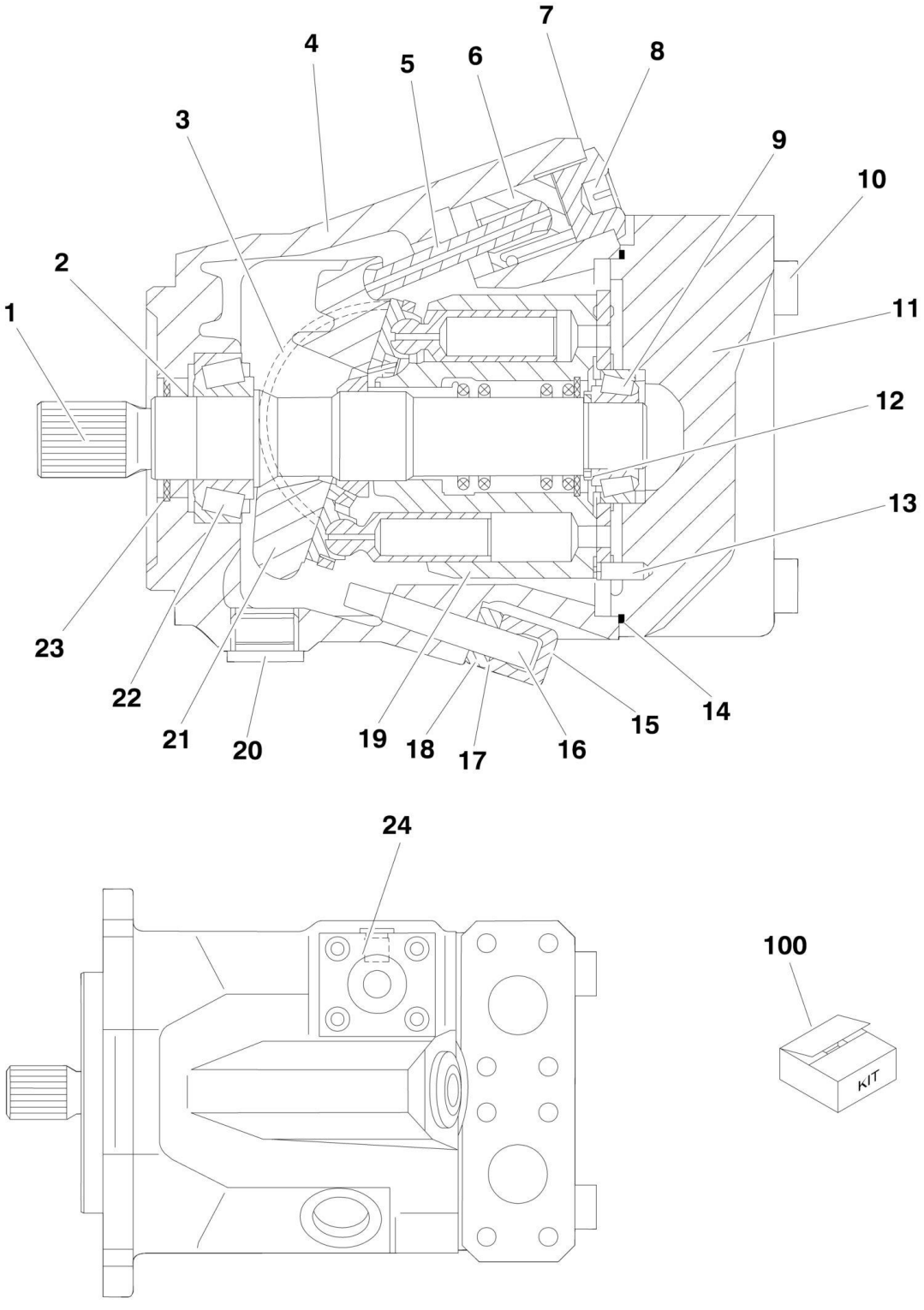

FIGURE 1-10. DRIVE MOTOR ASSEMBLY (SN 0300068000 through 0300075605)

ITEM	PART NUMBER	QTY	DESCRIPTION	REV
	3160204	Ref	**DRIVE MOTOR ASSEMBLY**	A
1	7012701	1	Shaft - 13 Teeth	
2	See Note	NSS	Seal, Shaft (Note: Use Item 100)	
3	7012702	2	Bearing, Cradle	
4	See Note	NSS	Housing (Note: Not Available - Purchase Complete Drive Motor Assembly)	
5	7012703	1	Rod, Piston	
6	7012704	1	Piston, Stroking	
7	See Note	NSS	O-Ring (Note: Use Item 100)	
8	7012705	1	Nut, Adapter	
9	7012706	1	Bearing, Roller	
10	7012707	4	Bolt, Metric Socket Head M12 x 65	
11	7012708	1	Block, Port	
12	7012709	1	Shim	
13	7012710	1	Pin, Dowel M6 x 18	
14	See Note	NSS	O-Ring (Note: Use Item 100)	
15	7012711	1	Nut, Cap M10 x 1	
16	7012712	1	Screw, Adjusting	
17	See Note	NSS	O-Ring (Note: Use Item 100)	
18	7012713	1	Nut, Jam M10 x 1	
19	7012716	1	Rotary Group Assembly	
20	See Note	NSS	Plug (Note: Not Available - Purchase Locally)	
21	7024036	1	Plate, Swash	
22	7012714	1	Bearing, Roller	
23	7012715	1	V-Ring	
24	7012700		Control Plate Assembly **(Prior to SN 0300029852)**	
100	2900788	1	Seal Kit (Includes Items 2, 7, 14, 17 and O-Rings under Item 24)	

FIGURE 1-11. DRIVE MOTOR ASSEMBLY (ORIGINAL EQUIPMENT) (SN 0300075606 through 0300087000)

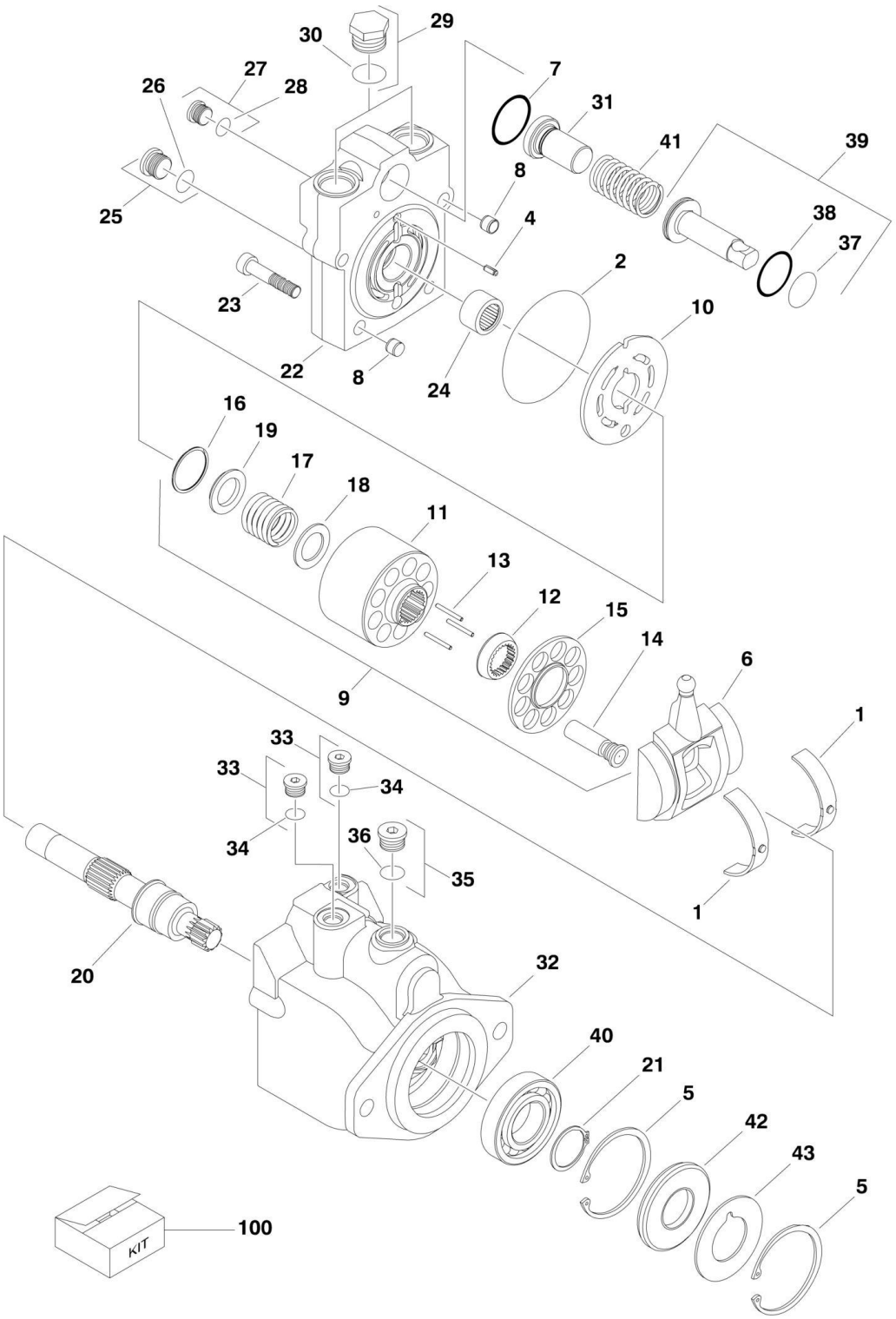

FIGURE 1-11. DRIVE MOTOR ASSEMBLY (ORIGINAL EQUIPMENT) (SN 0300075606 through 0300087000)

ITEM	PART NUMBER	QTY	DESCRIPTION	REV
		Ref	**DRIVE MOTOR ASSEMBLY**	
	3160299	Ref	**Drive Motor Assembly 2WD/2WS**	C
	3160300	Ref	**Drive Motor Assembly 2WD/4WS, 4WD/2WS & 4WD/4WS**	C
		Ref	**Note: Original Equipment Motor p/n 3160299 & p/n 3160300 uses 4 bolts to assemble the motor. Service Replacement Motor p/n 3160349 & p/n 3160350 motors use 5 bolts to assemble the motor. Visually identify component before ordering parts. If equipped with p/n 3160349 or p/n 3160350 refer to next illustration.**	
1	7022302	2	Bearing, Journal	
2	See Note	NSS	O-Ring (Note: Use Item 100)	
3	See Note	NSS	O-Ring (Note: Use Item 100)	
4	7007446	1	Pin	
5	7007438	2	Ring, Retaining	
6	7024861	1	Swash Plate	
7	See Note	NSS	O-Ring (Note: Use Item 100)	
8	7007435	2	Pin	
9	7022320	1	Cylinder Block Kit (Includes Items 11-19)	
10	7024862	1	Plate, Valve	
11	7024863	1	Block, Cylinder	
12	7024864	1	Guide, Slipper Retainer	
13	7021275	3	Pin, Slipper Hold Down	
14	7024865	9	Piston Assembly	
15	7024866	1	Retainer, Slipper	
16	7022311	1	Ring, Retaining	
17	7024867	1	Spring	
18	7024868	1	Washer	
19	7022314	1	Retainer, Spring	
20	7023910	1	Shaft	
21	7007439	1	Ring, Retaining	
22	7024869	1	Cap, End - Axial	
23	7022368	4	Screw	
24	7021249	1	Bearing, Needle	
25	7022321	1	Plug (Includes Item 26)	
26	See Note	NSS	O-Ring (Note: Use Item 25 or 100)	
27	7022318	1	Plug (Includes Item 28)	
28	See Note	NSS	O-Ring (Note: Use Item 27 or 100)	
29	7027419	2	Plug (Includes Item 30)	
30	See Note	NSS	O-Ring (Note: Use Item 29 or 100)	
31		Ref	Seat, Spring Options:	
31	7024853	1	Seal, Spring 2WD/2WS	
31	7022372	1	Seal, Spring 2WD/4WS, 4WD/2WS & 4WD/4WS	
32	7022370	1	Housing	
33	7022318	2	Plug (Includes Item 34)	
34	See Note	NSS	O-Ring (Note: Use Item 33 or 100)	
35	7022321	1	Plug (Includes Item 36)	
36	See Note	NSS	O-Ring (Note: Use Item 35 or 100)	
37	See Note	NSS	O-Ring (Note: Use Item 100)	
38	See Note	NSS	Ring, Seal (Note: Use Item 100)	
39	7024871	1	Piston, Servo	

SECTION 1 - FRAME

ITEM	PART NUMBER	QTY	DESCRIPTION	REV
40	7007437	1	Bearing	
41	7022326	1	Spring	
42	See Note	NSS	Seal, Lip (Note: Use Item 100)	
43	7022371	1	Washer, Support	
100	7022328	1	Seal Kit (Includes Items 2, 3, 7, 26, 28, 30, 34, 36, 37, 38 & 42)	

FIGURE 1-12. DRIVE MOTOR ASSEMBLY (SERVICE REPLACEMENT)

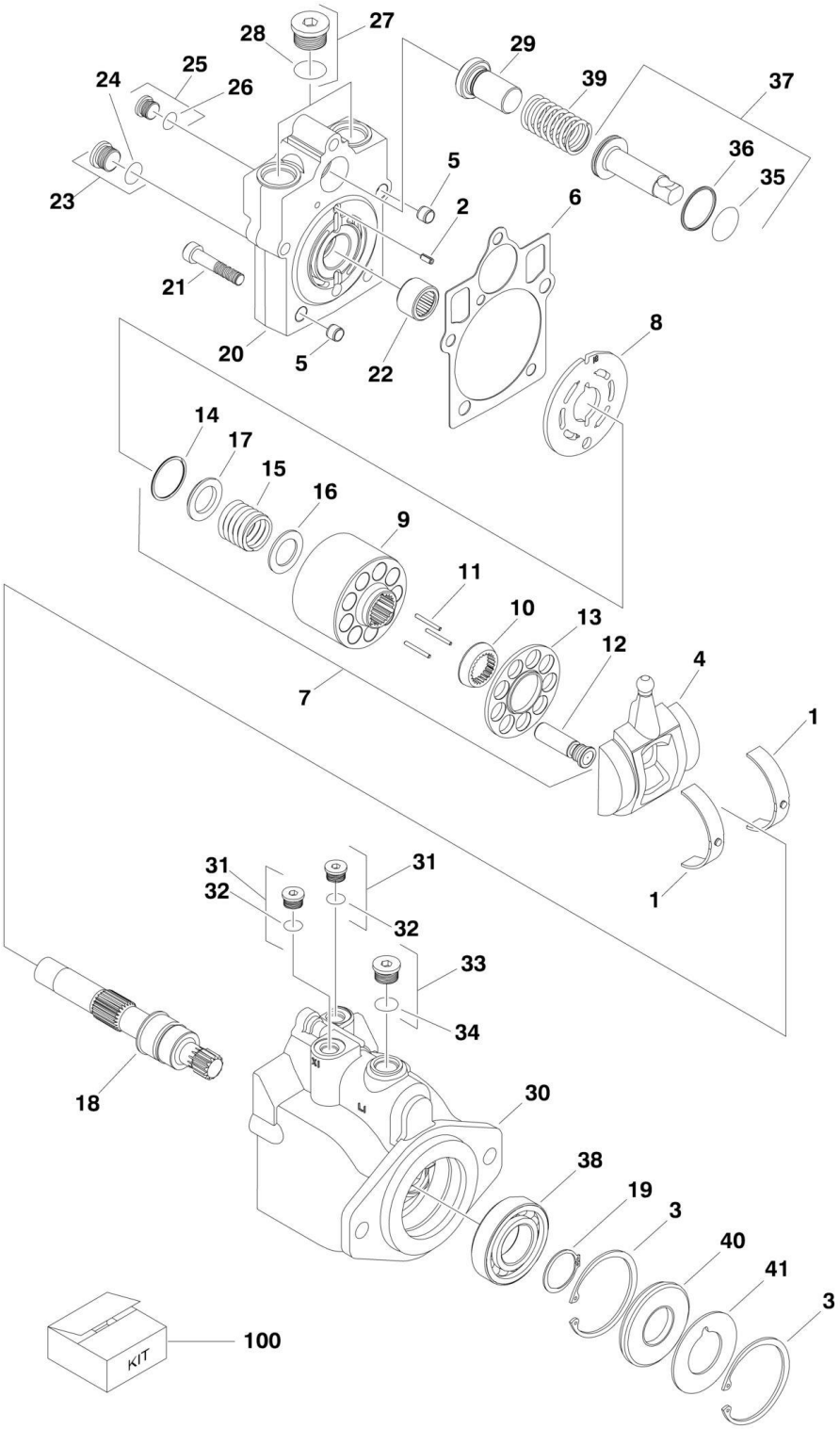

FIGURE 1-12. DRIVE MOTOR ASSEMBLY (SERVICE REPLACEMENT)

ITEM	PART NUMBER	QTY	DESCRIPTION	REV
		Ref	**DRIVE MOTOR ASSEMBLY**	
	3160349	Ref	**Service Replacement Motor for p/n 3120299**	B
	3160350	Ref	**Service Replacement Motor for p/n 3120300**	B
1	7022302	2	Bearing, Journal	
2	7007446	1	Pin	
3	7007438	2	Ring, Retaining	
4	70000794	1	Swash Plate	
5	See Note	NSS	Pin (Note: Not Available for Purchase)	
6	See Note	NSS	Gasket (Note: Use Item 100)	
7	7027740	1	Cylinder Block Kit (Includes Items 9-17)	
8	7024862	1	Plate, Valve	
9	7027740	1	Block, Cylinder	
10	7027740	1	Guide, Slipper Retainer	
11	7021275	3	Pin, Slipper Hold Down	
12	7024865	9	Piston Assembly	
13	7027740	1	Retainer, Slipper	
14	7022311	1	Ring, Retaining	
15	7024867	1	Spring	
16	7022313	1	Washer	
17	7022314	1	Retainer, Spring	
18	7023910	1	Shaft	
19	7007439	1	Ring, Retaining	
20	70000795	1	Cap, End - Axial	
21	7022368	5	Screw	
22	7021249	1	Bearing, Needle	
23	2220886	1	Plug (Includes Item 24)	
24	See Note	NSS	O-Ring (Note: Use Item 23 or 100)	
25	2220883	1	Plug (Includes Item 26)	
26	See Note	NSS	O-Ring (Note: Use Item 25 or 100)	
27	7027419	2	Plug (Includes Item 28)	
28	See Note	NSS	O-Ring (Note: Use Item 27 or 100)	
29		Ref	Seat, Spring Options:	
29	7024853	1	Seat, Spring 2WD/2WS	
29	7022372	1	Seat, Spring 2WD/4WS, 4WD/2WS & 4WD/4WS	
30	See Note	NSS	Housing (Note: Not Available - Purchase Complete Drive Motor Assembly)	
31	2220883	2	Plug (Includes Item 32)	
32	See Note	NSS	O-Ring (Note: Use Item 31 or 100)	
33	2220886	1	Plug (Includes Item 34)	
34	See Note	NSS	O-Ring (Note: Use Item 33 or 100)	
35	See Note	NSS	O-Ring (Note: Use Item 100)	
36	See Note	NSS	Ring, Seal (Note: Use Item 100)	
37	7024871	1	Piston, Servo	
38	7007437	1	Bearing	
39	7022326	1	Spring	
40	See Note	NSS	Seal, Lip (Note: Use Item 100)	
41	7022371	1	Washer, Support	
100	7022328	1	Seal Kit (Includes Items 6, 24, 26, 28, 32, 34, 35, 36 & 40)	

FIGURE 1-13. DRIVE VALVES AND SHIELDS INSTALLATION (FRAME MOUNTED) (SN 0300068000 through 0300075605)

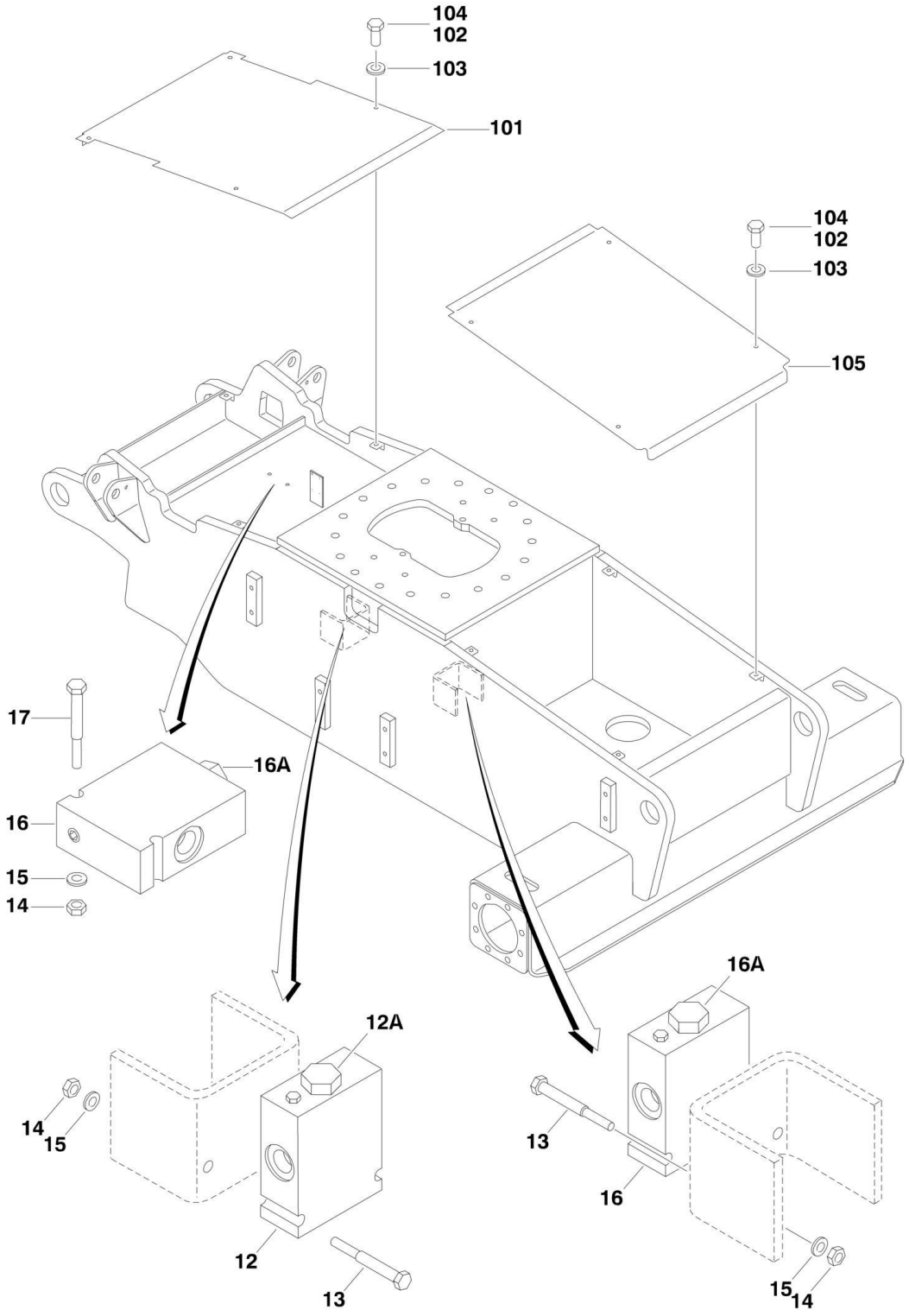

FIGURE 1-13. DRIVE VALVES AND SHIELDS INSTALLATION (FRAME MOUNTED) (SN 0300068000 through 0300075605)

ITEM	PART NUMBER	QTY	DESCRIPTION	REV
		Ref	**DRIVE VALVES INSTALLATION OPTIONS:**	
	0270121	Ref	**Drive Valve Installation 2WD**	3-B
	0270120	Ref	**Drive Valve Installation 4WD**	3-B
12	4640923	1	Valve, Flow Divider	
12A	7017442	1	Cartridge, Flow Divider	
12A	7012980	1	Seal Kit - 7017442 Cartridge	
12A	7012993	1	Plug, Orifice	
13	0641522	AR	Bolt 5/16in-18NC x 2-5/8in	
14	3311505	AR	Locknut 5/16in-18NC	
15	4751500	AR	Flatwasher 5/16in Regular	
16		Ref	Flow Divider Valve Assembly Options:	
16	Not Required	0	Flow Divider Valve Assembly 2WD	
16	4640937	2	Flow Divider Valve Assembly 4WD	
16A	7021657	2	Cartridge (1 Per Valve)	
16A	7012980	2	Seal Kit - 7021657 Cartridge (1 Per Valve)	
16A	7012994	1	Plug, Orifice	
17	0641520	AR	Bolt 5/16in-18NC x 2-1/2in	
18	4060808	3.5 ft /1.06m	Shield, Flex Trim (Not Shown)	
		Ref	**FRAME SHIELDS INSTALLATION**	
	0254856	Ref	**Frame Shields Installation 2WS**	-
	0254857	Ref	**Drive Shields Installation 4WS**	-
101	4060870	1	Shield, Frame - Front	
102	0641608	AR	Bolt, 3/8in - 16NC x 1in	
103	4751600	AR	Flatwasher, 3/8in Regular	
104	0100011	AR	Compound, Locking	
105		Ref	Shield, Frame - Rear	
105	Not Required	0	Shield, Frame - Rear 2WS	
105	4060874	1	Shield, Frame - Rear 4WS	

FIGURE 1-14. DRIVE VALVES AND SHIELDS INSTALLATION (FRAME MOUNTED) (SN 0300075606 through 0300087000)

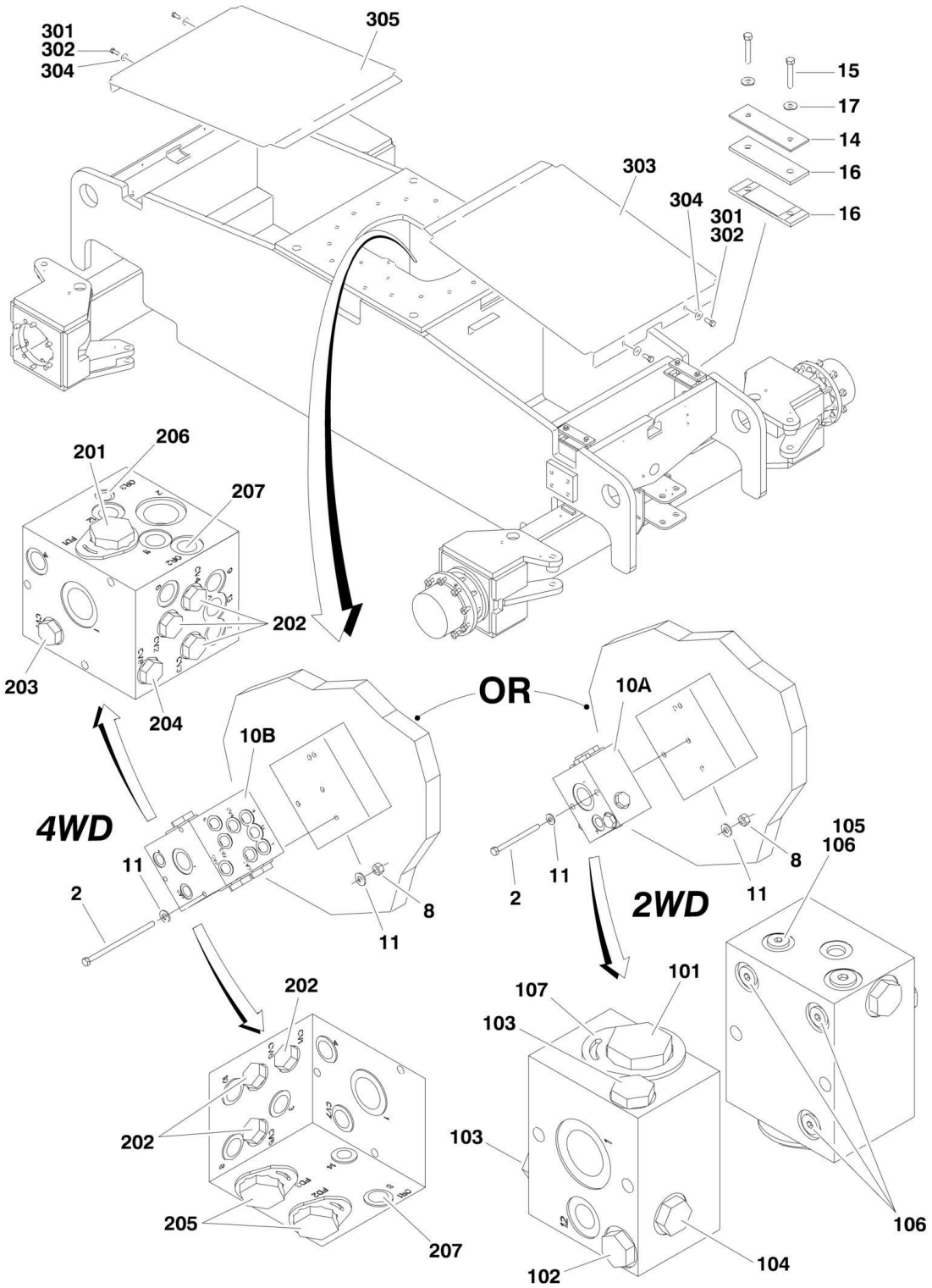

FIGURE 1-14. DRIVE VALVES AND SHIELDS INSTALLATION (FRAME MOUNTED) (SN 0300075606 through 0300087000)

ITEM	PART NUMBER	QTY	DESCRIPTION	REV
		Ref	**DRIVE VALVES INSTALLATION OPTIONS:**	
	0273049	Ref	**Drive Valve Installation 2WD/2WS**	D
	0273367	Ref	**Drive Valve Installation 2WD/4WS**	A
	0273048	Ref	**Drive Valve Installation 4WD/2WS**	F
	0273366	Ref	**Drive Valve Installation 4WD/4WS**	E
2		Ref	Bolt 5/16in-18NC Options:	
2	0641532	2	Bolt 4in Length 2WD	
2	0641552	3	Bolt 6-1/2in Length 4WD	
8	3311505	AR	Locknut 5/16in-18NC	
10		Ref	Flow Divider Valve Assembly Options:	
10A		Ref	2WD Options (See Items 101-107 for Breakdown):	
10A	4641287	1	Flow Divider Valve Assembly **(SN 0300075606 through 0300086891)**	
10A	4641409	NLA	Flow Divider Valve Assembly (Use p/n 1001100120) **(SN 0300086892 through 0300087000)**	
10B		Ref	4WD Options (See Items 201-207 for Breakdown):	
10B	4641280	1	Flow Divider Valve Assembly **(SN 0300075606 through 0300086891)**	
10B	4641410	NLA	Flow Drive Valve Assembly (Use p/n 1001098503) **(SN 0300086892 through 0300087000)**	
11	4711500	AR	Flatwasher 5/16in Thin	
14		Ref	Bar, Clamping	
14	Not Required	0	Bar, Clamping 2WD/2WS	
14	0363012	2	Bar, Clamping 2WD/2WS, 4WD/2WS & 4WD/4WS	
15	0641618	4	Bolt 3/8in-16NC x 2-1/4in	
16	3340911	4	Rubber, Clamp	
17	4751600	4	Flatwasher 3/8in Regular	
		Ref	**FLOW DIVIDER ASSEMBLIES 2WD**	
	4641287	Ref	**Flow Divider Assemblies 2WD (SN 0300075606 through 0300086891)**	C
	4641409	Ref	**Flow Divider Assemblies 2WD (SN 0300086892 through 0300087000)**	A
	1001100120	Ref	**Service Replacement for 4641409**	A
		Ref	**Note: Original Equipment Valve may have been replaced with Service Replacement Valve p/n 1001098503. Identify p/n stamped on Valve before ordering parts.**	
101	7023933	1	Valve, Cartridge (Flow Divider)	
101	7021625	1	Seal Kit - Flow Divider Cartridge	
102	7024850	1	Valve, Cartridge (Check) (Used with p/n 4641287)	
102	7024892	1	Valve, Cartridge (Check) (Used with p/n 4641409 & p/n 1001100120)	
102	7023936	1	Seal Kit - Check Cartridge	
103	7022397	2	Valve, Cartridge (Check)	
103	7022399	2	Seal Kit - Check Cartridge	
104	7023935	1	Valve, Cartridge (Check)	
104	7023936	1	Seal Kit - Check Cartridge	
105	70002063	1	Orifice (Used with p/n 1001100120)	
106	7017406	4	Plug (Used with p/n 1001100120)	
107	70000781	1	Kit, Lock Down (Used with p/n 1001100120)	
		Ref	**FLOW DIVIDER ASSEMBLIES 4WD**	
	4641280	Ref	**Flow Divider Assemblies 4WD (SN 0300075606 through**	C

SECTION 1 - FRAME

ITEM	PART NUMBER	QTY	DESCRIPTION	REV
			0300086891)	
	4641410	Ref	**Flow Divider Assemblies 4WD (SN 0300086892 through 0300087000)**	B
	1001098503	Ref	**Service Replacement for 4641410**	A
201	7023933	1	Valve, Cartridge (Flow Divider)	
201	7021625	1	Seal Kit - Flow Divider Cartridge	
202	7022397	6	Valve, Cartridge (Check) (Used with p/ns 4641280 & 4641410)	
202	70003408	6	Valve, Cartridge (Check) (Used with p/n 1001098503)	
202	7022399	6	Seal Kit - Check Cartridge	
203	7023935	1	Valve, Cartridge (Check)	
203	7023936	1	Seal Kit - Check Cartridge	
204	7024850	1	Valve, Cartridge (Check) (Used with p/n 4641280)	
204	7024892	1	Valve, Cartridge (Check) (Used with p/ns 4641410 & 1001098503)	
204	7023936	1	Seal Kit - Check Cartridge	
205	7023917	2	Valve, Cartridge (Flow Divider)	
205	7021625	2	Seal Kit - Flow Divider Cartridge	
206	70002063	1	Plug, Orifice	
207	70002064	2	Plug, Orifice	
		Ref	**FRAME SHIELDS INSTALLATION**	
	0273067	Ref	**Frame Shields Installation 2WS**	A
	0273362	Ref	**Frame Shields Installation 4WS**	A
301	0100011	AR	Compound, Locking	
302	0641607	AR	Bolt, 3/8in - 16NC x 7/8in	
303	4061058	1	Shield, Frame - Front	
304	4751600	AR	Flatwasher, 3/8in Regular	
305		Ref	Shield, Frame - Rear	
305	Not Required	0	Shield, Frame - Rear 2WS	
305	4061058	1	Shield, Frame - Rear 4WS	

FIGURE 1-15. TOW PACKAGE INSTALLATION (OPTIONAL) (SN 0300068000 through 0300075605)

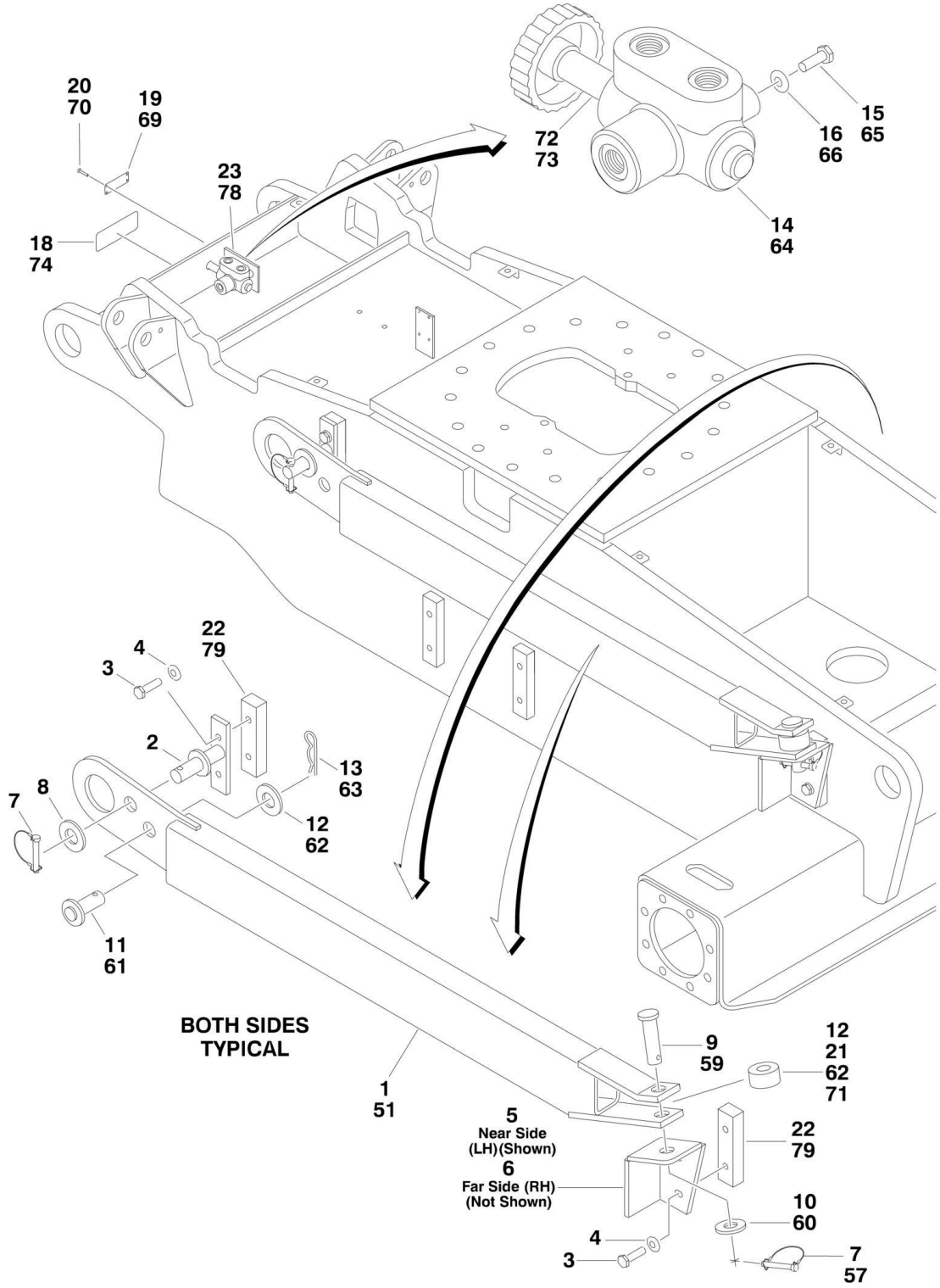

FIGURE 1-15. TOW PACKAGE INSTALLATION (OPTIONAL) (SN 0300068000 through 0300075605)

ITEM	PART NUMBER	QTY	DESCRIPTION	REV
	0255363	Ref	**TOW PACKAGE INSTALLATION - 2WS**	6
1	4845281	2	Tow Bar Weldment	
2	4845283	2	Bracket, Tow Bar Storage (Front)	
3	0641608	8	Bolt 3/8in-16NC x 1in	
4	4711600	8	Flatwasher 3/8in Thin	
5	4845282	1	Bracket, Tow Bar Storage (Rear Left Side)	
6	4845286	1	Bracket, Tow Bar Storage (Rear Right Side)	
7	3421453	4	Snap-Pin	
8	4712600	1	Flatwasher 1in Thin	
9	3422552	2	Pin, Tow Bar	
10	4713400	2	Flatwasher 1-1/2in Thin	
11	3422553	1	Pin, Tow Bar	
12	4713000	2	Flatwasher 1-1/4in Thin	
13	3420592	2	Hairpin	
14	4640261	1	Valve, Tow	
15	0641505	2	Bolt 5/16in-18NC x 5/8in	
16	4711500	2	Flatwasher 5/16in Thin	
18	1702968	1	Decal	
19	3250872	1	Nameplate	
20	3820001	4	Rivet	
21	4566971	2	Spacer, Tube	
22	0362519	4	Bar, Tow Clamp	
23	3539662	1	Plate, Valve Mount	
	0258886	Ref	**TOW PACKAGE Installation - 4WS (OPTIONAL)**	3-B
51	4845281	2	Tow Bar Weldment	
52 to 56	Not Required	0	Not Required	
57	3421453	2	Snap-Pin	
58	Not Required	0	Not Required	
59	3422552	2	Pin, Tow Bar	
60	4713400	2	Flatwasher 1-1/4in Thin	
61	3422553	1	Pin, Tow Bar	
62	4713000	2	Flatwasher 1-1/4in Thin	
63	3420592	1	Hairpin	
64	4640261	1	Valve, Tow	
65	0641505	2	Bolt 5/16in-18NC x 5/8in	
66	4711500	2	Flatwasher 5/16in Thin	
68	Not Required	0	Not Required	
69	3250872	1	Nameplate	
70	3820001	4	Rivet	
71	4566971	2	Spacer, Tube	
72	3841329	1	Rod, Extension	
73	4761600	1	Lockwasher 5/16in	
74	1703403	1	Decal	
75	1703404	2	Decal, Match Arrow (Not Shown)	
76	1703444	1	Decal (Not Shown)	
77	1703450	1	Decal (Not Shown) Options	
78	3539662	1	Plate, Valve Mount	
79	0362519	4	Bar	

FIGURE 1-16. TOW PACKAGE INSTALLATION (OPTIONAL) (SN 0300075606 through 0300087000)

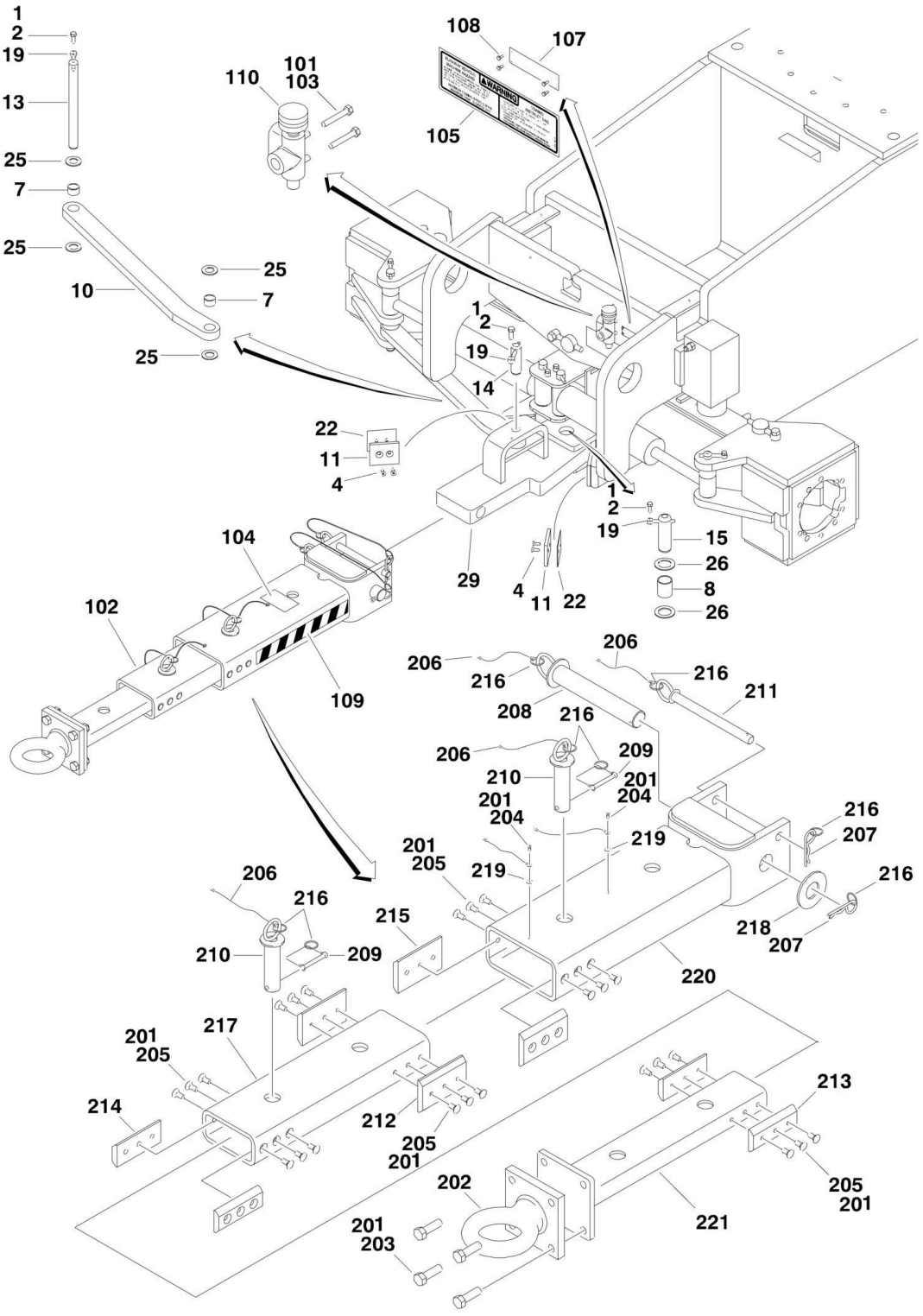

FIGURE 1-16. TOW PACKAGE INSTALLATION (OPTIONAL) (SN 0300075606 through 0300087000)

ITEM	PART NUMBER	QTY	DESCRIPTION	REV
		Ref	**TOW PACKAGE INSTALLATION**	
	0273422	Ref	**Tow Package Installation 2WD**	A
	0273394	Ref	**Tow Package Installation 4WD**	A
1	0100011	AR	Compound, Locking	
2	0641608	3	Bolt 3/8in-16NC x 1in	
4	0741607	4	Screw, Countersunk 3/8in-16NC x 7/8in	
7	0962292	2	Bearing	
8	0962348	1	Bearing	
10	3010125	1	Link, Steer	
11	3340966	2	Pad, Stop	
13	3422567	1	Pin	
14	3422813	1	Pin	
15	3422848	1	Pin	
19	3841143	3	Keeper, Pin	
22	4071059	2	Shim	
25	4740111	3	Thrustwasher	
26	4740155	2	Thrustwasher	
29	4846935	1	Bar, Pivot	
	0273398	Ref	**TOW BAR INSTALLATION**	B
101	0100011	AR	Compound, Locking	
102	0270528	1	Bar Assembly (See Items 201-221 for Breakdown)	
103	0641516	2	Bolt 5/16in-18NC x 2in	
104	1704578	2	Decal - Crushing	
105	1705090	1	Decal - Towing Instructions	
107	3250872	1	Nameplate - Steer/Tow Select Valve	
108	3940604	4	Screw, Self-Tapping #6-32NF x 1/2in	
109	4420051	2 ft/.61m	Tape, Safety	
110	4640281	1	Valve, Select	
	0270528	Ref	**TOW BAR ASSEMBLY**	A
201	0100011	AR	Compound, Locking	
202	0362910	1	Pintle, Draw Eye	
203	0642010	4	Bolt 5/8in-11NC x 1-1/4in	
204	0721004	2	Screw, Hex Machine	
205	0741607	24	Screw, Countersunk 3/8in-16NC x 7/8in	
206	1060584	6	Cable, Lanyard	
207	3420372	2	Pin, Cotter	
208	3420447	1	Pin, Towing	
209	3421565	2	Pin, Snap	
210	3422841	2	Pin	
211	3422847	1	Pin	
212	3572009	2	Plate, Slide Stop	
213	3572010	2	Plate, Slide Stop	
214	3572011	2	Plate, Slide Stop	
215	3572012	2	Plate, Slide Stop	
216	3760170	8	Ring, Split	
217	4568133	1	Tube, Tow Bar	
218	4740036	1	Flatwasher	
219	4751000	2	Flatwasher #10	
220	4846295	1	Tow Bar Attach Weldment	
221	4846296	1	Pintle Attach Weldment	

SECTION 2 - TURNTABLE

FIGURE 2-1. CONTROL VALVES INSTALLATIONS

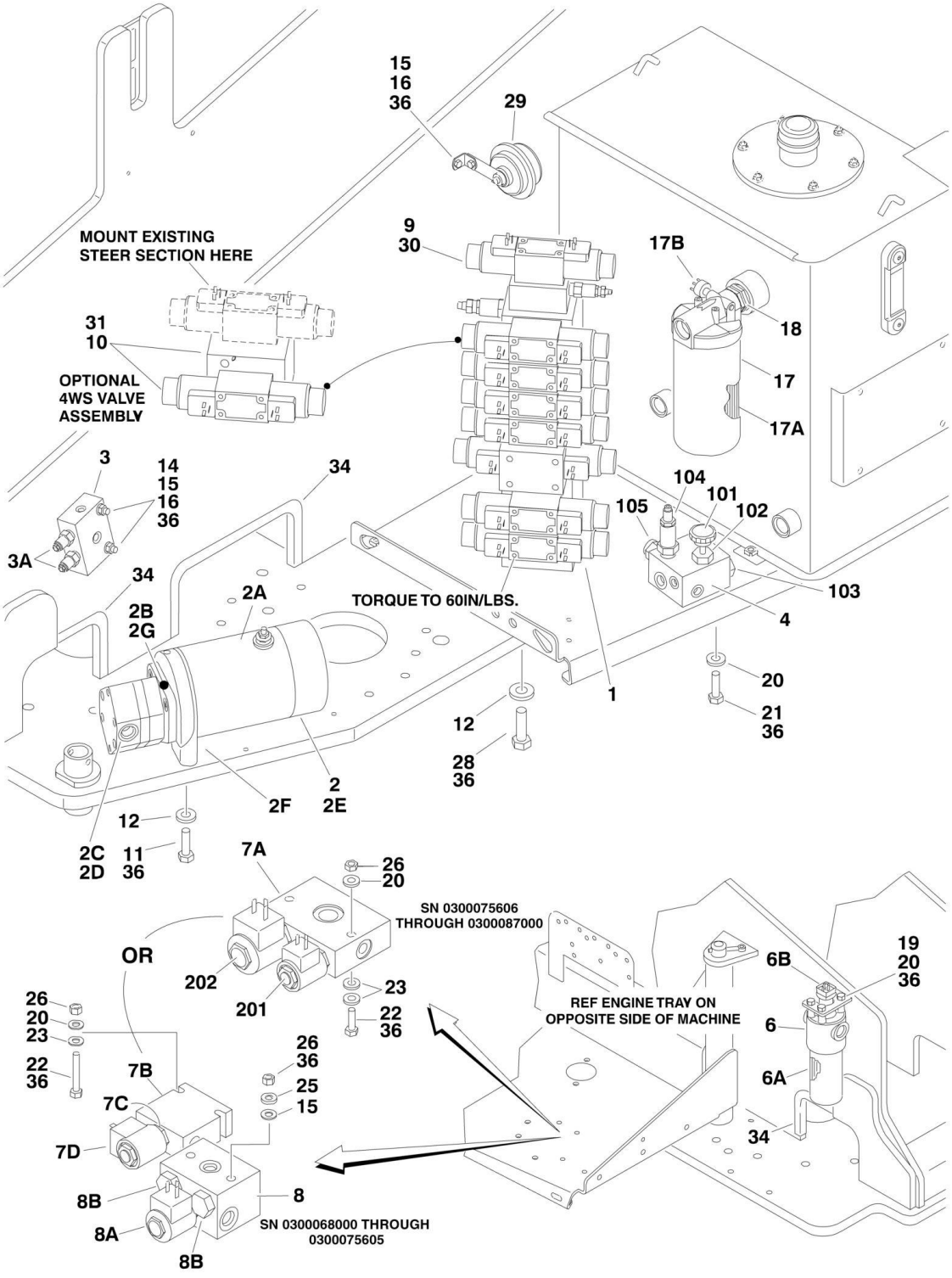

FIGURE 2-1. CONTROL VALVES INSTALLATIONS

ITEM	PART NUMBER	QTY	DESCRIPTION	REV
		Ref	**VALVES INSTALLATIONS**	
		Ref	**Valves Installations (SN 0300068000 through 0300075605)**	
	0255315	Ref	**Valves Installations 600S 2WS**	13
	0255446	Ref	**Valves Installations 600S 4WS**	12
	0255445	Ref	**Valves Installations 600SJ 2WS & 660SJ 2WS**	14
	0255447	Ref	**Valves Installations 600SJ 4WS & 660SJ 4WS**	12
		Ref	**Valves Installations (SN 0300075606 through 0300084826)**	
	0273082	Ref	**Valves Installations 600S 2WS**	3
	0273087	Ref	**Valves Installations 600S 4WS**	3
	0273086	Ref	**Valves Installations 600SJ 2WS & 660SJ 2WS**	3
	0273088	Ref	**Valves Installations 600SJ 4WS & 660SJ 4WS**	3
		Ref	**Valves Installations (SN 0300084827 through 0300087000)**	
	0274316	Ref	**Valves Installations 600S 2WS**	1
	0274317	Ref	**Valves Installations 600S 4WS**	1
	0274318	Ref	**Valves Installations 600SJ 2WS & 660SJ 2WS**	1
	0274319	Ref	**Valves Installations 600SJ 4WS & 660SJ 4WS**	1
1	4641096	1	Main Control Valve Assembly (See MAIN CONTROL VALVE ASSEMBLY for Breakdown)	
2	3600243	NLA	Auxiliary Pump Assembly (Use p/n 3600379) **(SN 0300068000 through 0300070772)**	
2	3600365	1	Auxiliary Pump Assembly **(SN 0300070773 through 0300087000)**	
2A	7013755	1	Replacement Motor (Pump p/n 3600243)	
2A	7013799	1	Brush Kit - 7013755	
2A	7004248	1	Replacement Motor without Endhead (Pump p/n 3600365/3600379)	
2A	7004290	1	Replacement Motor with Endhead (was p/n 7011067) (Pump p/n 3600365/3600379)	
2A	7011065	1	Brush Kit	
2B	7013711	1	Coupling (Pump p/n 3600243)	
2B	7011063	1	Coupling (Pump p/n 3600365/3600379)	
2C	7013796	1	Replacement Pump (Pump p/n 3600243)	
2C	See Note	1	Seal Kit (Purchase Individual Pieces) (Note: Not Available for Purchase)	
2C	7016700	1	Seal, Oil	
2C	7016701	1	O-Ring	
2C	7016702	1	O-Ring	
2C	7011064	1	Replacement Pump (Pump p/n 3600365/3600379)	
2C	7011066	1	Seal Kit	
2D	7022203	4	Bolt (Pump to Bracket) (Pump p/n 3600243)	
2D	7011043	4	Bolt (Pump to Endhead) (Pump p/n 3600365/3600379)	
2E	7016744	2	Bolt (Motor to Bracket) (Pump p/n 3600243)	
2E	See Note	2	Bolt (Motor to Endhead) (Pump p/n 3600365/3600379) (Note: Not Available for Purchase)	
2F	7011062	1	Endhead (Pump p/n 3600365/3600379)	
2G	7011044	1	Gasket (Pump p/n 3600365/3600379)	
3	4640908	1	Counterbalance Valve Assembly **(SN 0300068000 through 0300084827)**	
3A	7011328	2	Cartridge, Counterbalance	
3A	2900770	2	Seal, Kit - 7011328 Cartridge	
4	4640931	1	Manual Descent Valve Assembly (See Items 101-105 for Breakdown) **(SN 0300068000 through 0300070975)**	

ITEM	PART NUMBER	QTY	DESCRIPTION	REV
6		Ref	Hydraulic Pressure Filter Assembly Options:	
6	2120146	1	Hydraulic Pressure Filter Assembly **(SN 0300068000 through 0300084826)**	
6	2120209	1	Hydraulic Pressure Filter Assembly **(SN 0300084827 through 0300087000)**	
6A	2120150	1	Element, Filter (Used with p/n 2120146)	
6A	2120210	1	Element, Filter (Used with p/n 2120209)	
6B	7016312	1	Indicator, Clogged (Used with p/n 2120146)	
6B	7020020	1	Indicator, Clogged (Used with p/n 2120209)	
6C	70000934	1	O-Ring, Filter Bowl (Not Shown - Used with p/n 2120209)	
7		Ref	Valve Assembly (Brake) Options:	
7A	4641108	1	Valve Assembly (Brake) (See Items 201-202 for Breakdown) **(SN 0300075606 through 0300087000)**	
7B	4640907	1	Valve Assembly (Brake) **(SN 0300068000 through 0300075606)**	
7C	7012941	1	Cartridge without Coil	
7C	7012907	1	Seal Kit - 7012941 Cartridge	
7D	7012944	1	Coil	
8	4640906	1	Valve Assembly (Two Speed Only) **(SN 0300068000 through 0300075606)**	
8A	7012974	1	Cartridge with Coil	
8A	7012907	1	Seal Kit - 7012974 Cartridge	
8B	7012944	1	Coil	
8C	See Note	2	Cartridge, Check (Note: Not Available for Purchase)	
8C	7012972	1	Seal Kit	
9		Ref	Valve Kit (Articulating Jib) Options:	
9	Not Required	0	Valve Kit (Articulating Jib) 600S	
9	4640921	1	Valve Kit (Articulating Jib) 600SJ & 660SJ (See ACCESSORY VALVE ASSEMBLY for Breakdown)	
10		Ref	4WS Valve Kit Options:	
10	Not Required	0	2WS Machines	
10	4640922	1	4WS Machines	
10	7012774	1	Control Valve Assembly	
10	7018912	2	Nut, Coil	
10	7012772	2	Coil	
10	7024014	2	Pipe, Pole	
10	7012773	1	Seal Kit - 7012774 Control Valve	
10	7017420	2	Valve, Cartridge	
10	7012998	2	Seal Kit - 7017420 Cartridge	
11	0641613	2	Bolt 3/8in-16NC x 1-5/8in	
12	4711600	5	Flatwasher 3/8in Thin	
14		Ref	Hardware Options:	
14	4891800	2	Flatwasher 1/2in Hardened **(SN 0300068000 through 0300074783)**	
14	0641514	2	Bolt 5/16in-18NC x 1-3/4in **(SN 0300074784 through 0300075605)**	
14	4891800	2	Flatwasher 1/2in Hardened **(SN 0300075606 through 0300087000)**	
15	4711500	AR	Flatwasher 5/16in Thin	
16		Ref	Hardware Options:	
16	3311501	3	Nut 5/16in-18NC **(SN 0300068000 through 0300074783)**	
16	0641506	1	Bolt 5/16in-18NC x 3/4in **(SN 0300074784 through 0300075605)**	
16	3311501	3	Nut 5/16in-18NC **(SN 0300075606 through 0300087000)**	

ITEM	PART NUMBER	QTY	DESCRIPTION	REV
17	2120145	1	Return Filter Assembly **(SN 0300068000 through 0300084826)**	
17	2120164	1	Return Filter Assembly **(SN 0300084827 through 0300087000)**	
17A	2120149	1	Element, Filter (Used with p/n 2120146 & p/n 2120164)	
17B	7016313	1	Indicator Switch, Clogged (Used with p/n 2120145)	
17B	7020021	1	Indicator Switch, Clogged (Used with p/n 2120164)	
18	2220893	1	Fitting, Adapter	
19	0651406	AR	Bolt 1/4in-28NF x 3/4in	
20	4711400	AR	Flatwasher 1/4in Thin	
21	0651406	3	Bolt 1/4in-28NF x 3/4in **(SN 0300068000 through 0300070975)**	
22	0641418	2	Bolt 1/4in-20NC x 2-1/4in	
23	4891400	4	Flatwasher 1/4in Hardened **(SN 0300068000 through 0300075606)**	
24	0641508	2	Bolt 5/16in-18NC x 1in **(SN 0300068000 through 0300075606)**	
25	4891500	2	Flatwasher 5/16in Hardened **(SN 0300068000 through 0300075606)**	
26	3311405	2	Locknut 1/4in-20NC	
28	0641608	3	Bolt 3/8in-16NC x 1in	
29	0140001	1	Horn	
30		Ref	Harness Assembly (Jib Control) Options (Not Shown - See ELECTRICAL SECTION for Breakdown):	
30	Not Required	0	Harness Assembly (Jib Control) 600S	
30	4921927	1	Harness Assembly (Jib Control) 600SJ & 660SJ	
31		Ref	Harness Assembly (4WS Control) Options: (Not Shown - See ELECTRICAL SECTION for Breakdown):	
31	Not Required	0	2WS Machines	
31	4921928	1	4WS Machines	
34	4060918	40 in/10m	Flex-Trim	
36	0100011	AR	Compound, Locking	
	4640931	Ref	**MANUAL DESCENT VALVE ASSEMBLY (SN 0300068000 through 0300070975)**	
101	7012961	1	Knob	
102	7012954	1	Cartridge, Needle Valve	
102	7012953	1	Seal Kit - 7012954 Valve	
103	7012975	1	Cartridge, Check Valve	
103	7012540	1	Seal Kit - 7012975 Valve	
104	7012976	1	Cartridge, Relief Valve	
104	7012971	1	Seal Kit - 7012971 Valve	
105	7012977	1	Cartridge, Pilot Valve	
105	7012918	1	Seal Kit - 7012977 Valve	
	4641108	Ref	**VALVE ASSEMBLY (DUAL SELECT BRAKE/2 SPEED)**	B
201	7012941	1	Cartridge without Coil	
201	7010543	1	Seal Kit - 7012941 Cartridge	
201	7012944	1	Coil	
202	7012995	1	Cartridge without Coil	
202	7012518	1	Seal Kit - 7012995 Cartridge	
202	7012943	1	Coil	

FIGURE 2-2. MAIN CONTROL VALVE ASSEMBLY

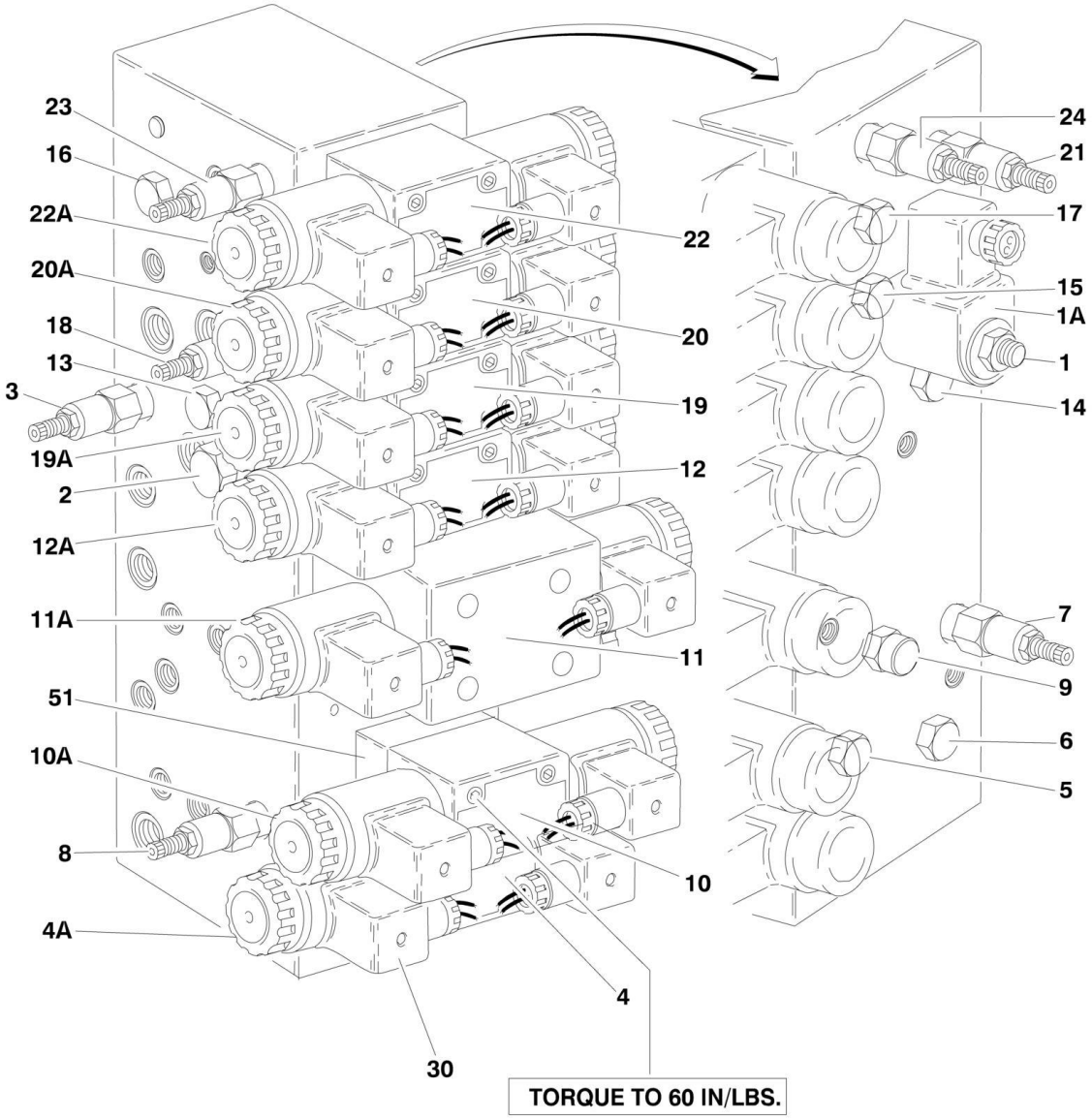

FIGURE 2-2. MAIN CONTROL VALVE ASSEMBLY

ITEM	PART NUMBER	QTY	DESCRIPTION	REV
	4641096	Ref	**MAIN CONTROL VALVE ASSEMBLY**	A
1	7017410	1	Cartridge, Without Coil	
1	7012967	1	Seal Kit - 7017410 Cartridge	
1A	7012944	1	Coil	
2	7017464	1	Cartridge, Pressure Sensing	
2	7012518	1	Seal Kit	
3	7012912	1	Cartridge (Main Relief)	
3	7012998	1	Seal Kit	
4	70001976	1	Control Valve Assembly (Platform Level) (was p/n 7012770)	
4	7012773	1	Seal Kit	
4	7018942	4	Capscrew #10 x 2	
4A	7012772	2	Coil	
5	7012914	1	Cartridge, Check Valve	
5	7012918	1	Seal Kit - 7012914 Cartridge	
6	7012914	1	Cartridge, Check Valve	
6	7012918	1	Seal Kit - 7012914 Cartridge	
7	7012912	1	Cartridge, Relief Valve (Platform Level Backward)	
7	7012998	1	Seal Kit - 7012912 Cartridge	
8	7012912	1	Cartridge, Relief Valve (Platform Level Forward)	
8	7012998	1	Seal Kit - 7012912 Cartridge	
9	7012989	1	Cartridge, Flow Control	
9	7012953	1	Seal Kit - 7012989 Cartridge	
10	70001976	1	Control Valve Assembly (Platform Rotate) (was p/n 7012770)	
10	7012773	1	Seal Kit	
10	7018986	4	Capscrew #10 x 3-1/2	
10A	7012772	2	Coil	
11	70000579	1	Control Valve Assembly (Upper Tele) (was p/n 7012766)	
		Ref	**Note: Refer to Vendor P/N on Valve Nameplate before ordering Parts. P/N 7012766 is RR00567495 or R900567495. P/N 70000579 is R900930080.**	
11		Ref	Seal Kit Options:	
11	7012769	1	Seal Kit - 7012766 Valve	
11	70000583	1	Seal Kit - 70000579 Valve	
11	7018951	4	Capscrew 1/4 x 1-1/2	
11A		Ref	Coil Options:	
11A	7012772	1	Coil, 7012766 Valve (was p/n 7012768)	
11A	70000582	1	Coil, 70000579 Valve	
11A		Ref	Nut, Coil Options:	
11A	7018912	1	Nut, Coil 7012766 Valve	
11A	70000580	1	Nut, Coil 70000579 Valve	
12	7012775	1	Control Valve Assembly (Flow Control)	
12	7012773	1	Seal Kit	
12	7018942	4	Capscrew #10 x 2	
12A	7012772	2	Coil	
12A	7018912	2	Nut	
12A	7024015	2	Pipe, Pole	
13	7010542	1	Cartridge, Shuttle	
13	7010543	1	Seal Kit - 7010542 Cartridge	
14	7010542	1	Cartridge, Shuttle	
14	7010543	1	Seal Kit - 7010542 Cartridge	

SECTION 2 - TURNTABLE

ITEM	PART NUMBER	QTY	DESCRIPTION	REV
15	7010542	1	Cartridge, Shuttle	
15	7010543	1	Seal Kit - 7010542 Cartridge	
16	7010542	1	Cartridge, Shuttle	
16	7010543	1	Seal Kit - 7010542 Cartridge	
17	7010542	1	Cartridge, Shuttle	
17	7010543	1	Seal Kit - 7010542 Cartridge	
18	7012912	1	Cartridge, Relief Valve (Upper Lift Down)	
18	7012998	1	Seal Kit - 7012912 Cartridge	
19	7012775	1	Control Valve Assembly (Upper Lift)	
19	7012773	1	Seal Kit	
19	7018942	4	Capscrew #10 x 2	
19A	7012772	2	Coil	
19A	7018912	2	Nut	
19A	7024015	2	Pipe, Pole	
20	7012775	1	Control Valve Assembly (Swing)	
20	7012773	1	Seal Kit	
20	7018942	4	Capscrew #10 x 2	
20A	7012772	2	Coil	
20A	7018912	2	Nut	
20A	7024015	2	Pipe, Pole	
21	7012912	1	Cartridge, Relief Valve (Swing)	
21	7012998	1	Seal Kit - 7012912 Cartridge	
22	7012774	1	Control Valve Assembly (Steer)	
22	7012773	1	Seal Kit	
22	7018942	4	Capscrew #10 x 2	
22A	7012772	2	Coil	
22A	7018912	2	Nut	
22A	7024014	2	Pipe, Pole	
23	7012912	1	Cartridge, Relief Valve (Steer Left)	
23	7012998	1	Seal Kit - 7012912 Cartridge	
24	7012912	1	Cartridge, Relief Valve (Steer Right)	
24	7012998	1	Seal Kit - 7012912 Cartridge	
30	4460499	15	Connector, Din with Diode (Part of Valve Harness)	
	2901763	Ref	**ROTATE SANDWICH VALVE KIT**	A
51	7021310	1	Block, Valve	

FIGURE 2-3. ACCESSORY VALVE ASSEMBLY

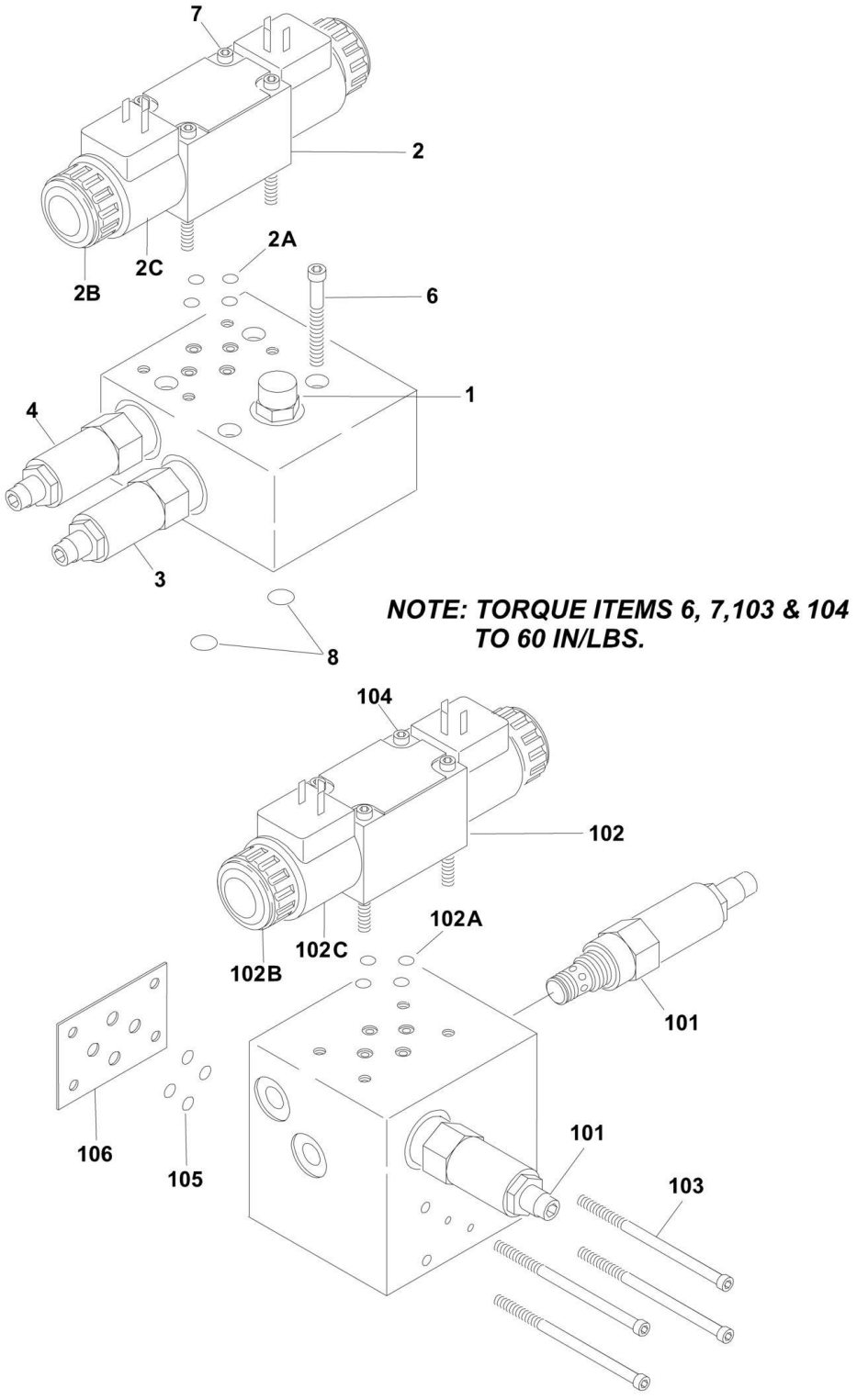

FIGURE 2-3. ACCESSORY VALVE ASSEMBLY

ITEM	PART NUMBER	QTY	DESCRIPTION	REV
		Ref	**ACCESSORY VALVE ASSEMBLIES**	
	4640921	Ref	**ARTICULATING JIB VALVE ASSEMBLY**	D
1	7012965	1	Cartridge, Flow Control	
1	7012953	1	Seal Kit - 7012965 Cartridge	
2	70001976	1	Directional Control Valve Assembly (was p/n 7012770)	
2	7012773	1	Seal Kit	
2A	7018945	4	O-Ring	
2B	7018912	2	Nut	
2C	7012772	2	Coil	
3	7017421	1	Cartridge, Relief	
3	7012998	1	Seal Kit - 7017421 Cartridge	
4	7017422	1	Cartridge, Relief	
4	7012998	1	Seal Kit - 7017422 Cartridge	
5	4460499	2	Connector, DIN with Diode (Not Shown - Part of Valve Harness)	
6	7012777	4	Capscrew, Socket Head 5/16in-18NC x 2-1/4in (Used to Mount Valve Assembly)	
7	7018942	4	Capscrew, Socket Head #10-24NC x 2in	
8	7012776	2	O-Ring (Used to Mount Main Valve)	
	4640922	Ref	**4WS VALVE ASSEMBLY**	B
101	7017420	1	Cartridge, Relief	
101	7012998	1	Seal Kit - 7017420 Cartridge	
102	7012774	1	Directional Control Valve Assembly	
102	7012773	1	Seal Kit	
102A	7018945	4	O-Ring	
102B	7018912	2	Nut	
102C	7012772	2	Coil	
103	7018946	4	Capscrew, Socket Head #10-24NC x 5in (Used to Mount Main Valve)	
104	7018942	4	Capscrew, Socket Head #10-24NC x 2in	
105	7018948	4	O-Ring (Used to Mount Main Valve)	
106	7018947	1	Plate, O-Ring	

FIGURE 2-4. SWING DRIVE, TURNTABLE BEARING AND LOCK INSTALLATIONS

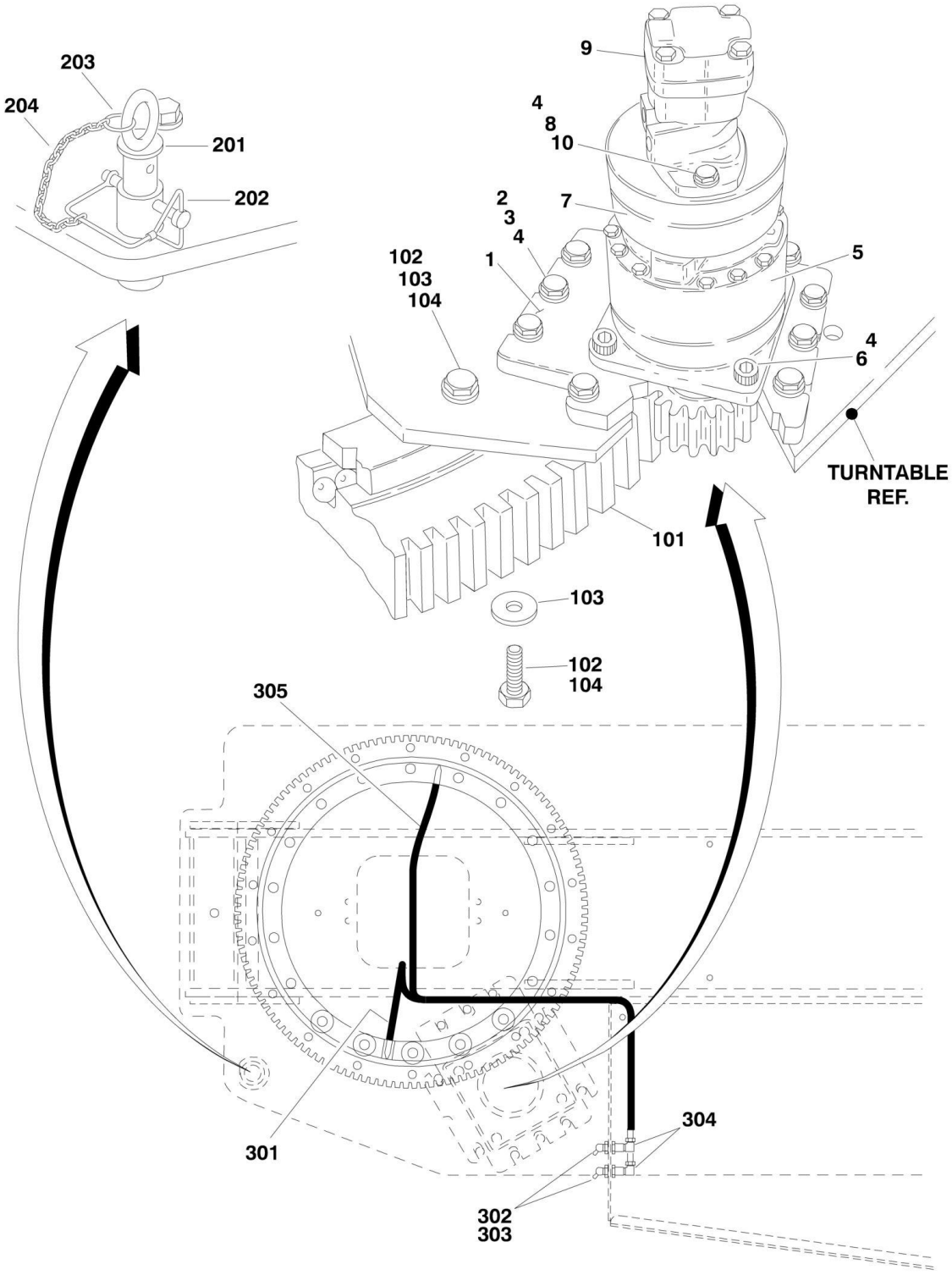

FIGURE 2-4. SWING DRIVE, TURNTABLE BEARING AND LOCK INSTALLATIONS

ITEM	PART NUMBER	QTY	DESCRIPTION	REV
	0270329	Ref	**SWING DRIVE INSTALLATION**	A
1	3537318	1	Plate, Swing Drive Mounting	
2	0642018	10	Bolt 5/8in-11NC x 2-1/4in	
3	4892000	10	Flatwasher 5/8in Hardened	
4	0100011	AR	Compound, Locking	
5	2780205	1	Hub Assembly (See SWING HUB ASSEMBLY for Breakdown)	
6	3932224	2	Capscrew 3/4in-10NC x 1-1/2in	
7	0920119	1	Brake Assembly	
7	7007933	2	Gasket, Mounting Face	
7	7007990	2	O-Ring, Mounting Face	
7	7018612	1	Repair Kit - 0920119 Brake	
		Ref	**Note: Other then Gasket and O-Ring, Repair Kit is only part available.**	
8	0681836	2	Bolt 1/2in-13NC x 4-1/2in	
9		Ref	Motor Assembly Options (See SWING MOTOR ASSEMBLY for Breakdown): (Note: Either p/n may be used as replacement)	
9	3160273	NLA	White Roller Stator Motor (Original Equipment) (Use p/n 1001110169)	
9	1001110169	1	Parker Motor (Service Replacement)	
10	4891800	2	Flatwasher 1/2in Hardened	
	0254798	Ref	**TURNTABLE BEARING INSTALLATION**	1-A
101	0440207	1	Bearing, Turntable	
102	0682016	36	Bolt 5/8in - 11NC x 2in (Grade 8)	
103	4892000	36	Flatwasher 5/8in Hardened	
104	0100019	AR	Compound, Locking	
	0239585	Ref	**TURNTABLE LOCK INSTALLATION**	B
201	3421627	1	Pin	
202	3421565	1	Pin, Snap	
203	3760170	2	Ring, Quick Release	
204	1260017	9 in/23cm	Chain	
	0255316	Ref	**REMOTE BEARING LUBE INSTALLATION**	3
301	2751095	1	Hose, Grease **(SN 0300068000 through 0300070975)**	
302	2180344	AR	Fitting, Bulkhead	
303	2160003	AR	Fitting, Grease 45	
304	2220063	2	Fitting, 90	
305	2751032	1	Hose, Grease	

FIGURE 2-5. SWING HUB ASSEMBLY

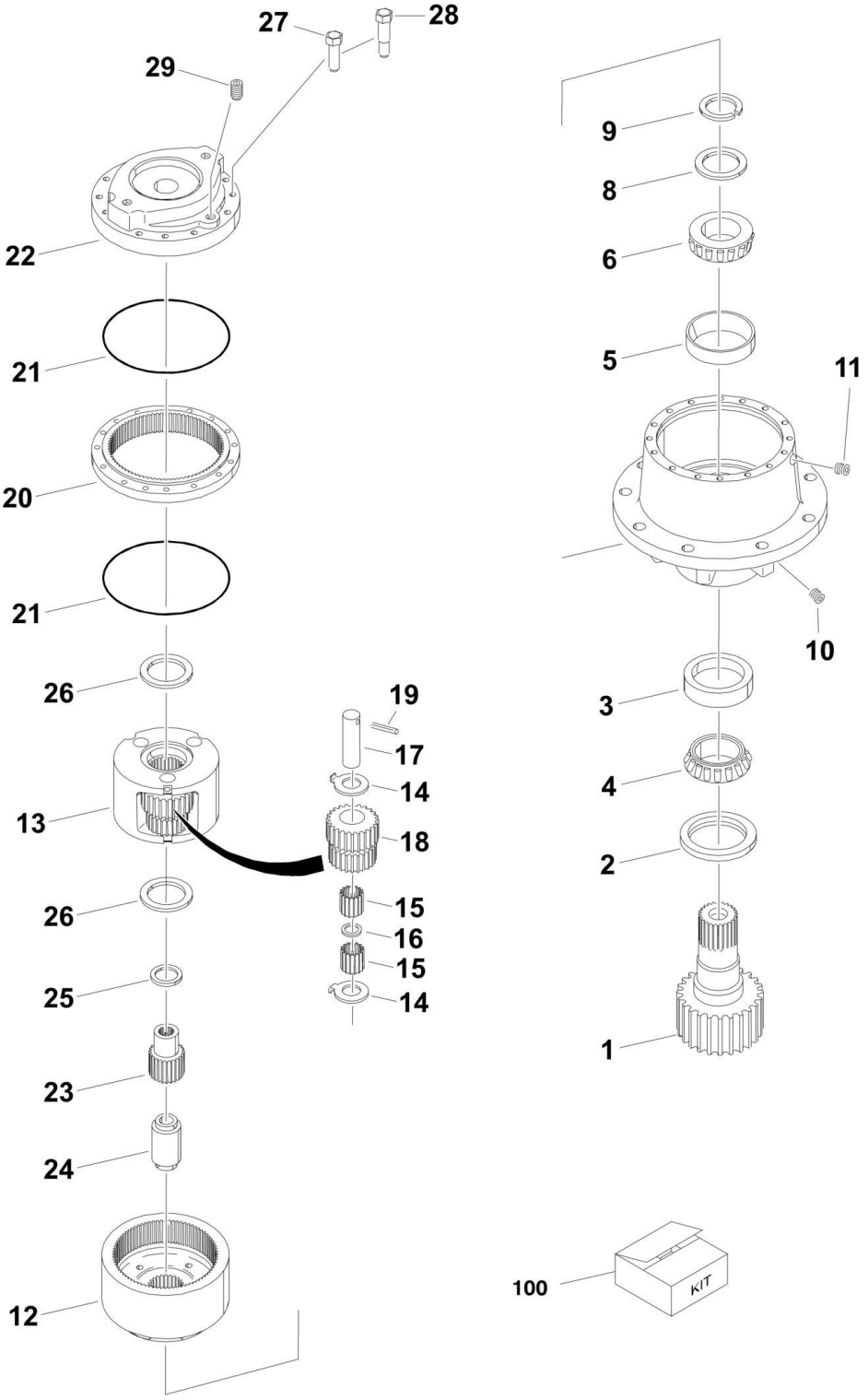

FIGURE 2-5. SWING HUB ASSEMBLY

ITEM	PART NUMBER	QTY	DESCRIPTION	REV
	2780205	Ref	**SWING HUB ASSEMBLY**	
		Ref	**HOUSING ASSEMBLY**	
1	7010492	1	Shaft, Output	
2	7000228	1	Seal, Lip	
3	7000255	1	Cup, Bearing	
4	7000256	1	Cone, Bearing	
5	7000257	1	Cup, Bearing	
6	7000258	1	Cone, Bearing	
7	7017089	1	Housing	
8	7007633	1	Thrustwasher	
9	7000229	1	Ring, Retaining	
10	7010494	2	Pipe, Plug	
11	7001928	2	Pipe, Plug	
12	7000246	2	Gear, In O-Ring	
		Ref	**CARRIER ASSEMBLY**	
13	7001931	1	Carrier	
14	7001985	6	Thrustwasher, Tanged	
15	7001909	96	Bearing, Needle	
16	7000263	3	Spacer, Thrust	
17	7001911	3	Shaft, Planet	
18	7001987	3	Gear, Cluster	
19	7010474	3	Roll Pin	
20	7001988	1	Ring Gear	
21	7000230	1	O-Ring (Black)	
21	7017070	1	O-Ring (White)	
22	7000209	1	Cover, Input	
23	7010488	1	Gear, Sun	
24	7000269	1	Spacer, Input	
25	7000270	1	Thrustwasher	
26	7000253	2	Thrustwasher	
27	7000217	8	Bolt	
28	7000214	4	Bolt, Shoulder	
29	2200222	1	Pipe, Plug	
100	7024100	1	Seal Kit (Includes Items 2, 9, 21 & 26)	

FIGURE 2-6. SWING MOTOR ASSEMBLY

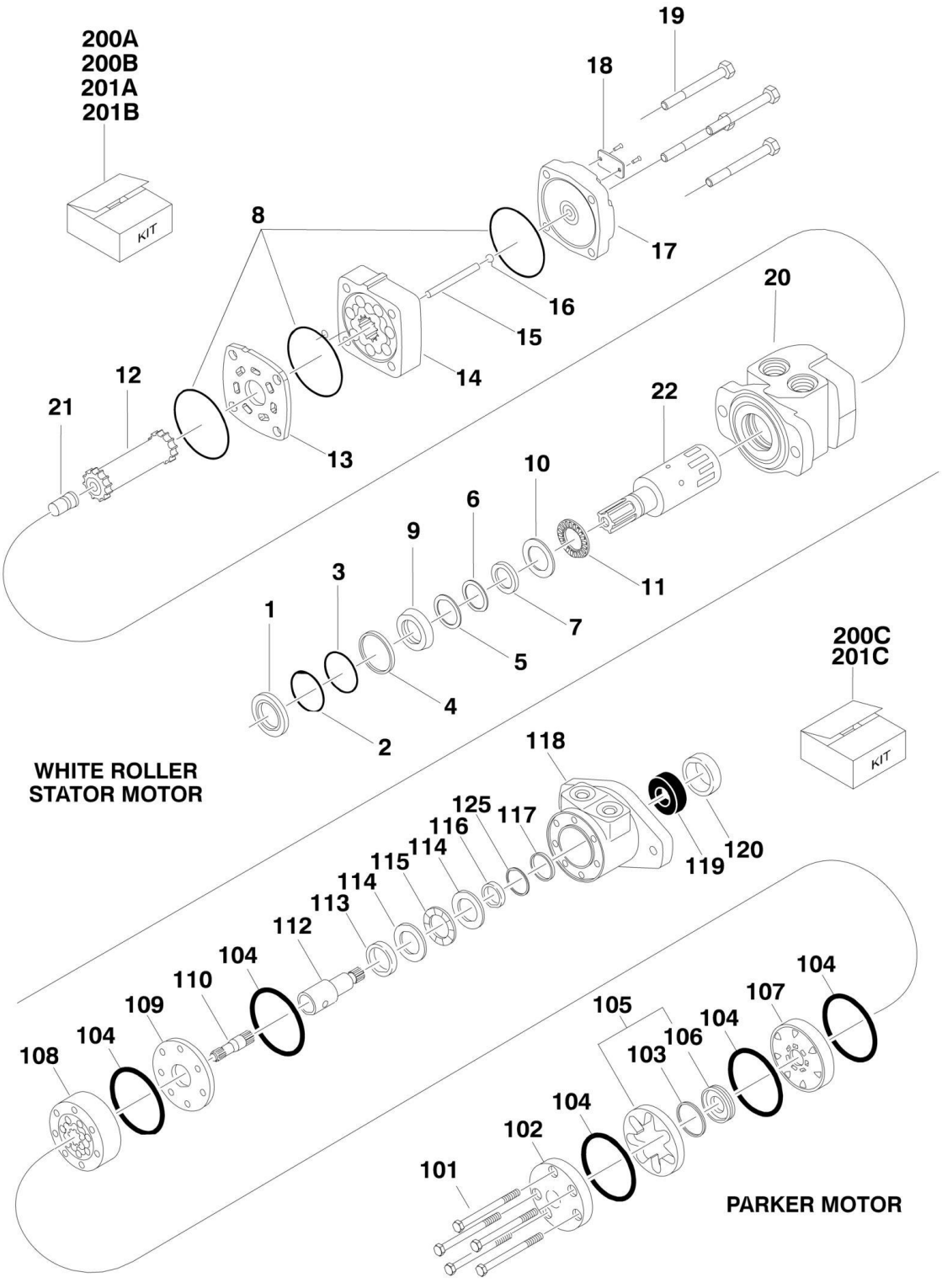

FIGURE 2-6. SWING MOTOR ASSEMBLY

ITEM	PART NUMBER	QTY	DESCRIPTION	REV
		Ref	**Note: Original Equipment may have been replaced with Service Replacement swing motor. Identify brand before ordering parts.**	
	3160273	Ref	**SWING MOTOR ASSEMBLY (WHITE ROLLER STATOR) (ORIGINAL EQUIPMENT)**	B
1	See Note	NSS	Seal, Dust (Note: Use Item 200A)	
2	See Note	NSS	Ring, Split Wire (Note: Use Item 200A)	
3	See Note	NSS	Shim, Metal Back-up (Note: Use Item 200A)	
4	See Note	NSS	Seal, High Pressure (Note: Use Item 200A)	
5	See Note	NSS	Shim, Metal Back-up (Note: Use Item 200A)	
6	See Note	NSS	Seal, Teflon Back-up (Note: Use Item 200A)	
7	See Note	NSS	Seal, Shaft (Note: Use Item 200A)	
8	See Note	NSS	Seal, Body (Note: Use Item 200A)	
9	See Note	NSS	Carrier, Seal (Note: Use Item 200B)	
10	See Note	NSS	Thrustwasher (Note: Use Item 200B)	
11	7016422	1	Bearing, Thrust	
12	7005889	1	Link, Drive	
13	7016423	1	Plate, Wear	
14	7005890	1	Rotor Assembly	
15	7005891	1	Pin, Drive Link	
16	See Note	NSS	Ball (Note: Use Item 201A)	
17	See Note	NSS	Cover, End (Note: Use Item 201A)	
18	See Note	NSS	Tag, I.D. (Note: Not Available for Purchase)	
19	7005892	4	Bolt	
20	7016425	1	Housing (Note: Use Item 201B)	
21	7005893	1	Plug, Cooling (Note: Use Item 201B)	
22	7016426	1	Shaft (Note: Use Item 201B)	
	1001110169	Ref	**SWING MOTOR ASSEMBLY (PARKER) (SERVICE REPLACEMENT)**	A
101	70002243	5	Bolt	
102	7004035	1	Cover, End	
103	See Note	NSS	Seal, Commutator (Note: Use Item 200C)	
104	See Note	NSS	Seal, Ring (Note: Use Item 200C)	
105	7024453	1	Commutator and Ring Assembly	
106	7024453	1	Ring	
107	7024379	1	Manifold	
108	70002208	1	Rotor Set	
109	7024380	1	Plate, Wear	
110	83304150	1	Link, Drive	
112	7024395	1	Shaft, Coupling	
113	7024381	1	Bushing, Bronze	
114	7004043	2	Thrustwasher	
115	7004044	1	Bearing, Thrust	
116	See Note	NSS	Seal, Inner (Note: Use Item 200C)	
117	See Note	NSS	Washer, Back-up (Note: Use Item 200C)	
118	See Note	1	Housing (Note: Not Available - Purchase Complete Swing Motor Assembly)	
119	7024390	1	Bearing	
120	See Note	NSS	Seal (Note: Use Item 200C)	
125	See Note	NSS	Washer, Back-up (Note: Use Item 200C)	
		Ref	**SEAL AND REPAIR KITS**	

SECTION 2 - TURNTABLE

ITEM	PART NUMBER	QTY	DESCRIPTION	REV
200		Ref	Seal Kit Options:	
200		Ref	White Roller Stator Options:	
200A	7005881	1	Seal Kit (Includes Items 1-8)	
200B	7005882	1	Seal Carrier Kit (Includes Items 9 & 10) Parker Options:	
200C	7024389	1	Seal Kit (Includes Items 103, 104, 116, 117, 120 & 125)	
201		Ref	Repair Kit Options:	
201		Ref	White Roller Stator Options:	
201A	7016424	1	End Cover Kit (Includes Items 16 & 17)	
201B	7016427	1	Housing/Shaft Kit (Includes Items 20-22)	
201C	See Note	AR	Parker Options (Note: Purchase Individual Components)	

FIGURE 2-7. CATERPILLAR ENGINE INSTALLATION

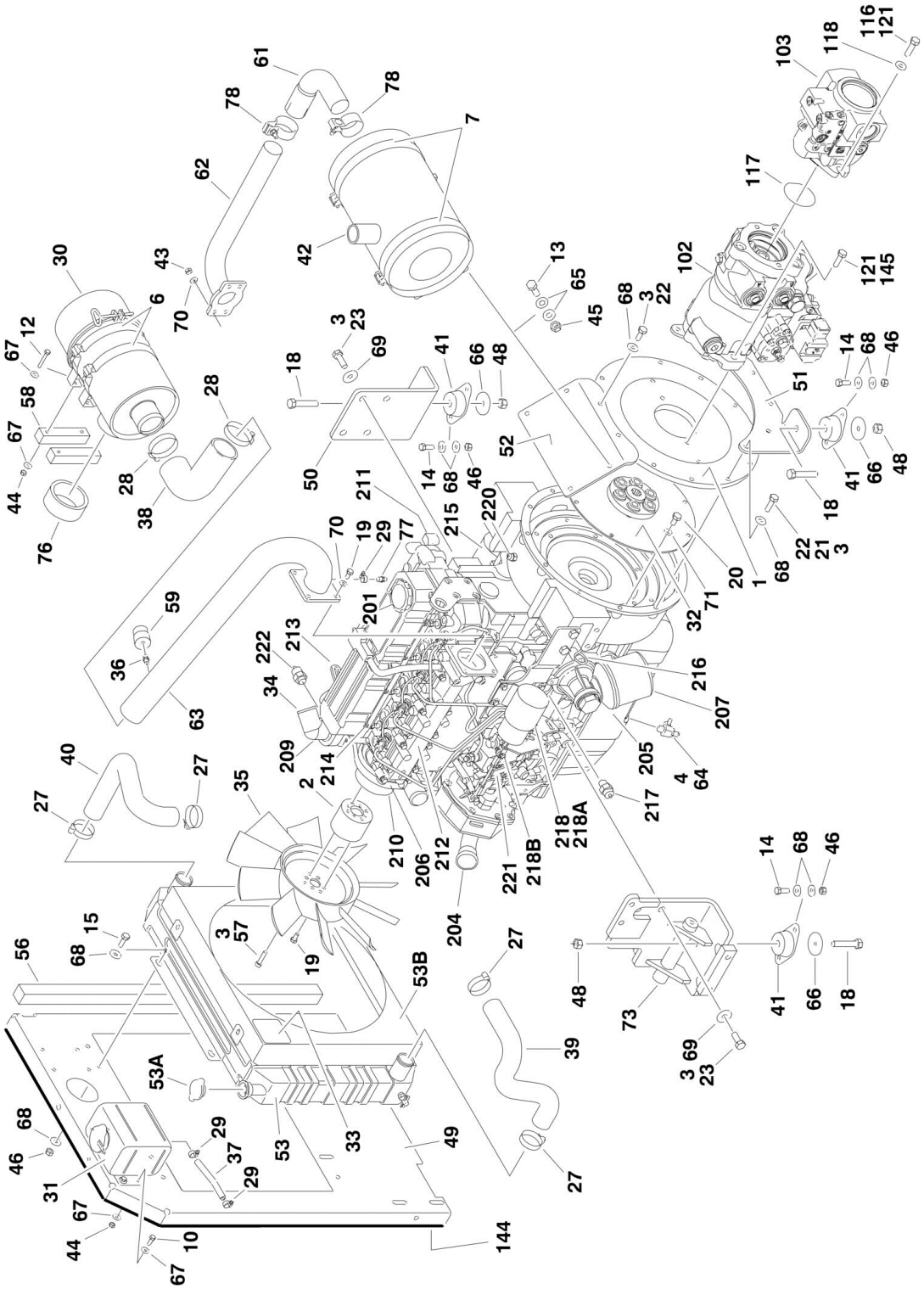

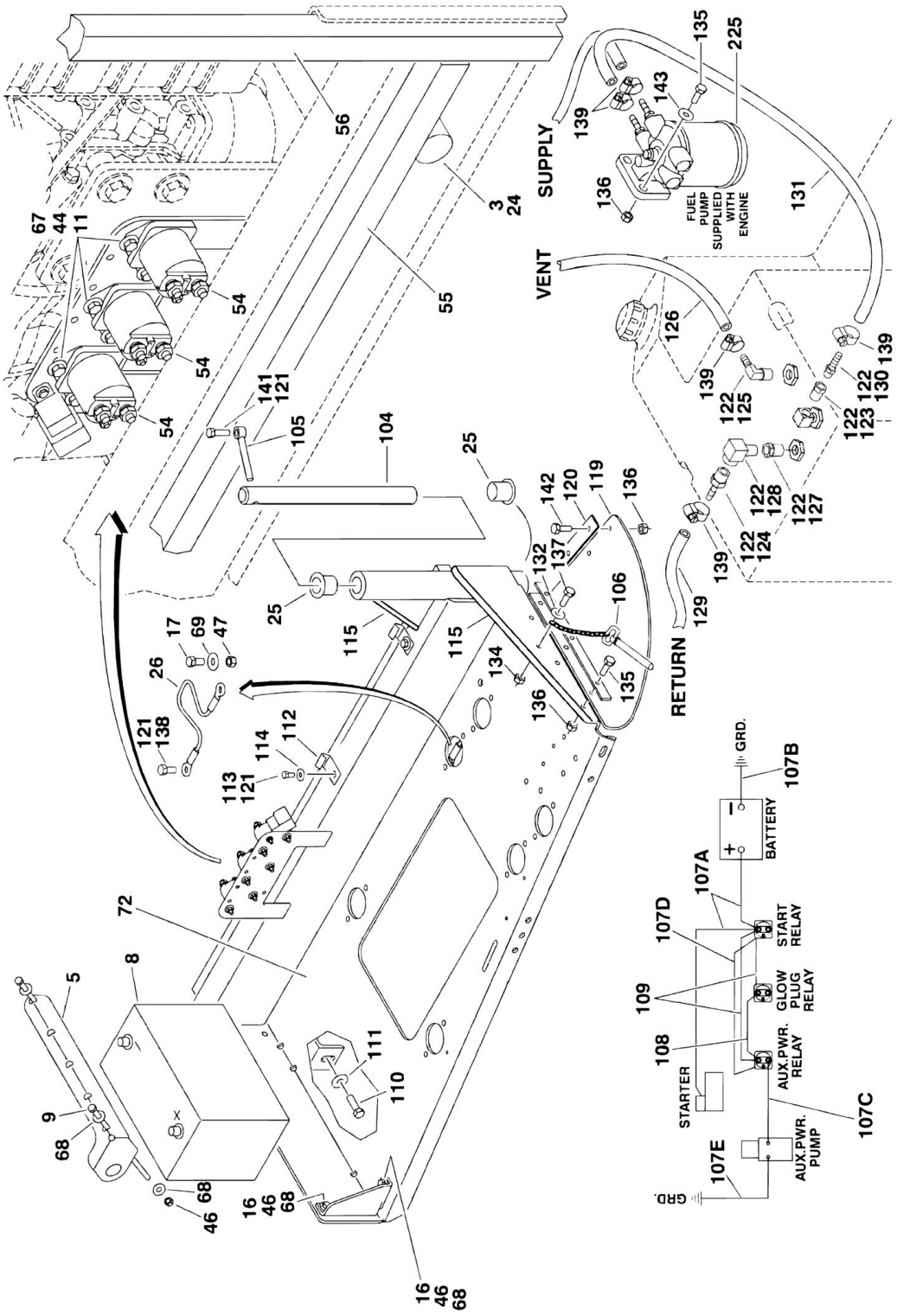
SUPPLY
VENT
RETURN
FUEL PUMP SUPPLIED WITH ENGINE
BATTERY
GRD.
START RELAY
GLOW PLUG RELAY
AUX.PWR. RELAY
STARTER
AUX.PWR. PUMP
107A
107B
107C
107D
107E
108
109

FIGURE 2-7. CATERPILLAR ENGINE INSTALLATION

ITEM	PART NUMBER	QTY	DESCRIPTION	REV
		Ref	**CATERPILLAR ENGINE ASSEMBLIES**	
	0272796	Ref	**Caterpillar Engine Assemblies (SN 0300068000 through 0300084826)**	F
	0274491	Ref	**Caterpillar Engine Assemblies (SN 0300084827 through 0300087000)**	B
1	0080181	1	Adapter, Pump Mounting Plate	
2	0080243	1	Adapter, Fan Spacer	
3	0100011	AR	Compound, Locking	
4	0100020	AR	Sealant, Thread	
5	0181727	1	Hold-Down, Battery	
6	0340041	2	Band, Mounting	
7	0340046	2	Band, Muffler	
8	0400075	1	Battery	
9	0630498	2	Rod, Hold-Down	
10	0641406	4	Bolt 1/4in-20NC x 3/4in	
11	0641407	6	Bolt 1/4in-20NC x 7/8in	
12	0701414	4	Bolt 1/4in-20NC x 3/4in	
13	0641507	4	Bolt 5/16in-18NC x 7/8in	
14	0641608	8	Bolt 3/8-16NC x 1in	
15	0641609	4	Bolt 3/8-16NC x 1-1/8in	
16	0641610	4	Bolt 3/8-16NC x 1-1/4in	
17	0641808	1	Bolt 1/2in-13NC x 1in	
18	0641828	4	Bolt 1/2in-13NC x 2-1/2in	
19	0700808	8	Bolt M8 x 16mm	
20	0701010	8	Bolt M10 x 20mm	
21	0701012	4	Bolt M10 x 25mm	
22	0701015	8	Bolt M10 x 35mm	
23	0701214	8	Bolt M12 x 30mm	
24	0940070	1	Bumper, Rubber	
25	0961986	2	Bearing, Flange	
26	1060637	1	Lanyard	
27		Ref	Clamp, Hose Options:	
27	1320012	4	Clamp, Hose **(SN 0300068000 through 0300084826)**	
27	8405104	4	Clamp, Hose **(SN 0300084827 through 0300087000)**	
28	1320016	2	Clamp, Hose	
29		Ref	Clamp, Hose Options:	
29	1320022	3	Clamp, Hose **(SN 0300068000 through 0300084826)**	
29	8405009	3	Clamp, Hose **(SN 0300084827 through 0300087000)**	
30	1340060	1	Air Cleaner Assembly	
30	7012664	1	Element, Air Cleaner	
31	1580011	1	Container, Coolant Overflow	
32	1660239	1	Coupling, Pump	
33	1703162	2	Decal - Fan Blade	
34	2000194	1	Caterpillar Engine Assembly	
35	2060025	1	Fan	
36	2180798	1	Fitting **(SN 0300068000 through 0300084827)**	
37	2720058	0.33 ft /0.1m	Hose	
38	2720434	1	Elbow, Rubber	
39	2720509	1	Hose, Radiator (Bottom)	

ITEM	PART NUMBER	QTY	DESCRIPTION	REV
40	2720510	1	Hose, Radiator (Top)	
41	3200406	4	Mount, Engine	
42	3220113	1	Muffler, Spark Arresting	
43	3290801	4	Nut M8 x 1.25	
44	3311405	14	Locknut 1/4in-20NC	
45	3311505	4	Locknut 5/16in-18NC	
46	3311605	18	Locknut 3/8in-16NC	
47	3311801	1	Nut 1/2in-13NC	
48	3311805	4	Locknut 1/2in-13NC	
49	3539872	1	Plate, Radiator Mounting	
50	3574206	1	Plate, Motor Mount	
51	3574207	1	Plate, Engine Mount (Rear)	
52	3574208	1	Bracket, Muffler	
53	3620047	1	Radiator	
53A	7027412	1	Cap, Radiator	
53B	70004182	1	Shroud, Fan	
54	3740067	3	Relay, Solenoid Assembly	
55	3960468	1	Seal, Foam Gasket	
56	3960469	1	Seal, Foam Gasket	
57	4031911	4	Bolt M8 x 35mm	
58	4220191	2	Block, Spacer	
59	4360392	1	Switch, Restrictor Indicator **(SN 0300068000 through 0300084827)**	
61	4567073	1	Tube, Exhaust	
62	4568721	1	Exhaust Tube Weldment	
63		Ref	Tube, Air Intake Weldment Options:	
63	4568788	1	Tube, Air Intake Weldment **(SN 0300068000 through 0300084826)**	
63	4569177	1	Tube, Air Intake Weldment **(SN 0300084827 through 0300087000)**	
64	4640750	1	Valve, Oil Drain	
65	4711500	8	Flatwasher 5/16in Thin	
66	4740274	4	Washer, Snubbing	
67	4751400	28	Flatwasher 1/4in Regular	
68	4751600	48	Flatwasher 3/8in Regular	
69	4751800	8	Flatwasher 1/2in Regular	
70	4811900	8	Flatwasher M8	
71	4832000	8	Lockwasher M10	
72	4846790	1	Tray Engine	
73	4846805	1	Mount, Engine/Generator - Left	
74	4922737	1	Harness, Relay Ground	
75	0721006	1	Bolt #10-24NC x 3/4in	
76	2720515	1	Seal, Air Cleaner	
77	2220767	1	Fitting	
78	70001017	2	Clamp	
		Ref	**CATERPILLAR ENGINE INSTALLATIONS**	
	0273521	Ref	**Caterpillar Engine Installations (SN 0300068000 through 0300075605)**	3
	0273594	Ref	**2WD (SN 0300075606 through 0300084826)**	2
	0274492	Ref	**2WD (SN 0300084827 through 0300087000)**	1
	0273595	Ref	**4WD (SN 0300075606 through 0300084826)**	2
	0274493	Ref	**4WD (SN 0300084827 through 0300087000)**	1

SECTION 2 - TURNTABLE

ITEM	PART NUMBER	QTY	DESCRIPTION	REV
102		Ref	Piston Pump Assembly Options:	
102	3600260	1	Piston Pump Assembly (See PISTON PUMP ASSEMBLY for Breakdown) **(SN 0300068000 through 0300075605)**	
102	3600388	1	2WD (See PISTON PUMP ASSEMBLY for Breakdown) **(SN 0300075606 through 0300087000)**	
102	3600381	1	4WD (See PISTON PUMP ASSEMBLY for Breakdown) **(SN 0300075606 through 0300087000)**	
103	3600242	1	Gear Pump Assembly (See GEAR PUMP ASSEMBLY for Breakdown)	
104	3422446	1	Pin, Pivot	
105	3841143	1	Keeper, Pin	
106	3422532	1	Pin, Hitch	
107	2902296	1	Battery Cable Kit	
107A	7027000	1	Cable, Battery (Red)	
		Ref	**Note: Machines were built with Revisions A or B Cable Kit. Replacement p/n 7027000 will incorporate Item 107D. Discard Item 107D and install per illustration. (SN 0300068000 through 0300087000)**	
107B	7027004	1	Cable, Battery (Black)	
107C	7027002	1	Cable (Red)	
107D	7027001	1	Cable (Red) (No Longer Part of 2902296 Kit)	
107E	7027003	1	Cable (Black)	
108	1060904	1	Cable, Battery	
109	4922737	1	Harness, Relay Ground	
110	0642010	1	Bolt 5/8in-11NC x 1-1/4in	
111	4752000	1	Flatwasher 5/8in Regular	
112	1320223	3	J-Clip 1/2in	
113	0641606	3	Bolt 3/8in-16NC x 3/4in	
114	4711600	3	Flatwasher 3/8in Thin	
115	4060805	2 ft /0.7mm	Flex-Trim 1/4in	
116	3931620	2	Bolt 3/8in-16NC x 1-1/4in	
117	3790152	1	O-Ring	
118	4891600	2	Flatwasher 3/8in Hardened	
119	3380429	1	Panel, Rubber	
120	3539957	2	Plate, Support	
121	0100011	AR	Compound, Locking	
122	0100020	AR	Sealant, Thread	
123	2220273	2	Fitting, Reducer	
124	2180536	2	Fitting, Straight	
125	2220313	1	Fitting, 90	
126	2750532	6 ft/1.8m	Hose 3/8in	
127	2220250	1	Fitting, Reducer	
128	2220549	1	Fitting, 90	
129	2720271	15 ft/4.6m	Hose 3/16in	
130	2220794	1	Fitting, Barbed	
131	2720058	16 ft/4.9m	Hose	
132	4751400	4	Flatwasher 1/4in Regular	
133	0641608	2	Bolt 3/8in-16NC x 1in	
134	3311405	1	Locknut 1/4in-20NC	
135	0641507	5	Bolt 5/16in-18NC x 1-1/4in	
136	3311505	8	Locknut 5/16in-18NC	
137	0641407	1	Bolt 1/4in-20NC x 7/8in	

ITEM	PART NUMBER	QTY	DESCRIPTION	REV
138	0641808	1	Bolt 1/2in-13NC x 1in	
139	1320022	7	Clamp, Hose	
140	1701505	1	Decal - Diesel (Not Shown - Located on Hood)	
141	0641610	1	Bolt 3/8in-16NC x 1-1/4in	
142	0641514	3	Bolt 5/16in-18NC x 1-3/4in	
143	4751500	3	Flatwasher 5/16in Regular	
144	3960389	5 ft/1.5m	Seal, Hood	
145	0641812	2	Bolt 1/2in-13NC x 1-3/4in	
	2000194	Ref	**ENGINE COMPONENTS**	D
201	7026800	1	Cap Oil Filler	
201	7026801	1	Gasket, Valve Cover	
202	7026802	1	Flywheel	
202	7026803	1	Gear, Ring (112 Teeth)	
203	7026804	1	Gasket (Not Shown - Between Flywheel Housing and Engine Block)	
203	7026805	1	Seal (Not Shown - Rear of Flywheel Housing)	
204	7026806	1	Cap, Filler	
204	7026807	1	Seal, Oil (Located in Front Housing)	
205	7026808	1	Plug, Oil Pan	
205	7026809	1	Gasket, Oil Pan	
206	7026810	1	V-Belt	
207	7026811	1	Filter, Oil	
		Ref	**Note: Machines with SkyPower use Remote Mounted Oil Filter - See SPECIAL OPTIONS SECTION. The same oil filter is used for all applications.**	
207	7026812	1	O-Ring (Between Bolt and Oil Filter Bracket)	
207	7026813	1	O-Ring (Between Oil Filter Bracket and Engine Block)	
208	7026819	1	Engine Cooler Assembly (Not Shown)	
208	7026816	2	O-Ring (Between Cover and Cooler)	
208	7026817	4	O-Ring (Between Cover and Cooler)	
208	7026818	1	Gasket (Between Cover and Engine Block)	
209	7026822	1	Thermostat	
209	7026821	1	Gasket (Between Regulator and Thermostat Housing)	
209	7026820	1	Gasket (Between Regulator and Engine Head)	
210		Ref	Pump, Water Options:	
		Ref	**Note: Customer must verify ENGINE SERIAL NUMBER before ordering replacement water pump.**	
210	7026823	1	**Engine (SN 0300075606 through Engine 34400832)**	
210	70001120	1	**Engine (SN 34400832 to Present)**	
210	70001742	1	Pulley, Water Pump	
210	7026824	1	Gasket (Between Pump and Pump Cover)	
210	7026825	1	Gasket (Between Pump Cover and Engine Block)	
211	7026826	1	Gasket, Exhaust Manifold	
211	7026827	1	Gasket, Exhaust	
212	7026829	1	Gasket, Intake Manifold	
212	7026828	1	Gasket, Intake	
213	7026831	1	Alternator	
214	7026832	4	Plug, Glow	
215	7026833	1	Starter	
216	7026834	1	Dipstick Oil Level	
217	1001097554	1	Switch, Oil Pressure (was p/n 7026844)	
218	1600361	1	Actuator/Linkage Assembly - Throttle	

SECTION 2 - TURNTABLE

ITEM	PART NUMBER	QTY	DESCRIPTION	REV
218A	1600361	1	Actuator and Electrical Connector Kit (was p/n 7026842)	
218A	7026835	1	Connector, Actuator	
218B	7026843	1	Linkage Kit	
220	7026841	1	Sensor, Speed Sensor	
220	7026836	1	Connector, Speed Sensor	
221	7026839	1	Pump, Fuel Supply	
222	7026840	1	Sensor, Water Temperature	
222	7026882	1	Seal, Sensor	
223	0902910	NLA	Mounting Bracket, Actuator (Use p/n 7026887)	
223	0903220	NLA	Mounting Bracket, Actuator (Use p/n 7026887)	
224	7026814	1	Valve, Relief - Engine Oil (Not Shown)	
224	7026815	1	Gasket, Relief Valve - Engine Oil (Not Shown)	
225	See Note	1	Fuel Filter/Water Separator (Note: Not Available for Purchase)	
225	7026830	1	Element, Fuel Filter/Water Separator	
226	2580055	1	Block Heater Kit (Not Shown) (was p/n 7026845)	
226	7026838	1	Gasket, Block Heater (Not Shown)	
226	70002841	1	Cord, Electrical (Not Shown)	

FIGURE 2-8. DEUTZ ENGINE INSTALLATION (SN 0300068000 through 0300077489)

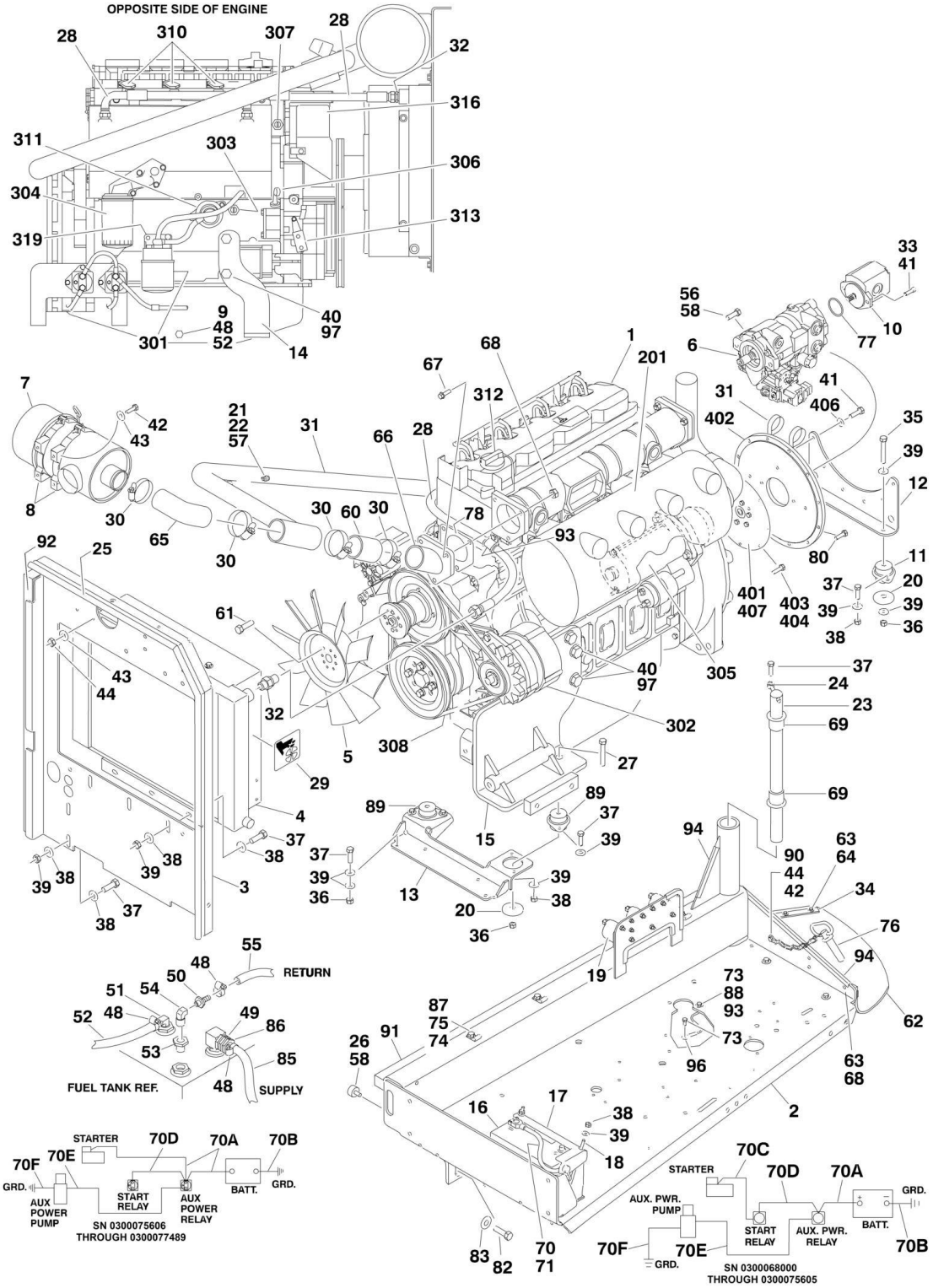

FIGURE 2-8. DEUTZ ENGINE INSTALLATION (SN 0300068000 through 0300077489)

ITEM	PART NUMBER	QTY	DESCRIPTION	REV
		Ref	**DEUTZ ENGINE INSTALLATIONS**	
	0270763	Ref	**Deutz Engine Installations (SN 0300068000 through 0300075605)**	9-I
	0273593	Ref	**2WD (SN 0300075606 through 0300077489)**	2-B
	0273072	Ref	**4WD (SN 0300075606 through 0300077489)**	3-C
1	2000189	1	Engine - Deutz F4M1011F Diesel	
2	4845404	1	Tray Engine	
3	3539872	1	Plate, Radiator Mounting	
4	3620033	1	Cooler, Oil	
5	2060025	1	Fan	
6		Ref	Piston Pump Assembly Options:	
6	3600260	1	Piston Pump Assembly (See PISTON PUMP ASSEMBLY for Breakdown) **(SN 0300068000 through 0300075605)**	
6	3600388	1	2WD (See PISTON PUMP ASSEMBLY for Breakdown) **(SN 0300075606 through 0300077489)**	
6	3600381	1	4WD (See PISTON PUMP ASSEMBLY for Breakdown) **(SN 0300075606 through 0300077489)**	
7	1340060	1	Air Cleaner Assembly	
7	7012664	1	Element, Air Cleaner (Not Shown)	
8	0340041	2	Band, Mounting	
9	4640751	1	Valve, Oil Drain	
10	3600242	1	Gear Pump Assembly (See GEAR PUMP ASSEMBLY for Breakdown)	
11	3200378	2	Mount, Rubber Engine (Rear)	
12	3537420	1	Bracket, Engine Mounting - Rear	
13	3539971	1	Bracket, Engine Mounting - Front	
14	3537416	1	Support, Engine - Right	
15	4846566	1	Support, Engine - Left	
16	0400075	1	Battery	
17	0181727	1	Hold-Down, Battery	
18	0630498	2	Rod, Hold-Down	
19	3740067	2	Relay	
20	4740274	4	Washer, Snubbing	
21	4360392	1	Switch, Restrictor Indicator	
22	2180798	1	Fitting	
23	3422446	1	Pin, Pivot	
24	3841143	1	Keeper, Pin	
25	3960389	5 ft/1.5m	Seal	
26	0940070	1	Bumper, Rubber	
27	0641826	2	Bolt 1/2in-13NC x 3-1/4in	
28	2720398	2	Hose, Oil Cooler	
29	1703162	2	Nameplate - Fan Caution	
30	1320016	4	Clamp, Hose	
31	4567815	1	Tuning Tube Weldment	
32	2220451	2	Fitting, Straight	
33	3931620	2	Capscrew 3/8in-16NC x 1-1/4in	
34	3539957	2	Plate, Hold Down	
35	0641818	2	Bolt 1/2in-13NC x 2-1/4in	
36	3311805	4	Locknut 1/2in-13NC	
37	0641610	21	Bolt 3/8in-16NC x 1-1/4in	
38	3311605	22	Locknut 3/8in-16NC x 1-1/4in	

SECTION 2 - TURNTABLE

ITEM	PART NUMBER	QTY	DESCRIPTION	REV
39	4751600	44	Flatwasher 3/8in Regular	
40	0701414	6	Bolt 1/4in-20NC x 3/4in	
41	4891600	2	Flatwasher 3/8in Hardened	
42	0641407	10	Bolt 1/4in-20NC x 7/8in	
43	4751400	17	Flatwasher 1/4in Regular	
44	3311405	10	Locknut 1/4in-20NC	
48	1320022	6	Clamp, Hose	
49	2220273	1	Fitting, Reducer	
50	2180536	1	Fitting, Straight	
51	2220313	1	Fitting, 90	
52	2750532	6 ft/1.83m	Hose 3/8in	
53	2220250	1	Fitting, Reducer	
54	2220459	1	Fitting, 90	
55	2720271	13.5 ft/4m	Hose 3/16in	
56	0641812	2	Bolt 1/2in-13NC x 1-1/2in	
57	0100020	AR	Sealant, Thread	
58	0100011	AR	Compound, Locking	
60	2720449	1	Coupling, Rubber Intake	
61	0700808	4	Bolt M8 x 16mm	
62	3380429	1	Panel, Rubber	
63	0641508	3	Bolt 5/16in-18NC x 1-1/4in	
64	0641514	3	Bolt 5/16in-18NC x 1-3/4in	
65	2720434	1	Elbow, Rubber	
66	4845395	1	Air Intake Adapter Weldment	
67	0641510	3	Bolt 5/16in-18NC x 1-1/4in	
68	3311505	AR	Locknut 5/16in-18NC	
69	0961986	2	Bushing, Flanged	
70	2901358	1	Battery Cable Kit **(SN 0300068000 through 0300075605)**	
70	2902296	1	Battery Cable Kit **(SN 0300075606 through 0300077489)**	
70A	7016800	1	Cable, Battery (Red) (Kit p/n 2901358)	
70A	7027000	1	Cable, Battery (Red) (Kit p/n 2902296)	
		Ref	**Note: Machines SN 0300068000 to SN 0300077489 were built with Revisions A or B Cable Kit. Replacement p/n 7027000 will incorporate Item 70D. Discard Item 70D and install per illustration.**	
70B	7016812	1	Cable, Battery (Black) (Kit p/n 2901358)	
70B	7027004	1	Cable, Battery (Black) (Kit p/n 2902296)	
70C	7016802	1	Cable (Red) (Kit p/n 2901358)	
70C	Not Required	0	Kit p/n 2902296	
70D	7016803	1	Cable (Red) (Kit p/n 2901358)	
70D	7027001	1	Cable (Red) (Kit p/n 2902296) (No Longer Part of 2902296 Kit)	
70E	7016824	1	Cable (Red) (Kit p/n 2901358)	
70E	7027003	1	Cable (Black) (Kit p/n 2902296)	
70F	7027002	1	Cable (Red) (Kit p/n 2902296)	
71	4460611	1	Terminal, Battery Jumper Post **(SN 0300068000 through 0300075605)**	
73	0641808	2	Bolt 1/2in-13NC x 1in	
74	1320223	3	J-Clip 1/2in	
75	0641606	3	Bolt 3/8in-16NC x 3/4in	
76	3422532	1	Pin, Hitch	
77	3790152	1	O-Ring	
78	3960407	1	Gasket	

ITEM	PART NUMBER	QTY	DESCRIPTION	REV
79	4791400	4	Starwasher 1/4in	
80	0701012	4	Bolt M10 x 25mm	
81	0701015	4	Bolt M10 x 35mm	
82	0642010	1	Bolt 5/8in-11NC x 1-1/4in	
83	4752000	1	Flatwasher 5/8in Regular	
84	1701505	1	Decal - Diesel (Not Shown - Located on Hood)	
85	2720058	16 ft/4.9m	Hose	
86	2220794	1	Fitting, Barbed	
87	4711600	3	Flatwasher 3/8in Thin	
88	4751800	1	Flatwasher 1/2in Regular	
89	3200362	2	Mount, Rubber Engine (Front)	
90	4711400	1	Flatwasher 1/4in Thin	
91	3960468	1	Seal, Foam Gasket	
92	3960469	1	Seal, Foam Gasket	
93	3311801	1	Nut 1/2in-13NC	
94	4060805	3 ft/.88m	Flex-Trim 1/4in	
96	1060637	1	Lanyard	
97	4711900	6	Flatwasher 9/16in Thin	
		Ref	**MUFFLER INSTALLATIONS**	
	0256689	Ref	**Standard Equipment (Spark Arresting)**	-
	0256690	Ref	**Optional Equipment (Catalytic)**	-
201		Ref	Muffler Options:	
201	3220103	1	Spark Arresting	
201	3220104	1	Catalytic	
201		Ref	Muffler Components:	
201		Ref	Clamp Options:	
201	1320176	1	Saddle Clamp Used on Spark Arresting	
201	70001017	1	Band Clamp Used on Catalytic	
201	7024398	1	Tube, Exhaust	
201	7024560	1	Plug, Brass	
	2000189	Ref	**ENGINE COMPONENTS**	B
301	7016328	1	Filter, Fuel	
302	7000663	1	Generator (was p/n 7020410)	
302	7020464	1	Regulator	
302	70003356	1	Pulley, Alternator	
302	70002234	1	Bracket, Adjustable	
303	7020461	1	Switch, Oil Pressure	
304	7016331	1	Filter, Oil	
305	7020479	1	Starter	
305	7026608	1	Relay	
305	70001498	1	Shield, Starter Heat (Not Shown)	
306	7026631	1	Dipstick Oil Level	
306	70001002	1	Tube, Dipstick	
306	7020487	1	O-Ring, Dipstick	
307	7020168	1	Switch, Engine Temperature	
307	7020480	1	Ring Seal, Engine Temperature Switch	
308	7020408	1	V-Belt	
310	7024318	4	Pump, Fuel Injection (was p/n 7020462)	
310	7026522	4	Injector, Fuel (Includes Nozzle Element) (Not Shown)	
311	7020463	1	Fuel, Pump Supply (was p/n 7024413)	
311	7020411	1	Gasket, Lift Pump	

ITEM	PART NUMBER	QTY	DESCRIPTION	REV
312	7020465	2	Cap, Filler	
313	7020474	1	Pump, Oil Lube	
313	7020468	1	Ring Seal Oil Pump	
315	7024565	1	Sensor, Speed (was p/n 7020481) (Not Shown)	
316	7020458	1	Actuator, Throttle	
316	7027276	1	Spring, Actuator (was p/n 7026607)	
317	See Note	1	Flywheel/Ring Gear Assembly (Not Shown): (Note: Not Available for Purchase)	
317	7024579	1	Ring Gear Only (Not Shown)	
318	7020471	4	Gasket, Exhaust Manifold to Engine Block (Not Shown)	
318	70002200	8	Stud	
318	70003476	8	Nut	
319	70001423	1	Bracket, Fuel Filter	
320	7020449	4	Gasket, Intake Manifold (Not Shown)	
321	7020431	1	Gasket, Valve Cover (Not Shown)	
322		Ref	Gasket, Head Options (Not Shown):	
322	70001681	1	1 Notch	
322	70002411	1	2 Notches	
322	70002530	1	3 Notches	
323	7020459	1	Thermostat (Located at rear of engine block - Not Shown)	
323	7020460	1	Spring, Compression	
324	7020488	1	Connector, Plug-in (Plug into Various Sensors - Oil, Temperature and Pressure - Not Shown)	
	0256847	Ref	**PUMP COUPLING INSTALLATION**	-
401	1660234	1	Coupling, Hayes	
402	0080163	1	Plate, Pump Adapter	
403	0700810	6	Bolt M8 x 20mm	
404	4831900	6	Lockwasher M8	
406	4832000	8	Lockwasher M10	
407	3020021	AR	Grease, Coupling (Not Shown)	

FIGURE 2-9. DEUTZ ENGINE INSTALLATION (SN 0300077490 through 0300087000)

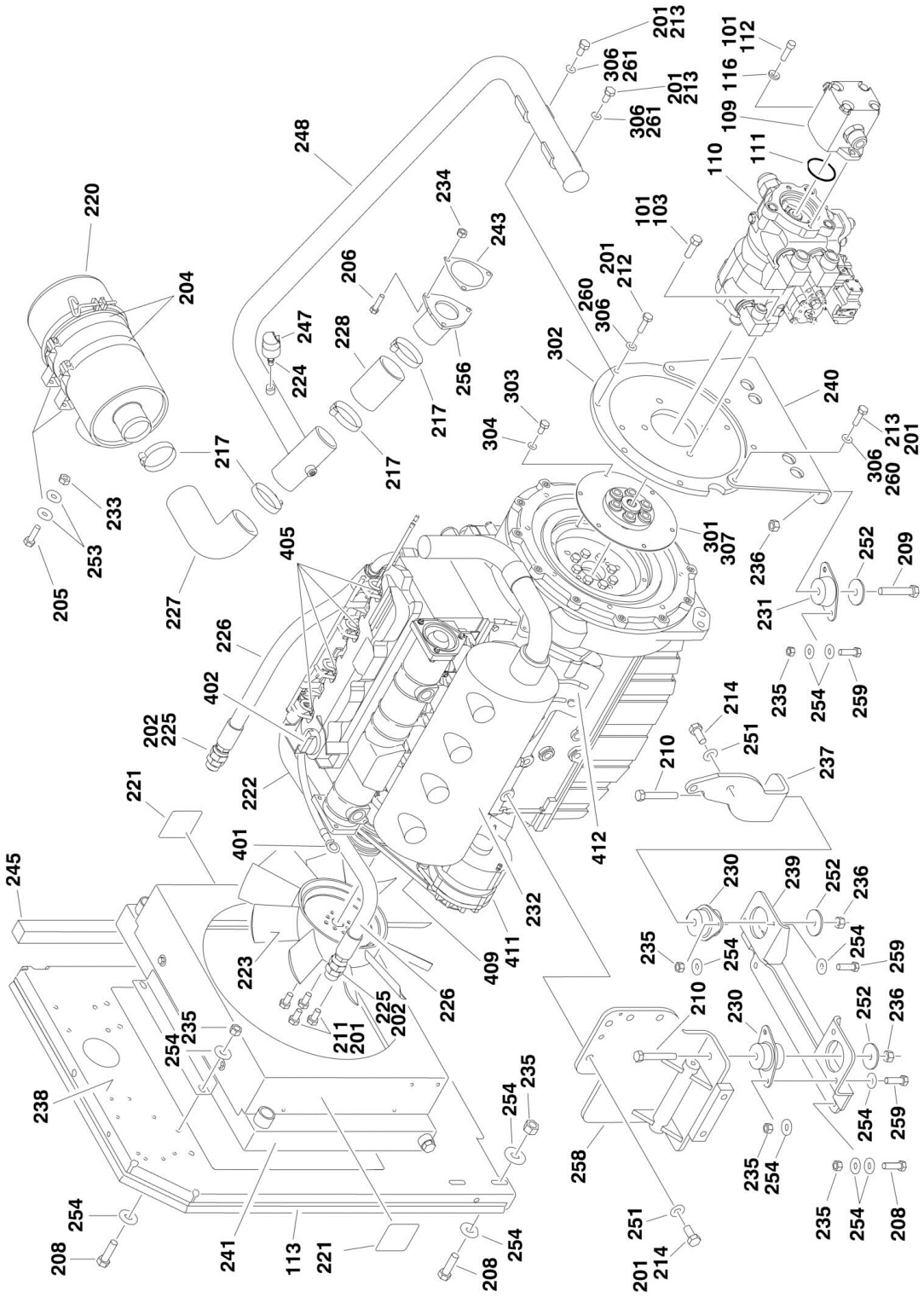

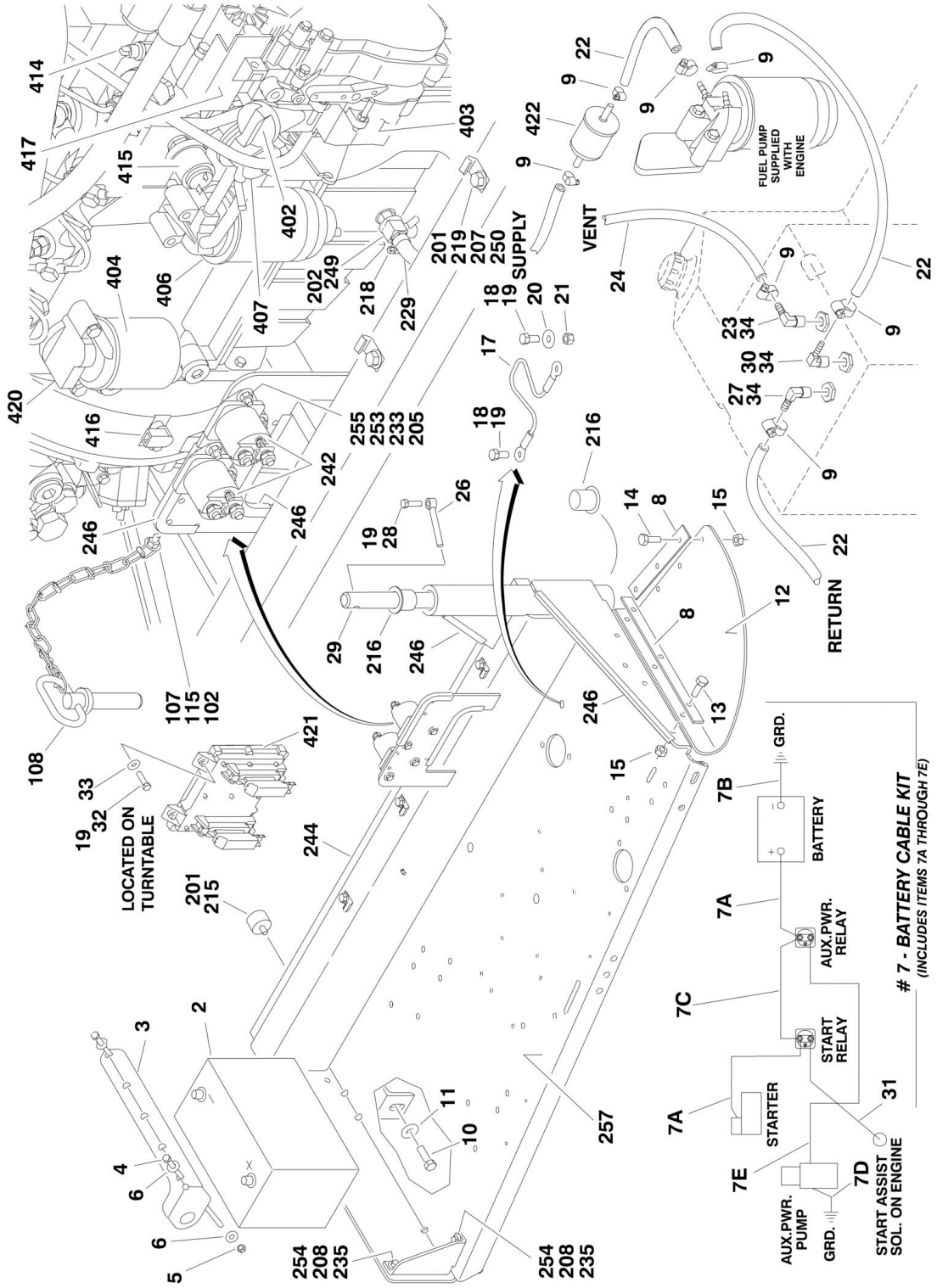
FUEL PUMP SUPPLIED WITH ENGINE
VENT
SUPPLY
RETURN
LOCATED ON TURNTABLE
7 - BATTERY CABLE KIT
(INCLUDES ITEMS 7A THROUGH 7E)
BATTERY
GRD.
AUX.PWR. RELAY
START RELAY
STARTER
AUX.PWR. PUMP
START ASSIST SOL. ON ENGINE

FIGURE 2-9. DEUTZ ENGINE INSTALLATION (SN 0300077490 through 0300087000)

ITEM	PART NUMBER	QTY	DESCRIPTION	REV
		Ref	**DEUTZ ENGINE INSTALLATIONS**	
	0273692	Ref	**2WD (SN 0300068000 through 0300084826)**	5-B
	0274298	Ref	**2WD (SN 0300084827 through 0300087000)**	C
	0273693	Ref	**4WD (SN 0300068000 through 0300084826)**	5-C
	0274297	Ref	**4WD (SN 0300084827 through 0300087000)**	C
2	0400075	1	Battery	
3	0181727	1	Hold-Down, Battery	
4	0630498	2	Bolt, Battery Hold-Down	
5	3311605	2	Locknut 3/8in-16NC	
6	4751600	4	Flatwasher 3/8in Regular	
7	2902296	1	Battery Cable Kit	B
7A	7027000	1	Cable, Battery (Red)	
		Ref	**Note: Machines SN 0300077490 through 0300087000 were built with Revisions A or B Cable Kit. Replacement p/n 7027000 will incorporate Item 70C. Discard Item 70C and install per illustration.**	
7B	7027004	1	Cable, Battery (Black)	
7C	7027001	1	Cable (Red) (No Longer Part of 2902296 Kit)	
7D	7027003	1	Cable (Black)	
7E	7027002	1	Cable (Red)	
8	3539957	2	Plate, Hold-Down	
9	1320022	AR	Clamp, Hose	
10	0642010	1	Bolt 5/8in-11NC x 1-1/4in	
11	4752000	1	Flatwasher 5/8in Regular	
12	3380429	1	Panel, Rubber	
13	0641508	3	Bolt 5/16in-18NC x 1in	
14	0641514	3	Bolt 5/16in-18NC x 1-3/4in	
15	3311505	10	Locknut 5/16in-18NC	
16	1701505	1	Decal - Diesel (Not Shown - Located on Hood)	
17	1060637	1	Cable, Lanyard	
18	0641808	2	Bolt 1/2in-13NC x 1in	
19	0100011	AR	Compound, Locking	
20	4751800	1	Flatwasher 1/2in Regular	
21	3311801	1	Nut 1/2in-13NC	
22	2720058	30 ft/9.2m	Hose	
23	2220313	1	Fitting, 90	
24	2750532	6 ft/1.8m	Hose	
25	0100020	AR	Sealant, Pipe (Not Shown)	
26	3841143	1	Pin, Keeper	
27	2221176	1	Fitting, 90 Barbed	
28	0641610	1	Bolt 3/8in-16NC x 1-1/4in	
29	3422446	1	Pin, Pivot	
30	2180348	1	Fitting, Straight Barbed	
31	4922978	1	Harness, Start Assist Solenoid **(SN 0300068000 through 0300084826)**	
32	0641410	4	Bolt 1/4in-20NC x 1-1/4in **(SN 0300084827 through 0300087000)**	
33	4711400	4	Flatwasher 1/4in Thin **(SN 0300084827 through 0300087000)**	
34	0100020	AR	Sealant, Pipe #567	
		Ref	**ENGINE AND PUMP ASSEMBLIES**	
	2000220	Ref	**2WD (SN 0300068000 through 0300084826)**	D

ITEM	PART NUMBER	QTY	DESCRIPTION	REV
	2000281	Ref	**2WD (SN 0300084827 through 0300087000)**	B
	2000221	Ref	**4WD (SN 0300068000 through 0300084826)**	E
	2000280	Ref	**4WD (SN 0300084827 through 0300087000)**	B
101	0100011	AR	Compound, Locking	
102	0641407	1	Bolt 1/4in-20NC x 7/8in	
103	0641812	2	Bolt 1/2in-13NC x 1-1/2in	
107	3311405	1	Locknut 1/4in-20NC	
108	3422532	1	Pin, Hitch	
109	3600395	1	Gear Pump Assembly with Fittings (See GEAR PUMP ASSEMBLY for Breakdown)	
110		Ref	Piston Pump Assembly with Fittings Options (See PISTON PUMP ASSEMBLY for Breakdown):	
110	3600394	1	Piston Pump Assembly with Fittings 2WD	
110	3600396	1	Piston Pump Assembly with Fittings 4WD	
111	3790152	1	O-Ring	
112	3931620	2	Capscrew 3/8in-16NC x 1-1/4in	
113	3960389	5 ft/1.5m	Seal	
115	4751400	1	Flatwasher 1/4in Regular	
116	4891800	2	Flatwasher 3/8in Hardened	
117	3020016	3.75 gl /14.19L	Oil, Motor (Not Shown)	
		Ref	**ENGINE ASSEMBLIES**	
	2000219	Ref	**Engine Assemblies (SN 0300068000 through 0300084826)**	F
	2000279	Ref	**Engine Assemblies (SN 0300084827 through 0300087000)**	C
	0256689	Ref	**MUFFLER INSTALLATION - SPARK ARRESTING**	-
	0256690	Ref	**MUFFLER INSTALLATION - CATALYTIC**	-
201	0100011	AR	Compound, Locking	
202	0100020	AR	Sealant, Pipe	
204	0340041	2	Band, Air Cleaner	
205	0641407	8	Bolt 1/4in-20NC x 7/8in	
206	0641510	3	Bolt 5/16in-18NC x 1-1/4in	
207	0641606	3	Bolt 3/8in-16NC x 3/4in	
208	0641610	12	Bolt 3/8in-16NC x 1-1/4in	
209	0641818	2	Bolt 1/2in-13NC x 2-1/4in	
210	0641826	2	Bolt 1/2in-13NC x 3-1/4in	
211	0700808	4	Bolt 8mm x 16mm	
212	0701012	2	Bolt 10mm x 25mm	
213		Ref	Bolt Options:	
213	0701015	4	Bolt 10mm x 35mm **(SN 0300068000 through 0300084708)**	
213	0701014	6	Bolt 10mm x 30mm **(SN 0300084709 through 0300087000)**	
214	0701414	6	Bolt 14mm x 30mm	
215	0940070	1	Bumper	
216	0961986	2	Bushing, Flanged	
217	1320016	4	Clamp	
218	1320022	1	Clamp, Hose	
219	1320223	4	J-Clip	
220	1340060	1	Air Cleaner Assembly Filter Element	
220	7012664	1	Element, Filter (Not Shown)	
221	1703162	2	Decal - Caution Fan Blade	
222		Ref	Engine, Deutz - F4M2011 Tier II Options:	
222	2000216	1	Engine, Deutz - F4M2011 Tier II **(SN 0300077490 through 0300084826)**	

ITEM	PART NUMBER	QTY	DESCRIPTION	REV
222	2000274	1	Engine, Deutz - F4M2011 Tier II **(SN 0300084827 through 0300087000)**	
223	2060025	1	Fan	
224	2180798	1	Fitting **(SN 0300068000 through 0300084826)**	
225	2220451	2	Fitting, Straight	
226	2720398	2	Hose, Oil Cooler	
227	2720434	1	Elbow, Rubber	
228	2720449	1	Hose, Air Cleaner	
229	2750532	1 ft/30cm	Hose, Oil Drain	
230	3200362	2	Mount, Motor	
231	3200406	2	Mount, Motor	
232		Ref	Muffler Options:	
232	3220103	1	Spark Arresting	
232	3220104	1	Catalytic	
232		Ref	Muffler Components:	
232		Ref	Clamp Options:	
232	1320176	1	Saddle Clamp Used on Spark Arresting	
232	70001017	1	Band Clamp Used on Catalytic	
232	7024398	1	Tube, Exhaust	
232	7024560	1	Plug, Brass	
233	3311405	8	Locknut 1/4in-20NC	
234	3311505	3	Locknut 5/16in-18NC	
235	3311605	AR	Locknut 3/8in-16NC	
236	3311805	4	Locknut 1/2in-13NC	
237	3537416	1	Plate, Engine Mounting (Front Right Side)	
238	3539872	1	Plate, Radiator Mounting	
239	3539971	1	Plate, Engine Mounting (Front Bottom)	
240	3534978	1	Plate, Engine Mounting (Rear)	
241	3620033	1	Radiator	
242	3740067	2	Relay	
243	3960407	1	Gasket, Air Intake	
244	3960468	1	Seal	
245	3960469	1	Seal	
246	4060805	37 in/1m	Flex-Trim	
247	4360392	1	Indicator, Restriction **(SN 0300068000 through 0300084826)**	
248		Ref	Tube, Tuning Options:	
248	4567815	1	Tube, Tuning **(SN 0300068000 through 0300084826)**	
248	4569171	1	Tube, Tuning **(SN 0300084827 through 0300087000)**	
249	4640751	1	Valve, Oil Drain	
250	4711600	3	Flatwasher 3/8in Thin	
251	4711900	6	Flatwasher 9/16in Thin	
252	4740274	4	Washer, Snubbing	
253	4751400	16	Flatwasher 1/4in Regular	
254	4751600	40	Flatwasher 3/8in Regular	
255	4791400	4	Starwasher 1/4in	
256	4845395	1	Adapter, Air Intake	
257	4845404	1	Tray, Engine	
258	4846566	1	Plate, Engine Mounting (Front Left Side)	
259		Ref	Bolt Options:	
259	0641610	8	Bolt 3/8in-16NC x 1-1/4in **(SN 0300068000 through 0300084708)**	
259	0641608	8	Bolt 3/8in-16NC x 1in **(SN 0300084709 through 0300087000)**	

ITEM	PART NUMBER	QTY	DESCRIPTION	REV
260	4711700	6	Flatwasher 7/16in Thin **(SN 0300084709 through 0300087000)**	
261	4751700	2	Flatwasher 7/16in Thin **(SN 0300084709 through 0300087000)**	
	0256847	Ref	**PUMP COUPLING INSTALLATION**	2
301	1660234	1	Coupling, Hayes	
302	0080163	1	Plate, Pump Adapter	
303	0700810	63	Bolt M8 x 20mm	
304	4831900	6	Lockwasher M8	
306	4832000	8	Lockwasher M10 **(SN 0300068000 through 0300084708)**	
307	3020021	AR	Grease, Coupling	
		Ref	**ENGINE COMPONENTS**	
	2000216	Ref	**Engine Components (SN 0300068000 through 0300084826)**	C
	2000274	Ref	**Engine Components (SN 0300084827 through 0300087000)**	A
401	7026631	1	Dipstick	
401	7020487	1	O-Ring, Dipstick (Not Shown)	
402	7020465	1	Cap, Filler	
403	7020484	1	Pump, Oil Lube	
403	7020468	1	Seal Between Oil Pump and Engine Block (Not Shown)	
404	7016331	1	Filter, Oil	
405		Ref	Pump, Injector Options:	
405	7027246	4	Series A Injector	
405	7027608	4	Series B Injector	
405	7027609	4	Series C Injector	
405	7027610	4	Series D Injector	
405	7020447	4	Gasket (I per Injector)	
406	7016328	1	Filter, Fuel	
407	70000916	1	Pump, Fuel Supply (was p/n 7027238)	
407	70001435	1	Repair Kit for 70000916 Pump	
407	70000919	1	Hand Pump for 70000916 Pump	
407	70000918	1	Seal, Hand Pump for 70000916 Pump	
407		Ref	O-Seal Between Fuel Pump and Engine Block Options (Not Shown):	
407	7020411	1	7027238 Pump	
407	70000917	1	70000916 Pump	
408	7020449	4	Gasket, Intake Manifold (Not Shown)	
409	7020408	1	V-Belt	
410	7020471	4	Gasket, Exhaust Manifold to Engine Block (Not Shown)	
410	70002200	8	Stud (Not Shown)	
410	70003476	8	Nut (Not Shown)	
410	7020471	4	Gasket, Exhaust Manifold to Exhaust Muffler (Not Shown)	
411	7000663	1	Alternator (was p/n 7020410)	
411	7020464		Regulator, Voltage (Not Shown)	
411	70002234	1	Bracket, Adjusting (Not Shown)	
412	7020479	1	Starter	
412	7026608	1	Relay	
412	70001498	1	Shield, Starter Heat	
413	7027793	1	Plug- In Connector (Not Shown)	
414	7027241	1	Transmitter, Temperature (Used on 2000219)	
414	7027791	1	Transmitter, Temperature (Used on 2000274)	
414	See Note	1	Ring, Sealing (Note: Not Available for Purchase)	
415	7020461	1	Sensor, Oil Pressure (Used on 2000219)	
415	7027790	1	Sensor, Oil Pressure (Used on 2000274)	
416	7024565	1	Sensor, Speed	

ITEM	PART NUMBER	QTY	DESCRIPTION	REV
417	7020458	1	Actuator, Throttle (Used on 2000219)	
417	7027792	1	Actuator, Throttle (Used on 2000274)	
417	7027276	2	Spring, Actuator (Used on 2000274)	
418	7020459	1	Thermostat (Located at rear of engine block - Not Shown)	
418	7020460	1	Spring, Compression	
419		Ref	Flywheel Options (Not Shown):	
419	See Note	1	Flywheel (Note: Not Available for Purchase) **(SN 0300068000 through 0300084826)**	
419	70000264	1	Flywheel **(SN 0300084827 through 0300087000)**	
419	7024579	1	Ring Gear (Located on Flywheel - Not Shown)	
420		Ref	Sender, Temperature Options:	
420	7027236	1	Sender, Temperature **(SN 0300068000 through 0300084826)**	
420	See Note	1	Sender, Temperature (Note: Not Available for Purchase) **(SN 0300084827 through 0300087000)**	
421	7027795	1	Module, Control (Used on 2000274 Only) **(SN 0300084827 through 0300087000)**	
422	7027245	1	Filter, Fuel In-line	
423	7027239	1	Solenoid, Start	
424		Ref	Timing Belt/Idler Kit Options (Not Shown):	
424	70000800	1	Timing Belt/Idler Kit **(SN 0300068000 through 0300084826)**	
424	See Note	1	Timing Belt/Idler Kit (Note: Not Available for Purchase) **(SN 0300084827 through 0300087000)**	
425		Ref	Flywheel Options (Not Shown):	
425	See Note	1	Flywheel (Note: Not Available for Purchase) **(SN 0300068000 through 0300084826)**	
425	70000264	1	Flywheel **(SN 0300084827 through 0300087000)**	
425	7024579	1	Ring Gear (Located on Flywheel - Not Shown)	
426		Ref	Gasket, Head Options (Not Shown):	
426		Ref	Gasket for 2000274 Engines	
426	70003001	1	Gasket - 1 Notch	
426	70003002	1	Gasket - 2 Notch	
426	70003003	1	Gasket - 3 Notch	
426	See Note	1	Gasket for 2000216 Engines (Note: Not Available for Purchase)	
	0274233	Ref	**FUEL FILTER INSTALLATION (NOT SHOWN) (SN 0300077442 through 0300087000)**	A
	0100020	AR	Sealant, Pipe	
	0641610	2	Bolt 3/8in-16NC x 1-1/4in	
	1320022	2	Clamp	
	2120203	1	Filter	
	2221176	2	Fitting 90	
	2720058	4.5 ft /1.4m	Hose	
	3311605	2	Locknut 3/8in-16NC	
	4751600	4	Flatwasher 3/8in Regular	

FIGURE 2-10. PISTON PUMP ASSEMBLY (SN 0300068000 through 0300075605)

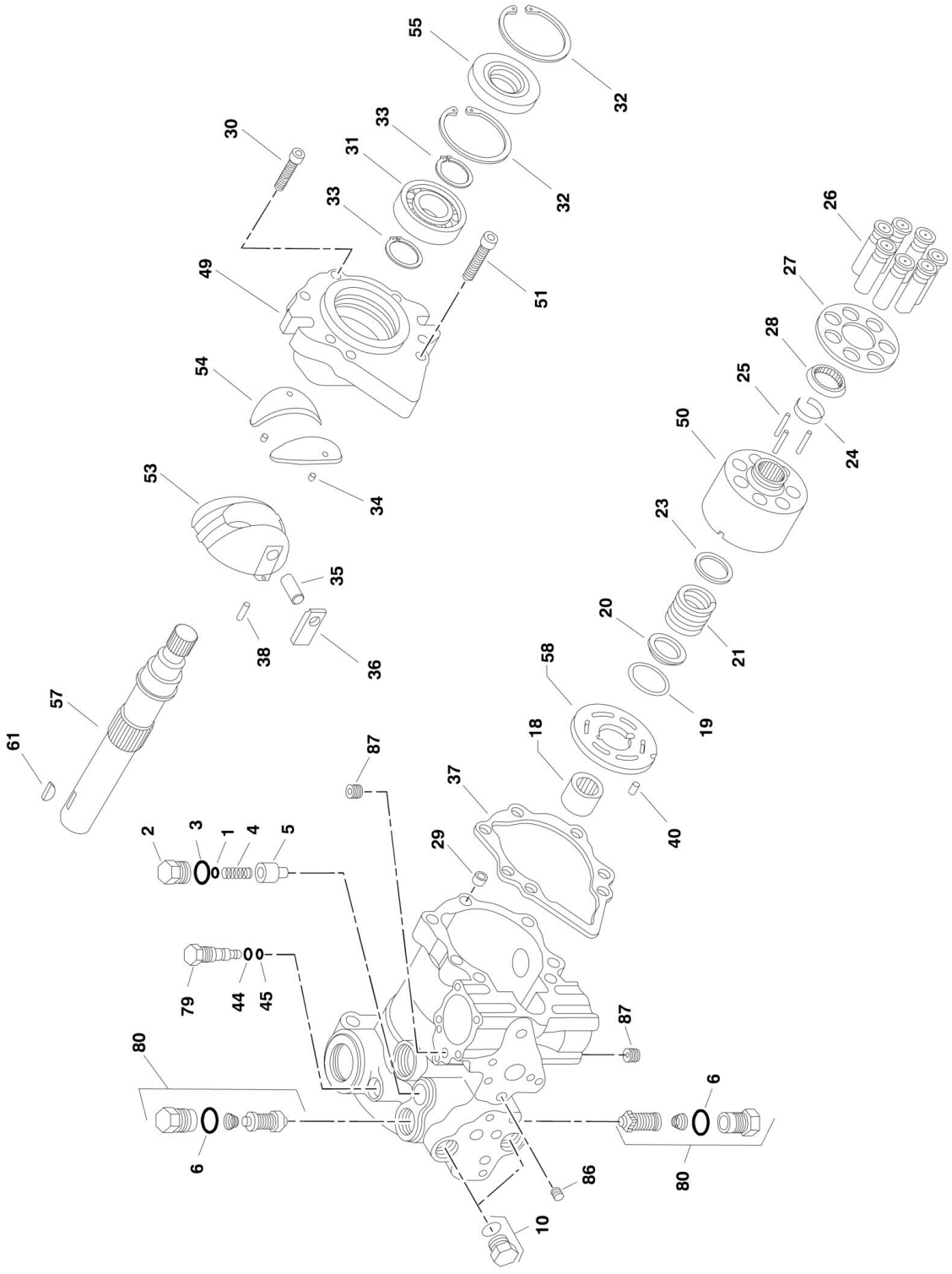

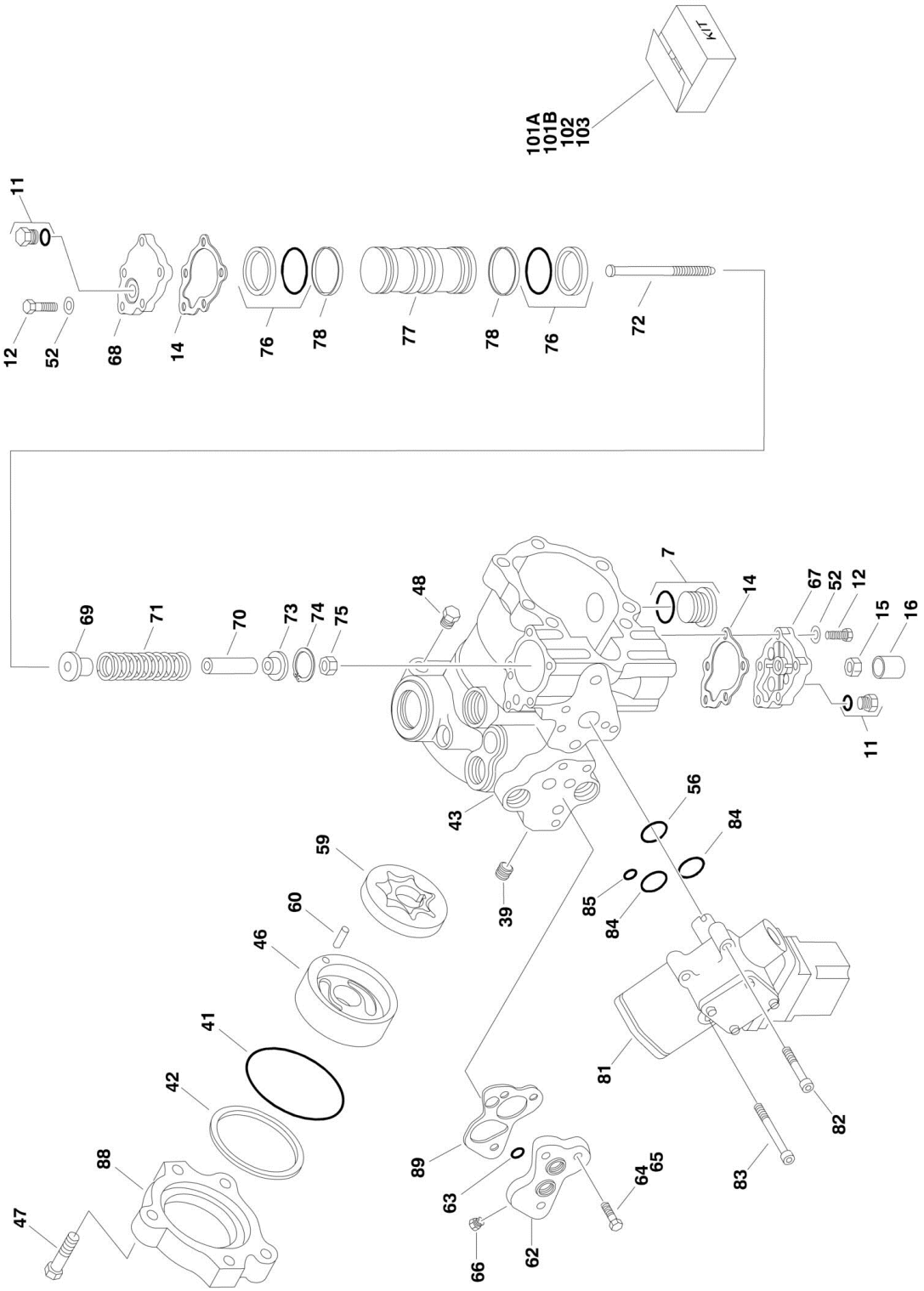
KIT
101A
101B
102
103
11
12
52
68
14
76
78
77
78
76
72
69
71
70
73
74
75
48
7
14
67
52
12
15
16
11
43
56
84
59
39
85
84
60
46
41
42
88
47
89
63
66
62
64
65
81
82
83

FIGURE 2-10. PISTON PUMP ASSEMBLY (SN 0300068000 through 0300075605)

ITEM	PART NUMBER	QTY	DESCRIPTION	REV
	3600260	Ref	**PISTON PUMP ASSEMBLY**	-
1	7007413	1	Shim Kit	
2	7007414	1	Plug	
3	See Note	NSS	O-Ring (Note: Use Item 101A)	
4	7007416	1	Spring, Relief Valve	
5	7007417	1	Valve, Relief	
6	See Note	NSS	O-Ring (Note: Use Item 101A)	
7	7007419	2	Plug	
10	7007420	2	Plug	
11	7007208	2	Plug	
12	7007421	10	Screw	
14	See Note	NSS	Gasket, Servo Cover (Note: Use Item 101A)	
15	7007423	1	Nut, Special	
16	7007424	1	Cover, Adjustment	
18	7007425	1	Bearing, Needle	
19	See Note	NSS	Ring, Retaining (Note: Use Item 103)	
20	See Note	NSS	Washer (Note: Use Item 103)	
21	See Note	NSS	Spring (Note: Use Item 103)	
23	See Note	NSS	Washer (Note: Use Item 103)	
24	See Note	NSS	Retainer (Note: Use Item 103)	
25	See Note	NSS	Pin, Slipper Holddown (Note: Use Item 103)	
26	See Note	NSS	Piston Assembly (Note: Use Item 103)	
27	See Note	NSS	Retainer, Slipper (Note: Use Item 103)	
28	See Note	NSS	Guide, Retainer (Note: Use Item 103)	
29	7007435	1	Pin, Spring	
30	7007436	1	Screw, 12 Point Head	
31	7007437	1	Bearing, Ball	
32	7007438	2	Ring, Retainer	
33	7007439	2	Ring	
34	7007440	2	Pin, Spring	
35	7007441	1	Handle, Pin	
36	7007442	1	Sleeve, Bearing	
37	See Note	NSS	Gasket, Front Cover (Note: Use Item 101A)	
38	7007444	1	Pin	
39	7007445	1	Plug, Expansion	
40	See Note	NSS	Pin (Note: Use Item 103)	
41	See Note	NSS	O-Ring (Note: Use Item 101A or 102)	
42	See Note	NSS	Ring, Load Temper (Note: Use Item 101A or 102)	
43	7007449	1	Housing, Pump	
44	See Note	NSS	Ring, Back-up (Note: Use Item 101A)	
45	See Note	NSS	O-Ring (Note: Use Item 101A)	
46	See Note	NSS	Cover, Gerotor (Note: Use Item 102)	
47	7007453	3	Bolt, Hex	
48	7007208	1	Plug	
49	7007454	1	Cover, Front	
50	See Note	NSS	Block, Cylinder (Note: Use Item 103)	
51	7007456	6	Screw	
52	7001438	10	Washer	
53	See Note	NSS	Swash Plate (Note: Use Item 103)	
54	7007458	1	Journal, Bearing	

ITEM	PART NUMBER	QTY	DESCRIPTION	REV
55	7007459	1	Seal, Lip	
56	See Note	NSS	O-Ring (Note: Use Item 101A)	
57	7010121	1	Shaft, Main Pump	
58	7021214	1	Plate, Valve (Note: Use Item 103)	
59	7007463	1	Gerotor Assembly	
60	See Note	NSS	Pin (Note: Use Item 102)	
61	See Note	NSS	Key, Woodruff (Note: Use Item 102)	
62	7007466	1	Adaptor, Remote Filtration (Without By-Pass)	
63	See Note	NSS	O-Ring (Note: Use Item 101A)	
64	7007468	2	Screw	
65	7007469	2	Screw	
66	7007470	1	Plug	
67	7007471	1	Cover, Servo (With Adjuster)	
67	7007490	2	Stop, Servo (Not Shown)	
67	7007491	2	Nut, Special (Not Shown)	
67	7007492	2	Ring, External (Not Shown)	
68	7007482	1	Cover, Servo (Without Adjuster)	
69	7007483	1	Guide, Spring	
70	7007484	1	Stop, Servo	
71	7007485	1	Spring	
72	7007486	1	Screw	
73	7007487	1	Guide, Spring	
74	7007488	1	Ring, Retaining	
75	7007499	1	Locknut	
76	See Note	NSS	Ring, Piston (Note: Use Item 101A or 101B)	
77	7007494	1	Piston, Servo	
78	See Note	NSS	O-Ring (Note: Use Item 101A or 101B)	
79	7007472	1	Valve, Bypass	
80	7010122	2	Valve, Pressure Relief (Includes Item 6) (was p/n 7007473)	
81	7007474	1	Control, Dual Oil-Filled	
81	7007496	1	Coil Assembly (Pilot)	
81	7007497	1	Plug (Pump)	
81	7007498	1	Plug (Valve Harness)	
82	7007478	2	Screw	
83	7001498	2	Screw	
84	See Note	NSS	O-Ring (Note: Use Item 101A)	
85	See Note	NSS	O-Ring (Note: Use Item 101A)	
86	7007475	1	Plug, Orifice/Screen (.156)	
87	7007477	2	Plug, Orifice (.37)	
88	7007476	1	Adapter, Auxiliary Pump	
89	7010120	1	Spacer/Gasket	
101		Ref	Seal Kit Options:	
101A	2900752	1	Seal Kit - Complete (Includes Items 3, 6, 14, 37, 41, 42, 44, 45, 56, 63, 76, 78, 84 & 85)	
101B	7007412	1	Seal Kit - Servo Piston (Includes Items 76 & 78)	
102	2900826	1	Charge Pump Kit (Includes Items 41, 42, 46, 59, 60 & 61)	
103	2900827	1	Cylinder Block Kit (Includes Items 19-28, 40, 50, 53, & 58)	

FIGURE 2-11. PISTON PUMP ASSEMBLY (SN 0300075606 through 0300087000)

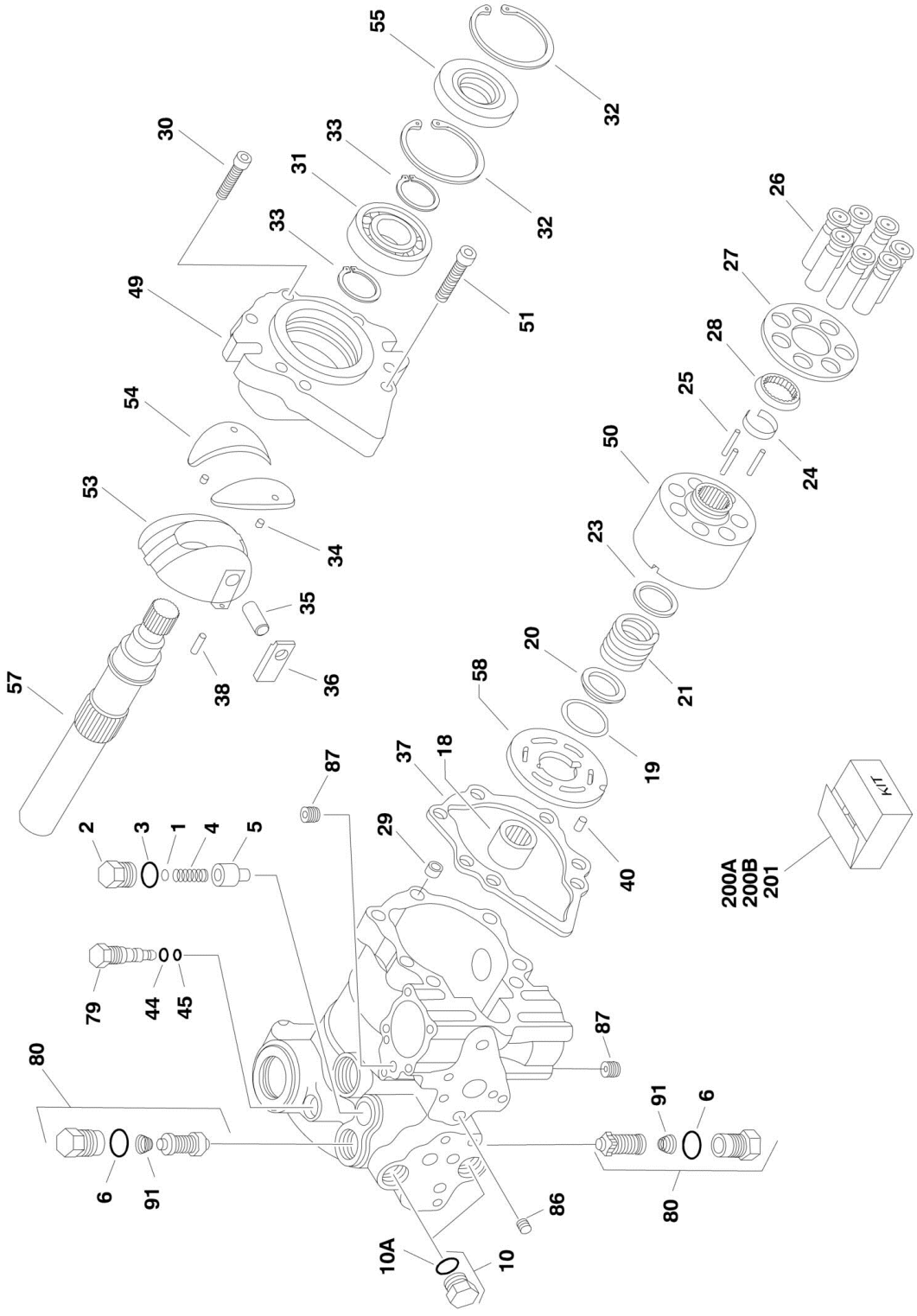

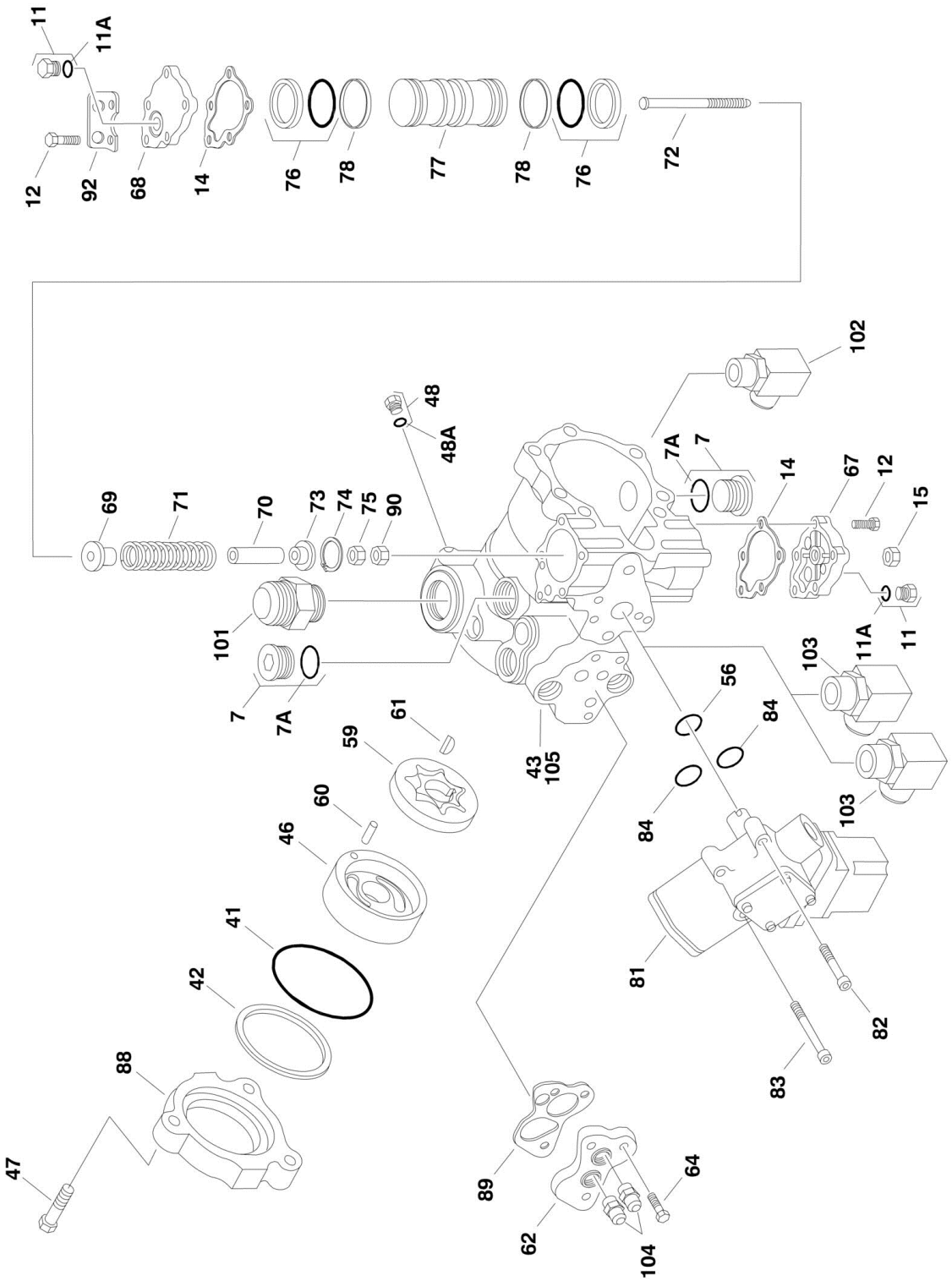
11
11A
12
92
68
14
76
78
77
78
76
72
102
48
48A
7A
7
14
67
12
15
69
71
70
73
74
75
90
101
7
7A
43
105
61
59
60
46
41
42
88
47
56
84
84
103
103
11A
11
81
82
83
89
62
104
64

FIGURE 2-11. PISTON PUMP ASSEMBLY (SN 0300075606 through 0300087000)

ITEM	PART NUMBER	QTY	DESCRIPTION	REV
		Ref	**PISTON PUMP ASSEMBLY**	
	3600388	Ref	**Piston Pump Assembly 2WD**	A
	3600381	Ref	**Piston Pump Assembly 4WD**	A
1	7007413	1	Shim Kit	
2	7024874	1	Plug (Pump Assembly p/n 3600388) 2WD	
2	7007414	1	Plug (Pump Assembly p/n 3600381) 4WD	
3	See Note	NSS	O-Ring (Note: Use Item 200A)	
4	7021200	1	Spring, Relief Valve	
5	7007417	1	Valve, Relief	
6	See Note	NSS	O-Ring (Note: Use Item 200A)	
7	7007419	2	Plug	
7A	7007418	2	O-Ring	
10	7007470	2	Plug	
10A	7021256	2	O-Ring	
11	7007470	2	Plug	
11A	7021256	2	O-Ring	
12	7021223	10	Screw	
14	See Note	NSS	Gasket, Servo Cover (Note: Use Item 200A)	
15	7007423	1	Nut, Special	
18	7007425	1	Bearing, Needle	
19	See Note	NSS	Ring, Retaining (Note: Use Item 201)	
20	See Note	NSS	Washer (Note: Use Item 201)	
21	See Note	NSS	Spring (Note: Use Item 201)	
23	See Note	NSS	Washer (Note: Use Item 201)	
24	See Note	NSS	Retainer (Note: Use Item 201)	
25	See Note	NSS	Pin, Slipper Holddown (Note: Use Item 201)	
26	See Note	NSS	Piston Assembly (Note: Use Item 201)	
27	See Note	NSS	Retainer, Slipper (Note: Use Item 201)	
28	See Note	NSS	Guide, Retainer (Note: Use Item 201)	
29	7007435	1	Pin, Spring	
30	7021202	1	Screw	
31	7007437	1	Bearing, Ball	
32	7007438	2	Ring, Retainer	
33	7007439	2	Ring	
34	7021203	2	Pin, Spring	
35	7007441	1	Handle, Pin	
36	7007442	1	Sleeve, Bearing	
37	See Note	NSS	Gasket, Front Cover (Note: Use Item 200A)	
38	7007444	1	Pin	
40	7007446	1	Pin	
41	See Note	NSS	O-Ring (Note: Use Item 200A)	
42	See Note	NSS	Ring, Load Temper (Note: Use Item 200A)	
43	7023977	1	Housing, Pump	
44	See Note	NSS	Ring, Back-up (Note: Use Item 200A)	
45	See Note	NSS	O-Ring (Note: Use Item 200A)	
46	7007452	1	Cover, Gerotor	
47	7007453	3	Bolt, Hex	
48	7007208	1	Plug	
48A	7007207	1	O-Ring	
49	7024875	1	Cover, Front (Pump Assembly p/n 3600388) 2WD	

ITEM	PART NUMBER	QTY	DESCRIPTION	REV
49	7007454	1	Cover, Front (Pump Assembly p/n 3600381) 4WD	
50	7010116	1	Block, Cylinder (Note: Use Item 201)	
51	7021207	6	Screw	
53	7007457	1	Swash Plate	
54	7021210	1	Journal, Bearing (Pump Assembly p/n 3600388) 2WD	
54	7021212	1	Journal, Bearing (Pump Assembly p/n 3600381) 4WD	
55	See Note	NSS	Seal, Lip (Note: Use Item 200A)	
56	See Note	NSS	O-Ring (Note: Use Item 200A)	
57	7010121	1	Shaft, Main Pump	
58	7021214	1	Plate, Valve	
59	7007463	1	Gerotor Assembly	
60	7007464	1	Pin	
61	7007465	1	Key, Woodruff	
62	7007466	1	Adaptor, Remote Filtration (Without By-Pass)	
64	7021218	3	Screw	
67	7021220	1	Cover, Servo (Without Adjuster)	
68	7021219	1	Cover, Servo (Without Adjuster)	
69	7023979	1	Guide, Spring	
70	7007484	1	Stop, Servo	
71	7007485	1	Spring	
72	7021221	1	Screw	
73	7007487	1	Guide, Spring	
74	7007488	1	Ring, Retaining	
75	7021222	1	Locknut	
76	See Note	NSS	Ring, Piston (Note: Use Item 200A or 200B)	
77	7007494	1	Piston, Servo	
78	See Note	NSS	O-Ring (Note: Use Item 200A or 200B)	
79	7024877	1	Valve, Bypass (Pump Assembly p/n 3600388) 2WD	
79	7007472	1	Valve, Bypass (Pump Assembly p/n 3600381) 4WD	
80	7010122	2	Valve, Pressure Relief (Includes Item 6) (Pump Assembly p/n 3600388) 2WD	
80	7024851	2	Valve, Pressure Relief (Includes Item 6) (Pump Assembly p/n 3600381) 4WD	
81	7007474	1	Control, Dual Oil-Filled	
81	7007496	1	Coil Assembly (Pilot)	
81	7007497	1	Plug (Pump)	
81	7007498	1	Plug (Valve Harness)	
82	7001498	2	Screw	
83	7007478	2	Screw	
84	7001433	2	O-Ring (Note: Use Item 200A)	
86	7007475	1	Plug, Orifice/Screen (.156)	
87	7007477	2	Plug, Orifice (.37)	
88	7007476	1	Adapter, Auxiliary Pump	
89	7021217	1	Spacer/Gasket (Note: Use Item 200A)	
90	7021206	1	Nut	
91	7024800	2	Spring	
92	7021201	1	Bracket, Lifting	
		Ref	**PISTON PUMP AND FITTING ASSEMBLIES**	
	3600394	Ref	**Piston Pump and Fitting Assemblies 2WD**	B
	3600396	Ref	**Piston Pump and Fitting Assemblies 4WD**	A
101	2220479	1	Fitting, Straight	
102	2220578	1	Fitting, 90	

SECTION 2 - TURNTABLE

ITEM	PART NUMBER	QTY	DESCRIPTION	REV
103	2220646	2	Fitting, 90	
104	2220947	2	Fitting, Straight	
105		Ref	Pump Options (Includes Items 1-92)	
105	3600388	1	Pump 2WD	
105	3600381	1	Pump 4WD	
		Ref	**KIT OPTIONS:**	
200		Ref	Seal Kit Options:	
200A	7021232	1	Seal Kit - Complete (Includes Items 3, 6, 14, 37, 41, 42, 44, 45, 55, 56, 76, 78, 84 & 89)	
200B	7007412	1	Seal Kit - Servo Piston (Includes Items 76 & 78)	
201	7010116	1	Cylinder Block Kit (Includes Items 19-28 & 50)	

FIGURE 2-12. GEAR PUMP ASSEMBLY

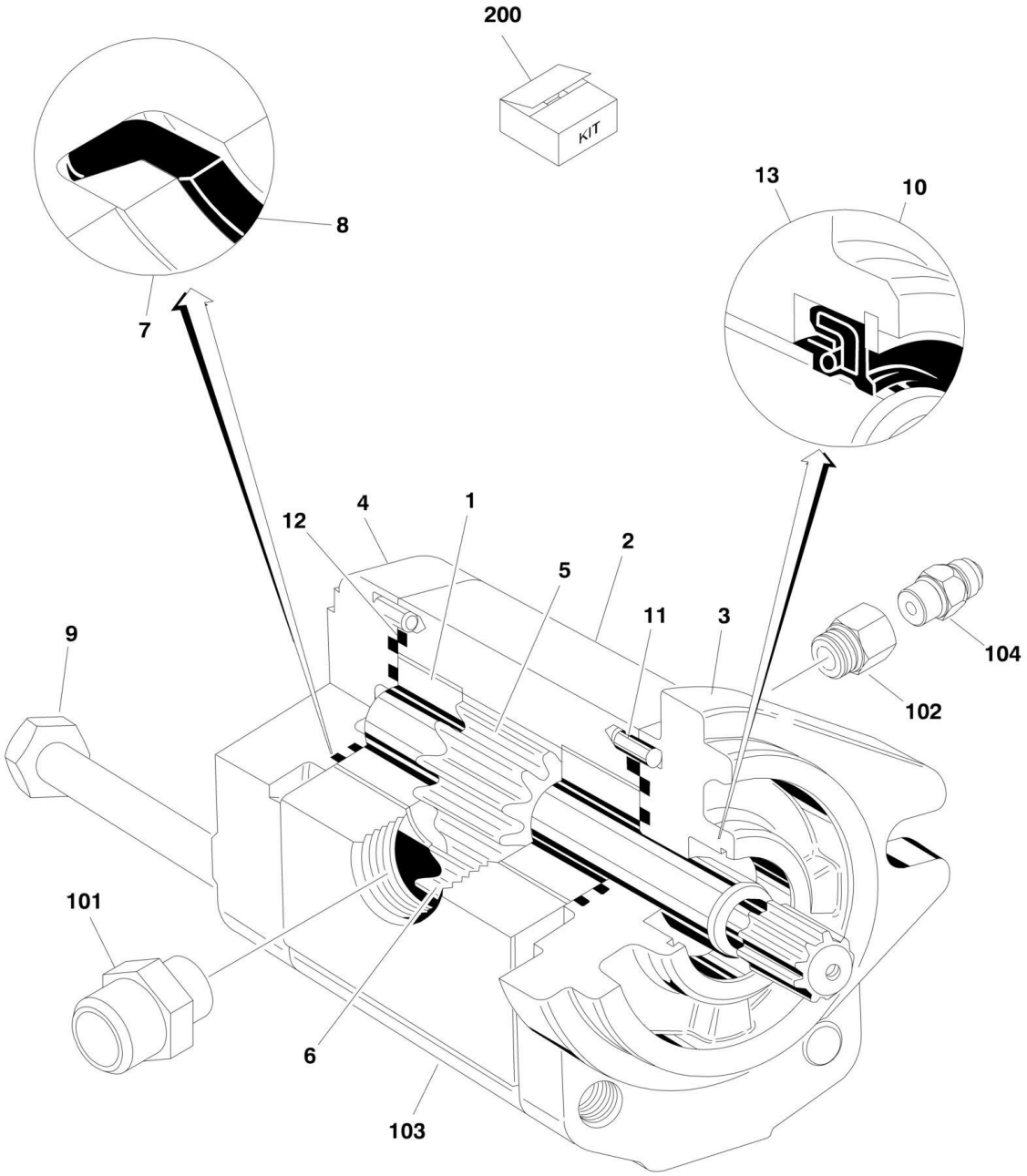

FIGURE 2-12. GEAR PUMP ASSEMBLY

ITEM	PART NUMBER	QTY	DESCRIPTION	REV
	3600242	Ref	**GEAR PUMP ASSEMBLY**	
1	7010105	2	Bearing/Bushing	
2	See Note	NLA	Housing (Note: Not Available - Purchase p/n 3600242 Complete Replacement)	
3	See Note	NLA	Flange (Note: Not Available - Purchase p/n 3600242 Complete Replacement)	
4	7010103	1	Cover	
5	7012987	1	Gear, Drive	
6	7012988	1	Gear, Idler	
7	See Note	NSS	Ring, Anti-Extrusion (Note: Use Item 200)	
8	See Note	NSS	Seal (Note: Use Item 200)	
9	See Note	4	Bolt (Note: Not Available for Purchase)	
10	7010104	1	Ring, Retaining	
11	See Note	4	Pin, Dowel (Note: Not Available for Purchase)	
12	See Note	NSS	Seal, O-Ring (Note: Use Item 200)	
13	See Note	NSS	Seal, Shaft (Note: Use Item 200)	
	3600395	Ref	**GEAR PUMP AND FITTING ASSEMBLY**	A
101	2220376	1	Fitting, Straight	
102	2220810	1	Fitting, Reducer	
103	3600242	1	Pump (Includes Items 1-13)	
104	4640744	1	Fitting, Check Valve	
		Ref	**KIT OPTIONS**	
200	7007489	1	Seal Kit (Includes Items 7, 8, 12 & 13)	

FIGURE 2-13. TANK INSTALLATIONS

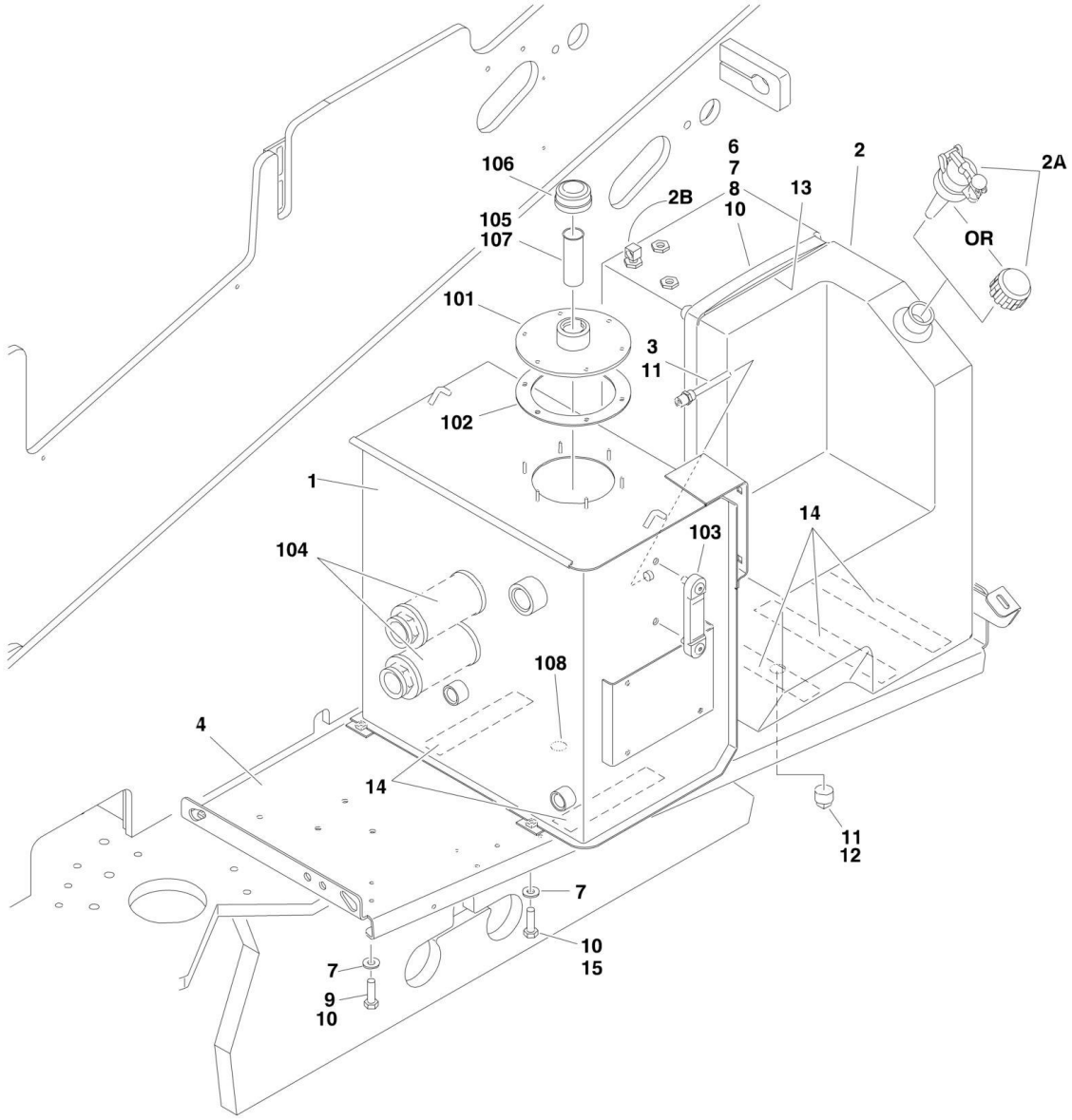

FIGURE 2-13. TANK INSTALLATIONS

ITEM	PART NUMBER	QTY	DESCRIPTION	REV
	0254849	Ref	**TANKS INSTALLATION**	9
1	4400449	1	Hydraulic Tank Assembly (See Items 101-108 for Breakdown)	
2	4400400	1	Tank, Fuel	
2A		Ref	Cap Options:	
2A	7016314	1	Standard Black Cap	
2A	1120487	1	Optional Blue Cap (Diesel Machines) (Not Included with Tank)	
2B	7019658	1	Tube, Fuel Pick-up (With Fitting)	
3	4360436	1	Switch, Fuel Level	
4	4845393	1	Hydraulic Tray Weldment	
6	4240113	1	Strap, Tank	
7	4751600	12	Flatwasher 3/8in Regular	
8	3311601	AR	Nut 3/8in-16NC	
9	0641614	6	Bolt 3/8in-16NC x 1-3/4in	
10	0100011	AR	Compound, Locking	
11	0100020	AR	Sealant, Pipe	
12	2200222	1	Fitting	
13	4280295	25 in /44cm	Strip, Protective	
14	4420038	70 in /1.78m	Tape, Rubber	
15	0641608	4	Bolt 3/8in-16NC x 1in	
	4400449	Ref	**HYDRAULIC TANK ASSEMBLY**	D
101	7024439	1	Cover	
102	7024440	1	Gasket	
103	7024441	1	Gauge, Sight	
104	7024442	2	Strainer	
105	7024443	1	Filler Neck	
106	7024444	1	Cap, Vented	
107	7024445	1	Strainer	
108	7024446	1	Plug, Magnetic	

FIGURE 2-14. ROTARY COUPLING INSTALLATION (SN 0300068000 through 0300075605)

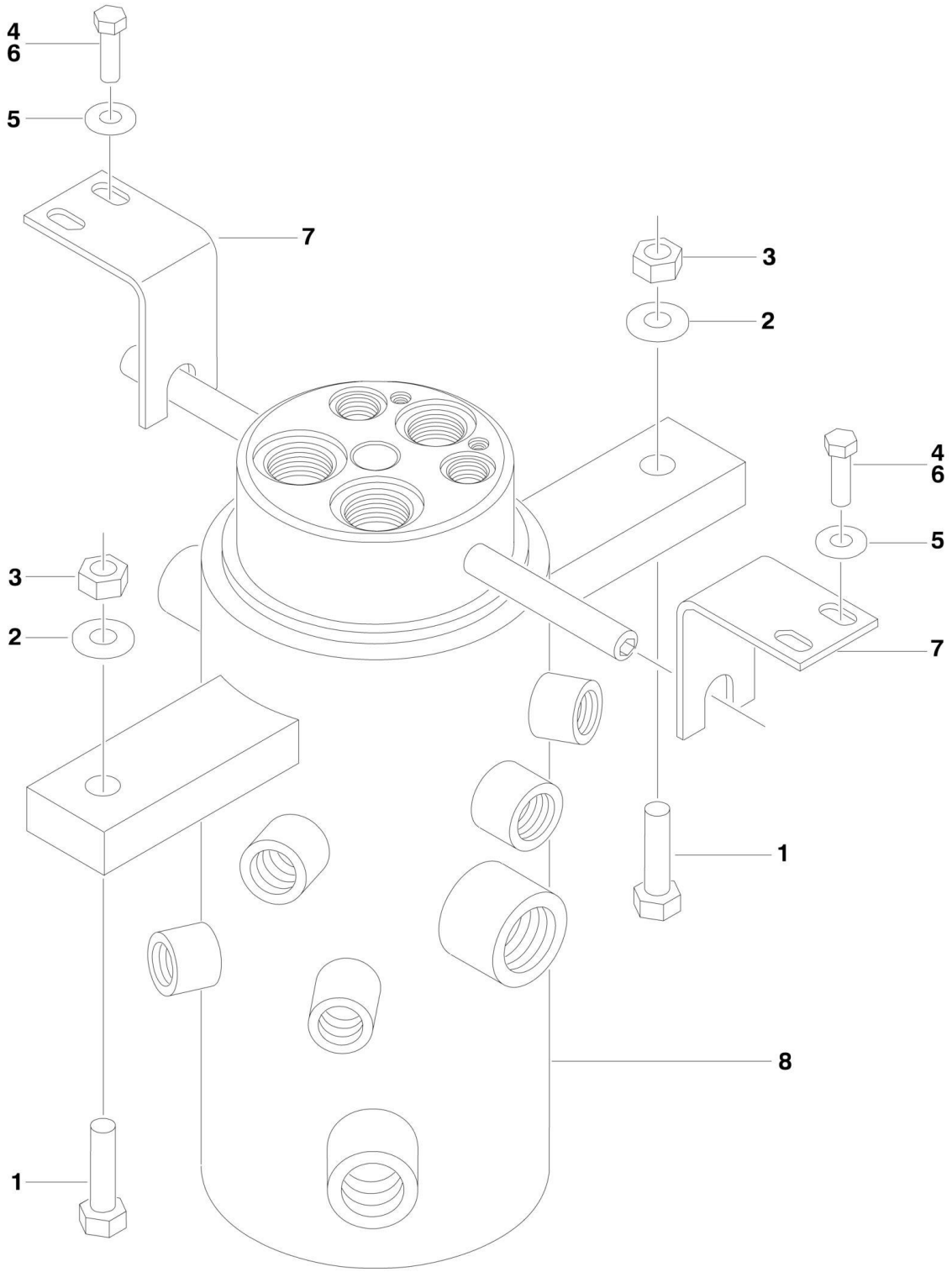

FIGURE 2-14. ROTARY COUPLING INSTALLATION (SN 0300068000 through 0300075605)

ITEM	PART NUMBER	QTY	DESCRIPTION	REV
		Ref	**ROTARY COUPLING INSTALLATIONS**	
	0255262	Ref	**Rotary Coupling Installations 2WS**	5
	0255294	Ref	**Rotary Coupling Installations 4WS**	2
1	0641820	2	Bolt 1/2in-13NC x 2-1/2in	
2	4751800	4	Flatwasher 1/2in	
3	3311805	2	Locknut 1/2in-13NC	
4	0641611	4	Bolt 3/8in-16NC x 1-3/8in	
5	4751600	4	Flatwasher 3/8in	
6	0100011	AR	Compound, Locking	
7	0902520	2	Bracket	
8		Ref	Coupling, Rotary Options:	
8	1660219	1	Coupling, Rotary 2WS	
8	1660223	1	Coupling, Rotary 4WS	
8		Ref	Seal Kit Options:	
8	7013187	1	Seal Kit 2WS	
8	7016342	1	Seal Kit 4WS	
8		Ref	Rebuilt Couplings Options:	
8	1660219RR	1	Rebuilt Couplings 2WS	
8	1660223RR	1	Rebuilt Couplings 4WS	

FIGURE 2-15. ROTARY COUPLING INSTALLATION (SN 0300075606 through 0300087000)

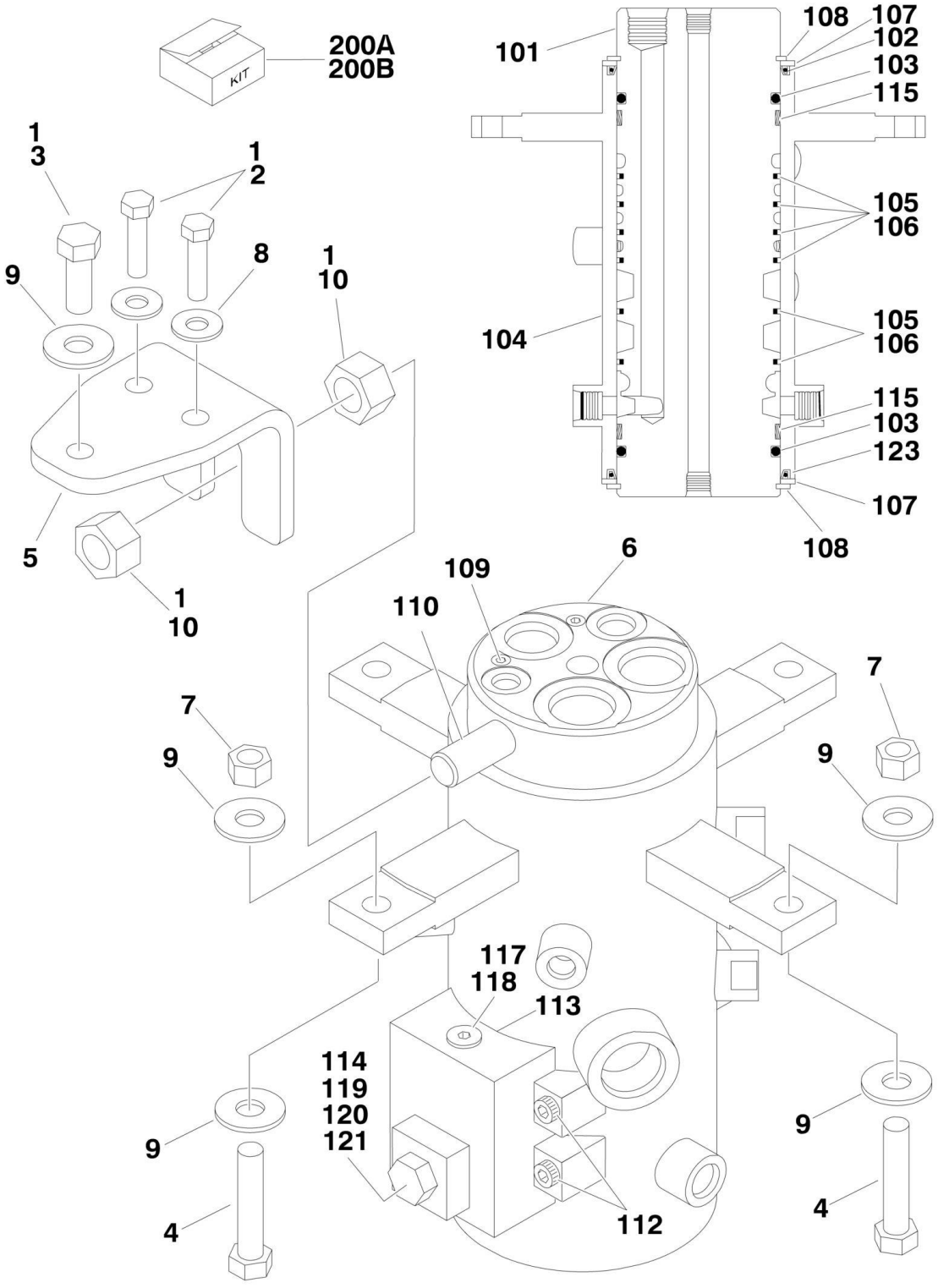

FIGURE 2-15. ROTARY COUPLING INSTALLATION (SN 0300075606 through 0300087000)

ITEM	PART NUMBER	QTY	DESCRIPTION	REV
		Ref	**ROTARY COUPLING INSTALLATIONS**	
	0273052	Ref	**Rotary Coupling Installations 2WS**	D
	0273161	Ref	**Rotary Coupling Installations 4WS**	D
1	0100011	AR	Compound, Locking	
2	0641612	2	Bolt 3/8in-16NC x 1-1/2in	
3	0641811	1	Bolt 1/2in-13NC x 1-3/8in	
4	0641820	2	Bolt 1/2in-13NC x 2-1/2in	
5	0903056	1	Bracket	
6		Ref	Coupling, Rotary Options (See Items 101-121 for Breakdown):	
6	1660257	1	Coupling, Rotary 2WS	
6	1660258	1	Coupling, Rotary 4WS	
7	3271805	2	Locknut 1/2in-13NC	
8	4751600	2	Flatwasher 3/8in Regular	
9	4751800	5	Flatwasher 1/2in Regular	
10	3322201	2	Nut 3/4in-16NC	
		Ref	**ROTARY COUPLING ASSEMBLIES**	
	1660257	Ref	**2WS (Original Equipment)**	
	1660303	Ref	**2WS (Service Replacement)**	
	1660258	Ref	**4WS (Original Equipment)**	
	1660304	Ref	**4WS (Service Replacement)**	
		Ref	**Note: Original Equipment may have been replaced with Service Replacement part. Identify p/n stamped on rotary coupling before ordering parts.**	
101	See Note	NSS	Body (Note: Not Available - Purchase Complete Rotary Coupling Assembly)	
102		Ref	Seal, Oil Options:	
102	7026189	2	Seal, Oil 2WS (p/n 1660257)	
102	70001248	2	Seal, Oil 2WS (p/n 1660303)	
102	7026512	2	Seal, Oil 4WS	
103	See Note	NSS	O-Ring (Note: Use Item 200A or 200B)	
104	See Note	NSS	Housing (Note: Not Available - Purchase Complete Rotary Coupling Assembly)	
105		Ref	Seal, Cap	
105	See Note	NSS	Seal, Cap 2WS (Note: Use Item 200A or 200B)	
105	See Note	NSS	Seal, Cap 4WS (Note: Use Item 200C or 200D)	
106		Ref	O-Ring	
106	See Note	NSS	O-Ring 2WS (Note: Use Item 200A or 200B)	
106	See Note	NSS	O-Ring 4WS (Note: Use Item 200C or 200D)	
107		Ref	Ring Options:	
107	7026503	2	Ring 2WS	
107	7026511	2	Ring 4WS	
108		Ref	Ring, Retaining Options:	
108	7026504	Ref	Ring, Retaining 2WS	
108	7026504	2	1660257 Coupling	
108	7026504	1	1660303 Coupling	
108	7013189	Ref	Ring, Retaining 4WS	
108	7013189	2	1660258 Coupling	
108	7013189	1	1660304 Coupling	
109		Ref	Plug, Pipe Options	
109		Ref	Plug, Pipe 2WS	

SECTION 2 - TURNTABLE

ITEM	PART NUMBER	QTY	DESCRIPTION	REV
109	See Note	NSS	1660257 Coupling (Note: Not Available - Purchase Locally)	
109	8093461	2	1660303 Coupling	
109		Ref	Plug, Pipe 4WS	
109	See Note	NSS	1660258 Coupling (Note: Not Available - Purchase Locally)	
109	8093461	4	1660304 Coupling	
110	See Note	NSS	Lug, Torque (Note: Not Available for Purchase)	
111	7024404	1	Block, Valve	
112	7026197	4	Bolt 5/16in-18NC x 1-1/4in	
113	See Note	NSS	O-Ring (Note: Use Item 200A, 200B, 200C or 200D)	
114	See Note	NSS	O-Ring (Note: Use Item 200A, 200B, 200C or 200D)	
115	See Note	NSS	Bearing (Note: Use Item 200A, 200B, 200C or 200D)	
117	7026505	1	Plug	
118	7026506	1	Valve, Check	
119	7026507	1	Plug	
120		Ref	Valve Block, Plunger Options:	
120	7026508	1	1660257 & 1660258 Couplings	
120	7024404	1	1660303 & 1660304 Couplings	
121	7026509	1	Spring, Compression	
122	See Note	NSS	Protective Netting (Not Shown) (1660303 & 1660304) Couplings (Note: Not Available for Purchase)	
123		Ref	Seal Options:	
123	7026189	1	1660257 Coupling	
123	70001248	1	1660303 Coupling	
123	See Note	NSS	1660258 & 1660304 Couplings (Note: Use Item 200C or 200D)	
200		Ref	Seal Kit Options:	
200A	7026510	1	1660257 Coupling (Includes Items 103, 105, 106 & 113-115. Items 102 & 123 must be purchased separately)	
200B	70001248	1	1660303 Coupling (Includes Items 102, 103, 105, 106, 113-115 & 123.	
200C	7026512	1	1660258 Coupling (Includes Items 102, 103, 105, 106, 113-115 & 123)	
200D	70001249	1	1660304 Coupling (Includes Items 102, 103, 105, 106, 113-115 & 123)	

FIGURE 2-16. GROUND CONTROL BOX ASSEMBLY

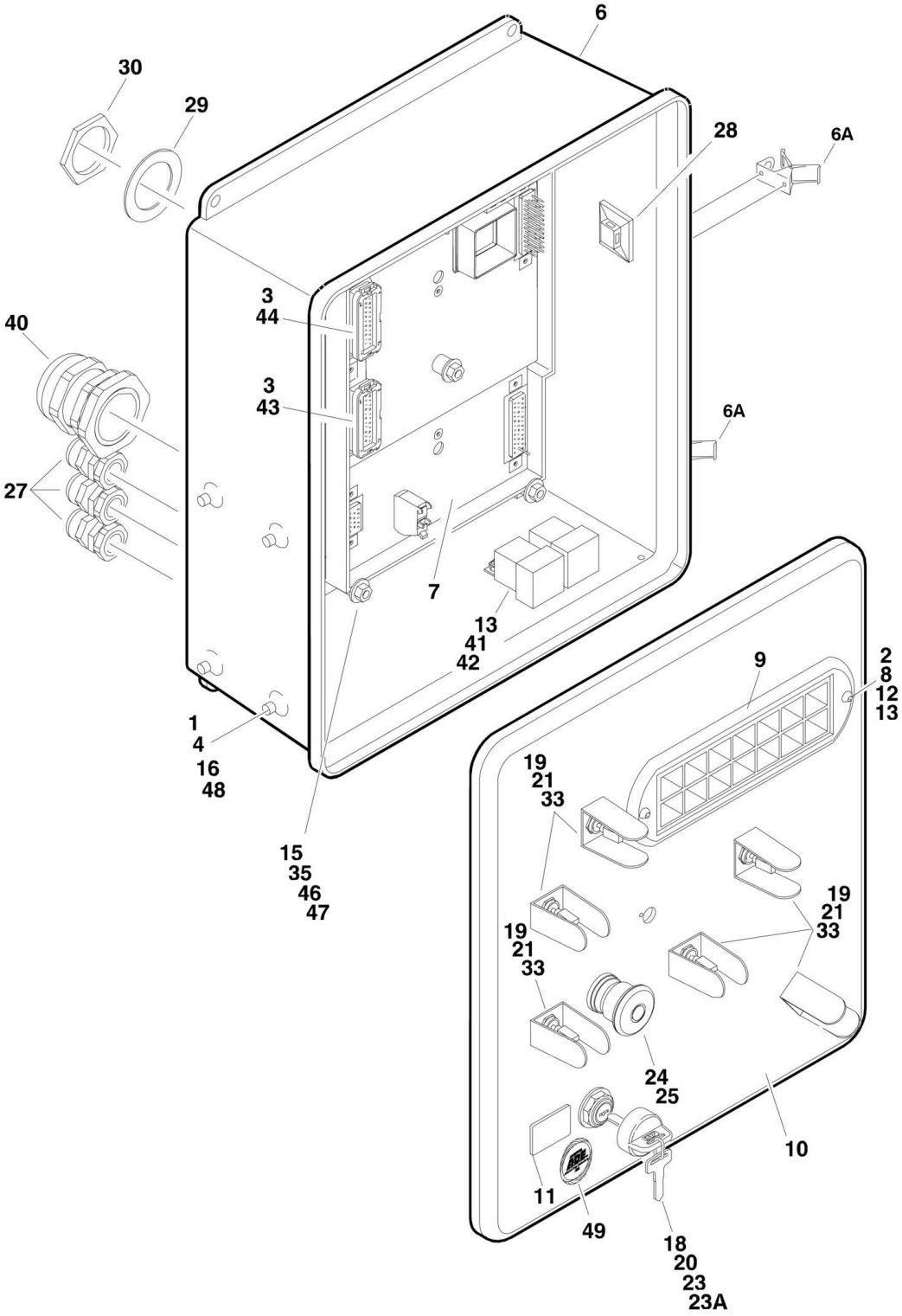

FIGURE 2-16. GROUND CONTROL BOX ASSEMBLY

ITEM	PART NUMBER	QTY	DESCRIPTION	REV
		Ref	**GROUND CONTROL BOX ASSEMBLIES**	
		Ref	**Ground Control Box Assemblies (SN 0300068000 through 0300084826)**	
	0861612	Ref	**Ground Control Box Assemblies 600S with Caterpillar Engine**	C
	0861613	Ref	**Ground Control Box Assemblies 600SJ & 660SJ with Caterpillar Engine**	C
	0861482	Ref	**Ground Control Box Assemblies 600S with Deutz Engine**	G
	0861483	Ref	**Ground Control Box Assemblies 600SJ & 660SJ with Deutz Engine**	G
		Ref	**Ground Control Box Assemblies (SN 0300084827 through 0300087000)**	
	0861698	Ref	**Ground Control Box Assemblies 600S with Caterpillar Engine**	A
	0861699	Ref	**Ground Control Box Assemblies 600SJ & 660SJ with Caterpillar Engine**	A
	0861687	Ref	**Ground Control Box Assemblies 600S with Deutz Engine**	A
	0861688	Ref	**Ground Control Box Assemblies 600SJ & 660SJ with Deutz Engine**	A
1	0100011	AR	Compound, Locking	
2	0630518	2	Capscrew, Button Head	
3	0100048	AR	Grease, Dielectric	
4	0641506	4	Bolt 5/16in-18NC x 3/4in	
6	0861389	1	Box, Fiberglass	
6A	7020246	2	Latch	
7		Ref	Module (Re-calibration Required when Replaced) Options:	
7	1600327	NLA	Caterpillar and Deutz Engine (Use p/n 2915014) **(SN 0300068000 through 0300077489)**	
7	1600364	1	Caterpillar Engine **(SN 0300077490 through 0300087000)**	
7	1600364	1	Deutz Engine **(SN 0300077490 through 0300084826)**	
7	2915014	1	Update Kit (Includes Module, Cables, Programming Instructions and CD Software) (Use with 1600327 & 1600364)	
7	1600411	1	Deutz Engine **(SN 0300084827 through 0300087000)**	
8	1670829	1	Bezel	
9		Ref	Decal - Ground Control Display Options:	
9	1702610	1	Decal - Ground Control Display **(SN 0300068000 through 0300072241)**	
9	1705752	1	Decal - Ground Control Display **(SN 0300072242 through 0300084826)**	
9	1705753	1	Decal - Ground Control Display **(SN 0300084827 through 0300087000)**	
10		Ref	Decal - Faceplate Options:	
10	1703465	1	Decal - Faceplate 600S	
10	1703466	1	Decal - Faceplate 600SJ/660SJ	
11	2420172	1	Gauge, Hourmeter	
12	2760105	1	Housing, Display Light	
13	3300408	AR	Locknut, Plastic Insert	
15	3311401	10	Nut 1/4in-20NC	
16	3539219	1	Plate, Reinforcement	
18	3910804	6	Screw #8-32NC x 1/4in	
19	4060906	6	Shield, Toggle Switch	
20	4070987	1	Shim (.015in)	

SECTION 2 - TURNTABLE

ITEM	PART NUMBER	QTY	DESCRIPTION	REV
21	4360328	6	Switch, Toggle	
23	4360470	1	Switch, Key	
23A	2860030	1	Key Replacement	
24	4360475	1	Switch, Emergency Stop	
25	4360476	1	Switch, Contact Block	
26	4460234	2	Tie, Wire (Not Shown)	
27	4460426	AR	Connector, Strain Relief	
28	4460488	AR	Mounting Base, Terminal	
29	4460471	1	Lockwasher, Terminal	
30	4460470	1	Nut, Terminal	
33	4740444	6	Washer, Special	
35	4751400	20	Flatwasher 1/4in Regular	
40	4460526	1	Connector, Strain Relief	
41	3740049	AR	Relay	
42	3900268	AR	Screw, Flange #10 x 1/2in	
43	4460875	1	Connector, Gray	
44	4460874	1	Connector, Natural	
44	4460905	4	Connector, Amp Seal Plug	
45		Ref	Harness, Analyzer Cable Options (Not Shown - See ELECTRICAL SECTION for Breakdown):	
45	4922666	1	Harness, Analyzer Cable **(SN 0300068000 through 0300084826)**	
45	Not Required	0	Harness, Analyzer Cable **(SN 0300084827 through 0300087000)**	
46	0630548	5	Bolt	
47	4761400	15	Lockwasher 1/4in	
48	3300205	4	Nut, Retainer	
49	1705132	1	Decal - ADE	
50	3520035	1	Plug, Cap (Not Shown)	

FIGURE 2-17. ELECTRICAL OPTIONS INSTALLATION (TURNTABLE MOUNTED)

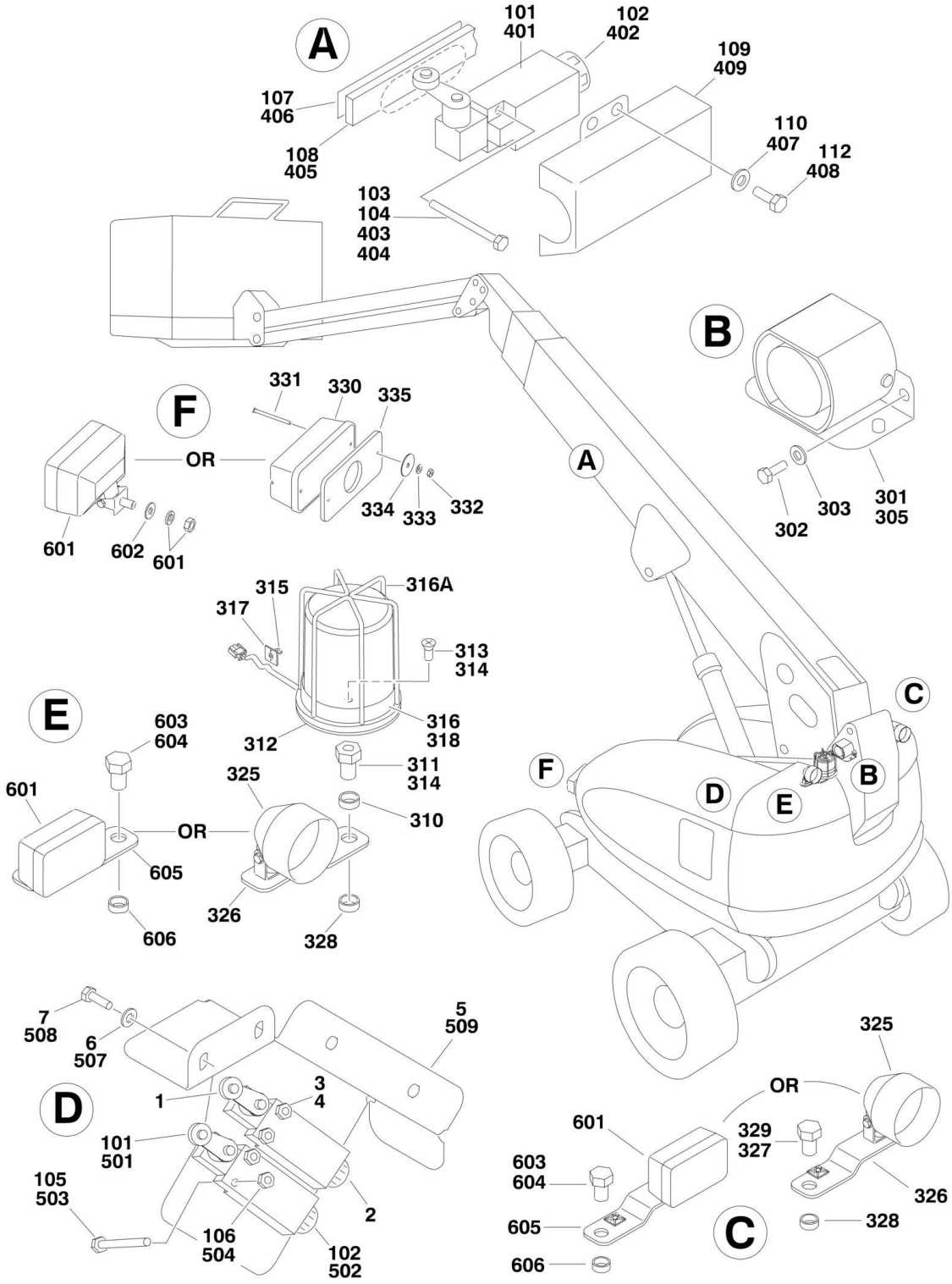

FIGURE 2-17. ELECTRICAL OPTIONS INSTALLATION (TURNTABLE MOUNTED)

ITEM	PART NUMBER	QTY	DESCRIPTION	REV
		Ref	**ELECTRICAL OPTIONS INSTALLATIONS (TURNTABLE MOUNTED)**	
	0255335	Ref	**LIMIT SWITCH INSTALLATION - ABOVE HORIZONTAL**	6-F
1		Ref	Switch, Limit Options:	
1	4360322	NLA	Switch, Limit (Use p/n 4360578) **(SN 0300068000 through 0300074440)**	
1	4360549	NLA	Switch, Limit (Use p/n 4360578) **(SN 0300074441 through 0300080872)**	
1	4360578	1	Switch, Limit **(SN 0300080873 through 0300087000)**	
2		Ref	Connector, Strain Relief Options:	
2	4460428	1	Connector, Strain Relief **(SN 0300068000 through 0300068965)**	
2	4460968	1	Connector, Strain Relief **(SN 0300074441 through 0300087000)**	
3	3931028	2	Capscrew, Socket Head #10-24NC x 1-3/4in	
4	3311005	2	Locknut #10-24NC	
5	1670818	1	Cover, Limit Switch	
6	4751400	4	Flatwasher 1/4in Regular	
7	3931408	4	Bolt 1/4in-20NC x 1in	
	0255698	Ref	**LIMIT SWITCHES INSTALLATION - DUAL CAPACITY(AUSTRALIAN SPEC ONLY)**	6-D
101		Ref	Switch, Limit Options:	
101	4360322	NLA	Switch, Limit (Use p/n 4360578) **(SN 0300068000 through 0300074440)**	
101	4360549	NLA	Switch, Limit (Use p/n 4360578) **(SN 0300074441 through 0300080872)**	
101	4360578	1	Switch, Limit **(SN 0300080873 through 0300087000)**	
102		Ref	Connector, Strain Relief Options:	
102	4460428	2	Connector, Strain Relief **(SN 0300068000 through 0300074440)**	
102	4460968	2	Connector, Strain Relief **(SN 0300074441 through 0300087000)**	
103	0100035	AR	Compound, Locking	
104	3930816	2	Capscrew, Socket Head #8-32NC x 1in	
105	3930828	2	Capscrew, Socket Head #8-32NC x 1-3/4in	
106	3310805	2	Locknut #8-32NC	
107	4420060	9 ft/2.7m	Tape, Double Sided	
108	0362528	1	Bar, Fiberglass	
109	1670824	1	Cover, Limit Switch	
110	4751400	4	Flatwasher 1/4in Regular	
112	0641403	4	Bolt 1/4in-20NC x 3/8in	
	0270833	Ref	**ALARMS INSTALLATION**	1
301	0257887	1	Alarm/Harness Assembly	
301	0140032	1	Alarm	
301	2820035	6 in/15cm	Loom	
301	4460424	1	Plug	
301	4460268	2	Socket	
302	0641406	2	Bolt 1/4in-20NC x 3/4in	
303	4711400	2	Flatwasher 1/4in Thin	
305	0100048	AR	Sealant, Silicone	
	0270805	Ref	**STROBE LIGHT INSTALLATION (AMBER) (OPTIONAL)**	2
		Ref	**Note: If machines is equipped with BLUE Strobe Light, see**	

ITEM	PART NUMBER	QTY	DESCRIPTION	REV
			SPECIAL OPTIONS SECTION SkyGuard Kit.	
310	4220162	1	Spacer, Stop - Used with ECCO Model 6640 Only **(SN 0300068000 through 0300069327)**	
311		Ref	Adapter Options:	
311	0630491	1	Adapter used with ECCO Model 6640	
311	0080241	1	Adapter used with ECCO Model 6650	
312	3539281	1	Plate, Mounting - Used with ECCO Model 6640 Only **(SN 0300068000 through 0300069327)**	
313	0741606	1	Screw, Flathead Countersunk 3/8in-16NC x 3/4in - Used with ECCO Model 6640 Only **(SN 0300068000 through 0300069327)**	
314	0100011	AR	Compound, Locking	
315	4240032	1	Wire-Tile	
316		Ref	Strobe Light/Guard/Harness Assembly Options:	
316	0255917	NLA	Strobe Light/Guard/Harness Assembly (Use p/n 0272507) **(SN 0300068000 through 0300069326)**	
316	0272507	1	Strobe Light/Guard/Harness Assembly (Includes Item 311 & 316A) **(SN 0300069327 through 0300087000)**	
316		Ref	Bulb, Replacement Options:	
316	7016380	1	Bulb for ECCO Model 6640	
316	70001941	1	Bulb for ECCO Model 6650	
316A		Ref	Guard Options:	
316A	4060907	1	Guard used with ECCO Model 6640	
316A	2920215	1	Guard used with ECCO Model 6650	
317	4460234	1	Clamp	
318	0100048	AR	Sealant, Silicone	
	0271552	Ref	**LIGHTS INSTALLATION (OPTIONAL)**	2
325	2920110	2	Headlight	
326	0902206	2	Bracket, Mounting	
327	0642612	1	Bolt 1in-8NC x 1-1/2in	
328	4220162	2	Spacer	
329	0100011	AR	Compound, Locking	
330	2920113	2	Taillight	
331	3911040	4	Screw, Machine #10-24NC x 2-1/2in	
332	3311005	4	Nut #10-24NC	
333	4751000	4	Flatwasher #10 Regular	
334	4740362	4	Washer, Fender	
335	3960461	2	Gasket	
337	4240032	21	Tie-Strap (Not Shown)	
338	4460234	21	Mount, Tie-Strap (Not Shown)	
339	4360336	1	Switch, Toggle (Not Shown - Located on Console)	
340	3790012	1	O-Ring (Not Shown - Located on Console)	
341	3820001	11	Rivet, Pop (Not Shown)	
		Ref	**TRANSPORT SWITCH INSTALLATION (CE SPEC)**	
	0256305	Ref	**Transport Switch Installation (CE Spec) 600S & 660SJ**	5
	0256306	Ref	**Transport Switch Installation (CE Spec) 600SJ**	5
401		Ref	Switch, Limit Options:	
401	4360322	NLA	Switch, Limit (Use p/n 4360578) **(SN 0300068000 through 0300074440)**	
401	4360549	NLA	Switch, Limit (Use p/n 4360578) **(SN 0300074441 through 0300080872)**	
401	4360578	1	Switch, Limit **(SN 0300080873 through 0300087000)**	
402		Ref	Connector, Strain Relief Options:	
402	4460428	1	Connector, Strain Relief **(SN 0300068000 through**	

ITEM	PART NUMBER	QTY	DESCRIPTION	REV
			0300074440)	
402	4460968	1	Connector, Strain Relief **(SN 0300074441 through 0300087000)**	
403	3930828	2	Capscrew, Socket Head #8-32NC x 1-3/4in	
404	3310805	2	Locknut #8-32NC	
405		Ref	Bar, Fiberglass Options:	
405	0362609	1	Bar, Fiberglass 600S & 660SJ	
405	0362610	1	Bar, Fiberglass 600SJ	
406	4420060	AR	Tape, Double-Sided	
407	4751400	4	Flatwasher 1/4in Regular	
408	0641403	4	Bolt 1/4in-20NC x 3/8in	
409		Ref	Cover, Limit Switch Options:	
409	1670824	1	Cover, Limit Switch **(SN 0300068000 through 0300078808)**	
409	3380535	1	Cover, Limit Switch **(SN 0300078809 through 0300087000)**	
	0257882	Ref	**8M DRIVE CUT-OUT INSTALLATION**	1
501		Ref	Switch, Limit Options:	
501	4360322	NLA	Switch, Limit (Use p/n 4360578) **(SN 0300068000 through 0300074440)**	
501	4360549	NLA	Switch, Limit (Use p/n 4360578) **(SN 0300074441 through 0300080872)**	
501	4360578	1	Switch, Limit **(SN 0300080873 through 0300087000)**	
502		Ref	Connector, Strain Relief Options:	
502	4460428	1	Connector, Strain Relief **(SN 0300068000 through 0300074440)**	
502	4460968	1	Connector, Strain Relief **(SN 0300074441 through 0300087000)**	
503	3930828	2	Capscrew, Socket Head #8-32NC x 1-3/4in	
504	3310805	2	Locknut #8-32NC	
505	1060016	181 in /4.6m	Cable, Electrical - 16/3 (Not Shown)	
507	4751400	2	Flatwasher 1/4in Regular	
508	3931408	2	Bolt, Socket Head 1/4in-20NC x 3/8in	
509	1670821	1	Cover, Limit Switch	
	0274210	Ref	**CHASSIS ILLUMINATION LIGHT INSTALLATION**	1-A
601	2920157	4	Lamp, Worklight	
602	4740546	4	Washer, Rubber	
603	0100011	AR	Compound, Locking	
604	0642612	2	Bolt 1in-8NC x 1-1/2in	
605	0902206	2	Bracket, Light Mounting	
606	4220162	2	Spacer	
608	3790012	1	O-Ring (Not Shown - Located at Platform Console Box)	
609	4360336	1	Switch, Toggle (Not Shown - Located at Platform Console Box)	
610	4240032	21	Strap, Tie (Not Shown)	
611	4460234	21	Mount, Cable (Not Shown)	
612	3820001	11	Rivet, Pop (Not Shown)	

FIGURE 2-18. ENGINE TRAY JACK INSTALLATION (OPTIONAL)

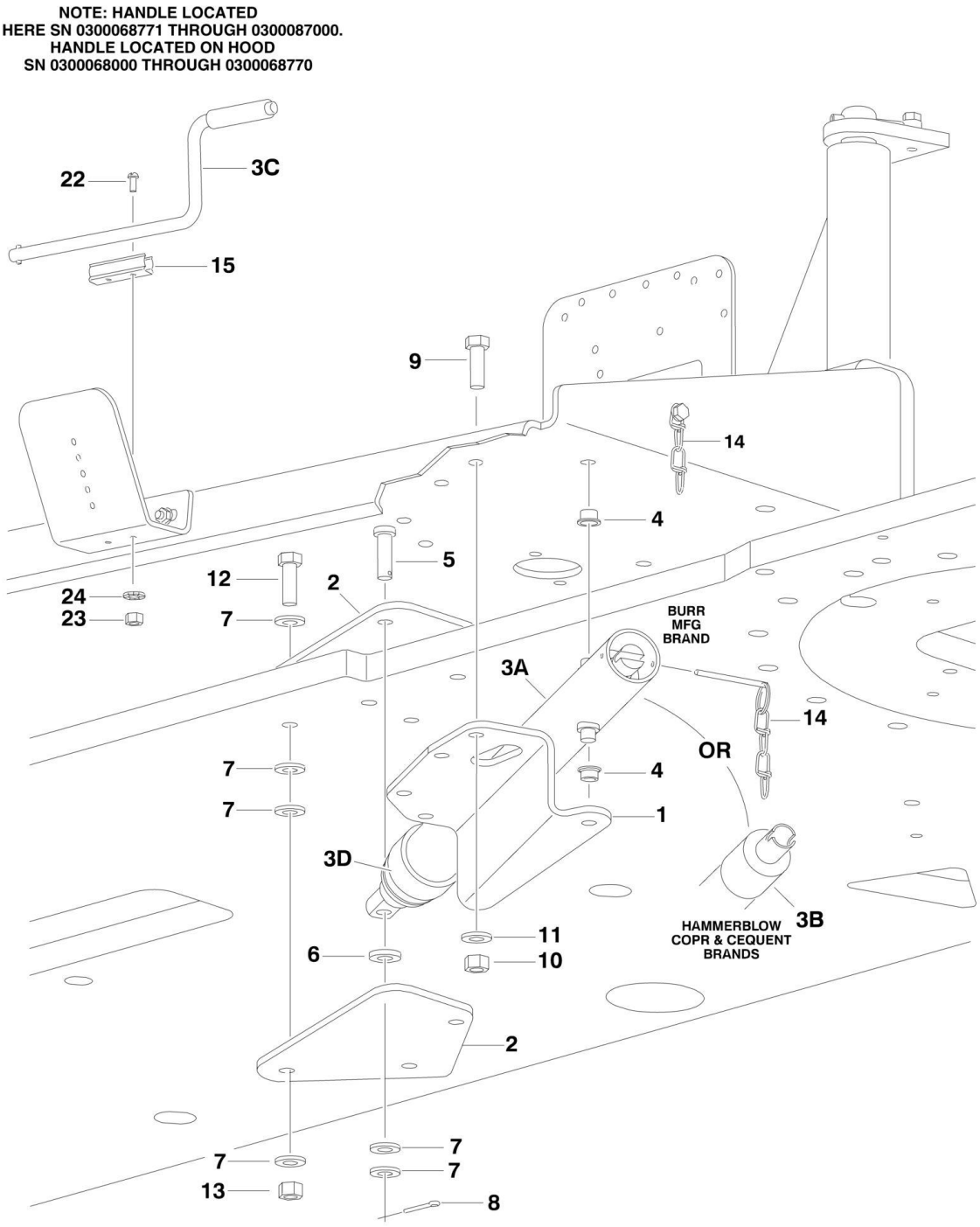

FIGURE 2-18. ENGINE TRAY JACK INSTALLATION (OPTIONAL)

ITEM	PART NUMBER	QTY	DESCRIPTION	REV
	0255881	Ref	**ENGINE TRAY JACK INSTALLATION**	3-G
1	3537445	1	Bracket	
2	3537446	2	Bracket	
3	2840016	1	Hydraulic Jack Assembly Options:	D
3A		Ref	Burr Manufacturing Brand	
3B		Ref	Hammerblow Corp and Cequent Brands	
3C		Ref	Handle Options:	
3C	7016374	1	Burr Manufacturing Brand	
3C	7024598	1	Hammerblow Corp Brand	
3D	7016322	1	Wiper (Burr Manufacturing Brand Only)	
4	0962051	2	Bushing, Flanged	
5	3430816	1	Pin, Clevis	
6	4891800	1	Flatwasher 1/2in Hardened	
7	4711800	6	Flatwasher 1/2in Thin	
8	3450404	1	Pin, Cotter 1/8in x 1in	
9	0641609	4	Bolt 3/8in-16NC x 1-1/8in	
10	3311605	4	Locknut 3/8in-16NC	
11	4891600	4	Flatwasher 3/8in Hardened	
12	0641818	4	Bolt 1/2in-13NC x 2-1/4in	
13	3311805	4	Locknut 1/2in-13NC	
14	3422530	1	Pin, Hitch **(SN 0300068000 through 0300070643)**	
15	1380147	1	Clip, Spring	
22	3910608	2	Screw #6-32NC x 1in	
23	3310601	2	Nut #6-32NC	
24	4770600	2	Starwasher #6	

FIGURE 2-19. HOODS AND LIFTING PLATE INSTALLATIONS

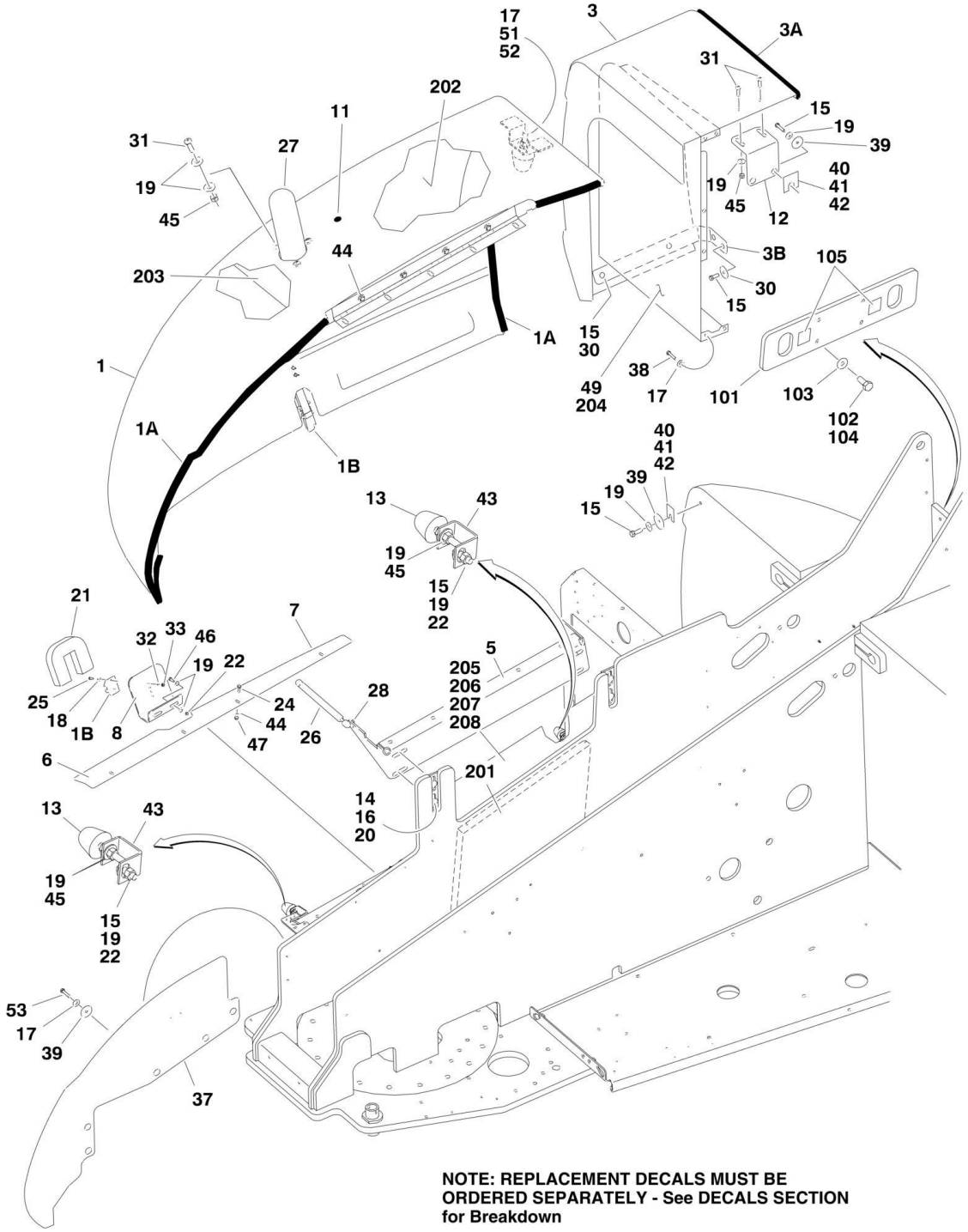

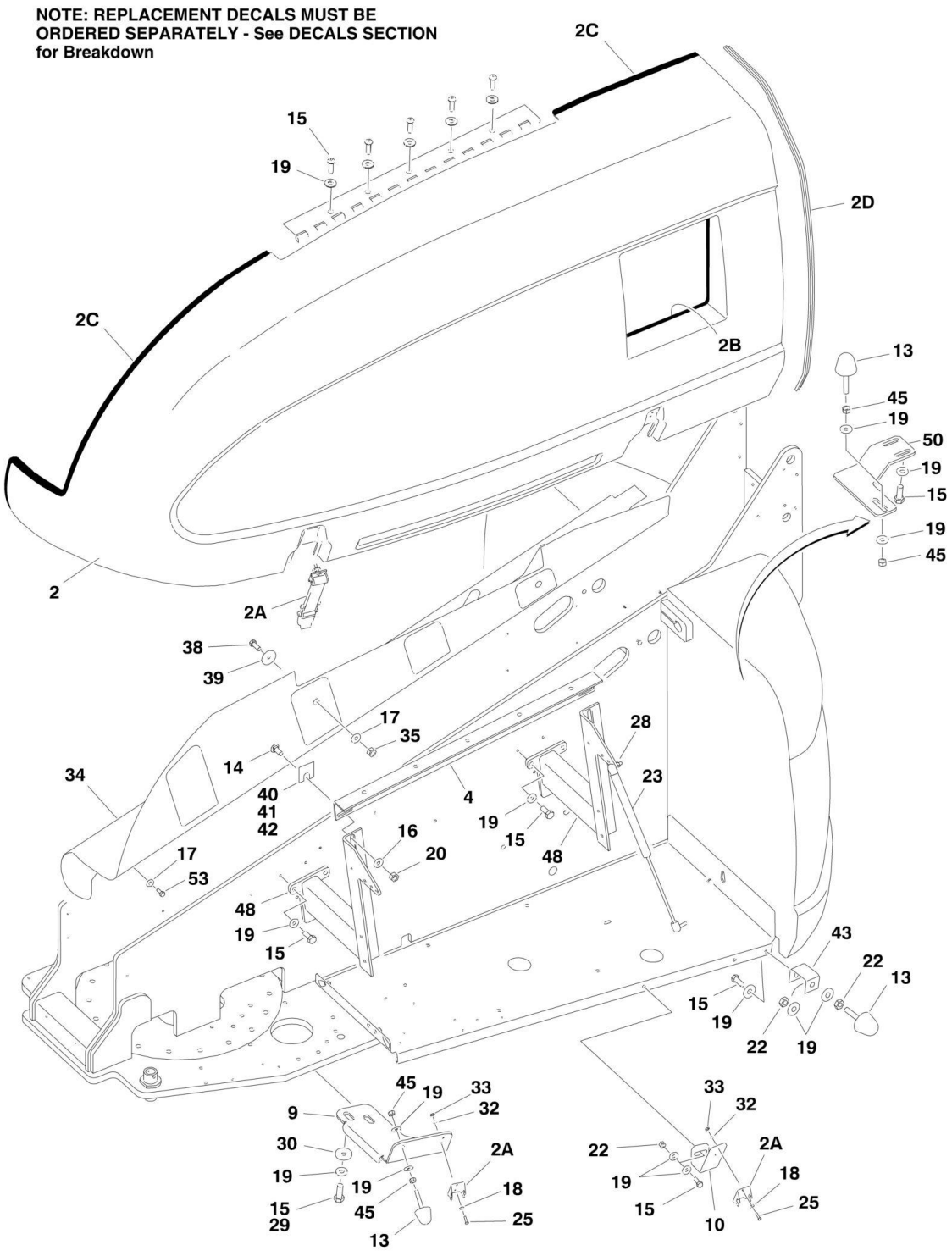
NOTE: REPLACEMENT DECALS MUST BE ORDERED SEPARATELY - See DECALS SECTION for Breakdown
2C
15
19
2D
2C
2B
13
45
19
50
19
15
19
45
2
2A
38
39
17
35
28
34
14
40
41
42
4
23
19
15
48
16
20
17
53
48
19
15
43
22
13
15
19
22
19
45
19
33
32
9
30
19
15
29
19
45
13
2A
18
25
33
32
22
19
15
2A
18
25
10

FIGURE 2-19. HOODS AND LIFTING PLATE INSTALLATIONS

ITEM	PART NUMBER	QTY	DESCRIPTION	REV
		Ref	**Note: Steel Hood Replacement Kits are available for machines built with Deutz engines (Purchase p/n 1001126286) and Caterpillar engines (Purchase p/n 1001126287).**	
	0256830	Ref	**HOODS INSTALLATION**	10-I
1	2680449	1	Hood Assembly - Engine Side	
1	2600209		Hinge	
1A	3960464	65 in /1.67m	Seal	
1A	3960462	61 in /1.55m	Seal	
1B	2940088	1	Latch	
2	2680448	1	Hood Assembly - Tank Side	
2	2600233		Hinge	
2A	2940088	2	Latch	
2B	3960438	53 in /1.35m	Seal	
2C	3960464	83 in /2.11m	Seal	
2D	3960462	55 in/1.4m	Seal	
3	2680450	1	Hood Assembly - Engine Spacer	
3A	3960453	68 in /1.73m	Seal	
3B	7023366	1	Bracket	
4	0902416	1	Bracket, Hood Mounting	
5	0902351	1	Bracket, Hood Mounting	
6	3539934	1	Plate, Seal	
7	3960389	3.5 ft/1m	Seal	
8	0902491	1	Bracket, Latch	
9	0902223	1	Bracket, Latch	
10	0902143	1	Bracket, Latch	
11	3520033	2	Plug, Hole	
12	0902161	1	Bracket, Hood Spacer Mounting	
13	0940071	5	Bumper	
14	0630507	6	Bolt, Carriage 1/2in-13NC x 1-1/4in	
15	0641608	AR	Bolt 3/8in-16NC x 1in	
16	4740171	6	Flatwasher, Hardened	
17	4751500	9	Flatwasher 5/16in Regular	
18	4751000	12	Flatwasher #10 Regular	
19	4751600	AR	Flatwasher 3/8in Regular	
20	3311805	6	Locknut 1/2in-13NC	
21	3960470	1	Seal	
22	3311605	5	Locknut 3/8in-16NC	
23	4160139	2	Spring, Gas (Tank Side)	
24	0641406	4	Bolt 1/4in-20NC x 3/4in	
25	0721006	6	Screw #10-24NC x 3/4in	
26	4160143	2	Spring, Gas (Engine Side)	
27	4845411	1	Outlet, Exhaust	
28	3311505	4	Locknut 5/16in-18NC	
29	0100011	AR	Compound, Locking	
30	4740076	4	Washer, Fender	
31	3900232	5	Screw, Button Head 3/8in-16NC x 1-1/4in	

ITEM	PART NUMBER	QTY	DESCRIPTION	REV
32	4761000	6	Lockwasher #10	
33	3311001	6	Nut #10-24NC	
34	1670771	1	Cover	
35	3311501	AR	Nut 5/16in-18NC	
36	0641512	2	Bolt 5/16in-18NC x 1-1/2in	
37	1670779	1	Cover, Side	
38	0641506	6	Bolt 5/16in-18NC x 3/4in	
39	4740076	AR	Washer, Fender	
40	4070410	AR	Shim 1/16in	
41	4070411	AR	Shim 1/8in	
42	4070412	AR	Shim 3/16in	
43	0902219	2	Bracket, Bumper	
44	4751400	4	Flatwasher 1/4in Regular	
45	3311601	AR	Nut 3/8in-16NC	
46	0641609	2	Bolt 3/8in-16NC x 1-1/8in	
47	3311405	4	Locknut 1/4in-20NC	
48	4845356	2	Hood Mount Weldment	
49	3539979	1	Plate, Inlet Baffle **(SN 0300068000 through 0300076512)**	
50	0902384	1	Bracket, Hood Mount	
51	0940088	1	Hood, Bumper	
52	3321501	2	Nut 5/16in-24NF	
53	0641506	10	Bolt 5/16in-18NC x 3/4in **(SN 0300074784 through 0300087000)**	
	0256122	Ref	**LIFTING PLATE INSTALLATION**	1-B
101	3539590	1	Plate, Lifting	
102	0682014	4	Bolt 5/8in-11NC x 1-3/4in (Grade 8)	
103	4892000	4	Flatwasher 5/8in Hardened	
104	0100019	AR	Compound, Locking	
105	1701500	2	Decal - Tie Down/Lift	
	0256823	Ref	**NOISE REDUCTION INSTALLATION (DIESEL MACHINES)**	2
201	2820078	1	Foam, Acoustical	
202	2820079	1	Foam, Acoustical	
203	2820119	1	Foam, Acoustical	
204	2820081	1	Foam, Acoustical **(SN 0300068000 through 0300076512)**	
205	3539955	1	Plate, Baffle	
206	0641506	2	Bolt 5/16in-18NC x 3/4in	
207	4751500	2	Flatwasher 5/16in Regular	
208	0100011	AR	Compound, Locking (Not Shown)	

FIGURE 2-20. 2500W GENERATOR INSTALLATION CATERPILLAR MACHINES (OPTIONAL)

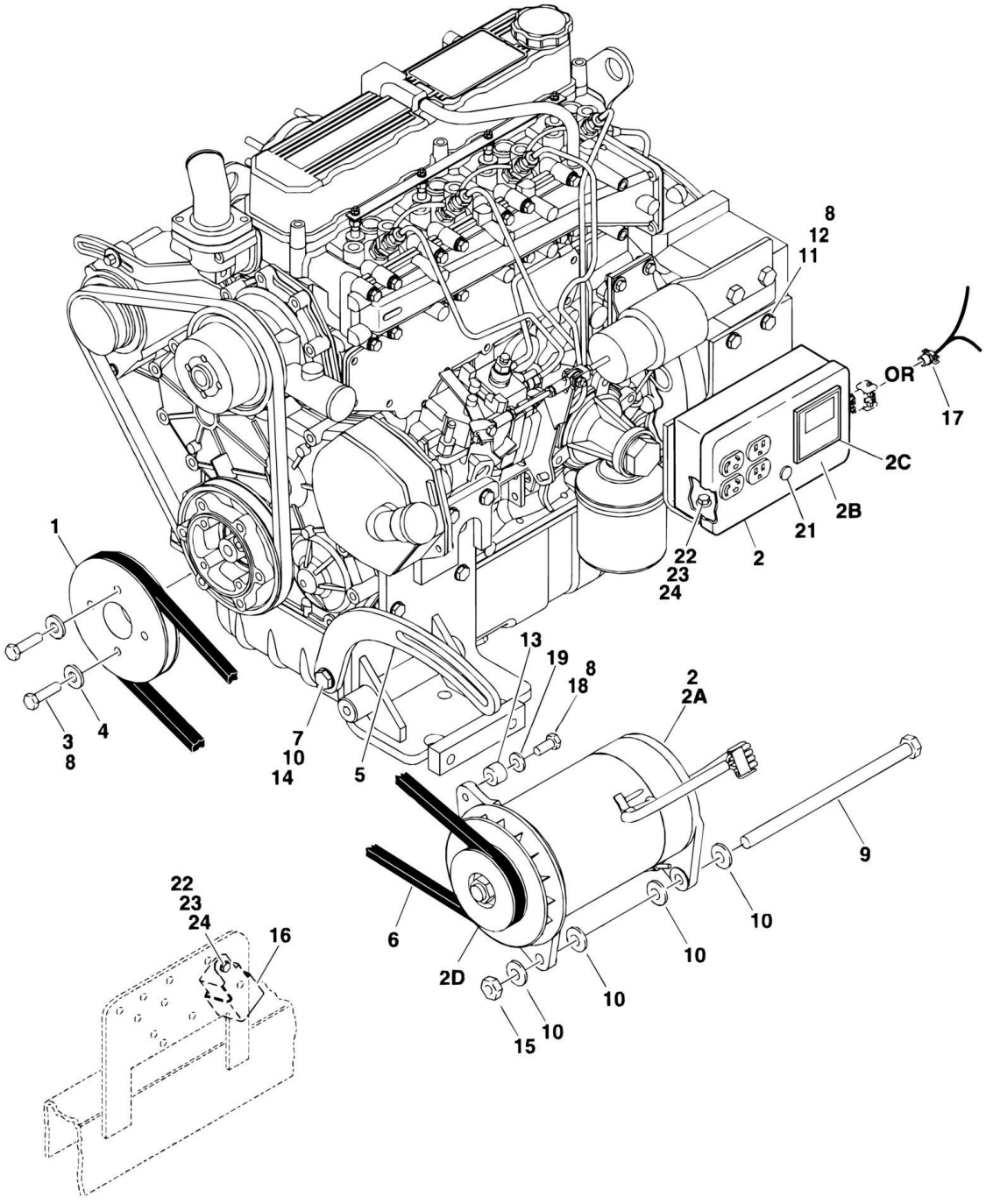

FIGURE 2-20. 2500W GENERATOR INSTALLATION CATERPILLAR MACHINES (OPTIONAL)

ITEM	PART NUMBER	QTY	DESCRIPTION	REV
		Ref	**2500W GENERATOR INSTALLATION OPTIONS:**	
		Ref	**Generator Installation (SN 0300068000 through 0300077489)**	
	0273518	Ref	**110V/60Hz**	3-C
	0273538	Ref	**110V/50Hz**	3-C
	0273539	Ref	**220V/50Hz**	3-C
		Ref	**Generator Installation (SN 0300077490 through 0300087000)**	
	0274081	Ref	**110V/60Hz**	1-A
	0274091	Ref	**110V/50Hz**	1-A
	0274087	Ref	**220V/50Hz**	1-A
1	3580322	1	Pulley	
2		Ref	Generator and Control Box Assembly Options:	
2	2460032	1	110V/60Hz **(SN 0300068000 through 0300077489)**	
2	2460055	1	110V/60Hz **(SN 0300077490 through 0300087000)**	
2	2460039	1	110V/50Hz **(SN 0300068000 through 0300077489)**	
2	2460057	1	110V/50Hz **(SN 0300077490 through 0300087000)**	
2	2460013	1	220V/50Hz **(SN 0300068000 through 0300077489)**	
2	2460056	1	220V/50Hz **(SN 0300077490 through 0300087000)**	
2A	7012558	1	Generator Only - 110V/60Hz	
2A	2460049	1	Generator Only - 110V/50Hz (was p/n 7019679 & 70000129)	
2A	1001100321	1	Generator Only - 220V/50Hz (was p/n 7019679 & 70000128)	
		Ref	**Note: Replacement Generators come standard with p/n 3580134 pulley. This pulley may not be correct for all applications. Refer to pulley options below.**	
2A		Ref	Armature with Slip Rings Options:	
2A	7026199	1	Armature with Slip Rings - 110V/60Hz	
2A	70000122	1	Armature with Slip Rings - 110V/50Hz	
2A	70000123	1	Armature with Slip Rings - 220V/50Hz	
2A	7012513	4	Cap, Brush Holder	
2A	7020108	4	Brush	
2A	7020109	4	Holder, Brush	
2A	7012514	1	Fan	
2A	7020110	1	Bell, Front	
2A	7020111	1	Bell, Rear	
2A	7020190	2	Bearing	
2B		Ref	Box, Control Options:	
2B	7003657	1	110V/60Hz **(SN 0300068000 through 0300077489)**	
2B	7019680	1	110V/60Hz **(SN 0300077490 through 0300087000)**	
2B	700002239	1	110V/50Hz **(SN 0300068000 through 0300077489)**	
2B	7019680	1	110V/50Hz **(SN 0300077490 through 0300087000)**	
2B	70002235	1	220V/50Hz **(SN 0300068000 through 0300077489)**	
2B	70000127	1	220V Control Box **(SN 0300077490 through 0300087000)**	
2B		Ref	Receptacle Options:	
2B	4460190	AR	Receptacle, Standard (110V Only)	
2B	4460027	AR	Receptacle, Twistlock (110V Only)	
2B	70000124	AR	Receptacle, Double (220V/50Hz Only)	
2B	70000125	AR	Receptacle, Single (220V/50Hz Only)	
2B		Ref	Breaker, Circuit Options:	
2B	7020194	1	110V/60Hz Breaker, Circuit **(SN 0300068000 through 0300077489)**	
2B	4360542	1	110V/60Hz Breaker, Circuit **(SN 0300077490 through**	

SECTION 2 - TURNTABLE

ITEM	PART NUMBER	QTY	DESCRIPTION	REV
			0300087000)	
2B	70002240	1	110V/50Hz Breaker, Circuit **(SN 0300068000 through 0300077489)**	
2B	4360542	1	110V/50Hz Breaker, Circuit **(SN 0300077490 through 0300087000)**	
2B	70000126	1	220V Breaker, Circuit	
2B	3520028	1	Plug, Hole	
2B	2920162	1	Lamp **(SN 0300068000 through 0300077490)**	
2B	7020191	1	Switch, Toggle **(SN 0300068000 through 0300077490)**	
2C		Ref	Voltmeter Options:	
2C	2420203	1	Voltmeter - 110V (was p/n 7010699)	
2C	7020192	1	Voltmeter - 220V	
2D		Ref	Pulley Options:	
2D	3580276	1	Pulley - 60Hz	
2D	3580134	1	Pulley - 50Hz	
2D	7027887	1	Key, Woodruff	
3	0700816	4	Bolt 8mm x 40mm	
4	4751900	4	Flatwasher 9/16in	
5		Ref	Arm, Adjusting Options:	
5	0200742	1	Arm, Adjusting **(SN 0300068000 through 0300074860)**	
5	0200819	1	Arm, Adjusting **(SN 0300074861 through 0300087000)**	
6		Ref	V-Belt Options:	
6	0480121	1	110V/60Hz	
6	0480120	1	110V/50Hz	
6	0480120	1	220V/50Hz	
7	0641610	1	Bolt 3/8in-16NC x 1-1/4in	
8	0100011	AR	Compound, Locking	
9	0641772	1	Bolt 7/16in-14NC x 9in	
10	4751600	6	Flatwasher 3/8in	
11	3574684	1	Plate, Box Mounting	
12	0701210	2	Bolt, Metric 12mm x 20mm	
13		Ref	Bushing, Spacer Options:	
13	0962653	1	Bushing, Spacer **(SN 0300068000 through 0300074860)**	
13	0962563	1	Bushing, Spacer **(SN 0300074861 through 0300087000)**	
14	3311605	1	Locknut 3/8in-16NC	
15	3311705	1	Locknut 7/16in-14NC	
16	3740080	1	Relay	
17	4460023	1	Connector, Strain Relief **(SN 0300068000 through 0300077490)**	
18	0641508	1	Bolt 5/16in-18NC x 1in	
19	4751500	1	Flatwasher 5/16in	
21	3520028	1	Plug, Hole **(SN 0300068000 through 0300077490)**	
22	0721006	3	Bolt #10-24NC x 3/4in	
23	3311005	3	Locknut #10-24NC	
24	4751000	6	Flatwasher #10	
25	4360336	1	Switch, Toggle (Not Shown - Located at Platform)	
26	4740397	1	Bushing (Not Shown - Located at Platform) **(SN 0300068000 through 0300074861)**	
27	4060802	1	Guard, Switch (Not Shown - Located at Platform)	
28		Ref	Decal - Voltage Options (Not Shown - Located at Platform):	
28	See Note	1	110V/60Hz (Note: Not Available for Purchase)	
28	0480120	1	110V/50Hz	

ITEM	PART NUMBER	QTY	DESCRIPTION	REV
28	0480120	1	220V/50Hz	
29	2820031	4 in/10cm	Heat Shrink (Not Shown - Located at Platform)	
30	3251102	1	Decal (Not Shown - Located at Platform)	

FIGURE 2-21. 2500W GENERATOR INSTALLATION - DEUTZ MACHINES (OPTIONAL)

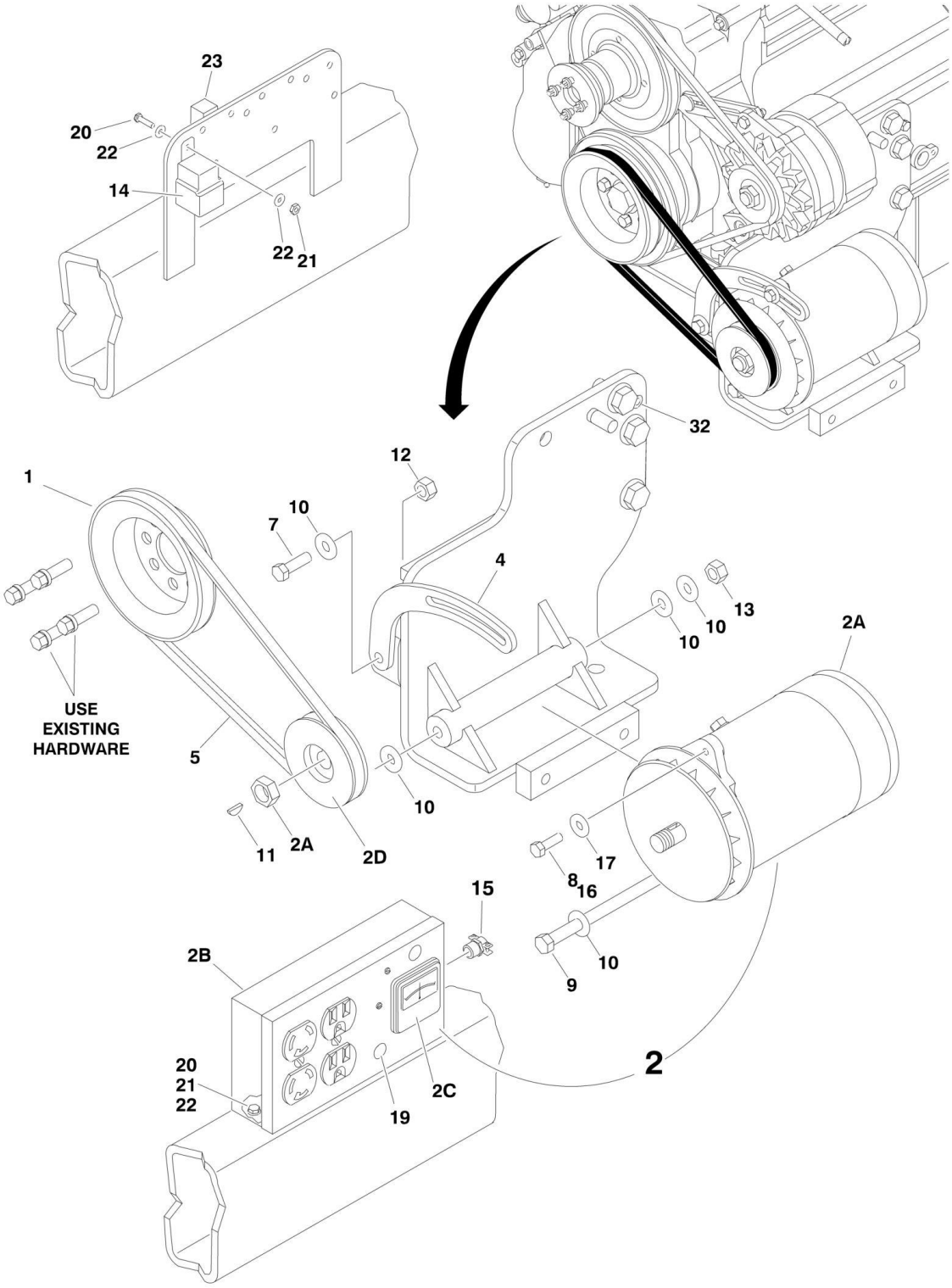

FIGURE 2-21. 2500W GENERATOR INSTALLATION - DEUTZ MACHINES (OPTIONAL)

ITEM	PART NUMBER	QTY	DESCRIPTION	REV
		Ref	**2500W GENERATOR INSTALLATION OPTIONS:**	
	0272482	Ref	**110V/50Hz Generator (SN 0300068000 through 0300077489)**	3
	0274090	Ref	**110V/50Hz Generator (SN 0300077490 through 0300087000)**	1
	0272481	Ref	**220V/50Hz Generator (SN 0300068000 through 0300077489)**	3
	0274086	Ref	**220V/50Hz Generator (SN 0300077490 through 0300087000)**	1
1	3580158	1	Pulley	
2		Ref	Generator and Control Box Assembly Options:	
2	2460039	1	110V/50Hz Assembly **(SN 0300068000 through 0300077489)**	B
2	2460057	1	110V/50Hz Assembly **(SN 0300077490 through 0300087000)**	A
2	2460013	1	220V/50Hz Assembly **(SN 0300068000 through 0300077489)**	B
2	2460056	1	220V/50Hz Assembly **(SN 0300077490 through 0300087000)**	A
2A		Ref	Replacement Generator Options:	
2A	2460049	1	110V Replacement Generator	
2A	1001100321	1	220V Replacement Generator	
2A	7020193	1	Cable, Generator (Generator to Control Box)	
2A		Ref	Armature Options:	
2A	70000122	1	Armature 110V Generator	
2A	70000123	1	Armature 220V Generator	
2A	7020108	4	Brush	
2A	7020109	4	Holder, Brush	
2A	7012513	4	Cap, Brush Holder	
2A	7012514	1	Fan	
2A	7020110	1	Bell, Front	
2A	7020111	1	Bell Rear	
2A	7020190	2	Bearing	
2B		Ref	Control Box Options:	
2B	70002239	1	110V Control Box **(SN 0300068000 through 0300077489)**	
2B	7019680	1	110V Control Box **(SN 0300077490 through 0300087000)**	
2B	70002235	1	220V Control Box **(SN 0300068000 through 0300077489)**	
2B	70000127	1	220V Control Box **(SN 0300077490 through 0300087000)**	
2B		Ref	Breaker, Circuit Options:	
2B	70002240	1	Breaker 110V **(SN 0300068000 through 0300077489)**	
2B	2420203	1	Breaker 110V **(SN 0300077490 through 0300087000)**	
2B	70000126	1	Breaker 220V	
2B		Ref	Receptacle Options:	
2B	4460190	AR	Receptacle, Standard 110V	
2B	4460027	AR	Receptacle, Twistlock 110V	
2B	70000124	AR	Receptacle, Double 220V	
2B	70000125	AR	Receptacle, Single 220V	
2B	2920162	1	Lamp	
2B	7020191	1	Switch, Toggle	
2B	3520028	1	Plug, Hole	
2C		Ref	Voltmeter Options:	
2C	2420203	1	Voltmeter 110V (was p/n 7010699)	
2C	7020192	1	Voltmeter 220V	
2D	3580134	1	Pulley	
4	0200742	1	Arm, Adjusting	
5		Ref	V-Belt Options:	
5	0480120	1	110Volt Assembly **(SN 0300068000 through 0300068274)**	
5	0480119	1	220Volt Assembly **(SN 0300068000 through 0300068274)**	

SECTION 2 - TURNTABLE

ITEM	PART NUMBER	QTY	DESCRIPTION	REV
5	0480121	1	110Volt/220Volt Assembly **(SN 0300068275 through 0300087000)**	
7	0641610	1	Bolt 3/8in-16NC x 1-1/4in	
8	0100011	AR	Compound, Locking	
9	0641772	1	Bolt 7/16in-14NC x 9in	
10	4751600	6	Flatwasher 3/8in Regular	
11	2860012	1	Key, Woodruff	
12	3311605	1	Locknut 3/8in-16NC	
13	3311705	1	Locknut 7/16in-14NC	
14	3740080	1	Relay	
15	4460023	1	Connector, Strain Relief	
16	0641508	1	Bolt 5/16in-18NC x 1in	
17	4751500	AR	Flatwasher 5/16in Regular	
19	3520028	1	Plug, Hole **(SN 0300068000 through 0300077490)**	
20	0721006	4	Bolt #10-24NC x 3/4in	
21	3311005	4	Locknut #10-24NC	
22	4751000	9	Flatwasher #10 Regular	
23	4360294	1	Breaker, Circuit - 30Amp **(SN 0300068000 through 0300077490)**	
25	4360336	1	Switch, Toggle (Not Shown - Located at Platform)	
26	4740397	1	Bushing (Not Shown - Located at Platform)	
27	4060802	1	Guard, Switch (Not Shown - Located at Platform)	
28	3252507	1	Decal - 220V - 50/60Hz (Not Shown - Located on Turntable)	
29	2820031	4 in/10cm	Heat Shrink (Not Shown - Located at Platform)	
30	3251102	1	Decal (Not Shown - Located at Platform)	

FIGURE 2-22. 2500W GENERATOR INSTALLATION - DEUTZ MACHINES (UK SPEC AND GERMAN SPEC) (OPTIONAL)

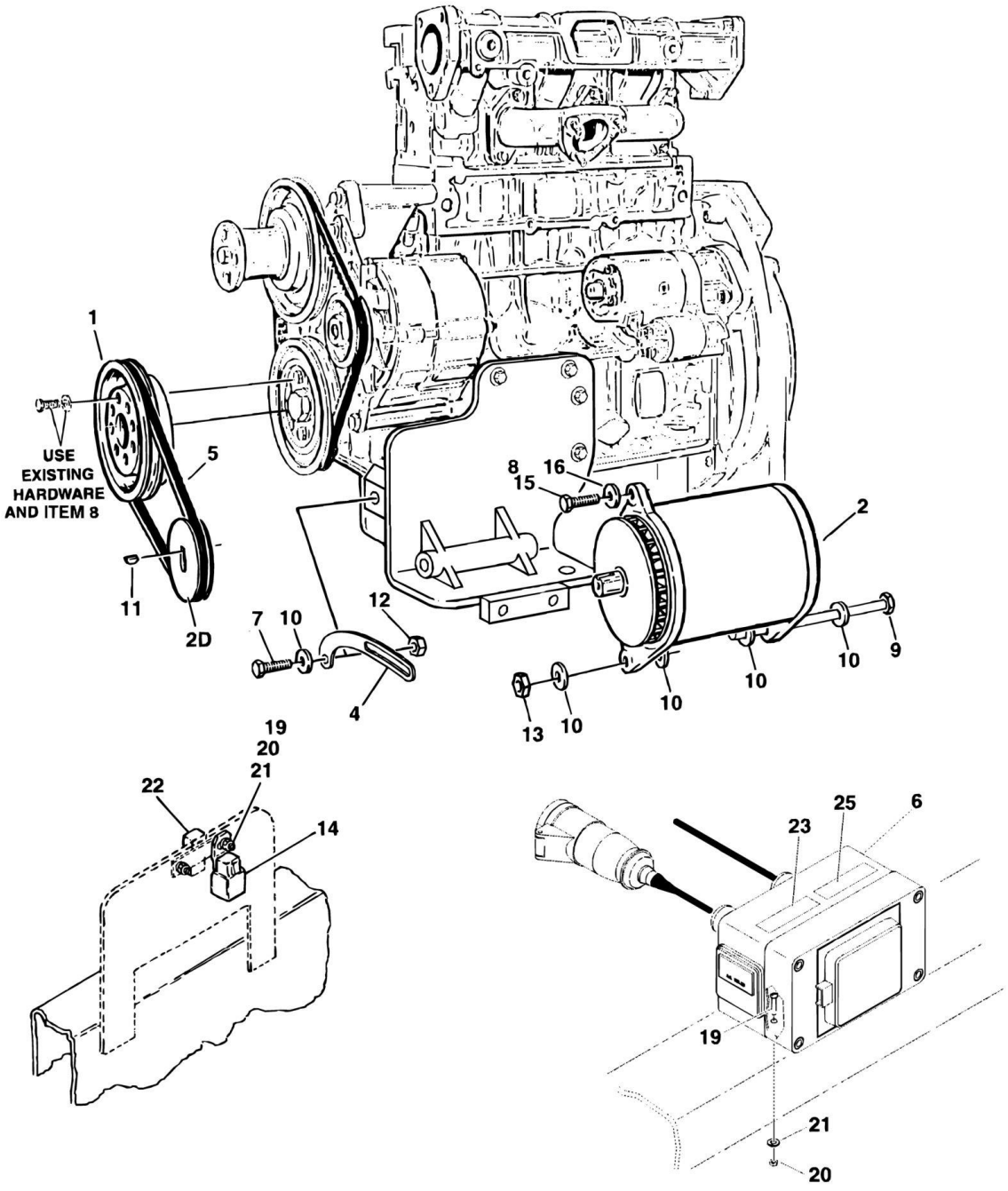

FIGURE 2-22. 2500W GENERATOR INSTALLATION - DEUTZ MACHINES (UK SPEC AND GERMAN SPEC) (OPTIONAL)

ITEM	PART NUMBER	QTY	DESCRIPTION	REV
		Ref	**2500W GENERATOR INSTALLATION OPTIONS:**	
	0273045	Ref	**110V - 50Hz Generator (UK Spec)**	1
	0273085	Ref	**110V - 50Hz Generator (German Spec)**	1
1	3580158	1	Pulley	
2	2460049	1	Generator and Control Box Assembly	A
2A	70000122	1	Armature, Generator	
2A	7020108	4	Brush	
2A	7020109	4	Holder, Brush	
2A	7012513	4	Cap, Brush Holder	
2A	7012514	1	Fan	
2A	7020110	1	Bell, Front	
2A	7020111	1	Bell Rear	
2A	7020190	2	Bearing	
2B	Not Required	0	Box, Control	
2C	Not Required	0	Voltmeter	
2D	3580134	1	Pulley	
2D	7027887	1	Key, Woodruff	
3	1705325	3	Decal - 120V 50Hz (Not Shown - Located on Turntable and at Platform)	
4	0200741	1	Arm, Adjusting	
5	0480120	1	V-Belt	
6		Ref	Box, Generator Control (See ELECTRICAL SECTION for Breakdown)	
6	0861599	1	UK Spec	
6	0861607	1	German Spec	
7	0641610	1	Bolt 3/8in-16NC x 1-1/4in	
8	0100011	AR	Compound, Locking	
9	0641772	1	Bolt 7/16in-14NC x 9in	
10	4751600	6	Flatwasher 3/8in Regular	
11	2860012	1	Key, Woodruff	
12	3311605	1	Locknut 3/8in-16NC	
13	3311705	1	Locknut 7/16in-14NC	
14	3740080	1	Relay	
15	0641508	1	Bolt 5/16in-18NC x 1in	
16	4751500	1	Flatwasher 5/16in Regular	
18	2820031	4 in/10cm	Heat Shrink (Not Shown - Located at Platform)	
19	0721006	4	Bolt #10-24NC x 3/4in	
20	3311005	4	Locknut #10-24NC	
21	4751000	9	Flatwasher #10 Regular	
22	4360294	1	Breaker, Circuit - 30Amp	
23	1705715	1	Decal - Danger	
24	4360336	1	Switch, Toggle (Not Shown - Located at Platform)	
25	1705714	1	Decal - 115V AC	
26	1705728	1	Decal, Generator ON/OFF (Not Shown - Located at Platform)	

FIGURE 2-23. 7500W SKYPOWER GENERATOR INSTALLATION - CATERPILLAR AND DEUTZ ENGINES (OPTIONAL)

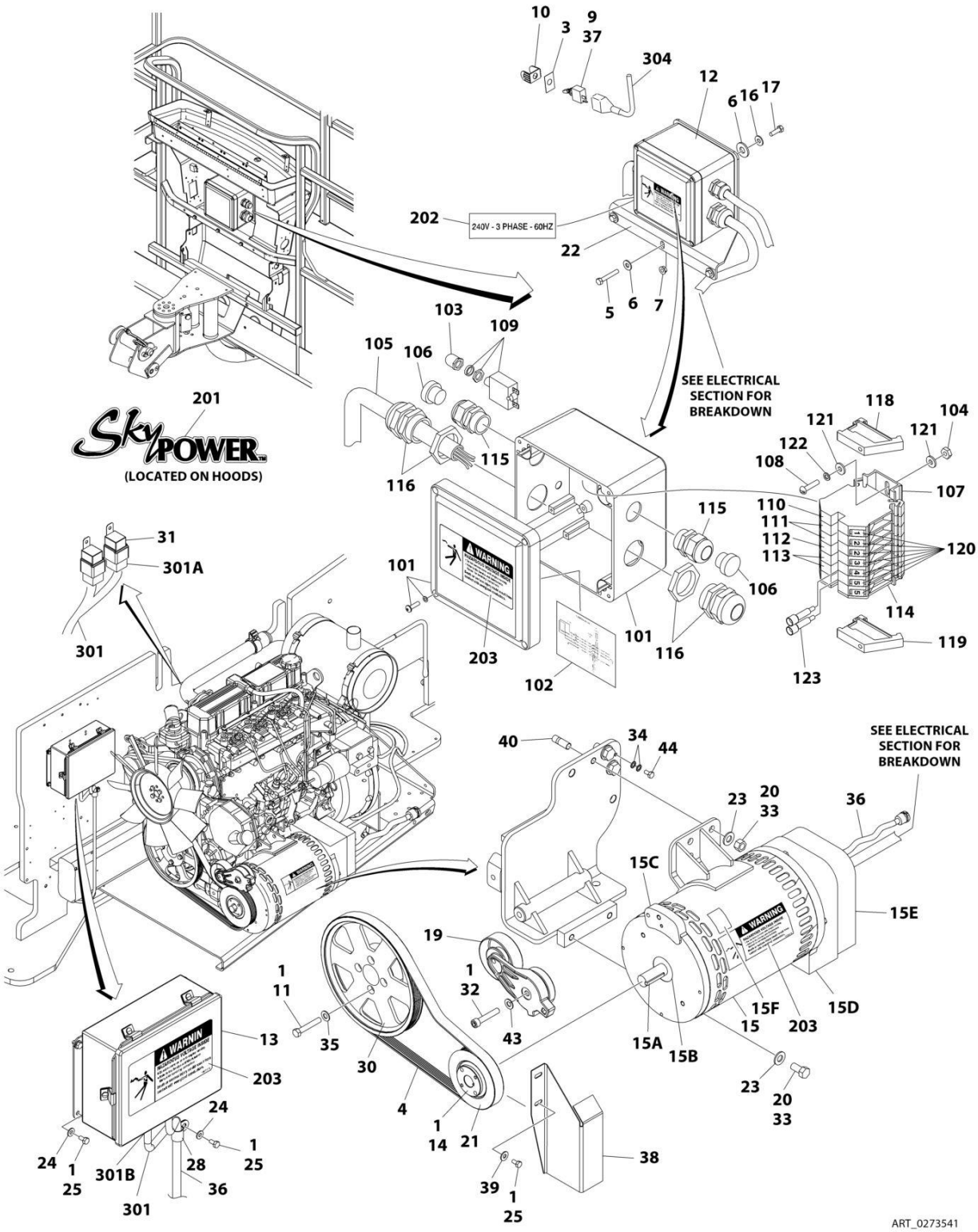

FIGURE 2-23. 7500W SKYPOWER GENERATOR INSTALLATION - CATERPILLAR AND DEUTZ ENGINES (OPTIONAL)

ITEM	PART NUMBER	QTY	DESCRIPTION	REV
		Ref	**7500W SKYPOWER GENERATOR INSTALLATION (OPTIONAL)**	
	0273541	Ref	**50Hz and Caterpillar Engine**	G
	0272492	Ref	**50Hz and Deutz Engine**	F
		Ref	**Note: See ELECTRICAL SECTION for Boom Cable Installation.**	
1	0100011	AR	Compound, Locking	
3	3252764	1	Nameplate	
4	0480125	1	Belt, Drive (Caterpillar Engine)	
4	0480126	1	Belt, Drive (Deutz Engine)	
5	0641516	3	Bolt 5/16 x 2	
6	4711500	10	Flatwasher 5/16	
7	3311505	3	Locknut 5/16	
8	0641406	1	Bolt 1/4 x 3/4 (Not Shown - Located on Turntable)	
9	4360336	1	Switch, Toggle	
10	4060802	1	Guard, Switch	
11	0700815	4	Bolt M8 x 35 (Caterpillar Engine)	
11	4032015	4	Bolt M10 x 55 (Deutz Engine)	
12	0861567	1	Junction Box Assembly (See Items 101-123 for Breakdown)	
13	0861572	1	Control Box Assembly	
14	0962520	1	Bushing, Split Taper	
15		Ref	Generator Assembly Options:	
15	2460050	1	Generator Assembly (Caterpillar Engine)	
15	2460048	1	Generator Assembly (Deutz Engine)	
15	70001100	1	Rotor (Includes p/n 70001384 & 70000863) (Not Shown)	
15	70001384	1	Bearing, Ball Radial (Not Shown)	
15	70000863	1	Fan (Not Shown)	
15		Ref	Stator Options (Not Shown):	
15	70001969	1	Stator 2460050 Generator	
15	70002088	1	Stator 2460048 Generator	
15	70002297	1	Stud	
15	70003631	1	Brushholder Assembly (Not Shown) (was p/n 7024484)	
15A	70004171	1	Key (was p/n 7024561)	
15B	70001966	1	Bearing, Ball Radial (Located in Belt Tensioner Endbell)	
15C	70001953	1	Endbell, Belt Tensioner	
15D		Ref	Endbell, Brush Block Options (was p/n 70001385):	
15D	70004170	1	Endbell, Brush Block Caterpillar Engine Machines	
15D	70004169	1	Endbell, Brush Block Deutz Engine Machines	
15E	70004170	1	Shroud Caterpillar Engine (was p/ns 70001970 & 70001971)	
15E	70004169	1	Shroud Deutz Engine (was p/n 70002290)	
15E	7027799	1	Block, Connector 6 Position (Not Shown)	
15E	70002460	1	Nut, Brass (Attaches p/n 7027799 to Cover) (Not Shown)	
15E	7024485	1	Breaker, Circuit 30Amp (Not Shown)	
15E	70001696	1	Boot, Breaker (was p/n 7024486 - Not Shown)	
15E	7026597	1	Connector, with Leads (Not Shown)	
15E	7026626	1	Housing Plug and Pins (Not Shown)	
15E	7026188	1	Clamp, Cable (Not Shown)	
15E	70003708	1	Retaining Ring Internal (Not Shown)	
15E	70003709	1	Retaining Ring External (Not Shown)	
15E	70004170	1	Plate, End Panel Caterpillar Engine (was p/n 70001972)	

ITEM	PART NUMBER	QTY	DESCRIPTION	REV
15E	70004169	1	Plate, End Panel Deutz Engine (was p/n 70002255)	
15E	70001974	1	Decal - Terminal Connections	
15F	70001973	1	Decal - Warning Moving Parts	
16	4761500	4	Lockwasher 5/16	
17	0641505	4	Bolt 5/16 x 5/8	
18	3311405	1	Locknut 1/4 (Not Shown - Located on Turntable)	
19	3580317	1	Tensioner, Belt	
20	0641808	AR	Bolt 1/2 x 1	
20	3311801	1	Nut 1/2 (Deutz Engine Only)	
21	3580319	1	Pulley (was p/n 7026187)	
22	0902888	1	Bracket, Box Mounting	
23	4711800	AR	Flatwasher 1/2	
24	4711400	5	Flatwasher 1/4	
25	0641404	AR	Bolt 1/4 x 1/2	
28	1320224	NLA	Clamp (Use p/n 1320318)	
29	4240018	AR	Tie-Strap (Not Shown)	
30		Ref	Pulley Options:	
30	3580321	1	Pulley (Caterpillar Engine)	
30	3580320	1	Pulley (Deutz Engine)	
31	3740080	2	Relay	
32	3931632	1	Bolt 3/8 x 2 (Caterpillar Engine)	
32	0641618	1	Bolt 3/8 x 2-1/4 (Deutz Engine)	
33	0100019	AR	Compound, Locking	
34	4791400	AR	Starwasher 1/4	
35	4811900	4	Flatwasher M8 (Caterpillar Engine Only)	
36	4922925	1	Harness, Generator	
37	2820031	1	Insulator	
38		Ref	Shield Options:	
38	Not Required	1	Shield Caterpillar Engine	
38	4061049	1	Shield Deutz Engine	
39	4751400	AR	Flatwasher 1/4 Regular (Deutz Engine Only)	
40	4300157	1	Stud (Deutz Engine Only)	
42	0100062	1	Loctite (Not Shown) (Deutz Engine Only)	
43	4711600	1	Flatwasher 3/8 (Deutz Engine Only)	
44	0641403	1	Bolt 1/4 x 3/8	
	0861567	Ref	**JUNCTION BOX ASSEMBLY**	B
101	0861541	1	Box, Junction	
102	1705376	1	Decal - Wiring Schematic	
103	3300396	1	Cover, Fuse	
104	3310601	2	Nut #6	
105	3520189	1	Plug	
106	3520192	2	Plug	
107		Ref	Rail, Relay Options:	
107	3640986	1	Rail, Relay **(SN 0300068000 through 0300072912)**	
107	3641533	1	Rail, Relay **(SN 0300072913 through 0300087000)**	
108	3910610	2	Bolt #6 x 5/8	
109	4360070	1	Circuit Breaker - 15 Amp	
110	4460411	2	Marker Strip #1	
111	4460412	4	Marker Strip #2	
112	4460413	2	Marker Strip #3	
113	4460414	2	Marker Strip #4	

ITEM	PART NUMBER	QTY	DESCRIPTION	REV
114	4460415	4	Marker Strip #5	
115	4460425	2	Strain Relief, Terminal	
116	4460426	2	Connector, Strain Relief	
118	4460607	2	Terminal, End Stop	
119	4460956	1	Terminal, Block End	
120	4460957	7	Terminal, Block	
121	4750600	4	Flatwasher, #6 Regular	
122	4760600	1	Lockwasher #6	
123	4461001	2	Cross Connector - 2 Position **(SN 0300072913 through 0300087000)**	
	0272589	Ref	**DECAL INSTALLATION**	A
201	1705460	2	Decal - SkyPower	
202	1705461	1	Decal - 240V - 3 Phase	
203	1705489	3	Decal, Hazardous Voltage	
	4933264	Ref	**ELECTRICAL DIAGRAM COMPONENTS**	C
301	4922757	1	Generator Harness	3-C
301A	4460374	2	Plug, Sealed Relay	
301A	4460375	7	Terminal	
301B	4460967	1	Plug, Male - 3 Position	
301B	4460465	3	Socket, Female	
301C	2400060	1	Fuseholder (Not Shown)	
301C	2400064	1	Fuse - 5 Amp (Not Shown)	
304	4922641	1	Switch Harness	

SECTION 3 - BOOM

FIGURE 3-1. BOOM INSTALLATION - 600S

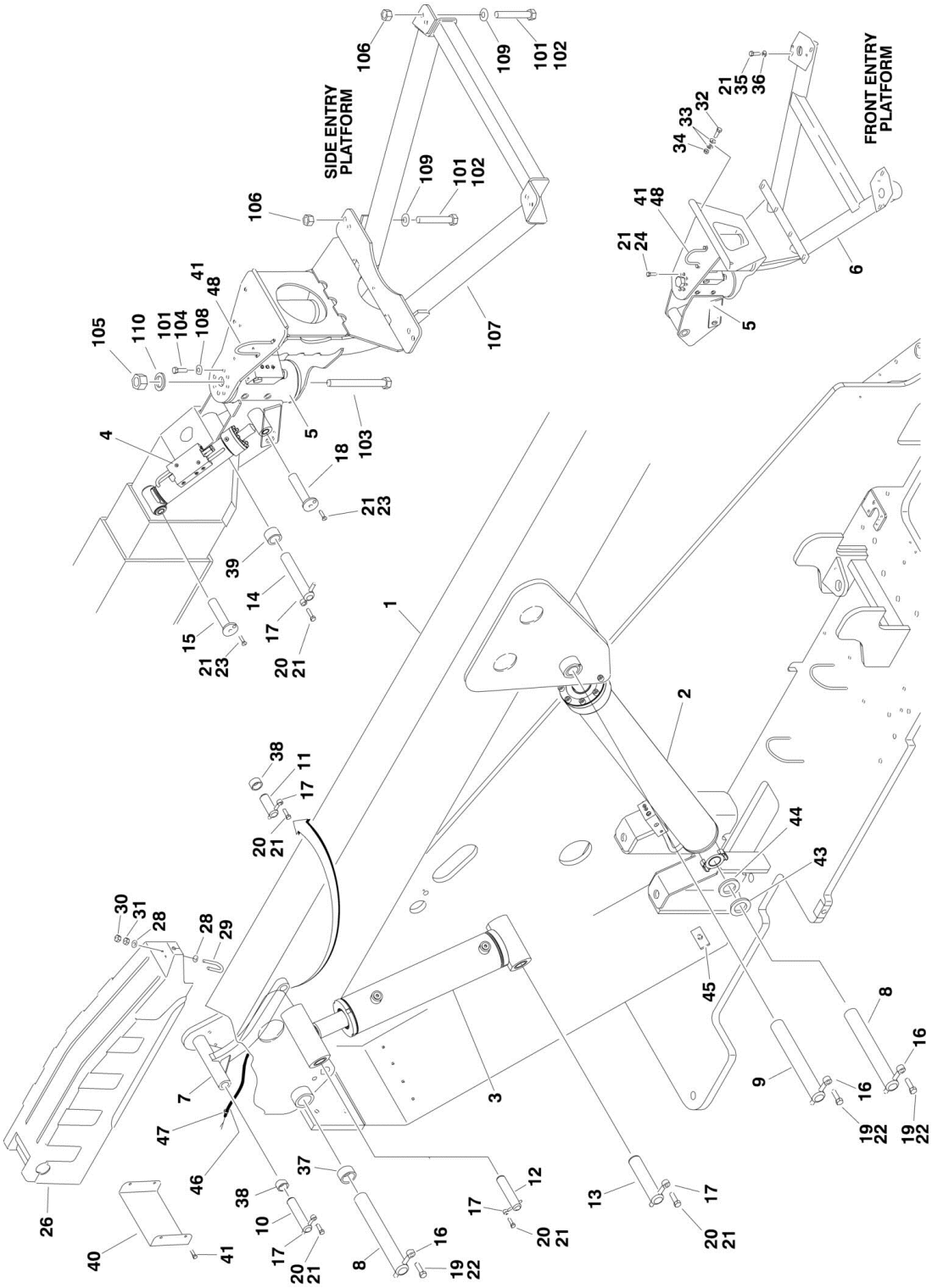

FIGURE 3-1. BOOM INSTALLATION - 600S

ITEM	PART NUMBER	QTY	DESCRIPTION	REV
		Ref	**BOOM AND CYLINDERS INSTALLATION OPTIONS:**	
	0271327	Ref	**Boom and Cylinders Installation 600S (Front Entry Platform Machines)**	3
	0272132	Ref	**Boom and Cylinders Installation 600S (Side Entry Platform Machines)**	4
1		Ref	Boom Assembly - 600S (See MAIN BOOM ASSEMBLIES for Breakdown)	
1	0801071	1	Boom Assembly **(SN 0300068000 through 0300068178)**	
1	0801340	1	Boom Assembly **(SN 0300068179 through 0300073985)**	
1	0801383	1	Boom Assembly **(SN 0300073986 through 0300087000)**	
2		Ref	Lift Cylinder Assembly (See CYLINDER SECTION for Breakdown)	
2	1683275	1	Lift Cylinder Assembly (Original Equipment) **(SN 0300068000 through 0300070974)**	
2	1683666	NLA	Lift Cylinder Assembly (Use p/n 1001112468) (Original Equipment) **(SN 0300070975 through 0300087000)**	
2	1001112468	NLA	Boom Lift Cylinder Assembly (Service Replacement)	
3		Ref	Master Cylinder Assembly Options (See CYLINDER SECTION for Breakdown):	
3	1683266	NLA	Master Cylinder Assembly (Use p/n 1001228002) (Original Equipment)	
3	1001228002	1	Master Cylinder Assembly (Service Replacement)	
4		Ref	Platform Level Cylinder Assembly Options See CYLINDER SECTION for Breakdown):	
4	1683415	NLA	Platform Level Cylinder Assembly (Use p/n 1001228008) (Original Equipment)	
4	1001223512	NLA	Platform Level Cylinder Assembly (Use p/n 1001228008) (Service Replacement)	
4	1001228008	1	Platform Level Cylinder Assembly (Service Replacement)	
5		Ref	Rotator Assembly Options:	
5	0060075	1	Front Entry Platform (p/n was 0060034) (See ROTATOR ASSEMBLIES (FRONT ENTRY PLATFORM) for Breakdown)	
5	0060067	1	Side Entry Platform (See ROTATOR ASSEMBLIES (SIDE ENTRY PLATFORM) for Breakdown)	
6		Ref	Support, Platform Options:	
6	4846081	1	Front Entry Platform	
6	See Note	Ref	Side Entry Platform (Note: See Items 101-110 for Breakdown)	
7	4844944	NLA	Link, Push (Use p/n 1001094043)	
8	3422564	2	Pin (Cylinder Pivot - T/T End and Boom Pivot)	
9	3422568	1	Pin (Lift Cylinder Pivot - Boom End)	
10	3422566	1	Pin (Link - T/T End)	
11	3422557	1	Pin (Link - Boom End)	
12	3422567	1	Pin (Master Cylinder - Boom End)	
13	3422565	1	Pin (Master Cylinder - T/T End)	
14	3422562	1	Pin (Rotator)	
15	3422569	1	Pin (Level Cylinder - Boom End)	
16	3841258	3	Keeper, Pin	
17	3841143	5	Keeper, Pin	
18	3422580	1	Pin (Level Cylinder - Rotator End)	
19	0642012	3	Bolt 5/8in-11NC x 1-1/2in	
20	0641608	5	Bolt 3/8in-16NC x 1in	
21	0100011	AR	Compound, Locking	

ITEM	PART NUMBER	QTY	DESCRIPTION	REV
22	0100019	AR	Compound, Locking	
23	0741607	2	Screw, Countersunk 3/8in-16NC x 7/8in	
24	0641810	6	Bolt 1/2in-13NC x 1-1/4in (Front Entry Platform Only)	
26	1671055	1	Cover, Boom	
28	4751400	4	Flatwasher 1/4in Regular	
29	0630458	1	U-Bolt	
30	3311402	4	Nut, Jam 1/4in-20NC	
31	3311401	2	Locknut 1/4in-20NC	
32	0641820	4	Bolt 1/2in-13NC x 2-1/2in	
33	4711800	8	Flatwasher 1/2in Thin (Front Entry Platform)	
34	3311805	4	Locknut 1/2in-13NC (Front Entry Platform)	
35	0681610	4	Bolt 3/8in-16NC x 1-1/4in (Grade 8) (Front Entry Platform)	
36	4711600	4	Flatwasher 3/8in Thin (Front Entry Platform)	
37	0961950	2	Bushing	
38	0962006	3	Bushing	
39	0961951	2	Bushing	
40	3539563	1	Cover	
41	0641604	6	Bolt 3/8in-16NC x 1/2in	
43	4740314	AR	Thrustwasher	
44	4740158	AR	Thrustwasher	
45	1320235	1	Clamp, Staff	
46	4100033	2 ft/.3m	Sleeve	
47	4240033	2	Tie-Strap	
48	3841340	1	Loop, Hose	
		Ref	**SUPPORT INSTALLATIONS (SIDE ENTRY PLATFORM)**	
	0272070	Ref	**Machines without Load Sensing and without SkyGlazier**	C
	See Note	Ref	Machines without Load Sensing and with SkyGlazier (Note: For CE Spec Machines Refer to JLG Supplement p/n 3124242 for Components)	
	See Note	Ref	Machines with Load Sensing and without SkyGlazier (Note: For CE Spec Machines Refer to JLG Supplement p/n 3124287 for Components)	
	See Note	Ref	Machines with Load Sensing and with SkyGlazier (Note: For CE Spec Machines Refer to JLG Supplement p/n 3124287 for Components)	
101	0100011	AR	Compound, Locking	
102	0641812	8	Bolt 1/2in-13NC x 1-1/2in	
103	0642684	1	Bolt 1in-8NC x 10-1/2in	
104	0681608	8	Bolt 3/8in-16NC x 1in (Grade 8)	
105	3272605	1	Locknut 1in-8NC	
106	3311805	8	Locknut 1/2in-13NC	
107	4846573	1	Support, Platform	
108	4891600	8	Flatwasher 3/8in Hardened	
109	4891800	8	Flatwasher 1/2in Hardened	
110	4892600	1	Flatwasher 1in Hardened	

FIGURE 3-2. BOOM INSTALLATION - 600SJ & 660SJ

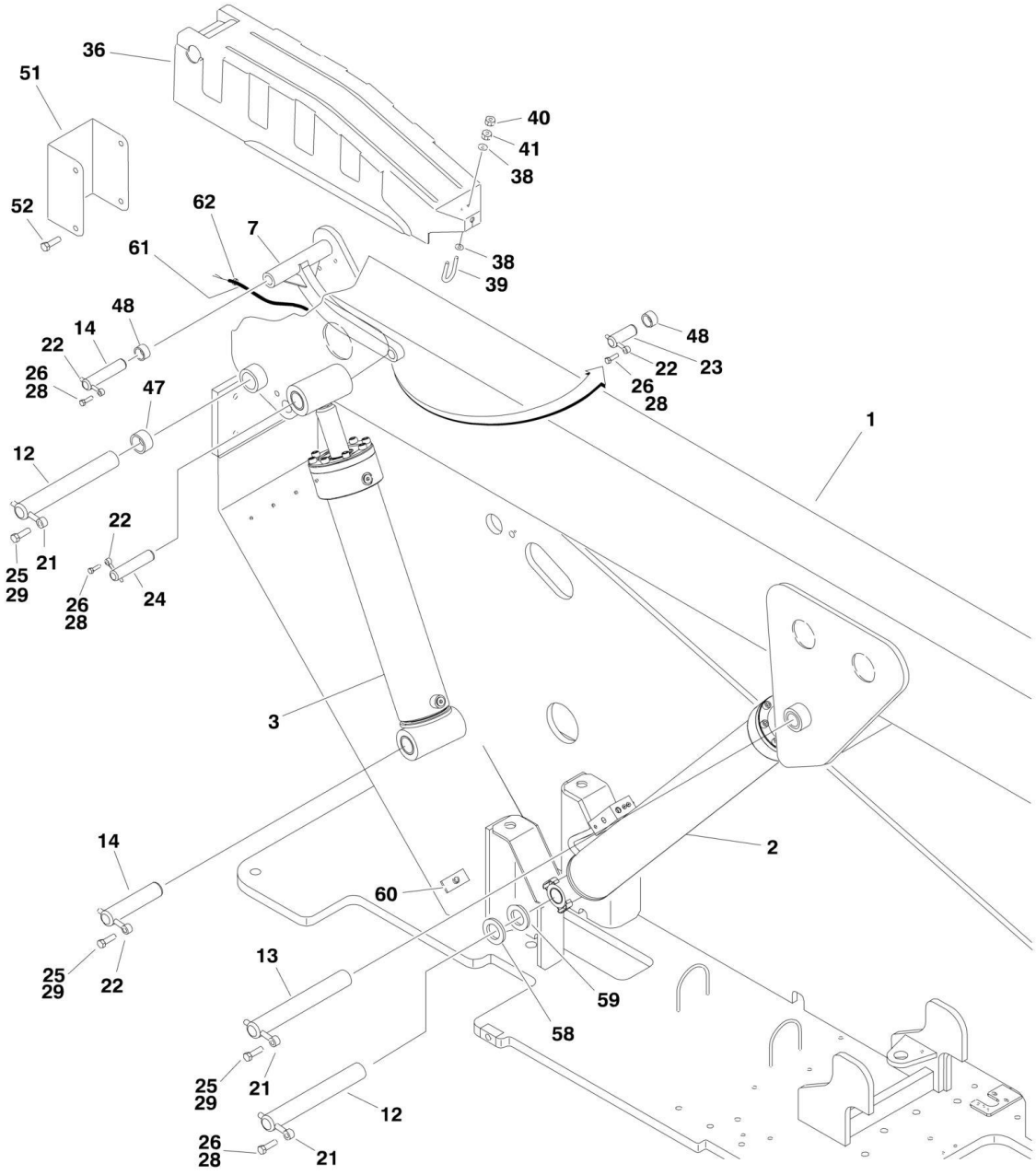

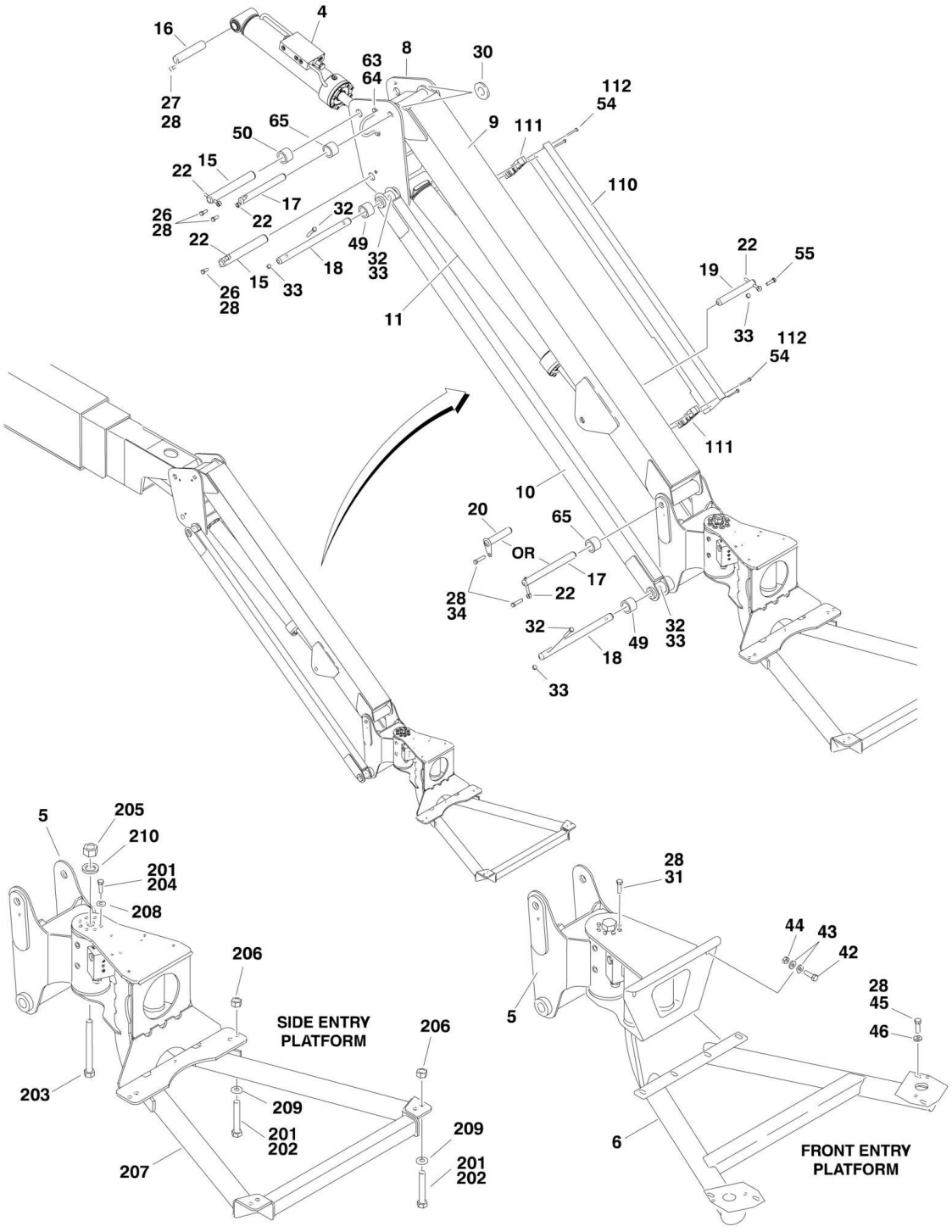
16
4
8
30
63
64
27
28
112
54
65
50
9
111
15
22
110
17
26
28
22
32
22
49
32
33
18
15
33
26
28
11
22
55
19
33
112
54
111
10
20
65
OR
17
28
34
22
32
49
32
33
18
33
5
205
210
201
204
208
206
SIDE ENTRY
PLATFORM
206
203
209
201
202
209
207
201
202
28
31
44
43
42
28
45
46
5
6
FRONT ENTRY
PLATFORM

FIGURE 3-2. BOOM INSTALLATION - 600SJ & 660SJ

ITEM	PART NUMBER	QTY	DESCRIPTION	REV
		Ref	**BOOM AND CYLINDERS INSTALLATIONS**	
	0271318	Ref	**Boom and Cylinders Installation 600SJ (Front Entry Platform Machines)**	3
	0272134	Ref	**Boom and Cylinders Installation 600SJ (Side Entry Platform Machines)**	4
	0271317	Ref	**Boom and Cylinders Installation 660SJ (Front Entry Platform Machines)**	3
	0272130	Ref	**Boom and Cylinders Installation 660SJ (Side Entry Platform Machines)**	4
1		Ref	Boom Assembly Options: (See MAIN BOOM ASSEMBLIES for Breakdown)	
1	0801073	1	Boom Assembly 600SJ **(SN 0300068000 through 0300068178)**	
1	0801341	1	Boom Assembly 600SJ **(SN 0300068179 through 0300073985)**	
1	0801387	1	Boom Assembly 600SJ **(SN 0300073986 through 0300087000)**	
1	0801072	1	Boom Assembly 660SJ **(SN 0300068000 through 0300068178)**	
1	0801336	1	Boom Assembly 660SJ **(SN 0300068179 through 0300073985)**	
1	0801386	1	Boom Assembly 660SJ **(SN 0300073986 through 0300087000)**	
2		Ref	Boom Lift Cylinder Assembly (See CYLINDER SECTION for Breakdown)	
2	1683275	1	Boom Lift Cylinder Assembly (Original Equipment) **(SN 0300068000 through 0300070974)**	
2	1683666	NLA	Boom Lift Cylinder Assembly (Use p/n 1001112468) (Original Equipment) **(SN 0300070975 through 0300087000)**	
2	1001112468	NLA	Boom Lift Cylinder Assembly (Service Replacement)	
3		Ref	Master Cylinder Assembly Options (See CYLINDER SECTION for Breakdown):	
3	1683263	NLA	Master Cylinder Assembly (Use p/n 1001228052) (Original Equipment)	
3	1001228052	1	Master Cylinder Assembly (Service Replacement)	
4		Ref	Platform Level Cylinder Assembly Options (See CYLINDER SECTION for Breakdown):	
4	1683418	NLA	Platform Level Cylinder Assembly (Original Equipment) (Use p/n 1001228051)	
4	1001223331	NLA	Platform Level Cylinder Assembly (Use p/n 1001228051) (Service Replacement)	
4	1001228051	1	Platform Level Cylinder Assembly (Service Replacement)	
5		Ref	Rotator Assembly Options:	
5	0060031	NLA	Front Entry Platform (See ROTATOR ASSEMBLIES (FRONT ENTRY PLATFORM) for Breakdown) (Use Kit p/n 1001103095 - includes p/n 0060074 actuator, attaching pin and hardware)	
5	0060066	1	Side Entry Platform (See ROTATOR ASSEMBLIES (SIDE ENTRY PLATFORM) for Breakdown)	
6		Ref	Support, Platform Options:	
6	4846081	1	Front Entry Platform Machines	
6	See Note	1	Side Entry Platform (Note: See Items 201-210 for Breakdown)	
7	4844944	NLA	Link, Push (Use p/n 1001094043)	
8	4844815	1	Pivot	
9	4844816	1	Tube (Top)	

ITEM	PART NUMBER	QTY	DESCRIPTION	REV
10	4844817	2	Tube (Bottom)	
11		Ref	Articulating Jib Lift Cylinder Assembly (See CYLINDER SECTION for Breakdown)	
11	1683258	1	Articulating Jib Lift Cylinder Assembly (Original Equipment) **(SN 0300068000 through 0300070974)**	
11	1683609	NLA	Articulating Jib Lift Cylinder Assembly (Original Equipment) (Use p/n 1001248012) **(SN 0300070975 through 0300087000)**	
11	1001228012	NLA	Articulating Jib Lift Cylinder Assembly (Use p/n 1001248012) (Service Replacement)	
11	1001248012	1	Articulating Jib Lift Cylinder Assembly (Service Replacement)	
12	3422564	2	Pin (Boom Pivot and Lift Cylinder Pivot - T/T End)	
13	3422568	1	Pin (Boom Lift Cylinder - Boom End)	
14	3422566	2	Pin (Link - T/T End and Master Cylinder - T/T End)	
15	3422561	2	Pin (Articulating Jib Cylinder - Pivot End and Pivot - Boom End)	
16	3422583	1	Pin (Articulating Jib Level Cylinder - Boom End)	
17	3422860	2	Pin (Top Tube - Pivot End)	
18	3422861	2	Pin (Bottom Tube - Both Ends)	
19	3422867	1	Pin (Articulating Jib Lift Cylinder - Top Tube End)	
20	3422563	1	Pin (Top Tube - Rotator End)	
21	3841258	3	Keeper, Pin	
22	3841143	9	Keeper, Pin	
23	3422557	1	Pin (Link - Boom)	
24	3422574	1	Pin (Master Cylinder - Boom End)	
25	0642012	3	Bolt 5/8in-11NC x 1-1/2in	
26	0641608	7	Bolt 3/8in-16NC x 1in	
27	0741607	1	Screw, Countersunk 3/8in-16NC x 7/8in	
28	0100011	AR	Compound, Locking	
29	0100019	AR	Compound, Locking	
30	4740439	2	Thrustwasher	
31	0641808	6	Bolt 1/2in-13NC x 1in (600SJ) (Front Entry Platform)	
31	0641810	6	Bolt 1/2in-13NC x 1-1/4in (660SJ) (Front Entry Platform)	
32	0641618	4	Bolt 3/8in-16NC x 2-1/4in	
33	3311605	5	Locknut 3/8in-16NC	
34	0641614	1	Bolt 3/8in-16NC x 1-3/4in	
36	1671055	1	Cover, Boom	
38	4751400	4	Flatwasher 1/4in Regular	
39	0630458	1	U-Bolt	
40	3311402	4	Nut, Jam 1/4in-20NC	
41	3311405	2	Locknut 1/4in-20NC	
42	0641820	4	Bolt 1/2in-13NC x 2-1/2in (Front Entry Platform Machines)	
43	4711800	8	Flatwasher 1/2in Thin (Front Entry Platform Machines)	
44	3311805	4	Locknut 1/2in-13NC (Front Entry Platform Machines)	
45	0681610	4	Bolt 3/8in-16NC x 1-1/4in (Grade 8) (Front Entry Platform)	
46	4711600	4	Flatwasher 3/8in Thin (Front Entry Platform Machines)	
47	0961950	2	Bushing	
48	0962006	3	Bushing	
49	0961947	6	Bushing	
50	0961951	2	Bushing	
51	3539563	1	Cover	
52	0641604	4	Bolt 3/8in-16NC x 1/2in	
54	2080044	4	Rivnut	
55	0641611	1	Bolt 3/8in-16NC x 1-3/8in	

ITEM	PART NUMBER	QTY	DESCRIPTION	REV
58	4740314	AR	Thrustwasher	
59	4740158	AR	Thrustwasher	
60	1320235	1	Clamp	
61	4100033	2 ft/.6m	Sleeve, Abrasion	
62	4240033	2	Tie-Strap	
63	3841340	1	Clamp, Loop	
64	0641606	2	Bolt 3/8in-16NC x 3/4in	
65	0962335	4	Bushing	
		Ref	**BOOM CABLES INSTALLATION**	
	0270738	Ref	**Boom Cables Installation 600SJ - 2WS (Australian Spec)**	3
	0270737	Ref	**Boom Cables Installation 600SJ - 2WS (CE Spec)**	3
	0270736	Ref	**Boom Cables Installation 660SJ - 2WS (Australian Spec)**	3
	0270735	Ref	**Boom Cables Installation 660SJ - 2WS (CE Spec)**	3
	0272488	Ref	**Boom Cables Installation 600SJ - 2WS (SkyPower) (Australian Spec) (7500W 60Hz)**	2
	0272487	Ref	**Boom Cables Installation 600SJ - 2WS (SkyPower) (CE Spec) (7500W 50Hz)**	2
	0272485	Ref	**Boom Cables Installation 660SJ - 2WS (SkyPower) (Australian Spec) (7500W 60Hz)**	2
	0272486	Ref	**Boom Cables Installation 660SJ - 2WS (SkyPower) (CE Spec) (7500W 50Hz)**	2
110	1670769	1	Cover	
111	0561237	2	Clamp, Block	
112	0641416	4	Bolt 1/4in-20NC x 2in	
		Ref	**SUPPORT INSTALLATIONS (SIDE ENTRY PLATFORM)**	
	0272070	Ref	**Machines without Load Sensing and without SkyGlazier CE Spec Machines:**	C
	See Note	Ref	**Machines without Load Sensing and with SkyGlazier (Note: For Replacement Parts, Contact JLG Customer Service and Request Manual p/n 3124242.)**	
	See Note	Ref	**Machines with Load Sensing and without SkyGlazier (Note: For Replacement Parts, Contact JLG Customer Service and Request Manual p/n 3124287.)**	
	See Note	Ref	**Machines with Load Sensing and with SkyGlazier (Note: For Replacement Parts, Contact JLG Customer Service and Request Manual p/n 3124287.)**	
201	0100011	AR	Compound, Locking	
202	0641812	8	Bolt 1/2in-13NC x 1-1/2in	
203	0642684	1	Bolt 1in-8NC x 10-1/2in	
204	0681608	8	Bolt 3/8in-16NC x 1in (Grade 8)	
205	3272605	1	Locknut 1in-8NC	
206	3311805	8	Locknut 1/2in-13NC	
207	4846573	1	Support, Platform	
208	4891600	8	Flatwasher 3/8in Hardened	
209	4891800	8	Flatwasher 1/2in Hardened	
210	4892600	1	Flatwasher 1in Hardened	

FIGURE 3-3. MAIN BOOM ASSEMBLIES

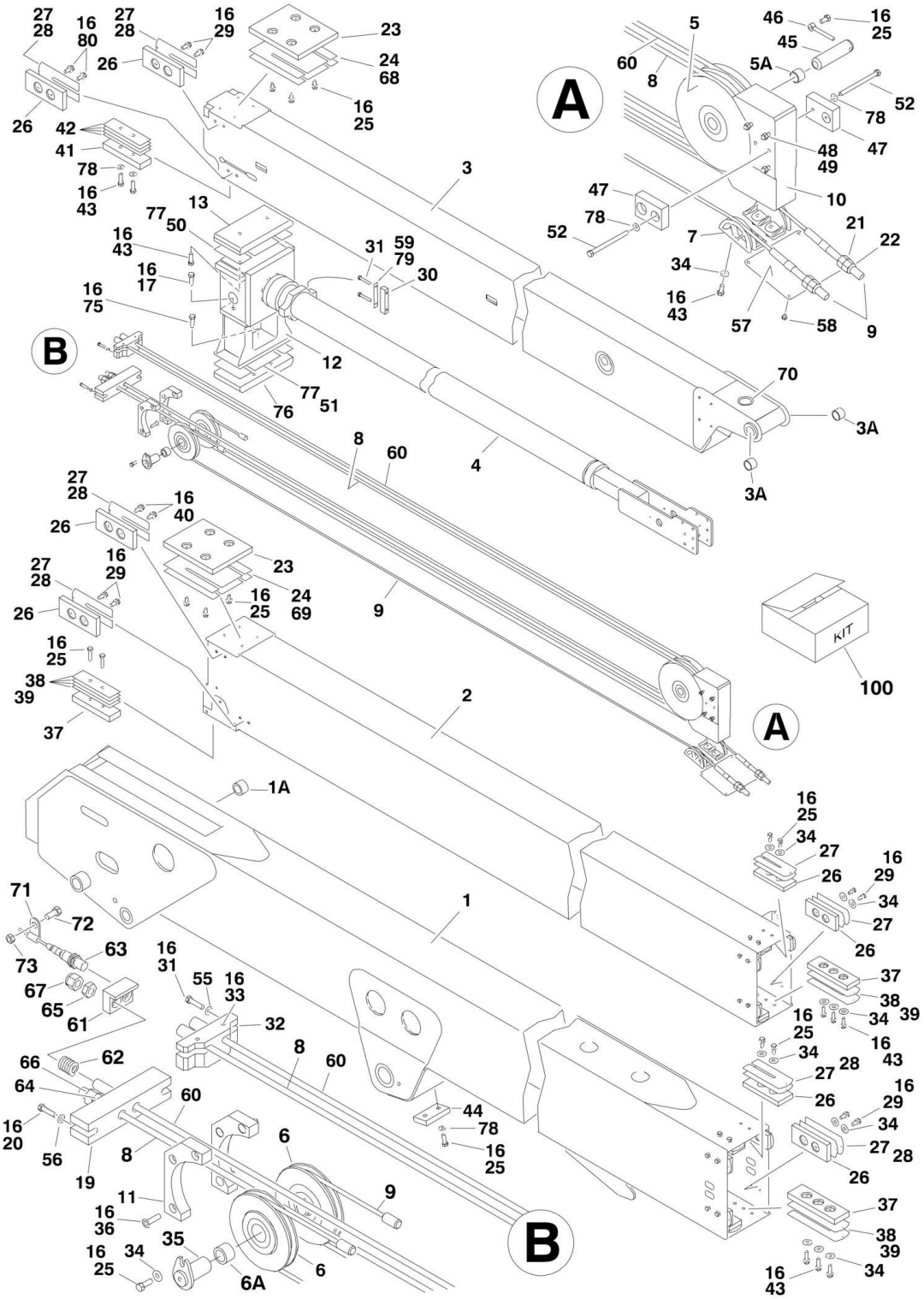

FIGURE 3-3. MAIN BOOM ASSEMBLIES

ITEM	PART NUMBER	QTY	DESCRIPTION	REV
		Ref	**MAIN BOOM ASSEMBLY OPTIONS:**	
		Ref	**Main Boom Assembly (SN 0300068000 through 0300068178)**	
	0801071	Ref	**Main Boom Assembly 600S**	14-H
	0801073	Ref	**Main Boom Assembly 600SJ**	12-H
	0801072	Ref	**Main Boom Assembly 660SJ**	11-H
		Ref	**Main Boom Assembly (SN 0300068179 through 0300073985)**	
	0801340	Ref	**Main Boom Assembly 600S**	3-C
	0801341	Ref	**Main Boom Assembly 600SJ**	3-C
	0801336	Ref	**Main Boom Assembly 660SJ**	3-C
		Ref	**Main Boom Assembly (SN 0300073986 through 0300087000)**	
	0801383	Ref	**Main Boom Assembly 600S**	3-C
	0801387	Ref	**Main Boom Assembly 600SJ**	3-C
	0801386	Ref	**Main Boom Assembly 660SJ**	3-C
1		Ref	Base Weldment Options:	
1	0801011	1	Base Weldment 600S	
1	0801036	1	Base Weldment 600SJ	
1	0801011	1	Base Weldment 660SJ	
1A	0961950	2	Bushing	
2		Ref	Mid Weldment Options:	
2	0801012	1	Mid Weldment 600S & 660SJ **(SN 0300068000 through 0300073985)**	
2	0801372	1	Mid Weldment 600S & 660SJ **(SN 0300073986 through 0300087000)**	
2	0801037	1	Mid Weldment 600SJ **(SN 0300068000 through 0300073985)**	
2	0801373	1	Mid Weldment 600SJ **(SN 0300073986 through 0300087000)**	
3		Ref	Fly Weldment Options:	
3	0801065	1	Fly Weldment 600S	
3	0801038	1	Fly Weldment 600SJ	
3	0801014	1	Fly Weldment 660SJ	
3A	0961951	2	Bushing (600SJ & 660SJ Only)	
4		Ref	Telescope Cylinder Assembly Options: (See CYLINDER SECTION for Breakdown)	
4	1683618	1	Telescope Cylinder Assembly 600S & 660SJ	
4	1683620	1	Telescope Cylinder Assembly 600SJ	
5	3580241	1	Sheave Assembly (Extend)	2-B
5A	0961951	2	Bushing	
6	3580243	2	Sheave Assembly (Retract)	1-A
6A	0961951	2	Bushing (1 Per Sheave)	
7	1220078	2	Block, Sheave	
8		Ref	Cable (Extend) Options:	
8	3890010	1	Cable (Extend) 600S & 660SJ	
8	3890011	1	Cable (Extend) 600SJ	
9		Ref	Cable (Retract) Options:	
9	3890006	2	Cable (Retract) 600S & 660SJ	
9	3890008	2	Cable (Retract) 600SJ	
10	3580248	1	Guard, Sheave (Extend)	
11	3580249	2	Guard, Sheave (Retract)	
12	4846319	1	Support, Wear Pad	
13	3340844	1	Pad, Wear	
14	4070975	3	Shim.05 **(SN 0300068000 through 0300072078)**	

ITEM	PART NUMBER	QTY	DESCRIPTION	REV
15	0641608	10	Bolt 3/8in-16NC x 1in **(SN 0300068000 through 0300082631)**	
16	0100011	AR	Compound, Locking	
17		Ref	Bolt Options:	
17	0681612	4	Bolt 3/8in-16NC x 1-1/2in (Grade 8) **(SN 0300068000 through 0300082631)**	
17	0681610	4	Bolt 3/8in-16NC x 1-1/4in (Grade 8) **(SN 0300082632 through 0300087000)**	
19	0561245	1	Block, Cable	
20	0641824	2	Bolt 1/2in-13NC x 3in	
21	3312201	4	Nut 3/4in-10NC	
22	3300241	4	Locknut, Special 3/4in-10NC	
23	3340757	2	Pad, Wear	
24	4070896	4	Shim (.06) (Without Slide-In Slots)	
25	0641607	AR	Bolt 3/8in-16NC x 7/8in	
26	3340881	20	Pad, Wear	
27	4070897	28	Shim (.05) (Without Slide-In Slots)	
28	4070898	24	Shim (.12) (Without Slide-In Slots)	
29		Ref	Bolt Options:	
29	0641605	16	Bolt 3/8in-16NC x 5/8in **(SN 0300068000 through 0300082631)**	
29	0641606	24	Bolt 3/8in-16NC x 3/4in **(SN 0300082632 through 0300087000)**	
30	0561185	2	Block	
31	0641618	6	Bolt 3/8in-16NC x 2-1/4in	
32	0561183	1	Block, Cable	
33	3951608	2	Setscrew 3/8in-16NC x 1in	
34	4711600	AR	Flatwasher 3/8in Thin	
35	3422424	2	Pin (Retract Sheave)	
36	0741612	6	Screw, Countersunk 3/8in-16NC x 1-1/2in	
37	3340871	5	Pad, Wear	
38	4070863	12	Shim (.12)	
39	4070864	12	Shim (.05)	
40	0641613	AR	Bolt 3/8in-16NC x 1-5/8in	
41	3340758	2	Pad, Wear	
42	4070895	8	Shim (.06)	
43		Ref	Bolt Options:	
43	0641610	14	Bolt 3/8in-16NC x 1-1/4in **(SN 0300068000 through 0300082631)**	
43	0641608	22	Bolt 3/8in-16NC x 1in **(SN 0300082632 through 0300087000)**	
44	0561076	1	Block	
45	3422417	2	Pin (Extend Sheave)	
46	3841143	1	Keeper, Pin	
47	3340755	2	Pad, Wear	
48	0641634	4	Bolt 3/8in-16NC x 4-1/4in	
49	3311605	4	Locknut 3/8in-16NC	
50	4070976	1	Shim (.12)	
51	4071004	1	Shim (.25)	
52		Ref	Bolt Options:	
52	0641640	2	Bolt 3/8in-16NC x 5in **(SN 0300068000 through 0300082631)**	
52	0641638	2	Bolt 3/8in-16NC x 4-3/4in **(SN 0300082632 through 0300087000)**	
55	4891600	6	Flatwasher 3/8in Hardened	
56	4891800	2	Flatwasher 1/2in Hardened	

ITEM	PART NUMBER	QTY	DESCRIPTION	REV
57	3539622	1	Plate, Cover	
58	0641403	4	Bolt 1/4in-20NC x 3/8in	
59	4070929	AR	Shim	
60		Ref	Cable (Extend) Options:	
60	3890009	1	Cable (Extend) 600S & 660SJ	
60	3890012	1	Cable (Extend) 600SJ	
61		Ref	Plate, Spring Mounting Options:	
61	3939680	1	Plate, Spring Mounting **(SN 0300068000 through 0300068178)**	
61	0561508	1	Plate, Spring Mounting **(SN 0300068179 through 0300087000)**	
62	4160149	1	Spring	
63		Ref	Switch, Proximity Options:	
63	4360429	1	Switch, Proximity **(SN 0300068000 through 0300068178)**	
63	4360506	1	Switch, Proximity **(SN 0300068179 through 0300087000)**	
64	3300399	1	Nut, Jam 7/8in-9NC	
65	3300400	1	Nut, Jam 5/8in-11NC	
66	3300242	1	Locknut 7/8in-9NC	
67	3300240	1	Locknut 5/8in-11NC	
68	4070939	AR	Shim 16Ga (With Slide-In Slots)	
69	4070940	AR	Shim 16Ga (With Slide-In Slots)	
70	4060805	6 in/16cm	Flex-Trim	
71	1320244	1	Clamp	
72	0641406	1	Bolt 1/4in-20NC x 3/4in	
73	3311401	1	Nut 1/4in-20NC	
74	1670836	8	Cover, Boom (Not Shown)	
75	0681608	4	Bolt 3/8in-16NC x 1in	
76	3340900	1	Pad, Wear	
77	4071005	AR	Shim	
78	4751600	12	Flatwasher 3/8in Regular **(SN 0300082632 through 0300087000)**	
79	4071007	AR	Shim **(SN 0300082632 through 0300087000)**	
80	0641614	4	Bolt 3/8in-16NC x 1-3/4in **(SN 0300082632 through 0300087000)**	
100	2901986	1	Kit, Wear Pad Support (Includes Items 12, 51, 75, 76 & 77)	

FIGURE 3-4. ROTATOR ASSEMBLIES (FRONT ENTRY PLATFORM)

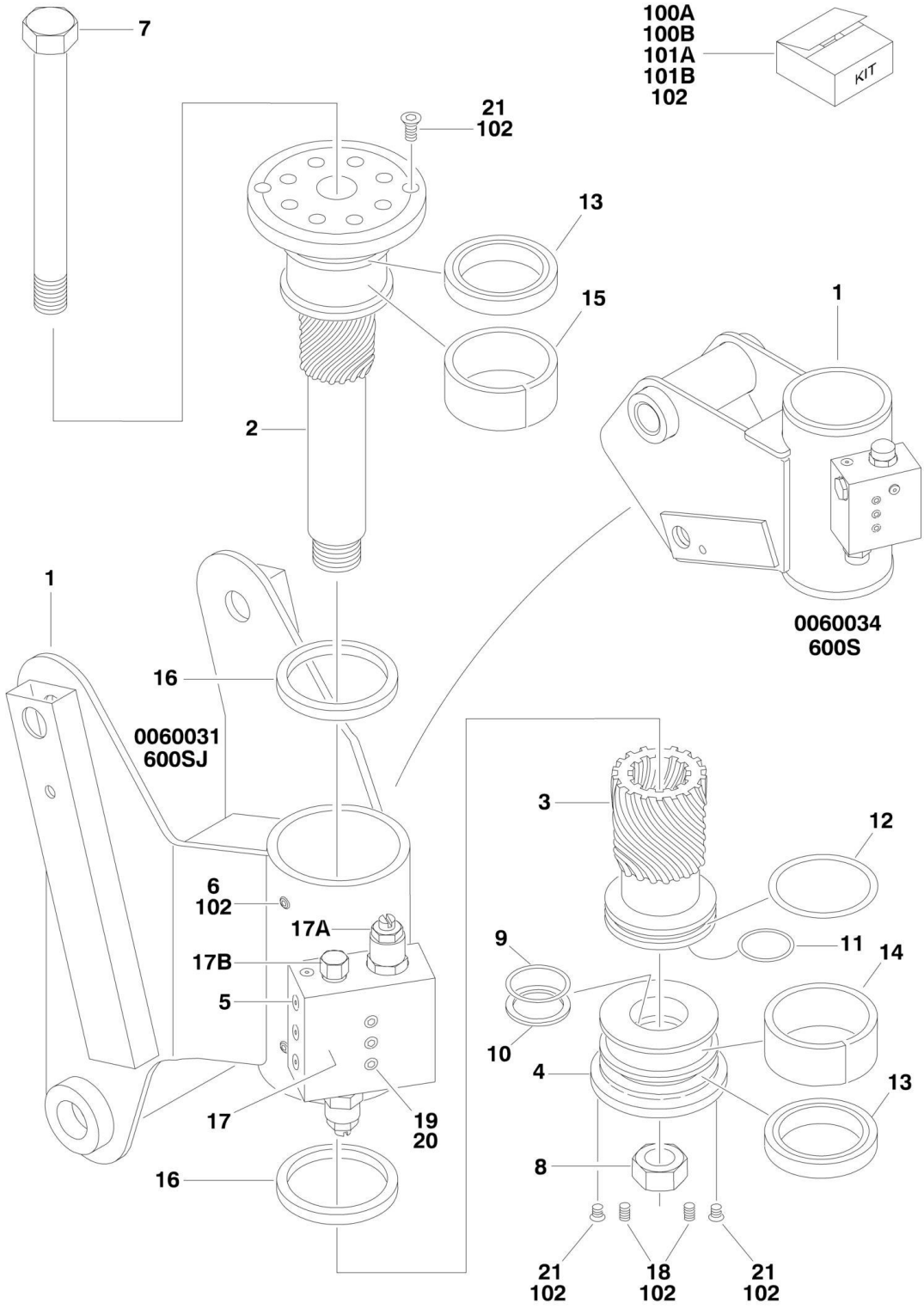

FIGURE 3-4. ROTATOR ASSEMBLIES (FRONT ENTRY PLATFORM)

ITEM	PART NUMBER	QTY	DESCRIPTION	REV
		Ref	**ROTATOR ASSEMBLIES**	
		Ref	**Note: Recommended replacement rotator uses spacer plate bolted on the top with 8 capscrews (Not shown - located at item 2). Actual production rotator does not use spacer plate.**	
	0060034	Ref	**Rotator Assemblies 600S (Original Equipment)**	G
	0060075	Ref	**Rotator Assemblies 600S (Service Replacement)**	B
	0060031	Ref	**Rotator Assemblies 600SJ & 660SJ (Original Equipment)**	H
	See Note	Ref	**Rotator Assemblies 600SJ & 660SJ (Service Replacement) (Note: For 600SJ & 660SJ, the recommended replacement rotator kit p/n 1001103095 (includes 0060074 actuator assembly, attaching pin and hardware).)**	
1	See Note	NSS	Housing/Ring Gear Assembly (Note: Not Available - Purchase Complete Rotator Assembly)	
2		Ref	Shaft Weldment Options:	
2	7017177	1	Shaft Weldment 0060034 & 0060031 Rotators (was p/n 7017117)	
2	7017162	1	Shaft Weldment 0060075 & 0060074 Rotators	
2	See Note	NSS	Plate, Spacer (Not Shown) (0060075 & 0060074 Rotators Only) (Note: Not Available for Purchase)	
3		Ref	Piston/Sleeve Options:	
3	7017115	1	Piston/Sleeve 0060034 & 0060031 Rotators	
3	7017163	1	Piston/Sleeve 0060075 & 0060074 Rotators	
4		Ref	Cap, End Options:	
4	7017174	1	Cap, End 0060034 Rotators	
4	7017174	1	Cap, End 0060031 Rotators (was p/n 7017116)	
4	7017164	1	Cap, End 0060075 & 0060074 Rotators	
5	See Note	NSS	Plug, Port (Note: Not Available - Purchase Locally)	
6	7017142	2	Setscrew/Pin	
7	7017119	1	Bolt 1in-8NC x 11in	
8	3272605	1	Locknut 1in-8NC	
9	See Note	NSS	Seal, Cap (Note: Use Item 100A or 100B)	
10	See Note	NSS	Ring, Back-up (Cap) (Note: Use Item 100A or 100B)	
11	See Note	NSS	Seal, Rod (Note: Use Item 100A or 100B)	
12	See Note	NSS	Seal, Piston (Note: Use Item 100A or 100B)	
13	See Note	NSS	Packing, Bearing (Note: Use Item 100A or 100B)	
14	See Note	NSS	Bearing, Cap (Note: Use Item 101A or 101B)	
15	See Note	NSS	Bearing, Shaft (Note: Use Item 101A or 101B)	
16	See Note	NSS	Thrustwasher (Note: Use Item 101A or 101B)	
17		Ref	Valve Assembly Options:	
17	7017183	1	Valve Assembly 0060034 & 0060031 Rotators (was p/n 7017101)	
17	7017183	1	Valve Assembly 0060075 & 0060074 Rotators	
17A		Ref	Cartridge, Valve Options:	
17A	7011331	2	Cartridge for Helac p/n 24736	
17A	7017193	2	Cartridge for Helac p/n 27600	
17A	2900770	2	Seal Kit - 7011331 Valve	
17A	See Note	NSS	Seal Kit - 7017193 Valve (Note: Not Available for Purchase - Use p/n 7017193)	
17B		Ref	Cartridge, Valve Options:	
17B	7011332	2	Cartridge for Helac p/n 24736	
17B	See Note	NSS	Cartridge for Helac p/n 27600 (Not Shown - Located on Side of Valve Block) (Note: Purchase Complete Valve Assembly)	

ITEM	PART NUMBER	QTY	DESCRIPTION	REV
17B	7011346	2	Seal Kit - 7011332 Valve	
17B	See Note	NSS	Seal Kit - Valve Located on Side of Block (Note: Purchase Valve Assembly)	
18	7017118	2	Setscrew/Pin	
19	See Note	NSS	Capscrew 1/4in-20NC x 1-1/2 (Grade 8) (Note: Not Available for Purchase)	
20	3790110	3	O-Ring (Located between Valve and Actuator Housing)	
21	70001697	4	Screw, Countersunk 1/4in-20NC x 3/8in (Grade 8)	
		Ref	**KIT OPTIONS**	
100		Ref	Seal Kit Options (Includes Items 9-13 & 102):	
100A	7017157	1	Seal Kit for 0060034 & 0060031 Rotators	
100B	7017158	1	Seal Kit for 0060075 & 0060074 Rotators	
101		Ref	Bearing Kit Options (Includes Items 14-16):	
101A	7017156	1	Bearing Kit for 0060034 & 0060031 Rotators (Original Equipment)	
101B	7017159	1	Bearing Kit for 0060075 & 0060074 Rotators (Service Replacement)	
102	7017142	1	Hardware Kit (Includes Items 6, 18 & 21) (Part of Item 100)	

FIGURE 3-5. ROTATOR ASSEMBLIES (SIDE ENTRY PLATFORM)

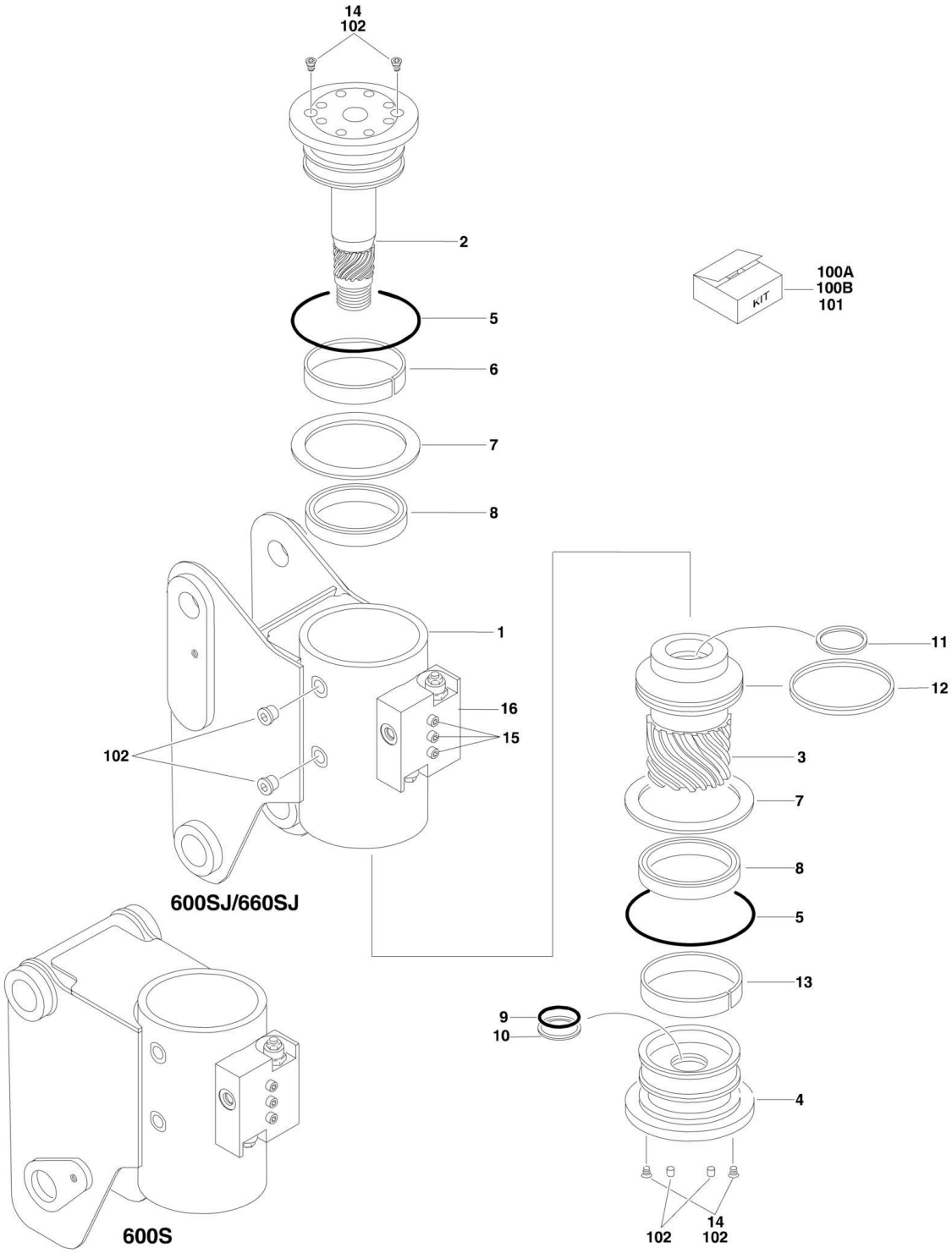

FIGURE 3-5. ROTATOR ASSEMBLIES (SIDE ENTRY PLATFORM)

ITEM	PART NUMBER	QTY	DESCRIPTION	REV
		Ref	**ROTATOR ASSEMBLIES**	
	0060067	Ref	**Rotator Assemblies 600S**	A
	0060066	Ref	**Rotator Assemblies 600SJ & 660SJ**	A
1	See Note	NSS	Housing/Ring Gear Assembly (Note: Not Available - Purchase Complete Rotator Assembly)	
2	7017162	1	Shaft Weldment	
2	7017195	2	Bushing, Shaft	
3	7017163	1	Piston/Sleeve Assembly	
4	7017164	1	Cap, End	
5	See Note	NSS	O-Ring (Note: Use Item 100A or 100B)	
6	See Note	NSS	Bearing, Shaft (Note: Use Item 101)	
7	See Note	NSS	Thrustwasher (Note: Use Item 101)	
8	See Note	NSS	Packing, Bearing (Note: Use Item 100A or 100B)	
9	See Note	NSS	Seal, Cap (Note: Use Item 100A or 100B)	
10	See Note	NSS	Ring, Back-up Cap (Note: Use Item 100A or 100B)	
11	See Note	NSS	Seal, Rod (Note: Use Item 100A or 100B)	
12	See Note	NSS	Seal, Piston (Note: Use Item 100A or 100B)	
13	7017159	1	Bearing, Cap	
14	70001697	4	Screw, Countersunk 1/4in-20NC x 3/8in (Grade 8)	
15	See Note	NSS	Capscrew 1/4in-20NC x 1-1/2 (Grade 8) (Note: Not Available for Purchase)	
16	7017183	1	Valve Assembly	
16	7017193	2	Cartridge, Valve	
16	See Note	NSS	Seal Kit - 7017193 Valve (Note: Use p/n 7017193)	
16	See Note	NSS	Cartridge, Valve (Not Shown - Located on Side of Block) (Note: Use p/n 7017183)	
16	See Note	NSS	Seal Kit - Valve Located on Side of Block (Note: Use p/n 7017183)	
		Ref	**KIT OPTIONS**	
100		Ref	Seal Kit Options (Includes Items 5, 8-12 & 102):	
100A	7017158	1	Seal Kit - Standard	
100B	70000342	1	Seal Kit - Low Temperature	
101	7017159	1	Bearing Kit (Includes Items 6, 7 & 13)	
102	See Note	NSS	Hardware Kit (Includes Items 14, 2 Setscrews and 2 Plugs) (Note: Use Item 100)	

FIGURE 3-6. POWER TRACK INSTALLATIONS

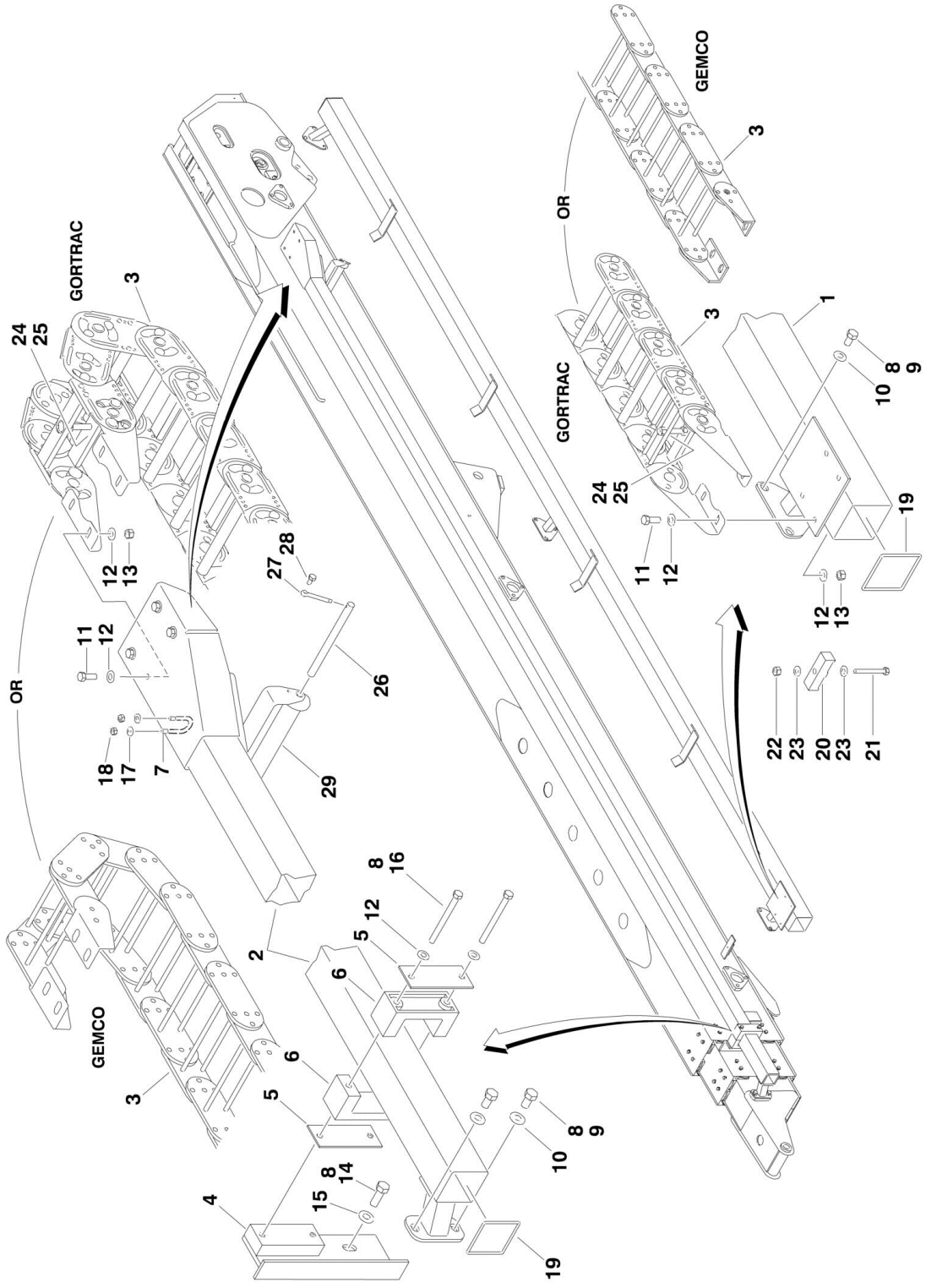

FIGURE 3-6. POWER TRACK INSTALLATIONS

ITEM	PART NUMBER	QTY	DESCRIPTION	REV
		Ref	**POWER TRACK INSTALLATIONS**	
	0271372	Ref	**Power Track Installations 600SJ**	3
	0270804	Ref	**Power Track Installations 600S/660SJ**	4
1		Ref	Rail Options:	
1	4845819	1	Rail 600S/660SJ	
1	4846392	1	Rail 600SJ	
2		Ref	Tube Options:	
2	4845671	1	Tube 600S/660SJ	
2	4846391	1	Tube 600SJ	
3		Ref	Power Track Assembly Options:	
		Ref	**Note: Various Power Tracks use on this model. Identify brand before ordering parts.**	
3		Ref	Power Track Assembly 600S/660SJ	
3	1180345	NLA	Gemco Brand Power Track (Use p/n 1001099832)	
3	7016530	AR	Power Track Repair Section (Includes 18 Link Pin, 4 Radius Links, 2 Carrier Links, 1 Rod Carrier, 1 Spring Loaded Rod, 1 Carrier Weldment and 12 Bearing Plates)	
3	7006138	1	Power Track - Pin Kit (Includes 1 pin, 1 Retaining Ring and 4 Washers)	
3	1001099832	1	Gortrac Brand Power Track	
3	70002005	AR	Power Track - Section Repair Kit	
3	70002006	1	Power Track - Bracket Kit	
3	70004643	2	Clamp with Hardware	
3		Ref	Power Track Assembly 600SJ	
3	1180359	NLA	Gemco Brand Power Track (Use p/n 1001099839)	
3	7016530	AR	Power Track Repair Section (Includes 18 Link Pin, 4 Radius Links, 2 Carrier Links, 1 Rod Carrier, 1 Spring Loaded Rod, 1 Carrier Weldment and 12 Bearing Plates)	
3	7006138	1	Power Track - Pin Kit (Includes 1 pin, 1 Retaining Ring and 4 Washers)	
3	1001099839	1	Gortrac Brand Power Track	
3	70002007	AR	Power Track - Section Repair Kit	
3	70002006	1	Power Track - Bracket Kit	
4	4845677	1	Bracket **(SN 0300068000 through 0300073986)**	
5	3538758	AR	Plate	
6	3340764	2	Pad, Wear	
7	0630458	1	U-Bolt	
8	0100011	AR	Compound, Locking	
9	0641807	11	Bolt 1/2in-13NC x 7/8in	
10	4711800	11	Flatwasher 1/2in Thin	
11	0641608	8	Bolt 3/8in-16NC x 1in	
12	4711600	18	Flatwasher 3/8in Thin	
13	3311605	8	Locknut 3/8in-16NC	
14	0642612	1	Bolt 1in-8NC x 1-1/2in **(SN 0300068000 through 0300073986)**	
15	4712600	1	Flatwasher 1in Thin **(SN 0300068000 through 0300073986)**	
16	0641648	2	Bolt 3/8in-16NC x 6in **(SN 0300068000 through 0300073986)**	
17	4711400	2	Flatwasher 1/4in Thin	
18	3311405	2	Locknut 1/4in-20NC	
19	4060803	3 ft/0.9m	Shield, Trim	
20	1320247	1	Clamp, Nylon	
21	0641522	1	Bolt 5/16in-18NC x 2-3/4in	

ITEM	PART NUMBER	QTY	DESCRIPTION	REV
22	3311505	1	Locknut 5/16in-18NC	
23	4711500	2	Flatwasher 5/16in Thin	
24	4070994	2	Shim	
25	4070995	2	Shim	
26	3841013	1	Roller, Rod	
27	3450806	1	Pin, Cotter	
28	0641404	1	Bolt 1/4in-20NC x 1/2in	
29	3860050	1	Roller	

SECTION 4 - PLATFORM

SECTION 4 - PLATFORM

FIGURE 4-1. PLATFORM COMPONENTS INSTALLATION (AUSTRALIAN SPEC WITH FRONT ENTRY PLATFORM)

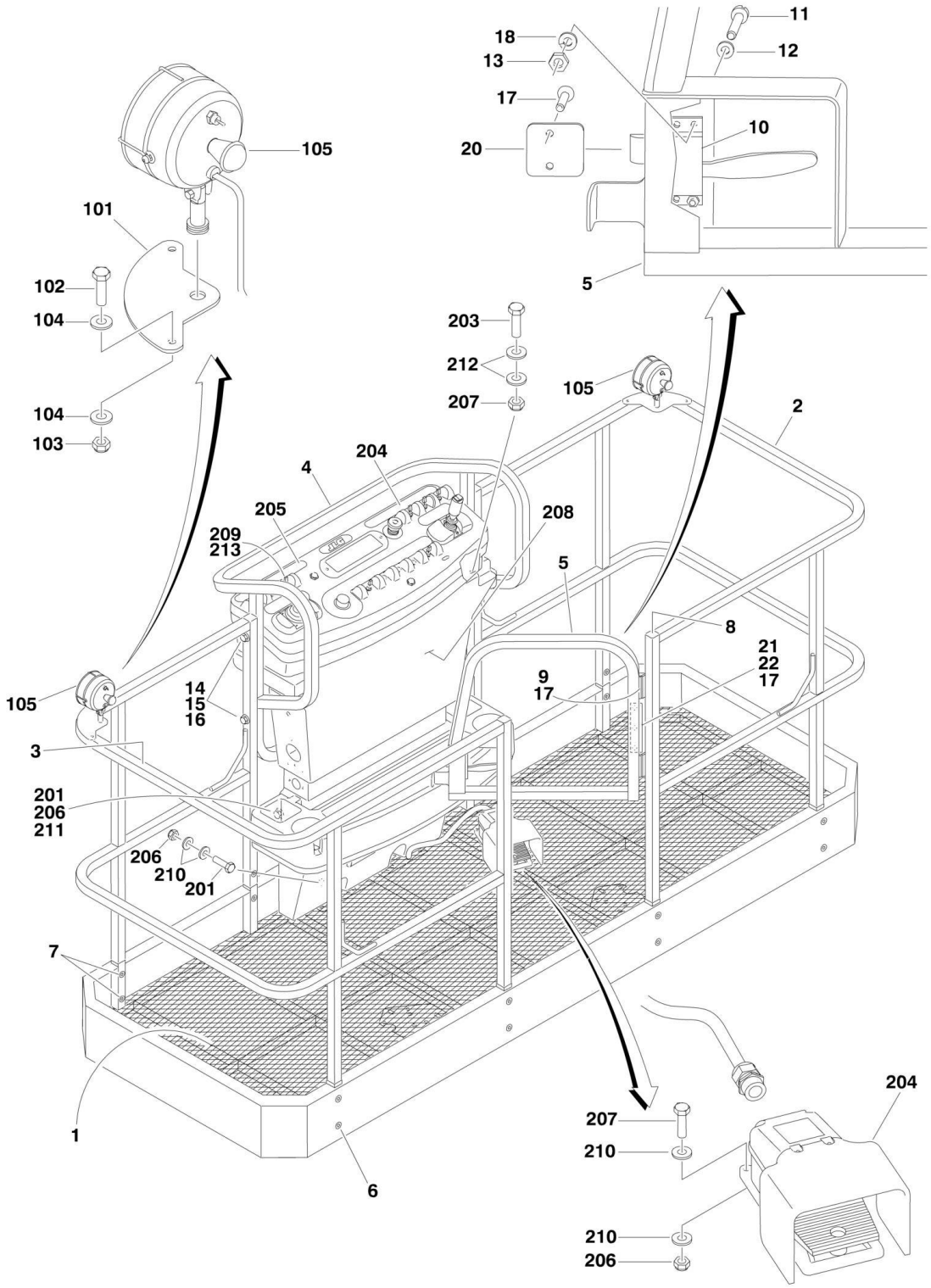

FIGURE 4-1. PLATFORM COMPONENTS INSTALLATION (AUSTRALIAN SPEC WITH FRONT ENTRY PLATFORM)

ITEM	PART NUMBER	QTY	DESCRIPTION	REV
		Ref	**PLATFORM ASSEMBLIES:**	
	3510542	Ref	**6ft (1.83m) with Mesh to Mid Rail and Self-Closing Gate**	2
	3510543	Ref	**8ft (2.44m) with Mesh to Mid Rail and Self-Closing Gate**	2
1		Ref	Floor Weldment Options:	
1	4844954	1	6ft/1.83m Platform	
1	4844928	1	8ft/2.44m Platform	
2		Ref	Rail Weldment - Right Side Options:	
2	4844955	1	6ft/1.83m Platform with Mesh Mid Rail	
2	4844924	1	8ft/2.44m Platform with Mesh Mid Rail	
3		Ref	Rail Weldment - Left Side Options:	
3	4844956	1	6ft/1.83m Platform with Mesh Mid Rail	
3	4844925	1	8ft/2.44m Platform with Mesh Mid Rail	
4	4845328	1	Rail Weldment - Back	
5	4845426	1	Gate Weldment	
6	3900207	16	Fastener	
		Ref	**Note: P/N 3900207 Fastener may be replaced with P/N 0641416 Bolt, P/N 4751400 Flatwasher, P/N 3311405 Locknut and P/N3300151 Acorn Type Nut. Acorn type nut is required to meet industry safety requirements.**	
7	3300393	16	Collar	
8	3520072	4	Plug, Cap	
9	2600219	2	Hinge	
10	2940074	1	Latch	
11	3911008	4	Screw #10-24NC x 1/2in	
12	4751000	4	Flatwasher #10 Regular	
13	3311005	4	Locknut #10-24NC	
14	0641524	4	Bolt 5/16in-18NC x 3in	
15	3311505	4	Locknut 5/16in-18NC	
16	4751500	4	Flatwasher 5/16in Regular	
17	2080040	13	Fastener	
18	4761000	4	Lockwasher 3/8in	
20	3539685	1	Plate, Latch	
21	4220165	1	Stop, Gate	
22	4060803	6 ft/1.8m	Trim	
		Ref	**WORKLIGHTS INSTALLATIONS (optional)**	
	0270814	Ref	**Worklights Installations (Optional) (SN 0300068000 through 0300074440)**	3-D
	0273486	Ref	**Worklights Installations (Optional) 600S (SN 0300074441 through 0300087000)**	C
	0273490	Ref	**Worklights Installations (Optional) 600SJ (SN 0300074441 through 0300087000)**	C
	0273491	Ref	**Worklights Installations (Optional) 660SJ (SN 0300074441 through 0300087000)**	C
101	3536089	2	Plate, Mounting	
102	0641414	4	Bolt 1/4in-20NC x 1-3/4in	
103	3311405	4	Locknut 1/4in-20NC	
104	4711400	8	Flatwasher 1/4in Thin	
105	2920140	2	Worklight	
105	7016399	2	Bulb, Replacement (1 Per Worklight)	
106	4240099	10	Tie-Strap (Not Shown)	

ITEM	PART NUMBER	QTY	DESCRIPTION	REV
107	2820035	9	Loom, Vinyl (Not Shown)	
109		Ref	Connector, Strain Relief Options:	
109	4460598	1	Connector, Strain Relief **(SN 0300068000 through 0300074440)**	
109	4460426	1	Connector, Strain Relief **(SN 0300074441 through 0300087000)**	
110	4920018	AR	Wire, Black 16 Ga (Not Shown) **(SN 0300068000 through 0300074441)**	
		Ref	**CONSOLE BOX INSTALLATIONS**	
	0272298	Ref	**2WD - CE Spec**	A
	0271940	Ref	**4WD - CE Spec**	A
201	0641406	4	Bolt 1/4in-20NC x 3/4in	
202	0641408	3	Bolt 1/4in-20NC x 1in	
203	0641610	4	Bolt 3/8in-16NC x 1-1/4in	
204		Ref	Console Box and Footswitch Assembly (See PLATFORM CONSOLE ASSEMBLY for Breakdown)	
205	1702676	1	Decal - Horn	
206	3311405	7	Locknut 1/4in-20NC	
207	3311605	4	Locknut 3/8in-16NC	
208	3380434	1	Panel, Decal Mount	
209		Ref	Switch Options:	
209	4360336	1	Switch	
209	4360331	1	Switch	
210	4740362	7	Flatwasher 1/4in Fender	
211	4751400	4	Flatwasher 1/4in Regular	
212	4751600	8	Flatwasher 3/8in Regular	
213	3790012	1	O-Ring	

FIGURE 4-2. PLATFORM COMPONENTS INSTALLATION (CE SPEC WITH FRONT ENTRY PLATFORM)

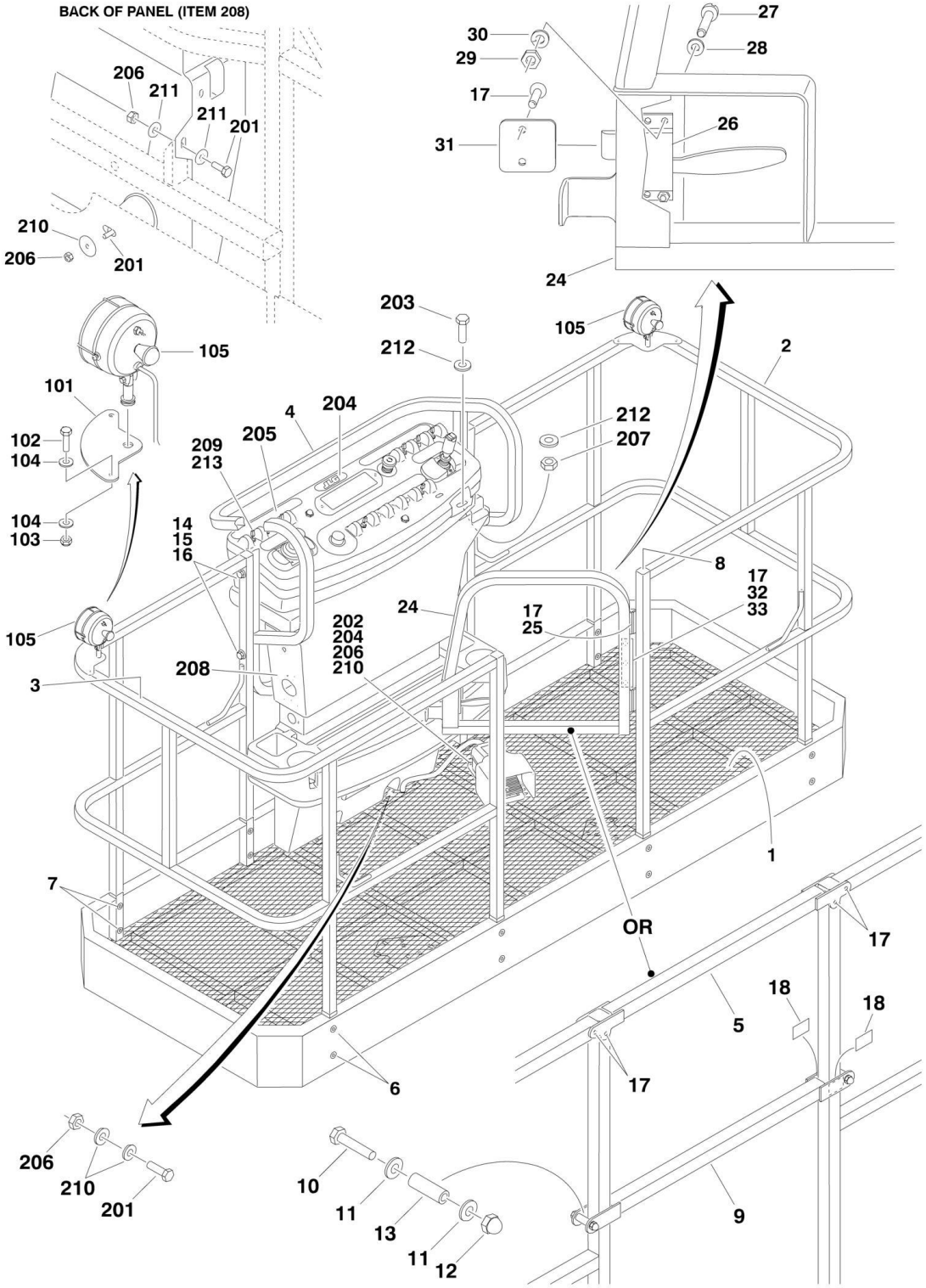

FIGURE 4-2. PLATFORM COMPONENTS INSTALLATION (CE SPEC WITH FRONT ENTRY PLATFORM)

ITEM	PART NUMBER	QTY	DESCRIPTION	REV
		Ref	**PLATFORM ASSEMBLIES:**	
	3510751	Ref	**5ft (1.52m) Platform with Drop Bar**	2
	3510499	Ref	**6ft (1.83m) Platform with Drop Bar**	3
	3510537	Ref	**6ft (1.83m) Platform with Self-Closing Gate**	2
	3510763	Ref	**6ft (1.83m) Platform with Drop Bar (Mesh to Mid Rail)**	1
	3510500	Ref	**8ft (2.44m) Platform with Drop Bar**	2
	3510538	Ref	**8ft (2.44m) Platform with Self-Closing Gate**	2
	3510764	Ref	**8ft (2.44m) Platform with Drop Bar (Mesh to Mid Rail)**	1
1		Ref	Floor Weldment Options:	
1	4846184	1	5ft/1.52m Platform	
1	4845290	1	6ft/1.83m Platform	
1	4845289	1	8ft/2.44m Platform	
2		Ref	Rail Weldment - Right Side Options:	
2	4846194	1	5ft/1.52m Platform	
2	4844955	1	6ft/1.83m Platform	
2	4846228	1	6ft/1.83m Platform (Mesh to Mid Rail)	
2	4844924	1	8ft/2.44m Platform	
2	4846240	1	8ft/2.44m Platform (Mesh to Mid Rail)	
3		Ref	Rail Weldment - Left Side Options:	
3	4846195	1	5ft/1.52m Platform	
3	4844956	1	6ft/1.83m Platform	
3	4846229	1	6ft/1.83m Platform (Mesh to Mid Rail)	
3	4844925	1	8ft/2.44m Platform	
3	4846241	1	8ft/2.44m Platform (Mesh to Mid Rail)	
4	4845328	1	Rail Weldment - Back	
5	4845287	1	Rail Weldment - Top (Drop Bar Platform Only)	
6	3900207	AR	Fastener	
		Ref	**Note: P/N 3900207 Fastener may be replaced with P/N 0641416 Bolt, P/N 4751400 Flatwasher, P/N 3311405 Locknut and P/N3300151 Acorn Type Nut. Acorn type nut is required to meet industry safety requirements.**	
7	3300393	AR	Collar	
8	3520072	4	Plug, Cap	
9	4845288	1	Bar, Drop (Drop Bar Platform Only)	
10	0641418	2	Bolt 1/4in-20NC x 2-1/4in	
11	4740411	4	Washer, Nylon	
12	3300151	2	Nut, Acorn 1/4in-20NC	
13	0961845	2	Bushing	
14	0641524	4	Bolt 5/16in-18NC x 3in	
15	3311505	4	Locknut 5/16in-18NC	
16	4751500	4	Flatwasher 5/16in Regular	
17	2080040	AR	Fastener	
18	4420055	7 in/18cm	Tape (Drop Bar Platform Only)	
24	4845426	1	Gate (Self-Closing Gate Only)	
25	2600287	2	Hinge (Self-Closing Gate Only)	
26	2940074	1	Latch (Self-Closing Gate Only)	
27	3911016	4	Screw #10-24NC x 2in (Self-Closing Gate Only)	
28	4751000	4	Flatwasher #10 Regular (Self-Closing Gate Only)	
29	3311005	4	Locknut #10-24NC (Self-Closing Gate Only)	

ITEM	PART NUMBER	QTY	DESCRIPTION	REV
30	4761000	4	Lockwasher #10 (Self-Closing Gate Only)	
31	3539685	1	Plate, Latch (Self-Closing Gate Only)	
32	4220164	1	Stop, Gate (Self-Closing Gate Only)	
33	4060803	6 ft/1.8m	Trim (Self-Closing Gate Only)	
		Ref	**WORKLIGHTS INSTALLATIONS (optional)**	
	0270814	Ref	**Worklights Installations (Optional) (SN 0300068000 through 0300074440)**	3-D
	0273486	Ref	**Worklights Installations (Optional) 600S (SN 0300074441 through 0300087000)**	C
	0273490	Ref	**Worklights Installations (Optional) 600SJ (SN 0300074441 through 0300087000)**	C
	0273491	Ref	**Worklights Installations (Optional) 660SJ (SN 0300074441 through 0300087000)**	C
101	3536089	2	Plate, Mounting	
102	0641414	4	Bolt 1/4in-20NC x 1-3/4in	
103	3311405	4	Locknut 1/4in-20NC	
104	4711400	8	Flatwasher 1/4in Thin	
105	2920140	2	Worklight	
105	7016399	2	Bulb, Replacement (1 Per Worklight)	
106	4240099	10	Tie-Strap (Not Shown)	
107	2820035	9	Loom, Vinyl (Not Shown)	
109		Ref	Connector, Strain Relief Options (Not Shown - Located on Bottom of Console Box):	
109	4460598	1	Connector, Strain Relief **(SN 0300068000 through 0300074440)**	
109	4460426	1	Connector, Strain Relief **(SN 0300074441 through 0300087000)**	
110	4920018	AR	Wire, Black 16 Ga (Not Shown) **(SN 0300068000 through 0300074441)**	
		Ref	**CONSOLE BOX INSTALLATIONS**	
	0272298	Ref	**Console Box Installations 2WD**	A
	0271940	Ref	**Console Box Installations 4WD**	A
201	0641406	4	Bolt 1/4in-20NC x 3/4in	
202	0641408	3	Bolt 1/4in-20NC x 1in	
203	0641610	4	Bolt 3/8in-16NC x 1-1/4in	
204		Ref	Console Box and Footswitch Assembly (See PLATFORM CONSOLE ASSEMBLY for Breakdown)	
205	1702676	1	Decal - Horn	
206	3311405	7	Locknut 1/4in-20NC	
207	3311605	4	Locknut 3/8in-16NC	
208	3380434	1	Panel, Decal Mount	
209		Ref	Switch Options:	
209	4360336	1	Switch	
209	4360331	1	Switch	
210	4740362	7	Flatwasher 1/4in Fender	
211	4751400	4	Flatwasher 1/4in Regular	
212	4751600	8	Flatwasher 3/8in Regular	
213	3790012	1	O-Ring	

FIGURE 4-3. PLATFORM COMPONENTS INSTALLATION (SIDE ENTRY PLATFORM)

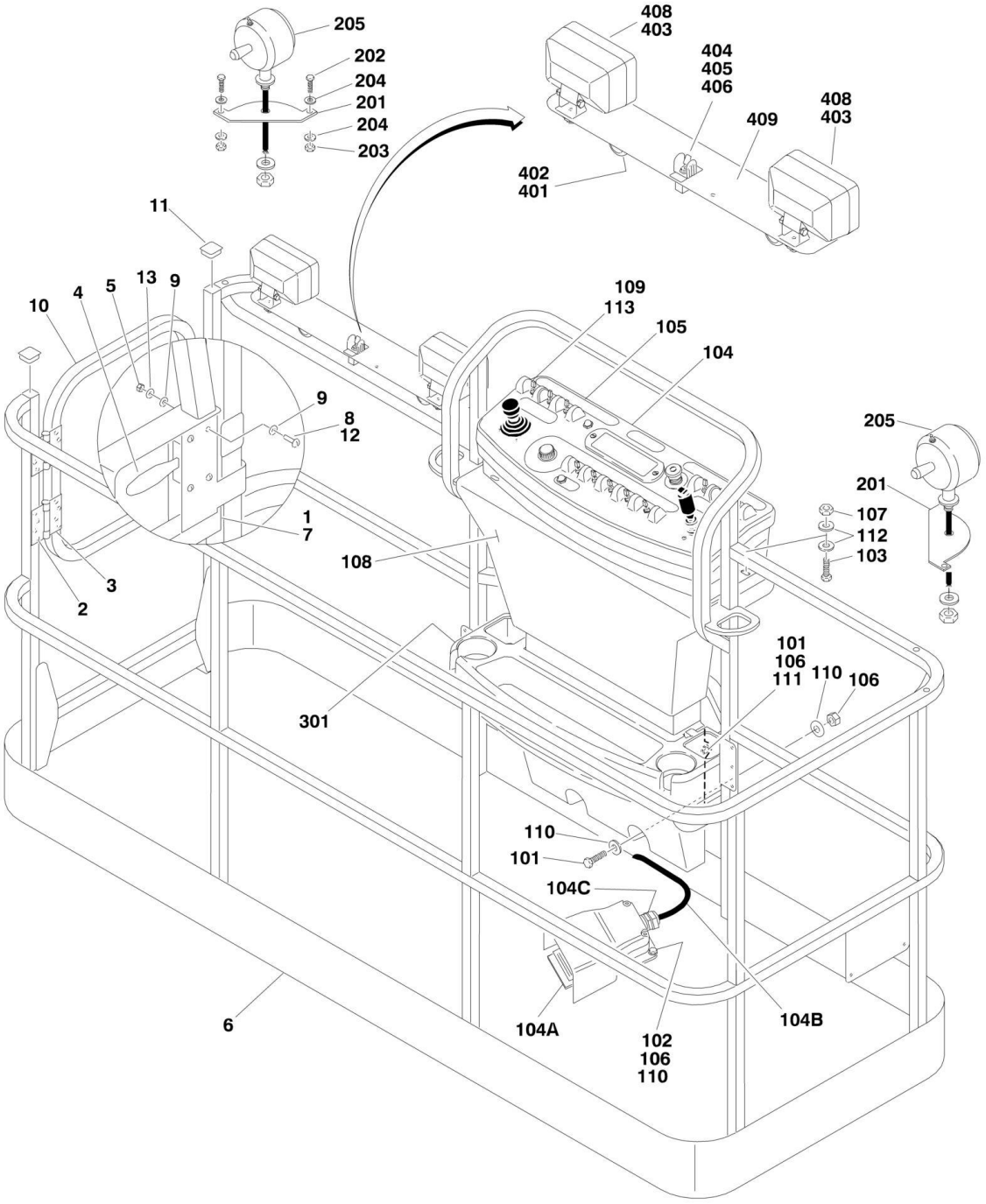

FIGURE 4-3. PLATFORM COMPONENTS INSTALLATION (SIDE ENTRY PLATFORM)

ITEM	PART NUMBER	QTY	DESCRIPTION	REV
		Ref	**PLATFORM ASSEMBLIES:**	
	3510830	Ref	**4ft (1.22m) with No Mesh (SN 0300068809 through 0300087000)**	B-E
	3510831	Ref	**5ft (1.52m) with No Mesh (SN 0300068809 through 0300087000)**	B-E
	3510833	Ref	**6ft (1.83m) with No Mesh (SN 0300068809 through 0300087000)**	B-E
	3510832	Ref	**6ft (1.83m) with No Mesh**	B-E
	3510822	Ref	**8ft (2.44m) with No Mesh**	B-E
		Ref	**Note: Original Equipment platform may have been replaced with Service Replacement platform. Identify platform before ordering parts.**	
		Ref	**Note: When replacing 8ft/2.44m platform with Soft Touch option, new Soft Touch Rail p/n 4846673 must be purchased to accommodate limit switch locations.**	
		Ref	**Note: When replacing platform on machines with SkyCutter option, new bracket p/n 1001145405 must be purchased to accommodate SkyCutter components.**	
1	0100040	AR	Sealant, Adhesive **(SN 0300068000 through 0300073444)**	
2	2080040	16	Fastener, Huck	
3	2600281	2	Hinge, Self-Closing	
4	2940074	1	Latch	
5	3311001	4	Nut #10-24NC **(SN 0300068000 through 0300077333)**	
6	See Note	NSS	Platform Weldment (Note: Purchase Complete Platform Assembly)	
7	3520072	1	Cap-Plug	
8		Ref	Hardware Options:	
8	3911008	4	Screw #10-24NC x 1in **(SN 0300068000 through 0300077332)**	
8	3820020	4	Pop Rivet **(SN 0300077333 through 0300087000)**	
9	4751000	AR	Flatwasher #10 Regular **(SN 0300068000 through 0300077333)**	
10		Ref	Gate Weldment Options:	
10	4846452	1	Gate for Original Equipment Platform p/n 3510830, 3510831, 3510832, 3510833, 3510822	
10	1001144629	1	Gate for Service Replacement Platform p/ns 1001144023, 1001144024, 1001144025, 1001144026, 1001144027	
11	3520198	2	Plug, Square	
12	0100011	AR	Compound, Locking **(SN 0300073444 through 0300077333)**	
13	4761000	4	Lockwasher #10 **(SN 0300073444 through 0300077333)**	
		Ref	**CONSOLE BOX INSTALLATIONS**	
	0272298	Ref	**Console Box Installations 2WD (SN 0300068000 through 0300069777)**	A
	0271940	Ref	**Console Box Installations 2WD/4WD**	A
	0273058	Ref	**Console Box Installations 4WD - UK/German Spec**	A
101	0641406	4	Bolt 1/4in-20NC x 3/4in	
102	0641408	3	Bolt 1/4in-20NC x 1in	
103	0641610	4	Bolt 3/8in-16NC x 1-1/4in	
104		Ref	Platform Console Box Assembly (See PLATFORM CONSOLE ASSEMBLY for Breakdown)	
104A	0272970	1	Footswitch Assembly (Includes Footswitch and Items 104B & 104C)	
		Ref	**Note: Assembly p/n 0272970 may use either p/n 4360031 or**	

ITEM	PART NUMBER	QTY	DESCRIPTION	REV
			p/n 1001117320. If Original Equipment was replaced as an "assembly," p/n 1001117320 may have been used as part of the Service Replacement. Identify component before ordering parts.	
104A		Ref	Footswitch Less Cable Options:	
104A	4360031	1	Original Equipment	
104A	1001117320	1	Service Replacement	
104A		Ref	Block, Contact Options (see Note Above):	
104A	7000625	2	Contact Block for 4360031 Footswitch	
104A	70003483	1	Contact Block for 1001117320 Footswitch	
104A	7000625	2	Block, Contact	
104B	1060918	7 ft/2.14m	Cable, Electrical - 18/3	
104C	4460071	1	Connector, Strain Relief	
105	1702676	1	Decal - Horn	
106	3311405	7	Locknut 1/4in-20NC	
107	3311605	4	Locknut 3/8in-16NC	
108		Ref	Panel, Decal Mount Options:	
108	3380434	1	CE Spec	
108	3380476	1	UK Spec	
109		Ref	Switch Options:	
109	4360336	1	Switch	
109	4360331	1	Switch	
110	4740362	7	Flatwasher 1/4in Fender	
111	4751400	4	Flatwasher 1/4in Regular	
112	4751600	8	Flatwasher 3/8in Regular	
113	3790012	1	O-Ring	
		Ref	**WORKLIGHTS INSTALLATIONS (optional)**	
	0270814	Ref	**Worklights Installations (Optional) (SN 0300068000 through 0300074440)**	3-E
	0273486	Ref	**Worklights Installations (Optional) 600S (SN 0300074441 through 0300087000)**	C
	0273490	Ref	**Worklights Installations (Optional) 600SJ (SN 0300074441 through 0300087000)**	C
	0273491	Ref	**Worklights Installations (Optional) 660SJ (SN 0300074441 through 0300087000)**	C
201	3536089	2	Plate, Mounting	
202	0641414	4	Bolt 1/4in-20NC x 1-3/4in	
203	3311405	4	Locknut 1/4in-20NC	
204	4711400	8	Flatwasher 1/4in Thin	
205	2920140	2	Worklight	
205	7016399	2	Bulb, Replacement (1 Per Worklight)	
206	4240099	10	Tie-Strap (Not Shown)	
207	2820035	9	Loom, Vinyl (Not Shown)	
209		Ref	Connector, Strain Relief Options (Not Shown - Located at Console Box):	
209	4460598	1	Connector, Strain Relief **(SN 0300068000 through 0300074440)**	
209	4460426	1	Connector, Strain Relief **(SN 0300074441 through 0300087000)**	
		Ref	**TRAY INSTALLATIONS (OPTIONAL)**	
301	1580012	1	Tray, Storage (Center)	
302	1580013	1	Tray, Storage (Rail Mounted - Not Shown)	
	0274209	Ref	**FLOODLIGHT INSTALLATION**	A
401	0641518	2	Bolt 5/16in-18NC x 2 1/4in	

ITEM	PART NUMBER	QTY	DESCRIPTION	REV
402	2560173	2	Handle	
403	2920157	2	Lamp, Work Light	
404	3250585	1	Nameplate - Light On	
405	4060802	1	Guard, Switch	
406	4360336	1	Switch, Toggle	
407	4420037	1	Tape, Insulation (Not Shown)	
408	4751800	2	Flatwasher 1/2in Regular	
409	4846561	1	Mount, Light	
410	4922888	1	Harness 12/3 (Not Shown)	

FIGURE 4-4. PLATFORM COMPONENTS INSTALLATION (FALL ARREST PLATFORM)

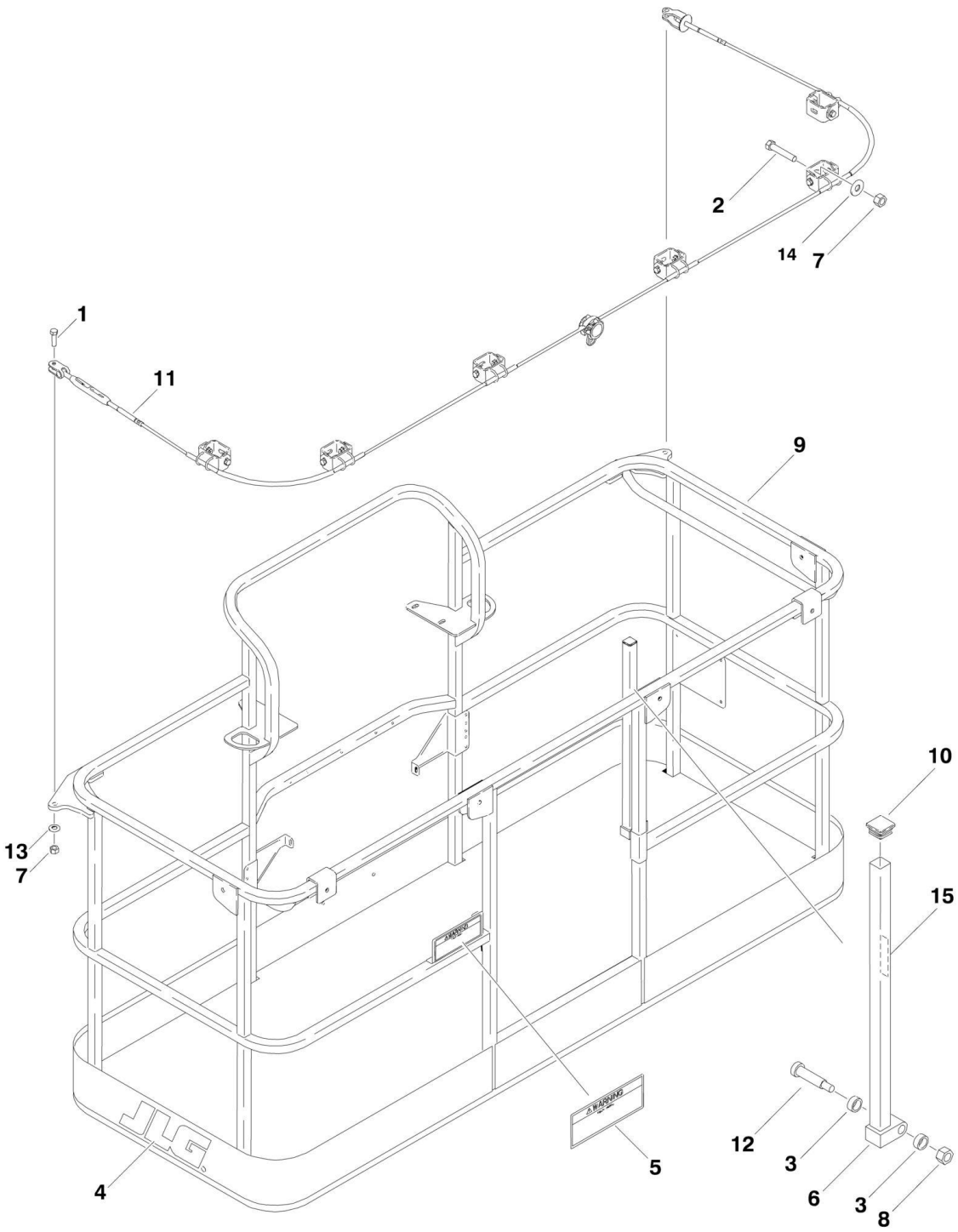

FIGURE 4-4. PLATFORM COMPONENTS INSTALLATION (FALL ARREST PLATFORM)

ITEM	PART NUMBER	QTY	DESCRIPTION	REV
		Ref	**PLATFORM ASSEMBLIES (FALL ARREST)**	
	3510868	Ref	**Platform Assemblies (Fall Arrest) (SN 0300068000 through 0300085918)**	B
	3510877	Ref	**Platform Assemblies (Fall Arrest) (SN 0300085919 through 0300087000)**	A
1	0681814	2	Bolt 1/2in-13NC x 1-3/4in (Grade 8)	
2	0681822	6	Bolt 1/2in-13NC x 2-3/4in (Grade 8)	
3	0962270	2	Bearing, Oilite	
4	1702773	1	Decal - JLG	
5		Ref	Decal - Safety Options:	
5	1705014	1	Decal - Safety **(SN 0300068000 through 0300085918)**	
5	1706501	1	Decal - Safety **(SN 0300085919 through 0300087000)**	
6	2410014	1	Gate Weldment	
7	3271805	8	Locknut 1/2in-13NC (Grade 8)	
8	3311605	1	Locknut 3/8in-16NC	
9	See Note	NSS	Platform Weldment (Purchase Platform Assembly) (Note: Purchase Complete Platform Assembly)	
10	3520072	1	Cap-Plug	
11	3890040	1	Cable, Fall Arrest	
12	3900054	1	Bolt 1/2in-13NC x 1-3/4in	
13	4711800	2	Flatwasher 1/2in Thin	
14	4751800	6	Flatwasher 1/2in Regular	
15	1706493	1	Decal - Drop Bar **(SN 0300085919 through 0300087000)**	

FIGURE 4-5. PLATFORM CONSOLE ASSEMBLY

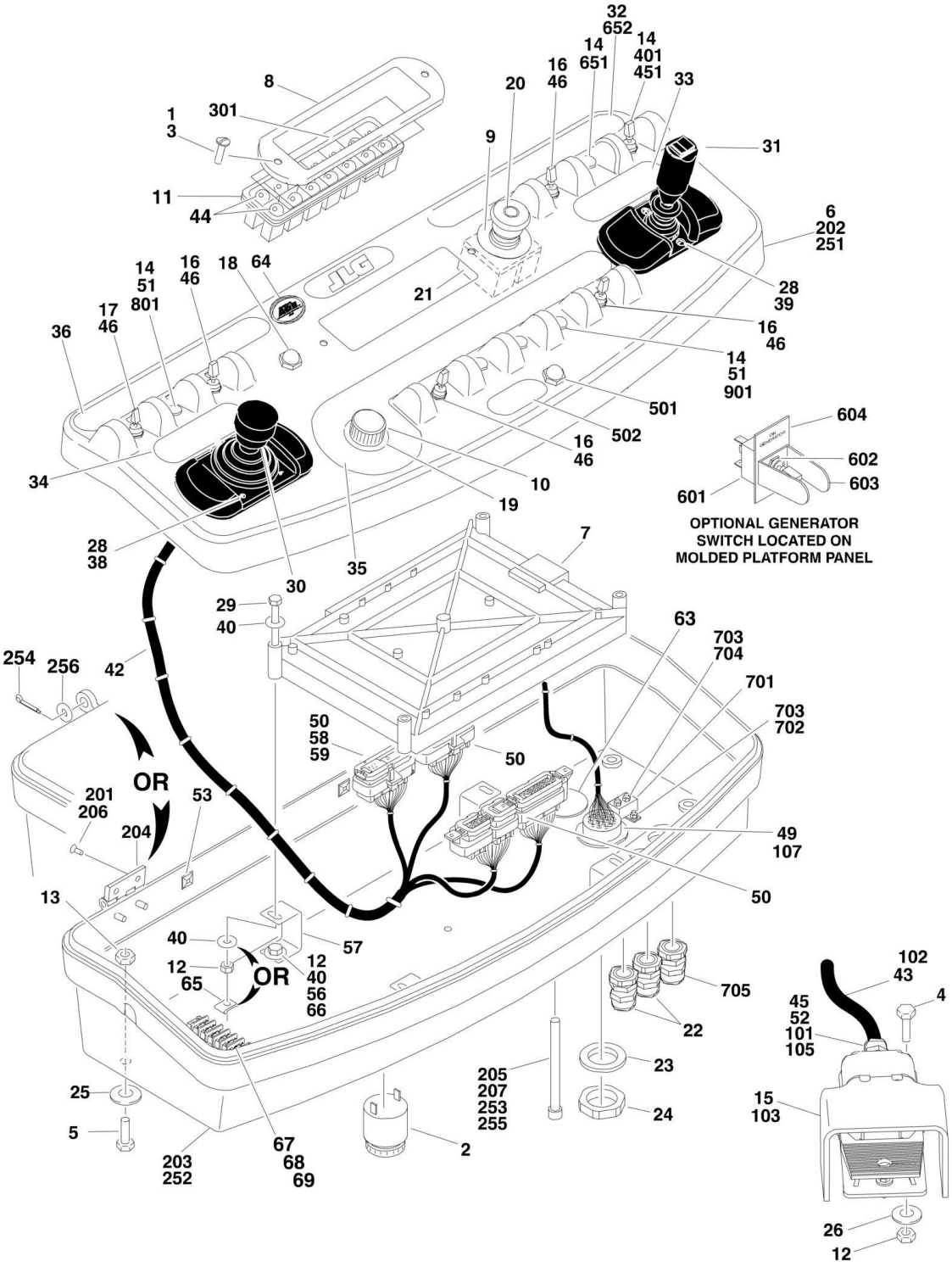

FIGURE 4-5. PLATFORM CONSOLE ASSEMBLY

ITEM	PART NUMBER	QTY	DESCRIPTION	REV
		Ref	**CONSOLE BOX AND FOOTSWITCH ASSEMBLIES**	
	See Note	Ref	**Console Box and Footswitch Assemblies (Note: See Item 6 Note) (SN 0300068000 through 0300068964)**	
		Ref	**Note: No exact SN break exists. SN 0300068000 through SN 0300068965 may use either p/n 0861477 or p/n 0861511**	
	0861511	Ref	**Console Box and Footswitch Assemblies (SN 0300068965 through 0300087000)**	F
1	0100035	AR	Compound, Locking	
2	0140011	1	Alarm	
3	0630464	AR	Screw, Button Head #10-24NC x 1/2in	
4	0641408	3	Bolt 1/4in-20NC x 1in	
5	0641610	AR	Bolt 3/8in-16NC x 1-1/4in	
6		Ref	Box, Console Options:	
		Ref	**Note: No exact SN break exists. SN 0300068000 through SN 0300068965 may use either box.**	
6	0861414	1	Box, Console - Aluminum (See Items 101-108 for Breakdown)	
6	0861537	1	Box, Console - Die Cast (See Items 151-156 for Breakdown)	
7		Ref	Controller, Module (Re-calibration Required when Replaced) Options:	
7	1600313	1	Controller, Module (Re-calibration Required when Replaced) **(SN 0300068000 through 0300077489)**	
7	1600375	1	Controller, Module (Re-calibration Required when Replaced) **(SN 0300077490 through 0300087000)**	
8	1670829	1	Bezel	
9	1704260	1	Decal - EMS	
10	2560136	1	Handle, Knob	
11	2760105	1	Housing, Display Light	
12	3311405	11	Locknut 1/4in-20NC	
13	3311605	4	Locknut 3/8in-16NC	
14		Ref	Plug, Hole 1/2in Options:	
14	3520028	6	Plug, Hole 1/2in **(SN 0300068000 through 0300077482)**	
14	3520054	6	Plug, Hole 1/2in **(SN 0300077483 through 0300087000)**	
15	See Note	1	Footswitch Assembly (Note: See Items 101-107 for Breakdown)	
16	4360328	4	Switch, Toggle	
17	4360331	1	Switch, Toggle	
18	4360387	1	Switch, Pushbutton	
19	4360407	1	Controller, Speed	
19	See Note	NSS	Gasket "Top Hat" (Included with Switch) (Note: Not Available - Purchase Complete Controller)	
19	70003784	1	Seal	
20	4360475	1	Switch, Emergency Stop	
20	7020175	1	Cap, Red	
20	7020176	1	Contact Block	
21	4360476	1	Block, Contact	
22	4460428	2	Connector, Strain Relief	
23	4460471	1	Lockwasher, Terminal	
24	4460470	1	Nut, Terminal	
25	4751600	4	Flatwasher 3/8in Regular	
26	4740362	AR	Flatwasher 1/4in Fender	
28	0641404	8	Bolt 1/4in-20NC x 1/2in	
29		Ref	Bolt Options:	

ITEM	PART NUMBER	QTY	DESCRIPTION	REV
29	0641416	4	Bolt 1/4in-20NC x 2in **(SN 0300068000 through 0300077489)**	
29	0641414	4	Bolt 1/4in-20NC x 1-3/4in **(SN 0300077490 through 0300087000)**	
30	1600317	NLA	Controller Assembly (Lift and Swing) (See CONTROLLER ASSEMBLY (LIFT AND SWING) for Breakdown) (Use p/n 1001129555)	
31	1600318	NLA	Controller Assembly (Drive and Steer) (See CONTROLLER ASSEMBLY (DRIVE AND STEER) for Breakdown) (Use p/n 1001212415)	
32		Ref	Decal (Stop) Options:	
32	1702564	1	Decal (Stop) **(SN 0300068000 through 0300072391)**	
32	1704997	1	Decal (Stop) **(SN 0300072392 through 0300087000)**	
33	1702565	1	Decal (Drive and Steer)	
34	1702566	1	Decal (Lift and Swing)	
35	1702567	1	Decal (Function Speed)	
36	1702676	1	Decal (Horn)	
38	4340678	1	Support, Hand	
39	4340684	1	Support, Hand	
40	4751400	AR	Flatwasher 1/4in Regular	
41	4922666	1	Harness, Analyzer Cable (Not Shown)	
41	4460871	4	Terminal, Socket	
41	4460761	1	Housing - 4 Position	
41	4460227	4	Pin	
42	4922639	1	Harness, Platform Box Options:	
43	1060918	7 ft/2.1m	Cable, 18/3	
44	2920129	12	Bulb, Light	
45	4460071	1	Connector, Strain Relief	
46	3790012	5	O-Ring	
49	4460464	1	Terminal, Deutsch	
50		Ref	Terminal, Socket	
50	See Note	NSS	Terminal, Socket (Note: See Item 6 Note) **(SN 0300068000 through 0300068964)**	
50	4460226	2	Terminal, Socket **(SN 0300068965 through 0300087000)**	
51	0100009	AR	Sealant	
52	0100020	AR	Loctite #567	
53	4460488	1	Terminal, Mounting Base	
54	4460234	AR	Wire Tie (Not Shown)	
56	0641404	4	Bolt 1/4in-20NC x 1/2in	
57	0902751	4	Bracket, Card Support	
58	4460905	5	Connector, Amp Seal Plug	
59	0100048	AR	Grease, Dialectric	
60	4460226	2	Socket, Female (Not Shown - Used with Footswitch) (See ELECTRICAL SECTION for Location)	
61	4460708	2	Connector, Female - 15 Position (Not Shown - See ELECTRICAL SECTION for Location)	
62	4460905	5	Seal, Plug (Not Shown - Used with Footswitch) (See ELECTRICAL SECTION for Location)	
63	1671037	1	Cover	
64	1705132	1	Decal - ADE	
65	3300353	4	Nut, Tinnerman	
66	0100081	AR	Loctite #454	
67	0721008	1	Bolt #10-24NC x 1 **(SN 0300071160 through 0300087000)**	
68	3311001	1	Nut #10-24NC **(SN 0300071160 through 0300087000)**	

ITEM	PART NUMBER	QTY	DESCRIPTION	REV
69	4460007	1	Bar, Buss **(SN 0300071160 through 0300087000)**	
	0272970	Ref	**FOOT SWITCH ASSEMBLY (Includes Items 102 & 105)**	A
		Ref	**Note: Assembly p/n 0272970 may use either p/n 4360031 or p/n 1001117320. If Original Equipment was replaced as an "assembly," p/n 1001117320 may have been used as part of the Service Replacement. Identify component before ordering parts.**	
101	0100020	AR	Pipe Sealant	
102	1060918	7 ft/2.1m	Cable, 18/3	
103		Ref	Footswitch Less Cable Options:	
103	4360031	1	Original Equipment	
103	1001117320	1	Service Replacement	
103		Ref	Block, Contact Options (see Note Above):	
103	7000625	2	Contact Block for 4360031 Footswitch	
103	70003483	1	Contact Block for 1001117320 Footswitch	
105	4460071	1	Connector, Strain Relief	
106	4460226	2	Socket, Female (Not Shown - Used with Footswitch) (See ELECTRICAL SECTION for Location)	
107	4460464	1	Terminal, Deutsch	
	0861414	Ref	**CONSOLE BOX ASSEMBLY (Note: See Note Under Item 6 for Usage.)**	C
201	0100011	AR	Compound, Locking	
202	See Note	NLA	Console Top (Note: Not Available - Purchase Complete Console Box Assembly)	
203	See Note	NLA	Console Bottom (Note: Not Available - Purchase Complete Console Box Assembly)	
204	2600211	2	Hinge	
205	3311601	1	Nut 3/8in-16NC	
206	3900224	8	Screw Countersunk	
207	3931672	1	Screw 3/8in-16NC x 4-1/2in	
208	3520174	3	Plug, Hole 3/16 (Not Shown) (Located on back of console box)	
	0861537	Ref	**CONSOLE BOX ASSEMBLY (Note: See Note Under Item 6 for Usage.)**	C
251	See Note	NLA	Console Top (Note: Not Available - Purchase Complete Console Box Assembly)	
252	See Note	NLA	Console Bottom (Note: Not Available - Purchase Complete Console Box Assembly)	
253	3311601	1	Nut 3/8in-16NC	
254	3450304	NLA	Pin, Cotter (Use p/n 3420156)	
255	0630568	1	Screw 3/8in-16NC x 4-1/2in	
256	4711500	2	Flatwasher 5/16 Thin	
		Ref	**LIGHT PANEL DECAL INSTALLATION**	
	0256632	Ref	**Euro Spec**	-
	0256633	Ref	**Australian Spec**	-
301		Ref	Decal - Display Options:	
301	1703084	1	Euro Spec	
301	1703085	1	Australian Spec	
	0271552	Ref	**HEAD AND TAIL LIGHTS INSTALLATIONS (OPTIONAL)**	2
401	4360336	1	Switch, Toggle	
401	3790012	1	O-Ring	
	0274210	Ref	**CHASSIS ILLUMINATION LIGHT INSTALLATION**	1-A
451	4360336	1	Switch, Toggle	
451	3790012	1	O-Ring	
		Ref	**SOFT TOUCH SYSTEM INSTALLATION (OPTIONAL)**	

SECTION 4 - PLATFORM

ITEM	PART NUMBER	QTY	DESCRIPTION	REV
	0273824	Ref	**6ft Platform**	A
	0272427	Ref	**8ft Platform**	C
501	4360387	1	Switch, Pushbutton	
502	1702938	1	Decal - Soft Touch Override	
		Ref	**GENERATOR INSTALLATION (CE Spec) (OPTIONAL)**	
	0272482	Ref	**110V Deutz**	2
	0272481	Ref	**220V Deutz**	2
601	4360336	1	Switch, Toggle	
602	4740397	1	Bushing	
603	4060802	1	Guard, Switch	
604	3251102	1	Decal - Generator ON/OFF	
		Ref	**GENERATOR INSTALLATION (OPTIONAL)**	
	0273045	Ref	**110V 50Hz (UK Spec)**	1
	0273085	Ref	**110V 50Hz (German Spec)**	1
651	4360336	1	Switch, Toggle	
652	1705728	1	Decal - Generator ON/OFF	
		Ref	**PLATFORM WORKLIGHT INSTALLATION (OPTIONAL)**	
	0270814	Ref	**Platform Worklight Installation (Optional) (SN 0300068000 through 0300074440)**	3-E
	0273486	Ref	**Platform Worklight Installation (Optional) 600S (SN 0300074441 through 0300087000)**	C
	0273490	Ref	**Platform Worklight Installation (Optional) 600SJ (SN 0300074441 through 0300087000)**	C
	0273491	Ref	**Platform Worklight Installation (Optional) 660SJ (SN 0300074441 through 0300087000)**	C
701	4360232	1	Breaker, Circuit - 15Amp **(SN 0300068000 through 0300074441)**	
702	0721003	2	Bolt #10-24NC x 3/8in **(SN 0300068000 through 0300074441)**	
703	4761000	4	Lockwasher #10 **(SN 0300068000 through 0300074441)**	
704	3311001	2	Nut #10-24NC **(SN 0300068000 through 0300074441)**	
705		Ref	Connector, Strain Relief Options:	
705	4460598	1	Connector, Strain Relief **(SN 0300068000 through 0300074420)**	
705	4460426	1	Connector, Strain Relief **(SN 0300074421 through 0300087000)**	
		Ref	**4WS COMPONENTS INSTALLATION**	
801	4360331	1	Switch, Toggle	
801	3790012	1	O-Ring	
		Ref	**JIB SWITCH INSTALLATION (600SJ & 660SJ ONLY)**	
901	4360328	1	Switch, Toggle	
901	3790012	1	O-Ring	

FIGURE 4-6. CONTROLLER ASSEMBLY (LIFT AND SWING) (ORIGINAL EQUIPMENT)

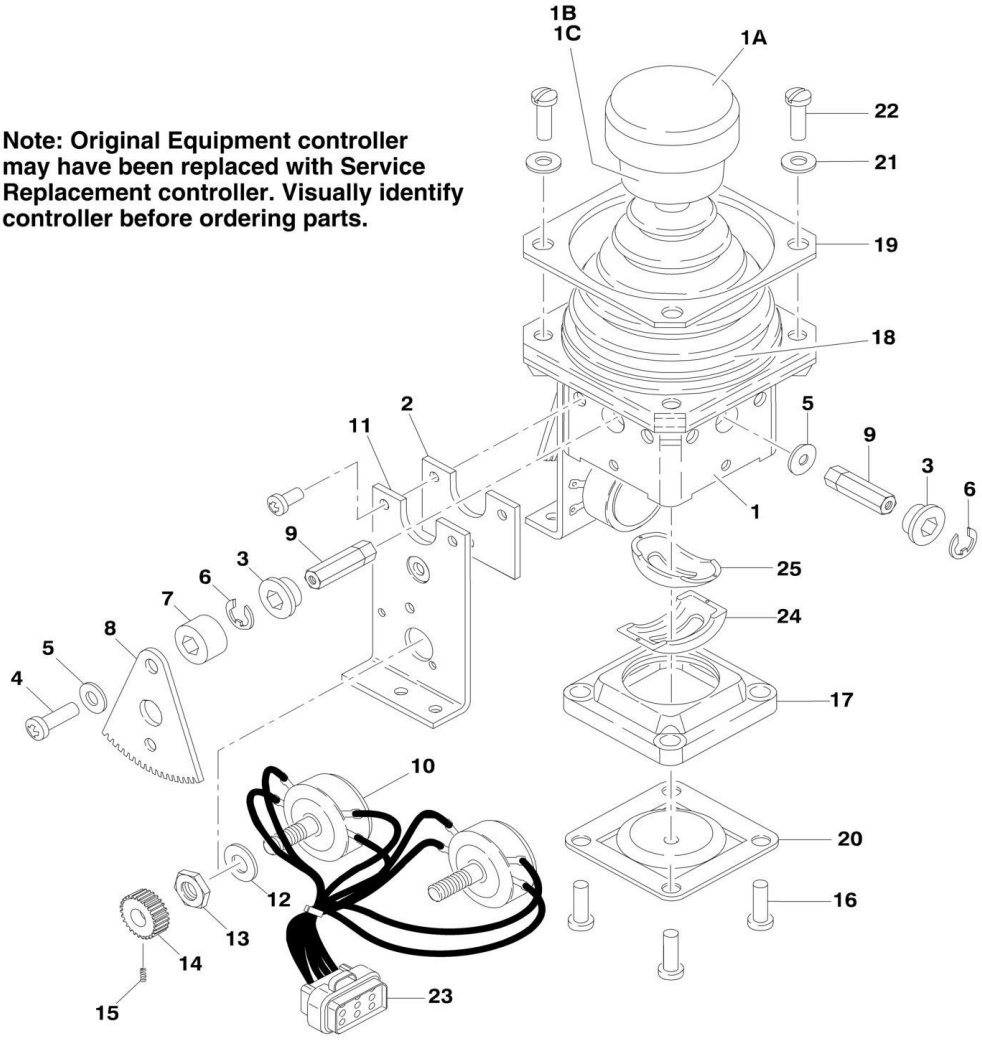

FIGURE 4-6. CONTROLLER ASSEMBLY (LIFT AND SWING) (ORIGINAL EQUIPMENT)

ITEM	PART NUMBER	QTY	DESCRIPTION	REV
		Ref	**Note: Original Equipment controller may have been replaced with Service Replacement controller. Visually identify controller before ordering parts.**	
	1600317	Ref	**CONTROLLER ASSEMBLY (ORIGINAL EQUIPMENT)**	B
		Ref	**Note: Use p/n 1001129555 Kit as replacement.**	
1	7019141	1	Mechanical Assembly (Includes Base, Handle Stem and Items 1A, 1B, 1C & 18)	
1A	7019197	1	Handle Cap and Rod	
1B	7003928	1	Spring	
1C	7022808	1	Cap, Lift	
2	7019171	2	Plate	
3	7019111	4	Bearing, Gear	
4	7019143	2	Screw	
5	7019144	2	Spacer, Cam	
6	7019145	4	E-Clip	
7	7019174	2	Spacer	
8	7003977	2	Gear, Drive	
9		Ref	Shaft Options:	
9	7019147	2	Shaft, Short	
9	7019177	2	Shaft, Long	
10	7022818	2	Potentiometer	
11	7019142	2	Plate	
12	7003992	2	Washer	
13	7003993	2	Nut	
14	7003976	2	Gear, Slave	
15	7019149	2	Setscrew	
16	7022816	4	Screw	
17	7019150	1	Gate	
18	7022814	1	Boot	
19	7022815	1	Bezel	
20	See Note	NSS	Center, Detent (Note: Use p/n 1001129555)	
21	7003953	4	Washer	
22	7022817	4	Screw	
23	7022819	1	Plug, Male 8 Position (Natural)	
23	4460871	8	Socket, Female	
24	7019122	1	Gimble, Outer	
25	7019123	1	Gimble, Inner	

FIGURE 4-7. CONTROLLER ASSEMBLY (LIFT AND SWING) (SERVICE REPLACEMENT)

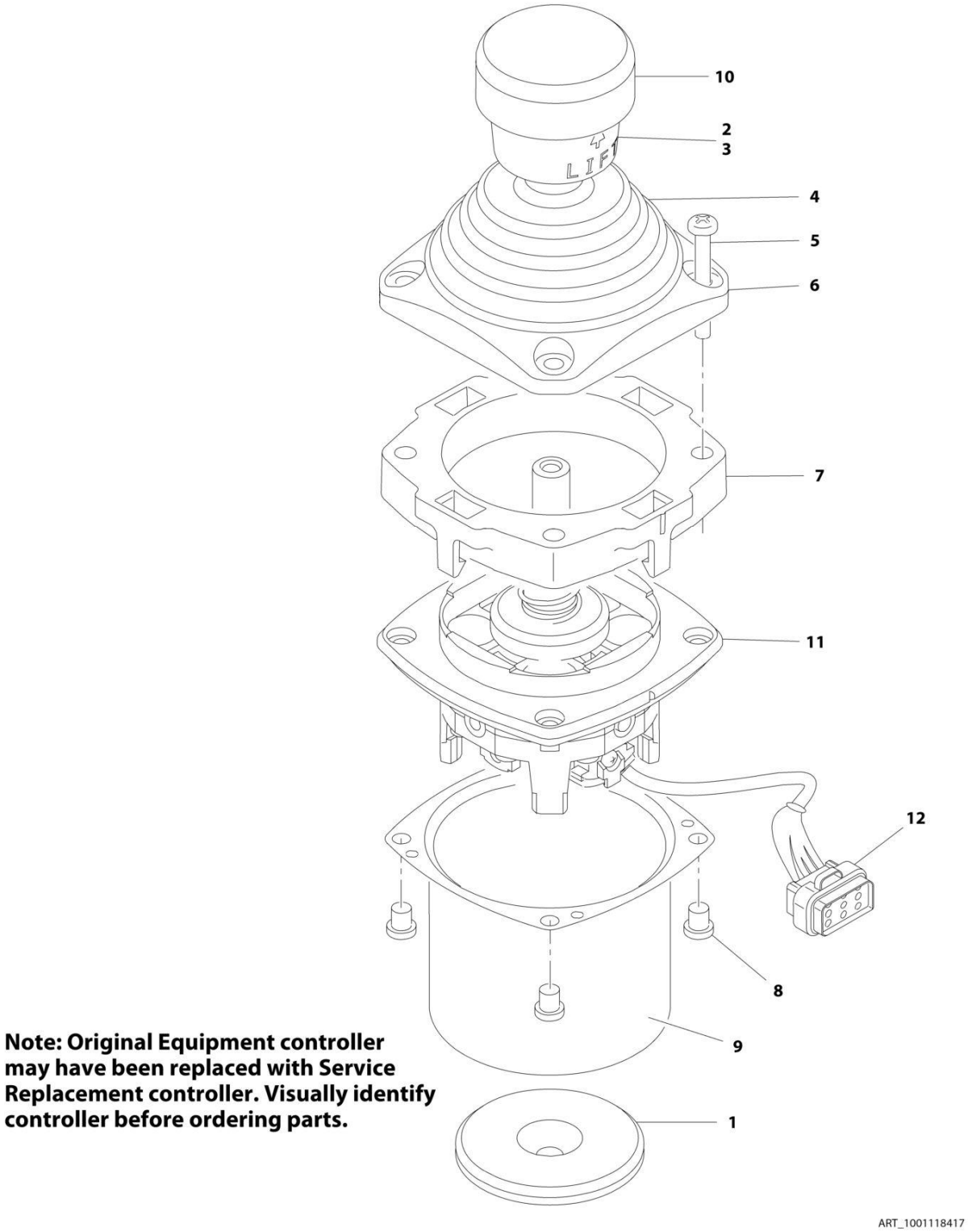

Note: Original Equipment controller may have been replaced with Service Replacement controller. Visually identify controller before ordering parts.

FIGURE 4-7. CONTROLLER ASSEMBLY (LIFT AND SWING) (SERVICE REPLACEMENT)

ITEM	PART NUMBER	QTY	DESCRIPTION	REV
		Ref	**Note: Original Equipment controller may have been replaced with Service Replacement controller. Visually identify controller before ordering parts.**	
	1001118417	Ref	**CONTROLLER ASSEMBLY (LIFT AND SWING) (SERVICE REPLACEMENT)**	A
		Ref	**Note: Use p/n 1001129555 as Replacement.**	
1	70002730	1	Gasket	
2	7003928	1	Spring	
3	7022808	1	Cap, Lift	
4	70002731	1	Boot	
5	70002732	4	Screw	
6	7022815	1	Bezel	
7	70002733	1	Adapter	
8	70002734	4	Screw	
9	70002735	1	Can, Enclosure	
10	70002906	1	Cap	
11	See Note	NSS	Mechanical Assembly (Note: Use p/n 1001129555)	
12	7022819	1	Connector - 8 Position	
12	4460871	6	Socket, Female	

FIGURE 4-8. CONTROLLER ASSEMBLY (LIFT AND SWING) (SERVICE REPLACEMENT)

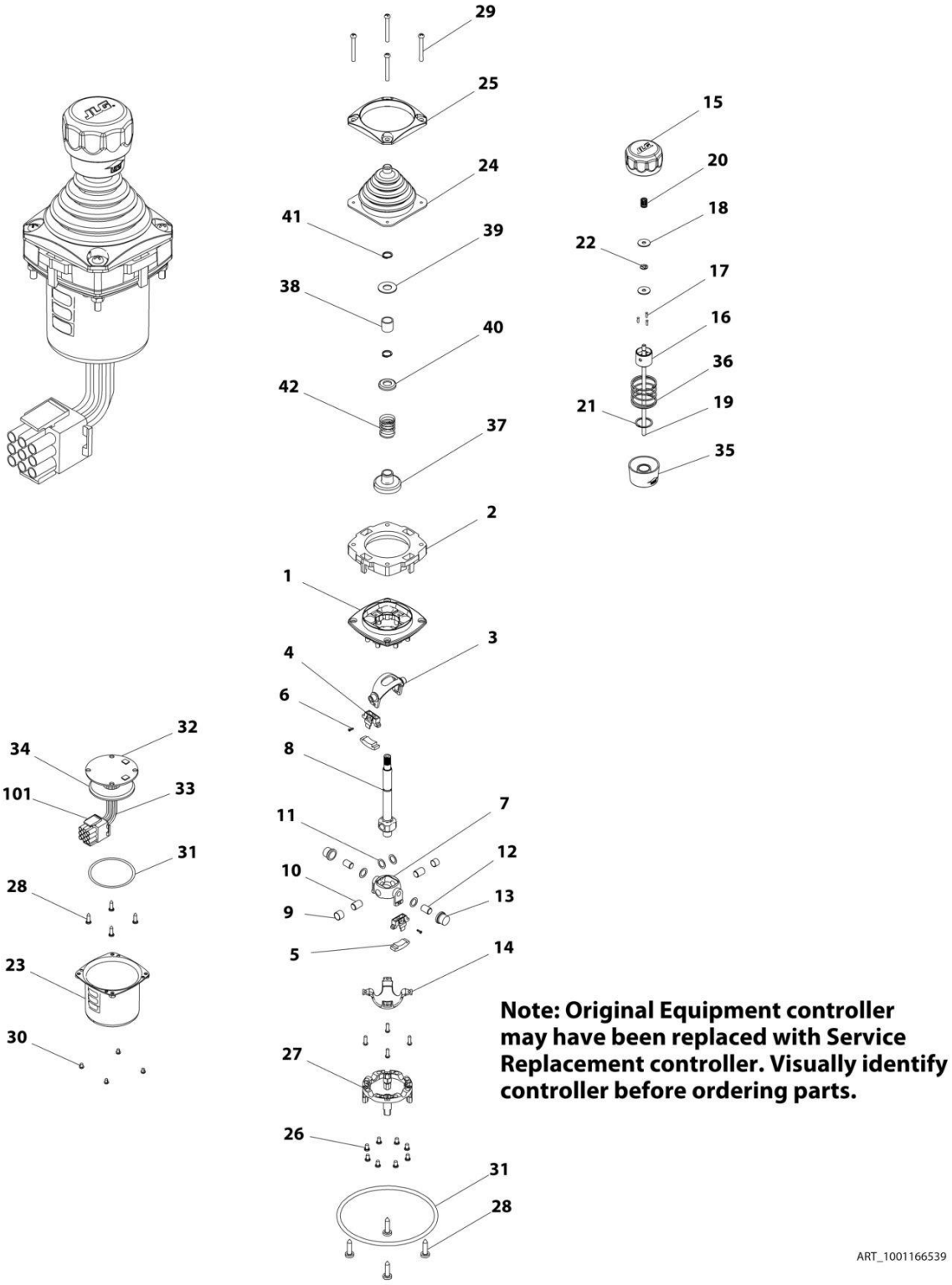

FIGURE 4-8. CONTROLLER ASSEMBLY (LIFT AND SWING) (SERVICE REPLACEMENT)

ITEM	PART NUMBER	QTY	DESCRIPTION	REV
		Ref	**Note: Original Equipment controller may have been replaced with Service Replacement controller. Visually identify controller before ordering parts.**	
	1001166539	Ref	**CONTROLLER ASSEMBLY (LIFT AND SWING) (SERVICE REPLACEMENT)**	A
		Ref	**Note: Use p/n 1001129555 as Replacement.**	
1	See Note	1	Main Cast Body (Note: Not Available - Purchase Complete Assembly)	
2	70004752	1	Adapter	
3	See Note	NSS	Pivot Arm, Plastic (Note: Not Available - Purchase Complete Assembly)	
4	See Note	NSS	Holder, Magnet (Note: Not Available - Purchase Complete Assembly)	
5	See Note	NSS	Arc, Magnet (Note: Not Available - Purchase Complete Assembly)	
6	See Note	NSS	Screw (Note: Not Available for Purchase)	
7	See Note	NSS	Pivot Arm, Cast (Note: Not Available - Purchase Complete Assembly)	
8	See Note	NSS	Shaft, Main (Note: Not Available - Purchase Complete Assembly)	
9	See Note	NSS	Bearing (Note: Not Available - Purchase Complete Assembly)	
10	See Note	NSS	Pin (Note: Not Available - Purchase Complete Assembly)	
11	See Note	NSS	Shim (Note: Not Available - Purchase Complete Assembly)	
12	See Note	NSS	Pin (Note: Not Available - Purchase Complete Assembly)	
13	See Note	NSS	Bearing (Note: Not Available - Purchase Complete Assembly)	
14	See Note	NSS	Dome, Centering (Note: Not Available - Purchase Complete Assembly)	
15	70004753	1	Cap	
16	70004754	1	Insert, Cap	
17	70004755	3	Pin	
18	70004756	2	Washer	
19	70004757	1	Pin, Centering	
20	70004758	1	Spring	
21	70004759	1	Ring, Retaining	
22	70004760	1	E-Ring	
23	70004761	1	Can, Enclosure	
24	70004762	1	Boot	
25	70004763	1	Bezel	
26	See Note	NSS	Screw (Note: Not Available for Purchase)	
27	See Note	NSS	Base Mounting (Note: Not Available - Purchase Complete Assembly)	
28	See Note	NSS	Screw (Note: Not Available for Purchase)	
29	70004764	4	Screw	
30	70004765	4	Screw	
31	70004766	1	O-Ring	
32	See Note	NSS	Plate (Note: Not Available - Purchase Complete Assembly)	
33	See Note	NSS	Harness (Note: Not Available - Purchase Complete Assembly)	
34	70004767	1	Grommet, Rubber	
35	70004768	1	Housing	
36	70004769	1	Spring	
37	70004770	1	Stopper	
38	70004771	1	Spacer	
39	70004772	1	Washer	

SECTION 4 - PLATFORM

ITEM	PART NUMBER	QTY	DESCRIPTION	REV
40	70004773	1	Disc	
41	70004774	2	Ring, Retaining	
42	70004775	1	Spring	
101	4460265	1	Connector - 9 Position	
101	4460266	6	Socket, Female	

FIGURE 4-9. CONTROLLER ASSEMBLY (DRIVE AND STEER) (ORIGINAL EQUIPMENT)

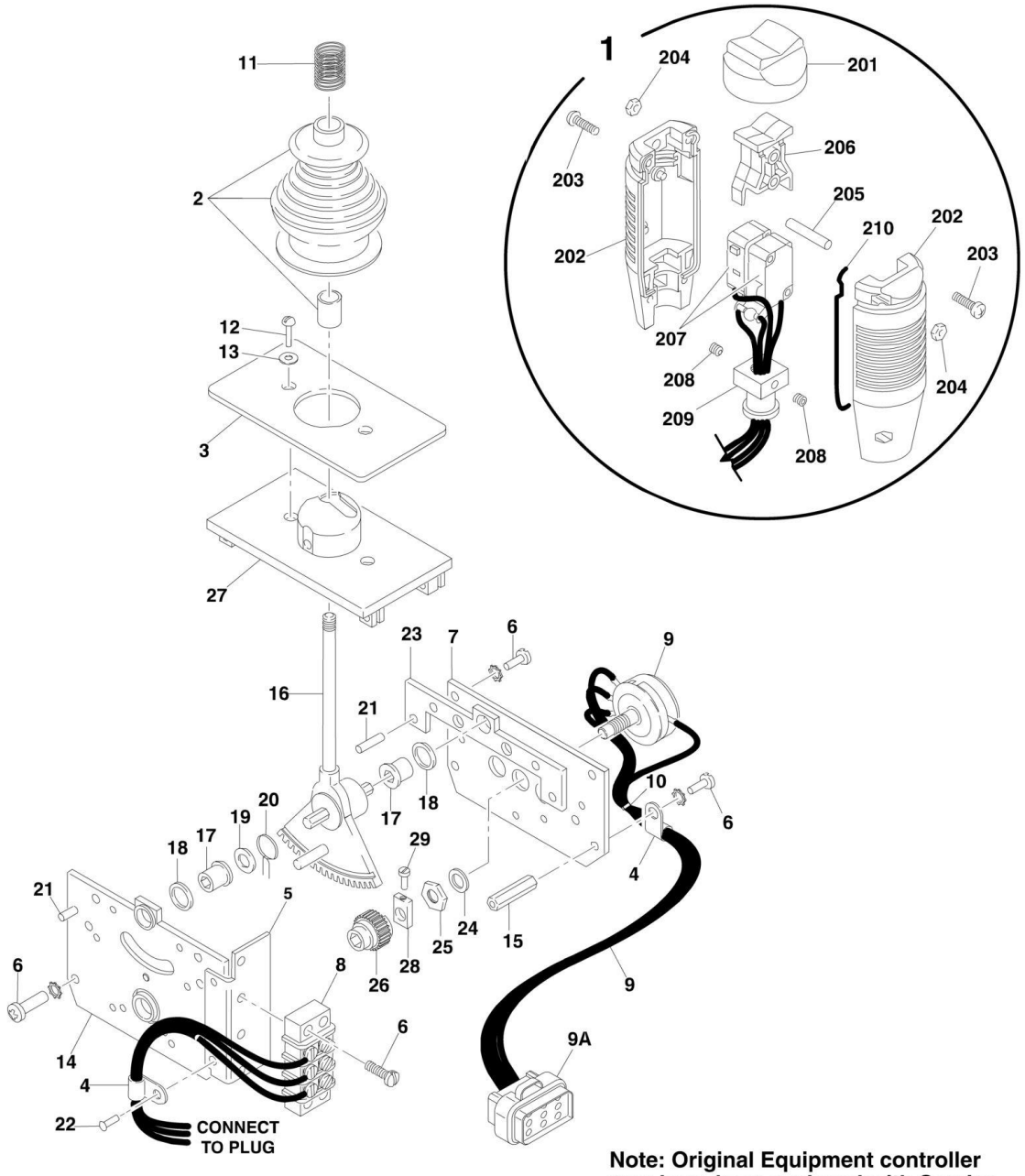

Note: Original Equipment controller may have been replaced with Service Replacement controller. Visually identify controller before ordering parts.

FIGURE 4-9. CONTROLLER ASSEMBLY (DRIVE AND STEER) (ORIGINAL EQUIPMENT)

ITEM	PART NUMBER	QTY	DESCRIPTION	REV
		Ref	**Note: Original Equipment controller may have been replaced with Service Replacement controller. Visually identify controller before ordering parts.**	
	1600318	Ref	**CONTROLLER ASSEMBLY (ORIGINAL EQUIPMENT)**	C
		Ref	**Note: Use p/n 1001212415 as Replacement.**	
1	7022812	1	Handle Assembly (See Items 201-210 for Breakdown)	
2	7019161	1	Boot and Sleeve	
3	7003933	1	Gasket	
4	7019154	2	Clamp, Wire	
5	7022823	1	Bracket, Mounting	
6	7003994	1	Screw	
7	7022822	1	Plate, Pot Mounting	
8	7003986	1	Strip, Terminal - 3 Position	
9	7022824	1	Electric Assembly	
9A	1001113961	1	Plug, Male - 8 Position (Black) (was p/n 7022825)	
9A	4460871	7	Socket, Female	
10	7019151	AR	Tie-Strap	
11	7019162	1	Spring	
12	7003969	2	Screw	
13	7003941	2	Washer	
14	See Note	NSS	Plate, Mounting (Left Side) (Note: Use p/n 1001166538)	
15	7019115	2	Stand-Off	
16	7019155	1	Shaft 8mm	
17	7019111	2	Bearing	
18	7019110	2	Spacer, Head Gear	
19	7019112	1	Washer	
20	7003946	1	Spring, Return	
21	7019103	4	Pin	
22	See Note	1	Rivet (Note: Not Available - Purchase Locally)	
23	7019168	1	Plate, Mounting (Right Side)	
24	7003992	1	Washer	
25	7003993	1	Nut	
26	7003935	1	Gear, Slave	
27	7019160	1	Plate, Base	
28	7019114	1	Coupling, Potentiometer	
29	See Note	1	Screw, Cup Point (Note: Not Available - Purchase Locally)	
	7022812	Ref	**HANDLE ASSEMBLY**	
201	7003972	1	Boot, Switch	
202	7003973	2	Half, Handle	
203	7003980	4	Screw	
204	7019167	4	Nut	
205	7019164	1	Axle	
206	7019165	1	Rocker	
207	7019196	1	Wiring Assembly	
207	7019166	2	Switch, Micro	
208	7003983	2	Setscrew	
209	7019194	1	Coupling	
210	7003989	2	Gasket	

FIGURE 4-10. CONTROLLER ASSEMBLY (DRIVE AND STEER) (SERVICE REPLACEMENT)

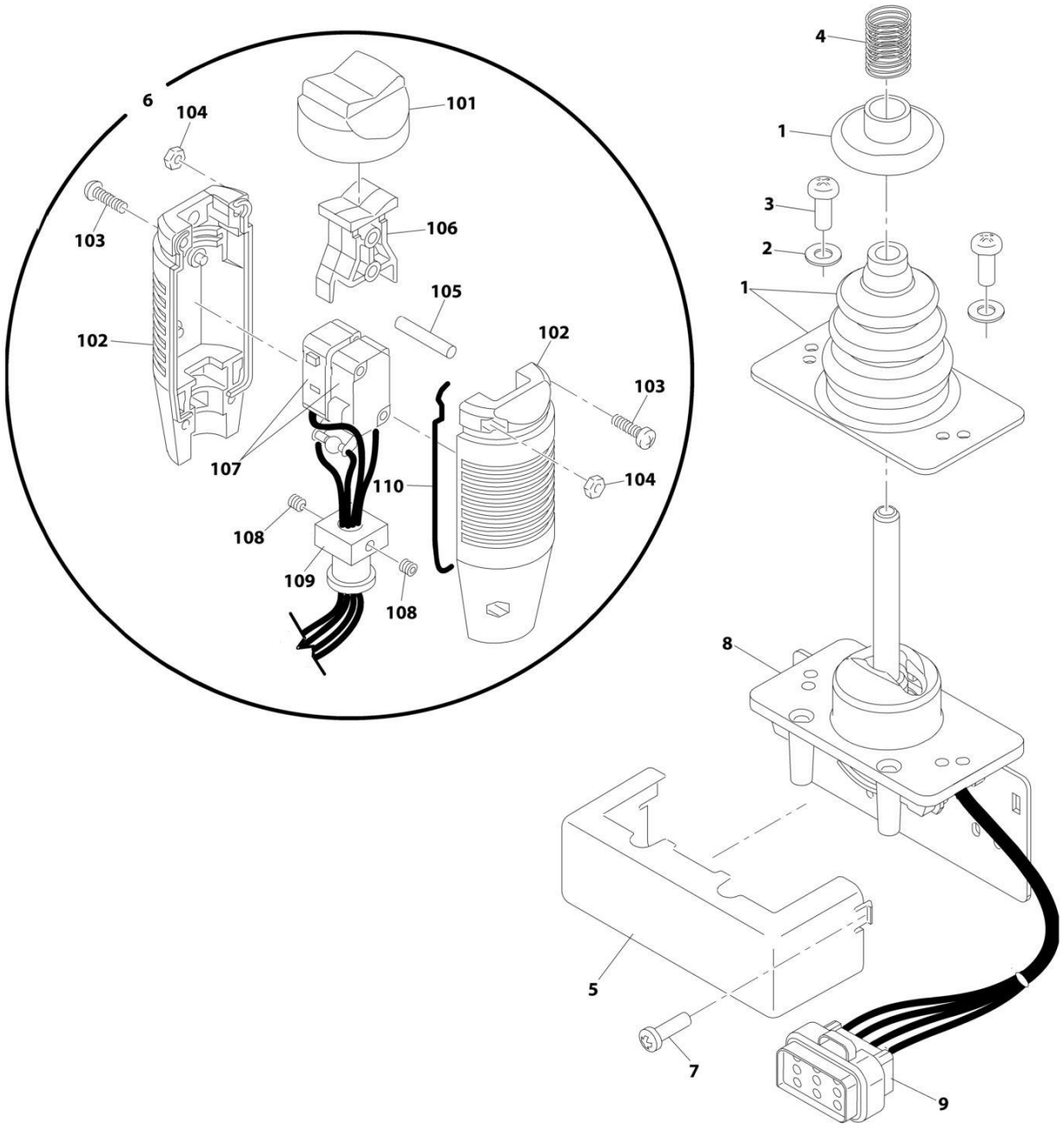

Note: Original Equipment controller may have been replaced with Service Replacement controller. Visually identify controller before ordering parts.

FIGURE 4-10. CONTROLLER ASSEMBLY (DRIVE AND STEER) (SERVICE REPLACEMENT)

ITEM	PART NUMBER	QTY	DESCRIPTION	REV
		Ref	**Note: Original Equipment controller may have been replaced with Service Replacement controller. Visually identify controller before ordering parts.**	
	1001118416	Ref	**CONTROLLER ASSEMBLY (DRIVE AND STEER) (SERVICE REPLACEMENT)**	A
		Ref	**Note: Use p/n 1001212415 as Replacement.**	
1	70002724	1	Boot and Control Lock Assembly	
2	7003941	2	Washer	
3	70002725	2	Screw	
4	7019162	1	Spring	
5	70002726	1	Enclosure	
6	70002727	1	Handle Assembly (See Items 101-110 for Breakdown)	
7	70002728	1	Screw	
8	See Note	NSS	Mechanical Assembly (Note: Use p/n 1001166538)	
9	1001113961	1	Plug, Male - 8 Position (Black) (was p/n 7022825)	
9	4460871	7	Socket, Female	
	70002727	Ref	**HANDLE ASSEMBLY**	
101	7003972	1	Boot, Switch	
102	7003973	2	Half, Handle	
103	7003980	4	Screw	
104	7019167	4	Nut	
105	7019164	1	Axle	
106	7019165	1	Rocker	
107	70002729	1	Wiring Assembly	
107	70003982	2	Switch, Micro	
108	7003983	2	Setscrew	
109	7019194	1	Coupling	
110	7003989	2	Gasket	

FIGURE 4-11. CONTROLL ASSEMBLY (DRIVE AND STEER) (SERVICE REPLACEMENT)

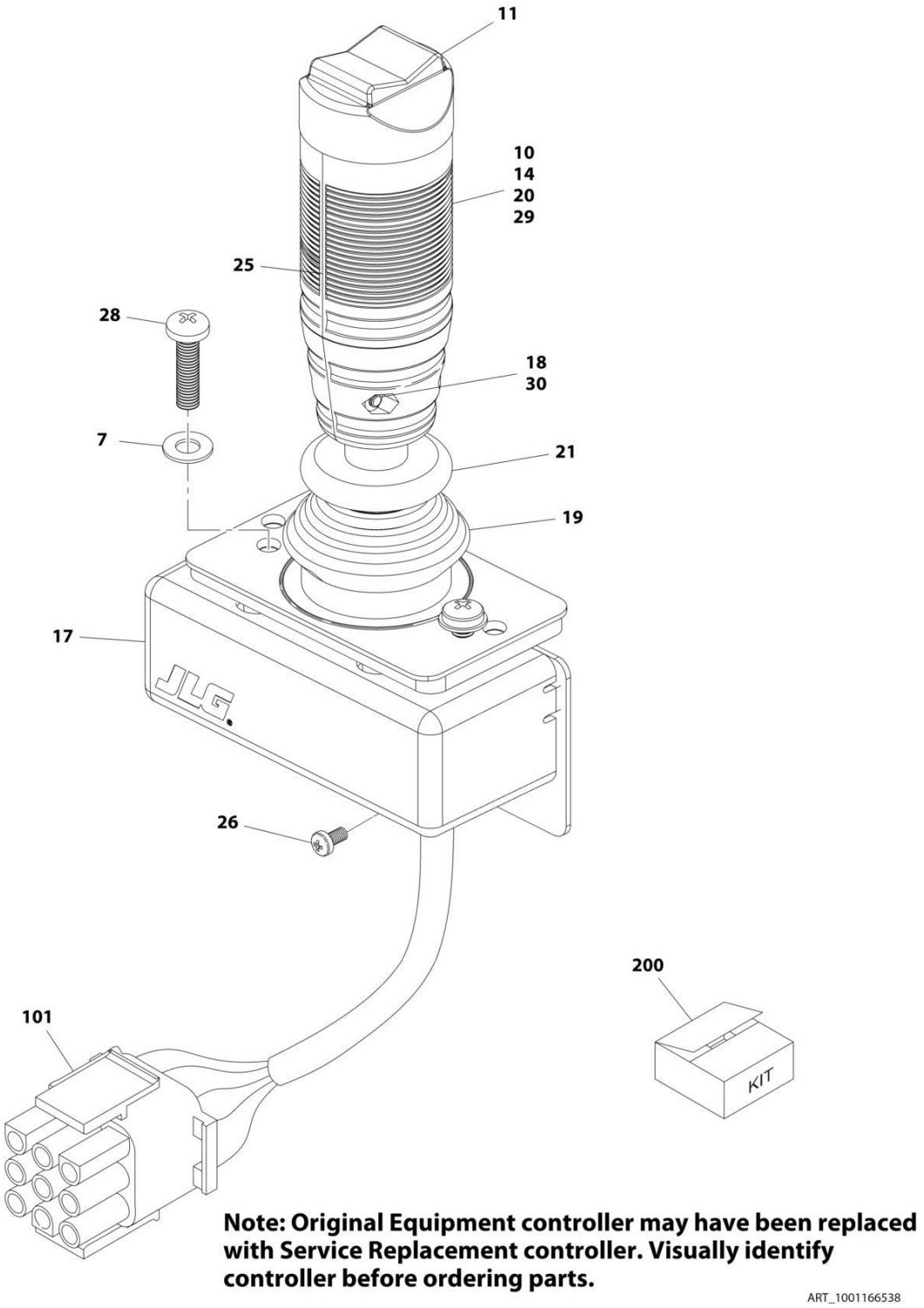

FIGURE 4-11. CONTROLL ASSEMBLY (DRIVE AND STEER) (SERVICE REPLACEMENT)

ITEM	PART NUMBER	QTY	DESCRIPTION	REV
		Ref	**Note: Original Equipment controller may have been replaced with Service Replacement controller. Visually identify controller before ordering parts.**	
	1001166538	Ref	**CONTROLLER ASSEMBLY (DRIVE AND STEER) (SERVICE REPLACEMENT)**	A
		Ref	**Note: Use p/n 1001212415 as Replacement.**	
7	70004738	2	Washer	
10	70004739	1	Roller	
11	70004740	1	Boot, Switch	
14	70004741	2	Half, Handle	
17	70004742	1	Enclosure	
18	70004743	4	Nut	
19	70004744	NLA	Boot, Controller (Note: Use Item 200)	
20	70004745	NLA	Tube, Locking (Note: Use Item 200)	
21	70004746	NLA	Disc, Locking (Note: Use Item 200)	
25	70004747	2	Seal, Rope	
26	70004748	1	Screw, M3 x 6	
28	70004749	2	Screw, M5 x 20	
29	70004750	1	Pin, Dowel	
30	70004751	4	Screw, M3 x 16	
101	4460265	1	Connector - 9 Position	
101	4460266	7	Socket, Female	
200	70005230	1	Boot Kit (Includes Items 19-21)	

FIGURE 4-12. SOFT TOUCH SYSTEM INSTALLATION (OPTIONAL)

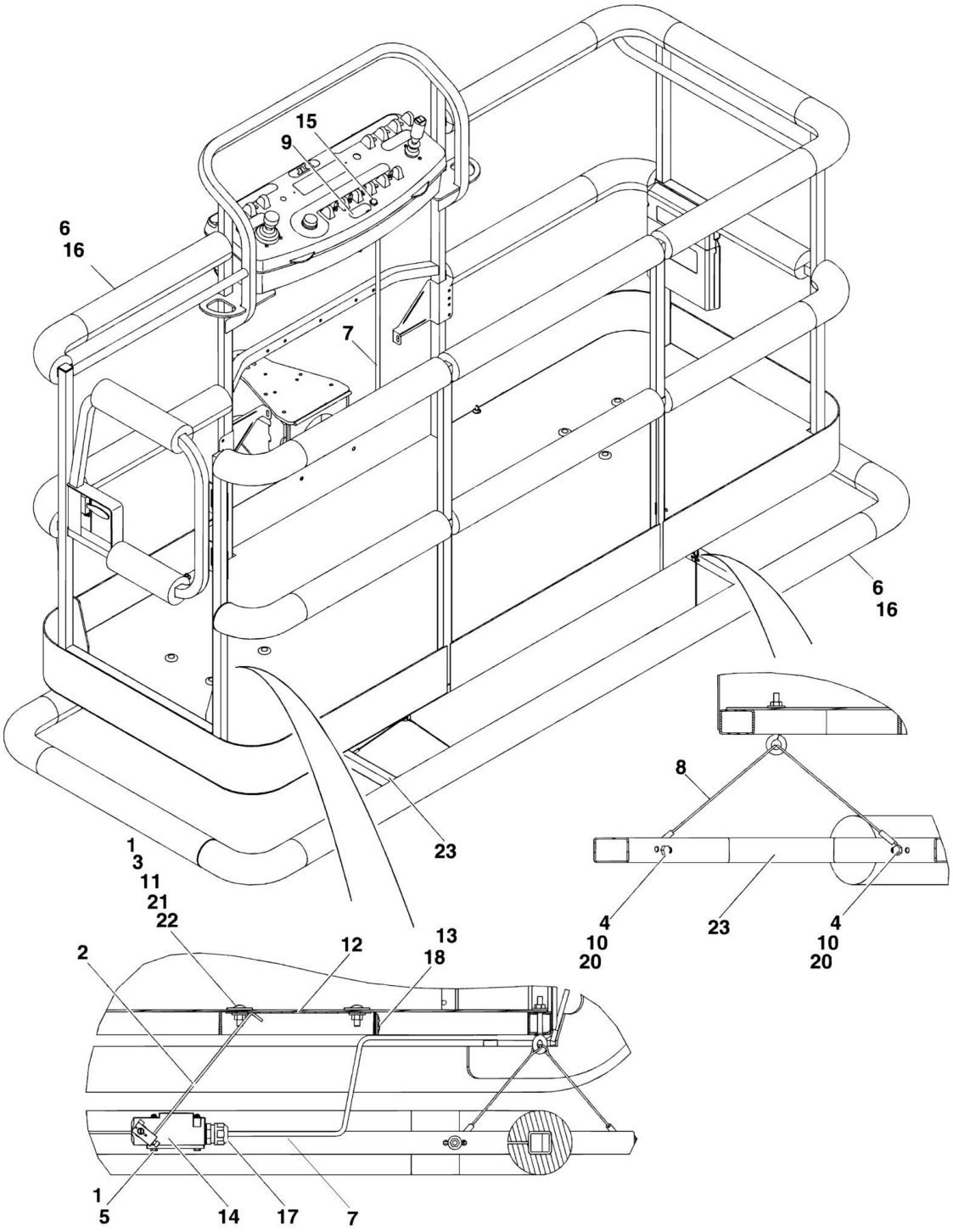

FIGURE 4-12. SOFT TOUCH SYSTEM INSTALLATION (OPTIONAL)

ITEM	PART NUMBER	QTY	DESCRIPTION	REV
		Ref	**SOFT TOUCH SYSTEM INSTALLATIONS**	
	0273824	Ref	**6ft Platforms (Side Entry Platform)**	A
	0272427	Ref	**8ft Platforms (Side Entry Platform)**	C
	0273706	Ref	**8ft/2.4m Platforms with Fall Arrest**	A
1	0100011	AR	Compound, Locking	
2	0200048	2	Arm, Switch	
3	0630462	8	Bolt, Carriage	
4	0641414	8	Bolt 1/4in-20NC x 1-3/4in	
5	0721005	4	Bolt #10-24NC x 5/8in	
6		Ref	Bumper Kits (Includes Corners and Enough Straight Material for One Platform)	
6	0940134	1	6ft Platform	
6	0940103	1	8ft Platform	
6	0940133	1	8ft/2.4m Platforms with Fall Arrest	
6	0940092	1	Bumper (Corner) Options:	
6	0940092	12	6ft/8ft Platform	
6	0940092	8	8ft/2.4m Platforms with Fall Arrest	
6	0940094	AR	Bumper (12ft Length)	
7	1060341	Ref	Cable, Electrical - 16/2 Options:	
7	1060341	22 ft/6.7m	Cable, Electrical - 16/2, 6ft Platform	
7	1060341	23 ft/7m	Cable, Electrical - 16/2, 8ft Platform	
8	1060903	4	Wire Rope and Eyebolt Assembly	
9	1702938	1	Decal - Soft Touch Override	
10	3311401	8	Nut 1/4in-20NC	
11	3311501	8	Nut 5/16in-18NC	
12		Ref	Plate, Switch Strike Options:	
12	3575359	2	6ft Platform	
12	3574091	2	8ft Platform	
13	4240099	7	Tie-Strap	
14	4360057	2	Switch, Limit	
15	4360387	1	Switch, Push Button	
16	4420068	1	Tape, Adhesive	
17	4460049	2	Connector, Strain Relief	
18	4460234	7	Tie-Strap	
19	4460425	1	Connector, Strain Relief	
20	4751400	8	Flatwasher 1/4in	
21	4751500	12	Flatwasher 5/16in	
22	4751800	8	Flatwasher 1/2in	
23		Ref	Rail, Soft Touch Options:	
23	3641569	1	6ft Platform	
23	4846673	1	8ft Platform	
100		Ref	Soft Touch Add-on Kit Options (Includes required components to add option to existing machines) (Not Shown):	
		Ref	**Note: May not be available for all machines depending on existing options. Contact JLG Parts Dept before ordering.**	
100	1001121592	1	Soft Touch Add-on Kit 3ft x 6ft (.9m x 1.83m) Platform	
100	1001121593	1	Soft Touch Add-on Kit 3ft x 6ft (.9m x 2.44m) Platform	

FIGURE 4-13. PLATFORM PADDING INSTALLATION (OPTIONAL) (SIDE ENTRY PLATFORM)

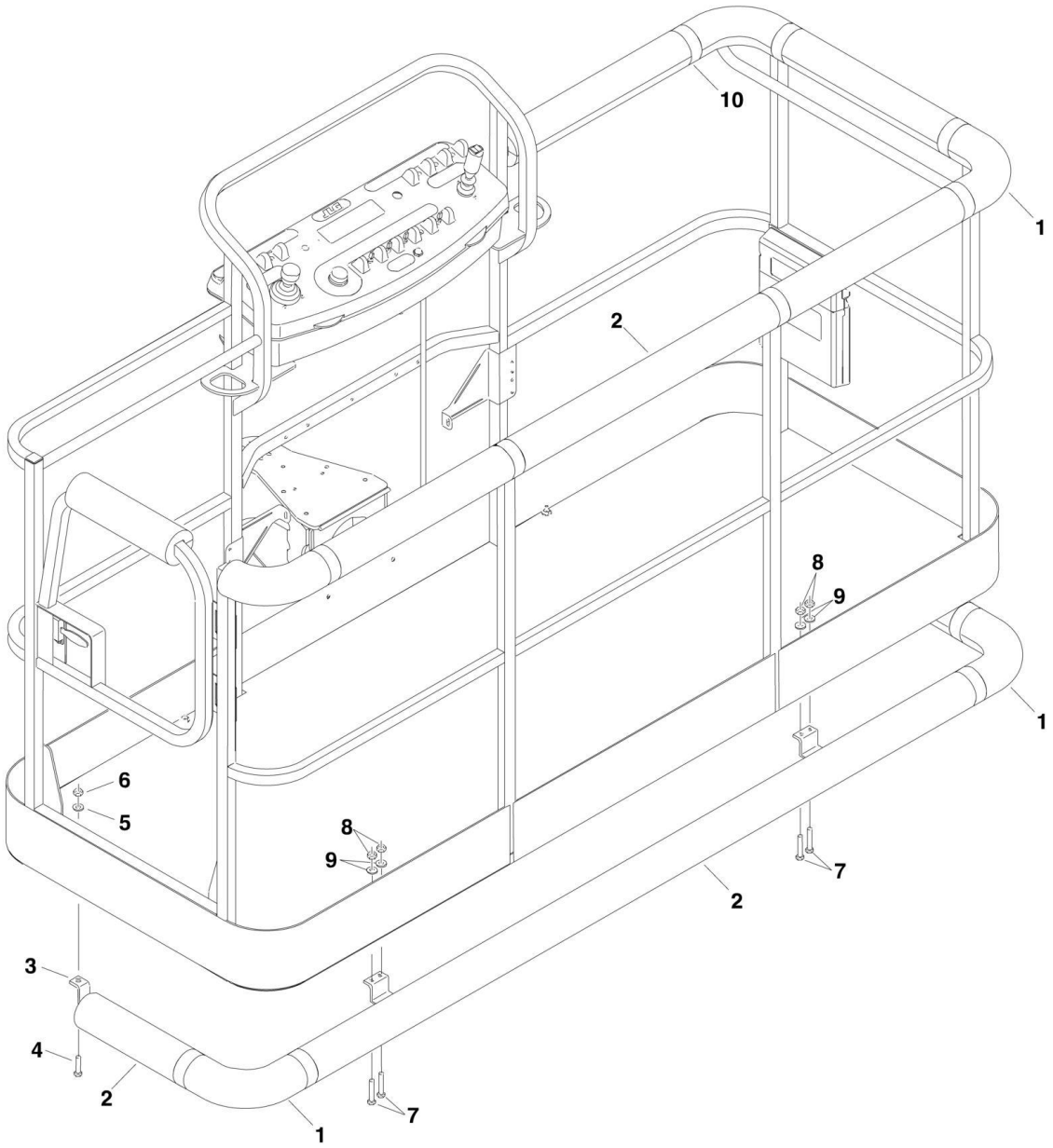

FIGURE 4-13. PLATFORM PADDING INSTALLATION (OPTIONAL) (SIDE ENTRY PLATFORM)

ITEM	PART NUMBER	QTY	DESCRIPTION	REV
	0273542	Ref	**PADDING INSTALLATION**	A
1	0940092	4	Bumper, Pad (Corner)	
2	0940094	9 ft/2.7m	Bumper, Pad (Square Tubing)	
3	0940131	1	Bumper, Rail	
4	0641516	2	Bolt 5/16in-18NC x 2in	
5	4751500	2	Flatwasher 5/16in	
6	3311505	2	Locknut 5/16in-18NC	
7	0641813	4	Bolt 1/2in-13NC x 1-5/8in	
8	3311805	4	Locknut 1/2in-13NC	
9	4891800	4	Flatwasher 1/2in (Hardened)	
10	4420068	30 ft/9.1m	Tape	

FIGURE 4-14. SKYWELDER INSTALLATION (50HZ)

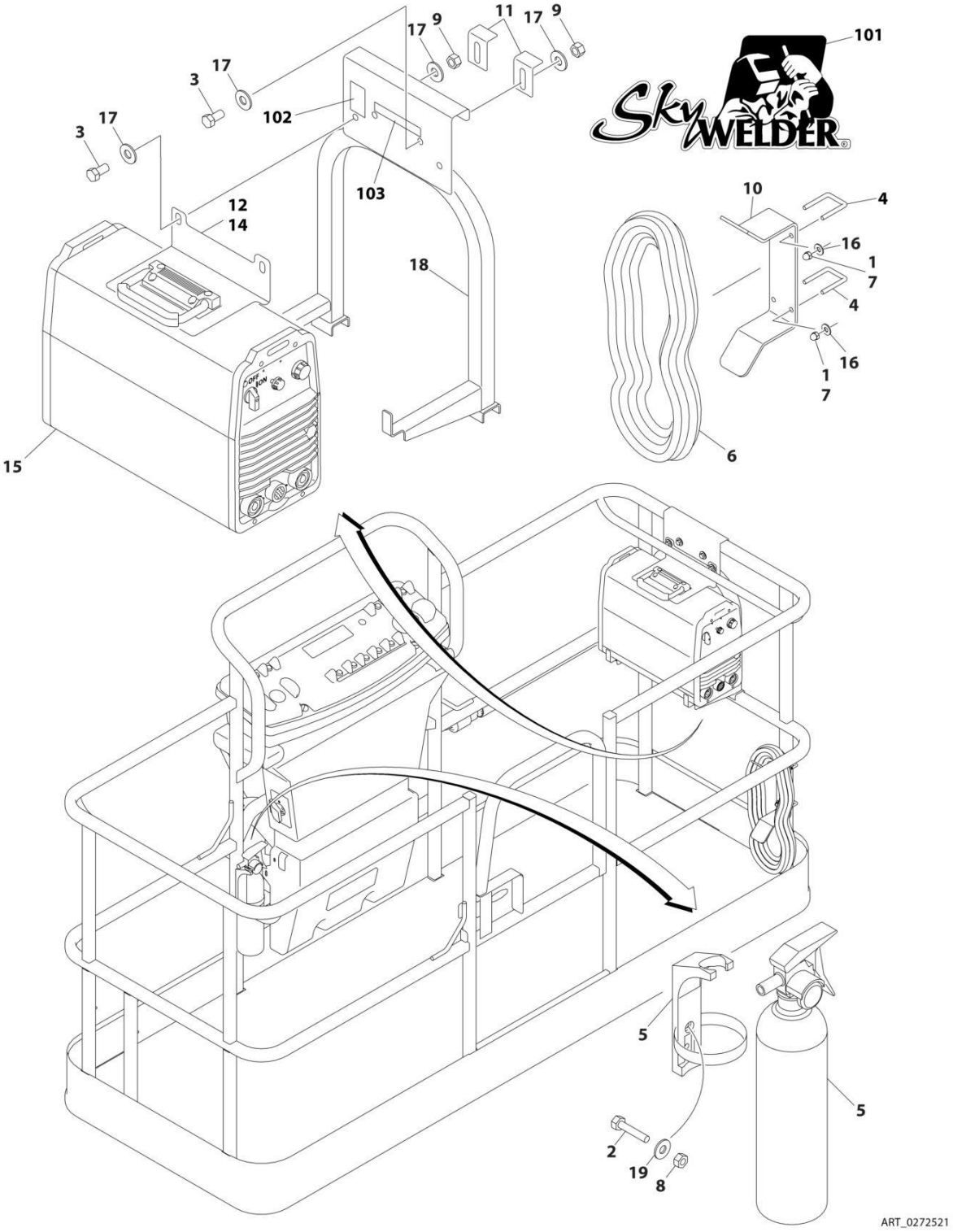

FIGURE 4-14. SKYWELDER INSTALLATION (50HZ)

ITEM	PART NUMBER	QTY	DESCRIPTION	REV
	0272521	Ref	**SKYWELDER INSTALLATION (50HZ)**	D
1	0100011	AR	Compound, Locking	
2	0630518	2	Screw #10 x 3/4	
3	0641606	4	Bolt 3/8 x 3/4	
4	1320302	2	U-Clamp	
5	2030010	1	Extinguisher, Fire	
6	2902217	1	Weld Leads Kit	
7	3300151	4	Nut 1/4	
8	3311005	2	Nut #10	
9	3311605	4	Nut 3/8	
10	3573400	1	Bracket	
11	3577121	2	Angle	
12	3573642	1	Plate	
13	4240099	AR	Tie-Strap (Not Shown)	
14	4420037	AR	Tape	
15	4530028	1	Welder Assembly (See WELDER ASSEMBLY for Breakdown)	
16	4751400	4	Washer 1/4	
17	4751600	8	Washer 3/8	
18	4846627	1	Support	
19	4751000	2	Washer #10	
	0272588	Ref	**SKYWELDER DECAL INSTALLATION**	B
101	1705355	2	Decal - SkyWelder	
102	1705305	1	Decal - Weld Lead	
103	1705466	NLA	Decal - Weight (Use p/n 1001228988)	

FIGURE 4-15. SKYCUTTER INSTALLATION - 50HZ POWER SUPPLY

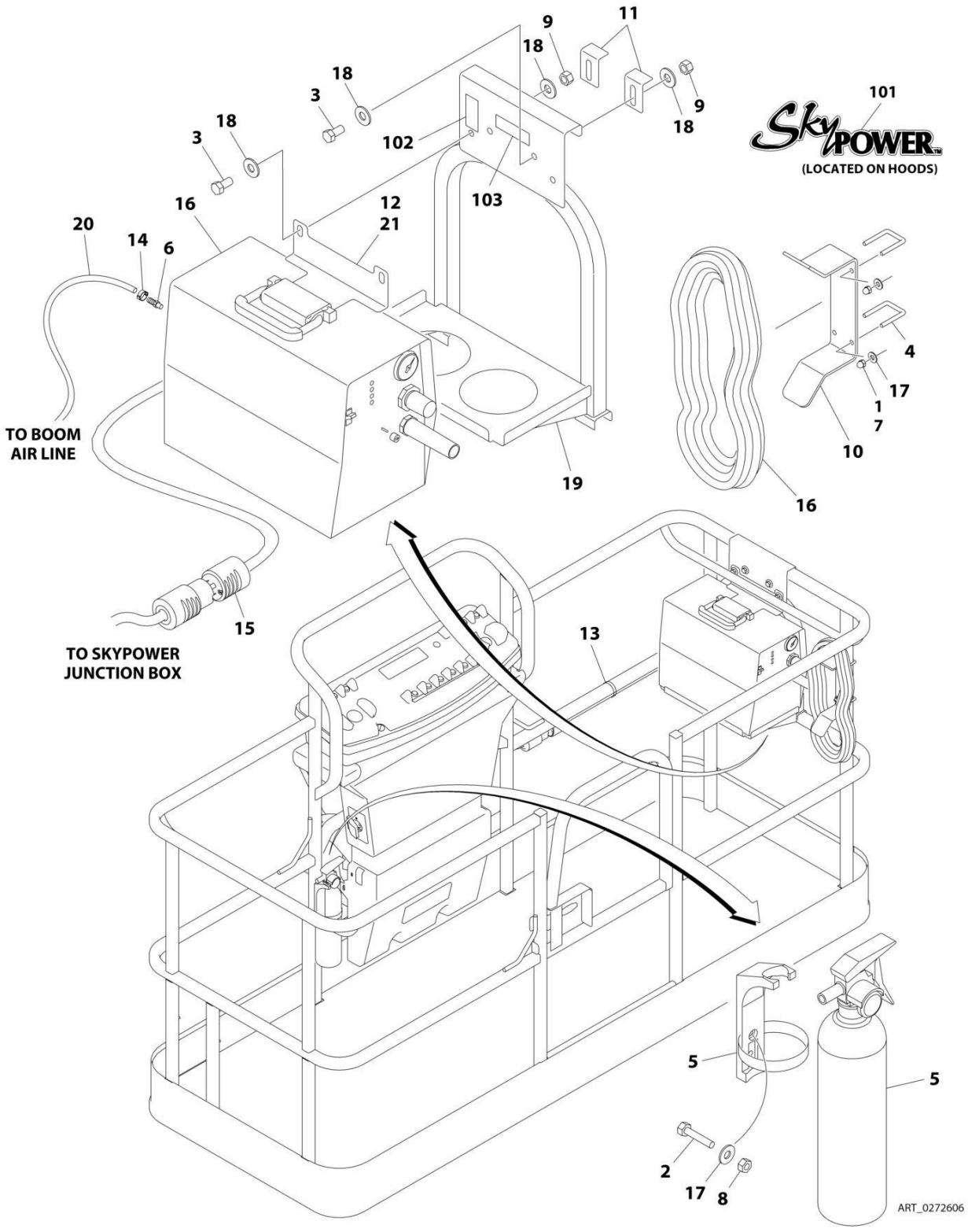

FIGURE 4-15. SKYCUTTER INSTALLATION - 50HZ POWER SUPPLY

ITEM	PART NUMBER	QTY	DESCRIPTION	REV
	0272606	Ref	**SKYCUTTER INSTALLATION - 50Hz Power Supply**	D
		Ref	**Note: When replacing platform on machines with SkyCutter option, new bracket p/n 1001145405 must be purchased to accommodate SkyCutter components.**	
1	0100011	AR	Compound, Locking	
2	0641406	2	Bolt 1/4 x 3/4	
3	0641606	4	Bolt 3/8 x 3/4	
4	1320302	2	Clamp	
5	2030010	1	Extinguisher, Fire	
6	2180832	1	Fitting, NPT/Barbed	
7	3300151	4	Nut 1/4	
8	3311405	2	Nut 1/4	
9	3311605	4	Nut 3/8	
10	3573400	1	Bracket, Cable	
11	3573641	2	Plate, Clamp (Use p/n 3577121)	
12	3573643	1	Plate, Top Support	
13	4240099	AR	Tie, Wire	
14	1320177	2	Clamp, Hose	
15	4460971	1	Plug, Twistlock	
16	4530025	1	Plasma Cutter Assembly - 50Hz Power Supply (See PLASMA CUTTER ASSEMBLY for Breakdown)	
17	4751400	6	Washer 1/4	
18	4751600	8	Washer 3/8	
19	4846571	1	Support	
20	2720160	4 ft/ 1.2m	Hose	
21	4420037	AR	Tape, Insulation	
	0272607	Ref	**SKYCUTTER DECAL INSTALLATION**	A
101	1705490	2	Decal - SkyCutter	
102	1705305	1	Decal - Weld Lead	
103	1705466	1	Decal - Weight	

FIGURE 4-16. PLASMA CUTTER ASSEMBLY - 50HZ POWER SUPPLY

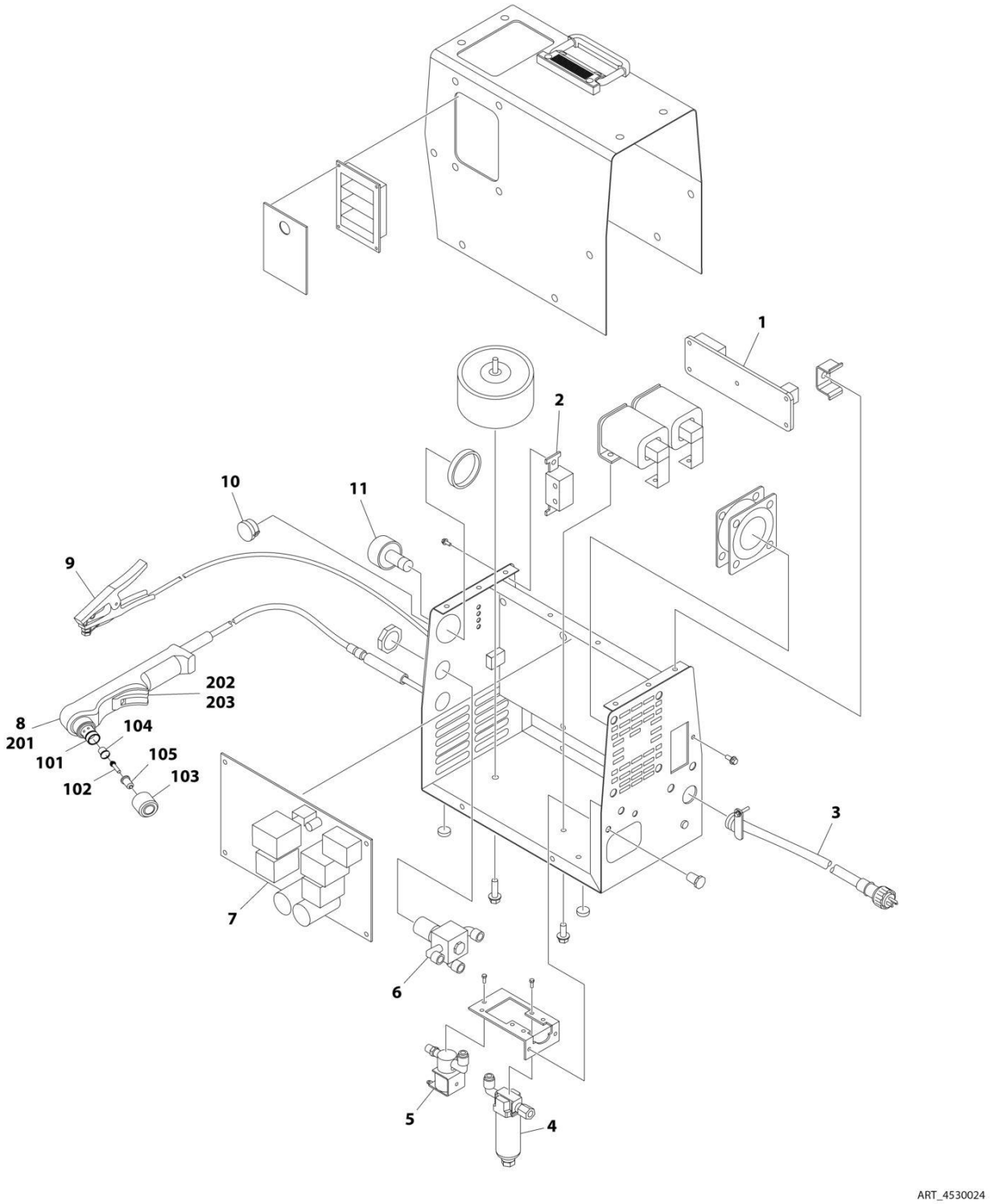

FIGURE 4-16. PLASMA CUTTER ASSEMBLY - 50HZ POWER SUPPLY

ITEM	PART NUMBER	QTY	DESCRIPTION	REV
	4530025	Ref	**PLASMA CUTTER ASSEMBLY - 50Hz POWER SUPPLY**	D
		Ref	**Note: For other components see your Miller Dealer.**	
1	7024538	1	Circuit Card	
2	7024520	1	Switch	
3	7024539	10 ft/ 3m	Cable, Power	
4	7024522	1	Filter, Air	
5	7024540	1	Valve, Air	
6	7024524	1	Regulator, Air	
7	7024541	1	Circuit Card	
8	7024526	1	Torch Assembly (See Items 101-203 for Breakdown)	
9	7024527	1	Clamp	
10	7024528	1	Knob	
11	7024529	1	Gauge, Air	
	7024526	Ref	**TORCH ASSEMBLY**	
101	7024530	1	O-Ring	
102	7024531	1	Electrode	
103	7024532	1	Cup, Retaining	
104	7024533	1	Swirl Ring	
105	7024534	1	Tip	
201	7024535	1	Handle, Torch	
202	7024536	1	Switch	
203	7024537	1	Trigger	

SECTION 5 - CYLINDER

SECTION 5 - CYLINDER

FIGURE 5-1. AXLE LOCKOUT CYLINDER ASSEMBLY (SN 0300068000 through 0300075605)

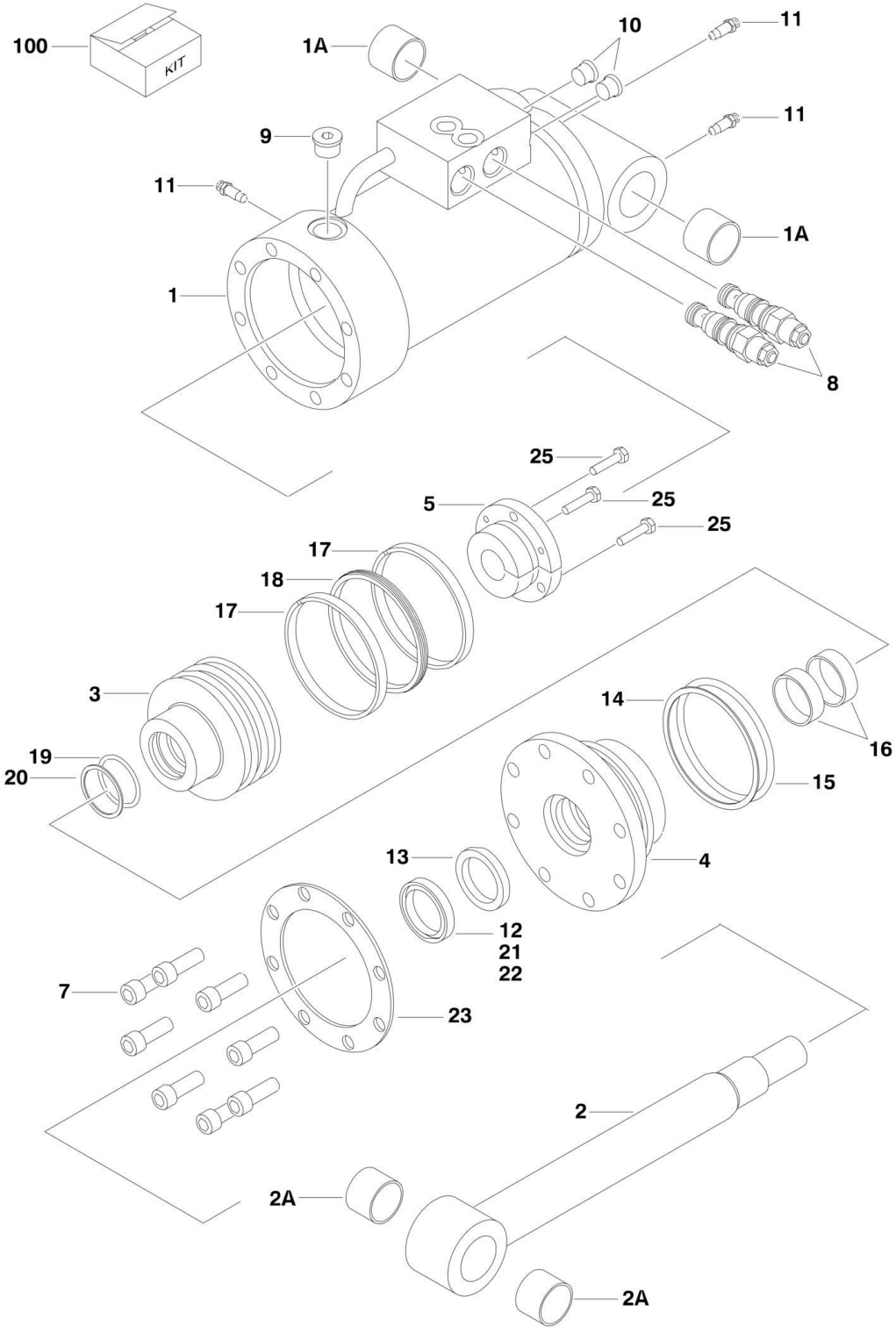

FIGURE 5-1. AXLE LOCKOUT CYLINDER ASSEMBLY (SN 0300068000 through 0300075605)

ITEM	PART NUMBER	QTY	DESCRIPTION	REV
	1683078	Ref	**AXLE LOCKOUT CYLINDER ASSEMBLY**	H
1	1684191	1	Barrel Weldment	
1A	0962496	2	Bushing	
2	1683986	1	Rod Weldment	
2A	0962496	2	Bushing	
3	3480176	1	Piston	
4	1683059	1	Head	
5	0961895	1	Bushing	
7	3931720	8	Bolt, Socket Head 7/16in-14NC x 1-1/4in	
8	4641162	2	Cartridge, Valve (Counterbalance)	
8	2900770	2	Seal Kit - 4641162 Valve (1 Per Assembly)	
9	2220886	1	Plug, O-Ring	
10	2220885	2	Plug, O-Ring	
11	4640858	3	Valve, Bleeder	
12	See Note	NSS	Wiper (Note: Use Item 100)	
13	See Note	NSS	Seal, Rod (Note: Use Item 100)	
14	See Note	NSS	O-Ring (Note: Use Item 100)	
15	See Note	NSS	Ring, Back-up (Note: Use Item 100)	
16	See Note	NSS	Ring, Wear (Note: Use Item 100)	
17	See Note	NSS	Ring, Wear (Note: Use Item 100)	
18	See Note	NSS	T-Seal (Note: Use Item 100)	
19	See Note	NSS	O-Ring (Note: Use Item 100)	
20	See Note	NSS	Ring, Back-up (Note: Use Item 100)	
21	0100011	AR	Compound, Locking	
22	0100038	AR	Primer, Locking	
23	3760367	1	Ring, Washer	
25	0630535	3	Screw, Socket Head 1/4in-20NC x 1-1/8in	
100	2901271	1	Seal Kit - 1683078 Cylinder (Includes Items 12-20)	

FIGURE 5-2. AXLE LOCKOUT CYLINDER ASSEMBLY (SN 0300075606 through 0300087000)

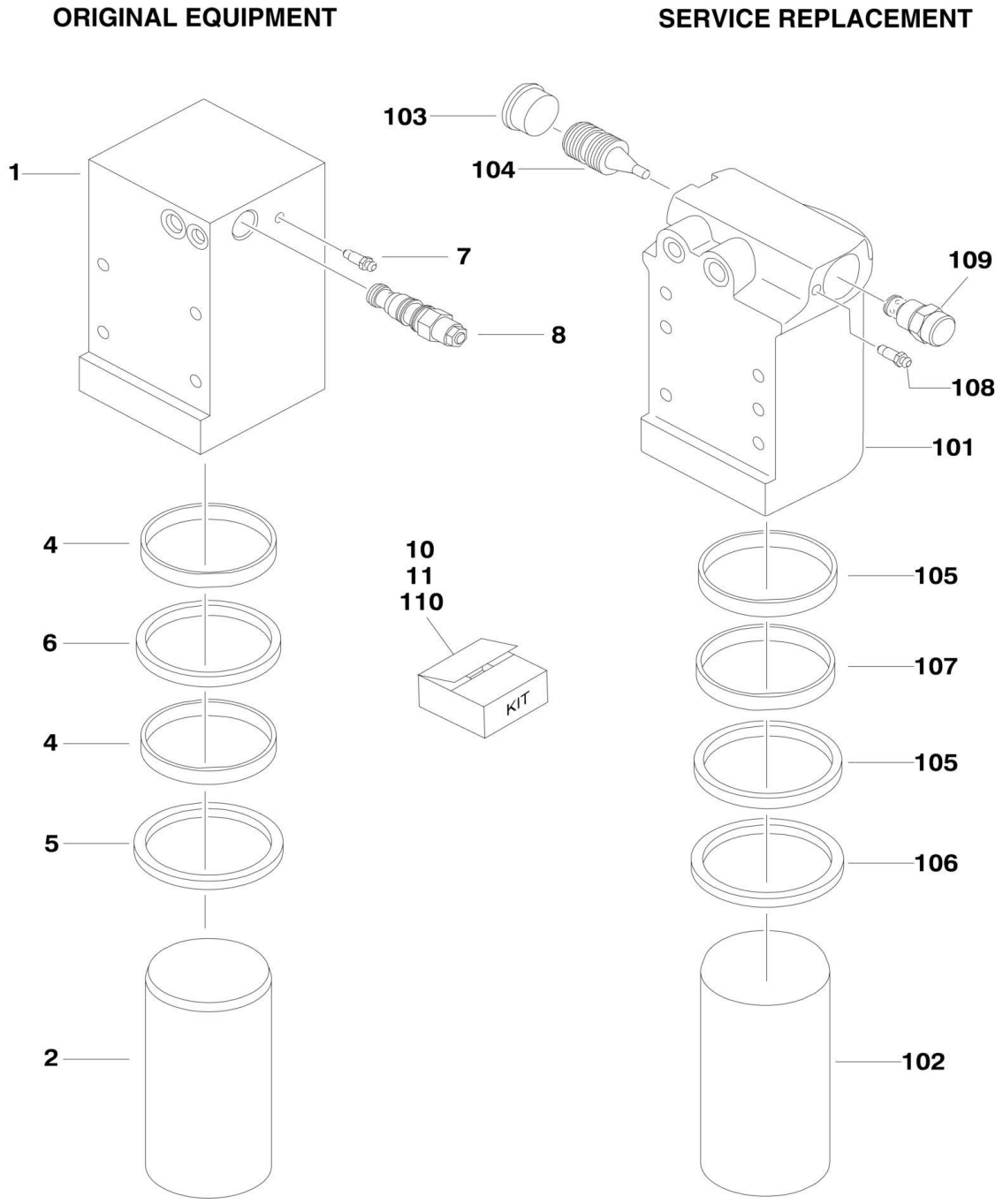

FIGURE 5-2. AXLE LOCKOUT CYLINDER ASSEMBLY (SN 0300075606 through 0300087000)

ITEM	PART NUMBER	QTY	DESCRIPTION	REV
	1684280	Ref	**AXLE LOCKOUT CYLINDER ASSEMBLY**	G
		Ref	**Note: Service Kit p/n 1001167359 may have been installed as a Service Replacement. Kit uses p/n 1684465 Cylinder. In kit has been installed, Use Item 101-109 for Service**	
1	1684289	1	Barrel	
2	1684290	1	Rod	
4	See Note	NSS	Ring, Wear (Note: Use Item 100)	
5	See Note	NSS	Wiper (Note: Use Item 100)	
6	See Note	NSS	Seal, Rod (Note: Use Item 100)	
7	4640858	1	Bleeder	
8	4641319	1	Cartridge, Valve	
8	7024879	1	Seal Kit	
10	2902266	1	Seal Kit (Includes Items 4-6)	
11	1001167359	1	Cylinder Replacement Kit (Kit Replaces p/n 1684280 with p/n 1684465 Cylinder)	
	1684465	Ref	**AXLE LOCKOUT CYLINDER ASSEMBLY**	J
		Ref	Note: Original Equipment components may have been replaced with Service Replacement components part. Identify p/n stamped on cylinder before ordering parts.	
101	0370026	1	Barrel	
102	1684290	1	Rod	
103	2220890	1	Plug	
104	3480288	1	Piston, Pilot	
105	See Note	NSS	Ring, Wear (Note: Use Item 110)	
106	See Note	NSS	Wiper (Note: Use Item 110)	
107	See Note	NSS	Seal, Rod (Note: Use Item 110)	
108	4640858	1	Bleeder	
109	4641390	1	Cartridge, Valve	
109	7017496	1	Seal Kit	
110	2902266	1	Seal Kit (Includes Items 4-6)	

FIGURE 5-3. LEVEL CYLINDER ASSEMBLY (PLATFORM SLAVE) - 600S (ORIGINAL EQUIPMENT)

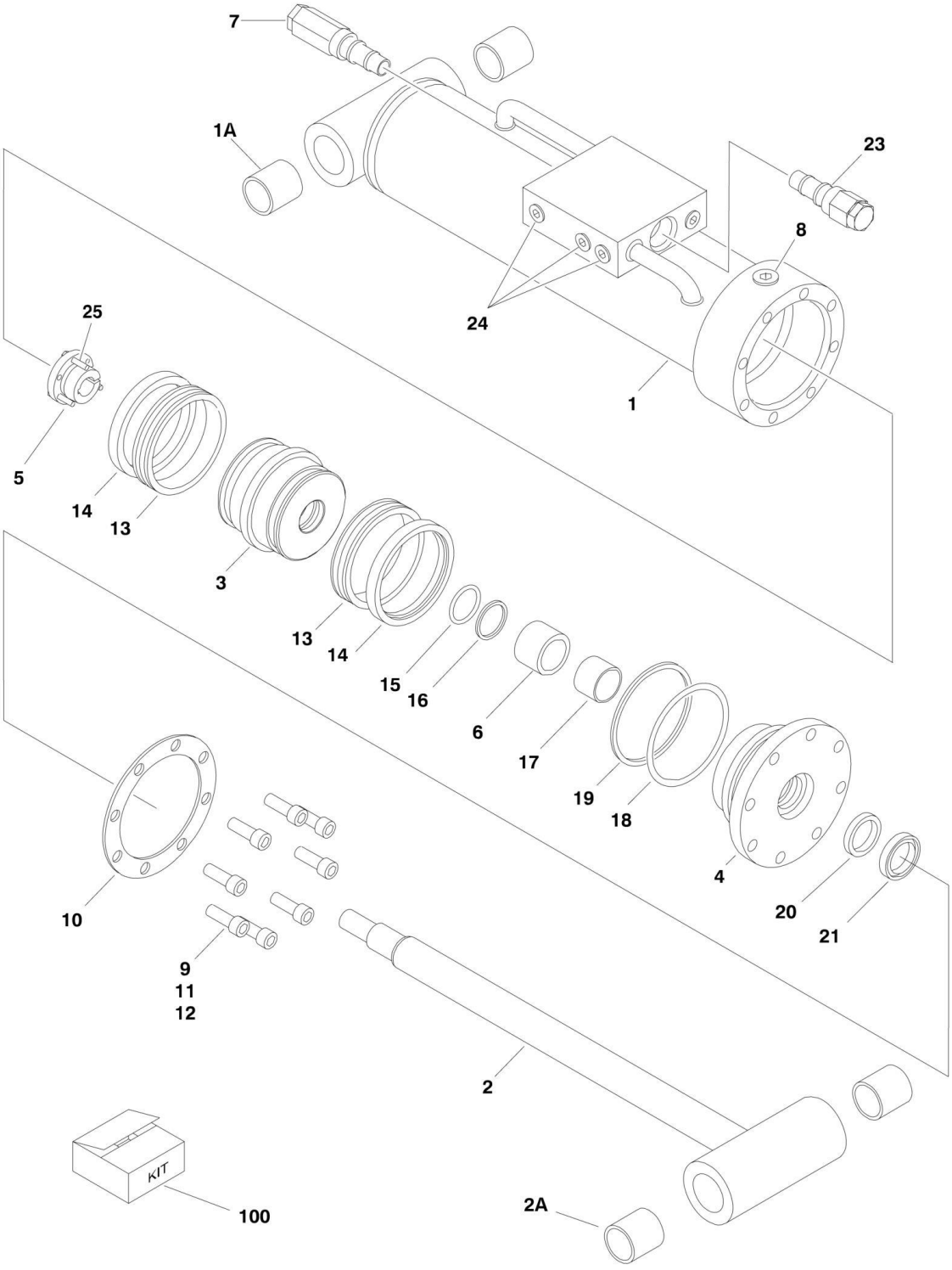

FIGURE 5-3. LEVEL CYLINDER ASSEMBLY (PLATFORM SLAVE) - 600S (ORIGINAL EQUIPMENT)

ITEM	PART NUMBER	QTY	DESCRIPTION	REV
	1683415	Ref	**LEVEL CYLINDER ASSEMBLY (PLATFORM SLAVE) - 600S (ORIGINAL EQUIPMENT)**	C
		Ref	Note: Original Cylinder May Have Been Replaced with Service Replacement. Identify PN Stamped on Cylinder Before Ordering Parts.	
1	1683977	1	Barrel Weldment	
1A	0961947	2	Bushing	
2	1683976	1	Rod Weldment	
2A	0961947	2	Bushing	
3	3480210	1	Piston	
4	1683053	1	Head	
5	0961893	1	Bushing, Tapered	
6	4566468	1	Spacer	
7	4640509	1	Cartridge, Valve	
7	2900792	1	Seal Kit - 4640509 Valve	
8	2220885	1	Plug, O-Ring	
9	3931516	8	Capscrew 5/16 x 1	
10	3760368	1	Ring, Washer	
11	0100011	AR	Compound, Locking	
12	0100038	AR	Primer, Locking	
13	See Note	NSS	Seal (Note: Use Item 100)	
14	See Note	NSS	Ring, Lock (Note: Use Item 100)	
15	See Note	NSS	O-Ring (Note: Use Item 100)	
16	See Note	NSS	Ring, Back-up (Note: Use Item 100)	
17	See Note	NSS	Ring, Wear (Note: Use Item 100)	
18	See Note	NSS	O-Ring (Note: Use Item 100)	
19	See Note	NSS	Ring, Back-up (Note: Use Item 100)	
20	See Note	NSS	Seal, Rod (Note: Use Item 100)	
21	See Note	NSS	Wiper (Note: Use Item 100)	
23	4640932	1	Cartridge, Valve	
23	7011112	1	Seal Kit - 4640932 Valve	
24	2220883	8	Plug, O-Ring	
25	0630534	3	Screw #10 x 1	
100	2901303	1	Seal Kit (Includes Items 13-21)	

FIGURE 5-4. LEVEL CYLINDER ASSEMBLY (PLATFORM SLAVE) - 600S (SERVICE REPLACEMENT)

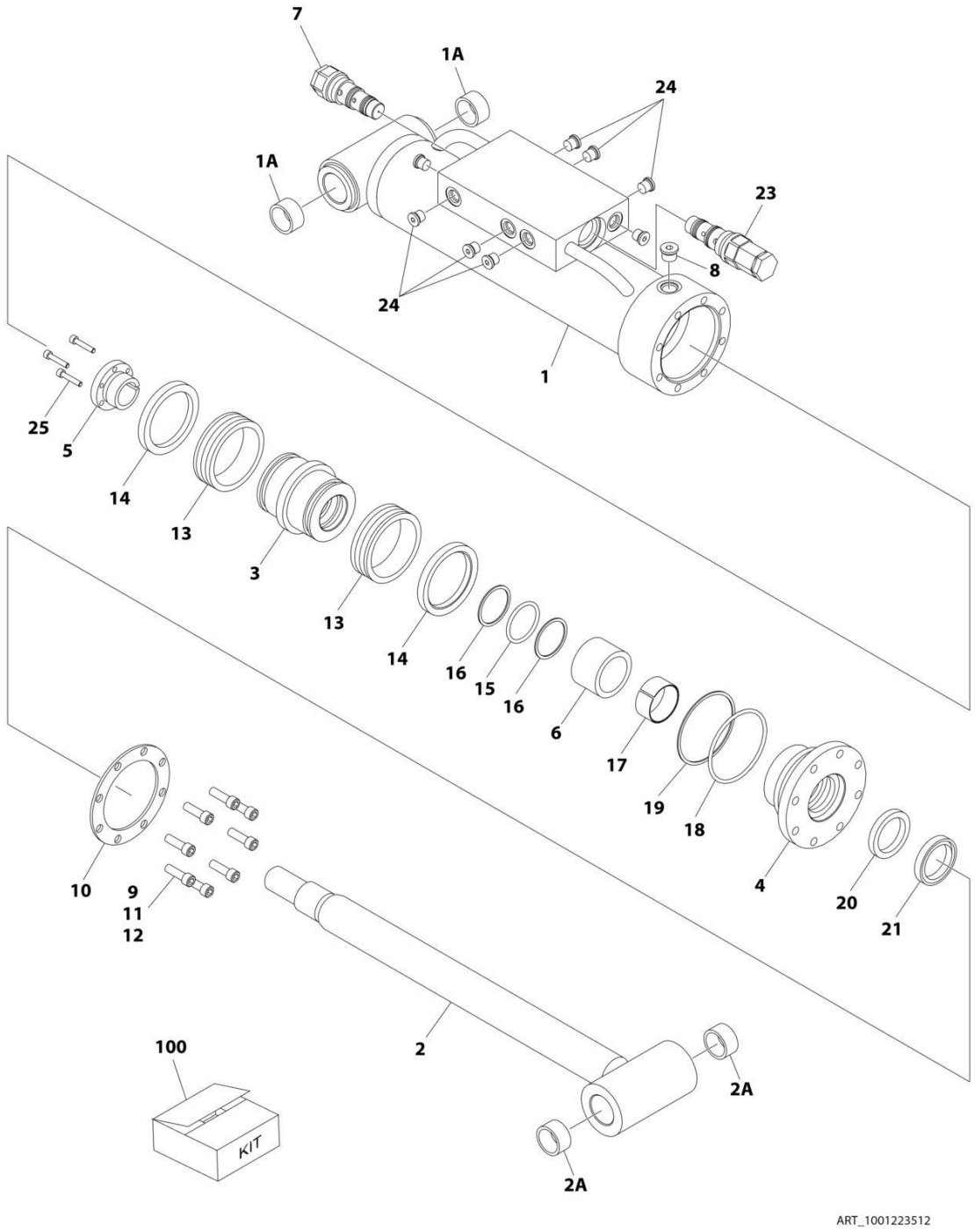

FIGURE 5-4. LEVEL CYLINDER ASSEMBLY (PLATFORM SLAVE) - 600S (SERVICE REPLACEMENT)

ITEM	PART NUMBER	QTY	DESCRIPTION	REV
	1001223512	Ref	**LEVEL CYLINDER ASSEMBLY (PLATFORM SLAVE) - 600S (SERVICE REPLACEMENT)**	B
		Ref	Note: Original Cylinder May Have Been Replaced with Service Replacement. Identify PN Stamped on Cylinder Before Ordering Parts.	
1	1001223511	1	Barrel Weldment	
1A	0961947	2	Bushing	
2	1683976	1	Rod Weldment	
2A	0961947	2	Bushing	
3	3480210	1	Piston	
4	1683053	1	Head	
5	0961893	1	Bushing, Tapered	
6	4566468	1	Spacer	
7	4640509	1	Cartridge, Valve	
7	2900792	1	Seal Kit - 4640509 Valve	
8	2220885	1	Plug, O-Ring	
9	3931516	8	Capscrew 5/16 x 1	
10	3760368	1	Ring, Washer	
11	0100011	AR	Compound, Locking	
12	0100038	AR	Primer, Locking	
13	See Note	NSS	Seal (Note: Use Item 100)	
14	See Note	NSS	Ring, Lock (Note: Use Item 100)	
15	See Note	NSS	O-Ring (Note: Use Item 100)	
16	See Note	NSS	Ring, Back-up (Note: Use Item 100)	
17	See Note	NSS	Ring, Wear (Note: Use Item 100)	
18	See Note	NSS	O-Ring (Note: Use Item 100)	
19	See Note	NSS	Ring, Back-up (Note: Use Item 100)	
20	See Note	NSS	Seal, Rod (Note: Use Item 100)	
21	See Note	NSS	Wiper (Note: Use Item 100)	
23	4640932	1	Cartridge, Valve	
23	7011112	1	Seal Kit 4640932 Valve	
24	2220883	8	Plug, O-Ring	
25	0630534	3	Screw #10 x 1	
100	2901303	1	Seal Kit (Includes Items 13-21)	

FIGURE 5-5. LEVEL CYLINDER ASSEMBLY (PLATFORM SLAVE) - 600S (SERVICE REPLACEMENT)

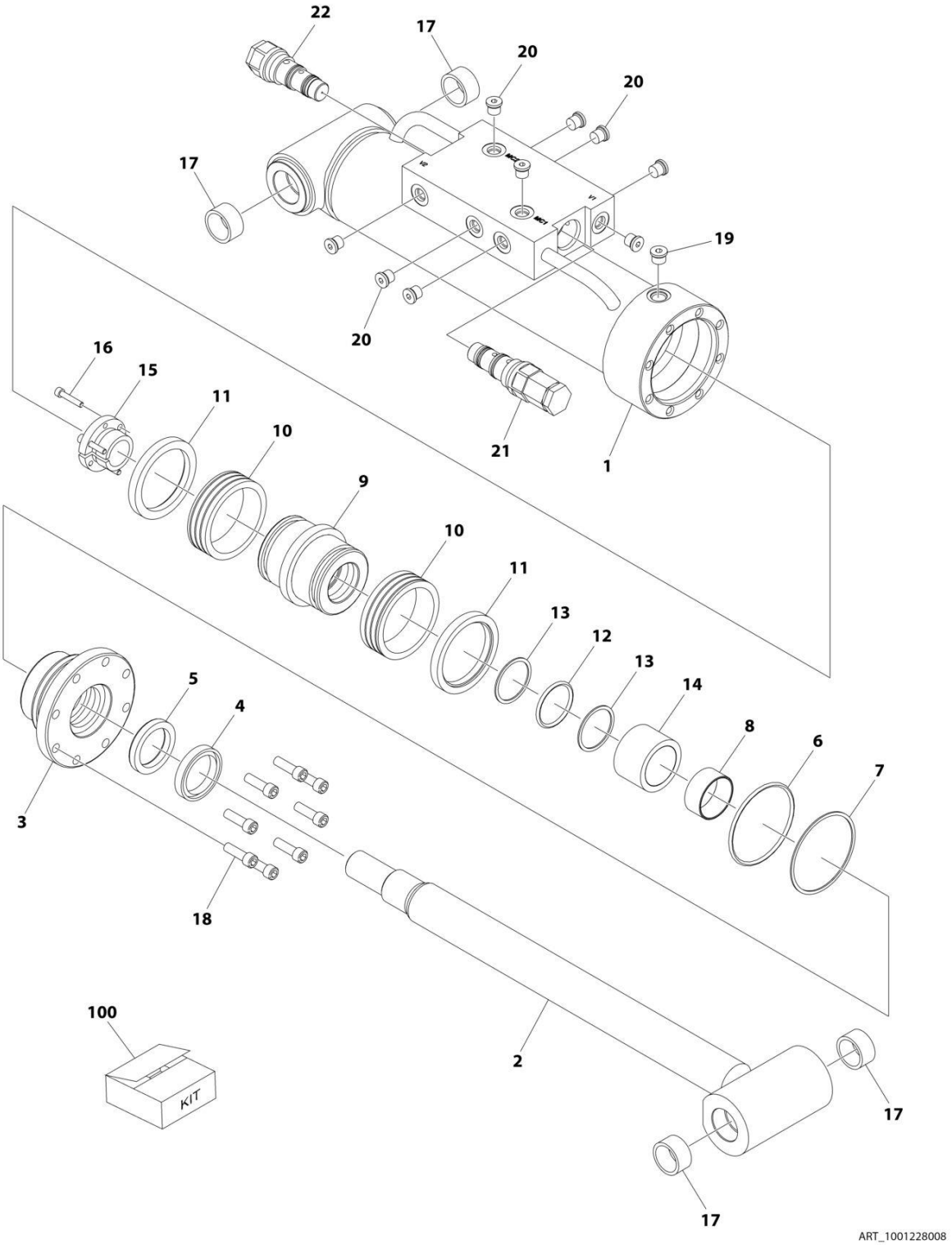

FIGURE 5-5. LEVEL CYLINDER ASSEMBLY (PLATFORM SLAVE) - 600S (SERVICE REPLACEMENT)

ITEM	PART NUMBER	QTY	DESCRIPTION	REV
	1001228008	Ref	LEVEL CYLINDER ASSEMBLY - PLATFORM SLAVE	C
		Ref	Note: Original Cylinder may have been replaced with Service Replacement. Identify PN Stamped on Cylinder Before Ordering Parts.	
1	See Note	NSS	Barrel (Note: Use p/n 1001228008)	
2	70006648	1	Rod	
3	70006649	1	Head	
4	See Note	NSS	Wiper (Note: Use Item 100)	
5	See Note	NSS	Seal Rod (Note: Use Item 100)	
6	See Note	NSS	O-Ring (Note: Use Item 100)	
7	See Note	NSS	Ring, Back-up (Note: Use Item 100)	
8	See Note	NSS	Ring, Wear (Note: Use Item 100)	
9	70006650	1	Piston	
10	See Note	NSS	Seal (Note: Use Item 100)	
11	See Note	NSS	Ring, Lock (Note: Use Item 100)	
12	See Note	NSS	O-Ring (Note: Use Item 100)	
13	See Note	NSS	Ring, Back-up (Note: Use Item 100)	
14	70006651	1	Spacer	
15	0961893	1	Bushing, Tapered	
16	0630534	3	Bolt #10 x 1	
17	0961947	4	Bushing	
18	3931516	8	Capscrew, Socket Head	
19	2220885	AR	Plug, O-Ring	
20	2220883	10	Plug, O-Ring	
21	4640932	1	Cartridge, Valve	
21	7011112	1	Seal Kit - 4640932 Valve	
22	4640509	1	Cartridge, Valve	
22	2900792	1	Seal Kit - 4640509 Valve	
100	2901303	1	Seal Kit - 1001228008 Cylinder (Includes Items 4-8 & 10-13)	

FIGURE 5-6. LEVEL CYLINDER ASSEMBLY (PLATFORM SLAVE) - 600SJ & 660SJ (ORIGINAL EQUIPMENT)

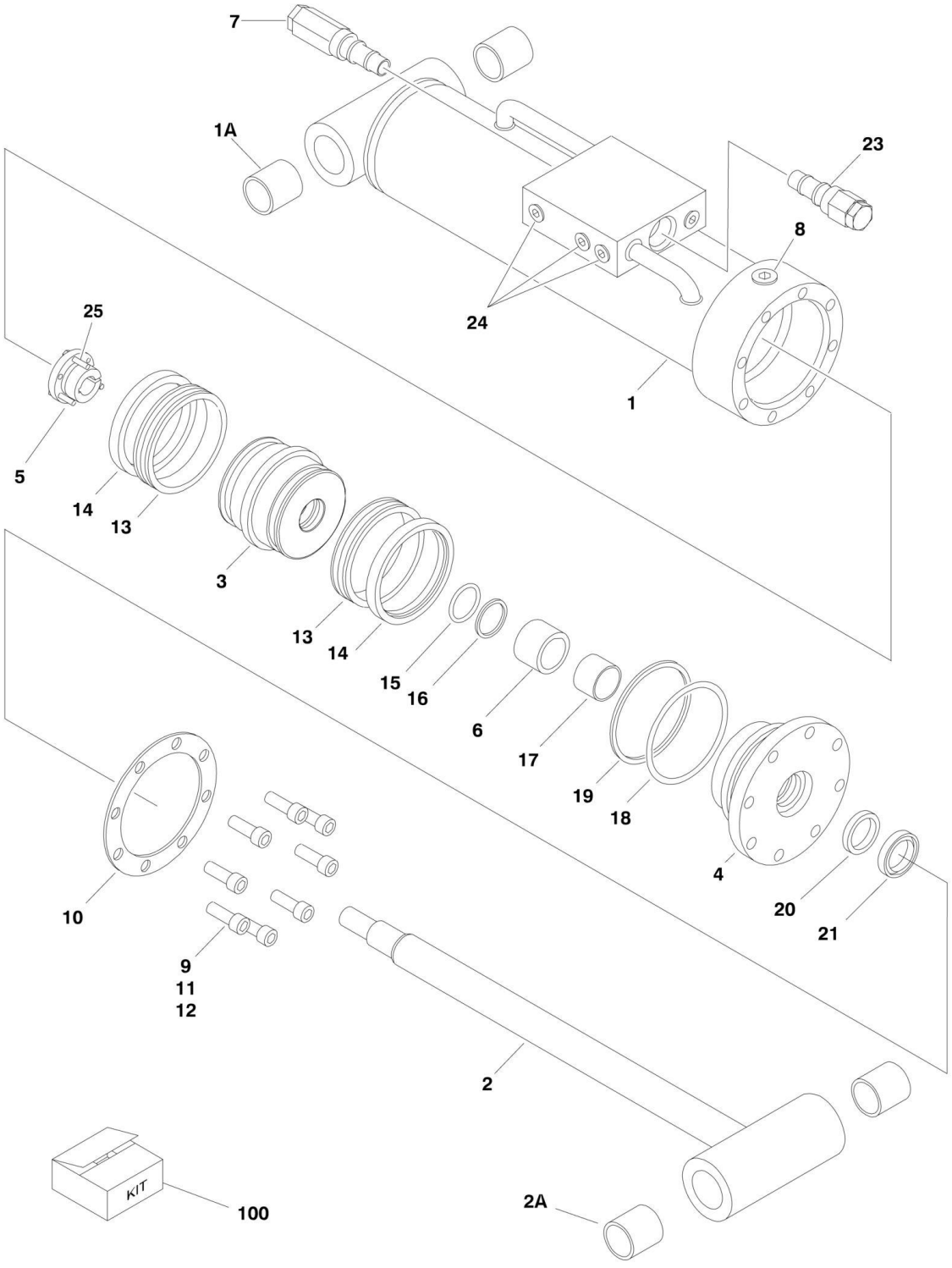

FIGURE 5-6. LEVEL CYLINDER ASSEMBLY (PLATFORM SLAVE) - 600SJ & 660SJ (ORIGINAL EQUIPMENT)

ITEM	PART NUMBER	QTY	DESCRIPTION	REV
	1683418	Ref	**LEVEL CYLINDER ASSEMBLY (PLATFORM SLAVE) - 600SJ & 660SJ (ORIGINAL EQUIPMENT)**	D
		Ref	Note: Original Cylinder May Have Been Replaced with Service Replacement. Identify PN Stamped on Cylinder Before Ordering Parts.	
1	1683952	1	Barrel Weldment (Note: Item 1A not included - Purchase Separately)	
1A	0961951	2	Bushing	
2	1683963	1	Rod Weldment (Note: Item 2A not included - Purchase Separately)	
2A	0961951	2	Bushing	
3	3480188	1	Piston	
4	1683055	1	Head	
5	0961894	1	Bushing, Tapered	
6	4566468	1	Spacer	
7	4640509	1	Cartridge, Valve	
7	2900792	1	Seal Kit - 4640509 Valve	
8	2220885	1	Plug, O-Ring	
9	3931620	8	Capscrew 3/8 x 1-1/4	
10	3760369	1	Ring, Washer	
11	0100011	AR	Compound, Locking	
12	0100038	AR	Primer, Locking	
13	See Note	NSS	Seal (Note: Use Item 100)	
14	See Note	NSS	Ring, Lock (Note: Use Item 100)	
15	See Note	NSS	O-Ring (Note: Use Item 100)	
16	See Note	NSS	Ring, Back-up (Note: Use Item 100)	
17	See Note	NSS	Ring, Wear (Note: Use Item 100)	
18	See Note	NSS	O-Ring (Note: Use Item 100)	
19	See Note	NSS	Ring, Back-up (Note: Use Item 100)	
20	See Note	NSS	Seal, Rod (Note: Use Item 100)	
21	See Note	NSS	Wiper (Note: Use Item 100)	
23	4640932	1	Cartridge, Valve	
23	7011112	1	Seal Kit - 4640932 Valve	
24	2220883	8	Plug, O-Ring	
25	0630535	3	Screw 1/4 x 1-1/8	
100	2901301	1	Seal Kit - 1683418 Cylinder (Includes Items 13-21)	

FIGURE 5-7. LEVEL CYLINDER ASSEMBLY (PLATFORM SLAVE) - 600SJ & 660SJ (SERVICE REPLACEMENT)

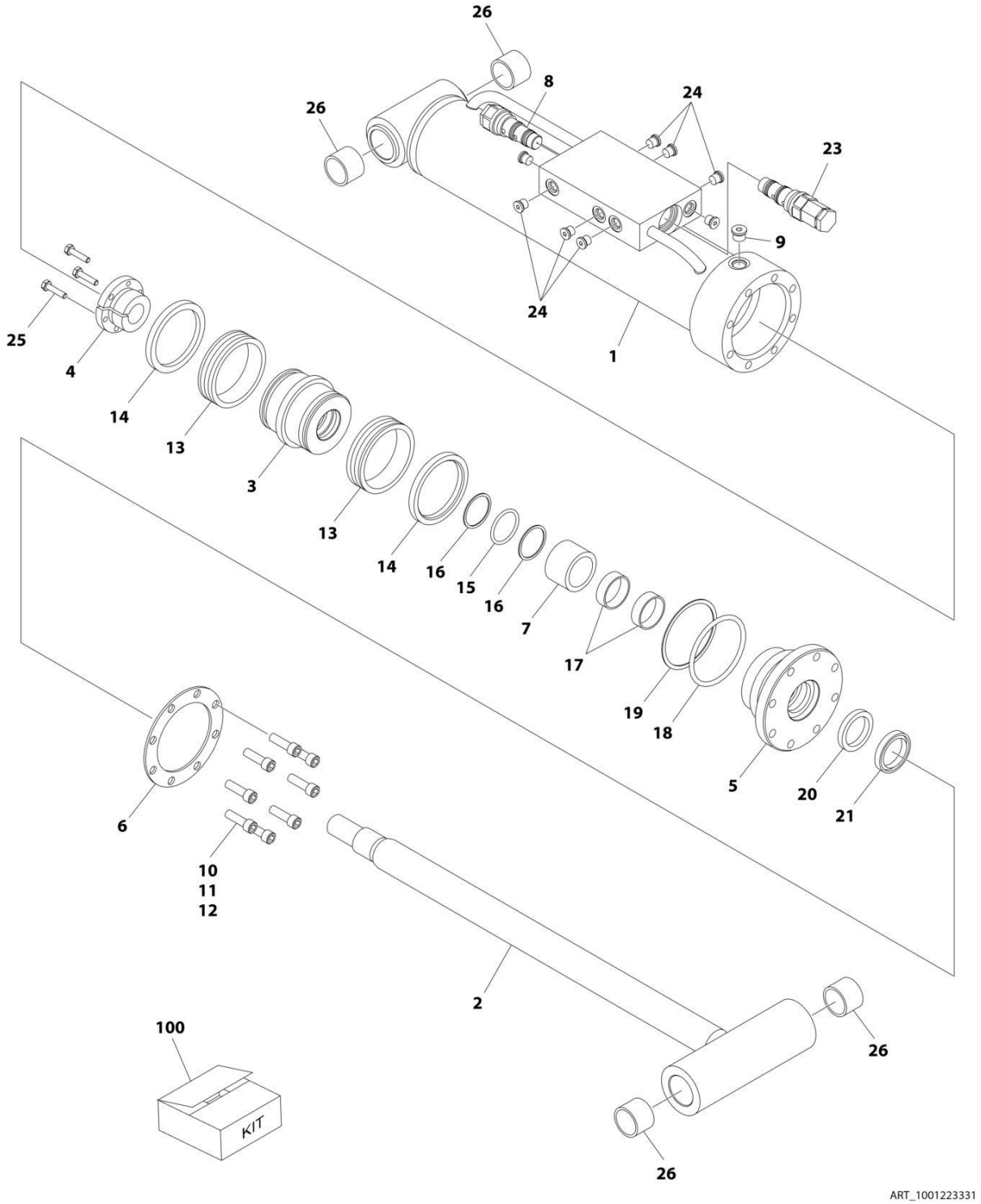

FIGURE 5-7. LEVEL CYLINDER ASSEMBLY (PLATFORM SLAVE) - 600SJ & 660SJ (SERVICE REPLACEMENT)

ITEM	PART NUMBER	QTY	DESCRIPTION	REV
	1001223331	Ref	**LEVEL CYLINDER ASSEMBLY (PLATFORM SLAVE) - 600SJ & 660SJ (SERVICE REPLACEMENT)**	B
		Ref	Note: Original Cylinder May Have Been Replaced with Service Replacement. Identify PN Stamped on Cylinder Before Ordering Parts.	
1	1001223332	1	Barrel Weldment	
2	1683963	1	Rod Weldment	
3	3480188	1	Piston	
4	0961894	1	Bushing, Tapered	
5	1683055	1	Head	
6	3760369	1	Ring, Washer	
7	4566468	1	Spacer	
8	4640509	1	Cartridge, Valve	
8	2900792	1	Seal Kit - 4640509 Valve	
9	2220885	1	Plug, O-Ring	
10	3931620	8	Capscrew 3/8 x 1-1/4	
11	0100011	AR	Compound, Locking	
12	0100038	AR	Primer, Locking	
13	See Note	NSS	Seal (Note: Use Item 100)	
14	See Note	NSS	Ring, Lock (Note: Use Item 100)	
15	See Note	NSS	O-Ring (Note: Use Item 100)	
16	See Note	NSS	Ring, Back-up (Note: Use Item 100)	
17	See Note	NSS	Ring, Wear (Note: Use Item 100)	
18	See Note	NSS	O-Ring (Note: Use Item 100)	
19	See Note	NSS	Ring, Back-up (Note: Use Item 100)	
20	See Note	NSS	Seal, Rod (Note: Use Item 100)	
21	See Note	NSS	Wiper (Note: Use Item 100)	
23	4640932	1	Cartridge, Valve	
23	7011112	1	Seal Kit 4640932 Valve	
24	2220883	8	Plug, O-Ring	
25	0630535	3	Screw #10 x 1	
26	0961951	4	Bushing	
100	2901303	1	Seal Kit (Includes Items 13-21)	

FIGURE 5-8. LEVEL CYLINDER ASSEMBLY (PLATFORM SLAVE) - 600SJ & 660SJ (SERVICE REPLACEMENT)

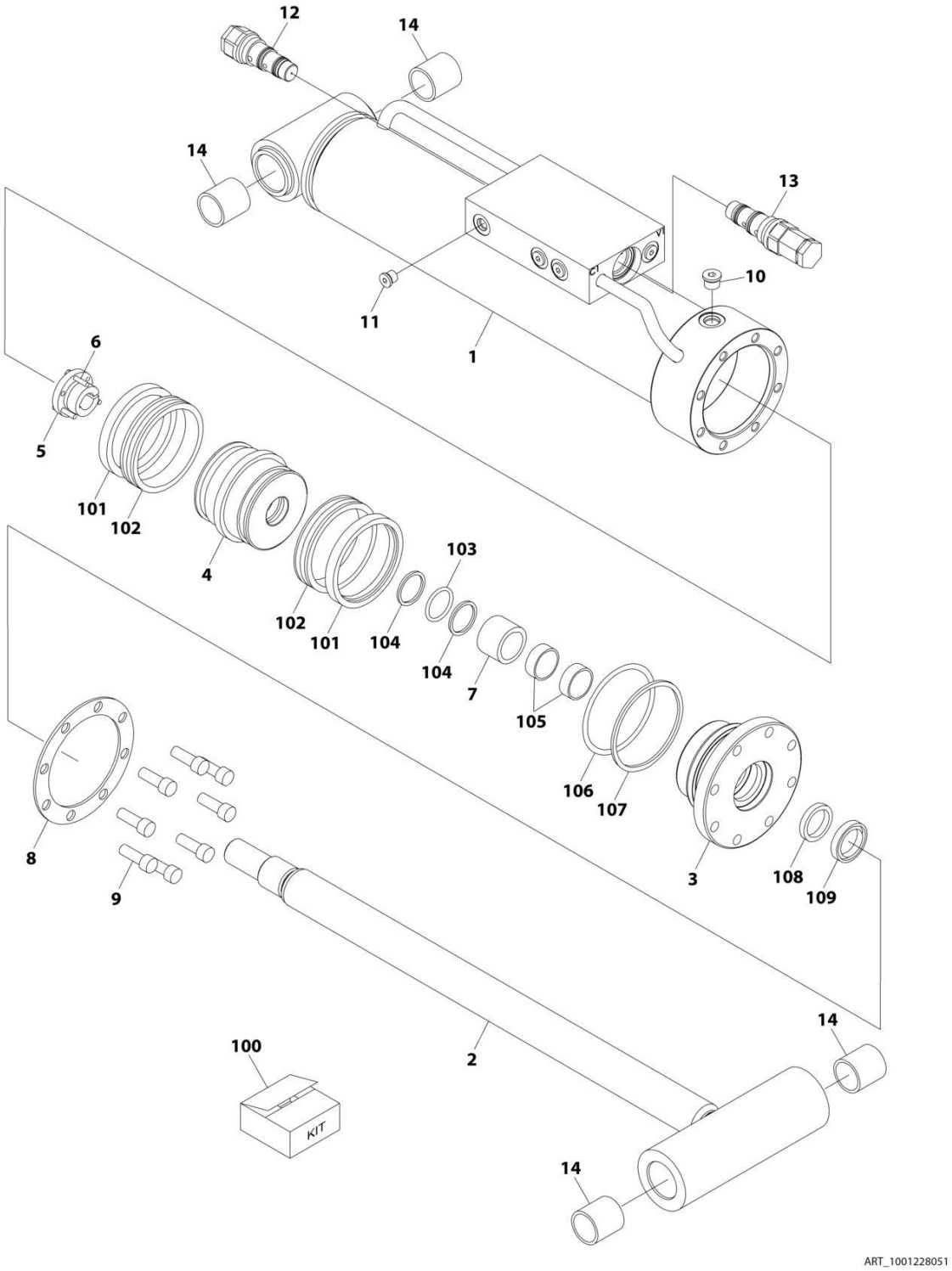

FIGURE 5-8. LEVEL CYLINDER ASSEMBLY (PLATFORM SLAVE) - 600SJ & 660SJ (SERVICE REPLACEMENT)

ITEM	PART NUMBER	QTY	DESCRIPTION	REV
	1001228051	Ref	LEVEL CYLINDER ASSEMBLY	A
		Ref	Note: Original Cylinder May Have Been Replaced with Service Replacement. Identify PN Stamped on Cylinder Before Ordering Parts.	
1	See Note	NSS	Barrel (Note: Use p/n 1001228051)	
2	70006823	1	Rod	
3	70006446	1	Head	
4	70006445	1	Piston	
5	70006444	1	Bushing, Tapered	
6	0630535	3	Bolt 1/4 x 1-1/8	
7	70006443	1	Spacer	
8	70006822	1	Ring, Washer	
9	3931620	8	Capscrew 3/8 x 1-1/4	
10	2220885	1	Plug, O-Ring	
11	2220883	8	Plug, O-Ring	
12	4640509	1	Cartridge, Valve	
12	2900792	1	Seal Kit - 4640509 Valve	
13	4640932	1	Cartridge, Valve	
13	7011112	1	Seal Kit - 4640932 Valve	
14	0961951	4	Bushing	
100	1001138796	1	Seal Kit - 1001228051 Cylinder (Includes Items 101-109)	
101	See Note	NSS	Ring, Lock (Note: Use Item 100)	
102	See Note	NSS	Seal (Note: Use Item 100)	
103	See Note	NSS	O-Ring (Note: Use Item 100)	
104	See Note	NSS	Ring, Back-up (Note: Use Item 100)	
105	See Note	NSS	Ring, Wear (Note: Use Item 100)	
106	See Note	NSS	O-Ring (Note: Use Item 100)	
107	See Note	NSS	Ring, Back-up (Note: Use Item 100)	
108	See Note	NSS	Seal, Rod (Note: Use Item 100)	
109	See Note	NSS	Wiper (Note: Use Item 100)	

FIGURE 5-9. LIFT CYLINDER ASSEMBLY (BOOM)

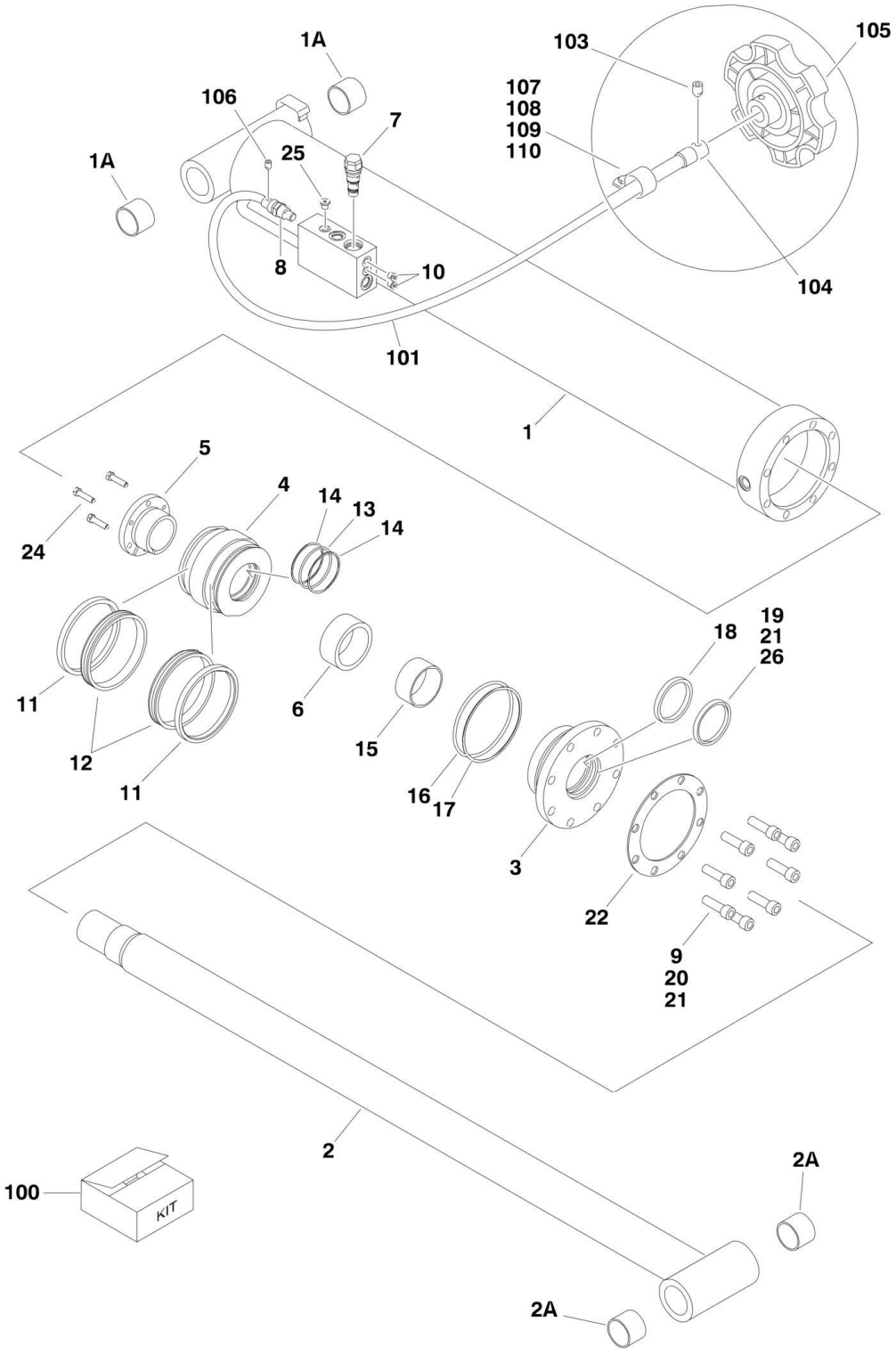

FIGURE 5-9. LIFT CYLINDER ASSEMBLY (BOOM)

ITEM	PART NUMBER	QTY	DESCRIPTION	REV
		Ref	**Note: Original Equipment Cylinder may have been replaced with Service Replacement Cylinder. Identify p/n stamped on cylinder before ordering parts.**	
		Ref	**LIFT CYLINDER ASSEMBLY (BOOM) OPTIONS:**	
	1683275	Ref	**Main Lift Cylinder Assembly (SN 0300068000 through 0300070974)**	H
	1683666	Ref	**Main Lift Cylinder Assembly (Original Equipment) (SN 0300070975 through 0300087000)**	D
	1001112468	Ref	**Main Lift Cylinder Assembly (Service Replacement for p/n 1682666)**	B
1	1683955	NLA	Barrel Weldment (Use p/n 1001112467)	
1A	0961950	2	Bushing	
2	1683954	1	Rod Weldment	
2A	0961950	2	Bushing	
3	1683067	1	Head	
4	3480206	1	Piston	
5	0961898	1	Bushing, Tapered (Use item #24 in place of supplied bolts)	
6	4566501	1	Spacer, Tube	
7	4640509	1	Cartridge, Valve	
7	2900792	1	Seal Kit - 4640509 Valve	
8	4640799	1	Cartridge, Valve (Used on 1683275 Cylinder)	
8	7010545	1	Seal Kit - 4640799 Valve	
8	2220887	1	Plug, O-Ring (Used on 1683666 Cylinder)	
9	3932032	8	Bolt, Socket Head 5/16in-11NC x 2in	
10	2220883	2	Plug, O-Ring	
11	See Note	NSS	Ring, Lock (Note: Use Item 100)	
12	See Note	NSS	Seal, Hydrolock (Note: Use Item 100)	
13	See Note	NSS	O-Ring (Note: Use Item 100)	
14	See Note	NSS	Ring, Back-up (Note: Use Item 100)	
15	See Note	NSS	Ring, Wear (Note: Use Item 100)	
16	See Note	NSS	O-Ring (Note: Use Item 100)	
17	See Note	NSS	Ring, Back-up (Note: Use Item 100)	
18	See Note	NSS	Seal, Rod (Note: Use Item 100)	
19	See Note	NSS	Wiper (Note: Use Item 100)	
20	0100011	AR	Compound, Locking	
21	0100038	AR	Primer, Locking	
22	3760372	1	Washer, Ring	
24	0630536	3	Screw, Socket Head 3/8in-16NC x 1-1/2in	
25	2220235	1	Plug, O-Ring **(SN 0300070975 through 0300087000)**	
26	0100063	AR	Loctite #609 **(SN 0300070975 through 0300087000)**	
100	2901285	1	Seal Kit - Includes Items 11-19	
	0256212	Ref	**MANUAL DESCENT INSTALLATION (SN 0300068000 through 0300070975)**	3-B
101	1060617	1	Cable	
103	3900230	2	Setscrew #10-32NF x 3/8in	
104	0080220	1	Adapter	
105	2560144	1	Knob	
106	3950803	1	Setscrew #8-32NC x 3/8in	
107	1320070	1	Clamp	
108	0641408	1	Bolt 1/4in-20NC x 1in	
109	3311405	1	Locknut 1/4in-20NC	

SECTION 5 - CYLINDER

ITEM	PART NUMBER	QTY	DESCRIPTION	REV
110	4751400	2	Flatwasher 1/4in Regular	

FIGURE 5-10. LIFT CYLINDER ASSEMBLY (JIB) - 600SJ & 660SJ (ORIGINAL EQUIPMENT)

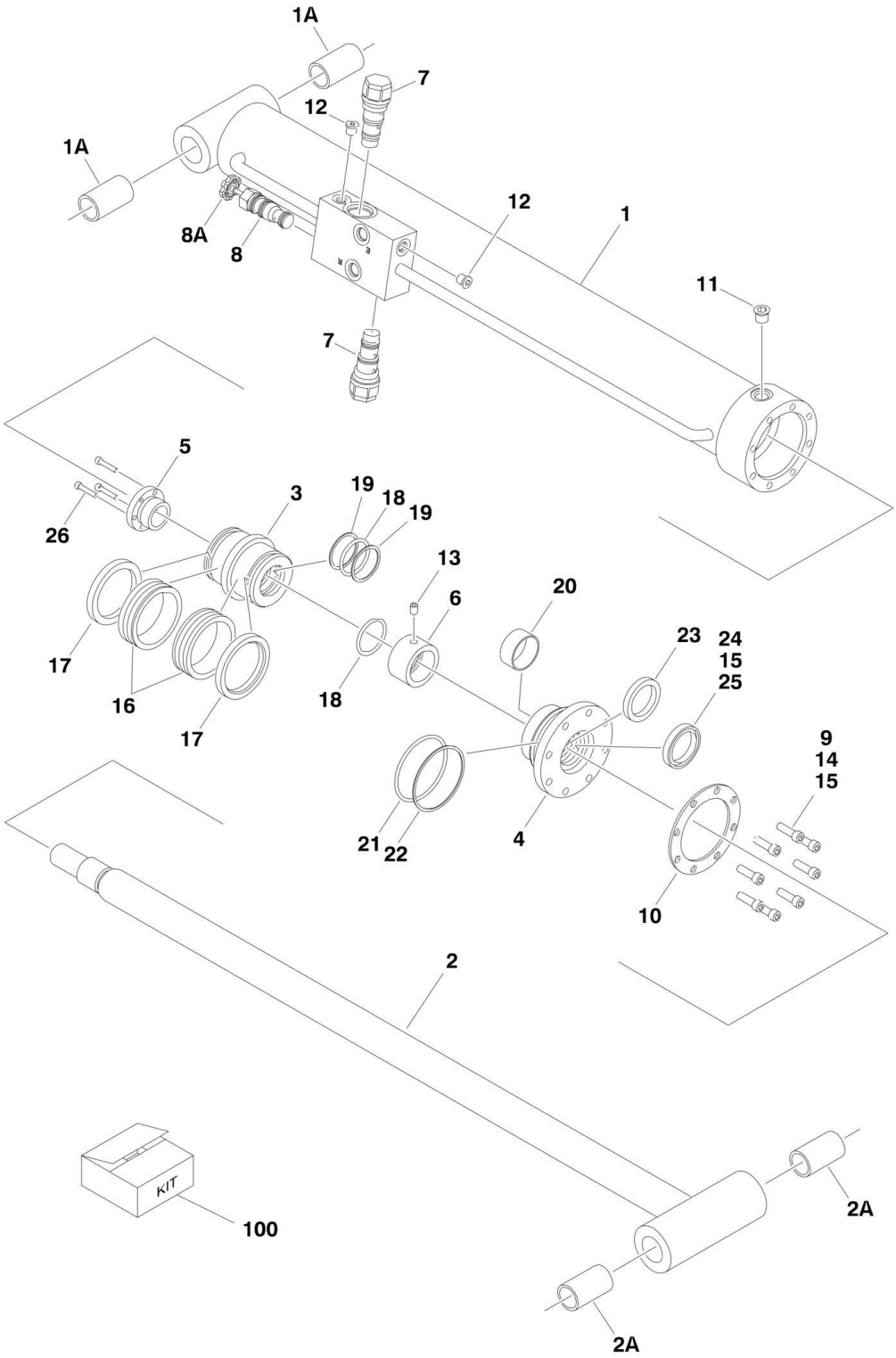

FIGURE 5-10. LIFT CYLINDER ASSEMBLY (JIB) - 600SJ & 660SJ (ORIGINAL EQUIPMENT)

ITEM	PART NUMBER	QTY	DESCRIPTION	REV
		Ref	**LIFT CYLINDER ASSEMBLY (JIB) - 600SJ & 660SJ (ORIGINAL EQUIPMENT)**	
	1683258	Ref	**Lift Cylinder Assembly (Jib) (SN 0300068000 through 0300070974)**	E
	1683609	Ref	**Lift Cylinder Assembly (Jib) (SN 0300070975 through 0300087000)**	G
		Ref	Note: Original Cylinder May Have Been Replaced with Service Replacement. Identify PN Stamped on Cylinder Before Ordering Parts.	
1	1684092	1	Barrel Weldment	
1A	0962336	2	Bushing	
2	1684090	1	Rod Weldment	
2A	0962336	2	Bushing	
3	3480210	1	Piston	
4	1683053	1	Head	
5	0961893	1	Bushing, Tapered	
6		Ref	Spacer, Tube Options:	
6	4566471	1	Spacer, Tube **(SN 0300068000 through 0300079598)**	
6	4100100	1	Spacer, Tube **(SN 0300079599 through 0300087000)**	
7	4640509	2	Cartridge, Valve	
7	2900792	2	Seal Kit - 4640509 Valve	
8	4640902	1	Cartridge, Valve **(SN 0300068000 through 0300070975)**	
8	7012953	1	Seal Kit - 4640902 Valve	
8A	7012961	1	Knob	
9	3931516	8	Capscrew 5/16 x 1	
10	3760368	1	Ring, Washer	
11	2220885	1	Plug, O-Ring #6	
12	2220883	2	Plug, O-Ring #4	
13	3900141	1	Setscrew 1/4 x 3/8 **(SN 0300068000 through 0300079599)**	
14	0100011	AR	Compound, Locking	
15	0100038	AR	Primer, Locking	
16	See Note	NSS	Seal (Note: Use Item 100)	
17	See Note	NSS	Ring, Lock (Note: Use Item 100)	
18	See Note	NSS	O-Ring (Note: Use Item 100)	
19	See Note	NSS	Ring, Back-up (Note: Use Item 100)	
20	See Note	NSS	Ring, Wear (Note: Use Item 100)	
21	See Note	NSS	O-Ring (Note: Use Item 100)	
22	See Note	NSS	Ring, Back-up (Note: Use Item 100)	
23	See Note	NSS	Seal, Rod (Note: Use Item 100)	
24	See Note	NSS	Wiper (Note: Use Item 100)	
25	0100063	AR	Loctite #609 **(SN 0300070975 through 0300079599)**	
26	0630534	3	Screw #10 x 1	
100	2901303	1	Seal Kit - 1683258 Cylinder (Includes Items 16-24)	

FIGURE 5-11. LIFT CYLINDER ASSEMBLY (JIB) - 600SJ & 660SJ (SERVICE REPLACEMENT)

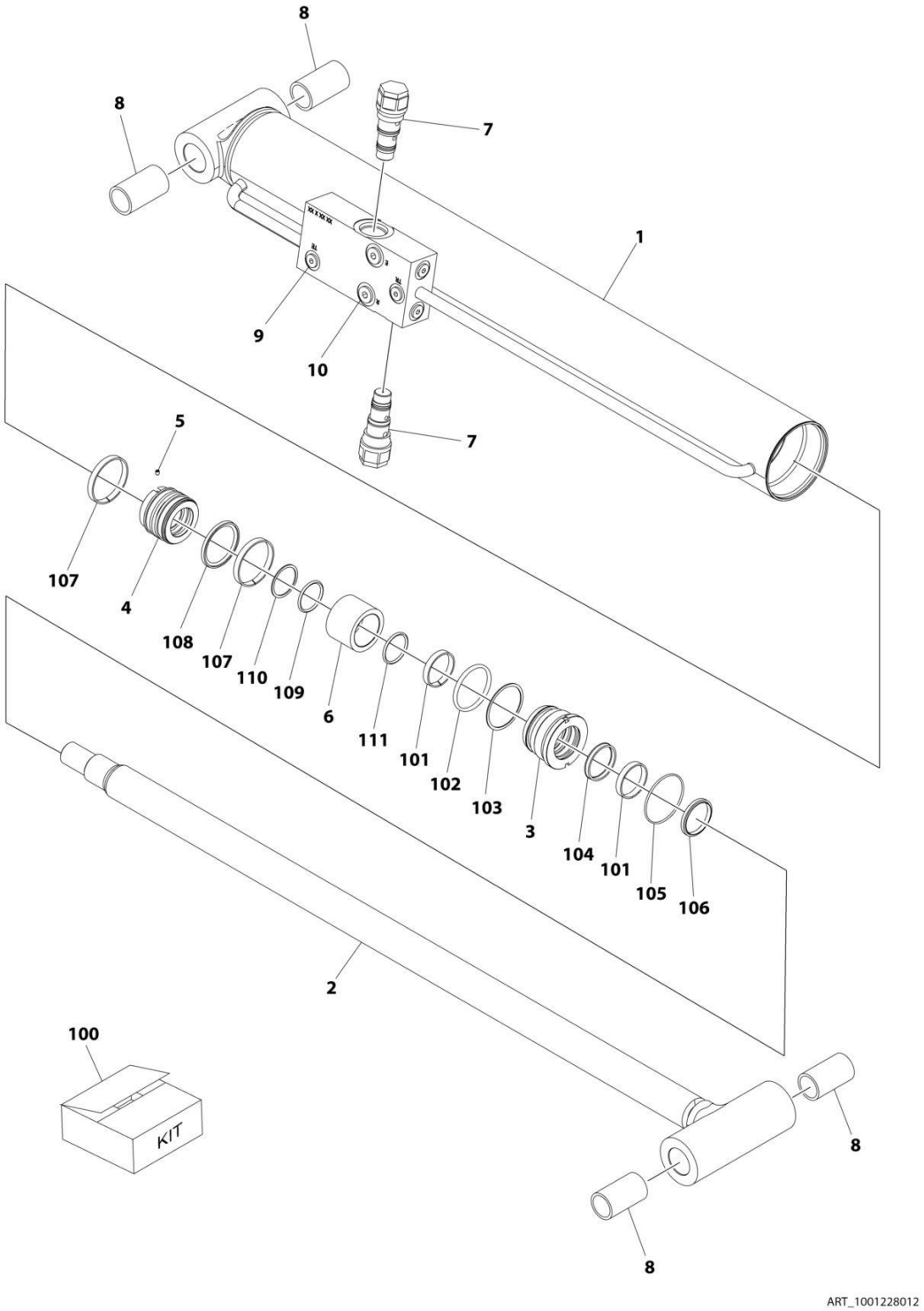

FIGURE 5-11. LIFT CYLINDER ASSEMBLY (JIB) - 600SJ & 660SJ (SERVICE REPLACEMENT)

ITEM	PART NUMBER	QTY	DESCRIPTION	REV
	1001228012	Ref	LIFT CYLINDER ASSEMBLY - JIB	C
		Ref	Note: Original Cylinder May Have Been Replaced with Service Replacement. Identify PN Stamped on Cylinder Before Ordering Parts.	
1	See Note	NSS	Barrel (Note: Not Available for Purchase)	
2	70006572	1	Rod	
3	70006571	1	Head	
4	70006570	1	Piston	
5	70023915	1	Screw	
6	70006569	1	Spacer	
7	4640509	2	Cartridge, Valve	
7	2900792	2	Seal Kit - 4640509 Valve	
8	0962336	4	Bushing	
9	2220883	6	Plug, O-Ring	
10	2220885	2	Plug, O-Ring	
100	70006568	1	Seal Kit (Includes Items 101-111)	
101	See Note	NSS	Ring, Wear (Note: Use Item 100)	
102	See Note	NSS	O-Ring (Note: Use Item 100)	
103	See Note	NSS	Ring, Back-up (Note: Use Item 100)	
104	See Note	NSS	Seal, Rod (Note: Use Item 100)	
105	See Note	NSS	O-Ring (Note: Use Item 100)	
106	See Note	NSS	Wiper (Note: Use Item 100)	
107	See Note	NSS	Ring, Wear (Note: Use Item 100)	
108	See Note	NSS	Seal (Note: Use Item 100)	
109	See Note	NSS	O-Ring (Note: Use Item 100)	
110	See Note	NSS	Ring, Back-up (Note: Use Item 100)	
111	See Note	NSS	O-Ring (Note: Use Item 100)	

FIGURE 5-12. LIFT CYLINDER ASSEMBLY (JIB) - 600SJ & 660SJ (SERVICE REPLACEMENT)

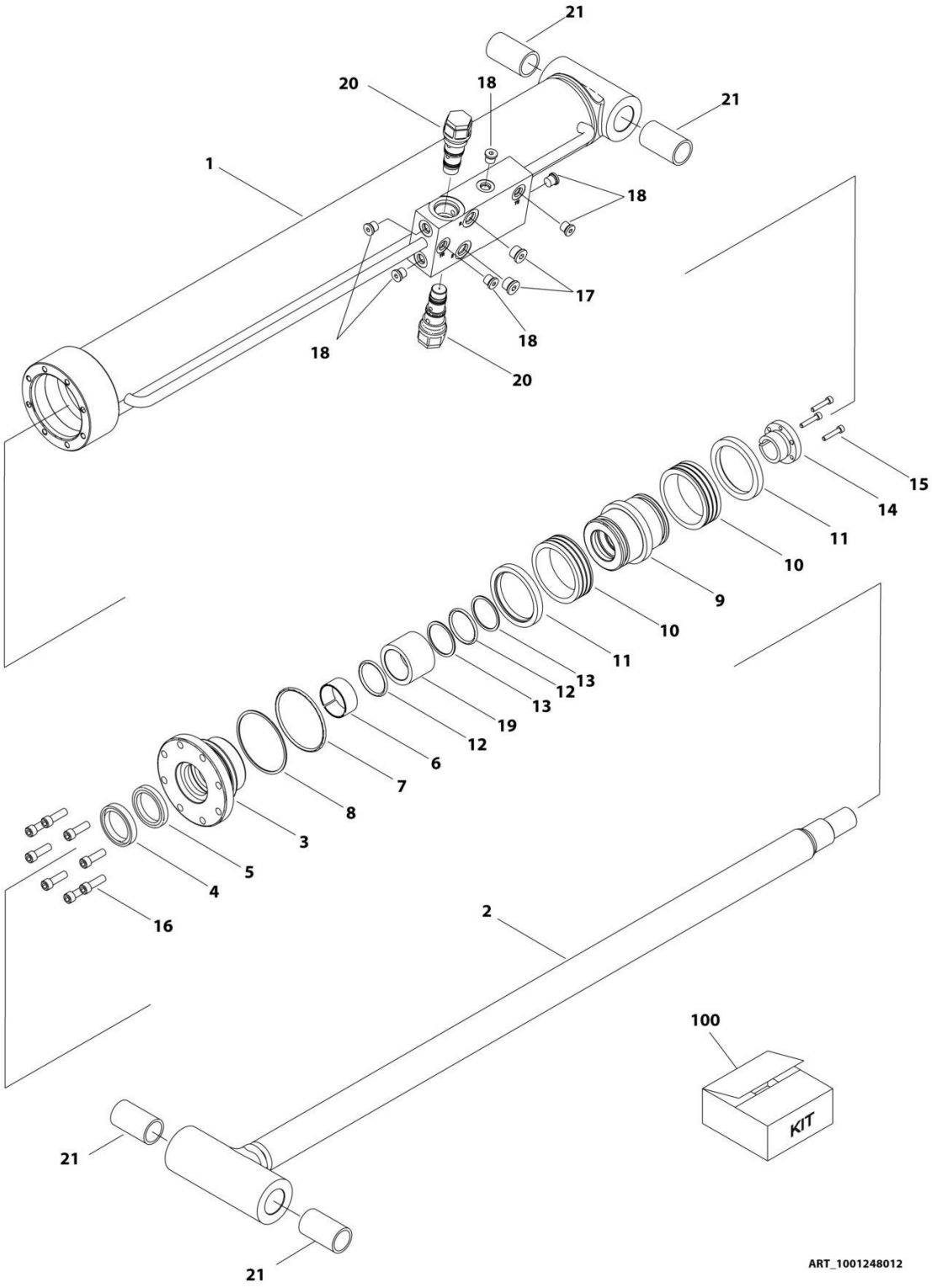

FIGURE 5-12. LIFT CYLINDER ASSEMBLY (JIB) - 600SJ & 660SJ (SERVICE REPLACEMENT)

ITEM	PART NUMBER	QTY	DESCRIPTION	REV
	1001248012	Ref	LIFT CYLINDER ASSEMBLY - JIB	B
		Ref	Note: Original Cylinder May Have Been Replaced with Service Replacement. Identify PN Stamped on Cylinder Before Ordering Parts.	
1	See Note	NSS	Barrel (Note: Not Available for Purchase)	
2	70006734	1	Rod	
3	70006649	1	Head	
4	See Note	NSS	Wiper (Note: Use Item 100)	
5	See Note	NSS	Seal, Rod (Note: Use Item 100)	
6	See Note	NSS	Ring, Wear (Note: Use Item 100)	
7	See Note	NSS	O-Ring (Note: Use Item 100)	
8	See Note	NSS	Ring, Back-up (Note: Use Item 100)	
9	70006650	1	Piston	
10	See Note	NSS	Seal (Note: Use Item 100)	
11	See Note	NSS	Ring, Lock (Note: Use Item 100)	
12	See Note	NSS	O-Ring (Note: Use Item 100)	
13	See Note	NSS	Ring, Back-up (Note: Use Item 100)	
14	0961893	1	Bushing, Tapered	
15	0630534	3	Capscrew, Socket Head #10 x 1	
16	70006735	8	Capscrew 5/16	
17	2220885	2	Plug, O-Ring	
18	2220883	6	Plug, O-Ring	
19	70006736	1	Spacer	
20	4640509	2	Cartridge, Valve	
20	2900792	2	Seal Kit - 4640509 Valve	
21	0962336	4	Bushing	
100	1001138795	1	Seal Kit (Includes Items 4-8 & 10-13)	

FIGURE 5-13. MASTER CYLINDER ASSEMBLY (ORIGINAL EQUIPMENT)

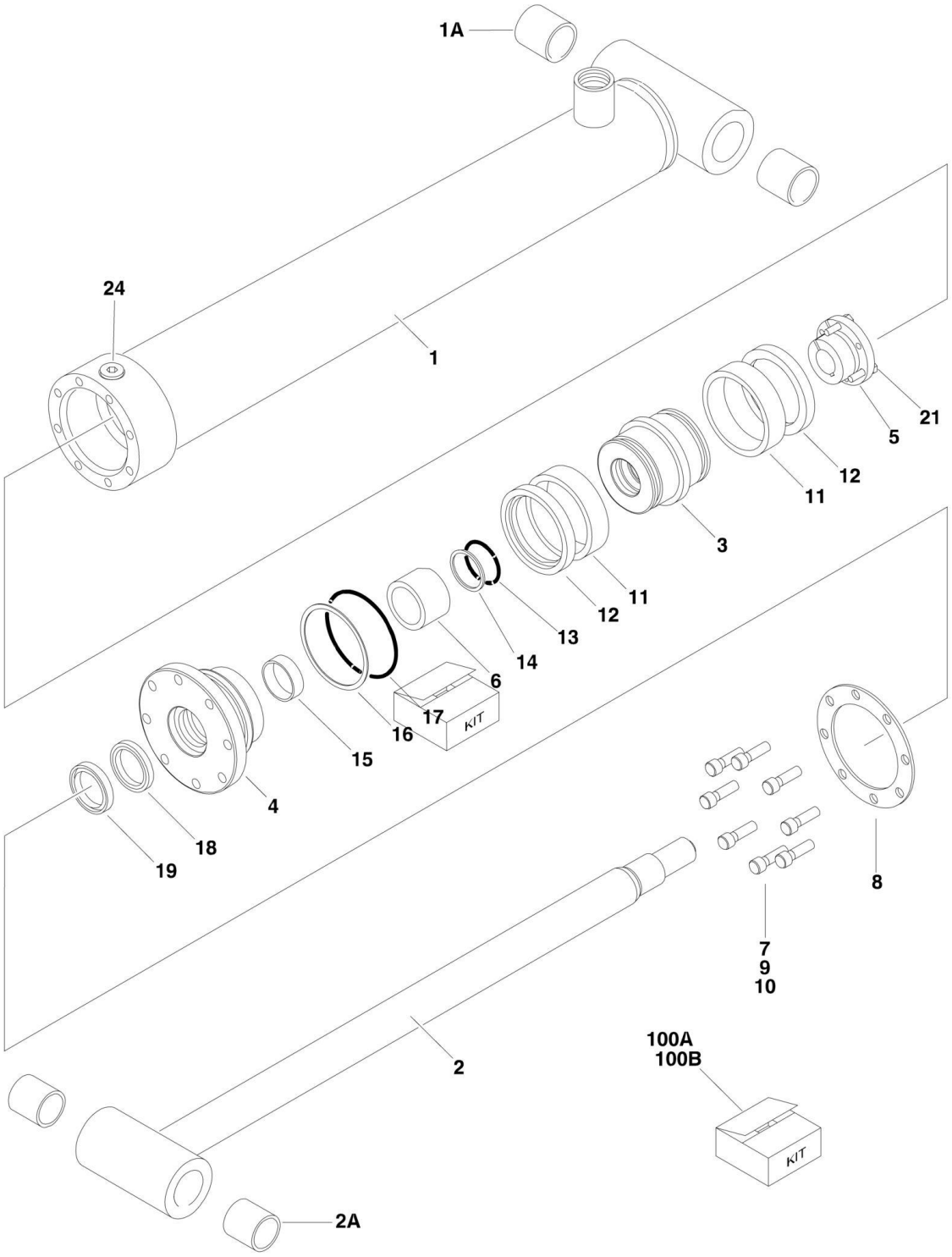

FIGURE 5-13. MASTER CYLINDER ASSEMBLY (ORIGINAL EQUIPMENT)

ITEM	PART NUMBER	QTY	DESCRIPTION	REV
	1683266	Ref	**MASTER CYLINDER ASSEMBLY - 600S (ORIGINAL EQUIPMENT)**	C
	1683263	Ref	**MASTER CYLINDER ASSEMBLY - 600SJ/660SJ (ORIGINAL EQUIPMENT)**	E
		Ref	Note: Original Cylinder May Have Been Replaced with Service Replacement. Identify PN Stamped on Cylinder Before Ordering Parts.	
1		Ref	Barrel Options:	
1	1683972	1	Barrel 600S (Note: Includes Item 1A)	
1	1683949	1	Barrel 600SJ/660SJ (Note: Item 1A not included - Purchase Separately)	
1A		Ref	Bushing Options:	
1A	0961947	2	Bushing 600S	
1A	0961951	2	Bushing 600SJ/660SJ	
2		Ref	Rod Options:	
2	1683973	1	Rod 600S (Note: Includes Item 1A)	
2	1683962	1	Rod 600SJ/660SJ (Note: Item 2A not included - Purchase Separately)	
2A		Ref	Bushing Options:	
2A	0961947	2	Bushing 600S	
2A	0961951	2	Bushing 600SJ/660SJ	
3		Ref	Piston Options:	
3	3480210	1	Piston 600S	
3	3480188	1	Piston 600SJ/660SJ	
4		Ref	Head Options:	
4	1683053	1	Head 600S	
4	1683055	1	Head 600SJ/660SJ	
5		Ref	Bushing, Tapered Options:	
5	0961893	1	Bushing, Tapered 600S	
5	0961894	1	Bushing, Tapered 600SJ/660SJ	
6	4566468	1	Spacer, Tube	
7		Ref	Capscrew Options:	
7	3931516	8	Capscrew 600S - Capscrew 5/16 x 1	
7	3931620	8	Capscrew 600SJ/660SJ - Capscrew 3/8 x 1-1/4	
8		Ref	Ring, Washer Options:	
8	3760368	1	Ring, Washer 600S	
8	3760369	1	Ring, Washer 600SJ/660SJ	
9	0100011	AR	Compound, Locking	
10	0100038	AR	Primer, Locking	
11	See Note	NSS	Seal (Note: Use Item 100A or 100B)	
12	See Note	NSS	Ring, Lock (Note: Use Item 100A or 100B)	
13	See Note	NSS	O-Ring (Note: Use Item 100A or 100B)	
14	See Note	NSS	Ring, Back-up (Note: Use Item 100A or 100B)	
15	See Note	NSS	Ring, Wear (Note: Use Item 100A or 100B)	
16	See Note	NSS	O-Ring (Note: Use Item 100A or 100B)	
17	See Note	NSS	Ring, Back-up (Note: Use Item 100A or 100B)	
18	See Note	NSS	Seal, Rod (Note: Use Item 100A or 100B)	
19	See Note	NSS	Wiper (Note: Use Item 100A or 100B)	
21		Ref	Screw Options:	
21	0630534	3	Screw 600S - Screw #10 x 1	
21	0630535	3	Screw 600SJ/660SJ - Screw 1/4 x 1-1/8	

SECTION 5 - CYLINDER

ITEM	PART NUMBER	QTY	DESCRIPTION	REV
24	2220885	1	Fitting, Plug (600SJ/660SJ - 1683263 Cylinder Only)	
100		Ref	Seal Kit (Includes Items 11-19)	
100A	2901303	1	Seal Kit 600S	
100B	2901301	1	Seal Kit 600SJ/660SJ	

FIGURE 5-14. MASTER CYLINDER ASSEMBLY - 600S (SERVICE REPLACEMENT)

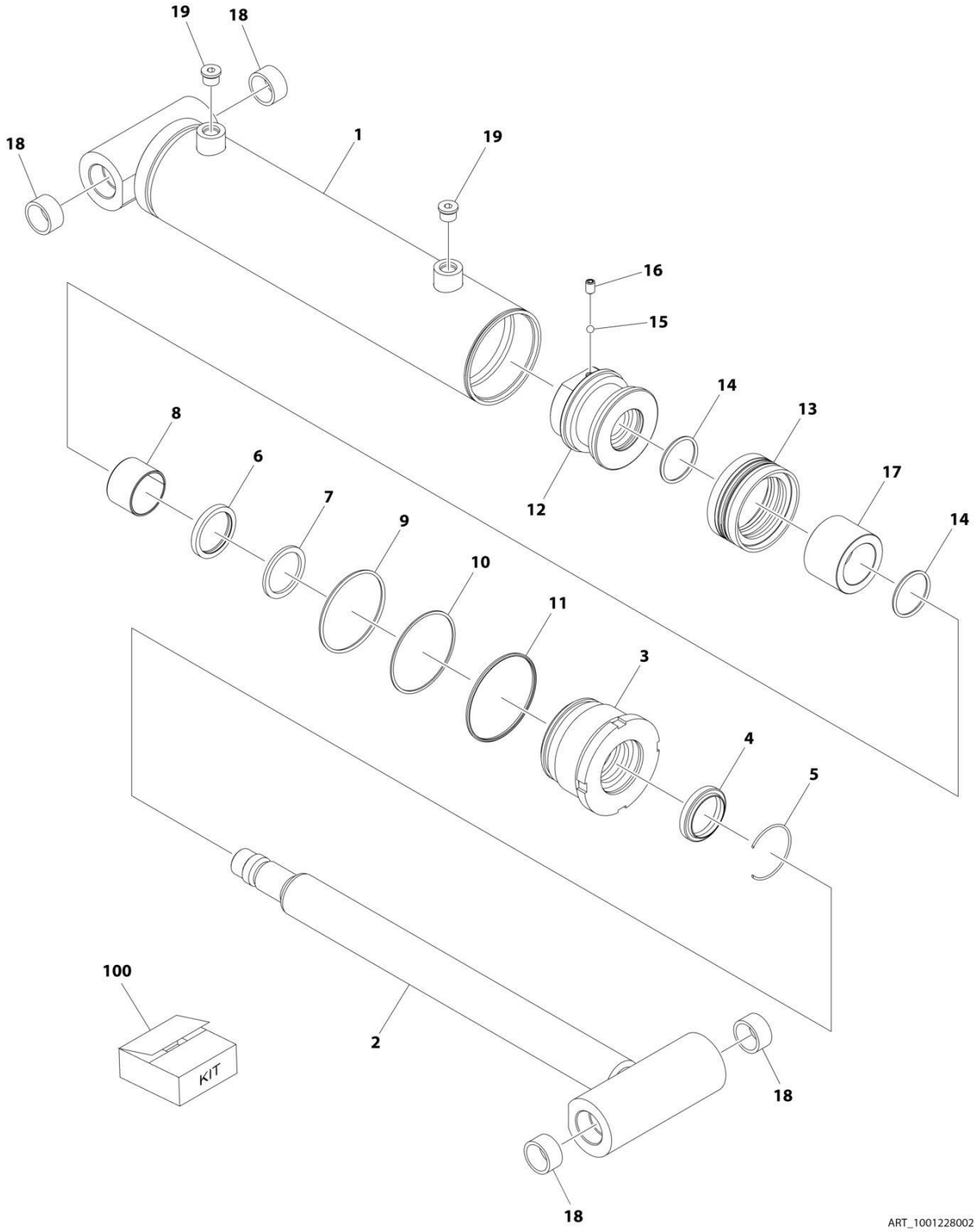

FIGURE 5-14. MASTER CYLINDER ASSEMBLY - 600S (SERVICE REPLACEMENT)

ITEM	PART NUMBER	QTY	DESCRIPTION	REV
	1001228002	Ref	MASTER CYLINDER ASSEMBLY	B
		Ref	Note: Original Cylinder May Have Been Replaced with Service Replacement. Identify PN Stamped on Cylinder Before Ordering Parts.	
1	See Note	NSS	Barrel (Note: Not Available for Purchase)	
2	70006774	1	Rod	
3	70006599	1	Head	
4	See Note	NSS	Wiper Rod (Note: Use Item 100)	
5	70002373	1	Ring, Retaining	
6	See Note	NSS	Seal, Rod (Note: Use Item 100)	
7	See Note	NSS	Ring, Back-up (Note: Use Item 100)	
8	See Note	NSS	Ring, Wear (Note: Use Item 100)	
9	See Note	NSS	O-Ring (Note: Use Item 100)	
10	See Note	NSS	Ring, Back-up (Note: Use Item 100)	
11	See Note	NSS	O-Ring (Note: Use Item 100)	
12	70006597	1	Piston	
13	See Note	NSS	Seal Piston (Note: Use Item 100)	
14	See Note	NSS	O-Ring (Note: Use Item 100)	
15	70022564	1	Ball	
16	70006601	1	Setscrew	
17	70006775	1	Spacer	
18	0961947	4	Bushing	
19	70023371	2	Plug, O-Ring	
100	70006776	1	Seal Kit (Includes Items 4, 6-11, 13 & 14)	

FIGURE 5-15. MASTER CYLINDER ASSEMBLY - 600SJ/660SJ (SERVICE REPACEMENT)

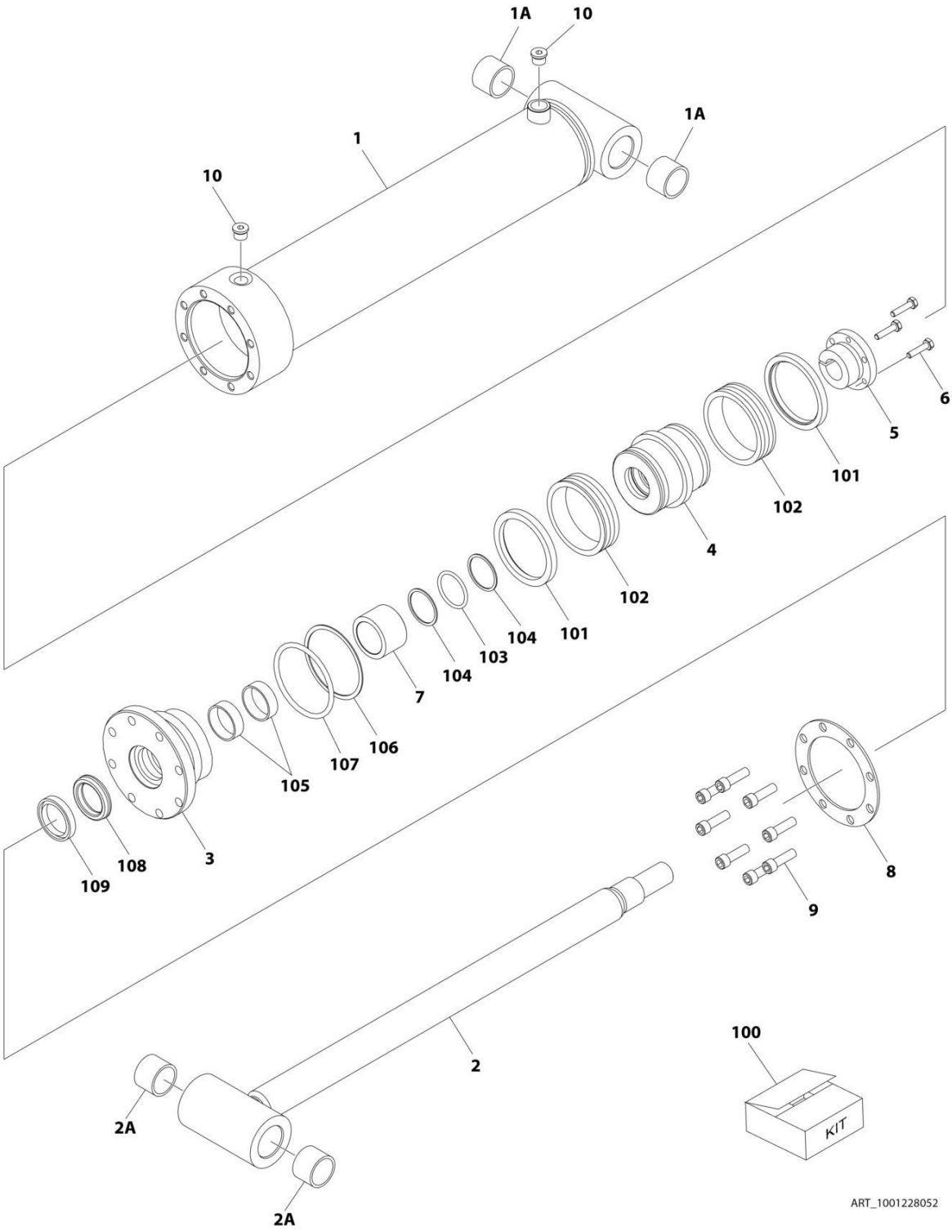

FIGURE 5-15. MASTER CYLINDER ASSEMBLY - 600SJ/660SJ (SERVICE REPACEMENT)

ITEM	PART NUMBER	QTY	DESCRIPTION	REV
	1001228052	Ref	**MASTER CYLINDER ASSEMBLY - 600SJ/660SJ (SERVICE REPACEMENT)**	A
		Ref	Note: Original Cylinder May Have Been Replaced with Service Replacement. Identify PN Stamped on Cylinder Before Ordering Parts.	
1	See Note	1	Barrel Weldment (Note: Not Available for Purchase)	
1A	0961951	2	Bushing	
2	70006447	1	Rod Weldment	
2A	0961951	2	Bushing	
3	70006446	1	Head	
4	70006445	1	Piston	
5	70006444	1	Bushing, Tapered	
6	0630535	3	Capscrew 1/4 x 1-1/8	
7	70006443	1	Spacer	
8	70006442	1	Ring, Washer	
9	3931620	8	Capscrew 3/8 x 1-1/4	
10	2220885	2	Plug, O-Ring	
100	1001138796	1	Seal Kit (Includes Items 101-109)	
101	See Note	NSS	Ring, Wear (Note: Use Item 100)	
102	See Note	NSS	Seal, Piston (Note: Use Item 100)	
103	See Note	NSS	O-Ring (Note: Use Item 100)	
104	See Note	NSS	Ring, Back-up (Note: Use Item 100)	
105	See Note	NSS	Ring, Wear (Note: Use Item 100)	
106	See Note	NSS	O-Ring (Note: Use Item 100)	
107	See Note	NSS	Ring, Back-up (Note: Use Item 100)	
108	See Note	NSS	Seal, Rod (Note: Use Item 100)	
109	See Note	NSS	Wiper, Rod (Note: Use Item 100)	

FIGURE 5-16. STEER CYLINDER ASSEMBLY

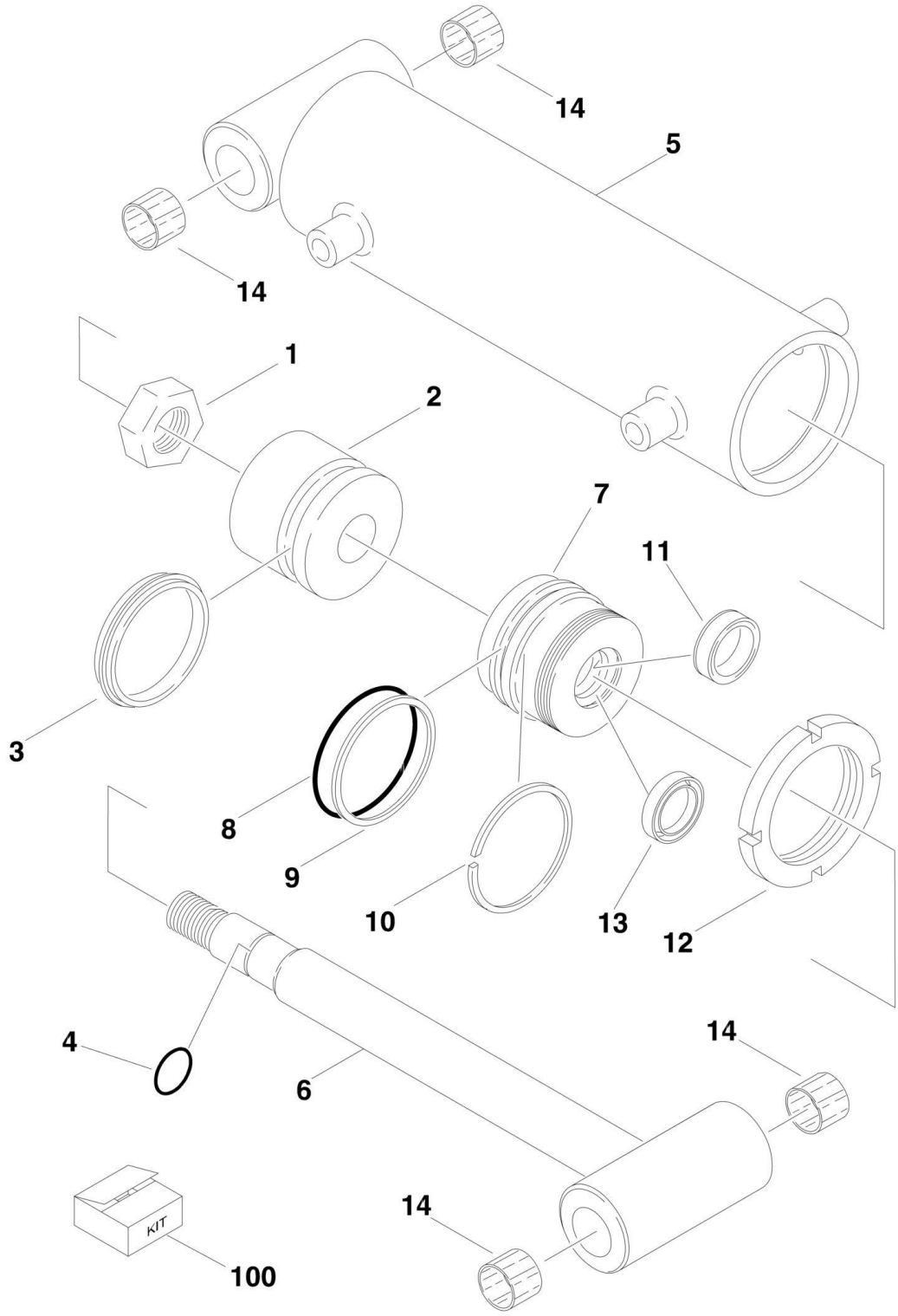

FIGURE 5-16. STEER CYLINDER ASSEMBLY

ITEM	PART NUMBER	QTY	DESCRIPTION	REV
	1683208	Ref	**STEER CYLINDER ASSEMBLY**	C
1	7001626	1	Locknut	
2	7001627	1	Piston	
3	See Note	NSS	Seal (Note: Use Item 100)	
4	See Note	NSS	O-Ring (Note: Use Item 100)	
5	See Note	1	Barrel Weldment (Note: Not Available - Purchase Complete Steer Cylinder Assembly)	
6	7001633	1	Rod Weldment	
7	7001629	1	Head	
8	See Note	NSS	O-Ring (Note: Use Item 100)	
9	See Note	NSS	Ring, Back-up (Note: Use Item 100)	
10	See Note	NSS	Ring, Retainer (Note: Use Item 100)	
11	See Note	NSS	Seal, Lip (Note: Use Item 100)	
12	7001630	1	Nut, Spanner	
13	See Note	NSS	Wiper (Note: Use Item 100)	
14	0961977	4	Bushings	
100	7001625	1	Seal Kit - 1683208 (Includes Items 3, 4, 8-11 & 13)	

FIGURE 5-17. TELESCOPE CYLINDER ASSEMBLY

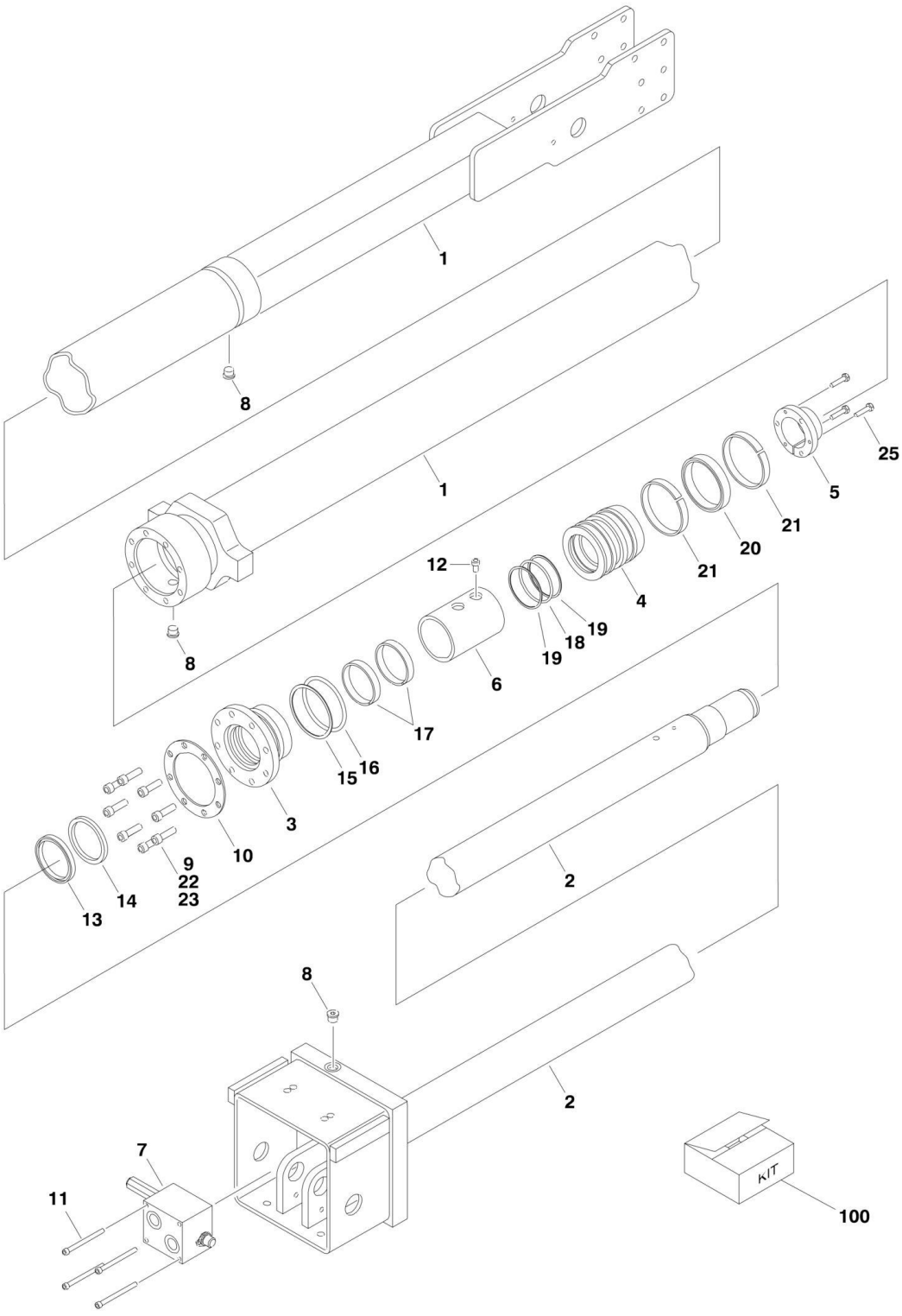

FIGURE 5-17. TELESCOPE CYLINDER ASSEMBLY

ITEM	PART NUMBER	QTY	DESCRIPTION	REV
		Ref	**TELESCOPE CYLINDER ASSEMBLY**	
	1683618	Ref	**Telescope Cylinder Assembly 600S & 660SJ**	3-D
	1683620	Ref	**Telescope Cylinder Assembly 600SJ**	2-C
1		Ref	Barrel Options:	
1	1683619	1	Barrel 600S & 660SJ	
1	1683621	1	Barrel 600SJ	
2		Ref	Rod Options:	
2	1683250	1	Rod 600S & 660SJ	
2	1683359	1	Rod 600SJ	
3	1683057	1	Head	
4	3480205	1	Piston	
5	0961897	1	Bushing, Tapered	
6	4566644	1	Spacer, Tube	
7	4641028	1	Valve Assembly (No serviceable parts - sold as assembly only)	
7	7024397	2	O-Rings Between Valve Block and Cylinder	
8	2220885	6	Plug, O-Ring	
9	3931620	8	Capscrew 3/8in-16NC x 1-1/4in	
10	3760369	1	Ring, Washer	
11	3931448	4	Capscrew 1/4in-20NC x 3in	
12	3931508	1	Capscrew 5/16in-18NC x 1/2in	
13	See Note	NSS	Wiper (Note: Use Item 100)	
14	See Note	NSS	Seal, Rod (Note: Use Item 100)	
15	See Note	NSS	O-Ring (Note: Use Item 100)	
16	See Note	NSS	Ring, Back-up (Note: Use Item 100)	
17	See Note	NSS	Ring, Wear (Note: Use Item 100)	
18	See Note	NSS	O-Ring (Note: Use Item 100)	
19	See Note	NSS	Ring, Back-up (Note: Use Item 100)	
20	See Note	NSS	T-Seal (Note: Use Item 100)	
21	See Note	NSS	Ring, Wear (Note: Use Item 100)	
22	0100011	AR	Compound, Locking	
23	0100038	AR	Primer, Locking	
25	0630535	3	Bolt 1/4in-20NC x 1-1/8in	
100	2901284	1	Seal Kit (Includes Items 13-21)	

FIGURE 5-18. CYLINDER BELLOWS INSTALLATION (OPTIONAL)

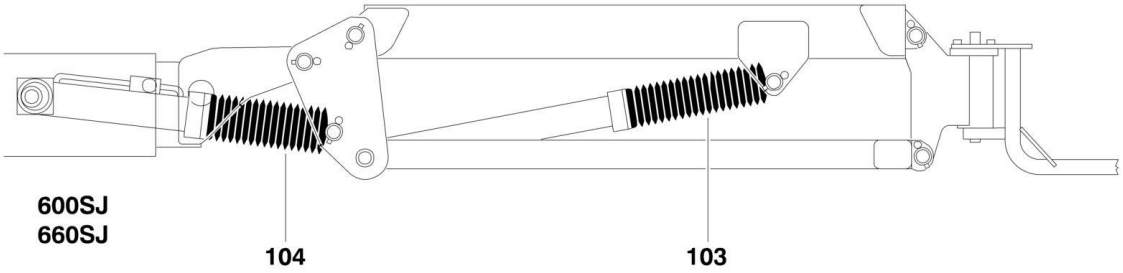

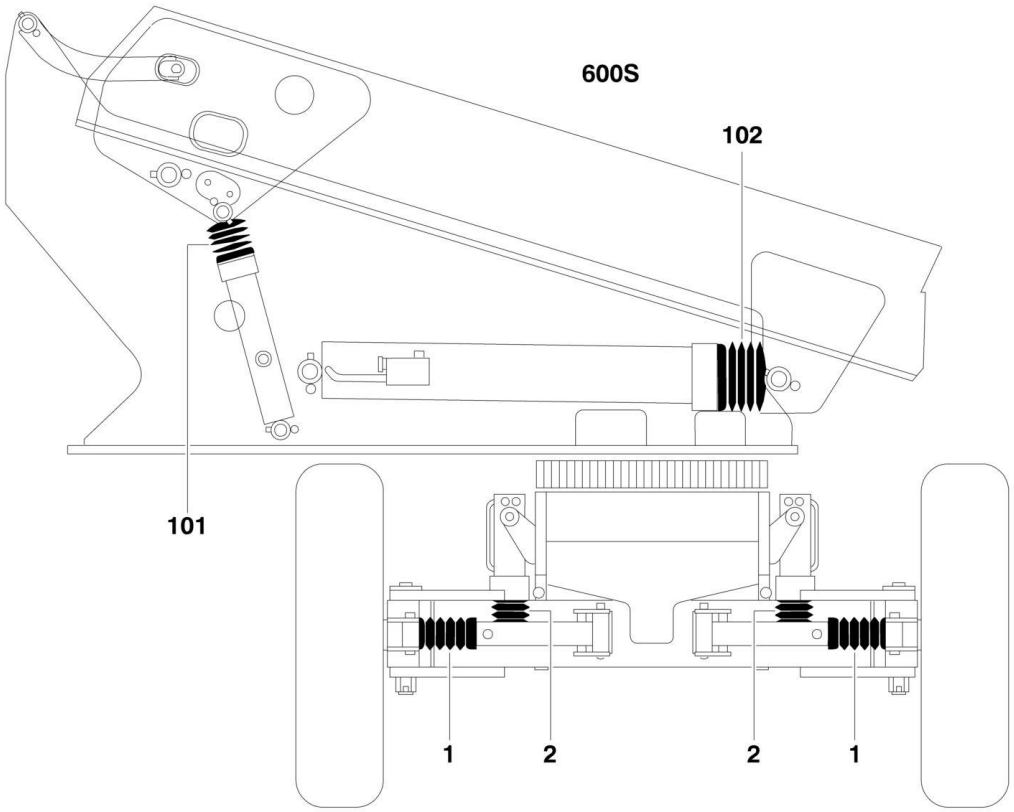

FIGURE 5-18. CYLINDER BELLOWS INSTALLATION (OPTIONAL)

ITEM	PART NUMBER	QTY	DESCRIPTION	REV
		Ref	**BELLOWS INSTALLATION - FRAME**	
	0255353	Ref	**2WS with Oscillating Axle**	
	0255354	Ref	**2WS with Fixed Axle**	
	0255355	Ref	**4WS with Oscillating Axle**	
	0255356	Ref	**4WS with Fixed Axle**	
1	0460150	AR	Bellows, Cylinder (1 Per Steer Cylinder)	
2	0460158	AR	Bellows, Cylinder (1 Per Lockout Cylinder)	
	0255929	Ref	**BELLOWS INSTALLATION - BOOM (600S)**	
101	0460152	1	Bellows, Cylinder (Master Cylinder)	
102	0460153	1	Bellows, Cylinder (Lift Cylinder)	
103	Not Required	0	Not Required	
104	0460152	1	Bellows, Cylinder (Platform Level Cylinder)	
	0255930	Ref	**BELLOWS INSTALLATION - BOOM (600SJ & 660SJ)**	
101	0460151	1	Bellows, Cylinder (Master Cylinder)	
102	0460153	1	Bellows, Cylinder (Lift Cylinder)	
103	0460161		Bellows, Cylinder (Articulating Jib Lift Cylinder)	
104	0460160	1	Bellows, Cylinder (Platform Level Cylinder)	

SECTION 6 - HYDRAULIC

FIGURE 6-1. HYDRAULIC DIAGRAM - DRIVE AND STEER (2WD/2WS)

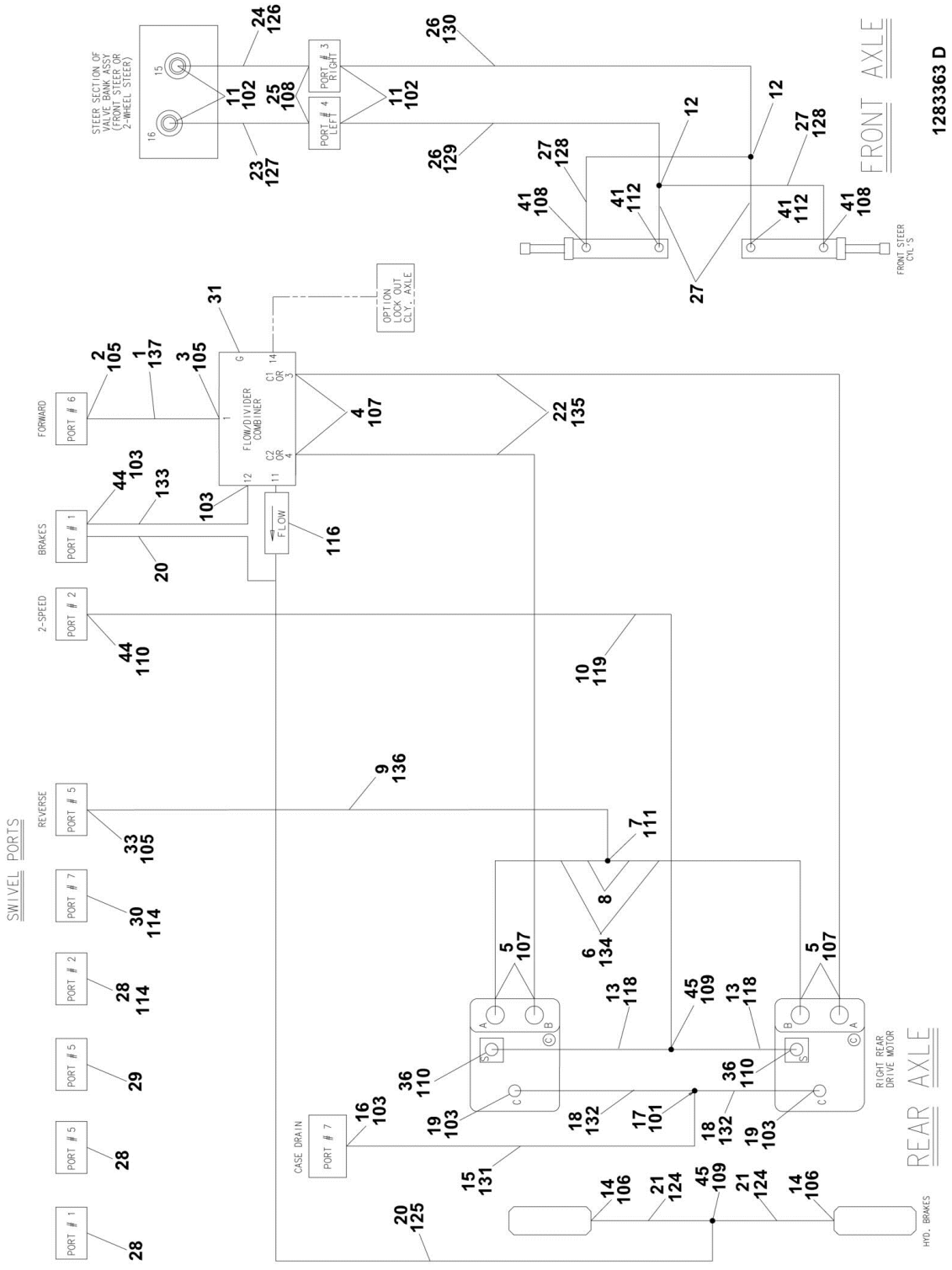

FIGURE 6-1. HYDRAULIC DIAGRAM - DRIVE AND STEER (2WD/2WS)

ITEM	PART NUMBER	QTY	DESCRIPTION	REV
		Ref	**HYDRAULIC DIAGRAM - DRIVE AND STEER (2WD/2WS)**	
	2792184	Ref	**Machines (SN 0300068000 through 0300075605)**	3
1	2752322	1	Hose	
2	2220646	1	Fitting, 90	
3	2220377	2	Fitting, Straight	
4	2220568	2	Fitting, 45	
5	2220465	4	Fitting, Straight	
6	2752245	2	Hose	
7	2220363	1	Fitting, Tee	
8	2220710	2	Fitting, Reducer	
9	2752345	1	Hose	
10	2751016	1	Hose	
11	2220371	4	Fitting, Straight	
12	2220490	2	Fitting, Tee	
13	2751013	2	Hose	
14	2220466	1	Fitting, 90	
15	2752812	1	Hose	
16	2220375	1	Fitting, Straight	
17	2220362	1	Fitting, Tee	
18	2752807	2	Hose	
19	2220671	2	Fitting, 90	
20	2752584	1	Hose	
21	2752592	2	Hose	
22	2752258	2	Hose	
23	2752632	1	Hose	
24	2752478	1	Hose	
25	2220473	2	Fitting, 90	
26	2752462	2	Hose	
27	2752963	4	Hose	
28	2220237	3	Fitting, O-Ring Plug	
29	2220242	1	Fitting, O-Ring Plug	
30	2220240	1	Fitting, O-Ring Plug	
31	2220235	1	Fitting, O-Ring Plug	
33	2220365	1	Fitting, 45	
36	2220502	2	Fitting, 45	
41	2220473	4	Fitting, 90	
44	2220582	2	Fitting, Straight	
45	2220504	2	Fitting, Tee	
	2792616	Ref	**Machines (SN 0300075606 through 0300087000)**	2
101	2220362	1	Fitting, Tee	
102	2220371	4	Fitting, Straight	
103	2220373	5	Fitting, Straight	
105	2220377	3	Fitting, Straight	
106	2220415	2	Fitting, Straight	
107	2220451	6	Fitting, Straight	
108	2220473	4	Fitting, 90	
109	2220504	2	Fitting, Tee	
110	2220582	3	Fitting, Straight	
111	2221170	1	Fitting, Tee	
112	2220606	2	Fitting, Tee	

ITEM	PART NUMBER	QTY	DESCRIPTION	REV
114	2220307	2	Fitting, Plug	
116	4641307	1	Valve, Check	
118	2753925	2	Hose	
119	2753924	1	Hose	
124	2752592	2	Hose	
125	2752910	1	Hose	
126	2752478	1	Hose	
127	2752632	1	Hose	
128	2753397	2	Hose	
129	2752475	1	Hose	
130	2752611	1	Hose	
131	2752928	1	Hose	
132	2753929	2	Hose	
133	2752929	1	Hose	
134	2753969	2	Hose	
135	2753967	2	Hose	
136	2752341	1	Hose	
137	2753435	1	Hose	

FIGURE 6-2. HYDRAULIC DIAGRAM - DRIVE AND STEER (4WD/2WS) (SN 0300068000 through 0300075605)

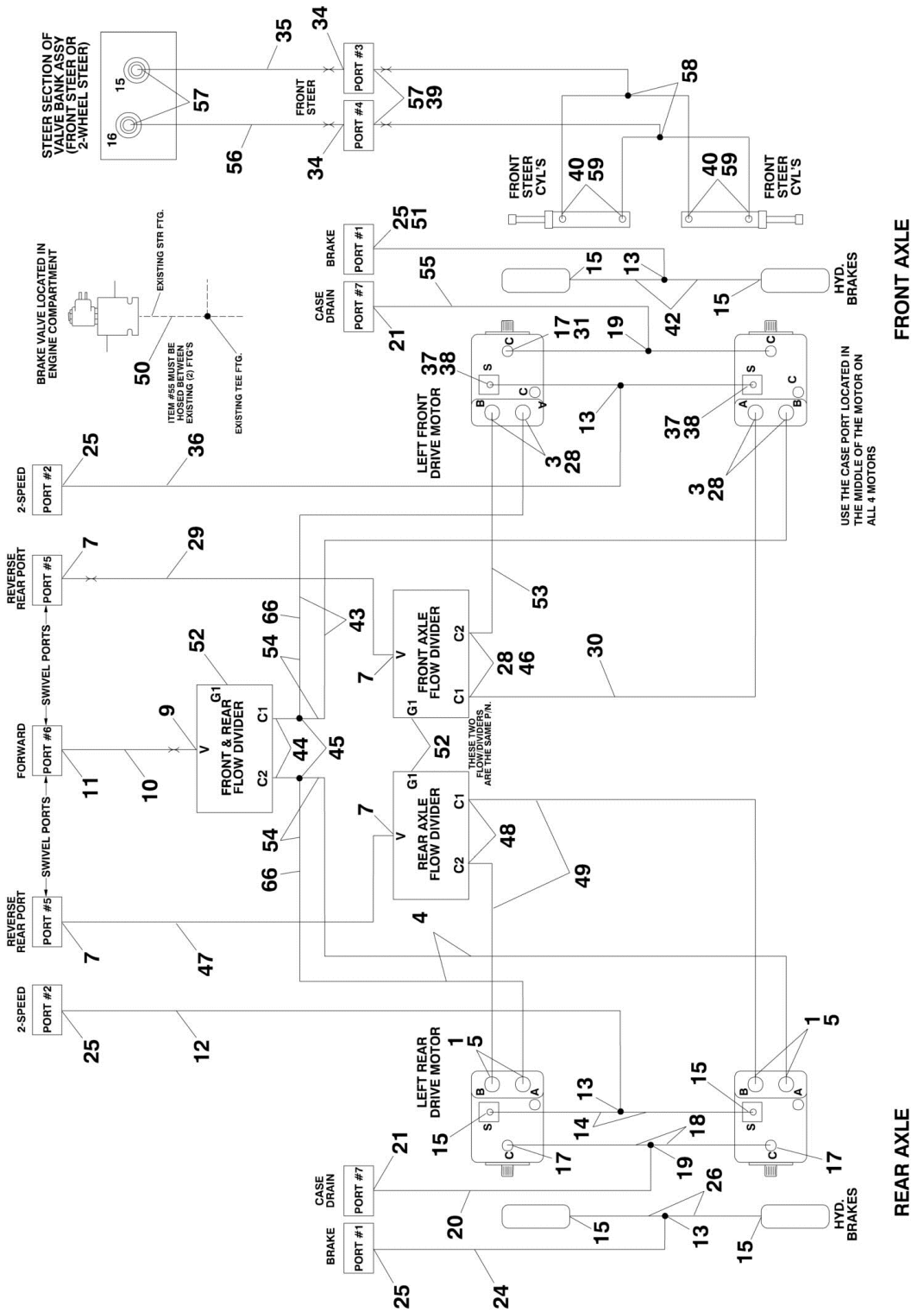

FIGURE 6-2. HYDRAULIC DIAGRAM - DRIVE AND STEER (4WD/2WS) (SN 0300068000 through 0300075605)

ITEM	PART NUMBER	QTY	DESCRIPTION	REV
	2792186	Ref	**DRIVE HYDRAULIC DIAGRAM - 4WD/2WS**	8
1	2220465	4	Fitting, 90	
3	2220500	4	Fitting, 45	
4	2752398	2	Hose	
5	2220622	4	Fitting, Reducer	
7	2220435	4	Fitting, Straight	
9	2220377	1	Fitting, Straight	
10	2752322	1	Hose	
11	2220646	1	Fitting, 90	
12	2751016	1	Hose	
13	2220504	4	Fitting, Tee	
14	2751013	2	Hose	
15	2220466	6	Fitting, 90	
17	2220671	4	Fitting, 90	
18	2752807	2	Hose	
19	2220362	2	Fitting, Tee	
20	2752812	1	Hose	
21	2220375	2	Fitting, Straight	
24	2752584	1	Hose	
25	2220582	4	Fitting, Straight	
26	2752592	2	Hose	
28	2220833	6	Fitting, Reducer	
29	2752256	1	Hose	
30	2752888	1	Hose	
31	2752898	2	Hose	
34	2220472	2	Fitting, 90	
35	2752478	1	Hose	
36	2751021	1	Hose	
37	2752918	2	Hose	
38	2220502	2	Fitting, 45	
39	2752462	2	Hose	
40	2752963	4	Hose	
42	2752909	2	Hose	
43	2752889	2	Hose	
44	2220550	2	Fitting, Reducer	
45	2220738	2	Fitting, Tee	
46	2220596	2	Fitting, 90	
47	2752249	1	Hose	
48	2220800	2	Fitting, Straight	
49	2752389	2	Hose	
50	2220914	1	Orifice (.043)	
51	2752443	1	Hose	
52	2220235	3	Plug #4	
53	2752893	1	Hose	
54	2220622	4	Fitting, Reducer	
55	2752810	1	Hose	
56	2752632	1	Hose	
57	2220582	4	Fitting, Straight	
58	2220363	1	Fitting, Tee	

ITEM	PART NUMBER	QTY	DESCRIPTION	REV
59	2220472	2	Fitting, 90	
60 to 65	Not Required	0	Not Required	
66	2220386	2	Fitting, 90	

FIGURE 6-3. HYDRAULIC DIAGRAM - DRIVE AND STEER (4WD/2WS) (SN 0300075606 through 0300087000)

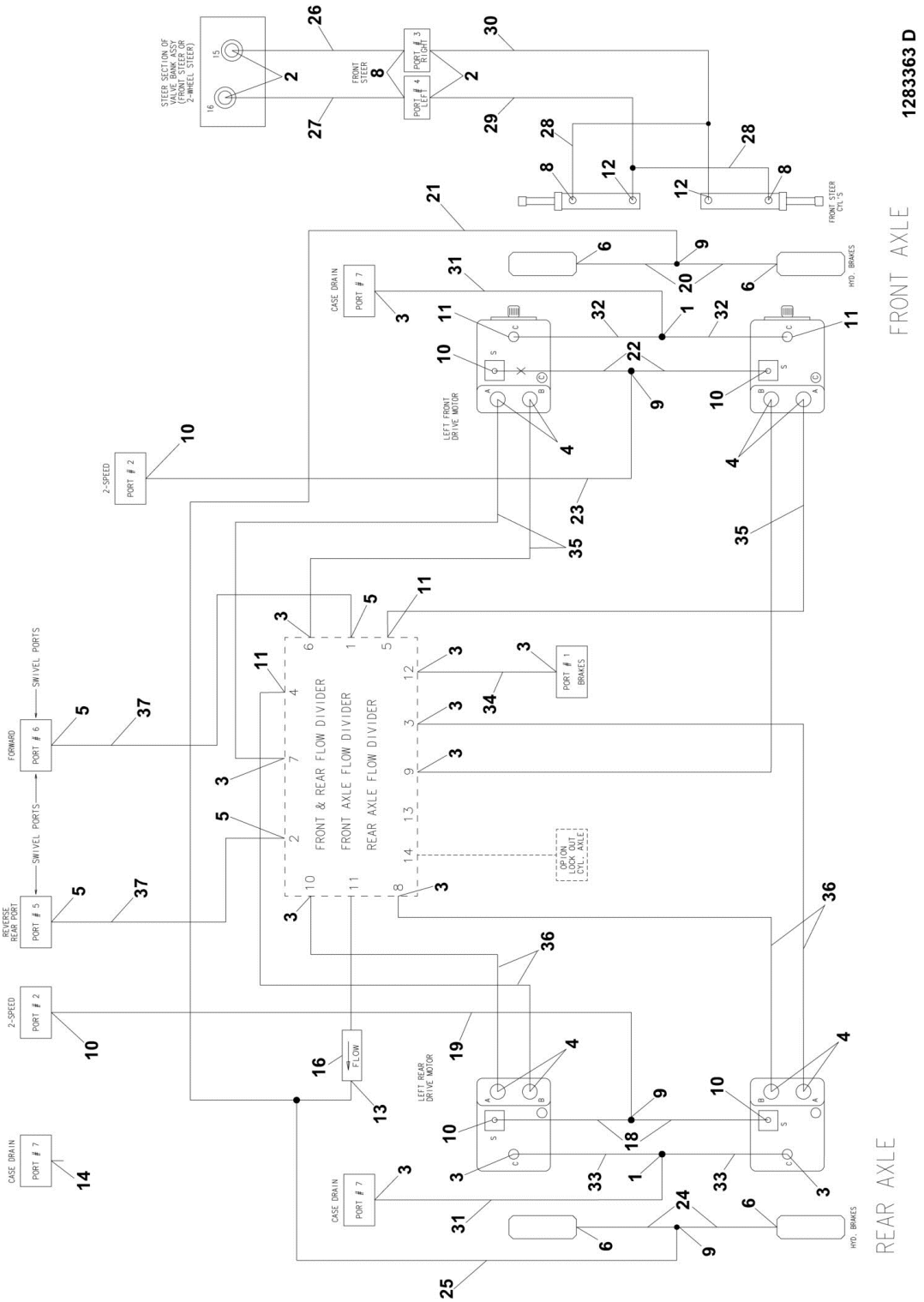

FIGURE 6-3. HYDRAULIC DIAGRAM - DRIVE AND STEER (4WD/2WS) (SN 0300075606 through 0300087000)

ITEM	PART NUMBER	QTY	DESCRIPTION	REV
	2792607	Ref	**DRIVE HYDRAULIC DIAGRAM - 4WD/2WS**	3
1	2220362	2	Fitting, Tee	
2	2220371	4	Fitting, Straight	
3	2220373	12	Fitting, Straight	
4	2220375	8	Fitting, Straight	
5	2220377	4	Fitting, Straight	
6	2220415	4	Fitting, Straight	
8	2220473	4	Fitting, 90	
9	2220504	4	Fitting, Tee	
10	2220582	6	Fitting, Straight	
11	2220596	4	Fitting, 90	
12	2220606	2	Fitting, Tee	
13	2220861	1	Fitting, Tee	
14	2220237	1	Plug	
16	4641284	1	Valve, Check	
18	2753925	2	Hose	
19	2753924	1	Hose	
20	2753926	2	Hose	
21	2752909	1	Hose	
22	2752574	2	Hose	
23	2752977	1	Hose	
24	2752592	2	Hose	
25	2752910	1	Hose	
26	2752478	1	Hose	
27	2752632	1	Hose	
28	2753397	2	Hose	
29	2752475	1	Hose	
30	2752611	1	Hose	
31	2752928	2	Hose	
32	2753928	2	Hose	
33	2753929	2	Hose	
34	2752929	1	Hose	
35	2753931	4	Hose	
36	2753930	4	Hose	
37		Ref	Hose Options:	
37	2753435	2	Hose **(SN 0300075606 through 0300081123)**	
37	2752331	2	Hose **(SN 0300081124 through 0300087000)**	

FIGURE 6-4. HYDRAULIC DIAGRAM - OSCILLATING AXLE

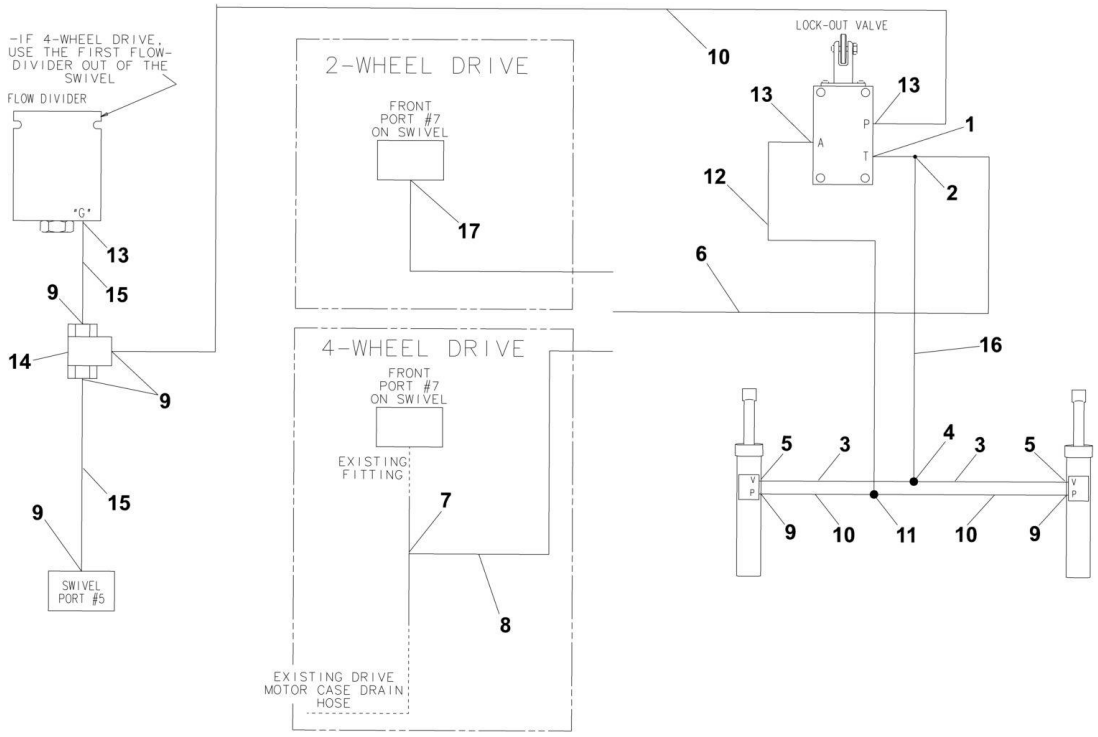

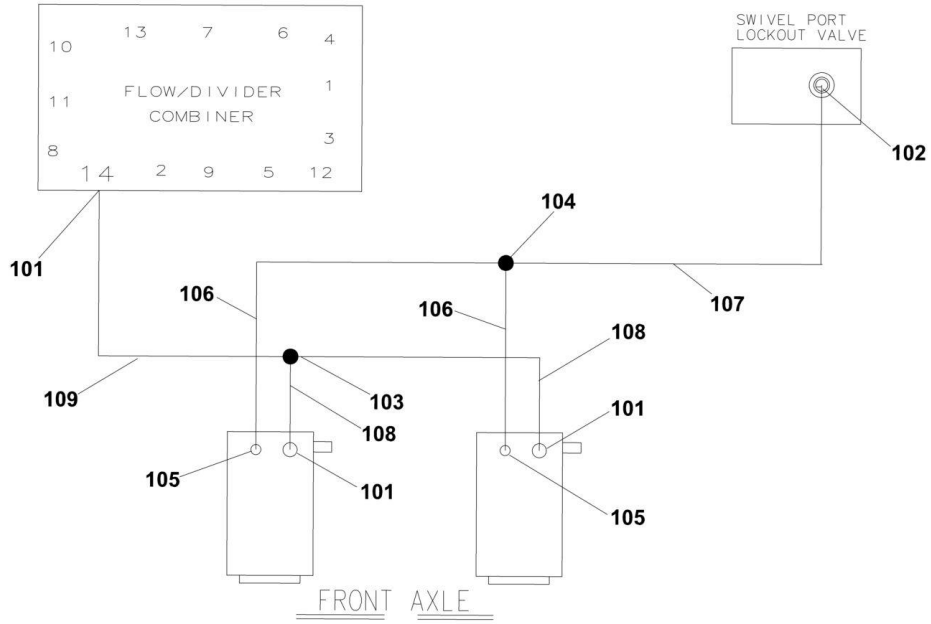

FIGURE 6-4. HYDRAULIC DIAGRAM - OSCILLATING AXLE

ITEM	PART NUMBER	QTY	DESCRIPTION	REV
		Ref	**AXLE LOCKOUT HYDRAULIC DIAGRAM - OSCILLATING AXLE**	
	2792204	Ref	**Machines (SN 0300068000 through 0300075605)**	3
1	2220603	1	Fitting, Straight	
2	2220635	1	Fitting, Tee	
3	2752822	2	Hose	
4	2220490	1	Fitting, Tee	
5	2220371	2	Fitting, Straight	
6	2752823	1	Hose	
7	2220385	1	Fitting, Tee	
8	2220619	1	Fitting, Reducer	
9	2220582	6	Fitting, Straight	
10	2751397	3	Hose	
11	2220504	1	Fitting, Tee	
12	2751015	1	Hose	
13	2220415	3	Fitting, Straight	
14	4640939	1	Valve, Shuttle	
15	2751020	2	Hose	
16	2752824	1	Hose	
17	2220577	1	Fitting, Straight	
	2792612	Ref	**Machines (SN 0300075606 through 0300087000)**	1
101	2220371	3	Fitting, Straight	
102	2220468	1	Fitting, Straight	
103	2220490	1	Fitting, Tee	
104	2220504	1	Fitting, Tee	
105	2220415	2	Fitting, Straight	
106	2751434	2	Hose	
107	2751410	1	Hose	
108	2753933	2	Hose	
109	2752462	1	Hose	

FIGURE 6-5. HYDRAULIC DIAGRAM - STANDARD (SN 0300068000 through 0300075605)

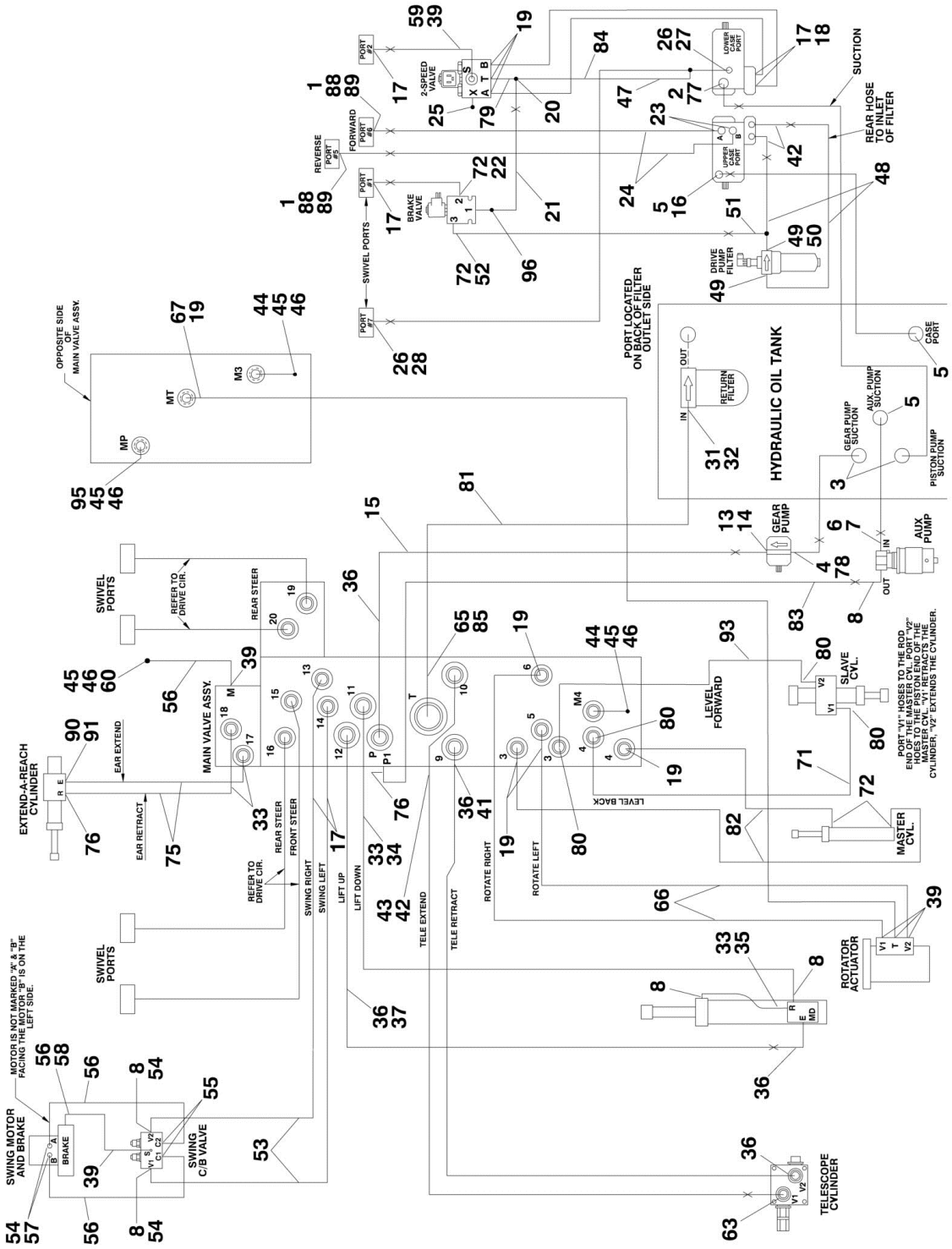

FIGURE 6-5. HYDRAULIC DIAGRAM - STANDARD (SN 0300068000 through 0300075605)

ITEM	PART NUMBER	QTY	DESCRIPTION	REV
		Ref	**STANDARD HYDRAULIC DIAGRAM**	
	2792179	Ref	**Standard Hydraulic Diagram 600S**	21
	2792181	Ref	**Standard Hydraulic Diagram 600SJ**	19
	2792180	Ref	**Standard Hydraulic Diagram 660SJ**	21
1	2220377	2	Fitting, Straight	
2	2752752	1	Hose	
3	2220380	2	Fitting, Straight	
4	2220376	1	Fitting, Straight	
5	2220578	3	Fitting, 90	
6	2752653	1	Hose	
7	2220408	1	Fitting, Straight	
8	2220628	5	Fitting, 90	
13	2220810	1	Fitting, Reducer	
14	4640744	1	Fitting, Check Valve	
15	2752504	1	Hose	
16	2752654	1	Hose	
17	2220582	AR	Fitting, Straight	
18	2751427	2	Hose	
19	2220415	AR	Fitting, Straight	
20	2220605	1	Fitting, Tee	
21	2752573	1	Hose	
22	2752594	1	Hose	
23	2220646	2	Fitting, 90	
24	2752340	2	Hose	
25	2220235	1	Fitting, Plug	
26	2220375	2	Fitting, Straight	
27	2220385	1	Fitting, Tee	
28	2752514	1	Hose	
31	2220921	1	Fitting, Reducer	
32	2220498	1	Fitting, 45	
33	2220372	AR	Fitting, Straight	
34	2752631	1	Hose	
35	2752632	1	Hose	
36	2220373	5	Fitting, Straight	
37	2752515	1	Hose	
38	2752587	1	Hose **(SN 0300068000 through 0300070974)**	
39	2220466	AR	Fitting, 90	
40	2220596	2	Fitting, 90 **(SN 0300068000 through 0300070974)**	
41		Ref	Hose Options:	
41	2752516	1	Hose **(SN 0300068000 through 0300070974)**	
41	2751474	1	Hose **(SN 0300070975 through 0300075605)**	
42	2220947	3	Fitting, Straight	
43	2752762	1	Hose	
44	2220873	AR	Fitting, Straight Nipple	
45	2220428	AR	Fitting, Quick Coupling	
46	2220429	AR	Fitting, Dust Cap	
47	2220618	1	Fitting, Reducer	
48	2752763	2	Hose	
49	2220906	2	Fitting, 90	
50	2220948	1	Fitting, Tee	

ITEM	PART NUMBER	QTY	DESCRIPTION	REV
51	2220618	1	Fitting, Reducer	
52	2752580	1	Hose	
53	2752588	2	Hose	
54	2220609	4	Fitting, Reducer	
55	2220468	2	Fitting, Straight	
56	2752981	AR	Hose	
57	2220497	2	Fitting, Straight	
58	2220502	1	Fitting, 45	
59	2751396	1	Hose	
60		Ref	Fitting, Straight Options:	
60	2220414	AR	Fitting, Straight 600S/660SJ	
60	Not Required	0	Fitting, Straight 600SJ	
61	2752433	1	Hose **(SN 0300068000 through 0300070974)**	
62	2220462	1	Fitting, 90 **(SN 0300068000 through 0300070974)**	
63	2220950	1	Fitting, 45	
64	2752517	1	Hose **(SN 0300068000 through 0300070974)**	
65	2220974	1	Fitting, Long Straight	
66		Ref	Hose Options:	
66	2752598	2	Hose 600S & 600SJ	
66	2752596	2	Hose 660SJ	
67		Ref	Hose Options:	
67	2752599	1	Hose 600S & 600SJ	
67	2752597	1	Hose 660SJ	
71		Ref	Hose Options:	
71	2752633	AR	Hose 600S & 660SJ	
71	2751868	AR	Hose 600SJ	
72	2220472	4	Fitting, 90	
75		Ref	Hose Options:	
75	2752633	2	Hose 660SJ	
75	2753048	2	Hose 600SJ	
76	2220473	AR	Fitting, 90	
77	2220479	1	Fitting, Straight	
78	2752753	1	Hose	
79	2220909	1	Fitting, Restrictor	
80	2220603	4	Fitting, Straight	
81	2752783	1	Hose	
82	2752591	2	Hose	
83	2752643	1	Hose	
84	2752981	1	Hose	
85	2220409	1	Fitting, 45	
87	2220574	1	Fitting, Straight **(SN 0300068000 through 0300070974)**	
88	0100011	AR	Compound, Locking	
89	0100038	AR	Loctite, Primer	
90	2180724	1	Fitting, 90 (600SJ & 660SJ Only)	
91	2180380	1	Fitting, Pipe Plug (600SJ & 660SJ Only)	
92	1703533	1	Decal - Hose Tags (Not Shown)	
93	2753083	1	Hose (600SJ & 660SJ Only)	
94	4240018	7	Tie-Strap (Not Shown)	
95	2220873	1	Fitting, Nipple	
96	2220914	1	Fitting, Restrictor	

FIGURE 6-6. HYDRAULIC DIAGRAM - STANDARD (SN 0300075606 through 0300087000)

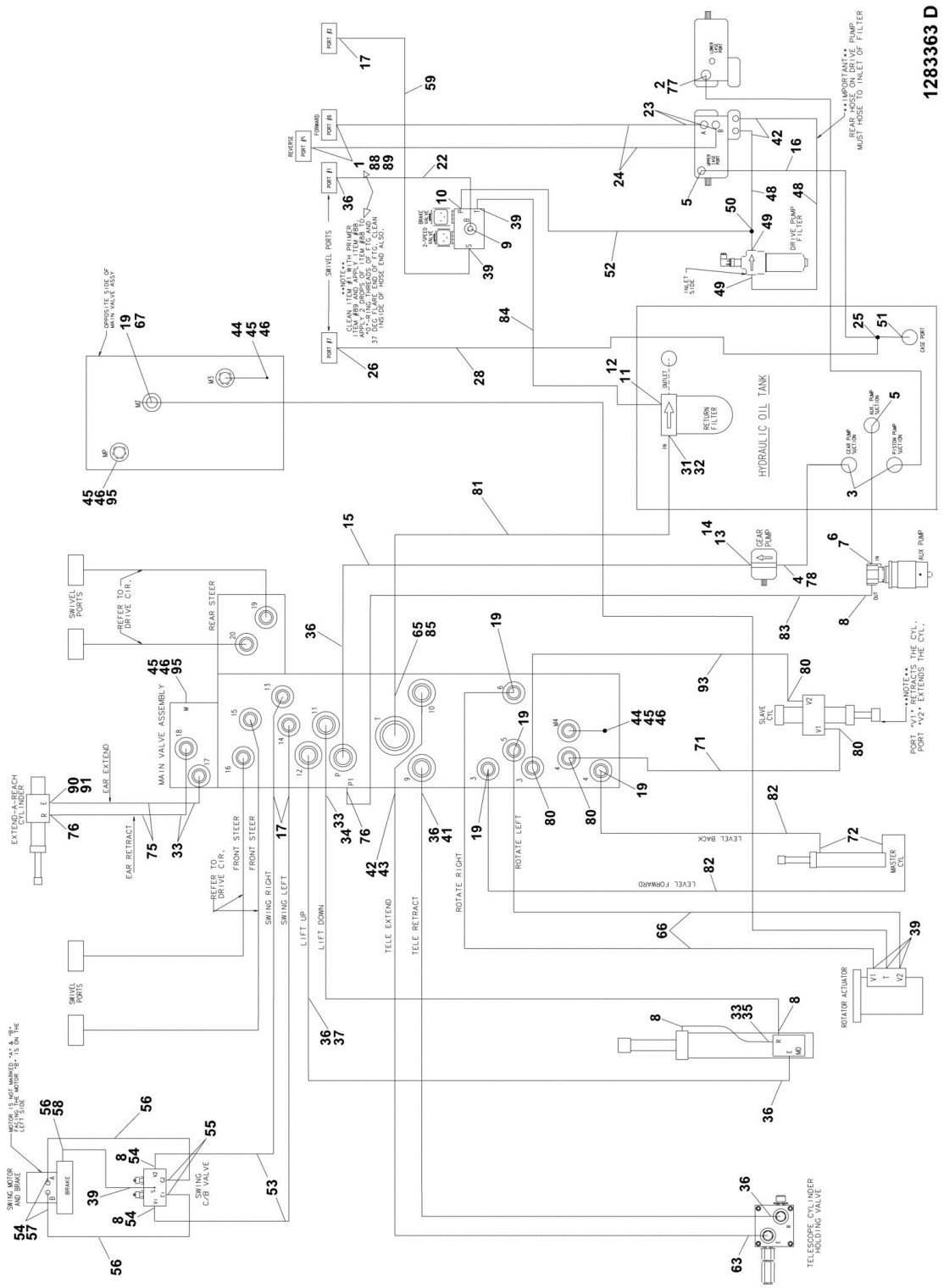

FIGURE 6-6. HYDRAULIC DIAGRAM - STANDARD (SN 0300075606 through 0300087000)

ITEM	PART NUMBER	QTY	DESCRIPTION	REV
		Ref	**STANDARD HYDRAULIC DIAGRAM**	
	2792608	Ref	**Standard Hydraulic Diagram 600S**	6
	2792614	Ref	**Standard Hydraulic Diagram 600SJ**	5
	2792603	Ref	**Standard Hydraulic Diagram 660SJ**	4
1	2220377	2	Fitting, Straight	
2	2752752	1	Hose	
3	2220380	2	Fitting, Straight	
4	2220376	1	Fitting, Straight	
5	2220578	2	Fitting, 90	
6	2752653	1	Hose	
7	2220408	1	Fitting, Straight	
8	2220628	5	Fitting, 90	
9	2220596	1	Fitting, 90	
10	2220474	1	Fitting, 90	
11	2220574	1	Fitting, 90	
12	0100020	AR	Sealant, Pipe	
13	2220810	1	Fitting, Reducer	
14	4640744	1	Fitting, Check Valve	
15	2752504	1	Hose	
16	2752654	1	Hose	
17	2220582	3	Fitting, Straight	
19	2220415	5	Fitting, Straight	
22	2752502	1	Hose	
23	2220646	2	Fitting, 90	
24	2752340	2	Hose	
25	2220407	1	Fitting, 90	
26	2220375	1	Fitting, Straight	
28	2753968	1	Hose	
31	2220921	1	Fitting, Reducer	
32	2220498	1	Fitting, 45	
33	2220372	AR	Fitting, Straight	
34	2752631	1	Hose	
35	2752632	1	Hose	
36	2220373	6	Fitting, Straight	
37	2752515	1	Hose	
39	2220466	6	Fitting, 90	
41	2751474	1	Hose	
42	2220947	3	Fitting, Straight	
43	2752762	1	Hose	
44	2220873	2	Fitting, Straight Nipple	
45	2220428	AR	Fitting, Quick Coupling	
46	2220429	AR	Fitting, Dust Cap	
47	2220618	1	Fitting, Reducer	
48	2752763	2	Hose	
49		Ref	Fitting, 90 Options:	
49	2220906	2	Fitting, 90 **(SN 0300075606 through 0300084826)**	
49	2221042	2	Fitting, 90 **(SN 0300084827 through 0300087000)**	
50	2220948	1	Fitting, Tee	
51	2220738	1	Fitting, Tee	
52	2753957	1	Hose	

ITEM	PART NUMBER	QTY	DESCRIPTION	REV
53	2752588	2	Hose	
54	2220609	AR	Fitting, Reducer	
55	2220468	2	Fitting, Straight	
56	2752981	3	Hose	
57	2220497	2	Fitting, Straight	
58	2220502	1	Fitting, 45	
59	2751396	1	Hose	
63	2220950	1	Fitting, 45	
65	2220974	1	Fitting, Long Straight	
66		Ref	Hose Options:	
66	2752598	2	Hose 600S & 600SJ	
66	2752596	2	Hose 660SJ	
67		Ref	Hose Options:	
67	2752599	1	Hose 600S & 600SJ	
67	2752597	1	Hose 660SJ	
71		Ref	Hose Options:	
71	2752633	AR	Hose 600S & 660SJ	
71	2751868	AR	Hose 600SJ **(SN 0300075606 through 0300087911)**	
71	2753048	AR	Hose 600SJ **(SN 0300087912 through 0300087000)**	
72	2220472	AR	Fitting, 90	
75		Ref	Hose Options:	
75	Not Required	0	Hose 600S	
75	2753048	2	Hose 600SJ	
75	2752633		Hose 660SJ	
76	2220473	AR	Fitting, 90	
77	2220479	1	Fitting, Straight	
78	2752753	1	Hose	
80	2220603	4	Fitting, Straight	
81	2752783	1	Hose	
82	2752591	2	Hose	
83	2752643	1	Hose	
84	2753325	1	Hose	
85	2220409	1	Fitting, 45	
88	0100011	AR	Compound, Locking	
89	0100038	AR	Loctite, Primer	
90	2180724	1	Fitting, 90 (600SJ & 660SJ Only)	
91	2180380	1	Fitting, Pipe Plug (600SJ & 660SJ Only)	
92	1703533	2	Decal - Hose Tags (Not Shown)	
93		Ref	Hose Options:	
93	2752633	1	Hose 600S & 660SJ	
93	2752633	1	Hose 600SJ **(SN 0300075606 through 0300087911)**	
93	2753048	1	Hose 600SJ **(SN 0300087912 through 0300087000)**	
94	4240018	7	Tie-Strap (Not Shown)	
95	2220873	1	Fitting, Nipple	

FIGURE 6-7. HYDRAULIC DIAGRAM LIST

ITEM	PART NUMBER	QTY	DESCRIPTION	REV
		Ref	**Note: Information on diagrams not shown is available from JLG Service/Parts Departments.**	
		Ref	**Drive and Steer Hydraulic Diagrams:**	
		Ref	Drive and Steer Hydraulic Diagrams **(SN 0300068000 through 0300075605)**	
	2792184	Ref	2WD/2WS Machines	
	2792185	Ref	2WD/4WS Machines	
	2792186	Ref	4WD/2WS Machines	
	2792187	Ref	4WD/4WS Machines	
		Ref	Drive and Steer Hydraulic Diagrams **(SN 0300075606 through 0300087000)**	
	2792616	Ref	2WD/2WS Machines	
	2792617	Ref	2WD/4WS Machines	
	2792607	Ref	4WD/2WS Machines	
	2792615	Ref	4WD/4WS Machines	
		Ref	**AXLE LOCKOUT HYDRAULIC DIAGRAM**	
	2792204	Ref	Axle Lockout Hydraulic Diagram **(SN 0300068000 through 0300075605)**	
	2792612	Ref	Axle Lockout Hydraulic Diagram **(SN 0300075606 through 0300087000)**	
		Ref	**Loop Flushing Hydraulic Diagram**	
	2792660	Ref	Loop Flushing Hydraulic 2WD	
	2792659	Ref	Loop Flushing Hydraulic 4WD	
		Ref	**Oil Cooler Hydraulic Diagrams:**	
	0256762	Ref	**Deutz Engine**	
	1282665	Ref	**Deutz Engine**	
	0272041	Ref	**Ford Engine**	
	1283309	Ref	**Ford Engine**	
		Ref	**Standard Hydraulic Diagrams:**	
		Ref	Standard Hydraulic Diagrams: **(SN 0300068000 through 0300075605)**	
	2792179	Ref	Standard Hydraulic Diagrams 600S	
	1282380	Ref	Standard Hydraulic Diagrams 600S	
	2792181	Ref	Standard Hydraulic Diagrams 600SJ	
	1282380	Ref	Standard Hydraulic Diagrams 600SJ	
	2792180	Ref	Standard Hydraulic Diagrams 660SJ	
	1282380	Ref	Standard Hydraulic Diagrams 660SJ	
		Ref	Standard Hydraulic Diagrams: **(SN 0300075606 through 0300087000)**	
	2792608	Ref	Standard Hydraulic Diagrams 600S	
	1283363	Ref	Standard Hydraulic Diagrams 600S	
	2792614	Ref	Standard Hydraulic Diagrams 600SJ	
	1283363	Ref	Standard Hydraulic Diagrams 600SJ	
	2792613	Ref	Standard Hydraulic Diagrams 660SJ	
	1283363	Ref	Standard Hydraulic Diagrams 660SJ	
		Ref	**Standard Hydraulic Schematic**	
	2792176	Ref	Standard Hydraulic Schematic **(SN 0300068000 through 0300075605)**	
	2792605	Ref	Standard Hydraulic Schematic **(SN 0300075606 through 0300087000)**	

ITEM	PART NUMBER	QTY	DESCRIPTION	REV
		Ref	**Tool Hydraulic Diagrams:**	
	2792325	Ref	Tool Hydraulic Diagrams 600S	
	2792326	Ref	Tool Hydraulic Diagrams 600SJ	
	2792327	Ref	Tool Hydraulic Diagrams 660SJ	
		Ref	**Tow Hydraulic Diagram**	
	2792266	Ref	2WS **(SN 0300068000 through 0300075605)**	
	2792315	Ref	4WS **(SN 0300068000 through 0300075605)**	
	2792630	Ref	Tow Hydraulic Diagram **(SN 0300075606 through 0300087000)**	

SECTION 7 - ELECTRICAL

FIGURE 7-1. ELECTRICAL DIAGRAM LIST

ITEM	PART NUMBER	QTY	DESCRIPTION	REV
		Ref	**ALARM ELECTRICAL DIAGRAM**	
	4933025	Ref	**Motion Alarm**	1
	1282937	Ref	**Motion Alarm**	A
	4933026	Ref	**Travel Alarm**	1
	1282937	Ref	**Travel Alarm**	A
		Ref	**DRIVE CUT-OUT ELECTRICAL DIAGRAMS**	
	4932990	Ref	**Above Elevation**	2
	1282828	Ref	**Above Elevation**	B
	4932993	Ref	**Above Elevation Tilt**	2
	1282828	Ref	**Above Elevation Tilt**	B
	4932991	Ref	**8 Meter**	2
	1282828	Ref	**8 Meter**	B
	3640493	1	Rail, Mounting	
	4460607	2	Stop, Terminal	
	4120013	1	Socket, Relay	
	3740058	1	Relay 4PDT	
	3740063	1	Spring, Relay	
	4932900	Ref	**DUAL CAPACITY ELECTRICAL DIAGRAM (AUSTRALIAN SPEC)**	1-A
	4933272	Ref	**EIM LOAD CELL ELECTRICAL DIAGRAM**	1-A
	4932986	Ref	**ENGINE LOW OIL SHUTDOWN ELECTRICAL DIAGRAM**	2-B
	4933313	Ref	**FLOOD LIGHTS ELECTRICAL DIAGRAM**	1-A
		Ref	**GENERATOR ELECTRICAL DIAGRAMS**	
	4933215	Ref	**110 Volt (SN 0300068000 through 0300077489)**	1-B
	4933216	Ref	**220 Volt (SN 0300068000 through 0300077489)**	1-B
	4933300	Ref	**110/220 Volt (SN 0300077490 through 0300087000)**	1-A
	4933217	Ref	**GLOW PLUG DIAGRAM**	B
		Ref	**LIGHTS ELECTRICAL DIAGRAM**	
	4933219	Ref	**Headlight/Taillight and Chassis Illumination Lights Harness**	1-B
	4922643	1	Harness (Located in Ground Console Box)	
	3740049	1	Relay	
		Ref	**OIL COOLER ELECTRICAL DIAGRAMS**	
	0256762	Ref	**Deutz Engine**	4
	1282665	Ref	**Deutz Engine**	D
	4922509	Ref	**PLATFORM ELECTRICAL DIAGRAM**	
	4933218	Ref	**PLATFORM SOFT TOUCH SYSTEM ELECTRICAL DIAGRAM**	1-B
		Ref	**PLATFORM WORKLIGHTS ELECTRICAL DIAGRAMS**	
	0270814	Ref	**Platform Worklights Electrical Diagrams (SN 0300068000 through 0300074440)**	3-E
	0273486	Ref	**Platform Worklights Electrical Diagrams 600S (SN 0300074441 through 0300087000)**	C
	0273490	Ref	**Platform Worklights Electrical Diagrams 600SJ (SN 0300074441 through 0300087000)**	C
	0273491	Ref	**Platform Worklights Electrical Diagrams 660SJ (SN 0300074441 through 0300087000)**	C
	4933263	Ref	**POWER TOOL ELECTRICAL DIAGRAM**	1-B
		Ref	**REMOTE CONTROL ELECTRICAL DIAGRAMS:**	
	4922847	Ref	Harness, Remote Control Box	1-A
	4922863	Ref	Harness, Cable Remote Control	1-A
	4933274	Ref	Electrical Diagram	A

ITEM	PART NUMBER	QTY	DESCRIPTION	REV
		Ref	**STANDARD ELECTRICAL DIAGRAMS**	
	4933291	Ref	**Caterpillar Engine**	1-A
	4933222	Ref	**Deutz Engine (SN 0300068000 through 0300084826)**	4-D
	4933318	Ref	**Deutz Engine (SN 0300084827 through 0300087000)**	D
		Ref	**STANDARD ELECTRICAL SCHEMATIC**	
	1870132	Ref	**Caterpillar and Ford Engine**	H
	1870132	Ref	**Deutz Engine (SN 0300068000 through 0300084826)**	H
	1870191	Ref	**Deutz Engine (SN 0300084827 through 0300087000)**	A
	0270805	Ref	**STROBE LIGHT ELECTRICAL DIAGRAM**	2
	1283235	Ref	**STROBE LIGHT ELECTRICAL DIAGRAM**	E

FIGURE 7-2. HARNESS COMPONENTS INSTALLATION

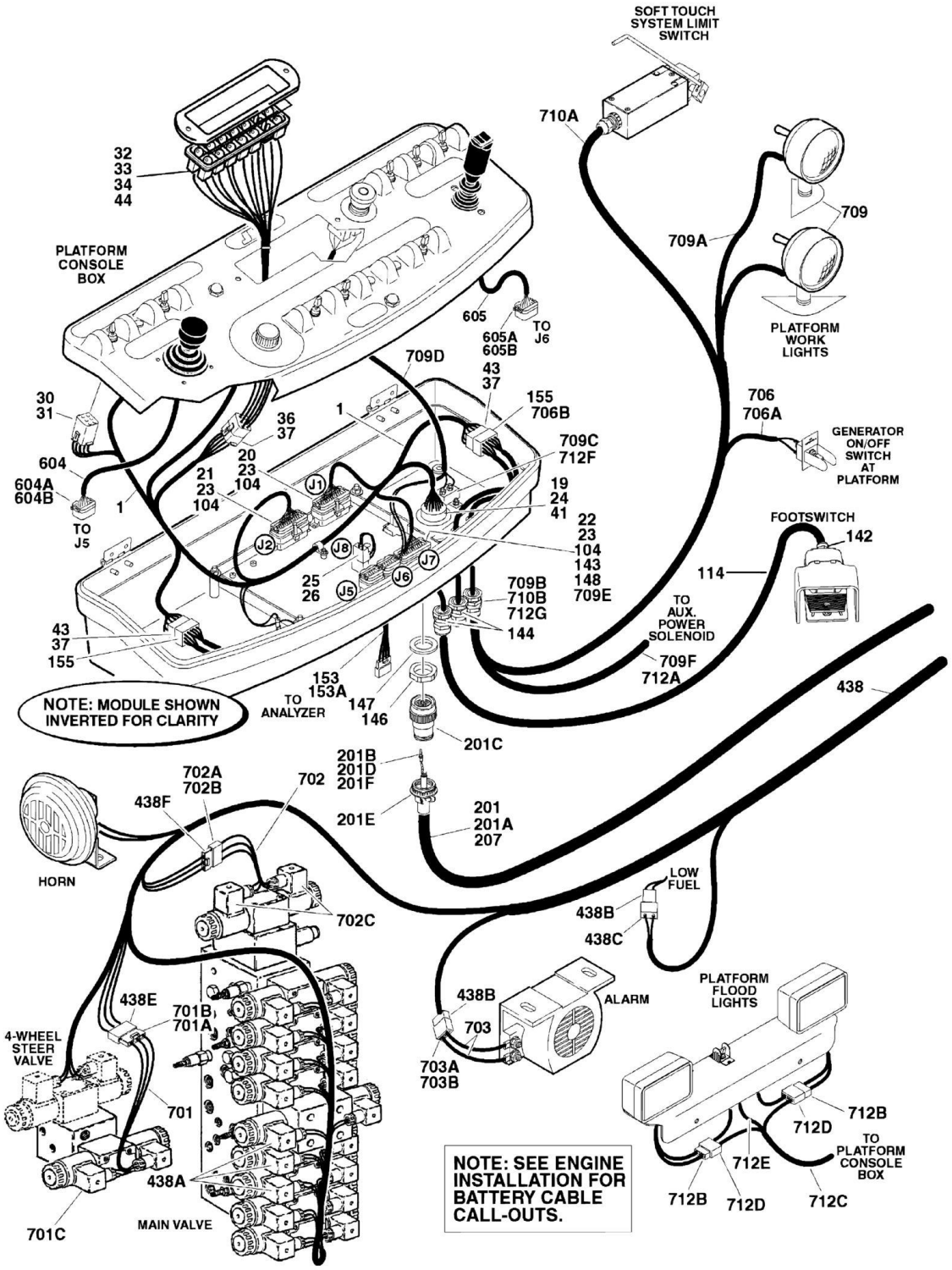

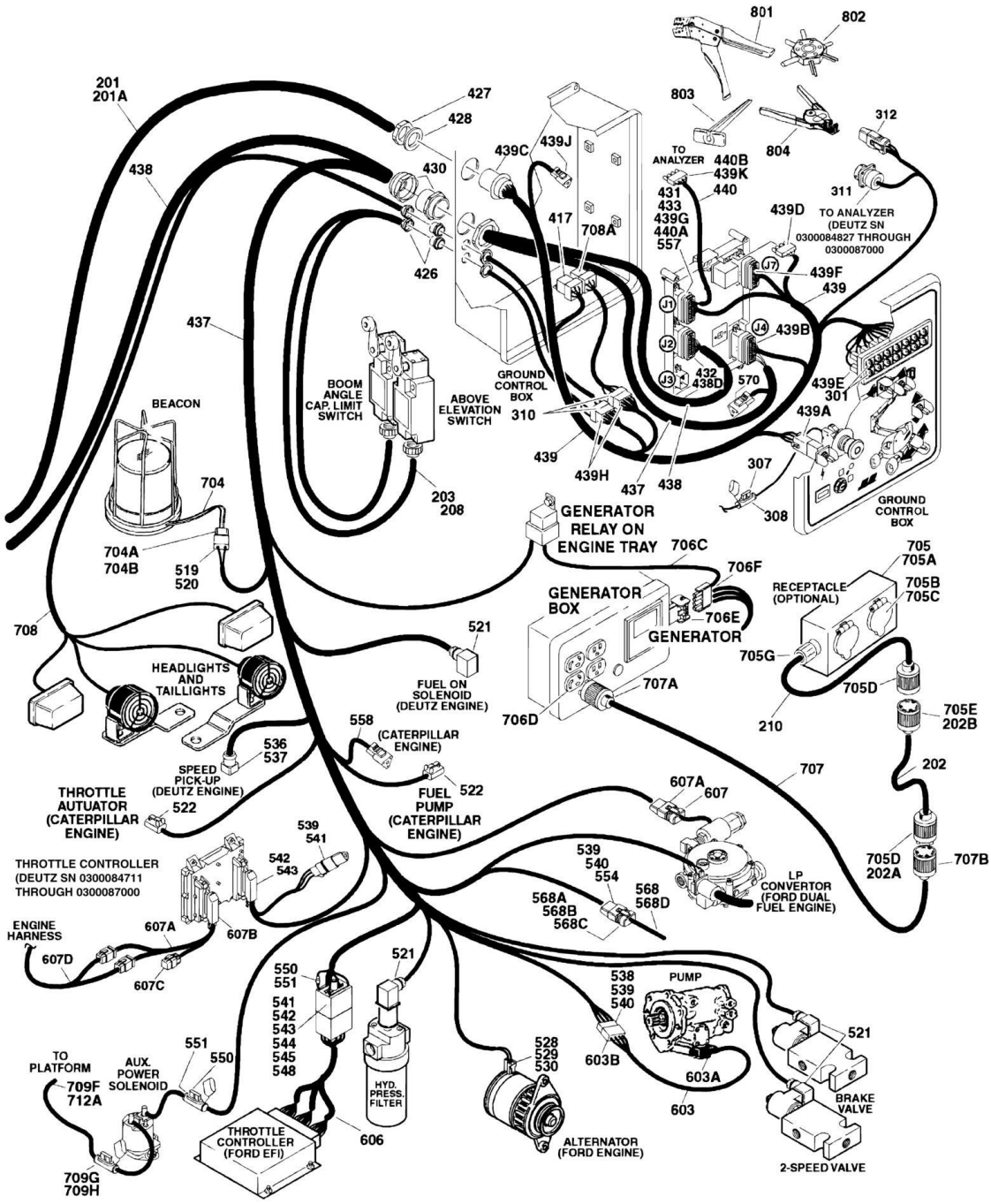
801
802
803
804
312
311
TO ANALYZER
TO ANALYZER (DEUTZ SN 0300084827 THROUGH 0300087000
201
201A
427
428
430
426
438
439C
439J
440B
439K
440
431
433
439G
440A
557
417
708A
439D
439F
439
439B
J1
J2
J3
J4
J7
432
438D
570
439E
301
439A
437
BOOM ANGLE CAP. LIMIT SWITCH
ABOVE ELEVATION SWITCH
GROUND CONTROL BOX
310
439
439H
437
438
307
308
GROUND CONTROL BOX
BEACON
704
704A
704B
519
520
203
208
GENERATOR RELAY ON ENGINE TRAY
706C
706F
GENERATOR BOX
706E
GENERATOR
706D
707A
705
705A
RECEPTACLE (OPTIONAL)
705B
705C
705G
705D
210
705E
202B
202
707
708
521
FUEL ON SOLENOID (DEUTZ ENGINE)
HEADLIGHTS AND TAILLIGHTS
558
(CATERPILLAR ENGINE)
536
537
SPEED PICK-UP (DEUTZ ENGINE)
THROTTLE AUTUATOR (CATERPILLAR ENGINE)
522
FUEL PUMP (CATERPILLAR ENGINE)
522
607A
607
539
541
542
543
THROTTLE CONTROLLER (DEUTZ SN 0300084711 THROUGH 0300087000
539
540
554
568
568D
568A
568B
568C
LP CONVERTOR (FORD DUAL FUEL ENGINE)
705D
202A
707B
ENGINE HARNESS
607A
607B
607D
607C
550
551
541
542
543
544
545
548
521
538
539
540
PUMP
521
TO PLATFORM
709F
712A
AUX. POWER SOLENOID
551
550
HYD. PRESS. FILTER
606
528
529
530
603B
603A
603
BRAKE VALVE
THROTTLE CONTROLLER (FORD EFI)
ALTERNATOR (FORD ENGINE)
2-SPEED VALVE
709G
709H

FIGURE 7-2. HARNESS COMPONENTS INSTALLATION

ITEM	PART NUMBER	QTY	DESCRIPTION	REV
	4922639	Ref	**PLATFORM BOX HARNESS ASSEMBLY**	5-F
1	4922639	1	Harness, Console Box	
19	4460866	1	Connector - 19 Position	
20	4460874	1	Connector - 35 Position (Natural)	
21	4460875	1	Connector - 35 Position (Gray)	
22	4460873	1	Connector - 35 Position (Black)	
23	4460871	77	Socket, Female	
24	4460464	7	Pin, Male (16 Gauge)	
25	4460879	1	Terminal, Housing 2 Position	
26	4460887	2	Terminal, (12 Gauge)	
30	4460418	8	Connector - 6 Position	
31	4460419	24	Terminal, Female	
32	4120035	12	Base, Light	
36	4460225	1	Connector - 6 Position	
37	4460227	30	Pin, Male	
41	4460508	3	Pin, Male (12 Gauge)	
43	4460434	2	Connector - 15 Position	
44	2920129	12	Bulb, Light	
		Ref	**PLATFORM BOX ASSEMBLY COMPONENTS**	
104	0100048	AR	Grease, Dialectric	
114	1060918	8 ft/2.4m	Cable, Electrical - 18/3	
142	4460071	1	Connector, Strain Relief	
143	4460226	2	Socket, Female	
144	4460428	2	Connector, Strain Relief	
146	4460470	1	Nut, Terminal	
147	4460471	1	Lockwasher, Terminal	
148	4460905	5	Seal, Plug	
153	4922666	1	Harness, Analyzer Cable	2-B
153	4460226	4	Socket, Female (Not Shown - Located at J2)	
153A	4460761	1	Connector, Female - 4 Position	
153A	4460227	4	Pin, Male	
155	4460708	2	Terminal, 15 Pin Mate-N-Loc	
		Ref	**BOOM CABLES INSTALLATION**	
	0270733	Ref	**Boom Cables Installation 600S - 2WS (Australian Spec)**	4
	0270734	Ref	**Boom Cables Installation 600S - 2WS (CE Spec)**	5
	0270738	Ref	**Boom Cables Installation 600SJ - 2WS (Australian Spec)**	3
	0270737	Ref	**Boom Cables Installation 600SJ - 2WS (CE Spec)**	3
	0270736	Ref	**Boom Cables Installation 660SJ - 2WS (Australian Spec)**	3
	0270735	Ref	**Boom Cables Installation 660SJ - 2WS (CE Spec)**	3
	0272483	Ref	**Boom Cables Installation 600S - 2WS (SkyPower) (Australian Spec) (7500W 60Hz)**	2
	0272484	Ref	**Boom Cables Installation 600S - 2WS (SkyPower) (CE Spec) (7500W 50Hz)**	2
	0272488	Ref	**Boom Cables Installation 600SJ - 2WS (SkyPower) (Australian Spec) (7500W 60Hz)**	2
	0272487	Ref	**Boom Cables Installation 600SJ - 2WS (SkyPower) (CE Spec) (7500W 50Hz)**	2
	0272485	Ref	**Boom Cables Installation 660SJ - 2WS (SkyPower) (Australian Spec) (7500W 60Hz)**	2
	0272486	Ref	**Boom Cables Installation 660SJ - 2WS (SkyPower) (CE Spec) (7500W 50Hz)**	2

ITEM	PART NUMBER	QTY	DESCRIPTION	REV
201		Ref	Harness, Main Boom Options:	
201	4922468	1	Harness, Main Boom 600S - 2WS	
201	4922466	1	Harness, Main Boom 600SJ - 2WS	
201	4922467	1	Harness, Main Boom 660SJ - 2WS	
201A	1060896	Ref	Cable Options:	
201A	1060896	67 ft /20.4m	Cable 600S - 2WS	
201A	1060896	69 ft/21m	Cable 600SJ - 2WS	
201A	1060896	75 ft /22.8m	Cable 660SJ - 2WS	
201B	4460465	22	Socket, Female - #16	
201C	4460865	1	Connector - 19 Position	
201D	4460509	8	Socket, Female - #12	
201E	4460473	1	Clamp, Cable	
201F	4460466	4	Seal, Plug	
202		Ref	Harness Options: (Does not include plug ends)	
202		Ref	Harness **(SN 0300071888 through 0300087000)**	
202	4922889	1	Harness 600S - 2WS (Australian Spec)	
202	4922884	1	Harness 600S - 2WS (CE Spec)	
202	4922887	1	Harness 600SJ - 2WS (Australian Spec)	
202	4922885	1	Harness 600SJ - 2WS (CE Spec)	
202	4922888	1	Harness 660SJ - 2WS (Australian Spec)	
202	4922886	1	Harness 660SJ - 2WS (CE Spec)	
202		Ref	Cable, Electrical - 12/3 Options:	
202	1060494	AR	Australian Spec	
202	1060461	Ref	CE Spec	
202	1060461	69.5 ft /21.8m	Harness 600S	
202	1060461	71 ft /21.6m	Harness 600SJ	
202	1060461	77 ft /23.5m	Harness 660SJ	
202		Ref	7500W 60Hz - 7500W 50Hz	
202	4922792	1	Harness 600S - 2WS (SkyPower)	
202	4922790	1	Harness 600SJ - 2WS (SkyPower)	
202	4922791	1	Harness 660SJ - 2WS (SkyPower)	
202A	4460205	1	Plug, Male (110V)	
202B	4460134	1	Connector, Female (110V)	
203		Ref	Cable, Electrical - 18/2 Boom Length Options:	
203	1061026	1	Cable, Electrical - 18/2 Boom Length 600S - 2WS (Australian Spec)	
203	1061026	1	Cable, Electrical - 18/2 Boom Length 600S/600SJ - 2WS (CE Spec)	
203	1061027	1	Cable, Electrical - 18/2 Boom Length 600SJ/660SJ - 2WS (Australian Spec)	
203	1061027	1	Cable, Electrical - 18/2 Boom Length 660SJ - 2WS (CE Spec)	
203	1060680	Ref	Cable, Electrical - 18/2 Options:	
203	1060680	55.5 ft /16.9m	Cable, Electrical - 18/2, 600S/600SJ - 2WS	
203	1060680	15 ft/4.6m	Cable, Electrical - 18/2, 660SJ - 2WS	
207		Ref	Sleeve, Nylon Options: (Not Shown)	
207	4100026	10 ft/3.0m	Sleeve, Nylon 600S - 2WS	
207	Not Required	0	Sleeve, Nylon 600SJ/660SJ - 2WS	

ITEM	PART NUMBER	QTY	DESCRIPTION	REV
208	1061027	2	Cable, Electrical - 18/2 (Australian Spec 600S - 2WS Only)	
208	1060680	13.5 ft /4.2m	Cable, Electrical - 18/2 (Australian Spec 600S - 2WS Only 600S - 2WS	
		Ref	**GROUND CONTROL BOX DIAGRAMS**	
	4933291	Ref	**Caterpillar Engine (SN 0300068000 through 0300084826)**	2-B
	4933328	Ref	**Caterpillar Engine (SN 0300084827 through 0300087000)**	1-A
	4933222	Ref	**Deutz Engine (SN 0300068000 through 0300084826)**	4-D
	4933318	Ref	**Deutz Engine (SN 0300084827 through 0300087000)**	D
301	2920129	AR	Bulb, Light	
307	2400065	1	Fuse, 30Amp	
308	2400066	1	Fuse, Holder with Cover	
310	4460708	2	Receptacle, Female - 15 Position	
310	4460226	13	Socket, Female	
310	4922637	1	Harness, Jumper (Not Shown)	
310	4922636	1	Harness, Jumper (Not Shown)	
311	4461072		Receptacle, Female - 12 Position (Deutz Engine Only) **(SN 0300084827 through 0300087000)**	
311	4461074	1	Shell, Receptacle Only **(SN 0300084827 through 0300087000)**	
311	4461071	4	Socket, Female (Gold Only) **(SN 0300084827 through 0300087000)**	
311	4461073	1	Cap, Dust (Deutz Only) **(SN 0300084827 through 0300087000)**	
311	2902443	1	Kit, Receptacle Only **(SN 0300084827 through 0300087000)**	
312	4460894	1	Plug, Male - 6 Position (Deutz Engine Only) **(SN 0300084827 through 0300087000)**	
312	4460892	1	Connector, Terminal Only **(SN 0300084827 through 0300087000)**	
		Ref	**GROUND CONTROL BOX COMPONENTS**	
417	3740049	1	Relay	
426	4460426	2	Connector, Strain Relief	
427	4460470	1	Nut, Terminal	
428	4460471	1	Lockwasher, Terminal	
430	4460526	1	Connector, Strain Relief	
431	4460874	1	Connector (Natural)	
432	4460875	1	Connector (Gray)	
433	4460905	4	Connector, Amp Seal Plug	
437		Ref	Engine Harness Assembly (Not Shown - See 501-557 for Breakdown)	
437	4922921	1	Caterpillar Engine **(SN 0300068000 through 0300084826)**	
437	4923227	1	Caterpillar Engine **(SN 0300084827 through 0300087000)**	
437	4922515	1	Deutz Engine Machines **(SN 0300068000 through 0300084826)**	
437	4923212	1	Deutz Engine Machines **(SN 0300084827 through 0300087000)**	
438		Ref	Valve Harness Assembly Options:	
438	4922513	1	Valve Harness Assembly **(SN 0300068000 through 0300084826)**	3-D
438	4923206	1	Valve Harness Assembly **(SN 0300084827 through 0300087000)**	2-B
438A	4460880	15	Connector, DIN	
438B	4460320	2	Connector, Female- 2 Position	
438B	4460267	5	Pin, Male	
438C	4460424	1	Connector, Male- 2 Position	
438C	4460268	5	Pin, Female	

ITEM	PART NUMBER	QTY	DESCRIPTION	REV
438D	4460871	AR	Socket, Female	
438E	4460326	1	Connector, Male - 3 Position	
438E	4460267	7	Pin, Male	
438F	4460445	1	Connector, Female - 3 Position	
438F	4460268	5	Pin, Female	
439		Ref	Ground Control Box Harness Assembly Options:	
439	4922648	1	Caterpillar and Deutz Engine **(SN 0300068000 through 0300084826)**	4-E
439	4923229	1	Caterpillar Engine **(SN 0300084827 through 0300087000)**	1-A
439	4923213	1	Deutz Engine **(SN 0300084827 through 0300087000)**	B
439A	4460418	7	Connector, Female- 6 Position	
439A	4460419	21	Socket, Female	
439B	4460876	1	Connector, 35- Position	
439B	4460871	AR	Socket, Female	
439B	4460905	2	Seal, Plug	
439C	4460866	1	Connector - 19 Position	
439C	4460464	7	Pin, Male Deutsch (16 Gauge)	
439D	4460878	1	Housing, Terminal- 4 Position	
439D	4460887	3	Terminal (12 Gauge)	
439E	4120035	AR	Base, Light	
439E	4460634	AR	Terminal (16 Gauge)	
439F	4460873	1	Connector, 35- Position (Black)	
439F	4460871	AR	Socket, Female	
439F	4460635	5	Terminal (12 Gauge)	
439G	4460871	AR	Socket, Female	
439H	4460434	2	Plug, Male 15- Position	
439H	4460227	AR	Pin	
439I	3990010	2	Diode - 6Amp (Not Shown)	
439J	4460536	1	Connector, Female - 3 Position (Deutz Engine Machines Only) **(SN 0300084827 through 0300087000)**	
439J	4460943	3	Socket, Female Only **(SN 0300084827 through 0300087000)**	
439K	4460761	1	Connector, Female - 4 Position (Deutz Engine Machines Only) **(SN 0300084827 through 0300087000)**	
439K	4460227	3	Pin, Male Only **(SN 0300084827 through 0300087000)**	
440	4922666	1	Cable, Analyzer **(SN 0300068000 through 0300084827)**	2-B
440A	4460226	4	Socket, Female	
440B	4460761	1	Connector, Female 4- Position	
440B	4460227	4	Pin, Male	
441		Ref	Ground Control Box Wiring Diagram (Not Shown - See Items 301-310 for Breakdown)	
441	4933291	1	Caterpillar Engine **(SN 0300068000 through 0300084826)**	
441	4933328	1	Caterpillar Engine **(SN 0300084827 through 0300087000)**	
441	4933222	1	Deutz Engine **(SN 0300068000 through 0300084826)**	
441	4933318	1	Deutz Engine **(SN 0300084827 through 0300087000)**	
		Ref	**ENGINE HARNESS ASSEMBLY**	
	4922921	Ref	**Caterpillar Engine (SN 0300068000 through 0300084826)**	3-C
	4923227	Ref	**Caterpillar Engine (SN 0300084827 through 0300087000)**	1-A
	4922515	Ref	**Deutz Engine (SN 0300068000 through 0300084826)**	5-E
	4923212	Ref	**Deutz Engine (SN 0300084827 through 0300087000)**	C
519	4460424	1	Receptacle, Female - 2 Position	
520	4460268	2	Socket, Female	
521	4460880	AR	DIN Connector without Diode	

ITEM	PART NUMBER	QTY	DESCRIPTION	REV
522	4460891	2	Connector, Male - 2 Position (Caterpillar Engine Only)	
522	4460465	7	Socket, Female	
528 to 530	Not Required	0	Not Required	
536	4460890	1	Housing - 2 Position (Deutz Engine Only)	
537	4460889	2	Terminal (Deutz Engine Only)	
538	4460460	1	Connector, Male - 4 Position	
539	4460457	AR	Terminal, Female	
540	4460458	AR	Seal, Terminal	
541 to 545	Not Required	0	Not Required	
548	Not Required	0	Not Required	
550 to 551	Not Required	0	Not Required	
554	Not Required	0	Not Required	
557	4460871	AR	Socket, Female	
558	4460539	1	Connector, Male - 3 Position (Caterpillar Engine Only)	
558	4460944	3	Socket, Female	
		Ref	**Note: Items 569-573 is used o Deutz Engine Only from SN 0300084827 through 0300087000 Only.**	
569	4461070	1	Connector, Receptacle with Resistor (3 Position)	
570	4460539	1	Connector, Male - 3 Position	
570	4460944	3	Socket, Female	
571	4461095	1	Connector, Male - 3 Position	
571	4460944	3	Socket, Female	
572	4461052	1	Connector, Receptacle - 25 Position	
572	4461005	5	Terminal (Gold)	
572	4461006	5	Seal, Terminal	
572	4461060	2	Terminal (Tin)	
572	4461054	2	Seal, Terminal	
573	4461053	1	Cover, Plug	
		Ref	**STANDARD HARNESS COMPONENTS**	
603	See Note	1	Pump Harness (Note: Not Available for Purchase)	
603A	7007497	1	Plug (Pump End)	
603B	7007498	1	Plug (Engine Harness End)	
604	See Note	1	Controller Harness Assembly (Lift and Swing) (Note: Not Available for Purchase)	
604A	7022819	1	Plug, Male - 8 Position (Natural)	
604B	4460871	8	Socket, Female	
605	See Note	1	Controller Harness/Circuit Board Assembly (Drive and Steer) (Note: Not Available for Purchase)	
605A	7022825	1	Plug, Male - 8 Position (Black)	
605B	4460871	7	Socket, Female	
606 to 607	Not Required	0	Not Required	
		Ref	**OPTIONAL HARNESS COMPONENTS**	
701	4921928	1	4WS Valve Harness	
701A	4460268	3	Socket, Female	
701B	4460445	1	Connector, Female - 3 Position	
701C	4460499	2	Connector, DIN with Diode	
702	4921927	1	Jib Valve Harness (600SJ & 660SJ Only)	
702A	4460326	1	Plug, Male - 3 Position	
702B	4460267	3	Pin, Male	
702C	4460499	2	Connector, DIN with Diode	
703	0257887	1	Alarm Harness (Includes Alarm)	
703A	4460424	1	Plug, Male - 2 Position	

ITEM	PART NUMBER	QTY	DESCRIPTION	REV
703B	4460268	2	Socket, Female	
704		Ref	Strobe Light Harness Options (Includes Strobe Light):	
704	0255917	1	Strobe Light Harness Options (Includes Strobe Light): **(SN 0300068000 through 0300069326)**	
704	0272507	1	Strobe Light Harness Options (Includes Strobe Light): **(SN 0300069327 through 0300087000)**	
704A	4460320	1	Connector, Female - 2 Position	
704B	4460267	2	Pin, Male	
705	0256201	AR	AC to Platform Receptacle Components	3
705A	Not Required	0	Box, Switch	
705B	Not Required	0	Receptacle	
705C	Not Required	0	Shield, Cover	
705D	4460709	1	Plug, Male	
705E	4460710	1	Connector, Female	
705F	4921820	1	Harness-Receptacle Box to Boom	
705F	1060461	2.5 ft /0.76m	Cable, Electrical - 12/3	
705G	4460071	1	Connector, Strain Relief	
706		Ref	Generator Electrical Components	
706	4933215	AR	110V **(SN 0300068000 through 0300077489)**	1-B
706	4933216	AR	220V **(SN 0300068000 through 0300077489)**	1-B
706	4933300	AR	110V/220V **(SN 0300077490 through 0300087000)**	1-A
706	4933287	AR	110V, 50Hz (UK Spec) **(SN 0300080133 through 0300087000)**	1-A
706	4933284	AR	110V, 50Hz (German Spec) **(SN 0300080133 through 0300087000)**	1-A
706	3990010	1	Diode - 6Amp (Not Shown)	
706A	4922641	1	Harness - On/Off Switch	
706B	4460226	2	Socket, Female	
706C		Ref	Powermite Control Box to Relay Options:	
706C	4922482	1	Powermite Control Box to Relay **(SN 0300068000 through 0300077489)**	
706C	4922970	1	Powermite Control Box to Relay **(SN 0300077490 through 0300087000)**	
706C	4922913	1	UK/German Spec **(SN 0300080133 through 0300087000)**	
706D	4460027	1	Receptacle, Twist Lock (110V Only)	
706E	4460961	1	Connector, Female - 4 Position **(SN 0300077490 through 0300087000)**	
706E	4460705	4	Pin, Male	
706F	4460321	1	Connector, Male - 4 Position **(SN 0300077490 through 0300087000)**	
706F	4460906	4	Socket, Female	
707	4921956	1	Generator to Rear of Boom Harness (110V/220V)	
		Ref	**Note: Harness used to connect AC at platform harness to generator receptacle to power platform receptacle.**	
707	1060461	20 ft/6.1m	Cable, Electrical - 12/3	
707A	Not Required	0	Plug, Male	
707B	Not Required	0	Receptacle, Female	
708	See Note	1	Headlight and Taillight and Chassis Illumination Lights Harness (Note: Not Available for Purchase)	
708	1060341	37 ft /11.3m	Cable, Electrical - 16/2	
708A	3740049	1	Relay	
708B	4922643	1	Harness, Bag (Located at Ground Control Box) (Not Shown)	
709		Ref	Platform Worklights Components	

ITEM	PART NUMBER	QTY	DESCRIPTION	REV
709A	2920140	2	Platform Worklights External Harness (Includes Light and Wire Only)	
709B		Ref	Connector, Strain Relief Options:	
709B	4460598	1	Connector, Strain Relief **(SN 0300060000 through 0300074440)**	
709B	4460426	1	Connector, Strain Relief **(SN 0300074441 through 0300087000)**	
709C	4360232	1	Circuit Breaker, 15Amp **(SN 0300060000 through 0300074441)**	
709D	4922498	1	Platform Worklights Internal Harness **(SN 0300060000 through 0300074441)**	
709E	4460871	3	Socket, Female **(SN 0300060000 through 0300074441)**	
		Ref	**Note: Items 709F-709H. (SN 0300074441 through 0300087000)**	
709F		Ref	Platform Worklights Harness Options:	
709F	4922888	1	Platform Worklights Harness 600S/600SJ	
709F	4922964	1	Platform Worklights Harness 660SJ	
709F	1060494	Ref	Cable, Electrical - 12/3 Options:	
709F	1060494	77 ft /23.5mm	Cable, Electrical - 12/3, 600S/600SJ	
709F	1060494	83 ft /25.3mm	Cable, Electrical - 12/3, 660SJ	
709G	2400070	1	Fuse	
709H	2400066	1	Holder, Fuse	
710	See Note	1	Soft Touch System Harness (Note: Not Available for Purchase)	
710A	1060341	16 ft/4.9m	Cable, Electrical - 16/3	
710B	4460425	1	Connector, Strain Relief	
711	Not Required	0	Not Required	
712	4933313	1	Floodlights Harness Components	
712A	1060494	77 ft 23.5m	Electrical Cable 12/3 (Aux Relay to Console Box)	
712B	4460320	2	Plug, Male - 2 Position	
712B	4460227	4	Pin, Male	
712C	4922764	1	Floodlight Harness (Lights to Switch)	
712D	4460424	2	Connector, Female - 2 Position	
712D	4460226	4	Socket, Female	
712E	1060977	1	Cord, 2 Wire Coiled (Console Box Circuit Breaker to Switch)	
712F	4360232	1	Circuit Breaker - 15Amp	
712G	4460425	1	Strain, Relief	
		Ref	**TOOLS**	
801	7002821	1	Crimper (For Wire to Pin/Socket Connections)	
802	7002823	1	Extractor (For Removal of Pin/Socket from Connectors)	
803	4460467	1	Extractor, Pin (Blue 16-18 Gauge) (For Removal of Pin/Socket from Connectors)	
803	4460510	1	Extractor, Pin (Yellow 12-14 Gauge) (For Removal of Pin/Socket from Connectors)	
804	7002828	1	Stripper, Wire	
805	2901443	1	Analyzer Kit (Not Shown)	

FIGURE 7-3. AC CABLE INSTALLATION (UK AND GERMAN SPEC)

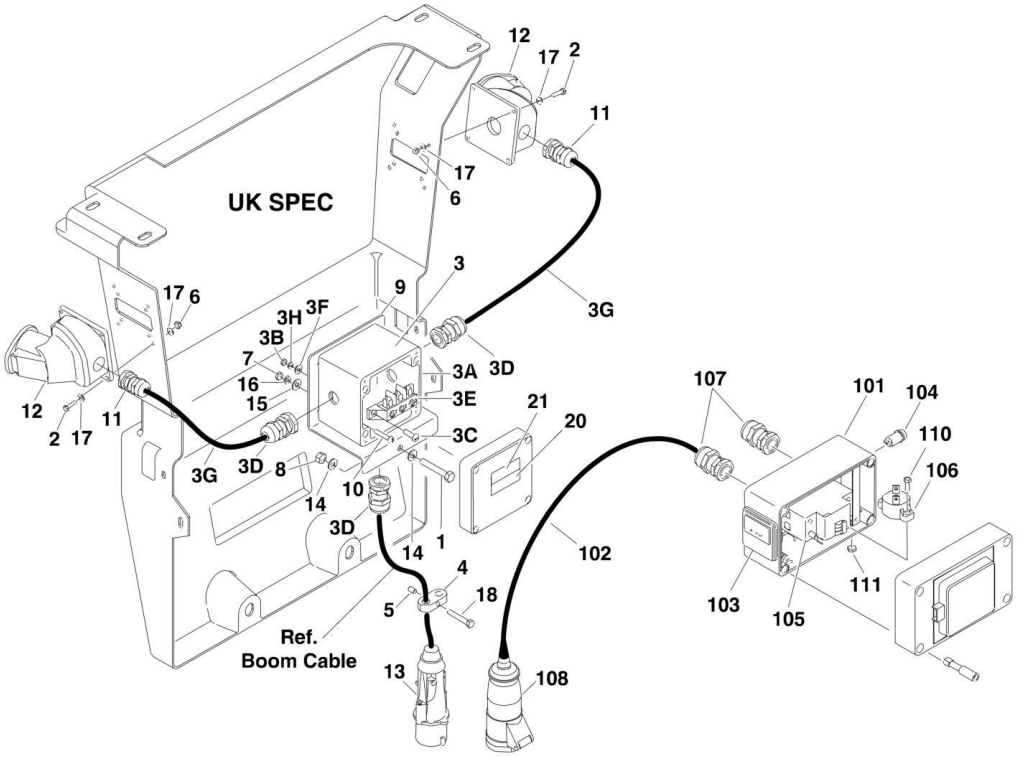

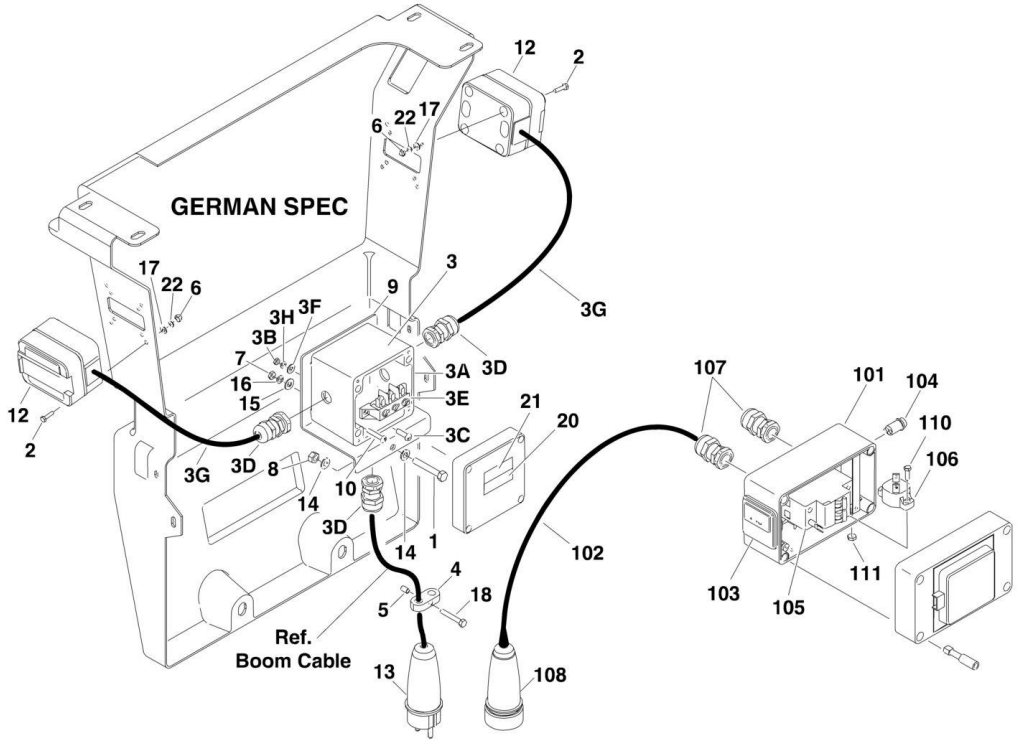

FIGURE 7-3. AC CABLE INSTALLATION (UK AND GERMAN SPEC)

ITEM	PART NUMBER	QTY	DESCRIPTION	REV
		Ref	**AC CABLES INSTALLATIONS:**	
	0273076	Ref	**UK Spec**	A
	0273078	Ref	**German Spec**	A
1	0641516	1	Bolt 5/16in-18NC x 2in	
2		Ref	Bolt Options:	
2	0700408	8	Bolt (Metric) 4mm x 16mm (UK Spec)	
2	3910808	8	Bolt #8-32NC x 1/2in (German Spec)	
3	0861606	1	Junction Box Assembly (See Items 101-111 for Breakdown)	
3A	0861604	1	Box, Junction	
3B	3311001	2	Nut #10-24NC	
3C	3911010	2	Screw #10-24NC x 5/8in	
3D	4460968	3	Connector, Strain Relief	
3E	4460987	1	Terminal	
3F	4751000	2	Flatwasher #10 (Wide)	
3G	4922909	2	Harness	
3H	4761000	2	Lockwasher #10	
4	1320149	1	Clamp	
5	2080046	1	Rivnut	
6		Ref	Nut Options:	
6	3290405	8	Locknut (Metric) 4mm x.7 (UK Spec)	
6	3310801	8	Nut #8-32NC (German Spec)	
7	3311001	4	Nut #10-24NC	
8	3311505	1	Locknut 5/16in-18NC	
9	3574443	1	Plate, Box Bracket	
10	3911016	4	Screw #10-24NC x 1in	
11	4460968	2	Connector, Strain Relief (UK Spec Only)	
12		Ref	Terminal Options:	
12	4460988	2	Plug, Female - UK Spec	
12	4460997	2	Receptacle - German Spec	
13		Ref	Plug Options:	
13	4460990	1	UK Spec	
13	4460998	1	German Spec	
14	4711500	2	Flatwasher 5/16in (Narrow)	
15	4751000	4	Flatwasher #10	
16	4761000	4	Lockwasher #10	
17		Ref	Flatwasher (Metric) 4mm	
17	4811400	16	Flatwasher (Metric) 4mm (UK Spec)	
17	4750800	8	Flatwasher #8 (Wide) (German Spec)	
18	0641410	1	Bolt 1/4in-20NC x 1-1/4in	
20	1705714	1	Decal - Danger	
21	1705715	1	Decal - 115V AC	
22	4760800	8	Lockwasher #8 (German Spec Only)	
		Ref	**GENERATOR CONTROL BOX ASSEMBLY:**	
	0861599	Ref	**UK Spec**	A
	0861607	Ref	**German Spec**	A
101	0861602	1	Box, Control	
102	1060461	20 ft/6m	Cable Electrical 12/3	
103	2420203	1	Voltmeter	
104	2920162	1	Lamp	
105		Ref	Breaker Circuit Options:	

SECTION 7 - ELECTRICAL

ITEM	PART NUMBER	QTY	DESCRIPTION	REV
105	4360541	1	Breaker Circuit (UK Spec)	
105	4360540	1	Residual Current Device (German Spec)	
106	4360542	1	Breaker Circuit 20Amp	
107	4460968	2	Connector, Strain Relief	
108		Ref	Plug Options:	
108	4460991	1	Plug, Female (UK Spec)	
108	4460999	1	Plug, Terminal (German Spec)	
109	4922912	1	Harness	
110	0721005	2	Screw #10-24NC x 5/8in	
111	3311001	2	Nut #10-24NC	

SECTION 8 - DECALS

SECTION 8 - DECALS

FIGURE 8-1. DECAL INSTALLATION - CE AND AUSTRALIAN SPEC (SN 0300068000 through 0300087000)

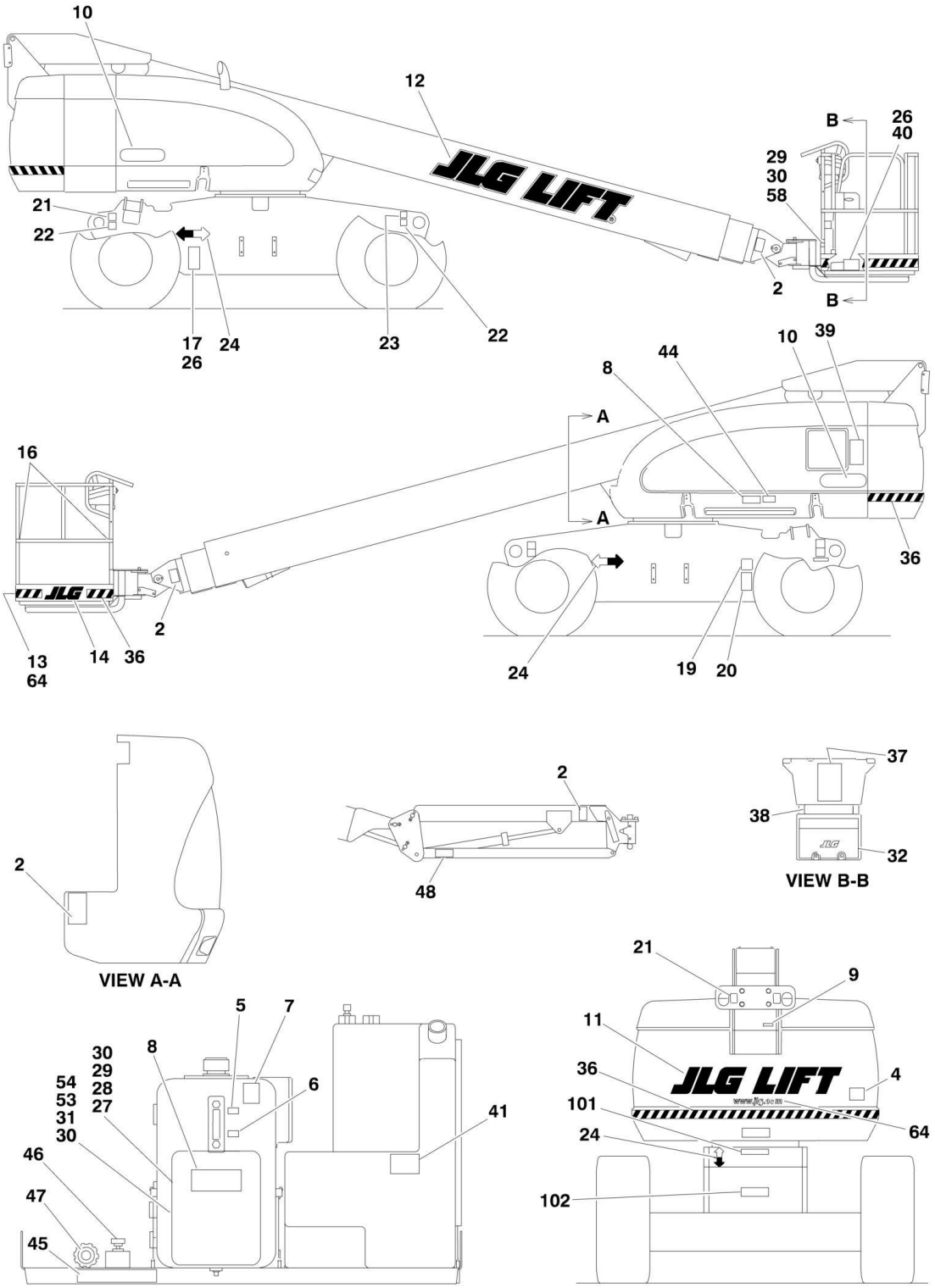

FIGURE 8-1. DECAL INSTALLATION - CE AND AUSTRALIAN SPEC (SN 0300068000 through 0300087000)

ITEM	PART NUMBER	QTY	DESCRIPTION	REV
		Ref	**STANDARD DECAL INSTALLATIONS**	
	0271014	Ref	**Decal - JLG**	3
	0255330	Ref	**Standard Decal Installations 600S Common Parts**	11
	0255334	Ref	**Standard Decal Installations 600SJ Common Parts**	9
	0255332	Ref	**Standard Decal Installations 660SJ Common Parts**	12
	0256622	Ref	**Standard Decal Installations 600S Australian Spec**	9
	0256634	Ref	**Standard Decal Installations 600SJ & 660SJ Australian Spec**	9
	0256256	Ref	**Standard Decal Installations 600S Dutch Spec**	5
	0256573	Ref	**Standard Decal Installations 600SJ & 660SJ Dutch Spec**	5
	0256253	Ref	**Standard Decal Installations 600S French Spec**	6
	0256570	Ref	**Standard Decal Installations 600SJ & 660SJ French Spec**	6
	0256254	Ref	**Standard Decal Installations 600S German Spec**	5
	0256571	Ref	**Standard Decal Installations 600SJ & 660SJ German Spec**	5
	0256255	Ref	**Standard Decal Installations 600S Italian Spec**	6
	0256572	Ref	**Standard Decal Installations 600SJ & 660SJ Italian Spec**	6
	0273194	Ref	**Standard Decal Installations 600S Norwegian Spec**	3
	0256257	Ref	**Standard Decal Installations 600S Spanish Spec**	5
	0256574	Ref	**Standard Decal Installations 600SJ & 660SJ Spanish Spec**	5
	0256252	Ref	**Standard Decal Installations 600S UK Spec**	6
	0256569	Ref	**Standard Decal Installations 600SJ & 660SJ UK Spec**	6
	0257733	Ref	**Warning Stripes Installation (CE Specs)**	1
2	1701518	3	Decal - Crushing	
4		Ref	Decal Options:	
4	1705084	1	CE Spec	
	Not Required	0	Australian Spec	
5	1701502	1	Decal - High Oil Level	
6	1701503	1	Decal - Low Oil Level	
7	1701504	1	Decal - Hydraulic Oil	
8	1701509	1	Decal - Manual	
9		Ref	Decal - 240/50Hz Options:	
9	Not Required	0	CE Spec	
9	3251242	1	Australian Spec	
10		Ref	Decal - Model Options:	
10	1702815	2	Decal - Model 600S	
10	1702816	2	Decal - Model 600SJ	
10	1702817	2	Decal - Model 660SJ	
11	1702861	3	Decal - JLG Lift (8in)	
12	1702862	1	Decal - JLG Lift (12in) **(SN 0300068000 through 0300069980)**	
13	1702774	1	Decal - JLG Lift (3 1/2in)	
14	1702773	2	Decal - JLG (5in)	
16		Ref	Decal - Attach Lanyard Here Options:	
16	Not Required	0	CE Spec	
16	1704277	4	Australian Spec	
17	See Note	NSS	Nameplate - Serial Number (Note: Not Available for Purchase)	
19	See Note	NSS	Decal - Bar Code (Note: Not Available for Purchase)	
20	1700584	1	Decal - Patent	
21	1701499	2	Decal - No Tie Down /Lift	
22	1702300	4	Decal - Tie Down /Lift	
23	1701500	2	Decal - Tie Down /Lift	

SECTION 8 - DECALS

ITEM	PART NUMBER	QTY	DESCRIPTION	REV
24	1701529	4	Decal- Arrow	
26	3820001	4	Rivet	
27	0641408	1	Bolt 1/4in-20NC x 1in	
28	1060279	1	Cable, Lanyard	
29	3311405	AR	Locknut 1/4in-20NC	
30	4751400	AR	Flatwasher 1/4in	
31	0860520	1	Box, Manual Storage	
32	3380434	1	Panel, Pedestal **(SN 0300068000 through 0300076512)**	
36	4420051	17.4 ft /5.3m	Decal - Warning Stripes	
37		Ref	Nameplate - Capacity Options:	
37	1703992	1	Australian Spec	
37	1701596	1	Dutch Spec	
37	1690697	1	French Spec	
37	1690697	1	German Spec	
37	1690697	1	Italian Spec	
37	1690697	1	Norwegian Spec	
37	1690697	1	Spanish Spec	
37	1690697	1	UK Spec	
38		Ref	Nameplate - Caution Options:	
38	Not Required	0	Not Required	
38	1703186	1	Dutch Spec	
38	1703184	1	French Spec	
38	1703190	1	German Spec	
38	1703185	1	Italian Spec	
38	1705250	1	Norwegian Spec	
38	1703187	1	Spanish Spec	
38	1703183	1	UK Spec	
39		Ref	Nameplate - Caution Options:	
39	1691483	1	Australian Spec	
39	1701596	1	Dutch Spec	
39	1693289	1	French Spec	
39	1693291	1	German Spec	
39	1701602	1	Italian Spec	
39	1705232	1	Norwegian Spec	
39	1701798	1	Spanish Spec	
39	1691483	1	UK Spec	
40		Ref	Nameplate - Footswitch Options:	
40	3252347	1	Australian Spec	
40	1703518	1	Dutch Spec	
40	1693292	1	French Spec	
40	1693294	1	German Spec	
40	1701600	1	Italian Spec	
40	1705275	1	Norwegian Spec	
40	1701791	1	Spanish Spec	
40	3252347	1	UK Spec	
41	1701505	1	Decal - Fuel (Diesel)	
44		Ref	Decal - Manual Descent Options:	
44	1702901	1	Australian Spec **(SN 0300068000 through 0300070916)**	
44	1702996	1	Dutch Spec **(SN 0300068000 through 0300070916)**	
44	1702984	1	French Spec **(SN 0300068000 through 0300070916)**	
44	1702988	1	German Spec **(SN 0300068000 through 0300070916)**	

ITEM	PART NUMBER	QTY	DESCRIPTION	REV
44	1702992	1	Italian Spec **(SN 0300068000 through 0300070916)**	
44	Not Required	0	Norwegian Spec	
44	1703000	1	Spanish Spec **(SN 0300068000 through 0300070916)**	
44	1702901	1	UK Spec **(SN 0300068000 through 0300070916)**	
45		Ref	Decal - Manual Descent Options:	
45	1702902	1	Australian Spec **(SN 0300068000 through 0300070916)**	
45	1702997	1	Dutch Spec **(SN 0300068000 through 0300070916)**	
45	1702985	1	French Spec **(SN 0300068000 through 0300070916)**	
45	1702989	1	German Spec **(SN 0300068000 through 0300070916)**	
45	1702993	1	Italian Spec **(SN 0300068000 through 0300070916)**	
45	Not Required	0	Norwegian Spec	
45	1703001	1	Spanish Spec **(SN 0300068000 through 0300070916)**	
45	1702902	1	UK Spec **(SN 0300068000 through 0300070916)**	
46	1702903	1	Decal - Manual Descent #1 **(SN 0300068000 through 0300070916)**	
47	1702904	1	Decal - Manual Descent #2 **(SN 0300068000 through 0300070916)**	
48		Ref	Decal - No Hands Options: (600SJ & 660SJ Only)	
48	1702908	1	Australian Spec **(SN 0300068000 through 0300070916)**	
48	1702998	1	Dutch Spec **(SN 0300068000 through 0300070916)**	
48	1702986	1	French Spec	
48	1702990	1	German Spec **(SN 0300068000 through 0300070916)**	
48	1702994	1	Italian Spec **(SN 0300068000 through 0300070916)**	
48	1703002	1	Spanish Spec **(SN 0300068000 through 0300070916)**	
48	1702908	1	UK Spec **(SN 0300068000 through 0300070916)**	
53	0641406	4	Bolt 1/4in-20NC x 3/4in	
54	0100011	AR	Compound, Locking	
57		Ref	Decal - Wheel Load Options:	
57	1703470	4	Decal - Wheel Load 600S	
57	1703471	4	Decal - Wheel Load 600SJ	
57	1703472	4	Decal - Wheel Load 660SJ	
58	0641414	2	Bolt 1/4in-20NC x 1-3/4in **(SN 0300068000 through 0300076512)**	
64	1704885	2	Decal - Website	
		Ref	**OPTIONAL DECALS**	
101	3250872	1	Nameplate - Steer/Tow Selection (Machines with Tow Package Only)	
102		Ref	Decal - Tow Instructions Options: (Machines with Tow Package Only)	
102	1702305	1	2WD (Machines with Tow Package Only)	
102	1703403	1	4WD (Machines with Tow Package Only)	

FIGURE 8-2. DECAL INSTALLATION - MODEL 660SJ (RUSSIAN SPEC)

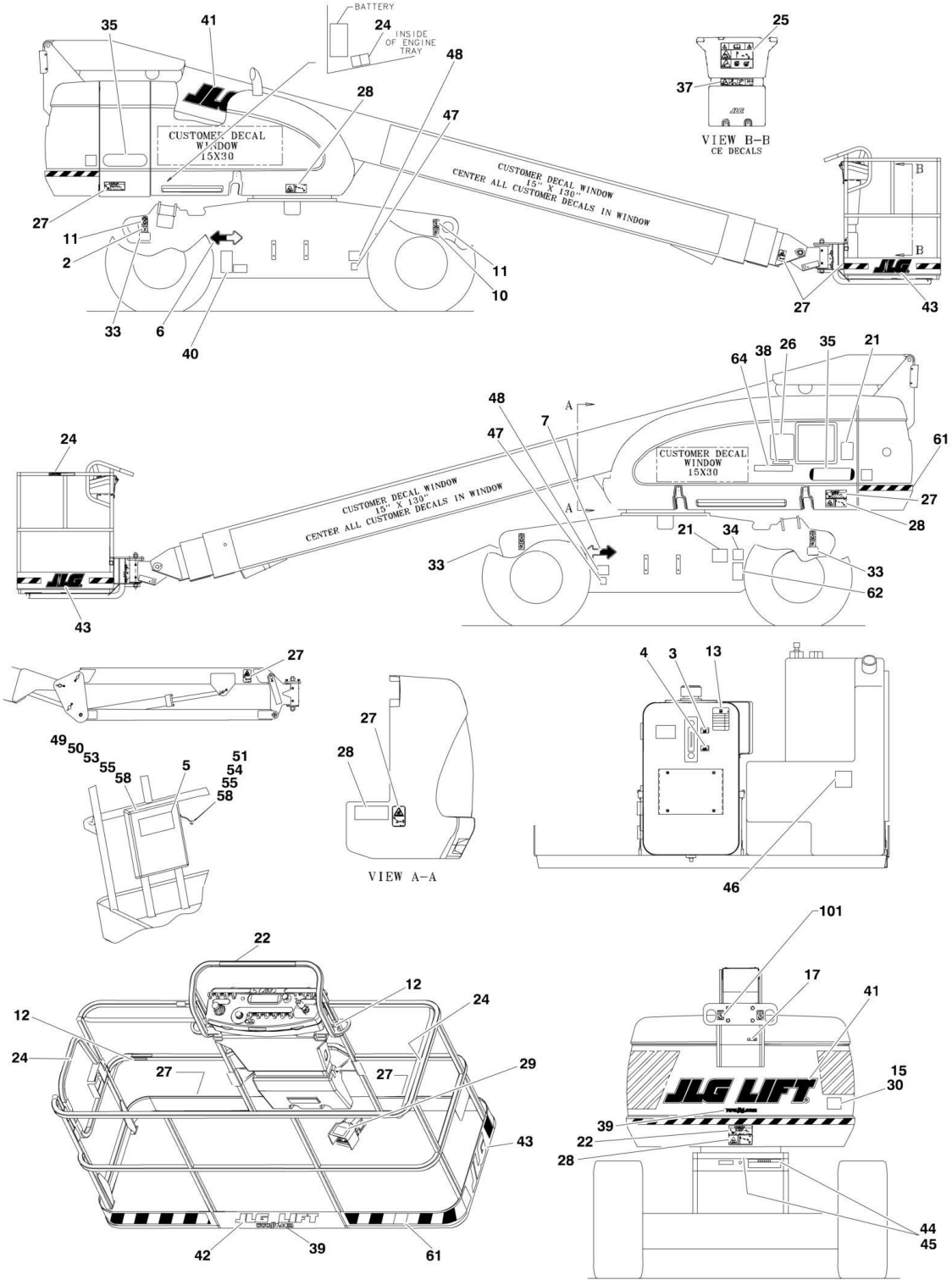

FIGURE 8-2. DECAL INSTALLATION - MODEL 660SJ (RUSSIAN SPEC)

ITEM	PART NUMBER	QTY	DESCRIPTION	REV
		Ref	**DECAL INSTALLATIONS**	
	0274359	Ref	**Decal Installations 660SJ - RUSSIAN SPEC**	2-B
	0274093	Ref	**DECAL JLG LOGO**	1
2	1701499	4	Decal - No Tie Down /Lift	
3	1701502	1	Decal - High Oil Level	
4	1701503	1	Decal - Low Oil Level	
5	1701509	1	Decal - Manual	
6	1701529	4	Decal - Arrow	
7 to 9	Not Required	0	Not Required	
10	1703811	4	Decal - Tie Down/Lift	
11	1703814	6	Decal - Tie Down	
12	Not Required	0	Not Required	
13	1704412	1	Decal - Hydraulic Oil Chart	
14	1705084	1	Decal - Sound Power Level	1
15 to 16	Not Required	0	Not Required	
18 to 22	Not Required	0	Not Required	
23	1706098	1	Decal - Warning Explosion/Fire	
24	Not Required	0	Not Required	
25	1705921	1	Decal - Tipping/Electrical Platform	
26	1705822	1	Decal - Electrical/Safety Manual	
27	1701518	8	Decal - Crushing	
28	1705961	4	Decal - Electrocution	
29	1705828	1	Decal - Footswitch	
30 to 32	Not Required	0	Not Required	
33	1703472	1	Decal - Max Tire Load	
34	See Note	1	Decal - Bar Code (Note: Not Available for Purchase)	
35	1702817	2	Decal - Model 660SJ	
36	Not Required	0	Not Required	
37	1705978	1	Decal - 230kg Capacity	
38	Not Required	0	Not Required	
39	1704885	2	Decal - Website	
40	3252523	1	Nameplate - Manufacturers	
41	1702861	3	Decal - JLG Lift	
42	1702774	1	Decal - JLG Lift	
43	1702773	2	Decal - JLG	
44	3250872	1	Nameplate - Steer/Tow Selector	
45	1705090	1	Decal - Towing Instructions	
46	1701505	1	Decal - Fuel Diesel	
47 to 48	Not Required	0	Not Required	
49	0100011	AR	Compound, Locking	
50	0641406	4	Bolt 1/4in-20NC x 3/4in	
51	0641408	1	Bolt 1/4in-20NC x 1in	
52	Not Required	0	Not Required	
53	0860520	1	Box Manual Storage	
54	1060279	1	Cable, Lanyard	
55	3311405	5	Locknut 1/4in-20NC	
56	Not Required	0	Not Required	
57	3820001	4	Rivet, Pop	
58	4751400	10	Flatwasher 1/4in	
59 to 60	Not Required	0	Not Required	

SECTION 8 - DECALS

ITEM	PART NUMBER	QTY	DESCRIPTION	REV
61	4420051	18 ft/5.5m	Decal - Warning Strip	
62	1700584	1	Decal - Patent	
		Ref	**OPTIONAL DECALS**	
101	1701500	2	Decal - Tie Down/Lift	

SECTION 9 - RECOMMENDED SERVICE PARTS STOCK

SECTION 9 - RECOMMENDED SERVICE PARTS STOCK

FIGURE 9-1. MODEL 600S/600SJ/660SJ STANDARD PARTS

ITEM	PART NUMBER	QTY	DESCRIPTION	REV
	Note	Ref	**Note: The following list will service one machine (built to current production per date on the front cover) with emergency repair parts which can be installed in the field. Parts from the list should be replaced when inventory is depleted to keep service parts stock supplied. For further information, contact your JLG dealer or the JLG Industries Parts Department.**	
		Ref	**STANDARD PARTS**	
	2120150	4	Element Filter	
	7020020	1	Switch, Indicator	
	7012944	1	Coil	
	7012772	1	Coil	
	2120149	1	Element, Filter	
	7020021	1	Switch, Indicator	
	70000582	1	Coil	
	7012664	1 doz	Element, Air Cleaner	
	3740067	1	Relay	
	7024444	1	Breather, Hydraulic Tank	
	4360328	1	Switch, Toggle	
	4360469	1	Switch, Key	
	2860030	1	Key, Replacement	
	4360475	1	Switch, Mushroom	
	3740049	1	Relay	
	2940074	1	Latch	
	4360331	1	Switch, Toggle	
	4360387	1	Switch, Push Button	
	4360407	1	Controller, Speed	
	1001129555	1	Controller (Lift and Swing)	
	1001212415	1	Controller (Drive and Steer)	
	2400065	2	Fuse, 30Amp	
	3990010	2	Diode	

FIGURE 9-2. MODEL 600S/600SJ/660SJ VARIABLE PARTS

ITEM	PART NUMBER	QTY	DESCRIPTION	REV
	Note	Ref	**Note: The following list will service one machine (built to current production per date on the front cover) with emergency repair parts which can be installed in the field. Parts from the list should be replaced when inventory is depleted to keep service parts stock supplied. For further information, contact your JLG dealer or the JLG Industries Parts Department.**	
		Ref	**VARIABLE PARTS**	
	7026830	1 doz	Filter, Fuel (Caterpillar Engine Machines)	
	7026811	1 doz	Filter, Oil (Caterpillar Engine Machines)	
	7016328	1 doz	Filter, Fuel (Deutz Engine Machines)	
	7016331	1 doz	Filter, Oil (Deutz Engine Machines)	
	3740080	1	Relay (Machines with Generator)	
	4360294	1	Breaker, Circuit (Machines with Generator)	
	4360336	1	Switch, Toggle (Machines with Generator)	
	1600364	1	Module - ADE (Ground Control) (Caterpillar Engine)	
	1600411	1	Module - ADE (Ground Control) (Deutz Engine)	
	4360578	1	Switch, Limit	
	70002005	1	Powertrack Repair Section (600S) (Gortrac Brand)	
	70002007	1	Powertrack Repair Section (660SJ) (Gortrac Brand)	
	7016530	2	Power Track - Repair Section (Gemco Brand)	
	7006138	24	Power Track - Pin Kit (Gemco Brand)	
	4360336	1	Switch, Toggle (Machines with Headlights)	
	1600375	1	Module - ADE (Platform Control)	

SECTION 10 - SPECIAL OPTIONS

SECTION 10 - SPECIAL OPTIONS

FIGURE 10-1. SPECIAL OPTIONS

ITEM	PART NUMBER	QTY	DESCRIPTION	REV
	Note	Ref	**Note: This list is to accommodate machines ordered with special equipment. Options may not be applicable to all models. For more specific parts information contact JLG Parts Department.**	
		Ref	**MISCELLANEOUS SPECIAL OPTIONS**	
		Ref	**Airline to Platform Installation Options:**	
	0255388	Ref	1/2in 600S & 600SJ	
	0255389	Ref	1/2in 660SJ	
	0274219	Ref	**Battery Disconnect Switch**	
	0270723	Ref	**Beacon Light Installation (On Platform)**	
	0256273	Ref	**Boom Wipers Installation (Brush Type)**	
	0256789	Ref	**Camera Mount Assembly**	
		Ref	**ClearSky Telematics Kit (Dealer Installed)**	
	1001102841	Ref	**ANSI Spec**	
	1001102842	Ref	**ANSI Export/CE/Japanese Specs**	
	1001139132	Ref	**Australian Spec**	
	1001104985	Ref	**CSA Spec**	
		Ref	**Note: Refer to ClearSky (Telematics) Manual p/n 3128499 for Service Parts.**	
		Ref	**Cold Weather Package Installation Options:**	
	0273575	Ref	Caterpillar Engine	
	0256060	Ref	Deutz	
	0271548	Ref	Deutz (With Glow/Plugs)	
		Ref	**Container - Tray Storage Options:**	
	1580012	1	Center	
	1580013	1	Rail	
		Ref	**Decal Options:**	
	0256763	Ref	Decal - 265kg Capacity Rating (600S)	
	0256764	Ref	Decal - 265kg Capacity Rating (600S)	
	0256770	Ref	Decal - 265kg Capacity Rating (600SJ)	
	0256773	Ref	Decal - 265kg Capacity Rating (600SJ)	
	0256771	Ref	Decal - 265kg Capacity Rating (660SJ)	
	0256774	Ref	Decal - 265kg Capacity Rating (660SJ)	
	1702788	1	Decal - Biodegradable Hydraulic Fluid	
	1703479	1	Decal - Biodegradable Hydraulic Fluid (German)	
	1704174	1	Decal - Biodegradable Hydraulic Fluid (Synthetic)	
	1704175	1	Decal - Biodegradable Hydraulic Fluid (German) (Synthetic)	
		Ref	**Decal Kits**	
	2900974	Ref	Decal Kit - Country Spec (Australian Spec)	
	2900937	Ref	Decal Kit - Country Spec (CE Spec)	
	1001193633	Ref	Decal Kit - Machine	
	1001108718	Ref	Decal Kit - Platform	
	1001119562	Ref	Decal Kit - Platform Console Box	
		Ref	**Electrical Connector Kits**	
	1001148902	Ref	Amp/Tyco Electrical Connector Kit	
	1001148903	Ref	Deutsch DT Electrical Connector Kit	
	1001148904	Ref	Deutsch HD Electrical Connector Kit	
	1001148905	Ref	Packard Electrical Connector Kit	
	1001148906	Ref	Various Electrical Connectors Kit	

ITEM	PART NUMBER	QTY	DESCRIPTION	REV
	2580055	Ref	**Engine Block Heater Installation (Caterpillar Engine Machines)**	
	0257157	Ref	**Ether Start Installation (Deutz Engine Machines)**	
		Ref	**Filter Kits:**	
		Ref	Combined Filter Kit (Hydraulic/Air and Fuel/Engine Oil)	
		Ref	Caterpillar Engines	
	2915137	NLA	Caterpillar Engines (Use p/n 1001110994) **(SN 0300068000 through 0300084826)**	
	1001114031	NLA	Caterpillar Engines (Use p/n 1001110994) **(SN 0300068000 through 0300084826)**	
	1001110994	1	Caterpillar Engines **(SN 0300068000 through 0300084826)**	
	1001114123	NLA	Caterpillar Engines (Use p/n 1001110991) **(SN 0300084827 through 0300087000)**	
	1001114124	NLA	Caterpillar Engines (Use p/n 1001110991) **(SN 0300084827 through 0300087000)**	
	1001110991	1	Caterpillar Engines **(SN 0300084827 through 0300087000)**	
		Ref	Deutz Engines	
	2910463	NLA	Deutz Engines (Use p/n 1001110993) **(SN 0300068000 through 0300084826)**	
	1001110993	1	Deutz Engines **(SN 0300068000 through 0300084827)**	
	1001114036	NLA	Deutz Engines - 600 Hour (Use p/n 1001110990) **(SN 0300084827 through 0300087000)**	
	1001110990	1	Deutz Engines - 600 Hour **(SN 0300084827 through 0300087000)**	
		Ref	Hydraulic/Air Filter	
	2910924	NLA	Caterpillar and Deutz - 300 Hour (Use p/n 1001109692) **(SN 0300084827 through 0300087000)**	
	1001109692	1	Caterpillar and Deutz - 300 Hour	
	1001114132	NLA	Deutz Engines - 300 Hour (Use p/n 1001109684) **(SN 0300084827 through 0300087000)**	
	1001109684	1	Deutz Engines - 300 Hour	
	1001110133	1	Fuel/Engine Oil Filter (Deutz Engines Only)	
	4060959	Ref	**Footswitch Shield (Note: Move Decal to Shield)**	
	1120362	Ref	**Fuel Cap with Gage**	
		Ref	**Glow Plugs Installation (Deutz Engine Machines) Options:**	
	0271333	Ref	**Glow Plugs Installation (Deutz Engine Machines) (SN 0300068000 through 0300082631)**	
	0271912	Ref	**Glow Plugs Installation (Deutz Engine Machines) (SN 0300082632 through 0300087000)**	
	2901691	Ref	**Glow Plugs Installed in Intake Kit (Deutz Engine Machines)**	
		Ref	**Hood (Steel) Replacement Kit**	
	1001126287	Ref	**Caterpillar Engine Machines**	
	1001126286	Ref	**Deutz Engine Machines**	
	1001187494	Ref	**Hose Kit - Boom (SN 0300068000 through 0300075605)**	
	1001187495	Ref	**Hose Kit - Boom (SN 0300075606 through 0300087000)**	
		Ref	**Hostile Environment Add-On Kits**	
	1001204925	Ref	**Hostile Environment Add-On Kit (600S)**	
	1001204926	Ref	**Hostile Environment Add-On Kit (660SJ)**	
		Ref	**Hydraulic Fluids Options:**	
	2300014	Ref	Mobil 424	
	2300027	Ref	Mobil 224H Bio	
	2300029	Ref	Mobil EAL ISO 46 Bio	
	2300016	Ref	Mobil DTE 13M	
	2300019	Ref	Quaker State Quintolubric 888-46 Fire Res	
	0255439	Ref	**Intercom Communication System Installation**	

SECTION 10 - SPECIAL OPTIONS

ITEM	PART NUMBER	QTY	DESCRIPTION	REV
	1001189615	Ref	**Kingpin Removal Kit**	
		Ref	**Loop Flushing Installations**	
	0273741	Ref	**Loop Flushing Installations 2WD**	
	0273738	Ref	**Loop Flushing Installations 4WD**	
	0256762	Ref	**Oil Cooler Installation - Deutz Engine Machines**	
	1282665	Ref	**Oil Cooler Installation - Deutz Engine Machines**	
		Ref	**Oxy-Acetylene Lines to Platform Installation Options:**	
	0255390	Ref	**Oxy-Acetylene Lines to Platform Installation 600S & 600SJ**	
	0255391	Ref	**Oxy-Acetylene Lines to Platform Installation 660SJ**	
	0258703	Ref	**Platform Console Cover Installation**	
	1001205175	Ref	**Platform Console Cover Add-On Kit**	
		Ref	**Platform Entry Kit**	
	1001142504	Ref	**Kit, Replace Swing Gate with Drop Bar**	
	1001142505	Ref	**Kit, Replace Drop Bar with Swing Gate**	
	0272384	Ref	**Platform and Glazier and Load Sensing System Installation (Refer to Accessories Book #3124287 for Service Parts):**	
		Ref	**Platform Huck Fasteners Replacement Hardware**	
	0641416	AR	Bolt 1/4in-20NC x 2in	
	3311405	AR	Locknut 1/4in-20NC	
	4711400	AR	Flatwasher 1/4in	
	3300151	AR	Acorn Nut 1/4in-20NC	
	1001149730	Ref	**Platform Mid Rail Repair Kit**	
		Ref	**Platform Top Rail Extension (With Side Entry)**	
	0272733	Ref	**3ftx6ft Platforms**	
	0272725	Ref	**3ftx8ft Platforms**	
	2910073	Ref	**Power Track Hose and Clamp Kit**	
	1320247	1	Clamp, Nylon	
	0641522	1	Bolt 5/16in-18NC x 2-3/4in	
	3311505	1	Locknut 5/16in-18NC	
	4711500	2	Flatwasher 5/16in	
	2753084	1	Hose	
	0861586	Ref	**Remote Control Box**	
	0861653	Ref	**Remote Control Box (600S Only)**	
	4240151	1	Strap Assembly	
	4923045	1	Harness Remote Control Cable	
	0861681	Ref	**Remote Control Box - Tethered (600S Only)**	
	4240151	1	Strap Assembly	
	4923045	1	Harness Remote Control Cable	
	2902300	Ref	**Remote Oil Filter Kit - Required on Caterpillar Engine to Allow SkyPower 7500 Watt Generator to Fit (SN 0300068000 through 0300078183)**	
	3574696	1	Bracket, Mounting Remote Filter	
		Ref	**SkyGuard Component Options:**	
	1001149560	Ref	SkyGuard Complete Add-on Kit (Non-UGM Machines)	
	1001137672	Ref	SkyGuard Installation Kit (Old Style Platform)	
	1001197016	Ref	SkyGuard Installation Kit (New Style Platform)	
	1001137440	1	SkyGuard Sensor Harness	
	1001186431	2	Relay	
	1001143256	Ref	SkyGuard Blue Beacon Kit	
	1001116159	Ref	SkyPower Kit – 7500W Generator (Deutz Engines)	
	1001228357	Ref	**Telematics Retrofit Harness Kit (Machines with UGM)**	
	0272302	Ref	**Tire Sealant Installation**	

ITEM	PART NUMBER	QTY	DESCRIPTION	REV
	0272312	Ref	**Tire Sealant Decal Installation**	
	2902203	1	Kit, Tire Sealant Decal	
		Ref	**Tools for Service**	
	7002840	1	Anti-Rotation Pin Removal Tool	
	8896941	1	Wire Stripper	
	7002821	1	Wire Crimper (To install wire ends to wires)	
	7002823	1	Pin/Socket Extractor - Universal (To Remove Pins/Sockets from Connectors)	
	4460467	1	Extractor - 16-18 Gauge (For Removal of Pin/Sockets from Deutsch Connectors)	
	4460510	1	Extractor - 12-14 Gauge (For Removal of Pin/Sockets from Deutsch Connectors)	
	7002822	1	Screwdriver, Potentiometer (To Adjust Drive Controllers)	
	7016654	1	Screwdriver, Magnetic	
	7004275	1	Seal Installation Tool - 1in	
	7004276	1	Seal Installation Tool - 1-1/2in	
	7002826	1	Seal Installation Tool - 2in	
	7016655	1	Wire Rope Sheave Gauge	
	7016652	1	Huck Bolt Faster (For Small Huck Bolts Only)	
		Ref	**Tool (Hydraulic) Installations Options:**	
	0272347	Ref	Tool (Hydraulic) Installations 600S	
	0272348	Ref	Tool (Hydraulic) Installations 600SJ	
	0272349	Ref	Tool (Hydraulic) Installations 660SJ	
	0257728	Ref	**Tube Rack Installation**	
	0258918	Ref	**Utility Rack Installation**	
		Ref	**Weld Leads to Platform Installation Options:**	
	0255399	Ref	Weld Leads to Platform Installation 600S & 600SJ	
	0255895	Ref	Weld Leads to Platform Installation 660SJ	
		Ref	**Wheel Covers Installation**	
	0256196	Ref	Wheel Covers Installation **(SN 0300068000 through 0300075605)**	
	0273449	Ref	Wheel Covers Installation **(SN 0300075606 through 0300087000)**	

PART NUMBER INDEX

PART NUMBER INDEX

0060031.....156, 165
0060034.....165
0060066.....156, 169
0060067.....151, 169
0060075.....151, 165
0080163.....90, 97
0080181.....80
0080220.....237
0080241.....126
0080243.....80
0100009.....190
0100011....11, 12, 15, 19, 20, 23, 27, 29, 31, 49, 52, 57, 63, 71, 80, 82, 88, 94, 95, 113, 115, 117, 121, 126, 127, 132, 133, 136, 140, 143, 145, 151, 152, 157, 158, 162, 171, 183, 191, 209, 213, 215, 221, 225, 227, 231, 233, 237, 241, 247, 257, 276, 280, 305, 307
0100019 11, 71, 133, 146, 152, 157
0100020....80, 82, 88, 94, 95, 98, 113, 190, 191, 279
0100035.....125, 189
0100038 15, 23, 221, 225, 227, 231, 233, 237, 241, 247, 257, 276, 280
0100040.....183
0100048....121, 125, 126, 190, 290
0100062.....146
0100063.....12, 237, 241
0100081.....190
0140001.....63
0140011.....189
0140032.....125
0181727.....80, 87, 94
0200048.....209
0200741.....143
0200742.....136, 139
0200819.....136
0239585.....71
0254798.....71
0254849.....113
0254856.....49
0254857.....49
0255262.....115
0255294.....115
0255315.....61
0255316.....71
0255330.....303
0255332.....303
0255334.....303
0255335.....125
0255353.....259
0255354.....259
0255355.....259
0255356.....259
0255363.....55
0255388.....314
0255389..... 314
0255390..... 316
0255391..... 316
0255399..... 317
0255439..... 315
0255445..... 61
0255446..... 61
0255447..... 61
0255698..... 125
0255881..... 129
0255895..... 317
0255917..... 126, 295
0255929..... 259
0255930..... 259
0256060..... 314
0256122..... 133
0256196..... 317
0256201..... 295
0256212..... 237
0256252..... 303
0256253..... 303
0256254..... 303
0256255..... 303
0256256..... 303
0256257..... 303
0256273..... 314
0256305..... 126
0256306..... 126
0256394..... 11
0256569..... 303
0256570..... 303
0256571..... 303
0256572..... 303
0256573..... 303
0256574..... 303
0256621..... 11
0256622..... 303
0256632..... 191
0256633..... 191
0256634..... 303
0256689..... 89, 95
0256690..... 89, 95
0256762.... 282, 286, 316
0256763..... 314
0256764..... 314
0256770..... 314
0256771..... 314
0256773..... 314
0256774..... 314
0256789..... 314
0256823..... 133
0256830..... 132
0256847..... 90, 97
0257157..... 315
0257728..... 317
0257732..... 11
0257733..... 303
0257744..... 27
0257882..... 127
0257887..... 125, 294
0258703..... 316
0258886..... 55
0258918..... 317
0270120..... 31, 49
0270121..... 31, 49
0270329..... 71
0270528..... 57
0270723..... 314
0270733..... 290
0270734..... 290
0270735..... 158, 290
0270736..... 158, 290
0270737..... 158, 290
0270738..... 158, 290
0270763..... 87
0270804..... 171
0270805..... 125, 287
0270814... 175, 180, 184, 192, 286
0270833..... 125
0270868..... 20, 27
0271003..... 19
0271004..... 19
0271005..... 27
0271014..... 303
0271317..... 156
0271318..... 156
0271327..... 151
0271333..... 315
0271372..... 171
0271548..... 314
0271552..... 126, 191
0271616..... 32
0271617..... 32
0271619..... 32
0271912..... 315
0271940.... 176, 180, 183
0272041..... 282
0272070..... 152, 158
0272130..... 156
0272132..... 151
0272134..... 156
0272298.... 176, 180, 183
0272302..... 316
0272312..... 317
0272347..... 317
0272348..... 317
0272349..... 317
0272384..... 316
0272427..... 192, 209
0272481..... 139, 192
0272482..... 139, 192
0272483..... 290
0272484..... 290
0272485..... 158, 290
0272486..... 158, 290
0272487..... 158, 290
0272488..... 158, 290
0272492..... 145
0272507..... 126, 295
0272521..... 213
0272588..... 213
0272589..... 147
0272606..... 215
0272607..... 215
0272725..... 316
0272733..... 316
0272796..... 80
0272970..... 183, 191
0273045..... 143, 192
0273048..... 31, 51
0273049..... 31, 51
0273052.....117
0273058.....183
0273067.....52
0273072.....87
0273076.....299
0273078.....299
0273080.....23, 29
0273081.....15, 23
0273082.....61
0273085.....143, 192
0273086.....61
0273087.....61
0273088.....61
0273150.....15
0273161.....117
0273194.....303
0273226.....15, 23
0273238.....32
0273239.....32
0273240.....32
0273356.....29
0273357.....29
0273362.....52
0273366.....31, 51
0273367.....31, 51
0273379.....15, 23
0273394.....23, 57
0273398.....57
0273422.....15, 57
0273449.....317
0273486....175, 180, 184, 192, 286
0273490....175, 180, 184, 192, 286
0273491....175, 180, 184, 192, 286
0273518.....135
0273521.....81
0273538.....135
0273539.....135
0273541.....145
0273542.....211
0273575.....314
0273593.....87
0273594.....81
0273595.....81
0273692.....94
0273693.....94
0273706.....209
0273738.....316
0273741.....316
0273824.....192, 209
0274081.....135
0274086.....139
0274087.....135
0274090.....139
0274091.....135
0274093.....307
0274152.....32
0274209.....184
0274210.....127, 191
0274219.....314
0274233.....98
0274297.....94
0274298.....94
0274316.....61

0274317 61
0274318 61
0274319 61
0274359 307
0274491 80
0274492 81
0274493 81
0340041 ..... 80, 87, 95
0340046 80
0362519 55
0362528 125
0362609 127
0362610 127
0362910 57
0363012 51
0370026 223
0400075 ..... 80, 87, 94
0440170 ..... 12, 15
0440171 ..... 12, 15
0440207 71
0460150 259
0460151 259
0460152 259
0460153 259
0460158 259
0460160 259
0460161 259
0480119 139
0480120 ... 136, 137, 139, 143
0480121 ..... 136, 140
0480125 145
0480126 145
0561076 162
0561138 12
0561139 12
0561183 162
0561185 162
0561237 158
0561245 162
0561508 163
0630078 12
0630458 .... 152, 157, 171
0630462 209
0630464 189
0630490 16
0630491 126
0630498 ..... 80, 87, 94
0630507 132
0630518 ..... 121, 213
0630534 ... 225, 227, 229, 241, 245, 247
0630535 ... 221, 231, 233, 235, 247, 253, 257
0630536 237
0630548 122
0630568 191
0641403 ... 125, 127, 146, 163
0641404 ... 146, 172, 189, 190
0641406 ..... 80, 125, 132, 145, 163, 176, 180, 183, 215, 305, 307
0641407 .... 80, 82, 88, 95
0641408 ... 176, 180, 183, 189, 237, 304, 307
0641410 ..... 94, 299
0641414 11, 19, 175, 180, 184, 190, 209, 305
0641416 .... 158, 190, 316
0641418 ..... 63, 179
0641505 ..... 55, 146
0641506 ..... 62, 121, 133
0641507 ..... 80, 82
0641508 . 63, 88, 94, 136, 140, 143
0641510 ..... 88, 95
0641512 133
0641514 .... 62, 83, 88, 94
0641516 ..... 57, 145, 211, 299
0641518 184
0641520 49
0641522 ..... 49, 171, 316
0641524 ..... 175, 179
0641532 51
0641552 51
0641604 ..... 152, 157
0641605 162
0641606 . 82, 88, 95, 158, 162, 213, 215
0641607 ..... 52, 162
0641608 ... 11, 12, 15, 19, 20, 23, 27, 29, 49, 55, 57, 63, 80, 82, 96, 113, 132, 151, 157, 162, 171
0641609 ..... 80, 129, 133
0641610 ... 80, 83, 87, 94, 95, 96, 98, 136, 140, 143, 162, 176, 180, 183, 189
0641611 ..... 115, 157
0641612 ... 11, 15, 20, 27, 117
0641613 ..... 62, 162
0641614 .... 113, 157, 163
0641618 ..... 51, 146, 157, 162
0641634 162
0641638 162
0641640 162
0641648 171
0641772 .... 136, 140, 143
0641807 171
0641808 ... 80, 83, 88, 94, 146, 157
0641810 ..... 152, 157
0641811 117
0641812 . 83, 88, 95, 152, 158
0641813 211
0641814 .... 11, 15, 19, 23
0641818 ..... 87, 95, 129
0641820 ... 115, 117, 152, 157
0641824 162
0641826 ..... 87, 95
0641828 80
0642010 .... 57, 82, 89, 94
0642012 ... 11, 15, 19, 23, 29, 151, 157
0642018 71
0642612 .... 126, 127, 171
0642684 ..... 152, 158
0651406 63
0681608 ..... 152, 158, 163
0681610 .. 12, 20, 27, 152, 157, 162
0681612 162
0681810 31
0681814 187
0681822 187
0681836 71
0682012 12
0682014 ..... 12, 133
0682016 ..... 31, 71
0700408 299
0700808 ..... 80, 88, 95
0700810 ..... 90, 97
0700815 145
0700816 136
0701010 80
0701012 ..... 80, 89, 95
0701014 95
0701015 ..... 80, 89, 95
0701210 136
0701214 80
0701414 ..... 80, 88, 95
0721003 ..... 12, 15, 192
0721004 57
0721005 ..... 209, 300
0721006 ..... 81, 132, 136, 140, 143
0721008 190
0741606 126
0741607 ..... 57, 152, 157
0741612 162
0801011 161
0801012 161
0801014 161
0801036 161
0801037 161
0801038 161
0801065 161
0801071 ..... 151, 161
0801072 ..... 156, 161
0801073 ..... 156, 161
0801336 ..... 156, 161
0801340 ..... 151, 161
0801341 ..... 156, 161
0801372 161
0801373 161
0801383 ..... 151, 161
0801386 ..... 156, 161
0801387 ..... 156, 161
0860520 ..... 304, 307
0861389 121
0861414 ..... 189, 191
0861482 121
0861483 121
0861511 189
0861537 ..... 189, 191
0861541 146
0861567 ..... 145, 146
0861572 145
0861586 316
0861599 ..... 143, 299
0861602 299
0861604 299
0861606 299
0861607 ..... 143, 299
0861612 121
0861613 121
0861653 316
0861681 316
0861687 121
0861688 121
0861698 121
0861699 121
0902143 132
0902161 132
0902206 ..... 126, 127
0902219 133
0902223 132
0902351 132
0902384 133
0902416 132
0902491 132
0902520 115
0902751 190
0902888 146
0902910 84
0903056 117
0903220 84
0920117 31
0920119 71
0940070 ..... 80, 87, 95
0940071 132
0940088 133
0940092 ..... 209, 211
0940094 ..... 209, 211
0940103 209
0940131 211
0940133 209
0940134 209
0961845 179
0961893 ... 225, 227, 229, 241, 245, 247
0961894 .... 231, 233, 247
0961895 221
0961897 257
0961898 237
0961947 ... 157, 225, 227, 229, 247, 251
0961950 ... 11, 15, 19, 23, 152, 157, 161, 237
0961951 ... 152, 157, 161, 231, 233, 235, 247, 253
0961977 ... 12, 15, 20, 23, 27, 29, 255
0961986 ..... 80, 88, 95
0962006 ..... 152, 157
0962036 12
0962051 129
0962131 ... 15, 20, 23, 27, 29
0962270 187
0962292 57
0962335 158
0962336 .... 241, 243, 245
0962348 57
0962496 221
0962520 145
0962563 136
0962653 136
1001097554 83
1001098503 52

PART NUMBER INDEX

1001099832.....171
1001099839.....171
1001100120.....51
1001100321.....135, 139
1001102841.....314
1001102842.....314
1001104985.....314
1001108718.....314
1001109684.....315
1001109692.....315
1001110133.....315
1001110169.....71, 75
1001110990.....315
1001110991.....315
1001110993.....315
1001110994.....315
1001112468.....151, 156, 237
1001113961.....203, 205
1001114031.....315
1001114036.....315
1001114123.....315
1001114124.....315
1001114132.....315
1001116159.....316
1001117320.....184, 191
1001118416.....205
1001118417.....197
1001119562.....314
1001121592.....209
1001121593.....209
1001126286.....315
1001126287.....315
1001129555.....310
1001137440.....316
1001137672.....316
1001138795.....245
1001138796.....235, 253
1001139132.....314
1001142504.....316
1001142505.....316
1001143256.....316
1001144629.....183
1001148902.....314
1001148903.....314
1001148904.....314
1001148905.....314
1001148906.....314
1001149560.....316
1001149730.....316
1001166538.....207
1001166539.....199
1001167359.....15, 23, 223
1001186431.....316
1001187494.....315
1001187495.....315
1001189615.....316
1001193633.....314
1001197016.....316
1001204925.....315
1001204926.....315
1001205175.....316
1001212415.....310
1001223331.....156, 233
1001223332.....233
1001223511.....227
1001223512.....151, 227
1001228002.....151, 251
1001228008.....151, 229
1001228012.....157, 243
1001228051.....156, 235
1001228052.....156, 253
1001228357.....316
1001248012.....157, 245
1060016.....127
1060279.....304, 307
1060341.....209, 295, 296
1060461.....291, 295, 299
1060494.....291, 296
1060584.....57
1060617.....237
1060637.....80, 89, 94
1060680.....291, 292
1060896.....291
1060903.....209
1060904.....82
1060918.....184, 190, 191, 290
1060977.....296
1061026.....291
1061027.....291, 292
1100086.....11, 19
1120304.....12, 15
1120362.....315
1120487.....113
1180345.....171
1180359.....171
1220078.....161
1260017.....71
1282380.....282
1282665.....282, 286, 316
1282828.....286
1282937.....286
1283235.....287
1283309.....282
1283363.....282
1320012.....80
1320016.....80, 87, 95
1320022.....80, 83, 88, 94, 95, 98
1320070.....237
1320149.....299
1320176.....89, 96
1320177.....215
1320223.....82, 88, 95
1320224.....146
1320235.....152, 158
1320244.....163
1320247.....171, 316
1320302.....213, 215
1340060.....80, 87, 95
1380147.....129
1580011.....80
1580012.....184, 314
1580013.....184, 314
1600313.....189
1600317.....190, 195
1600318.....190, 203
1600327.....121
1600361.....83, 84
1600364.....121, 312
1600375.....189, 312
1600411.....121, 312
1660219.....115
1660219RR.....115
1660223.....115
1660223RR.....115
1660234.....90, 97
1660239.....80
1660257.....117
1660258.....117
1660303.....117
1660304.....117
1670769.....158
1670771.....133
1670779.....133
1670818.....125
1670821.....127
1670824.....125, 127
1670829.....121, 189
1670836.....163
1671037.....190
1671055.....152, 157
1683053.....225, 227, 241, 247
1683055.....231, 233, 247
1683057.....257
1683059.....221
1683067.....237
1683078.....11, 19, 221
1683208.....12, 15, 20, 24, 27, 29, 255
1683250.....257
1683258.....157, 241
1683263.....156, 247
1683266.....151, 247
1683275.....151, 156, 237
1683359.....257
1683415.....151, 225
1683418.....156, 231
1683609.....157, 241
1683618.....161, 257
1683619.....257
1683620.....161, 257
1683621.....257
1683666.....151, 156, 237
1683949.....247
1683952.....231
1683954.....237
1683955.....237
1683962.....247
1683963.....231, 233
1683972.....247
1683973.....247
1683976.....225, 227
1683977.....225
1683986.....221
1684090.....241
1684092.....241
1684191.....221
1684280.....15, 23, 223
1684289.....223
1684290.....223
1684465.....223
1690697.....304
1691483.....304
1693289.....304
1693291.....304
1693292.....304
1693294.....304
1700584.....303, 308
1701499.....303, 307
1701500.....133, 303, 308
1701502.....303, 307
1701503.....303, 307
1701504.....303
1701505.....83, 89, 94, 304, 307
1701509.....303, 307
1701518.....303, 307
1701529.....304, 307
1701596.....304
1701600.....304
1701602.....304
1701791.....304
1701798.....304
1702300.....303
1702305.....305
1702564.....190
1702565.....190
1702566.....190
1702567.....190
1702610.....121
1702676.....176, 180, 184, 190
1702773.....187, 303, 307
1702774.....303, 307
1702788.....314
1702815.....303
1702816.....303
1702817.....303, 307
1702861.....303, 307
1702862.....303
1702901.....304, 305
1702902.....305
1702903.....305
1702904.....305
1702908.....305
1702938.....192, 209
1702968.....55
1702984.....304
1702985.....305
1702986.....305
1702988.....304
1702989.....305
1702990.....305
1702992.....305
1702993.....305
1702994.....305
1702996.....304
1702997.....305
1702998.....305
1703000.....305
1703001.....305
1703002.....305
1703084.....191
1703085.....191
1703162.....80, 87, 95
1703183.....304
1703184.....304
1703185.....304
1703186.....304
1703187.....304
1703190.....304
1703403.....55, 305
1703404.....55
1703444.....55
1703450.....55

1703465 121
1703466 121
1703470 305
1703471 305
1703472 ..... 305, 307
1703479 314
1703518 304
1703533 ..... 276, 280
1703811 307
1703814 307
1703992 304
1704174 314
1704175 314
1704260 189
1704277 303
1704412 307
1704578 57
1704885 ..... 305, 307
1704997 190
1705014 187
1705084 ..... 303, 307
1705090 ..... 57, 307
1705132 ..... 122, 190
1705232 304
1705250 304
1705275 304
1705305 ..... 213, 215
1705325 143
1705355 213
1705376 146
1705460 147
1705461 147
1705466 ..... 213, 215
1705489 147
1705490 215
1705714 ..... 143, 299
1705715 ..... 143, 299
1705728 ..... 143, 192
1705752 121
1705753 121
1705822 307
1705828 307
1705921 307
1705961 307
1705978 307
1706098 307
1706493 187
1706501 187
1870132 287
1870191 287
2000189 ..... 87, 89
2000194 ..... 80, 83
2000216 ..... 95, 97
2000219 95
2000220 94
2000221 95
2000274 ..... 96, 97
2000279 95
2000280 95
2000281 95
2030010 ..... 213, 215
2060025 ..... 80, 87, 96
2080040 ..... 175, 179, 183
2080044 157
2080046 299
2120145 63
2120146 62
2120149 ..... 63, 310
2120150 ..... 62, 310
2120164 63
2120203 98
2120209 62
2120210 62
2160003 71
2180344 71
2180348 94
2180380 ..... 276, 280
2180536 ..... 82, 88
2180724 ..... 276, 280
2180798 ..... 80, 87, 96
2180832 215
2200222 ..... 73, 113
2220063 71
2220235 ..... 237, 263, 267, 275
2220237 ..... 263, 271
2220240 263
2220242 263
2220250 ..... 82, 88
2220273 ..... 82, 88
2220307 264
2220313 ..... 82, 88, 94
2220362 ..... 263, 267, 271
2220363 ..... 263, 267
2220365 263
2220371 ..... 263, 271, 273
2220372 ..... 275, 279
2220373 ..... 263, 271, 275, 279
2220375 ..... 263, 267, 271, 275, 279
2220376 ..... 111, 275, 279
2220377 ..... 263, 267, 271, 275, 279
2220380 ..... 275, 279
2220385 ..... 273, 275
2220386 268
2220407 279
2220408 ..... 275, 279
2220409 ..... 276, 280
2220414 276
2220415 ..... 263, 271, 273, 275, 279
2220428 ..... 275, 279
2220429 ..... 275, 279
2220435 267
2220451 ..... 87, 96, 263
2220459 88
2220462 276
2220465 ..... 263, 267
2220466 ..... 263, 267, 275, 279
2220468 ..... 273, 276, 280
2220472 ..... 267, 268, 276, 280
2220473 ..... 263, 271, 276, 280
2220474 279
2220479 ..... 107, 276, 280
2220490 ..... 263, 273
2220497 ..... 276, 280
2220498 ..... 275, 279
2220500 267
2220502 ..... 263, 267, 276, 280
2220504 ..... 263, 267, 271, 273
2220549 82
2220550 267
2220568 263
2220574 ..... 276, 279
2220577 273
2220578 ..... 107, 275, 279
2220582 ..... 263, 267, 271, 273, 275, 279
2220596 ..... 267, 271, 275, 279
2220603 ..... 273, 276, 280
2220605 275
2220606 ..... 263, 271
2220609 ..... 276, 280
2220618 ..... 275, 276, 279
2220619 273
2220622 267
2220628 ..... 275, 279
2220635 273
2220646 ..... 108, 263, 267, 275, 279
2220671 ..... 263, 267
2220710 263
2220738 ..... 267, 279
2220767 81
2220794 ..... 82, 89
2220800 267
2220810 ..... 111, 275, 279
2220833 267
2220861 271
2220873 ..... 275, 276, 279, 280
2220883 ..... 47, 225, 227, 229, 231, 233, 235, 237, 241, 243, 245
2220885 ..... 221, 225, 227, 229, 231, 233, 235, 241, 243, 245, 248, 253, 257
2220886 ..... 47, 221
2220887 237
2220890 223
2220893 63
2220906 ..... 275, 279
2220909 276
2220914 ..... 267, 276
2220921 ..... 275, 279
2220947 ..... 108, 275, 279
2220948 ..... 275, 279
2220950 ..... 276, 280
2220974 ..... 276, 280
2221042 279
2221170 263
2221176 ..... 94, 98
2300014 315
2300016 315
2300019 315
2300027 315
2300029 315
2360376 19
2360414 19
2360415 19
2360451 19
2360452 19
2360453 19
2360615 23
2360623 23
2360624 23
2360634 23
2360635 23
2360636 23
2400060 147
2400064 147
2400065 ..... 292, 310
2400066 ..... 292, 296
2400070 296
2410014 187
2420172 121
2420203 ..... 136, 139, 299
2460013 ..... 135, 139
2460032 135
2460039 ..... 135, 139
2460048 145
2460049 ..... 135, 139, 143
2460050 145
2460055 135
2460056 ..... 135, 139
2460057 ..... 135, 139
2560136 189
2560144 237
2560173 185
2580055 ..... 84, 315
2600209 132
2600211 191
2600219 175
2600233 132
2600281 183
2600287 179
2680448 132
2680449 132
2680450 132
2720058 ..... 80, 82, 89, 94, 98
2720160 215
2720271 ..... 82, 88
2720398 ..... 87, 96
2720434 ..... 80, 88, 96
2720449 ..... 88, 96
2720509 80
2720510 81
2720515 81
2750532 ..... 82, 88, 94, 96
2751013 ..... 263, 267
2751015 273
2751016 ..... 263, 267
2751020 273
2751021 267
2751032 71
2751095 71
2751396 ..... 276, 280
2751397 273
2751410 273
2751427 275
2751434 273
2751474 ..... 275, 279
2751868 ..... 276, 280
2752245 263
2752249 267
2752256 267
2752258 263

PART NUMBER INDEX

2752322.....263, 267
2752331.....271
2752340.....275, 279
2752341.....264
2752345.....263
2752389.....267
2752398.....267
2752433.....276
2752443.....267
2752462.....263, 267, 273
2752475.....264, 271
2752478.....263, 264, 267, 271
2752502.....279
2752504.....275, 279
2752514.....275
2752515.....275, 279
2752516.....275
2752517.....276
2752573.....275
2752574.....271
2752580.....276
2752584.....263, 267
2752587.....275
2752588.....276, 280
2752591.....276, 280
2752592.....263, 264, 267, 271
2752594.....275
2752596.....276, 280
2752597.....276, 280
2752598.....276, 280
2752599.....276, 280
2752611.....264, 271
2752631.....275, 279
2752632.....263, 264, 267, 271, 275, 279
2752633.....276, 280
2752643.....276, 280
2752653.....275, 279
2752654.....275, 279
2752752.....275, 279
2752753.....276, 280
2752762.....275, 279
2752763.....275, 279
2752783.....276, 280
2752807.....263, 267
2752810.....267
2752812.....263, 267
2752822.....273
2752823.....273
2752824.....273
2752888.....267
2752889.....267
2752893.....267
2752898.....267
2752909.....267, 271
2752910.....264, 271
2752918.....267
2752928.....264, 271
2752929.....264, 271
2752963.....263, 267
2752977.....271
2752981.....276, 280
2753048.....276, 280
2753083.....276
2753084.....316
2753325..... 280
2753397..... 264, 271
2753435..... 264, 271
2753924..... 264, 271
2753925..... 264, 271
2753926..... 271
2753928..... 271
2753929..... 264, 271
2753930..... 271
2753931..... 271
2753933..... 273
2753957..... 279
2753967..... 264
2753968..... 279
2753969..... 264
2760105..... 121, 189
2780188..... 11
2780205..... 71, 73
2780261..... 31, 35
2780269..... 31, 37
2780271..... 16
2792176..... 282
2792179..... 275, 282
2792180..... 275, 282
2792181..... 275, 282
2792184..... 263, 282
2792185..... 282
2792186..... 267, 282
2792187..... 282
2792204..... 273, 282
2792266..... 283
2792315..... 283
2792325..... 283
2792326..... 283
2792327..... 283
2792603..... 279
2792605..... 282
2792607..... 271, 282
2792608..... 279, 282
2792612..... 273, 282
2792613..... 282
2792614..... 279, 282
2792615..... 282
2792616..... 263, 282
2792617..... 282
2792630..... 283
2792659..... 282
2792660..... 282
2820031... 137, 140, 143, 146
2820035... 125, 176, 180, 184
2820078..... 133
2820079..... 133
2820081..... 133
2820119..... 133
2840016..... 129
2860012..... 140, 143
2860030..... 122, 310
2900752..... 103
2900770..... 61, 165, 221
2900788..... 41
2900792... 225, 227, 229, 231, 233, 235, 237, 241, 243, 245
2900826..... 103
2900827..... 103
2900937..... 314
2900974..... 314
2901271..... 221
2901284..... 257
2901285..... 237
2901301..... 231, 248
2901303... 225, 227, 229, 233, 241, 248
2901358..... 88
2901443..... 296
2901691..... 315
2901763..... 66
2901986..... 163
2902203..... 317
2902217..... 213
2902266..... 223
2902296..... 82, 88, 94
2902300..... 316
2902443..... 292
2910073..... 316
2910463..... 315
2910924..... 315
2915014..... 121
2915137..... 315
2920110..... 126
2920113..... 126
2920129.... 190, 290, 292
2920140... 175, 180, 184, 296
2920157..... 127, 185
2920162.... 136, 139, 299
2920215..... 126
2940074... 175, 179, 183, 310
2940088..... 132
3010125..... 57
3020016..... 95
3020021..... 90, 97
3160204..... 31, 41
3160273..... 71, 75
3160299..... 31, 43
3160300..... 31, 43
3160349..... 47
3160350..... 47
3200362..... 89, 96
3200378..... 87
3200406..... 81, 96
3220103..... 89, 96
3220104..... 89, 96
3220113..... 81
3250585..... 185
3250872 55, 57, 305, 307
3251102.... 137, 140, 192
3251242..... 303
3252347..... 304
3252507..... 140
3252523..... 307
3252764..... 145
3271805..... 117, 187
3272605.... 152, 158, 165
3290405..... 299
3290801..... 81
3300007..... 12, 31
3300106..... 31
3300151... 179, 213, 215, 316
3300205..... 122
3300229.....12
3300240.....163
3300241.....162
3300242.....163
3300353.....190
3300393.....175, 179
3300396.....146
3300399.....163
3300400.....163
3300408.....121
3310601.....129, 146
3310801.....299
3310805.....125, 127
3311001....133, 183, 190, 192, 299, 300
3311005....125, 126, 136, 140, 143, 175, 179, 213
3311401....121, 152, 163, 209
3311402.....152, 157
3311405....63, 81, 82, 88, 95, 96, 133, 146, 157, 171, 175, 176, 180, 184, 189, 215, 237, 304, 307, 316
3311501.....62, 133, 209
3311505....49, 51, 81, 82, 88, 94, 96, 132, 145, 172, 175, 179, 211, 299, 316
3311601.....113, 133, 191
3311605....81, 87, 94, 96, 98, 129, 132, 136, 140, 143, 157, 162, 171, 176, 180, 184, 187, 189, 213, 215
3311705.....136, 140, 143
3311801....31, 81, 89, 94, 146
3311805..81, 87, 96, 115, 129, 132, 152, 157, 158, 211
3312002.....12
3312201.....162
3321501.....133
3322201.....117
3323002.....12
3323403.....12
3324203.....12, 16
3340755.....162
3340757.....162
3340758.....162
3340764.....171
3340844.....161
3340871.....162
3340881.....162
3340900.....163
3340911.....51
3340966.....57
3380429.....82, 88, 94
3380434....176, 180, 184, 304
3380476.....184
3380535.....127
3420372.....57
3420447.....57
3420592.....55

3421453 55
3421565 ..... 57, 71
3421627 71
3422326 ... 12, 16, 20, 24, 27, 29
3422332 11
3422333 ..... 11, 19
3422335 12
3422351 12
3422352 12
3422417 162
3422424 162
3422446 ..... 82, 87, 94
3422530 129
3422532 ..... 82, 88, 95
3422552 55
3422553 55
3422557 ..... 151, 157
3422561 157
3422562 151
3422563 157
3422564 ..... 151, 157
3422565 151
3422566 ..... 151, 157
3422567 .. 16, 24, 57, 151
3422568 ..... 151, 157
3422569 151
3422574 157
3422580 151
3422583 157
3422591 ..... 11, 19
3422592 ..... 15, 23
3422753 ..... 20, 27
3422813 57
3422841 57
3422847 57
3422848 57
3422860 157
3422861 157
3422867 157
3422900 ..... 16, 24, 29
3422902 ... 16, 20, 24, 27, 29
3422903 ... 16, 20, 24, 27, 29
3422904 19
3430816 129
3450304 191
3450404 129
3450806 172
3451010 ..... 12, 16
3451012 12
3480176 221
3480188 .... 231, 233, 247
3480205 257
3480206 237
3480210 ... 225, 227, 241, 247
3480288 223
3510499 179
3510500 179
3510537 179
3510538 179
3510542 175
3510543 175
3510751 179
3510763 179
3510764 179
3510822 183
3510830 183
3510831 183
3510832 183
3510833 183
3510868 187
3510877 187
3520028 ... 136, 139, 140, 189
3520033 132
3520035 122
3520054 189
3520072 ... 175, 179, 183, 187
3520174 191
3520189 146
3520192 146
3520198 183
3534978 96
3536089 .... 175, 180, 184
3537318 71
3537416 ..... 87, 96
3537420 87
3537445 129
3537446 129
3538047 11
3538758 171
3539219 121
3539281 126
3539563 ..... 152, 157
3539590 133
3539622 163
3539662 55
3539685 ..... 175, 180
3539872 ..... 81, 87, 96
3539877 .... 11, 15, 19, 23
3539878 .... 11, 15, 19, 23
3539934 132
3539955 133
3539957 ..... 82, 87, 94
3539971 ..... 87, 96
3539979 133
3572009 57
3572010 57
3572011 57
3572012 57
3573400 ..... 213, 215
3573641 215
3573642 213
3573643 215
3574091 209
3574206 81
3574207 81
3574208 81
3574443 299
3574684 136
3574696 316
3575359 209
3577121 213
3580134 .... 136, 139, 143
3580158 ..... 139, 143
3580241 161
3580243 161
3580248 161
3580249 161
3580276 136
3580317 146
3580319 146
3580320 146
3580321 146
3580322 135
3600242 ..... 82, 87, 111
3600243 61
3600260 ..... 82, 87, 102
3600365 61
3600381 . 82, 87, 106, 108
3600388 . 82, 87, 106, 108
3600394 ..... 95, 107
3600395 ..... 95, 111
3600396 ..... 95, 107
3620033 ..... 87, 96
3620047 81
3640493 286
3640986 146
3641533 146
3641569 209
3740049 .... 122, 286, 292, 295, 310
3740058 286
3740063 286
3740067 ... 81, 87, 96, 310
3740080 .... 136, 140, 143, 146, 312
3760170 ..... 57, 71
3760367 221
3760368 .... 225, 227, 241, 247
3760369 .... 231, 233, 247, 257
3760372 237
3780187 12
3790012 .... 126, 127, 176, 180, 184, 190, 191, 192
3790045 31
3790110 166
3790152 ..... 82, 88, 95
3820001 ..... 55, 126, 127, 304, 307
3820020 183
3841013 172
3841143 .... 11, 12, 16, 19, 20, 24, 27, 29, 57, 82, 87, 94, 151, 157, 162
3841236 12
3841258 .... 11, 15, 16, 19, 23, 24, 29, 151, 157
3841329 55
3841340 ..... 152, 158
3841510 .... 16, 20, 24, 27, 29
3860050 172
3890006 161
3890008 161
3890009 163
3890010 161
3890011 161
3890012 163
3890040 187
3900054 187
3900141 241
3900207 ..... 175, 179
3900224 191
3900230 237
3900232 132
3900268 122
3910608 129
3910610 146
3910804 121
3910808 299
3911008 ..... 175, 183
3911010 299
3911016 ..... 179, 299
3911040 126
3930816 125
3930828 ..... 125, 127
3931028 125
3931408 ..... 125, 127
3931448 257
3931508 257
3931516 ... 225, 227, 229, 241, 247
3931620 . 82, 87, 95, 231, 233, 235, 247, 253, 257
3931632 146
3931672 191
3931720 221
3931840 .... 11, 15, 19, 23
3932032 237
3932224 71
3939680 163
3940604 57
3950803 237
3951608 162
3960343 ..... 12, 16
3960389 ...83, 87, 95, 132
3960407 ..... 88, 96
3960438 132
3960453 132
3960461 126
3960462 132
3960464 132
3960468 ..... 81, 89, 96
3960469 ..... 81, 89, 96
3960470 132
3990010 .... 293, 295, 310
4031911 81
4032015 145
4060802 ... 136, 140, 145, 185, 192
4060803 .... 171, 175, 180
4060805 ...82, 89, 96, 163
4060808 49
4060870 49
4060874 49
4060906 121
4060907 126
4060918 63
4060959 315
4061049 146
4061058 52
4070410 133
4070411 133
4070412 133
4070863 162
4070864 162
4070878 ..... 11, 19
4070879 ..... 11, 19
4070895 162
4070896 162
4070897 162

PART NUMBER INDEX

4070898.....162
4070929.....163
4070939.....163
4070940.....163
4070944.....11, 15, 19, 23
4070945.....11, 15, 19, 23
4070975.....161
4070976.....162
4070987.....121
4070994.....172
4070995.....172
4071004.....162
4071005.....163
4071007.....163
4071059.....57
4100026.....291
4100033.....152, 158
4100100.....241
4120013.....286
4120035.....290, 293
4130353.....11
4130354.....11
4130381.....20, 27
4130382.....20, 27
4130394.....24, 29
4130395.....24, 29
4130396.....16
4130397.....16
4130399.....24
4130400.....16
4160139.....132
4160143.....132
4160149.....163
4220162.....126, 127
4220164.....180
4220165.....175
4220191.....81
4240018.....146, 276, 280
4240032.....126, 127
4240033.....152, 158
4240099.....175, 180, 184, 209, 213, 215
4240113.....113
4240151.....316
4280295.....113
4300097.....31
4300157.....146
4340678.....190
4340684.....190
4360031.....184, 191
4360057.....209
4360070.....146
4360232.....192, 296
4360294.....140, 143, 312
4360322.....125, 126, 127
4360328.....122, 189, 192, 310
4360331.....176, 180, 184, 189, 192, 310
4360336.....126, 127, 136, 140, 143, 145, 176, 180, 184, 185, 191, 192, 312
4360387.....189, 192, 209, 310
4360392.....81, 87, 96
4360407.....189, 310
4360429..... 163
4360436..... 113
4360469..... 310
4360470..... 122
4360475.... 122, 189, 310
4360476..... 122, 189
4360506..... 163
4360540..... 300
4360541..... 300
4360542.... 135, 136, 300
4360549.... 125, 126, 127
4360578... 125, 126, 127, 312
4400400..... 113
4400449..... 113
4420037.... 185, 213, 215
4420038..... 113
4420051..... 57, 304, 308
4420055..... 179
4420060..... 125, 127
4420068..... 209, 211
4460007..... 191
4460023..... 136, 140
4460027.... 135, 139, 295
4460049..... 209
4460071... 184, 190, 191, 290, 295
4460134..... 291
4460190..... 135, 139
4460205..... 291
4460225..... 290
4460226... 190, 191, 290, 292, 293, 295, 296
4460227... 190, 290, 293, 296
4460234... 122, 126, 127, 190, 209
4460265..... 200, 207
4460266..... 200, 207
4460267... 292, 293, 294, 295
4460268... 125, 292, 293, 294, 295
4460320.... 292, 295, 296
4460321..... 295
4460326..... 293, 294
4460374..... 147
4460375..... 147
4460411..... 146
4460412..... 146
4460413..... 146
4460414..... 146
4460415..... 147
4460418..... 290, 293
4460419..... 290, 293
4460424... 125, 292, 293, 294, 296
4460425.... 147, 209, 296
4460426... 122, 147, 176, 180, 184, 192, 292, 296
4460428... 125, 126, 127, 189, 290
4460434..... 290, 293
4460445..... 293, 294
4460457..... 294
4460458..... 294
4460460..... 294
4460464... 190, 191, 290, 293
4460465.... 147, 291, 294
4460466..... 291
4460467..... 296, 317
4460470... 122, 189, 290, 292
4460471... 122, 189, 290, 292
4460473..... 291
4460488..... 122, 190
4460499..... 66, 69, 294
4460508..... 290
4460509..... 291
4460510..... 296, 317
4460526..... 122, 292
4460536..... 293
4460539..... 294
4460598... 176, 180, 184, 192, 296
4460607..... 147, 286
4460611..... 88
4460634..... 293
4460635..... 293
4460705..... 295
4460708.... 190, 290, 292
4460709..... 295
4460710..... 295
4460761.... 190, 290, 293
4460865..... 291
4460866..... 290, 293
4460871... 190, 195, 197, 203, 205, 290, 293, 294, 296
4460873..... 290, 293
4460874.... 122, 290, 292
4460875.... 122, 290, 292
4460876..... 293
4460878..... 293
4460879..... 290
4460880..... 292, 293
4460887..... 290, 293
4460889..... 294
4460890..... 294
4460891..... 294
4460892..... 292
4460894..... 292
4460905... 122, 190, 290, 292, 293
4460906..... 295
4460943..... 293
4460944..... 294
4460956..... 147
4460957..... 147
4460961..... 295
4460967..... 147
4460968... 125, 127, 299, 300
4460971..... 215
4460987..... 299
4460988..... 299
4460990..... 299
4460991..... 300
4460997..... 299
4460998..... 299
4460999..... 300
4461001..... 147
4461005.....294
4461006.....294
4461052.....294
4461053.....294
4461054.....294
4461060.....294
4461070.....294
4461071.....292
4461072.....292
4461073.....292
4461074.....292
4461095.....294
4520258.....32
4520339.....32
4520340.....32
4530025.....215, 217
4530028.....213
4566468.....225, 227, 231, 233, 247
4566471.....241
4566501.....237
4566644.....257
4566971.....55
4567073.....81
4567815.....87, 96
4568133.....57
4568721.....81
4568788.....81
4569171.....96
4569177.....81
4640113.....32
4640261.....55
4640281.....57
4640509.....225, 227, 229, 231, 233, 235, 237, 241, 243, 245
4640744.....111, 275, 279
4640750.....81
4640751.....87, 96
4640799.....237
4640858.....221, 223
4640871.....11, 19
4640902.....241
4640906.....62
4640907.....62
4640908.....61
4640921.....62, 69
4640922.....62, 69
4640923.....49
4640931.....61, 63
4640932.....225, 227, 229, 231, 233, 235
4640937.....49
4640939.....273
4641028.....257
4641096.....61, 65
4641108.....62, 63
4641162.....221
4641280.....51
4641284.....271
4641287.....51
4641307.....264
4641319.....223
4641390.....223
4641409.....51
4641410.....51, 52

4711400 ... 11, 19, 63, 89, 94, 125, 146, 171, 175, 180, 184, 316
4711500 ... 51, 55, 62, 81, 145, 172, 191, 299, 316
4711600 ... 11, 19, 55, 62, 82, 89, 96, 146, 152, 157, 162, 171
4711700 97
4711800 ..... 19, 129, 146, 152, 157, 171, 187
4711900 ..... 89, 96
4712600 ..... 55, 171
4713000 55
4713400 55
4740036 57
4740067 12
4740076 ..... 132, 133
4740111 ... 12, 16, 20, 24, 27, 29, 57
4740155 57
4740158 ... 11, 15, 19, 23, 152, 158
4740171 132
4740256 ... 12, 16, 20, 24, 27, 29
4740263 16
4740274 ..... 81, 87, 96
4740283 ..... 12, 16
4740314 ..... 152, 158
4740362 ... 126, 176, 180, 184, 189
4740393 31
4740397 .... 136, 140, 192
4740411 179
4740439 157
4740444 122
4740463 ... 12, 20, 24, 27, 29
4740546 127
4750600 147
4750800 299
4751000 ..... 57, 126, 132, 136, 140, 143, 175, 179, 183, 213, 299
4751400 ... 81, 82, 88, 95, 96, 122, 125, 127, 133, 146, 152, 157, 176, 180, 184, 190, 209, 213, 215, 238, 304, 307
4751500 49, 83, 132, 133, 136, 140, 143, 175, 179, 209, 211
4751600 ... 49, 51, 52, 81, 88, 94, 96, 98, 113, 115, 117, 132, 136, 140, 143, 163, 176, 180, 184, 189, 213, 215
4751700 97
4751800 ... 11, 81, 89, 94, 115, 117, 185, 187, 209
4751900 136
4752000 ..... 82, 89, 94
4760600 147
4760800 299
4761000 12, 16, 133, 175, 180, 183, 192, 299
4761400 122
4761500 146
4761600 55
4770600 129
4791400 ..... 89, 96, 146
4811400 299
4811900 ..... 81, 146
4831900 ..... 90, 97
4832000 ..... 81, 90, 97
4844777 11
4844815 156
4844816 156
4844817 157
4844924 ..... 175, 179
4844925 ..... 175, 179
4844928 175
4844944 ..... 151, 156
4844954 175
4844955 ..... 175, 179
4844956 ..... 175, 179
4845281 55
4845282 55
4845283 55
4845286 55
4845287 179
4845288 179
4845289 179
4845290 179
4845328 ..... 175, 179
4845356 133
4845393 113
4845395 ..... 88, 96
4845404 ..... 87, 96
4845411 132
4845426 ..... 175, 179
4845671 171
4845677 171
4845819 171
4846081 ..... 151, 156
4846184 179
4846194 179
4846195 179
4846228 179
4846229 179
4846240 179
4846241 179
4846288 19
4846295 57
4846296 57
4846319 161
4846391 171
4846392 171
4846452 183
4846561 185
4846566 ..... 87, 96
4846571 215
4846573 ..... 152, 158
4846627 213
4846673 209
4846790 81
4846805 81
4846814 ..... 15, 23
4846934 ..... 15, 23
4846935 57
4860148 32
4860243 32
4891400 63
4891500 63
4891600 82, 88, 129, 152, 158, 162
4891800 .... 15, 23, 31, 62, 71, 95, 129, 152, 158, 162, 211
4892000 ..... 31, 71, 133
4892600 ..... 152, 158
4920018 ..... 176, 180
4921820 295
4921927 ..... 63, 294
4921928 ..... 63, 294
4921956 295
4922466 291
4922467 291
4922468 291
4922482 295
4922498 296
4922509 286
4922513 292
4922515 ..... 292, 293
4922636 292
4922637 292
4922639 ..... 190, 290
4922641 ..... 147, 295
4922643 ..... 286, 295
4922648 293
4922666 .... 122, 190, 290, 293
4922737 ..... 81, 82
4922757 147
4922764 296
4922790 291
4922791 291
4922792 291
4922847 286
4922863 286
4922884 291
4922885 291
4922886 291
4922887 291
4922888 ..... 185, 291, 296
4922889 291
4922909 299
4922912 300
4922913 295
4922921 ..... 292, 293
4922925 146
4922964 296
4922970 295
4922978 94
4923045 316
4923206 292
4923212 ..... 292, 293
4923213 293
4923227 ..... 292, 293
4923229 293
4932900 286
4932986 286
4932990 286
4932991 286
4932993 286
4933025 286
4933026 286
4933215 ..... 286, 295
4933216 ..... 286, 295
4933217 286
4933218 286
4933219 286
4933222 .... 287, 292, 293
4933263 286
4933264 147
4933272 286
4933274 286
4933284 295
4933287 295
4933291 .... 287, 292, 293
4933300 ..... 286, 295
4933313 ..... 286, 296
4933318 .... 287, 292, 293
4933328 ..... 292, 293
70000122 .. 135, 139, 143
70000123 ..... 135, 139
70000124 ..... 135, 139
70000125 ..... 135, 139
70000126 ..... 136, 139
70000127 ..... 135, 139
700002239 135
70000264 98
70000342 169
70000579 65
70000580 65
70000582 ..... 65, 310
70000583 65
70000781 51
70000782 37
70000794 47
70000795 47
70000800 98
70000863 145
70000916 97
70000917 97
70000918 97
70000919 97
70000934 62
70001002 89
70001017 ..... 81, 89, 96
70001100 145
70001119 37
70001120 83
70001248 ..... 117, 118
70001249 118
70001384 145
70001423 90
70001435 97
70001498 ..... 89, 97
70001681 90
70001696 145
70001697 ..... 166, 169
70001742 83
70001941 126
70001953 145
70001966 145
70001969 145
70001973 146
70001974 146
70001976 ..... 65, 69
70002005 ..... 171, 312
70002006 171
70002007 ..... 171, 312
70002063 ..... 51, 52
70002064 52
70002088 145
7000209 73

PART NUMBER INDEX

7000214.....73
7000216.....37
7000217.....73
70002200.....90, 97
70002208.....75
70002234.....89, 97
70002235.....135, 139
70002239.....139
70002240.....136, 139
70002243.....75
7000228.....73
7000229.....73
70002297.....145
7000230.....73
70002373.....251
70002411.....90
7000246.....73
70002460.....145
7000253.....73
70002530.....90
7000255.....73
7000256.....73
7000257.....73
7000258.....73
7000263.....73
7000269.....73
7000270.....73
70002724.....205
70002725.....205
70002726.....205
70002727.....205
70002728.....205
70002729.....205
70002730.....197
70002731.....197
70002732.....197
70002733.....197
70002734.....197
70002735.....197
7000281.....38
70002841.....84
70002906.....197
70003001.....98
70003002.....98
70003003.....98
70003356.....89
70003408.....52
70003476.....90, 97
70003483.....184, 191
70003631.....145
70003708.....145
70003709.....145
70003784.....189
70003982.....205
70004169.....145, 146
70004170.....145
70004171.....145
70004182.....81
70004643.....171
70004738.....207
70004739.....207
70004740.....207
70004741.....207
70004742.....207
70004743.....207
70004744.....207
70004745.....207
70004746.....207
70004747.....207
70004748.....207
70004749.....207
70004750.....207
70004751.....207
70004752.....199
70004753.....199
70004754.....199
70004755.....199
70004756.....199
70004757.....199
70004758.....199
70004759.....199
70004760.....199
70004761.....199
70004762.....199
70004763.....199
70004764.....199
70004765.....199
70004766.....199
70004767.....199
70004768.....199
70004769.....199
70004770.....199
70004771.....199
70004772.....199
70004773.....200
70004774.....200
70004775.....200
70005230.....207
7000625.....184, 191
70006442.....253
70006443.....235, 253
70006444.....235, 253
70006445.....235, 253
70006446.....235, 253
70006447.....253
70006568.....243
70006569.....243
70006570.....243
70006571.....243
70006572.....243
70006597.....251
70006599.....251
70006601.....251
7000663.....89, 97
70006648.....229
70006649.....229, 245
70006650.....229, 245
70006651.....229
70006734.....245
70006735.....245
70006736.....245
70006774.....251
70006775.....251
70006776.....251
70006822.....235
70006823.....235
7000731.....31
7001433.....107
7001438.....102
7001498.....103, 107
7001625.....255
7001626.....255
7001627.....255
7001629.....255
7001630.....255
7001633.....255
7001711.....35
7001909.....73
7001911.....73
7001913.....37
7001928.....73
7001931.....73
7001985.....73
7001987.....73
7001988.....73
70022564.....251
70023371.....251
70023915.....243
7002821.....296, 317
7002822.....317
7002823.....296, 317
7002826.....317
7002828.....296
7002840.....11, 19, 317
7003657.....135
7003928.....195, 197
7003933.....203
7003935.....203
7003941.....203, 205
7003946.....203
7003953.....195
7003969.....203
7003972.....203, 205
7003973.....203, 205
7003976.....195
7003977.....195
7003980.....203, 205
7003983.....203, 205
7003986.....203
7003989.....203, 205
7003992.....195, 203
7003993.....195, 203
7003994.....203
7004035.....75
7004043.....75
7004044.....75
7004248.....61
7004275.....317
7004276.....317
7004290.....61
7005881.....76
7005882.....76
7005889.....75
7005890.....75
7005891.....75
7005892.....75
7005893.....75
7006138.....171, 312
7007207.....106
7007208.....102, 106
7007412.....103, 108
7007413.....102, 106
7007414.....102, 106
7007416.....102
7007417.....102, 106
7007418.....106
7007419.....102, 106
7007420.....102
7007421.....102
7007423.....102, 106
7007424.....102
7007425.....102, 106
7007435.....43, 102, 106
7007436.....102
7007437.44, 47, 102, 106
7007438.43, 47, 102, 106
7007439.43, 47, 102, 106
7007440.....102
7007441.....102, 106
7007442.....102, 106
7007444.....102, 106
7007445.....102
7007446.....43, 47, 106
7007449.....102
7007452.....106
7007453.....102, 106
7007454.....102, 107
7007456.....102
7007457.....107
7007458.....102
7007459.....103
7007463.....103, 107
7007464.....107
7007465.....107
7007466.....103, 107
7007468.....103
7007469.....103
7007470.....103, 106
7007471.....103
7007472.....103, 107
7007474.....103, 107
7007475.....103, 107
7007476.....103, 107
7007477.....103, 107
7007478.....103, 107
7007482.....103
7007483.....103
7007484.....103, 107
7007485.....103, 107
7007486.....103
7007487.....103, 107
7007488.....103, 107
7007489.....111
7007490.....103
7007491.....103
7007492.....103
7007494.....103, 107
7007496.....103, 107
7007497.....103, 107, 294
7007498.....103, 107, 294
7007499.....103
7007633.....73
7007933.....71
7007990.....71
7010103.....111
7010104.....111
7010105.....111
7010116.....107, 108
7010120.....103
7010121.....103, 107
7010122.....103, 107
7010474.....73
7010488.....73
7010492.....73
7010494.....73
7010542.....65, 66
7010543.....63, 65, 66
7010545.....237

7011043 61
7011044 61
7011062 61
7011063 61
7011064 61
7011065 61
7011066 61
7011112 ... 225, 227, 229, 231, 233, 235
7011328 61
7011331 165
7011332 165
7011346 166
7012513 .... 135, 139, 143
7012514 .... 135, 139, 143
7012518 ..... 63, 65
7012540 63
7012558 135
7012664 .. 80, 87, 95, 310
7012693 ..... 11, 19
7012700 41
7012701 41
7012702 41
7012703 41
7012704 41
7012705 41
7012706 41
7012707 41
7012708 41
7012709 41
7012710 41
7012711 41
7012712 41
7012713 41
7012714 41
7012715 41
7012716 41
7012769 65
7012772 ... 62, 65, 66, 69, 310
7012773 .... 62, 65, 66, 69
7012774 ..... 62, 66, 69
7012775 ..... 65, 66
7012776 69
7012777 69
7012907 62
7012912 ..... 65, 66
7012914 65
7012918 ..... 63, 65
7012941 ..... 62, 63
7012943 63
7012944 .. 62, 63, 65, 310
7012953 .. 63, 65, 69, 241
7012954 63
7012961 ..... 63, 241
7012965 69
7012967 65
7012971 63
7012972 62
7012974 62
7012975 63
7012976 63
7012977 63
7012980 49
7012987 111
7012988 111
7012989 65
7012993 49
7012994 49
7012995 63
7012998 .... 62, 65, 66, 69
7013187 115
7013189 117
7013711 61
7013755 61
7013796 61
7013799 61
7014700 35
7014701 35
7014703 35
7014704 35
7014705 35
7014707 35
7014708 35
7014709 35
7014710 35
7014711 35
7014712 35
7014717 35
7014718 35
7014719 35
7014720 35
7014721 35
7014722 35
7014723 35
7014724 35
7014725 35
7014726 35
7014729 35
7014730 35
7014731 35
7014732 35
7014733 35
7014734 35
7014735 35
7014736 35
7014737 35
7016312 62
7016313 63
7016314 113
7016322 129
7016328 ..... 89, 97, 312
7016331 ..... 89, 97, 312
7016342 115
7016374 129
7016380 126
7016399 .... 175, 180, 184
7016422 75
7016423 75
7016424 76
7016425 75
7016426 75
7016427 76
7016530 ..... 171, 312
7016652 317
7016654 317
7016655 317
7016700 61
7016701 61
7016702 61
7016744 61
7016800 88
7016802 88
7016803 88
7016812 88
7016824 88
7017022 38
7017027 37
7017070 73
7017072 37
7017089 73
7017093 37
7017095 37
7017115 165
7017118 166
7017119 165
7017142 ..... 165, 166
7017156 166
7017157 166
7017158 ..... 166, 169
7017159 ..... 166, 169
7017162 ..... 165, 169
7017163 ..... 165, 169
7017164 ..... 165, 169
7017174 165
7017177 165
7017183 ..... 165, 169
7017193 ..... 165, 169
7017195 169
7017406 51
7017410 65
7017420 ..... 62, 69
7017421 69
7017422 69
7017442 49
7017464 65
7017496 223
7018612 ..... 31, 71
7018912 ..... 62, 65, 66, 69
7018942 ..... 65, 66, 69
7018945 69
7018946 69
7018947 69
7018948 69
7018951 65
7018986 65
7019103 203
7019110 203
7019111 ..... 195, 203
7019112 203
7019114 203
7019115 203
7019122 195
7019123 195
7019141 195
7019142 195
7019143 195
7019144 195
7019145 195
7019147 195
7019149 195
7019150 195
7019151 203
7019154 203
7019155 203
7019160 203
7019161 203
7019162 ..... 203, 205
7019164 ..... 203, 205
7019165 ..... 203, 205
7019166 203
7019167 ..... 203, 205
7019168 203
7019171 195
7019174 195
7019177 195
7019194 ..... 203, 205
7019196 203
7019197 195
7019658 113
7019680 ..... 135, 139
7020020 ..... 62, 310
7020021 ..... 63, 310
7020108 .... 135, 139, 143
7020109 .... 135, 139, 143
7020110 .... 135, 139, 143
7020111 .... 135, 139, 143
7020168 89
7020175 189
7020176 189
7020190 .... 135, 139, 143
7020191 ..... 136, 139
7020192 ..... 136, 139
7020193 139
7020194 135
7020246 121
7020408 ..... 89, 97
7020411 ..... 89, 97
7020431 90
7020447 97
7020449 ..... 90, 97
7020458 ..... 90, 98
7020459 ..... 90, 98
7020460 ..... 90, 98
7020461 ..... 89, 97
7020463 89
7020464 ..... 89, 97
7020465 ..... 90, 97
7020468 ..... 90, 97
7020471 ..... 90, 97
7020474 90
7020479 ..... 89, 97
7020480 89
7020484 97
7020487 ..... 89, 97
7020488 90
7021200 106
7021201 107
7021202 106
7021203 106
7021206 107
7021207 107
7021210 107
7021212 107
7021214 ..... 103, 107
7021217 107
7021218 107
7021219 107
7021220 107
7021221 107
7021222 107
7021223 106
7021232 108
7021249 ..... 43, 47
7021256 106
7021275 ..... 43, 47
7021310 66
7021625 ..... 51, 52

PART NUMBER INDEX

7021657.....49
7022203.....61
7022302.....43, 47
7022311.....43, 47
7022313.....47
7022314.....43, 47
7022318.....43
7022320.....43
7022321.....43
7022326.....44, 47
7022328.....44, 47
7022368.....43, 47
7022370.....43
7022371.....44, 47
7022372.....43, 47
7022397.....51, 52
7022399.....51, 52
7022808.....195, 197
7022812.....203
7022814.....195
7022815.....195, 197
7022816.....195
7022817.....195
7022818.....195
7022819.....195, 197, 294
7022822.....203
7022823.....203
7022824.....203
7022825.....294
7023366.....132
7023910.....43, 47
7023917.....52
7023933.....51, 52
7023935.....51, 52
7023936.....51, 52
7023977.....106
7023979.....107
7024014.....62, 66
7024015.....65, 66
7024036.....41
7024100.....73
7024124.....37
7024125.....37
7024127.....37
7024129.....37
7024134.....38
7024318.....89
7024379.....75
7024380.....75
7024381.....75
7024389.....76
7024390.....75
7024395.....75
7024397.....257
7024398.....89, 96
7024404.....118
7024439.....113
7024440.....113
7024441.....113
7024442.....113
7024443.....113
7024444.....113, 310
7024445.....113
7024446.....113
7024453.....75
7024485.....145
7024520.....217
7024522.....217
7024524.....217
7024526.....217
7024527.....217
7024528.....217
7024529.....217
7024530.....217
7024531.....217
7024532.....217
7024533.....217
7024534.....217
7024535.....217
7024536.....217
7024537.....217
7024538.....217
7024539.....217
7024540.....217
7024541.....217
7024560.....89, 96
7024565.....90, 97
7024579.....90, 98
7024598.....129
7024721.....38
7024722.....37
7024723.....38
7024724.....37
7024725.....37
7024726.....37
7024727.....37
7024728.....37
7024729.....37
7024730.....37
7024731.....37
7024732.....37
7024733.....37
7024734.....37
7024735.....37
7024736.....37
7024737.....38
7024738.....37
7024739.....37
7024740.....37
7024741.....37
7024742.....37
7024743.....37
7024744.....37, 38
7024764.....38
7024765.....38
7024766.....38
7024800.....107
7024850.....51, 52
7024851.....107
7024853.....43, 47
7024861.....43
7024862.....43, 47
7024863.....43
7024864.....43
7024865.....43, 47
7024866.....43
7024867.....43, 47
7024868.....43
7024869.....43
7024871.....43, 47
7024874.....106
7024875.....106
7024877.....107
7024879.....223
7024892.....51, 52
7026188.....145
7026189.....117, 118
7026197.....118
7026199.....135
7026503.....117
7026504.....117
7026505.....118
7026506.....118
7026507.....118
7026508.....118
7026509.....118
7026510.....118
7026511.....117
7026512.....117, 118
7026522.....89
7026597.....145
7026608.....89, 97
7026626.....145
7026631.....89, 97
7026800.....83
7026801.....83
7026802.....83
7026803.....83
7026804.....83
7026805.....83
7026806.....83
7026807.....83
7026808.....83
7026809.....83
7026810.....83
7026811.....83, 312
7026812.....83
7026813.....83
7026814.....84
7026815.....84
7026816.....83
7026817.....83
7026818.....83
7026819.....83
7026820.....83
7026821.....83
7026822.....83
7026823.....83
7026824.....83
7026825.....83
7026826.....83
7026827.....83
7026828.....83
7026829.....83
7026830.....84, 312
7026831.....83
7026832.....83
7026833.....83
7026834.....83
7026835.....84
7026836.....84
7026838.....84
7026839.....84
7026840.....84
7026841.....84
7026843.....84
7026882.....84
7027000.....82, 88, 94
7027001.....82, 88, 94
7027002.....82, 88, 94
7027003.....82, 88, 94
7027004.....82, 88, 94
7027236.....98
7027239.....98
7027241.....97
7027245.....98
7027246.....97
7027276.....90, 98
7027412.....81
7027419.....43, 47
7027608.....97
7027609.....97
7027610.....97
7027740.....47
7027790.....97
7027791.....97
7027792.....98
7027793.....97
7027795.....98
7027799.....145
7027887.....136, 143
8093461.....118
83304150.....75
8405009.....80
8405104.....80
8896941.....317





Corporate Office
JLG Industries, Inc.
1 JLG Drive
McConnellsburg, PA 17233-9533 USA
(717) 485-5161 (Corporate)
(877) 554-5438 (Customer Support)
(717) 485-6417

Visit our website for JLG Worldwide Locations.
www.jlg.com