# Illustrated Parts Manual

## *Models*
## *600SC*
## *660SJC*

***SN 0300128000***
***THROUGH***
***0300174703***

**3121251**

September 30, 2018 - Rev O

***ANSI***

CE

An Oshkosh Corporation Company

# REVISION LOG

NOTES:

## GROUND MODULE IDENTIFICATION

**MODULE ON MACHINES "WITHOUT UGM" (UNIVERSAL GROUND MODULE)**

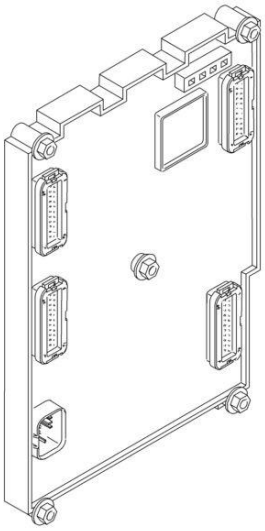

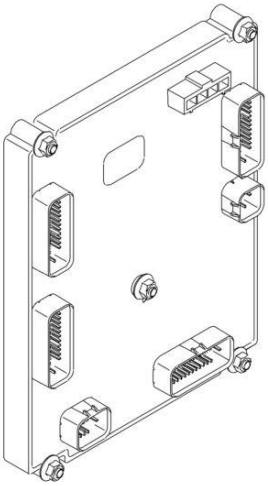

**MODULE ON MACHINES "WITH UGM" (UNIVERSAL GROUND MODULE)**

MANUAL REVISION LOG:

February 2, 2009 - A - Original Issue Of Manual (Edited to B/M 0010568 Revision 67)

November 20, 2009 - B - Revised Manual (Edited to B/M 0010568 Revision 67)

January 31, 2011 - C - Revised Manual (Edited to B/M 0010568 Revision 67)

May 20, 2011 - D - Revised Manual (Edited to B/M 0010568 Revision 67)

August 5, 2011 - E - Revised Manual (Edited to B/M 0010568 Revision 67)

December 6, 2011 - F - Revised Manual (Edited to B/M 0010568 Revision 79)

May 4, 2012 - G - Revised Manual (Edited to B/M 0010568 Revision B)

July 26, 2012 - H - Revised Manual (Edited to B/M 0010568 Revision B)

November 19, 2012 - I - Revised Manual (Edited to B/M 0010568 Revision B)

March 20, 2013 - J - Revised Manual (Edited to B/M 0010568 Revision B)

June 30, 2013 - K - Revised Manual (Edited to B/M 0010568 Revision R)

September 10, 2013 - L - Revised Manual

June 30, 2016 - M - Revised Manual (Revision 4)

March 30, 2018 - N - Revised Manual

September 30, 2018 - O - Revised Manual

# GENERAL INFORMATION

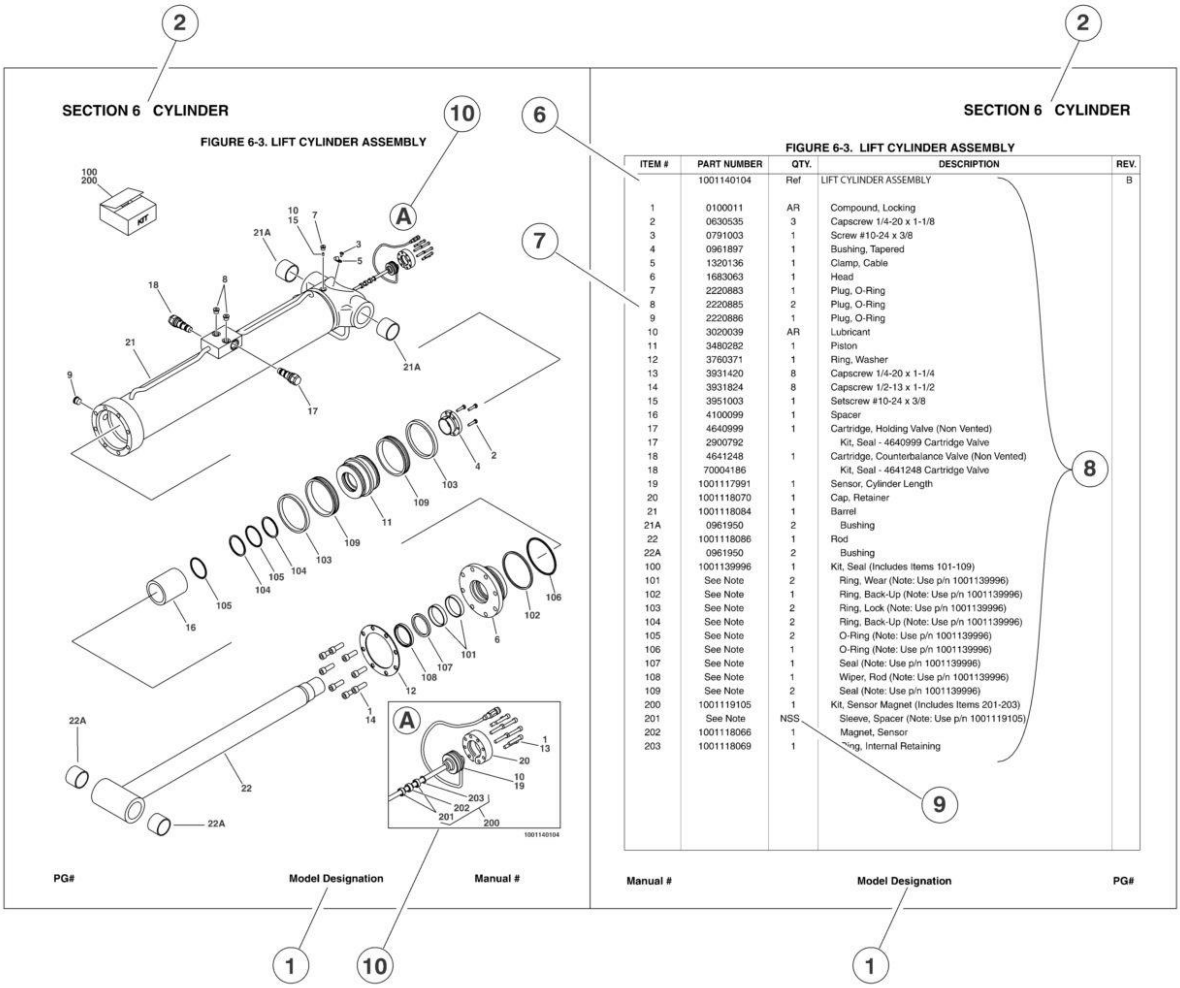


| ITEM # | PART NUMBER | QTY. | DESCRIPTION | REV. |
|---|---|---|---|---|
| | 1001140104 | Ref. | LIFT CYLINDER ASSEMBLY | B |
| 1 | 0100011 | AR | Compound, Locking | |
| 2 | 0630535 | 3 | Capscrew 1/4-20 x 1-1/8 | |
| 3 | 0791003 | 1 | Screw #10-24 x 3/8 | |
| 4 | 0961897 | 1 | Bushing, Tapered | |
| 5 | 1320136 | 1 | Clamp, Cable | |
| 6 | 1683063 | 1 | Head | |
| 7 | 2220883 | 1 | Plug, O-Ring | |
| 8 | 2220885 | 2 | Plug, O-Ring | |
| 9 | 2220886 | 1 | Plug, O-Ring | |
| 10 | 3020039 | AR | Lubricant | |
| 11 | 3480282 | 1 | Piston | |
| 12 | 3760371 | 1 | Ring, Washer | |
| 13 | 3931420 | 8 | Capscrew 1/4-20 x 1-1/4 | |
| 14 | 3931824 | 8 | Capscrew 1/2-13 x 1-1/2 | |
| 15 | 3951003 | 1 | Setscrew #10-24 x 3/8 | |
| 16 | 4100099 | 1 | Spacer | |
| 17 | 4640999 | 1 | Cartridge, Holding Valve (Non Vented) | |
| 17 | 2900792 | | Kit, Seal - 4640999 Cartridge Valve | |
| 18 | 4641248 | 1 | Cartridge, Counterbalance Valve (Non Vented) | |
| 18 | 70004186 | | Kit, Seal - 4641248 Cartridge Valve | |
| 19 | 1001117991 | 1 | Sensor, Cylinder Length | |
| 20 | 1001118070 | 1 | Cap, Retainer | |
| 21 | 1001118084 | 1 | Barrel | |
| 21A | 0961950 | 2 | Bushing | |
| 22 | 1001118086 | 1 | Rod | |
| 22A | 0961950 | 2 | Bushing | |
| 100 | 1001139996 | 1 | Kit, Seal (Includes Items 101-109) | |
| 101 | See Note | 2 | Ring, Wear (Note: Use p/n 1001139996) | |
| 102 | See Note | 1 | Ring, Back-Up (Note: Use p/n 1001139996) | |
| 103 | See Note | 2 | Ring, Lock (Note: Use p/n 1001139996) | |
| 104 | See Note | 2 | Ring, Back-Up (Note: Use p/n 1001139996) | |
| 105 | See Note | 2 | O-Ring (Note: Use p/n 1001139996) | |
| 106 | See Note | 1 | O-Ring (Note: Use p/n 1001139996) | |
| 107 | See Note | 1 | Seal (Note: Use p/n 1001139996) | |
| 108 | See Note | 1 | Wiper, Rod (Note: Use p/n 1001139996) | |
| 109 | See Note | 2 | Seal (Note: Use p/n 1001139996) | |
| 200 | 1001119105 | 1 | Kit, Sensor Magnet (Includes Items 201-203) | |
| 201 | See Note | NSS | Sleeve, Spacer (Note: Use p/n 1001119105) | |
| 202 | 1001118066 | 1 | Magnet, Sensor | |
| 203 | 1001118069 | 1 | Ring, Internal Retaining | |

**1) MACHINE IDENTIFICATION**
Machines are identified by model and in some cases a combination of models, serial number (SN) or regional standard (i.e ANSI, CE,CSA). Components may also be identified by SN or manufacturer. common components that may be identified by these characteristics are engines and hydraulic components.

**2) PARTS MANUAL ORGANIZATION**
Product information in this manual is organized under section titles. Frame, Cylinder, Hydraulic and Electrical are a few examples. Each section is organized by figure and page number. The information within the Figure is then organized by item number, part number, description and corresponding illustration (s).

**3) TABLE OF CONTENTS**
A table of contents is found toward the beginning of the manual. Figure number, description and page number are provided for quick reference to the page containing the related information.

**4) RECOMMENDED SPARE PARTS**
The Recommended Spare Parts, located near the end of the manual, referance most frequently used maintenance parts.

**5) PART NUMBER INDEX**
A numerical index listing all part numbers and the corresponding page number(s) appears at the back of the manual.

# GENERAL INFORMATION

**6) NON-SERVICED PARTS**

In some instances, it is necessary to display non-serviced parts, assemblies or installations. In the case of assemblies and installations there will be a Ref in the Qty column. In case of parts that are not available for service within assemblies or components, there will be a NSS (Not Sold Separately) or NLA (No Longer Available) listed in the Qty. column of the manual.

**7) PARTS LIST ITEM NUMBERS**

Numbers shown in the item# column correspond to numbers used in the associated illustration (s). Item numbers which are missing from the sequence in the parts list are not used on that page

**8) INDENTED PARTS DESCRIPTION**

An indented part description is included in the item under which it is indented.

**9) ABBREVIATION AND SYMBOLS**

AC ..... Alternating Current
ADE. ..... Advanced Design Electronics
ANSI ..... American National Standards Institute
AR.. ..... As Required
ASSY ..... Assembly
AUX... ..... Auxiliary
AWG ..... American Wire Gauge
B/M.. ..... Bill of Material
CE.. ..... European Conformity
CCW ..... Counter Clockwise
cm. ..... Centimeter
CW ..... Clockwise
CSA. ..... Canadian Standards Association
CYL... ..... Cylinder
DIA. ..... Diameter
DC ..... Direct Current
EMS ..... Emergency Stop
ENG ..... Engine
FT(ft) ..... Feet
GA(Ga).. ..... Gauge
HYD ..... Hydraulic
Hz.. ..... Hertz
ID.. ..... Inside Diameter
in... ..... inches
ISO ..... International Organization for Standards
JIC ..... Joint Industry Council
KG ..... Kilogram
L.. ..... Liter
LB ..... Pounds
LCD ..... Liquid Crystal Display
LED ..... Light Emitting Diodes
LH... ..... Left Hand
LSS ..... Load Sensing System
M(m)... ..... Metric/Meter
MM (mm) ..... Milimeter
mA. ..... Miliamps
NLA ..... No Longer Available
NPT ..... National Pipe Threads
NSS ..... Not Sold Separately
OD.. ..... Outside Diameter
ORB ..... O-Ring Boss
ORFS ..... O-Ring Face Seal
OZ (oz). ..... Ounces
PG ..... Page
P/N. ..... Part Number
qt. ..... Quarts
QTY. ..... Quantity
REF ..... Reference
REV ..... Revision Level
RH... ..... Right Hand
SAE ..... Society of Automotive Engineers
SN.. ..... Serial Number
SPEC(S) ..... Specifications
T/T. ..... Turntable
UGM ..... Universal Ground Module
V. ..... Volts
W... ..... Watts
#... ..... Number

**10) ILLUSTRATION REFERANCE LETTERS**

When necessary, illustrations may contain referance letters that are intended to track information (i. e. hoses, harnesses) from one point to another or to track visual enlargement of components to show details that may be located in another area on the illustration.

*Note: Due to continuous product improvements, JLG Industries, Inc. reserves the right to make specification changes without prior notification. Contact JLG Industries, Inc. for updated information.*

# TABLE OF CONTENTS

SECTION 1 - FRAME ..... 9

FIGURE 1-1. GRADALL FRAME ASSEMBLY ..... 10
FIGURE 1-2. GRADALL FRAME DRIVE ASSEMBLY ..... 12
FIGURE 1-3. GRADALL DRIVE TRACK ROLLER ASSEMBLY (BOTTOM) ..... 16
FIGURE 1-4. GRADALL FRAME TRACK ROLLER ASSEMBLY (CARRIER) ..... 18
FIGURE 1-5. GRADALL FRAME TRACK CHAIN ASSEMBLY ..... 20
FIGURE 1-6. GRADALL FRAME IDLER ASSEMBLY ..... 22
FIGURE 1-7. GRADALL FRAME SPRING AND SHOCK ASSEMBLIES ..... 24
FIGURE 1-8. GRADALL FRAME ROTARY COUPLING ASSEMBLY ..... 26
FIGURE 1-9. CATERPILLAR FRAME ASSEMBLY ..... 28
FIGURE 1-10. CATERPILLAR FRAME IDLER ASSEMBLY ..... 30
FIGURE 1-11. CATERPILLAR FRAME TRACK ROLLER INSTALLATION ..... 32
FIGURE 1-12. CATERPILLAR FRAME TRACK SHOE INSTALLATION ..... 34
FIGURE 1-13. CATERPILLAR FRAME DRIVE MOTOR ASSEMBLY ..... 36
FIGURE 1-14. CATERPILLAR FRAME DRIVE VALVE ASSEMBLY ..... 38
FIGURE 1-15. CATERPILLAR FRAME DRIVE HUB ASSEMBLY ..... 40
FIGURE 1-16. CATERPILLAR FRAME ROTARY COUPLING ASSEMBLY ..... 42

SECTION 2 - TURNTABLE ..... 45

FIGURE 2-1. CONTROL VALVES INSTALLATIONS ..... 46
FIGURE 2-2. MAIN CONTROL VALVE ASSEMBLY ..... 50
FIGURE 2-3. ARTICULATING JIB VALVE ASSEMBLY (660SJC ONLY) ..... 54
FIGURE 2-4. SWING DRIVE, TURNTABLE BEARING AND LOCK INSTALLATIONS ..... 56
FIGURE 2-5. SWING HUB ASSEMBLY (SN 0300128000 through 0300137440) ..... 60
FIGURE 2-6. SWING MOTOR ASSEMBLY (WHITE ROLLER STATOR) (ORIGINAL EQUIPMENT) (SN 0300128000 through 0300137440) ..... 62
FIGURE 2-7. SWING MOTOR ASSEMBLY (PARKER) (SERVICE REPLACEMENT) (SN 0300128000 through 0300137440) ... 64
FIGURE 2-8. SWING MOTOR/BRAKE/HUB ASSEMBLY (PARKER/FAIRFIELD) (SN 0300137441 through 0300174703) ..... 66
FIGURE 2-9. CATERPILLAR ENGINE INSTALLATION (SN 0300128000 through 0300149851) ..... 70
FIGURE 2-10. CATERPILLAR ENGINE INSTALLATION (SN 0300149852 through 0300174703) ..... 78
FIGURE 2-11. DEUTZ ENGINE INSTALLATION (WITHOUT UGM) ..... 86
FIGURE 2-12. DEUTZ ENGINE INSTALLATION (WITH UGM) ..... 96
FIGURE 2-13. PISTON PUMP ASSEMBLY ..... 104
FIGURE 2-14. GEAR PUMP ASSEMBLY ..... 110
FIGURE 2-15. TANK INSTALLATIONS ..... 112
FIGURE 2-16. GROUND CONTROL ASSEMBLY (WITHOUT UGM) ..... 114
FIGURE 2-17. GROUND CONTROL ASSEMBLY (WITH UGM) ..... 118
FIGURE 2-18. ELECTRICAL OPTIONS INSTALLATION (TURNTABLE MOUNTED) ..... 122
FIGURE 2-19. HOODS (ABS) AND LIFTING PLATE INSTALLATIONS ..... 126
FIGURE 2-20. HOODS (STEEL) AND LIFTING PLATE INSTALLATIONS ..... 132
FIGURE 2-21. ENGINE TRAY JACK INSTALLATION ..... 138
FIGURE 2-22. 2500W GENERATOR INSTALLATION - CATERPILLAR MACHINES (OPTIONAL) ..... 140
FIGURE 2-23. 2500W GENERATOR INSTALLATION - DEUTZ MACHINES (OPTIONAL) ..... 144
FIGURE 2-24. 7500W SKYPOWER GENERATOR INSTALLATION ..... 148
FIGURE 2-25. SKYAIR AIR COMPRESSOR INSTALLATION ..... 154
FIGURE 2-26. AIR COMPRESSOR ASSEMBLY ..... 156

SECTION 3 - BOOM ..... 159

FIGURE 3-1. BOOM INSTALLATION - 600SC ..... 160
FIGURE 3-2. BOOM INSTALLATION - 660SJC ..... 164
FIGURE 3-3. MAIN BOOM ASSEMBLIES - ANSI AND ANSI EXPORT SPECS ..... 168
FIGURE 3-4. MAIN BOOM ASSEMBLIES - AUSTRALIAN AND CE SPECS ..... 172
FIGURE 3-5. ROTATOR ASSEMBLIES ..... 176
FIGURE 3-6. PLATFORM SUPPORT INSTALLATION ..... 178
FIGURE 3-7. POWER TRACK INSTALLATION ..... 180

SECTION 4 - PLATFORM ..... 183

FIGURE 4-1. PLATFORM COMPONENTS INSTALLATION ..... 184
FIGURE 4-2. PLATFORM CONSOLE ASSEMBLY ..... 188
FIGURE 4-3. CONTROLLER ASSEMBLY (LIFT AND SWING) (ORIGINAL EQUIPMENT) ..... 192
FIGURE 4-4. CONTROLLER ASSEMBLY (LIFT AND SWING) (SERVICE REPLACEMENT) ..... 194
FIGURE 4-5. CONTROLLER ASSEMBLY (LIFT AND SWING) (SERVICE REPLACEMENT) ..... 196

# TABLE OF CONTENTS

FIGURE 4-6. CONTROLLER ASSEMBLY (DRIVE AND STEER) ....200
FIGURE 4-7. SKYGLAZIER INSTALLATION ....202
FIGURE 4-8. SKYCUTTER INSTALLATION - 60HZ POWER SUPPLY ....204
FIGURE 4-9. SKYWELDER/SKYCUTTER COMBO INSTALLATION (60HZ) ....206
FIGURE 4-10. SKYWELDER INSTALLATION (60HZ) ....210
FIGURE 4-11. SKYWELDER INSTALLATION (50HZ) ....212
FIGURE 4-12. WELDER ASSEMBLY ....214
FIGURE 4-13. PLASMA CUTTER ASSEMBLY - 60HZ POWER SUPPLY ....216
FIGURE 4-14. PLASMA CUTTER ASSEMBLY ....218

SECTION 5 - CYLINDER ....221

FIGURE 5-1. JIB CYLINDER ASSEMBLY (ORIGINAL EQUIPMENT) ....222
FIGURE 5-2. JIB CYLINDER ASSEMBLY (SERVICE REPLACEMENT) ....224
FIGURE 5-3. JIB CYLINDER ASSEMBLY (SERVICE REPLACEMENT) ....226
FIGURE 5-4. LEVEL CYLINDER ASSEMBLY - 600SC (ORIGINAL EQUIPMENT) ....228
FIGURE 5-5. LEVEL CYLINDER ASSEMBLY - 600SC (SERVICE REPLACEMENT) ....230
FIGURE 5-6. LEVEL CYLINDER ASSEMBLY - 600SC (SERVICE REPLACEMENT) ....232
FIGURE 5-7. LEVEL CYLINDER ASSEMBLY - 660SJC (ORIGINAL EQUIPMENT) ....234
FIGURE 5-8. LEVEL CYLINDER ASSEMBLIES - 660SJC (SERVICE REPLACEMENT) ....236
FIGURE 5-9. LEVEL CYLINDER ASSEMBLY - 660SJC (SERVICE REPLACEMENT) ....238
FIGURE 5-10. LIFT CYLINDER ASSEMBLY ....240
FIGURE 5-11. MASTER CYLINDER ASSEMBLY ....242
FIGURE 5-12. MASTER CYLINDER ASSEMBLY - 660SJC (SERVICE REPACEMENT) ....246
FIGURE 5-13. TELESCOPE CYLINDER ASSEMBLY ....248

SECTION 6 - HYDRAULIC ....251

FIGURE 6-1. FRAME HYDRAULIC DIAGRAM (CATERPILLAR CHASSIS) ....252
FIGURE 6-2. FRAME HYDRAULIC DIAGRAM (GRADALL CHASSIS) ....254
FIGURE 6-3. STANDARD HYDRAULIC DIAGRAM - CATERPILLAR ENGINE (SN 0300128000 through 0300149851) ....256
FIGURE 6-4. STANDARD HYDRAULIC DIAGRAM - CATERPILLAR ENGINE (SN 0300149852 through 0300174703) ....260
FIGURE 6-5. STANDARD HYDRAULIC DIAGRAM - DEUTZ ENGINE (SN 0300128000 through 0300169157) ....264
FIGURE 6-6. STANDARD HYDRAULIC DIAGRAM - DEUTZ ENGINE (SN 0300169158 through 0300174703) ....268
FIGURE 6-7. HYDRAULIC DIAGRAM LIST ....272

SECTION 7 - ELECTRICAL ....273

FIGURE 7-1. ELECTRICAL DIAGRAM LIST ....274
FIGURE 7-2. ELECTRICAL SCHEMATIC (WITHOUT UGM) ....276
FIGURE 7-3. ELECTRICAL SCHEMATIC (WITH UGM) ....280
FIGURE 7-4. HARNESS COMPONENTS INSTALLATION (WITHOUT UGM) ....288
FIGURE 7-5. HARNESS COMPONENTS INSTALLATION (WITH UGM) ....304

SECTION 8 - DECALS ....319

FIGURE 8-1. DECAL INSTALLATION (ANSI SPECS) ....320
FIGURE 8-2. DECAL INSTALLATION (ANSI EXPORT SPECS) ....324
FIGURE 8-3. DECAL INSTALLATION (AUSTRALIAN AND CE SPECS) ....328

SECTION 9 - RECOMMENDED SERVICE PARTS STOCK ....331

FIGURE 9-1. MODELS 600SC/660SJC STANDARD PARTS ....332
FIGURE 9-2. MODELS 600SC/660SJC VARIABLE PARTS ....334

SECTION 10 - SPECIAL OPTIONS ....335

FIGURE 10-1. SPECIAL OPTIONS LIST ....336

PART NUMBER INDEX ....341

# SECTION 1 - FRAME

## FIGURE 1-1. GRADALL FRAME ASSEMBLY

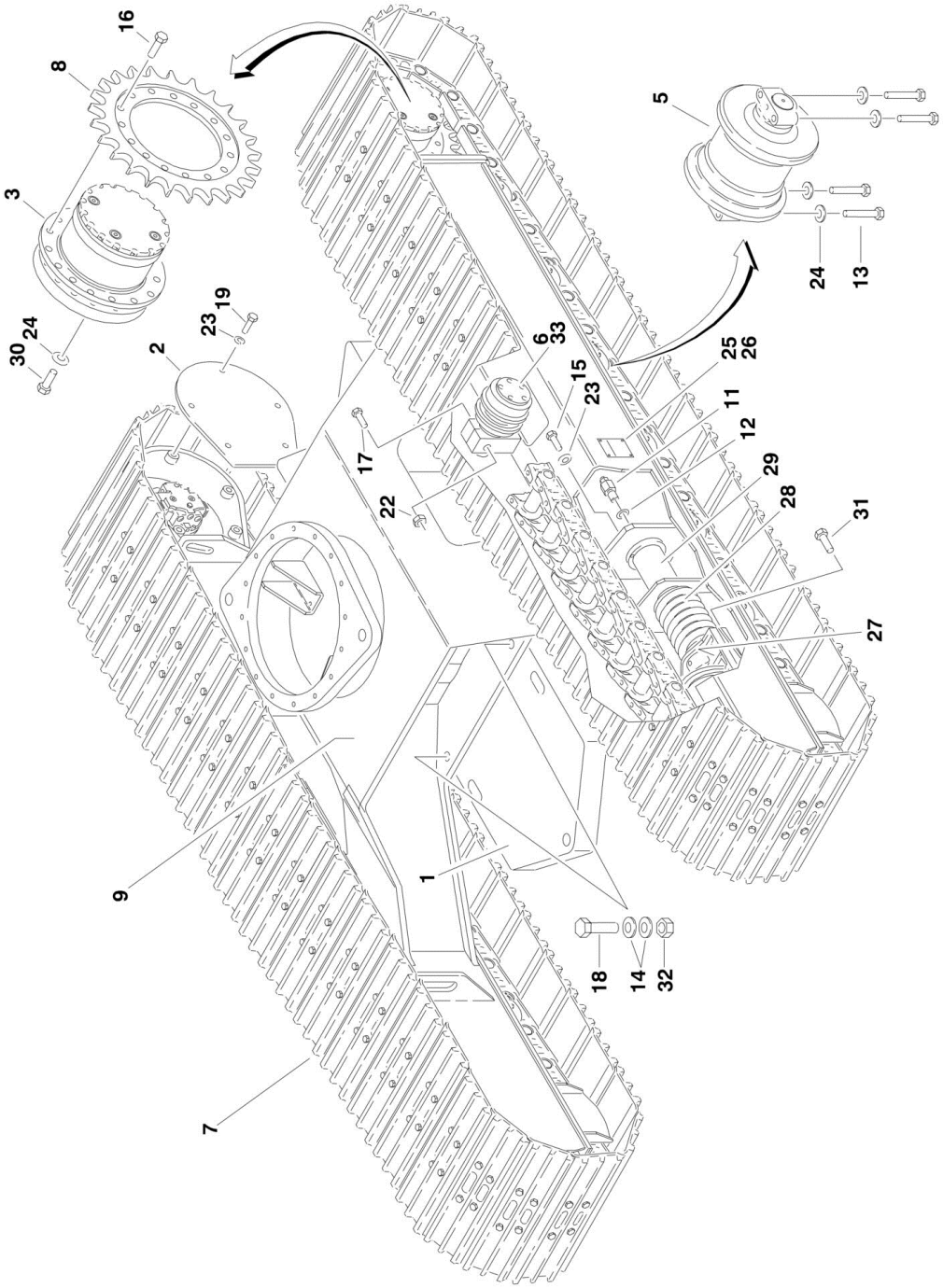

## FIGURE 1-1. GRADALL FRAME ASSEMBLY

| ITEM | PART NUMBER | QTY | DESCRIPTION | REV |
|---|---|---|---|---|
| | | Ref | **GRADALL FRAME ASSEMBLY** | |
| | 80215014 | Ref | **Gradall Frame Assembly 600SC (SN 030012800 through 0300169157)** | C |
| | 2360574 | Ref | **Gradall Frame Assembly 600SC (SN 0300169158 through 0300174703)** | B |
| | 80215016 | Ref | **Gradall Frame Assembly 660SJC (SN 030012800 through 0300169157)** | C |
| | 2360576 | Ref | **Gradall Frame Assembly 660SJC (SN 0300169158 through 0300174703)** | B |
| 1 | 80211154 | 1 | Counterweight (660SJC Only) | |
| 2 | 80211039 | 2 | Plate, Cover | |
| 3 | | Ref | Drive Assembly (See GRADALL FRAME DRIVE ASSEMBLY for Breakdown) | |
| 3 | 8021-D121 | NLA | Drive Assembly (Use p/n 80213121) **(SN 0300128000 through 0300169157)** | |
| 3 | 80213118 | NLA | Drive Assembly (Use p/n 80213121) **(SN 0300169158 through 0300174703)** | |
| 5 | 80213004 | 12 | Track Roller Assembly - Bottom (See GRADALL DRIVE TRACK ROLLER ASSEMBLY (BOTTOM) for Breakdown) | |
| 6 | 80213005 | 2 | Track Roller Assembly - Carrier (See GRADALL FRAME TRACK ROLLER ASSEMBLY (CARRIER) for Breakdown) | |
| 7 | 80213117 | 2 | Track Chain Assembly (See GRADALL FRAME TRACK CHAIN ASSEMBLY for Breakdown) | |
| 8 | 80213044 | 2 | Sprocket, Drive | |
| 9 | 80216028 | 1 | Undercarriage | |
| 11 | 80613008 | 2 | Fitting, Grease | |
| 12 | 80613009 | 2 | Seal, Grease Fitting | |
| 13 | 80683015 | 48 | Bolt 5/8in-11NC x 3in | |
| 14 | 90027475 | 8 | Flatwasher 1in | |
| 15 | 83191002 | 4 | Bolt M12 x 45mm | |
| 16 | 80213011 | 30 | Bolt, Flanged M16 x 50mm | |
| 17 | 83201001 | 2 | Bolt 3/4in-10NC x 4-1/4in | |
| 18 | 83201047 | 4 | Capscrew 1in-8NC x 8-1/2in (Grade 8) | |
| 19 | 88201065 | 10 | Bolt 1/2in-13NC x 1in | |
| 22 | 88521212 | 2 | Locknut 3/4in-10NC | |
| 23 | 88551013 | 14 | Lockwasher 1/2in | |
| 24 | 90027472 | 80 | Flatwasher 5/8in Hardened | |
| 25 | 80213060 | 2 | Nameplate - Caution | |
| 26 | 88341012 | 8 | Screw #4 x 5/16in | |
| 27 | 80213040 | 2 | Idler Assembly (See GRADALL FRAME IDLER ASSEMBLY for Breakdown) | |
| 28 | 80213041 | 2 | Spring Assembly (See GRADALL FRAME SPRING AND SHOCK ASSEMBLIES for Breakdown) | |
| 29 | 80213042 | 2 | Shock Assembly (See GRADALL FRAME SPRING AND SHOCK ASSEMBLIES for Breakdown) | |
| 30 | 83191056 | 32 | Bolt M16 x 50mm | |
| 31 | 83191058 | 4 | Capscrew M16 x 45mm | |
| 32 | 88501016 | 4 | Nut 1in-8NC | |
| 33 | 14403323 | AR | Never-Seize | |

## FIGURE 1-2. GRADALL FRAME DRIVE ASSEMBLY

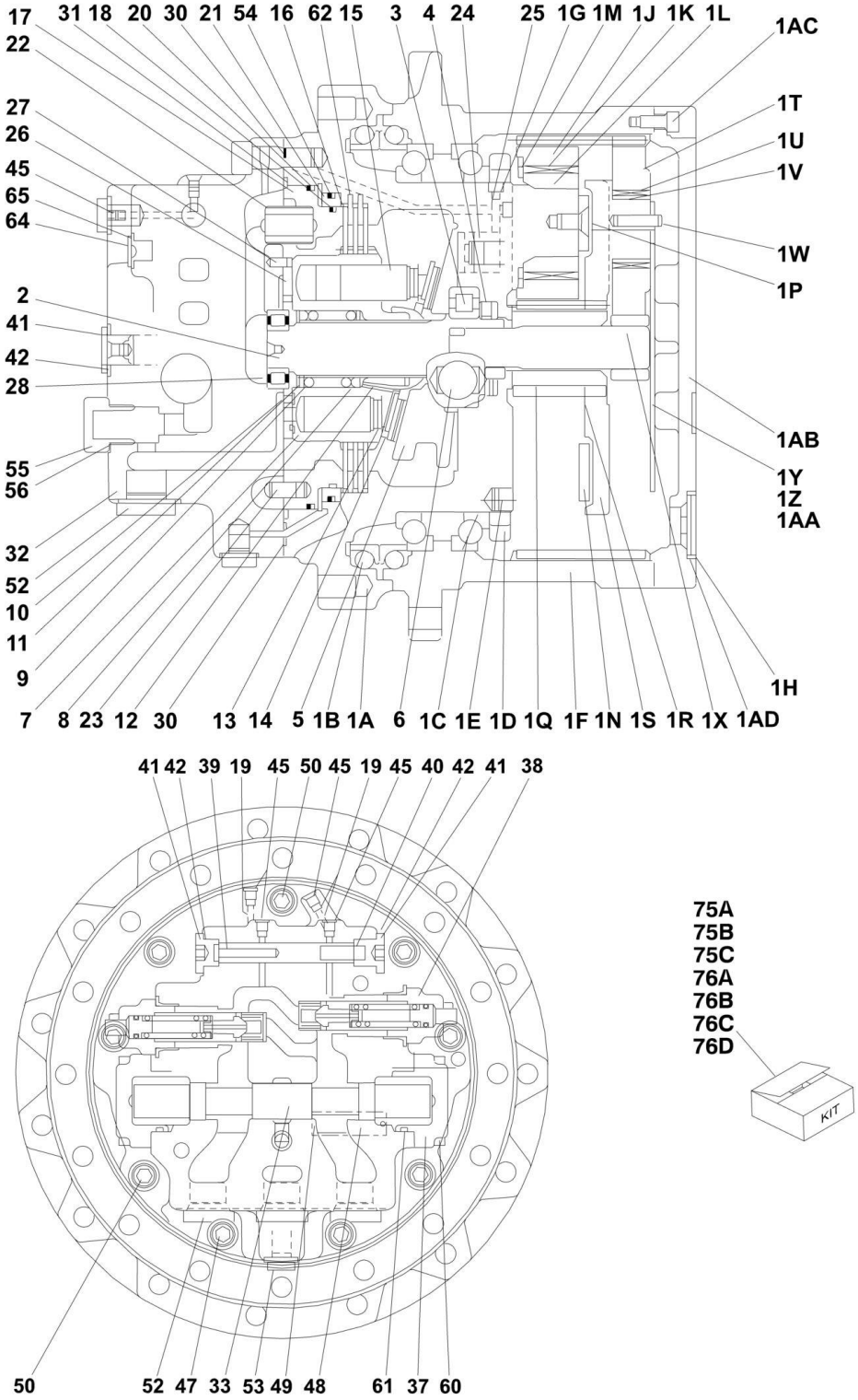

## FIGURE 1-2. GRADALL FRAME DRIVE ASSEMBLY

| ITEM | PART NUMBER | QTY | DESCRIPTION | REV |
|---|---|---|---|---|
| | 80213121 | Ref | **DRIVE ASSEMBLY** | |
| 1 | 80214375 | 1 | Gear Box Assembly | |
| 1A | See Note | NSS | Flange (Note: Use Item 76B) | |
| 1B | See Note | NSS | Seal, Floating (Note: Use Item 75A) | |
| 1C | 80214337 | 2 | Bearing, Angular | |
| 1D | See Note | NSS | Nut, Ring (Note: Use Item 1) | |
| 1E | See Note | NSS | Plug (Note: Use Item 1) | |
| 1F | See Note | NSS | Housing (Note: Use Item 1) | |
| 1G | See Note | NSS | Plug (Note: Not Available - Purchase Locally.) | |
| 1H | See Note | NSS | Plug (Note: Not Available - Purchase Locally.) | |
| 1J | 80214332 | 4 | Gear, Planetary (B) | |
| 1K | 80214334 | 4 | Bearing, Needle | |
| 1L | 80214333 | 4 | Bushing, Floating | |
| 1M | See Note | NSS | Thrustwasher (Note: Use Item 1) | |
| 1N | See Note | NSS | Plate, Thrust (Note: Use Item 1) | |
| 1P | See Note | NSS | Screw (Note: Use Item 1) | |
| 1Q | 80214329 | 1 | Gear, Sun | |
| 1R | See Note | NSS | Ring, Retaining (Note: Not Available - Purchase Locally) | |
| 1S | See Note | NSS | Holder (Note: Use Item 1) | |
| 1T | 80214376 | 3 | Gear, Planetary (A) | |
| 1U | 80214326 | 3 | Bearing, Needle | |
| 1V | 80214325 | 3 | Race, Inner Bearing | |
| 1W | See Note | NSS | Pin, Spring (Note: Use Item 1) | |
| 1X | 80214377 | 1 | Driveshaft | |
| 1Y | See Note | NSS | Plate, Thrust (Note: Use Item 76A) | |
| 1Z | See Note | NSS | Plate, Thrust (Note: Use Item 76A) | |
| 1AA | See Note | NSS | Plate, Thrust (Note: Use Item 76A) | |
| 1AB | 7022693 | 1 | Cover | |
| 1AC | See Note | 16 | Bolt (Note: Not Available - Purchase Locally) | |
| 1AD | See Note | NSS | O-Ring (Note: Use Item 75A) | |
| 2 | 80214308 | 1 | Shaft | |
| 3 | 80914076 | 1 | Bearing | |
| 4 | See Note | NSS | Seal, Oil (Note: Use Item 75B) | |
| 5 | See Note | NSS | Plate, Swash (Note: Purchase Complete Assembly) | |
| 6 | See Note | NSS | Ball (Note: Purchase Complete Assembly) | |
| 7 | See Note | NSS | Block, Cylinder (Note: Use Item 76B) | |
| 8 | See Note | NSS | Collar (Note: Purchase Complete Assembly) | |
| 9 | See Note | NSS | Spring (Note: Purchase Complete Assembly) | |
| 10 | See Note | NSS | Collar (Note: Purchase Complete Assembly) | |
| 11 | See Note | NSS | Ring, Retaining (Note: Not Available - Purchase Locally) | |
| 12 | 80214312 | 3 | Pin | |
| 13 | See Note | NSS | Retainer, Holder (Note: Not Available - Purchase Complete Assembly) | |
| 14 | See Note | NSS | Plate, Retainer (Note: Not Available - Purchase Complete Assembly) | |
| 15 | See Note | NSS | Piston Assembly (Note: Use Item 76B) | |
| 16 | See Note | NSS | Plate, Brake Disc (Note: Use Item 76C) | |
| 17 | See Note | NSS | Piston, Brake (Note: Use Item 76C) | |
| 18 | See Note | NSS | O-Ring (Note: Use Item 75B or 76C.) | |
| 19 | See Note | NSS | Orifice (Note: Not Available for Purchase.) | |

| ITEM | PART NUMBER | QTY | DESCRIPTION | REV |
|---|---|---|---|---|
| 20 | See Note | NSS | O-Ring (Note: Use Item 75B or 76C.) | |
| 21 | See Note | NSS | Collar (Note: Use Item 76C) | |
| 22 | See Note | NSS | Spring (Note: Not Available - Purchase Complete Assembly) | |
| 23 | See Note | NSS | Pin (Note: Not Available - Purchase Complete Assembly) | |
| 24 | See Note | NSS | Piston Assembly (Note: Not Available - Purchase Complete Assembly) | |
| 25 | See Note | NSS | Spring (Note: Not Available - Purchase Complete Assembly) | |
| 26 | See Note | NSS | Plate, Valve (Note: Not Available - Purchase Complete Assembly) | |
| 27 | See Note | NSS | Pin (Note: Not Available - Purchase Complete Assembly) | |
| 28 | 80214378 | 1 | Bearing | |
| 30 | See Note | NSS | O-Ring (Note: Use Item 75B) | |
| 31 | See Note | NSS | O-Ring (Note: Use Item 75B) | |
| 32 | See Note | NSS | Plate, Base (Note: Use Item 76C) | |
| 33 | See Note | NSS | Spool (Note: Use Item 76C) | |
| 37 | See Note | NSS | Flange (Note: Not Available - Purchase Complete Assembly) | |
| 38 | 80214379 | 2 | Relief Valve Assembly (See Below for Seal Kit) | |
| 39 | See Note | NSS | Spool (Note: Not Available - Purchase Complete Assembly) | |
| 40 | See Note | NSS | Spring (Note: Not Available - Purchase Complete Assembly) | |
| 41 | See Note | NSS | Plug (Note: Not Available - Purchase Locally.) | |
| 42 | See Note | NSS | O-Ring (Note: Use Item 75B) | |
| 45 | See Note | NSS | Plug (Note: Not Available - Purchase Locally.) | |
| 47 | See Note | NSS | Bolt (Note: Not Available - Purchase Locally) | |
| 48 | See Note | NSS | Nameplate (Note: Not Available for Purchase.) | |
| 49 | See Note | NSS | Drivescrew (Note: Not Available for Purchase.) | |
| 50 | See Note | NSS | Bolt (Note: Not Available for Purchase.) | |
| 52 | See Note | NSS | Plug, Shipping (Note: Not Available for Purchase.) | |
| 53 | See Note | NSS | Plug, Shipping (Note: Not Available for Purchase.) | |
| 54 | See Note | NSS | O-Ring (Note: Use Item 75B) | |
| 55 | See Note | NSS | Plug (Note: Not Available - Purchase Locally.) | |
| 56 | See Note | NSS | O-Ring (Note: Use Item 75B) | |
| 60 | See Note | NSS | Bolt (Note: Not Available - Purchase Locally) | |
| 61 | See Note | NSS | O-Ring (Note: Use Item 75B) | |
| 62 | See Note | NSS | Plate, Friction (Note: Use Item 76C) | |
| 64 | See Note | NSS | Plug (Note: Not Available - Purchase Locally.) | |
| 65 | See Note | NSS | O-Ring (Note: Use Item 75B) | |
| 75 | | Ref | Seal Kit Options: | |
| 75A | 80214371 | 1 | Hub Seal Kit (Includes Items 1B & 1AD) | |
| 75B | 80214372 | 1 | Motor/Brake/Valve Seal Kit (Includes Items 4, 18, 20, 30, 31, 42, 54, 56, 61, 65 & 75C) | |
| 75C | See Note | NSS | Relief Valve Seal Kit (Includes 3 O-Rings and 2 Back-up Rings for Item 38) (Note: Use Item 75B) | |
| 76 | | Ref | Repair Kit Options: | |
| 76A | 80214172 | 1 | Hub Thrust Plate Kit (Includes Items 1Y, 1Z & 1AA) | |
| 76B | 80214171 | 1 | Cylinder Block Kit (Includes Items 1, 7 & 15) | |
| 76C | 80214373 | 1 | Brake Kit (Includes Items 16, 17, 18, 20, 21 & 62) | |
| 76D | 80214374 | 1 | Base Plate Kit (Includes Items 32 & 33) | |

FIGURE 1-3. GRADALL DRIVE TRACK ROLLER ASSEMBLY (BOTTOM)

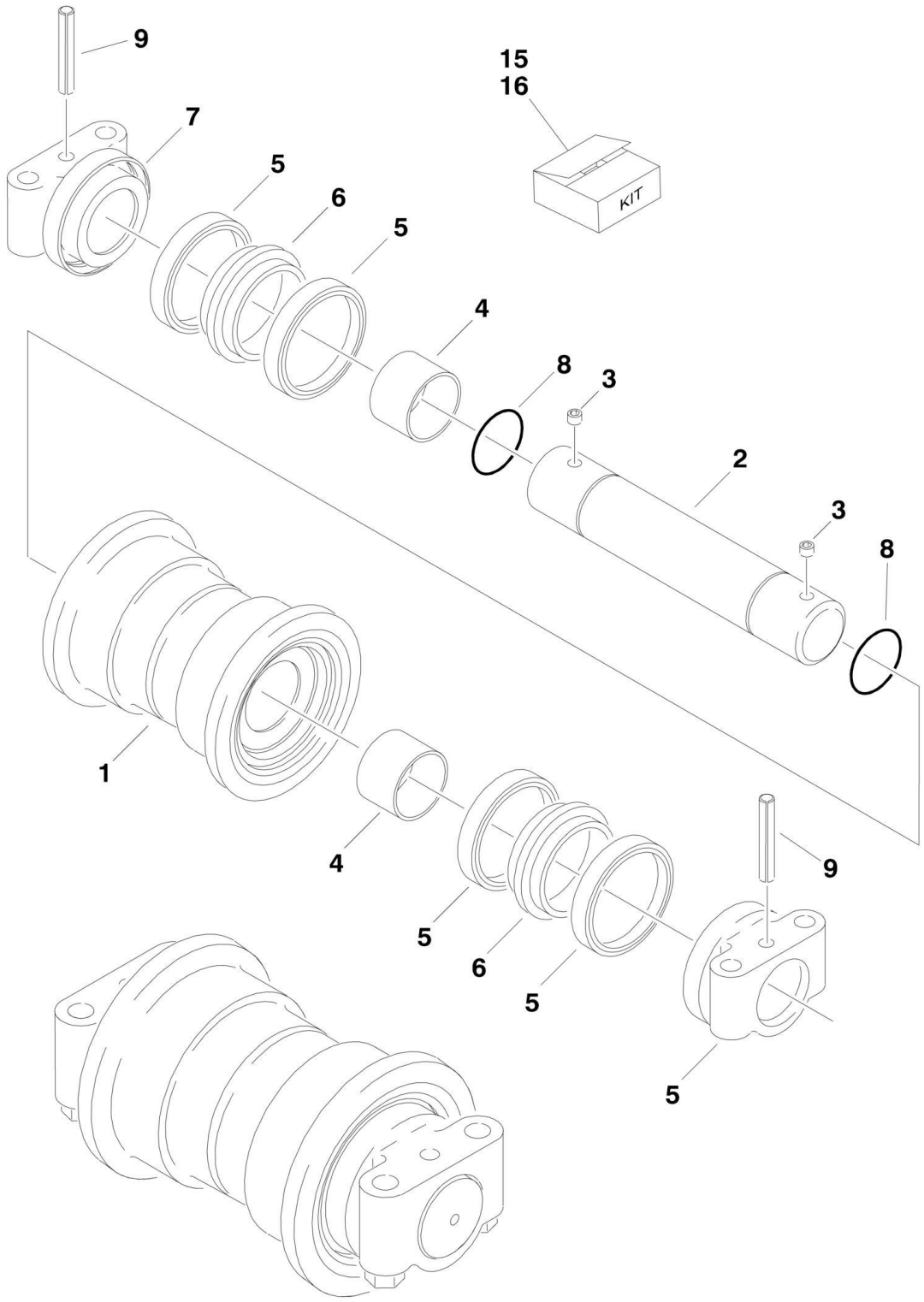

## FIGURE 1-3. GRADALL DRIVE TRACK ROLLER ASSEMBLY (BOTTOM)

| ITEM | PART NUMBER | QTY | DESCRIPTION | REV |
|---|---|---|---|---|
| | 80213004 | Ref | **ROLLER ASSEMBLY (BOTTOM)** | F |
| 1 | See Note | NSS | Roller, Guide (Note: Use Item 16) | |
| 2 | 80214008 | 1 | Shaft | |
| 3 | See Note | 1 | Plug (Note: Not Available - Purchase Locally.) | |
| 4 | 80214006 | 2 | Bearing | |
| 5 | 80214003 | 4 | Ring | |
| 6 | 80214003 | 2 | Seal | |
| 7 | 80214002 | 2 | Support, Mounting Bracket | |
| 8 | 80214007 | 2 | O-Ring | |
| 9 | 80214001 | 2 | Rollpin | |
| 15 | 80214003 | 2 | Seal Kit (Includes Items 5 & 6) | |
| 16 | 80214005 | 1 | Roller Guide Bearing Kit (Includes Items 1 & 4) | |

**FIGURE 1-4. GRADALL FRAME TRACK ROLLER ASSEMBLY (CARRIER)**

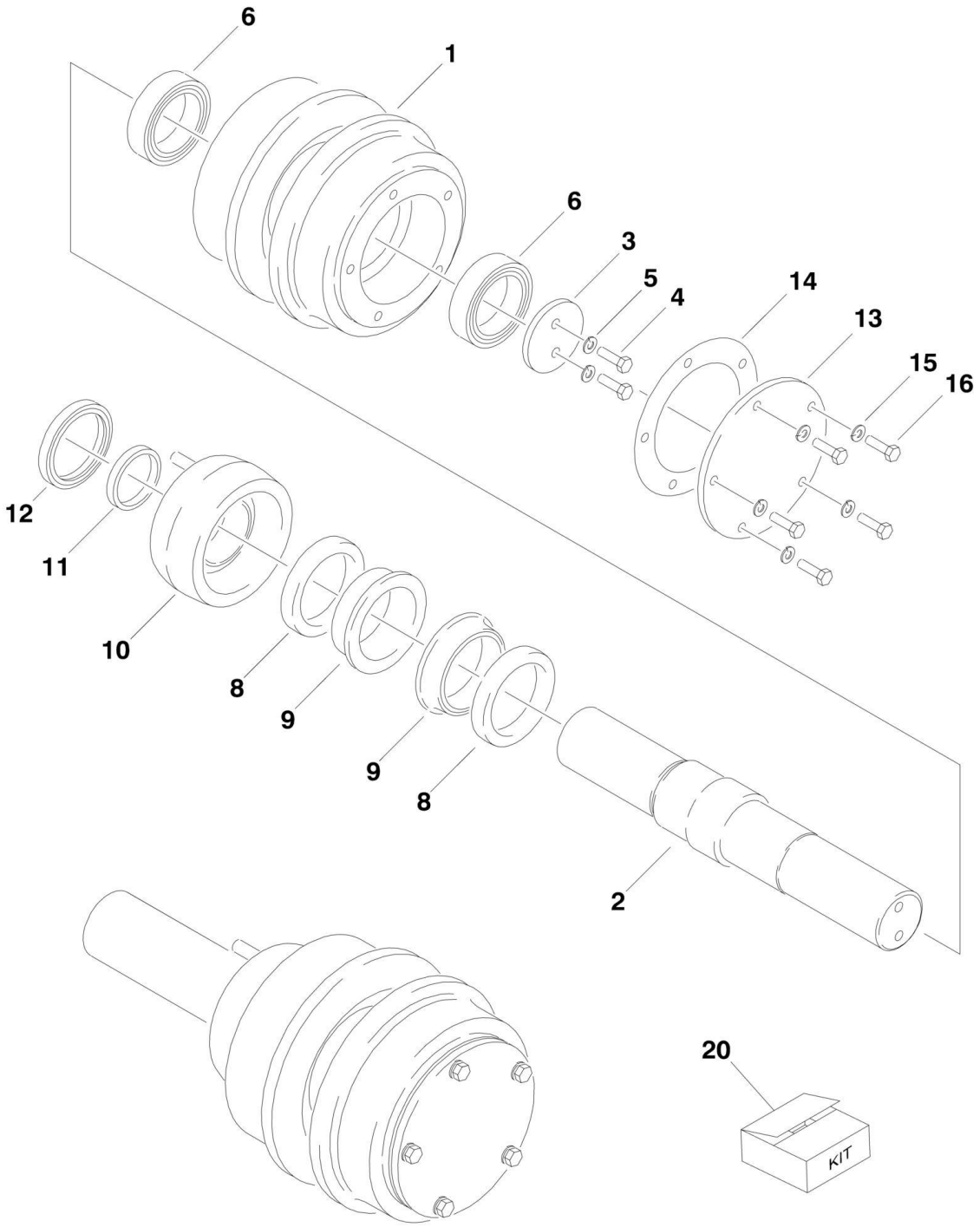

## FIGURE 1-4. GRADALL FRAME TRACK ROLLER ASSEMBLY (CARRIER)

| ITEM | PART NUMBER | QTY | DESCRIPTION | REV |
|---|---|---|---|---|
| | 80213005 | Ref | **ROLLER ASSEMBLY (BOTTOM)** | D |
| 1 | 80214017 | NLA | Roller, Guide (Use p/n 80213005) | |
| 2 | 80214022 | 1 | Shaft | |
| 3 | See Note | NSS | Cover, Internal (Note: Not Available - Purchase Complete Assembly) | |
| 4 | 80214014 | 2 | Bolt | |
| 5 | 80214015 | 2 | Washer | |
| 6 | 80214013 | 2 | Bearing, Roller | |
| 8 | See Note | NSS | Ring, Seal (Note: Use Item 20) | |
| 9 | See Note | NSS | Ring, Tension (Note: Use Item 20) | |
| 10 | 80214019 | 1 | Collar | |
| 11 | 80214020 | 1 | Ring, Packing | |
| 12 | 80214021 | 1 | Ring, Seal | |
| 13 | 80214011 | 1 | Cover | |
| 14 | 80214012 | 1 | Seal, Cover | |
| 15 | 80214010 | 5 | Lockwasher | |
| 16 | 80214009 | 5 | Bolt | |
| 20 | 80214018 | 1 | Seal Kit (Includes Items 8 & 9) | |

## FIGURE 1-5. GRADALL FRAME TRACK CHAIN ASSEMBLY

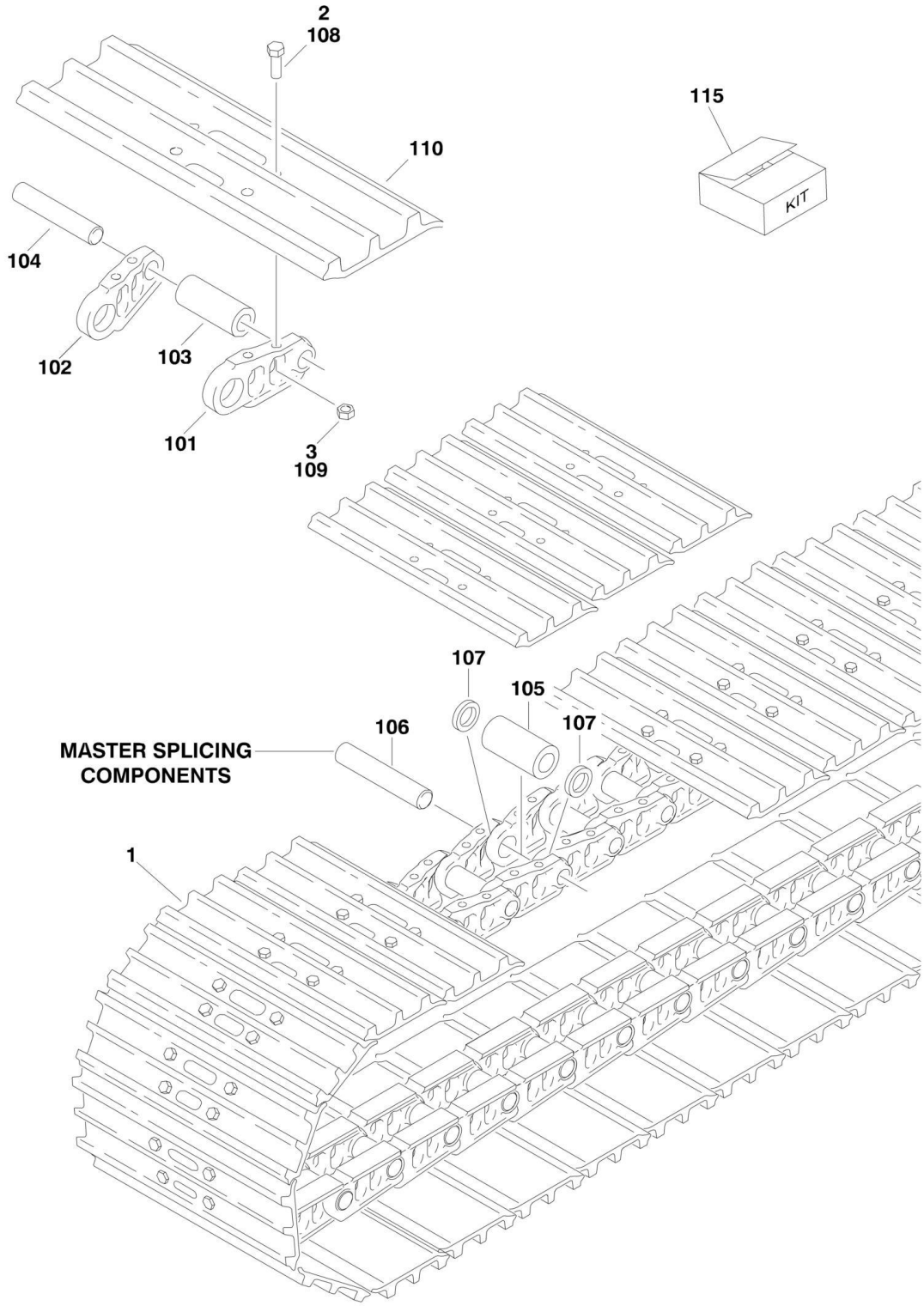

## FIGURE 1-5. GRADALL FRAME TRACK CHAIN ASSEMBLY

| ITEM | PART NUMBER | QTY | DESCRIPTION | REV |
|---|---|---|---|---|
| | 80213117 | Ref | **TRACK CHAIN ASSEMBLY** | - |
| | | Ref | **Note: Qty shown is for one track - 2 tracks per machine.** | |
| 1 | See Note | 47 | Shoe Assembly (Note: Not Available - Purchase Individual Parts. See Items 101-115 for Breakdown) | |
| 2 | 80213016 | 188 | Bolt | |
| 3 | 80214368 | 188 | Nut | |
| | | Ref | **SHOE ASSEMBLY** | |
| | | Ref | **Note: Qty shown is for one side - 47 shoes per track and 2 tracks per machine.** | |
| 101 | 80214361 | 47 | Link, Right | |
| 102 | 80214362 | 47 | Link, Left | |
| 103 | 80214363 | 47 | Bearing | |
| 104 | 80214364 | 46 | Pin, Hinge | |
| 105 | 80214365 | 1 | Bearing, Splice | |
| 106 | 80214366 | 1 | Pin, Splice Hinge | |
| 107 | 80214367 | 2 | Spacer | |
| 108 | 80213016 | 188 | Screw | |
| 109 | 80214368 | 188 | Nut | |
| 110 | 80214369 | 47 | Cleat, Track | |
| 115 | 80214370 | 1 | Pin and Bearing Kit (Includes Items 103-107) | |
| | 1001113466 | Ref | **RUBBER TRACK PAD INSTALLATION (NOT SHOWN)** | 1 |
| | 1001104328 | 94 | Pad, Rubber | |
| | 0100011 | AR | Compound, Locking | |

## FIGURE 1-6. GRADALL FRAME IDLER ASSEMBLY

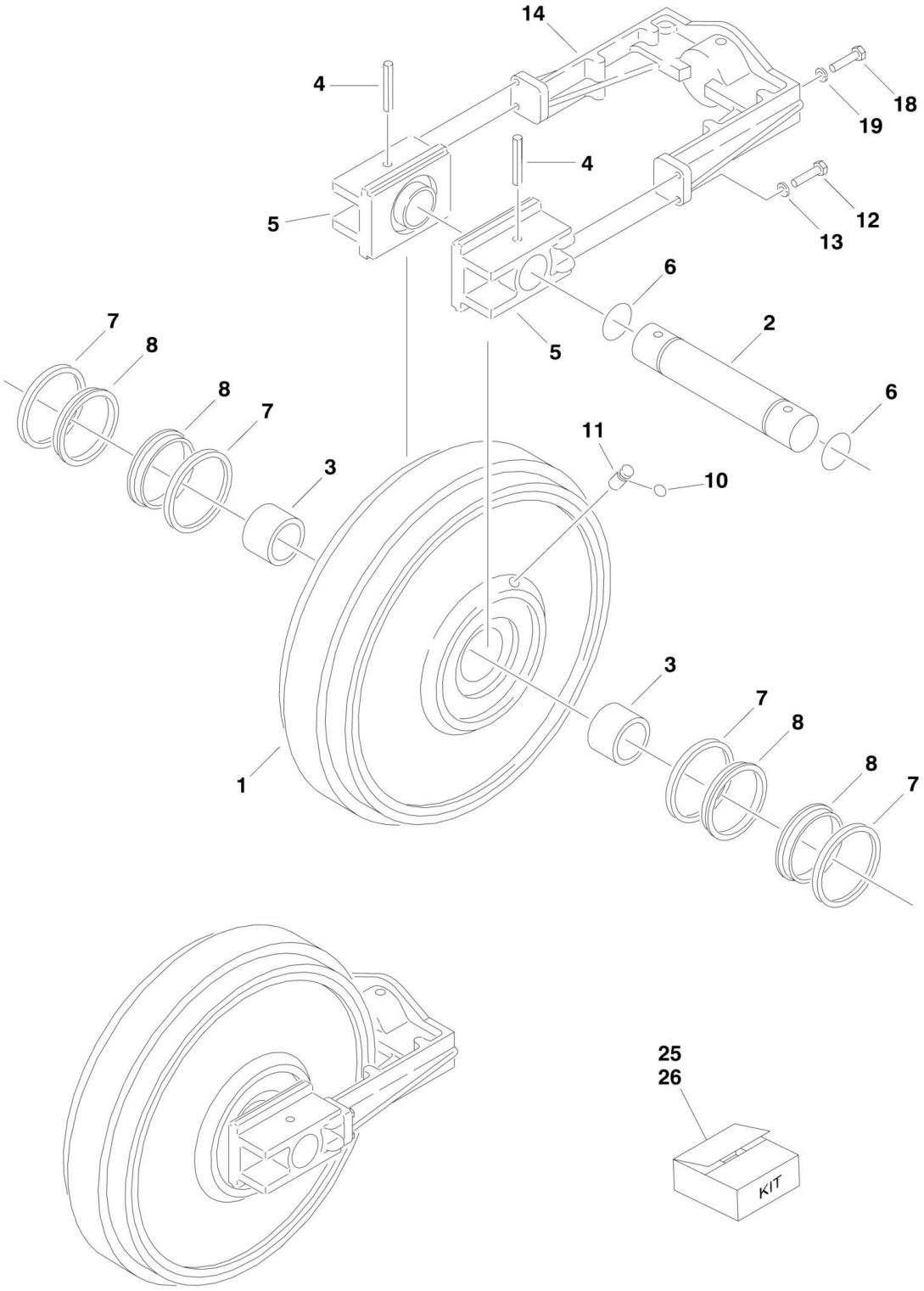

## FIGURE 1-6. GRADALL FRAME IDLER ASSEMBLY

| ITEM | PART NUMBER | QTY | DESCRIPTION | REV |
|---|---|---|---|---|
| | 80213040 | Ref | **IDLER ASSEMBLY** | B |
| 1 | See Note | NSS | Idler without Bearing (Note: Use Item 25) | |
| 2 | 80214027 | 1 | Shaft | |
| 3 | 80214024 | 2 | Bearing | |
| 4 | 80214004 | 2 | Rollpin | |
| 5 | 80214026 | 2 | Bracket, Mounting | |
| 6 | 80214028 | 2 | Seal | |
| 7 | See Note | NSS | Seal (Note: Use Item 26) | |
| 8 | See Note | NSS | Holder, Seal (Note: Use Item 26) | |
| 10 | 83604107 | 1 | O-Ring | |
| 11 | 83694108 | 1 | Plug | |
| 12 | 80214030 | 4 | Bolt | |
| 13 | 83694007 | 4 | Lockwasher | |
| 14 | 80214029 | 1 | Bracket | |
| 18 | 83694009 | 2 | Bolt | |
| 19 | 83694010 | 2 | Lockwasher | |
| 25 | 80214023 | 1 | Idler Kit (Includes Items 1 & 3) | |
| 26 | 83694040 | 2 | Seal and Holder Kit (Includes Items 7 & 8) | |

FIGURE 1-7. GRADALL FRAME SPRING AND SHOCK ASSEMBLIES

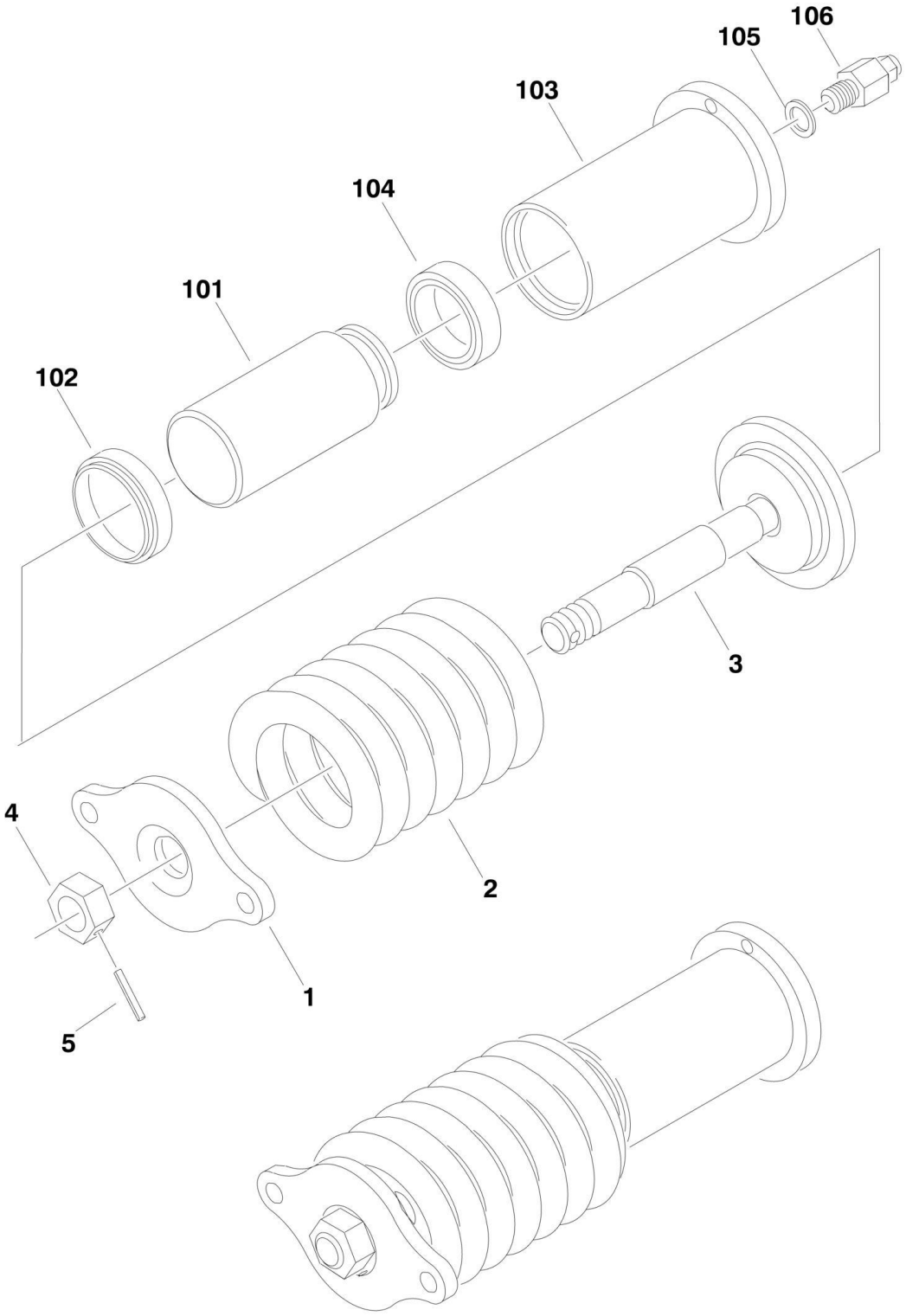

## FIGURE 1-7. GRADALL FRAME SPRING AND SHOCK ASSEMBLIES

| ITEM | PART NUMBER | QTY | DESCRIPTION | REV |
|---|---|---|---|---|
| | 80213041 | Ref | **SPRING ASSEMBLY** | C |
| 1 | 80214031 | 1 | Flange, Mounting | |
| 2 | 80214033 | 1 | Spring | |
| 3 | 80214034 | 1 | Plate, Base | |
| 4 | 80214010 | 1 | Locknut | |
| 5 | 80214011 | 1 | Rollpin | |
| | 80213042 | Ref | **SHOCK ASSEMBLY** | A |
| 101 | 83694046 | 1 | Piston/Rod | |
| 102 | 83694045 | 1 | Wiper | |
| 103 | 80614008 | 1 | Barrel | |
| 104 | 83694047 | 1 | Seal | |
| 105 | 80613009 | 1 | Seal | |
| 106 | 80613008 | 1 | Fitting | |

## FIGURE 1-8. GRADALL FRAME ROTARY COUPLING ASSEMBLY

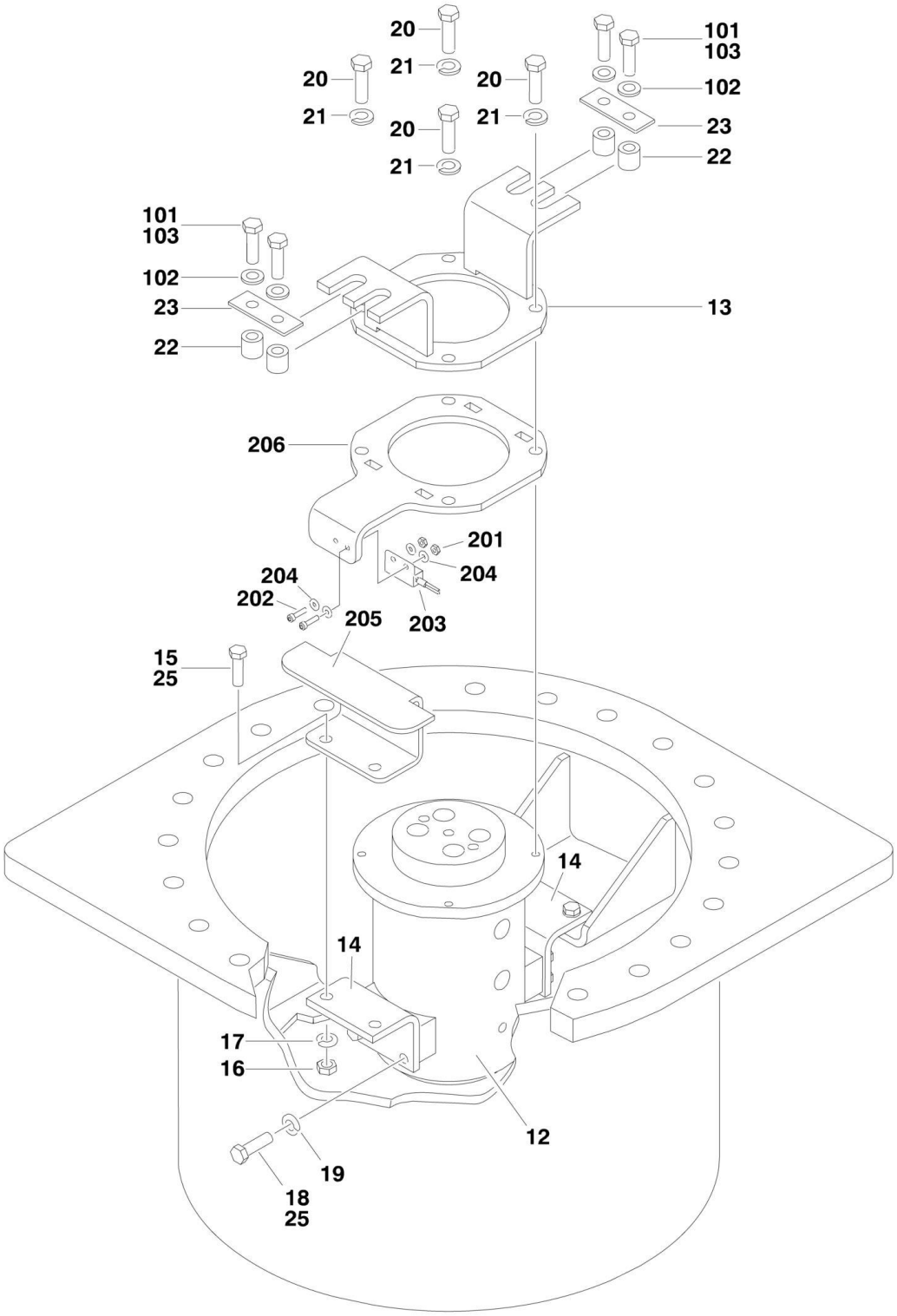

## FIGURE 1-8. GRADALL FRAME ROTARY COUPLING ASSEMBLY

| ITEM | PART NUMBER | QTY | DESCRIPTION | REV |
|---|---|---|---|---|
| | | Ref | **ROTARY COUPLING INSTALLATION** | |
| | 80215014 | Ref | **Rotary Coupling Installation 600SC** | C |
| | 80215016 | Ref | **Rotary Coupling Installation 660SJC** | C |
| 12 | 80213115 | 1 | Rotary Coupling Assembly | |
| 12 | 80213116 | 1 | Seal Kit - 80213115 Coupling (Includes Qty 9 Seals and Qty 2 Wiper Rings) | |
| 13 | 80216035 | 1 | Stabilizer | |
| 14 | 80211144 | 1 | Support | |
| 15 | 88201069 | 4 | Bolt 1/2in-13NC x 2in | |
| 16 | 88501008 | 4 | Nut 1/2in-13NC | |
| 17 | 88551013 | 4 | Lockwasher 1/2in | |
| 18 | 83191021 | 8 | Bolt M10 x 30mm | |
| 19 | 83191013 | 8 | Lockwasher M10 | |
| 20 | 83191004 | 4 | Bolt M12 x 30mm | |
| 21 | 83191010 | 4 | Lockwasher M10 | |
| 22 | 80211147 | 4 | Spacer | |
| 23 | 80211148 | 2 | Keeper | |
| 25 | 14403364 | AR | Compound, Locking | |
| | 0271817 | Ref | **ROTARY COUPLING INSTALLATION** | 1-A |
| 101 | 0641616 | 4 | Bolt 3/8in-16NC x 2in | |
| 102 | 4751600 | 4 | Flatwasher 3/8in | |
| 103 | 0100011 | AR | Compound, Locking | |
| | 1001145988 | Ref | **DRIVE ORIENTATION INSTALLATION (SN 0300169158 through 0300174703)** | A |
| 201 | 3311005 | 2 | Locknut #10-24NC | |
| 202 | 3931012 | 2 | Capscrew #10-24NC x 3/4in | |
| 203 | 4360517 | 1 | Switch, Proximity | |
| 204 | 4711000 | 4 | Flatwasher #10 | |
| 205 | 1001149587 | 1 | Cam (Part of Chassis Assembly) | |
| 206 | 80211160 | 1 | Bracket (Part of Chassis Assembly) | |

## FIGURE 1-9. CATERPILLAR FRAME ASSEMBLY

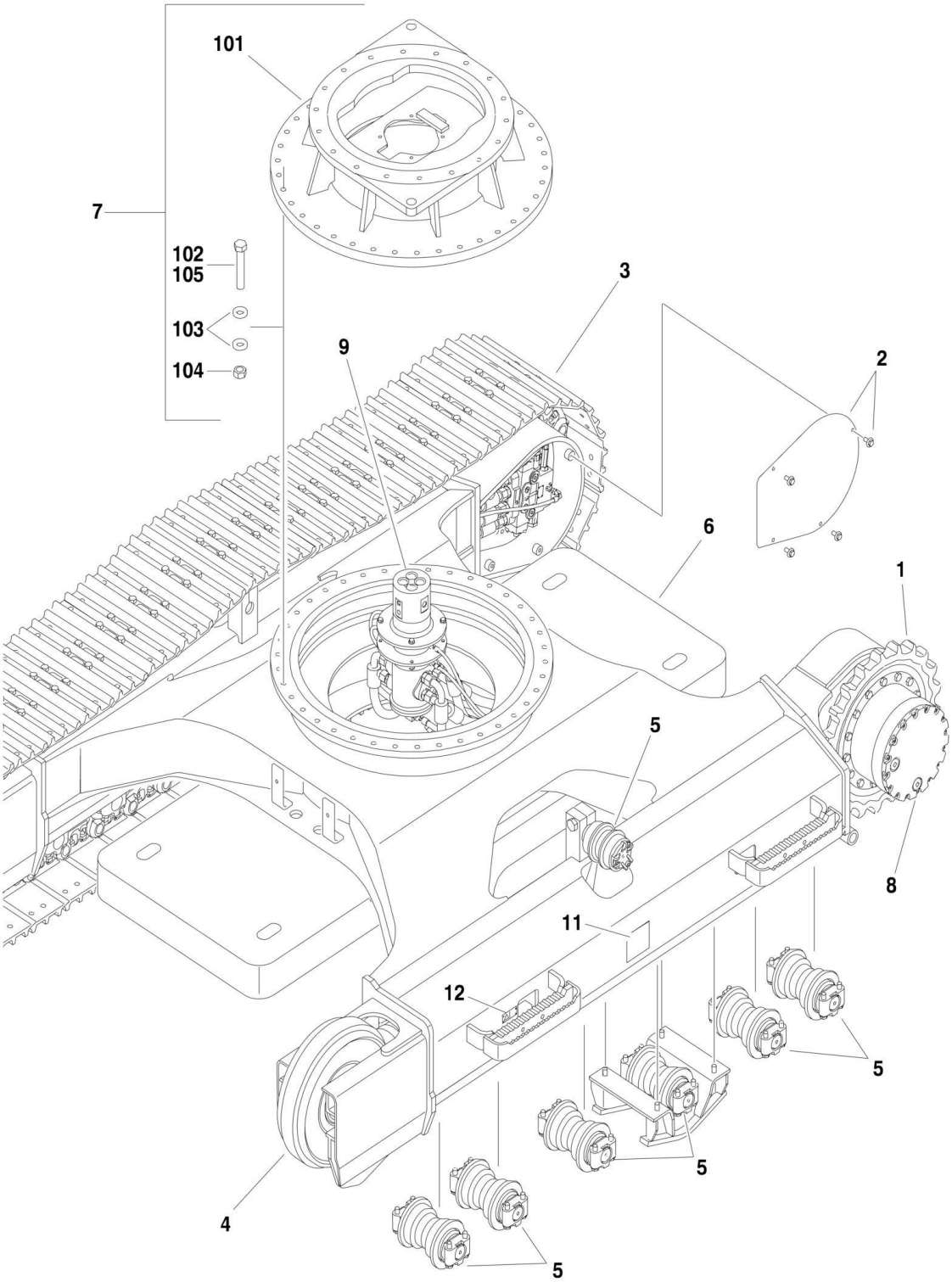

## FIGURE 1-9. CATERPILLAR FRAME ASSEMBLY

| ITEM | PART NUMBER | QTY | DESCRIPTION | REV |
|---|---|---|---|---|
| | | Ref | **FRAME ASSEMBLY LESS TRACK** | |
| | 1001102504 | Ref | **Frame Assembly Less Track 600SC (ANSI, ANSI Export, CSA and Japanese Specs)** | D |
| | 1001109075 | Ref | **Frame Assembly Less Track 600SC (Australian and CE Specs)** | D |
| | 1001103563 | Ref | **Frame Assembly Less Track 660SJC** | E |
| 1 | | Ref | Sprocket Components | |
| 1 | 7022605 | 2 | Sprocket (15 Teeth) (1 Per Side) | |
| 1 | 7022732 | 30 | Bolt M16 x 35mm (15 Per Side) | |
| 2 | | Ref | Motor Guard Components | |
| 2 | 70002464 | 2 | Guard, Motor Cover | |
| 2 | 7022636 | 8 | Bolt M12 x 30mm (4 Per Cover) | |
| 2 | 7022617 | 8 | Washer M12 (4 Per Cover) | |
| 3 | 70002465 | 2 | Track Shoe Installation (See CATERPILLAR FRAME TRACK SHOE INSTALLATION for Breakdown) | |
| 4 | NPN | Ref | Front Idler Assemblies (See CATERPILLAR FRAME IDLER ASSEMBLY for Breakdown) | |
| 5 | NPN | Ref | Track Roller Installation (See CATERPILLAR FRAME TRACK ROLLER INSTALLATION for Breakdown) | |
| 6 | See Note | NSS | Frame Weldment (Note: Not Available for Purchase.) | |
| 7 | NPN | Ref | Adapter Components (See Items 101-105 for Breakdown) | |
| 8 | NPN | Ref | Drive Assembly | |
| 8 | NPN | Ref | Drive Motor Assembly (See CATERPILLAR FRAME DRIVE MOTOR ASSEMBLY for Breakdown) | |
| 8 | NPN | Ref | Drive Hub Assembly (See CATERPILLAR FRAME DRIVE HUB ASSEMBLY for Breakdown) | |
| 9 | NPN | Ref | Swivel (Rotary Coupling) Installation (See CATERPILLAR FRAME ROTARY COUPLING ASSEMBLY for Breakdown) | |
| 11 | See Note | NSS | Nameplate - Caterpillar Chassis SN (Note: Not Available for Purchase.) | |
| 12 | See Note | NSS | Decal - Warning (Note: Not Available for Purchase.) | |
| | | Ref | **ADAPTER COMPONENTS** | |
| 101 | 1001102159 | 1 | Adapter Weldment | |
| 102 | 0771626 | 38 | Bolt M16 x 90mm Grade 10.9 | |
| 103 | 4892000 | 76 | Washer, Hardened 5/8in | |
| 104 | 3291601 | 38 | Nut M16 | |
| 105 | 0100019 | AR | Compound, Locking | |

## FIGURE 1-10. CATERPILLAR FRAME IDLER ASSEMBLY

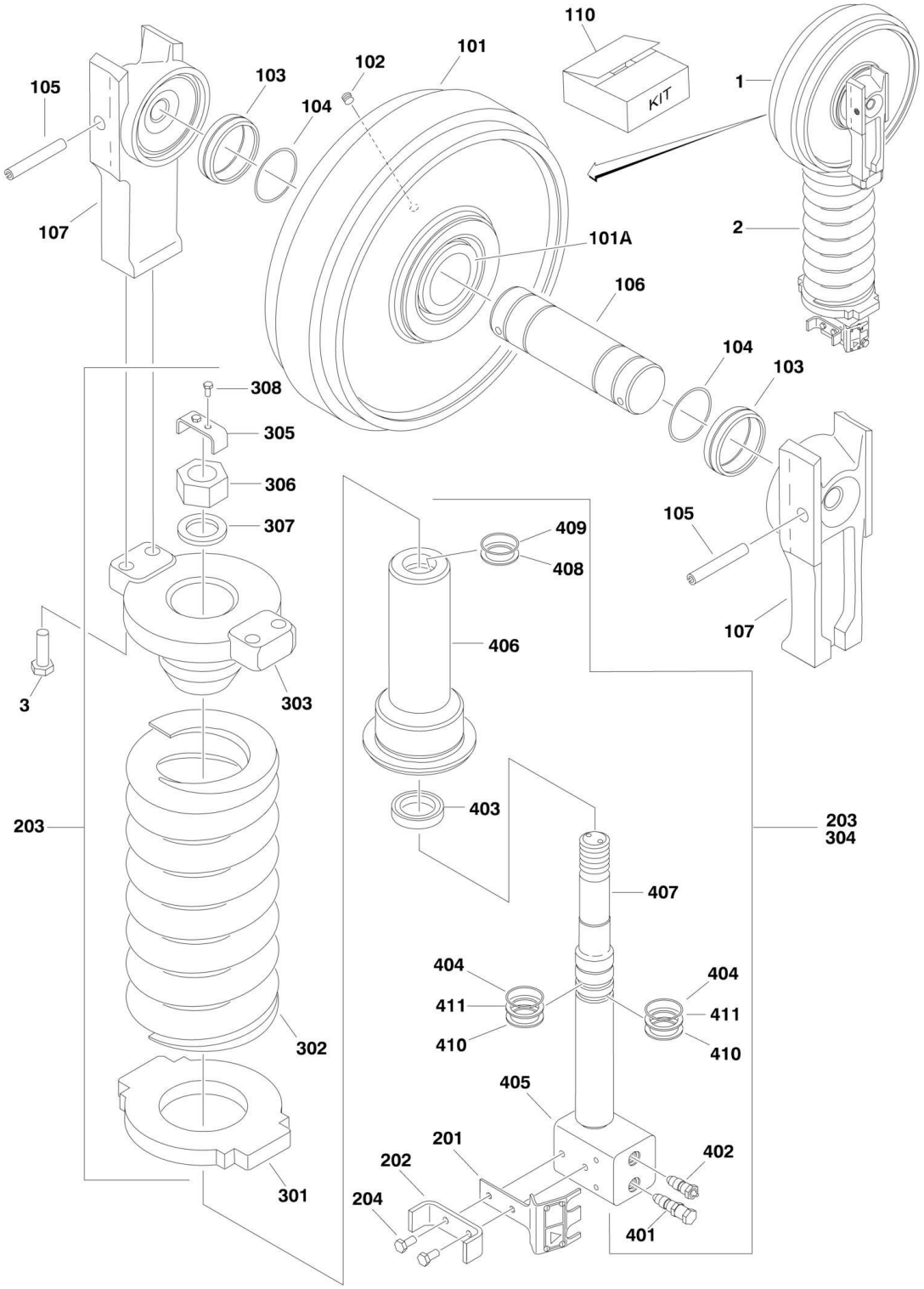

## FIGURE 1-10. CATERPILLAR FRAME IDLER ASSEMBLY

| ITEM | PART NUMBER | QTY | DESCRIPTION | REV |
|---|---|---|---|---|
| | | Ref | **IDLER ASSEMBLIES** | B |
| | NPN | Ref | **Idler Assembly - Right Side (Note: Not Available as Complete Assembly. Purchase Individual Parts.)** | |
| | NPN | Ref | **Idler Assembly - Left Side (Note: Not Available as Complete Assembly. Purchase Individual Parts.)** | |
| 1 | 7022603 | 2 | Idler Assembly (1 Per Side) (See Items 101-110 for Breakdown) | |
| 2 | NPN | 2 | Track Adjuster Assembly (1 Per Side) (See Items 201-204 for Breakdown) (Note: Not Available as Complete Assembly. Purchase Individual Parts.) | |
| 3 | 70002475 | 8 | Bolt M16 x 60mm (4 Per Side) | |
| | 7022603 | Ref | **IDLER WHEEL ASSEMBLY** | |
| 101 | 7022624 | 1 | Idler Wheel and Bearing Assembly | |
| 101A | See Note | NSS | Bearing (Note: Use Item 1) | |
| 102 | 7022627 | 1 | Plug, Pipe | |
| 103 | 7022657 | 2 | Seal | |
| 104 | 7022654 | 2 | O-Ring | |
| 105 | 7022658 | 2 | Pin | |
| 106 | 7022622 | 1 | Shaft, Idler Wheel | |
| 107 | 7022610 | 2 | Bearing | |
| 110 | 7022657 | 2 | Seal Kit (Each Kit Includes 2 Seals) | |
| | | Ref | **TRACK ADJUSTER ASSEMBLY** | |
| | NPN | Ref | **Right Side (Shown)** | |
| | NPN | Ref | **Left Side (Not Shown)** | |
| 201 | 70002476 | 1 | Plate, Decal | |
| 201 | See Note | NSS | Drivescrew (Note: Not Available - Purchase p/n 70002476) | |
| 201 | See Note | NSS | Nameplate - Warning (Note: Not Available - Purchase p/n 70002476) | |
| 202 | 70002477 | 1 | Plate | |
| 203 | 70002478 | 1 | Recoil Spring Assembly (See Items 301-308 for Breakdown) | |
| 204 | 70002479 | 1 | Bolt M10 x 20mm | |
| | 70002478 | Ref | **RECOIL SPRING ASSEMBLY** | |
| 301 | 70002480 | 1 | Plate | |
| 302 | 70002481 | 1 | Spring | |
| 303 | 70002482 | 1 | Support | |
| 304 | 70002483 | 1 | Cylinder Assembly (See Items 401-411 for Breakdown) | |
| 305 | 70002484 | 1 | Plate | |
| 306 | 70002485 | 1 | Nut M36 | |
| 307 | 70002486 | 1 | Washer | |
| 308 | 70002487 | 2 | Bolt M6 | |
| | 70002483 | Ref | **TRACK ADJUSTER CYLINDER ASSEMBLY** | |
| 401 | 7022601 | 1 | Valve, Relief | |
| 402 | 7022655 | 1 | Valve, Fill | |
| 403 | 7022656 | 2 | Seal, Lip | |
| 404 | 70002488 | 1 | Seal, O-Ring | |
| 405 | 70002489 | 1 | Piston | |
| 406 | 70002490 | 1 | Barrel | |
| 407 | 70002491 | 1 | Rod | |
| 408 | 70002492 | 1 | Seal, O-Ring | |
| 409 | 70002493 | 1 | Ring | |
| 410 | 7022660 | 2 | Ring, Back-up | |
| 411 | 7022661 | 2 | Ring, Back-up | |

## FIGURE 1-11. CATERPILLAR FRAME TRACK ROLLER INSTALLATION

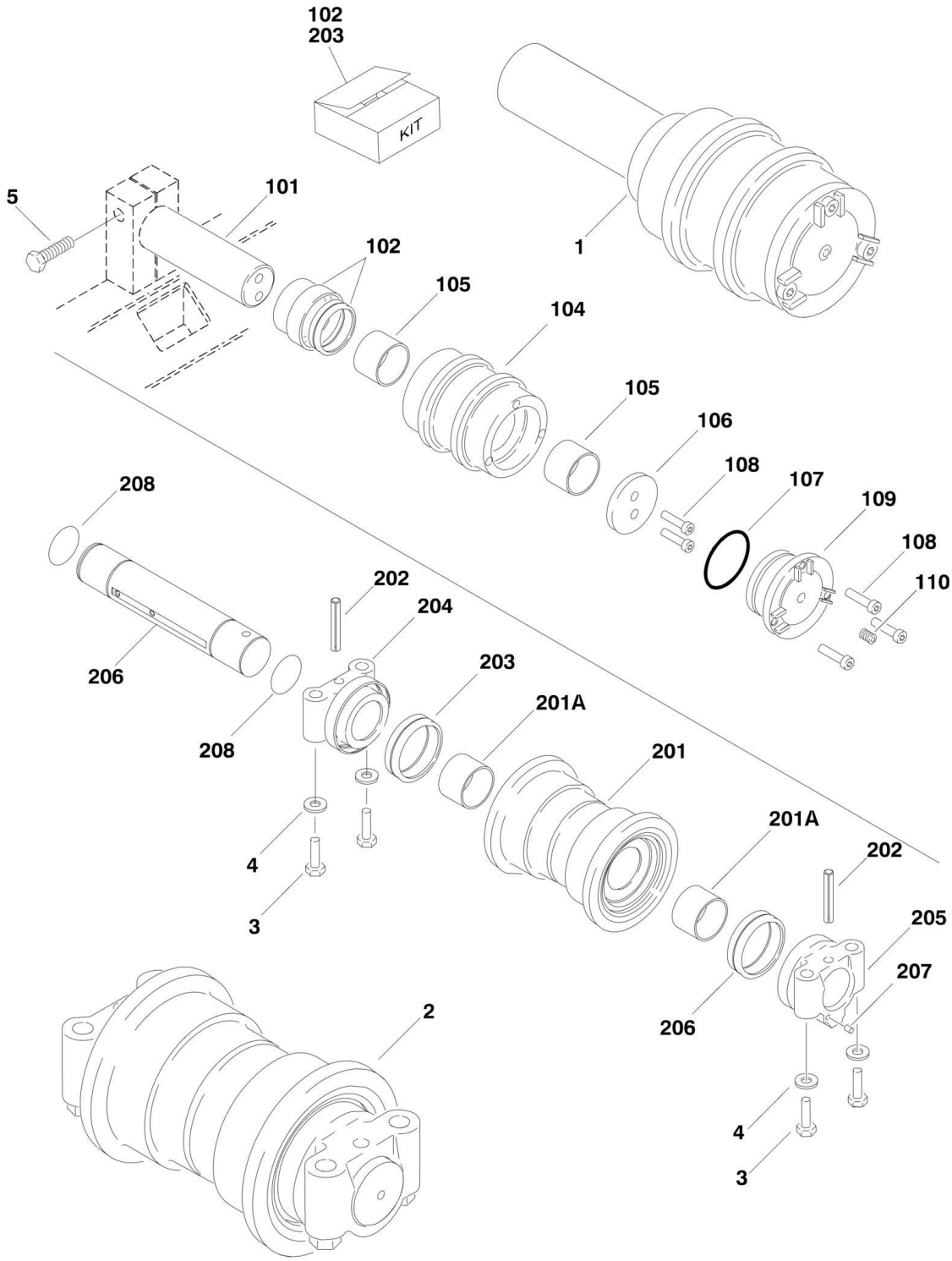

## FIGURE 1-11. CATERPILLAR FRAME TRACK ROLLER INSTALLATION

| ITEM | PART NUMBER | QTY | DESCRIPTION | REV |
|---|---|---|---|---|
| | | Ref | **TRACK ROLLER INSTALLATION** | |
| 1 | 7022604 | 2 | Roller Assembly - Upper (See Items 101-110 for Breakdown) | |
| 2 | 70002495 | 12 | Roller Assembly - Lower (See Items 201-208 for Breakdown) | |
| 3 | 7022629 | 48 | Bolt M16 x 80mm | |
| 4 | 7022638 | 48 | Washer | |
| 5 | 7022645 | 2 | Bolt M24 x 80mm | |
| | 7022604 | Ref | **ROLLER ASSEMBLY - UPPER** | |
| 101 | 7022632 | 1 | Shaft | |
| 102 | 7022662 | 1 | Seal Kit (includes 2 Seals) | |
| 104 | 7022630 | 1 | Roller and Bearing Assembly | |
| 105 | See Note | NSS | Bearing (Note: Use Item 104) | |
| 106 | 7022633 | 1 | Retainer | |
| 107 | 7022625 | 1 | O-Ring | |
| 108 | 7022637 | 5 | Bolt, Socket Head M10 x 25mm | |
| 109 | 7022631 | 1 | Cover, Carrier Roller | |
| 110 | 7022627 | 1 | Plug, Pipe | |
| | 70002495 | Ref | **ROLLER ASSEMBLY - LOWER** | |
| 201 | 7022618 | 1 | Roller and Bearing Assembly | |
| 201A | See Note | NSS | Bearing (Note: Use Item 201) | |
| 202 | 7022623 | 2 | Dowel | |
| 203 | 7022663 | 2 | Seal Kit (Includes 2 Seals and 2 Rings) | |
| 204 | 70002496 | 1 | Collar | |
| 205 | 70002497 | 1 | Collar | |
| 206 | 70002498 | 1 | Shaft | |
| 207 | 70002499 | 1 | Plug, Pipe | |
| 208 | 7022626 | 2 | O-Ring | |

FIGURE 1-12. CATERPILLAR FRAME TRACK SHOE INSTALLATION

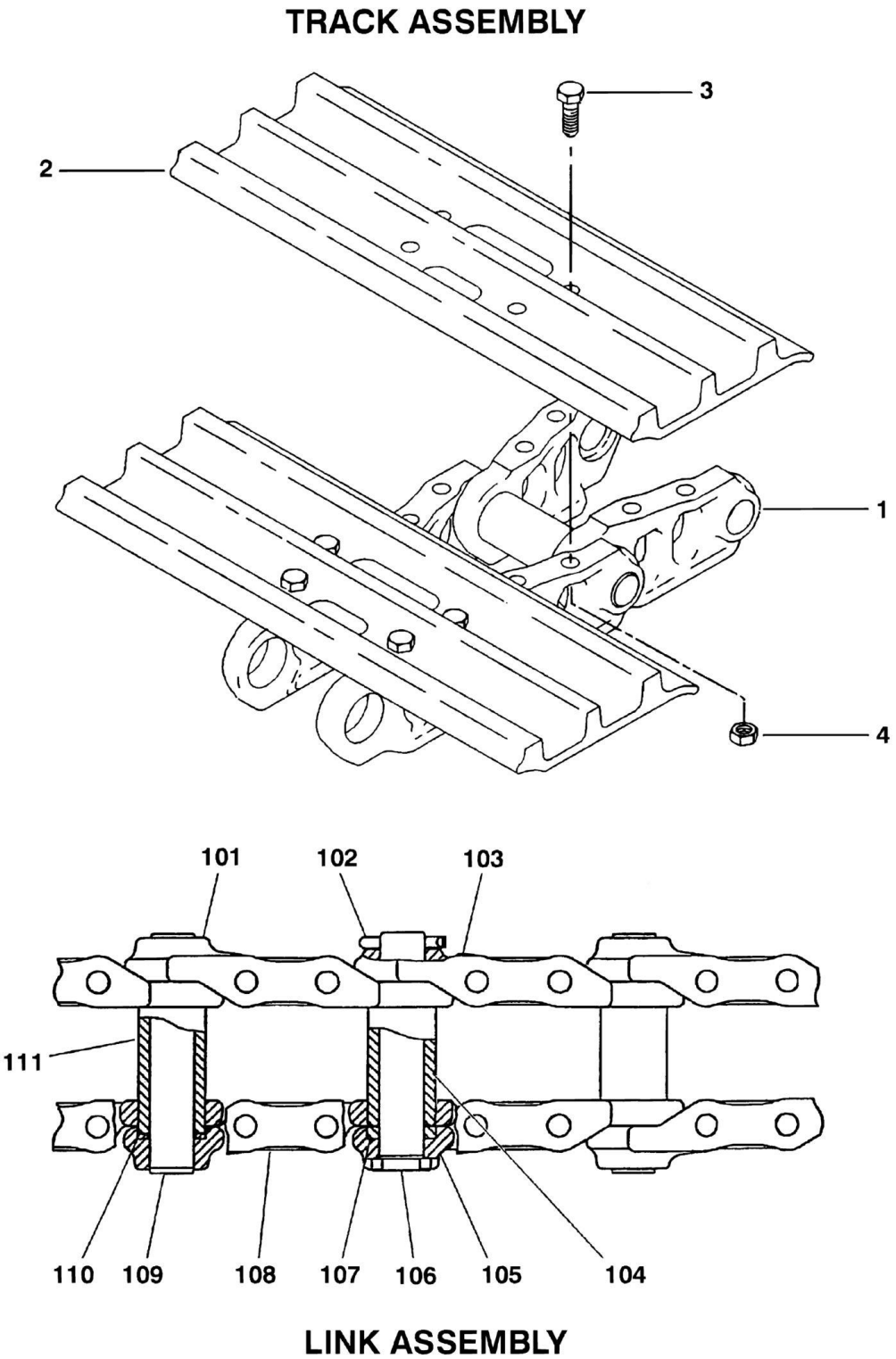

## FIGURE 1-12. CATERPILLAR FRAME TRACK SHOE INSTALLATION

| ITEM | PART NUMBER | QTY | DESCRIPTION | REV |
|---|---|---|---|---|
| | 70002465 | Ref | **TRACK SHOE ASSEMBLY - STEEL** | - |
| 1 | 7022751 | 1 | Link Assembly (See Items 101-111 for Breakdown) | |
| 2 | 70002466 | 43 | Shoe, Track | |
| 3 | 7022612 | 172 | Bolt M16 x 46mm | |
| 4 | 7022614 | 172 | Nut M16 x 46mm | |
| | 7022751 | Ref | **LINK ASSEMBLY** | |
| 101 | 7022606 | 42 | Link, Track | |
| 102 | 7022652 | 1 | Pin, Cotter | |
| 103 | 7022608 | 1 | Link, Track (Master) | |
| 104 | 70002467 | 1 | Bushing | |
| 105 | 7022609 | 1 | Link, Track (Master) | |
| 106 | 7022664 | 1 | Pin (Master Link) | |
| 107 | 70002468 | 2 | Washer, Seal | |
| 108 | 7022607 | 42 | Link, Track (Standard) | |
| 109 | 70002469 | 42 | Pin (Standard Link) | |
| 110 | 70002470 | 84 | Washer, Seal | |
| 111 | 70002471 | 42 | Bushing | |
| | 1001104328 | Ref | **RUBBER PAD INSTALLATION (OPTIONAL - NOT SHOWN)** | A |
| | | Ref | **Note: Used as a cover over steel track shoes only.** | |

## FIGURE 1-13. CATERPILLAR FRAME DRIVE MOTOR ASSEMBLY

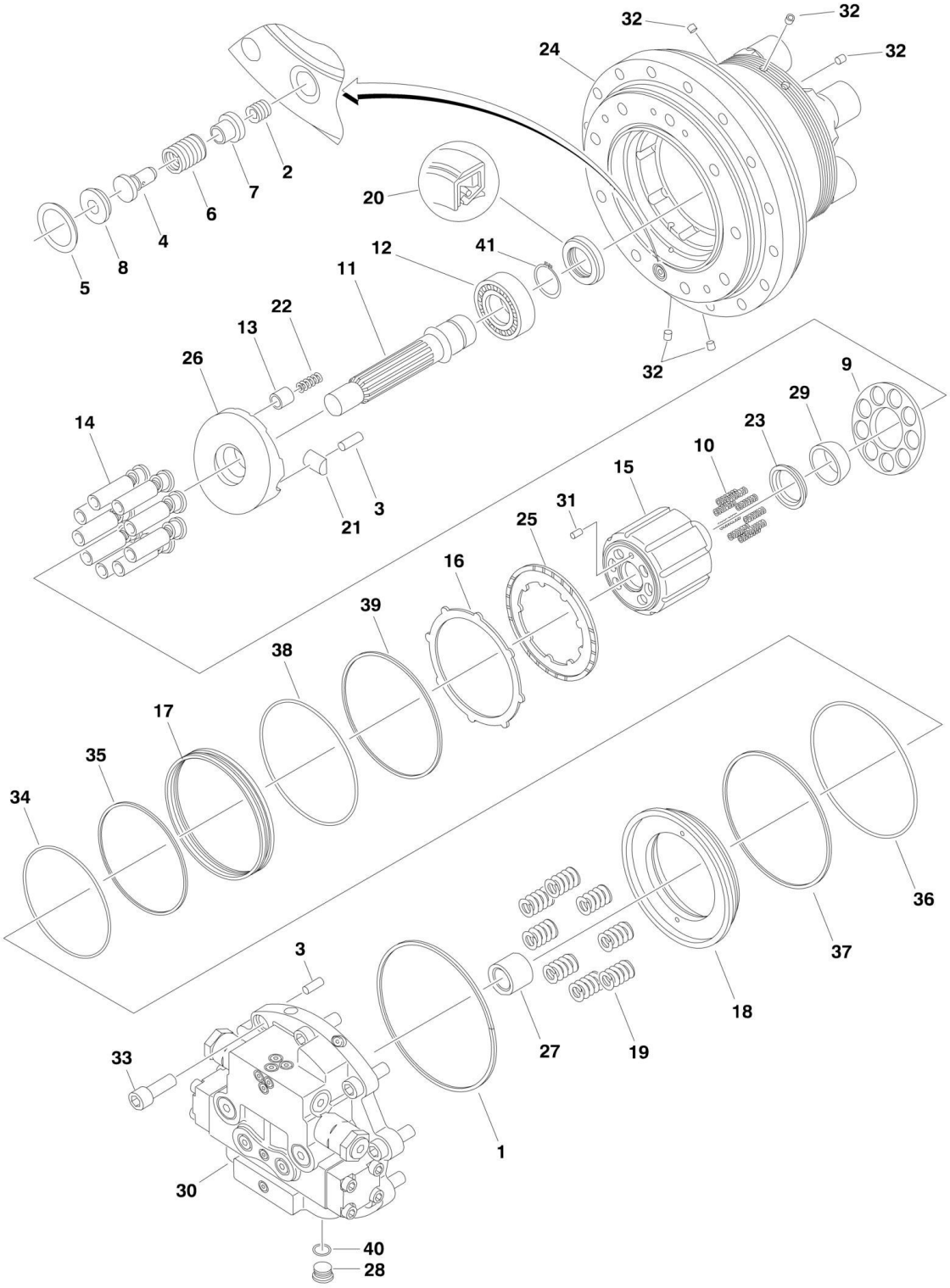

## FIGURE 1-13. CATERPILLAR FRAME DRIVE MOTOR ASSEMBLY

| ITEM | PART NUMBER | QTY | DESCRIPTION | REV |
|---|---|---|---|---|
| | | Ref | **NOTE: INFORMATION NOT AVAILABLE AT TIME OF PRINTING.** | |
| | NPN | Ref | **DRIVE MOTOR ASSEMBLY** | |
| 1 | See Note | 1 | Seal, O-Ring | |
| 2 | See Note | 1 | Orifice | |
| 3 | See Note | 4 | Pin | |
| 4 | See Note | 1 | Valve | 1-A |
| 5 | See Note | 1 | Seal, O-Ring | |
| 6 | See Note | 1 | Spring | |
| 7 | See Note | 1 | Retainer | |
| 8 | See Note | 1 | Seat | |
| 9 | See Note | 1 | Retainer | |
| 10 | See Note | 9 | Spring | |
| 11 | See Note | 1 | Shaft | |
| 12 | See Note | 1 | Bearing, Roller | |
| 13 | See Note | 2 | Piston | |
| 14 | See Note | 9 | Piston Assembly | |
| 15 | See Note | 1 | Barrel Assembly | |
| 16 | See Note | 4 | Plate, Separator | |
| 17 | See Note | 1 | Guide, Piston | |
| 18 | See Note | 1 | Piston, Brake | |
| 19 | See Note | 8 | Spring | |
| 20 | See Note | 1 | Lip-Seal | |
| 21 | See Note | 2 | Key | |
| 22 | See Note | 2 | Spring | |
| 23 | See Note | 1 | Spacer | |
| 24 | See Note | 1 | Body | |
| 25 | See Note | 4 | Plate, Friction | |
| 26 | See Note | 1 | Plate, Cam | |
| 27 | See Note | 1 | Bearing, Needle | |
| 28 | See Note | 1 | Plug, O-Ring | |
| 29 | See Note | 1 | Retainer, Ball | |
| 30 | See Note | 1 | Valve Assembly (See CATERPILLAR FRAME DRIVE VALVE ASSEMBLY for Breakdown) | |
| 31 | See Note | 1 | Dowel | |
| 32 | See Note | 7 | Plug | |
| 33 | See Note | 9 | Capscrew M16 x 40mm | |
| 34 | See Note | 1 | Seal, O-Ring | |
| 35 | See Note | 1 | Ring, Back-up | |
| 36 | See Note | 1 | Seal, O-Ring | |
| 37 | See Note | 1 | Ring, Back-up | |
| 38 | See Note | 1 | Seal, O-Ring | |
| 39 | See Note | 1 | Ring, Back-up | |
| 40 | See Note | 1 | Seal, O-Ring | |
| 41 | See Note | 1 | Ring, Retaining | |

## FIGURE 1-14. CATERPILLAR FRAME DRIVE VALVE ASSEMBLY

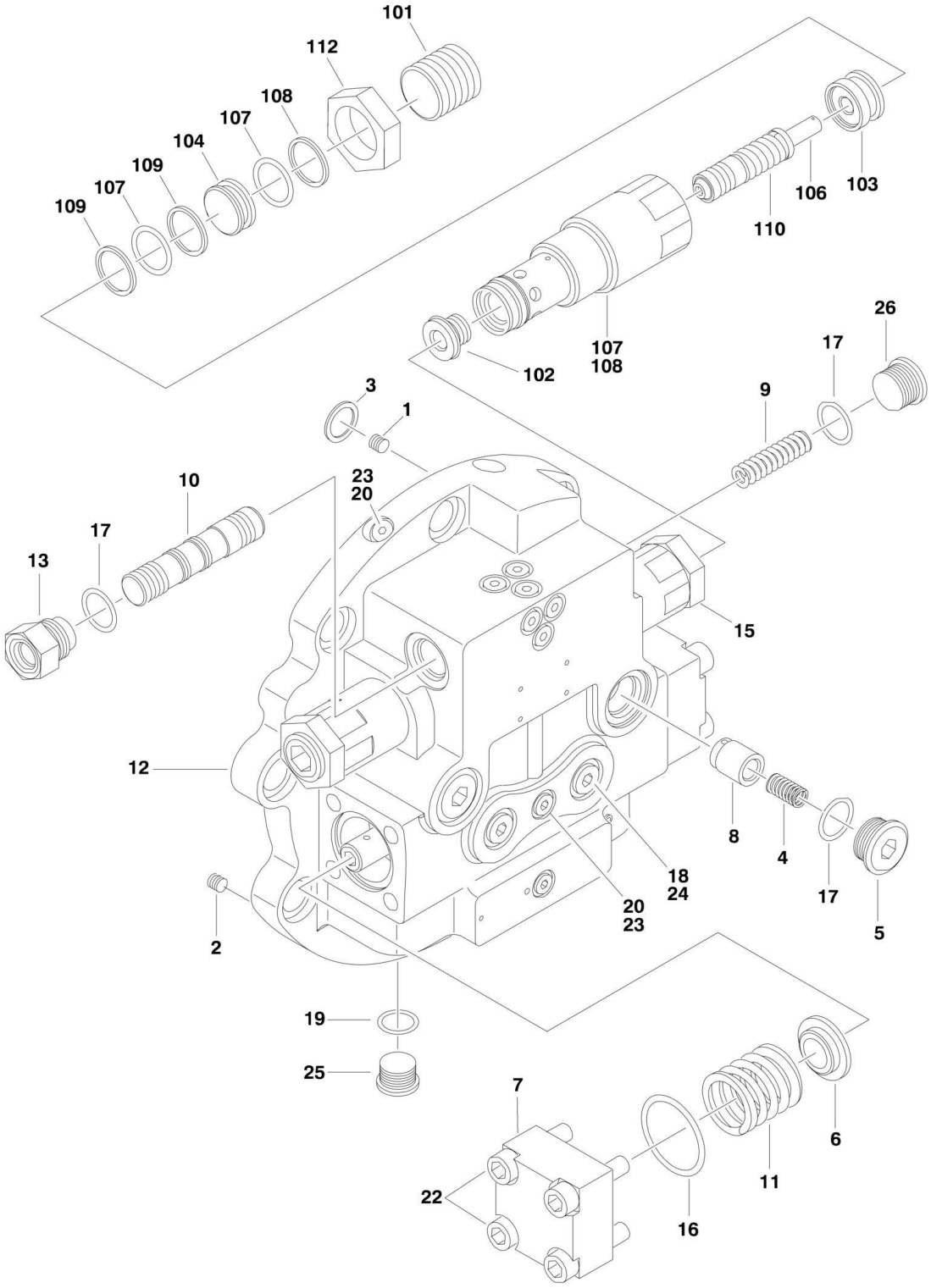

## FIGURE 1-14. CATERPILLAR FRAME DRIVE VALVE ASSEMBLY

| ITEM | PART NUMBER | QTY | DESCRIPTION | REV |
|---|---|---|---|---|
| | | Ref | **NOTE: INFORMATION NOT AVAILABLE AT TIME OF PRINTING.** | |
| | NPN | Ref | **DRIVE VALVE ASSEMBLY** | |
| 1 | See Note | 2 | Orifice | |
| 2 | See Note | 1 | Orifice | |
| 3 | See Note | 2 | Seal, O-Ring | |
| 4 | See Note | 2 | Spring | 1-A |
| 5 | See Note | 2 | Plug | |
| 6 | See Note | 2 | Guide | |
| 7 | See Note | 2 | Cover | |
| 8 | See Note | 2 | Valve | |
| 9 | See Note | 1 | Spring | |
| 10 | See Note | 1 | Spool | |
| 11 | See Note | 2 | Spring | |
| 12 | See Note | 1 | Valve, Counterbalance | |
| 12 | See Note | 1 | Spool Assembly | |
| 12 | See Note | 2 | Ball | |
| 13 | See Note | 1 | Adapter | |
| 15 | See Note | 1 | Relief Valve Assembly (See Items 101-112 for Breakdown) | |
| 16 | See Note | 2 | Seal, O-Ring | |
| 17 | See Note | 4 | Seal, O-Ring | |
| 18 | See Note | 2 | Seal, O-Ring | |
| 19 | See Note | 1 | Seal, O-Ring | |
| 20 | See Note | 12 | Seal, O-Ring | |
| 22 | See Note | 8 | Capscrew M10 x 40mm | |
| 23 | See Note | 12 | Plug O-Ring | |
| 24 | See Note | 2 | Plug O-Ring | |
| 25 | See Note | 1 | Plug O-Ring | |
| 26 | See Note | 1 | Plug O-Ring | |
| | | Ref | **RELIEF VALVE ASSEMBLY** | |
| 101 | See Note | 1 | Setscrew M27 x 27mm | |
| 102 | See Note | 1 | Seat | |
| 103 | See Note | 1 | Piston | |
| 104 | See Note | 1 | Stop | |
| 106 | See Note | 1 | Valve, Relief | |
| 107 | See Note | 3 | Seal, O-Ring | |
| 108 | See Note | 3 | Ring, Back-up | |
| 109 | See Note | 2 | Ring, Back-up | |
| 110 | See Note | 1 | Spring | |
| 111 | See Note | 1 | Seal, O-Ring | |
| 112 | See Note | 1 | Nut M27 | |

## FIGURE 1-15. CATERPILLAR FRAME DRIVE HUB ASSEMBLY

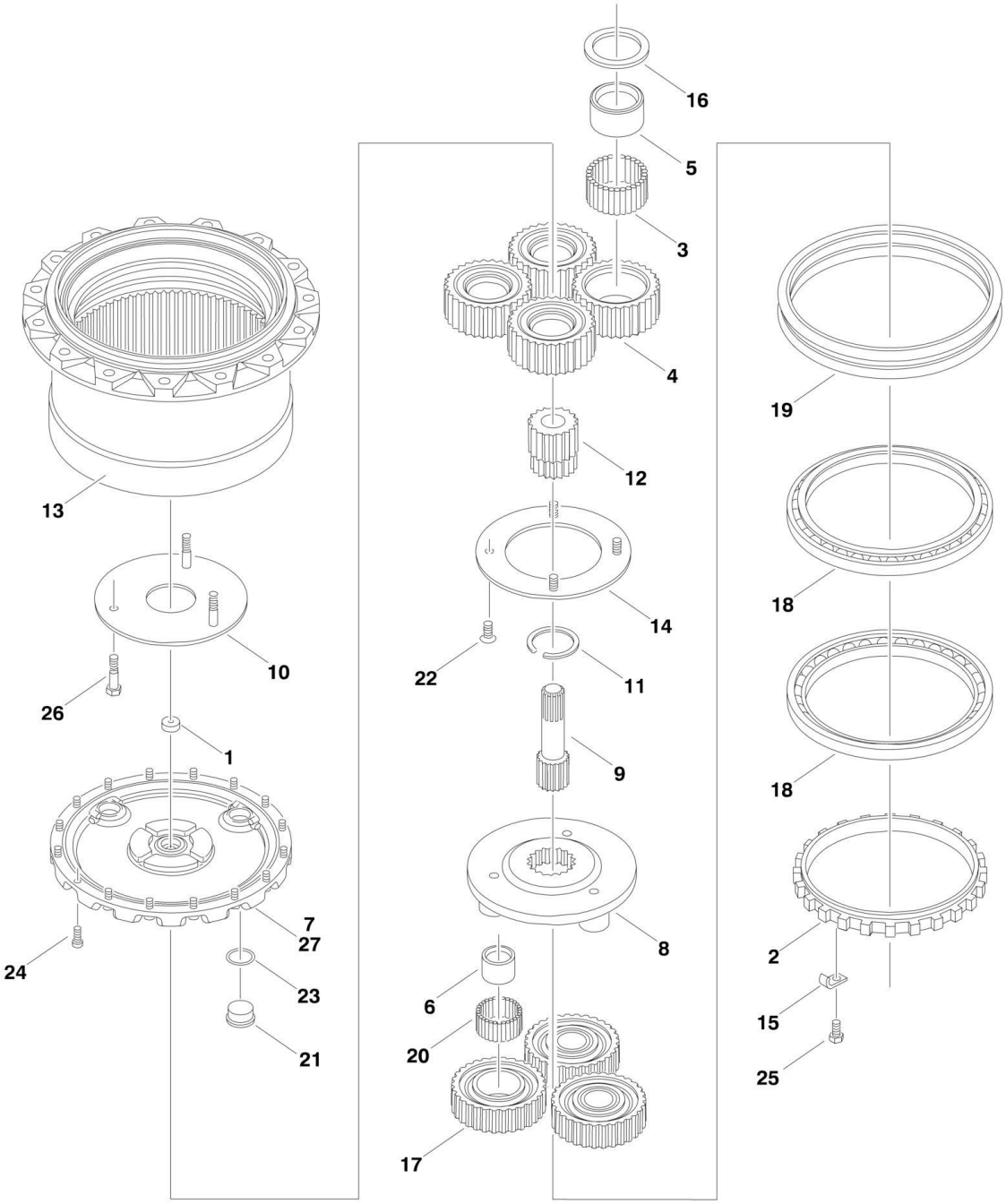

## FIGURE 1-15. CATERPILLAR FRAME DRIVE HUB ASSEMBLY

| ITEM | PART NUMBER | QTY | DESCRIPTION | REV |
|---|---|---|---|---|
| | | Ref | **NOTE: INFORMATION NOT AVAILABLE AT TIME OF PRINTING.** | |
| | NPN | Ref | **DRIVE HUB ASSEMBLY** | |
| 1 | See Note | 1 | Plate | |
| 2 | See Note | 1 | Ring, Locking | |
| 3 | See Note | 4 | Bearing | |
| 4 | See Note | 4 | Gear (37 Teeth) | 1-A |
| 5 | See Note | 4 | Race | |
| 6 | See Note | 3 | Race | |
| 7 | See Note | 1 | Cover | |
| 8 | See Note | 1 | Carrier | |
| 9 | See Note | 1 | Gear, Sun (17 Teeth) | |
| 10 | See Note | 1 | Plate | |
| 11 | See Note | 1 | Ring | |
| 12 | See Note | 1 | Gear (19 Teeth) | |
| 13 | See Note | 1 | Housing | |
| 14 | See Note | 1 | Plate | |
| 15 | See Note | 1 | Plate, Lock | |
| 16 | See Note | 4 | Plate | |
| 17 | See Note | 3 | Gear, Planet (40 Teeth) | |
| 18 | See Note | 2 | Bearing | |
| 19 | See Note | 1 | Seal, Cone | |
| 20 | See Note | 3 | Bearing Assembly | |
| 21 | See Note | 2 | Plug, Pipe | |
| 22 | See Note | 4 | Capscrew M10 x 25mm | |
| 23 | See Note | 2 | Seal, O-Ring | |
| 24 | See Note | 16 | Capscrew M8 x 20mm | |
| 25 | See Note | 1 | Bolt M10 x 20mm | |
| 26 | See Note | 3 | Bolt M10 x 50mm | |
| 27 | See Note | AR | Sealant, Gasket | |

## FIGURE 1-16. CATERPILLAR FRAME ROTARY COUPLING ASSEMBLY

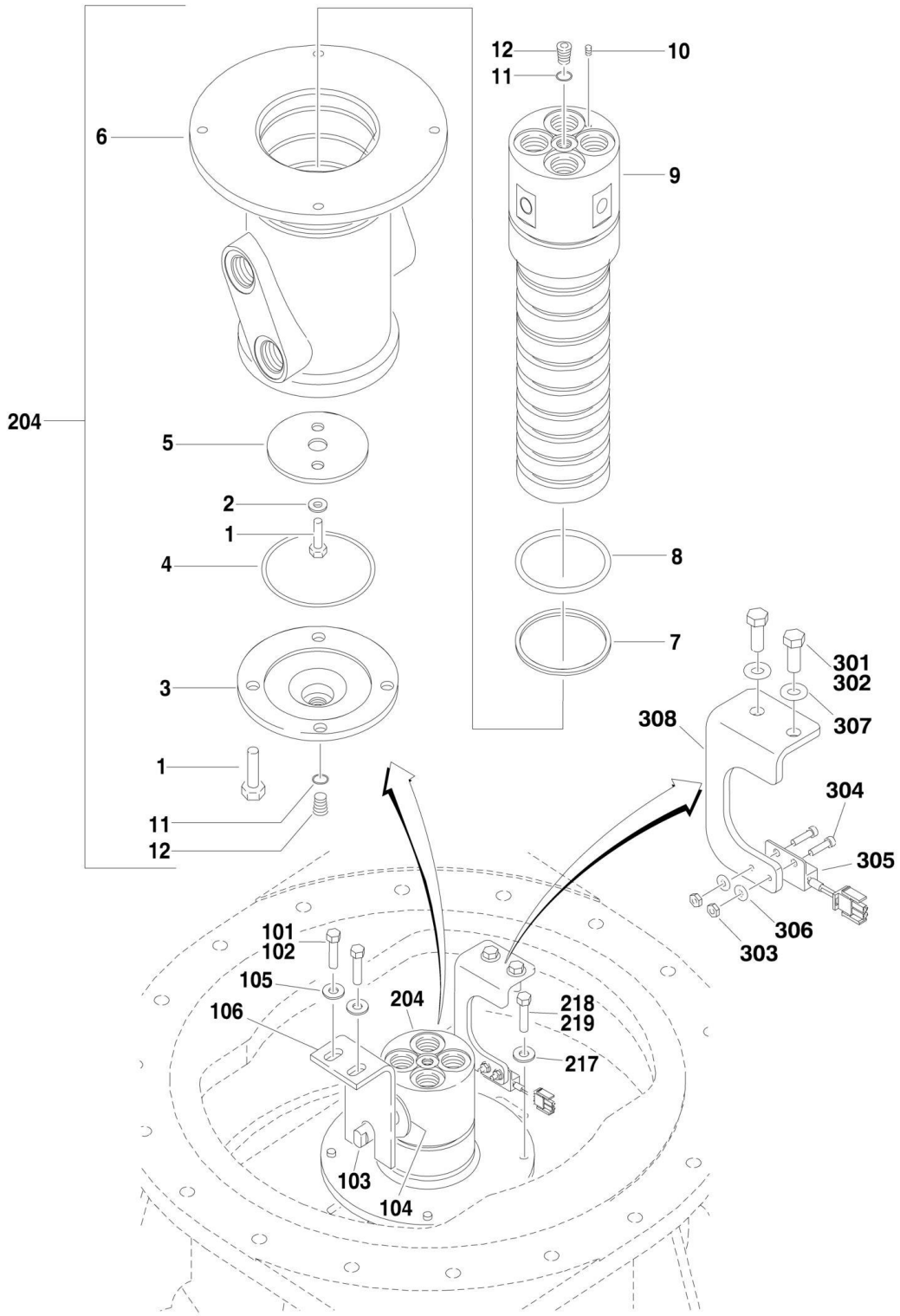

## FIGURE 1-16. CATERPILLAR FRAME ROTARY COUPLING ASSEMBLY

| ITEM | PART NUMBER | QTY | DESCRIPTION | REV |
|---|---|---|---|---|
| | 1660245 | Ref | **ROTARY COUPLING ASSEMBLY** | |
| 1 | 7022720 | 6 | Bolt M10 x 25mm | |
| 2 | 7022721 | 2 | Washer | |
| 3 | 7022722 | 1 | Cover | |
| 4 | 7022723 | 1 | O-Ring | |
| 5 | 7022724 | 1 | Retainer | |
| 6 | 7022735 | 1 | Housing | |
| 7 | 7022726 | 7 | Seal | |
| 8 | 7022727 | 3 | O-Ring | |
| 9 | 7022736 | 1 | Rotor | |
| 10 | 7022729 | 1 | Plug, Pipe | |
| 11 | 70002500 | 2 | O-Ring | |
| 12 | 70002501 | 2 | Plug, O-Ring | |
| | 1001103980 | Ref | **ROTARY COUPLING INSTALLATION** | A |
| 101 | 0100011 | AR | Compound, Locking | |
| 102 | 0641612 | 2 | Bolt 3/8in-16NC x 1-1/2in | |
| 103 | 3841456 | 1 | Rod, Coupling | |
| 104 | 4740490 | 1 | Washer, Special | |
| 105 | 4751600 | 6 | Flatwasher 3/8in | |
| 106 | 1001103952 | 1 | Bracket | |
| | 1001103980 | Ref | **ROTARY COUPLING MOUNTING COMPONENTS** | A |
| 201 | 70002502 | 2 | Grommet (Not Shown - Located in Frame Near Swivel Adapter) | |
| 202 | 70002503 | 2 | Grommet (Not Shown - Located in Frame Where Hose Exit Near Drive Assembly) | |
| 204 | 1660245 | 1 | Rotary Coupling Assembly (See Items 1-12 for Breakdown) | |
| 217 | 7022821 | 4 | Flatwasher M10 Hardened | |
| 218 | 0701012 | 4 | Bolt, Metric M10 x 25mm | |
| 219 | 70002516 | 1 | Gasket Maker (1.7 oz Tube) | |
| | 1001107769 | Ref | **DRIVE ORIENTATION INSTALLATION (WITH UGM)** | A |
| | | Ref | **Note: For Ground Module Identification, refer to Revision Log page A.** | |
| 301 | 0100011 | AR | Compound, Locking | |
| 302 | 0641608 | 2 | Bolt 3/8in-16NC x 1in | |
| 303 | 3311005 | 2 | Locknut 10-24NC | |
| 304 | 3931012 | 2 | Screw 10-24NC x 3/4in | |
| 305 | 4360517 | 1 | Switch, Proximity | |
| 306 | 4711000 | 2 | Flatwasher #10 | |
| 307 | 4711600 | 2 | Flatwasher 3/8in | |
| 308 | 1001107767 | 1 | Bracket, Switch Mount | |

# SECTION 2 - TURNTABLE

## FIGURE 2-1. CONTROL VALVES INSTALLATIONS

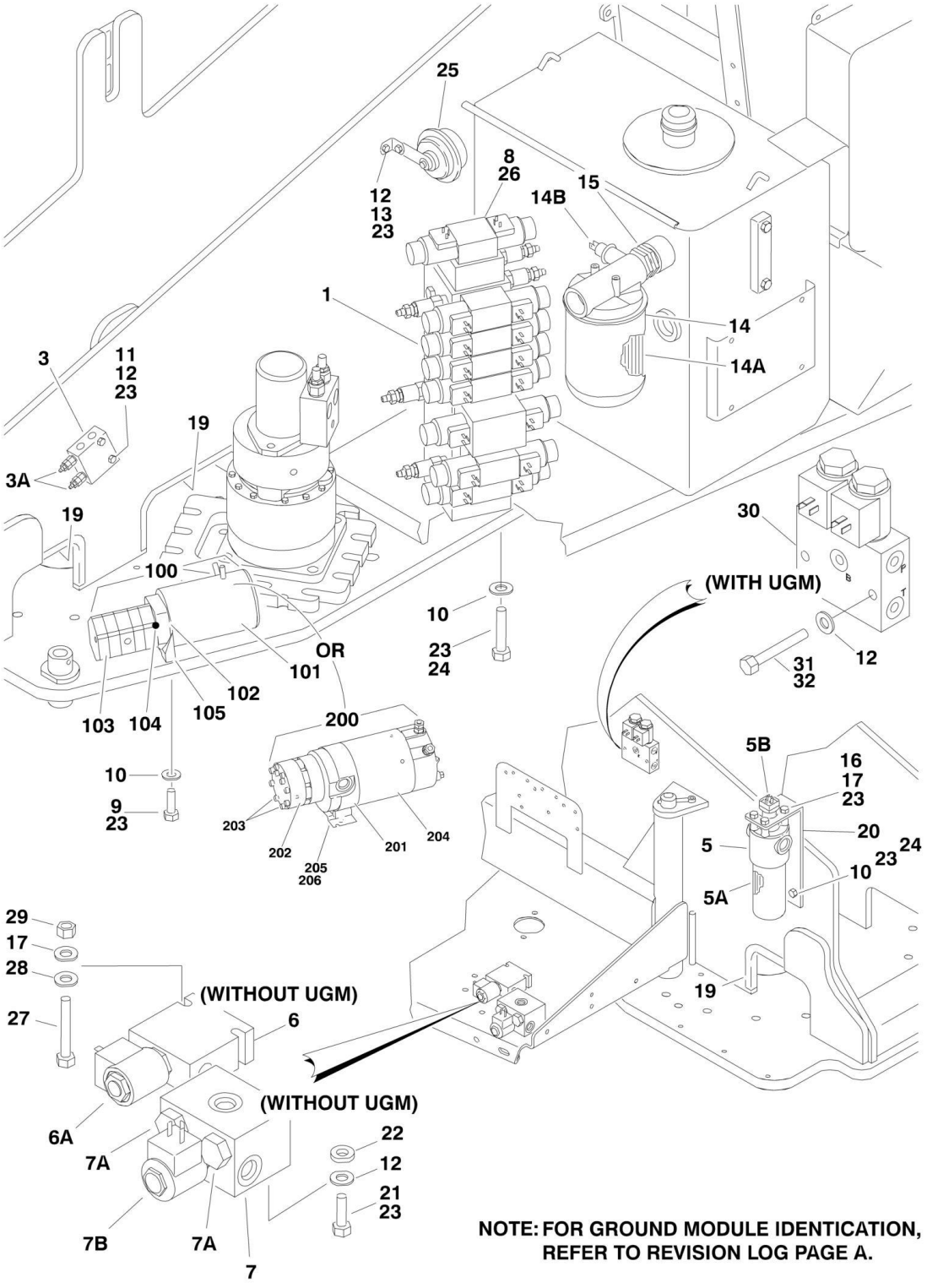

## FIGURE 2-1. CONTROL VALVES INSTALLATIONS

| ITEM | PART NUMBER | QTY | DESCRIPTION | REV |
|---|---|---|---|---|
| | | Ref | **VALVES INSTALLATIONS** | |
| | | Ref | **Note: For Ground Module Identification, refer to Revision Log page A.** | |
| | | Ref | **Without UGM** | |
| | 0274313 | Ref | **Without UGM 600SC** | 4 |
| | 0274314 | Ref | **Without UGM 660SJC** | 4 |
| | | Ref | **With UGM** | |
| | 1001106695 | Ref | **With UGM 600SC (SN 0300128000 through 0300166807)** | B |
| | 1001145283 | Ref | **With UGM 600SC (SN 0300166808 through 0300174703)** | A |
| | 1001106401 | Ref | **With UGM 660SJC (SN 0300128000 through 0300166807)** | B |
| | 1001145284 | Ref | **With UGM 660SJC (SN 0300166808 through 0300174703)** | A |
| | 1001143365 | Ref | **AUXILIARY PUMP INSTALLATION (SN 0300166808 through 0300174703)** | A |
| 1 | 4641489 | 1 | Main Control Valve Assembly (See MAIN CONTROL VALVE ASSEMBLY for Breakdown) | |
| 3 | 4640908 | 1 | Counterbalance Valve Assembly **(SN 0300128000 through 0300138211)** | |
| 3A | 7011328 | 2 | Cartridge, Counterbalance | |
| 3A | 2900770 | 2 | Seal, Kit - 7011328 Cartridge | |
| 5 | 2120209 | 1 | Hydraulic Pressure Filter Assembly | |
| 5A | 2120210 | 1 | Element, Filter | |
| 5B | 7020020 | 1 | Indicator, Clogged | |
| 5C | 70000934 | 1 | O-Ring, Filter Bowl (Not Shown) | |
| 6 | 4640907 | 1 | Valve Assembly (Brake) (Without UGM) | |
| 6A | 7012941 | 1 | Cartridge | |
| 6A | 7010543 | 1 | Seal Kit - 7012941 Cartridge | |
| 7 | 4640906 | 1 | Valve Assembly (Two Speed) (Without UGM) | |
| 7A | 7023981 | 1 | Cartridge without Coil | |
| 7A | 7012905 | 1 | Seal Kit - 7023981 Cartridge | |
| 7B | 7012944 | 1 | Coil | |
| 7C | 7017481 | 2 | Cartridge, Check | |
| 7C | 7012972 | 2 | Seal Kit | |
| 8 | | Ref | Valve Kit (Articulating Jib) Options: | |
| 8 | Not Required | 0 | Valve Kit (Articulating Jib) 600SC | |
| 8 | 4640921 | 1 | Valve Kit (Articulating Jib) 660SJC (See ARTICULATING JIB VALVE ASSEMBLY for Breakdown) | |
| 9 | 0641613 | 2 | Bolt 3/8in-16NC x 1-5/8in | |
| 10 | 4711600 | 7 | Flatwasher 3/8in Thin | |
| 11 | 0641514 | 2 | Bolt 5/16in-18NC x 1-3/4in **(SN 0300128000 through 0300138211)** | |
| 12 | 4751500 | AR | Flatwasher 5/16in Regular | |
| 13 | 0641506 | 1 | Bolt 5/16in-18NC x 3/4in | |
| 14 | 2120164 | 1 | Return Filter Assembly | |
| 14A | 2120149 | 1 | Element, Filter | |
| 14B | 7020021 | 1 | Indicator, Clogged | |
| 15 | 2220893 | 1 | Fitting, Adapter | |
| 16 | 0651406 | AR | Bolt 1/4in-28NF x 3/4in | |
| 17 | 4711400 | AR | Flatwasher 1/4in Thin | |
| 19 | 4060918 | 46 in/1.2m | Flex-Trim | |
| 20 | 0902587 | 1 | Bracket, Filter | |
| 21 | 0641508 | 2 | Bolt 5/16in-18NC x 1in | |

| ITEM | PART NUMBER | QTY | DESCRIPTION | REV |
|---|---|---|---|---|
| 22 | 4891500 | 2 | Flatwasher 5/16in Hardened | |
| 23 | 0100011 | AR | Compound, Locking | |
| 24 | 0641608 | 5 | Bolt 3/8in-16NC x 1in | |
| 25 | 0140001 | 1 | Horn | |
| 26 | | Ref | Harness, Articulating Jib Options: | |
| 26 | Not Required | 0 | Harness, Articulating Jib 600SC | |
| 26 | 4921927 | 1 | Harness, Articulating Jib 660SJC (See ELECTRICAL SECTION for Breakdown) | |
| 27 | 0641416 | 2 | Bolt 1/4in-20NC x 2in | |
| 28 | 4891400 | 4 | Flatwasher 1/4in Hardened | |
| 29 | 3311405 | 2 | Locknut 1/4in-20NC | |
| 30 | | Ref | Combination Valve Assembly (Brake and 2 Speed) (With UGM) | |
| 30 | 4641317 | 1 | Valve Assembly | |
| 30 | 7012944 | 2 | Coil | |
| 30 | 7012941 | 2 | Cartridge without Coil | |
| 30 | 7010543 | 2 | Seal Kit - 7012941 Cartridge (1 Per Cartridge) | |
| 31 | 0641512 | 2 | Bolt 5/16in-18NC x 1-1/2in (With UGM) | |
| 32 | 0100019 | AR | Compound, Locking (With UGM) | |
| 100 | 3600365 | Ref | **AUXILIARY PUMP ASSEMBLY (SN 0300128000 through 0300166807)** | B |
| 101 | | Ref | Replacement Motor Options: | |
| 101 | 7004290 | 1 | Replacement Motor with Endhead Item 105 (was p/n 7011067) | |
| 101 | 7004248 | 1 | Replacement Motor without Endhead | |
| 101 | 7011065 | 1 | Brush Kit | |
| 101 | See Note | NSS | Bolt (Mounts Motor to Endhead) (Note: Not Available - Purchase Locally) | |
| 102 | 7011063 | 1 | Coupling and Hardware Kit (Includes Pump Gasket and Item 104) | |
| 103 | 7011064 | 1 | Replacement Pump | |
| 103 | 7011044 | 1 | Gasket | |
| 103 | 7011066 | 1 | Seal Kit | |
| 103 | See Note | NSS | Relief Valve (Note: Not Available - Purchase Complete Pump.) | |
| 104 | 7011043 | 4 | Bolt (Mounts Pump to Mounting Bracket) | |
| 104 | 7011048 | 4 | Lockwasher | |
| 105 | 7011062 | 1 | Endhead | |
| 200 | 1001137458 | Ref | **AUXILIARY PUMP ASSEMBLY (SN 0300166808 through 0300174703)** | A |
| 201 | 70003995 | 1 | Base | |
| 202 | 70003996 | 1 | Pump Assembly | |
| 202 | 7026330 | 1 | Seal, Shaft | |
| 203 | 70003997 | 4 | Capscrew 1/4in-20NC x 3in | |
| 204 | 70003998 | 1 | Motor | |
| 204 | See Note | NSS | Brush Kit (Note: Not Available for Purchase) | |
| 205 | 70003999 | 1 | Bracket | |
| 206 | 70004000 | 2 | Capscrew 3/8in-16NC x 1in | |

## FIGURE 2-2. MAIN CONTROL VALVE ASSEMBLY

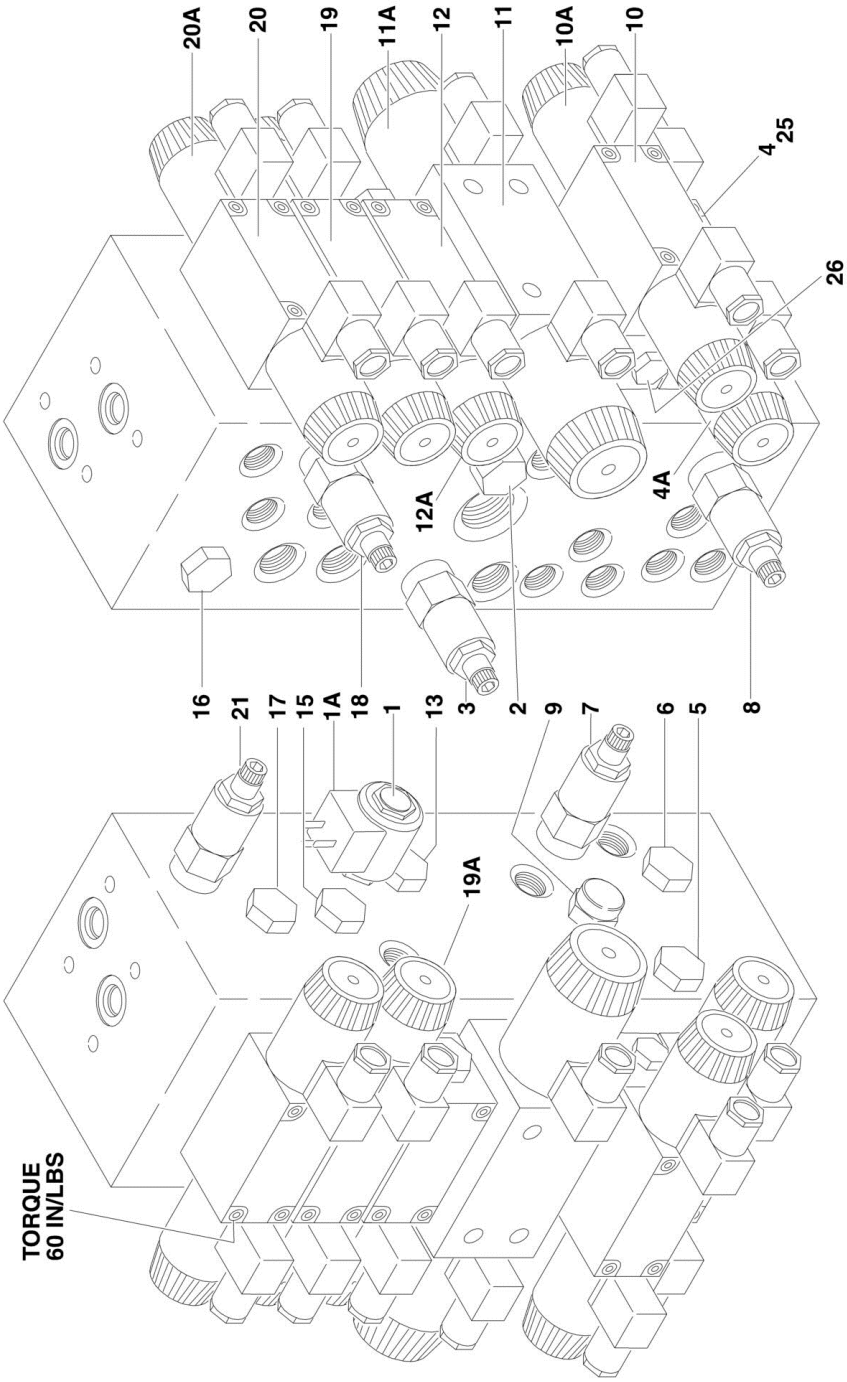

## FIGURE 2-2. MAIN CONTROL VALVE ASSEMBLY

| ITEM | PART NUMBER | QTY | DESCRIPTION | REV |
|---|---|---|---|---|
| | 4641489 | Ref | **MAIN CONTROL VALVE ASSEMBLY** | A |
| 1 | 7017410 | 1 | Cartridge, Without Coil | |
| 1 | 7012967 | 1 | Seal Kit - 7017410 Cartridge | |
| 1A | 7012944 | 1 | Coil | |
| 2 | 7017464 | 1 | Cartridge, Pressure Sensing | |
| 2 | 7012518 | 1 | Seal Kit - 7017464 Cartridge | |
| 3 | 7012912 | 1 | Cartridge (Main Relief) | |
| 3 | 7012998 | 1 | Seal Kit - 7012912 Cartridge | |
| 4 | 7021373 | 1 | Control Valve Assembly (Platform Level) | |
| 4 | 7012773 | 1 | Seal Kit | |
| 4 | 7012799 | 1 | Lanyard Assembly | |
| 4A | 7021376 | 2 | Coil | |
| 4A | 7021375 | 2 | Nut, Coil | |
| 5 | 7012914 | 1 | Cartridge, Check Valve (Platform Level) | |
| 5 | 7012918 | 1 | Seal Kit - 7012914 Cartridge | |
| 6 | 7012914 | 1 | Cartridge, Check Valve (Platform Level) | |
| 6 | 7012918 | 1 | Seal Kit - 7012914 Cartridge | |
| 7 | 7012912 | 1 | Cartridge, Relief Valve (Platform Level) | |
| 7 | 7012998 | 1 | Seal Kit - 7012912 Cartridge | |
| 8 | 7012912 | 1 | Cartridge, Relief Valve | |
| 8 | 7012998 | 1 | Seal Kit - 7012912 Cartridge | |
| 9 | 7012989 | 1 | Cartridge, Flow Control | |
| 9 | 7012953 | 1 | Seal Kit - 7012989 Cartridge | |
| 10 | 7021373 | 1 | Control Valve Assembly (Platform Rotate) | |
| 10 | 7012773 | 1 | Seal Kit | |
| 10 | 7012799 | 1 | Lanyard Assembly | |
| 10A | 7021376 | 2 | Coil | |
| 10A | 7021375 | 2 | Nut, Coil | |
| 11 | 70000579 | 1 | Control Valve Assembly (Upper Tele): | |
| 11 | 70000583 | 1 | Seal Kit - 70000579 Valve | |
| 11A | 70000582 | 1 | Coil | |
| 11A | 70000580 | 1 | Nut, Coil | |
| 12 | 7022521 | 1 | Control Valve Assembly (Flow Control) | |
| 12 | 7012773 | 1 | Seal Kit - 7012521 Valve | |
| 12A | 7018991 | 1 | Coil | |
| 12A | 7021375 | 1 | Nut, Coil | |
| 13 | 7010542 | 1 | Cartridge, Shuttle | |
| 13 | 7010543 | 1 | Seal Kit - 7010542 Cartridge | |
| 15 | 7010542 | 1 | Cartridge, Shuttle | |
| 15 | 7010543 | 1 | Seal Kit - 7010542 Cartridge | |
| 16 | 7010542 | 1 | Cartridge, Shuttle | |
| 16 | 7010543 | 1 | Seal Kit - 7010542 Cartridge | |
| 17 | 7010542 | 1 | Cartridge, Shuttle | |
| 17 | 7010543 | 1 | Seal Kit - 7010542 Cartridge | |
| 18 | 7012912 | 1 | Cartridge, Relief Valve | |
| 18 | 7012998 | 1 | Seal Kit - 7012912 Cartridge | |
| 19 | 7012775 | 1 | Control Valve Assembly (Upper Lift) | |
| 19 | 7012773 | 1 | Seal Kit | |
| 19A | 7012772 | 2 | Coil | |
| 20 | 7012775 | 1 | Control Valve Assembly (Swing) | |

| ITEM | PART NUMBER | QTY | DESCRIPTION | REV |
|---|---|---|---|---|
| 20 | 7012773 | 1 | Seal Kit - 7012775 Valve | |
| 20A | 7012772 | 2 | Coil | |
| 20A | 7018912 | 2 | Nut, Coil | |
| 21 | 7012912 | 1 | Cartridge, Relief Valve | |
| 21 | 7012998 | 1 | Seal Kit - 7012912 Cartridge | |
| 26 | 7021310 | 1 | Valve, Sandwich | |

**FIGURE 2-3. ARTICULATING JIB VALVE ASSEMBLY (660SJC ONLY)**

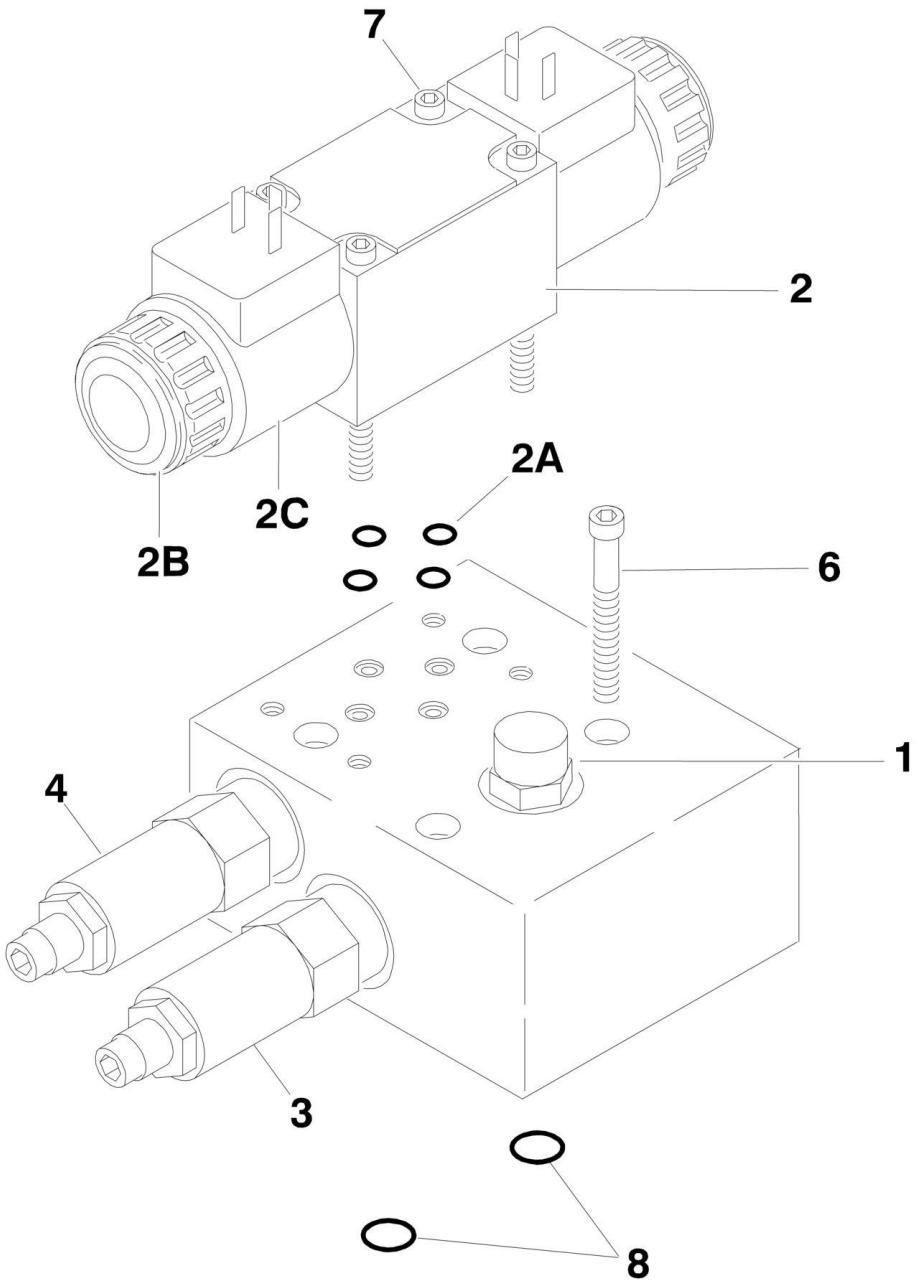


***NOTE: TORQUE ITEMS 6 & 7 TO 60 IN/LBS.***

## FIGURE 2-3. ARTICULATING JIB VALVE ASSEMBLY (660SJC ONLY)

| ITEM | PART NUMBER | QTY | DESCRIPTION | REV |
|---|---|---|---|---|
| | 4640921 | Ref | **ARTICULATING JIB VALVE ASSEMBLY (660SJC)** | D |
| 1 | 7012965 | 1 | Cartridge, Flow Control | |
| 1 | 7012953 | 1 | Seal Kit - 7012965 Cartridge | |
| 2 | 70001976 | 1 | Directional Control Valve Assembly (was p/n 7012770) | |
| 2 | 7012773 | 1 | Seal Kit | |
| 2A | 7018945 | 2 | O-Ring | |
| 2B | 7018912 | 2 | Nut | |
| 2C | 7012772 | 2 | Coil | |
| 3 | 7017421 | 1 | Cartridge, Relief | |
| 3 | 7012998 | 1 | Seal Kit - 7017421 Cartridge | |
| 4 | 7017422 | 1 | Cartridge, Relief | |
| 4 | 7012998 | 1 | Seal Kit - 7017422 Cartridge | |
| 5 | 4460499 | 2 | Connector, Din with Diode (Part of Valve Harness) | |
| 6 | 7012777 | 4 | Capscrew, Socket Head 5/16in-11NC x 2-1/4in (Used to Mount Valve Assembly) | |
| 7 | 7018942 | 4 | Capscrew, Socket Head #10-24NC x 2in | |
| 8 | 7012776 | 2 | O-Ring (Used to Mount to Main Valve) | |

FIGURE 2-4. SWING DRIVE, TURNTABLE BEARING AND LOCK INSTALLATIONS

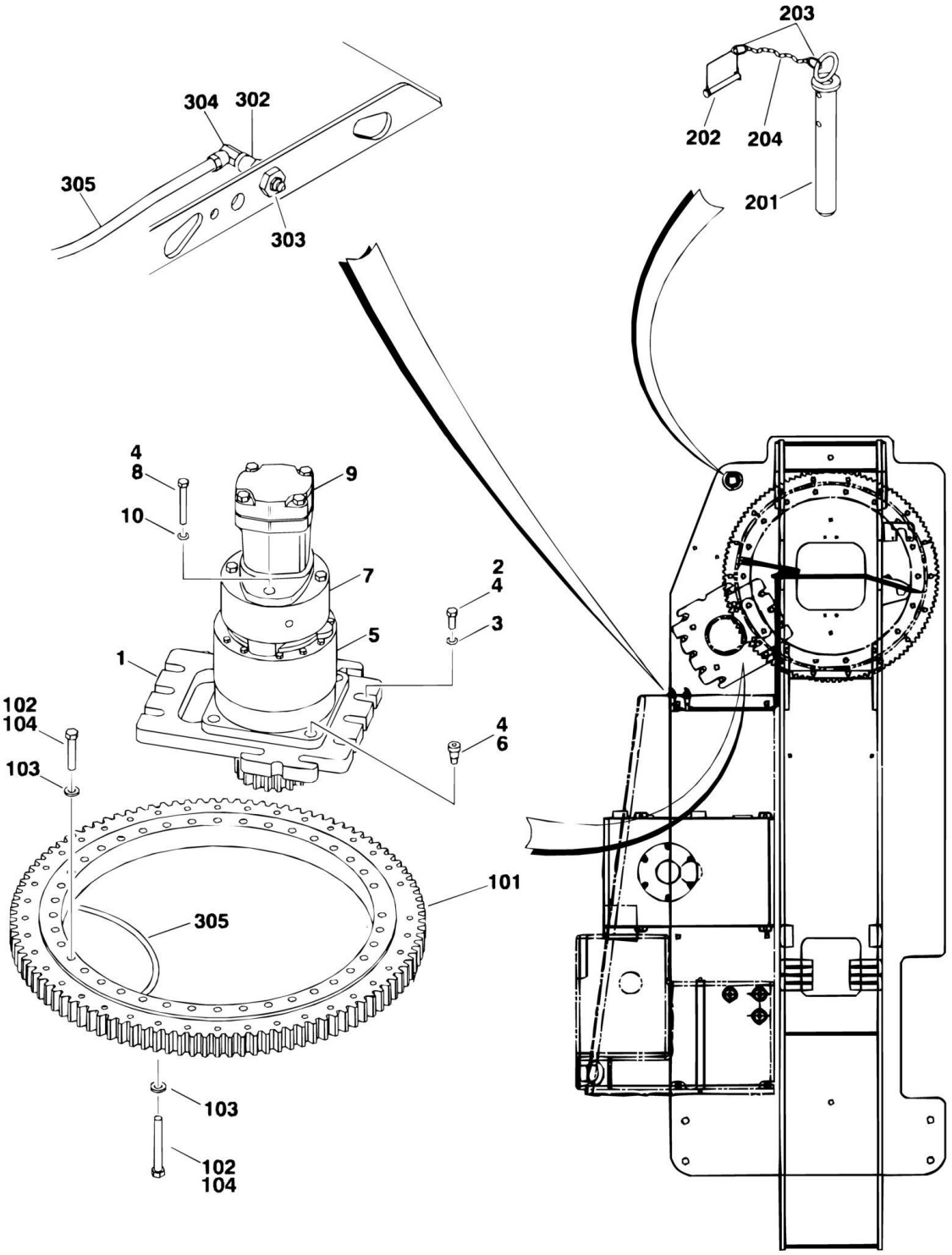

## FIGURE 2-4. SWING DRIVE, TURNTABLE BEARING AND LOCK INSTALLATIONS

| ITEM | PART NUMBER | QTY | DESCRIPTION | REV |
|---|---|---|---|---|
| | 4620127 | Ref | **TURNTABLE WELDMENT** | |
| | | Ref | **SWING DRIVE INSTALLATION** | |
| | 0270329 | Ref | **Swing Drive Installation (SN 0300128000 through 0300137440)** | D |
| | 1001094828 | Ref | **Swing Drive Installation (SN 0300137441 through 0300174703)** | C |
| 1 | 3537318 | 1 | Plate, Swing Drive Mounting | |
| 2 | 0642018 | 10 | Bolt 5/8in-11NC x 2-1/4in | |
| 3 | 4892000 | 10 | Flatwasher 5/8in Hardened | |
| 4 | 0100011 | AR | Compound, Locking | |
| 5 | | Ref | Swing Hub Assembly Options: | |
| 5 | 2780205 | 1 | Hub (See SWING HUB ASSEMBLY for Breakdown) **(SN 0300128000 through 0300137440)** | |
| 5 | 1001101061 | 1 | Hub (See SWING MOTOR/BRAKE/HUB ASSEMBLY for Breakdown) **(SN 0300137441 through 0300174703)** | |
| 6 | 3932224 | 4 | Capscrew 1/2in-13NC x 1-1/2in | |
| 7 | | Ref | Swing Brake Assembly Options: | |
| 7 | 0920119 | 1 | Brake **(SN 0300128000 through 0300137440)** | |
| 7 | 7018612 | 1 | Repair Kit for 0920119 Brake (Note: No Other Service Parts Available) | |
| 7 | 1001101061 | 1 | Brake (See SWING MOTOR/BRAKE/HUB ASSEMBLY for Breakdown) **(SN 0300137441 through 0300174703)** | |
| 8 | | Ref | Bolt Options: | |
| 8 | 0681836 | AR | Bolt 1/2in-13NC x 4-1/2in (Grade 8) **(SN 0300128000 through 0300137440)** | |
| 8 | | Ref | Bolt (See SWING MOTOR/BRAKE/HUB ASSEMBLY) **(SN 0300137441 through 0300174703)** | |
| 9 | | Ref | Swing Motor Assembly Options: | |
| 9 | | Ref | Motor for Options: (Note: Either p/n may be used for replacement) **(SN 0300135930 through 0300137440)** | |
| 9 | 3160273 | NLA | White Roller Stator Motor (Use p/n 1001110169) (See SWING MOTOR ASSEMBLY (WHITE ROLLER STATOR) (ORIGINAL EQUIPMENT) for Breakdown) | |
| 9 | 1001110169 | 1 | Parker Motor (See SWING MOTOR ASSEMBLY (PARKER) (SERVICE REPLACEMENT) for Breakdown) | |
| 9 | 1001101061 | 1 | Motor (See SWING MOTOR/BRAKE/HUB ASSEMBLY (PARKER/FAIRFIELD) for Breakdown) **(SN 0300137441 through 0300174703)** | |
| 10 | | Ref | Flatwasher 1/2in Hardened Options: | |
| 10 | 4891800 | 2 | Flatwasher 1/2in Hardened **(SN 0300128000 through 0300137440)** | |
| 10 | See Note | 2 | Flatwasher 1/2in Hardened (Note: See SWING MOTOR/BRAKE/HUB ASSEMBLY (PARKER/FAIRFIELD) **(SN 0300137441 through 0300174703)** | |
| | 0259055 | Ref | **TURNTABLE BEARING INSTALLATION** | B |
| 101 | 0440233 | NLA | Bearing Kit (Use p/n 2915089) (Kit Includes Bearing and Mounting Hardware) | |
| 102 | 0682023 | 36 | Bolt 5/8in - 11NC X 2-7/8in (Grade 8) | |
| 103 | 4892000 | 36 | Flatwasher 5/8in Hardened | |
| 104 | 0100019 | AR | Compound, Locking | |
| | 0239585 | Ref | **TURNTABLE LOCK INSTALLATION** | B |
| 201 | 3421627 | 1 | Pin | |
| 202 | 3421565 | 1 | Pin, Snap | |
| 203 | 3760170 | 2 | Ring, Quick Release | |
| 204 | 1260017 | 9 in/23cm | Chain | |

| ITEM | PART NUMBER | QTY | DESCRIPTION | REV |
|---|---|---|---|---|
| | 0255316 | Ref | **REMOTE BEARING LUBE INSTALLATION** | 3 |
| 302 | 2180344 | 1 | Fitting, Bulkhead | |
| 303 | 2160003 | 1 | Fitting, Grease 45 | |
| 304 | 2220063 | 1 | Fitting, 90 | |
| 305 | 2751032 | 1 | Hose, Grease | |

**FIGURE 2-5. SWING HUB ASSEMBLY (SN 0300128000 through 0300137440)**

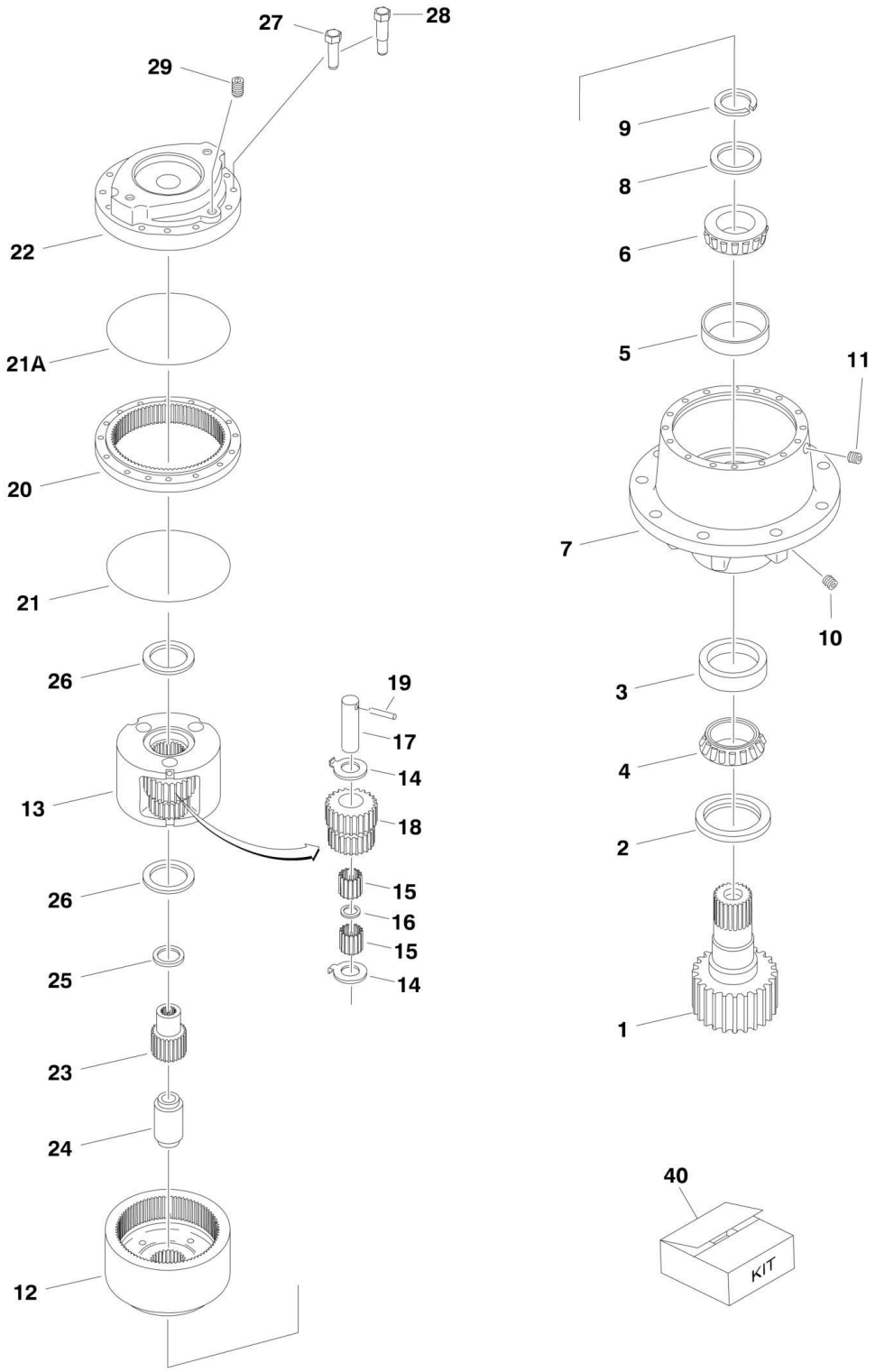

## FIGURE 2-5. SWING HUB ASSEMBLY (SN 0300128000 through 0300137440)

| ITEM | PART NUMBER | QTY | DESCRIPTION | REV |
|---|---|---|---|---|
| | 2780205 | Ref | **SWING HUB ASSEMBLY** | B |
| | | Ref | **Housing Assembly** | |
| 1 | 7010492 | 1 | Shaft, Output | |
| 2 | 7000228 | 1 | Seal, Lip | |
| 3 | 7000255 | 1 | Cup, Bearing | |
| 4 | 7000256 | 1 | Cone, Bearing | |
| 5 | 7000257 | 1 | Cup, Bearing | |
| 6 | 7000258 | 1 | Cone, Bearing | |
| 7 | 7010496 | 1 | Housing | |
| 8 | 7007633 | 1 | Thrustwasher | |
| 9 | 7000229 | 1 | Ring, Retaining | |
| 10 | 7010494 | 2 | Pipe, Plug | |
| 11 | 7001928 | 2 | Pipe, Plug | |
| 12 | 7000246 | 2 | Gear, In O-Ring | |
| | | Ref | **Carrier Assembly** | |
| 13 | 7001931 | 1 | Carrier | |
| 14 | 7001985 | 6 | Thrustwasher, Tanged | |
| 15 | 7001909 | 96 | Bearing, Needle | |
| 16 | 7000263 | 3 | Spacer, Thrust | |
| 17 | 7001911 | 3 | Shaft, Planet | |
| 18 | 7001987 | 3 | Gear, Cluster | |
| 19 | 7010474 | 3 | Rollpin | |
| 20 | 7001988 | 1 | Ring Gear | |
| 21 | 7000230 | 1 | O-Ring (Black) | |
| 21A | 7017070 | 1 | O-Ring (White) | |
| 22 | 7000209 | 1 | Cover, Input | |
| 23 | 7010488 | 1 | Gear, Sun | |
| 24 | 7000269 | 1 | Spacer, Input | |
| 25 | 7000270 | 1 | Thrustwasher | |
| 26 | 7000253 | 2 | Thrustwasher | |
| 27 | 7000217 | 8 | Bolt | |
| 28 | 7000214 | 4 | Bolt, Shoulder | |
| 29 | 2200222 | 1 | Pipe, Plug | |
| 40 | 7024100 | 1 | Seal Kit (Includes Items 2, 9, 21, 21A & 26) | |

**FIGURE 2-6. SWING MOTOR ASSEMBLY (WHITE ROLLER STATOR) (ORIGINAL EQUIPMENT) (SN 0300128000 through 0300137440)**

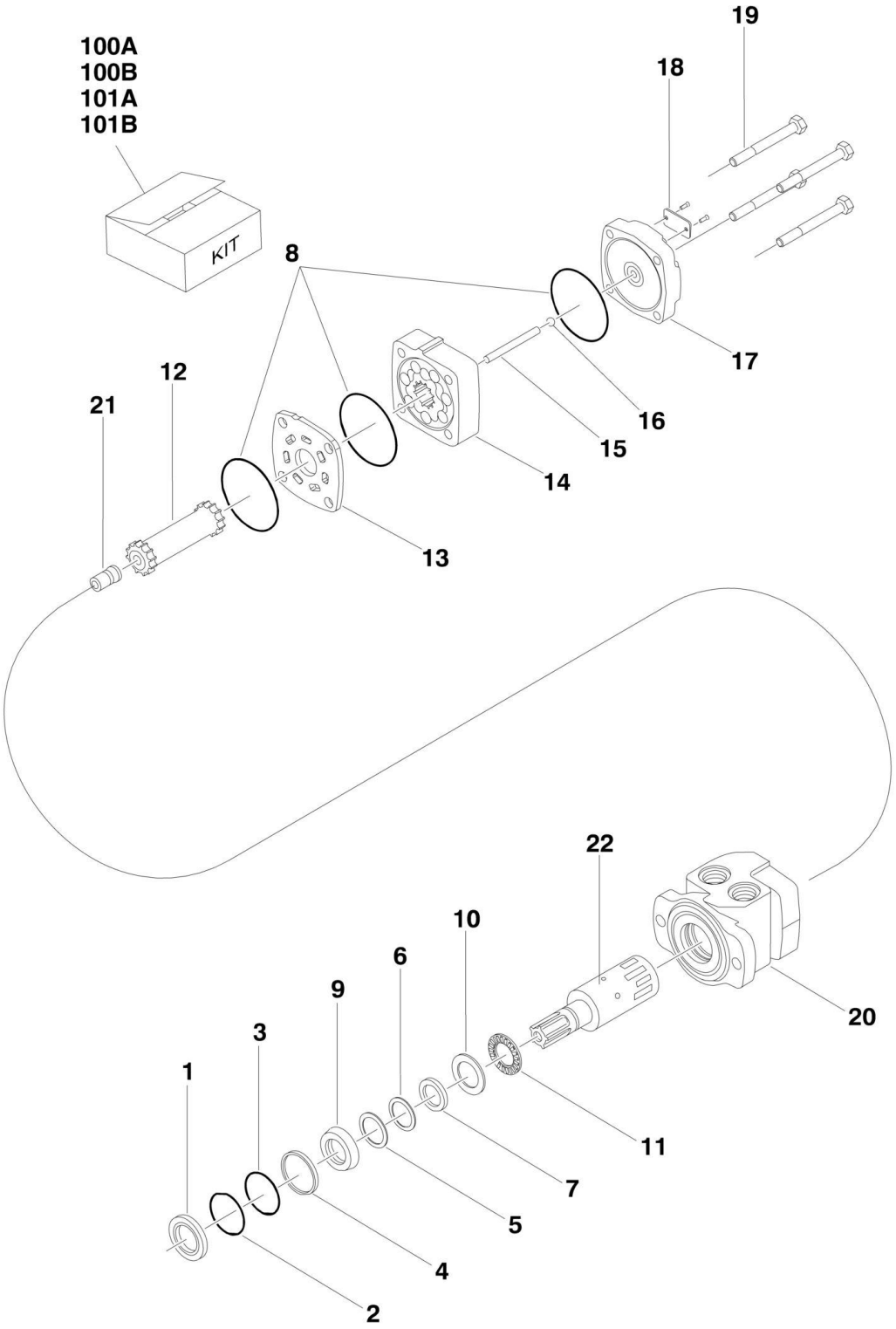

## FIGURE 2-6. SWING MOTOR ASSEMBLY (WHITE ROLLER STATOR) (ORIGINAL EQUIPMENT) (SN 0300128000 through 0300137440)

| ITEM | PART NUMBER | QTY | DESCRIPTION | REV |
|---|---|---|---|---|
| | 3160273 | Ref | **SWING MOTOR ASSEMBLY (WHITE ROLLER STATOR)** | C |
| | | Ref | **Note: Service replacement motor for machines with SN 0300128000 through 0300137441 is p/n 1001110169. Make sure motor has not been replaced by Identifying motor brand before ordering parts. See SWING MOTOR ASSEMBLY (PARKER) (SERVICE REPLACEMENT) for service replacement parts for p/n 1001110169 motor.** | |
| 1 | See Note | NSS | Seal, Dust (Note: Use Item 100A) | |
| 2 | See Note | NSS | Ring, Split Wire (Note: Use Item 100A) | |
| 3 | See Note | NSS | Shim, Metal Back-up (Note: Use Item 100A) | |
| 4 | See Note | NSS | Seal, High Pressure (Note: Use Item 100A) | |
| 5 | See Note | NSS | Shim, Metal Back-up (Note: Use Item 100A) | |
| 6 | See Note | NSS | Seal, Teflon Back-up (Note: Use Item 100A) | |
| 7 | See Note | NSS | Seal, Shaft (Note: Use Item 100A) | |
| 8 | See Note | NSS | Seal, Body (Note: Use Item 100A) | |
| 9 | See Note | NSS | Carrier, Seal (Note: Use Item 100B) | |
| 10 | See Note | NSS | Thrustwasher (Note: Use Item 100B) | |
| 11 | 7016422 | 1 | Bearing, Thrust | |
| 12 | 7005889 | 1 | Link, Drive | |
| 13 | 7016423 | 1 | Plate, Wear | |
| 14 | 7005890 | 1 | Rotor Assembly | |
| 15 | 7005891 | 1 | Pin, Drive Link | |
| 16 | See Note | NSS | Ball (Note: Use Item 101A) | |
| 17 | See Note | NSS | Cover, End (Note: Use Item 101A) | |
| 18 | See Note | 1 | Tag, I.D. (Note: Not Available for Purchase.) | |
| 19 | 7005892 | 4 | Bolt | |
| 20 | 7016425 | 1 | Housing | |
| 21 | 7005893 | 1 | Plug, Cooling | |
| 22 | 7016426 | 1 | Shaft | |
| 100 | | Ref | Seal Kit Options: | |
| 100A | 7005881 | 1 | Seal Kit (Includes Items 1-8) | |
| 100B | 7005882 | 1 | Seal Carrier Kit (Includes Items 9 & 10) | |
| 101 | | Ref | Repair Kit Options: | |
| 101A | 7016424 | 1 | End Cover Kit (Includes Items 16 & 17) | |
| 101B | 7016427 | 1 | Housing/Shaft Kit (Includes Items 20-22) | |

**FIGURE 2-7. SWING MOTOR ASSEMBLY (PARKER) (SERVICE REPLACEMENT) (SN 0300128000 through 0300137440)**

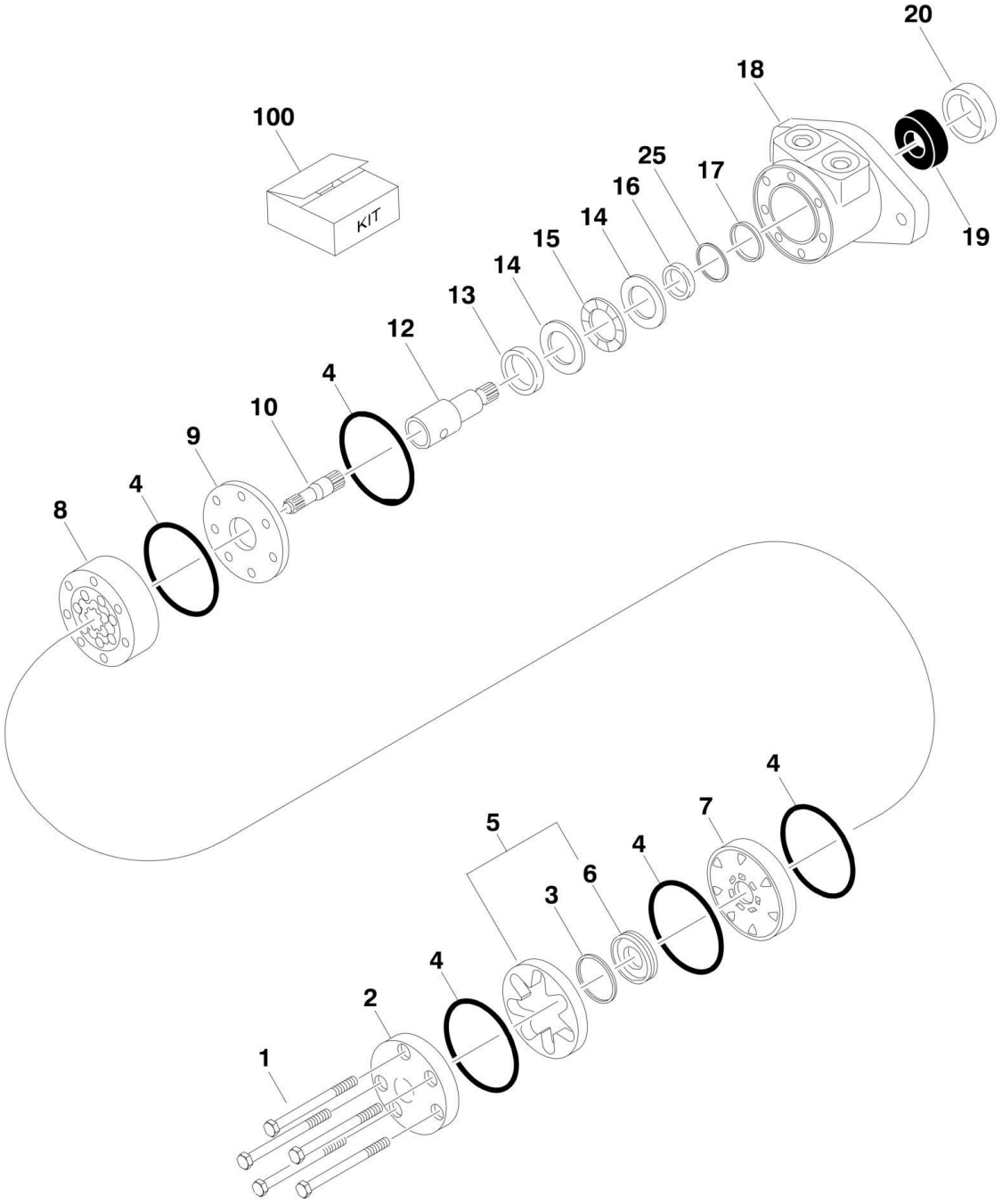

## FIGURE 2-7. SWING MOTOR ASSEMBLY (PARKER) (SERVICE REPLACEMENT) (SN 0300128000 through 0300137440)

| ITEM | PART NUMBER | QTY | DESCRIPTION | REV |
|---|---|---|---|---|
| | 1001110169 | Ref | **SWING MOTOR ASSEMBLY (PARKER)** | A |
| 1 | 70002243 | 5 | Bolt | |
| 2 | 7004035 | 1 | Cover, End | |
| 3 | See Note | NSS | Seal, Commutator (Note: Use Item 100) | |
| 4 | See Note | NSS | Seal, Ring (Note: Use Item 100) | |
| 5 | 7024453 | 1 | Commutator and Ring Assembly | |
| 6 | 7024453 | 1 | Ring | |
| 7 | 7024379 | 1 | Manifold | |
| 8 | 70002208 | 1 | Rotor Set | |
| 9 | 7024380 | 1 | Plate, Wear | |
| 10 | 83304150 | 1 | Link, Drive | |
| 12 | 7024395 | 1 | Shaft, Coupling | |
| 13 | 7024381 | 1 | Bushing, Bronze | |
| 14 | 7004043 | 2 | Thrustwasher | |
| 15 | 7004044 | 1 | Bearing, Thrust | |
| 16 | See Note | NSS | Seal, Inner (Note: Use Item 100) | |
| 17 | See Note | NSS | Washer, Back-up (Note: Use Item 100) | |
| 18 | See Note | NSS | Housing (Note: Not Available - Purchase Complete Swing Motor Assembly.) | |
| 19 | 7024390 | 1 | Bearing | |
| 20 | See Note | NSS | Seal (Note: Use Item 100) | |
| 25 | See Note | NSS | Washer, Back-up (Note: Use Item 100) | |
| 100 | 7024389 | 1 | Seal Kit (Includes Items 3, 4, 16, 17, 20 & 25) | |

**FIGURE 2-8. SWING MOTOR/BRAKE/HUB ASSEMBLY (PARKER/FAIRFIELD) (SN 0300137441 through 0300174703)**

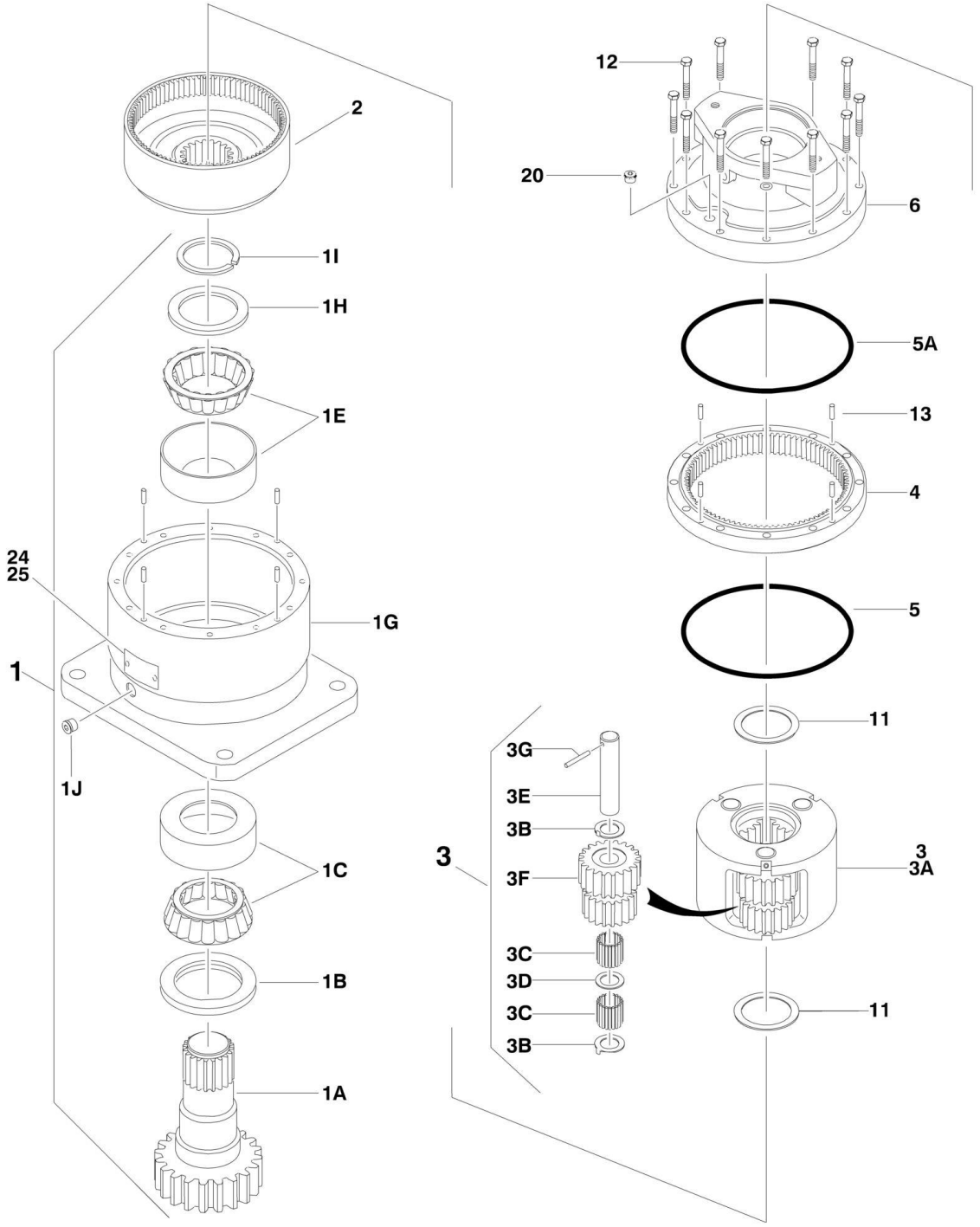

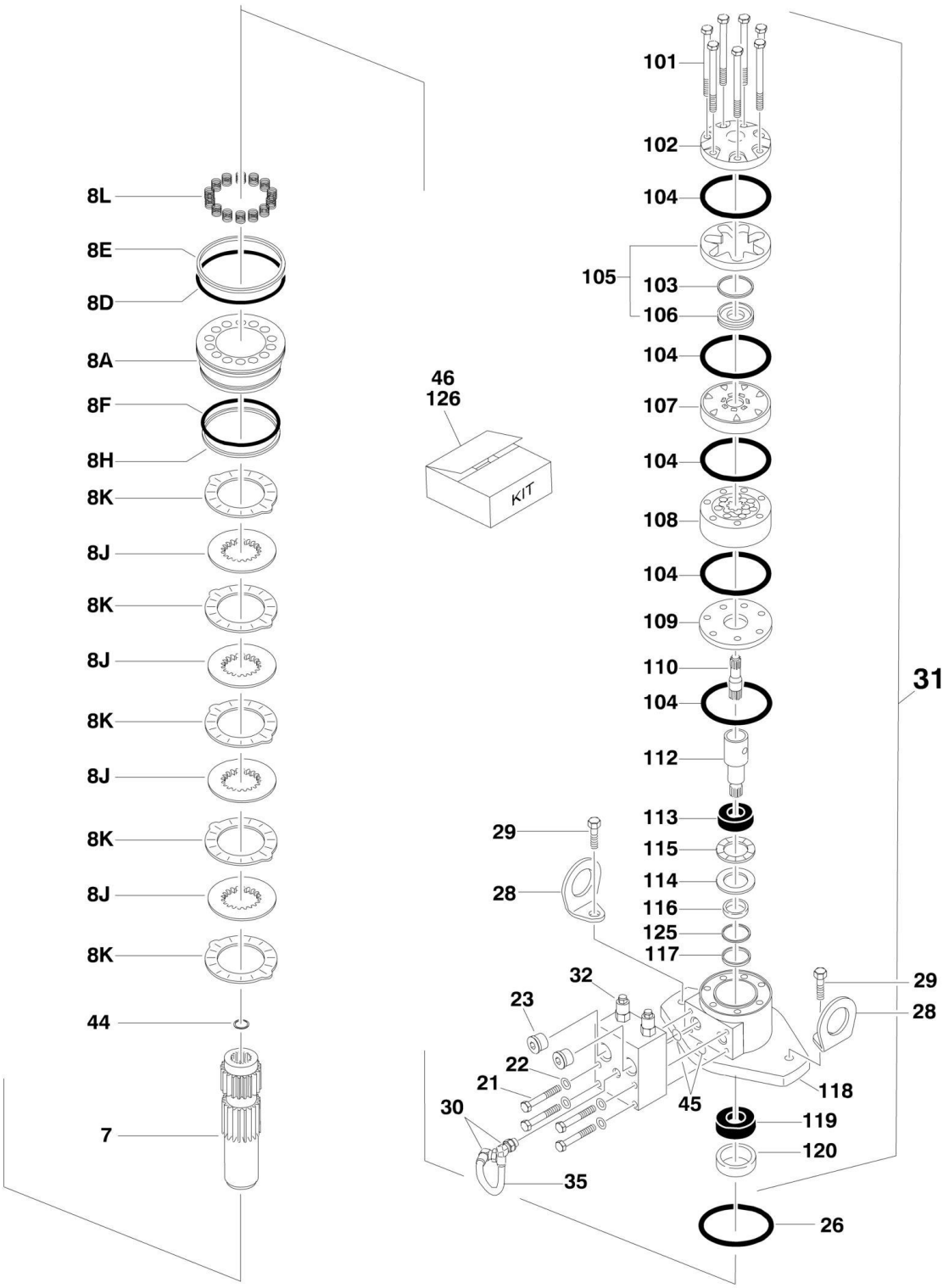
101
102
104
105
103
106
104
107
104
108
104
109
110
104
112
113
115
114
116
125
117
31
8L
8E
8D
8A
8F
8H
8K
8J
8K
8J
8K
8J
8K
8J
8K
44
7
46
126
KIT
29
28
32
23
22
21
30
35
45
29
28
118
119
120
26

## FIGURE 2-8. SWING MOTOR/BRAKE/HUB ASSEMBLY (PARKER/FAIRFIELD) (SN 0300137441 through 0300174703)

| ITEM | PART NUMBER | QTY | DESCRIPTION | REV |
|---|---|---|---|---|
| | 1001101061 | Ref | **SWING MOTOR/HUB ASSEMBLIES** | A |
| 1 | 1001101061 | 1 | Housing/Shaft Assembly (Note: Not Available - Purchase Complete Swing Motor/Brake/Hub Assembly.) | |
| 1A | 7010492 | 1 | Shaft, Output | |
| 1B | 7000228 | 1 | Seal, Lip | |
| 1C | 7000255 | 1 | Bearing Kit (Includes Cup and Cone) | |
| 1E | 7000257 | 1 | Bearing Kit (Includes Cup and Cone) | |
| 1G | See Note | NSS | Housing (Note: Not Available - Purchase Complete Swing Motor/Brake/Hub Assembly.) | |
| 1H | 7007633 | 1 | Thrustwasher | |
| 1I | 7000229 | 1 | Ring, Retaining | |
| 1J | 7017072 | 1 | Plug, Pipe | |
| 2 | 7000246 | 1 | Gear, Internal | |
| 3 | 80424002 | 1 | Carrier Assembly | |
| 3A | 7001931 | 1 | Carrier | |
| 3B | 7001985 | 6 | Washer, Tanged | |
| 3C | 7001909 | 96 | Bearing, Needle | |
| 3D | 7000263 | 3 | Thrustwasher | |
| 3E | 7001911 | 3 | Shaft, Planet | |
| 3F | 7001912 | 3 | Gear, Cluster | |
| 3G | 7010474 | 3 | Rollpin | |
| 4 | 7000248 | 1 | Gear, Ring | |
| 5 | 7000230 | 1 | O-Ring (Black) | |
| 5A | 7017070 | 1 | O-Ring (White) | |
| 6 | See Note | NSS | Housing, Brake (Note: Not Available - Purchase Complete Swing Motor/Brake/Hub Assembly.) | |
| 7 | 70002065 | 1 | Gear, Sun | |
| 8 | See Note | Ref | Brake Components (Note: Not Available - Purchase Individual Items.) | |
| 8A | 70000782 | 1 | Piston, Brake | |
| 8D | 70002070 | 1 | O-Ring | |
| 8E | 70002071 | 1 | Ring, Back-up | |
| 8F | 70002073 | 1 | O-Ring | |
| 8H | 70002072 | 1 | Ring, Back-up | |
| 8J | 70002067 | 4 | Rotor, Brake | |
| 8K | 70002068 | 5 | Stator, Brake | |
| 8L | 70002066 | 14 | Spring, Brake | |
| 11 | 7000253 | 2 | Thrustwasher | |
| 12 | 7000217 | 12 | Bolt 5/16in-18NC x 2-1/4in (Grade 8) | |
| 13 | 7017080 | 4 | Pin, Dowel | |
| 20 | 7017072 | 1 | Plug, Pipe | |
| 21 | 7024704 | 4 | Bolt 5/16in-18NC x 2in (Grade 8) | |
| 22 | See Note | NSS | Lockwasher (Note: Not Available - Purchase Locally.) | |
| 23 | 7017023 | 2 | Plug, Pipe | |
| 24 | See Note | NSS | Plate, ID (Note: Not Available for Purchase.) | |
| 25 | 7000281 | 2 | Screw, Drive | |
| 26 | 7024763 | 1 | O-Ring | |
| 28 | See Note | NSS | Lug, Lifting (Note: Not Available for Purchase.) | |
| 29 | 70002069 | 2 | Bolt 1/2in-13NC x 2in (Grade 8) | |
| 30 | 7017085 | 2 | Elbow | |

| ITEM | PART NUMBER | QTY | DESCRIPTION | REV |
|---|---|---|---|---|
| 31 | 70002075 | 1 | Motor Assembly (See Items 101-121 for Breakdown) | |
| 32 | 7024784 | 1 | Valve (No Serviceable Parts) | |
| 33 | 7017082 | 1 | Plug, Pipe (Not Shown) | |
| 35 | 70002074 | 1 | Tube | |
| 44 | 7017028 | 1 | Ring, Retaining | |
| 45 | 7000213 | 2 | O-Ring | |
| 46 | 7024100 | 1 | Seal Kit - Swing Hub (Includes Items 1B, 5, 5A & 11) | |
| | 70002075 | Ref | **MOTOR ASSEMBLY** | |
| 101 | 7024454 | 6 | Bolt | |
| 102 | 7004035 | 1 | Cover, End | |
| 103 | See Note | NSS | Seal, Commutator (Note: Use Item 126) | |
| 104 | See Note | NSS | Seal, Ring (Note: Use Item 126) | |
| 105 | 7024453 | 1 | Commutator and Ring Assembly | |
| 106 | 7024453 | 1 | Ring | |
| 107 | 7024379 | 1 | Manifold | |
| 108 | 7024455 | 1 | Rotor Set | |
| 109 | 7024380 | 1 | Plate, Wear | |
| 110 | 7024456 | 1 | Link, Drive | |
| 112 | 7024458 | 1 | Shaft, Coupling | |
| 113 | 7024381 | 1 | Bushing, Bronze | |
| 114 | 7004043 | 1 | Thrustwasher | |
| 115 | 7004044 | 1 | Bearing, Thrust | |
| 116 | See Note | NSS | Seal, Inner (Note: Use Item 126) | |
| 117 | See Note | NSS | Washer, Back-up (Note: Use Item 126) | |
| 118 | 70002075 | 1 | Housing (Note: Not Available - Purchase Complete Motor Assembly.) | |
| 119 | 7024390 | 1 | Bearing | |
| 120 | See Note | NSS | Seal (Note: Use Item 126) | |
| 125 | See Note | NSS | Washer, Back-up (Note: Use Item 126) | |
| 126 | 7024396 | 1 | Seal Kit, Motor (Includes Items 103, 104, 116, 117, 120 & 125) | |

## FIGURE 2-9. CATERPILLAR ENGINE INSTALLATION (SN 0300128000 through 0300149851)

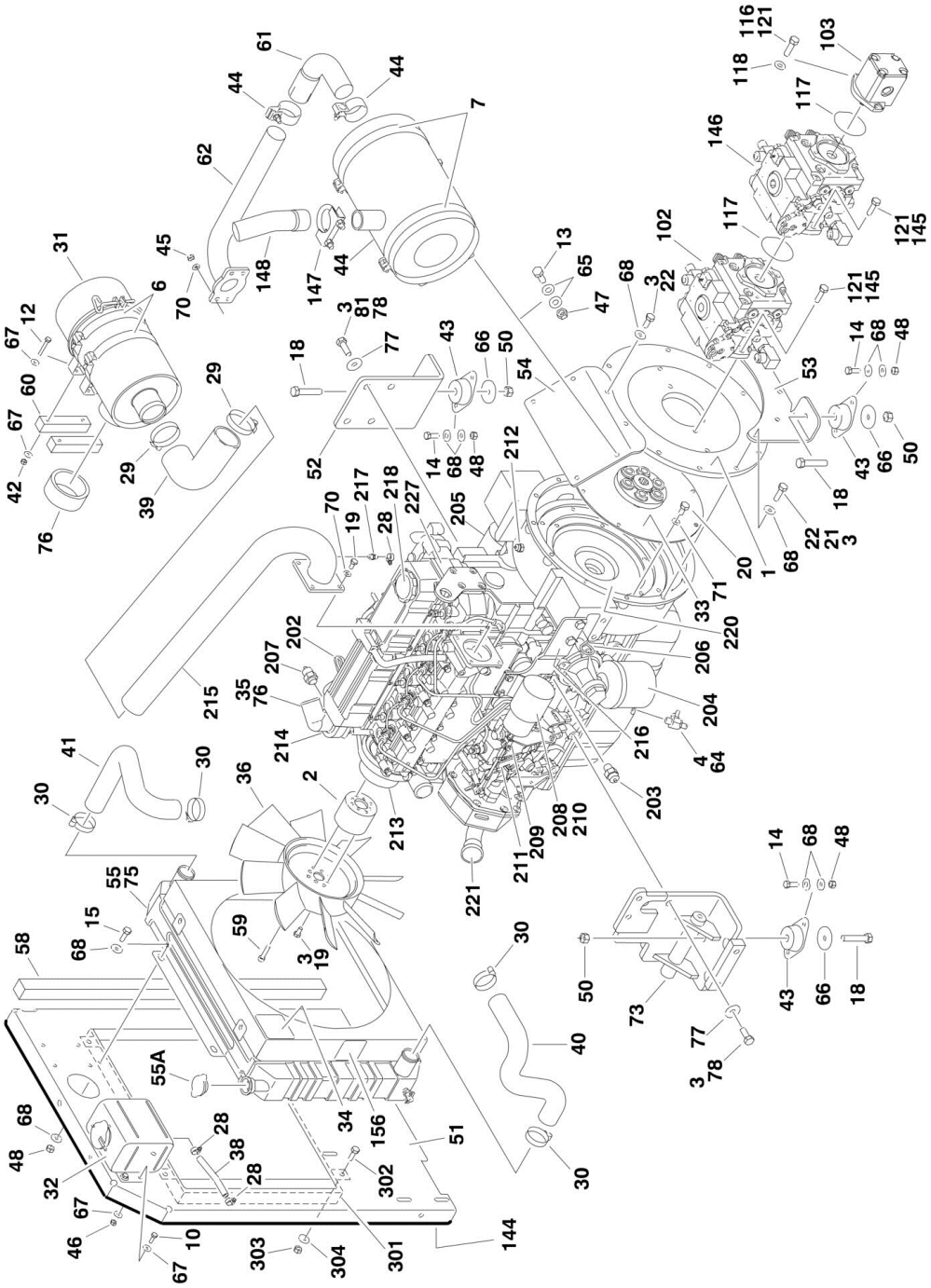

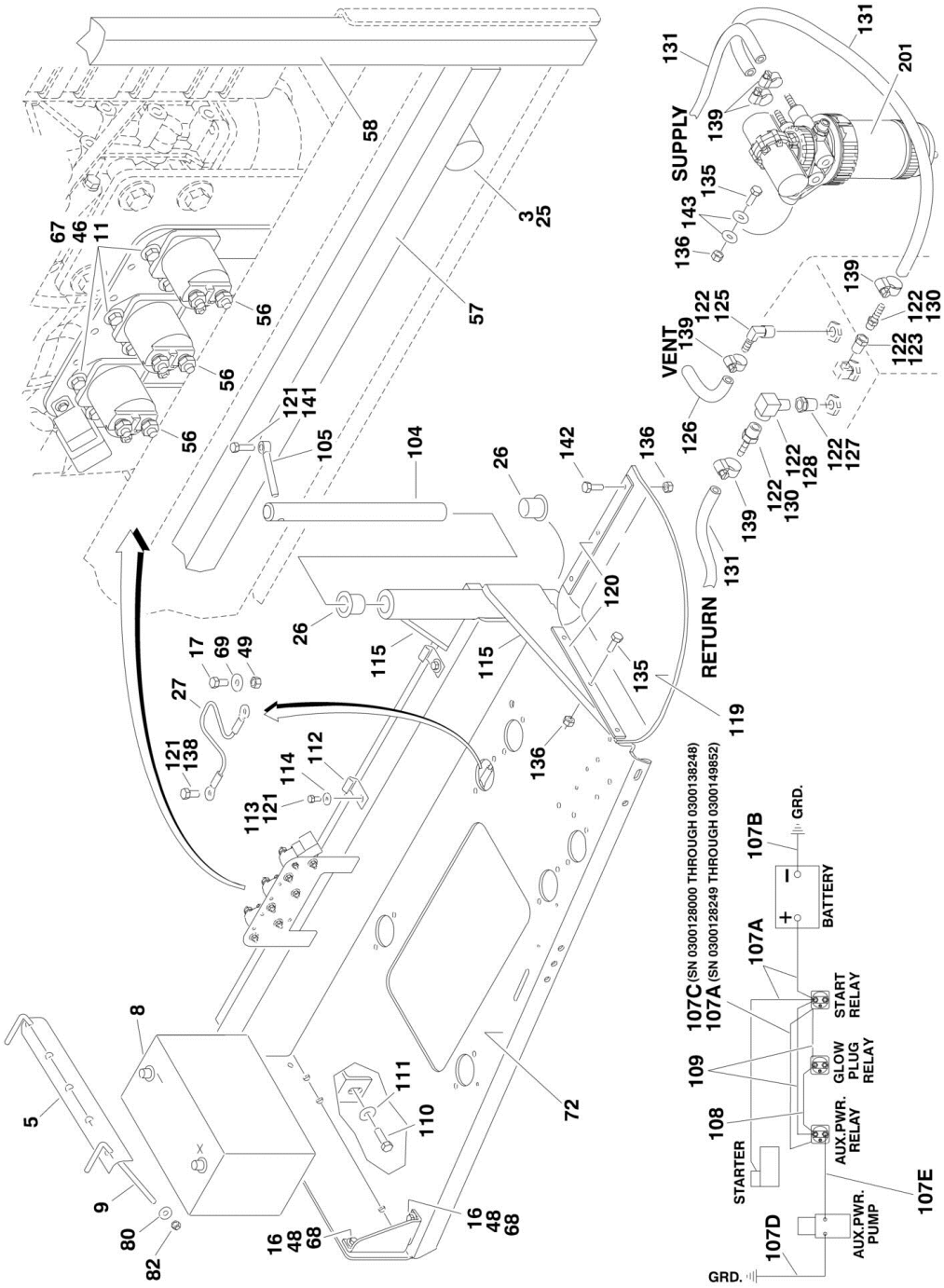
SUPPLY
VENT
RETURN
BATTERY
GRD.
START RELAY
GLOW PLUG RELAY
AUX.PWR. RELAY
STARTER
AUX.PWR. PUMP
107C (SN 0300128000 THROUGH 0300138248)
107A (SN 0300128249 THROUGH 0300149852)

## FIGURE 2-9. CATERPILLAR ENGINE INSTALLATION (SN 0300128000 through 0300149851)

| ITEM | PART NUMBER | QTY | DESCRIPTION | REV |
|---|---|---|---|---|
| | | Ref | **CATERPILLAR ENGINE ASSEMBLIES:** | |
| | 0274491 | Ref | **Tier II Engine Machines without Arctic Package (SN 0300128000 through 0300138353)** | L |
| | 1001105993 | Ref | **Tier III/IVi Engine Machines without Arctic Package (SN 0300138354 through 0300149851)** | D |
| | 0275256 | Ref | **Tier II Engine Machines with Arctic Package (SN 0300128000 through 0300138353)** | I |
| | 1001106338 | Ref | **Tier III/IVi Machines with Arctic Package (SN 0300138354 through 0300149851)** | D |
| 1 | 0080181 | 1 | Adapter, Pump Mounting Plate | |
| 2 | 0080243 | 1 | Adapter, Fan Spacer | |
| 3 | 0100011 | AR | Compound, Locking | |
| 4 | 0100020 | AR | Sealant, Thread | |
| 5 | 91401281 | 1 | Hold-down, Battery | |
| 6 | 0340041 | 2 | Band, Mounting | |
| 7 | 0340046 | 2 | Band, Muffler | |
| 8 | 0400075 | 1 | Battery | |
| 9 | 1001093382 | 2 | Bolt, Battery Hold-down | |
| 10 | 0641406 | 4 | Bolt 1/4in-20NC x 3/4in | |
| 11 | 0641407 | 6 | Bolt 1/4in-20NC x 7/8in | |
| 12 | 0701414 | 4 | Bolt 1/4in-20NC x 3/4in | |
| 13 | 0641507 | 4 | Bolt 5/16in-18NC x 7/8in | |
| 14 | 0641608 | 8 | Bolt 3/8in-16NC x 1in | |
| 15 | 0641609 | 4 | Bolt 3/8in-16NC x 1-1/8in | |
| 16 | 0641610 | 4 | Bolt 3/8in-16NC x 1-1/4in | |
| 17 | 0641808 | 1 | Bolt 1/2in-13NC x 1in | |
| 18 | 0641820 | 4 | Bolt 1/2in-13NC x 2-1/2in | |
| 19 | 0700808 | 4 | Bolt, Metric M8 x 16mm | |
| 20 | 0701010 | 8 | Bolt, Metric M10 x 20mm | |
| 21 | 0701012 | 4 | Bolt, Metric M10 x 25mm | |
| 22 | 0701015 | 8 | Bolt, Metric M10 x 35mm | |
| 25 | 0940070 | 1 | Bumper, Rubber | |
| 26 | 0961986 | 2 | Bearing, Flange | |
| 27 | 1060637 | 1 | Lanyard | |
| 28 | 8405009 | 2 | Clamp, Hose | |
| 29 | 1320016 | 2 | Clamp, Hose | |
| 30 | 8405104 | 4 | Clamp, Hose | |
| 31 | 1340060 | 1 | Air Cleaner Assembly | |
| 31 | 7012664 | 1 | Element, Air Cleaner | |
| 32 | 1580011 | 1 | Container, Coolant Overflow | |
| 33 | 1660239 | 1 | Coupling, Pump | |
| 34 | 1703162 | 2 | Decal - Fan Blade | |
| 35 | | Ref | Caterpillar Engine Assembly | |
| 35 | 2000386 | 1 | Caterpillar Engine Assembly **(SN 0300128000 through 0300138254)** | |
| 35 | 1001100313 | 1 | Caterpillar Engine Assembly **(SN 0300138255 through 0300149851)** | |
| 36 | 2060025 | 1 | Fan | |
| 38 | 2720058 | 4 in /0.1m | Hose | |
| 39 | 2720434 | 1 | Elbow, Rubber | |
| 40 | 2720509 | 1 | Hose, Radiator (Bottom) | |

| ITEM | PART NUMBER | QTY | DESCRIPTION | REV |
|---|---|---|---|---|
| 41 | | Ref | Hose, Radiator (Top) | |
| 41 | 2720510 | 1 | Hose, Radiator (Top) **(SN 0300128000 through 0300138254)** | |
| 41 | 1001107705 | 1 | Hose, Radiator (Top) **(SN 0300138255 through 0300149851)** | |
| 42 | 2720515 | 1 | Seal, Air Cleaner | |
| 43 | 3200406 | 4 | Mount, Engine | |
| 44 | 3220113 | 1 | Muffler, Spark Arresting | |
| 45 | 3290801 | 4 | Nut M8 x 1.25 | |
| 46 | 3311405 | 14 | Locknut 1/4in-20NC | |
| 47 | 3311505 | 4 | Locknut 5/16in-18NC | |
| 48 | 3311605 | 16 | Locknut 3/8in-16NC | |
| 49 | 3311801 | 1 | Nut 1/2in-13NC | |
| 50 | 3311805 | 4 | Locknut 1/2in-13NC | |
| 51 | 3539872 | 1 | Plate, Radiator Mounting | |
| 52 | 3574206 | 1 | Plate, Motor Mount | |
| 53 | 3574207 | 1 | Plate, Engine Mount (Rear) | |
| 54 | 3574208 | 1 | Bracket, Muffler | |
| 55 | 3620047 | 1 | Radiator | |
| 55 | 70004182 | 1 | Shroud | |
| 55A | 7027412 | 1 | Cap | |
| 56 | 3740067 | 3 | Relay, Solenoid Assembly | |
| 57 | 3960468 | 1 | Seal, Foam Gasket | |
| 58 | 3960469 | 1 | Seal, Foam Gasket | |
| 59 | 4031911 | 4 | Bolt Metric M8 x 35mm | |
| 60 | 4220191 | 2 | Block, Spacer | |
| 61 | 4567073 | 1 | Tube, Exhaust | |
| 62 | 4568721 | 1 | Exhaust Tube Weldment | |
| 64 | | Ref | Valve, Oil Drain Options: | |
| 64 | 1001105833 | NLA | Valve, Oil Drain (Use p/n 4640750) **(SN 0300128000 through 0300134291)** | |
| 64 | 4640750 | 1 | Valve, Oil Drain **(SN 0300134292 through 0300149851)** | |
| 65 | 4711500 | 8 | Flatwasher 5/16in Thin | |
| 66 | 4740274 | 4 | Washer, Snubbing | |
| 67 | 4751400 | 28 | Flatwasher 1/4in Regular | |
| 68 | 4751600 | 44 | Flatwasher 3/8in Regular | |
| 69 | 4751800 | 8 | Flatwasher 1/2in Regular | |
| 70 | 4811900 | 4 | Flatwasher M8 | |
| 71 | 4832000 | 8 | Lockwasher M10 | |
| 72 | 4846790 | 1 | Tray Engine | |
| 73 | 4846805 | 1 | Mount, Engine/Generator - Left | |
| 74 | | Ref | Harness, Relay Ground | |
| 74 | 4922737 | 1 | Harness, Relay Ground **(SN 0300128000 through 0300138254)** | |
| 74 | Not Required | 0 | Harness, Relay Ground **(SN 0300138255 through 0300149851)** | |
| 75 | | Ref | Coolant Options: | |
| 75 | 2300004 | AR | Machines without Arctic Package | |
| 75 | 2300041 | AR | Machines with Arctic Package | |
| 76 | | Ref | Oil, Motor Options: | |
| 76 | 3020016 | AR | Machines without Arctic Package | |
| 76 | 3020044 | AR | Machines with Arctic Package | |
| 77 | 4812100 | 8 | Flatwasher M12 | |
| 78 | 0711214 | 5 | Bolt M12 x 30mm | |

| ITEM | PART NUMBER | QTY | DESCRIPTION | REV |
|---|---|---|---|---|
| 80 | 4751500 | 2 | Flatwasher 5/16in Regular | |
| 81 | 0771212 | 3 | Bolt M12 x 25mm | |
| 82 | 88521205 | 2 | Locknut 5/16in-18NC | |
| | | Ref | **Note: Arctic Package Items 83-86 Not Shown - Used on Arctic Machines Only** | |
| 83 | 1060626 | 1 | Cord, 3 Way Extension | |
| 84 | 2580024 | 1 | Heater, Battery | |
| 85 | 2580055 | 1 | Heater, Block | |
| 86 | 3980007 | 1 | Seat, Battery | |
| | | Ref | **CATERPILLAR ENGINE INSTALLATION** | |
| | 0273524 | Ref | **Machines without Arctic Package** | 8-F |
| | 1001104426 | Ref | **Machines with Arctic Package** | 3-C |
| 102 | 3600363 | 1 | Piston Pump Assembly (Pump #3) (See PISTON PUMP ASSEMBLY for Breakdown) | |
| 103 | 3600242 | 1 | Gear Pump Assembly (Pump #1) (See GEAR PUMP ASSEMBLY for Breakdown) | |
| 104 | 3422446 | 1 | Pin | |
| 105 | 3841143 | 1 | Keeper, Pin | |
| 107 | 2902296 | 1 | Battery Cable Kit | C |
| | | Ref | **Note: 2902296 Rev A and B are no longer available. Verify whether machine is equipped with 2 or 3 relays on the engine tray. If there are 3 relays, purchase latest revision of the 2902296 kit. If there are 2 relays, purchase individual items as replacement.** | |
| 107A | | Ref | Cable - Battery to Starter Relay and Starter (Red) (was p/n 7027000) | |
| 107A | 1001116241 | 1 | Cable - Battery (Machines with 2 Relays on Engine Tray) | |
| 107A | 1001116240 | 1 | Cable - Battery (Machines with 3 Relays on Engine Tray) | |
| 107B | 7027004 | 1 | Cable - Battery to Ground (Black) | |
| 107C | 7027001 | 1 | Cable - Starter Relay to Auxiliary Relay (Red Only) **(SN 0300128000 through 0300138248)** | |
| | | Ref | **Note: Part of Item 107A on Machines SN 0300138249 through 0300149851.** | |
| 107D | 7027003 | 1 | Cable - Auxiliary Pump to Ground (Black) | |
| 107E | 7027002 | 1 | Cable - Auxiliary Relay to Auxiliary Pump (Red) | |
| 108 | 1060904 | 1 | Cable, Battery (Power to Glow Plug) | |
| 109 | 4922737 | 1 | Harness, Grounding | |
| 110 | 0642010 | 1 | Bolt 5/8in-11NC x 1-1/4in | |
| 111 | 4752000 | 1 | Flatwasher 5/8in Regular | |
| 112 | 1320223 | 2 | J-Clip | |
| 113 | 0641606 | 2 | Bolt 3/8in-16NC x 3/4in | |
| 114 | 4711600 | 2 | Flatwasher 3/8in Thin | |
| 115 | 4060805 | 23 in /58cm | Flex-Trim | |
| 116 | 3931620 | 2 | Capscrew 3/8in-16NC x 1-1/4in | |
| 117 | 3790045 | 1 | O-Ring | |
| 118 | 4891600 | 2 | Flatwasher 3/8in Hardened | |
| 119 | 3380429 | 1 | Panel, Rubber | |
| 120 | 3539957 | 2 | Support | |
| 121 | 0100011 | AR | Compound, Locking | |
| 122 | 0100020 | AR | Sealant | |
| 123 | 2220273 | | Fitting, Reducer | |
| 125 | 2220313 | 1 | Fitting, 90 Barbed | |
| 126 | 2750532 | 6 ft/1.8m | Hose | |

| ITEM | PART NUMBER | QTY | DESCRIPTION | REV |
|---|---|---|---|---|
| 127 | 2220250 | 1 | Fitting, Reducer | |
| 128 | 2220459 | 1 | Fitting, 90 | |
| 130 | 2220794 | 2 | Fitting, Straight Barbed | |
| 131 | 2720058 | 30 ft/9m | Hose | |
| 133 | 0641608 | 2 | Bolt 3/8in-16NC x 1in | |
| 135 | 0641510 | 5 | Bolt 5/16in-18NC x 1-1/4in | |
| 136 | 3311505 | 8 | Locknut 5/16in-18NC | |
| 138 | 0641808 | 1 | Bolt 1/2in-13NC x 1in | |
| 139 | 1320022 | 7 | Clamp | |
| 140 | 1701505 | 1 | Decal - Diesel Fuel (Not Shown - See DECALS SECTION) | |
| 141 | 0641610 | 1 | Bolt 3/8in-16NC x 1-1/4in | |
| 142 | 0641514 | 3 | Bolt 5/16in-18NC x 1-3/4in | |
| 143 | 4751500 | 4 | Flatwasher 5/16in Regular | |
| 144 | 3960389 | 5 ft/1.5m | Seal | |
| 145 | 0641812 | 4 | Bolt 1/2in-13NC x 1-3/4in | |
| 146 | 3600359 | 1 | Piston Pump Assembly (Pump #2) (See PISTON PUMP ASSEMBLY for Breakdown) | |
| 147 | 1320176 | 1 | Clamp | |
| 148 | 3460544 | 1 | Pipe, Exhaust | |
| | | Ref | **Note: Arctic Package Items 149 - 154 Not Shown - Used on Arctic Machines Only** | |
| 149 | 1702943 | 1 | Decal - Hydraulic Tank Heater | |
| 150 | 2580050 | 1 | Heater, Hydraulic Tank | |
| 151 | 1702941 | 1 | Decal - Battery Heater | |
| 152 | 1702944 | 1 | Decal - Heater Cord | |
| 153 | 1702942 | 1 | Decal - Engine Block Heater | |
| 154 | 1060625 | 1 | Cable, Immersion Heater | |
| 156 | | Ref | Decal - Warning Explosion/Fire Options: | |
| 156 | 1704972 | 1 | ANSI Spec | |
| 156 | 1706098 | 1 | Australian and CE Spec | |
| 156 | 1706059 | 1 | Brazilian Spec | |
| 156 | 1706060 | 1 | Chinese Spec | |
| 156 | 1706064 | 1 | CSA Spec | |
| 156 | 1706062 | 1 | Japanese Spec | |
| 156 | 1706061 | 1 | Korean Spec | |
| 156 | 1706063 | 1 | Spanish Language | |
| | | Ref | **ENGINE COMPONENTS** | |
| | 2000386 | Ref | **Tier II (SN 0300128000 through 0300138254)** | |
| | 1001100313 | Ref | **Tier II (SN 0300138255 through 0300149851)** | C |
| 201 | 7026839 | 1 | Fuel Filter Assembly | |
| 201 | 7026830 | 1 | Filter, Fuel | |
| 201 | 70002833 | 1 | Ring, Retaining | |
| 201 | 70002834 | 1 | Bowl, Water Separator | |
| 201 | 70002835 | 1 | Seal Kit, Water Separator | |
| 202 | 7026831 | 1 | Alternator | |
| 203 | 1001097554 | 1 | Switch, Oil Pressure (was p/n 7026844) | |
| 204 | 7026811 | 1 | Filter, Oil | |
| 204 | 7026812 | 1 | Seal - O-Ring (Oil Filter Head) | |
| 204 | 7026813 | 1 | Seal - O-Ring (Oil Filter Head) | |
| 205 | 7026833 | 1 | Starter | |
| 206 | | Ref | Dipstick Oil Level Options: | |
| 206 | 7026888 | 1 | 2000386 Engines | |

| ITEM | PART NUMBER | QTY | DESCRIPTION | REV |
|---|---|---|---|---|
| 206 | 70002844 | 1 | 1001100313 Engines | |
| 206 | 70002843 | 1 | Switch, Engine Temperature | |
| 207 | 7026840 | 1 | Switch, Engine Temperature | |
| 207 | 7026882 | 1 | Washer, Seal for Engine Temperature Switch | |
| 208 | 1600361 | 1 | Actuator/Linkage Assembly - Throttle | |
| 208 | 1600361 | 1 | Actuator and Electrical Connector Kit (was p/n 7026842) | |
| 208 | 7026835 | 1 | Connector, Actuator | |
| 208 | 7026837 | AR | Contact, Crimp | |
| 209 | 7026843 | 1 | Actuator, Linkage Kit | |
| 210 | 0902910 | 1 | Mounting Bracket, Actuator | |
| 211 | | Ref | Pump, Fuel Supply Options: | |
| 211 | 7026839 | 1 | 2000386 Engines | |
| 211 | 70002849 | 1 | 1001100313 Engines | |
| 211 | 70002850 | 1 | Coil (1001100313 Engines) | |
| 211 | 70002848 | 1 | Gasket | |
| 211 | 70002847 | 1 | Seal, O-Ring (Gear Cover to Fuel Supply Pump) | |
| 212 | 7026841 | 1 | Sensor, Tach | |
| 212 | 7026836 | 1 | Connector, Speed Sensor (Not Shown) | |
| 212 | 7026837 | AR | Contact, Crimp for Speed Sensor (Not Shown) | |
| 213 | 70001120 | 1 | Pump, Water | |
| 213 | 7026824 | 1 | Gasket (Between Pump and Pump Cover) | |
| 213 | 7026825 | 1 | Gasket (Between Pump Cover and Engine Block) | |
| 213 | 70001742 | 1 | Pulley | |
| 214 | 7026822 | 1 | Thermostat | |
| 214 | 7026820 | 1 | Gasket, Thermostat Housing | |
| 214 | 7026821 | 1 | Gasket, Coolant (Not Shown) | |
| 215 | 4569371 | 1 | Tube, Air Intake Weldment (was p/n 70001050) | |
| 216 | 7026887 | 1 | Bracket, Throttle Actuator (was p/n 0903220) | |
| 217 | 70001051 | 1 | Valve, Air Intake Check | |
| 218 | 7026800 | 1 | Cap, Oil Fill (Valve Cover) | |
| 219 | 70002851 | 1 | Gasket Kit (Not Shown) | |
| 219 | 7026801 | 1 | Gasket, Valve Cover (Not Shown) | |
| 219 | 7026804 | 1 | Gasket, Rear (Not Shown) | |
| 219 | 7026805 | 1 | Seal, Rear Main (Not Shown) | |
| 219 | 7026807 | 1 | Seal, Front Main (Not Shown) | |
| 219 | 7026809 | 1 | Gasket, Oil Pan (Not Shown) | |
| 219 | 7026826 | 1 | Gasket, Exhaust Manifold (Not Shown) | |
| 219 | 7026827 | 1 | Gasket, Exhaust (Not Shown) | |
| 219 | 7026829 | 1 | Gasket, Inlet Manifold (Not Shown) | |
| 219 | 7026828 | 1 | Gasket, Inlet (Not Shown) | |
| 219 | 70002763 | 1 | Gasket, Fuel Line (Not Shown) | |
| 219 | 70002863 | 4 | Seal, Fuel Injector Bolt (Not Shown) | |
| 220 | 7026802 | 1 | Flywheel with Ring Gear | |
| 220 | 7026803 | 1 | Gear, Ring | |
| 221 | 7026806 | 1 | Cap, Oil Fill (Lower Front) | |
| 222 | 7026810 | 1 | V-Belt (Not Shown) | |
| 223 | 7026814 | 1 | Valve, Relief (Engine Oil Pressure) (Not Shown) | |
| 223 | 7026815 | 1 | Gasket, Relief Valve (Not Shown) | |
| 224 | 7026819 | 1 | Cooler, Oil (Not Shown) | |
| 224 | 7026816 | 1 | O-Ring, Oil Cooler (Not Shown) | |
| 224 | 7026817 | 1 | O-Ring, Oil Cooler (Not Shown) | |

| ITEM | PART NUMBER | QTY | DESCRIPTION | REV |
|---|---|---|---|---|
| 224 | 7026818 | 1 | Gasket, Oil Cooler (Not Shown) | |
| 225 | 7026832 | 4 | Plug, Glow (Not Shown) | |
| 226 | 2580055 | 1 | Heater Kit, Engine Block (Optional) (Not Shown) (was p/n 7026845) | |
| 226 | 7026838 | 1 | Gasket, Engine Block Heater (Not Shown) | |
| 226 | 70002841 | 1 | Cord, Engine Block Heater (Not Shown) | |
| 227 | 70002766 | 1 | Head, Cylinder | |
| 227 | 70002761 | AR | Bolt, Head (Not Shown) | |
| 227 | 70002762 | 8 | Seal, Cylinder Head Valve (Not Shown) | |
| 227 | 70002767 | 1 | Gasket, Cylinder Head (Not Shown) | |
| 227 | 70002764 | 1 | Gasket, Rear Cylinder Head (Not Shown) | |
| 228 | 70002765 | 1 | Hose, Bypass (Not Shown) | |
| 229 | 70002852 | AR | Stud, Exhaust Manifold (Not Shown) | |
| 230 | 70002845 | 1 | Pump, Oil (Not Shown) | |
| 230 | 70002846 | 1 | Gasket, Oil Pump (Not Shown) | |
| | 0272364 | Ref | **OIL COOLER INSTALLATION** | 2-E |
| 301 | 3620034 | 1 | Cooler, Oil | |
| 302 | 0641608 | 4 | Bolt 3/8in-16NC x 1in | |
| 303 | 3311605 | 4 | Locknut 3/8in-16NC | |
| 304 | 4711600 | 4 | Flatwasher 3/8in Thin | |
| 305 | 4240099 | 1 | Tie-strap (Not Shown - Ties Hoses Together) | |

## FIGURE 2-10. CATERPILLAR ENGINE INSTALLATION (SN 0300149852 through 0300174703)

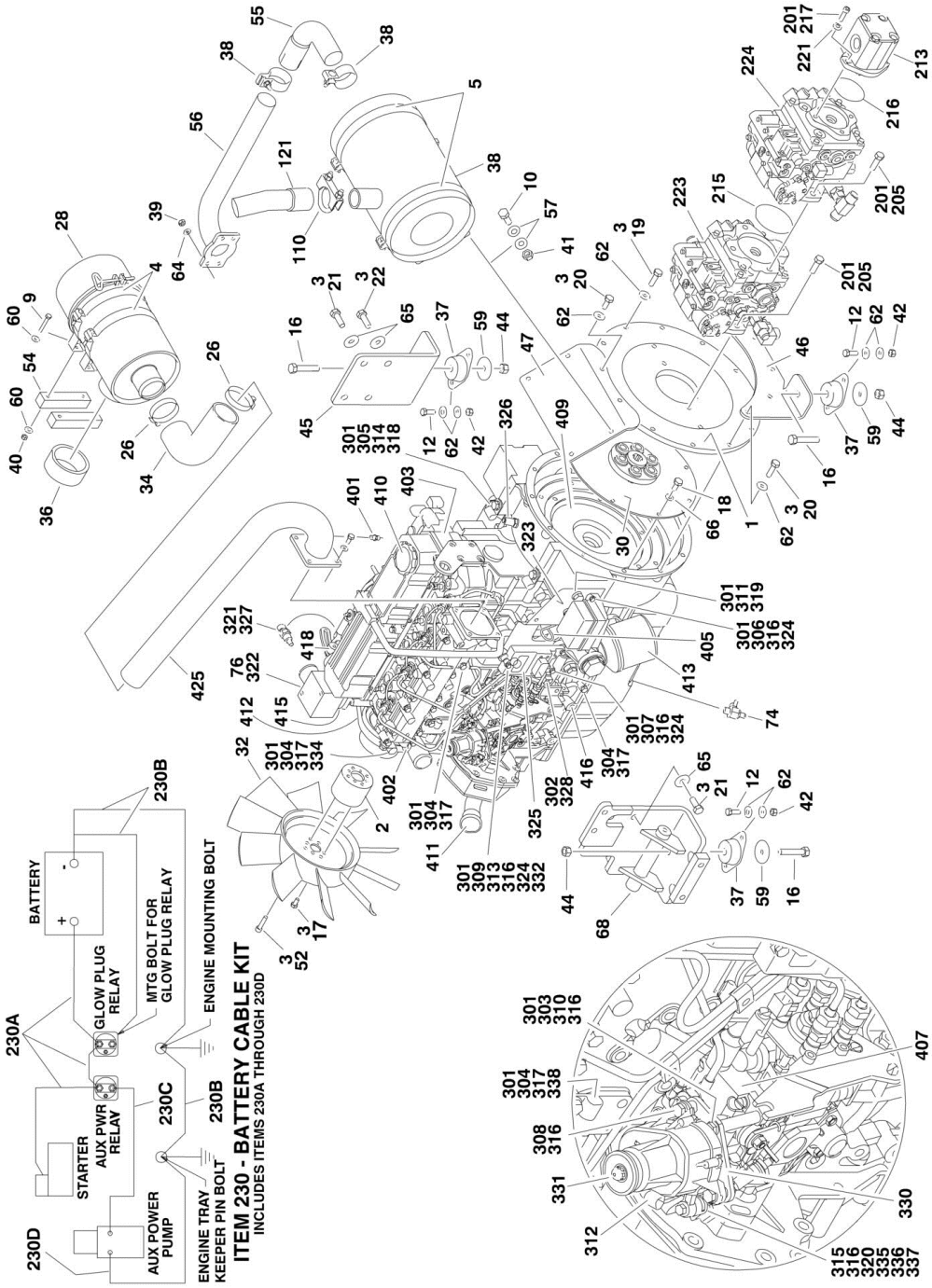

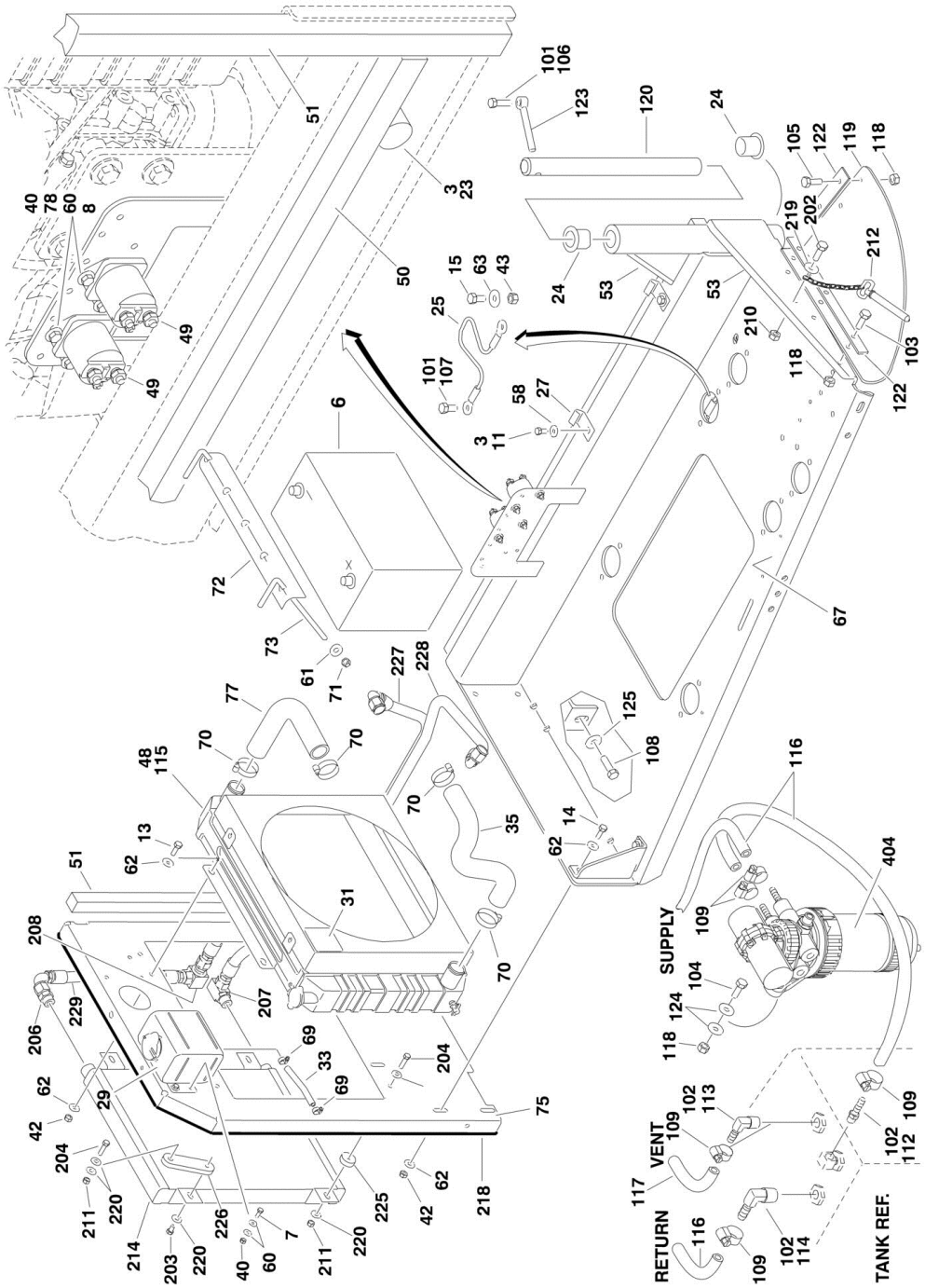
SUPPLY
VENT
RETURN
TANK REF.

## FIGURE 2-10. CATERPILLAR ENGINE INSTALLATION (SN 0300149852 through 0300174703)

| ITEM | PART NUMBER | QTY | DESCRIPTION | REV |
|---|---|---|---|---|
| | 1001109065 | Ref | **CATERPILLAR TIER IVi ENGINE ASSEMBLY** | D |
| 1 | 0080181 | 1 | Adapter, Pump Mounting Plate | |
| 2 | 0080243 | 1 | Adapter, Fan Spacer | |
| 3 | 0100011 | AR | Compound, Locking | |
| 4 | 0340041 | 2 | Band, Mounting | |
| 5 | 0340046 | 2 | Band, Muffler | |
| 6 | 0400075 | 1 | Battery | |
| 7 | 0641406 | 4 | Bolt 1/4in-20NC x 3/4in | |
| 8 | 0641407 | 4 | Bolt 1/4in-20NC x 7/8in | |
| 9 | 0701414 | 4 | Bolt 1/4in-20NC x 3/4in | |
| 10 | 0641507 | 4 | Bolt 5/16in-18NC x 7/8in | |
| 11 | 0641606 | 2 | Bolt 3/8in-16NC x 3/4in | |
| 12 | 0641608 | 8 | Bolt 3/8in-16NC x 1in | |
| 13 | 0641609 | 4 | Bolt 3/8in-16NC x 1-1/8in | |
| 14 | 0641610 | 4 | Bolt 3/8in-16NC x 1-1/4in | |
| 15 | 0641808 | 1 | Bolt 1/2in-13NC x 1in | |
| 16 | 0641820 | 4 | Bolt 1/2in-13NC x 2-1/2in | |
| 17 | 0700808 | 4 | Bolt M8 x 16mm | |
| 18 | 0701010 | 8 | Bolt M10 x 20mm | |
| 19 | 0701012 | 4 | Bolt M10 x 25mm | |
| 20 | 0701015 | 8 | Bolt M10 x 35mm | |
| 21 | 0711214 | 5 | Bolt M12 x 30mm | |
| 22 | 0771212 | 3 | Bolt M12 x 25mm | |
| 23 | 0940070 | 1 | Bumper, Rubber | |
| 24 | 0961986 | 2 | Bearing, Flange | |
| 25 | 1060637 | 1 | Lanyard | |
| 26 | 1320016 | 2 | Clamp, Hose | |
| 27 | 1320223 | 4 | Clamp | |
| 28 | 1340060 | 1 | Air Cleaner Assembly | |
| 28 | 7012664 | 1 | Element, Air Cleaner | |
| 29 | 1580011 | 1 | Container, Coolant Overflow | |
| 30 | 1660239 | 1 | Coupling, Pump | |
| 31 | 1703162 | 2 | Decal - Fan Blade | |
| 32 | 2060025 | 1 | Fan | |
| 33 | 2720058 | 4 in /0.1m | Hose | |
| 34 | 2720434 | 1 | Elbow, Rubber | |
| 35 | 2720509 | 1 | Hose, Radiator (Bottom) | |
| 36 | 2720515 | 1 | Seal, Air Cleaner | |
| 37 | 3200406 | 4 | Mount, Engine | |
| 38 | | Ref | Muffler Options: | |
| 38 | 3220113 | 1 | Muffler, Spark Arresting (Standard) | |
| 38 | 70001017 | 1 | Clamp (Used on p/n 3220113) | |
| 38 | 1001107116 | 1 | Muffler, Catalytic (Optional) | |
| 38 | 70002705 | 1 | Clamp | |
| 38 | 70002706 | 1 | Plug | |
| 39 | 3290801 | 4 | Nut M8 | |
| 40 | 3311405 | 12 | Locknut 1/4in-20NC | |
| 41 | 3311505 | 4 | Locknut 5/16in-18NC | |
| 42 | 3311605 | 16 | Locknut 3/8in-16NC | |
| 43 | 3311801 | 1 | Nut 1/2in-13NC | |

| ITEM | PART NUMBER | QTY | DESCRIPTION | REV |
|---|---|---|---|---|
| 44 | 3311805 | 4 | Locknut 1/2in-13NC | |
| 45 | 3574206 | 1 | Plate, Motor Mount | |
| 46 | 3574207 | 1 | Plate, Engine Mount (Rear) | |
| 47 | 3574208 | 1 | Bracket, Muffler | |
| 48 | 3620047 | 1 | Radiator | |
| 48 | 70004182 | 1 | Shroud | |
| 48 | 7027412 | 1 | Cap | |
| 49 | 3740067 | 2 | Relay, Solenoid Assembly | |
| 50 | 3960468 | 1 | Seal, Foam Gasket | |
| 51 | 3960469 | 1 | Seal, Foam Gasket | |
| 52 | 4031911 | 4 | Bolt M8 x 35mm | |
| 53 | 4060805 | 2 ft /0.7mm | Flex-Trim 1/4in | |
| 54 | 4220191 | 2 | Block, Spacer | |
| 55 | 4567073 | 1 | Tube, Exhaust | |
| 56 | 4568721 | 1 | Exhaust Tube Weldment | |
| 57 | 4711500 | 8 | Flatwasher 5/16in Thin | |
| 58 | 4711600 | 2 | Flatwasher 3/8in Thin | |
| 59 | 4740274 | 4 | Washer, Snubbing | |
| 60 | 4751400 | 24 | Flatwasher 1/4in Regular | |
| 61 | 4751500 | 2 | Flatwasher 5/16in Regular | |
| 62 | 4751600 | 44 | Flatwasher 3/8in Regular | |
| 63 | 4751800 | 1 | Flatwasher 1/2in Regular | |
| 64 | 4811900 | 4 | Flatwasher M8 | |
| 65 | 4812100 | 8 | Flatwasher M12 | |
| 66 | 4832000 | 8 | Lockwasher M10 | |
| 67 | 4846790 | 1 | Tray Engine | |
| 68 | 4846805 | 1 | Mount, Engine/Generator - Left | |
| 69 | 8405009 | 2 | Clamp, Hose | |
| 70 | 8405104 | 4 | Clamp, Hose | |
| 71 | 88521205 | 2 | Locknut 5/16in-18NC | |
| 72 | 91401281 | 1 | Hold-down, Battery | |
| 73 | 1001093382 | 2 | Rod, Hold-Down | |
| 74 | 1001105833 | NLA | Valve, Oil Drain (Use p/n 4640750) | |
| 74 | 0100020 | AR | Sealant, Pipe | |
| 75 | 1001109595 | 1 | Plate, Radiator Mounting | |
| 76 | 1001112077 | 1 | Caterpillar Tier IVi Engine Assembly | |
| 77 | 1001107705 | 1 | Hose, Radiator (Top) | |
| 78 | 4791400 | 4 | Starwasher 1/4in | |
| | | Ref | **CATERPILLAR TIER IVi ENGINE INSTALLATIONS** | |
| | 1001111834 | Ref | **Without Arctic Package** | C |
| | 1001111835 | Ref | **With Arctic Package** | C |
| 101 | 0100011 | AR | Compound, Locking | |
| 102 | 0100020 | AR | Sealant, Thread | |
| 103 | 0641507 | 3 | Bolt 5/16in-18NC x 7/8in | |
| 104 | 0641510 | 2 | Bolt 5/16in-18NC x 1-1/8in | |
| 105 | 0641514 | 3 | Bolt 5/16in-18NC x 1-3/4in | |
| 106 | 0641610 | 1 | Bolt 3/8in-16NC x 1-1/4in | |
| 107 | 0641808 | 1 | Bolt 1/2in-13NC x 1in | |
| 108 | 0642010 | 1 | Bolt 5/8in-11NC x 1-1/4in | |
| 109 | 1320022 | 7 | Clamp, Hose | |
| 110 | 1320176 | 7 | Clamp, U-Bolt | |

| ITEM | PART NUMBER | QTY | DESCRIPTION | REV |
|---|---|---|---|---|
| 111 | 1701505 | 1 | Decal - Diesel (Not Shown - Located on Hood) | |
| 112 | 2180348 | 1 | Fitting | |
| 113 | 2220313 | 1 | Fitting, 90 | |
| 114 | 2221176 | 1 | Fitting | |
| 115 | | Ref | Coolant Options: | |
| 115 | 2300004 | AR | Machines without Arctic Package | |
| 115 | 2300041 | AR | Machines with Arctic Package | |
| 116 | 2720058 | 30 ft/9.1m | Hose | |
| 117 | 2750532 | 6 ft/1.8m | Hose 3/8in | |
| 118 | 3311505 | 3 | Locknut 5/16in-18NC | |
| 119 | 3380429 | 1 | Panel, Rubber | |
| 120 | 3422446 | 1 | Pin, Pivot | |
| 121 | 3460544 | 1 | Pipe, Exhaust | |
| 122 | 3539957 | 2 | Plate, Hold Down | |
| 123 | 3841143 | 1 | Keeper, Pin | |
| 124 | 4751500 | 4 | Flatwasher 5/16in Regular | |
| 125 | 4752000 | 1 | Flatwasher 5/8in Regular | |
| | | Ref | **Note: Arctic Package Items 127-130 Not Shown - Used on Arctic Machines Only** | |
| 127 | 1060625 | 1 | Cable, Immersion Heater | |
| 128 | 1320223 | 1 | J-Clip 1/2in | |
| 129 | 1702943 | 1 | Decal - Hydraulic Tank Heater (Located on bottom of Hydraulic Oil Tank) | |
| 130 | 2580050 | 1 | Heater, Hydraulic Tank | |
| | | Ref | **CATERPILLAR TIER IVi ENGINE WITH PUMPS ASSEMBLIES** | |
| | 1001111832 | Ref | **Without Arctic Package** | B |
| | 1001111833 | Ref | **With Arctic Package** | B |
| 201 | 0100011 | AR | Compound, Locking | |
| 202 | 0641407 | 1 | Bolt 1/4in-20NC x 7/8in | |
| 203 | 0641605 | 2 | Bolt 3/8in-16NC x 5/8in | |
| 204 | 0641611 | 4 | Bolt 3/8in-16NC x 1-3/8in | |
| 205 | 0641812 | 4 | Bolt 1/2in-18NC x 1-3/4in | |
| 206 | 2220451 | 1 | Fitting, Straight | |
| 207 | 2220578 | 1 | Fitting, 90 | |
| 208 | 2230046 | 1 | Fitting, 90 | |
| 209 | | Ref | Oil, Motor Options (Not Shown): | |
| 209 | 3020016 | AR | Oil, Motor (Without Arctic Package) | |
| 209 | 3020044 | AR | Oil, Motor (With Arctic Package) | |
| 210 | 3311405 | 1 | Locknut 1/4in-20NC | |
| 211 | 3311605 | 4 | Locknut 3/8in-16NC | |
| 212 | 3422532 | 1 | Pin, Hitch | |
| 213 | 3600242 | 1 | Gear Pump Assembly (See GEAR PUMP ASSEMBLY for Breakdown) | |
| 214 | 3620034 | 1 | Cooler, Hydraulic Oil | |
| 215 | 3790045 | 1 | O-Ring | |
| 216 | 3790152 | 1 | O-Ring | |
| 217 | 3931620 | 2 | Bolt 3/8in-16NC x 1-1/4in | |
| 218 | 3960389 | 5 ft/1.5m | Seal, Hood | |
| 219 | 4751400 | 1 | Flatwasher 1/4in Regular | |
| 220 | 4751600 | 1 | Flatwasher 3/8in Regular | |
| 221 | 4891600 | 2 | Flatwasher 3/8in Hardened | |
| 223 | 1001109188 | 1 | Front Piston Pump Assembly (See PISTON PUMP ASSEMBLY | |

| ITEM | PART NUMBER | QTY | DESCRIPTION | REV |
|---|---|---|---|---|
| | | | for Breakdown) | |
| 224 | 1001109189 | 1 | Rear Piston Pump Assembly (See PISTON PUMP ASSEMBLY for Breakdown) | |
| 225 | 1001109599 | 2 | Spacer | |
| 226 | 1001109601 | 2 | Bracket | |
| 227 | 1001109660 | 1 | Hose | |
| 228 | 1001109661 | 1 | Hose | |
| 229 | 1001110469 | 1 | Hose | |
| 230 | 1001112763 | 1 | Battery Cable Kit | B |
| 230A | 7027028 | 1 | Cable, Battery (Red) | |
| 230B | 7027029 | 1 | Cable, Battery (Black) | |
| 230C | 7027002 | 1 | Cable (Red) | |
| 230D | 7027033 | 1 | Cable (Black) | |
| | | Ref | **Note: Arctic Package Items 231-239 Not Shown - Used on Arctic Machines Only** | |
| 231 | 0641608 | 2 | Bolt 3/8in-16NC x 1in | |
| 232 | 1060626 | 1 | Cord, 3-Way Extension (Located on Left Front of Engine) | |
| 233 | 1320223 | 2 | Clamp | |
| 234 | 1702941 | 1 | Decal - Battery Heater (Located on Battery Heater) | |
| 235 | 1702942 | 1 | Decal - Engine Block Heater (Located on Right Side of Engine) | |
| 236 | 1702944 | 1 | Decal - Heater Cord (Located on Left Front of Engine) | |
| 237 | 2580024 | 1 | Heater, Battery (Located on Battery) | |
| 238 | 2580055 | 1 | Heater, Block (Located on Left Side of Engine) | |
| 239 | 3980007 | 1 | Seat, Battery (Located Under Battery) | |
| | 1001112077 | Ref | **CATERPILLAR TIER IVi ENGINE WITH ECM ASSEMBLY** | E |
| 301 | 0100011 | AR | Compound, Locking | |
| 302 | 0100020 | AR | Sealant, Thread | |
| 303 | 0700620 | 1 | Bolt M6 x 60mm | |
| 304 | 0700808 | 5 | Bolt M8 x 16mm | |
| 305 | 0701010 | 2 | Bolt M10 x 20mm | |
| 306 | 0760606 | 2 | Bolt M6 x 12mm | |
| 307 | 0760610 | 2 | Bolt M6 x 20mm | |
| 308 | 4031709 | 3 | Bolt M6 x 25mm (was p/n 0760612) | |
| 309 | 8303541 | 1 | Screw M6 x 35mm | |
| 310 | 0700616 | 2 | Bolt M6 x 40mm | |
| 311 | 0761210 | 2 | Bolt M12 x 20mm | |
| 313 | 1320224 | 1 | Clamp, Cable | |
| 314 | 8406105 | 2 | Clip, Tube | |
| 315 | 3290507 | 1 | Locknut M5 | |
| 316 | 4811700 | 12 | Flatwasher M6 | |
| 317 | 4811900 | 5 | Flatwasher M8 | |
| 318 | 4812000 | 2 | Flatwasher M10 | |
| 319 | 4812100 | 2 | Flatwasher M12 | |
| 320 | 4811600 | 1 | Flatwasher M5 | |
| 321 | 1001097553 | 1 | Washer, Coolant Sensor | |
| 322 | 1001109064 | 1 | Caterpillar Tier IVi Engine Assembly | |
| 323 | 1001112057 | 1 | Bracket | |
| 324 | 1001112059 | 5 | Bumper | |
| 325 | 1001112067 | 1 | ECM | |
| 326 | 1001112068 | 1 | Sensor, Speed | |
| 327 | 1001112069 | 1 | Sensor, Temperature | |
| 328 | 1001112070 | 1 | Switch, Oil Pressure | |

| ITEM | PART NUMBER | QTY | DESCRIPTION | REV |
|---|---|---|---|---|
| 329 | 1001112071 | 1 | Harness, Engine (Not Shown - See ELECTRICAL SECTION for Breakdown) | |
| 330 | 1001112072 | 1 | Bracket | |
| 331 | 1001112073 | 1 | Actuator | |
| 331 | 1001112849 | 1 | Linkage Assembly | |
| 332 | 1001112570 | 1 | Spacer | |
| 334 | 1320263 | 1 | Clamp, Cable | |
| 335 | 1001112075 | 1 | Bolt | |
| 336 | 1001112592 | 1 | Bearing | |
| 337 | 1001116595 | 1 | Spacer | |
| 338 | 8406109 | 1 | Clip, Tube | |
| | 1001109064 | Ref | **ENGINE COMPONENTS** | B |
| 401 | 70001051 | 1 | Valve, Crankcase Actuator Shut-Off | |
| 402 | 70001120 | 1 | Pump, Water | |
| 402 | 70001742 | 1 | Pulley, Water Pump | |
| 402 | 70002765 | 1 | Hose, By-Pass (Not Shown) | |
| 403 | See Note | | Head, Cylinder (Note: Not Available for Purchase.) | |
| 403 | 7026801 | 1 | Gasket, Valve Cover | |
| 403 | 70002764 | 1 | Gasket, Rear Head | |
| 403 | 70002762 | 15 | Seat, Valve | |
| 403 | 70002761 | 17 | Bolt, Head | |
| 404 | 7026839 | 1 | Pump, Fuel Supply | |
| 404 | 7026830 | 1 | Element, Fuel Filter | |
| 404 | 70002834 | 1 | Bowl, Water Collection | |
| 404 | 70002835 | 1 | Seal Kit - Water Separator | |
| 404 | 70002833 | 1 | Ring, Fuel Pump Retaining | |
| 405 | 70002844 | 1 | Dipstick Oil Level | |
| 405 | 70002843 | 1 | Seal, Dipstick Tube | |
| 406 | 70002845 | 1 | Pump, Oil (Not Shown) | |
| 406 | 70002846 | 1 | O-Ring, Oil Pump (Not Shown) | |
| 407 | 70002849 | 1 | Pump, Fuel Injection | |
| 407 | 70002847 | 1 | O-Ring, Fuel Injection Pump Flange | |
| 407 | 70002848 | 1 | Gasket, Fuel Injection Pump | |
| 407 | 70002850 | 1 | Solenoid, Fuel Shut-Off | |
| 409 | 7026802 | 1 | Flywheel | |
| 409 | 7026803 | 1 | Gear, Flywheel | |
| 409 | 7026804 | 1 | Gasket (Not Shown - Between Flywheel Housing and Engine Block) | |
| 409 | 7026805 | 1 | Seal, Rear Main (Not Shown - Rear of Flywheel Housing) | |
| 409 | 7026807 | 1 | Seal, Front Main (Located in Front Housing) | |
| 410 | 7026800 | 1 | Cap Oil Filler (Top of Valve Cover) | |
| 411 | 7026806 | 1 | Cap, Filler (Front Side of Engine) | |
| 412 | 7026810 | 1 | V-Belt | |
| 413 | 7026811 | 1 | Filter, Oil | |
| | | Ref | **Note: Machines with SkyPower use Remote Mounted Oil Filter - See SPECIAL OPTIONS SECTION. The same oil filter is used for all applications.** | |
| 413 | 7026812 | 1 | O-Ring (Between Bolt and Oil Filter Bracket) | |
| 413 | 7026813 | 1 | O-Ring (Between Oil Filter Bracket and Engine Block) | |
| 414 | 7026819 | 1 | Engine Cooler Assembly (Not Shown) | |
| 414 | 7026816 | 2 | O-Ring (Between Cover and Cooler) | |
| 414 | 7026817 | 4 | O-Ring (Between Cover and Cooler) | |

| ITEM | PART NUMBER | QTY | DESCRIPTION | REV |
|---|---|---|---|---|
| 415 | 7026822 | 1 | Thermostat | |
| 415 | 7026821 | 1 | Gasket (Between Regulator and Thermostat Housing) | |
| 415 | 7026820 | 1 | Gasket (Between Regulator and Engine Head) | |
| 416 | 7026814 | 1 | Relief Valve, Oil Pressure | |
| 416 | 7026815 | | Gasket, Relief Valve | |
| 417 | See Note | 4 | Injector, Fuel (Not Shown) (Note: Not Available for Purchase.) | |
| 417 | 70002763 | 4 | Gasket, Fuel Line (Not Shown) | |
| 418 | 7026831 | 1 | Alternator | |
| 419 | 7026832 | 1 | Plug, Glow (Not Shown) | |
| 420 | 7026833 | 1 | Starter (Not Shown - Located on other side of engine) | |
| 421 | 7026826 | 1 | Gasket, Exhaust Manifold to Cylinder Head (Not Shown) | |
| 421 | 7026827 | 1 | Gasket, Exhaust Manifold to Exhaust Pipe (Not Shown) | |
| 421 | 70002852 | 4 | Stud, Exhaust Manifold (Not Shown) | |
| 422 | 7026829 | 1 | Gasket, Intake Manifold to Cylinder Head (Not Shown) | |
| 422 | 7026828 | 1 | Gasket, Intake Manifold to Intake Tube (Not Shown) | |
| 423 | 7026808 | 1 | Plug, Oil Pan (Not Shown) | |
| 423 | 7026809 | 1 | Gasket, Oil Plug | |
| 424 | 70002851 | 1 | Gasket Kit (Not Shown) | |
| 425 | 4569371 | 1 | Tube, Intake | |

## FIGURE 2-11. DEUTZ ENGINE INSTALLATION (WITHOUT UGM)

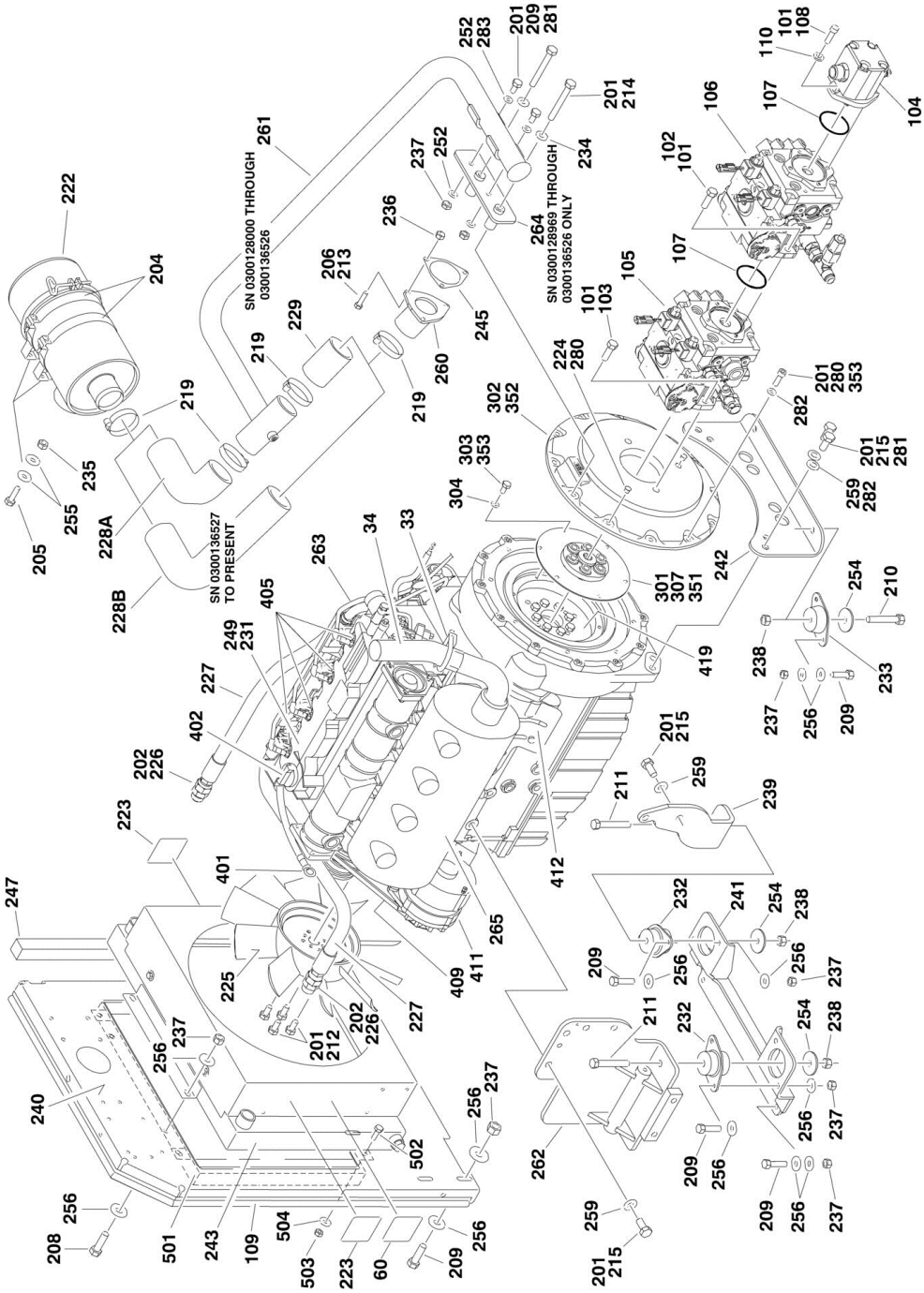

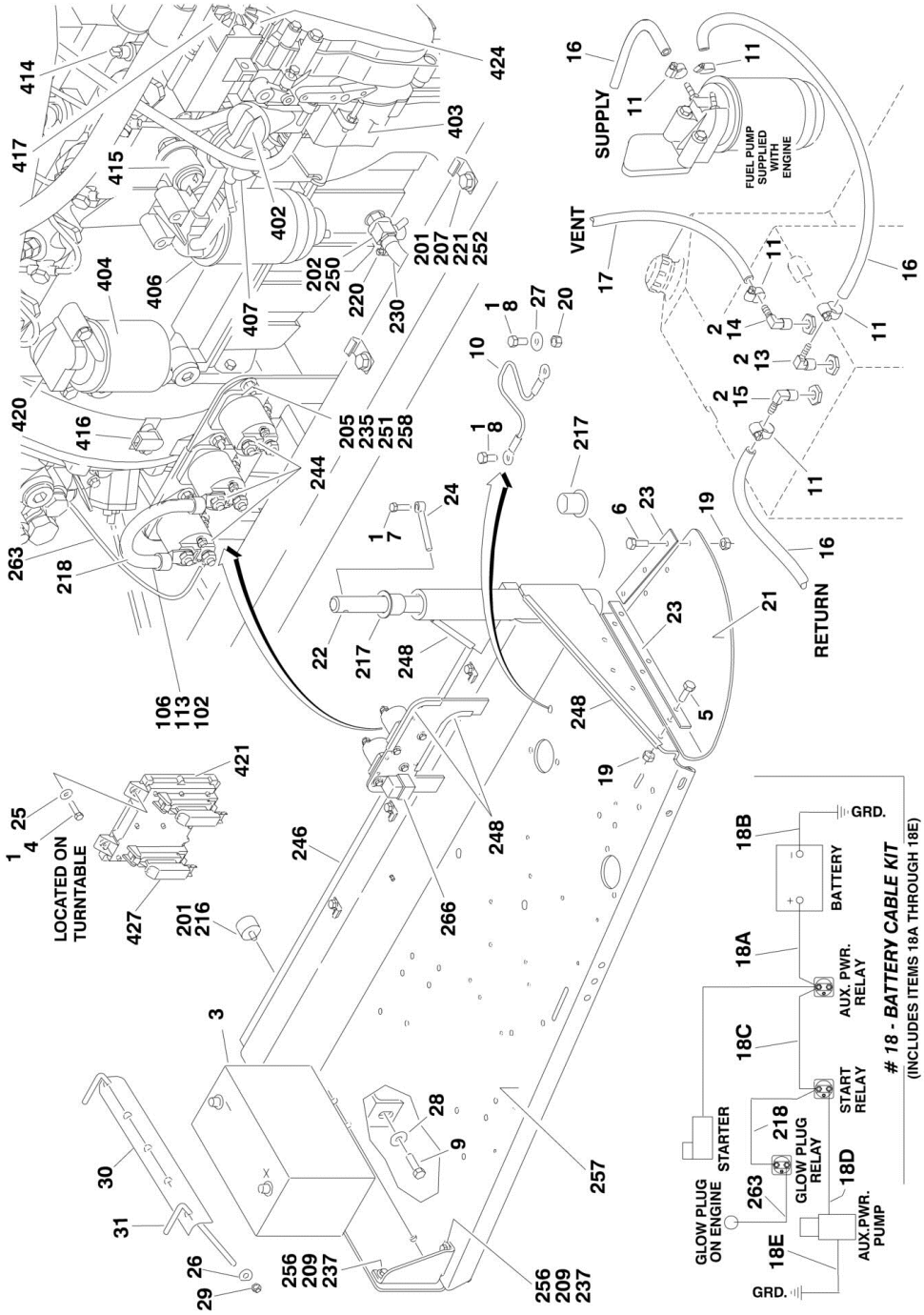
SUPPLY
VENT
RETURN
FUEL PUMP SUPPLIED WITH ENGINE
LOCATED ON TURNTABLE
GRD.
BATTERY
AUX. PWR. RELAY
START RELAY
GLOW PLUG RELAY
STARTER
GLOW PLUG ON ENGINE
AUX.PWR. PUMP
# 18 - BATTERY CABLE KIT
(INCLUDES ITEMS 18A THROUGH 18E)

## FIGURE 2-11. DEUTZ ENGINE INSTALLATION (WITHOUT UGM)

| ITEM | PART NUMBER | QTY | DESCRIPTION | REV |
|---|---|---|---|---|
| | | Ref | **Note: For Ground Module Identification, refer to Revision Log page A.** | |
| | | Ref | **DEUTZ ENGINE INSTALLATIONS:** | |
| | | Ref | **Tier II Engines (SN 0300128000 through 0300128968)** | |
| | 0274300 | Ref | **Without Arctic Package** | F |
| | See Note | Ref | **With Arctic Package (Note: Not Available for Purchase.)** | |
| | | Ref | **Tier III/Tier IVi Engines (SN 0300128969 through 0300174703)** | |
| | 1001099722 | Ref | **Without Arctic Package** | A |
| | 1001104425 | Ref | **With Arctic Package** | A |
| 1 | 0100011 | AR | Compound, Locking | |
| 2 | 0100020 | AR | Sealant, Pipe | |
| 3 | 0400075 | 1 | Battery | |
| 4 | 0641410 | 4 | Bolt 1/4in-20NC x 1-1/4in | |
| 5 | 0641508 | 3 | Bolt 5/16in-18NC x 1in | |
| 6 | 0641514 | 3 | Bolt 5/16in-18NC x 1-3/4in | |
| 7 | 0641610 | 1 | Bolt 3/8in-16NC x 1-1/4in | |
| 8 | 0641808 | 2 | Bolt 1/2in-13NC x 1in | |
| 9 | 0642010 | 1 | Bolt 5/8in-11NC x 1-1/4in | |
| 10 | 1060637 | 1 | Cable, Lanyard | |
| 11 | 1320022 | 5 | Clamp, Hose | |
| 12 | 1701505 | 1 | Decal - Diesel (Not Shown - Located on Hood) | |
| 13 | 2180348 | 1 | Fitting, Spec Barbed | |
| 14 | 2220313 | 1 | Fitting, 90 | |
| 15 | 2221176 | 1 | Fitting, 90 Barbed | |
| 16 | 2720058 | 30 ft/9.2m | Hose | |
| 17 | 2750532 | 6 ft/1.8m | Hose | |
| 18 | 2902296 | 1 | Battery Cable Kit | D |
| | | Ref | **Note: 2902296 Rev A-C are no longer available. Verify whether machine is equipped with 2 or 3 relays on the engine tray. If there are 3 relays, purchase latest revision of the 2902296 kit. If there are 2 relays, purchase individual items as replacement.** | |
| 18A | | Ref | Cable - Battery to Starter Relay and Starter (Red) (was p/n 7027000) | |
| 18A | 1001116241 | 1 | Cable - Battery (Machines with 2 Relays on Engine Tray) | |
| 18A | 1001116240 | 1 | Cable - Battery (Machines with 3 Relays on Engine Tray) | |
| 18B | 7027004 | 1 | Cable - Battery to Ground (Black) | |
| 18C | 7027001 | 1 | Cable - Starter Relay to Auxiliary Relay (Red Only) **(SN 0300128000 through 0300138248)** | |
| | | Ref | **Note: Part of Item 18A on Machines SN 0300138249 through 0300174703.** | |
| 18D | 7027002 | 1 | Cable - Auxiliary Relay to Auxiliary Pump (Red) | |
| 18E | 7027003 | 1 | Cable - Auxiliary Pump to Ground (Black) | |
| 19 | 3311505 | 7 | Locknut 5/16in-18NC | |
| 20 | 3311801 | 1 | Nut 1/2in-13NC | |
| 21 | 3380429 | 1 | Panel, Rubber | |
| 22 | 3422446 | 1 | Pin, Pivot | |
| 23 | 3539957 | 2 | Plate | |
| 24 | 3841143 | 1 | Pin, Keeper | |
| 25 | 4711400 | 4 | Flatwasher 1/4in Thin | |
| 26 | 4751500 | 3 | Flatwasher 5/16in Regular | |

| ITEM | PART NUMBER | QTY | DESCRIPTION | REV |
|---|---|---|---|---|
| 27 | 4751800 | 1 | Flatwasher 1/2in Regular | |
| 28 | 4752000 | 1 | Flatwasher 5/8in Regular | |
| 29 | 88521205 | AR | Locknut 5/16in-18NC | |
| 30 | 91401281 | 1 | Hold-down, Battery | |
| 31 | 1001093382 | 2 | Bolt, Battery Hold-down | |
| 33 | 1320176 | 1 | Clamp, Muffler Only **(SN 0300128969 through 0300174703)** | |
| 34 | 1001101600 | 1 | Tube, Exhaust Only **(SN 0300128969 through 0300174703)** | |
| | | Ref | **Note: Arctic Package Items 50-58 Used on Arctic Machines Only (Not Shown)** | |
| 50 | 1060625 | 1 | Cable, Immersion Heater | |
| 51 | 1060626 | 1 | Cord, 3 Way Extension | |
| 52 | 1702941 | 1 | Decal - Battery Heater | |
| 53 | 1702942 | 1 | Decal - Engine Block Heater | |
| 54 | 1702943 | 1 | Decal - Hydraulic Tank Heater | |
| 55 | 1702944 | 1 | Decal - Heater Cord | |
| 56 | 2580050 | 1 | Heater, Hydraulic Tank | |
| 57 | 3980007 | 1 | Seat, Battery | |
| 58 | 2580024 | 1 | Heater, Battery | |
| 60 | | Ref | Decal - Warning Explosion/Fire Options: | |
| 60 | 1704972 | 1 | ANSI Spec | |
| 60 | 1706098 | 1 | Australian and CE Spec | |
| 60 | 1706059 | 1 | Brazilian Spec | |
| 60 | 1706060 | 1 | Chinese Spec | |
| 60 | 1706064 | 1 | CSA Spec | |
| 60 | 1706062 | 1 | Japanese Spec | |
| 60 | 1706061 | 1 | Korean Spec | |
| 60 | 1706063 | 1 | Spanish Language | |
| | | Ref | **ENGINE AND PUMP ASSEMBLIES** | |
| | | Ref | **Tier II Engines (SN 0300128000 through 0300128968)** | |
| | 2000283 | Ref | **Without Arctic Package** | C |
| | See Note | Ref | **With Arctic Package (Note: Not Available for Purchase.)** | |
| | | Ref | **Tier III/Tier IVi Engines (SN 0300128969 through 0300174703)** | |
| | 1001099721 | Ref | **Without Arctic Package** | A |
| | 1001104433 | Ref | **With Arctic Package** | A |
| 101 | 0100011 | AR | Compound, Locking | |
| 102 | 0641808 | 2 | Bolt 1/2in-13NC x 1in | |
| 103 | 0641812 | 2 | Bolt 1/2in-13NC x 1-1/2in | |
| 104 | 3600395 | 1 | Gear Pump Assembly with Fittings (See GEAR PUMP ASSEMBLY for Breakdown) | |
| 105 | 3600412 | 1 | Pump Assembly with Fittings (See PISTON PUMP ASSEMBLY for Breakdown) | |
| 106 | 3600413 | 1 | Pump Assembly with Fittings (See PISTON PUMP ASSEMBLY for Breakdown) | |
| 107 | 3790152 | 2 | O-Ring | |
| 108 | 3931620 | 2 | Bolt 3/8in-16NC x 1-1/4in | |
| 109 | 3960389 | 5 ft/1.5m | Seal | |
| 110 | 4891600 | 2 | Flatwasher 3/8in Hardened | |
| | | Ref | **ENGINE ASSEMBLIES** | |
| | | Ref | **Tier II Engines (SN 0300128000 through 0300128968)** | |
| | 2000342 | Ref | **Without Arctic Package** | B |
| | See Note | Ref | **With Arctic Package (Note: Not Available for Purchase.)** | |
| | | Ref | **Tier III/Tier IVi Engines (SN 0300128969 through 0300174703)** | |

| ITEM | PART NUMBER | QTY | DESCRIPTION | REV |
|---|---|---|---|---|
| | 1001099640 | Ref | **Without Arctic Package** | G |
| | 1001098508 | Ref | **With Arctic Package** | G |
| | | Ref | **OPTIONAL MUFFLER INSTALLATIONS** | |
| | 0256690 | Ref | **Tier II Engines (SN 0300128000 through 0300128968)** | A |
| | 1001101241 | Ref | **Tier III/Tier IVi Engines (SN 0300128969 through 0300174703)** | B |
| 201 | 0100011 | AR | Compound, Locking | |
| 202 | 0100020 | AR | Sealant, Pipe Only **(SN 0300128000 through 0300136527)** | |
| 203 | 2580062 | 1 | Heater, Engine Block (Not Shown - Arctic Package Machines Only) | |
| 204 | 0340041 | 2 | Band, Air Cleaner | |
| 205 | 0641407 | 10 | Bolt 1/4in-20NC x 7/8in | |
| 206 | 0641510 | 3 | Bolt 5/16in-18NC x 1-1/4in | |
| 207 | 0641606 | 3 | Bolt 3/8in-16NC x 3/4in | |
| 208 | 0641609 | 6 | Bolt 3/8in-16NC x 1-1/8in | |
| 209 | 0641610 | 16 | Bolt 3/8in-16NC x 1-1/4in | |
| 210 | 0641818 | 2 | Bolt 1/2in-13NC x 2-1/4in | |
| 211 | 0641826 | 2 | Bolt 1/2in-13NC x 3-1/4in | |
| 212 | 0700808 | 4 | Bolt 8mm x 16mm | |
| 213 | 0641512 | 1 | Bolt 5/16in-18NC x 1-1/2in | |
| 214 | 0711125 | 2 | Bolt 10mm x 85mm (Tier III/IVi Engines Only) **(SN 0300128969 through 0300136527)** | |
| 215 | 0711414 | 10 | Bolt 14mm x 30mm | |
| 216 | 0940070 | 1 | Bumper | |
| 217 | 0961986 | 2 | Bushing, Flanged | |
| 218 | 1060904 | 1 | Cable, Jumper Only **(SN 0300128000 through 0300144061)** | |
| 219 | 1320016 | AR | Clamp Options: | |
| 219 | | Ref | Clamp **(SN 0300128000 through 0300136527)** | |
| 219 | | Ref | Clamp **(SN 0300136528 through 0300174703)** | |
| 220 | | Ref | Clamp, Hose Options: | |
| 220 | 1320022 | 1 | Tier II Engine **(SN 0300128000 through 0300128968)** | |
| 220 | 8410013 | 1 | Tier III/IVi Engine **(SN 0300128969 through 0300136526)** | |
| 220 | 8410013 | 1 | Tier III/IVi Engine **(SN 0300136527 through 0300144060)** | |
| 220 | 8410013 | 1 | Tier III/IVi Engine **(SN 0300144061 through 0300174703)** | |
| 221 | 1320223 | AR | J-Clip | |
| 222 | 1340060 | 1 | Air Cleaner Assembly Filter Element | |
| 222 | 7012664 | 1 | Element, Filter (Not Shown) | |
| 223 | 1703162 | 2 | Decal - Caution Fan Blade | |
| 224 | 3520054 | 2 | Plug (Tier III/IVi Engines Only) **(SN 0300128969 through 0300174703)** | |
| 225 | 2060025 | 1 | Fan | |
| 226 | 2220451 | 2 | Fitting, Straight | |
| 227 | 2720398 | 2 | Hose, Oil Cooler | |
| 228 | | Ref | Elbow, Rubber Options: | |
| 228A | 2720434 | 1 | Elbow, Rubber **(SN 0300128000 through 0300136526)** | |
| 228B | 1001091179 | 1 | Elbow, Rubber **(SN 0300136527 through 0300174703)** | |
| 229 | 2720449 | 1 | Hose, Air Cleaner Only **(SN 0300128000 through 0300136527)** | |
| 230 | | Ref | Hose, Oil Drain Options: | |
| 230 | 1001091892 | 1 ft/30cm | Hose, Oil Drain (Use p/n 2750532) **(SN 0300128000 through 0300136526)** | |
| 230 | See Note | AR | Hose, Oil Drain (Note: See Note at Item 250) **(SN 0300136527 through 0300144060)** | |
| 230 | 1001091892 | 1 ft/30cm | Hose, Oil Drain (Use p/n 2750532) **(SN 0300144601 through 0300174703)** | |

| ITEM | PART NUMBER | QTY | DESCRIPTION | REV |
|---|---|---|---|---|
| 231 | | Ref | Oil, Motor Options: | |
| 231 | 3020016 | AR | Without Arctic Package | |
| 231 | 3020044 | AR | With Arctic Package | |
| 232 | 3200362 | 2 | Mount, Motor | |
| 233 | 3200406 | 2 | Mount, Motor | |
| 234 | 4891600 | 2 | Flatwasher 3/8in Hardened Only **(SN 0300128969 through 0300136527)** | |
| 235 | 3311405 | 10 | Locknut 1/4in-20NC | |
| 236 | 3311505 | 3 | Locknut 5/16in-18NC | |
| 237 | 3311605 | 22 | Locknut 3/8in-16NC | |
| 238 | 3311805 | 4 | Locknut 1/2in-13NC | |
| 239 | 3537416 | 1 | Plate, Engine Mounting (Front Right Side) | |
| 240 | 3539872 | 1 | Plate, Radiator Mounting | |
| 241 | 3539971 | 1 | Plate, Engine Mounting (Front Bottom) | |
| 242 | | Ref | Plate, Engine Mounting (Rear) Options: | |
| 242 | 3574978 | 1 | Tier II Engine (Not Shown) **(SN 0300128000 through 0300128968)** | |
| 242 | 1001093943 | 1 | Tier III/IVi Engine **(SN 0300128969 through 0300174703)** | |
| 243 | 3620033 | 1 | Radiator | |
| 244 | 3740067 | 3 | Relay | |
| 245 | 3960407 | 1 | Gasket, Air Intake | |
| 246 | 3960468 | 1 | Seal | |
| 247 | 3960469 | 1 | Seal | |
| 248 | 4060805 | 37 in/1m | Flex-Trim | |
| 249 | | Ref | Engine, Deutz Options: | |
| 249 | 2000339 | 1 | Tier II Engine **(SN 0300128000 through 0300128968)** | |
| 249 | 1001094101 | 1 | Tier III/IVi Engine **(SN 0300128969 through 0300174703)** | |
| 250 | 1001104308 | NLA | Valve, Oil Drain (Use p/n 4640751) | |
| | | Ref | **Note: For Machines SN 0300136527 through 0300144061, Item 220 p/n 8410013 Clamp and Item 230 p/n 2750532 Hose (1ft) must be purchased also.** | |
| 251 | 4711400 | 6 | Flatwasher 1/4in Thin | |
| 252 | 4711600 | 3 | Flatwasher 3/8in Thin | |
| 254 | 4740274 | 4 | Washer, Snubbing | |
| 255 | 4751400 | 8 | Flatwasher 1/4in Regular | |
| 256 | 4751600 | 44 | Flatwasher 3/8in Regular | |
| 257 | | Ref | Tray, Engine | |
| 257 | 4845404 | 1 | Tier II Engine **(SN 0300128000 through 0300128968)** | |
| 257 | 1001094321 | 1 | Tier III/IVi Engine **(SN 0300128969 through 0300174703)** | |
| 258 | 4791400 | 6 | Starwasher 1/4in | |
| 259 | 4812200 | 10 | Flatwasher M14 | |
| 260 | 4845395 | 1 | Adapter, Air Intake | |
| 261 | | Ref | Tube, Tuning Options: | |
| 261 | 4569171 | 1 | Tier II Engine **(SN 0300128000 through 0300128968)** | |
| 261 | 1001099686 | 1 | Tier III/IVi Engine **(SN 0300128969 through 0300136526)** | |
| 261 | Not Required | 0 | Tier III/IVi Engine **(SN 0300136527 through 0300174703)** | |
| 262 | 4846566 | 1 | Plate, Engine Mounting (Front Left Side) | |
| 263 | 4923379 | 1 | Harness, Glow Plug | |
| 264 | 1001098916 | 1 | Support (Tier III/IVi Engines Only) **(SN 0300128969 through 0300136527)** | |
| 265 | | Ref | Muffler Options: | |
| 265 | 3220103 | 1 | Tier II Engine Spark Arresting **(SN 0300128000 through 0300128968)** | |

| ITEM | PART NUMBER | QTY | DESCRIPTION | REV |
|---|---|---|---|---|
| 265 | 3220104 | 1 | Tier II Engine Catalytic **(SN 0300128000 through 0300128968)** | |
| 265 | 1001099051 | 1 | Tier III/IVi Engine Spark Arresting **(SN 0300128969 through 0300174703)** | |
| 265 | 1001101241 | 1 | Tier III/IVi Engine Catalytic **(SN 0300128969 through 0300174703)** | |
| 265 | 1320176 | 1 | Clamp, Saddle (Not Shown) (220103 Muffler Only) | |
| 265 | 70001017 | 1 | Clamp, Band (Not Shown) (3220104 Muffler Only) | |
| 265 | 7024398 | 1 | Tube, Exhaust (322103 & 3220104 Mufflers Only) | |
| 265 | 70002200 | 8 | Stud, Exhaust Manifold to Engine Block (Not Shown) | |
| 265 | 70003476 | 8 | Nut, Exhaust Manifold to Engine Block (Not Shown) | |
| 265 | 7024560 | 1 | Plug, Brass (Not Shown) | |
| 266 | 3740080 | 1 | Relay (Tier III/IVi Engines Only) **(SN 0300128969 through 0300174703)** | |
| 280 | 0701012 | 2 | Bolt 10mm x 25mm (Tier II Engines Only) **(SN 0300128000 through 0300128969)** | |
| 281 | 0701015 | 6 | Bolt 10mm x 35mm (Tier II Engines Only) **(SN 0300128000 through 0300128969)** | |
| 282 | 4711700 | 6 | Flatwasher 7/16in Thin (Tier II Engines Only) **(SN 0300128000 through 0300128969)** | |
| 283 | 4751700 | 2 | Flatwasher 7/16in Regular (Tier II Engines Only) **(SN 0300128000 through 0300128969)** | |
| | 0256847 | Ref | **PUMP COUPLING INSTALLATION - TIER III ENGINES (SN 0300128000 through 0300128968)** | 2 |
| 301 | 1660234 | 1 | Coupling, Hayes | |
| 302 | 0080163 | 1 | Plate, Pump Adapter | |
| 303 | 0700810 | 63 | Bolt M8 x 20mm | |
| 304 | 4831900 | 6 | Lockwasher M8 | |
| 307 | 3020021 | AR | Grease, Coupling | |
| | 2902065 | Ref | **PUMP COUPLING INSTALLATION - TIER III ENGINES (SN 0300128969 through 0300174703)** | B |
| 351 | 70000793 | 1 | Coupling | |
| 352 | See Note | NSS | Plate, Pump Adapter (Not Shown) (Note: Not Available - Purchase p/n 2902065) | |
| 353 | See Note | NSS | Capscrew 10mm (Grade 10.9) (Note: Not Available - Purchase Locally) | |
| | | Ref | **ENGINE COMPONENTS:** | |
| | 2000339 | Ref | **Tier II Engine (SN 0300128000 through 0300128968)** | B |
| | 1001094101 | Ref | **Tier III/IVi Engine (SN 0300128969 through 0300174703)** | A |
| 401 | 7026631 | 1 | Dipstick | |
| 401 | 7020487 | 1 | Seal, Dipstick | |
| 401 | 70001002 | 1 | Tube, Dipstick (Tier II Engine Only) **(SN 0300128000 through 0300128969)** | |
| 402 | 7020465 | 2 | Cap, Filler | |
| 403 | | Ref | Pump, Oil Lube Options: | |
| 403 | 70000045 | 1 | Tier II Engine (was p/n 7020484) **(SN 0300128000 through 0300128968)** | |
| 403 | 70001850 | 1 | Tier III/IVi Engine **(SN 0300128969 through 0300174703)** | |
| 403 | 7020468 | 1 | Seal Between Oil Pump and Engine Block (Not Shown) | |
| 404 | 7016331 | 1 | Filter, Oil (was p/n 7016641) | |
| 405 | | Ref | Pump, Injector Options: | |
| 405 | | Ref | Injectors for Tier II Engine **(SN 0300128000 through 0300128968)** | |
| 405 | 7027246 | 4 | Series A Injector (was p/n 7027242) | |
| 405 | 7027608 | 4 | Series B Injector (was p/n 7027611) | |

| ITEM | PART NUMBER | QTY | DESCRIPTION | REV |
|---|---|---|---|---|
| 405 | 7027609 | 4 | Series C Injector (was p/n 7027612) | |
| 405 | 7027610 | 4 | Series D Injector (was p/n 7027613) | |
| 405 | | Ref | Injectors for Tier III/IVi Engine **(SN 0300128969 through 0300174703)** | |
| 405 | 70000912 | 4 | Series A Injector | |
| 405 | 70000913 | 4 | Series B Injector | |
| 405 | 70000914 | 4 | Series C Injector | |
| 405 | 70000915 | 4 | Series D Injector | |
| 405 | | Ref | Gasket Options (1 Per Injector): | |
| 405 | 7020447 | 4 | Tier II Engine (was p/n 7020410) **(SN 0300128000 through 0300128968)** | |
| 405 | See Note | NSS | Tier III/IVi Engine (Note: Not Available for Purchase.) **(SN 0300128969 through 0300174703)** | |
| 406 | 8320270 | 1 | Filter, Fuel (was p/n 7016328) | |
| 406 | 70001423 | 1 | Head, Fuel Filter | |
| 406 | 70001848 | 1 | Sensor Only **(SN 0300128969 through 0300174703)** | |
| 406 | 70001132 | 2 | Seal, Sensor Only **(SN 0300128969 through 0300174703)** | |
| 407 | | Ref | Pump Fuel Supply Options: | |
| 407 | 70000916 | 1 | Pump for Tier II Engine (was p/n 7027238) **(SN 0300128000 through 0300128968)** | |
| 407 | 70000916 | 1 | Pump for Tier III/IVi Engine **(SN 0300128969 through 0300174703)** | |
| 407 | | Ref | Repair Kit for Fuel Supply Pump Options: | |
| 407 | See Note | NSS | Kit for 7027238 Pump (Note: Not Available for Purchase.) | |
| 407 | 70001435 | 1 | Kit for 700001916 Pump | |
| 407 | | Ref | Hand Pump for Fuel Supply Pump Options: | |
| 407 | See Note | NSS | Hand Pump for Tier II Engine 7027238 Pump (Note: Not Available for Purchase.) | |
| 407 | 70000919 | 1 | Hand Pump for Tier II Engine 700001916 Pump | |
| 407 | | Ref | O-Seal Between Fuel Pump and Engine Block Options: | |
| 407 | 7020411 | 1 | Seal for 7027238 Pump | |
| 407 | 70000917 | 1 | Seal for 700001916 Pump | |
| 407 | | Ref | O-Seal Between Fuel Pump and Hand Pump Options: | |
| 407 | See Note | NSS | Seal for 7027238 Pump (Note: Not Available for Purchase.) | |
| 407 | 70000918 | 1 | Seal for 700001916 Pump | |
| 408 | 7020449 | 4 | Gasket, Intake Manifold (Not Shown) | |
| 409 | 7020408 | 1 | V-Belt | |
| 410 | | Ref | Exhaust Manifold Components (Not Shown) **(SN 0300128000 through 0300128968)** | |
| 410 | 7020471 | 4 | Gasket, Exhaust Manifold to Engine Block | |
| 410 | See Note | NSS | Gasket, Exhaust Manifold to Exhaust Pipe (Note: Not Available for Purchase.) | |
| 410 | 70002200 | AR | Stud, Exhaust Manifold | |
| 410 | 70003476 | AR | Nut, Exhaust Manifold | |
| 410 | | Ref | Exhaust Manifold Components (Not Shown) **(SN 0300128969 through 0300174703)** | |
| 410 | 70001835 | 1 | Gasket, Exhaust Adapter to Exhaust Rail | |
| 410 | 70001841 | 1 | Valve, Exhaust (Fits into Exhaust Adapter) | |
| 410 | 70001836 | 1 | Gasket, Exhaust Rail to Cylinder Head | |
| 410 | 70001837 | 1 | Gasket, Exhaust Manifold to Muffler | |
| 410 | 70001838 | 2 | Gasket, Exhaust Manifold to Engine Block | |
| 410 | 7020471 | 4 | Gasket, Exhaust Manifold to Engine Block | |
| 410 | 70001874 | 1 | Restrictor, Choke (Fits between qty2 of p/n 70001838) | |

| ITEM | PART NUMBER | QTY | DESCRIPTION | REV |
|---|---|---|---|---|
| 410 | 70001839 | 2 | Flange, Sealing | |
| 410 | 70002200 | AR | Stud, Exhaust Manifold | |
| 410 | 70003476 | AR | Nut, Exhaust Manifold | |
| 411 | | Ref | Alternator Options: | |
| 411 | 7000663 | 1 | Tier II Engine (was p/n 7020410) **(SN 0300128000 through 0300128968)** | |
| 411 | 7000663 | 1 | Tier III/IVi Engine **(SN 0300128969 through 0300174703)** | |
| 411 | | Ref | Regulator, Voltage Options (Not Shown): | |
| 411 | 7020464 | 1 | Tier II Engine **(SN 0300128000 through 0300128968)** | |
| 411 | 70001868 | 1 | Tier III/IVi Engine **(SN 0300128969 through 0300174703)** | |
| 411 | | Ref | Seal, Voltage Regulator Options (Not Shown): | |
| 411 | See Note | NSS | Tier II Engine (Note: Not Available for Purchase.) **(SN 0300128000 through 0300128968)** | |
| 411 | 70001866 | 1 | Tier III/IVi Engine **(SN 0300128969 through 0300174703)** | |
| 411 | 70002234 | 1 | Bar, Alternator Adjustment | |
| 412 | 7020479 | 1 | Starter | |
| 412 | 7026608 | 1 | Relay | |
| 412 | 70001498 | 1 | Shield, Starter | |
| 413 | See Note | NSS | Plug- In Connector (Not Shown) (Note: Not Available for Purchase.) | |
| 414 | 7027791 | 1 | Transmitter, Temperature | |
| 414 | See Note | 1 | Ring, Sealing (Note: Not Available for Purchase.) | |
| 415 | 7027790 | 1 | Sensor, Oil Pressure | |
| 416 | 7024565 | 1 | Sensor, Speed | |
| 417 | 7027792 | 1 | Throttle Actuator | |
| 417 | 7027276 | 2 | Springs | |
| 418 | 7020459 | 1 | Thermostat (Located at rear of engine block - Not Shown) | |
| 418 | 7020460 | 1 | Spring, Compression | |
| 419 | | Ref | Flywheel with Ring Gear Options: | |
| 419 | 70000264 | 1 | Tier II Engine **(SN 0300128000 through 0300128968)** | |
| 419 | 70001870 | 1 | Tier III/IVi Engine **(SN 0300128969 through 0300174703)** | |
| 419 | 7024579 | 1 | Gear, Ring 110 Tooth | |
| 420 | 7027236 | 1 | Sender, Temperature (Tier II Engine Only) **(SN 0300128000 through 0300128969)** | |
| 421 | 7027795 | 1 | Module, Control | |
| 423 | 70000345 | 4 | Plug, Glow | |
| 424 | 7027239 | 1 | Solenoid, Throttle (Tier II Engine Only) **(SN 0300128000 through 0300128968)** | |
| 425 | 70001847 | 1 | Breather, Front Cover (Not Shown) (Tier III/IVi Engine Only) **(SN 0300128969 through 0300174703)** | |
| 425 | 70001126 | 1 | Seal, Front Cover Breather (Not Shown) (Tier III/IVi Engine Only) **(SN 0300128969 through 0300174703)** | |
| 426 | | Ref | Gasket, Head Options (Not Shown): | |
| 426 | 70003001 | 1 | 2000339 Engine Gasket with 1 Notch | |
| 426 | 70003002 | 1 | 2000339 Engine Gasket with 2 Notches | |
| 426 | 70003003 | 1 | 2000339 Engine Gasket with 3 Notches | |
| 426 | 70002415 | 1 | 1001094101 Engine Gasket with 1 Notch | |
| 426 | 70002416 | 1 | 1001094101 Engine Gasket with 2 Notches | |
| 426 | 70002417 | 1 | 1001094101 Engine Gasket with 3 Notches | |
| 427 | 7027796 | 1 | Harness, Engine (Connects to Item 421) | |
| 427 | 7027793 | 1 | Connector at Module | |
| 427 | 70001872 | 1 | Harness, Engine (Connects to p/n 7027793 (was p/n 7027794) | |
| | 0272364 | Ref | **OIL COOLER INSTALLATION** | 2-E |

| ITEM | PART NUMBER | QTY | DESCRIPTION | REV |
|---|---|---|---|---|
| 501 | 3620034 | 1 | Cooler, Oil | |
| 502 | 0641608 | 4 | Bolt 3/8in-16NC x 1in | |
| 503 | 3311605 | 4 | Locknut 3/8in-16NC | |
| 504 | 4711600 | 4 | Flatwasher 3/8in Thin | |
| 505 | 4240099 | 1 | Tie strap (Not Shown - Ties Hoses Together) | |

## FIGURE 2-12. DEUTZ ENGINE INSTALLATION (WITH UGM)

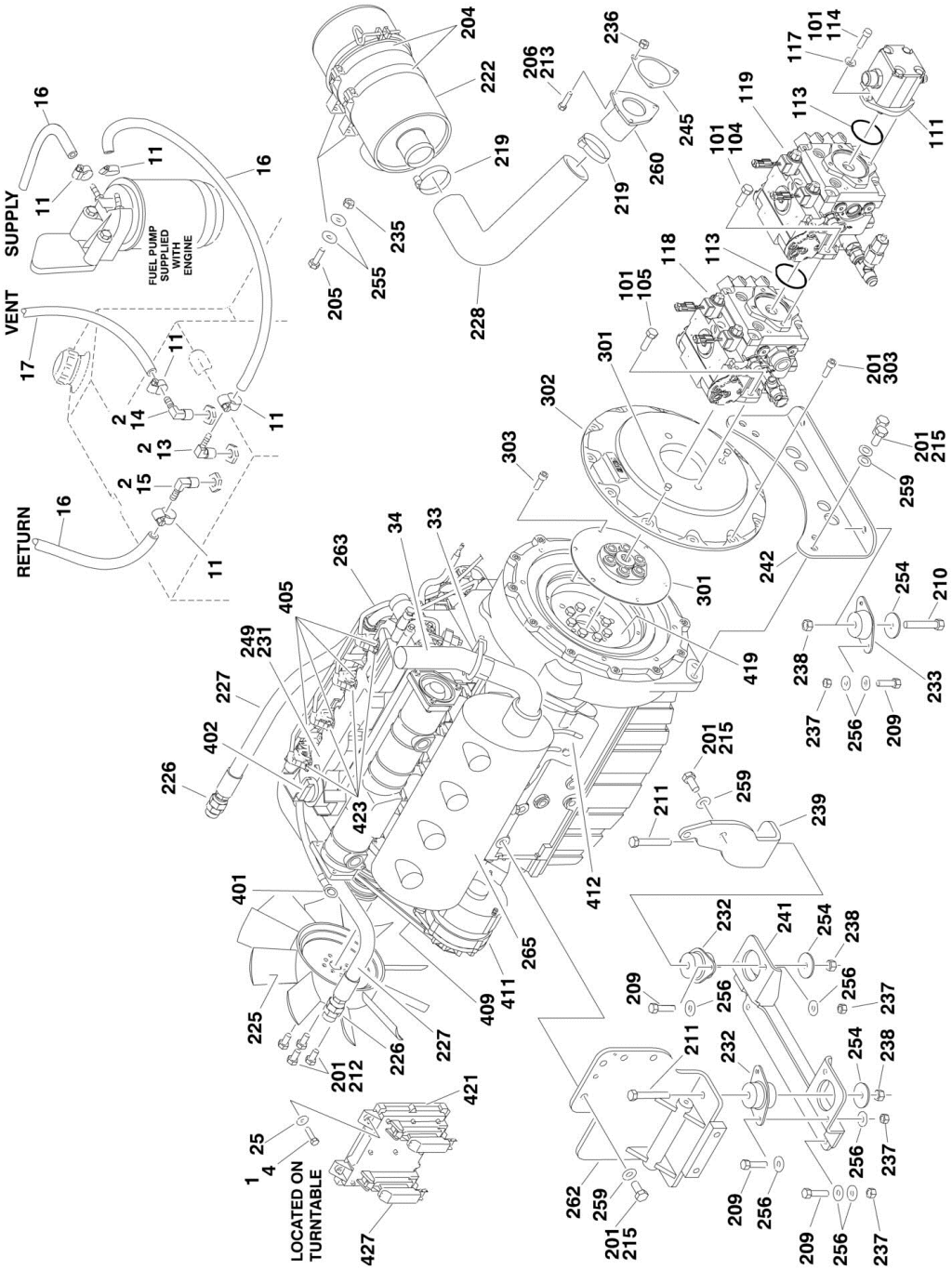

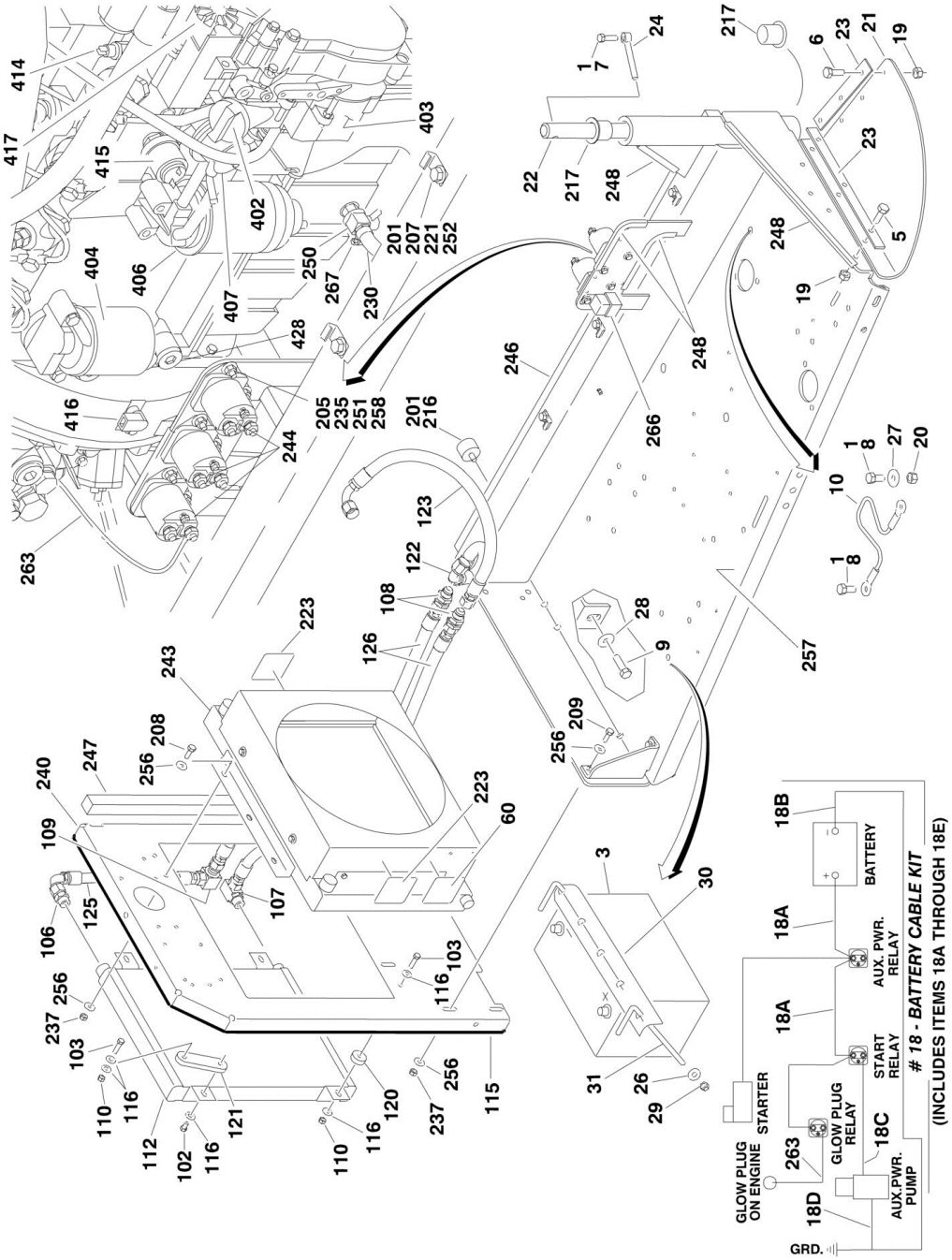
BATTERY
AUX. PWR. RELAY
START RELAY
GLOW PLUG RELAY
STARTER
GLOW PLUG ON ENGINE
AUX.PWR. PUMP
GRD.
# 18 - BATTERY CABLE KIT
(INCLUDES ITEMS 18A THROUGH 18E)

## FIGURE 2-12. DEUTZ ENGINE INSTALLATION (WITH UGM)

| ITEM | PART NUMBER | QTY | DESCRIPTION | REV |
|---|---|---|---|---|
| | | Ref | **Note: For Ground Module Identification, refer to Revision Log page A.** | |
| | | Ref | **DEUTZ ENGINE INSTALLATIONS:** | |
| | | Ref | **Tier IVi Engines** | |
| | 1001109437 | Ref | **Without Arctic Package (All Specs) (SN 0300128000 through 0300168631)** | B |
| | 1001109437 | Ref | **Without Arctic Package (All Specs Except ANSI, CE and CSA Specs) (SN 0300168632 through 0300174703)** | B |
| | 1001110795 | Ref | **With Arctic Package (ANSI, ANSI Export and CSA Specs) (SN 0300128000 through 0300168631)** | B |
| | 1001110795 | Ref | **With Arctic Package (ANSI Export Spec) (SN 0300168632 through 0300174703)** | B |
| | | Ref | **Tier IVi-Flex Engines** | |
| | 1001137757 | Ref | **Without Arctic Package (ANSI, CE and CSA Specs) (SN 0300168632 through 0300174703)** | B |
| | 1001137760 | Ref | **With Arctic Package (ANSI and CSA Specs) (SN 0300168632 through 0300174703)** | B |
| | 1001144357 | Ref | **Tier IVi-PRE Engines (CE Spec Only) (SN 0300168632 through 0300174703)** | B |
| 1 | 0100011 | AR | Compound, Locking | |
| 2 | 0100020 | AR | Sealant, Pipe | |
| 3 | 0400075 | 1 | Battery | |
| 4 | 0641410 | 4 | Bolt 1/4in-20NC x 1-1/4in | |
| 5 | 0641508 | 3 | Bolt 5/16in-18NC x 1in | |
| 6 | 0641514 | 3 | Bolt 5/16in-18NC x 1-3/4in | |
| 7 | 0641610 | 1 | Bolt 3/8in-16NC x 1-1/4in | |
| 8 | 0641808 | 2 | Bolt 1/2in-13NC x 1in | |
| 9 | 0642010 | 1 | Bolt 5/8in-11NC x 1-1/4in | |
| 10 | 1060637 | 1 | Cable, Lanyard | |
| 11 | 1320022 | 5 | Clamp, Hose | |
| 12 | 1701505 | 1 | Decal - Diesel (Not Shown - Located on Hood) | |
| 13 | 2180348 | 1 | Fitting, Spec Barbed | |
| 14 | 2220313 | 1 | Fitting, 90 | |
| 15 | 2221176 | 1 | Fitting, 90 Barbed | |
| 16 | 2720058 | 30 ft/9.2m | Hose | |
| 17 | 2750532 | 6 ft/1.8m | Hose | |
| 18 | 2902296 | 1 | Battery Cable Kit | D |
| 18A | 1001116240 | 1 | Cable - Battery to Starter Relay and Starter (Red) | |
| 18B | 7027004 | 1 | Cable - Battery to Ground (Black) | |
| 18C | 7027002 | 1 | Cable - Auxiliary Relay to Auxiliary Pump (Red) | |
| 18D | 7027003 | 1 | Cable - Auxiliary Pump to Ground (Black) | |
| 19 | 3311505 | 6 | Locknut 5/16in-18NC | |
| 20 | 3311801 | 1 | Nut 1/2in-13NC | |
| 21 | 3380429 | 1 | Panel, Rubber | |
| 22 | 3422446 | 1 | Pin, Pivot | |
| 23 | 3539957 | 2 | Plate | |
| 24 | 3841143 | 1 | Pin, Keeper | |
| 25 | 4711400 | 4 | Flatwasher 1/4in Thin | |
| 26 | 4751500 | AR | Flatwasher 5/16in Regular | |
| 27 | 4751800 | 1 | Flatwasher 1/2in Regular | |
| 28 | 4752000 | 1 | Flatwasher 5/8in Regular | |

| ITEM | PART NUMBER | QTY | DESCRIPTION | REV |
|---|---|---|---|---|
| 29 | 88521205 | 2 | Locknut 5/16in-18NC | |
| 30 | 91401281 | 1 | Hold-down, Battery | |
| 31 | 1001093382 | 2 | Bolt, Battery Hold-down | |
| 33 | 1320176 | 1 | Clamp, Muffler | |
| 34 | 1001101600 | 1 | Tube, Exhaust | |
| | | Ref | **Note: Arctic Package Items 50-58 Used on Arctic Machines Only (Not Shown)** | |
| 50 | 1060625 | 1 | Cable, Immersion Heater | |
| 51 | 1060626 | 1 | Cord, 3 Way Extension | |
| 52 | 1702941 | 1 | Decal - Battery Heater | |
| 53 | 1702942 | 1 | Decal - Engine Block Heater | |
| 54 | 1702943 | 1 | Decal - Hydraulic Tank Heater | |
| 55 | 1702944 | 1 | Decal - Heater Cord | |
| 56 | 2580050 | 1 | Heater, Hydraulic Tank | |
| 57 | 3980007 | 1 | Seat, Battery | |
| 58 | 2580024 | 1 | Heater, Battery | |
| 60 | | Ref | Decal - Warning Explosion/Fire Options: | |
| 60 | 1704972 | 1 | ANSI Spec | |
| 60 | 1706098 | 1 | Australian and CE Spec | |
| 60 | 1706059 | 1 | Brazilian Spec | |
| 60 | 1706060 | 1 | Chinese Spec | |
| 60 | 1706064 | 1 | CSA Spec | |
| 60 | 1706062 | 1 | Japanese Spec | |
| 60 | 1706061 | 1 | Korean Spec | |
| 60 | 1706063 | 1 | Spanish Language | |
| | | Ref | **ENGINE AND PUMP ASSEMBLIES** | |
| | | Ref | **Tier IVi Engines** | |
| | 1001109436 | Ref | **Without Arctic Package (All Specs) (SN 0300128000 through 0300168631)** | C |
| | 1001109436 | Ref | **Without Arctic Package (All Specs Except ANSI, CE and CSA Specs) (SN 0300168632 through 0300174703)** | C |
| | 1001110796 | Ref | **With Arctic Package (ANSI, ANSI Export and CSA Specs) (SN 0300128000 through 0300168631)** | C |
| | 1001110796 | Ref | **With Arctic Package (ANSI Export Spec) (SN 0300168632 through 0300174703)** | C |
| | | Ref | **Tier IVi-Flex Engines** | |
| | 1001137756 | Ref | **Without Arctic Package (ANSI, CE and CSA Specs) (SN 0300168632 through 0300174703)** | B |
| | 1001137759 | Ref | **With Arctic Package (ANSI and CSA Specs) (SN 0300168632 through 0300174703)** | B |
| | 1001144356 | Ref | **Tier IVi-PRE Engines (CE Spec Only) (SN 0300168632 through 0300174703)** | B |
| 101 | 0100011 | AR | Compound, Locking | |
| 102 | 0641605 | 2 | Bolt 3/8in-16NC x 5/8in | |
| 103 | 0641611 | 4 | Bolt 3/8in-16NC x 1-3/8in | |
| 104 | 0641808 | 2 | Bolt 1/2in-13NC x 1in | |
| 105 | 0641812 | 2 | Bolt 1/2in-13NC x 1-1/2in | |
| 106 | 2220451 | 1 | Fitting, Straight | |
| 107 | 2220578 | 1 | Fitting, 90 | |
| 108 | 2230027 | 2 | Fitting, Straight Bulkhead | |
| 109 | 2230046 | 1 | Fitting, 90 Bulkhead | |
| 110 | 3311605 | 4 | Locknut 3/8in-16NC | |
| 111 | 3600395 | 1 | Gear Pump Assembly with Fittings (See GEAR PUMP | |

| ITEM | PART NUMBER | QTY | DESCRIPTION | REV |
|---|---|---|---|---|
| | | | ASSEMBLY for Breakdown) | |
| 112 | 3620034 | 1 | Cooler, Oil | |
| 113 | 3790152 | 2 | O-Ring | |
| 114 | 3931620 | 2 | Bolt 3/8in-16NC x 1-1/4in | |
| 115 | 3960389 | 5 ft/1.5m | Seal | |
| 116 | 4751600 | 10 | Flatwasher 3/8in Regular | |
| 117 | 4891600 | 2 | Flatwasher 3/8in Hardened | |
| 118 | 1101109188 | 1 | Pump Assembly with Fittings (See PISTON PUMP ASSEMBLY for Breakdown) | |
| 119 | 1001109189 | 1 | Pump Assembly with Fittings (See PISTON PUMP ASSEMBLY for Breakdown) | |
| 120 | 1001109599 | 2 | Spacer | |
| 121 | 1001109601 | 2 | Bracket | |
| 122 | 1001110092 | 1 | Hose | |
| 123 | 1001110094 | 1 | Hose | |
| 125 | 1001110469 | 1 | Hose | |
| 126 | 1001110665 | 2 | Hose | |
| | | Ref | **ENGINE ASSEMBLIES** | |
| | | Ref | **Tier IVi Engines** | |
| | 1001110185 | Ref | **Without Arctic Package (All Specs) (SN 0300128000 through 0300168631)** | E |
| | 1001110185 | Ref | **Without Arctic Package (All Specs Except ANSI, CE and CSA Specs) (SN 0300168632 through 0300174703)** | E |
| | 1001110797 | Ref | **With Arctic Package (ANSI, ANSI Export and CSA Specs) (SN 0300128000 through 0300168631)** | E |
| | 1001110797 | Ref | **With Arctic Package (ANSI Export Spec) (SN 0300168632 through 0300174703)** | E |
| | | Ref | **Tier IVi-Flex Engines** | |
| | 1001137755 | Ref | **Without Arctic Package (ANSI, CE and CSA Specs) (SN 0300168632 through 0300174703)** | B |
| | 1001137758 | Ref | **With Arctic Package (ANSI and CSA Specs) (SN 0300168632 through 0300174703)** | B |
| | 1001144355 | Ref | **Tier IVi-PRE Engines (CE Spec Only) (SN 0300168632 through 0300174703)** | B |
| | 1001101241 | Ref | **OPTIONAL MUFFLER INSTALLATION** | B |
| 201 | 0100011 | AR | Compound, Locking | |
| 203 | 2580062 | 1 | Heater, Engine Block (Not Shown - Arctic Package Machines Only) | |
| 204 | 0340041 | 2 | Band, Air Cleaner | |
| 205 | 0641407 | 10 | Bolt 1/4in-20NC x 7/8in | |
| 206 | 0641510 | 2 | Bolt 5/16in-18NC x 1-1/4in | |
| 207 | 0641606 | 3 | Bolt 3/8in-16NC x 3/4in | |
| 208 | 0641609 | 6 | Bolt 3/8in-16NC x 1-1/8in | |
| 209 | 0641610 | 16 | Bolt 3/8in-16NC x 1-1/4in | |
| 210 | 0641818 | 2 | Bolt 1/2in-13NC x 2-1/4in | |
| 211 | 0641826 | 2 | Bolt 1/2in-13NC x 3-1/4in | |
| 212 | 0700808 | 4 | Bolt 8mm x 16mm | |
| 213 | 0641512 | 1 | Bolt 5/16in-18NC x 1-1/2in | |
| 215 | 0711414 | 10 | Bolt 14mm x 30mm | |
| 216 | 0940070 | 1 | Bumper | |
| 217 | 0961986 | 2 | Bushing, Flanged | |
| 219 | 1320016 | 2 | Clamp | |
| 221 | 1320223 | 4 | J-Clip | |
| 222 | 1340060 | 1 | Air Cleaner Assembly | |

| ITEM | PART NUMBER | QTY | DESCRIPTION | REV |
|---|---|---|---|---|
| 222 | 7012664 | 1 | Element, Filter (Not Shown) | |
| 223 | 1703162 | 2 | Decal - Caution Fan Blade | |
| 224 | 3520054 | 2 | Plug | |
| 225 | 2060025 | 1 | Fan | |
| 226 | 2220451 | 2 | Fitting, Straight | |
| 227 | 2720398 | 2 | Hose, Oil Cooler | |
| 228 | 1001091179 | 1 | Elbow, Rubber | |
| 230 | 2750532 | 1 ft/30cm | Hose, Oil Drain | |
| 231 | | Ref | Oil, Motor Options: | |
| 231 | 3020016 | AR | Without Arctic Package | |
| 231 | 3020044 | AR | With Arctic Package | |
| 232 | 3200362 | 2 | Mount, Motor | |
| 233 | 3200406 | 2 | Mount, Motor | |
| 235 | 3311405 | 10 | Locknut 1/4in-20NC | |
| 236 | 3311505 | 3 | Locknut 5/16in-18NC | |
| 237 | 3311605 | 22 | Locknut 3/8in-16NC | |
| 238 | 3311805 | 4 | Locknut 1/2in-13NC | |
| 239 | 3537416 | 1 | Plate, Engine Mounting (Front Right Side) | |
| 240 | 1001109595 | 1 | Plate, Radiator Mounting | |
| 241 | 3539971 | 1 | Plate, Engine Mounting (Front Bottom) | |
| 242 | 1001093943 | 1 | Plate, Engine Mounting (Rear) | |
| 243 | | Ref | Radiator Options: | |
| 243 | 3620033 | 1 | Radiator **(SN 0300128000 through 0300171409)** | |
| 243 | 1001150998 | 1 | Radiator **(SN 0300171410 through 0300174703)** | |
| 244 | 3740067 | 3 | Relay | |
| 245 | 3960407 | 1 | Gasket, Air Intake | |
| 246 | 3960468 | 1 | Seal | |
| 247 | 3960469 | 1 | Seal | |
| 248 | 4060805 | 37 in/1m | Flex-Trim | |
| 249 | | Ref | Engine, Deutz Options: | |
| 249 | 1001094101 | 1 | Tier IVi Engines (All Specs) **(SN 0300128000 through 0300168631)** | |
| 249 | 1001094101 | 1 | Tier IVi Engines (All Specs Except ANSI, CE and CSA Specs) **(SN 0300168632 through 0300174703)** | |
| 249 | 1001137737 | 1 | Tier IVi-Flex Engines (ANSI, CE and CSA Specs) **(SN 0300168632 through 0300174703)** | |
| 249 | 1001144319 | Ref | Tier IVi-PRE Engines (CE Spec Only) **(SN 0300168632 through 0300174703)** | |
| 250 | 4640751 | 1 | Valve, Oil Drain | |
| 251 | 4711400 | 6 | Flatwasher 1/4in Thin | |
| 252 | 4711600 | 3 | Flatwasher 3/8in Thin | |
| 254 | 4740274 | 4 | Washer, Snubbing | |
| 255 | 4751400 | 8 | Flatwasher 1/4in Regular | |
| 256 | 4751600 | 44 | Flatwasher 3/8in Regular | |
| 257 | 1001094321 | 1 | Tray, Engine | |
| 258 | 4791400 | 6 | Starwasher 1/4in | |
| 259 | 4812200 | 10 | Flatwasher M14 | |
| 260 | 4845395 | 1 | Adapter, Air Intake | |
| 262 | 4846566 | 1 | Plate, Engine Mounting (Front Left Side) | |
| 263 | 4923379 | 1 | Harness, Glow Plug | |
| 265 | | Ref | Muffler Options: | |
| 265 | 1001099051 | 1 | Spark Arresting | |

| ITEM | PART NUMBER | QTY | DESCRIPTION | REV |
|---|---|---|---|---|
| 265 | 1001101241 | 1 | Catalytic | |
| 265 | 7024560 | 1 | Plug, Brass (Not Shown) | |
| 266 | 3740080 | 1 | Relay | |
| 267 | 1320022 | 1 | Clamp, Hose | |
| | 2902065 | Ref | **PUMP COUPLING INSTALLATION** | D |
| 301 | 70000793 | 1 | Coupling | |
| 302 | See Note | NSS | Plate, Pump Adapter (Not Shown) (Note: Not Available - Purchase p/n 2902065) | |
| 303 | See Note | NSS | Capscrew 10mm (Grade 10.9) (Note: Not Available - Purchase Locally) | |
| | | Ref | **ENGINE COMPONENTS** | |
| | | Ref | **Tier IVi Engines** | |
| | 1001094101 | Ref | **All Specs (SN 0300128000 through 0300168631)** | A |
| | 1001094101 | Ref | **All Specs Except ANSI, CE and CSA Specs (SN 0300168632 through 0300174703)** | A |
| | | Ref | **Tier IVi-Flex Engines** | |
| | 1001137737 | Ref | **ANSI, CE and CSA Specs (SN 0300168632 through 0300174703)** | A |
| | 1001144319 | Ref | **Tier IVi-PRE Engines (CE Spec Only) (SN 0300168632 through 0300174703)** | A |
| 401 | 7026631 | 1 | Dipstick | |
| 401 | 7020487 | 1 | Seal, Dipstick | |
| 402 | 7020465 | 2 | Cap, Filler | |
| 403 | 70001850 | 1 | Pump, Oil Lube | |
| 403 | 7020468 | 1 | Seal Between Oil Pump and Engine Block (Not Shown) | |
| 404 | 7016331 | 1 | Filter, Oil | |
| 405 | | Ref | Pump, Injector Options: | |
| 405 | 70000912 | 4 | Series A Injector | |
| 405 | 70000913 | 4 | Series B Injector | |
| 405 | 70000914 | 4 | Series C Injector | |
| 405 | 70000915 | 4 | Series D Injector | |
| 405 | See Note | NSS | Gasket (1 per Injector) (Note: Not Available for Purchase.) | |
| 406 | 8320270 | 1 | Filter, Fuel | |
| 406 | 70001848 | 1 | Sensor | |
| 406 | 70001132 | 2 | Seal, Sensor | |
| 407 | 70000916 | 1 | Pump Fuel Supply | |
| 407 | 70001435 | 1 | Repair Kit for Fuel Supply Pump | |
| 407 | 70000919 | 1 | Hand Pump for Fuel Supply Pump | |
| 407 | 70000917 | 1 | O-Seal Between Fuel Pump and Engine Block | |
| 407 | 70000918 | 1 | O-Seal Between Fuel Pump and Hand Pump | |
| 408 | 7020449 | 4 | Gasket, Intake Manifold (Not Shown) | |
| 409 | 7020408 | 1 | V-Belt | |
| 410 | | Ref | Exhaust Manifold Components (Not Shown) | |
| 410 | 70001835 | 1 | Gasket, Exhaust Adapter to Exhaust Rail | |
| 410 | 70001841 | 1 | Valve, Exhaust (Fits into Exhaust Adapter) | |
| 410 | 70001836 | 1 | Gasket, Exhaust Rail to Cylinder Head | |
| 410 | 70001837 | 1 | Gasket, Exhaust Manifold to Muffler | |
| 410 | 70001838 | 2 | Gasket, Exhaust Manifold to Engine Block | |
| 410 | 7020471 | 4 | Gasket, Exhaust Manifold to Engine Block | |
| 410 | 70001874 | 1 | Restrictor, Choke (Fits between qty2 of p/n 70001838) | |
| 410 | 70001839 | 2 | Flange, Sealing | |
| 410 | 70002200 | AR | Stud, Exhaust Manifold | |

| ITEM | PART NUMBER | QTY | DESCRIPTION | REV |
|---|---|---|---|---|
| 410 | 70003476 | AR | Nut, Exhaust Manifold | |
| 411 | 7000663 | 1 | Alternator | |
| 411 | 70001868 | 1 | Regulator, Voltage (Not Shown) | |
| 411 | 70001866 | 1 | Seal, Voltage Regulator (Not Shown) | |
| 411 | 70002234 | 1 | Bar, Alternator Adjustment | |
| 412 | 7020479 | 1 | Starter | |
| 412 | 7026608 | 1 | Relay | |
| 413 | See Note | NSS | Plug- In Connector (Not Shown) (Note: Not Available for Purchase.) | |
| 414 | 7027791 | 1 | Transmitter, Temperature | |
| 414 | See Note | NSS | Ring, Sealing (Note: Not Available for Purchase.) | |
| 415 | 7027790 | 1 | Sensor, Oil Pressure | |
| 416 | 7024565 | 1 | Sensor, Speed | |
| 417 | 7027792 | 1 | Throttle Actuator | |
| 417 | 7027276 | 2 | Springs | |
| 418 | 7020459 | 1 | Thermostat (Located at rear of engine block - Not Shown) | |
| 419 | 70001870 | 1 | Flywheel with Ring Gear | |
| 419 | 7024579 | 1 | Gear, Ring 110 Tooth | |
| 421 | 7027795 | 1 | Module, Control | |
| 423 | 70000345 | 4 | Plug, Glow | |
| 425 | 70001847 | 1 | Breather, Front Cover (Not Shown) | |
| 425 | 70001126 | 1 | Seal, Front Cover Breather (Not Shown) | |
| 426 | | Ref | Gasket, Head Options (Not Shown): | |
| 426 | 70002415 | 1 | Gasket with 1 Notch | |
| 426 | 70002416 | 1 | Gasket with 2 Notches | |
| 426 | 70002417 | 1 | Gasket with 3 Notches | |
| 427 | 7027796 | 1 | Harness, Engine (Connects to Item 421) | |
| 427 | 7027793 | 1 | Connector at Module | |
| 427 | 70001872 | 1 | Harness, Engine (Connects to p/n 7027793) | |
| 428 | 70001181 | 1 | Valve, Pressure Control | |
| 428 | 70124410 | 1 | Spring | |
| 428 | 70025082 | 1 | Seal | |
| 428 | 70124440 | 1 | Screw | |
| 429 | 70025752 | 1 | Valve, Pressure Relief (Not Shown - Located on Front Left of Engine Block) | |
| 429 | 70025753 | 1 | Spring | |
| 429 | 70005916 | 1 | Seal | |
| 429 | 70005917 | 1 | Screw | |

## FIGURE 2-13. PISTON PUMP ASSEMBLY

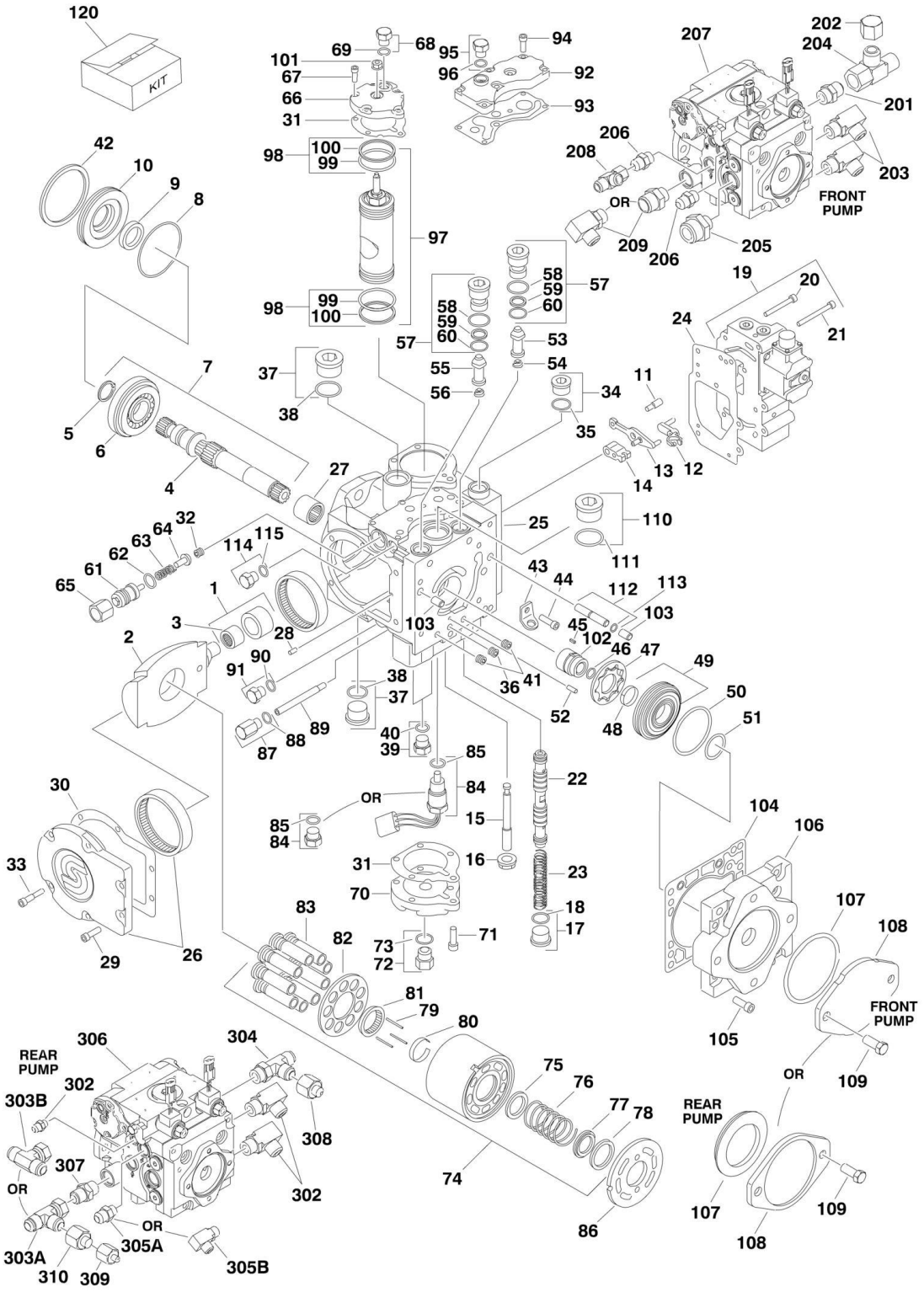

## FIGURE 2-13. PISTON PUMP ASSEMBLY

| ITEM | PART NUMBER | QTY | DESCRIPTION | REV |
|---|---|---|---|---|
| | | Ref | **PISTON PUMP ASSEMBLIES** | |
| | 3600363 | Ref | **Front Pump (15 Tooth)** | B |
| | 3600359 | Ref | **Rear Pump (13 Tooth)** | A |
| 1 | 7024805 | 1 | Cam Follower Bearing Assembly (Includes Item 3) | |
| 2 | 7022330 | 1 | Swashplate | |
| 3 | 7021236 | 1 | Bearing, Needle | |
| 4 | | Ref | Shaft Options: | |
| 4 | 7021237 | 1 | Front Pump (15 Tooth) | |
| 4 | 7022354 | 1 | Rear Pump (13 Tooth) | |
| 5 | 7021238 | 1 | Ring, Retaining | |
| 6 | 7021239 | 1 | Bearing, Roller | |
| 7 | | Ref | Shaft Options (Includes Items 4, 5 & 6): | |
| 7 | 7021240 | 1 | Front Pump (15 Tooth) | |
| 7 | 7022355 | 1 | Rear Pump (13 Tooth) | |
| 8 | See Note | NSS | O-Ring (Note: Use Item 120) | |
| 9 | See Note | NSS | Seal, Lip (Note: Use Item 120) | |
| 10 | 7021243 | 1 | Carrier, Shaft Seal | |
| 11 | 7023996 | 1 | Screw | |
| 12 | 7022331 | 1 | Link, Control Summing | |
| 13 | 7022332 | 1 | Link, Control Feedback | |
| 14 | 7022333 | 1 | Link, Neutral Adjust | |
| 15 | 7022334 | 1 | Screw, Neutral Adjust | |
| 16 | 7023997 | 1 | Nut, Seal | |
| 17 | 7022321 | 1 | Plug (Includes Item 18) | |
| 18 | See Note | NSS | O-Ring (Note: Use Item 17 or 120) | |
| 19 | 7022335 | 1 | Control Kit (Includes Items 20 & 21) | |
| 20 | 7023998 | 4 | Screw | |
| 21 | 7021267 | 3 | Screw | |
| 22 | 7022336 | 1 | Spool Assembly | |
| 23 | 7022337 | 1 | Spring | |
| 24 | 7022338 | 1 | Gasket, Control | |
| 25 | | Ref | Housing Assembly (Includes Items 27, 32, 36 & 41): | |
| 25 | 7023999 | 1 | Front Pump | |
| 25 | 3600359 | 1 | Rear Pump (Note: Not Available - Purchase Complete Rear Pump.) | |
| 26 | 7021248 | 1 | Side Cover Assembly | |
| 27 | 7021249 | 1 | Bearing, Needle | |
| 28 | 7021250 | 1 | Pin | |
| 29 | 7021251 | 2 | Screw | |
| 30 | See Note | NSS | Gasket, Side Cover (Note: Use Item 120) | |
| 31 | 7021253 | 2 | Gasket, Servo Cover | |
| 32 | Not Required | 0 | Screen, Filter | |
| 33 | 7021255 | 4 | Screw | |
| 34 | 7022321 | 1 | Plug (Includes Item 35) | |
| 35 | See Note | NSS | O-Ring (Note: Use Item 34 or 120) | |
| 36 | | Ref | Plug | |
| 36 | 7001485 | 1 | Front Pump | |
| 36 | Not Required | 0 | Rear Pump | |
| 37 | 7007419 | 2 | Plug (Includes Item 38) | |
| 38 | See Note | NSS | O-Ring (Note: Use Item 37 or 120) | |

| ITEM | PART NUMBER | QTY | DESCRIPTION | REV |
|---|---|---|---|---|
| 39 | 7007470 | 2 | Plug (Includes Item 40) | |
| 40 | See Note | NSS | O-Ring (Note: Use Item 39 or 120) | |
| 41 | 7001485 | 2 | Plug, Pipe | |
| 42 | 7021257 | 1 | Ring, Retaining | |
| 43 | 7022340 | 1 | Bracket, Lifting | |
| 44 | 7021251 | 1 | Screw | |
| 45 | 7022342 | 1 | Key | |
| 46 | 7022341 | 1 | Ring, Retaining | |
| 47 | | Ref | Component Options: | |
| 47 | 7022343 | 1 | Gerotor Assembly (Front Pump) | |
| 47 | 7022357 | 1 | Spacer (Rear Pump) | |
| 48 | 7021259 | 1 | Bearing, Journal | |
| 49 | | Ref | Cover Assembly (Gerotor) Options (Includes Item 48): | |
| 49 | 7022344 | 1 | Front Pump | |
| 49 | 7021260 | 1 | Rear Pump | |
| 50 | See Note | NSS | O-Ring (Note: No longer required per supplier. Pressure is the same on either side of o-ring.) | |
| 51 | See Note | NSS | O-Ring (Note: Use Item 120) | |
| 52 | See Note | NSS | Pin (Note: Not Available for Purchase.) | |
| 53 | 7022345 | 1 | Valve, SCR | |
| 54 | 7024800 | 1 | Spring | |
| 55 | 7022345 | 1 | Valve, SCR | |
| 56 | 7024800 | 1 | Spring | |
| 57 | 7021265 | 2 | Bypass Valve Assembly (Includes Items 58, 59 & 60) | |
| 58 | See Note | NSS | O-Ring (Note: Use Item 120) | |
| 59 | See Note | NSS | Ring, Back-up (Note: Use Item 120) | |
| 60 | See Note | NSS | O-Ring (Note: Use Item 120) | |
| 61 | 7022346 | 1 | Adjuster | |
| 62 | 7021289 | 1 | O-Ring | |
| 63 | 7022347 | 1 | Spring | |
| 64 | 7024804 | 1 | Poppet | |
| 65 | 7022190 | 1 | Nut | |
| 66 | 7022348 | 1 | Cover, Servo | |
| 67 | 7021255 | 5 | Screw, Torx | |
| 68 | 7007470 | 1 | Plug (Includes Item 69) | |
| 69 | See Note | NSS | O-Ring (Note: Use Item 68 or 120) | |
| 70 | 7001268 | 1 | Cover, Servo | |
| 71 | 7021255 | 5 | Screw, Torx | |
| 72 | 7007470 | 1 | Plug (Includes Item 73) | |
| 73 | See Note | NSS | O-Ring (Note: Use Item 72 or 120) | |
| 74 | | Ref | Cylinder Block Kit Options (Includes Items 75-83): | |
| 74 | 7022349 | 1 | Front Pump (With Speed Ring) | |
| 74 | 7021269 | 1 | Rear Pump (Without Speed Ring) | |
| 75 | 7021271 | 1 | Washer, Special | |
| 76 | 7021272 | 1 | Spring, Cylinder Block | |
| 77 | 7021273 | 1 | Washer, Special | |
| 78 | 7021274 | 1 | Ring, Retaining | |
| 79 | 7021275 | 3 | Pin, Slipper Hold Down | |
| 80 | 7021276 | 1 | Retainer, Pin | |
| 81 | 7021277 | 1 | Guide, Retainer | |
| 82 | 7021278 | 1 | Retainer, Slipper | |
| 83 | 7021279 | 9 | Piston Assembly | |

| ITEM | PART NUMBER | QTY | DESCRIPTION | REV |
|---|---|---|---|---|
| 84 | | Ref | Component Options (Includes Item 85): | |
| 84 | 7022350 | 1 | Sensor, Speed (Front Pump) | |
| 84 | 7007470 | 1 | Plug (Rear Pump) | |
| 85 | See Note | NSS | O-Ring (Note: Use Item 120) | |
| 86 | 7021281 | 1 | Plate, Valve (Right Side) | |
| 87 | 7007470 | 1 | Plug (Includes Item 88) (Front Pump Only) | |
| 88 | See Note | NSS | O-Ring (Front Pump Only) (Note: Use Item 120) | |
| 89 | 7024801 | 1 | Spool, Loop Flushing | |
| 90 | 7021283 | 1 | Plug (Includes Item 91) (Front Pump Only) | |
| 91 | See Note | NSS | O-Ring (Front Pump Only) (Note: Use Item 90 or 120) | |
| 92 | 7021285 | 1 | Adapter, Remote Filter (Front Pump Only) | |
| 93 | See Note | NSS | Gasket, Filter Adapter (Front Pump Only) (Note: Use Item 120) | |
| 94 | 7021255 | 7 | Screw (Front Pump Only) | |
| 95 | 7007470 | 1 | Plug (Includes Item 96) | |
| 96 | See Note | NSS | O-Ring (Note: Use Item 95 or 120) | |
| 97 | 7022351 | 1 | Servo Piston Kit (Includes Qty 2 of Item 98) | |
| 98 | 7007412 | 2 | Servo Piston Ring Kit (Includes Items 99 & 100) | |
| 99 | See Note | NSS | O-Ring (Note: Use Item 98 or 120) | |
| 100 | See Note | NSS | Ring, Piston (Note: Use Item 98 or 120) | |
| 101 | See Note | NSS | Nut, Seal (Note: Use Item 120) | |
| 102 | | Ref | Coupling Options: | |
| 102 | 7022352 | 1 | Front Pump | |
| 102 | 7022359 | 1 | Rear Pump | |
| 103 | 7001481 | 2 | Pin | |
| 104 | See Note | NSS | Gasket, Charge Pump (Note: Use Item 120) | |
| 105 | 7021296 | 6 | Screw, Torx | |
| 106 | | Ref | Cover, Charge Pump | |
| 106 | 7022353 | 1 | Front Pump | |
| 106 | 7021297 | 1 | Rear Pump | |
| 107 | | Ref | Seal Options: | |
| 107 | See Note | NSS | O-Ring (Front Pump) (Note: Use Item 120) | |
| 107 | 7021298 | 1 | Seal (Rear Pump) | |
| 108 | | Ref | Cover, Flange Options: | |
| 108 | 7021229 | 1 | Front Pump | |
| 108 | 7021299 | 1 | Rear Pump | |
| 109 | 7007289 | 2 | Screw | |
| 110 | 7007419 | 1 | Plug (Rear Pump Only) | |
| 111 | See Note | NSS | O-Ring (Rear Pump Only) (Note: Use Item 120) | |
| 112 | 7022358 | 1 | Plug (Include Item 113) (Rear Pump Only) | |
| 113 | See Note | NSS | O-Ring (Rear Pump Only) (Note: Use Item 112 or 120) | |
| 114 | 7021256 | 1 | Plug (Include Item 115) (Rear Pump Only) | |
| 115 | See Note | NSS | O-Ring (Rear Pump Only) (Note: Use Item 114 or 120) | |
| 116 | 7024802 | 1 | Spring (Rear Pump Only) | |
| 117 | 7024803 | 1 | Poppet (Rear Pump Only) | |
| 120 | 7021280 | 1 | Seal Kit - Complete (Includes Items 8, 9, 16, 18, 30, 31, 35, 38, 40, 51, 58, 59, 60, 69, 73, 85, 88, 91, 93, 96, 99, 100, 101, 104, 107, 111, 113 & 115) | |
| | | Ref | **PISTON PUMP AND FITTING ASSEMBLY (FRONT PUMP)** | |
| | 3600412 | Ref | **Piston Pump and Fitting Assembly (Front Pump) (SN 0300128000 through 0300159999)** | B |
| | 1001109188 | Ref | **Piston Pump and Fitting Assembly (Front Pump) (SN 0300160000 through 0300174703)** | A |

| ITEM | PART NUMBER | QTY | DESCRIPTION | REV |
|---|---|---|---|---|
| 201 | 2220451 | 1 | Fitting, Straight | |
| 202 | 2220518 | 1 | Cap (100110109188 Pump Only) | |
| 203 | 2220578 | 2 | Fitting, 90 | |
| 204 | 2220700 | 2 | Fitting, Tee (100110109188 Pump Only) | |
| 205 | 2220946 | 1 | Fitting, Straight | |
| 206 | 2220947 | 2 | Fitting, Straight | |
| 207 | 2220948 | 1 | Fitting, Straight | |
| 208 | 3600363 | 1 | Pump Assembly (Includes Items 1-120) | |
| 209 | | Ref | Fitting Options: | |
| 209 | 2220376 | 1 | Fitting, Straight (3600412 Pump) | |
| 209 | 2220578 | 1 | Fitting, 90 (100110109188 Pump) | |
| | | Ref | **PISTON PUMP AND FITTING ASSEMBLY (REAR PUMP)** | |
| | 3600413 | Ref | **Piston Pump and Fitting Assembly (Rear Pump) (SN 0300128000 through 0300159999)** | A |
| | 1001109189 | Ref | **Piston Pump and Fitting Assembly (Front Pump) (SN 0300160000 through 0300174703)** | A |
| 301 | 2220578 | 2 | Fitting, 90 | |
| 302 | 2220582 | 1 | Fitting, Straight (1001109189 Pump Only) | |
| 303 | | Ref | Fitting, Tee Options: | |
| 303A | 2220700 | 1 | 3600412 Pump | |
| 303B | 2220682 | 1 | 100110109188 Pump | |
| 304 | | Ref | Fitting Options: | |
| 304 | 2220451 | 1 | 3600412 Pump (Straight Fitting) | |
| 304 | 2220738 | 1 | 100110109188 Pump (Tee Fitting) | |
| 305 | | Ref | Fitting Options: | |
| 305A | 2220852 | 1 | 3600412 Pump (Straight Fitting) | |
| 305B | 2221042 | | 100110109188 Pump (90 Fitting) | |
| 306 | 3600359 | 1 | Pump Assembly (Includes Items 1-120) | |
| 307 | 4641264 | 1 | Fitting, Straight (Check Valve) | |
| 308 | 1001094694 | 1 | Fitting, Straight (100110109189 Pump Only) | |
| 309 | 2220618 | 1 | Fitting, Straight (3600412 Pump Only) | |
| 310 | 2220622 | 1 | Fitting, Straight (3600412 Pump Only) | |

## FIGURE 2-14. GEAR PUMP ASSEMBLY

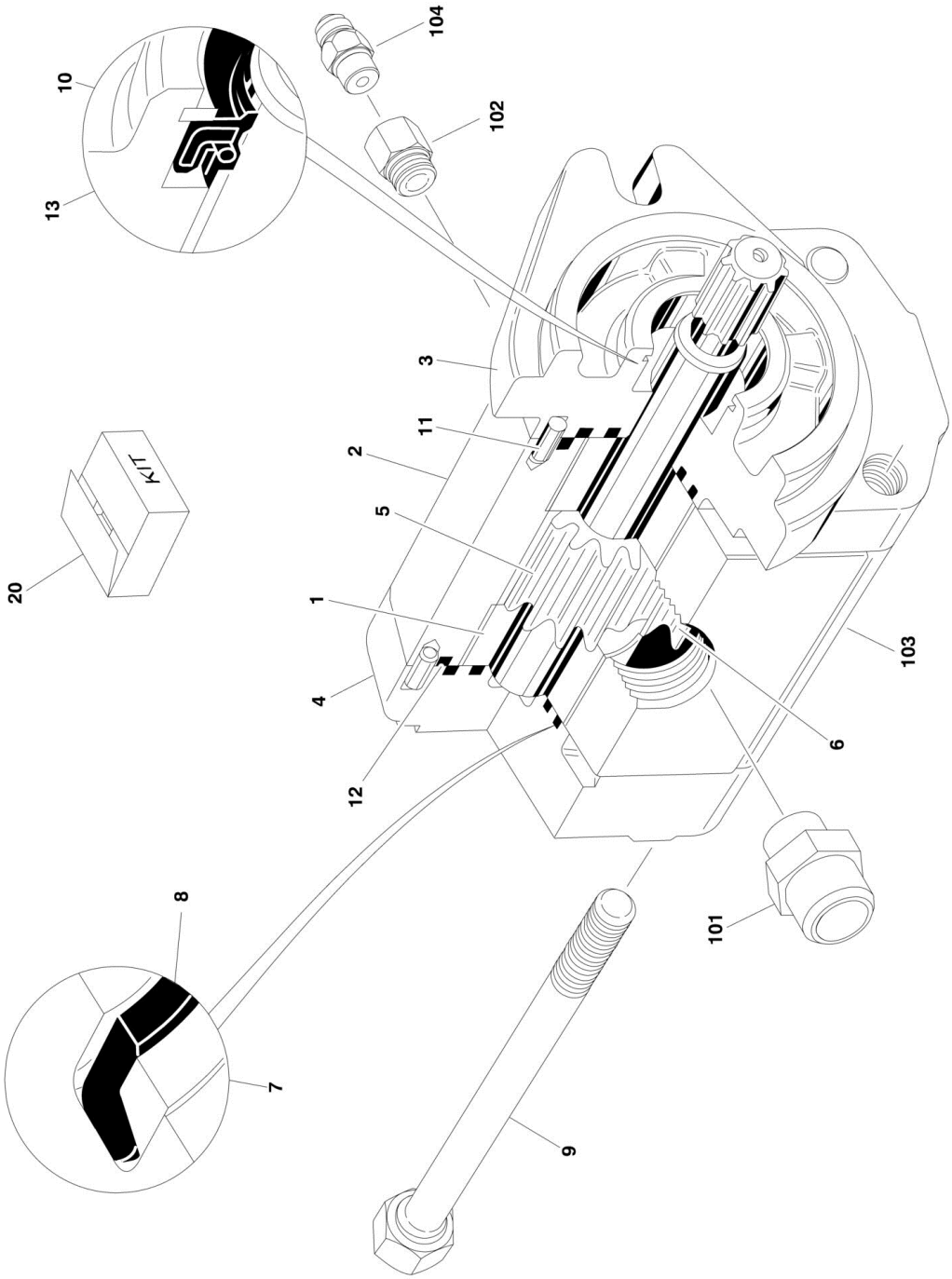

## FIGURE 2-14. GEAR PUMP ASSEMBLY

| ITEM | PART NUMBER | QTY | DESCRIPTION | REV |
|---|---|---|---|---|
| | 3600242 | Ref | **GEAR PUMP ASSEMBLY** | |
| 1 | 7010105 | 2 | Bearing/Bushing | |
| 2 | See Note | NSS | Housing (Note: Not Available - Purchase Complete Gear Pump Assembly.) | |
| 3 | See Note | NSS | Flange (Note: Not Available - Purchase Complete Gear Pump Assembly.) | |
| 4 | 7010103 | 1 | Cover | |
| 5 | 7012987 | 1 | Gear, Drive | |
| 6 | 7012988 | 1 | Gear, Idler | |
| 7 | See Note | NSS | Ring, Anti-Extrusion (Note: Use Item 20) | |
| 8 | See Note | NSS | Seal (Mote: Use Item 20) | |
| 9 | See Note | NSS | Bolt (Note: Not Available - Purchase Locally) | |
| 10 | 7010104 | 1 | Ring, Retaining | |
| 11 | See Note | NSS | Pin, Dowel (Note: Not Available for Purchase.) | |
| 12 | See Note | NSS | Seal, O-Ring (Note: Use Item 20) | |
| 13 | See Note | NSS | Seal, Shaft (Note: Use Item 20) | |
| 20 | 7007489 | 1 | Seal Kit (Includes Items 7, 8, 12 & 13) | |
| | 3600395 | Ref | **GEAR PUMP AND FITTING ASSEMBLY (SN 0300160000 through 0300174703)** | A |
| 101 | 2220376 | 1 | Fitting, Straight | |
| 102 | 2220810 | 1 | Fitting, Reducer | |
| 103 | 3600242 | 1 | Pump Assembly (Includes Items 1-13) | |
| 104 | 4640744 | 1 | Fitting, Check Valve | |

## FIGURE 2-15. TANK INSTALLATIONS

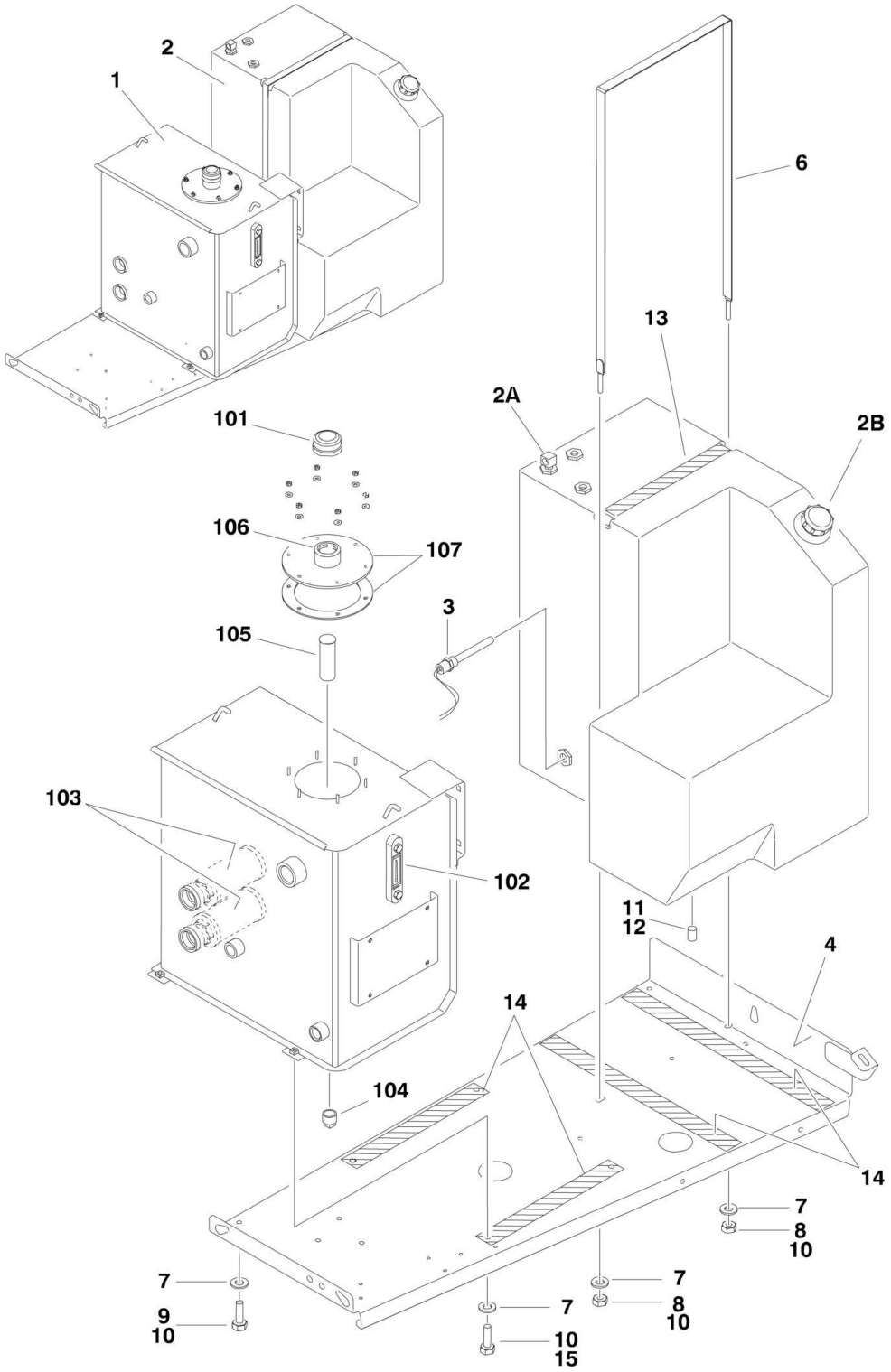

## FIGURE 2-15. TANK INSTALLATIONS

| ITEM | PART NUMBER | QTY | DESCRIPTION | REV |
|---|---|---|---|---|
| | | Ref | **TANKS INSTALLATION OPTIONS:** | |
| | 0254849 | Ref | **Standard Without Locking Fuel Tank** | 12-G |
| | 0257483 | Ref | **Optional With Locking Fuel Tank** | 3 |
| 1 | 4400449 | 1 | Hydraulic Tank Assembly (See Items 101-107 for Breakdown) | |
| 2 | 4400400 | 1 | Tank, Fuel | |
| 2A | 7019658 | 1 | Tube, Fuel Pick up | |
| 2B | | Ref | Cap Options: | |
| 2B | 7016314 | 1 | Standard - Non-Locking | |
| 2B | 1120487 | 1 | Optional Locking (Blue - Diesel Machines) (Not Included with Tank) (Note: Lock must be Purchased Locally) | |
| 3 | 4360436 | 1 | Switch, Fuel Level | |
| 4 | 1001091911 | 1 | Tray | |
| 6 | 4240113 | 1 | Strap, Tank | |
| 7 | 4751600 | 12 | Flatwasher 3/8in Regular | |
| 8 | 3311601 | 2 | Nut 3/8in-16NC | |
| 9 | 0641614 | 6 | Bolt 3/8in-16NC x 1-3/4in | |
| 10 | 0100011 | AR | Compound, Locking | |
| 11 | 0100079 | AR | Sealant, Pipe | |
| 12 | 2200222 | 1 | Fitting | |
| 13 | 4280295 | 25 in /44cm | Strip, Protective | |
| 14 | 4420038 | 70 in /1.8m | Tape, Rubber | |
| 15 | 0641608 | 4 | Bolt 3/6in-16NC x 1in | |
| | 4400449 | Ref | **HYDRAULIC TANK ASSEMBLY** | F |
| 101 | 7024444 | 1 | Filler/Breather Assembly | |
| 102 | 7024441 | 1 | Gauge, Sight | |
| 103 | 7024442 | 2 | Strainer 1-1/4inNPT | |
| 104 | 7024446 | 1 | Plug, Magnetic | |
| 105 | 7024445 | 1 | Strainer | |
| 106 | 7024443 | 1 | Neck, Filler | |
| 107 | 7024439 | 1 | Cover | |
| 107 | 7024440 | 1 | Gasket | |

## FIGURE 2-16. GROUND CONTROL ASSEMBLY (WITHOUT UGM)

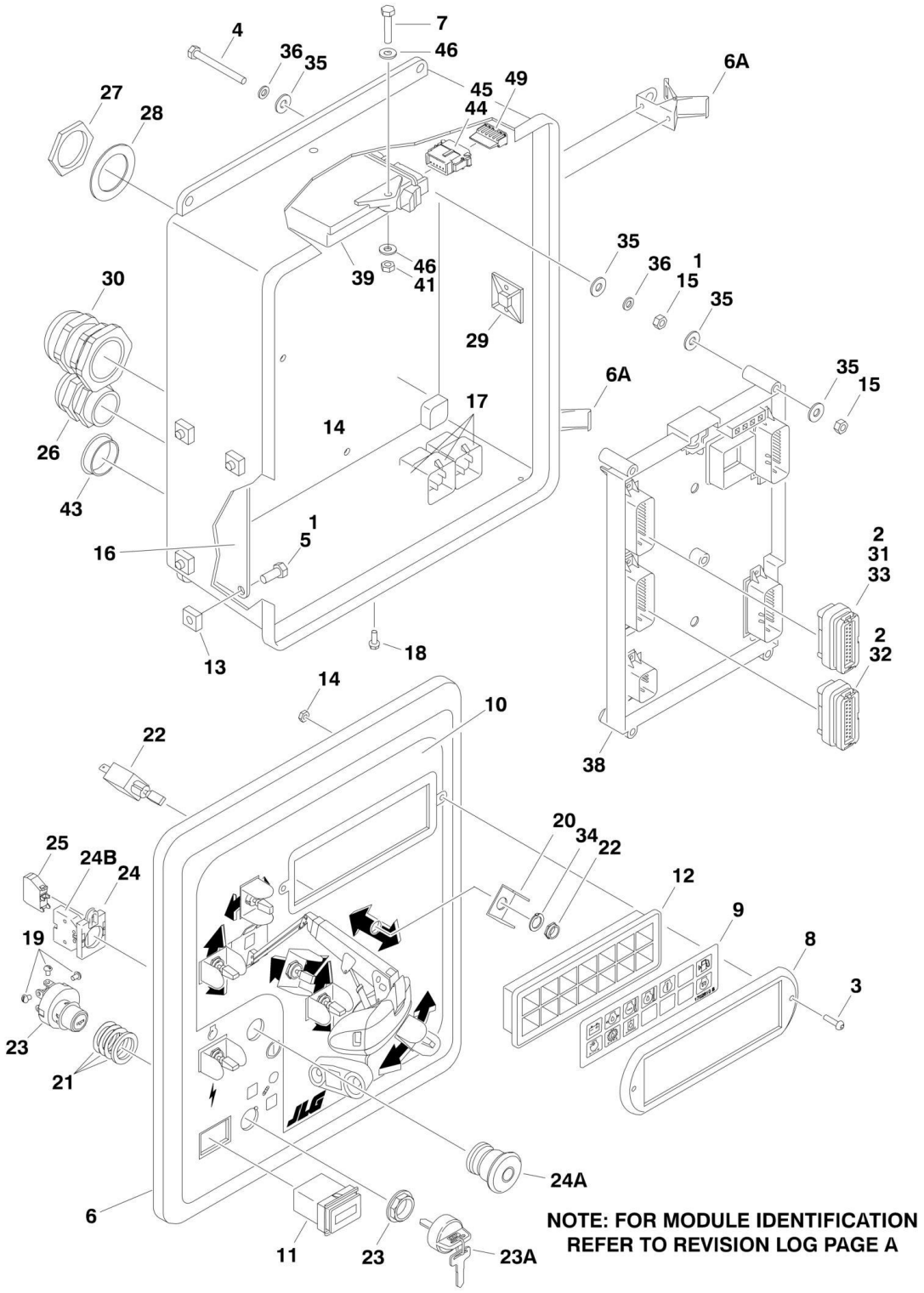

## FIGURE 2-16. GROUND CONTROL ASSEMBLY (WITHOUT UGM)

| ITEM | PART NUMBER | QTY | DESCRIPTION | REV |
|---|---|---|---|---|
| | | Ref | **Note: For Module Identification (Non-UGM/UGM), refer to Revision Log page A.** | |
| | | Ref | **GROUND CONTROL BOX ASSEMBLIES** | |
| | | Ref | **Ground Control Box Assemblies 600SC:** | |
| | 1810081 | Ref | **All Specs with Caterpillar Engine Except CE and Australian Specs** | C |
| | 1810080 | Ref | **CE and Australian Specs with Caterpillar Engine** | C |
| | 1810078 | Ref | **All Specs with Deutz Engine Except CE and Australian Specs (SN 0300128000 through 0300128968)** | A |
| | 1001102244 | Ref | **All Specs with Deutz Engine Except CE and Australian Specs (SN 0300128969 through 0300174703)** | C |
| | 1810079 | Ref | **CE and Australian Specs with Deutz Engine (SN 0300128000 through 0300128968)** | A |
| | 1001102246 | Ref | **CE and Australian Specs with Deutz Engine (SN 0300128969 through 0300174703)** | C |
| | | Ref | **Ground Control Box Assemblies 660SJC:** | |
| | 1810085 | Ref | **All Specs with Caterpillar Engine Except CE and Australian Specs** | C |
| | 1810084 | Ref | **CE and Australian Specs with Caterpillar Engine** | C |
| | 1810082 | Ref | **All Specs with Deutz Engine Except CE and Australian Specs (SN 0300128000 through 0300128968)** | A |
| | 1001102245 | Ref | **All Specs with Deutz Engine Except CE and Australian Specs (SN 0300128969 through 0300174703)** | C |
| | 1810083 | Ref | **CE and Australian Specs with Deutz Engine (SN 0300128000 through 0300128968)** | A |
| | 1001102247 | Ref | **CE and Australian Specs with Deutz Engine (SN 0300128969 through 0300174703)** | C |
| 1 | 0100011 | AR | Compound, Locking | |
| 2 | 0100048 | AR | Grease, Dielectric | |
| 3 | 0630518 | 2 | Capscrew, Button Head | |
| 4 | 0630548 | 5 | Screw, Self-Tapping | |
| 5 | 0641506 | 4 | Bolt 5/16in-18NC x 3/4in | |
| 6 | 0861872 | 1 | Box, Fiberglass | |
| 6A | 7020246 | 2 | Latch | |
| 7 | 0641410 | 2 | Bolt 1/4in-20NC x 1-1/4in | |
| 8 | 1670829 | 1 | Bezel | |
| 9 | 1706712 | 1 | Decal - Ground Control Display | |
| 10 | | Ref | Decal - Faceplate Options: | |
| 10 | 1706916 | 1 | Decal - Faceplate 600SC **(SN 0300128000 through 0300135535)** | |
| 10 | 1001102603 | 1 | Decal - Faceplate 600SC **(SN 0300135536 through 0300174703)** | |
| 10 | 1706917 | 1 | Decal - Faceplate 660SJC **(SN 0300128000 through 0300135535)** | |
| 10 | 1001102604 | 1 | Decal - Faceplat 660SJC **(SN 0300135536 through 0300174703)** | |
| 11 | 2420172 | 1 | Gauge, Hourmeter | |
| 12 | 2760105 | 1 | Housing, Display Light | |
| 13 | 3300205 | 4 | Nut, Retainer | |
| 14 | 3300408 | 4 | Locknut, Plastic Insert | |
| 15 | 3311401 | 10 | Nut 1/4in-20NC | |
| 16 | 3539219 | 1 | Plate, Reinforcement | |
| 17 | 3740049 | Ref | Relay Options: | |

| ITEM | PART NUMBER | QTY | DESCRIPTION | REV |
|---|---|---|---|---|
| 17 | 3740049 | 3 | Caterpillar Engine | |
| 17 | 3740049 | 2 | Deutz Engine | |
| 18 | 3900268 | AR | Screw, Flange #10 x 1/2in | |
| 19 | 3910804 | 6 | Screw #8-32NC x 1/4in | |
| 20 | 4060906 | Ref | Shield, Toggle Switch | |
| 20 | 4060906 | 7 | Shield, Toggle Switch **(SN 0300128000 through 0300135535)** | |
| 20 | 4060906 | 1 | Shield, Toggle Switch **(SN 0300135536 through 0300174703)** | |
| 21 | 4070987 | 1 | Shim (.015in) | |
| 22 | 4360328 | AR | Switch, Toggle | |
| 23 | | Ref | Switch, Key Options: | |
| 23 | 4360469 | 1 | All Specs Except CE and Australian Specs | |
| 23 | 4360470 | 1 | CE and Australian Specs Only | |
| 23A | 2860030 | 1 | Key Replacement | |
| 24 | 4360475 | 1 | Switch, Emergency Stop | |
| 24A | 7020175 | 1 | Cap, Mushroom Head | |
| 24B | 7020176 | 1 | Block, Contact | |
| 25 | 4360476 | 1 | Switch, Contact Block | |
| 26 | 4460426 | 1 | Connector, Strain Relief | |
| 27 | 4460470 | 1 | Nut, Terminal | |
| 28 | 4460471 | 1 | Lockwasher, Terminal | |
| 29 | 4460488 | AR | Mounting Base, Terminal | |
| 30 | 4460526 | 1 | Connector, Strain Relief | |
| 31 | 4460874 | 1 | Connector, Natural | |
| 32 | 4460875 | 1 | Connector, Gray | |
| 33 | 4460905 | AR | Plug, Terminal | |
| 34 | 4740444 | AR | Washer, Special | |
| 35 | 4751400 | 20 | Flatwasher 1/4in Regular | |
| 36 | 4761400 | 15 | Lockwasher 1/4in | |
| 37 | 4922513 | 1 | Harness, Valve (Not Shown - See ELECTRICAL SECTION for Breakdown) | |
| 38 | 1600411 | NLA | Module, Ground Control (Note: Re-calibration Required when Replaced) (Use p/n 1001149676) | |
| 39 | 1600422 | 1 | Module, Propulsion (Note: Re-calibration Required when Replaced) | |
| 41 | 3311405 | 2 | Locknut 1/4in-20NC | |
| 43 | 3520035 | 1 | Plug, Cap | |
| 44 | 4460466 | 6 | Seal, Plug | |
| 45 | 4460909 | 1 | Connector 12 Position Mini | |
| 46 | 4711400 | 4 | Flatwasher 1/4in Thin | |
| 47 | | Ref | Harness, Ground Control Box (Not Shown - See ELECTRICAL SECTION for Breakdown) | |
| 47 | 4923577 | 1 | Harness, Ground Control Box **(SN 0300128000 through 0300144060)** | |
| 47 | 1001108126 | 1 | Harness, Ground Control Box **(SN 0300144061 through 0300174703)** | |
| 48 | | Ref | Harness, Engine (Not Shown - See ELECTRICAL SECTION for Breakdown) | |
| 48 | 4923582 | 1 | Caterpillar Engine | |
| 48 | 4923257 | 1 | Deutz Engine **(SN 0300128000 through 0300128968)** | |
| 48 | 1001102161 | 1 | Deutz Engine **(SN 0300128969 through 0300174703)** | |
| 49 | 4460915 | 1 | Lock, Wedge | |

## FIGURE 2-17. GROUND CONTROL ASSEMBLY (WITH UGM)

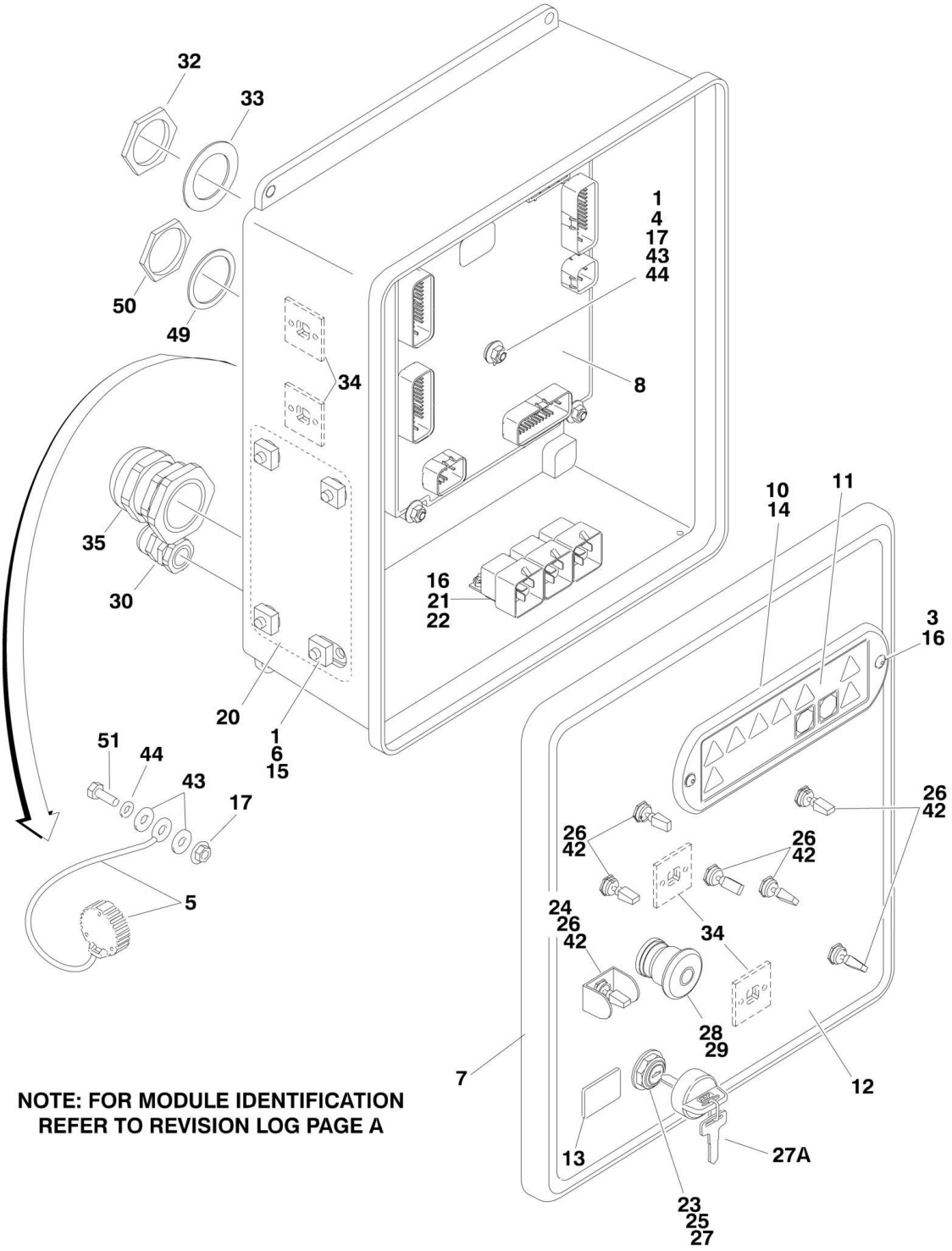

## FIGURE 2-17. GROUND CONTROL ASSEMBLY (WITH UGM)

| ITEM | PART NUMBER | QTY | DESCRIPTION | REV |
|---|---|---|---|---|
| | | Ref | **Note: For Module Identification (Non-UGM/UGM), refer to Revision Log page A.** | |
| | | Ref | **GROUND CONTROL BOX ASSEMBLIES** | |
| | | Ref | **Ground Control Box Assemblies 600SC:** | |
| | 1001108488 | Ref | **All Specs with Caterpillar Engine Except CE Specs** | B |
| | 1001108487 | Ref | **CE Spec with Caterpillar Engine** | C |
| | 1001108459 | Ref | **All Specs with Deutz Engine Except CE and Specs** | B |
| | 1001108485 | Ref | **CE Spec with Deutz Engine** | B |
| | | Ref | **Ground Control Box Assemblies 660SJC:** | |
| | 1001108490 | Ref | **All Specs with Caterpillar Engine Except CE Spec** | B |
| | 1001108489 | Ref | **CE Spec with Caterpillar Engine** | C |
| | 1001108484 | Ref | **All Specs with Deutz Engine Except CE Spec** | B |
| | 1001108486 | Ref | **CE Spec with Deutz Engine** | B |
| 1 | 0100011 | AR | Compound, Locking | |
| 2 | 0100048 | AR | Grease, Dielectric | |
| 3 | 0630518 | 2 | Capscrew, Button Head | |
| 4 | 0630548 | 5 | Screw, Self-Tapping | |
| 5 | 1001106736 | 1 | Cap, Dust | |
| 6 | 0641506 | 4 | Bolt 5/16in-18NC x 3/4in | |
| 7 | 1001111017 | 1 | Box, Fiberglass | |
| 7A | 7020246 | 2 | Latch | |
| 8 | 1001103667 | 1 | Module, Ground Control (Note: Re-calibration Required when Replaced) | |
| 10 | 1670829 | 1 | Bezel | |
| 11 | 1706712 | 1 | Decal - Ground Control Display | |
| 12 | | Ref | Decal - Faceplate Options: | |
| 12 | 1001102603 | 1 | Decal - Faceplate 600SC | |
| 12 | 1001102604 | 1 | Decal - Faceplate 660SJC | |
| 13 | 2420172 | 1 | Gauge, Hourmeter | |
| 14 | 2760105 | 1 | Housing, Display Light | |
| 15 | 3300205 | 4 | Nut, Retainer | |
| 16 | 3300408 | 4 | Locknut, Plastic Insert | |
| 17 | 77143013 | 11 | Nut 1/4in-20NC, Whiz Lock | |
| 20 | 3539219 | 1 | Plate, Reinforcement | |
| 21 | 3740049 | AR | Relay Options: | |
| 21 | | Ref | Caterpillar Engine | |
| 21 | | Ref | Deutz Engine | |
| 22 | 3900268 | AR | Screw, Flange #10 x 1/2in | |
| 23 | 3910804 | 6 | Screw #8-32NC x 1/4in | |
| 24 | 4060906 | 1 | Shield, Toggle Switch | |
| 25 | 4070987 | 1 | Shim (.125in) | |
| 26 | 4360328 | AR | Switch, Toggle | |
| 27 | | Ref | Switch, Key Options: | |
| 27 | 4360469 | 1 | All Specs Except CE Spec | |
| 27 | 4360470 | 1 | CE Specs Only | |
| 27A | 2860030 | 1 | Key Replacement | |
| 28 | 4360475 | 1 | Switch, Emergency Stop | |
| 28A | 7020175 | 1 | Cap, Mushroom Head | |
| 28B | 7020176 | 1 | Block, Contact | |
| 29 | 4360476 | 1 | Switch, Contact Block | |

| ITEM | PART NUMBER | QTY | DESCRIPTION | REV |
|---|---|---|---|---|
| 30 | 4460426 | 1 | Connector, Strain Relief | |
| 32 | 4460470 | 1 | Nut, Terminal | |
| 33 | 4460471 | 1 | Lockwasher, Terminal | |
| 34 | 4460488 | AR | Mounting Base, Terminal | |
| 35 | 4460526 | 1 | Connector, Strain Relief | |
| 42 | 4740444 | 6 | Washer, Special | |
| 43 | 4751400 | 12 | Flatwasher 1/4in Regular | |
| 44 | 4761400 | 6 | Lockwasher 1/4in | |
| 45 | 4922513 | 1 | Harness, Valve (See ELECTRICAL SECTION for Breakdown) (Not Shown) | |
| 46 | | Ref | Harness, Engine (See ELECTRICAL SECTION for Breakdown) (Not Shown) | |
| 46 | 1001108597 | 1 | Caterpillar Engine | |
| 46 | 1001108598 | 1 | Deutz Engine | |
| 47 | 1001108602 | 1 | Harness, Ground Control Box (See ELECTRICAL SECTION for Breakdown) (Not Shown) | |
| 49 | 4460496 | 1 | Lockwasher, Terminal | |
| 50 | 4460497 | 1 | Nut, Terminal | |
| 51 | 0641407 | 1 | Bolt 1/4in-20NC x 7/8in | |

## FIGURE 2-18. ELECTRICAL OPTIONS INSTALLATION (TURNTABLE MOUNTED)

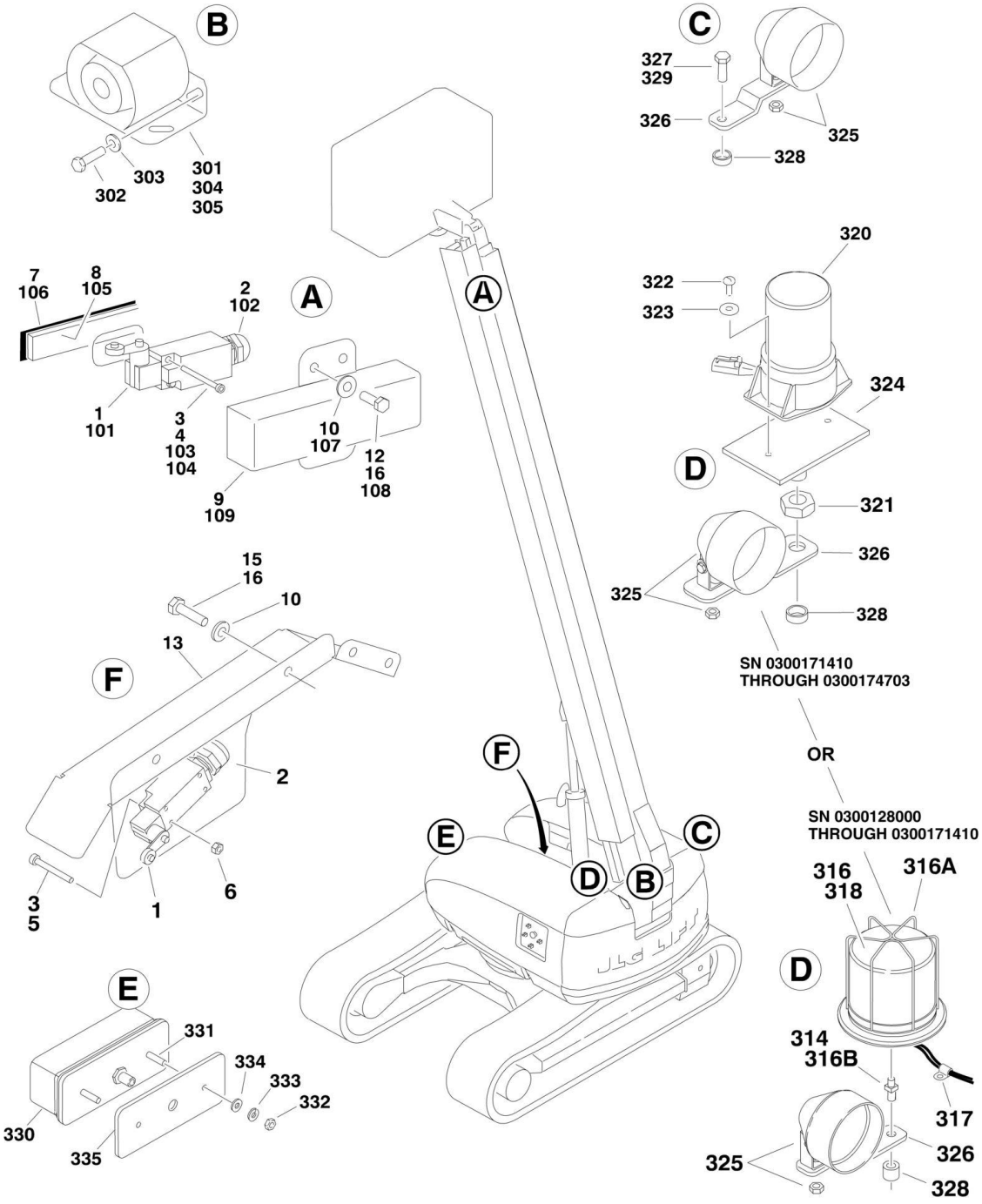

## FIGURE 2-18. ELECTRICAL OPTIONS INSTALLATION (TURNTABLE MOUNTED)

| ITEM | PART NUMBER | QTY | DESCRIPTION | REV |
|---|---|---|---|---|
| | | Ref | **ELECTRICAL OPTIONS INSTALLATIONS (TURNTABLE MOUNTED)** | |
| | | Ref | **LIMIT SWITCH INSTALLATION - DRIVE DISABLE** | |
| | 0270313 | Ref | **Limit Switch Installation - Drive Disable 600SC** | 8 |
| | 0270381 | Ref | **Limit Switch Installation - Drive Disable 660SJC** | 7 |
| 1 | 4360578 | 2 | Switch, Limit | |
| 2 | 4460968 | 2 | Connector, Strain Relief | |
| 3 | 0100035 | AR | Compound, Locking | |
| 4 | 3930816 | 2 | Capscrew, Socket Head #8-32NC x 1in | |
| 5 | 3930828 | 2 | Capscrew, Socket Head #8-32NC x 1-3/4in | |
| 6 | 3310801 | 2 | Locknut #8-32NC | |
| 7 | 4420060 | 8.7 ft /2.7m | Tape, Double Sided | |
| 8 | | Ref | Bar, Fiberglass Options: | |
| 8 | 0362528 | NLA | Bar, Fiberglass 600SC (Use p/n 1001106479) | |
| 8 | 0362951 | NLA | Bar, Fiberglass 660SJC (Use p/n 1001106484) | |
| 9 | 3380535 | 1 | Cover, Limit Switch | |
| 10 | 4751400 | AR | Flatwasher 1/4in Regular | |
| 12 | 0641403 | 4 | Bolt 1/4in-20NC x 3/8in | |
| 13 | 1670818 | 1 | Cover | |
| 15 | 3931408 | 4 | Capscrew, Socket Head 1/4in-20NC x 1/2in | |
| 16 | 0100011 | AR | Compound, Locking | |
| | 0256305 | Ref | **LIMIT SWITCHES INSTALLATION - TRANSPORT** | 5 |
| 101 | 4360578 | 1 | Switch, Limit | |
| 102 | 4460968 | 1 | Connector, Strain Relief | |
| 103 | 0100035 | AR | Compound, Locking | |
| 104 | 3930816 | 2 | Capscrew, Socket Head #8-32NC x 1in | |
| 105 | 0362609 | NLA | Bar, Fiberglass (Use p/n 1001106481) | |
| 106 | 4420054 | 17.1 ft /5.2m | Tape, Double Sided | |
| 107 | 4751400 | 4 | Flatwasher 1/4in Regular | |
| 108 | 0641403 | 4 | Bolt 1/4in-20NC x 3/8in | |
| 109 | 3380535 | 1 | Cover, Limit Switch | |
| | 0270833 | Ref | **ALARMS INSTALLATIONS** | C |
| 301 | 0257887 | 1 | Alarm/Harness Assembly | |
| 302 | 0641406 | 2 | Bolt 1/4in-20NC x 3/4in | |
| 303 | 4711400 | 2 | Flatwasher 1/4in Thin | |
| 304 | 0100048 | AR | Grease, Dielectric | |
| 305 | 0100011 | AR | Compound, Locking | |
| | 0270805 | Ref | **STROBE LIGHT INSTALLATIONS (AMBER) (OPTIONAL) (SN 0300128000 through 0300171410)** | C |
| 314 | 0100011 | AR | Compound, Locking | |
| 315 | 4240032 | 1 | Tie Strap | |
| 316 | 0272507 | 1 | Strobe Light/Guard/Harness Assembly | B |
| 316 | | Ref | Bulb, Replacement Options: | |
| 316 | 7016380 | 1 | Bulb for ECCO Model 6640 | |
| 316 | 70001941 | 1 | Bulb for ECCO Model 6650 | |
| 316A | | Ref | Guard Options: | |
| 316A | 4060907 | 1 | Guard for ECCO Model 6640 | |
| 316A | 2920215 | 1 | Guard for ECCO Model 6650 | |

| ITEM | PART NUMBER | QTY | DESCRIPTION | REV |
|---|---|---|---|---|
| 316B | | Ref | Adapter Options: | |
| 316B | 0630491 | 1 | Adapter for ECCO Model 6640 | |
| 316B | 0080241 | 1 | Adapter for ECCO Model 6650 | |
| 317 | 4460234 | 1 | Clamp | |
| 318 | 0100048 | AR | Sealant, Silicone | |
| | 1001149955 | Ref | **STROBE LIGHT INSTALLATIONS (AMBER) (OPTIONAL) (SN 0300171410 through 0300174703)** | C |
| | 1001150406 | Ref | **STROBE LIGHT ASSEMBLY (AMBER)** | A |
| 320 | 2920161 | 1 | Strobe Light/Harness Assembly | |
| 320 | 7016319 | 1 | Bulb | |
| 320 | 7016372 | 1 | Lens | |
| 321 | 3312602 | 1 | Nut, Jam 1in-8NC | |
| 321 | 0100035 | AR | Compound, Locking | |
| 322 | 3900085 | 2 | Screw #10-32 x 1/2in | |
| 323 | 4751000 | 2 | Flatwasher 1/4in Thin | |
| 324 | 1001149994 | 1 | Mount Strobe | |
| | 0271552 | Ref | **LIGHTS INSTALLATIONS (OPTIONAL)** | C |
| 325 | 2920110 | 2 | Headlight | |
| 326 | 0902206 | 2 | Bracket, Mounting | |
| 327 | 0642612 | 1 | Bolt 1in-8NC x 1-1/2in | |
| 328 | 4220162 | 2 | Spacer | |
| 329 | 0100011 | AR | Compound, Locking | |
| 330 | 2920113 | 2 | Taillight | |
| 331 | 3911040 | 4 | Screw, Machine #10-24NC x 2-1/2in | |
| 332 | 3311005 | 4 | Nut #10-24NC | |
| 333 | 4751000 | 4 | Flatwasher #10 Regular | |
| 334 | 4740362 | 4 | Washer, Fender | |
| 335 | 3960461 | 2 | Gasket | |
| 337 | 4240032 | 12 | Tie-Strap (Not Shown) | |
| 338 | 4460234 | 12 | Mount, Tie-Strap (Not Shown) | |
| 339 | 4360336 | 1 | Switch, Toggle (Not Shown - Located on Console) | |
| 340 | 3790012 | 1 | O-Ring (Not Shown - Located on Console) | |
| 341 | 3820001 | 11 | Rivet (Not Shown - Use to Mount Item 338) | |

## FIGURE 2-19. HOODS (ABS) AND LIFTING PLATE INSTALLATIONS

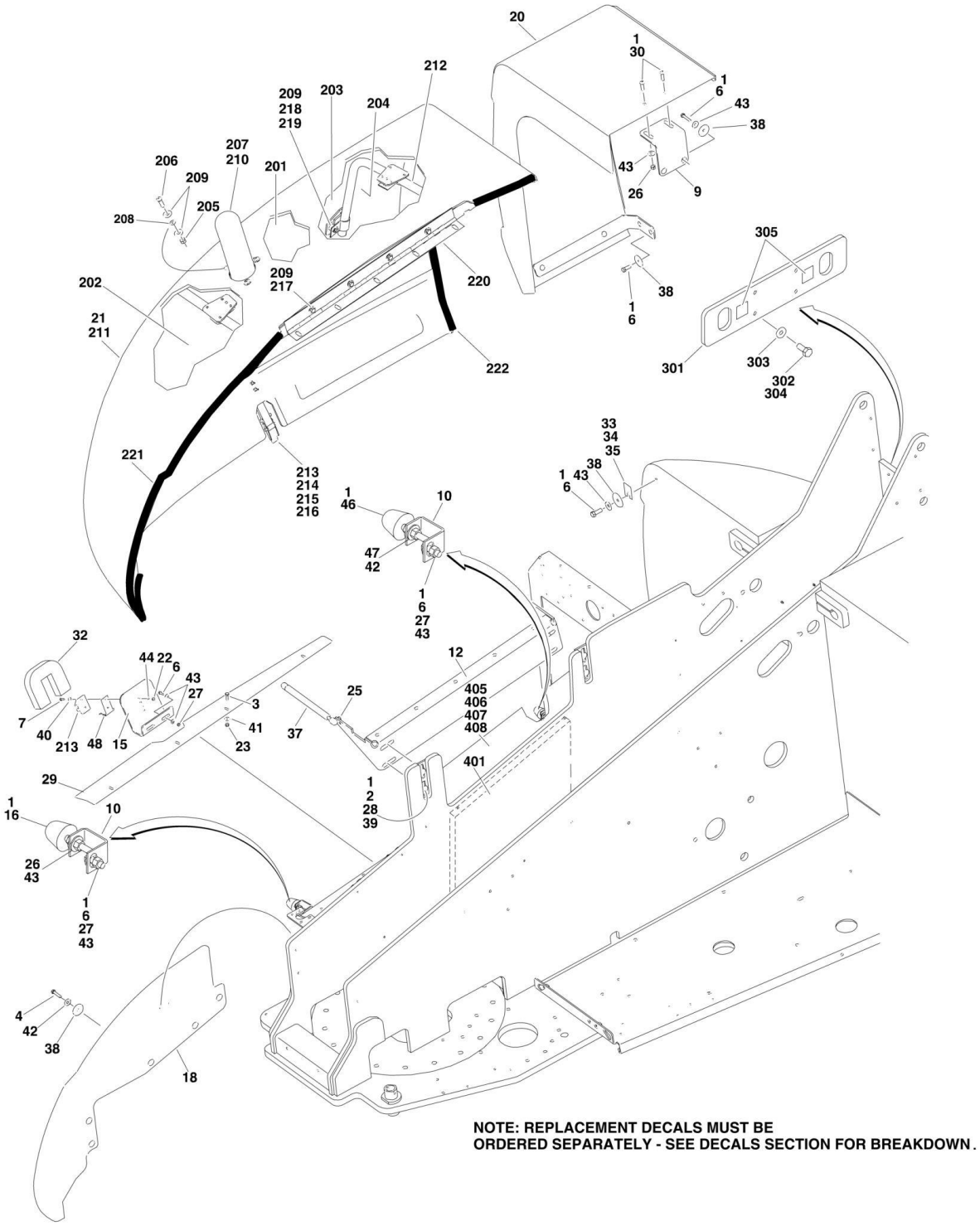

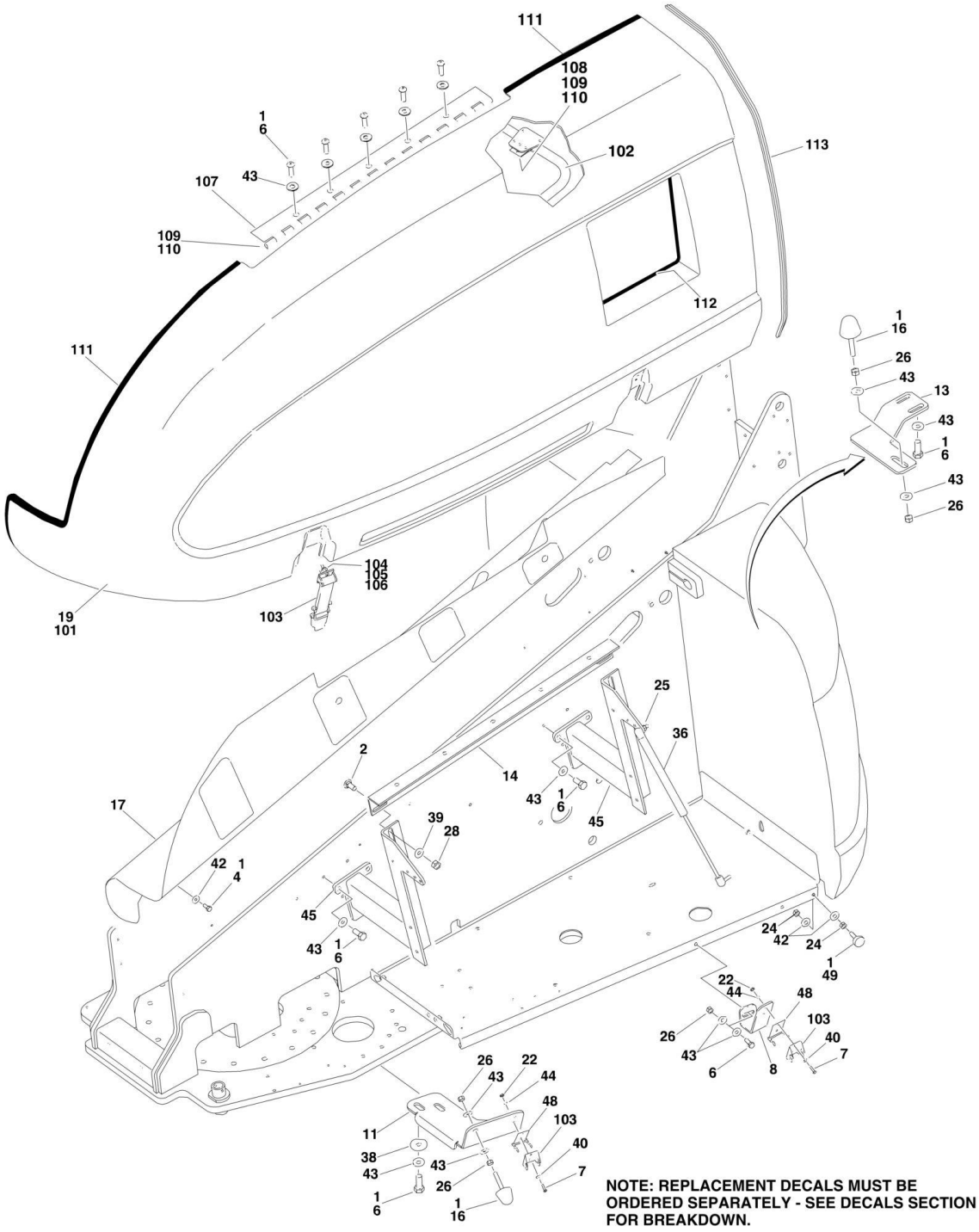
111
108
109
110
1
6
102
113
107
43
109
110
112
111
1
16
26
43
13
43
1
6
43
26
104
105
106
19
101
103
25
36
2
14
43
1
6
17
39
28
45
42
1
4
45
43
1
6
24
42
24
1
49
22
44
48
103
26
43
40
7
6
8
26
22
43
44
48
103
11
40
38
43
43
7
26
1
6
1
16
NOTE: REPLACEMENT DECALS MUST BE
ORDERED SEPARATELY - SEE DECALS SECTION
FOR BREAKDOWN.

## FIGURE 2-19. HOODS (ABS) AND LIFTING PLATE INSTALLATIONS

| ITEM | PART NUMBER | QTY | DESCRIPTION | REV |
|---|---|---|---|---|
| | | Ref | **HOODS INSTALLATION** | |
| | 0274751 | Ref | **Caterpillar Engine Machines** | G |
| | 0274751 | Ref | **Deutz Tier II Engine Machines (SN 0300128000 through 0300128968)** | G |
| | 1001100954 | Ref | **Deutz Tier III/IVi Engine Machines (SN 0300128969 through 0300174703)** | A |
| 1 | 0100011 | AR | Compound, Locking | |
| 2 | 0630507 | 6 | Bolt, Carriage 1/2in-13NC x 1-1/4in | |
| 3 | 0641406 | 4 | Bolt 1/4in-20NC x 3/4in | |
| 4 | 0641506 | AR | Bolt 5/16in-18NC x 3/4in | |
| 6 | 0641608 | 30 | Bolt 3/8in-16NC x 1in | |
| 7 | 0721006 | 6 | Bolt #10-24NC x 3/4in | |
| 8 | 0902143 | 1 | Bracket | |
| 9 | 0902161 | 1 | Bracket, Hood Spacer | |
| 10 | 0902219 | 2 | Bracket, Bumper | |
| 11 | 0902223 | 1 | Bracket, Latch | |
| 12 | 0902351 | 1 | Bracket, Hood Mount | |
| 13 | 0902384 | 1 | Bracket, Hood Mount | |
| 14 | 0902416 | 1 | Bracket, Hood Mount | |
| 15 | 0902491 | 1 | Bracket, Hood Latch | |
| 16 | 0940071 | 3 | Bumper | |
| 17 | 1670771 | 1 | Cover | |
| 18 | 1670779 | 1 | Cover, Engine/Turntable | |
| 19 | 1671228 | 1 | Hood Assembly - Tank Side (See Items 101-113 for Breakdown) | |
| 20 | 1671233 | 1 | Hood, Engine Spacer | |
| 21 | | Ref | Hood Assembly - Engine Side Options (See Items 201-222 for Breakdown): | |
| 21 | 1671247 | 1 | Caterpillar Engine Machines | |
| 21 | 1671247 | 1 | Deutz Tier II Engine Machines **(SN 0300128000 through 0300128968)** | |
| 21 | 1001100955 | 1 | Deutz Tier III/IVi Engine Machines **(SN 0300128969 through 0300174703)** | |
| 22 | 3311001 | 6 | Nut #10-24NC | |
| 23 | 3311405 | 4 | Locknut 1/4in-20NC | |
| 24 | 3311501 | AR | Nut 5/16in-18NC | |
| 25 | 3311505 | 3 | Locknut 5/16in-18NC | |
| 26 | 3311601 | AR | Nut 3/8in-16NC | |
| 27 | 3311605 | 5 | Locknut 3/8in-16NC | |
| 28 | 3311805 | 6 | Locknut 1/2in-13NC | |
| 29 | 3571712 | 1 | Plate, Seal | |
| 30 | 3900232 | 2 | Screw, Button Head 3/8in-16NC x 1-1/4in | |
| 31 | 3960389 | 3.5 ft /1.1m | Seal | |
| 32 | 3960470 | 1 | Seal | |
| 33 | 4070410 | AR | Shim 1/16in | |
| 34 | 4070411 | AR | Shim 1/8in | |
| 35 | 4070412 | AR | Shim 3/16in | |
| 36 | 4160139 | 2 | Spring, Gas (Tank Side) | |
| 37 | 4160143 | 1 | Spring, Gas (Tank Side) | |
| 38 | 4740076 | AR | Washer, Fender | |
| 39 | 4740171 | 6 | Washer, Hardened | |

| ITEM | PART NUMBER | QTY | DESCRIPTION | REV |
|---|---|---|---|---|
| 40 | 4751000 | 6 | Flatwasher #10 Regular | |
| 41 | 4751400 | 4 | Flatwasher 1/4in Regular | |
| 42 | 4751500 | AR | Flatwasher 5/16in Regular | |
| 43 | 4751600 | AR | Flatwasher 3/8in Regular | |
| 44 | 4761000 | 6 | Lockwasher #10 | |
| 45 | 4845356 | 2 | Hood Mount Weldment | |
| 46 | 0940088 | 1 | Bumper | |
| 47 | 3321501 | 2 | Nut 5/16in-24NF | |
| 48 | 2940188 | 2 | Latch, Spring Clip | |
| 49 | 0940049 | 1 | Stopper, Hood | |
| | 1671228 | Ref | **HOOD TANK SIDE** | A |
| 101 | 1671231 | 1 | Shell, Tank Side | |
| 102 | 1671232 | 1 | Frame, Tank Side | |
| 103 | 2940088 | 2 | Latch | |
| 104 | 0721008 | 4 | Bolt #10-24NC x 1in | |
| 105 | 4751000 | 4 | Flatwasher #10 Regular | |
| 106 | 3311001 | 4 | Nut #10-24NC | |
| 107 | 2600233 | 1 | Hinge | |
| 108 | 1321384 | 4 | Hold Down | |
| 109 | 0641606 | 9 | Bolt 3/8in-16NC x 3/4in | |
| 110 | 4751600 | 9 | Flatwasher 3/8in Regular | |
| 111 | 3960464 | 7 ft/2.1m | Seal | |
| 112 | 3960438 | 5 ft/1.5m | Seal | |
| 113 | 3960462 | 4.5 ft /1.4m | Seal | |
| | | Ref | **HOOD ENGINE SIDE** | |
| | 1671247 | Ref | **Caterpillar Engine Machines** | C |
| | 1671247 | Ref | **Deutz Tier II Engine Machines (SN 0300128000 through 0300128968)** | C |
| | 1001100955 | Ref | **Deutz Tier III/IVi Engine Machines (SN 0300128969 through 0300174703)** | D |
| 201 | | Ref | Foam, Acoustical Options: | |
| 201 | 1001101391 | 1 | Caterpillar Engine Machines | |
| 201 | 1001101391 | 1 | Deutz Tier II Engine Machines **(SN 0300128000 through 0300128968)** | |
| 201 | 1001101673 | 1 | Deutz Tier III/IVi Engine Machines **(SN 0300128969 through 0300174703)** | |
| 202 | 2820233 | 1 | Insulation, Rear | |
| 203 | 2820234 | 1 | Insulation, Center | |
| 204 | 2820235 | 1 | Insulation, Rear | |
| 205 | 3311605 | 3 | Locknut 3/8in-16NC | |
| 206 | 3900232 | 3 | Screw, Button Head 3/8in-16NC x 1-1/4in | |
| 207 | | Ref | Gasket, Heat Options: | |
| 207 | 1001101392 | 1 | Caterpillar Engine Machines | |
| 207 | 1001101392 | 1 | Deutz Tier II Engine Machines **(SN 0300128000 through 0300128968)** | |
| 207 | 1001101623 | 1 | Deutz Tier III/IVi Engine Machines **(SN 0300128969 through 0300174703)** | |
| 208 | 4740500 | 3 | Washer - Special | |
| 209 | 4751600 | 14 | Flatwasher 3/8in Regular | |
| 210 | | Ref | Tube Weldment, Exhaust Options | |
| 210 | 4845411 | 1 | Caterpillar Engine Machines | |
| 210 | 4845411 | 1 | Deutz Tier II Engine Machines **(SN 0300128000 through** | |

| ITEM | PART NUMBER | QTY | DESCRIPTION | REV |
|---|---|---|---|---|
| | | | **0300128969)** | |
| 210 | 1001099121 | 1 | Deutz Tier III/IVi Engine Machines **(SN 0300128969 through 0300174703)** | |
| 211 | | Ref | Hood Kit, Engine Side (Includes Items 201-204, 207 & 208) | |
| 211 | 1001097961 | 1 | Caterpillar Engine Machines | |
| 211 | 1001097961 | 1 | Deutz Tier II Engine Machines **(SN 0300128000 through 0300128968)** | |
| 211 | See Note | 1 | Deutz Tier III/IVi Engine Machines (Note: Not Available - Purchase Individual Items.) **(SN 0300128969 through 0300174703)** | |
| 212 | 1671230 | 1 | Frame, Engine Side | |
| 213 | 2940088 | 1 | Latch | |
| 214 | 0721008 | 2 | Bolt #10-24NC x 1in | |
| 215 | 4751000 | 2 | Flatwasher #10 Regular | |
| 216 | 3311001 | 2 | Nut #10-24NC | |
| 217 | 0641608 | 4 | Bolt 3/8in-16NC x 1in | |
| 218 | 1321384 | 4 | Hold Down | |
| 219 | 0641606 | 4 | Bolt 3/8in-16NC x 3/4in | |
| 220 | 2600209 | 1 | Hinge | |
| 221 | 3960464 | 5.5 ft /1.7m | Seal | |
| 222 | 3960462 | 5.1 ft /1.6m | Seal | |
| | 0256122 | Ref | **LIFTING PLATE INSTALLATION** | 1-B |
| 301 | 3539590 | 1 | Plate, Lifting | |
| 302 | 0682014 | 4 | Bolt 5/8in-11NC x 1-3/4in (Grade 8) | |
| 303 | 4892000 | 4 | Flatwasher 5/8in Hardened | |
| 304 | 0100019 | AR | Compound, Locking | |
| 305 | 1701500 | 2 | Decal - Tie Down/Lift | |
| | 0256823 | Ref | **NOISE REDUCTION INSTALLATION** | 3 |
| 401 | 2820078 | 1 | Foam, Acoustical | |
| 405 | 3539955 | 1 | Plate, Baffle | |
| 406 | 0641506 | 2 | Bolt 5/16in-18NC x 3/4in | |
| 407 | 4751500 | 2 | Flatwasher 5/16in Regular | |
| 408 | 0100011 | AR | Compound, Locking | |

## FIGURE 2-20. HOODS (STEEL) AND LIFTING PLATE INSTALLATIONS

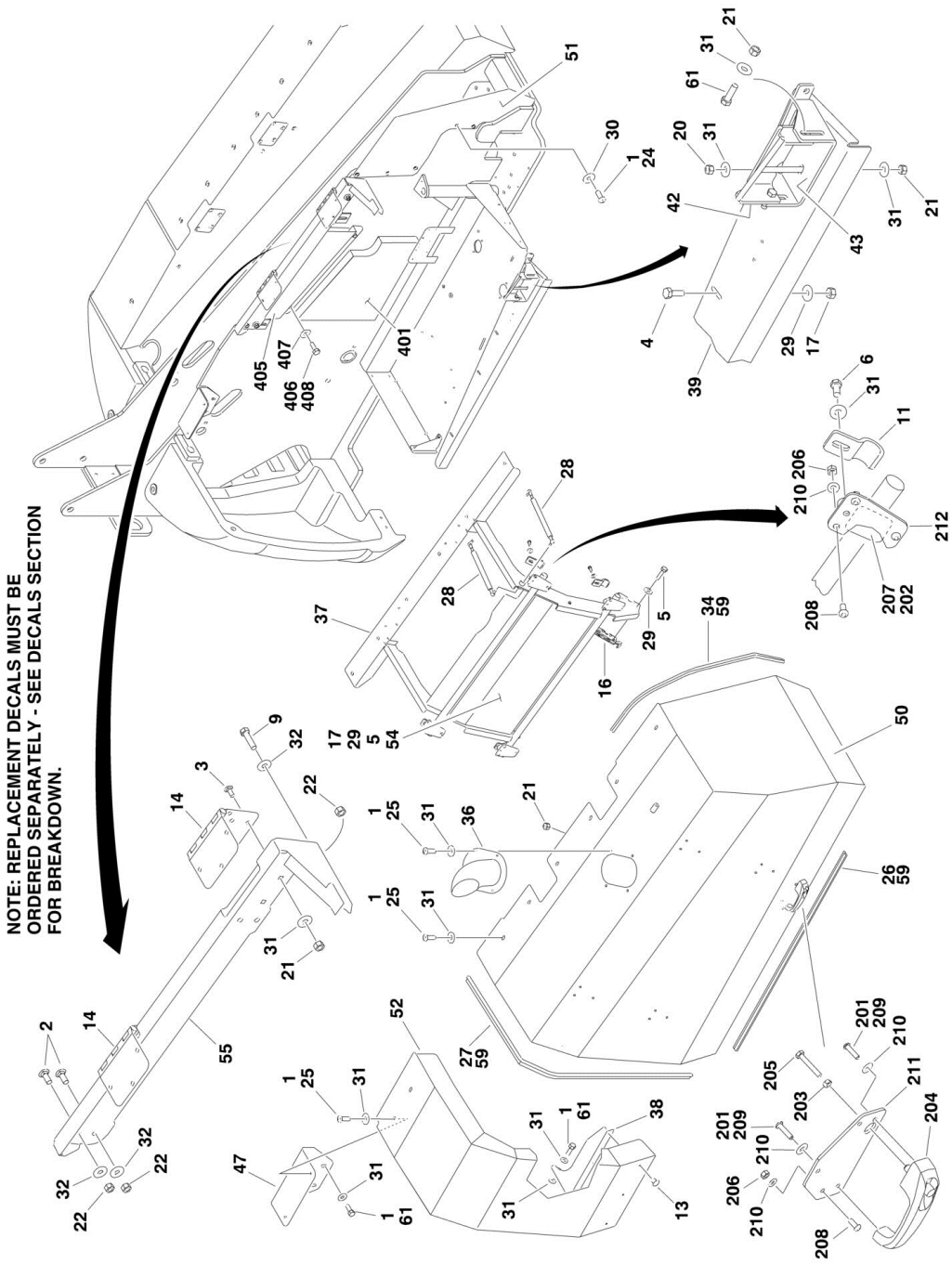

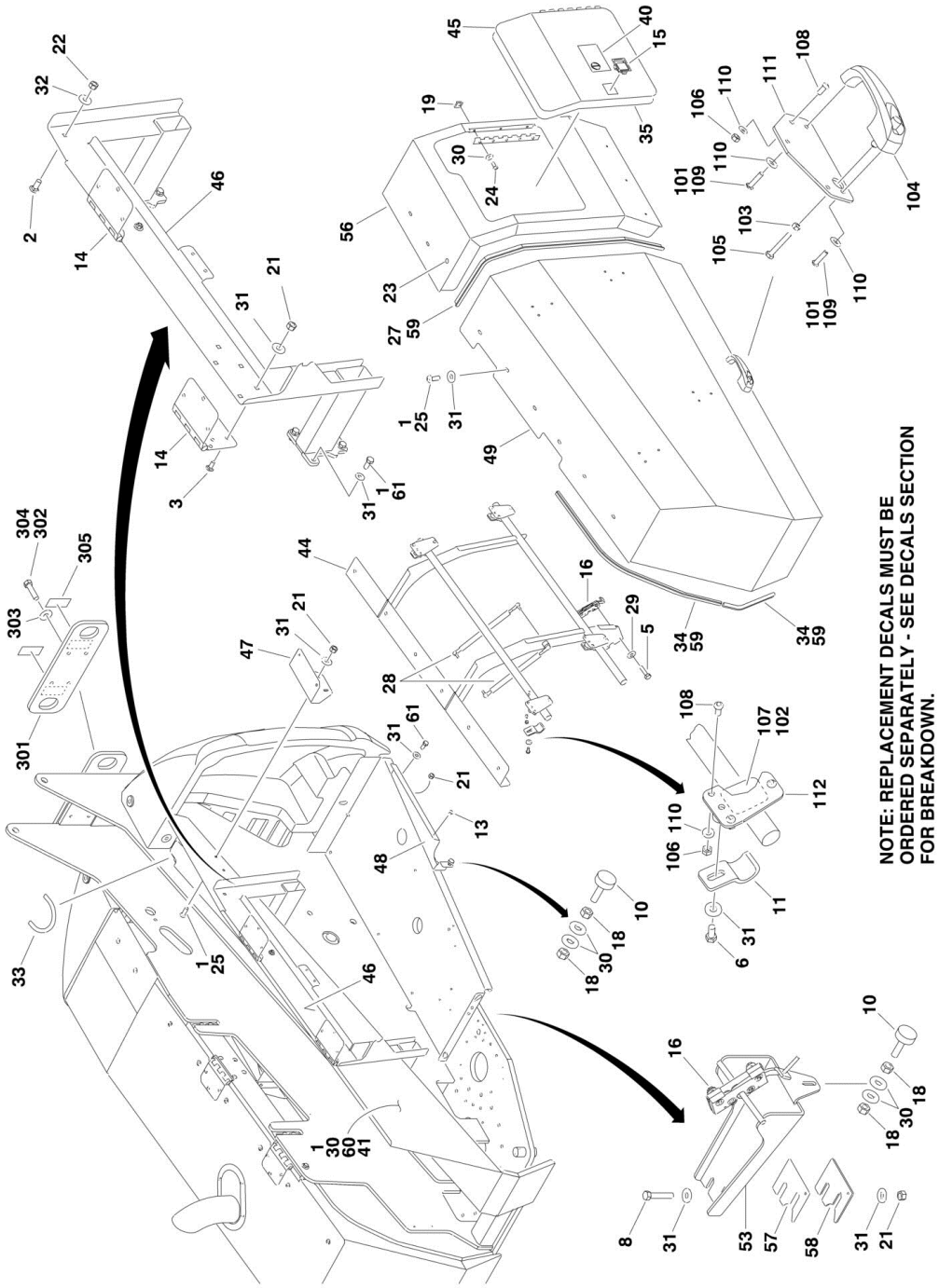
NOTE: REPLACEMENT DECALS MUST BE
ORDERED SEPARATELY - SEE DECALS SECTION
FOR BREAKDOWN.

## FIGURE 2-20. HOODS (STEEL) AND LIFTING PLATE INSTALLATIONS

| ITEM | PART NUMBER | QTY | DESCRIPTION | REV |
|---|---|---|---|---|
| | | Ref | **HOODS INSTALLATIONS** | |
| | 1001118718 | Ref | **Caterpillar Engines** | D |
| | | Ref | **Deutz Engines Options:** | |
| | 1001117429 | Ref | **Deutz Engines (SN 0300128000 through 0300167720)** | D |
| | 1001147830 | Ref | **Deutz Engines (SN 0300167721 through 0300174703)** | A |
| 1 | 0100011 | AR | Compound, Locking | |
| 2 | 0630507 | 4 | Bolt, Carriage 1/2in-13NC x 1-1/4in | |
| 3 | 0630485 | 19 | Bolt, Carriage 1/2in-13NC x 1in | |
| 4 | 0641406 | 4 | Bolt 1/4in-20NC x 3/4in | |
| 5 | 0641408 | AR | Bolt 1/4in-20NC x 1in | |
| 6 | 0641607 | 8 | Bolt 3/8in-16NC x 7/8in | |
| 7 | 0641611 | 2 | Bolt 3/8in-16NC x 1-3/8in | |
| 8 | 0641616 | 2 | Bolt 3/8in-16NC x 2in | |
| 9 | 0641818 | 1 | Bolt 1/2in-13NC x 2-1/4in | |
| 10 | 0940049 | 2 | Stopper, Hood | |
| 11 | 1321384 | 8 | Clamp, Hood | |
| 13 | 2080040 | 6 | Fastener, Huck | |
| 14 | 2600280 | 4 | Hinge, Offset | |
| 15 | 2940045 | 1 | Latch, Paddle | |
| 16 | 2940173 | 2 | Latch, Rotary | |
| 17 | 3311405 | AR | Locknut 1/4in-20NC | |
| 18 | 3311501 | 4 | Nut 5/16in-18NC | |
| 19 | 3300364 | 3 | Nut, Tinnerman 5/16in-18NC | |
| 20 | 3311601 | 1 | Nut 3/8in-16NC | |
| 21 | 3311605 | 46 | Locknut 3/8in-16NC | |
| 22 | 3311805 | 5 | Locknut 1/2in-13NC | |
| 23 | 3520030 | 1 | Plug, Hole | |
| 24 | 3900210 | 8 | Screw, Button Head 5/16in-18 x 3/4in | |
| 25 | 3900316 | 34 | Screw, Button Head 3/8in-16NC x 1in | |
| 26 | 3960389 | 50 in/1.3m | Seal | |
| 27 | 3960462 | 9.5 ft /2.9m | Seal | |
| 28 | 4160194 | 4 | Spring, Gas | |
| 29 | 4751400 | AR | Flatwasher 1/4in Regular | |
| 30 | 4751500 | 17 | Flatwasher 5/16in Regular | |
| 31 | 4751600 | 89 | Flatwasher 3/8in Regular | |
| 32 | 4740171 | 6 | Flatwasher 1/2in Hardened | |
| 33 | 90206194 | 10 in /24cm | Flex-Trim | |
| 34 | 1001110166 | 8 ft/2.5m | Seal | |
| 35 | 1001113047 | 77 in/2m | Seal | |
| 36 | | Ref | Pipe, Exhaust Options: | |
| 36 | 1001116457 | 1 | Caterpillar Engines | |
| 36 | 1001116457 | 1 | Deutz Engines **(SN 0300128000 through 0300167720)** | |
| 36 | 1001116456 | 1 | Deutz Engines **(SN 0300167721 through 0300174703)** | |
| 37 | 1001116562 | 1 | Support | |
| 38 | 1001117234 | 1 | Bracket, Hood | |
| 39 | 1001117249 | 1 | Plate, Seal | |
| 40 | 1001117307 | 1 | Decal - Emergency Stop | |
| 41 | 1001117430 | 1 | Trough, Powertrack | |

| ITEM | PART NUMBER | QTY | DESCRIPTION | REV |
|---|---|---|---|---|
| 42 | 1001117523 | 1 | Bracket, Striker Plate | |
| 43 | 1001117525 | 1 | Bracket, Striker Plate | |
| 44 | 1001117543 | 1 | Support | |
| 45 | 1001117598 | 1 | Door | |
| 46 | 1001117612 | 1 | Mount, Hood | |
| 47 | 1001118264 | 2 | Bracket, Hood Mounting | |
| 48 | 1001118550 | 1 | Bracket, Hood Support | |
| 49 | 1001118715 | 1 | Hood Assembly - Tank Side (See Items 101-112 for Breakdown) | |
| | | Ref | **Note: Replacement Decals must be Purchased Separately - See DECALS SECTION.** | |
| 50 | 1001118716 | 1 | Hood Assembly - Engine Side (See Items 201-212 for Breakdown) | |
| | | Ref | **Note: Replacement Decals must be Purchased Separately - See DECALS SECTION.** | |
| 51 | 1001118735 | 1 | Plate, Filler | |
| 52 | 1001119283 | 1 | Hood, Fixed Engine Side | |
| | | Ref | **Note: Replacement Decals must be Purchased Separately - See DECALS SECTION.** | |
| 53 | 1001125097 | 1 | Bracket, Striker | |
| 54 | | Ref | Shield, Heat | |
| 54 | Not Required | 0 | Caterpillar Engines | |
| 54 | 1001120508 | 1 | Deutz Engines | |
| 55 | 1001121059 | 1 | Bracket, Hinge Support | |
| 56 | 1001121061 | 1 | Hood, Fixed Tank Side | |
| | | Ref | **Note: Replacement Decals must be Purchased Separately - See DECALS SECTION.** | |
| 57 | 1001121118 | AR | Shim 3mm | |
| 58 | 1001121119 | AR | Shim 1.5mm | |
| 59 | 0100081 | AR | Adhesive | |
| 60 | 0641506 | 5 | Bolt 5/16in-18NC x 3/4in | |
| 61 | 0641608 | 14 | Bolt 3/8in-16NC x 1in | |
| | 1001118715 | Ref | **HOOD TANK SIDE** | E |
| 101 | 0100011 | AR | Compound, Locking | |
| 102 | 0100081 | AR | Adhesive | |
| 103 | 0700616 | 1 | Bolt M6 x 40mm | |
| 104 | 2560187 | 1 | Handle, Push Button | |
| 105 | 3290601 | 1 | Nut M6 | |
| 106 | 3311505 | 15 | Locknut 5/16in-18NC | |
| 107 | 3340877 | 4 | Pad | |
| 108 | 3900210 | 15 | Screw, Button Head 5/16in-18NC x 3/4in | |
| 109 | 3900363 | 2 | Screw, Button Head M6 x 25mm | |
| 110 | 4711500 | 17 | Flatwasher 5/16in Thin | |
| 111 | 1001116290 | 1 | Plate, Latch Mounting | |
| 112 | 1001116292 | 4 | Mount, Clamp | |
| | 1001118716 | Ref | **HOOD ENGINE SIDE** | D |
| 201 | 0100011 | AR | Compound, Locking | |
| 202 | 0100081 | AR | Adhesive | |
| 203 | 0700616 | 1 | Bolt M6 x 40mm | |
| 204 | 2560187 | 1 | Handle, Push Button | |
| 205 | 3290601 | 1 | Nut M6 | |
| 206 | 3311505 | 15 | Locknut 5/16in-18NC | |
| 207 | 3340877 | 4 | Pad | |

| ITEM | PART NUMBER | QTY | DESCRIPTION | REV |
|---|---|---|---|---|
| 208 | 3900210 | 15 | Screw, Button Head 5/16in-18NC x 3/4in | |
| 209 | 3900363 | 2 | Screw, Button Head M6 x 25mm | |
| 210 | 4711500 | 17 | Flatwasher 5/16in Thin | |
| 211 | 1001116290 | 1 | Plate, Latch Mounting | |
| 212 | 1001116292 | 4 | Mount, Clamp | |
| | 0256122 | Ref | **LIFTING PLATE INSTALLATION** | 1-B |
| 301 | 3539590 | 1 | Plate, Lifting | |
| 302 | 0682014 | 4 | Bolt 5/8in-11NC x 1-3/4in (Grade 8) | |
| 303 | 4892000 | 4 | Flatwasher 5/8in Hardened | |
| 304 | 0100019 | AR | Compound, Locking | |
| 305 | 1701500 | 2 | Decal - Tie Down/Lift | |
| | 0256823 | Ref | **NOISE REDUCTION INSTALLATION (DIESEL MACHINES)** | 3 |
| 401 | 2820078 | 1 | Foam, Acoustical | |
| 405 | 3539955 | 1 | Plate, Baffle | |
| 406 | 0641506 | 2 | Bolt 5/16in-18NC x 3/4in | |
| 407 | 4751500 | 2 | Flatwasher 5/16in Regular | |
| 408 | 0100011 | AR | Compound, Locking | |

## FIGURE 2-21. ENGINE TRAY JACK INSTALLATION

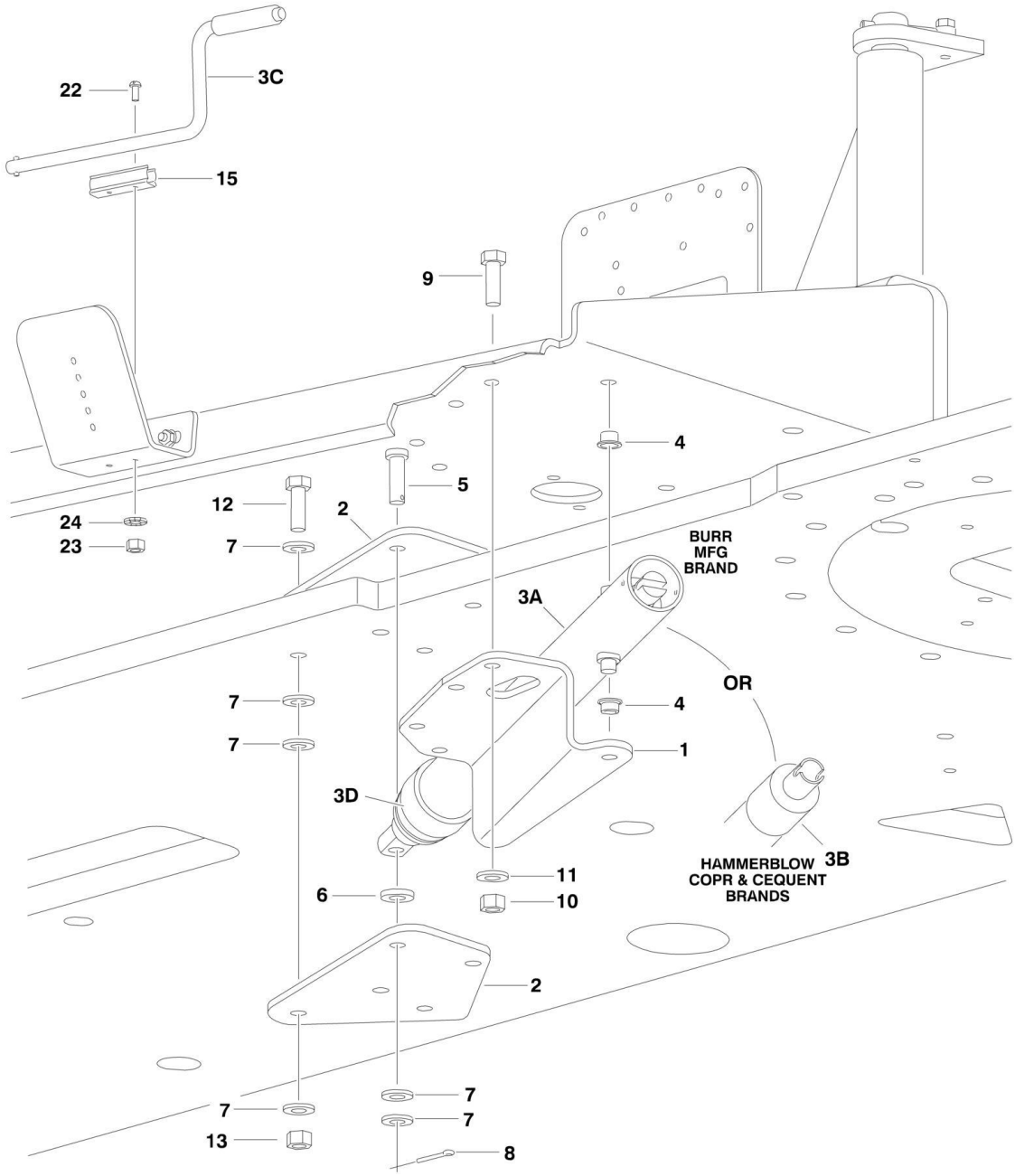

## FIGURE 2-21. ENGINE TRAY JACK INSTALLATION

| ITEM | PART NUMBER | QTY | DESCRIPTION | REV |
|---|---|---|---|---|
| | 0255881 | Ref | **ENGINE TRAY JACK INSTALLATION** | 3-G |
| 1 | 3537445 | 1 | Bracket | |
| 2 | 3537446 | 2 | Bracket | |
| 3 | 2840016 | 1 | Hydraulic Jack Assembly Options: | F |
| 3A | | Ref | Burr Manufacturing Brand | |
| 3B | | Ref | Hammerblow Corp and Cequent Brands | |
| 3C | | Ref | Handle Options: | |
| 3C | 7016374 | 1 | Burr Manufacturing Brand | |
| 3C | 7024598 | 1 | Hammerblow Corp and Cequent Brands | |
| 3D | 7016322 | 1 | Wiper (Burr Manufacturing Brand Only) | |
| 4 | 0962051 | 2 | Bushing, Flanged | |
| 5 | 3430816 | 1 | Pin, Clevis | |
| 6 | 4891800 | 1 | Washer, Hardened 1/2in | |
| 7 | 4711800 | 6 | Flatwasher 1/2in (Narrow) | |
| 8 | 3450404 | 1 | Pin, Cotter 1/8in x 1in | |
| 9 | 0641609 | 4 | Bolt 3/8in-16NC x 1-1/8in | |
| 10 | 3311605 | 4 | Locknut 3/8in-16NC | |
| 11 | 4891600 | 4 | Washer, Hardened 3/8in | |
| 12 | 0641818 | 4 | Bolt 1/2in-13NC x 2-1/4in | |
| 13 | 3311805 | 4 | Locknut 1/2in-13NC | |
| 15 | 1380147 | 1 | Clip, Spring | |
| 22 | 3910608 | 2 | Screw #6-32NC x 1in | |
| 23 | 3310601 | 2 | Nut #6-32NC | |
| 24 | 4770600 | 2 | Starwasher #6 | |

## FIGURE 2-22. 2500W GENERATOR INSTALLATION - CATERPILLAR MACHINES (OPTIONAL)

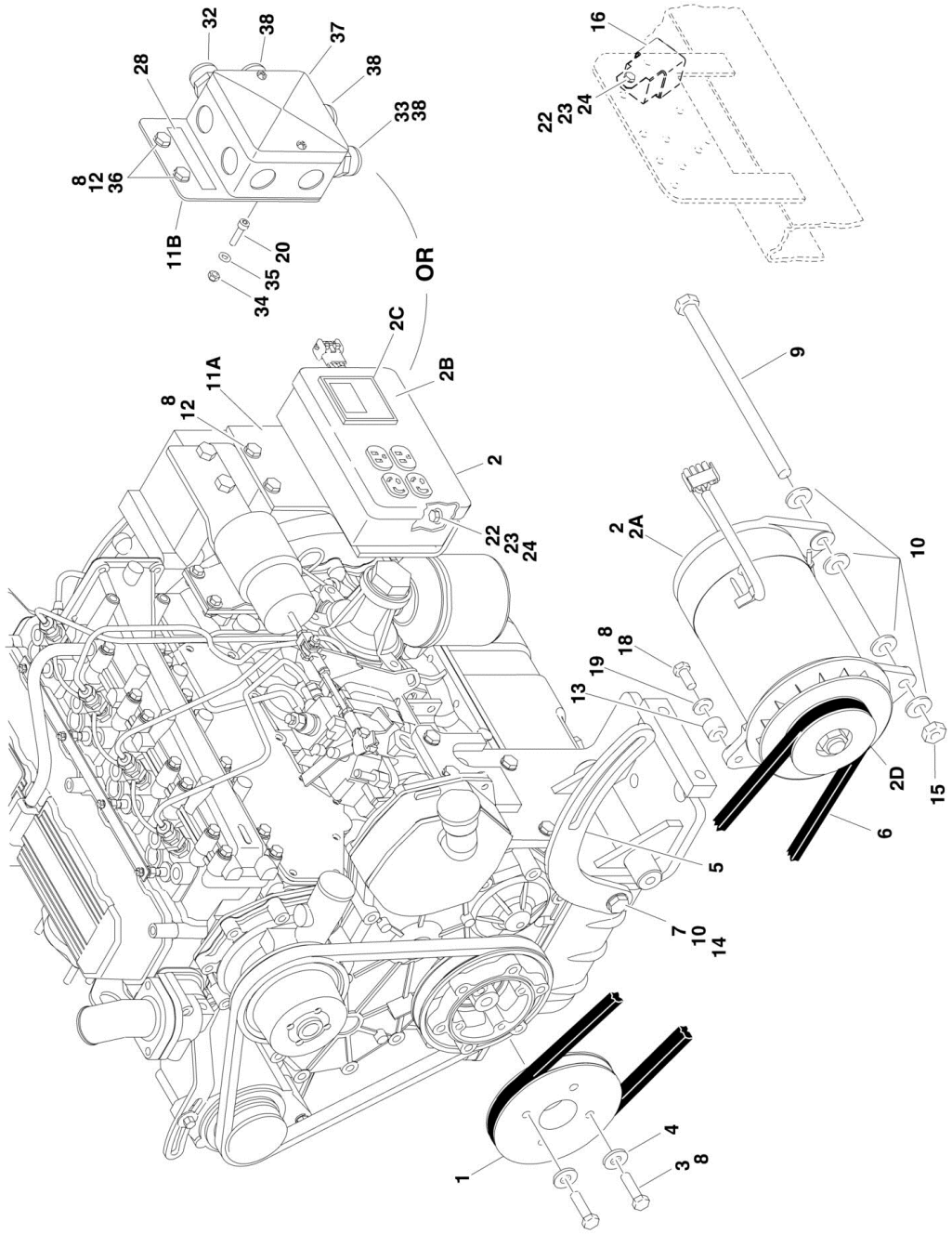

## FIGURE 2-22. 2500W GENERATOR INSTALLATION - CATERPILLAR MACHINES (OPTIONAL)

| ITEM | PART NUMBER | QTY | DESCRIPTION | REV |
|---|---|---|---|---|
| | | Ref | **Note: For Module Identification (Non-UGM/UGM), refer to Revision Log page A.** | |
| | | Ref | **GENERATOR INSTALLATION OPTIONS:** | |
| | | Ref | **Without UGM** | |
| | 0274081 | Ref | **110V/60Hz** | 1/A |
| | 0274091 | Ref | **110V/50Hz (SN 0300128000 through 0300132849)** | 1/A |
| | 1001102547 | Ref | **110V/50Hz (SN 0300132803 through 0300174703)** | A |
| | 0274087 | Ref | **220V/50Hz (SN 0300128000 through 0300132849)** | 1-A |
| | 1001102548 | Ref | **220V/50Hz (SN 0300132803 through 0300174703)** | A |
| | | Ref | **With UGM** | |
| | 1001115404 | Ref | **110V/60Hz** | A |
| | 1001115413 | Ref | **110V/50Hz (SN 0300128000 through 0300166807)** | A |
| | 1001115414 | Ref | **220V/50Hz** | A |
| 1 | 3580322 | 1 | Pulley | |
| 2 | | Ref | Generator and Control Box Assembly Options: | |
| 2 | 2460055 | 1 | 110V/60Hz | |
| 2 | 2460057 | 1 | 110V/50Hz **(SN 0300128000 through 0300132848)** | |
| 2 | See Note | NLA | 110V/50Hz (Note: Not Available for Purchase.) **(SN 0300132849 through 0300174703)** | |
| 2 | 2460056 | 1 | 220V/50Hz **(SN 0300128000 through 0300132848)** | |
| 2 | See Note | NLA | 220V/50Hz (Note: Not Available for Purchase.) **(SN 0300132849 through 0300174703)** | |
| 2A | 7012558 | 1 | Generator Only - 110V/60Hz | |
| 2A | 2460049 | 1 | Generator Only - 110V/50Hz (was p/n 7019679 & 70000129) | |
| 2A | 1001100321 | 1 | Generator Only - 220V/50Hz (was p/n 7019679 & 70000128) | |
| | | Ref | **Note: Replacement Generator come standard with p/n 3580134 pulley. This pulley may not be correct for all applications. Refer to pulley options below.** | |
| 2A | | Ref | Armature with Slip Rings Options: | |
| 2A | 7026199 | 1 | Armature with Slip Rings - 110V/60Hz | |
| 2A | 70000122 | 1 | Armature with Slip Rings - 110V/50Hz | |
| 2A | 70000123 | 1 | Armature with Slip Rings - 220V/50Hz | |
| 2A | 7012513 | 4 | Cap, Brush Holder | |
| 2A | 7020108 | 4 | Brush | |
| 2A | 7020109 | 4 | Holder, Brush | |
| 2A | 7012514 | 1 | Fan | |
| 2A | 7020110 | 1 | Bell, Front | |
| 2A | 7020111 | 1 | Bell, Rear | |
| 2A | 7020190 | 2 | Bearing | |
| 2B | 7019680 | 1 | Box, Control - 110V/60Hz (was p/n 7003657) | |
| 2B | 7019680 | 1 | Box, Control - 110V/50Hz Only (was p/n 7003657) **(SN 0300128000 through 0300132849)** | |
| 2B | 70000127 | 1 | Box, Control - 220V/50Hz (was p/n 7019680 Only) **(SN 0300128000 through 0300132849)** | |
| 2B | | Ref | Receptacle Options: | |
| 2B | 4460190 | 1 | Receptacle, Standard (110V Only) | |
| 2B | 4460027 | 1 | Receptacle, Twistlock (110V Only) | |
| 2B | 70000124 | 1 | Receptacle, Double (220V/50Hz Only) | |
| 2B | 70000125 | 1 | Receptacle, Single (220V/50Hz Only) | |
| 2B | | Ref | Breaker, Circuit Options: | |
| 2B | 7020194 | AR | 110V Breaker, Circuit | |

| ITEM | PART NUMBER | QTY | DESCRIPTION | REV |
|---|---|---|---|---|
| 2B | 70000126 | AR | 220V Breaker, Circuit | |
| 2B | 3520028 | 1 | Plug, Hole | |
| 2C | | Ref | Voltmeter Options: | |
| 2C | 2420203 | 1 | Voltmeter - 110V (was p/n 7010699) | |
| 2C | 7020192 | 1 | Voltmeter - 220V | |
| 2D | | Ref | Pulley Options: | |
| 2D | 3580276 | 1 | Pulley - 60Hz | |
| 2D | 3580134 | 1 | Pulley - 50Hz | |
| 2D | 7027887 | 1 | Key, Woodruff | |
| 3 | 0700816 | 4 | Bolt 8mm x 40mm | |
| 4 | 4751900 | 4 | Flatwasher 9/16in Regular | |
| 5 | 0200819 | 1 | Arm, Adjusting | |
| 6 | | Ref | V-Belt Options: | |
| 6 | 0480121 | 1 | 60Hz | |
| 6 | 0480120 | 1 | 50Hz | |
| 7 | 0641610 | 1 | Bolt 3/8in-16NC x 1-1/4in | |
| 8 | 0100011 | AR | Compound, Locking | |
| 9 | 0641772 | 1 | Bolt 7/16in-14NC x 9in | |
| 10 | 4751600 | 6 | Flatwasher 3/8in Regular | |
| 11 | | Ref | Plate, Box Mounting Options: | |
| 11A | 3574684 | 1 | Plate with Control Box | |
| 11B | 1001102644 | 1 | Plate with Junction Box | |
| 12 | 0761210 | 2 | Bolt, Metric 12mm x 20mm | |
| 13 | 0962563 | 1 | Bushing, Spacer | |
| 14 | 3311605 | 1 | Locknut 3/8in-16NC | |
| 15 | 3311705 | 1 | Locknut 7/16in-14NC | |
| 16 | 3740080 | 1 | Relay | |
| 18 | 0641508 | 1 | Bolt 5/16in-18NC x 1in | |
| 19 | 4751500 | 1 | Flatwasher 5/16in Regular | |
| 20 | 4031608 | 2 | Capscrew M5 x 20mm | |
| 21 | 4240018 | AR | Tie-Strap (Not Shown) | |
| 22 | 0721006 | 3 | Bolt #10-24NC x 3/4in | |
| 23 | 3311005 | 3 | Locknut #10-24NC | |
| 24 | 4751000 | 6 | Flatwasher #10 Regular | |
| 25 | 4360336 | 1 | Switch, Toggle (Not Shown - Located at Platform) | |
| 26 | 4740397 | 1 | Washer, Spacer (Not Shown - Located at Platform) | |
| 27 | 4060802 | 1 | Guard, Switch (Not Shown - Located at Platform) | |
| 28 | | Ref | Decal - Voltage Options (Not Shown - Located at Platform): | |
| 28 | See Note | NSS | 110V/60Hz (Note: Not Available for Purchase.) | |
| 28 | 1705325 | 1 | 110V/50Hz | |
| 28 | 3252507 | 1 | 220V/50Hz | |
| 29 | 2820031 | 4 in/10cm | Heatshrink (Not Shown - Located at Platform) | |
| 30 | 3251102 | 1 | Decal (Not Shown - Located at Platform) | |
| 32 | | Ref | Light, Red Options: | |
| 32 | 1001100233 | 1 | 110V/50Hz | |
| 32 | 1001100234 | 1 | 220V/50Hz | |
| 33 | 0962449 | 1 | Bushing | |
| 34 | 3290505 | 2 | Locknut M5 | |
| 35 | 4811600 | 2 | Flatwasher M5 | |
| 36 | 4812100 | 2 | Flatwasher M12 | |
| 37 | 1001099869 | 1 | Junction Box Assembly | |

| ITEM | PART NUMBER | QTY | DESCRIPTION | REV |
|---|---|---|---|---|
| 38 | 4460968 | 3 | Connector, Strain Relief | |

## FIGURE 2-23. 2500W GENERATOR INSTALLATION - DEUTZ MACHINES (OPTIONAL)

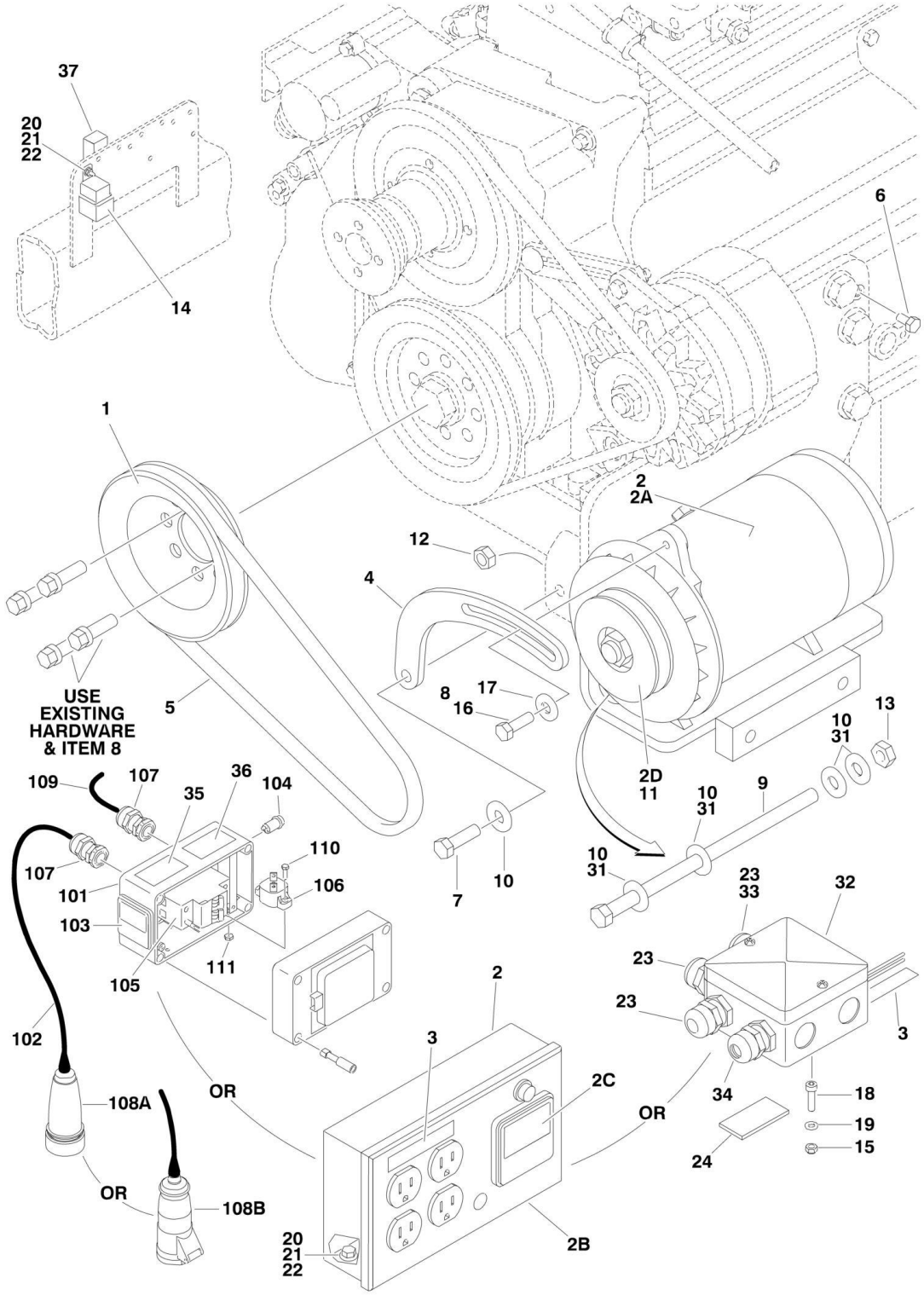

## FIGURE 2-23. 2500W GENERATOR INSTALLATION - DEUTZ MACHINES (OPTIONAL)

| ITEM | PART NUMBER | QTY | DESCRIPTION | REV |
|---|---|---|---|---|
| | | Ref | **Note: For Module Identification (Non-UGM/UGM), refer to Revision Log page A.** | |
| | | Ref | **GENERATOR INSTALLATIONS** | |
| | | Ref | **Without UGM** | |
| | 0274082 | Ref | **110V/60Hz (Available on all Specs Except CE Spec)** | 3-C |
| | 0274090 | Ref | **110V/50Hz (Available on ANSI Export, Australian and CE Specs) (SN 0300128000 through 0300132848)** | 1-A |
| | 1001099868 | Ref | **110V/50Hz (Available on ANSI Export, Australian and CE Specs) (SN 0300132849 through 0300174703)** | D |
| | 0273045 | Ref | **110V/50Hz Only (Available on CE Spec - UK Only) (SN 0300128000 through 0300132848)** | 1-A |
| | 0273085 | Ref | **110V/50Hz Only (Available on CE Spec - Germany Only) (SN 0300128000 through 0300132848)** | 1-A |
| | 0274086 | Ref | **220V/50Hz (Available on ANSI Export, Australian and CE Specs) (SN 0300128000 through 0300132848)** | 1-A |
| | 1001100308 | Ref | **220V/50Hz (Available on ANSI Export, Australian and CE Specs) (SN 0300132849 through 0300174703)** | D |
| | | Ref | **With UGM** | |
| | 1001115405 | Ref | **110V/60Hz (Available on all Specs Except CE and Australian Specs)** | A |
| | 1001115410 | Ref | **110V/50Hz (Available on CE Spec) (SN 0300128000 through 0300166807)** | A |
| | 1001115409 | Ref | **220V/50Hz (Available on CE Spec)** | A |
| 1 | 3580158 | 1 | Pulley | |
| 2 | | Ref | Generator Component Options: | |
| 2 | 2460055 | 1 | 110V/60Hz Generator and Control Box Assembly (0274082 & 1001115405 Installation) | |
| 2 | 2460057 | 1 | 110V/50Hz Generator and Control Box Assembly (0274090 Installation) | |
| 2 | 2460049 | 1 | 110V/50Hz Generator Only (1001099868, 0273045, 0273085 & 1001115410 Installations which Uses Junction Box or Switch Box) | |
| 2 | 2460056 | 1 | 220V/50Hz Generator and Control Box Assembly (0274086 Installation) | |
| 2 | 1001100321 | 1 | 220V/50Hz Generator Only (1001100308 Installation which Uses Junction Box and 1001115409) | |
| 2A | 7012558 | 1 | Generator Only - 110V/60Hz | |
| 2A | 2460049 | 1 | Generator Only - 110V/50Hz (was p/n 7019679 & 70000129) | |
| 2A | 1001100321 | 1 | Generator Only - 220V/50Hz (was p/n 7019679 & 70000128) | |
| | | Ref | **Note: Replacement Generator come standard with p/n 3580134 pulley. This pulley may not be correct for all applications. Refer to pulley options below.** | |
| 2A | | Ref | Armature with Slip Rings Options: | |
| 2A | 7026199 | 1 | Armature with Slip Rings - 110V/60Hz | |
| 2A | 70000122 | 1 | Armature with Slip Rings - 110V/50Hz | |
| 2A | 70000123 | 1 | Armature with Slip Rings - 220V/50Hz | |
| 2A | 7012513 | 4 | Cap, Brush Holder | |
| 2A | 7020108 | 4 | Brush | |
| 2A | 7020109 | 4 | Holder, Brush | |
| 2A | 7012514 | 1 | Fan | |
| 2A | 7020110 | 1 | Bell, Front | |
| 2A | 7020111 | 1 | Bell, Rear | |
| 2A | 7020190 | 2 | Bearing | |

| ITEM | PART NUMBER | QTY | DESCRIPTION | REV |
|---|---|---|---|---|
| 2B | 7019680 | 1 | Box, Control - 110V/60Hz & 110V/50Hz (0274082 & 0274090 Installations Only) (was p/n 7003657) | |
| 2B | 70000127 | 1 | Box, Control - 220V/50Hz (0274086 Installation Only) (was p/n 7019680) | |
| 2B | | Ref | Receptacle Options: | |
| 2B | 4460190 | 1 | Receptacle, Standard (110V Only) | |
| 2B | 4460027 | 1 | Receptacle, Twistlock (110V Only) | |
| 2B | 70000124 | 1 | Receptacle, Double (220V/50Hz Only) | |
| 2B | 70000125 | 1 | Receptacle, Single (220V/50Hz Only) | |
| 2B | | Ref | Breaker, Circuit Options: | |
| 2B | 7020194 | 1 | 110V Breaker, Circuit | |
| 2B | 70000126 | 1 | 220V Breaker, Circuit | |
| 2B | 3520028 | 1 | Plug, Hole | |
| 2C | | Ref | Voltmeter Options: | |
| 2C | 2420203 | 1 | Voltmeter - 110V (was p/n 7010699) | |
| 2C | 7020192 | 1 | Voltmeter - 220V | |
| 2D | | Ref | Pulley Options: | |
| 2D | 3580276 | 1 | Pulley - 60Hz | |
| 2D | 3580134 | 1 | Pulley - 50Hz | |
| 2D | 7027887 | 1 | Key, Woodruff | |
| 3 | | Ref | Decal Options: | |
| 3 | 3251243 | 1 | 120V 60Hz | |
| 3 | 1705325 | 1 | 120V 50Hz | |
| 3 | Not Required | 0 | 220V/50Hz | |
| 4 | | Ref | Arm, Adjusting Options: | |
| 4 | 0200742 | 1 | All Installations Except 0273045 & 0273085 | |
| 4 | 0200741 | 1 | 0273045 & 0273085 Installations Only | |
| 5 | | Ref | V-Belt Options: | |
| 5 | 0480121 | 1 | All Installations Except 0273045 & 0273085 | |
| 5 | 0480120 | 1 | 0273045 & 0273085 Installations Only | |
| 6 | 0641404 | 1 | Bolt 1/4in-20NC x 1/2in | |
| 7 | 0641610 | 1 | Bolt 3/8in-16NC x 1-1/4in | |
| 8 | 0100011 | AR | Compound, Locking | |
| 9 | 0641772 | 1 | Bolt 7/16in-14NC x 9in | |
| 10 | 4751600 | 6 | Flatwasher 3/8in Regular | |
| 11 | 2860012 | 1 | Key, Woodruff | |
| 12 | 3311605 | 1 | Locknut 3/8in-16NC | |
| 13 | 3311705 | 1 | Locknut 7/16in-14NC | |
| 14 | 3740080 | 1 | Relay | |
| 15 | 3290505 | 1 | Locknut M5 | |
| 16 | 0641508 | 1 | Bolt 5/16in-18NC x 1in | |
| 17 | 4751500 | AR | Flatwasher 5/16in Regular | |
| 18 | 4031608 | 1 | Capscrew M5 x 20mm | |
| 19 | 4811600 | 1 | Flatwasher M5 | |
| 20 | 0721006 | AR | Bolt #10-24NC x 3/4in | |
| 21 | 3311005 | AR | Locknut #10-24NC | |
| 22 | 4751000 | AR | Flatwasher #10 Regular | |
| 23 | 4460968 | 3 | Bushing, Strain Relief (10011099868, 1001100308, 1001115409 & 1001115410 Installations Only) | |
| 24 | 4420060 | AR | Tape, Double Sided | |
| 25 | 4360336 | 1 | Switch, Toggle (Not Shown - Located at Platform) | |
| 26 | 4740397 | 1 | Bushing (Not Shown - Located at Platform) | |

| ITEM | PART NUMBER | QTY | DESCRIPTION | REV |
|---|---|---|---|---|
| 27 | 4060802 | 1 | Guard, Switch (Not Shown - Located at Platform) | |
| 28 | | Ref | Decal - Voltage Options (Not Shown - Located at Platform): | |
| 28 | See Note | 1 | 110V/60Hz (Note: Not Available for Purchase.) | |
| 28 | 1705325 | 1 | 110V/50Hz | |
| 28 | 3252507 | 1 | 220V/50Hz | |
| 29 | 2820031 | 4 in/10cm | Heatshrink (Not Shown - Located at Platform) | |
| 30 | | Ref | Decal, Generator ON/OFF Options (Not Shown - Located at Platform): | |
| 30 | 3251102 | 1 | All Installations Except 0273045 & 0273085 | |
| 30 | 1705728 | 1 | 0273045 & 0273085 Installations Only | |
| 31 | 4070585 | AR | Shim .010in | |
| 32 | 1001099869 | 1 | Box, Junction (10011099868, 1001100308, 1001115409 & 1001115410 Installations Only) | |
| 33 | 0962449 | 1 | Bushing, Silicone (10011099868, 1001100308, 1001115409 & 1001115410 Installations Only) | |
| 34 | 1001100234 | 1 | Light, Red (10011099868, 1001100308, 1001115409 & 1001115410 Installations Only) | |
| 35 | 1705715 | 1 | Decal - 115VAC (0273045 & 0273085 Installations Only) | |
| 36 | 1705714 | 1 | Decal - Danger (0273045 & 0273085 Installations Only) | |
| 37 | 4360294 | 1 | Breaker, Circuit - 30 Amp (0273045 & 0273085 Installations Only) | |
| | 2902085 | 1 | Installation Kit - Powermite Generator (Includes Generator Mounting Bracket, P/N 0480121 Belt and Mounting Hardware) | |
| | | Ref | **GENERATOR CONTROL BOX ASSEMBLY (0273045 & 0273085 INSTALLATIONS ONLY)** | |
| | 0861599 | Ref | **UK Spec** | A |
| | 0861607 | Ref | **German Spec** | A |
| 101 | 0861602 | 1 | Box, Control | |
| 102 | 1060461 | 20 ft/6m | Cable Electrical 12/3 | |
| 103 | 2420203 | 1 | Voltmeter | |
| 104 | 2920162 | 1 | Lamp | |
| 105 | | Ref | Breaker Circuit Options: | |
| 105 | 4360541 | 1 | Breaker Circuit (UK Spec) | |
| 105 | 4360540 | 1 | Residual Current Device (German Spec) | |
| 106 | 4360542 | 1 | Breaker Circuit 20 Amp | |
| 107 | 4460968 | 2 | Connector, Strain Relief | |
| 108 | | Ref | Plug Options: | |
| 108A | 4460991 | 1 | Plug, Female (UK Spec) | |
| 108B | 4460999 | 1 | Plug, Terminal (German Spec) | |
| 109 | 4922912 | 1 | Harness | |
| 110 | 0721005 | 2 | Screw #10-24NC x 5/8in | |
| 111 | 3311001 | 2 | Nut #10-24NC | |

## FIGURE 2-24. 7500W SKYPOWER GENERATOR INSTALLATION

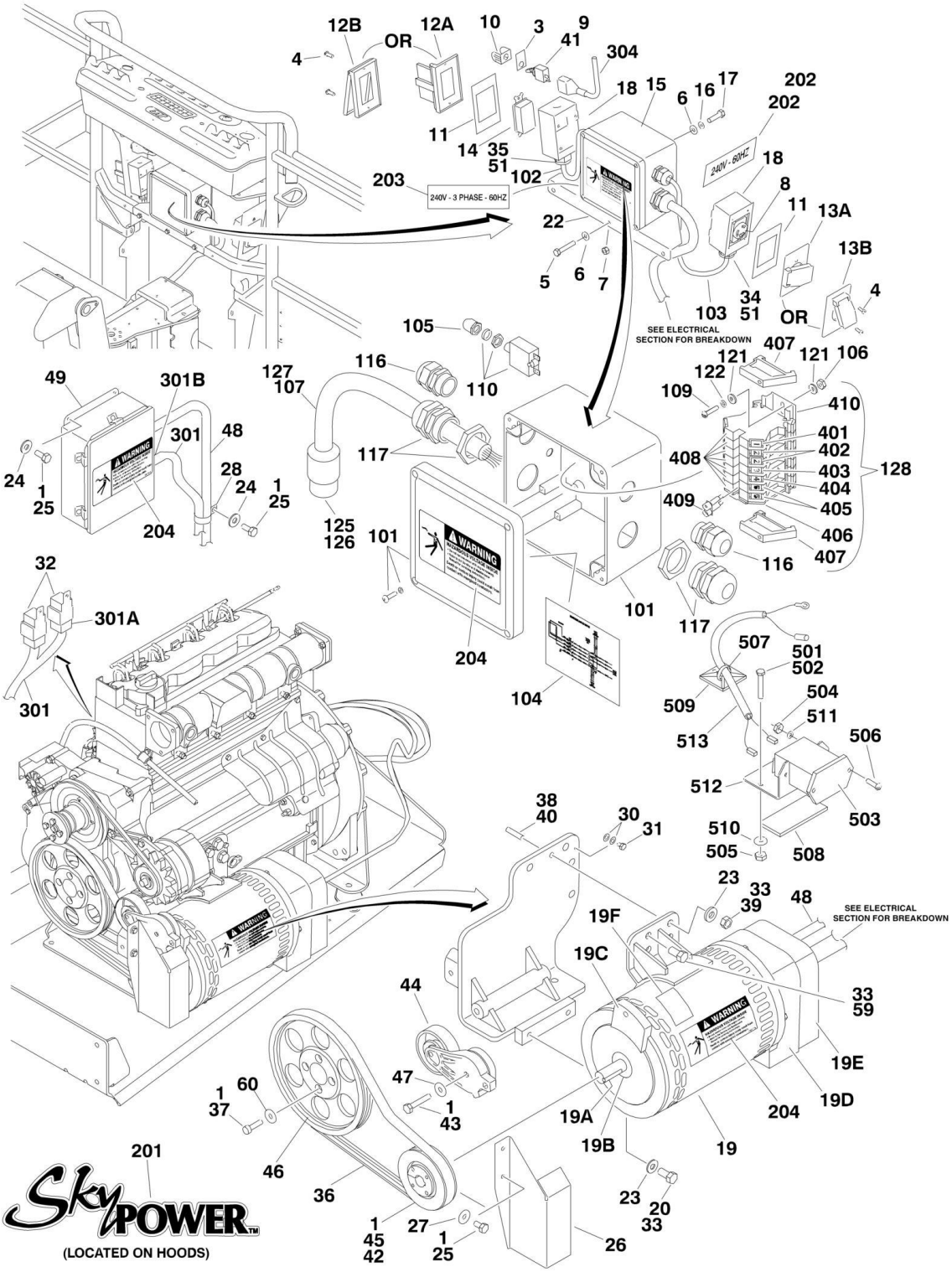

## FIGURE 2-24. 7500W SKYPOWER GENERATOR INSTALLATION

| ITEM | PART NUMBER | QTY | DESCRIPTION | REV |
|---|---|---|---|---|
| | | Ref | **Note: For Module Identification (Non-UGM/UGM), refer to Revision Log page A.** | |
| | | Ref | **7500W SKYPOWER GENERATOR INSTALLATION** | |
| | | Ref | **Without UGM** | |
| | 0273540 | Ref | **60Hz and Caterpillar Engine** | I |
| | 0272255 | Ref | **60Hz and Deutz Engine** | K |
| | 0273541 | Ref | **50Hz Spec and Caterpillar Engine** | I |
| | 0272492 | Ref | **50Hz Spec and Deutz Engine** | J |
| | | Ref | **With UGM** | |
| | 1001115398 | Ref | **60Hz and Caterpillar Engine** | C |
| | 1001115400 | Ref | **50Hz and Caterpillar Engine** | C |
| | 1001115387 | Ref | **60Hz and Deutz Engine** | B |
| | 1001115389 | Ref | **50Hz and Deutz Engine** | B |
| | | Ref | **Note: SkyPower Generator is Standard On ANSI and CSA Specs. Optional on All Other Specs.** | |
| | | Ref | **Note: See ELECTRICAL SECTION for Boom Cable Installation.** | |
| 1 | 0100011 | AR | Compound, Locking | |
| 3 | 3252764 | 1 | Nameplate | |
| 4 | 3910606 | 8 | Screw #6-32NC x 3/8in (60Hz Spec Only) | |
| 5 | 0641516 | 3 | Bolt 5/16in-18NC x 2in | |
| 6 | 4711500 | Ref | Flatwasher 5/16in Regular Options: | |
| 6 | 4711500 | 10 | Flatwasher 5/16in Regular Caterpillar Engine (Flatwasher 5/16in Thin) | |
| 6 | 4711500 | 7 | Flatwasher 5/16in Regular Deutz Engine: | |
| 7 | | Ref | Hardware Options: | |
| 7 | 3311505 | 3 | Caterpillar Engine (Locknut 5/16in-18NC) | |
| 7 | 3311508 | 3 | Deutz Engine (Nut 5/16in-18NC) | |
| 8 | | Ref | Receptacle, Female Twist-Lock Options: | |
| 8 | 4460958 | 1 | 60Hz Spec | |
| 8 | See Note | NLA | 50Hz Spec (Note: Not Available - Purchase Locally.) | |
| 9 | 4360336 | 1 | Switch, Toggle | |
| 10 | 4060802 | 1 | Guard, Switch | |
| 11 | | Ref | Gasket Options: | |
| 11 | 3960422 | 2 | 60Hz Spec | |
| 11 | See Note | NLA | 50Hz Spec (Note: Not Available - Purchase Locally.) | |
| 12 | | Ref | Cover, Receptacle Options: | |
| 12A | 4060700 | 1 | 60Hz Spec Side Hinged | |
| 12B | 1001110873 | 1 | 60Hz Spec Top Hinged | |
| 12C | See Note | NLA | 50Hz Spec (Note: Not Available - Purchase Locally.) (Not Shown) | |
| 13 | | Ref | Cover, Receptacle Options: | |
| 13A | 4061043 | 1 | 60Hz Spec Side Hinged | |
| 13B | 1001110872 | 1 | 60Hz Spec Top Hinged | |
| 13C | See Note | NLA | 50Hz Spec (Note: Not Available - Purchase Locally.) | |
| 14 | | Ref | Receptacle Options: | |
| 14 | 4460346 | 1 | 60Hz Spec | |
| 14 | See Note | NLA | 50Hz Spec (Note: Not Available - Purchase Locally.) | |
| 15 | | Ref | Junction Box Assembly Options (See Items 201-222 for Breakdown): | |
| 15 | 0861542 | 1 | 60Hz Spec | |

| ITEM | PART NUMBER | QTY | DESCRIPTION | REV |
|---|---|---|---|---|
| 15 | 0861567 | 1 | 50Hz Spec | |
| 16 | 4761500 | Ref | Lockwasher 5/16inOptions: | |
| 16 | 4761500 | 4 | Caterpillar Engine | |
| 16 | 4761500 | 1 | Deutz Engine | |
| 17 | | Ref | Bolt Options: | |
| 17 | 0641505 | 4 | Caterpillar Engine (Bolt 5/16in-18NC x 5/8in) | |
| 17 | 0641508 | 4 | Deutz Engine (Bolt 5/16in-18NC x 1in) | |
| 18 | | Ref | Box, Switch Options: | |
| 18 | 0860038 | 2 | 60Hz Spec | |
| 18 | See Note | NLA | 50Hz Spec (Note: Not Available - Purchase Locally.) | |
| 19 | | Ref | Generator Assembly Options: | |
| 19 | 2460050 | 1 | Caterpillar Engine | |
| 19 | 2460048 | 1 | Deutz Engine | |
| 19 | 70001100 | 1 | Rotor (Includes p/n 70001384 & 70000863) (Not Shown) | |
| 19 | 70001384 | 1 | Bearing, Ball Radial (Not Shown) | |
| 19 | 70000863 | 1 | Fan (Not Shown) | |
| 19 | | Ref | Stator Options (Not Shown): | |
| 19 | 70001969 | 1 | 2460050 Generator | |
| 19 | 70002088 | 1 | 2460048 Generator | |
| 19 | 70002297 | 1 | Stud | |
| 19 | 70003631 | 1 | Brushholder Assembly (Not Shown) (was p/n 7024484) | |
| 19A | 70004171 | 1 | Key (was p/n 7024561) | |
| 19B | 70001966 | 1 | Bearing, Ball Radial (Located in Belt Tensioner Endbell) | |
| 19C | 70001953 | 1 | Endbell, Belt Tensioner | |
| 19D | | Ref | Endbell, Brush Block Options (was p/n 70001385): | |
| 19D | 70004170 | 1 | Caterpillar Engine Machines | |
| 19D | 70004169 | 1 | Deutz Engine Machines | |
| 19E | | Ref | Shroud Options: | |
| 19E | 70004170 | 1 | Caterpillar Engine (was p/ns 70001970 & 70001971) | |
| 19E | 70004169 | 1 | Deutz Engine (was p/n 70002290) | |
| 19E | 7027799 | 1 | Block, Connector 6 Position (Not Shown) | |
| 19E | 70002460 | 1 | Nut, Brass (Attaches p/n 7027799 to Cover) (Not Shown) | |
| 19E | 7024485 | 1 | Breaker, Circuit 30Amp (Not Shown) | |
| 19E | 70001696 | 1 | Boot, Breaker (was p/n 7024486 - Not Shown) | |
| 19E | 7026597 | 1 | Connector, With Leads (Not Shown) | |
| 19E | 7026188 | 1 | Clamp, Cable (Not Shown) | |
| 19E | 70003708 | 1 | Retaining Ring Internal (Not Shown) | |
| 19E | 70003709 | 1 | Retaining Ring External (Not Shown) | |
| 19E | | Ref | Plate, End Panel Options: | |
| 19E | 70004170 | 1 | Caterpillar Engine | |
| 19E | 70004169 | 1 | Deutz Engine (was p/n 70002255) | |
| 19E | 70001974 | 1 | Decal - Terminal Connections | |
| 19F | 70001973 | 1 | Decal - Warning Moving Parts | |
| 20 | 0641808 | 2 | Bolt 1/2in-13NC x 1in | |
| 22 | 0902888 | 1 | Bracket, Box Mounting | |
| 23 | 4711800 | 3 | Flatwasher 1/2in Thin | |
| 24 | 4711400 | 5 | Flatwasher 1/4in Thin | |
| 25 | | Ref | Bolt Options: | |
| 25 | 0641404 | AR | Bolt 1/4in-20NC x 1/2in | |
| 25 | 0641405 | AR | Bolt 1/4in-20NC x 5/8in | |
| 25 | 0641408 | AR | Bolt 1/4in-20NC x 1in | |

| ITEM | PART NUMBER | QTY | DESCRIPTION | REV |
|---|---|---|---|---|
| 26 | | Ref | Shield Options: | |
| 26 | | Ref | Without UGM | |
| 26 | Not Required | 1 | Caterpillar Engine | |
| 26 | 4061049 | 1 | Deutz Engine | |
| 26 | | Ref | With UGM | |
| 26 | 1001118599 | 1 | Caterpillar Engine (Not Shown Only) **(SN 0300128000 through 0300172625)** | |
| 26 | 4061049 | 1 | Deutz Engine Only **(SN 0300128000 through 0300172625)** | |
| 27 | | Ref | Washer 1/4in Options: | |
| 27 | 4711400 | AR | Flatwasher 1/4in Thin | |
| 27 | 4751400 | AR | Flatwasher 1/4in Regular | |
| 27 | 4761400 | AR | Lockwasher 1/4in | |
| 28 | 1320224 | NLA | Clamp (Use p/n 1320318) | |
| 29 | 4240018 | AR | Tie-Strap (Not Shown) | |
| 30 | 4791400 | AR | Starwasher 1/4in | |
| 31 | 0641404 | 1 | Bolt 1/4in-20NC x 1/2in (Deutz Engine Only): | |
| 32 | 3740080 | 2 | Relay | |
| 33 | 0100019 | AR | Compound, Locking | |
| 34 | 4460051 | 1 | Connector, Strain Relief | |
| 35 | 4460071 | 1 | Connector, Strain Relief | |
| 36 | | Ref | Belt, Drive Options: | |
| 36 | 0480129 | 1 | Caterpillar Engine with 60Hz Generator | |
| 36 | 0480125 | 1 | Caterpillar Engine with 50Hz Generator | |
| 36 | 0480129 | 1 | Deutz Engine with 60Hz Generator | |
| 36 | 0480126 | 1 | Deutz Engine with 50Hz Generator | |
| 37 | | Ref | Bolt, Metric Options: | |
| 37 | 0700815 | 4 | Caterpillar Engine (Bolt M8 x 35mm) | |
| 37 | 4032015 | 4 | Deutz Engine (Capscrew M10 x 55mm) | |
| 38 | 4300157 | 1 | Stud | |
| 39 | 3311801 | 1 | Nut 1/2in-13NC | |
| 40 | 0100062 | 1 | Loctite #RC680 | |
| 41 | 2820031 | 1 | Insulator | |
| 42 | 0962520 | 1 | Bushing, Split Taper | |
| 43 | 0641618 | 1 | Bolt 3/8in-16NC x 2-1/4in | |
| 44 | 3580317 | 1 | Tensioner, Belt | |
| 45 | | Ref | Pulley Options: | |
| 45 | 3580318 | 1 | 60Hz Generator | |
| 45 | 3580319 | 1 | 50Hz Generator | |
| 46 | | Ref | Pulley Options: | |
| 46 | 3580321 | 1 | Caterpillar Engine | |
| 46 | 3580320 | 1 | Deutz Engine | |
| 47 | 4711600 | 1 | Flatwasher 3/8in Thin | |
| 48 | 4922925 | 1 | Harness, Generator | |
| 49 | | Ref | Control Box Assembly Options: (Was p/n 7024487): | |
| 49 | 0861538 | 1 | 60Hz Control Box Assembly | |
| 49 | 0861572 | 1 | 50Hz Control Box Assembly | |
| 49 | 7024488 | 1 | Card, Circuit - Generator Power | |
| 49 | See Note | 1 | Fuse (Note: Not Available - Purchase Locally.) | |
| 49 | 7024489 | 1 | Card, Circuit - Control | |
| | | Ref | **Note: Same Circuit Card is used for both 60Hz & 50Hz. When replacing card, rocker switch on card must be** | |

| ITEM | PART NUMBER | QTY | DESCRIPTION | REV |
|---|---|---|---|---|
| | | | **set for required application.** | |
| 49 | 70000619 | 1 | Harness, Circuit Card | |
| 51 | 0100020 | AR | Sealant (Deutz Engine Only) | |
| 59 | 0771415 | 1 | Bolt M14 x 35mm - Deutz Engine Only | |
| 60 | 4811900 | 4 | Flatwasher M8 (Caterpillar Engine Only) | |
| | | Ref | **JUNCTION BOX ASSEMBLY** | |
| | 0861542 | Ref | **60Hz Specs** | D |
| | 0861567 | Ref | **50Hz Specs** | B |
| 101 | 0861541 | 1 | Box, Junction | |
| 102 | | Ref | Cable, Electrical 12/3 | |
| 102 | 1060494 | 2 ft/.6m | 60Hz Spec | |
| 102 | See Note | 2 ft/.6m | 50Hz Spec (Note: Not Available - Purchase Locally.) | |
| 103 | | Ref | Cable, Electrical 10/3 | |
| 103 | 1060708 | 2.5 ft /.76m | 60Hz Spec | |
| 103 | See Note | NLA | 50Hz Spec (Note: Not Available - Purchase Locally.) | |
| 104 | 1705376 | 1 | Decal - Wiring Schematic | |
| 105 | 3300396 | 1 | Cover, Fuse | |
| 106 | 3310601 | 2 | Nut #6-32NC | |
| 107 | 1060343 | 1.5 ft /.46m | Cable, Electrical 10/4 (60Hz Spec Only) | |
| 108 | 3641533 | 1 | Rail, Relay | |
| 109 | 3910610 | 2 | Bolt #6-32NC x 5/8in | |
| 110 | 4360070 | 1 | Circuit Breaker - 15 Amp | |
| 116 | 4460425 | 2 | Strain Relief, Terminal | |
| 117 | 4460426 | 2 | Connector, Strain Relief | |
| 121 | 4750600 | 4 | Flatwasher, #6 Regular | |
| 122 | 4760600 | 2 | Lockwasher #6 | |
| 125 | 1671092 | 1 | Cover (60Hz Spec Only) | |
| 126 | 4460963 | 1 | Connector (60Hz Spec Only) | |
| 127 | 3520189 | 1 | Plug (50Hz Spec Only) | |
| 128 | | Ref | Terminal Block Assembly Options (See Items 401-410 for Breakdown): | |
| 128 | NPN | 1 | Gray Terminal Block Assembly | |
| 128 | 1001121340 | 1 | Tan Terminal Block Assembly | |
| | | Ref | **DECAL INSTALLATION** | |
| | 0272435 | Ref | **60Hz Spec** | B |
| | 0272589 | Ref | **50Hz Specs** | A |
| 201 | 1705460 | 2 | Decal - SkyPower | |
| 202 | 1705374 | 1 | Decal - 240V - 60Hz (60Hz Spec Only) | |
| 203 | | Ref | Decal - 240V - 3 Phase Options | |
| 203 | 1705375 | 1 | 60Hz Spec | |
| 203 | 1705461 | 1 | 50Hz Spec | |
| 204 | | Ref | Decal, Hazardous Voltage Option | |
| 204 | 1705387 | 3 | 60Hz Spec | |
| 204 | 1705489 | 3 | 50Hz Spec | |
| | 4933264 | Ref | **ELECTRICAL DIAGRAM COMPONENTS** | C |
| 301 | 4922757 | 1 | Generator Harness | 2-B |
| 301A | 4460374 | 2 | Plug, Sealed Relay | |
| 301A | 4460375 | 7 | Terminal | |
| 301B | 4460967 | 1 | Plug, Male - 3 Position | |
| 301B | 4460465 | 3 | Socket, Female | |

| ITEM | PART NUMBER | QTY | DESCRIPTION | REV |
|---|---|---|---|---|
| 301C | 2400060 | 1 | Fuseholder (Not Shown) | |
| 301C | 2400064 | 1 | Fuse - 5 Amp (Not Shown) | |
| 304 | 4922641 | 1 | Switch Harness | |
| | | Ref | **TERMINAL BLOCK ASSEMBLY** | |
| | NPN | Ref | **Gray Terminal Block Assembly (Complete Assembly Not Available - Purchase Individual Components)** | |
| | 1001121340 | Ref | **Tan Terminal Block Assembly** | A |
| 401 | | Ref | Marker Strip #1 Options: | |
| 401 | 4460411 | 2 | Gray Terminal Block Assembly | |
| 401 | 70002818 | 2 | Tan Terminal Block Assembly | |
| 402 | | Ref | Marker Strip #2 Options: | |
| 402 | 4460412 | 4 | Gray Terminal Block Assembly | |
| 402 | 70002819 | 4 | Tan Terminal Block Assembly | |
| 403 | | Ref | Marker Strip #3 Options: | |
| 403 | 4460413 | 2 | Gray Terminal Block Assembly | |
| 403 | 70002820 | 2 | Tan Terminal Block Assembly | |
| 404 | | Ref | Marker Strip #4 Options: | |
| 404 | 4460414 | 2 | Gray Terminal Block Assembly | |
| 404 | 70002821 | 2 | Tan Terminal Block Assembly | |
| 405 | | Ref | Marker Strip #5 Options: | |
| 405 | 4460415 | 4 | Gray Terminal Block Assembly | |
| 405 | 70002822 | 4 | Tan Terminal Block Assembly | |
| 406 | | Ref | Terminal, End Barrier Options: | |
| 406 | 4460956 | 1 | Gray Terminal Block Assembly | |
| 406 | 70002823 | 1 | Tan Terminal Block Assembly | |
| 407 | | Ref | Terminal, End Block Options: | |
| 407 | 4460607 | 2 | Gray Terminal Block Assembly | |
| 407 | 70002824 | 2 | Tan Terminal Block Assembly | |
| 408 | | Ref | Terminal, Block Options: | |
| 408 | 4460957 | 7 | Gray Terminal Block Assembly | |
| 408 | 70002825 | 7 | Tan Terminal Block Assembly | |
| 409 | | Ref | Terminal, Cross Connector Jumper Options: | |
| 409 | 4461001 | 2 | Gray Terminal Block Assembly | |
| 409 | 70002826 | 2 | Tan Terminal Block Assembly | |
| 410 | 3641533 | 1 | Rail, Relay | |
| | 1001094475 | Ref | **HOURMETER INSTALLATION (OPTIONAL)** | B |
| 501 | 0100011 | AR | Compound, Locking | |
| 502 | 0720808 | 1 | Screw #8-32 x 1in | |
| 503 | 2420165 | 1 | Hourmeter | |
| 504 | 3310604 | 2 | Nut #6-32 | |
| 505 | 3310805 | 1 | Locknut #8-32 | |
| 506 | 3910608 | 2 | Screw #6-32 x 1/2in | |
| 507 | 4240032 | 4 | Strap, Tie | |
| 508 | 4420060 | 3 in/7cm | Tape, Double-Sided | |
| 509 | 4460234 | 3 | Mount, Tie Strap | |
| 510 | 4750800 | 1 | Flatwasher #8 Regular | |
| 511 | 4760600 | 2 | Lockwasher #6 | |
| 512 | 1001094375 | 1 | Bracket, Hourmeter | |
| 513 | 1001094509 | 1 | Harness, Hourmeter | |
| 514 | 4460018 | 1 | Connector, Splice (Not Shown) | |

## FIGURE 2-25. SKYAIR AIR COMPRESSOR INSTALLATION

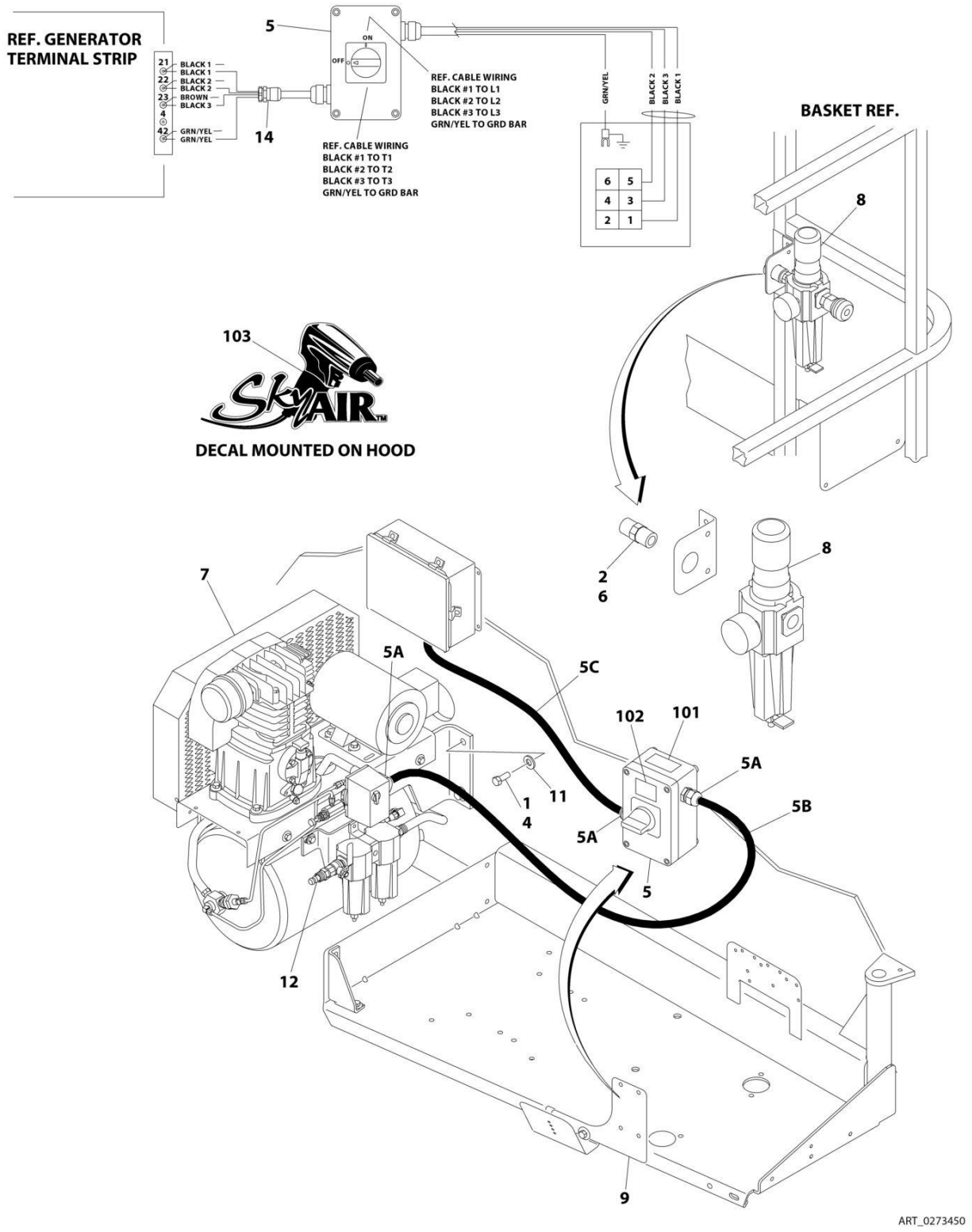

## FIGURE 2-25. SKYAIR AIR COMPRESSOR INSTALLATION

| ITEM | PART NUMBER | QTY | DESCRIPTION | REV |
|---|---|---|---|---|
| | 0273450 | Ref | SKYAIR AIR COMPRESSOR INSTALLATION | D |
| | | Ref | Note: ANSI, ANSI Export and CSA Specs Only. | |
| | | Ref | Note: Only Available on 60Hz Machines. | |
| 1 | 0100019 | AR | Compound, Locking | |
| 2 | 0100020 | AR | Sealant | |
| 4 | 0641810 | 4 | Bolt 1/2 x 1-1/4 | |
| 5 | 0861642 | 1 | Control Box Assembly | |
| 5A | 4460633 | 3 | Connector, Strain Relief | |
| 5B | 70002948 | AR | Cable, Electrical - 12/4 (13ft/4m) | |
| 5C | 70002948 | AR | Cable, Electrical - 12/4 (30in/76cm) | |
| 6 | 2220252 | 1 | Fitting, Adapter | |
| 7 | 3600386 | 1 | Compressor Assembly (See AIR COMPRESSOR ASSEMBLY for Breakdown) | |
| 8 | 3720021 | 1 | Filter/Regulator Assembly | |
| 8 | 7027781 | 1 | Service Kit (Includes Gaskets and Seals) | |
| 8 | 7027782 | 1 | Filter | |
| 8 | 7027784 | 1 | Gauge | |
| 8 | 7027783 | 1 | Valve, Drain | |
| 9 | 4340747 | 1 | Bracket, Control Box | |
| 11 | 4751800 | 4 | Washer 1/2 | |
| 12 | 2220750 | 1 | Fitting | |
| 14 | 4460428 | 1 | Connector, Strain Relief | |
| | 0273687 | Ref | DECAL INSTALLATION | A |
| 101 | 1705836 | 1 | Decal - Hazard Voltage | |
| 102 | 1705837 | 1 | Decal - Air Compressor | |
| 103 | 1705886 | 2 | Decal - SkyAir | |

## FIGURE 2-26. AIR COMPRESSOR ASSEMBLY

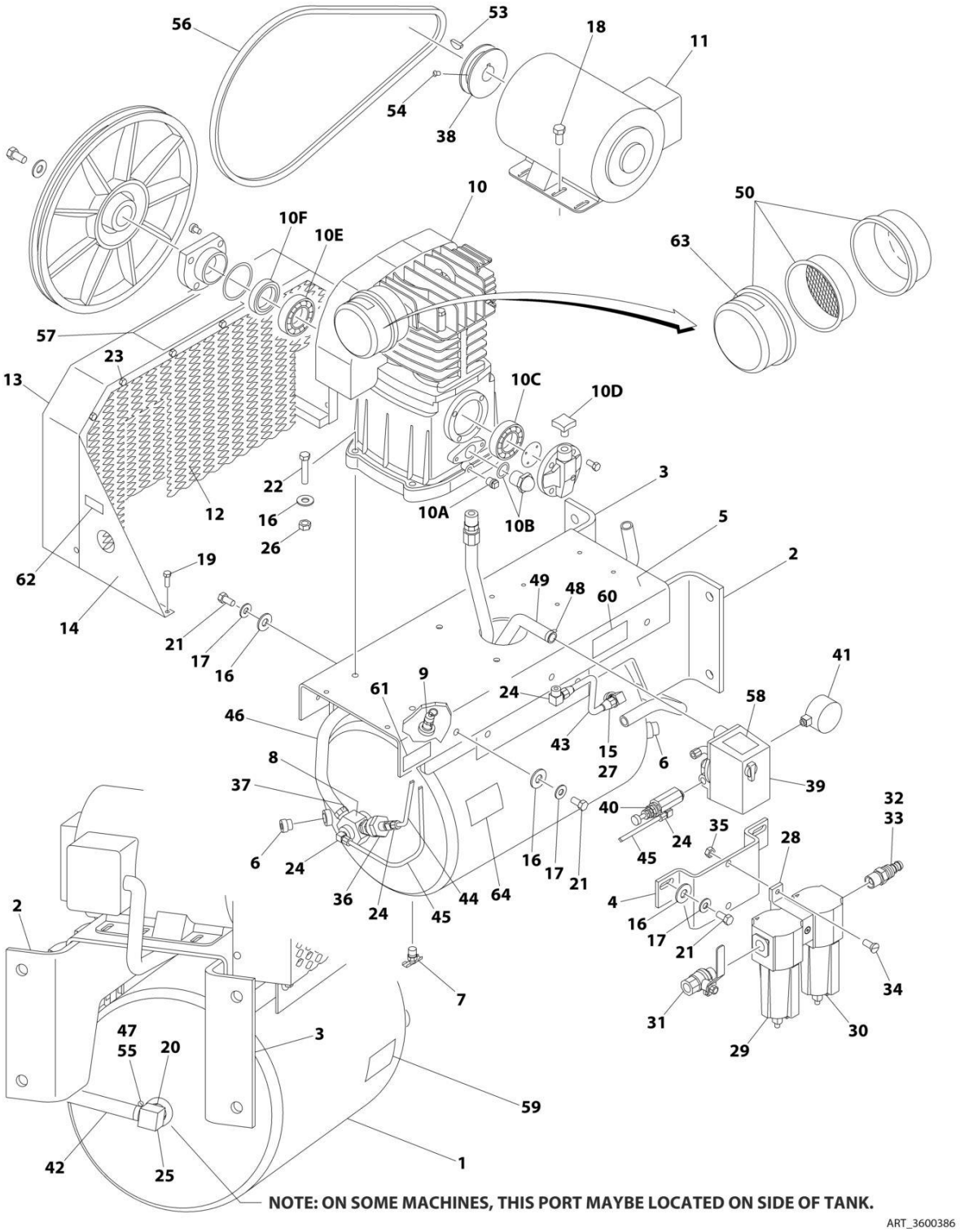

## FIGURE 2-26. AIR COMPRESSOR ASSEMBLY

| ITEM | PART NUMBER | QTY | DESCRIPTION | REV |
|---|---|---|---|---|
| | 3600386 | Ref | AIR COMPRESSOR ASSEMBLY | B |
| 1 | 7026632 | 1 | Tank | |
| 2 | See Note | 1 | Bracket, Mounting (Note: Not Available for Purchase) | |
| 3 | See Note | 1 | Bracket, Mounting (Note: Not Available for Purchase) | |
| 4 | See Note | 1 | Bracket, Regulator Mounting (Note: Not Available for Purchase) | |
| 5 | See Note | 1 | Deck (Note: Not Available for Purchase) | |
| 6 | See Note | 2 | Plug (Note: Not Available for Purchase) | |
| 7 | 7026633 | 1 | Valve, Drain | |
| 8 | 7026634 | 1 | Valve, Check | |
| 9 | 7026635 | 1 | Valve, Safety | |
| 10 | 7026636 | 1 | Pump Assembly | |
| 10 | 7026659 | 1 | Gasket and Seal Kit | |
| 10A | 7026651 | 1 | Plug, Oil Drain | |
| 10B | 7026652 | 1 | Gauge, Oil Sight | |
| 10C | 7026653 | 1 | Bearing | |
| 10D | 7026654 | 1 | Cap, Oil Fill | |
| 10E | 7026655 | 1 | Bearing | |
| 10F | 7026656 | 1 | Seal | |
| 11 | 7026637 | 1 | Motor Assembly | |
| 11 | See Note | 1 | Brush Kit (Note: Not Available for Purchase) | |
| 12 | See Note | 1 | Screen, Inner (Note: Not Available for Purchase) | |
| 13 | See Note | 1 | Guard, Belt (Note: Not Available for Purchase) | |
| 14 | See Note | 2 | Support (Note: Not Available for Purchase) | |
| 15 | See Note | 1 | Bushing (Note: Not Available for Purchase) | |
| 16 | 4751600 | 18 | Washer 3/8 | |
| 17 | 4761600 | 10 | Washer 3/8 | |
| 18 | 0641506 | 4 | Bolt 5/16 x 3/4 | |
| 19 | 0641406 | 8 | Bolt 1/4 x 3/4 | |
| 20 | See Note | 1 | Bushing (Note: Not Available for Purchase) | |
| 21 | 0641610 | 10 | Bolt 3/8 x 1-1/4 | |
| 22 | 0641616 | 4 | Bolt 3/8 x 2 | |
| 23 | See Note | 10 | Bolt 1/4 x 1/2 (Note: Not Available for Purchase) | |
| 24 | See Note | 4 | Fitting (Note: Not Available for Purchase) | |
| 25 | See Note | 1 | Fitting, Barbed (Note: Not Available for Purchase) | |
| 26 | 3311605 | 4 | Nut 3/8 | |
| 27 | See Note | 1 | Fitting, Compression (Note: Not Available for Purchase) | |
| 28 | See Note | 1 | Bracket, Mounting (Note: Not Available for Purchase) | |
| 29 | 7026660 | 1 | Filter, Oil Removal | |
| 30 | 7026661 | 1 | Filter, Water Removal | |
| 31 | 70001663 | 1 | Valve, Ball Shut-Off | |
| 32 | See Note | 1 | Bushing (Note: Not Available for Purchase) | |
| 33 | See Note | 1 | Fitting, Barbed (Note: Not Available for Purchase) | |
| 34 | See Note | 2 | Screw 1/4 x 1 (Note: Not Available for Purchase) | |
| 35 | 3311405 | 2 | Nut 1/4 | |
| 36 | See Note | 1 | Unloader (Note: Not Available for Purchase) | |
| 37 | See Note | 1 | Fitting (Note: Not Available for Purchase) | |
| 38 | See Note | 1 | Pulley (Note: Not Available for Purchase) | |
| 39 | 7026638 | 1 | Switch, Pressure | |
| 40 | 7026639 | 1 | Valve, Pilot | |
| 41 | 7026640 | 1 | Gauge | |

| ITEM | PART NUMBER | QTY | DESCRIPTION | REV |
|---|---|---|---|---|
| 42 | See Note | 1 | Hose (Note: Not Available for Purchase) | |
| 43 | See Note | 1 | Tube, Feed (Note: Not Available for Purchase) | |
| 44 | See Note | 1 | Tube (Note: Not Available for Purchase) | |
| 45 | See Note | 1 | Tube (Note: Not Available for Purchase) | |
| 46 | See Note | 1 | Aftercooler (Note: Not Available for Purchase) | |
| 47 | See Note | 2 | Clamp (Note: Not Available for Purchase) | |
| 48 | See Note | 2 | Clamp (Note: Not Available for Purchase) | |
| 49 | See Note | 1 | Harness, Wiring (Note: Not Available for Purchase) | |
| 50 | 7026658 | 1 | Filter Assembly | |
| 50 | 7026641 | 1 | Element, Filter | |
| 51 | See Note | 23 oz | Oil, Compressor (Note: Not Available for Purchase) (Not Shown) | |
| 52 | 0100020 | AR | Sealant (Not Shown) | |
| 53 | See Note | 1 | Key (Note: Not Available for Purchase) | |
| 54 | See Note | 2 | Setscrew (Note: Not Available for Purchase) | |
| 55 | See Note | 2 | Cover, Clamp End (Note: Not Available for Purchase) | |
| 56 | 7026642 | 1 | Belt | |
| 57 | 7026643 | 1 | Decal - Unit Warning | |
| 58 | 7026644 | 1 | Decal - Pressure Switch Warning | |
| 59 | 7026645 | 1 | Decal - Drain Tank Warning | |
| 60 | 7026646 | 1 | Decal - Compressor Maintenance | |
| 61 | 7026647 | 1 | Decal - Initial Oil Fill | |
| 62 | 7026648 | 1 | Decal - Hot Surfaces Warning | |
| 63 | 7026649 | 1 | Decal - Paper Element Cleaning | |
| 64 | 7026650 | 1 | Decal - Dual Control | |

# SECTION 3 - BOOM

## FIGURE 3-1. BOOM INSTALLATION - 600SC

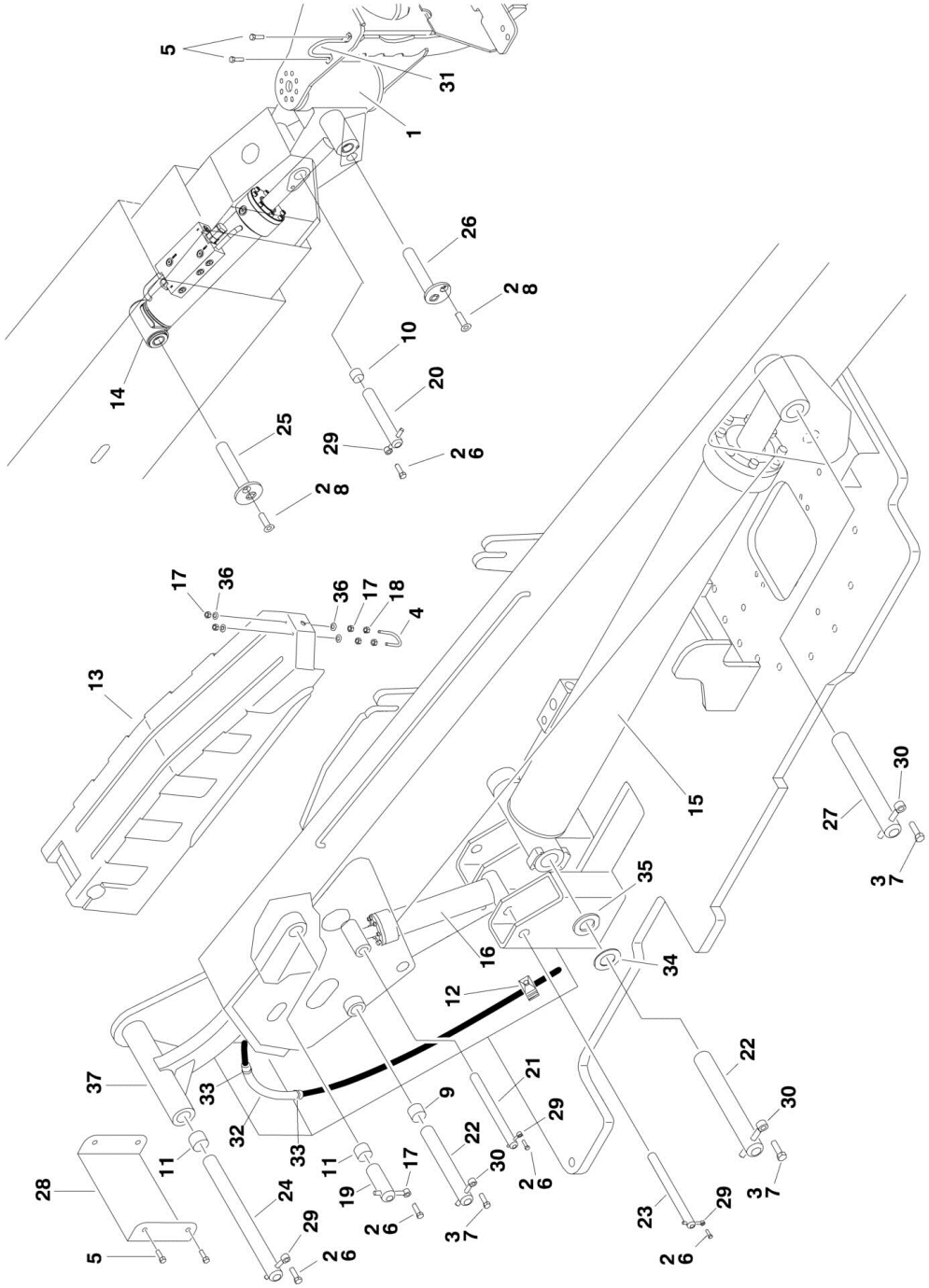

## FIGURE 3-1. BOOM INSTALLATION - 600SC

| ITEM | PART NUMBER | QTY | DESCRIPTION | REV |
|---|---|---|---|---|
| | | Ref | **BOOM AND CYLINDERS INSTALLATIONS - 600SC** | |
| | 0272138 | Ref | **ANSI and ANSI Export Specs (SN 0300128000 through 0300137550)** | 5 |
| | 0272136 | Ref | **Australian and CE Specs (SN 0300128000 through 0300137550)** | 6 |
| | 1001108341 | Ref | **All Specs (SN 0300137551 through 0300174703)** | F |
| 1 | 0060067 | 1 | Rotator Assembly (See ROTATOR ASSEMBLIES for Breakdown) | |
| | | Ref | **Note: Torque Nut on Bottom of Rotator to 480 ft Lbs when Reassembling.** | |
| 2 | 0100011 | AR | Compound, Locking | |
| 3 | 0100019 | AR | Compound, Locking | |
| 4 | 0630458 | AR | U-Bolt | |
| 5 | 0641604 | AR | Bolt 3/8in-16NC x 1/2in | |
| 6 | 0641608 | 5 | Bolt 3/8in-16NC x 1in | |
| 7 | 0642012 | 3 | Bolt 5/8in-11NC x 1-1/2in | |
| 8 | 0741607 | 2 | Screw, Countersunk 3/8in-16NC x 7/8in | |
| 9 | 0961950 | 2 | Bushing | |
| 10 | 0961951 | 2 | Bushing | |
| 11 | 0962006 | 3 | Bushing | |
| 12 | 1320235 | 1 | Clamp, Staff | |
| 13 | | Ref | Cover, Boom Options: | |
| 13 | 1671055 | NLA | Cover, Boom (Use p/n 1001148925) **(SN 0300128000 through 0300172250)** | |
| 13 | 1001148925 | 1 | Cover, Boom **(SN 0300172251 through 0300174703)** | |
| 14 | 1683415 | NLA | Platform Level Cylinder Assembly (Use p/n 1001228008) (See CYLINDER SECTION for Breakdown) (Original Equipment) | |
| 14 | 1001223512 | NLA | Platform Level Cylinder Assembly (Use p/n 1001228008) (See CYLINDER SECTION for Breakdown) (Service Replacement) | |
| 14 | 1001228008 | 1 | Platform Level Cylinder Assembly (See CYLINDER SECTION for Breakdown) (Service Replacement) | |
| 15 | | Ref | Lift Cylinder Assembly Options (See CYLINDER SECTION for Breakdown): | |
| 15 | 1683666 | NLA | Lift Cylinder Assembly (Use p/n 1001112468) **(SN 0300128000 through 0300138353)** | |
| 15 | 1001112468 | 1 | Lift Cylinder Assembly **(SN 0300138354 through 0300174703)** | |
| 16 | 1684414 | 1 | Master Cylinder Assembly (See CYLINDER SECTION for Breakdown) | |
| 17 | 3311402 | AR | Nut, Jam 1/4in-20NC | |
| 18 | 3311405 | AR | Locknut 1/4in-20NC | |
| 19 | 3422557 | 1 | Pin | |
| 20 | 3422562 | 1 | Pin | |
| 21 | 3422563 | 1 | Pin | |
| 22 | 3422564 | 2 | Pin | |
| 23 | 3422565 | 1 | Pin | |
| 24 | 3422566 | 1 | Pin | |
| 25 | 3422569 | 1 | Pin | |
| 26 | 3422580 | 1 | Pin | |
| 27 | 3423184 | 1 | Pin | |
| 28 | 3539563 | 1 | Cover **(SN 0300128000 through 0300172251)** | |
| 29 | 3841143 | 5 | Keeper, Pin | |
| 30 | 3841258 | 3 | Keeper, Pin | |

| ITEM | PART NUMBER | QTY | DESCRIPTION | REV |
|---|---|---|---|---|
| 31 | 3841340 | 1 | Clamp, Loop | |
| 32 | 4100033 | 2 ft/.3m | Sleeve | |
| 33 | 4240033 | AR | Tie-Strap | |
| 34 | 4740158 | 2 | Thrustwasher | |
| 35 | 4740314 | AR | Thrustwasher | |
| 36 | 4751400 | AR | Flatwasher 1/4in Regular | |
| 37 | | Ref | Link, Push Options: | |
| 37 | 4844944 | 1 | Link, Push **(SN 0300128000 through 0300137537)** | |
| 37 | 1001094043 | 1 | Link, Push **(SN 0300137538 through 0300174703)** | |

## FIGURE 3-2. BOOM INSTALLATION - 660SJC

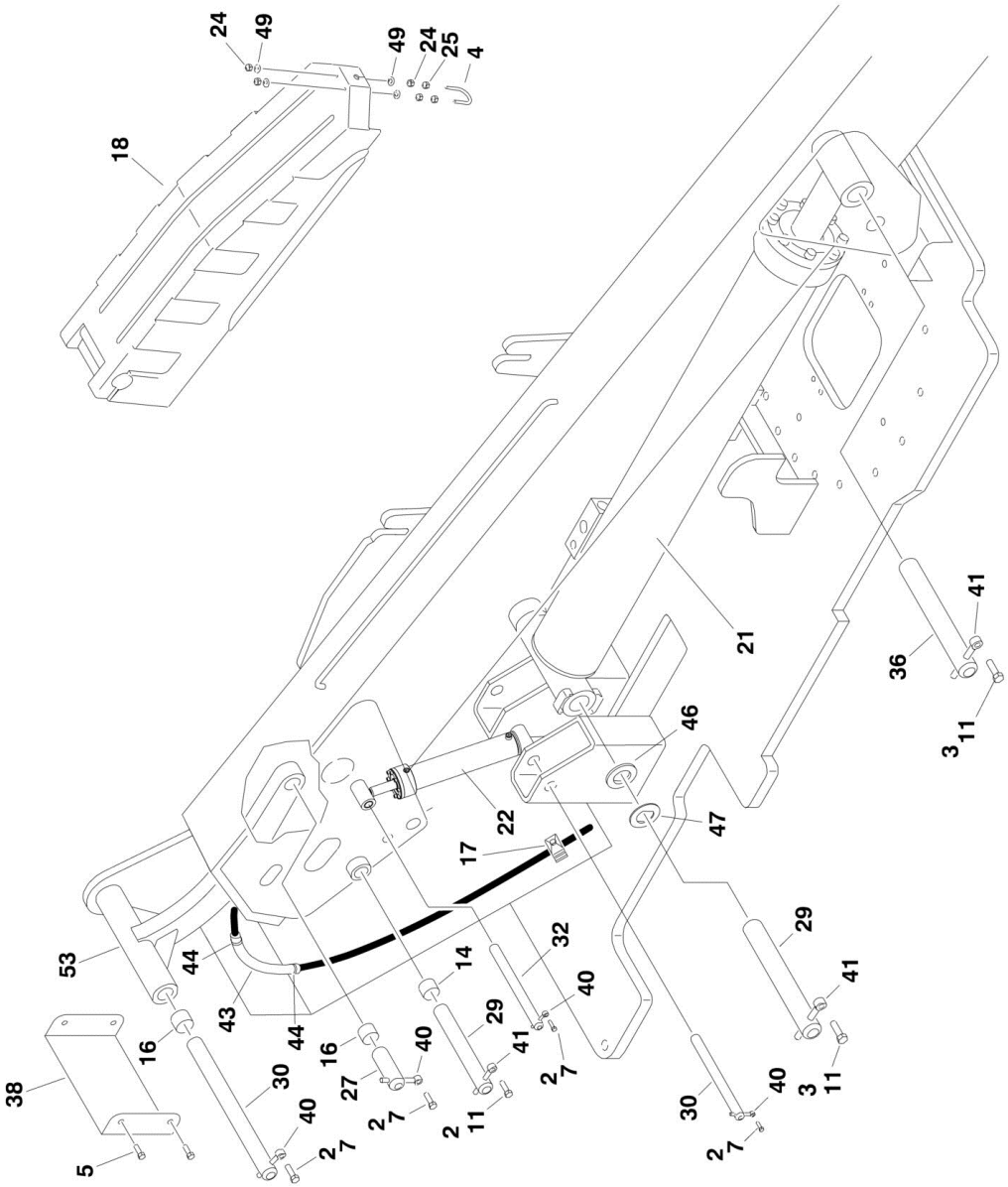

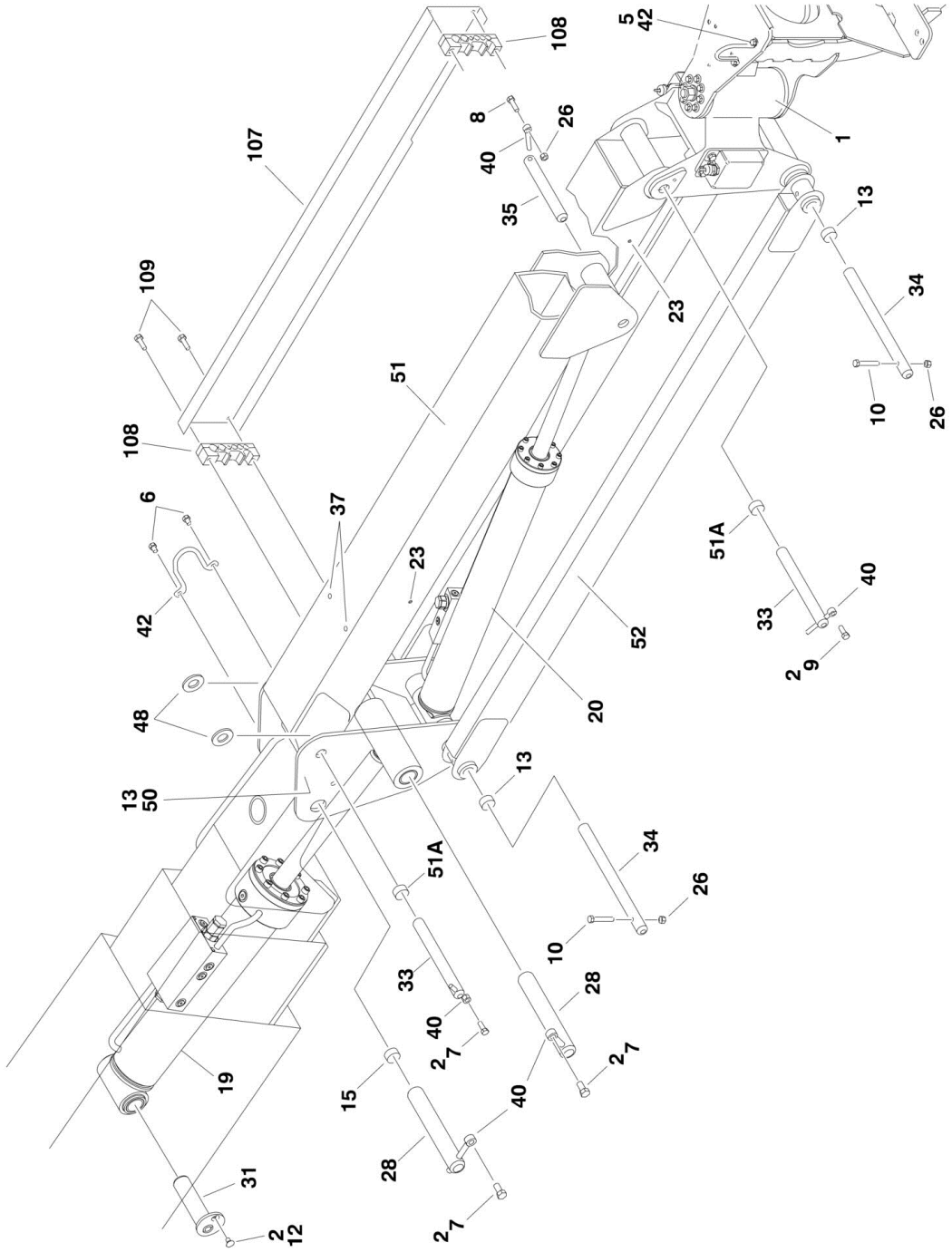
108
5
42
107
8
26
40
1
35
13
109
23
34
51
10
26
108
6
37
51A
23
40
42
33
52
2
9
48
20
13
50
13
51A
34
26
10
33
28
40
2
7
19
15
40
2
7
28
31
2
12
2
7

## FIGURE 3-2. BOOM INSTALLATION - 660SJC

| ITEM | PART NUMBER | QTY | DESCRIPTION | REV |
|---|---|---|---|---|
| | | Ref | **BOOM AND CYLINDERS INSTALLATIONS - 660SJC** | |
| | 0272147 | Ref | **ANSI and ANSI Export Specs (SN 0300128000 through 0300137550)** | 6 |
| | 0272146 | Ref | **Australian and CE Specs (SN 0300128000 through 0300137550)** | 7 |
| | 1001108342 | Ref | **All Specs (SN 0300137551 through 0300174703)** | F |
| 1 | 0060066 | 1 | Rotator Assembly (See ROTATOR ASSEMBLIES for Breakdown) | |
| | | Ref | **Note: Torque Nut on Bottom of Rotator to 480 ft Lbs when Reassembling.** | |
| 2 | 0100011 | AR | Compound, Locking | |
| 3 | 0100019 | AR | Compound, Locking | |
| 4 | 0630458 | AR | U-Bolt | |
| 5 | 0641604 | AR | Bolt 3/8in-16NC x 1/2in | |
| 6 | 0641606 | 2 | Bolt 3/8in-16NC x 3/4in | |
| 7 | 0641608 | 7 | Bolt 3/8in-16NC x 1in | |
| 8 | 0641611 | 1 | Bolt 3/8in-16NC x 1-3/8in | |
| 9 | 0641614 | 1 | Bolt 3/8in-16NC x 1-3/4in | |
| 10 | 0641618 | 4 | Bolt 3/8in-16NC x 2-1/4in | |
| 11 | 0642012 | 3 | Bolt 5/8in-11NC x 1-1/2in | |
| 12 | 0741607 | 1 | Screw, Countersunk 3/8in-16NC x 7/8in | |
| 13 | 0961947 | 6 | Bushing | |
| 14 | 0961950 | 2 | Bushing | |
| 15 | 0961951 | 2 | Bushing | |
| 16 | 0962006 | 3 | Bushing | |
| 17 | 1320235 | 1 | Clamp, Staff | |
| 18 | | Ref | Cover, Boom Options: | |
| 18 | 1671055 | NLA | Cover, Boom (Use p/n 1001148925) **(SN 0300128000 through 0300172250)** | |
| 18 | 1001148925 | 1 | Cover, Boom **(SN 0300172251 through 0300174703)** | |
| 19 | 1683418 | NLA | Platform Level Cylinder Assembly (Use p/n 1001228051) (See CYLINDER SECTION for Breakdown) (Original Equipment) | |
| 19 | 1001223331 | NLA | Platform Level Cylinder Assembly (Use p/n 1001228051) (See CYLINDER SECTION for Breakdown) (Service Replacement) | |
| 19 | 1001228051 | 1 | Platform Level Cylinder Assembly (See CYLINDER SECTION for Breakdown) (Service Replacement) | |
| 20 | 1683609 | NLA | Jib Lift Cylinder Assembly (Use p/n 1001248012) (See CYLINDER SECTION for Breakdown) (Original Equipment) | |
| 20 | 1001228012 | NLA | Jib Lift Cylinder Assembly (Use p/n 1001248012) (See CYLINDER SECTION for Breakdown) (Service Replacement) | |
| 20 | 1001248012 | 1 | Jib Lift Cylinder Assembly (See CYLINDER SECTION for Breakdown) (Service Replacement) | |
| 21 | | Ref | Lift Cylinder Assembly Options (See CYLINDER SECTION for Breakdown): | |
| 21 | 1683666 | NLA | Lift Cylinder Assembly (Use p/n 1001112468) **(SN 0300128000 through 0300138353)** | |
| 21 | 1001112468 | 1 | Lift Cylinder Assembly **(SN 0300138354 through 0300174703)** | |
| 22 | 1684413 | NLA | Master Cylinder Assembly (Use p/n 1001228052) (Original Equipment) **(SN 0300097054 through 0300128000)** | |
| 22 | 1001228052 | 1 | Master Cylinder Assembly (Service Replacement) | |
| 23 | 2080044 | 4 | Rivnut | |
| 24 | 3311402 | AR | Nut, Jam 1/4in-20NC | |
| 25 | 3311405 | AR | Locknut 1/4in-20NC | |

| ITEM | PART NUMBER | QTY | DESCRIPTION | REV |
|---|---|---|---|---|
| 26 | 3311605 | 5 | Locknut 3/8in-16NC | |
| 27 | 3422557 | 1 | Pin | |
| 28 | 3422561 | 2 | Pin | |
| 29 | 3422564 | 2 | Pin | |
| 30 | 3422566 | 2 | Pin | |
| 31 | 3422583 | 1 | Pin | |
| 32 | 3422790 | 1 | Pin | |
| 33 | 3422860 | 2 | Pin | |
| 34 | 3422861 | 2 | Pin | |
| 35 | 3422867 | 1 | Pin | |
| 36 | 3423184 | 1 | Pin | |
| 37 | 3520034 | 4 | Plug | |
| 38 | 3539563 | 1 | Cover Only **(SN 0300128000 through 0300172251)** | |
| 39 | 3790012 | 1 | O-Ring (Not Shown - Located on Console Box) | |
| 40 | 3841143 | 9 | Keeper, Pin | |
| 41 | 3841258 | 3 | Keeper, Pin | |
| 42 | 3841340 | AR | Clamp, Loop Options: | |
| 42 | 3841340 | 1 | Clamp, Loop **(SN 0300128000 through 0300155488)** | |
| 42 | 3841340 | 2 | Clamp, Loop **(SN 0300155489 through 0300174703)** | |
| 43 | 4100033 | 2 ft/.3m | Sleeve | |
| 44 | 4240033 | 2 | Tie-Strap | |
| 45 | 4360328 | 1 | Switch, Toggle (Not Shown - Located on Console Box) | |
| 46 | 4740158 | AR | Thrustwasher | |
| 47 | 4740314 | AR | Thrustwasher | |
| 48 | 4740439 | 2 | Thrustwasher | |
| 49 | 4751400 | AR | Flatwasher 1/4in Regular | |
| 50 | 4844815 | 1 | Pivot | |
| 51 | 4844816 | 1 | Tube, Jib (Top) | |
| 51A | 0962335 | 4 | Bushing | |
| 52 | 4844817 | 2 | Tube, Jib (Bottom) | |
| 53 | | Ref | Link, Push Options: | |
| 53 | 4844944 | 1 | Link, Push **(SN 0300128000 through 0300137537)** | |
| 53 | 1001094043 | 1 | Link, Push **(SN 0300137538 through 0300174703)** | |
| | | Ref | **CABLE COVER INSTALLATIONS** | |
| | 0272043 | Ref | **ANSI and ANSI Export Specs without SkyPower and without Arctic Package** | 2 |
| | 0274594 | Ref | **ANSI and ANSI Export Specs with SkyPower and without Arctic Package** | 1 |
| | 1001104428 | Ref | **ANSI and ANSI Export Specs without SkyPower and with Arctic Package** | 1 |
| | 1001104430 | Ref | **ANSI and ANSI Export Specs with SkyPower and with Arctic Package** | 1 |
| | 0272046 | Ref | **CE and Australian Specs without SkyPower** | 2 |
| | 0274595 | Ref | **CE and Australian Specs with SkyPower** | 1 |
| 107 | 1670769 | 1 | Cover | |
| 108 | 0561237 | 2 | Block, Clamp | |
| 109 | 0641416 | 4 | Bolt 1/4in-20NC x 2in | |

## FIGURE 3-3. MAIN BOOM ASSEMBLIES - ANSI AND ANSI EXPORT SPECS

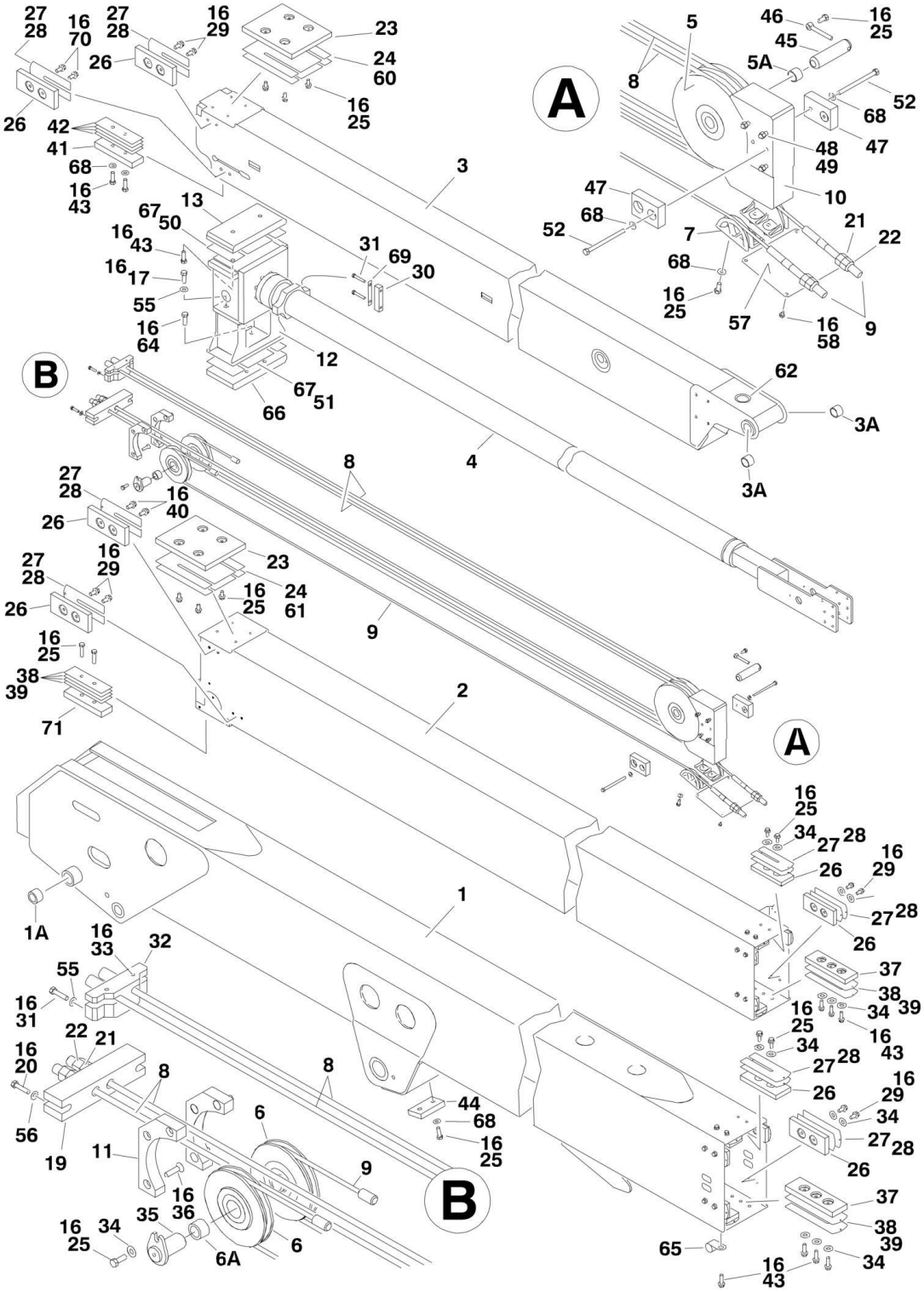

## FIGURE 3-3. MAIN BOOM ASSEMBLIES - ANSI AND ANSI EXPORT SPECS

| ITEM | PART NUMBER | QTY | DESCRIPTION | REV |
|---|---|---|---|---|
| | | Ref | **MAIN BOOM ASSEMBLY OPTIONS:** | |
| | 0801483 | Ref | **Main Boom Assembly 600SC ANSI and ANSI Export Specs** | F |
| | 0801484 | Ref | **Main Boom Assembly 660SJC ANSI and ANSI Export Specs** | F |
| 1 | 0801469 | 1 | Base Weldment | |
| 1A | 0961950 | 2 | Bushing, Garmax | |
| 2 | 0801524 | 1 | Mid Weldment | |
| 3 | | Ref | Fly Weldment Options: | |
| 3 | 0801498 | 1 | Fly Weldment 600SC | |
| 3 | 0801504 | 1 | Fly Weldment 660SJC | |
| 3A | 0961951 | 2 | Bushing (660SJC Only) | |
| 4 | 1683618 | 1 | Telescope Cylinder Assembly (See CYLINDER SECTION for Breakdown) | |
| 5 | 3580241 | 1 | Sheave Assembly (Extend) | 2-B |
| 5A | 0961951 | 2 | Bushing, Garmax | |
| 6 | 3580243 | 1 | Sheave Assembly (Extend) | 1-A |
| 6A | 0961951 | 2 | Bushing (1 Per Sheave) | |
| 7 | 1220078 | 2 | Block, Sheave | |
| 8 | 3890005 | 2 | Cable (Extend) | |
| 9 | 3890006 | 2 | Cable (Retract) | |
| 10 | 3580248 | 1 | Guard, Sheave (Extend) | |
| 11 | 3580249 | 2 | Guard, Sheave (Retract) | |
| 12 | 4846319 | 1 | Support, Wear Pad | |
| 13 | 3340844 | 1 | Pad, Wear | |
| 16 | 0100011 | AR | Compound, Locking | |
| 17 | 0681610 | 4 | Bolt 3/8in-16NC x 1-1/4in (Grade 8) | |
| 19 | 0561184 | 1 | Block, Cable | |
| 20 | 0641824 | 2 | Bolt 1/2in-13NC x 3in | |
| 21 | 3312201 | 4 | Nut 3/4in-10NC | |
| 22 | 3300241 | 4 | Locknut, Special 3/4in-10NC | |
| 23 | 3340757 | 2 | Pad, Wear | |
| 24 | 4070896 | 4 | Shim (.06) (Without Slide-In Slots) | |
| 25 | 0641607 | AR | Bolt 3/8in-16NC x 7/8in | |
| 26 | | Ref | Pad, Wear Options: | |
| 26 | 3340881 | 20 | Pad, Wear **(SN 0300128000 through 0300168631)** | |
| 26 | 1001148652 | 20 | Pad, Wear **(SN 0300168632 through 0300174703)** | |
| 27 | 4070897 | 28 | Shim (.05) (Without Slide-In Slots) | |
| 28 | 4070898 | 24 | Shim (.12) (Without Slide-In Slots) | |
| 29 | 0641606 | 24 | Bolt 3/8in-16NC x 3/4in | |
| 30 | 0561185 | 2 | Block | |
| 31 | 0641616 | 16 | Bolt 3/8in-16NC x 2in | |
| 32 | 0561183 | 1 | Block, Cable | |
| 33 | 3951608 | 2 | Setscrew 3/8in-16NC x 1in | |
| 34 | 4711600 | 38 | Flatwasher 3/8in Thin | |
| 35 | 3422424 | 2 | Pin (Retract Sheave) | |
| 36 | 0741612 | 6 | Screw, Countersunk 3/8in-16NC x 1-1/2in | |
| 37 | 3340871 | 4 | Pad, Wear | |
| 38 | 4070863 | 4 | Shim (.12) | |
| 39 | 4070864 | 3 | Shim (.05) | |
| 40 | 0641613 | AR | Bolt 3/8in-16NC x 1-5/8in | |
| 41 | | Ref | Pad, Wear Options: | |

| ITEM | PART NUMBER | QTY | DESCRIPTION | REV |
|---|---|---|---|---|
| 41 | 3340758 | 2 | Pad, Wear **(SN 0300128000 through 0300168631)** | |
| 41 | 1001148650 | 2 | Pad, Wear **(SN 0300168632 through 0300174703)** | |
| 42 | 4070895 | 8 | Shim (.06) | |
| 43 | 0641608 | 22 | Bolt 3/8in-16NC x 1in | |
| 44 | 0561076 | 1 | Block | |
| 45 | 3422417 | 2 | Pin (Extend Sheave) | |
| 46 | 3841143 | 1 | Keeper, Pin | |
| 47 | | Ref | Pad, Wear Options: | |
| 47 | 3340755 | 2 | Pad, Wear **(SN 0300128000 through 0300168631)** | |
| 47 | 1001148651 | 2 | Pad, Wear **(SN 0300168632 through 0300174703)** | |
| 48 | 0641634 | 4 | Bolt 3/8in-16NC x 4-1/4in | |
| 49 | 3311605 | 4 | Locknut 3/8in-16NC | |
| 50 | 4070976 | 1 | Shim (.12) | |
| 51 | 4071004 | 1 | Shim (.25) | |
| 52 | 0641638 | 2 | Bolt 3/8in-16NC x 4-3/4in | |
| 55 | 4891600 | 6 | Flatwasher 3/8in Hardened | |
| 56 | 4891800 | 2 | Flatwasher 1/2in Hardened | |
| 57 | 3539622 | 1 | Plate, Cover | |
| 58 | 0641403 | 4 | Bolt 1/4in-20NC x 3/8in | |
| 59 | 4070929 | AR | Shim | |
| 60 | 4070939 | AR | Shim (1/16in) (With Slide-In Slots) | |
| 61 | 4070940 | AR | Shim (1/16in) (With Slide-In Slots) | |
| 62 | 4060805 | 6 in/16cm | Flex-Trim | |
| 64 | 0681608 | 4 | Bolt 3/8in-16NC x 1in (Grade 8) | |
| 65 | 1320070 | 2 | Clamp | |
| 66 | 3340900 | 1 | Pad, Wear | |
| 67 | 4071005 | AR | Shim (.05) | |
| 68 | 4751600 | 12 | Flatwasher 3/8in Regular | |
| 69 | 4071007 | AR | Shim | |
| 70 | 0641614 | 4 | Bolt 3/8in-16NC x 1-3/4in | |
| 71 | | Ref | Pad, Wear Options: | |
| 71 | 3340871 | 1 | Pad, Wear **(SN 0300128000 through 0300168631)** | |
| 71 | 1001148653 | 1 | Pad, Wear **(SN 0300168632 through 0300174703)** | |

## FIGURE 3-4. MAIN BOOM ASSEMBLIES - AUSTRALIAN AND CE SPECS

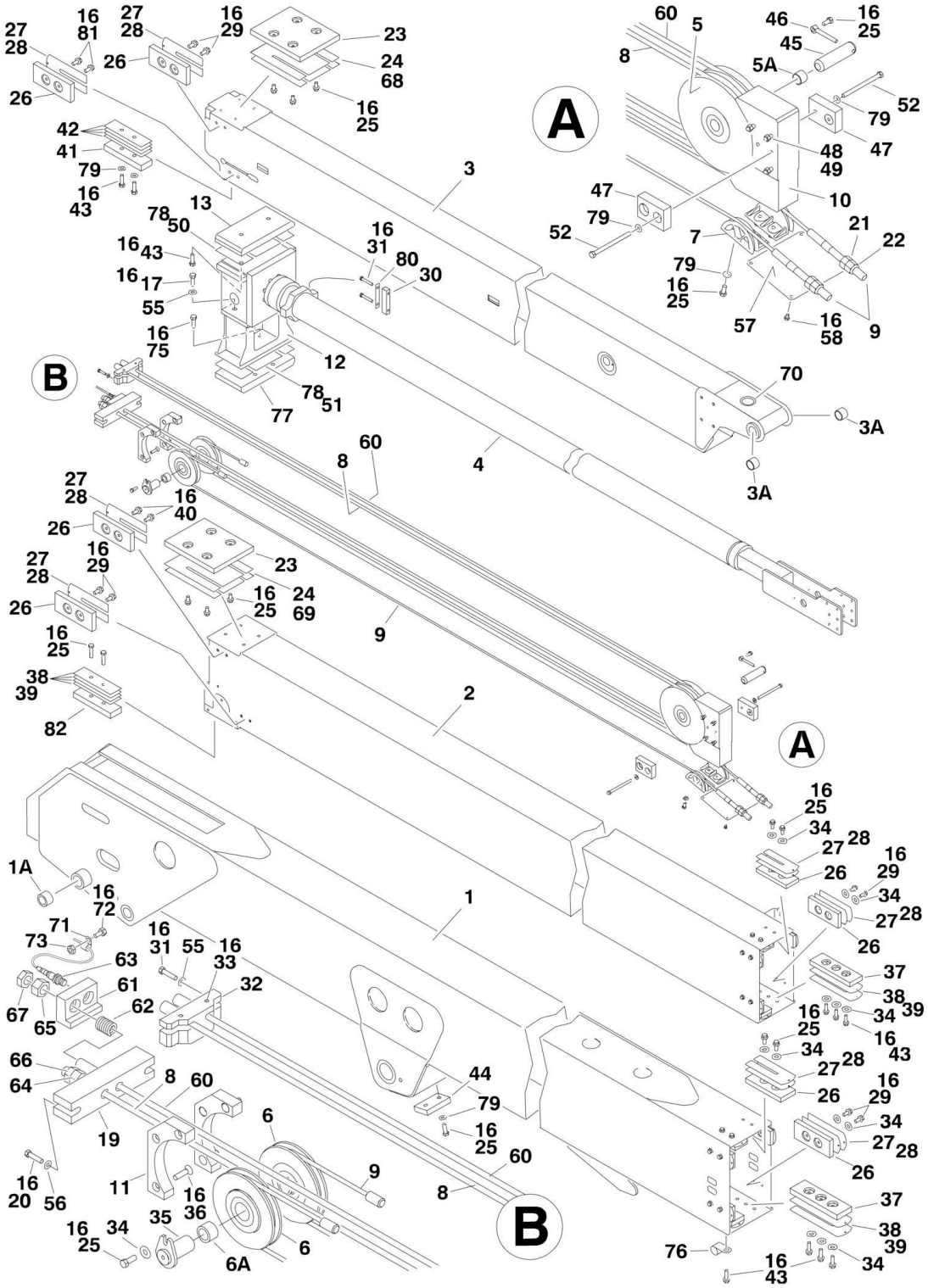

## FIGURE 3-4. MAIN BOOM ASSEMBLIES - AUSTRALIAN AND CE SPECS

| ITEM | PART NUMBER | QTY | DESCRIPTION | REV |
|---|---|---|---|---|
| | | Ref | **MAIN BOOM ASSEMBLY OPTIONS:** | |
| | 0801479 | Ref | **Main Boom Assembly 600SC Australian and CE Specs** | F |
| | 0801481 | Ref | **Main Boom Assembly 660SJC Australian and CE Specs** | F |
| 1 | 0801469 | 1 | Base Weldment | |
| 1A | 0961950 | 2 | Bushing | |
| 2 | 0801524 | 1 | Mid Weldment | |
| 3 | | Ref | Fly Weldment Options: | |
| 3 | 0801498 | 1 | Fly Weldment 600SC | |
| 3 | 0801504 | 1 | Fly Weldment 660SJC | |
| 4 | 1683618 | 1 | Telescope Cylinder Assembly (See CYLINDER SECTION for Breakdown) | |
| 5 | 3580241 | 1 | Sheave Assembly (Extend) | 2-B |
| 5A | 0961951 | 2 | Bushing, Garmax | |
| 6 | 3580243 | 1 | Sheave Assembly (Extend) | 1-A |
| 6A | 0961951 | 2 | Bushing (1 Per Sheave) | |
| 7 | 1220078 | 2 | Block, Sheave | |
| 8 | 3890010 | 1 | Cable (Extend) | |
| 9 | 3890006 | 2 | Cable (Retract) | |
| 10 | 3580248 | 1 | Guard, Sheave (Extend) | |
| 11 | 3580249 | 2 | Guard, Sheave (Retract) | |
| 12 | 4846319 | 1 | Support, Wear Pad | |
| 13 | 3340844 | 1 | Pad, Wear | |
| 16 | 0100011 | AR | Compound, Locking | |
| 17 | 0681610 | 4 | Bolt 3/8in-16NC x 1-1/4in (Grade 8) | |
| 19 | 0561245 | 1 | Block, Cable | |
| 20 | 0641824 | 2 | Bolt 1/2in-13NC x 3in | |
| 21 | 3312201 | 2 | Nut 3/4in-10NC | |
| 22 | 3300241 | 2 | Locknut, Special 3/4in-10NC | |
| 23 | 3340757 | 2 | Pad, Wear | |
| 24 | 4070896 | 4 | Shim (.06) (Without Slide-In Slots) | |
| 25 | 0641607 | AR | Bolt 3/8in-16NC x 7/8in | |
| 26 | | Ref | Pad, Wear Options: | |
| 26 | 3340881 | 20 | Pad, Wear **(SN 0300128000 through 0300168631)** | |
| 26 | 1001148652 | 20 | Pad, Wear **(SN 0300168632 through 0300174703)** | |
| 27 | 4070897 | 28 | Shim (.05) (Without Slide-In Slots) | |
| 28 | 4070898 | 24 | Shim (.12) (Without Slide-In Slots) | |
| 29 | 0641606 | 24 | Bolt 3/8in-16NC x 3/4in | |
| 30 | 0561185 | 2 | Block | |
| 31 | 0641616 | 6 | Bolt 3/8in-16NC x 2in | |
| 32 | 0561183 | 1 | Block, Cable | |
| 33 | 3951608 | 2 | Setscrew 3/8in-16NC x 1in | |
| 34 | 4711600 | 38 | Flatwasher 3/8in Thin | |
| 35 | 3422424 | 2 | Pin (Retract Sheave) | |
| 36 | 0741612 | 6 | Screw, Countersunk 3/8in-16NC x 1-1/2in | |
| 37 | 3340871 | 4 | Pad, Wear | |
| 38 | 4070863 | 4 | Shim (.12) | |
| 39 | 4070864 | 3 | Shim (.05) | |
| 40 | 0641613 | AR | Bolt 3/8in-16NC x 1-5/8in | |
| 41 | | Ref | Pad, Wear Options: | |
| 41 | 3340758 | 2 | Pad, Wear **(SN 0300128000 through 0300168631)** | |

| ITEM | PART NUMBER | QTY | DESCRIPTION | REV |
|---|---|---|---|---|
| 41 | 1001148650 | 2 | Pad, Wear **(SN 0300168632 through 0300174703)** | |
| 42 | 4070895 | 8 | Shim (.06) | |
| 43 | 0641608 | 22 | Bolt 3/8in-16NC x 1in | |
| 44 | 0561076 | 1 | Block | |
| 45 | 3422417 | 2 | Pin (Extend Sheave) | |
| 46 | 3841143 | 1 | Keeper, Pin | |
| 47 | | Ref | Pad, Wear Options: | |
| 47 | 3340755 | 2 | Pad, Wear **(SN 0300128000 through 0300168631)** | |
| 47 | 1001148651 | 2 | Pad, Wear **(SN 0300168632 through 0300174703)** | |
| 48 | 0641634 | 4 | Bolt 3/8in-16NC x 4-1/4in | |
| 49 | 3311605 | 4 | Locknut 3/8in-16NC | |
| 50 | 4070976 | 1 | Shim (.12) | |
| 51 | 4071004 | 1 | Shim (.25) | |
| 52 | 0641638 | 2 | Bolt 3/8in-16NC x 4-3/4in | |
| 55 | 4891600 | 6 | Flatwasher 3/8in Hardened | |
| 56 | 4891800 | 2 | Flatwasher 1/2in Hardened | |
| 57 | 3539622 | 1 | Plate, Cover | |
| 58 | 0641403 | 4 | Bolt 1/4in-20NC x 3/8in | |
| 59 | 4070929 | AR | Shim | |
| 60 | 3890009 | 1 | Cable (Extend) | |
| 61 | 0561508 | 1 | Plate, Spring Mounting | |
| 62 | 4160149 | 1 | Spring | |
| 63 | 4360506 | 1 | Switch, Proximity | |
| 64 | 3272401 | 1 | Nut 7/8in-9NC | |
| 65 | 3272001 | 1 | Nut 5/8in-11NC | |
| 66 | 3300242 | 1 | Locknut 7/8in-9NC | |
| 67 | 3300240 | 1 | Locknut 5/8in-11NC | |
| 68 | 4070939 | AR | Shim (1/16in) (With Slide-In Slots) | |
| 69 | 4070940 | AR | Shim (1/16in) (With Slide-In Slots) | |
| 70 | 4060805 | 6 in/16cm | Flex-Trim | |
| 71 | 1320244 | 1 | Clamp | |
| 72 | 0641406 | 1 | Bolt 1/4in-20NC x 3/4in | |
| 73 | 3311401 | 1 | Nut 1/4in-20NC | |
| 75 | 0681608 | 4 | Bolt 3/8in-16NC x 1in (Grade 8) | |
| 76 | 1320070 | 2 | Clamp | |
| 77 | 3340900 | 1 | Pad, Wear | |
| 78 | 4071005 | 6 | Shim (.05) | |
| 79 | 4751600 | 12 | Flatwasher 3/8in Regular | |
| 80 | 4071007 | AR | Shim | |
| 81 | 0641614 | 4 | Bolt 3/8in-16NC x 1-3/4in | |
| 82 | | Ref | Pad, Wear Options: | |
| 82 | 3340871 | 1 | Pad, Wear **(SN 0300128000 through 0300168631)** | |
| 82 | 1001148653 | 1 | Pad, Wear **(SN 0300168632 through 0300174703)** | |

## FIGURE 3-5. ROTATOR ASSEMBLIES

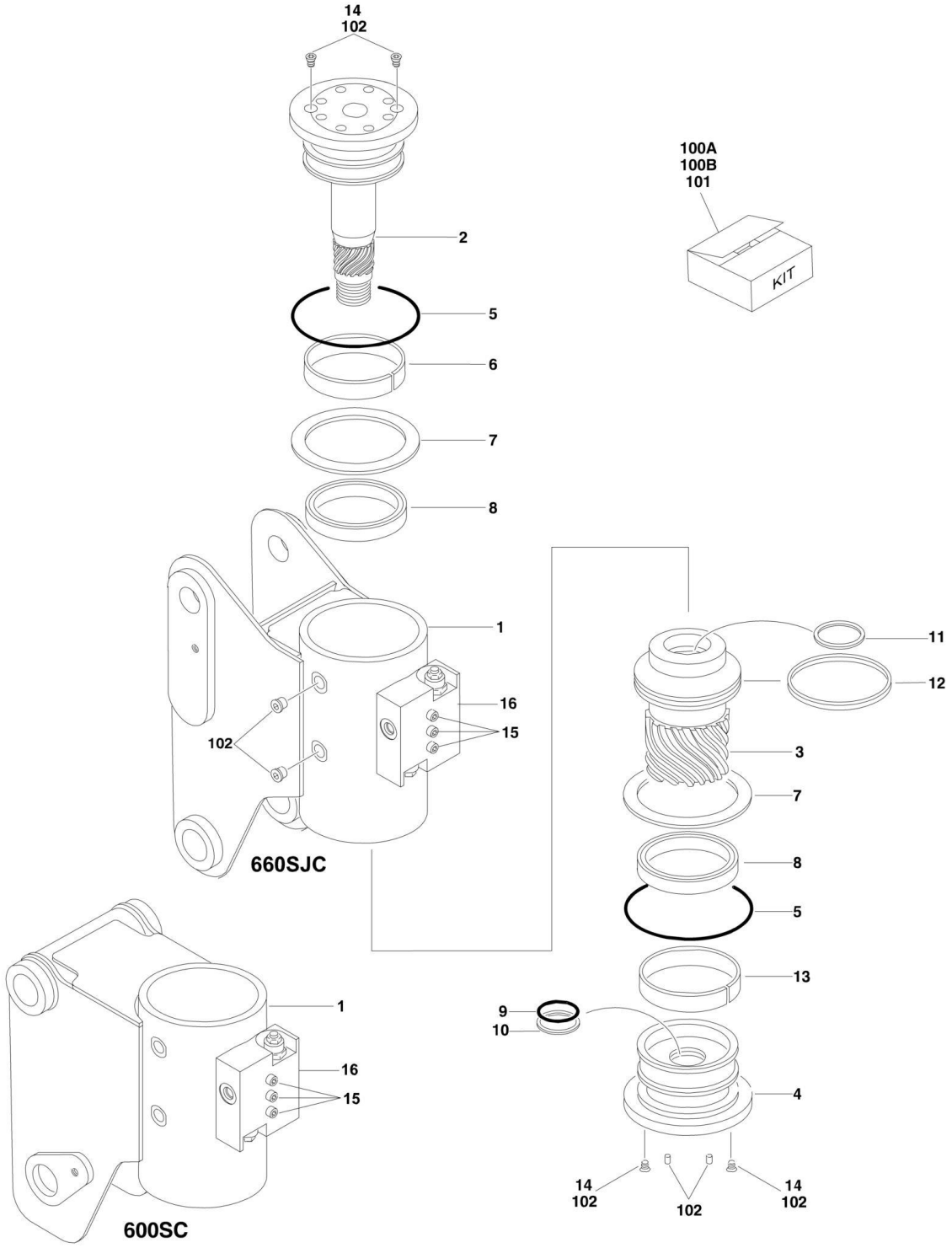

## FIGURE 3-5. ROTATOR ASSEMBLIES

| ITEM | PART NUMBER | QTY | DESCRIPTION | REV |
|---|---|---|---|---|
| | | Ref | **ROTATOR ASSEMBLIES** | |
| | 0060067 | Ref | **Rotator Assembly 600SC** | A |
| | 0060066 | Ref | **Rotator Assembly 660SJC** | C |
| 1 | See Note | NSS | Housing/Ring Gear Assembly (Note: Not Available - Purchase Complete Rotator Assembly.) | |
| 2 | 7017162 | 1 | Shaft | |
| 2 | 7017195 | 2 | Bushing, Shaft | |
| 3 | 7017163 | 1 | Piston/Sleeve Assembly | |
| 4 | 7017164 | 1 | Cap, End | |
| 5 | See Note | NSS | O-Ring (Note: Use Item 100A or 100B) | |
| 6 | See Note | NSS | Bearing, Shaft (Note: Use Item 101) | |
| 7 | See Note | NSS | Thrustwasher (Note: Use Item 101) | |
| 8 | See Note | NSS | Packing, Bearing (Note: Use Item 100A or 100B) | |
| 9 | See Note | NSS | Seal, Cap (Note: Use Item 100A or 100B) | |
| 10 | See Note | NSS | Ring, Back-up Cap (Note: Use Item 100A or 100B) | |
| 11 | See Note | NSS | Seal, Rod (Note: Use Item 100A or 100B) | |
| 12 | See Note | NSS | Seal, Piston (Note: Use Item 100A or 100B) | |
| 13 | See Note | NSS | Bearing, Cap (Note: Use Item 101) | |
| 14 | 70001697 | 4 | Screw, Countersunk 1/4in-20NC x 3/8in (Grade 8) | |
| 15 | See Note | 3 | Capscrew 1/4 x 1-1/2 (Grade 8) (Note: Not Available for Purchase.) | |
| 16 | 7017183 | 3 | Valve Assembly | |
| 16 | 7017193 | 1 | Cartridge, Valve | |
| 16 | See Note | NSS | Seal Kit - 7017193 Valve (Note: Use p/n 7017193) | |
| 16 | See Note | NSS | Cartridge, Valve (Not Shown - Located on Side of Block) (Note: Use p/n 7017183) | |
| 16 | See Note | NSS | Seal Kit - Valve Located on Side of Block (Note: Use p/n 7017183) | |
| | | Ref | **Kit Options** | |
| 100 | | Ref | Seal Kit Options (Includes Items 5, 8-12 & 102): | |
| 100A | 7017158 | 1 | Seal Kit - Standard | |
| 100B | 70000342 | 1 | Seal Kit - Low Temperature | |
| 101 | 7017159 | | Bearing Kit (Includes Items 6, 7 & 13) | |
| 102 | See Note | NSS | Hardware Kit (Note: Part of Item 100 - Use Item 100A or 100B) | |

FIGURE 3-6. PLATFORM SUPPORT INSTALLATION

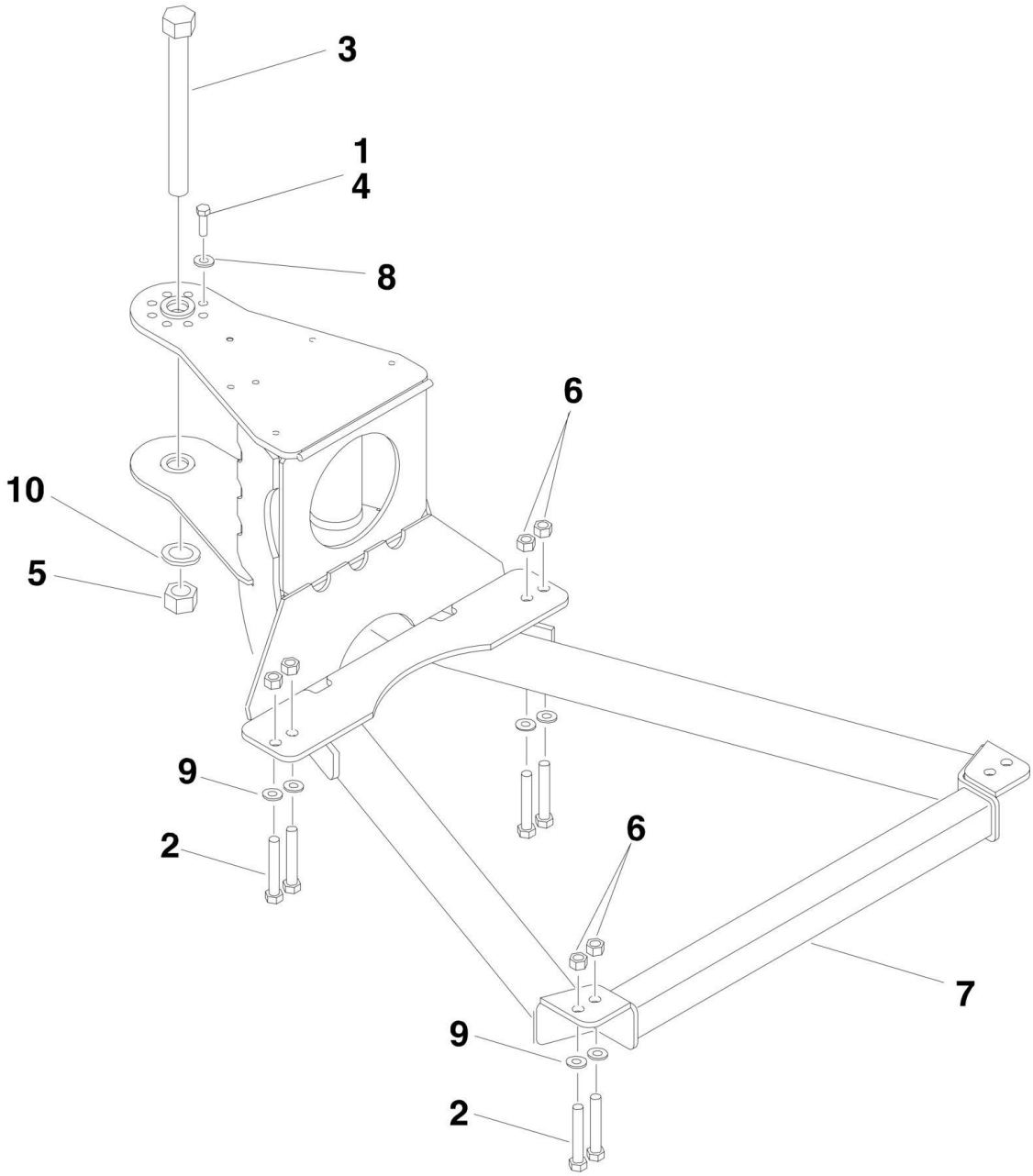

## FIGURE 3-6. PLATFORM SUPPORT INSTALLATION

| ITEM | PART NUMBER | QTY | DESCRIPTION | REV |
|---|---|---|---|---|
| | | Ref | **PLATFORM SUPPORT INSTALLATIONS (SIDE ENTRY PLATFORM)** | |
| | 0272070 | Ref | **Machines without Load Sensing and without SkyGlazier** | C |
| | See Note | Ref | **Machines without Load Sensing and with SkyGlazier (Note: For Replacement Parts, Contact JLG Customer Service and Request Manual p/n 3124242.)** | |
| | See Note | Ref | **Machines with Load Sensing and without SkyGlazier (Note: For Replacement Parts, Contact JLG Customer Service and Request Manual p/n 3124287.)** | |
| | See Note | Ref | **Machines with Load Sensing and with SkyGlazier (Note: For Replacement Parts, Contact JLG Customer Service and Request Manual p/n 3124287.)** | |
| 1 | 0100011 | AR | Compound, Locking | |
| 2 | 0641812 | 8 | Bolt 1/2in-13NC x 1-1/2in | |
| 3 | 0642684 | 1 | Bolt 1in-8NC x 10-1/4in | |
| 4 | 0681608 | 8 | Bolt 3/8in-16NC x 1in | |
| 5 | 3272605 | 1 | Locknut 1in-8NC | |
| 6 | 3311805 | 8 | Locknut 1/2in-13NC | |
| 7 | | Ref | Support Options: | |
| 7 | 4846573 | 1 | Support (Machines without Load Sensing and without SkyGlazier) | |
| 7 | See Note | 1 | Support (All Other Machines) | |
| 8 | 4891600 | 8 | Flatwasher 3/8in Hardened | |
| 9 | 4891800 | 8 | Flatwasher 1/2in Hardened | |
| 10 | 4892600 | 1 | Flatwasher 1in Hardened | |

## FIGURE 3-7. POWER TRACK INSTALLATION

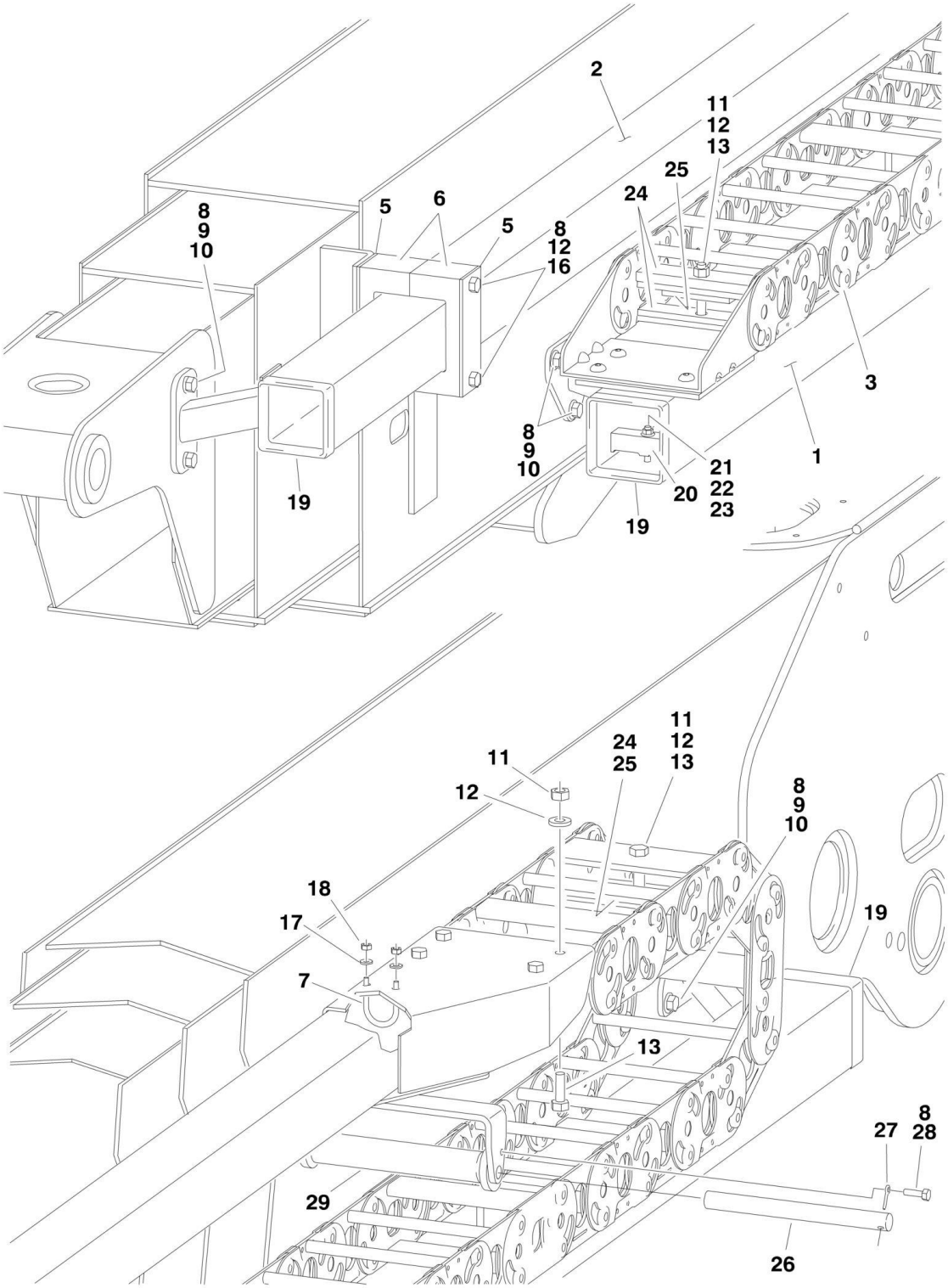

## FIGURE 3-7. POWER TRACK INSTALLATION

| ITEM | PART NUMBER | QTY | DESCRIPTION | REV |
|---|---|---|---|---|
| | | Ref | **POWER TRACK INSTALLATION OPTIONS** | |
| | 0257988 | Ref | **Power Track Installation 600SC** | 7 |
| | 0271242 | Ref | **Power Track Installation 660SJC** | 3 |
| 1 | 4845819 | 1 | Rail | |
| 2 | 4845671 | 1 | Tube, Push | |
| 3 | | Ref | Power Track Assembly Options: | |
| | | Ref | **Note: Various Power Tracks use on this model. Identify brand before ordering parts.** | |
| 3 | 1180345 | NLA | **Gemco Brand Power Track (Not Shown) (Use p/n 1001099832)** | |
| 3 | 7016530 | AR | Repair Section (Gemco Brand) (Includes 18 Link Pin, 4 Radius Links, 2 Carrier Links, 1 Rod Carrier, 1 Spring Loaded Rod, 1 Carrier Weldment and 12 Bearing Plates) | |
| 3 | 7006138 | 1 | Pin Kit (Gemco Brand) (Includes 1 pin, 1 Retaining Ring and 4 Washers) | |
| 3 | 7006143 | 1 | Mounting Feet Kit (Gemco Brand) (Includes 1 Left Hand, 1 Right Hand and 2 Spacers) | |
| 3 | 1001099832 | 1 | **Gortrac Brand Power Track (Shown)** | |
| 3 | 70002005 | AR | Repair Section (Gortrac Brand) | |
| 3 | 70002006 | 1 | Mounting Bracket Kit (Gortrac Brand) | |
| 3 | 70004643 | 2 | Clamp Kit (Gortrac Brand) | |
| 5 | 3538758 | AR | Plate | |
| 6 | 3340764 | 2 | Pad, Wear | |
| 7 | 0630458 | 1 | U-Bolt | |
| 8 | 0100011 | AR | Compound, Locking | |
| 9 | 0641807 | 11 | Bolt 1/2in-13NC x 7/8in | |
| 10 | 4711800 | 11 | Flatwasher 1/2in Narrow | |
| 11 | 0641608 | 8 | Bolt 3/8in-16NC x 1in | |
| 12 | 4711600 | 18 | Flatwasher 3/8in Narrow | |
| 13 | 3311605 | 8 | Locknut 3/8in-16NC | |
| 16 | 0641644 | 2 | Bolt 3/8in-16NC x 5-1/2in | |
| 17 | 4711400 | 2 | Flatwasher 1/4in Narrow | |
| 18 | 3311405 | 2 | Locknut 1/4in-20NC | |
| 19 | 4060803 | 3 ft/0.9m | Shield, Trim | |
| 20 | 1320247 | 1 | Clamp, Nylon | |
| 21 | 0641522 | 1 | Bolt 5/16in-18NC x 2-3/4in | |
| 22 | 3311505 | 1 | Locknut 5/16in-18NC | |
| 23 | 4711500 | 2 | Flatwasher 5/16in Narrow | |
| 24 | 4070994 | 2 | Shim, Neoprene | |
| 25 | 4070995 | 2 | Shim, Neoprene | |
| 26 | 3841013 | 1 | Roller, Rod | |
| 27 | 3450806 | 1 | Pin, Cotter | |
| 28 | 0641404 | 1 | Screw | |
| 29 | 3860050 | 1 | Roller, Power Track | |

# SECTION 4 - PLATFORM

## FIGURE 4-1. PLATFORM COMPONENTS INSTALLATION

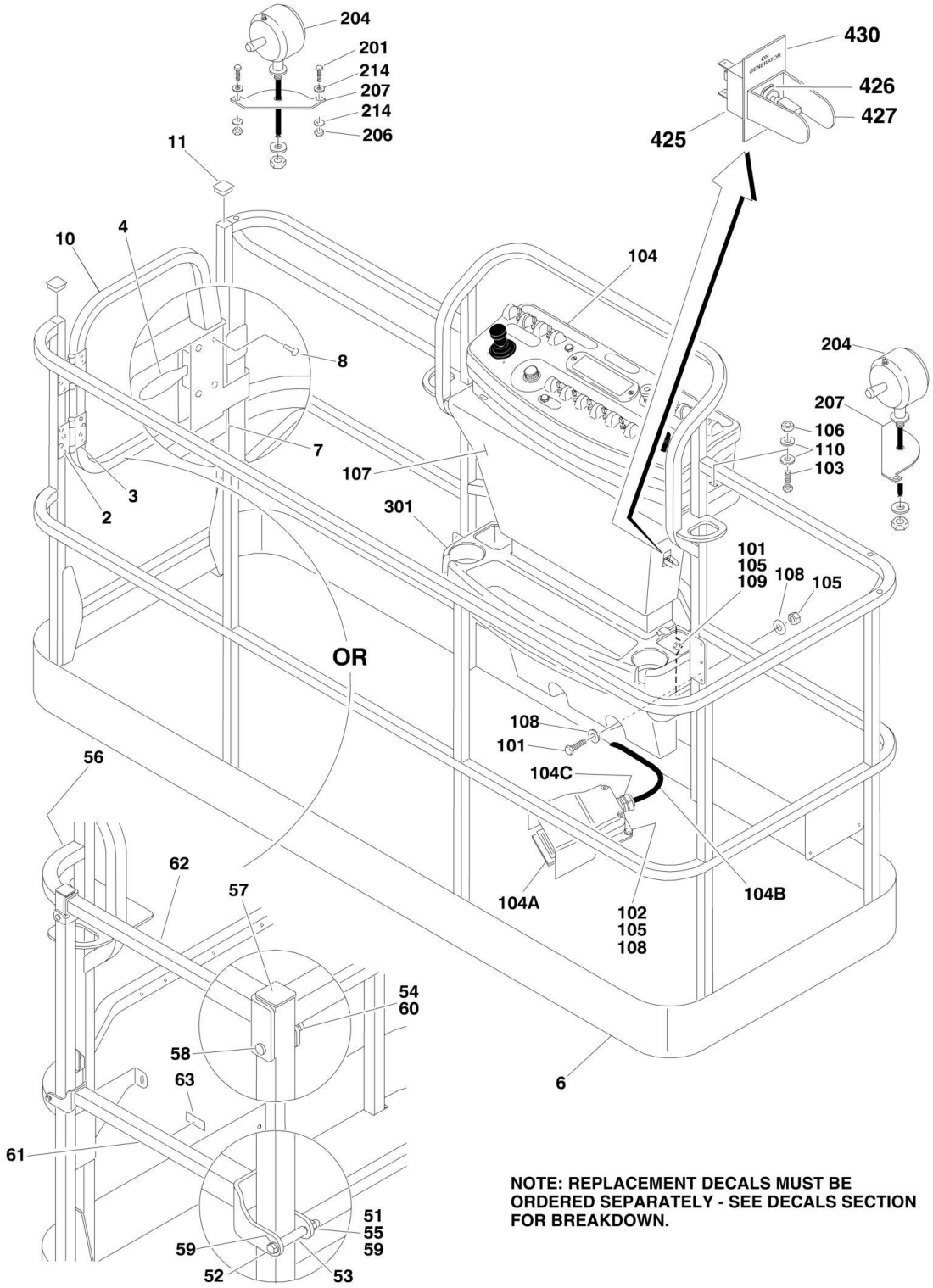


NOTE: REPLACEMENT DECALS MUST BE ORDERED SEPARATELY - SEE DECALS SECTION FOR BREAKDOWN.

## FIGURE 4-1. PLATFORM COMPONENTS INSTALLATION

| ITEM | PART NUMBER | QTY | DESCRIPTION | REV |
|---|---|---|---|---|
| | | Ref | **PLATFORM ASSEMBLIES** | |
| | 3510822 | Ref | **Platform 36in x 8ft (91.5cm x 2.44m) with No Mesh (Use p/n 1001144023) (SN 0300128000 through 0300168255)** | J |
| | 1001144023 | Ref | **Platform 36in x 8ft (91.5cm x 2.44m) with No Mesh (SN 0300168256 through 0300174703)** | B |
| | 3510833 | Ref | **Platform 36in x 6ft (91.5cm x 1.83m) with No Mesh (Use p/n 1001144024) (SN 0300128000 through 0300168255)** | I |
| | 1001144024 | Ref | **Platform 36in x 6ft (91.5cm x 1.83m) with No Mesh (SN 0300168256 through 0300174703)** | B |
| | | Ref | **Note: Replacement Decals must be ordered separately - See DECALS SECTION.** | |
| | | Ref | **Note: Original Equipment platform may have been replaced with Service Replacement platform. Identify platform before ordering parts.** | |
| | | Ref | **Note: When replacing platform on machines with SkyCutter option, new bracket p/n 1001145405 must be purchased to accommodate SkyCutter components.** | |
| 2 | 2080040 | 16 | Fastener, Huck | |
| 3 | 2600281 | 2 | Hinge, Self-Closing | |
| 4 | 2940074 | 1 | Latch | |
| 6 | See Note | 1 | Platform (Note: Not Available - Purchase Complete Platform Assembly.) | |
| 7 | 3520072 | 1 | Cap-Plug | |
| 8 | 3820020 | 4 | Rivet, Pop | |
| 10 | | Ref | Gate Options: | |
| 10 | 4846452 | 1 | Gate for Platform p/ns 3510822 & 3510833 | |
| 10 | 1001144629 | 1 | Gate for Platform p/ns 1001144023 & 1001144024 | |
| 11 | 3520198 | 2 | Cap-Plug | |
| | | Ref | **PLATFORM ASSEMBLY WITH DROP-BAR** | |
| | 1001138434 | Ref | **Platform 36in x 6ft (91.5cm x 1.83m) with No Mesh (Use p/n 1001144021) (SN 0300128000 through 0300168255)** | B |
| | 1001144021 | Ref | **Platform 36in x 6ft (91.5cm x 1.83m) with No Mesh (SN 0300168256 through 0300174703)** | B |
| | 1001138430 | Ref | **Platform 36in x 8ft (91.5cm x 2.44m) with No Mesh (Use p/n 1001144022) (SN 0300128000 through 0300168255)** | B |
| | 1001144022 | Ref | **Platform 36in x 8ft (91.5cm x 2.44m) with No Mesh (SN 0300168256 through 0300174703)** | B |
| | | Ref | **Note: Replacement Decals must be ordered separately - See DECALS SECTION.** | |
| | | Ref | **Note: Original Equipment platform may have been replaced with Service Replacement platform. Identify platform before ordering parts.** | |
| 51 | 0100011 | AR | Compound, Locking | |
| 52 | 0641418 | 2 | Bolt 1/4in-20NC x 2-1/4in | |
| 53 | 0961845 | 2 | Bushing | |
| 54 | 3290606 | 2 | Nut M6 | |
| 55 | 3300151 | 2 | Nut, Acorn | |
| 56 | See Note | 1 | Platform (Note: Not Available - Purchase Complete Platform Assembly.) | |
| 57 | 3520198 | 2 | Cap-Plug | |
| 58 | 4010618 | 2 | Screw M6 x 50mm | |
| 59 | 4711400 | 4 | Flatwasher 1/4in Thin | |
| 60 | 4811700 | 2 | Flatwasher M6 | |

| ITEM | PART NUMBER | QTY | DESCRIPTION | REV |
|---|---|---|---|---|
| 61 | 1001138494 | 1 | Bar, Drop | |
| 62 | 1001138514 | 1 | Rail (Top) | |
| 63 | 1001140429 | 1 | Decal - Drop-Bar | |
| | | Ref | **CONSOLE BOX INSTALLATIONS** | |
| | | Ref | **Note: For Ground Module Identification, Refer to Revision Log Page A.** | |
| | 0272399 | Ref | **Without UGM** | B |
| | 1001108822 | Ref | **With UGM (Use p/n 1001145886)** | B |
| 101 | 0641406 | 4 | Bolt 1/4in-20NC x 3/4in | |
| 102 | 0641408 | 3 | Bolt 1/4in-20NC x 1in | |
| 103 | 0641610 | 4 | Bolt 3/8in-16NC x 1-1/4in | |
| 104 | | Ref | Platform Console Box Assembly (See PLATFORM CONSOLE ASSEMBLY for Breakdown) | |
| 104 | 0861634 | 1 | Without UGM | |
| 104 | 1001108821 | NLA | With UGM (Use p/n 1001145885) | |
| 104A | | Ref | Footswitch Assembly Options (Includes Footswitch and Items 104B & 104C): | |
| 104A | 0272970 | 1 | Footswitch Assembly **(SN 0300128000 through 0300167720)** | |
| 104A | 1001117174 | 1 | Footswitch Assembly **(SN 0300167721 through 0300174703)** | |
| 104A | | Ref | Footswitch Options: | |
| 104A | 4360031 | 1 | Without UGM | |
| 104A | 7000625 | 2 | Block, Contact (Used on p/n 4360031) | |
| 104A | 1001117320 | 1 | With UGM **(SN 0300128000 through 0300167720)** | |
| 104A | 70003483 | 1 | Block, Contact (Used on p/n 1001117320) | |
| 104A | 1001117172 | 1 | With UGM **(SN 0300167721 through 0300174703)** | |
| 104A | 70002902 | 1 | Block, Contact for 1001117172 Footswitch | |
| 104A | 70002903 | 1 | Gasket for 1001117172 Footswitch | |
| 104A | 70002905 | 1 | Cover for 1001117172 Footswitch | |
| 104A | 70002904 | 1 | Bolt Replacement Kit for 1001117172 Footswitch | |
| 104B | 1060918 | 7 ft/2.14m | Cable, Electrical - 18/3 | |
| 104C | 4460071 | 1 | Connector, Strain Relief | |
| 105 | 3311405 | 7 | Locknut 1/4in-20NC | |
| 106 | 3311605 | 4 | Locknut 3/8in-16NC | |
| 107 | 3380434 | 1 | Panel, Decal Mount | |
| 108 | 4740362 | 7 | Washer, Fender 1/4in | |
| 109 | 4751400 | 4 | Flatwasher 1/4in Regular | |
| 110 | 4751600 | 8 | Flatwasher 3/8in Regular | |
| | | Ref | **WORKLIGHTS INSTALLATIONS (OPTIONAL)** | |
| | 0273486 | Ref | **Worklights Installations 600SC** | D |
| | 0273490 | Ref | **Worklights Installations 660SJC** | D |
| 201 | 2080040 | 4 | Huck Fastener | |
| 203 | 4922888 | 1 | Harness, Power to Console Box (Not Shown - See ELECTRICAL SECTION for Breakdown) | |
| 204 | 2920140 | 2 | Worklight | |
| 204 | 7016399 | 2 | Bulb, Replacement (1 Per Worklight) | |
| 206 | 3311405 | 4 | Locknut 1/4in-20NC | |
| 207 | 3536089 | 2 | Plate, Mounting | |
| 213 | 4460426 | 1 | Connector, Strain Relief (Not Shown - Located at Console Box) | |
| 217 | 2820035 | 9 ft/2.7m | Loom, Vinyl (Not Shown) | |
| 218 | 4240099 | 10 | Tie-Strap (Not Shown) | |
| | | Ref | **TRAY INSTALLATIONS (OPTIONAL)** | |

| ITEM | PART NUMBER | QTY | DESCRIPTION | REV |
|---|---|---|---|---|
| 301 | 1580012 | 1 | Tray, Storage (Center) | |
| 302 | 1580013 | 1 | Tray, Storage (Rail Mounted - Not Shown) | |
| | | Ref | **GENERATOR SWITCH INSTALLATION (OPTIONAL)** | |
| 425 | 4360336 | 1 | Switch, Toggle | |
| 426 | 4740397 | 1 | Bushing | |
| 427 | 4060802 | 1 | Guard, Switch | |
| 429 | 2820031 | 4 in/10cm | Heatshrink (Not Shown - Located at Platform) | |
| 430 | 3251102 | 1 | Decal | |

## FIGURE 4-2. PLATFORM CONSOLE ASSEMBLY

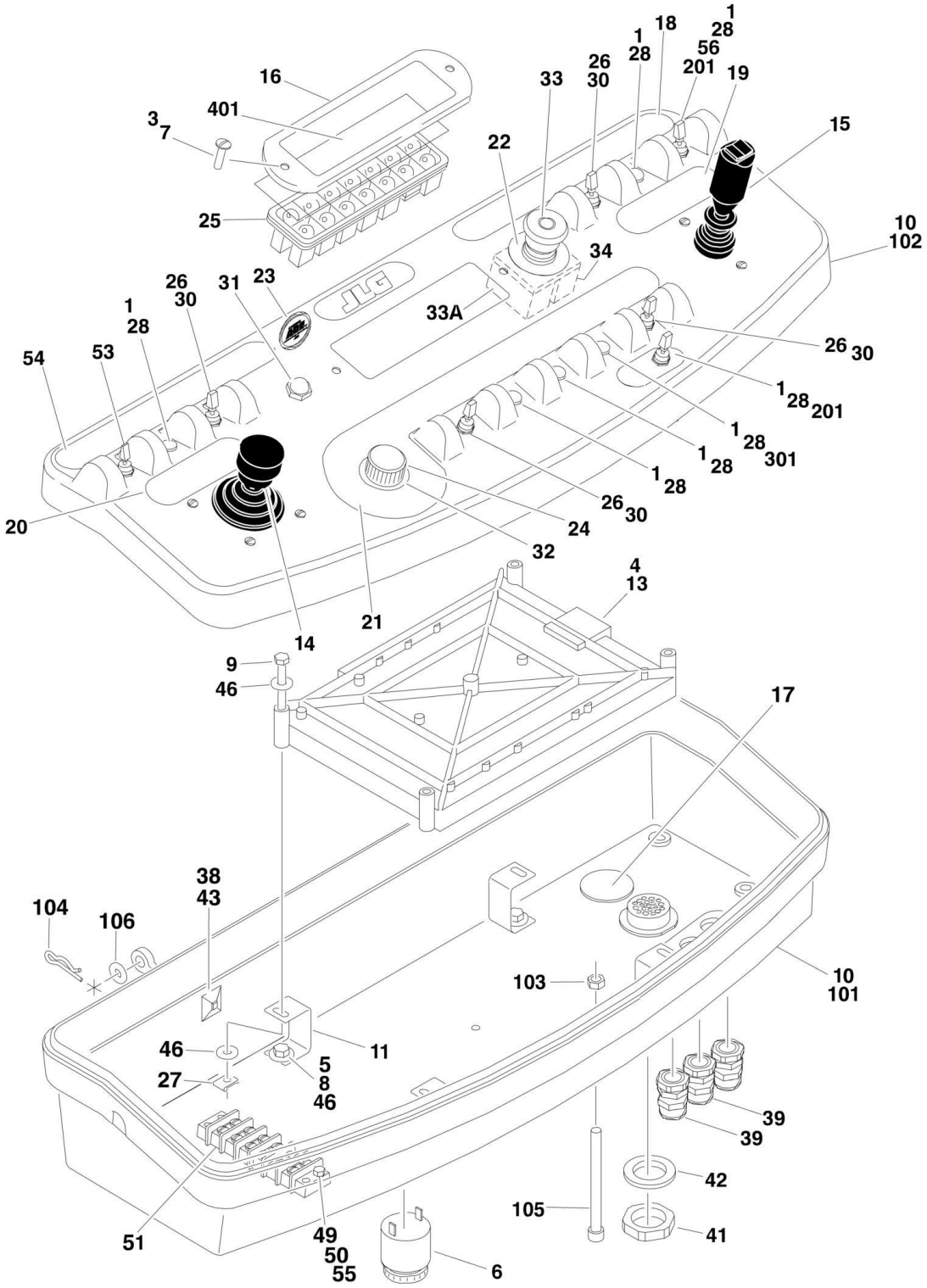

## FIGURE 4-2. PLATFORM CONSOLE ASSEMBLY

| ITEM | PART NUMBER | QTY | DESCRIPTION | REV |
|---|---|---|---|---|
| | | Ref | **Note: Platform Console Module is different based on the Ground Control Module (i.e. with UGM or without UGM). For Ground Module identification, see Revision Log Page A.** | |
| | | Ref | **CONSOLE BOX ASSEMBLY** | |
| | 0861634 | Ref | **Without UGM** | J |
| | 1001108821 | Ref | **With UGM (Original Equipment)** | E |
| | 1001145885 | Ref | **With UGM (Service Replacement)** | A |
| 1 | 0100009 | AR | Sealant | |
| 3 | 0100035 | AR | Compound, Locking | |
| 4 | 0100048 | AR | Grease, Dielectric | |
| 5 | 0100081 | AR | Adhesive | |
| 6 | 0140011 | 1 | Alarm | |
| 7 | 0630464 | 2 | Screw, Button Head #10-24NC x 1/2in | |
| 8 | 0641404 | 4 | Bolt 1/4in-20NC x 1/2in | |
| 9 | 0641416 | 4 | Bolt 1/4in-20NC x 2in | |
| 10 | 0861633 | 1 | Box, Console (See Items 101-106 for Breakdown) | |
| 11 | 0902751 | 4 | Bracket, Card Support | |
| 13 | | Ref | Controller, Module | |
| 13 | | Ref | Note: Re-calibration Required when Replaced. | |
| 13 | 1600375 | 1 | Without UGM | |
| 13 | 1001106355 | 1 | With UGM | |
| 14 | 1600317 | NLA | Controller Assembly (Lift and Swing) (Use p/n 1001129555) (See CONTROLLER ASSEMBLY (SWING AND LIFT) for Breakdown) | |
| 14 | 1001118417 | NLA | Controller Assembly (Lift and Swing) (Use p/n 1001129555) (See CONTROLLER ASSEMBLY (SWING AND LIFT) for Breakdown) | |
| 15 | 1600359 | 1 | Controller Assembly (Drive and Steer) (See CONTROLLER ASSEMBLY (DRIVE AND STEER) for Breakdown) | |
| 16 | 1670829 | 1 | Bezel | |
| 17 | | Ref | Cover Options: | |
| 17 | 1671037 | 1 | Cover (Wingnut Attached Round Cover) **(SN 0300128000 through 0300140371)** | |
| 17 | 1001110434 | 1 | Cover (Press-in D-Shaped Cover) **(SN 0300140372 through 0300174703)** | |
| 18 | | Ref | Decal - Stop Options: | |
| 18 | | Ref | Without UGM | |
| 18 | 1704997 | 1 | Without UGM **(SN 0300128000 through 0300136518)** | |
| 18 | 1001107527 | 1 | Without UGM **(SN 0300136519 through 0300174703)** | |
| 18 | 1001107677 | NLA | With UGM (Use p/n 1001131168) | |
| 19 | 1704460 | 1 | Decal - Drive and Steer | |
| 20 | 1702566 | 1 | Decal - Lift and Swing | |
| 21 | 1702567 | 1 | Decal - Function Speed | |
| 22 | 1704260 | 1 | Decal - EMS | |
| 23 | 1705132 | 1 | Decal - ADE | |
| 24 | 2560136 | 1 | Handle, Knob | |
| 25 | 2760105 | 1 | Housing, Display Light | |
| 26 | 3790012 | 5 | O-Ring | |
| 27 | 3300353 | 4 | Nut, Tinnerman | |
| 28 | | Ref | Plug, Hole Options: | |
| 28 | 3520028 | 6 | Without UGM | |
| 28 | 3520054 | 6 | With UGM | |
| 30 | 4360328 | 4 | Switch, Toggle | |

| ITEM | PART NUMBER | QTY | DESCRIPTION | REV |
|---|---|---|---|---|
| 31 | 4360387 | 1 | Switch, Pushbutton | |
| 32 | 4360407 | 1 | Controller, Speed | |
| 32 | See Note | 1 | Gasket "Top Hat" (Included with Switch) (Note: Not Available for Purchase) | |
| 32 | 70003784 | 1 | Seal | |
| 33 | 4360475 | 1 | Switch, Emergency Stop | |
| 33 | 7020175 | 1 | Cap, Red | |
| 33A | 7020176 | 1 | Contact Block | |
| 34 | 4360476 | 1 | Block, Contact | |
| 38 | 4460234 | AR | Tie-Strap | |
| 39 | 4460428 | 2 | Connector, Strain Relief | |
| 41 | 4460470 | 1 | Nut, Terminal | |
| 42 | 4460471 | 1 | Lockwasher, Terminal | |
| 43 | 4460488 | 1 | Base, Mounting Only **(SN 0300128000 through 0300134963)** | |
| 44 | 4460708 | 2 | Terminal, 15 Pin (Not Shown - See ELECTRICAL SECTION for Location) | |
| 45 | 4460905 | 5 | Plug, Seal (Not Shown - See ELECTRICAL SECTION for Location) | |
| 46 | 4751400 | 8 | Flatwasher 1/4in Regular | |
| 47 | | Ref | Harness, Platform Box Options (Not Shown - See ELECTRICAL SECTION for Location): | |
| 47 | 4922639 | 1 | Harness, Platform Box **(SN 0300128000 through 0300136518)** | |
| 47 | 1001107753 | 1 | Harness, Platform Box **(SN 0300136519 through 0300174703)** | |
| 48 | 4922666 | 1 | Harness, Analyzer Cable (Not Shown - See ELECTRICAL SECTION for Location) | |
| 49 | 0721006 | AR | Bolt #10-24NC x 3/4in | |
| 50 | 3311005 | AR | Locknut #10-24NC | |
| 51 | 4460007 | 1 | Bar, Buss | |
| 53 | 4360331 | 1 | Switch, Toggle | |
| 54 | 1702676 | 1 | Decal - Horn | |
| 55 | 4751000 | 2 | Flatwasher #10 Regular | |
| 56 | 4360330 | 1 | Switch, Toggle (UGM Machines Only) | |
| | 0861633 | Ref | **CONSOLE BOX ASSEMBLY** | C |
| 101 | See Note | NSS | Console Bottom (Note: Not Available - Purchase Complete Console Box Assembly.) | |
| 102 | See Note | NSS | Console Top (Note: Not Available - Purchase Complete Console Box Assembly.) | |
| 103 | 3311601 | 1 | Nut 3/8in-16NC | |
| 104 | 3470003 | 2 | Hairpin | |
| 105 | 0630568 | 1 | Screw 3/8in-16NC x 4-1/2in | |
| 106 | 4711500 | 2 | Flatwasher 5/16in Thin | |
| | 0271552 | Ref | **HEAD AND TAIL LIGHTS INSTALLATION (OPTIONAL)** | C |
| 201 | | Ref | Switch, Toggle Options: | |
| 201 | 4360336 | 1 | Switch, Toggle **(SN 0300128000 through 0300136518)** | |
| 201 | 4360522 | 1 | Switch, Toggle **(SN 0300136519 through 0300174703)** | |
| 201 | 3790012 | 1 | O-Ring Only **(SN 0300128000 through 0300136518)** | |
| 201 | 1705170 | 1 | Decal - Lights Only **(SN 0300136519 through 0300174703)** | |
| | | Ref | **JIB SWITCH INSTALLATION (660SCJ ONLY)** | |
| | 0272147 | Ref | **ANSI and ANSI Export Specs (SN 0300128000 through 0300137550)** | 5 |
| | 0272146 | Ref | **Australian and CE Specs (SN 0300128000 through 0300137550)** | 6 |
| | 1001108342 | Ref | **All Specs (SN 0300137551 through 0300174703)** | A |

| ITEM | PART NUMBER | QTY | DESCRIPTION | REV |
|---|---|---|---|---|
| 301 | 4360328 | 1 | Switch, Toggle | |
| 301 | 3790012 | 1 | O-Ring | |
| | | Ref | **LIGHT PANEL DECAL INSTALLATION** | |
| | 0270386 | Ref | **ANSI and CSA Specs** | 1-C |
| | 0270388 | Ref | **ANSI Export, Australian and Japanese Specs** | 1-C |
| | 0270387 | Ref | **CE Spec** | 1-C |
| 401 | | Ref | Decal Options: | |
| 401 | 1704707 | 1 | ANSI and CSA Specs | |
| 401 | 1704710 | 1 | ANSI Export, Australian and Japanese Specs | |
| 401 | 1704709 | 1 | CE Spec | |

## FIGURE 4-3. CONTROLLER ASSEMBLY (LIFT AND SWING) (ORIGINAL EQUIPMENT)

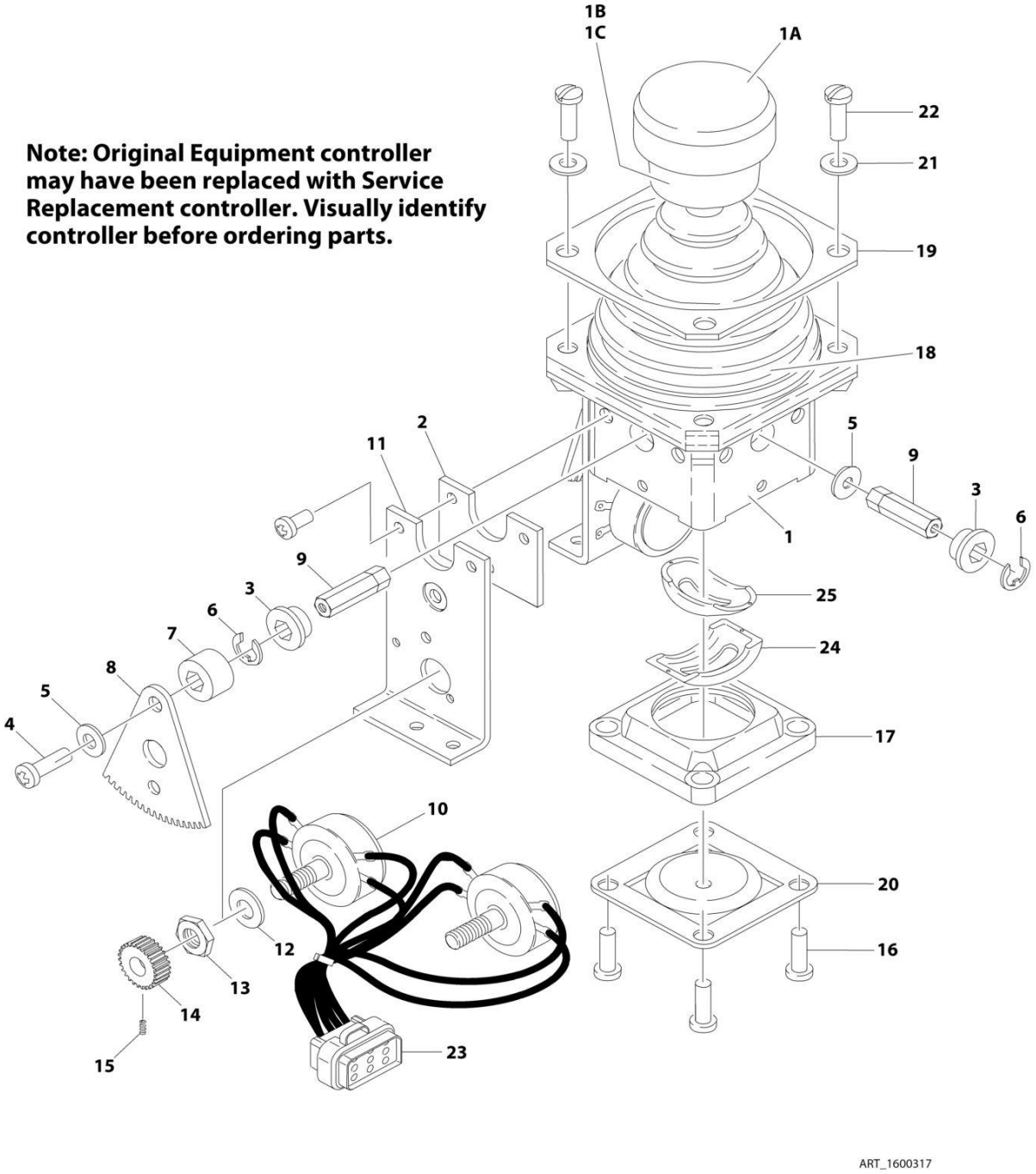

## FIGURE 4-3. CONTROLLER ASSEMBLY (LIFT AND SWING) (ORIGINAL EQUIPMENT)

| ITEM | PART NUMBER | QTY | DESCRIPTION | REV |
|---|---|---|---|---|
| | | Ref | **Note: Original Equipment controller may have been replaced with Service Replacement controller. Visually identify controller before ordering parts.** | |
| | 1600317 | Ref | **CONTROLLER ASSEMBLY (ORIGINAL EQUIPMENT)** | B |
| | | Ref | **Note: Use p/n 1001129555 Kit as replacement.** | |
| 1 | 7019141 | 1 | Mechanical Assembly (Includes Base, Handle Stem and Items 1A, 1B, 1C & 18) | |
| 1A | 7019197 | 1 | Handle Cap and Rod | |
| 1B | 7003928 | 1 | Spring | |
| 1C | 7022808 | 1 | Cap, Lift | |
| 2 | 7019171 | 1 | Plate | |
| 3 | 7019111 | 4 | Bearing, Gear | |
| 4 | 7019143 | 2 | Screw | |
| 5 | 7019144 | 2 | Spacer, Cam | |
| 6 | 7019145 | 4 | E-Clip | |
| 7 | 7019174 | 2 | Spacer | |
| 8 | 7003977 | 2 | Gear, Drive | |
| 9 | | Ref | Shaft Options: | |
| 9 | 7019147 | 2 | Shaft, Short | |
| 9 | 7019177 | 2 | Shaft, Long | |
| 10 | 7022818 | 2 | Potentiometer | |
| 11 | 7019142 | 2 | Plate | |
| 12 | 7003992 | 2 | Washer | |
| 13 | 7003993 | 2 | Nut | |
| 14 | 7003976 | 2 | Gear, Slave | |
| 15 | 7019149 | 2 | Setscrew | |
| 16 | 7022816 | 4 | Screw | |
| 17 | 7019150 | 1 | Gate | |
| 18 | 7022814 | 1 | Boot | |
| 19 | 7022815 | 1 | Bezel | |
| 20 | See Note | NSS | Detent, Center (Note: Use p/n 1001129555) | |
| 21 | 7003953 | 4 | Washer | |
| 22 | 7022817 | 4 | Screw | |
| 23 | 7022819 | 1 | Plug, Male 8 Position (Natural) | |
| 23 | 4460871 | 8 | Socket, Female | |
| 24 | 7019122 | 1 | Gimble, Outer | |
| 25 | 7019123 | 1 | Gimble, Inner | |

## FIGURE 4-4. CONTROLLER ASSEMBLY (LIFT AND SWING) (SERVICE REPLACEMENT)

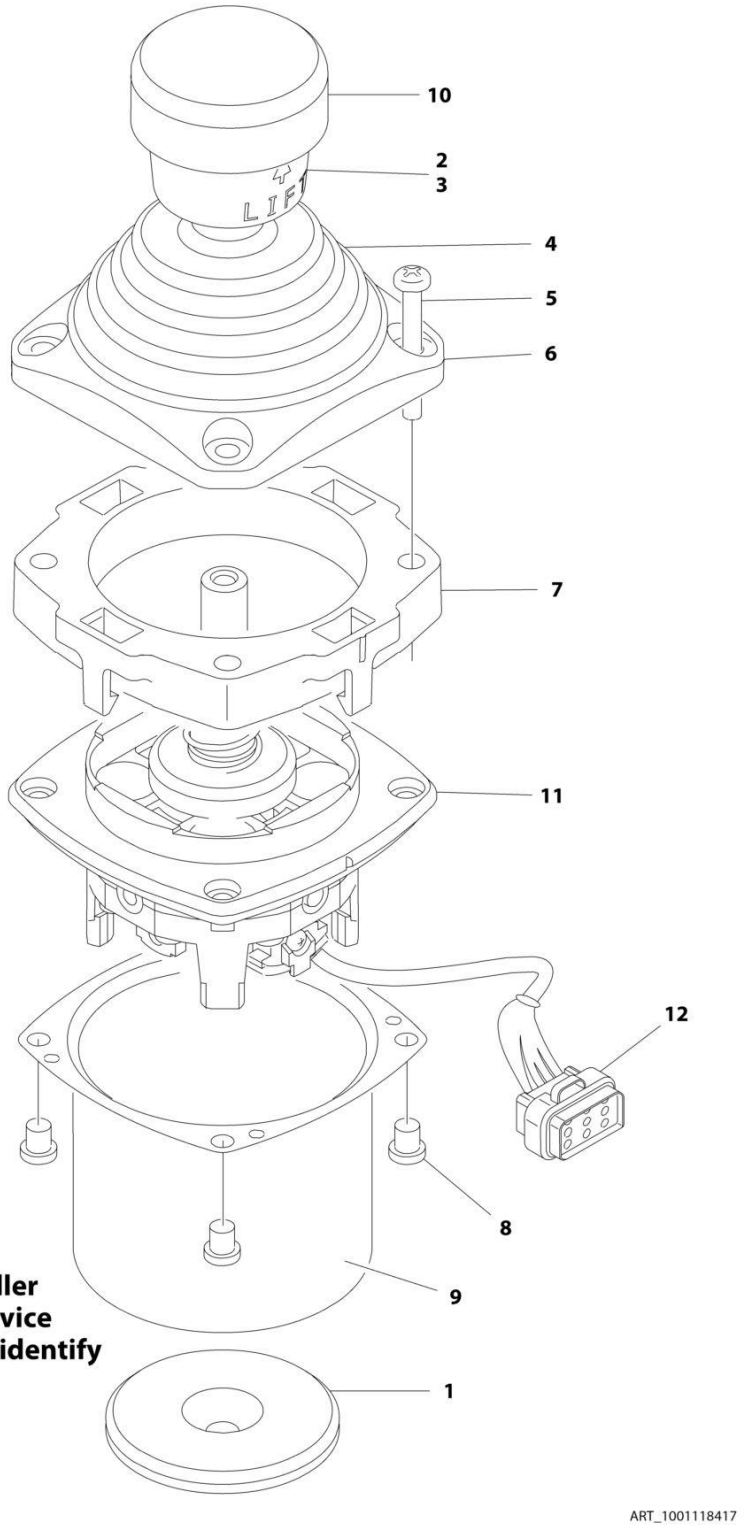


**Note: Original Equipment controller may have been replaced with Service Replacement controller. Visually identify controller before ordering parts.**

## FIGURE 4-4. CONTROLLER ASSEMBLY (LIFT AND SWING) (SERVICE REPLACEMENT)

| ITEM | PART NUMBER | QTY | DESCRIPTION | REV |
|---|---|---|---|---|
| | | Ref | **Note: Original Equipment controller may have been replaced with Service Replacement controller, Visually identify controller before ordering parts.** | |
| | 1001118417 | Ref | **CONTROLLER ASSEMBLY (LIFT AND SWING) (SERVICE REPLACEMENT)** | A |
| | | Ref | **Note: Use p/n 1001129555 as Replacement.** | |
| 1 | 70002730 | 1 | Gasket | |
| 2 | 7003928 | 1 | Spring | |
| 3 | 7022808 | 1 | Cap, Lift | |
| 4 | 70002731 | 1 | Boot | |
| 5 | 70002732 | 4 | Screw | |
| 6 | 7022815 | 1 | Bezel | |
| 7 | 70002733 | 1 | Adapter | |
| 8 | 70002734 | 4 | Screw | |
| 9 | 70002735 | 1 | Can, Enclosure | |
| 10 | 70002906 | 1 | Cap | |
| 11 | See Note | NSS | Mechanical Assembly (Note: Purchase Kit p/n 1001129555) | |
| 12 | 7022819 | 1 | Connector - 8 Position | |
| 12 | 4460871 | 6 | Socket, Female | |

## FIGURE 4-5. CONTROLLER ASSEMBLY (LIFT AND SWING) (SERVICE REPLACEMENT)

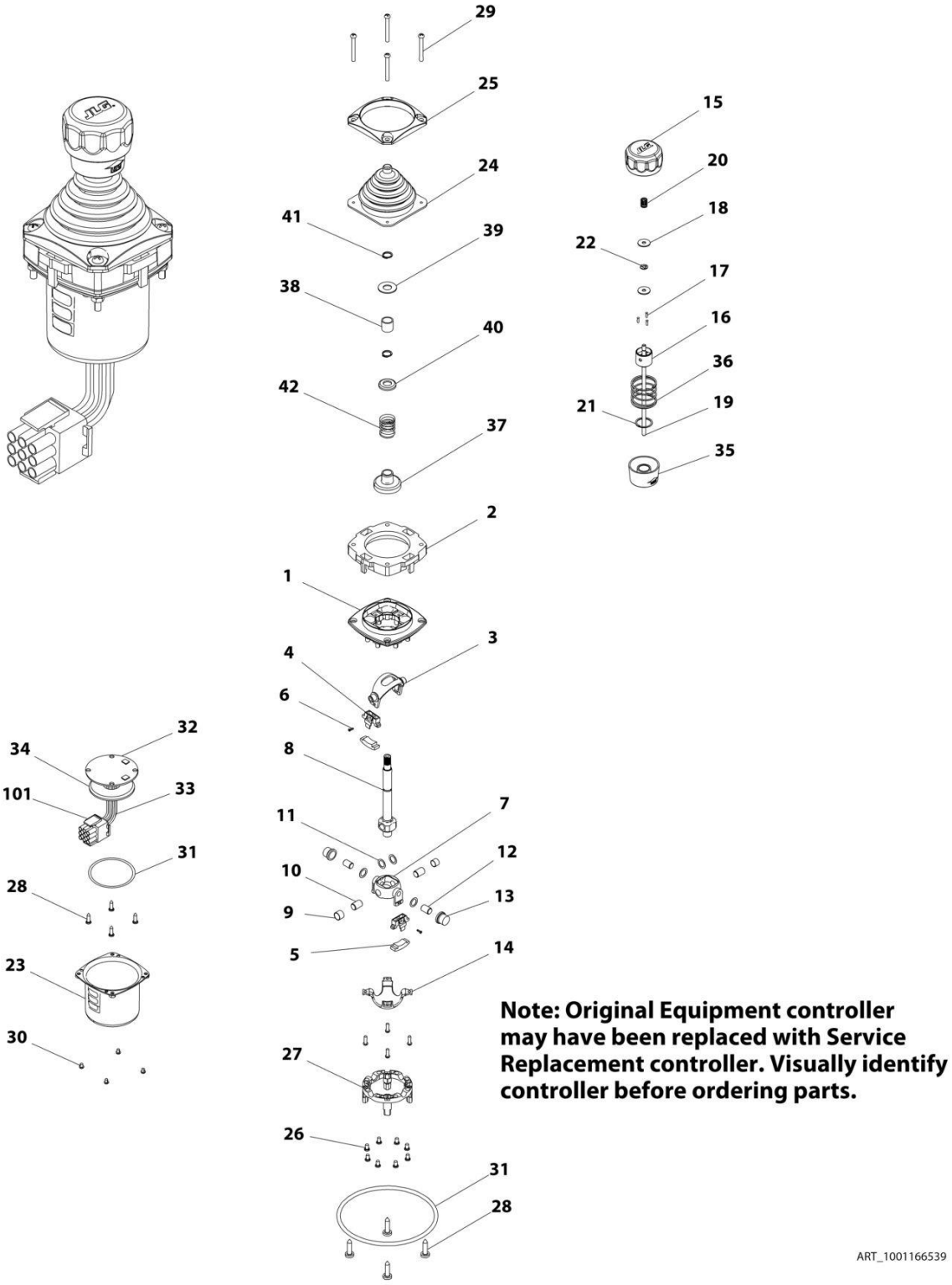

## FIGURE 4-5. CONTROLLER ASSEMBLY (LIFT AND SWING) (SERVICE REPLACEMENT)

| ITEM | PART NUMBER | QTY | DESCRIPTION | REV |
|---|---|---|---|---|
| | | Ref | **Note: Original Equipment controller may have been replaced with Service Replacement controller. Visually identify controller before ordering parts.** | |
| | 1001166539 | Ref | **CONTROLLER ASSEMBLY (LIFT AND SWING) (SERVICE REPLACEMENT)** | A |
| | | Ref | **Note: Use p/n 1001129555 as Replacement.** | |
| 1 | See Note | NSS | Main Cast Body (Note: Not Available - Purchase Complete Assembly) | |
| 2 | 70004752 | 1 | Adapter | |
| 3 | See Note | NSS | Pivot Arm, Plastic (Note: Not Available - Purchase Complete Assembly) | |
| 4 | See Note | NSS | Holder, Magnet (Note: Not Available - Purchase Complete Assembly) | |
| 5 | See Note | NSS | Arc, Magnet (Note: Not Available - Purchase Complete Assembly) | |
| 6 | See Note | NSS | Screw (Note: Not Available for Purchase) | |
| 7 | See Note | NSS | Pivot Arm, Cast (Note: Not Available - Purchase Complete Assembly) | |
| 8 | See Note | NSS | Shaft, Main (Note: Not Available - Purchase Complete Assembly) | |
| 9 | See Note | NSS | Bearing (Note: Not Available - Purchase Complete Assembly) | |
| 10 | See Note | NSS | Pin (Note: Not Available - Purchase Complete Assembly) | |
| 11 | See Note | NSS | Shim (Note: Not Available - Purchase Complete Assembly) | |
| 12 | See Note | NSS | Pin (Note: Not Available - Purchase Complete Assembly) | |
| 13 | See Note | NSS | Bearing (Note: Not Available - Purchase Complete Assembly) | |
| 14 | See Note | NSS | Dome, Centering (Note: Not Available - Purchase Complete Assembly) | |
| 15 | 70004753 | 1 | Cap | |
| 16 | 70004754 | 1 | Insert, Cap | |
| 17 | 70004755 | 3 | Pin | |
| 18 | 70004756 | 2 | Washer | |
| 19 | 70004757 | 1 | Pin, Centering | |
| 20 | 70004758 | 1 | Spring | |
| 21 | 70004759 | 1 | Ring, Retaining | |
| 22 | 70004760 | 1 | E-Ring | |
| 23 | 70004761 | 1 | Can, Enclosure | |
| 24 | 70004762 | 1 | Boot | |
| 25 | 70004763 | 1 | Bezel | |
| 26 | See Note | NSS | Screw (Note: Not Available for Purchase) | |
| 27 | See Note | NSS | Base Mounting (Note: Not Available - Purchase Complete Assembly) | |
| 28 | See Note | NSS | Screw (Note: Available for Purchase) | |
| 29 | 70004764 | 4 | Screw | |
| 30 | 70004765 | 4 | Screw | |
| 31 | 70004766 | 1 | O-Ring | |
| 32 | See Note | NSS | Plate (Note: Not Available - Purchase Complete Assembly) | |
| 33 | See Note | NSS | Harness (Note: Not Available - Purchase Complete Assembly) | |
| 34 | 70004767 | 1 | Grommet, Rubber | |
| 35 | 70004768 | 1 | Housing | |
| 36 | 70004769 | 1 | Spring | |
| 37 | 70004770 | 1 | Stopper | |
| 38 | 70004771 | 1 | Spacer | |
| 39 | 70004772 | 1 | Washer | |

| ITEM | PART NUMBER | QTY | DESCRIPTION | REV |
|---|---|---|---|---|
| 40 | 70004773 | 1 | Disc | |
| 41 | 70004774 | 2 | Ring, Retaining | |
| 42 | 70004775 | 1 | Spring | |
| 101 | 4460265 | 1 | Connector - 9 Position | |
| 101 | 4460226 | 6 | Socket, Female | |

FIGURE 4-6. CONTROLLER ASSEMBLY (DRIVE AND STEER)

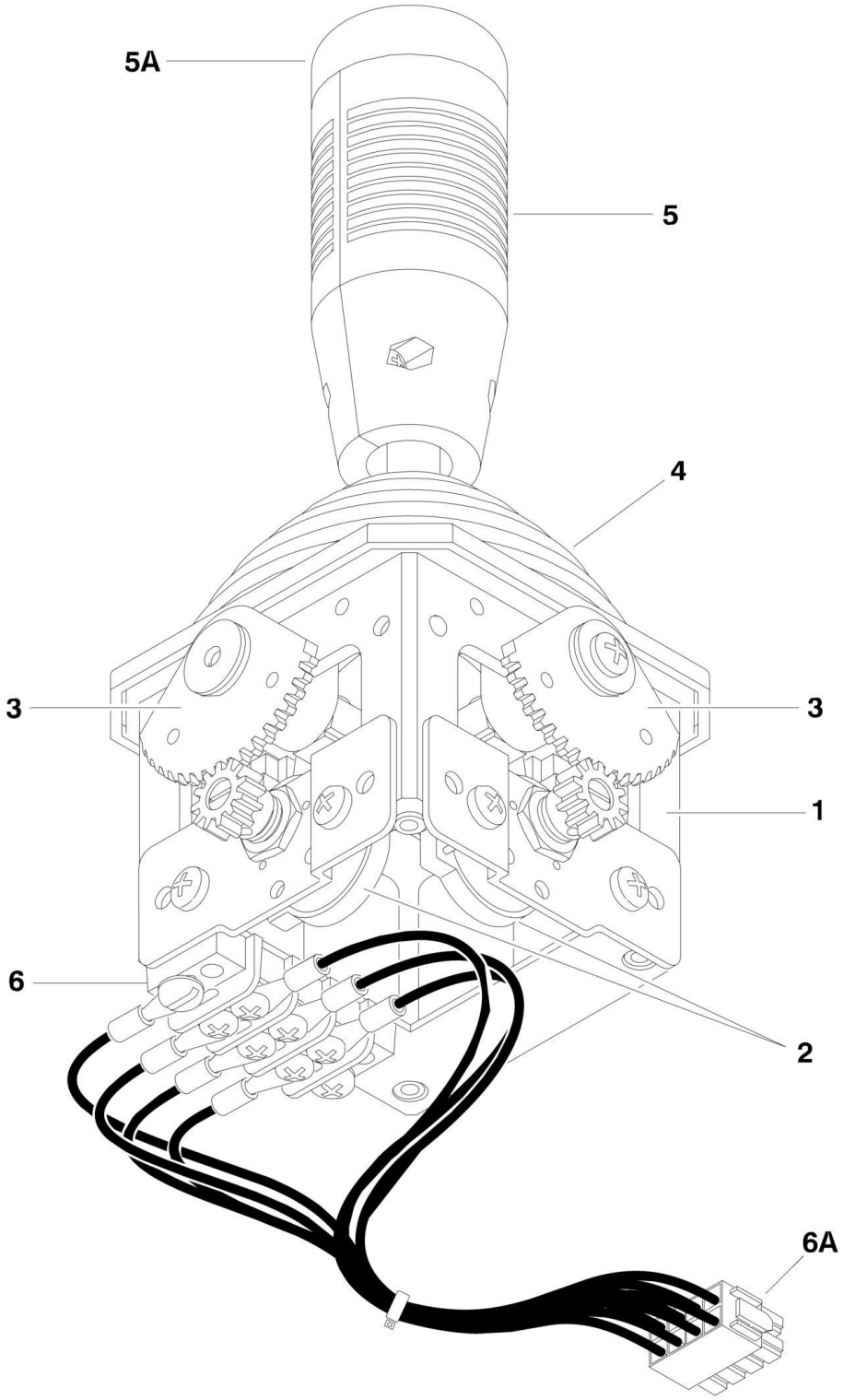

## FIGURE 4-6. CONTROLLER ASSEMBLY (DRIVE AND STEER)

| ITEM | PART NUMBER | QTY | DESCRIPTION | REV |
|---|---|---|---|---|
| | 1600359 | Ref | **CONTROLLER ASSEMBLY** | A |
| 1 | 7022832 | 1 | Housing Assembly (Includes Casting, Gimbles, etc) | |
| 2 | 7022833 | 2 | Potentiometer Plate | |
| 2 | 7003974 | 2 | Potentiometer | |
| 3 | 7022834 | 2 | Drive Gear Assembly | |
| 4 | 7022835 | 1 | Boot Assembly | |
| 5 | 7022836 | 1 | Handle Assembly | |
| 5A | 7022839 | 1 | Cap, Rubber | |
| 5A | 7022838 | 1 | Switch, Push Button | |
| 6 | 7022837 | 1 | Terminal Block/PC Board Assembly | |
| 6A | See Note | NSS | Plug, Male 8 Position (Note: Not Available for Purchase.) | |
| 6A | 4460871 | 6 | Socket, Female | |

## FIGURE 4-7. SKYGLAZIER INSTALLATION

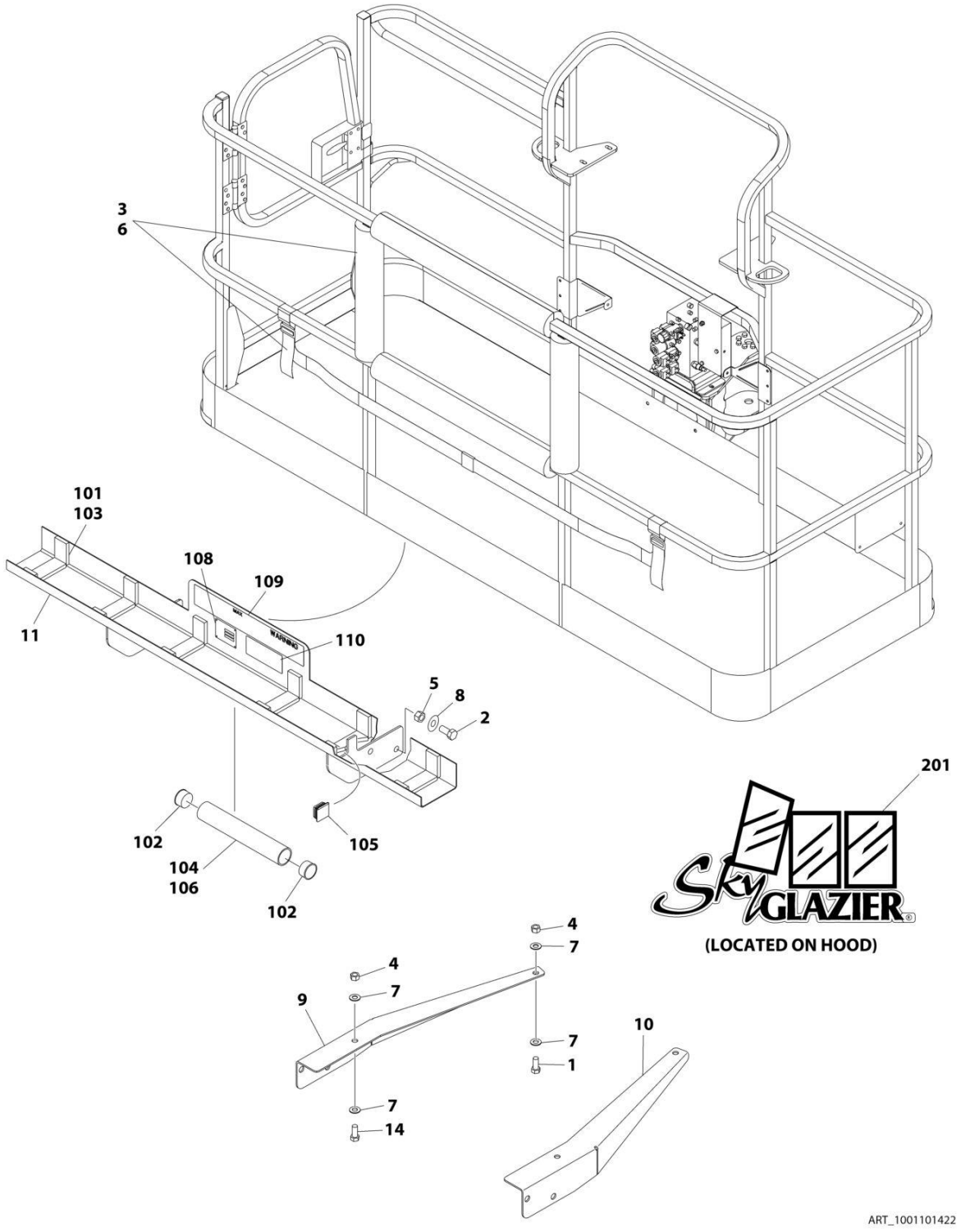

## FIGURE 4-7. SKYGLAZIER INSTALLATION

| ITEM | PART NUMBER | QTY | DESCRIPTION | REV |
|---|---|---|---|---|
| | 1001101422 | Ref | SKYGLAZIER INSTALLATION - WITHOUT LSS (ANSI AND CSA SPECS) | C |
| | 1001102647 | Ref | SKYGLAZIER INSTALLATION - WITH LSS (AUSTRALIAN SPECS) | C |
| | | Ref | Note: Only Available on 600SC & 660SJC for ANSI, Australian and CSA Specs. | |
| 1 | 0642012 | 2 | Bolt 5/8 x 1-1/2 | |
| 1 | 0642026 | 2 | Bolt 5/8 x 3-1/4 | |
| 2 | 0642212 | 4 | Bolt 3/4 x 1-1/2 | |
| 3 | 2902212 | 1 | Bumpers and Strap Kit | |
| 3 | 0940102 | 1 | Bumper Only | |
| 3 | 4240149 | 1 | Strap Only | |
| 4 | 3312005 | 4 | Nut 5/8 | |
| 5 | 3312205 | 4 | Nut 3/4 | |
| 6 | 4420014 | AR | Tape | |
| 7 | 4712000 | 6 | Washer 5/8 | |
| 8 | 4712200 | 8 | Washer 3/4 | |
| 9 | 1001099366 | 1 | Support | |
| 10 | 1001099367 | 1 | Support | |
| 11 | 1001101421 | 1 | Tray Assembly (See Items 101-110 for Breakdown) | |
| 14 | 8310129 | 2 | Bolt 5/8 x 2-1/2 | |
| 14 | 8310230 | 2 | Bolt 5/8 x 4 | |
| | 1001101421 | Ref | TRAY ASSEMBLY (ANSI, AUSTRALIAN AND CSA SPECS) | E |
| 101 | 0100081 | AR | Adhesive | |
| 102 | 1120555 | 2 | Cap, Tube | |
| 103 | 3340956 | 1 | Pad Kit | |
| 104 | 3460334 | 1 | Tube | |
| 105 | 3520071 | 2 | Plug | |
| 106 | 4420066 | AR | Tape, Double Sided | |
| 108 | See Note | NSS | Nameplate - Serial Number (Note: Not Available for Purchase) | |
| 109 | 1001163131 | 1 | Decal - Glazier Capacity | |
| 110 | 1701509 | 2 | Decal - Manual | |
| | 0272418 | Ref | SKYGLAZIER DECAL INSTALLATION | |
| 201 | 1705358 | 2 | Decal - SkyGlazier | |

## FIGURE 4-8. SKYCUTTER INSTALLATION - 60HZ POWER SUPPLY

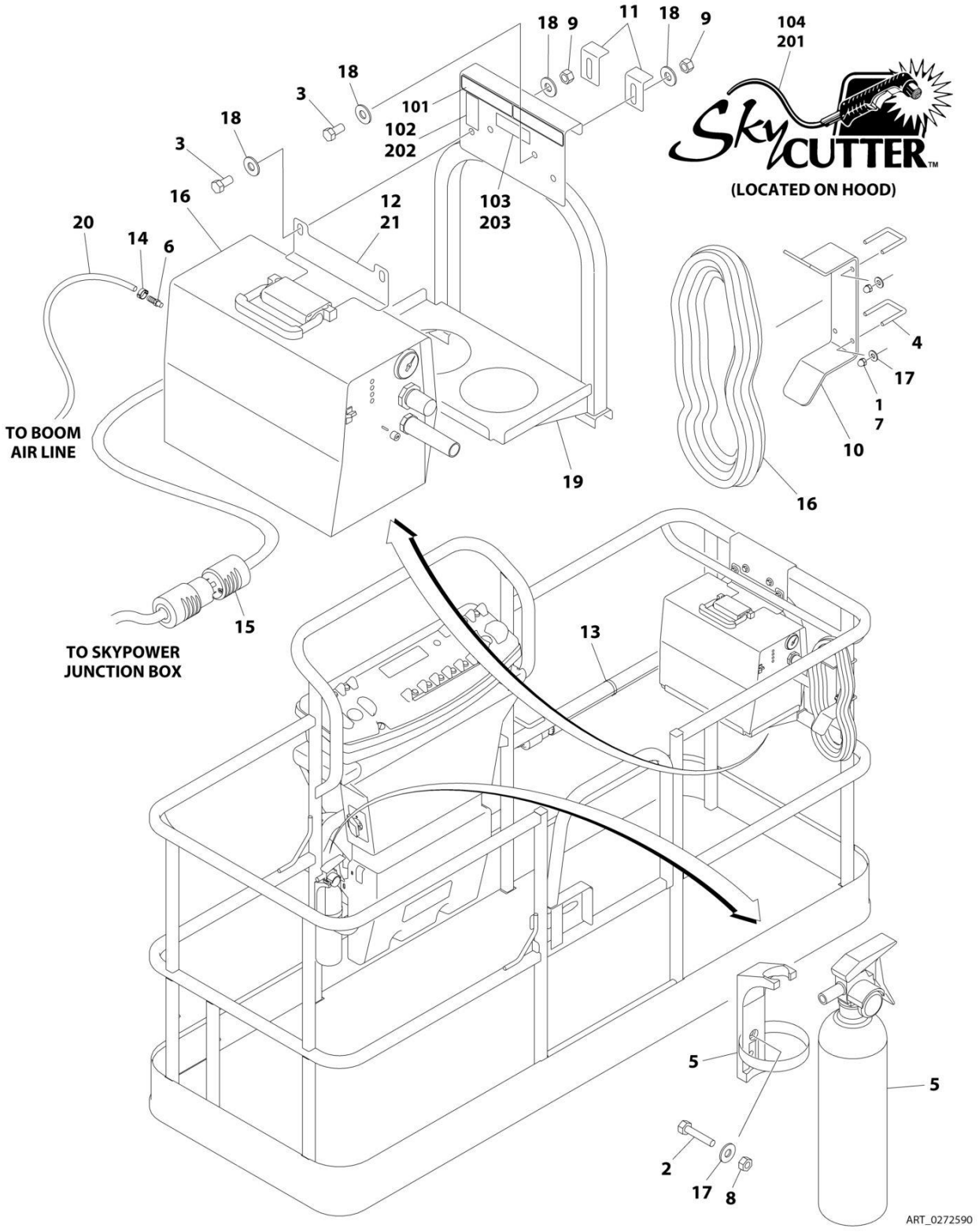

## FIGURE 4-8. SKYCUTTER INSTALLATION - 60HZ POWER SUPPLY

| ITEM | PART NUMBER | QTY | DESCRIPTION | REV |
|---|---|---|---|---|
| | 0272590 | Ref | SKYCUTTER INSTALLATION - 60HZ POWER SUPPLY | D |
| | | Ref | Note: When replacing platform on machines with SkyCutter option, new bracket p/n 1001145405 must be purchased to accommodate SkyCutter components. | |
| 1 | 0100011 | AR | Compound, Locking | |
| 2 | 0641406 | 2 | Bolt 1/4 x 3/4 | |
| 3 | 0641606 | 4 | Bolt 3/8 x 3/4 | |
| 4 | 1320302 | 2 | Clamp | |
| 5 | 2030010 | 1 | Extinguisher, Fire | |
| 6 | 2180832 | 1 | Fitting, NPT/Barbed | |
| 7 | 3300151 | 4 | Nut 1/4 | |
| 8 | 3311405 | 2 | Nut 1/4 | |
| 9 | 3311605 | 4 | Nut 3/8 | |
| 10 | 3573400 | 1 | Bracket, Cable | |
| 11 | 3573641 | 2 | Plate, Clamp (Use p/n 3577121) | |
| 12A | 3573643 | 1 | Plate, Top Support | |
| 12B | 3576799 | 1 | Plate, Top Support | |
| 13 | 4240099 | AR | Tie, Wire | |
| 14 | 1320177 | 2 | Clamp, Hose | |
| 15 | 4460971 | 1 | Plug, Twistlock | |
| 16 | 4530024 | 1 | Plasma Cutter Assembly (See PLASMA CUTTER ASSEMBLY for Breakdown) | |
| 17 | 4751400 | 6 | Washer 1/4 | |
| 18 | 4751600 | 8 | Washer 3/8 | |
| 19 | 4846571 | 1 | Support | |
| 20 | 2720160 | 4 ft/ 1.2m | Hose | |
| | 0272599 | Ref | SKYCUTTER DECAL INSTALLATION (60HZ) (ANSI, ANSI EXPORT AND CSA SPECS) | A |
| 101 | 1702868 | 1 | Decal - No Hands | |
| 102 | 1705305 | 1 | Decal - Weld Lead | |
| 103 | 1705466 | 1 | Decal - Weight | |
| 104 | 1705490 | 2 | Decal - SkyCutter | |

## FIGURE 4-9. SKYWELDER/SKYCUTTER COMBO INSTALLATION (60HZ)

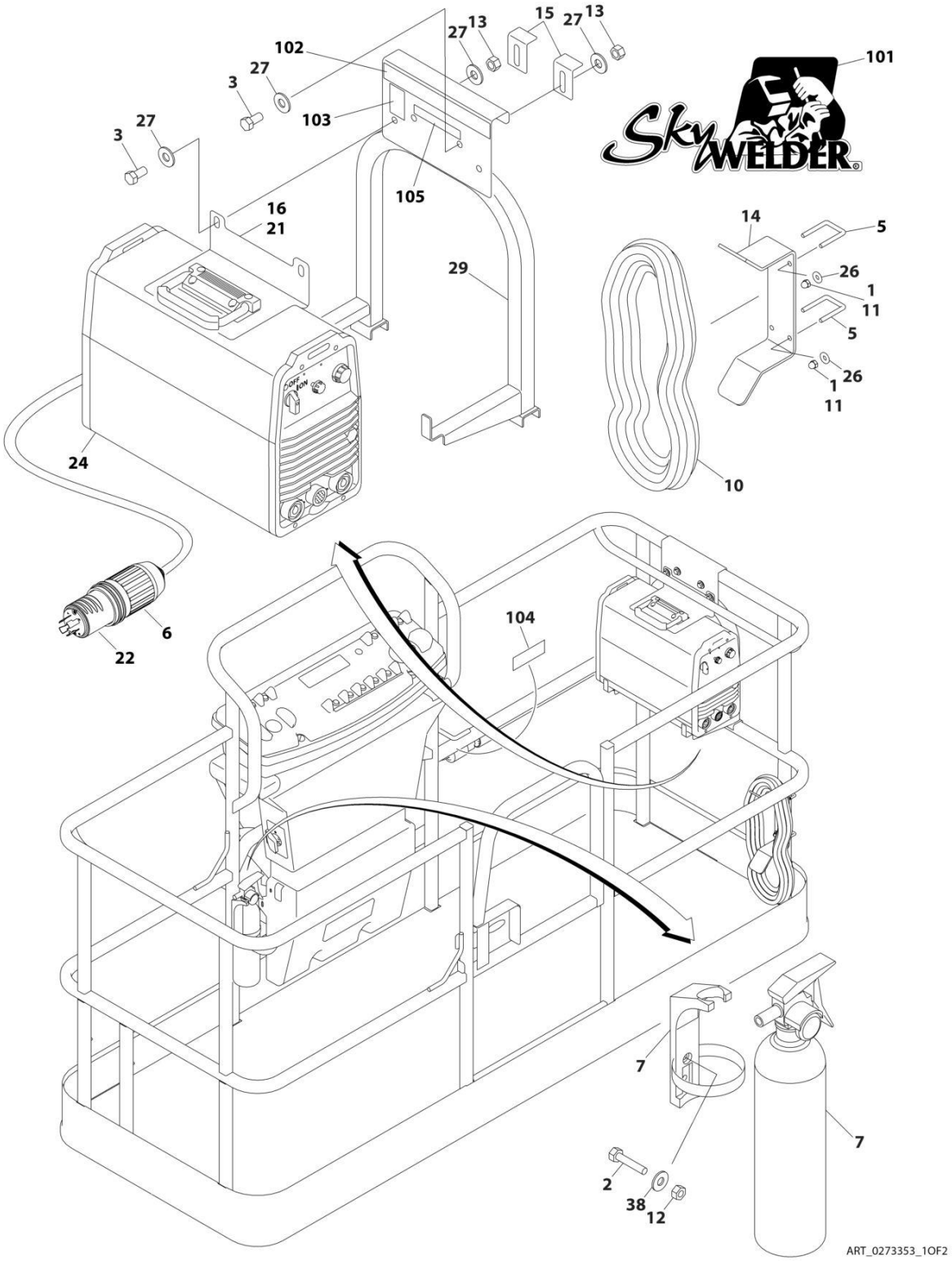

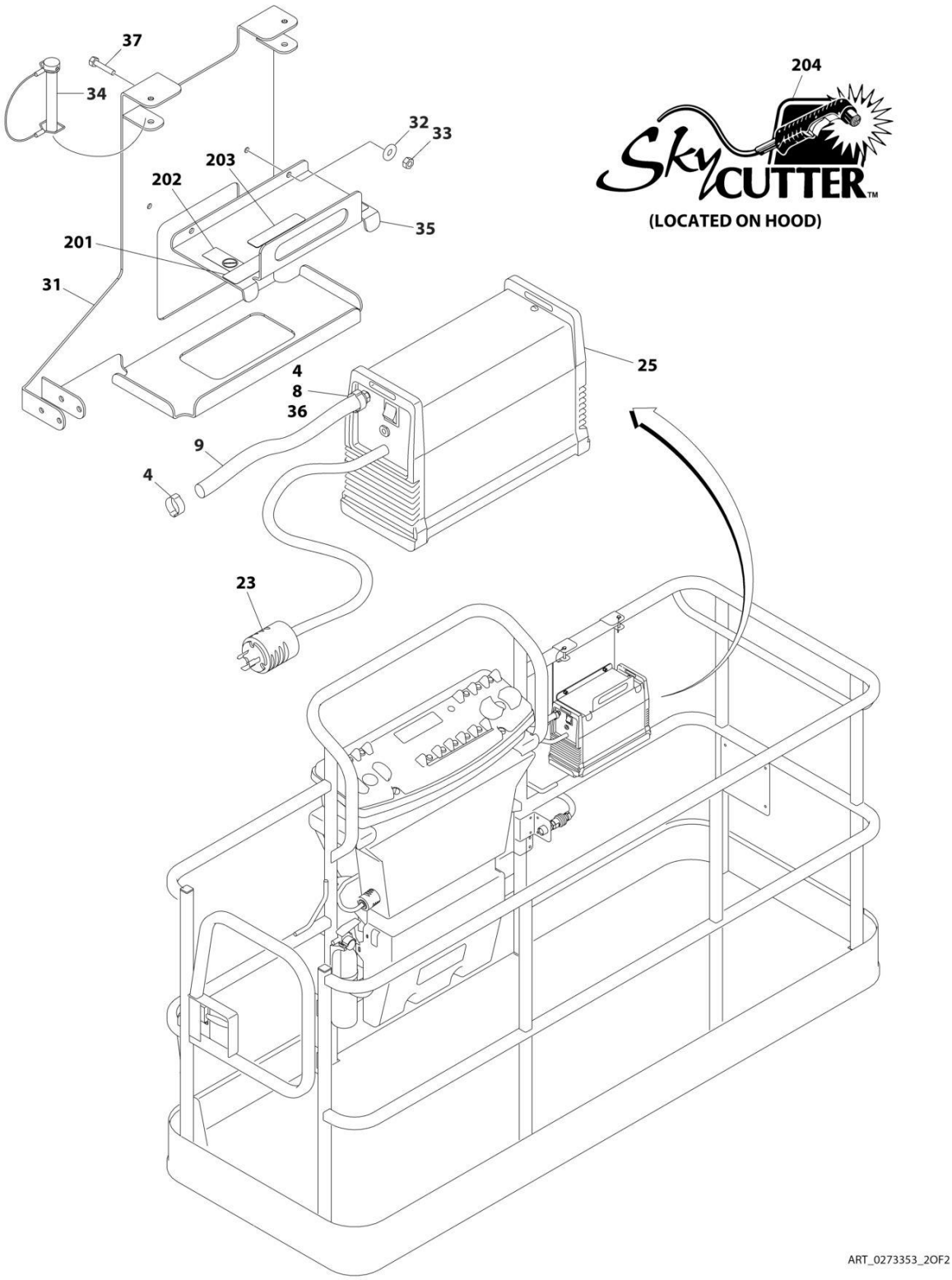
37
34
32
33
203
202
35
201
31
204
SkyCUTTER™
(LOCATED ON HOOD)
25
4
8
36
9
4
23
ART_0273353_2OF2

## FIGURE 4-9. SKYWELDER/SKYCUTTER COMBO INSTALLATION (60HZ)

| ITEM | PART NUMBER | QTY | DESCRIPTION | REV |
|---|---|---|---|---|
| | 0273353 | Ref | SKYWELDER/SKYCUTTER COMBO INSTALLATION (60HZ) | G |
| | | Ref | Note: ANSI, ANSI Export and CSA Spec Only. | |
| 1 | 0100011 | AR | Compound, Locking | |
| 2 | 0630518 | 2 | Screw #10 x 3/4 | |
| 3 | 0641606 | 4 | Bolt 3/8 x 3/4 | |
| 4 | 1320177 | 2 | Clamp | |
| 5 | 1320302 | 2 | Clamp | |
| 6 | 1671093 | 1 | Cover, Plug | |
| 7 | 2030010 | 1 | Extinguisher, Fire | |
| 8 | 2180832 | 1 | Fitting, Barbed/NPT | |
| 9 | 2720160 | 4.5 ft/ 1.37m | Hose | |
| 10 | 2902217 | 1 | Weld Leads Kit | |
| 11 | 3300151 | 4 | Nut 1/4 | |
| 12 | 3311005 | 2 | Nut #10 | |
| 13 | 3311605 | 4 | Nut 3/8 | |
| 14 | 3573400 | 1 | Bracket | |
| 15 | 3577121 | 2 | Angle | |
| 16 | 3573642 | 1 | Plate | |
| 20 | 4240099 | AR | Tie-Strap (Not Shown) | |
| 21 | 4420037 | 2.36 ft/ .71m | Tape | |
| 22 | 4460962 | 1 | Plug, Twist Lock | |
| 23 | 4460971 | 1 | Plug, Twist Lock | |
| 24 | 4530028 | 1 | Welder Assembly (See WELDER ASSEMBLY for Breakdown) | |
| 25 | 1001098012 | 1 | Plasma Cutter Assembly (See PLASMA CUTTER ASSEMBLY for Breakdown) | |
| 26 | 4751400 | 4 | Washer 1/4 | |
| 27 | 4751600 | 8 | Washer 3/8 | |
| 29 | 4846627 | 1 | Support | |
| 31 | 1001145405 | 1 | Bracket | |
| 32 | 4811700 | 2 | Washer M6 | |
| 33 | 3290605 | 2 | Nut M6 | |
| 34 | 3421453 | 3 | Pin | |
| 35 | 3576799 | 1 | Plate, Hold-Down | |
| 36 | 0100020 | 1 | Sealant | |
| 37 | 4010608 | 2 | Screw M6 x 16 | |
| 38 | 4751000 | 2 | Washer #10 | |
| | 0272448 | Ref | SKYWELDER DECAL INSTALLATION | B |
| 101 | 1705355 | 2 | Decal - SkyWelder | |
| 102 | 1702868 | 1 | Decal - No Hands | |
| 103 | 1705305 | 1 | Decal - Weld Leads | |
| 104 | 1705375 | 1 | Decal - 240V - 3 Phase - 60 Hz | |
| 105 | 1705466 | NLA | Decal - Weight (Use p/n 1001228988) | |
| | 0272599 | Ref | SKYCUTTER DECAL INSTALLATION | B |
| 201 | 1702868 | 1 | Decal - No Hands | |
| 202 | 1705305 | 1 | Decal - Weld Leads | |
| 203 | 1705466 | NLA | Decal - Weight (Use p/n 1001228988) | |
| 204 | 1705490 | 2 | Decal - SkyCutter | |

## FIGURE 4-10. SKYWELDER INSTALLATION (60HZ)

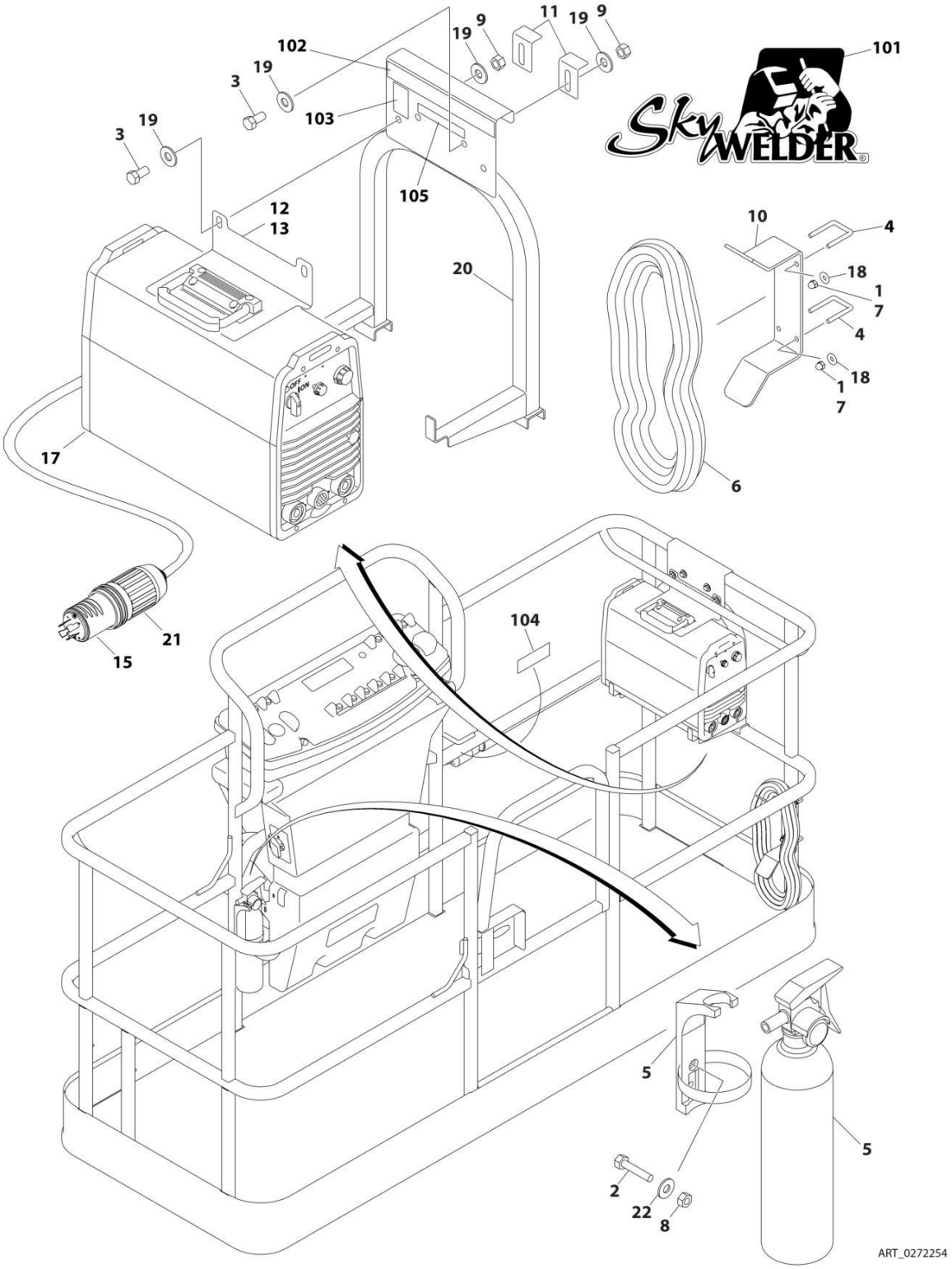

## FIGURE 4-10. SKYWELDER INSTALLATION (60HZ)

| ITEM | PART NUMBER | QTY | DESCRIPTION | REV |
|---|---|---|---|---|
| | 0272254 | Ref | SKYWELDER INSTALLATION (60HZ) | I |
| | | Ref | Note: ANSI, ANSI Export and CSA Specs Only. | |
| 1 | 0100011 | AR | Compound, Locking | |
| 2 | 0630518 | 2 | Screw #10 x 3/4 | |
| 3 | 0641606 | 4 | Bolt 3/8 x 3/4 | |
| 4 | 1320302 | 2 | U-Clamp | |
| 5 | 2030010 | 1 | Extinguisher, Fire | |
| 6 | 2902217 | 1 | Weld Leads Kit | |
| 7 | 3300151 | 4 | Nut 1/4 | |
| 8 | 3311005 | 2 | Nut #10 | |
| 9 | 3311605 | 4 | Nut 3/8 | |
| 10 | 3573400 | 1 | Bracket | |
| 11 | 3577121 | 2 | Angle | |
| 12 | 3573642 | 1 | Plate | |
| 13 | 4420037 | AR | Tape | |
| 14 | 4240099 | AR | Tie-Strap (Not Shown) | |
| 15 | 4460962 | 1 | Plug, Male Twistlock | |
| 17 | 4530028 | 1 | Welder Assembly (See WELDER ASSEMBLY for Breakdown) | |
| 18 | 4751400 | 4 | Washer 1/4 | |
| 19 | 4751600 | 8 | Washer 3/8 | |
| 20 | 4846627 | 1 | Support | |
| 21 | 1671093 | 1 | Cover, Plug | |
| 22 | 4751000 | 2 | Washer #10 | |
| | 0272448 | Ref | SKYWELDER DECAL INSTALLATION | B |
| 101 | 1705355 | 2 | Decal - SkyWelder | |
| 102 | 1702868 | 1 | Decal - No Hands | |
| 103 | 1705305 | 1 | Decal - Weld Lead | |
| 104 | 1705375 | 1 | Decal - 240V - 3 Phase - 60Hz | |
| 105 | 1705466 | NLA | Decal - Weight (Use p/n 1001228988) | |
| 105 | 1001228988 | 1 | Decal - Weight | |

## FIGURE 4-11. SKYWELDER INSTALLATION (50HZ)

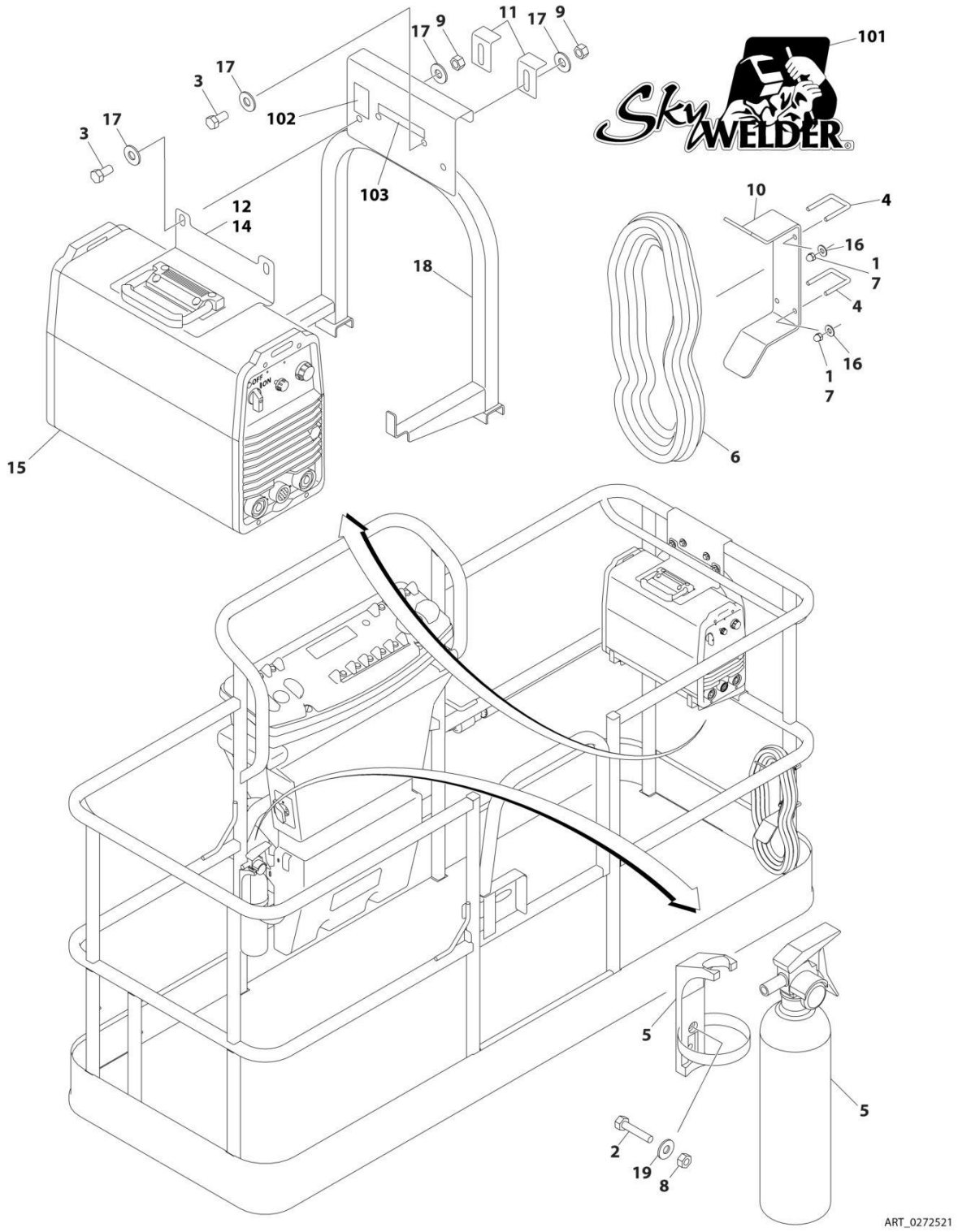

## FIGURE 4-11. SKYWELDER INSTALLATION (50HZ)

| ITEM | PART NUMBER | QTY | DESCRIPTION | REV |
|---|---|---|---|---|
| | 0272521 | Ref | SKYWELDER INSTALLATION (50HZ) | F |
| 1 | 0100011 | AR | Compound, Locking | |
| 2 | 0630518 | 2 | Screw #10 x 3/4 | |
| 3 | 0641606 | 4 | Bolt 3/8 x 3/4 | |
| 4 | 1320302 | 2 | U-Clamp | |
| 5 | 2030010 | 1 | Extinguisher, Fire | |
| 6 | 2902217 | 1 | Weld Leads Kit | |
| 7 | 3300151 | 4 | Nut 1/4 | |
| 8 | 3311005 | 2 | Nut #10 | |
| 9 | 3311605 | 4 | Nut 3/8 | |
| 10 | 3573400 | 1 | Bracket | |
| 11 | 3577121 | 2 | Angle | |
| 12 | 3573642 | 1 | Plate | |
| 13 | 4240099 | AR | Tie-Strap (Not Shown) | |
| 14 | 4420037 | AR | Tape | |
| 15 | 4530028 | 1 | Welder Assembly Options (See WELDER ASSEMBLY for Breakdown): | |
| 16 | 4751400 | 4 | Washer 1/4 | |
| 17 | 4751600 | 8 | Washer 3/8 | |
| 18 | 4846627 | 1 | Support | |
| 19 | 4751000 | 2 | Washer #10 | |
| | 0272588 | Ref | SKYWELDER DECAL INSTALLATION | A |
| 101 | 1705355 | 2 | Decal - SkyWelder | |
| 102 | 1705305 | 1 | Decal - Weld Lead | |
| 103 | 1705466 | 1 | Decal - Weight | |

## FIGURE 4-12. WELDER ASSEMBLY

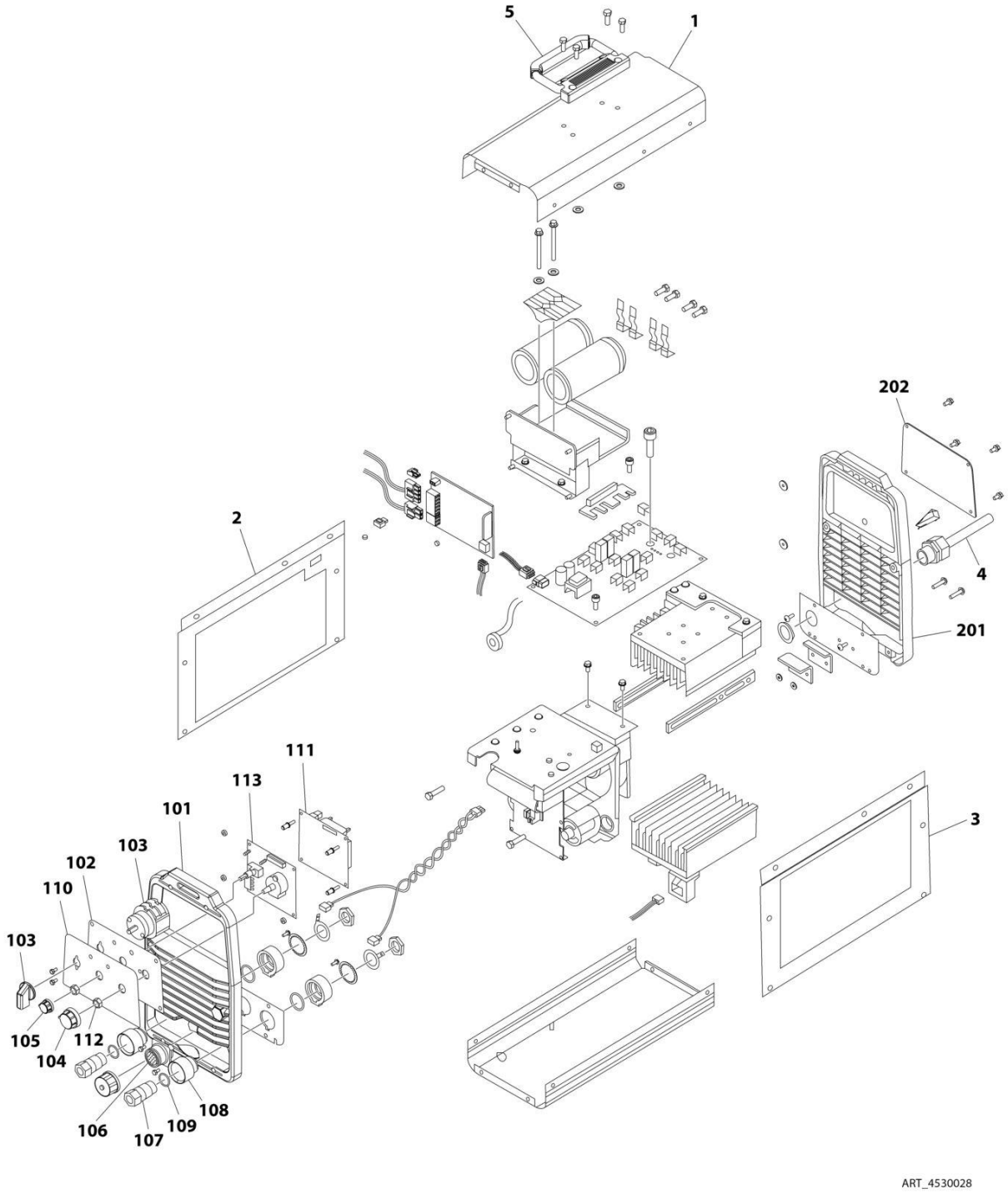

## FIGURE 4-12. WELDER ASSEMBLY

| ITEM | PART NUMBER | QTY | DESCRIPTION | REV |
|---|---|---|---|---|
| | 4530028 | Ref | WELDER ASSEMBLY | B |
| | | Ref | Note: For Other Components, contact your Miller Welder Dealer. | |
| 1 | 7027773 | 1 | Cover, Top | |
| 1 | 7027774 | 1 | Decal - Static Precautionary Warning | |
| 2 | See Note | NSS | Panel, LH Side (Note: Part of Item 1. Purchase Item 1) | |
| 3 | See Note | NSS | Panel, RH Side (Note: Part of Item 1. Purchase Item 1) | |
| 4 | 7024467 | 1 | Cable, Power | |
| 4 | 7027775 | 1 | Decal - Electrical Shock Warning (Not Shown) | |
| 5 | 7027776 | 1 | Handle, Carrying | |
| 101 | 7024462 | 1 | Panel, Front | |
| 102 | 7024463 | 1 | Panel, Console | |
| 103 | 7024469 | 1 | Switch with Lead | |
| 104 | 7024470 | 1 | Knob | |
| 105 | 7024471 | 1 | Knob | |
| 106 | 7024472 | 1 | Receptacle with Leads and Plugs | |
| 107 | 7024473 | 2 | Receptacle, Twistlock Female | |
| 108 | 7024474 | 2 | Insulator | |
| 109 | 7024475 | 2 | O-Ring | |
| 110 | 7027777 | 1 | Nameplate | |
| 111 | 7027779 | 1 | Circuit Card Assembly (Process Control) | |
| 112 | 7024478 | 2 | Nut | |
| 113 | 7027778 | 1 | Circuit Card Assembly (Operator Interface) | |
| 201 | 7024462 | 1 | Panel, Rear | |
| 202 | 7027780 | 1 | Panel, Cover | |

## FIGURE 4-13. PLASMA CUTTER ASSEMBLY - 60HZ POWER SUPPLY

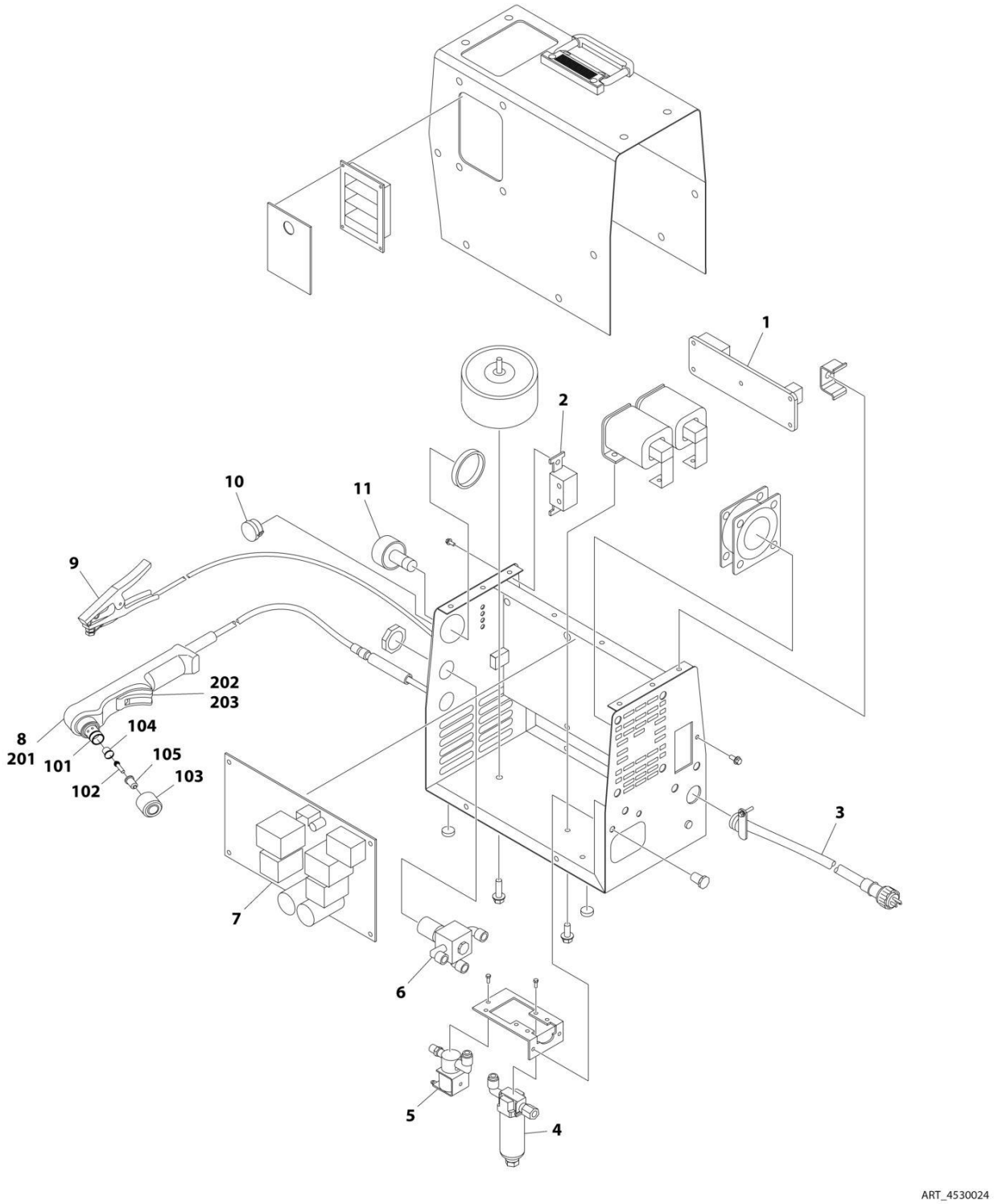

## FIGURE 4-13. PLASMA CUTTER ASSEMBLY - 60HZ POWER SUPPLY

| ITEM | PART NUMBER | QTY | DESCRIPTION | REV |
|---|---|---|---|---|
| | 4530024 | Ref | PLASMA CUTTER ASSEMBLY - 60HZ POWER SUPPLY | D |
| | | Ref | Note: For other components see your Miller Dealer. | |
| 1 | 7024519 | 1 | Circuit Card | |
| 2 | 7024520 | 1 | Switch | |
| 3 | 7024521 | 10 ft/ 3m | Cable, Power | |
| 4 | 7024522 | 1 | Filter, Air | |
| 5 | 7024523 | 1 | Valve, Air | |
| 6 | 7024524 | 1 | Regulator, Air | |
| 7 | 7024525 | 1 | Circuit Card | |
| 8 | 7024526 | 1 | Torch Assembly (See Items 101-203 for Breakdown) | |
| 9 | 7024527 | 1 | Clamp | |
| 10 | 7024528 | 1 | Knob | |
| 11 | 7024529 | 1 | Gauge, Air | |
| | 7024526 | Ref | TORCH ASSEMBLY | |
| 101 | 7024530 | 1 | O-Ring | |
| 102 | 7024531 | 1 | Electrode | |
| 103 | 7024532 | 1 | Cup, Retaining | |
| 104 | 7024533 | 1 | Swirl Ring | |
| 105 | 7024534 | 1 | Tip | |
| 201 | 7024535 | 1 | Handle, Torch | |
| 202 | 7024536 | 1 | Switch | |
| 203 | 7024537 | 1 | Trigger | |

## FIGURE 4-14. PLASMA CUTTER ASSEMBLY

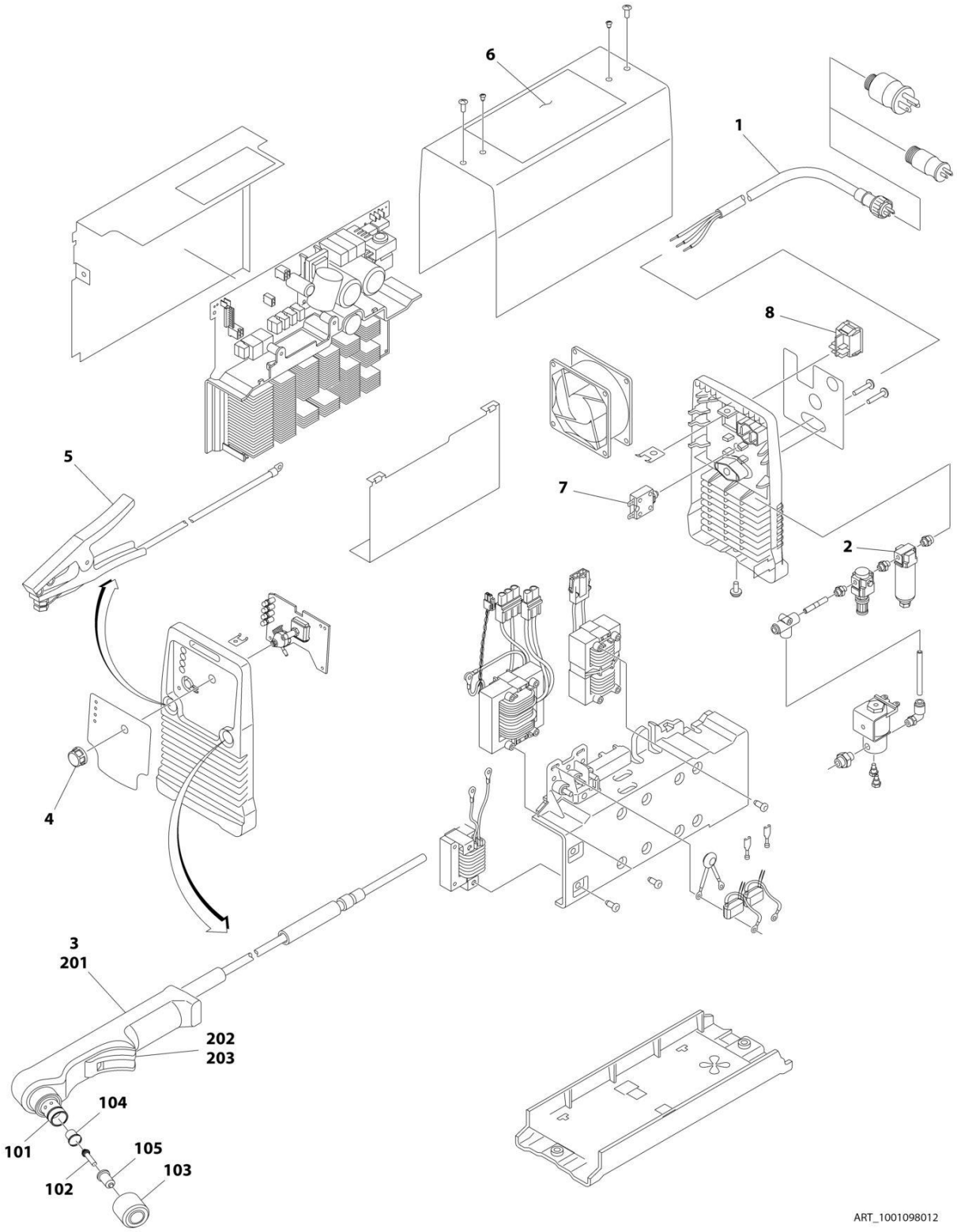

## FIGURE 4-14. PLASMA CUTTER ASSEMBLY

| ITEM | PART NUMBER | QTY | DESCRIPTION | REV |
|---|---|---|---|---|
| | 1001098012 | Ref | PLASMA CUTTER ASSEMBLY | A |
| | | Ref | Note: For Other Components, contact your Miller Welder Dealer. | |
| 1 | 70001424 | 1 | Cable, Power | |
| 1 | 70001425 | 1 | Decal - Voltage Warning | |
| 2 | 70001427 | 1 | Filter, Regulator | |
| 3 | 70001428 | 1 | Torch Assembly (See Items 101-203 for Breakdown) | |
| 4 | 7024471 | 1 | Knob | |
| 5 | 70001429 | 1 | Clamp with Cable | |
| 6 | 70001430 | 1 | Decal - Caution | |
| 7 | 70001431 | 1 | Breaker, Circuit | |
| 8 | 70001432 | 1 | Switch, Rocker | |
| | 70001428 | Ref | TORCH ASSEMBLY | |
| 101 | 7024530 | 1 | O-Ring | |
| 102 | 7024531 | 1 | Electrode | |
| 103 | 7024532 | 1 | Cup, Retaining | |
| 104 | 7024533 | 1 | Swirl Ring | |
| 105 | 7024534 | 1 | Tip | |
| 201 | 7024535 | 1 | Handle, Torch | |
| 202 | 7024536 | 1 | Switch | |
| 203 | 7024537 | 1 | Trigger | |

# SECTION 5 - CYLINDER

## FIGURE 5-1. JIB CYLINDER ASSEMBLY (ORIGINAL EQUIPMENT)

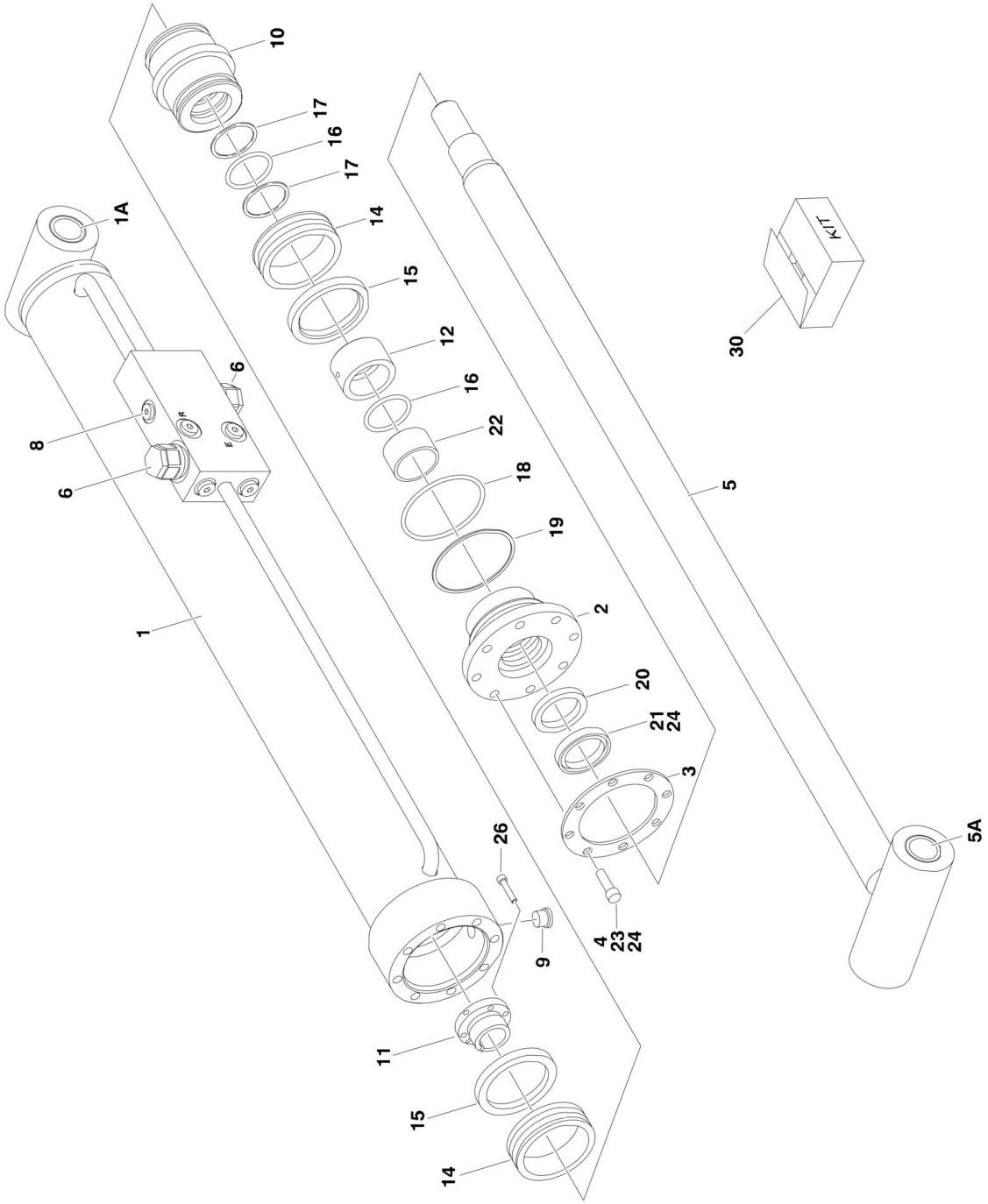

## FIGURE 5-1. JIB CYLINDER ASSEMBLY (ORIGINAL EQUIPMENT)

| ITEM | PART NUMBER | QTY | DESCRIPTION | REV |
|---|---|---|---|---|
| | 1683609 | Ref | **JIB CYLINDER ASSEMBLY (ORIGINAL EQUIPMENT)** | I |
| | | Ref | Note: Original Cylinder May Have Been Replaced with Service Replacement. Identify PN Stamped on Cylinder Before Ordering Parts. | |
| 1 | 1684089 | 1 | Barrel (Note: Includes Item 1A) | |
| 1A | 0962336 | 2 | Bushing | |
| 2 | 1683053 | 1 | Head | |
| 3 | 3760368 | 1 | Ring, Washer | |
| 4 | 3931516 | 8 | Capscrew, Socket Head 5/16in-18NC x 1in | |
| 5 | 1684090 | 1 | Rod | |
| 5A | 0962336 | 2 | Bushing (Note: Includes Item 5A) | |
| 6 | 4640509 | 2 | Cartridge, Valve | |
| 6 | 2900792 | 2 | Seal Kit - 4640509 Valve | |
| 8 | 2220883 | AR | Plug, O-Ring #4 | |
| 9 | 2220885 | 1 | Plug, O-Ring #6 | |
| 10 | 3480210 | 1 | Piston | |
| 11 | 0961893 | 1 | Bushing, Tapered | |
| 12 | 4100100 | 1 | Spacer | |
| 14 | See Note | NSS | Seal (Note: Use Item 30) | |
| 15 | See Note | NSS | Ring, Lock (Note: Use Item 30) | |
| 16 | See Note | NSS | O-Ring (Note: Use Item 30) | |
| 17 | See Note | NSS | Ring, Back-up (Note: Use Item 30) | |
| 18 | See Note | NSS | O-Ring (Note: Use Item 30) | |
| 19 | See Note | NSS | Ring, Back-up (Note: Use Item 30) | |
| 20 | See Note | NSS | Seal, Rod (Note: Use Item 30) | |
| 21 | See Note | NSS | Wiper (Note: Use Item 30) | |
| 22 | See Note | NSS | Ring, Wear (Note: Use Item 30) | |
| 23 | 0100011 | AR | Compound, Locking | |
| 24 | 0100038 | AR | Primer, Locking | |
| 26 | 0630534 | 3 | Screw, Socket Head #10-24NC x 1in | |
| 30 | 2901303 | 1 | Seal Kit (Includes Items 14-22) | |

## FIGURE 5-2. JIB CYLINDER ASSEMBLY (SERVICE REPLACEMENT)

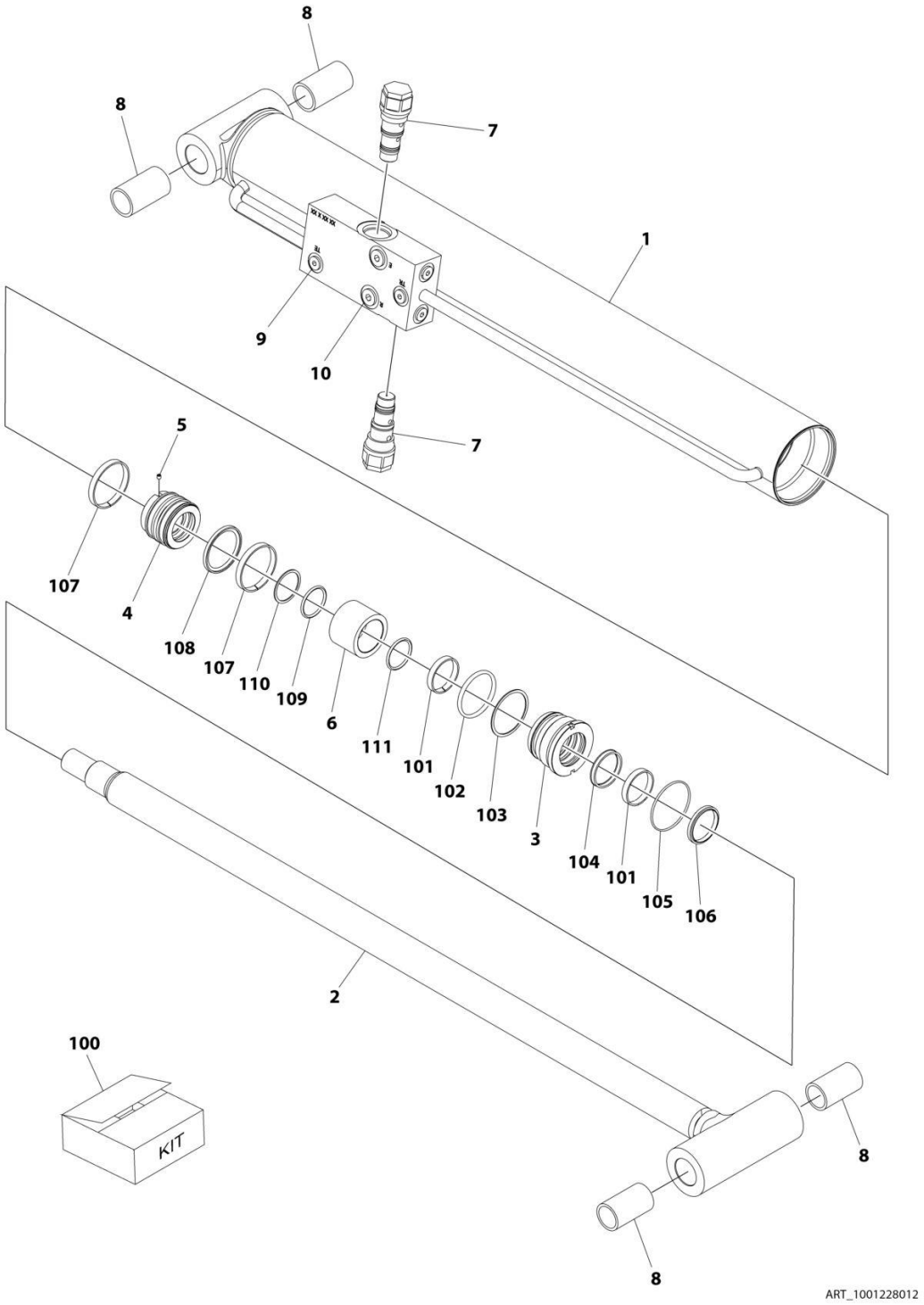

## FIGURE 5-2. JIB CYLINDER ASSEMBLY (SERVICE REPLACEMENT)

| ITEM | PART NUMBER | QTY | DESCRIPTION | REV |
|---|---|---|---|---|
| | 1001228012 | Ref | JIB CYLINDER ASSEMBLY (SERVICE REPLACEMENT) | A |
| | | Ref | Note: Original Cylinder May Have Been Replaced with Service Replacement. Identify PN Stamped on Cylinder Before Ordering Parts. | |
| 1 | See Note | NSS | Barrel (Note: Not Available for Purchase) | |
| 2 | 70006572 | 1 | Rod | |
| 3 | 70006571 | 1 | Head | |
| 4 | 70006570 | 1 | Piston | |
| 5 | 70023915 | 1 | Screw | |
| 6 | 70006569 | 1 | Spacer | |
| 7 | 4640509 | 2 | Cartridge, Valve | |
| 7 | 2900792 | 2 | Seal Kit - 4640509 Valve | |
| 8 | 0962336 | 4 | Bushing | |
| 9 | 2220883 | 6 | Plug, O-Ring | |
| 10 | 2220885 | 2 | Plug, O-Ring | |
| 100 | 70006568 | 1 | Seal Kit (Includes Items 101-111) | |
| 101 | See Note | NSS | Ring, Wear (Note: Use Item 100) | |
| 102 | See Note | NSS | O-Ring (Note: Use Item 100) | |
| 103 | See Note | NSS | Ring, Back-up (Note: Use Item 100) | |
| 104 | See Note | NSS | Seal, Rod (Note: Use Item 100) | |
| 105 | See Note | NSS | O-Ring (Note: Use Item 100) | |
| 106 | See Note | NSS | Wiper (Note: Use Item 100) | |
| 107 | See Note | NSS | Ring, Wear (Note: Use Item 100) | |
| 108 | See Note | NSS | Seal (Note: Use Item 100) | |
| 109 | See Note | NSS | O-Ring (Note: Use Item 100) | |
| 110 | See Note | NSS | Ring, Back-up (Note: Use Item 100) | |
| 111 | See Note | NSS | O-Ring (Note: Use Item 100) | |

## FIGURE 5-3. JIB CYLINDER ASSEMBLY (SERVICE REPLACEMENT)

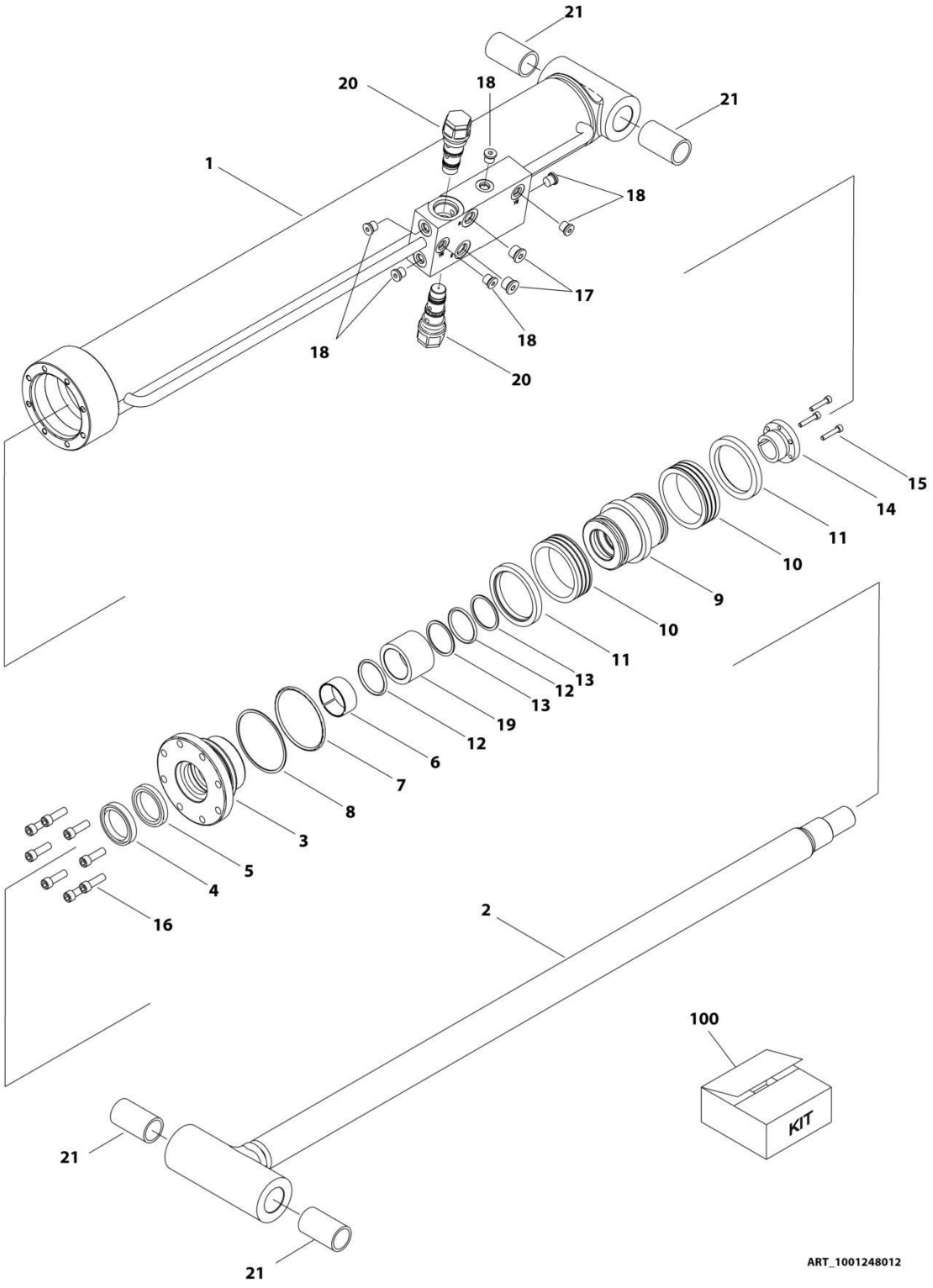

## FIGURE 5-3. JIB CYLINDER ASSEMBLY (SERVICE REPLACEMENT)

| ITEM | PART NUMBER | QTY | DESCRIPTION | REV |
|---|---|---|---|---|
| | 1001248012 | Ref | LIFT CYLINDER ASSEMBLY - JIB | A |
| | | Ref | Note: Original Cylinder May Have Been Replaced with Service Replacement. Identify PN Stamped on Cylinder Before Ordering Parts. | |
| 1 | See Note | NSS | Barrel (Note: Not Available for Purchase) | |
| 2 | 70006734 | 1 | Rod | |
| 3 | 70006649 | 1 | Head | |
| 4 | See Note | NSS | Wiper (Note: Use Item 100) | |
| 5 | See Note | NSS | Seal, Rod (Note: Use Item 100) | |
| 6 | See Note | NSS | Ring, Wear (Note: Use Item 100) | |
| 7 | See Note | NSS | O-Ring (Note: Use Item 100) | |
| 8 | See Note | NSS | Ring, Back-up (Note: Use Item 100) | |
| 9 | 70006650 | 1 | Piston | |
| 10 | See Note | NSS | Seal (Note: Use Item 100) | |
| 11 | See Note | NSS | Ring, Lock (Note: Use Item 100) | |
| 12 | See Note | NSS | O-Ring (Note: Use Item 100) | |
| 13 | See Note | NSS | Ring, Back-up (Note: Use Item 100) | |
| 14 | 0961893 | 1 | Bushing, Tapered | |
| 15 | 0630534 | 3 | Capscrew, Socket Head #10 x 1 | |
| 16 | 70006735 | 8 | Capscrew 5/16 | |
| 17 | 2220885 | 2 | Plug, O-Ring | |
| 18 | 2220883 | 6 | Plug, O-Ring | |
| 19 | 70006736 | 1 | Spacer | |
| 20 | 4640509 | 2 | Cartridge, Valve | |
| 20 | 2900792 | 2 | Seal Kit - 4640509 Valve | |
| 21 | 0962336 | 4 | Bushing | |
| 100 | 1001138795 | 1 | Seal Kit (Includes Items 4-8 & 10-13) | |

## FIGURE 5-4. LEVEL CYLINDER ASSEMBLY - 600SC (ORIGINAL EQUIPMENT)

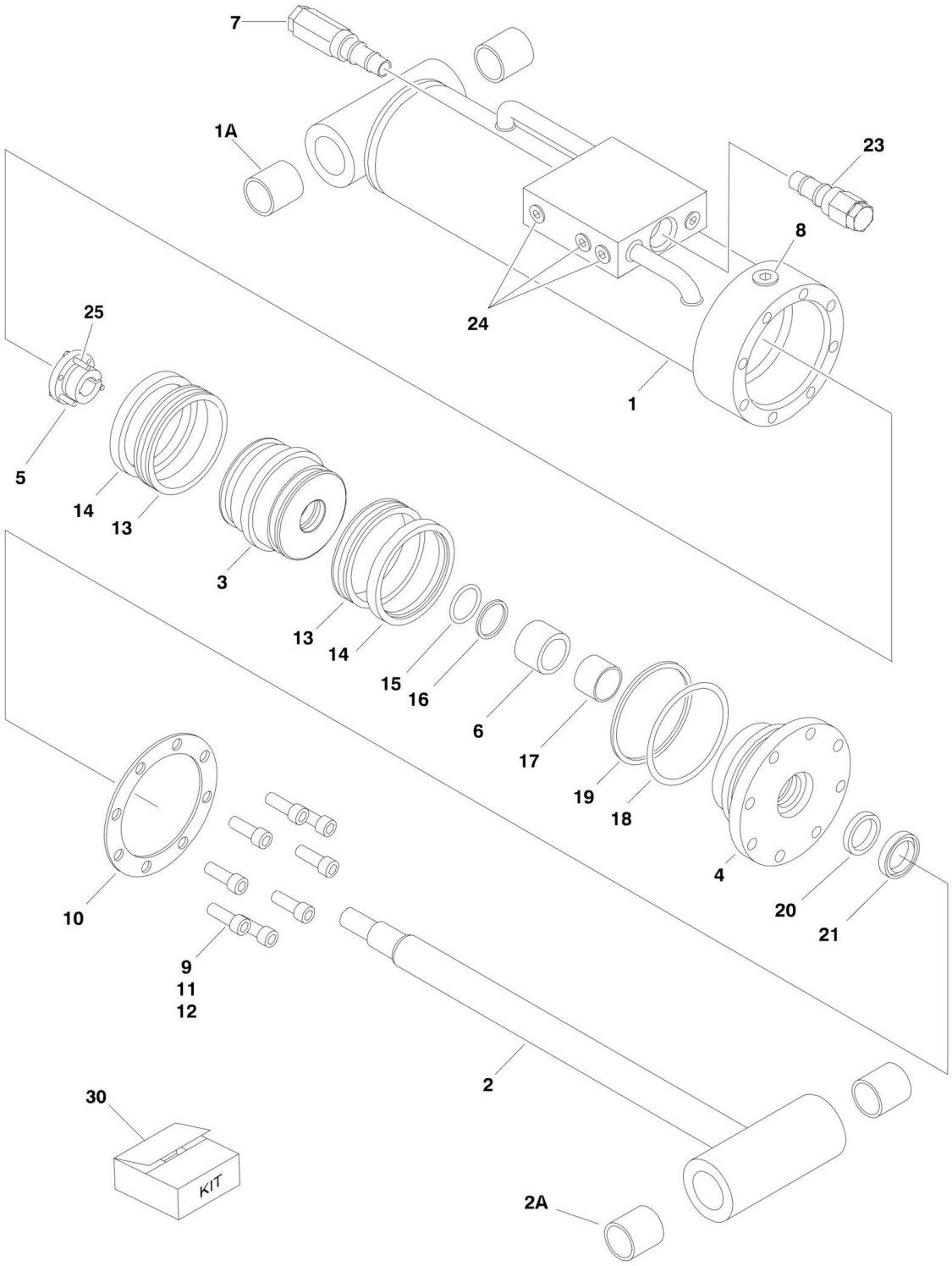

## FIGURE 5-4. LEVEL CYLINDER ASSEMBLY - 600SC (ORIGINAL EQUIPMENT)

| ITEM | PART NUMBER | QTY | DESCRIPTION | REV |
|---|---|---|---|---|
| | 1683415 | Ref | **LEVEL CYLINDER ASSEMBLY - 600SC (ORIGINAL EQUIPMENT)** | E |
| | | Ref | Note: Original Cylinder May Have Been Replaced with Service Replacement. Identify PN Stamped on Cylinder Before Ordering Parts. | |
| 1 | 1683977 | 1 | Barrel (Note: Includes Item 1A) | |
| 1A | 0961947 | 2 | Bushing | |
| 2 | 1683976 | 1 | Rod (Note: Includes Item 2A) | |
| 2A | 0961947 | 2 | Bushing | |
| 3 | 3480210 | 1 | Piston | |
| 4 | 1683053 | 1 | Head | |
| 5 | 0961893 | 1 | Bushing, Tapered | |
| 6 | 4566468 | 1 | Spacer | |
| 7 | 4640509 | 1 | Cartridge, Valve | |
| 7 | 2900792 | 1 | Seal Kit - 4640509 Valve | |
| 8 | 2220885 | 1 | Plug, O-Ring | |
| 9 | 3931516 | 8 | Capscrew, Socket Head 5/16in-18NC x 1in | |
| 10 | 3760368 | 1 | Ring, Washer | |
| 11 | 0100011 | AR | Compound, Locking | |
| 12 | 0100038 | AR | Primer, Locking | |
| 13 | See Note | NSS | Seal (Note: Use Item 30) | |
| 14 | See Note | NSS | Ring, Lock (Note: Use Item 30) | |
| 15 | See Note | NSS | O-Ring (Note: Use Item 30) | |
| 16 | See Note | NSS | Ring, Back-up (Note: Use Item 30) | |
| 17 | See Note | NSS | Ring, Wear (Note: Use Item 30) | |
| 18 | See Note | NSS | O-Ring (Note: Use Item 30) | |
| 19 | See Note | NSS | Ring, Back-up (Note: Use Item 30) | |
| 20 | See Note | NSS | Seal, Rod (Note: Use Item 30) | |
| 21 | See Note | NSS | Wiper (Note: Use Item 30) | |
| 23 | 4640932 | 1 | Cartridge, Valve | |
| 23 | 7011112 | 1 | Seal Kit - Valve Cartridge | |
| 24 | 2220883 | AR | Plug, O-Ring | |
| 25 | 0630534 | 3 | Screw, Socket Head #10-24NC x 1in | |
| 30 | 2901303 | 1 | Seal Kit (Includes Items 13-21) | |

## FIGURE 5-5. LEVEL CYLINDER ASSEMBLY - 600SC (SERVICE REPLACEMENT)

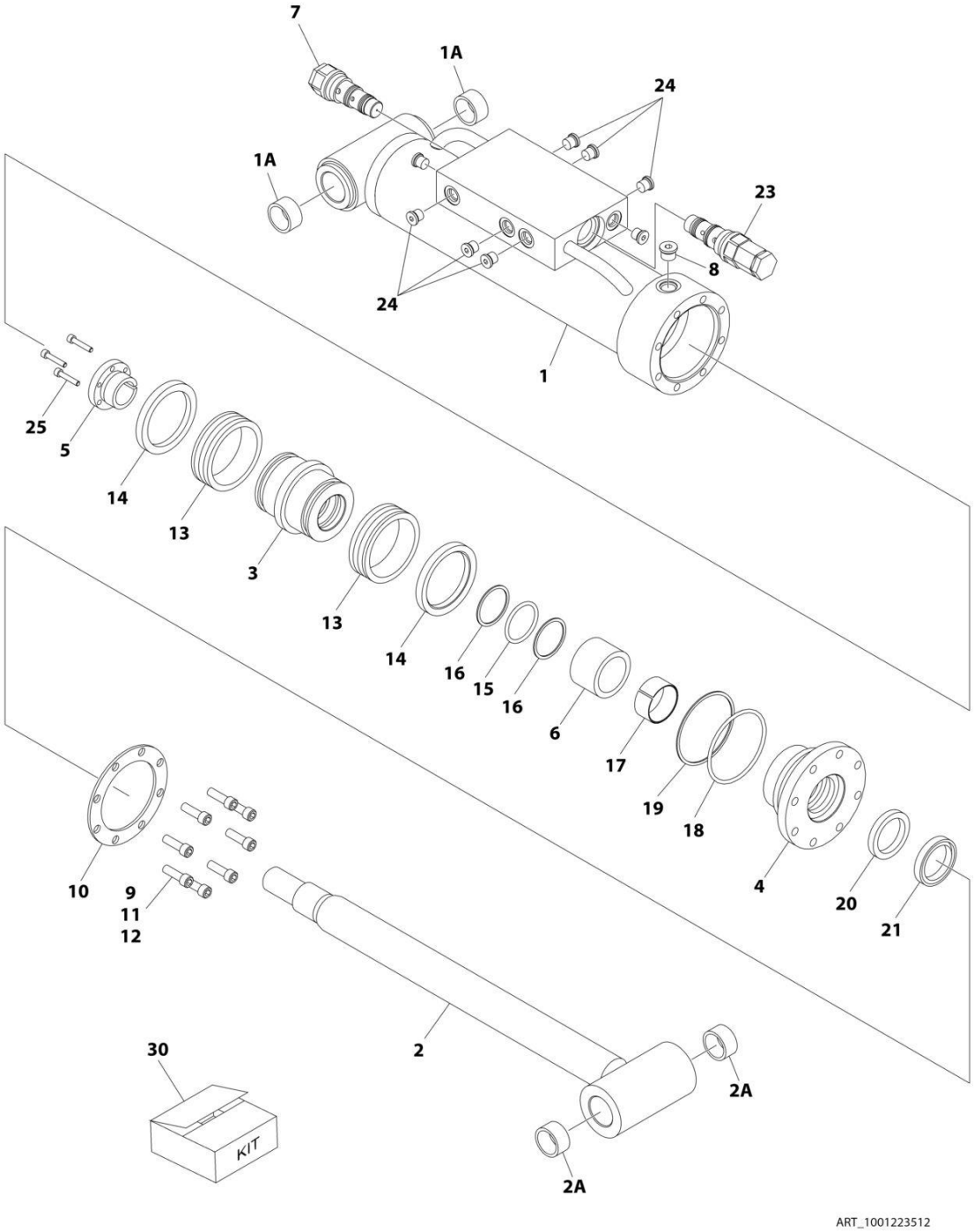

## FIGURE 5-5. LEVEL CYLINDER ASSEMBLY - 600SC (SERVICE REPLACEMENT)

| ITEM | PART NUMBER | QTY | DESCRIPTION | REV |
|---|---|---|---|---|
| | 1001223512 | Ref | LEVEL CYLINDER ASSEMBLY - 600SC (SERVICE REPLACEMENT) | B |
| | | Ref | Note: Original Cylinder May Have Been Replaced with Service Replacement. Identify PN Stamped on Cylinder Before Ordering Parts. | |
| 1 | 1001223511 | 1 | Barrel (Note: Includes Item 1A) | |
| 1A | 0961947 | 2 | Bushing | |
| 2 | 1683976 | 1 | Rod (Note: Includes Item 2A) | |
| 2A | 0961947 | 2 | Bushing | |
| 3 | 3480210 | 1 | Piston | |
| 4 | 1683053 | 1 | Head | |
| 5 | 0961893 | 1 | Bushing, Tapered | |
| 6 | 4566468 | 1 | Spacer | |
| 7 | 4640509 | 1 | Cartridge, Valve | |
| 7 | 2900792 | 1 | Seal Kit 4640509 Valve | |
| 8 | 2220885 | 1 | Plug, O-Ring | |
| 9 | 3931516 | 8 | Capscrew 5/16 x 1 | |
| 10 | 3760368 | 1 | Ring, Washer | |
| 11 | 0100011 | AR | Compound, Locking | |
| 12 | 0100038 | AR | Primer, Locking | |
| 13 | See Note | NSS | Seal (Note: Use Item 30) | |
| 14 | See Note | NSS | Ring, Lock (Note: Use Item 30) | |
| 15 | See Note | NSS | O-Ring (Note: Use Item 30) | |
| 16 | See Note | NSS | Ring, Back-up (Note: Use Item 30) | |
| 17 | See Note | NSS | Ring, Wear (Note: Use Item 30) | |
| 18 | See Note | NSS | O-Ring (Note: Use Item 30) | |
| 19 | See Note | NSS | Ring, Back-up (Note: Use Item 30) | |
| 20 | See Note | NSS | Seal, Rod (Note: Use Item 30) | |
| 21 | See Note | NSS | Wiper (Note: Use Item 30) | |
| 23 | 4640932 | 1 | Cartridge, Valve | |
| 23 | 7011112 | 1 | Seal Kit 4640932 Valve | |
| 24 | 2220883 | AR | Plug, O-Ring | |
| 25 | 0630534 | 3 | Screw #10 x 1 | |
| 30 | 2901303 | 1 | Seal Kit (Includes Items 13-21) | |

## FIGURE 5-6. LEVEL CYLINDER ASSEMBLY - 600SC (SERVICE REPLACEMENT)

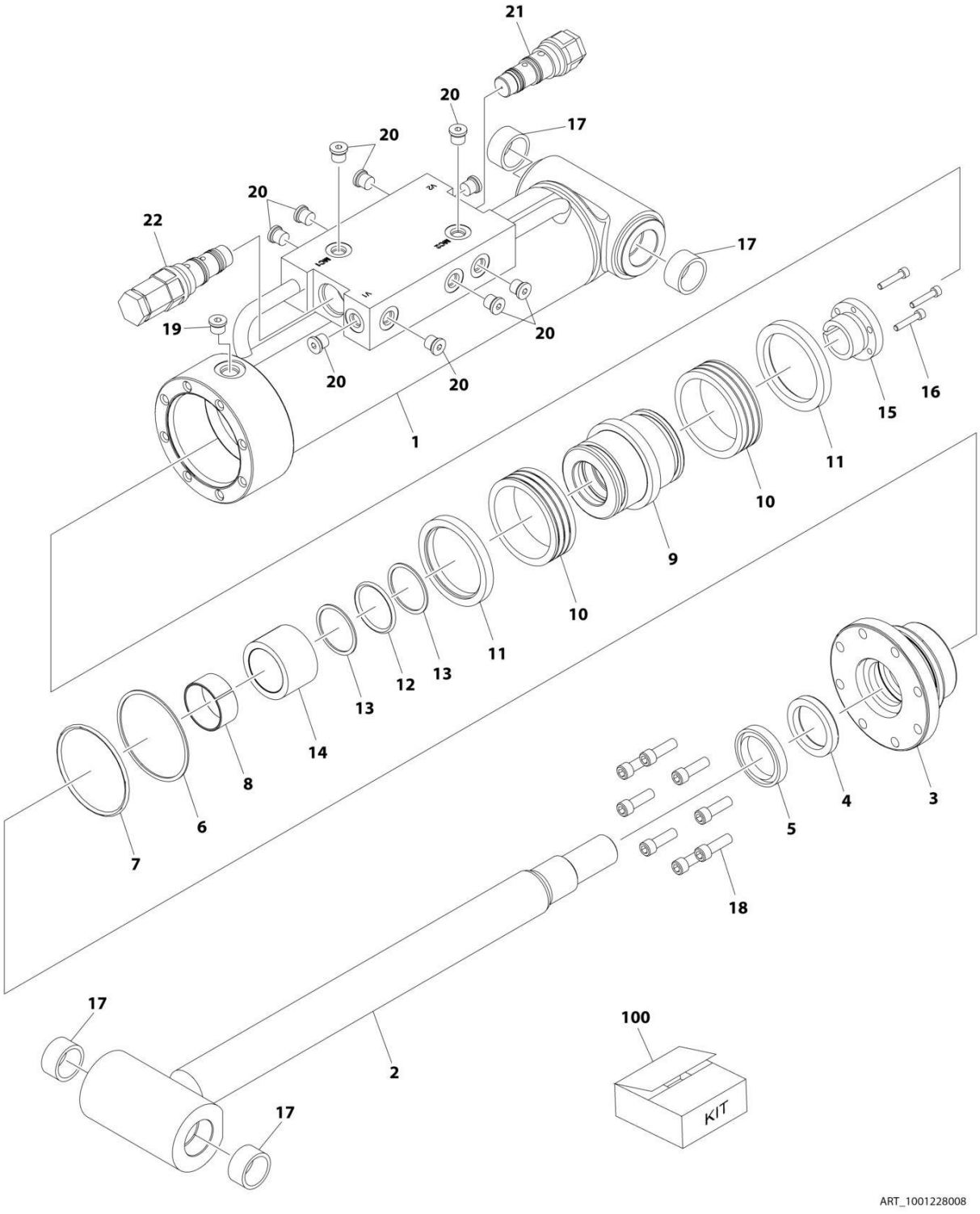

## FIGURE 5-6. LEVEL CYLINDER ASSEMBLY - 600SC (SERVICE REPLACEMENT)

| ITEM | PART NUMBER | QTY | DESCRIPTION | REV |
|---|---|---|---|---|
| | 1001228008 | Ref | LEVEL CYLINDER ASSEMBLY - 600SC (SERVICE REPLACEMENT) | A |
| | | Ref | Note: Original Cylinder May Have Been Replaced with Service Replacement. Identify PN Stamped on Cylinder Before Ordering Parts. | |
| 1 | See Note | NSS | Barrel (Note: Not Available for Purchase) | |
| 2 | 70006648 | 1 | Rod | |
| 3 | 70006649 | 1 | Head | |
| 4 | See Note | NSS | Wiper (Note: Use Item 100) | |
| 5 | See Note | NSS | Seal (Note: Use Item 100) | |
| 6 | See Note | NSS | O-Ring (Note: Use Item 100) | |
| 7 | See Note | NSS | Ring, Back-up (Note: Use Item 100) | |
| 8 | See Note | NSS | Ring, Wear (Note: Use Item 100) | |
| 9 | 70006650 | 1 | Piston | |
| 10 | See Note | NSS | Seal (Note: Use Item 100) | |
| 11 | See Note | NSS | Ring, Lock (Note: Use Item 100) | |
| 12 | See Note | NSS | O-Ring (Note: Use Item 100) | |
| 13 | See Note | NSS | Ring, Back-up (Note: Use Item 100) | |
| 14 | 70006569 | 1 | Spacer | |
| 15 | 0961893 | 1 | Bushing, Tapered | |
| 16 | 0630534 | 3 | Screw #10 x 1 | |
| 17 | 0961947 | 4 | Bushing | |
| 18 | 3931516 | 8 | Capscrew 5/16 x 1 | |
| 19 | 2220885 | 1 | Plug, O-Ring | |
| 20 | 2220883 | 10 | Plug, O-Ring | |
| 21 | 4640932 | 1 | Cartridge, Valve | |
| 21 | 7011112 | 1 | Seal Kit - 4640932 Valve | |
| 22 | 4640509 | 1 | Cartridge, Valve | |
| 22 | 2900792 | 1 | Seal Kit - 4640509 Valve | |
| 100 | 2901303 | 1 | Seal Kit (Includes Items 4-8 & 10-13) | |

## FIGURE 5-7. LEVEL CYLINDER ASSEMBLY - 660SJC (ORIGINAL EQUIPMENT)

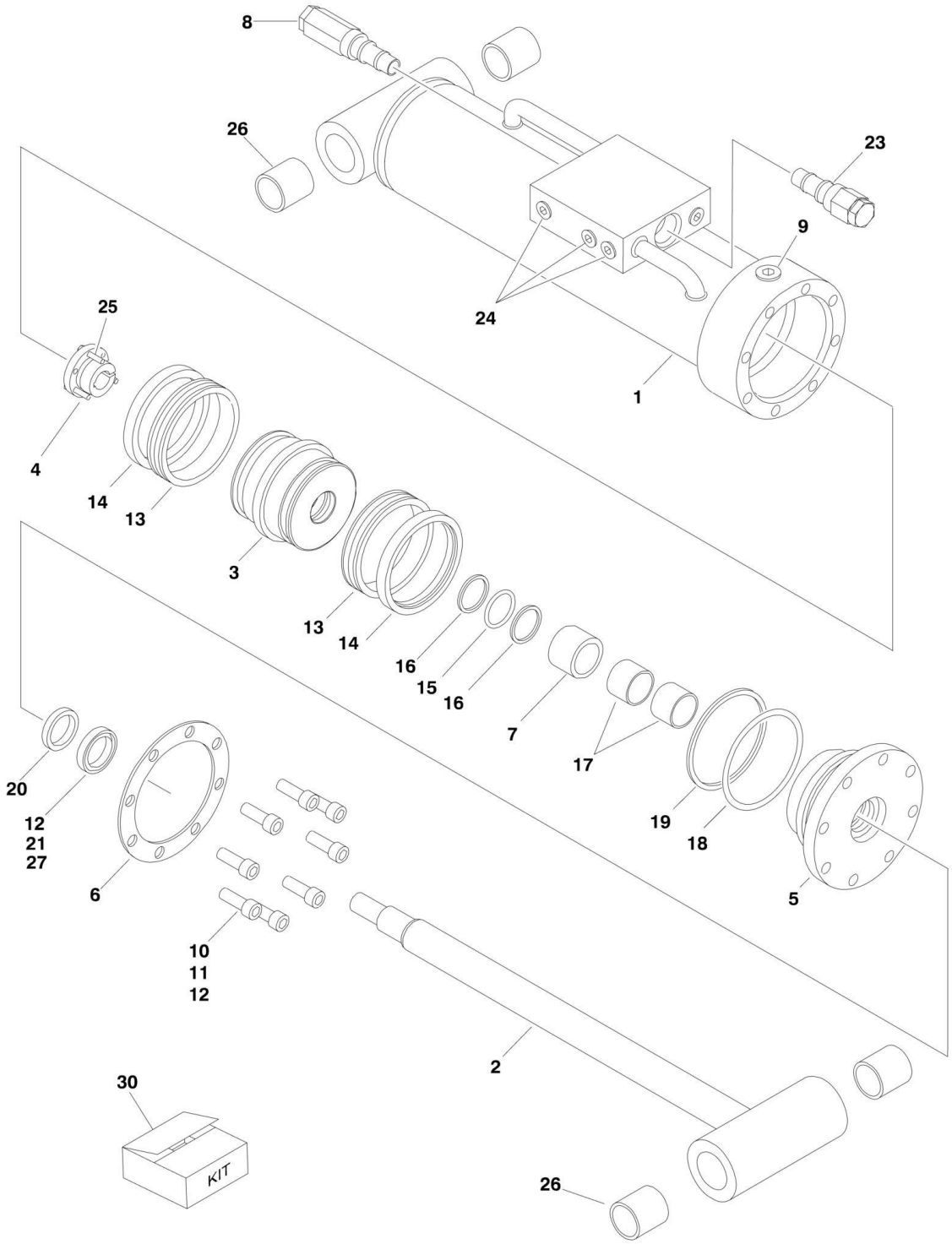

## FIGURE 5-7. LEVEL CYLINDER ASSEMBLY - 660SJC (ORIGINAL EQUIPMENT)

| ITEM | PART NUMBER | QTY | DESCRIPTION | REV |
|---|---|---|---|---|
| | 1683418 | Ref | **LEVEL CYLINDER ASSEMBLY - 660SJC (ORIGINAL EQUIPMENT)** | G |
| | | Ref | Note: Original Cylinder May Have Been Replaced with Service Replacement. Identify PN Stamped on Cylinder Before Ordering Parts. | |
| 1 | 1683952 | 1 | Barrel | |
| 2 | 1683963 | 1 | Rod | |
| 3 | 3480188 | 1 | Piston | |
| 4 | 0961894 | 1 | Bushing, Tapered | |
| 5 | 1683055 | 1 | Head | |
| 6 | 3760369 | 1 | Ring, Washer | |
| 7 | 4566468 | 1 | Spacer | |
| 8 | 4640509 | 1 | Cartridge, Valve | |
| 8 | 2900792 | 1 | Seal Kit - 4640509 Valve | |
| 9 | 2220885 | 1 | Plug, O-Ring | |
| 10 | 3931620 | 8 | Capscrew, Socket Head 3/8in-16NC x 1-1/4in | |
| 11 | 0100011 | AR | Compound, Locking | |
| 12 | 0100038 | AR | Primer, Locking | |
| 13 | See Note | NSS | Seal (Note: Use Item 30) | |
| 14 | See Note | NSS | Ring, Lock (Note: Use Item 30) | |
| 15 | See Note | NSS | O-Ring (Note: Use Item 30) | |
| 16 | See Note | NSS | Ring, Back-up (Note: Use Item 30) | |
| 17 | See Note | NSS | Ring, Wear (Note: Use Item 30) | |
| 18 | See Note | NSS | O-Ring (Note: Use Item 30) | |
| 19 | See Note | NSS | Ring, Back-up (Note: Use Item 30) | |
| 20 | See Note | NSS | Seal, Rod (Note: Use Item 30) | |
| 21 | See Note | NSS | Wiper (Note: Use Item 30) | |
| 23 | 4640932 | 1 | Cartridge, Valve | |
| 23 | 7011112 | 1 | Seal Kit - Valve Cartridge | |
| 24 | 2220883 | 8 | Plug, O-Ring | |
| 25 | 0630535 | 3 | Screw, Socket Head 1/4in-20NC x 1-1/8in | |
| 26 | 0961951 | 4 | Bushing | |
| 27 | 0100063 | AR | Loctite #RC609 | |
| 30 | 2901301 | 1 | Seal Kit (Includes Items 13-21) | |

## FIGURE 5-8. LEVEL CYLINDER ASSEMBLIES - 660SJC (SERVICE REPLACEMENT)

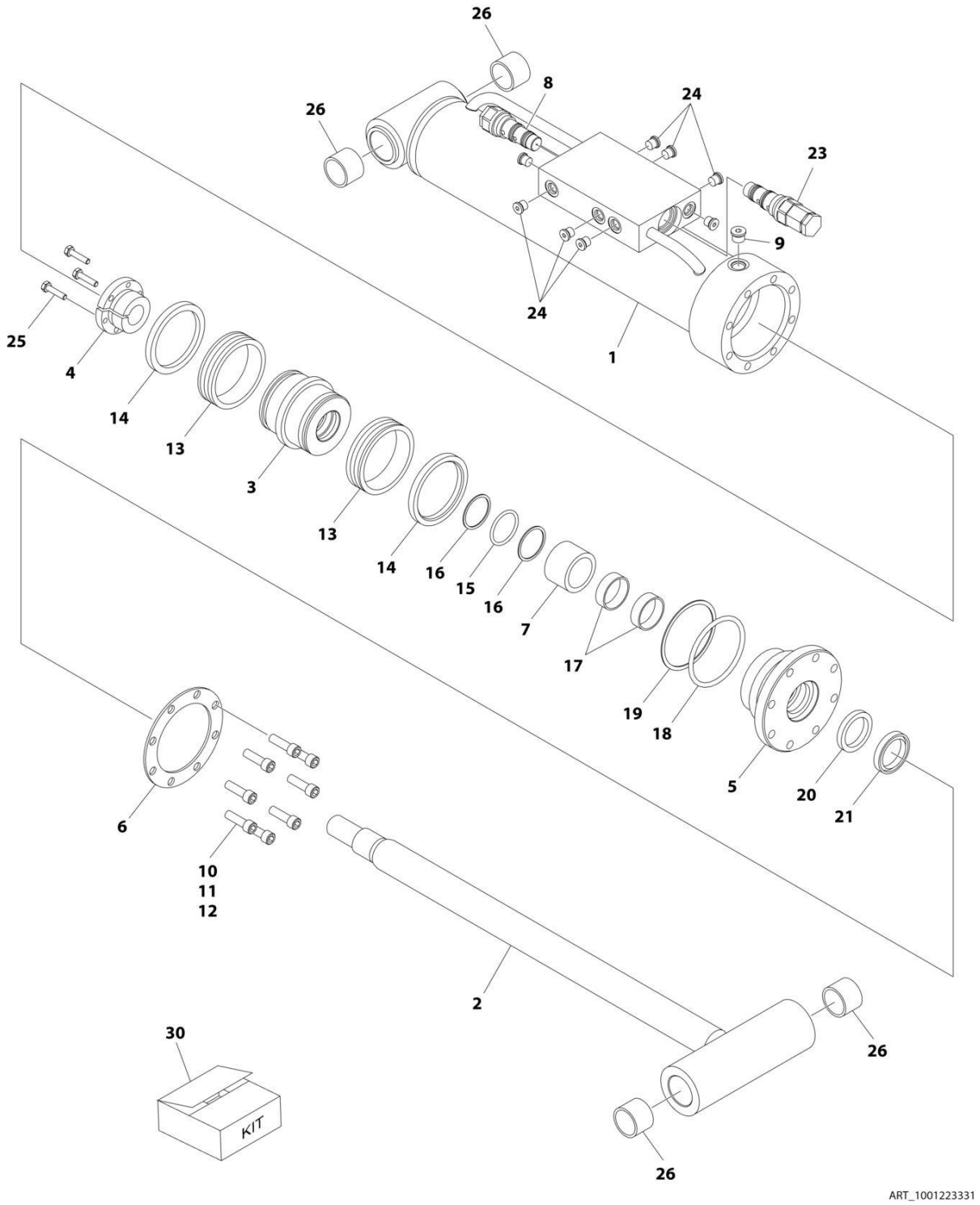

## FIGURE 5-8. LEVEL CYLINDER ASSEMBLIES - 660SJC (SERVICE REPLACEMENT)

| ITEM | PART NUMBER | QTY | DESCRIPTION | REV |
|---|---|---|---|---|
| | 1001223331 | Ref | LEVEL CYLINDER ASSEMBLIES - 600SJC & 660SJC (SERVICE REPLACEMENT) | B |
| | | Ref | Note: Original Cylinder May Have Been Replaced with Service Replacement. Identify PN Stamped on Cylinder Before Ordering Parts. | |
| 1 | 1001223332 | 1 | Barrel (Note: Item 26 not included - Purchase Separately) | |
| 2 | 1683963 | 1 | Rod (Note: Item 26 not included - Purchase Separately | |
| 3 | 3480188 | 1 | Piston | |
| 4 | 0961894 | 1 | Bushing, Tapered | |
| 5 | 1683055 | 1 | Head | |
| 6 | 3760369 | 1 | Ring, Washer | |
| 7 | 4566468 | 1 | Spacer | |
| 8 | 4640509 | 1 | Cartridge, Valve | |
| 8 | 2900792 | 1 | Seal Kit - 4640509 Valve | |
| 9 | 2220885 | 1 | Plug, O-Ring | |
| 10 | 3931620 | 8 | Capscrew 3/8 x 1-1/4 | |
| 11 | 0100011 | AR | Compound, Locking | |
| 12 | 0100038 | AR | Primer, Locking | |
| 13 | See Note | NSS | Seal (Note: Use Item 30) | |
| 14 | See Note | NSS | Ring, Lock (Note: Use Item 30) | |
| 15 | See Note | NSS | O-Ring (Note: Use Item 30) | |
| 16 | See Note | NSS | Ring, Back-up (Note: Use Item 30) | |
| 17 | See Note | NSS | Ring, Wear (Note: Use Item 30) | |
| 18 | See Note | NSS | O-Ring (Note: Use Item 30) | |
| 19 | See Note | NSS | Ring, Back-up (Note: Use Item 30) | |
| 20 | See Note | NSS | Seal, Rod (Note: Use Item 30) | |
| 21 | See Note | NSS | Wiper (Note: Use Item 30) | |
| 23 | 4640932 | 1 | Cartridge, Valve | |
| 23 | 7011112 | 1 | Seal Kit - 4640932 Valve | |
| 24 | 2220883 | 8 | Plug, O-Ring | |
| 25 | 0630535 | 3 | Screw #10 x 1 | |
| 26 | 0961951 | 4 | Bushing | |
| 30 | 2901301 | 1 | Seal Kit (Includes Items 13-21) | |

## FIGURE 5-9. LEVEL CYLINDER ASSEMBLY - 660SJC (SERVICE REPLACEMENT)

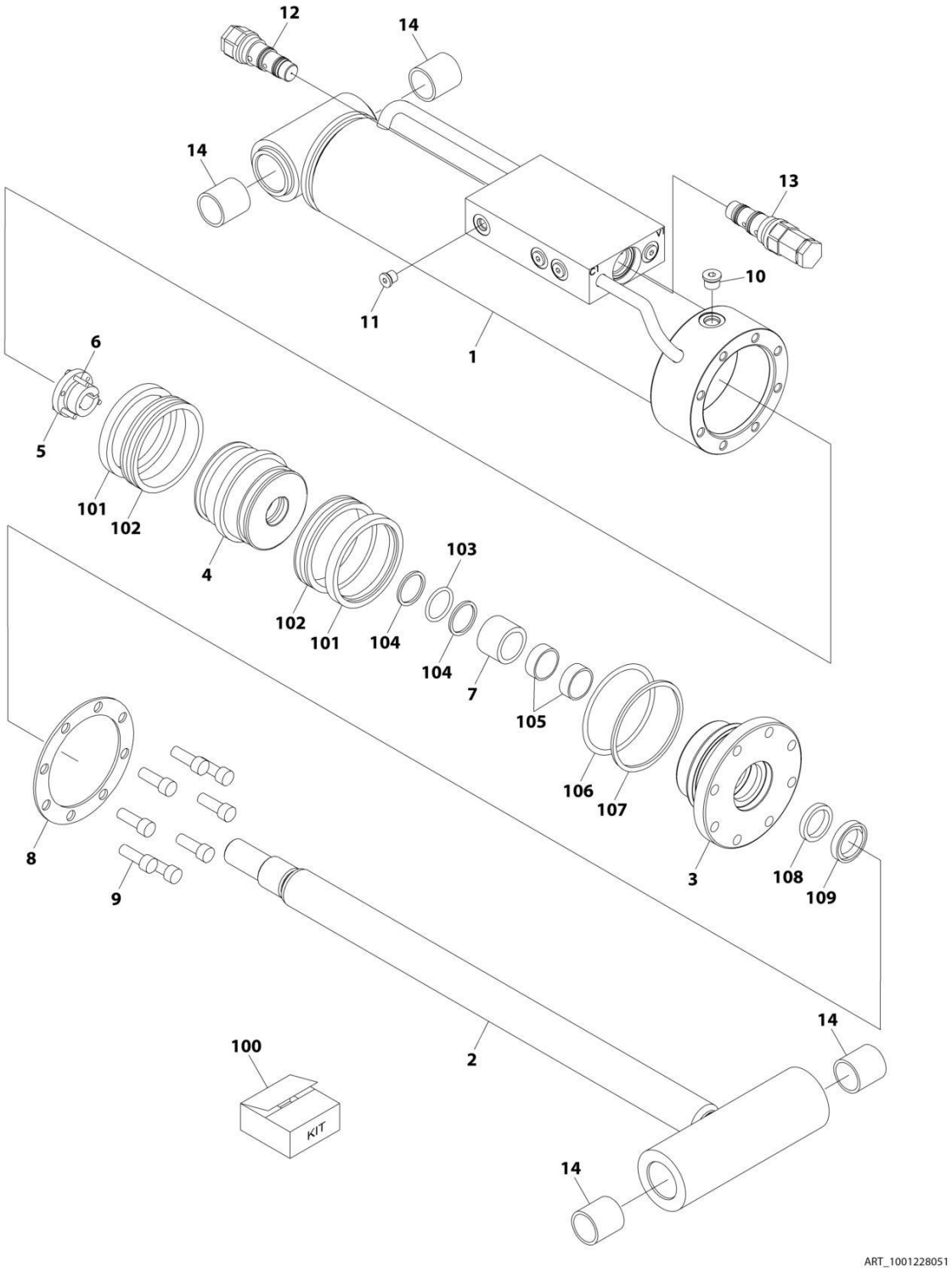

## FIGURE 5-9. LEVEL CYLINDER ASSEMBLY - 660SJC (SERVICE REPLACEMENT)

| ITEM | PART NUMBER | QTY | DESCRIPTION | REV |
|---|---|---|---|---|
| | 1001228051 | Ref | LEVEL CYLINDER ASSEMBLY | A |
| | | Ref | Note: Original Cylinder May Have Been Replaced with Service Replacement. Identify PN Stamped on Cylinder Before Ordering Parts. | |
| 1 | See Note | NSS | Barrel (Note: Use p/n 1001228051) | |
| 2 | 70006823 | 1 | Rod | |
| 3 | 70006446 | 1 | Head | |
| 4 | 70006445 | 1 | Piston | |
| 5 | 70006444 | 1 | Bushing, Tapered | |
| 6 | 0630535 | 3 | Bolt 1/4 x 1-1/8 | |
| 7 | 70006443 | 1 | Spacer | |
| 8 | 70006822 | 1 | Ring, Washer | |
| 9 | 3931620 | 8 | Capscrew 3/8 x 1-1/4 | |
| 10 | 2220885 | 1 | Plug, O-Ring | |
| 11 | 2220883 | 8 | Plug, O-Ring | |
| 12 | 4640509 | 1 | Cartridge, Valve | |
| 12 | 2900792 | 1 | Seal Kit - 4640509 Valve | |
| 13 | 4640932 | 1 | Cartridge, Valve | |
| 13 | 7011112 | 1 | Seal Kit - 4640932 Valve | |
| 14 | 0961951 | 4 | Bushing | |
| 100 | 1001138796 | 1 | Seal Kit - 1001228051 Cylinder (Includes Items 101-109) | |
| 101 | See Note | NSS | Ring, Lock (Note: Use Item 100) | |
| 102 | See Note | NSS | Seal (Note: Use Item 100) | |
| 103 | See Note | NSS | O-Ring (Note: Use Item 100) | |
| 104 | See Note | NSS | Ring, Back-up (Note: Use Item 100) | |
| 105 | See Note | NSS | Ring, Wear (Note: Use Item 100) | |
| 106 | See Note | NSS | O-Ring (Note: Use Item 100) | |
| 107 | See Note | NSS | Ring, Back-up (Note: Use Item 100) | |
| 108 | See Note | NSS | Seal, Rod (Note: Use Item 100) | |
| 109 | See Note | NSS | Wiper (Note: Use Item 100) | |

## FIGURE 5-10. LIFT CYLINDER ASSEMBLY

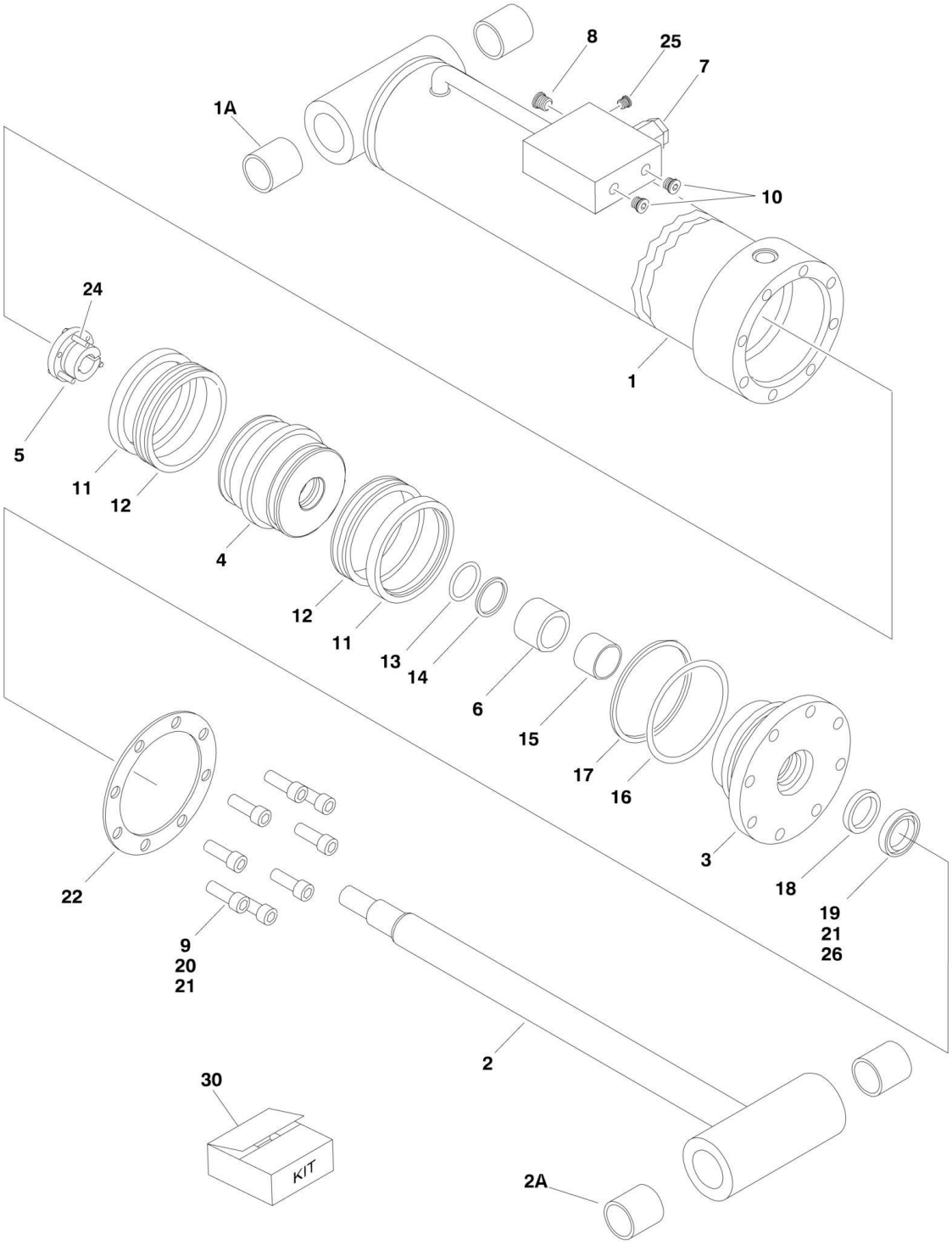

## FIGURE 5-10. LIFT CYLINDER ASSEMBLY

| ITEM | PART NUMBER | QTY | DESCRIPTION | REV |
|---|---|---|---|---|
| | | Ref | **LIFT CYLINDER ASSEMBLY** | |
| | 1683666 | Ref | **Original Equipment (SN 0300128000 through 0300138353)** | H |
| | 1001112468 | Ref | **Service Replacement (SN 0300128000 through 0300138353)** | B |
| | 1001112468 | Ref | **Original Equipment (SN 0300138354 through 0300174703)** | B |
| | | Ref | Note: Original Cylinder May Have Been Replaced with Service Replacement. Identify PN Stamped on Cylinder Before Ordering Parts. | |
| 1 | | Ref | Barrel Options: (Note: Includes Item 1A) | |
| 1 | 1683955 | 1 | Original Equipment **(SN 0300128000 through 0300138353)** | |
| 1 | 1001112467 | 1 | Service Replacement **(SN 0300128000 through 0300138353)** | |
| 1 | 1001112467 | 1 | Original Equipment **(SN 0300138354 through 0300174703)** | |
| 1A | 0961950 | 2 | Bushing | |
| 2 | 1683954 | 1 | Rod (Note: Includes Item 2A) | |
| 2A | 0961950 | 2 | Bushing | |
| 3 | 1683067 | 1 | Head | |
| 4 | 3480206 | 1 | Piston | |
| 5 | 0961898 | 1 | Bushing, Tapered (Use item #24 in place of supplied bolts) | |
| 6 | 4566501 | 1 | Spacer, Tube | |
| 7 | 4640509 | 1 | Cartridge, Valve | |
| 7 | 2900792 | 1 | Seal Kit - 4640509 Valve | |
| 8 | 2220887 | 1 | Plug, O-Ring | |
| 9 | 3932032 | 8 | Bolt, Socket Head 5/16in-11NC x 2in | |
| 10 | 2220883 | 2 | Plug, O-Ring | |
| 11 | See Note | NSS | Ring, Lock (Note: Use Item 30) | |
| 12 | See Note | NSS | Seal, Hydrolock (Note: Use Item 30) | |
| 13 | See Note | NSS | O-Ring (Note: Use Item 30) | |
| 14 | See Note | NSS | Ring, Back-up (Note: Use Item 30) | |
| 15 | See Note | NSS | Ring, Wear (Note: Use Item 30) | |
| 16 | See Note | NSS | O-Ring (Note: Use Item 30) | |
| 17 | See Note | NSS | Ring, Back-up (Note: Use Item 30) | |
| 18 | See Note | NSS | Seal, Rod (Note: Use Item 30) | |
| 19 | See Note | NSS | Wiper (Note: Use Item 30) | |
| 20 | 0100011 | AR | Compound, Locking | |
| 21 | 0100038 | AR | Primer, Locking | |
| 22 | 3760372 | 1 | Washer, Ring | |
| 24 | 0630536 | 3 | Screw, Socket Head 3/8in-16NC x 1-1/2in | |
| 25 | 2220235 | 1 | Plug, O-Ring | |
| 26 | 0100063 | AR | Loctite #RC609 Only **(SN 0300128000 through 0300138354)** | |
| 30 | 2901285 | 1 | Seal Kit (Includes Items 11-19) | |

## FIGURE 5-11. MASTER CYLINDER ASSEMBLY

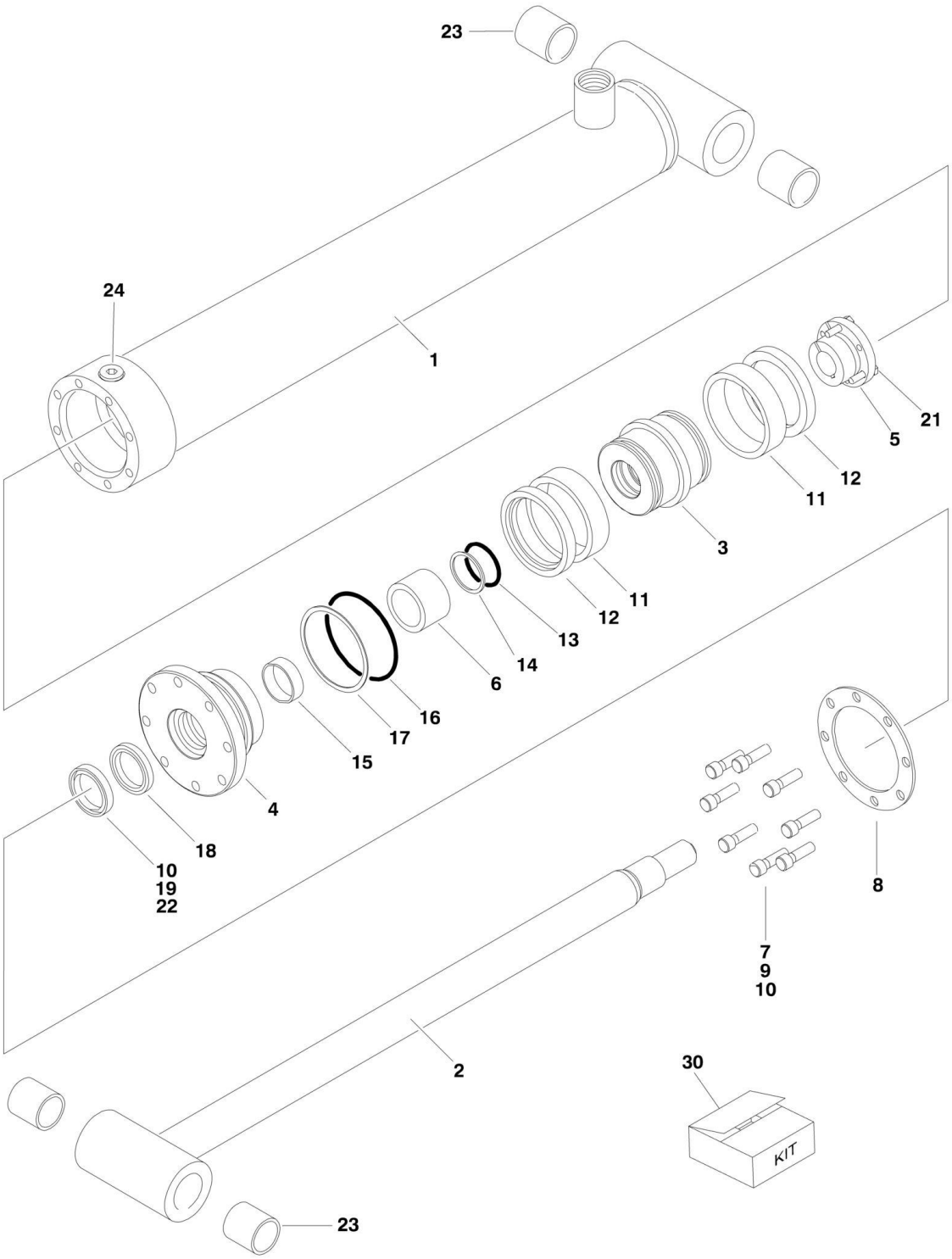

## FIGURE 5-11. MASTER CYLINDER ASSEMBLY

| ITEM | PART NUMBER | QTY | DESCRIPTION | REV |
|---|---|---|---|---|
| | | Ref | **MASTER CYLINDER ASSEMBLY** | |
| | 1684414 | Ref | **Master Cylinder Assembly 600SC** | D |
| | 1684413 | Ref | **Master Cylinder Assembly 660SJC (Original Equipment)** | F |
| | | Ref | Note: Original Cylinder May Have Been Replaced with Service Replacement. Identify PN Stamped on Cylinder Before Ordering Parts. | |
| 1 | | Ref | Barrel Options: | |
| 1 | 1683972 | 1 | Barrel 600SC (Includes Qty 2 of Item 23) | |
| 1 | 1683949 | 1 | Barrel 660SJC (Bushings Not Included) | |
| 2 | | Ref | Rod Options: | |
| 2 | 3850020 | 1 | Rod 600SC (Includes Qty 2 of Item 23): | |
| 2 | 1683963 | 1 | Rod 600SJC & 660SJC (Bushings Not Included) | |
| 3 | | Ref | Piston Options: | |
| 3 | 3480210 | 1 | Piston 600SC | |
| 3 | 3480188 | 1 | Piston 660SJC | |
| 4 | | Ref | Head Options: | |
| 4 | 1683053 | 1 | Head 600SC | |
| 4 | 1683055 | 1 | Head 660SJC | |
| 5 | | Ref | Bushing, Tapered Options: | |
| 5 | 0961893 | 1 | Bushing, Tapered 600SC | |
| 5 | 0961894 | 1 | Bushing, Tapered 660SJC | |
| 6 | 4566468 | 1 | Spacer, Tube | |
| 7 | | Ref | Capscrew Options: | |
| 7 | 3931516 | 8 | Capscrew 600SC (5/16in-18NC x 1in) | |
| 7 | 3931620 | 8 | Capscrew 660SJC (3/8in-16NC x 1-1/4in) | |
| 8 | | Ref | Ring, Washer Options: | |
| 8 | 3760368 | 1 | Ring, Washer 600SC | |
| 8 | 3760369 | 1 | Ring, Washer 660SJC | |
| 9 | 0100011 | AR | Compound, Locking | |
| 10 | 0100038 | AR | Primer, Locking | |
| 11 | See Note | NSS | Seal (Note: Use Item 30) | |
| 12 | See Note | NSS | Ring, Lock (Note: Use Item 30) | |
| 13 | See Note | NSS | O-Ring (Note: Use Item 30) | |
| 14 | See Note | NSS | Ring, Back-up (Note: Use Item 30) | |
| 15 | See Note | NSS | Ring, Wear (Note: Use Item 30) | |
| 16 | See Note | NSS | O-Ring (Note: Use Item 30) | |
| 17 | See Note | NSS | Ring, Back-up (Note: Use Item 30) | |
| 18 | See Note | NSS | Seal, Rod (Note: Use Item 30) | |
| 19 | See Note | NSS | Wiper (Note: Use Item 30) | |
| 21 | | Ref | Screw, Socket Head | |
| 21 | 0630534 | 3 | Screw, Socket Head 600SC (#10-24NC x 1in) | |
| 21 | 0630535 | 3 | Screw, Socket Head 660SJC (1/4in-20NC x 1-1/8in) | |
| 22 | 0100063 | AR | Loctite #RC680 | |
| 23 | | Ref | Bushing Options: | |
| 23 | 0961947 | 4 | Bushing 600SC | |
| 23 | 0961951 | 4 | Bushing 660SJC | |
| 24 | | Ref | Plug, O-Ring Options: | |
| 24 | Not Required | 0 | Plug, O-Ring 600SC | |
| 24 | 2220885 | 1 | Plug, O-Ring 660SJC | |
| 30 | | Ref | Seal Kit Options (Includes Items 11-19): | |

# SECTION 5 - CYLINDER

| ITEM | PART NUMBER | QTY | DESCRIPTION | REV |
|---|---|---|---|---|
| 30 | 2901303 | 1 | Seal Kit 600SC (1684414 Cylinder) | |
| 30 | 2901301 | 1 | Seal Kit 660SJC (1684413 Cylinder) | |

## FIGURE 5-12. MASTER CYLINDER ASSEMBLY - 660SJC (SERVICE REPACEMENT)

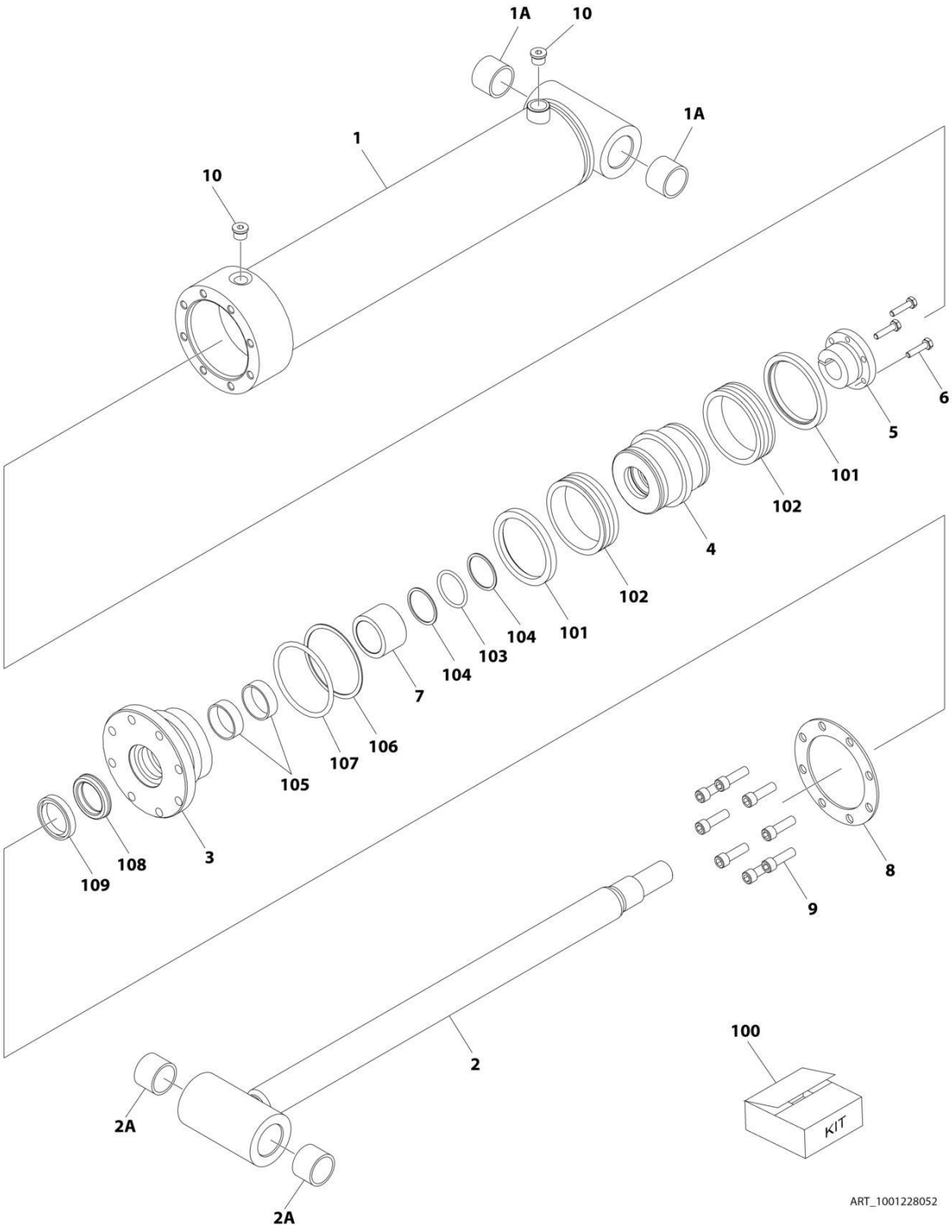

## FIGURE 5-12. MASTER CYLINDER ASSEMBLY - 660SJC (SERVICE REPACEMENT)

| ITEM | PART NUMBER | QTY | DESCRIPTION | REV |
|---|---|---|---|---|
| | 1001228052 | Ref | MASTER CYLINDER ASSEMBLY - 660SJC (SERVICE REPACEMENT) | A |
| | | Ref | Note: Original Cylinder May Have Been Replaced with Service Replacement. Identify PN Stamped on Cylinder Before Ordering Parts. | |
| 1 | See Note | NSS | Barrel Weldment (Note: Not Available for Purchase) | |
| 1A | 0961951 | 2 | Bushing | |
| 2 | 70006447 | 1 | Rod Weldment | |
| 2A | 0961951 | 2 | Bushing | |
| 3 | 70006446 | 1 | Head | |
| 4 | 70006445 | 1 | Piston | |
| 5 | 70006444 | 1 | Bushing, Tapered | |
| 6 | 0630535 | 3 | Capscrew 1/4 x 1-1/8 | |
| 7 | 70006443 | 1 | Spacer | |
| 8 | 70006442 | 1 | Ring, Washer | |
| 9 | 3931620 | 8 | Capscrew 3/8 x 1-1/4 | |
| 10 | 2220885 | 2 | Plug, O-Ring | |
| 100 | 1001138796 | 1 | Seal Kit (Includes Items 101-109) | |
| 101 | See Note | NSS | Ring, Wear (Note: Use Item 100) | |
| 102 | See Note | NSS | Seal, Piston (Note: Use Item 100) | |
| 103 | See Note | NSS | O-Ring (Note: Use Item 100) | |
| 104 | See Note | NSS | Ring, Back-up (Note: Use Item 100) | |
| 105 | See Note | NSS | Ring, Wear (Note: Use Item 100) | |
| 106 | See Note | NSS | O-Ring (Note: Use Item 100) | |
| 107 | See Note | NSS | Ring, Back-up (Note: Use Item 100) | |
| 108 | See Note | NSS | Seal, Rod (Note: Use Item 100) | |
| 109 | See Note | NSS | Wiper, Rod (Note: Use Item 100) | |

## FIGURE 5-13. TELESCOPE CYLINDER ASSEMBLY

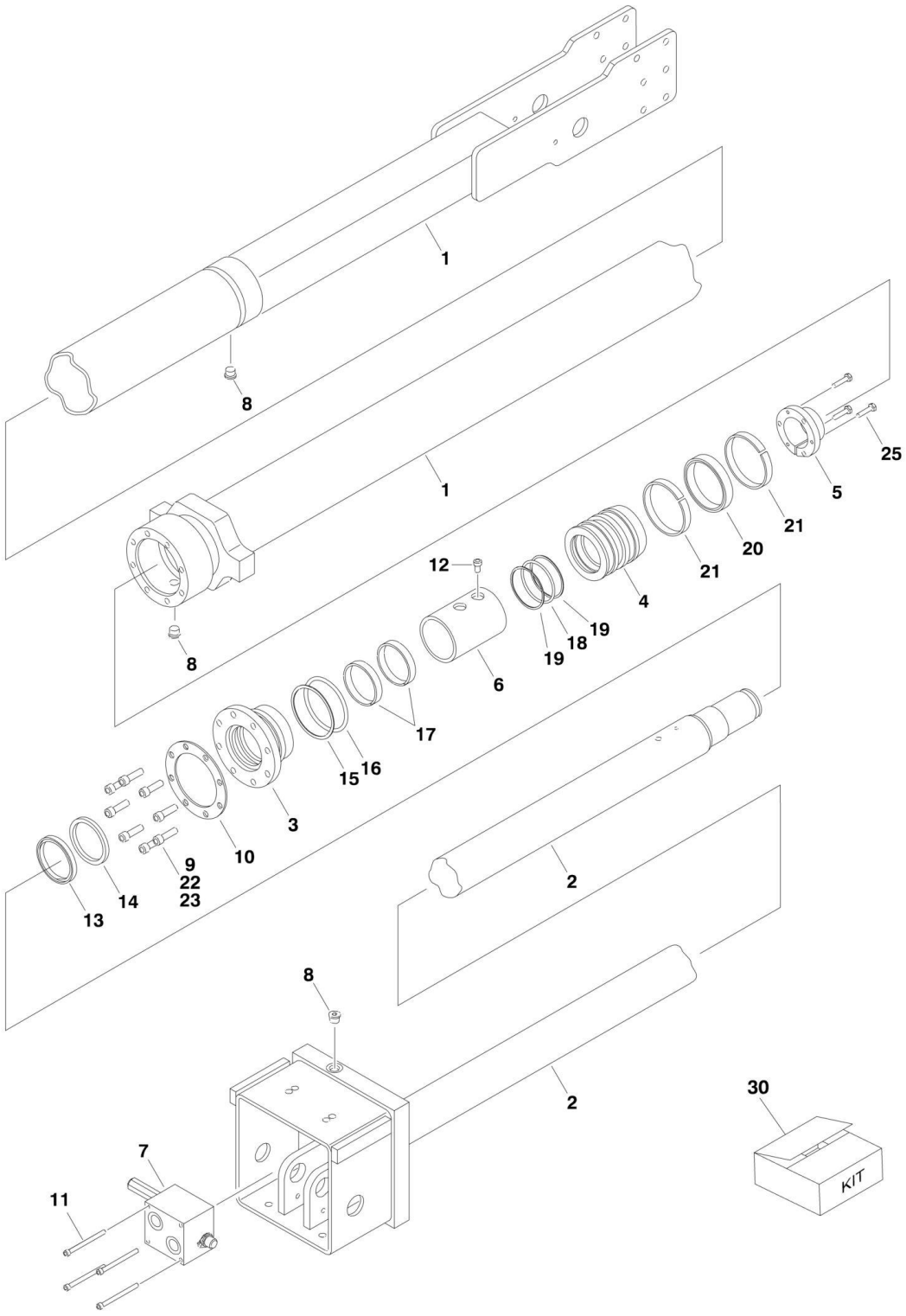

## FIGURE 5-13. TELESCOPE CYLINDER ASSEMBLY

| ITEM | PART NUMBER | QTY | DESCRIPTION | REV |
|---|---|---|---|---|
| | 1683618 | Ref | **TELESCOPE CYLINDER ASSEMBLY** | G |
| 1 | 1683619 | 1 | Barrel | |
| 2 | 1683250 | 1 | Rod | |
| 3 | 1683057 | 1 | Head | |
| 4 | 3480205 | 1 | Piston | |
| 5 | 0961897 | 1 | Bushing, Tapered | |
| 6 | 4566644 | 1 | Spacer, Tube | |
| 7 | 4641028 | 1 | Valve Assembly (No serviceable parts - sold as assembly only) | |
| 7 | 7024397 | 2 | O-Ring (Not Shown - Located between valve and cylinder block) | |
| 8 | 2220885 | 6 | Plug, O-Ring | |
| 9 | 3931620 | 8 | Capscrew 3/8in-16NC x 1-1/4in | |
| 10 | 3760369 | 1 | Ring, Washer | |
| 11 | 3931448 | 4 | Capscrew 1/4in-20NC x 3in | |
| 12 | 3931508 | 1 | Capscrew 5/16in-18NC x 1/2in | |
| 13 | See Note | NSS | Wiper (Note: Use Item 30) | |
| 14 | See Note | NSS | Seal, Rod (Note: Use Item 30) | |
| 15 | See Note | NSS | O-Ring (Note: Use Item 30) | |
| 16 | See Note | NSS | Ring, Back-up (Note: Use Item 30) | |
| 17 | See Note | NSS | Ring, Wear (Note: Use Item 30) | |
| 18 | See Note | NSS | O-Ring (Note: Use Item 30) | |
| 19 | 4641028 | NSS | Ring, Back-up (Note: Use Item 30) | |
| 20 | 4641028 | NSS | T-Seal (Note: Use Item 30) | |
| 21 | 4641028 | NSS | Ring, Wear (Note: Use Item 30) | |
| 22 | 0100011 | AR | Compound, Locking | |
| 23 | 0100038 | AR | Primer, Locking | |
| 25 | 0630535 | 3 | Bolt, Socket Head 1/4in-20NC x 1-1/8in | |
| 30 | 2901284 | 1 | Seal Kit (Includes Items 13-21) | |

# SECTION 6 - HYDRAULIC

## FIGURE 6-1. FRAME HYDRAULIC DIAGRAM (CATERPILLAR CHASSIS)

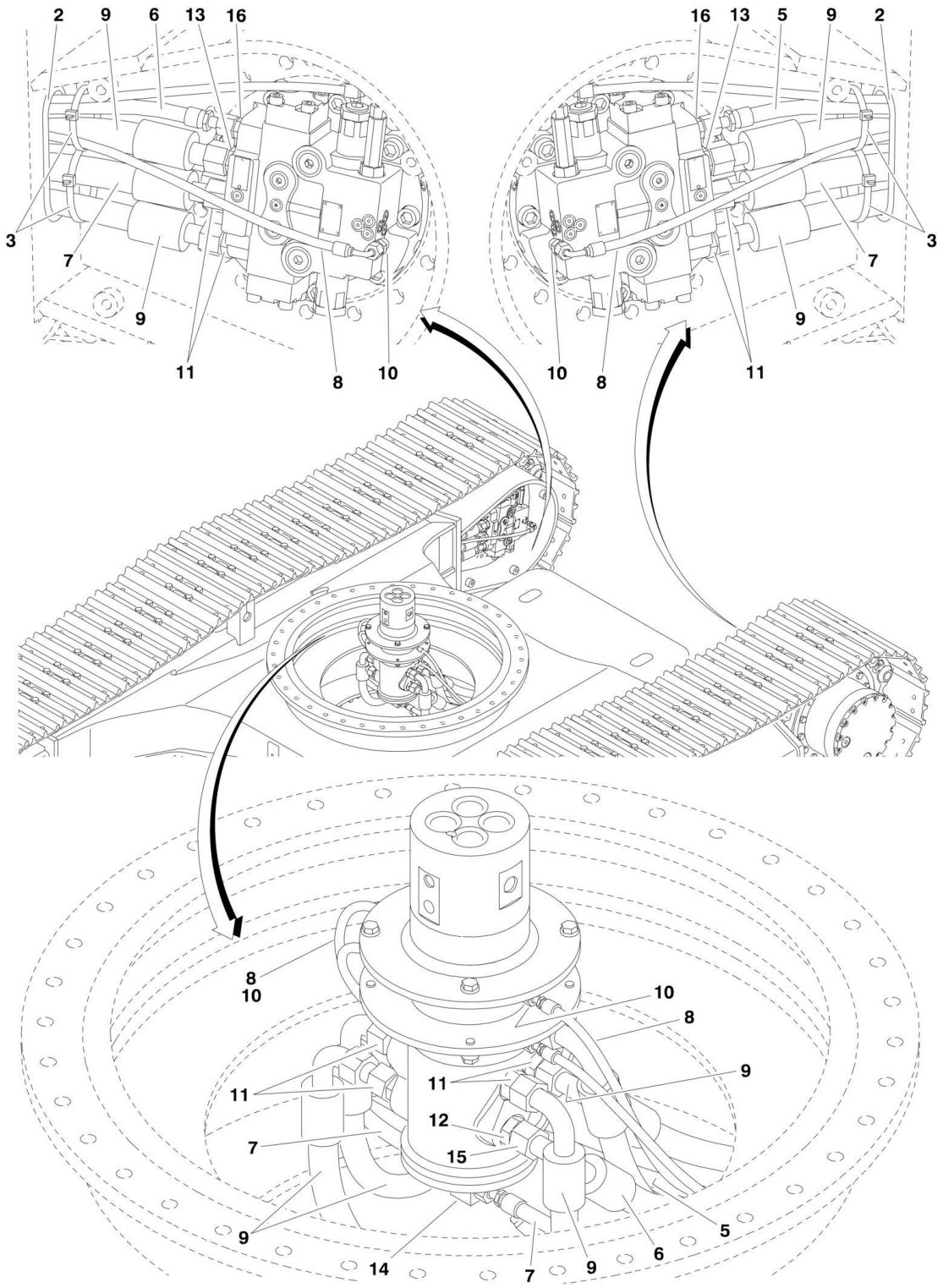

## FIGURE 6-1. FRAME HYDRAULIC DIAGRAM (CATERPILLAR CHASSIS)

| ITEM | PART NUMBER | QTY | DESCRIPTION | REV |
|---|---|---|---|---|
| | | Ref | **FRAME HYDRAULIC DIAGRAMS** | |
| | 1001102504 | Ref | **Frame Hydraulic Diagrams 600SC (ANSI, ANSI Export, CSA and Japanese Specs)** | B |
| | 1001109075 | Ref | **Frame Hydraulic Diagrams 600SC (Australian and CE Specs)** | B |
| | 1001103563 | Ref | **Frame Hydraulic Diagrams 660SJC** | D |
| 1 | 70002502 | 2 | Grommet (Not Shown - Located on Frame Near Coupling) | |
| 2 | 70002503 | 2 | Grommet | |
| 3 | See Note | NSS | Tie-Strap (Note: Not Available for Purchase.) | |
| 5 | 70002504 | 1 | Hose | |
| 6 | 70002505 | 1 | Hose | |
| 7 | 70002506 | 2 | Hose | |
| 8 | 70002507 | 2 | Hose | |
| 9 | 70002508 | 4 | Hose | |
| 10 | 70002509 | 4 | Fitting | |
| 11 | 70002510 | 8 | Fitting | |
| 12 | 70002511 | 1 | Fitting | |
| 13 | 70002512 | 2 | Fitting | |
| 14 | 70002513 | 1 | Fitting, Tee | |
| 15 | 70002514 | 1 | Fitting, Tee | |
| 16 | 70002515 | 2 | Fitting | |

## FIGURE 6-2. FRAME HYDRAULIC DIAGRAM (GRADALL CHASSIS)

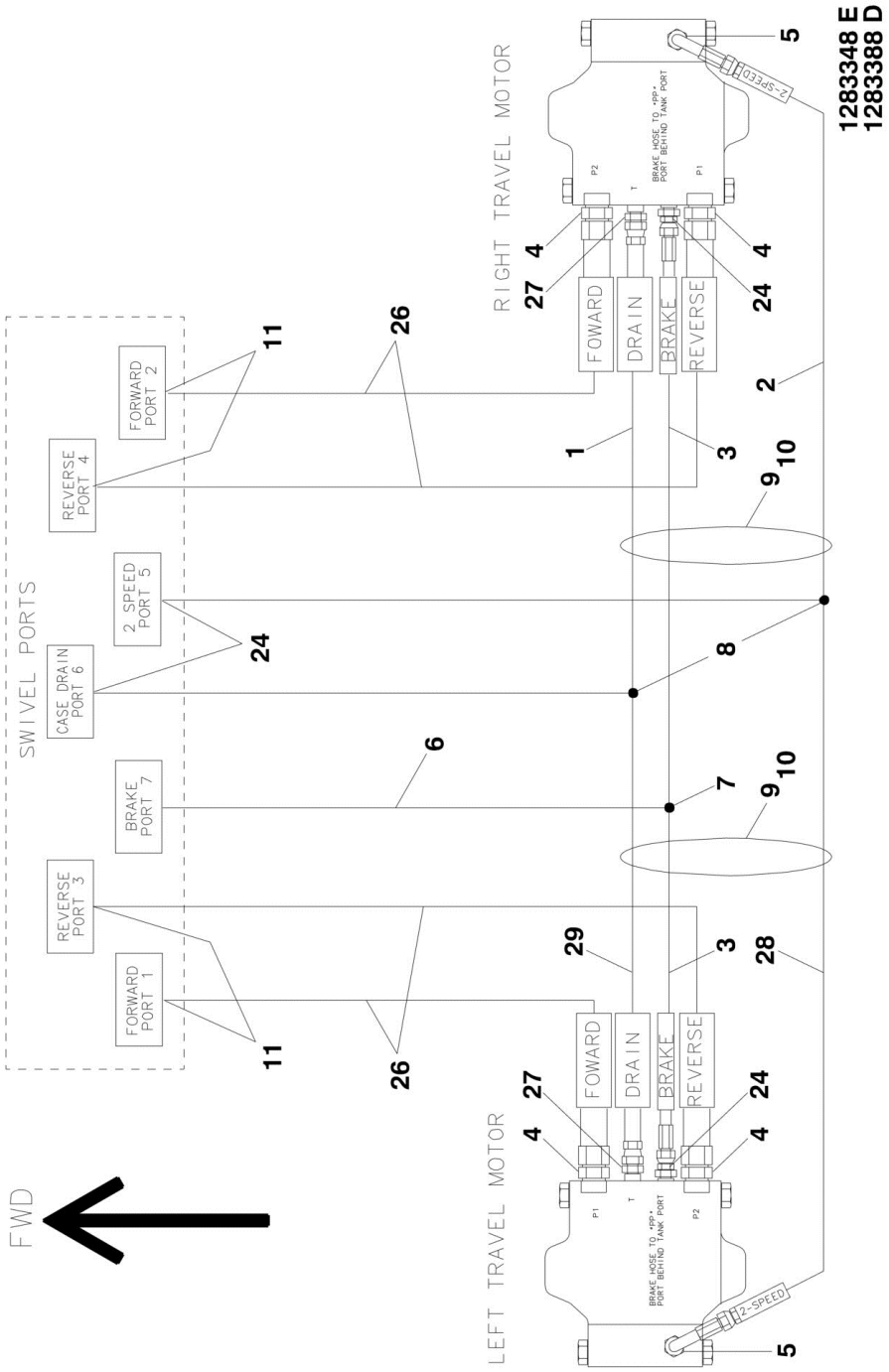

## FIGURE 6-2. FRAME HYDRAULIC DIAGRAM (GRADALL CHASSIS)

| ITEM | PART NUMBER | QTY | DESCRIPTION | REV |
|---|---|---|---|---|
| | | Ref | **FRAME HYDRAULIC DIAGRAMS** | |
| | 80215014 | Ref | **Frame Hydraulic Diagrams 600SC (SN 030012800 through 0300169157)** | C |
| | 2360574 | Ref | **Frame Hydraulic Diagrams 600SC (SN 0300169158 through 0300174703)** | B |
| | 80215016 | Ref | **Frame Hydraulic Diagrams 660SJC (SN 030012800 through 0300169157)** | C |
| | 2360576 | Ref | **Frame Hydraulic Diagrams 660SJC (SN 0300169158 through 0300174703)** | B |
| 1 | 84718604 | 1 | Hose | |
| 2 | 84719728 | 1 | Hose | |
| 3 | 84719727 | 2 | Hose | |
| 4 | 88662421 | NLA | Fitting, 45 (Use p/n 2151212) | |
| 5 | 88662329 | NLA | Fitting, 90 (Use p/n 21530606) | |
| 6 | 80213119 | 1 | Fitting, 90 | |
| 7 | 88662354 | NLA | Fitting, Tee (Use p/n 2170806) | |
| 8 | | Ref | Fitting, Tee Options: | |
| 8 | 88662346 | NLA | Tee with 3 male ends (Use p/n 2170306) | |
| 8 | 88662446 | NLA | Tee with 2 male/1 female ends (Use p/n 2170706) | |
| 9 | 83953053 | 2 | Sleeve | |
| 10 | 90027187 | 5 | Tie Strap | |
| 11 | 88662332 | NLA | Fitting, 90 (Use p/n 2131212) | |
| 24 | 88662301 | NLA | Fitting, Straight (Use p/n 2110606) | |
| 26 | 84718465 | 4 | Hose | |
| 27 | 88662448 | NLA | Fitting, Straight (Use p/n 2110612) | |
| 28 | | Ref | Hose Options: | |
| 28 | 84719026 | 1 | Hose with 1 Straight End and 1 (90) End | |
| 28 | 84719728 | 1 | Hose with 2 Straight End | |
| 29 | | Ref | Hose Options: | |
| 29 | 84719728 | 1 | Hose with 2 Straight End | |
| 29 | 84718604 | 1 | Hose with 1 Straight End and 1 (90) End | |

## FIGURE 6-3. STANDARD HYDRAULIC DIAGRAM - CATERPILLAR ENGINE (SN 0300128000 through 0300149851)

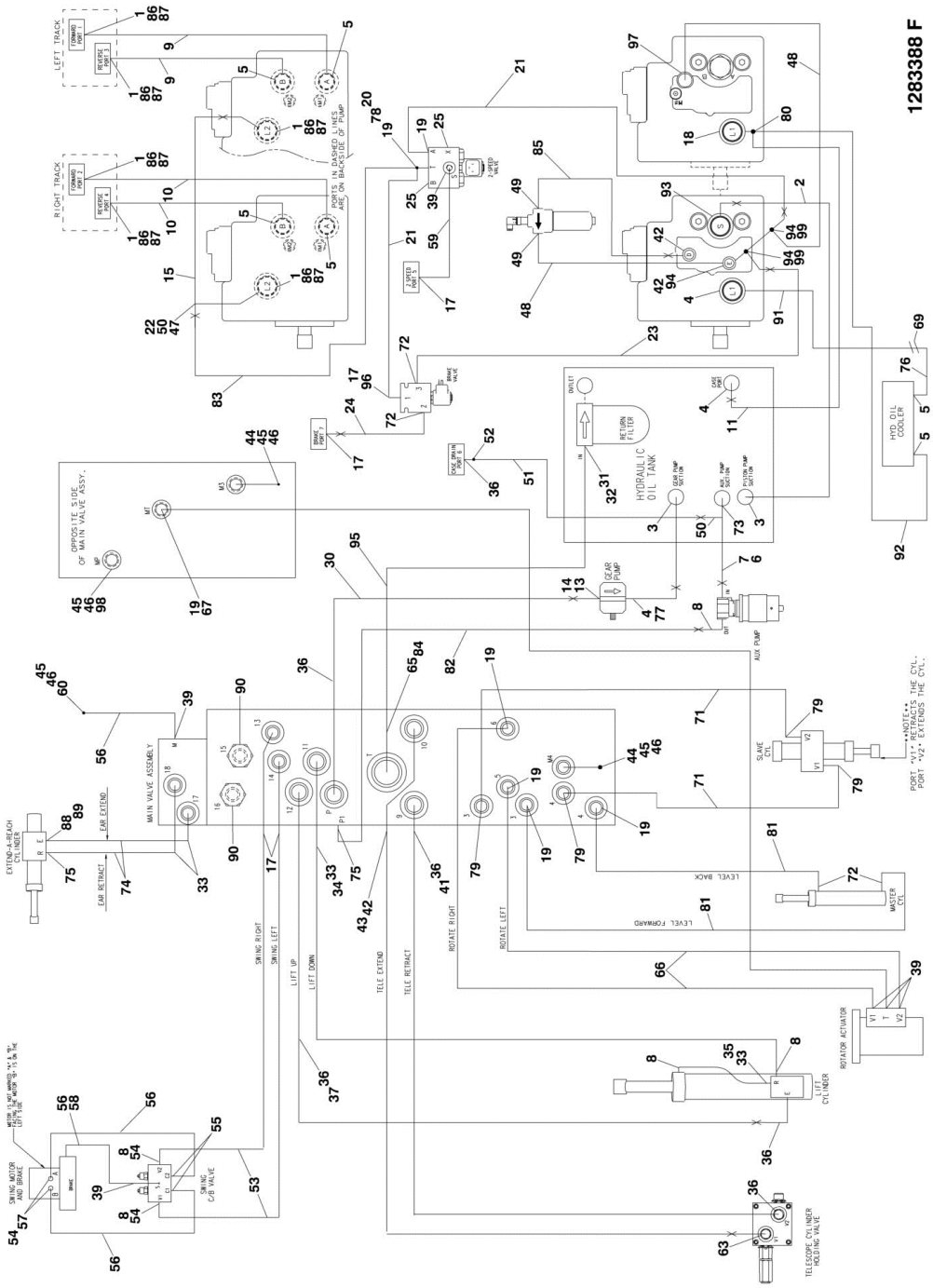

## FIGURE 6-3. STANDARD HYDRAULIC DIAGRAM - CATERPILLAR ENGINE (SN 0300128000 through 0300149851)

| ITEM | PART NUMBER | QTY | DESCRIPTION | REV |
|---|---|---|---|---|
| | | Ref | **HYDRAULIC DIAGRAMS** | |
| | 2792655 | Ref | **Hydraulic Diagrams 600SC Caterpillar Engine** | 8-F |
| | 1283388 | Ref | **Hydraulic Diagrams 600SC Caterpillar Engine** | 8-F |
| | 2792656 | Ref | **Hydraulic Diagrams 660SJC Caterpillar Engine** | 8-F |
| | 1283388 | Ref | **Hydraulic Diagrams 660SJC Caterpillar Engine** | 8-F |
| 1 | 2220451 | 4 | Fitting, Straight | |
| 2 | 2753318 | 1 | Hose | |
| 3 | 2220380 | 2 | Fitting, Straight | |
| 4 | 2220376 | 3 | Fitting, Straight | |
| 5 | 2220578 | 6 | Fitting, 90 | |
| 6 | 2752653 | 1 | Hose | |
| 7 | 2220408 | 1 | Fitting, Straight | |
| 8 | 2220628 | AR | Fitting, 90 | |
| 9 | 2753706 | 2 | Hose | |
| 10 | 2753707 | 2 | Hose | |
| 11 | 2753321 | 1 | Hose | |
| 13 | 2220810 | 1 | Fitting, Reducer | |
| 14 | 4640744 | 1 | Fitting, Check Valve | |
| 15 | 2753809 | 2 | Hose | |
| 17 | 2220582 | 5 | Fitting, Straight | |
| 18 | 4641264 | 1 | Valve, Check | |
| 19 | 2220415 | 6 | Fitting, Straight | |
| 20 | 2220605 | 1 | Fitting, Tee | |
| 21 | 2752573 | 2 | Hose | |
| 22 | 2220700 | 1 | Fitting, Tee | |
| 23 | 2752580 | 1 | Hose | |
| 24 | 2752594 | 1 | Hose | |
| 25 | 2220235 | 2 | Fitting, Plug | |
| 29 | 2753893 | 1 | Hose | |
| 30 | 2753192 | 1 | Hose | |
| 31 | 2220921 | 1 | Fitting, Reducer | |
| 32 | 2220498 | 1 | Fitting, 45 | |
| 33 | 2220372 | 4 | Fitting, Straight | |
| 34 | 2752631 | 1 | Hose | |
| 35 | 2752632 | 1 | Hose | |
| 36 | 2220373 | 6 | Fitting, Straight | |
| 37 | 2752515 | 1 | Hose | |
| 39 | 2220466 | AR | Fitting, 90 | |
| 41 | 2751474 | 1 | Hose | |
| 42 | 2220947 | 3 | Fitting, Straight | |
| 43 | 2752762 | 1 | Hose | |
| 44 | 2220873 | 2 | Fitting, Straight | |
| 45 | 2220428 | 4 | Fitting, Quick Disconnect | |
| 46 | 2220429 | 4 | Cover, Dust | |
| 47 | 2220618 | 1 | Fitting, Reducer | |
| 48 | 2752763 | 2 | Hose | |
| 49 | 2221042 | 2 | Fitting, 90 | |
| 50 | 2220622 | 2 | Fitting, Reducer | |
| 51 | 2752928 | 1 | Hose | |

| ITEM | PART NUMBER | QTY | DESCRIPTION | REV |
|---|---|---|---|---|
| 52 | 2220471 | 1 | Fitting, 90 | |
| 53 | 2752588 | 2 | Hose | |
| 54 | | Ref | Fitting Options: | |
| 54 | 2220609 | 2 | Fitting, Reducer **(SN 0300128000 through 0300128617)** | |
| 54 | 2220582 | 2 | Fitting, Straight **(SN 0300128618 through 0300149852)** | |
| 55 | 2220468 | 2 | Fitting, Straight Only **(SN 0300128000 through 0300137441)** | |
| 56 | 2752981 | Ref | Hose Options Only: **(SN 0300128000 through 0300137441)** | |
| 56 | 2752981 | 3 | Hose 600SC | |
| 56 | 2752981 | 4 | Hose 660SJC | |
| 57 | 2220497 | 2 | Fitting, Straight Only **(SN 0300128000 through 0300137441)** | |
| 58 | 2220502 | 1 | Fitting, 45 Only **(SN 0300128000 through 0300137441)** | |
| 59 | 2751396 | 1 | Hose | |
| 60 | 2220414 | 1 | Fitting, Straight | |
| 63 | 2220950 | 1 | Fitting, 45 | |
| 65 | 2220974 | 1 | Fitting, Straight | |
| 66 | | Ref | Hose Options: | |
| 66 | 2752598 | 2 | Hose 600SC | |
| 66 | 2752596 | 2 | Hose 660SJC | |
| 67 | | Ref | Hose Options: | |
| 67 | 2752599 | 1 | Hose 600SC & 600SJC | |
| 67 | 2752597 | 1 | Hose 660SJC | |
| 69 | 2230046 | 1 | Fitting, 90 Bulkhead | |
| 71 | 2752633 | 2 | Hose | |
| 72 | 2220472 | 4 | Fitting, 90 | |
| 73 | 2220738 | 1 | Fitting, Tee | |
| 74 | | Ref | Hose Options: | |
| 74 | Not Required | 0 | Hose 600SC | |
| 74 | 2752633 | 2 | Hose 660SJC | |
| 75 | 2220473 | Ref | Fitting, 90 | |
| 75 | 2220473 | 1 | Fitting, 90, 600SC | |
| 75 | 2220473 | 1 | Fitting, 90, 660SJC | |
| 76 | 2754311 | 1 | Hose | |
| 77 | 2753472 | 1 | Hose | |
| 78 | 2220909 | 1 | Orifice (.015) | |
| 79 | 2220603 | 4 | Fitting, Straight | |
| 80 | 2220682 | 1 | Fitting, Tee | |
| 81 | 2752591 | 2 | Hose | |
| 82 | 2752643 | 1 | Hose | |
| 83 | 2752453 | 1 | Hose | |
| 84 | 2220409 | 1 | Fitting, 45 | |
| 85 | 2754024 | 1 | Hose | |
| 86 | 0100011 | AR | Compound, Locking | |
| 87 | 0100038 | AR | Primer, Locking | |
| 88 | | Ref | Fitting, 90 Options: | |
| 88 | Not Required | 0 | Fitting, 90 600SC | |
| 88 | 2180724 | 1 | Fitting, 90 660SJC | |
| 89 | | Ref | Orifice (.062) Options: | |
| 89 | Not Required | 0 | Orifice (.062) 600SC | |
| 89 | 2180380 | 1 | Orifice (.062) 660SJC | |
| 90 | 2220237 | 2 | Fitting, Plug | |
| 91 | 2754023 | 1 | Hose | |

| ITEM | PART NUMBER | QTY | DESCRIPTION | REV |
|---|---|---|---|---|
| 92 | 2754022 | 1 | Hose | |
| 93 | 2220946 | 1 | Fitting, Straight | |
| 94 | 2220948 | 3 | Fitting, Tee | |
| 95 | 2752783 | 1 | Hose | |
| 96 | 2220914 | 1 | Fitting, Restrictor | |
| 97 | 2220852 | 1 | Fitting, Straight | |
| 98 | 2220873 | 1 | Fitting, Nipple | |
| 99 | 2220949 | 2 | Fitting, Reducer | |

## FIGURE 6-4. STANDARD HYDRAULIC DIAGRAM - CATERPILLAR ENGINE (SN 0300149852 through 0300174703)

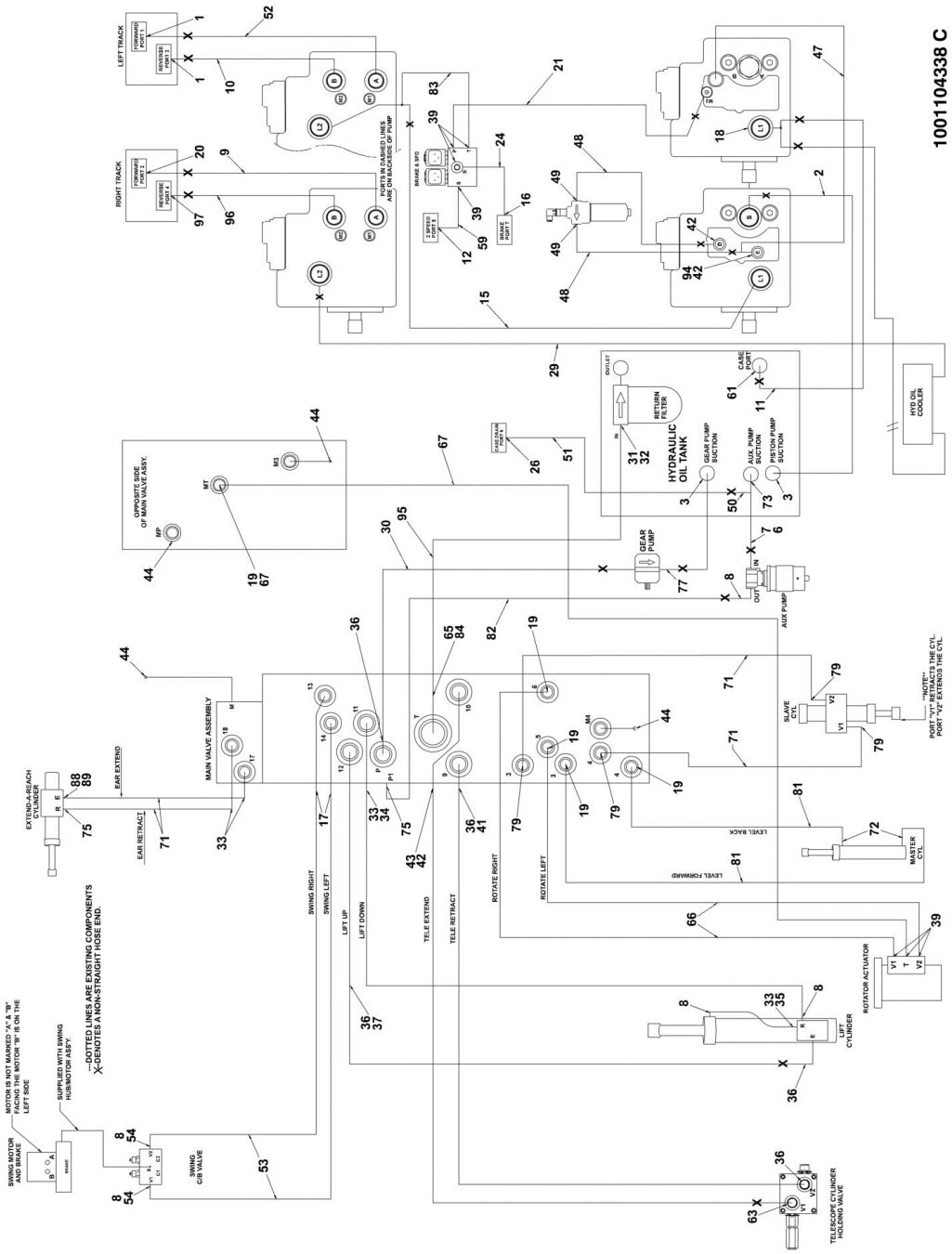

## FIGURE 6-4. STANDARD HYDRAULIC DIAGRAM - CATERPILLAR ENGINE (SN 0300149852 through 0300174703)

| ITEM | PART NUMBER | QTY | DESCRIPTION | REV |
|---|---|---|---|---|
| | | Ref | **HYDRAULIC DIAGRAMS** | |
| | 1001105480 | Ref | **Hydraulic Diagrams 600SC Caterpillar Engine (SN 0300128000 through 0300166807)** | B-D |
| | 1001104338 | Ref | **Hydraulic Diagrams 600SC Caterpillar Engine (SN 0300128000 through 0300166807)** | B-D |
| | 1001143453 | Ref | **Hydraulic Diagrams 600SC Caterpillar Engine (SN 0300166808 through 0300174703)** | A-D |
| | 1001104338 | Ref | **Hydraulic Diagrams 600SC Caterpillar Engine (SN 0300166808 through 0300174703)** | A-D |
| | 1001104340 | Ref | **Hydraulic Diagrams 660SJC Caterpillar Engine (SN 0300128000 through 0300166807)** | B-D |
| | 1001104338 | Ref | **Hydraulic Diagrams 660SJC Caterpillar Engine (SN 0300128000 through 0300166807)** | |
| | 1001143454 | Ref | **Hydraulic Diagrams 660SJC Caterpillar Engine (SN 0300166808 through 0300174703)** | A-D |
| | 1001104338 | Ref | **Hydraulic Diagrams 660SJC Caterpillar Engine (SN 0300166808 through 0300174703)** | A-D |
| 1 | 2111212 | 2 | Fitting, Straight | |
| 2 | 2753318 | 1 | Hose | |
| 3 | 2220380 | 2 | Fitting, Straight | |
| 4 | | Ref | Fitting, Straight Options: | |
| 4 | 2220451 | 2 | Fitting, Straight **(SN 0300128000 through 0300166807)** | |
| 4 | 2220376 | 2 | Fitting, Straight **(SN 0300166808 through 0300174703)** | |
| 6 | 2752653 | 1 | Hose | |
| 7 | | Ref | Fitting, Straight Options: | |
| 7 | 2220408 | 1 | Fitting, Straight **(SN 0300128000 through 0300166807)** | |
| 7 | 2220593 | 1 | Fitting, Straight **(SN 0300166808 through 0300174703)** | |
| 8 | 2220628 | 3 | Fitting, 90 | |
| 9 | 1001104361 | 1 | Hose | |
| 10 | 1001104359 | 1 | Hose | |
| 11 | | Ref | Hose Options: | |
| 11 | 1001109662 | 1 | Hose **(SN 0300149852 through 0300162381)** | |
| 11 | 1001138241 | 1 | Hose **(SN 0300162382 through 0300174703)** | |
| 12 | 2110406 | 1 | Fitting, Straight | |
| 15 | 1001110092 | 1 | Hose | |
| 16 | 2110408 | 1 | Fitting, Straight | |
| 17 | 2220582 | 5 | Fitting, Straight | |
| 19 | 2220415 | 5 | Fitting, Straight | |
| 20 | 2170112 | 1 | Fitting, Straight | |
| 21 | 2752581 | 1 | Hose | |
| 24 | 1001104362 | 1 | Hose | |
| 26 | 2130808 | 1 | Fitting, 90 | |
| 30 | 2753192 | 1 | Hose | |
| 31 | 2220921 | 1 | Fitting, Reducer | |
| 32 | 2220498 | 1 | Fitting, 45 | |
| 33 | 2220372 | Ref | Fitting, Straight | |
| 33 | 2220372 | 2 | Fitting, Straight 600SC | |
| 33 | 2220372 | 4 | Fitting, Straight 660SJC | |
| 34 | 2752631 | 1 | Hose | |
| 35 | 2752632 | 1 | Hose | |

| ITEM | PART NUMBER | QTY | DESCRIPTION | REV |
|---|---|---|---|---|
| 36 | 2220373 | 5 | Fitting, Straight | |
| 37 | 2752515 | 1 | Hose | |
| 39 | 2220466 | 8 | Fitting, 90 | |
| 41 | 2751474 | 1 | Hose | |
| 42 | 2220947 | 3 | Fitting, Straight | |
| 43 | 2752762 | 1 | Hose | |
| 44 | 2221086 | Ref | Fitting, Nipple (Test Port) | |
| 44 | 2221086 | 3 | Fitting, Nipple (Test Port) 600SC | |
| 44 | 2221086 | 4 | Fitting, Nipple (Test Port) 660SJC | |
| 47 | 1001109657 | 1 | Hose | |
| 48 | 2752763 | 2 | Hose | |
| 49 | 2221042 | 2 | Fitting, 90 | |
| 50 | 2220622 | 1 | Fitting, Reducer | |
| 51 | 1001104363 | 1 | Hose | |
| 52 | 1001109659 | 1 | Hose | |
| 53 | 2752588 | 2 | Hose | |
| 59 | 1001104364 | 1 | Hose | |
| 60 | 2220414 | 1 | Fitting, Straight | |
| 61 | 2220451 | 2 | Fitting, Straight | |
| 63 | 2220950 | 1 | Fitting, 45 | |
| 65 | 2220974 | 1 | Fitting, Straight | |
| 66 | | Ref | Hose Options: | |
| 66 | 2752598 | 2 | Hose 600SC | |
| 66 | 2752596 | 2 | Hose 660SJC | |
| 67 | | Ref | Hose Options: | |
| 67 | 2752599 | 1 | Hose 600SC & 600SJC | |
| 67 | 2752597 | 1 | Hose 660SJC | |
| 71 | 2752633 | Ref | Hose | |
| 71 | 2752633 | 2 | Hose 600SC | |
| 71 | 2752633 | 4 | Hose 660SJC | |
| 72 | 2220472 | 2 | Fitting, 90 | |
| 73 | 2220738 | 1 | Fitting, Tee | |
| 75 | 2220473 | Ref | Fitting, 90 | |
| 75 | 2220473 | 1 | Fitting, 90, 600SC | |
| 75 | 2220473 | 2 | Fitting, 90, 660SJC | |
| 77 | 2753472 | 1 | Hose | |
| 79 | 2220603 | 4 | Fitting, Straight | |
| 81 | 2752591 | 2 | Hose | |
| 82 | 2752643 | 1 | Hose | |
| 83 | 2752994 | 1 | Hose | |
| 84 | 2220409 | 1 | Fitting, 45 | |
| 88 | | Ref | Fitting, 90 Options: | |
| 88 | Not Required | 0 | Fitting, 90 600SC | |
| 88 | 2180724 | 1 | Fitting, 90 660SJC | |
| 89 | | Ref | Orifice (.062) Options: | |
| 89 | Not Required | 0 | Orifice (.062) 600SC | |
| 89 | 2180380 | 1 | Orifice (.062) 660SJC | |
| 90 | 2220237 | 2 | Fitting, Plug | |
| 95 | 2752783 | 1 | Hose | |
| 96 | | Ref | Hose Options: | |
| 96 | 1001104361 | 1 | Hose **(SN 0300149852 through 0300162381)** | |

| ITEM | PART NUMBER | QTY | DESCRIPTION | REV |
|---|---|---|---|---|
| 96 | 1001137643 | 1 | Hose **(SN 0300162382 through 0300174703)** | |
| 97 | | Ref | Fitting, Straight Options: | |
| 97 | 2170112 | 1 | Fitting, Straight **(SN 0300128000 through 0300166807)** | |
| 97 | 2111212 | 1 | Fitting, Straight **(SN 0300166808 through 0300174703)** | |

## FIGURE 6-5. STANDARD HYDRAULIC DIAGRAM - DEUTZ ENGINE (SN 0300128000 through 0300169157)

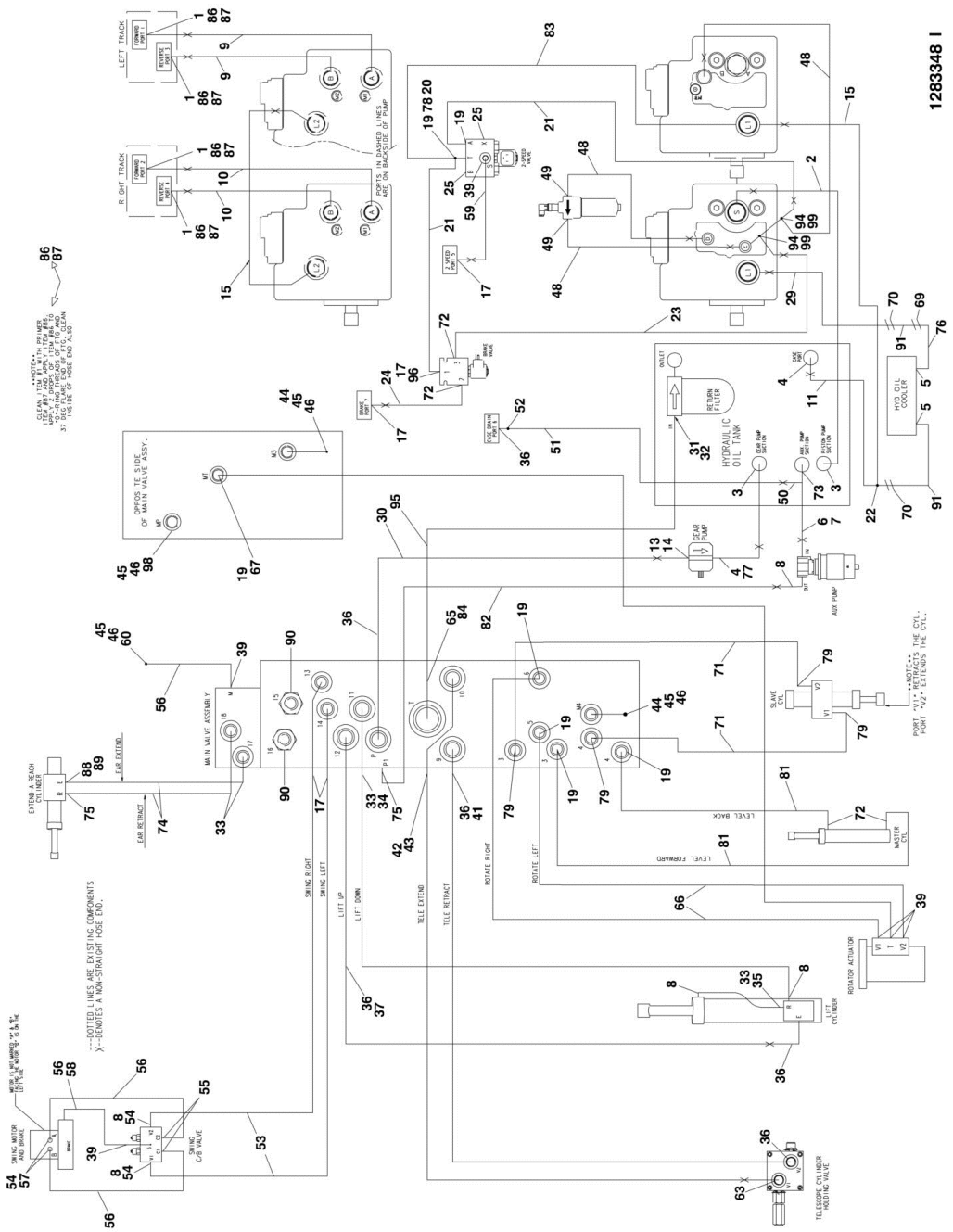

## FIGURE 6-5. STANDARD HYDRAULIC DIAGRAM - DEUTZ ENGINE (SN 0300128000 through 0300169157)

| ITEM | PART NUMBER | QTY | DESCRIPTION | REV |
|---|---|---|---|---|
| | | Ref | **HYDRAULIC DIAGRAMS** | |
| | 2792596 | Ref | **Hydraulic Diagrams 600SC Deutz Engine** | B-I |
| | 1283348 | Ref | **Hydraulic Diagrams 600SC Deutz Engine** | B-I |
| 1 | 2220451 | 4 | Fitting, Straight | |
| 2 | 2753318 | 1 | Hose | |
| 3 | 2220380 | 2 | Fitting, Straight | |
| 4 | 2220376 | AR | Fitting, Straight | |
| 5 | 2220578 | AR | Fitting, 90 | |
| 6 | 2752653 | 1 | Hose | |
| 7 | 2220408 | 1 | Fitting, Straight | |
| 8 | 2220628 | 5 | Fitting, 90 | |
| 9 | 2753706 | 2 | Hose | |
| 10 | 2753707 | 2 | Hose | |
| 11 | 2753321 | 1 | Hose | |
| 13 | 2220810 | 1 | Fitting, Reducer | |
| 14 | 4640744 | 1 | Fitting, Check Valve | |
| 15 | 2753809 | 2 | Hose | |
| 17 | 2220582 | AR | Fitting, Straight | |
| 19 | 2220415 | AR | Fitting, Straight | |
| 20 | 2220605 | 1 | Fitting, Tee | |
| 21 | 2752573 | 2 | Hose | |
| 22 | 2220700 | AR | Fitting, Tee | |
| 23 | 2752580 | 1 | Hose | |
| 24 | 2752594 | 1 | Hose | |
| 25 | 2220235 | 2 | Fitting, Plug | |
| 29 | 2753893 | 1 | Hose | |
| 30 | 2753192 | 1 | Hose | |
| 31 | 2220921 | 1 | Fitting, Reducer | |
| 32 | 2220498 | 1 | Fitting, 45 | |
| 33 | 2220372 | 4 | Fitting, Straight | |
| 34 | 2752631 | 1 | Hose | |
| 35 | 2752632 | 1 | Hose | |
| 36 | 2220373 | 6 | Fitting, Straight | |
| 37 | 2752515 | 1 | Hose | |
| 39 | 2220466 | AR | Fitting, 90 | |
| 41 | 2751474 | 1 | Hose | |
| 42 | 2220947 | AR | Fitting, Straight | |
| 43 | 2752762 | 1 | Hose | |
| 44 | 2220873 | 2 | Fitting, Straight | |
| 45 | 2220428 | 4 | Fitting, Quick Disconnect | |
| 46 | 2220429 | 4 | Cover, Dust | |
| 48 | 2752763 | 3 | Hose | |
| 49 | 2221042 | 2 | Fitting, 90 | |
| 50 | 2220622 | AR | Fitting, Reducer | |
| 51 | 2752928 | 1 | Hose | |
| 52 | 2220471 | 1 | Fitting, 90 | |
| 53 | 2752588 | 2 | Hose | |
| 54 | 2220609 | AR | Fitting, Reducer | |
| 55 | 2220468 | 2 | Fitting, Straight Only **(SN 0300128000 through 0300137441)** | |

| ITEM | PART NUMBER | QTY | DESCRIPTION | REV |
|---|---|---|---|---|
| 56 | 2752981 | AR | Hose | |
| 57 | 2220497 | 2 | Fitting, Straight Only **(SN 0300128000 through 0300137441)** | |
| 58 | 2220502 | 1 | Fitting, 45 Only **(SN 0300128000 through 0300137441)** | |
| 59 | 2751396 | 1 | Hose | |
| 60 | 2220414 | 1 | Fitting, Straight | |
| 63 | 2220950 | 1 | Fitting, 45 | |
| 65 | 2220974 | 1 | Fitting, Straight | |
| 66 | | Ref | Hose Options: | |
| 66 | 2752598 | 2 | Hose 600SC | |
| 66 | 2752596 | 2 | Hose 660SJC | |
| 67 | | Ref | Hose Options: | |
| 67 | 2752599 | 1 | Hose 600SC & 600SJC | |
| 67 | 2752597 | 1 | Hose 660SJC | |
| 69 | 2230046 | 1 | Fitting, 90 Bulkhead | |
| 70 | 2230027 | 2 | Fitting, Straight Bulkhead | |
| 71 | 2752633 | 2 | Hose | |
| 72 | 2220472 | AR | Fitting, 90 | |
| 73 | 2220738 | 1 | Fitting, Tee | |
| 74 | | Ref | Hose Options: | |
| 74 | Not Required | 0 | Hose 600SC | |
| 74 | 2752633 | 2 | Hose 660SJC | |
| 75 | 2220473 | AR | Fitting, 90 Options: | |
| 75 | 2220473 | 1 | Fitting, 90, 600SC | |
| 75 | 2220473 | 2 | Fitting, 90, 660SJC | |
| 76 | 2754311 | 1 | Hose | |
| 77 | 2753472 | 1 | Hose | |
| 78 | 2220909 | 1 | Orifice (.015) | |
| 79 | 2220603 | 4 | Fitting, Straight | |
| 81 | 2752591 | 2 | Hose | |
| 82 | 2752643 | 1 | Hose | |
| 83 | 2752438 | 1 | Hose | |
| 84 | 2220409 | 1 | Fitting, 45 | |
| 86 | 0100011 | AR | Compound, Locking | |
| 87 | 0100038 | AR | Primer, Locking | |
| 88 | | Ref | Fitting, 90 Options: | |
| 88 | Not Required | 0 | Fitting, 90 600SC | |
| 88 | 2180724 | 1 | Fitting, 90 660SJC | |
| 89 | | Ref | Orifice (.062) Options: | |
| 89 | Not Required | 0 | Orifice (.062) 600SC | |
| 89 | 2180380 | 1 | Orifice (.062) 660SJC | |
| 90 | 2220237 | 2 | Fitting, Plug | |
| 91 | 2753892 | 2 | Hose | |
| 94 | 2220948 | AR | Fitting, Tee | |
| 95 | 2752783 | 1 | Hose | |
| 96 | 2220914 | 1 | Fitting, Restrictor | |
| 98 | 2220873 | 1 | Fitting, Nipple | |
| 99 | 2220949 | 2 | Fitting, Reducer | |

## FIGURE 6-6. STANDARD HYDRAULIC DIAGRAM - DEUTZ ENGINE (SN 0300169158 through 0300174703)

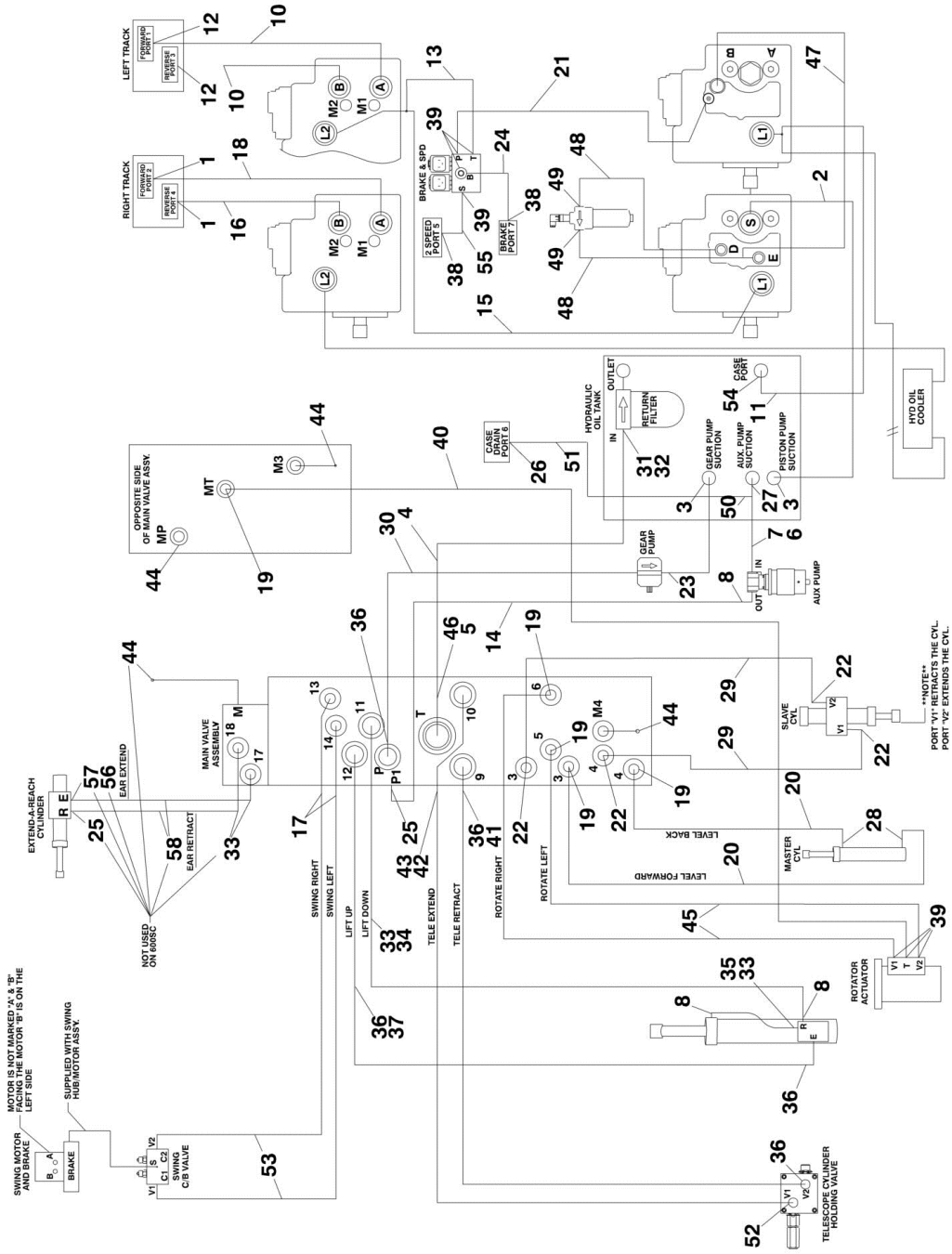

## FIGURE 6-6. STANDARD HYDRAULIC DIAGRAM - DEUTZ ENGINE (SN 0300169158 through 0300174703)

| ITEM | PART NUMBER | QTY | DESCRIPTION | REV |
|---|---|---|---|---|
| | 1001150760 | Ref | **HYDRAULIC DIAGRAMS** | |
| | 1001150763 | Ref | **Hydraulic Diagrams 600SC Deutz Engine** | B-B |
| 1 | 2111212 | 2 | Fitting, Straight | |
| 2 | 2753318 | 1 | Hose | |
| 3 | 2220380 | 2 | Fitting, Straight | |
| 4 | 2752783 | 1 | Hose | |
| 5 | 2220409 | 1 | Fitting, 45 | |
| 6 | 2752653 | 1 | Hose | |
| 7 | 2220408 | 1 | Fitting, Straight | |
| 8 | 2220628 | 3 | Fitting, 90 | |
| 10 | 1001104361 | 2 | Hose | |
| 11 | 1001138241 | 1 | Hose | |
| 12 | 2170112 | 2 | Fitting, Straight | |
| 13 | 2752994 | 1 | Hose | |
| 14 | 2752643 | 1 | Hose | |
| 15 | 1001110092 | 1 | Hose | |
| 16 | 1001109659 | 1 | Hose | |
| 17 | 2220582 | 2 | Fitting, Straight | |
| 18 | 1001104359 | 1 | Hose | |
| 19 | 2220415 | 5 | Fitting, Straight | |
| 20 | 2752591 | 2 | Hose | |
| 21 | 2752581 | 1 | Hose | |
| 22 | 2220603 | 4 | Fitting, Straight | |
| 23 | 2753472 | 1 | Hose | |
| 24 | 1001150475 | 1 | Hose | |
| 25 | 2220473 | AR | Fitting, 90 | |
| 26 | 2110806 | 1 | Fitting, Straight | |
| 27 | 2220738 | 1 | Fitting, Tee | |
| 28 | 2220472 | 2 | Fitting, Straight | |
| 29 | 2752633 | 2 | Hose | |
| 30 | 2753192 | 1 | Hose | |
| 31 | 2220921 | 1 | Fitting, Reducer | |
| 32 | 2220498 | 1 | Fitting, 45 | |
| 33 | 2220372 | AR | Fitting, Straight | |
| 34 | 2752631 | 1 | Hose | |
| 35 | 2752632 | 1 | Hose | |
| 36 | 2220373 | 5 | Fitting, Straight | |
| 37 | 2752515 | 1 | Hose | |
| 38 | 2110406 | 2 | Fitting, Straight | |
| 39 | 2220466 | 7 | Fitting, 90 | |
| 40 | | Ref | Hose Options: | |
| 40 | 2752599 | 1 | Hose 600SC | |
| 40 | 2752597 | 1 | Hose 660SJC | |
| 41 | 2751474 | 1 | Hose | |
| 42 | 2220947 | 1 | Fitting, Straight | |
| 43 | 2752762 | 1 | Hose | |
| 44 | 2221086 | AR | Fitting, Straight | |
| 45 | | Ref | Hose Options: | |
| 45 | 2752598 | 2 | Hose 600SC | |

| ITEM | PART NUMBER | QTY | DESCRIPTION | REV |
|---|---|---|---|---|
| 45 | 2752596 | 2 | Hose 660SJC | |
| 46 | 2220974 | 1 | Fitting Long Straight | |
| 47 | 1001109657 | 1 | Hose | |
| 48 | 2752763 | 2 | Hose | |
| 49 | 2221042 | 2 | Fitting, 90 | |
| 50 | 2220622 | 1 | Fitting, Reducer | |
| 51 | 1001104363 | 1 | Hose | |
| 52 | 2220950 | 1 | Fitting, 45 | |
| 53 | 2752588 | 2 | Hose | |
| 54 | 2220451 | 1 | Fitting, Straight | |
| 55 | 1001104364 | 1 | Hose | |
| 56 | | Ref | Orifice (.062) Options: | |
| 56 | Not Required | 0 | Orifice (.062) 600SC | |
| 56 | 2180380 | 1 | Orifice (.062) 660SJC | |
| 57 | | Ref | Fitting, 90 Options: | |
| 57 | Not Required | 0 | Fitting, 90 600SC | |
| 57 | 2180724 | 1 | Fitting, 90 660SJC | |
| 58 | | Ref | Hose Options: | |
| 58 | Not Required | 0 | Hose 600SC | |
| 58 | 2752633 | 2 | Hose 660SJC | |

## FIGURE 6-7. HYDRAULIC DIAGRAM LIST

| ITEM | PART NUMBER | QTY | DESCRIPTION | REV |
|---|---|---|---|---|
| | | Ref | **Note: Information on Diagrams Not Shown is Available From JLG Service/Parts Department.** | |
| | | Ref | **Frame Hydraulic Diagram Options:** | |
| | 1001102504 | Ref | Frame Hydraulic Diagram 600SC with Caterpillar Chassis (ANSI, ANSI Export, CSA and Japanese Specs) | |
| | 1001109075 | Ref | Frame Hydraulic Diagram 600SC with Caterpillar Chassis (Australian and CE Specs) | |
| | 8021-5014 | Ref | Frame Hydraulic Diagram 600SC with Gradall Chassis **(SN 0300128000 through 0300169157)** | |
| | 2360574 | Ref | Frame Hydraulic Diagram 600SC with Gradall Chassis **(SN 0300169158 through 0300174703)** | |
| | 1001103563 | Ref | Frame Hydraulic Diagram 660SJC with Caterpillar Chassis | |
| | 8021-5016 | Ref | Frame Hydraulic Diagram 660SJC with Gradall Chassis **(SN 0300128000 through 0300169157)** | |
| | 2360576 | Ref | Frame Hydraulic Diagram 660SJC with Gradall Chassis **(SN 0300169158 through 0300174703)** | |
| | | Ref | **Standard Hydraulic Diagrams:** | |
| | | Ref | Caterpillar Engine | |
| | 2792655 | Ref | Standard Hydraulic Diagrams 600SC **(SN 0300128000 through 0300149851)** | |
| | 1283388 | Ref | Standard Hydraulic Diagrams 600SC **(SN 0300128000 through 0300149851)** | |
| | 1001105480 | Ref | Standard Hydraulic Diagrams 600SC **(SN 0300149852 through 0300174703)** | |
| | 1001104338 | Ref | Standard Hydraulic Diagrams 600SC **(SN 0300149852 through 0300174703)** | |
| | 2792656 | Ref | Standard Hydraulic Diagrams 660SJC **(SN 0300128000 through 0300149851)** | |
| | 1283388 | Ref | Standard Hydraulic Diagrams 660SJC **(SN 0300128000 through 0300149851)** | |
| | 1001104340 | Ref | Standard Hydraulic Diagrams 660SJC **(SN 0300149852 through 0300174703)** | |
| | 1001104338 | Ref | Standard Hydraulic Diagrams 660SJC **(SN 0300149852 through 0300174703)** | |
| | | Ref | Deutz Engine | |
| | 2792596 | Ref | Deutz 600SC Deutz Engine **(SN 0300128000 through 0300168157)** | |
| | 1283348 | Ref | Deutz 600SC Deutz Engine **(SN 0300128000 through 0300168157)** | |
| | 1001150763 | Ref | Deutz 600SC Deutz Engine **(SN 0300168158 through 0300174703)** | |
| | 1001150760 | Ref | Deutz 600SC Deutz Engine **(SN 0300168158 through 0300174703)** | |
| | | Ref | **Standard Hydraulic Schematic Options** | |
| | 2792593 | Ref | Standard Hydraulic Schematic **(SN 0300128000 through 0300149851)** | |
| | 1001107109 | Ref | Standard Hydraulic Schematic **(SN 0300149852 through 0300169158)** | |
| | 1001151059 | Ref | Standard Hydraulic Schematic **(SN 0300169158 through 0300174703)** | |

# SECTION 7 - ELECTRICAL

## FIGURE 7-1. ELECTRICAL DIAGRAM LIST

| ITEM | PART NUMBER | QTY | DESCRIPTION | REV |
|---|---|---|---|---|
| | | Ref | **Note: Diagrams not shown are available from the JLG Service Department.** | |
| | | Ref | **COLD WEATHER ELECTRICAL DIAGRAMS** | |
| | 0273575 | Ref | **Cold Weather Package (Caterpillar Engine)** | |
| | 1282571 | Ref | **Cold Weather Package (Caterpillar Engine)** | |
| | 0256060 | Ref | **Cold Weather Package (Deutz Engine)** | |
| | 1282571 | Ref | **Cold Weather Package (Deutz Engine)** | |
| | 0257157 | Ref | **Cold Weather Package with Ether Start (Deutz Engines)** | |
| | 1282571 | Ref | **Cold Weather Package with Ether Start (Deutz Engines)** | |
| | 4932986 | Ref | **ENGINE SHUTDOWN ELECTRICAL DIAGRAM (DEUTZ ENGINES)** | |
| | | Ref | **2500W GENERATOR ELECTRICAL DIAGRAM** | |
| | 4933300 | Ref | **110V/60Hz** | |
| | 4933300 | Ref | **110V/50Hz (Available on ANSI Export, Australian and CE Specs) (SN 0300128000 through 0300132849)** | |
| | 4933287 | Ref | **110V/50Hz Only (Available on CE Spec - UK Only) (SN 0300128000 through 0300132849)** | |
| | 4933284 | Ref | **110V/50Hz Only (Available on CE Spec - Germany Only) (SN 0300128000 through 0300132849)** | |
| | 1001100027 | Ref | **110V/50Hz (All Specs) (SN 0300132803 through 0300174703)** | |
| | 4933300 | Ref | **220V/50Hz (SN 0300128000 through 0300132849)** | |
| | 1001100027 | Ref | **220V/50Hz (SN 0300132803 through 0300174703)** | |
| | 4933264 | Ref | **7500W SKYPOWER GENERATOR ELECTRICAL DIAGRAM** | |
| | | Ref | **GROUND CONTROL BOX ELECTRICAL DIAGRAM** | |
| | | Ref | **Note: For Ground Module Identification, refer to Revision Log page A.** | |
| | | Ref | **Without UGM** | |
| | 4933369 | Ref | **Caterpillar Engine** | |
| | 4933368 | Ref | **Deutz Engine** | |
| | | Ref | **With UGM** | |
| | 1001108600 | Ref | **Caterpillar Engine** | |
| | 1001108601 | Ref | **Deutz Engine** | |
| | 4933219 | Ref | **HEADLIGHT AND TAILIGHTS ELECTRICAL DIAGRAM** | |
| | | Ref | **PLATFORM ELECTRICAL DIAGRAM** | |
| | 4922639 | Ref | **Platform Electrical Diagram (SN 0300128000 through 0300136518)** | |
| | 1001107753 | Ref | **Platform Electrical Diagram (SN 0300136519 to Present)** | |
| | | Ref | **PLATFORM WORKLIGHTS ELECTRICAL DIAGRAM** | |
| | 0273486 | Ref | **Platform Worklights Electrical Diagram 600SC** | |
| | 0273490 | Ref | **Platform Worklights Electrical Diagram 660SJC** | |
| | 4933146 | Ref | **SERVICE LIGHT CABLE ELECTRICAL DIAGRAM (AUSTRALIAN SPEC)** | |
| | | Ref | **STANDARD ELECTRICAL SCHEMATIC** | |
| | | Ref | **Note: For Ground Module Identification, refer to Revision Log page A.** | |
| | 1870218 | Ref | **Without UGM** | |
| | 1001108900 | Ref | **With UGM** | |

## FIGURE 7-2. ELECTRICAL SCHEMATIC (WITHOUT UGM)

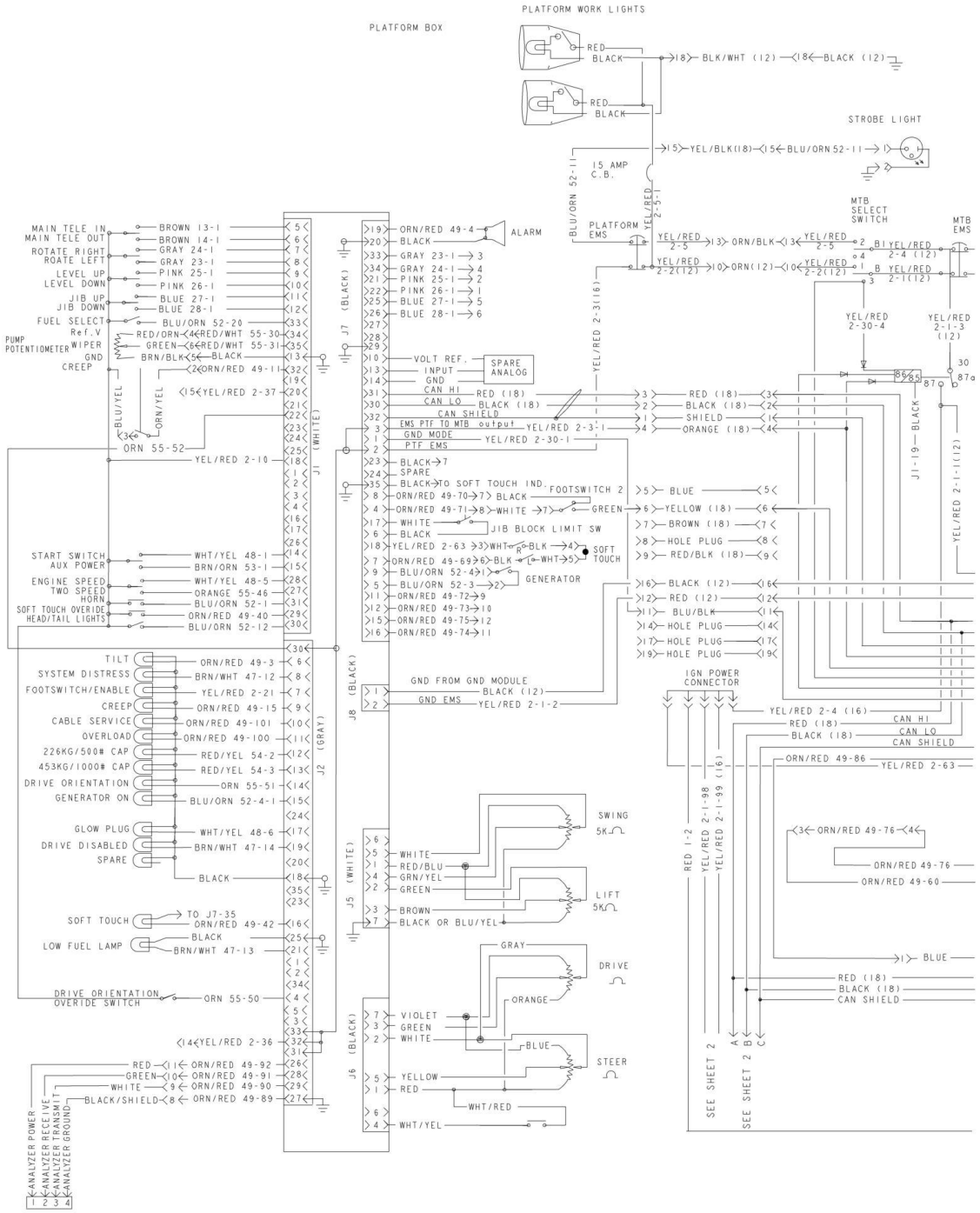

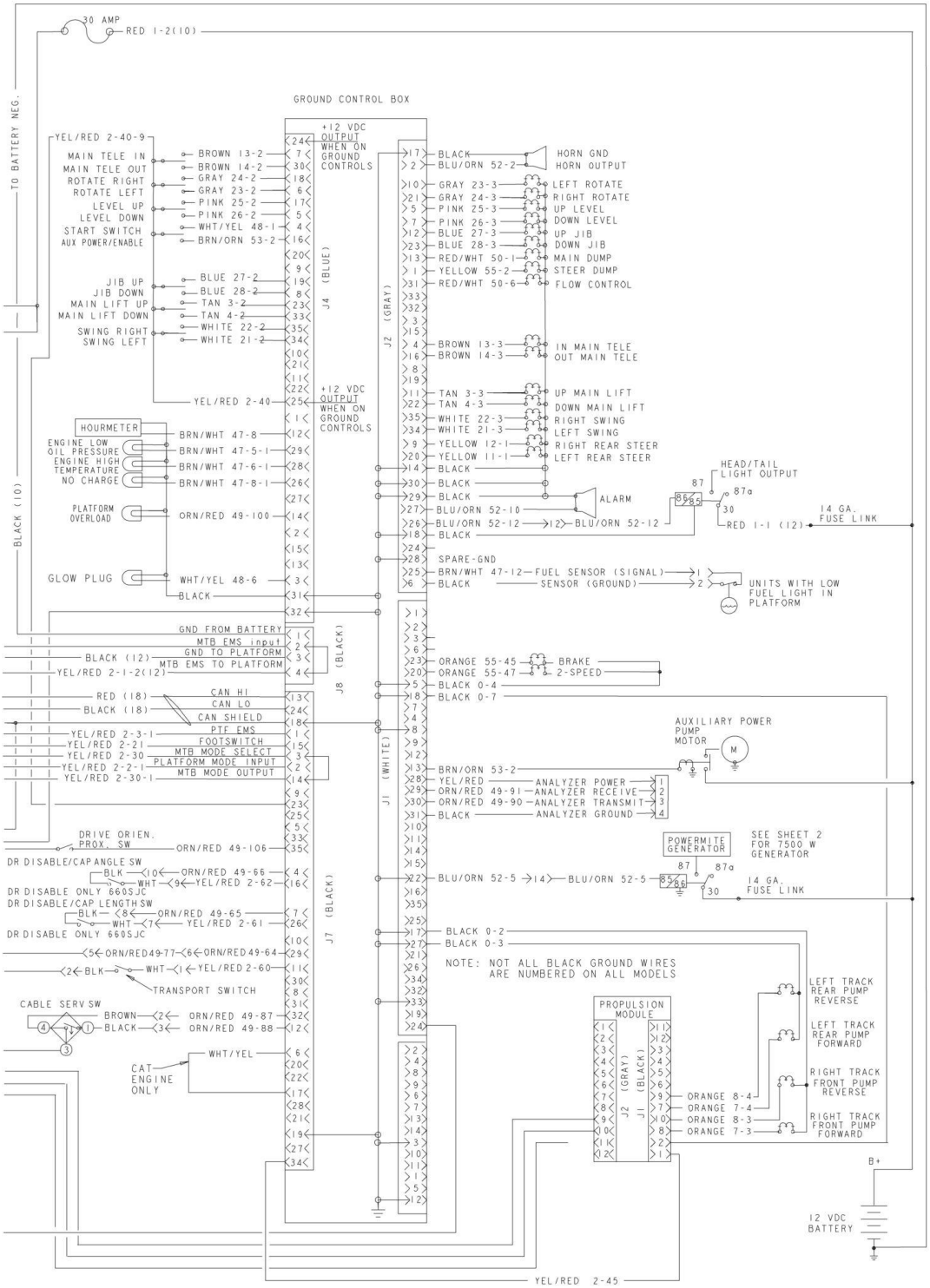
30 AMP
RED 1-2(10)
TO BATTERY NEG.
GROUND CONTROL BOX
+12 VDC OUTPUT WHEN ON GROUND CONTROLS
YEL/RED 2-40-9
MAIN TELE IN
MAIN TELE OUT
ROTATE RIGHT
ROTATE LEFT
LEVEL UP
LEVEL DOWN
START SWITCH
AUX POWER/ENABLE
BROWN 13-2
BROWN 14-2
GRAY 24-2
GRAY 23-2
PINK 25-2
PINK 26-2
WHT/YEL 48-1
BRN/ORN 53-2
JIB UP
JIB DOWN
MAIN LIFT UP
MAIN LIFT DOWN
SWING RIGHT
SWING LEFT
BLUE 27-2
BLUE 28-2
TAN 3-2
TAN 4-2
WHITE 22-2
WHITE 21-2
J4 (BLUE)
J2 (GRAY)
YEL/RED 2-40
HOURMETER
ENGINE LOW OIL PRESSURE
ENGINE HIGH TEMPERATURE
NO CHARGE
BRN/WHT 47-8
BRN/WHT 47-5-1
BRN/WHT 47-6-1
BRN/WHT 47-8-1
PLATFORM OVERLOAD
ORN/RED 49-100
GLOW PLUG
WHT/YEL 48-6
BLACK
BLACK (10)
BLACK
BLU/ORN 52-2
HORN GND
HORN OUTPUT
GRAY 23-3
GRAY 24-3
PINK 25-3
PINK 26-3
BLUE 27-3
BLUE 28-3
RED/WHT 50-1
YELLOW 55-2
RED/WHT 50-6
LEFT ROTATE
RIGHT ROTATE
UP LEVEL
DOWN LEVEL
UP JIB
DOWN JIB
MAIN DUMP
STEER DUMP
FLOW CONTROL
BROWN 13-3
BROWN 14-3
IN MAIN TELE
OUT MAIN TELE
TAN 3-3
TAN 4-3
WHITE 22-3
WHITE 21-3
YELLOW 12-1
YELLOW 11-1
UP MAIN LIFT
DOWN MAIN LIFT
RIGHT SWING
LEFT SWING
RIGHT REAR STEER
LEFT REAR STEER
BLACK
BLACK
BLACK
ALARM
BLU/ORN 52-10
BLU/ORN 52-12
BLU/ORN 52-12
HEAD/TAIL LIGHT OUTPUT
87
87a
30
RED 1-1 (12)
14 GA. FUSE LINK
BLACK
SPARE-GND
BRN/WHT 47-12
FUEL SENSOR (SIGNAL)
BLACK
SENSOR (GROUND)
UNITS WITH LOW FUEL LIGHT IN PLATFORM
GND FROM BATTERY
MTB EMS input
GND TO PLATFORM
MTB EMS TO PLATFORM
BLACK (12)
YEL/RED 2-1-2(12)
J8 (BLACK)
ORANGE 55-45
ORANGE 55-47
BRAKE
2-SPEED
BLACK 0-4
BLACK 0-7
RED (18)
BLACK (18)
CAN HI
CAN LO
CAN SHIELD
YEL/RED 2-3-1
YEL/RED 2-21
YEL/RED 2-30
YEL/RED 2-2-1
YEL/RED 2-30-1
PTF EMS
FOOTSWITCH
MTB MODE SELECT
PLATFORM MODE INPUT
MTB MODE OUTPUT
J1 (WHITE)
AUXILIARY POWER PUMP MOTOR
M
BRN/ORN 53-2
YEL/RED
ORN/RED 49-91
ORN/RED 49-90
BLACK
ANALYZER POWER
ANALYZER RECEIVE
ANALYZER TRANSMIT
ANALYZER GROUND
DRIVE ORIEN. PROX. SW
ORN/RED 49-106
DR DISABLE/CAP ANGLE SW
BLK
WHT
ORN/RED 49-66
YEL/RED 2-62
DR DISABLE ONLY 660SJC
DR DISABLE/CAP LENGTH SW
ORN/RED 49-65
YEL/RED 2-61
DR DISABLE ONLY 660SJC
ORN/RED 49-77
ORN/RED 49-64
YEL/RED 2-60
TRANSPORT SWITCH
J7 (BLACK)
POWERMITE GENERATOR
SEE SHEET 2 FOR 7500 W GENERATOR
BLU/ORN 52-5
BLU/ORN 52-5
14 GA. FUSE LINK
BLACK 0-2
BLACK 0-3
NOTE: NOT ALL BLACK GROUND WIRES ARE NUMBERED ON ALL MODELS
CABLE SERV SW
BROWN
BLACK
ORN/RED 49-87
ORN/RED 49-88
WHT/YEL
CAT ENGINE ONLY
PROPULSION MODULE
J2 (GRAY)
J1 (BLACK)
ORANGE 8-4
ORANGE 7-4
ORANGE 8-3
ORANGE 7-3
LEFT TRACK REAR PUMP REVERSE
LEFT TRACK REAR PUMP FORWARD
RIGHT TRACK FRONT PUMP REVERSE
RIGHT TRACK FRONT PUMP FORWARD
B+
12 VDC BATTERY
YEL/RED 2-45

1870218 C

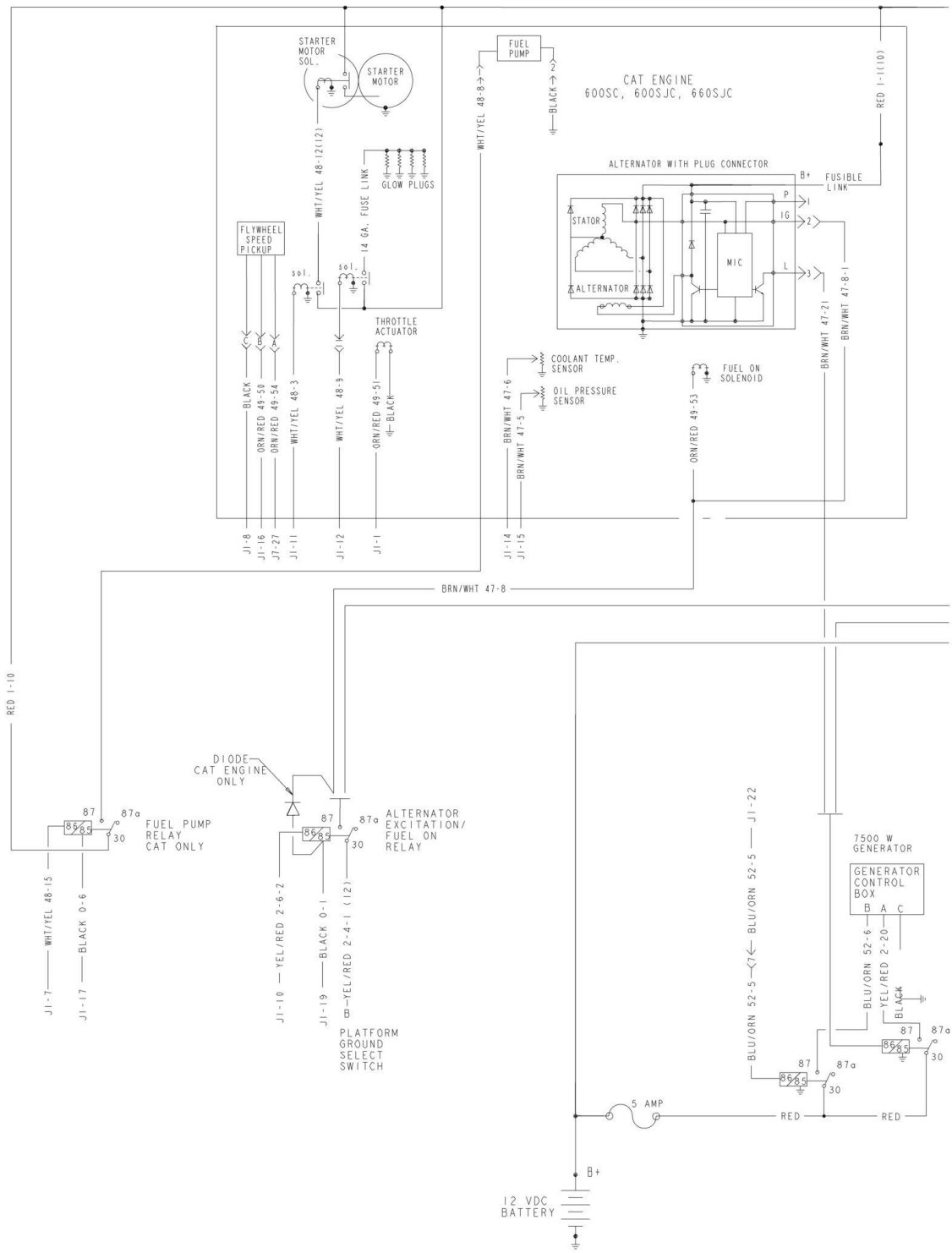
STARTER MOTOR SOL.
STARTER MOTOR
FUEL PUMP
CAT ENGINE
600SC, 600SJC, 660SJC
RED 1-1(10)
WHT/YEL 48-8
BLACK
WHT/YEL 48-12(12)
GLOW PLUGS
14 GA. FUSE LINK
ALTERNATOR WITH PLUG CONNECTOR
B+
FUSIBLE LINK
P
IG
L
STATOR
ALTERNATOR
MIC
FLYWHEEL SPEED PICKUP
sol.
THROTTLE ACTUATOR
BRN/WHT 47-8-1
BRN/WHT 47-21
COOLANT TEMP. SENSOR
OIL PRESSURE SENSOR
FUEL ON SOLENOID
BLACK
ORN/RED 49-50
ORN/RED 49-54
WHT/YEL 48-3
WHT/YEL 48-9
ORN/RED 49-51
BRN/WHT 47-6
BRN/WHT 47-5
ORN/RED 49-53
J1-8
J1-16
J7-27
J1-11
J1-12
J1-1
J1-14
J1-15
BRN/WHT 47-8
RED 1-10
DIODE CAT ENGINE ONLY
87
87a
30
86
85
FUEL PUMP RELAY CAT ONLY
ALTERNATOR EXCITATION/ FUEL ON RELAY
J1-7
WHT/YEL 48-15
J1-17
BLACK 0-6
J1-10
YEL/RED 2-6-2
J1-19
BLACK 0-1
B
YEL/RED 2-4-1 (12)
PLATFORM GROUND SELECT SWITCH
BLU/ORN 52-5
J1-22
7500 W GENERATOR
GENERATOR CONTROL BOX
B A C
BLU/ORN 52-6
YEL/RED 2-20
BLACK
5 AMP
RED
12 VDC BATTERY

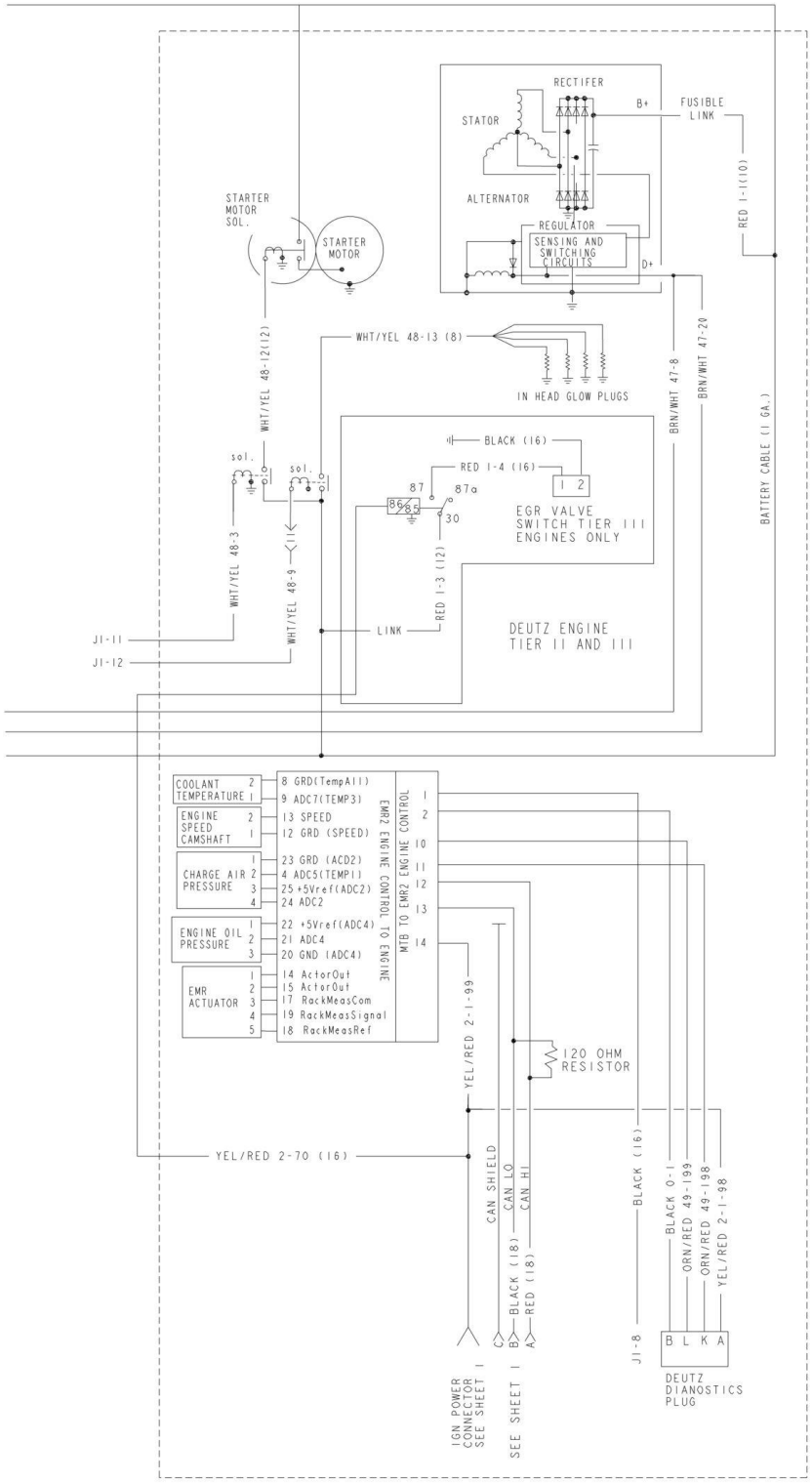
RECTIFER
STATOR
B+
FUSIBLE LINK
ALTERNATOR
REGULATOR
SENSING AND SWITCHING CIRCUITS
D+
RED 1-1(10)
STARTER MOTOR SOL.
STARTER MOTOR
WHT/YEL 48-12(12)
WHT/YEL 48-13 (8)
IN HEAD GLOW PLUGS
BRN/WHT 47-8
BRN/WHT 47-20
BATTERY CABLE (1 GA.)
BLACK (16)
RED 1-4 (16)
sol.
87
87a
86
30
EGR VALVE SWITCH TIER III ENGINES ONLY
WHT/YEL 48-3
WHT/YEL 48-9
RED 1-3 (12)
LINK
DEUTZ ENGINE TIER II AND III
J1-11
J1-12
COOLANT TEMPERATURE
ENGINE SPEED CAMSHAFT
CHARGE AIR PRESSURE
ENGINE OIL PRESSURE
EMR ACTUATOR
8 GRD(TempA11)
9 ADC7(TEMP3)
13 SPEED
12 GRD (SPEED)
23 GRD (ACD2)
4 ADC5(TEMP1)
25 +5Vref(ADC2)
24 ADC2
22 +5Vref(ADC4)
21 ADC4
20 GND (ADC4)
14 ActorOut
15 ActorOut
17 RackMeasCom
19 RackMeasSignal
18 RackMeasRef
EMR2 ENGINE CONTROL TO ENGINE
MTB TO EMR2 ENGINE CONTROL
YEL/RED 2-1-99
120 OHM RESISTOR
YEL/RED 2-70 (16)
CAN SHIELD
CAN LO
CAN HI
BLACK (18)
RED (18)
BLACK (16)
BLACK 0-1
ORN/RED 49-199
ORN/RED 49-198
YEL/RED 2-1-98
J1-8
B L K A
DEUTZ DIANOSTICS PLUG
IGN POWER CONNECTOR SEE SHEET 1
SEE SHEET 1

1870218 C

## FIGURE 7-3. ELECTRICAL SCHEMATIC (WITH UGM)

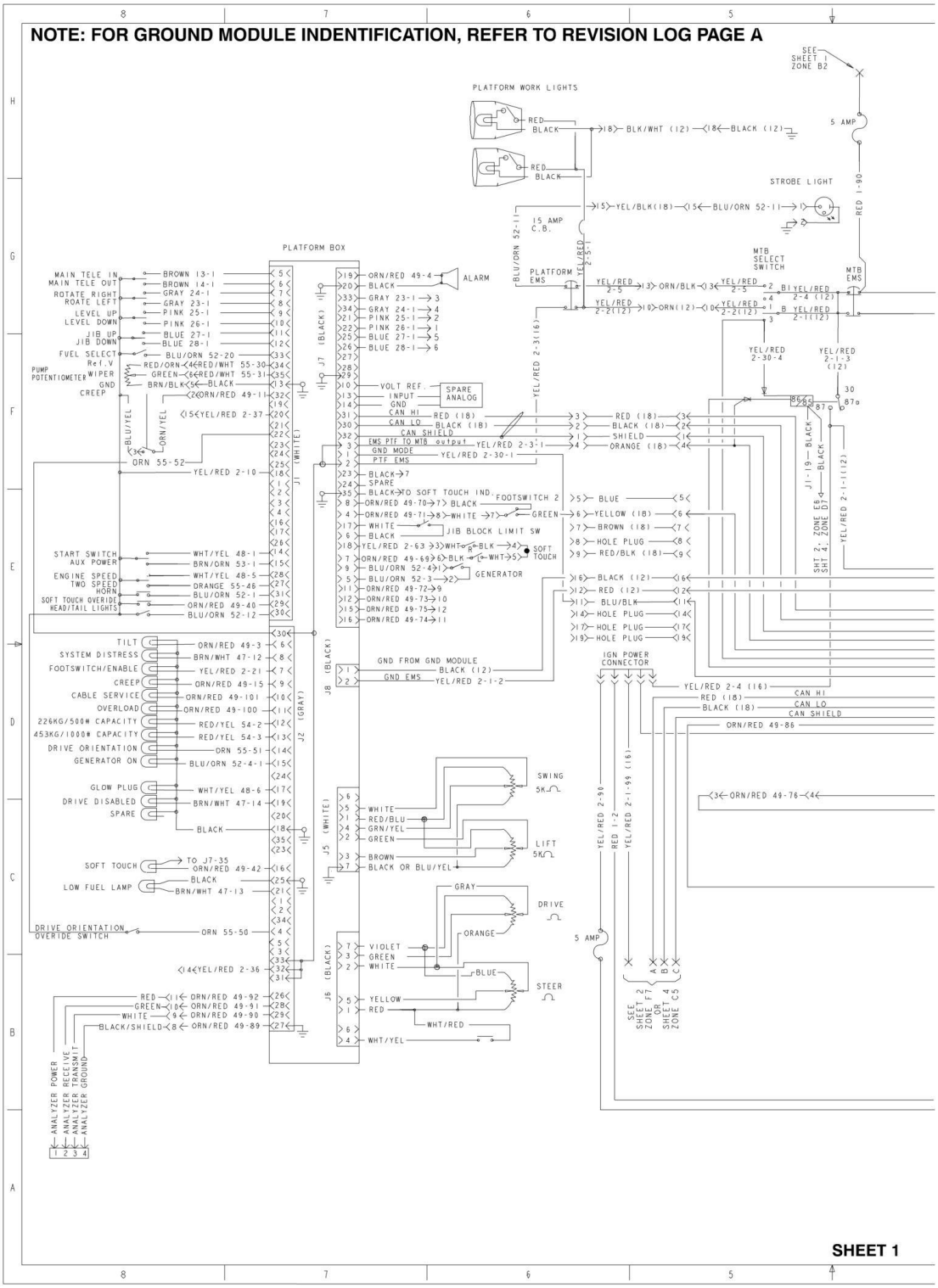

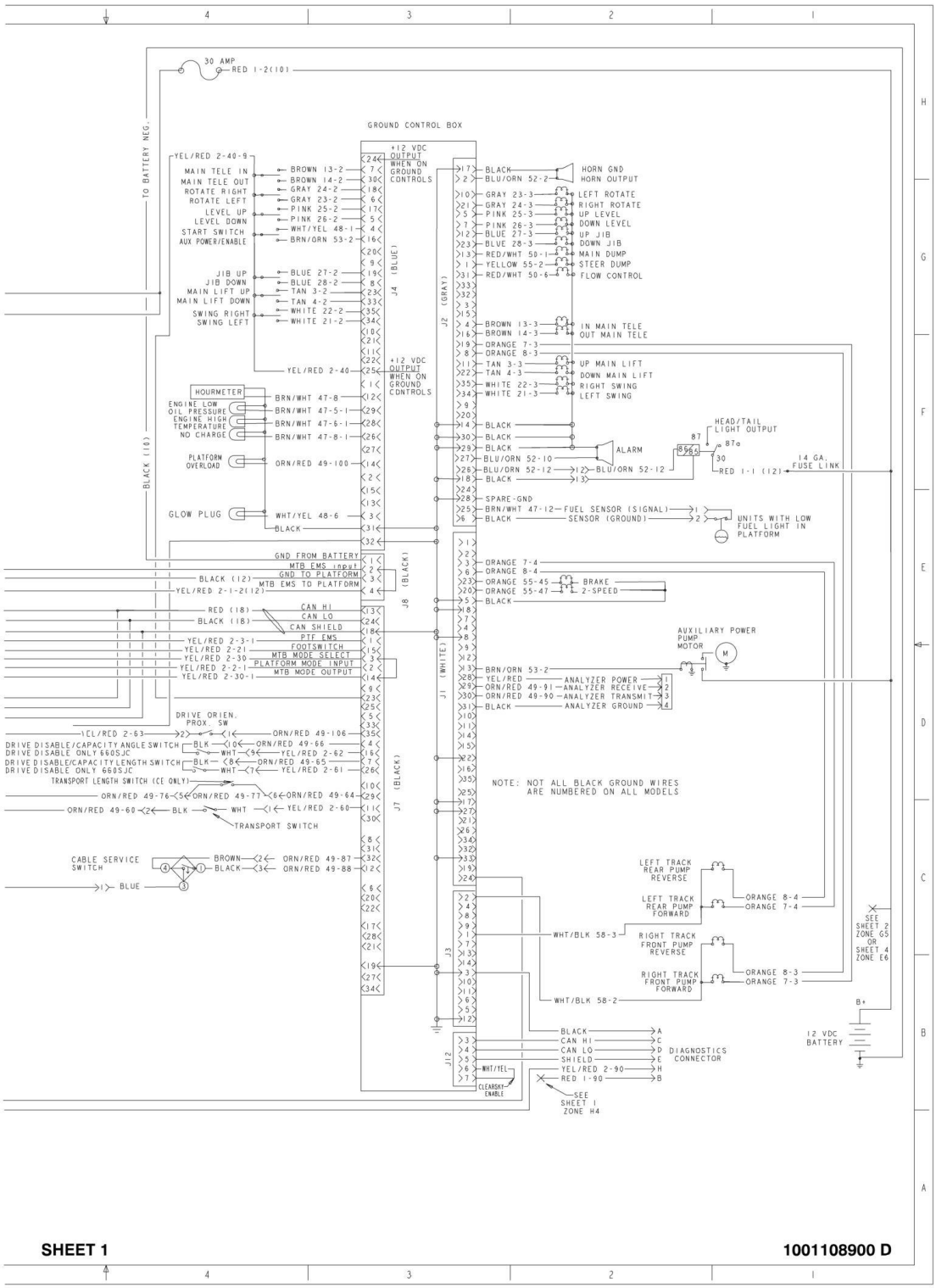
30 AMP
RED 1-2(10)
TO BATTERY NEG.
GROUND CONTROL BOX
+12 VDC OUTPUT WHEN ON GROUND CONTROLS
YEL/RED 2-40-9
MAIN TELE IN
MAIN TELE OUT
ROTATE RIGHT
ROTATE LEFT
LEVEL UP
LEVEL DOWN
START SWITCH
AUX POWER/ENABLE
BROWN 13-2
BROWN 14-2
GRAY 24-2
GRAY 23-2
PINK 25-2
PINK 26-2
WHT/YEL 48-1
BRN/ORN 53-2
JIB UP
JIB DOWN
MAIN LIFT UP
MAIN LIFT DOWN
SWING RIGHT
SWING LEFT
BLUE 27-2
BLUE 28-2
TAN 3-2
TAN 4-2
WHITE 22-2
WHITE 21-2
YEL/RED 2-40
J4 (BLUE)
J2 (GRAY)
BLACK (10)
HOURMETER
ENGINE LOW OIL PRESSURE
ENGINE HIGH TEMPERATURE
NO CHARGE
BRN/WHT 47-8
BRN/WHT 47-5-1
BRN/WHT 47-6-1
BRN/WHT 47-8-1
PLATFORM OVERLOAD
ORN/RED 49-100
GLOW PLUG
WHT/YEL 48-6
BLACK
HORN GND
HORN OUTPUT
LEFT ROTATE
RIGHT ROTATE
UP LEVEL
DOWN LEVEL
UP JIB
DOWN JIB
MAIN DUMP
STEER DUMP
FLOW CONTROL
IN MAIN TELE
OUT MAIN TELE
UP MAIN LIFT
DOWN MAIN LIFT
RIGHT SWING
LEFT SWING
ALARM
HEAD/TAIL LIGHT OUTPUT
87
87a
86
85
30
BLU/ORN 52-12
RED 1-1 (12)
14 GA. FUSE LINK
SPARE-GND
BRN/WHT 47-12
FUEL SENSOR (SIGNAL)
SENSOR (GROUND)
UNITS WITH LOW FUEL LIGHT IN PLATFORM
GND FROM BATTERY
MTB EMS input
GND TO PLATFORM
MTB EMS TO PLATFORM
BLACK (12)
YEL/RED 2-1-2(12)
J8 (BLACK)
RED (18)
BLACK (18)
CAN HI
CAN LO
CAN SHIELD
PTF EMS
FOOTSWITCH
MTB MODE SELECT
PLATFORM MODE INPUT
MTB MODE OUTPUT
YEL/RED 2-3-1
YEL/RED 2-21
YEL/RED 2-30
YEL/RED 2-2-1
YEL/RED 2-30-1
J1 (WHITE)
ORANGE 7-4
ORANGE 8-4
ORANGE 55-45
ORANGE 55-47
BRAKE
2-SPEED
AUXILIARY POWER PUMP MOTOR
BRN/ORN 53-2
YEL/RED
ORN/RED 49-91
ORN/RED 49-90
ANALYZER POWER
ANALYZER RECEIVE
ANALYZER TRANSMIT
ANALYZER GROUND
DRIVE ORIEN. PROX. SW
YEL/RED 2-63
ORN/RED 49-106
DRIVE DISABLE/CAPACITY ANGLE SWITCH
DRIVE DISABLE ONLY 660SJC
ORN/RED 49-66
YEL/RED 2-62
DRIVE DISABLE/CAPACITY LENGTH SWITCH
DRIVE DISABLE ONLY 660SJC
ORN/RED 49-65
YEL/RED 2-61
TRANSPORT LENGTH SWITCH (CE ONLY)
ORN/RED 49-77
ORN/RED 49-64
ORN/RED 49-60
YEL/RED 2-60
TRANSPORT SWITCH
J7 (BLACK)
NOTE: NOT ALL BLACK GROUND WIRES ARE NUMBERED ON ALL MODELS
CABLE SERVICE SWITCH
BROWN
BLACK
ORN/RED 49-87
ORN/RED 49-88
BLUE
LEFT TRACK REAR PUMP REVERSE
LEFT TRACK REAR PUMP FORWARD
ORANGE 8-4
ORANGE 7-4
WHT/BLK 58-3
RIGHT TRACK FRONT PUMP REVERSE
RIGHT TRACK FRONT PUMP FORWARD
ORANGE 8-3
ORANGE 7-3
WHT/BLK 58-2
SEE SHEET 2 ZONE G5 OR SHEET 4 ZONE E6
B+
12 VDC BATTERY
J3
J12
BLACK
CAN HI
CAN LO
SHIELD
YEL/RED 2-90
RED 1-90
DIAGNOSTICS CONNECTOR
WHT/YEL
CLEARSKI-ENABLE
SEE SHEET 1 ZONE H4
SHEET 1
1001108900 D

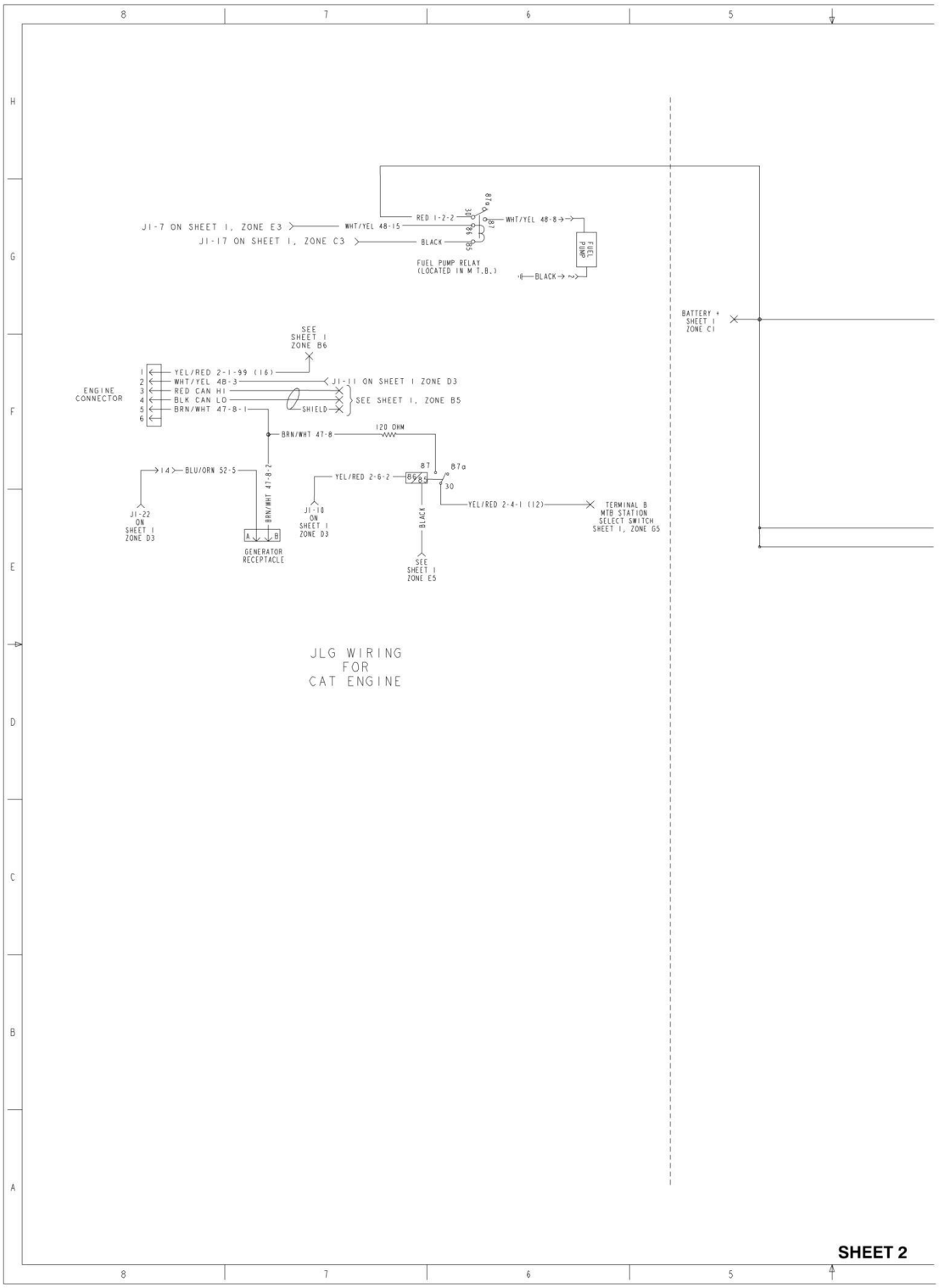
J1-7 ON SHEET 1, ZONE E3
WHT/YEL 48-15
J1-17 ON SHEET 1, ZONE C3
BLACK
RED 1-2-2
WHT/YEL 48-8
FUEL PUMP RELAY
(LOCATED IN M.T.B.)
FUEL PUMP
BLACK
BATTERY +
SHEET 1
ZONE C1
SEE
SHEET 1
ZONE B6
ENGINE
CONNECTOR
YEL/RED 2-1-99 (16)
WHT/YEL 48-3
RED CAN HI
BLK CAN LO
BRN/WHT 47-8-1
SHIELD
J1-11 ON SHEET 1 ZONE D3
SEE SHEET 1, ZONE B5
BRN/WHT 47-8
120 OHM
14
BLU/ORN 52-5
BRN/WHT 47-8-2
YEL/RED 2-6-2
87
87a
30
YEL/RED 2-4-1 (12)
TERMINAL B
MTB STATION
SELECT SWITCH
SHEET 1, ZONE G5
J1-22
ON
SHEET 1
ZONE D3
GENERATOR
RECEPTACLE
J1-10
ON
SHEET 1
ZONE D3
BLACK
SEE
SHEET 1
ZONE E5
JLG WIRING
FOR
CAT ENGINE
SHEET 2

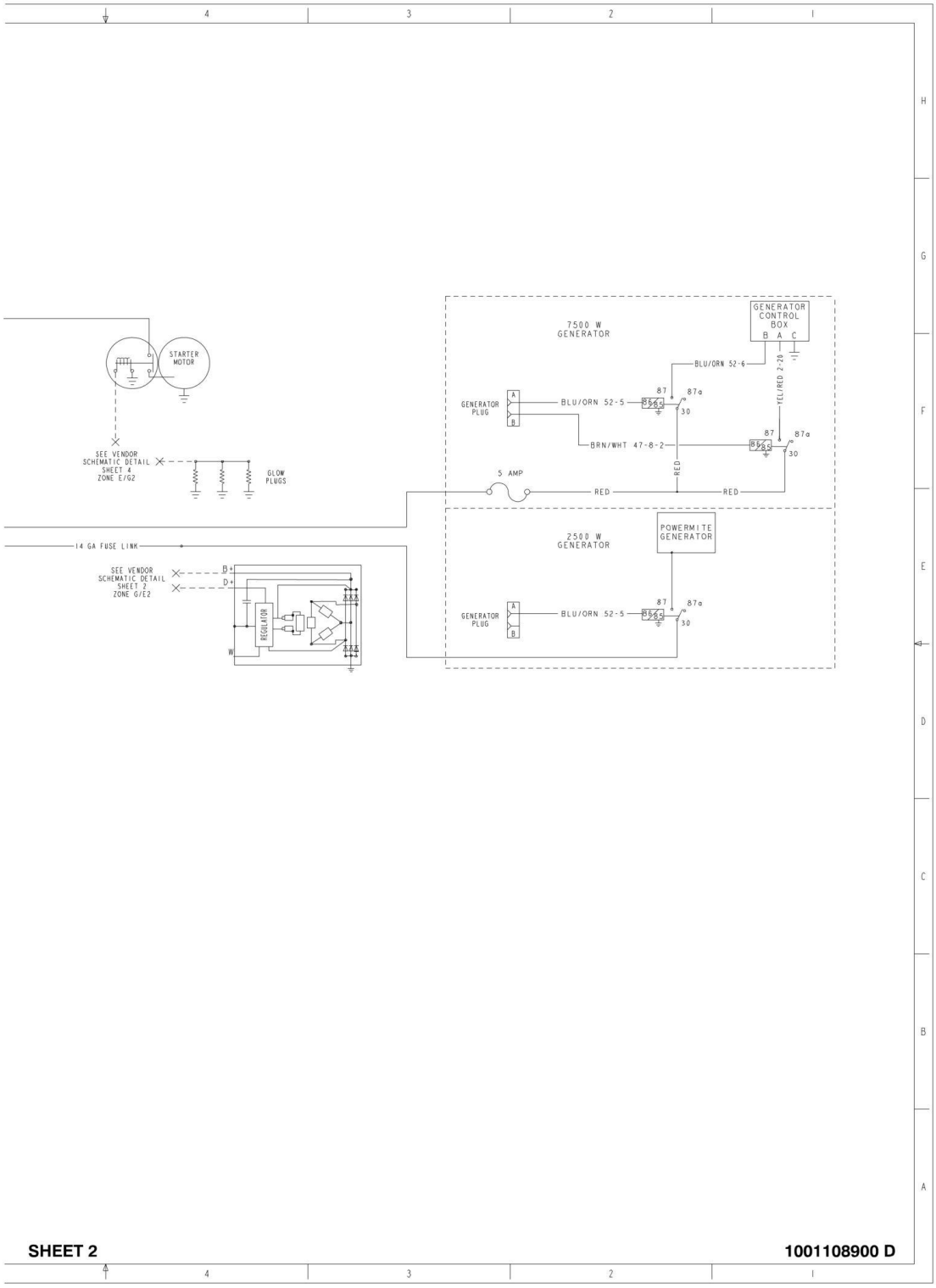


SHEET 2

1001108900 D

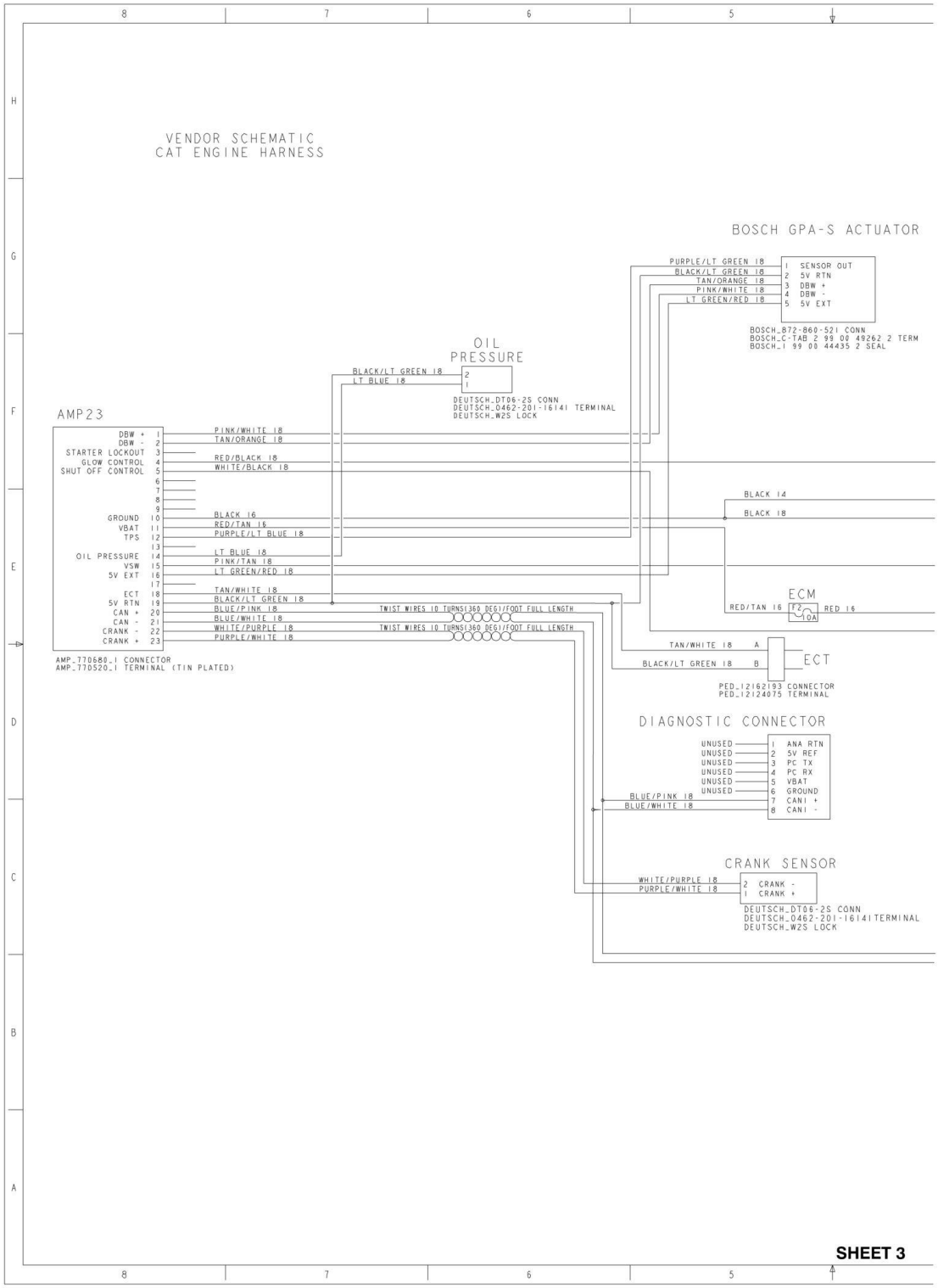
VENDOR SCHEMATIC
CAT ENGINE HARNESS
BOSCH GPA-S ACTUATOR
PURPLE/LT GREEN 18
BLACK/LT GREEN 18
TAN/ORANGE 18
PINK/WHITE 18
LT GREEN/RED 18
1 SENSOR OUT
2 5V RTN
3 DBW +
4 DBW -
5 5V EXT
BOSCH_872-860-521 CONN
BOSCH_C-TAB 2 99 00 49262 2 TERM
BOSCH_I 99 00 44435 2 SEAL
OIL PRESSURE
BLACK/LT GREEN 18
LT BLUE 18
DEUTSCH_DT06-2S CONN
DEUTSCH_0462-201-16141 TERMINAL
DEUTSCH_W2S LOCK
AMP23
DBW + 1
DBW - 2
STARTER LOCKOUT 3
GLOW CONTROL 4
SHUT OFF CONTROL 5
6
7
8
9
GROUND 10
VBAT 11
TPS 12
13
OIL PRESSURE 14
VSW 15
5V EXT 16
17
ECT 18
5V RTN 19
CAN + 20
CAN - 21
CRANK - 22
CRANK + 23
PINK/WHITE 18
TAN/ORANGE 18
RED/BLACK 18
WHITE/BLACK 18
BLACK 16
RED/TAN 16
PURPLE/LT BLUE 18
LT BLUE 18
PINK/TAN 18
LT GREEN/RED 18
TAN/WHITE 18
BLACK/LT GREEN 18
BLUE/PINK 18
BLUE/WHITE 18
WHITE/PURPLE 18
PURPLE/WHITE 18
TWIST WIRES 10 TURNS(360 DEG)/FOOT FULL LENGTH
TWIST WIRES 10 TURNS(360 DEG)/FOOT FULL LENGTH
AMP_770680_1 CONNECTOR
AMP_770520_1 TERMINAL (TIN PLATED)
BLACK 14
BLACK 18
ECM
RED/TAN 16
F2
10A
RED 16
TAN/WHITE 18
A
BLACK/LT GREEN 18
B
ECT
PED_12162193 CONNECTOR
PED_12124075 TERMINAL
DIAGNOSTIC CONNECTOR
UNUSED
UNUSED
UNUSED
UNUSED
UNUSED
UNUSED
BLUE/PINK 18
BLUE/WHITE 18
1 ANA RTN
2 5V REF
3 PC TX
4 PC RX
5 VBAT
6 GROUND
7 CAN1 +
8 CAN1 -
CRANK SENSOR
WHITE/PURPLE 18
PURPLE/WHITE 18
2 CRANK -
1 CRANK +
DEUTSCH_DT06-2S CONN
DEUTSCH_0462-201-16141TERMINAL
DEUTSCH_W2S LOCK
SHEET 3

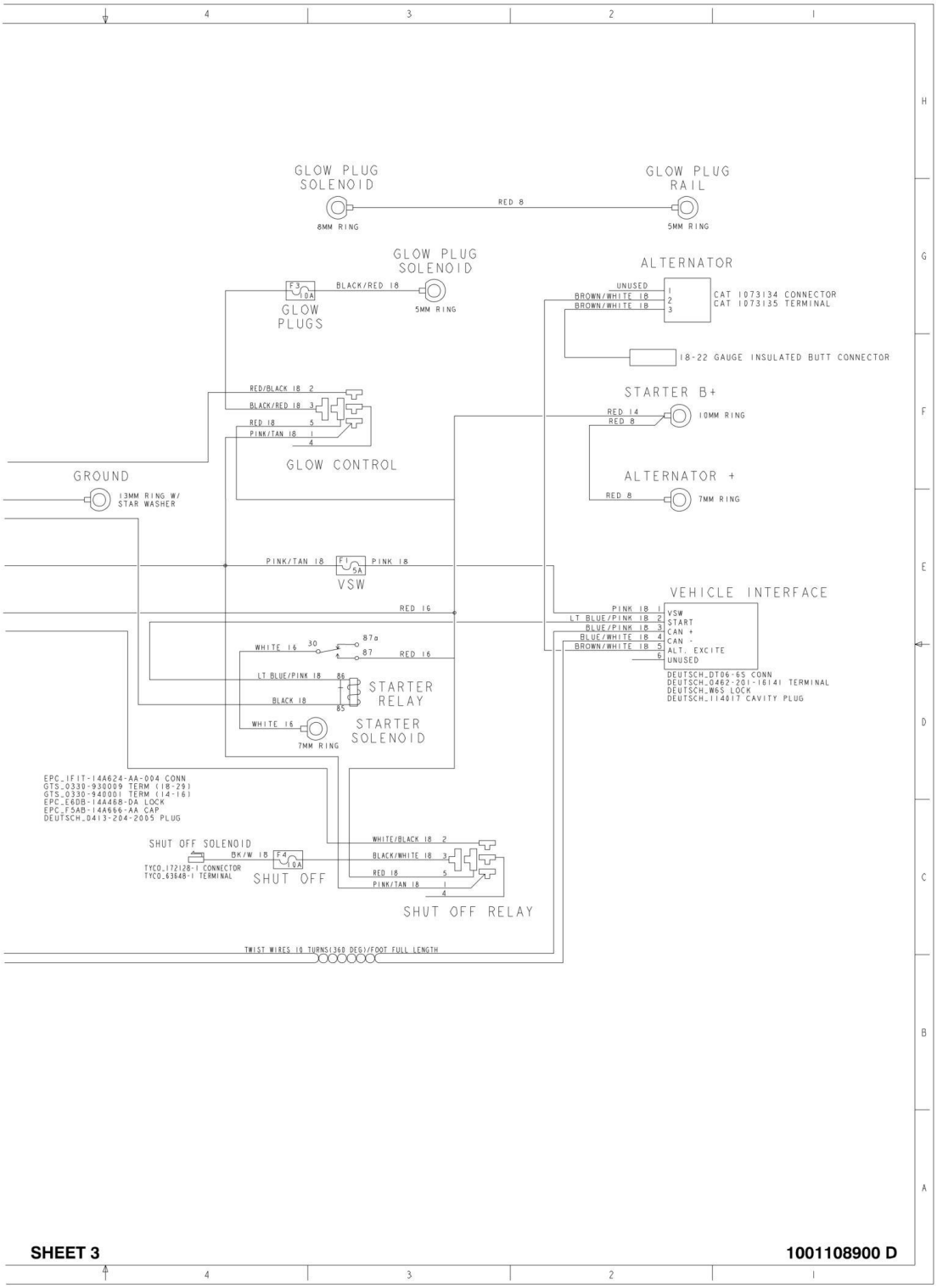
GLOW PLUG SOLENOID
8MM RING
RED 8
GLOW PLUG RAIL
5MM RING
GLOW PLUG SOLENOID
F3 10A
BLACK/RED 18
5MM RING
GLOW PLUGS
ALTERNATOR
UNUSED
BROWN/WHITE 18
BROWN/WHITE 18
CAT 1073134 CONNECTOR
CAT 1073135 TERMINAL
18-22 GAUGE INSULATED BUTT CONNECTOR
RED/BLACK 18
BLACK/RED 18
RED 18
PINK/TAN 18
GLOW CONTROL
STARTER B+
RED 14
RED 8
10MM RING
GROUND
13MM RING W/ STAR WASHER
ALTERNATOR +
RED 8
7MM RING
PINK/TAN 18
F1 5A
PINK 18
VSW
VEHICLE INTERFACE
RED 16
PINK 18
LT BLUE/PINK 18
BLUE/PINK 18
BLUE/WHITE 18
BROWN/WHITE 18
VSW
START
CAN +
CAN -
ALT. EXCITE
UNUSED
DEUTSCH_DT06-6S CONN
DEUTSCH_0462-201-16141 TERMINAL
DEUTSCH_W6S LOCK
DEUTSCH_114017 CAVITY PLUG
WHITE 16
30
87a
87
RED 16
LT BLUE/PINK 18
86
BLACK 18
85
STARTER RELAY
WHITE 16
7MM RING
STARTER SOLENOID
EPC_1F1T-14A624-AA-004 CONN
GTS_0330-930009 TERM (18-29)
GTS_0330-940001 TERM (14-16)
EPC_E6DB-14A468-DA LOCK
EPC_F5AB-14A666-AA CAP
DEUTSCH_0413-204-2005 PLUG
SHUT OFF SOLENOID
BK/W 18
F4 10A
TYCO_172128-1 CONNECTOR
TYCO_63648-1 TERMINAL
SHUT OFF
WHITE/BLACK 18
BLACK/WHITE 18
RED 18
PINK/TAN 18
SHUT OFF RELAY
TWIST WIRES 10 TURNS(360 DEG)/FOOT FULL LENGTH
SHEET 3
1001108900 D

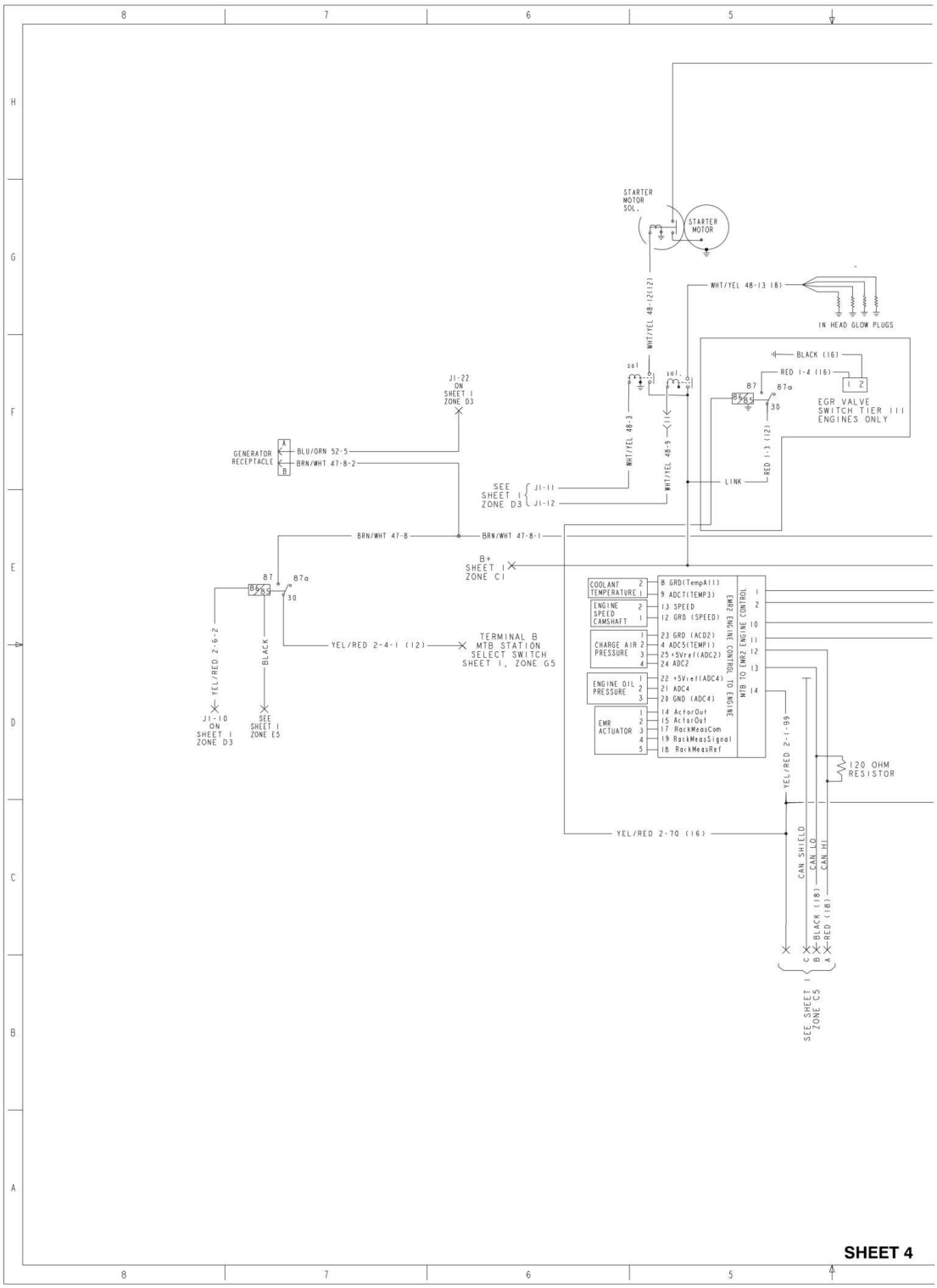
STARTER MOTOR SOL.
STARTER MOTOR
WHT/YEL 48-13 (8)
IN HEAD GLOW PLUGS
WHT/YEL 48-12(12)
BLACK (16)
RED 1-4 (16)
EGR VALVE SWITCH TIER III ENGINES ONLY
J1-22 ON SHEET 1 ZONE D3
GENERATOR RECEPTACLE
BLU/ORN 52-5
BRN/WHT 47-8-2
WHT/YEL 48-3
WHT/YEL 48-9
RED 1-3 (12)
LINK
SEE SHEET 1 ZONE D3
J1-11
J1-12
BRN/WHT 47-8
BRN/WHT 47-8-1
B+ SHEET 1 ZONE C1
YEL/RED 2-6-2
BLACK
YEL/RED 2-4-1 (12)
TERMINAL B MTB STATION SELECT SWITCH SHEET 1, ZONE G5
J1-10 ON SHEET 1 ZONE D3
SEE SHEET 1 ZONE E5
COOLANT TEMPERATURE
ENGINE SPEED CAMSHAFT
CHARGE AIR PRESSURE
ENGINE OIL PRESSURE
EMR ACTUATOR
8 GRD(TempA11)
9 ADC7(TEMP3)
13 SPEED
12 GRD (SPEED)
23 GRD (ACD2)
4 ADC5(TEMP1)
25 +5Vref(ADC2)
24 ADC2
22 +5Vref(ADC4)
21 ADC4
20 GND (ADC4)
14 ActorOut
15 ActorOut
17 RackMeasCom
19 RackMeasSignal
18 RackMeasRef
EMR2 ENGINE CONTROL TO ENGINE
MTB TO EMR2 ENGINE CONTROL
YEL/RED 2-1-99
120 OHM RESISTOR
YEL/RED 2-70 (16)
CAN SHIELD
CAN LO
CAN HI
BLACK (18)
RED (18)
SEE SHEET 1 ZONE C5
SHEET 4

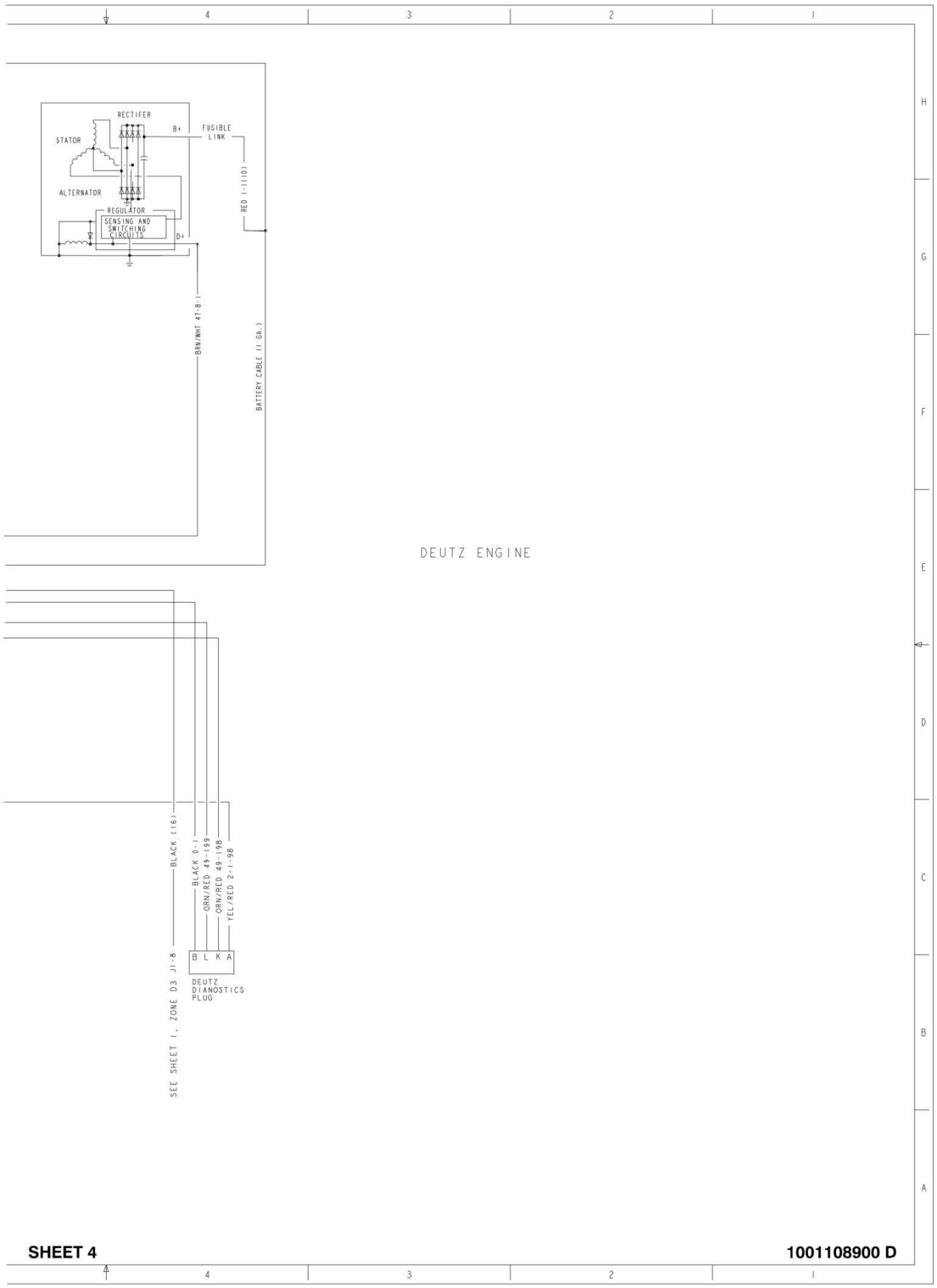
RECTIFER
STATOR
B+
FUSIBLE LINK
ALTERNATOR
REGULATOR
SENSING AND SWITCHING CIRCUITS
D+
RED 1-1(10)
BRN/WHT 47-8-1
BATTERY CABLE (1 GA.)
DEUTZ ENGINE
BLACK (16)
BLACK 0-1
ORN/RED 49-199
ORN/RED 49-198
YEL/RED 2-1-98
B L K A
DEUTZ DIANOSTICS PLUG
SEE SHEET 1, ZONE D3 J1-8
SHEET 4
1001108900 D

## FIGURE 7-4. HARNESS COMPONENTS INSTALLATION (WITHOUT UGM)

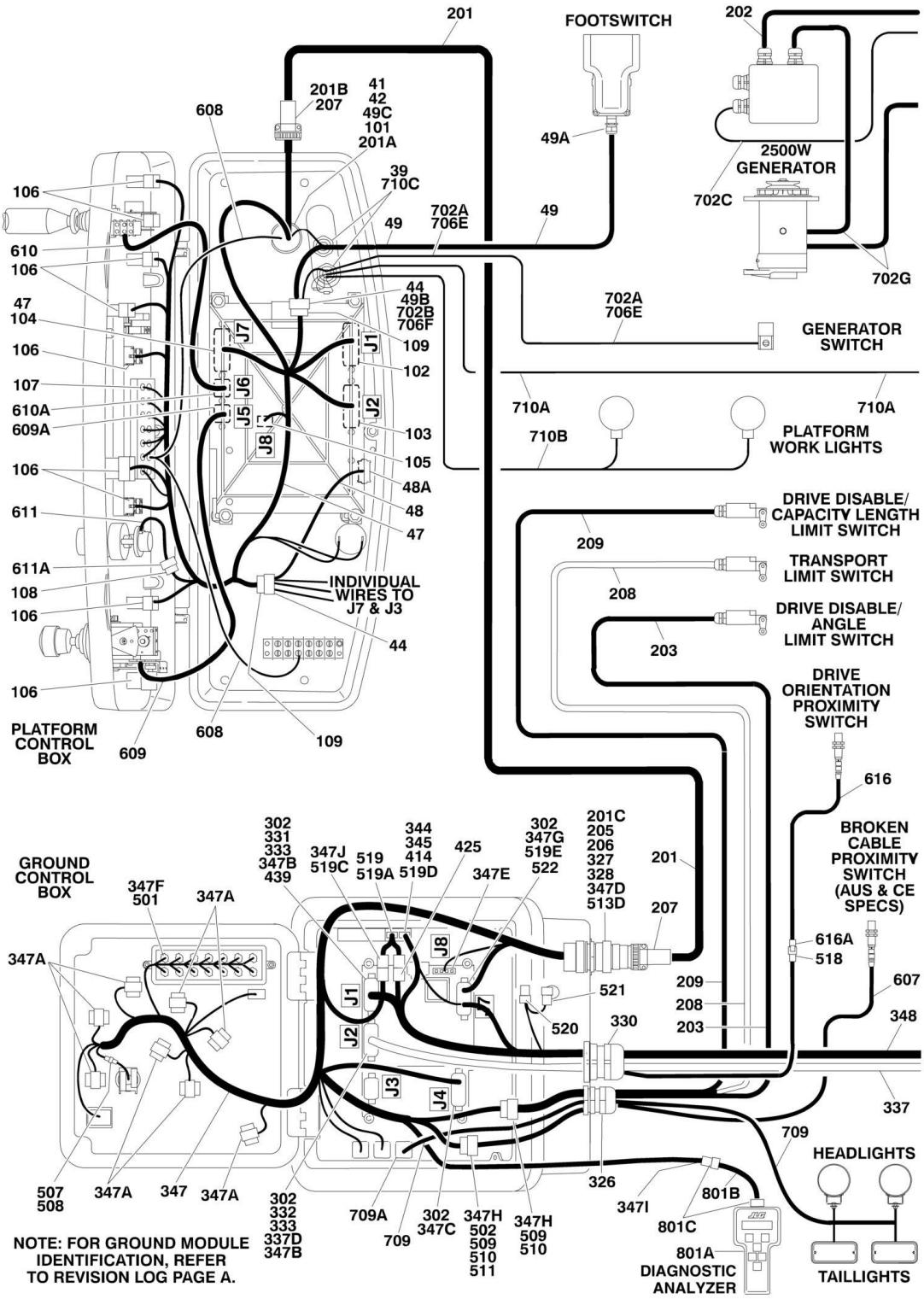

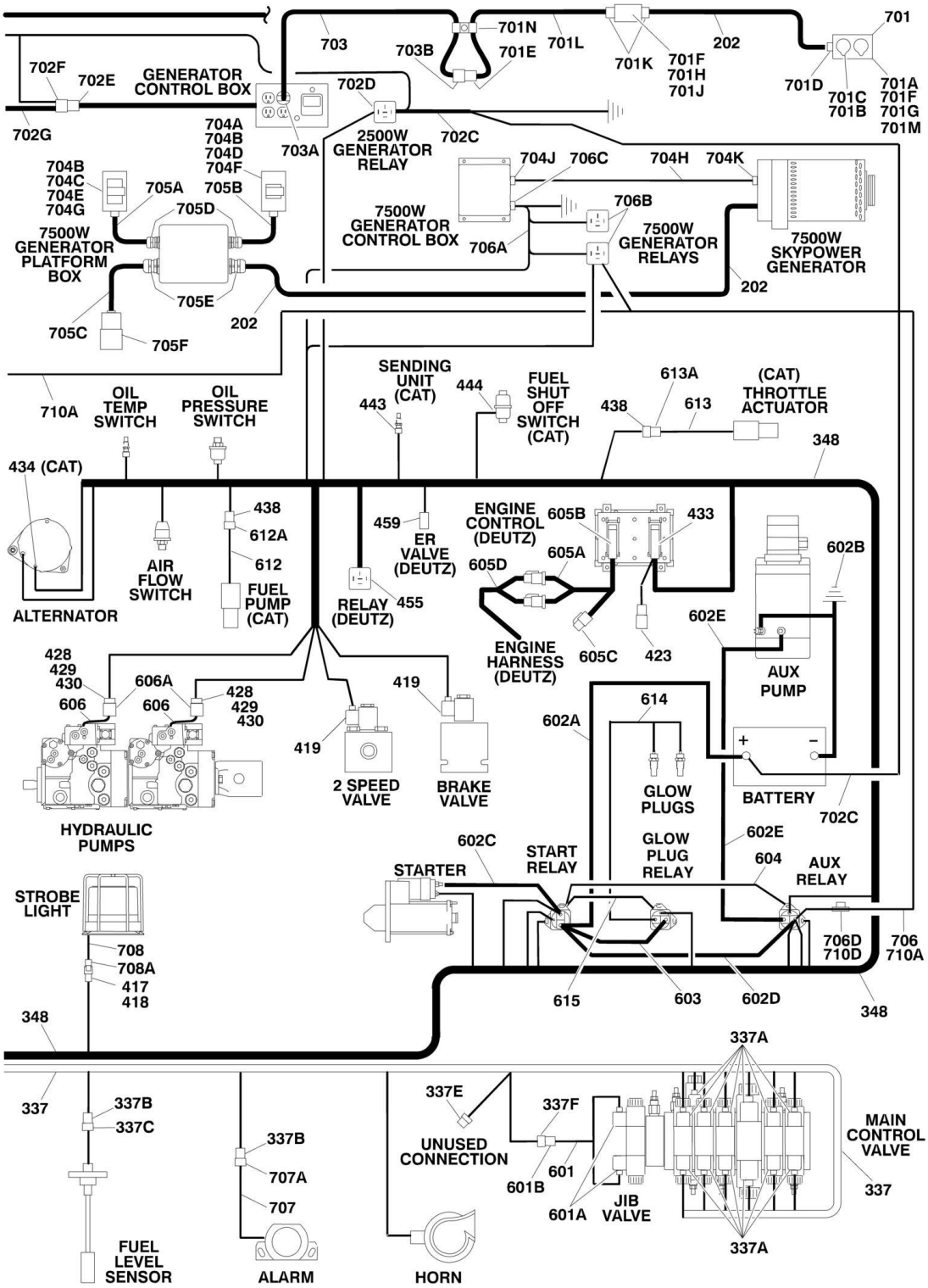
701
701N
703
703B
701E
701L
701K
701F
701H
701J
202
702F
702E
GENERATOR CONTROL BOX
702D
701D
701C
701B
701A
701F
701G
701M
702G
704A
704B
704D
704F
703A
2500W GENERATOR RELAY
702C
704B
704C
704E
704G
705A
705B
705D
704J
706C
704H
704K
706B
7500W GENERATOR CONTROL BOX
706A
7500W GENERATOR RELAYS
7500W SKYPOWER GENERATOR
7500W GENERATOR PLATFORM BOX
705E
202
705C
705F
710A
OIL TEMP SWITCH
OIL PRESSURE SWITCH
SENDING UNIT (CAT)
444
443
FUEL SHUT OFF SWITCH (CAT)
613A
438
613
(CAT) THROTTLE ACTUATOR
348
434 (CAT)
438
612A
612
459
ER VALVE (DEUTZ)
ENGINE CONTROL (DEUTZ)
605B
433
605A
605D
602B
AIR FLOW SWITCH
FUEL PUMP (CAT)
RELAY (DEUTZ)
455
ALTERNATOR
ENGINE HARNESS (DEUTZ)
605C
423
602E
AUX PUMP
428
429
430
606A
606
606
428
429
430
419
419
614
602A
2 SPEED VALVE
BRAKE VALVE
GLOW PLUGS
BATTERY
702C
HYDRAULIC PUMPS
602C
START RELAY
GLOW PLUG RELAY
602E
604
AUX RELAY
STARTER
STROBE LIGHT
708
708A
417
418
706D
710D
706
710A
615
603
602D
348
348
337A
337
337B
337C
337E
337F
MAIN CONTROL VALVE
UNUSED CONNECTION
601
601B
601A
JIB VALVE
337
337B
707A
707
337A
FUEL LEVEL SENSOR
ALARM
HORN

## FIGURE 7-4. HARNESS COMPONENTS INSTALLATION (WITHOUT UGM)

| ITEM | PART NUMBER | QTY | DESCRIPTION | REV |
|---|---|---|---|---|
| | | Ref | **Note: For Ground Module Identification, Refer to Revision Log Page A** | |
| | | Ref | **HARNESS COMPONENTS INSTALLATION** | |
| | 0861634 | Ref | **PLATFORM CONSOLE BOX COMPONENTS** | G |
| 39 | 4460428 | 2 | Connector, Strain Relief | |
| 41 | 4460470 | 1 | Nut, Terminal | |
| 42 | 4460471 | 1 | Lockwasher, Terminal | |
| 44 | 4460708 | 2 | Receptacle, Female - 15 Position | |
| 45 | 4460905 | 5 | Seal, Plug | |
| 47 | | Ref | Harness, Platform Box Options (See Items 101-109 for Breakdown): | |
| 47 | 4922639 | 1 | Harness, Platform Box **(SN 0300128000 through 0300136518)** | |
| 47 | 1001107753 | 1 | Harness, Platform Box **(SN 0300136519 through 0300174703)** | |
| 48 | 4922666 | 1 | Harness, Analyzer Cable | 1-A |
| 48 | 4460226 | 4 | Socket, Female (Not Shown - Located at J2) | |
| 48A | 4460761 | 1 | Connector, Female - 4 Position | |
| 48A | 4460227 | 4 | Pin, Male | |
| 49 | 0272970 | 1 | Harness, Footswitch (Includes Footswitch) | A |
| 49 | 1060918 | 7 ft/2.1m | Cable, Electrical - 18/3 | |
| 49A | 4460071 | 1 | Connector, Strain Relief | |
| 49B | 4460226 | 2 | Socket, Female | |
| 49C | 4460464 | 1 | Pin, Male Deutsch | |
| | | Ref | **PLATFORM BOX HARNESS ASSEMBLY** | |
| | 4922639 | Ref | **Platform Box Harness Assembly (SN 0300128000 through 0300136518)** | 7-I |
| | 1001107753 | Ref | **Platform Box Harness Assembly (SN 0300136519 through 0300174703)** | C |
| 101 | 4460866 | 1 | Connector - 19 Position | |
| 101 | 4460464 | 7 | Pin, Male 16 Ga | |
| 101 | 4460508 | 3 | Pin, Male 12 Ga | |
| 102 | 4460874 | 1 | Connector - 35 Position (Natural) | |
| 102 | 4460871 | 23 | Socket, Female | |
| 103 | 4460875 | 1 | Connector - 35 Position (Gray) | |
| 103 | 4460871 | 19 | Socket, Female | |
| 104 | 4460873 | 1 | Connector - 35 Position (Black) | |
| 104 | 4460871 | 25 | Socket, Female | |
| 105 | 4460879 | 1 | Connector, Male - 2 Position | |
| 105 | 4460887 | 2 | Terminal (12 Gauge) | |
| 106 | 4460418 | 9 | Connector, Female - 6 Position | |
| 106 | 4460419 | 27 | Socket, Female | |
| 107 | 4120035 | 13 | Base, Light | |
| 107 | 4460634 | 13 | Terminal | |
| 107 | 4460635 | 13 | Terminal | |
| 107 | 2920129 | 13 | Bulb, Light | |
| 108 | 4460225 | 1 | Plug, Male - 6 Position | |
| 108 | 4460227 | 5 | Pin, Male | |
| 109 | 4460434 | 2 | Plug, Male - 15 Position | |
| 109 | 4460227 | 28 | Pin, Male | |
| | | Ref | **BOOM CABLES INSTALLATION** | |
| | | Ref | **Boom Cables Installation 600SC:** | |

| ITEM | PART NUMBER | QTY | DESCRIPTION | REV |
|---|---|---|---|---|
| | | Ref | **ANSI and ANSI Export Specs** | |
| | 0272042 | Ref | **Without SkyPower and without Arctic Package** | 3 |
| | 0274592 | Ref | **With SkyPower and without Arctic Package** | 1 |
| | 1001104427 | Ref | **Without SkyPower and with Arctic Package** | 1 |
| | 1001104429 | Ref | **With SkyPower and with Arctic Package** | 1 |
| | | Ref | **CE and Australian Specs:** | |
| | 0272045 | Ref | **Without SkyPower** | 3 |
| | 0274593 | Ref | **With SkyPower** | 1 |
| | | Ref | **Boom Cables Installation 660SJC:** | |
| | | Ref | **ANSI and ANSI Export Specs:** | |
| | 0272043 | Ref | **Without SkyPower and without Arctic Package** | 2 |
| | 0274594 | Ref | **With SkyPower and without Arctic Package** | 1 |
| | 1001104428 | Ref | **Without SkyPower and with Arctic Package** | 1 |
| | 1001104430 | Ref | **With SkyPower and with Arctic Package** | 1 |
| | | Ref | **CE and Australian Specs:** | |
| | 0272046 | Ref | **Without SkyPower** | 2 |
| | 0274595 | Ref | **With SkyPower** | 1 |
| 201 | | Ref | Harness, Boom (12/4 -18/8) Options: | |
| 201 | 4922468 | 1 | Harness, Boom (12/4 -18/8) 600SC without Arctic Package | 2-B |
| 201 | 4923657 | 1 | Harness, Boom (12/4 -18/8) 600SC with Arctic Package | 1 |
| 201 | 4922467 | 1 | Harness, Boom (12/4 -18/8) 660SJC without Arctic Package | 2-B |
| 201 | 4923657 | 1 | Harness, Boom (12/4 -18/8) 660SJC with Arctic Package | 1 |
| 201 | | Ref | Cable, Electrical - 12/4 & 18/8 | |
| 201 | 1060896 | 67 ft /20.4m | 4922468 Harness (600SC without Arctic Package) | |
| 201 | 4923462 | 67 ft /20.4m | 4923657 Harness (600SC with Arctic Package) | |
| 201 | 4923462 | 75 ft /22.9m | 4922467 Harness (600SC with Arctic Package) | |
| 201 | 2820118 | 8 in/18cm | Heat Shrink | |
| 201A | 4460465 | 11 | Socket, Female 18 Gauge | |
| 201A | 4460865 | 1 | Connector - 19 Position | |
| 201A | 4460509 | 4 | Socket, Female 12 Gauge | |
| 201A | 4460466 | 4 | Seal, Plug | |
| 201B | 4460473 | 1 | Clamp. Cable | |
| 201C | 4460465 | 11 | Socket, Female 18 Gauge | |
| 201C | 4460509 | 4 | Socket, Female 12 Gauge | |
| 202 | | Ref | Cable, Electrical (To Receptacle Box) Options: | |
| 202 | 4922889 | 1 | Cable, Electrical (To Receptacle Box) 600SC ANSI and ANSI Export Specs without SkyPower and without Arctic Package (12/3 Cable 70ft/21.2m Length) | |
| 202 | 4923660 | 1 | Cable, Electrical (To Receptacle Box) 600SC ANSI and ANSI Export Specs without SkyPower and with Arctic Package (12/3 Cable 70ft/21.2m Length) | |
| 202 | 4922884 | 1 | Cable, Electrical (To Receptacle Box) 600SC CE and Australian Specs without SkyPower (12/3 Cable 70ft/21.2m Length) | |
| 202 | 4922792 | 1 | Cable, Electrical (To Receptacle Box) 600SC All Specs with SkyPower (8/5 Cable 83ft/25.3m) | |
| 202 | 4922888 | 1 | Cable, Electrical (To Receptacle Box) 660SJC ANSI and ANSI Export Specs without SkyPower and without Arctic Package (12/3 Cable 77ft/23.5m Length) | |
| 202 | 4923510 | 1 | Cable, Electrical (To Receptacle Box) 660SJC ANSI and | |

| ITEM | PART NUMBER | QTY | DESCRIPTION | REV |
|---|---|---|---|---|
| | | | ANSI Export Specs without SkyPower and with Arctic Package (12/3 Cable 70ft/21.2m Length) | |
| 202 | 4922886 | 1 | Cable, Electrical (To Receptacle Box) 660SJC CE and Australian Specs without SkyPower (12/3 Cable 77ft/23.5m Length) | |
| 202 | 4922791 | 1 | Cable, Electrical (To Receptacle Box) 660SJC All Specs with SkyPower (8/5 Cable 90.5ft/27.6m) | |
| 203 | 1061045 | 1 | Cable, Electrical - 18/2 (To Drive Disable/Angle Switch) (15ft/4.6m Length) | |
| 204 | | Ref | Sleeve, Nylon Options (Not Shown - Used with Items 201 & 202): | |
| 204 | 4100026 | 10 ft/3m | Sleeve, Nylon 600SC | |
| 204 | Not Required | 0 | Sleeve, Nylon 660SJC | |
| 205 | 4460865 | 1 | Connector - 19 Position | |
| 206 | 4460466 | AR | Seal, Plug | |
| 207 | 4460473 | 2 | Clamp, Cable | |
| 208 | | Ref | Cable, Electrical - 18/3 (To Transport Switch) Options: | |
| 208 | 1061046 | 1 | Cable, Electrical - 18/3 (To Transport Switch) 600SC | |
| 208 | 1061047 | 1 | Cable, Electrical - 18/3 (To Transport Switch) 660SJC | |
| 209 | | Ref | Cable, Electrical - 18/3 (To Drive Disable/Capacity Length) Options: | |
| 209 | 1061047 | 1 | Cable, Electrical - 18/3 (To Drive Disable/Capacity Length) 600SC | |
| 209 | 1061046 | 1 | Cable, Electrical - 18/3 (To Drive Disable/Capacity Length 660SJC | |
| | | Ref | **GROUND CONTROL BOX COMPONENTS** | |
| 302 | 0100048 | AR | Grease, Dielectric | |
| 326 | 4460426 | 1 | Connector, Strain Relief | |
| 327 | 4460470 | 1 | Nut, Terminal | |
| 328 | 4460471 | 1 | Washer, Terminal | |
| 330 | 4460526 | 1 | Connector, Strain Relief | |
| 331 | 4460874 | 1 | Connector, White - 35 Position | |
| 332 | 4460875 | 1 | Connector, Gray - 35 Position | |
| 333 | 4460905 | AR | Plug, Connector | |
| 337 | 4922513 | 1 | Valve Harness Assembly | 3-D |
| 337A | 4460880 | 11 | DIN Connector | |
| 337B | 4460320 | 2 | Plug, Male - 2 Position | |
| 337B | 4460267 | 4 | Pin, Male | |
| 337C | 4460424 | 1 | Connector, Female - 2 Position | |
| 337C | 4460268 | 2 | Socket, Female | |
| 337D | 4460871 | 28 | Socket, Female | |
| 337E | 4460326 | 1 | Plug, Male - 3 Position | |
| 337E | 4460267 | 1 | Pin, Male | |
| 337F | 4460445 | 1 | Connector, Female - 3 Position | |
| 337F | 4460268 | 3 | Socket, Female | |
| 344 | 4460466 | 6 | Seal, Plug | |
| 345 | 4460909 | 1 | Plug, Male -12 Position Mini (Black) | |
| 347 | | Ref | Ground Control Box Harness Assembly Options: | |
| 347 | 4923577 | 1 | Ground Control Box Harness Assembly **(SN 0300128000 through 0300144060)** | D |
| 347 | 1001108126 | 1 | Ground Control Box Harness Assembly **(SN 0300144061 through 0300174703)** | A |
| 347 | 3990010 | 2 | Diode - 6 Amp (Not Shown - Located at Power Down Relay) | |
| 347A | 4460418 | 7 | Connector, Female - 6 Position | |

| ITEM | PART NUMBER | QTY | DESCRIPTION | REV |
|---|---|---|---|---|
| 347A | 4460419 | 21 | Socket, Female | |
| 347B | 4460871 | 16 | Socket, Female | |
| 347C | 4460876 | 1 | Connector, Blue - 35 Position | |
| 347C | 4460871 | 23 | Socket, Female | |
| 347C | 4460905 | 1 | Seal, Plug | |
| 347D | 4460866 | 1 | Connector - 19 Position | |
| 347D | 4460464 | 10 | Pin, Male Deutsch 16 Ga | |
| 347D | 4460508 | 3 | Pin, Male Deutsch 12 Ga | |
| 347E | 4460878 | 1 | Plug, Male - 4 Position | |
| 347E | 4460887 | 3 | Terminal (12 Gauge) | |
| 347F | 4120035 | 5 | Base, Light | |
| 347F | 4460634 | 6 | Terminal (16 Gauge) | |
| 347F | 4460635 | 4 | Terminal (12 Gauge) | |
| 347G | 4460873 | 1 | Connector, Black - 35 Position | |
| 347G | 4460871 | 20 | Socket, Female | |
| 347G | 4460465 | 4 | Socket, Female | |
| 347G | 4460905 | 1 | Seal, Plug | |
| 347H | 4460434 | 2 | Plug, Male - 15 Position | |
| 347H | 4460227 | 19 | Pin, Male | |
| 347I | 4460761 | 1 | Connector, Female - 4 Position | |
| 347I | 4460227 | 4 | Pin, Male | |
| 347J | 4460536 | 1 | Connector, Female 3- Position | |
| 347J | 4460943 | 3 | Pin, Male | |
| 348 | | Ref | Harness, Engine Options (See Items 401-459 for Breakdown): | |
| 348 | 4923582 | 1 | Caterpillar Engine | |
| 348 | 4923257 | 1 | Deutz Engine **(SN 0300128000 through 0300128968)** | |
| 348 | 1001102161 | 1 | Deutz Engine **(SN 0300128969 through 0300174703)** | |
| 349 | | Ref | Ground Control Wiring Diagram Options (See Items 501-522 for Breakdown): | |
| 349 | 4933369 | 1 | Caterpillar Engine | |
| 349 | 4933368 | 1 | Deutz Engine | |
| | | Ref | **ENGINE HARNESS ASSEMBLY** | |
| | 4923582 | Ref | **Caterpillar Engine** | B |
| | 4923257 | Ref | **Deutz Engine (SN 0300128000 through 0300128968)** | G |
| | 1001102161 | Ref | **Deutz Engine (SN 0300128969 through 0300174703)** | B |
| 414 | 4460928 | 5 | Socket, Female | |
| 417 | 4460424 | 1 | Receptacle, Female - 2 Position | |
| 418 | 4460268 | 2 | Socket, Female | |
| 419 | 4460880 | 2 | DIN Connector without Diode | |
| 423 | 4461070 | 1 | Receptacle, Female with Resistor (3 Position) (Deutz Engine Only) | |
| 423 | 4461095 | 1 | Plug, Male - 3 Position | |
| 423 | 4460944 | 3 | Socket, Female | |
| 424 | 3990001 | 1 | Diode - 3 Amp (Not Shown - Caterpillar Engine Only) | |
| 425 | 4460539 | 1 | Connector, Male - 3 Position (Deutz Engine Only) | |
| 425 | 4460944 | 3 | Socket, Female | |
| 428 | 4460460 | 2 | Plug, Male - 4 Position | |
| 429 | 4460457 | 8 | Socket, Female | |
| 430 | 4460458 | 8 | Seal, Terminal | |
| 433 | 4461052 | 1 | Connector, Receptacle - 25 Position (Deutz Engine Only) | |
| 433 | 4461005 | 5 | Terminal (Gold) | |
| 433 | 4461006 | 5 | Seal, Terminal | |

| ITEM | PART NUMBER | QTY | DESCRIPTION | REV |
|---|---|---|---|---|
| 433 | 4461060 | 2 | Terminal (Tin) | |
| 433 | 4461054 | 2 | Seal, Terminal | |
| 433 | 4461053 | 1 | Cover, Plug | |
| 434 | 4460996 | 1 | Connector, Female - 3 Position (Caterpillar Engines Only) | |
| 434 | 4460995 | 2 | Terminal, Spade (Caterpillar Engines Only) | |
| 438 | 4460891 | 2 | Plug, Male - 2 Position (Caterpillar Engine Only) | |
| 438 | 4460465 | 4 | Socket, Female (Caterpillar Engine Only) | |
| 439 | 4460871 | 9 | Socket, Female | |
| 443 | 4460539 | 1 | Plug, Male - 3 Position (Caterpillar Engine Only) | |
| 443 | 4460465 | 3 | Socket, Female (Caterpillar Engine Only) | |
| 444 | 4460792 | 1 | Housing, Terminal (Caterpillar Engine Only) | |
| 444 | 4460339 | 1 | Terminal (Caterpillar Engine Only) | |
| 455 | 4460375 | 1 | Connector, Relay (Deutz Engines) **(SN 0300128969 through 0300174703)** | |
| 455 | 4460374 | 4 | Terminal, Relay (Deutz Engines Only) **(SN 0300128969 through 0300174703)** | |
| 459 | 1001102290 | 1 | Plug, Male - 2 Position (Deutz Engines) **(SN 0300128969 through 0300174703)** | |
| 459 | 1001102291 | 2 | Terminal (Deutz Engines) **(SN 0300128969 through 0300174703)** | |
| 459 | 1001102304 | 1 | Seal, Terminal (Deutz Engines) **(SN 0300128969 through 0300174703)** | |
| | | Ref | **GROUND CONTROL BOX WIRING DIAGRAM** | |
| | 4933369 | Ref | **Caterpillar Engine** | D |
| | 4933368 | Ref | **Deutz Engine** | D |
| 501 | 2920129 | AR | Bulb, Light | |
| 502 | 4922636 | 1 | Jumper Harness (Required without Tower Elevation Switch) (Deutz Engine Only) | |
| 507 | 2400065 | 1 | Fuse - 30 Amp | |
| 508 | 2400066 | 1 | Fuseholder | |
| 509 | 4460708 | 2 | Connector, Female - 15 Position | |
| 510 | 4460226 | 13 | Socket, Female | |
| 511 | 4922637 | 1 | Jumper Harness (Required without Boom Length Switch) | |
| 518 | 4460424 | 1 | Receptacle, Female - 2 Position **(SN 0300137195 through 0300174703)** | |
| 519 | | Ref | Harness, Can-Buss Options: | |
| 519 | 4923259 | 1 | Deutz Engine | C |
| 519 | 4923584 | 1 | Caterpillar Engine | B |
| 519A | 4460908 | 1 | Plug, Male -12 Position Mini (Gray) | |
| 519A | 4460928 | 2 | Socket, Female | |
| 519A | 4460466 | 10 | Seal, Plug | |
| 519C | 4460539 | 1 | Connector, Male - 3 Position | |
| 519C | 4460944 | 3 | Socket, Female | |
| 519D | 4460928 | 1 | Socket, Female | |
| 519E | 4460871 | 1 | Socket, Female | |
| 520 | 4460894 | 1 | Plug, Male - 6 Position | |
| 520 | 4460892 | 1 | Receptacle, Female - 6 Position | |
| 521 | 2902443 | 1 | Receptacle Kit (Deutz Engine Only) | |
| 521 | 4461071 | 8 | Socket, Female | |
| 521 | 4461072 | 1 | Receptacle | |
| 521 | 4461073 | 1 | Cap, Dust | |
| 521 | 4461074 | 1 | Shell, Black | |
| 522 | 4923591 | 1 | Jumper Harness (Caterpillar Engine Only) | |

| ITEM | PART NUMBER | QTY | DESCRIPTION | REV |
|---|---|---|---|---|
| | | Ref | **STANDARD HARNESS COMPONENTS** | |
| 601 | 4921927 | 1 | Jib Harness (660SJC Only) | 3-F |
| 601A | 4460499 | 2 | DIN Connector | |
| 601B | 4460326 | 1 | Plug, Male - 3 Position | |
| 601B | 4460267 | 3 | Pin, Male | |
| 602 | 2902296 | 1 | Battery Cable Kit | B |
| 602A | 7027000 | 1 | Cable, Battery (Battery + to Starter Relay) | |
| 602B | 7027004 | 1 | Cable, Battery (Battery and Aux Pump to Ground) | |
| 602C | 7027002 | 1 | Cable, Battery (Starter Relay to Starter) | |
| 602D | 7027001 | 1 | Cable, Battery (Starter Relay to Aux Pump) | |
| 602E | 7027003 | 1 | Cable, Battery (Aux Relay to Aux Pump) | |
| 603 | 1060904 | 1 | Cable, Battery (Power to Glow Plug) | |
| 604 | 4922737 | 1 | Relay Grounding Harness | |
| 605 | See Note | Ref | Deutz Engine Harness Components (Deutz Engine Machines Only) (Note: Not Available for Purchase.) | |
| 605A | 7027796 | 1 | Deutz Engine Harness | |
| 605B | 4461052 | 1 | Receptacle, Female - 25 Position | |
| 605B | 4461053 | 1 | Cover, Receptacle | |
| 605B | 4461005 | 5 | Terminal | |
| 605B | 4461006 | 5 | Seal (Used with p/n 4461005) | |
| 605B | 4461060 | 2 | Terminal | |
| 605B | 4461054 | 2 | Seal (Used with p/n 4461060) | |
| 605B | 4461008 | 18 | Plug, Hole | |
| 605C | 7027793 | 1 | Plug-In, Connector | |
| 605D | | Ref | Deutz Engine Harness Options (For other replacement parts refer to Deutz engine dealer): | |
| 605D | 7027794 | 1 | Tier II **(SN 0300128000 through 0300128968)** | |
| 605D | 70001872 | 1 | Tier III/IVi **(SN 0300128969 through 0300174703)** | |
| 606 | 7022350 | 2 | Pump Sensor Harness (Includes Sensor) | |
| 606A | 7007498 | 2 | Receptacle, Female - 4 Position | |
| 606A | 4460475 | 4 | Pin, Male | |
| 606A | 4460458 | 4 | Seal, Terminal | |
| 607 | 4360506 | 1 | Broken Cable Proximity Switch Harness (Includes Switch) (Australian and CE Specs Only) | |
| 608 | 4933146 | Ref | Service Cable Light Electrical Diagram (Australian Spec Only) | 1-A |
| 608 | 4922314 | 1 | Service Cable Light Harness (Australian Spec Only) | 1-A |
| 608 | 4120035 | 1 | Socket, Light | |
| 608 | 4460634 | 2 | Terminal | |
| 608 | 4460464 | 1 | Socket, Female | |
| 608 | 2920129 | 1 | Bulb, Light | |
| 609 | See Note | NSS | Controller Harness Assembly (Lift and Swing) (Note: Not Available - Purchase Complete Controller) | |
| 609A | 7022819 | 1 | Plug, Male - 8 Position (Natural) | |
| 609A | 4460871 | 8 | Socket, Female | |
| 610 | See Note | NSS | Controller Harness Assembly (Drive and Steer) (Note: Not Available - Purchase Complete Controller) | |
| 610A | See Note | NSS | Connector, Female - 8 Position (Note: Not Available for Purchase.) | |
| 610A | 4460871 | 6 | Socket, Female | |
| 611 | See Note | 1 | Speed Control Harness (Note: Not Available for Purchase.) | |
| 611A | 4460224 | 1 | Connector, Female - 6 Position | |
| 611A | 4460226 | 5 | Socket, Female | |
| 612 | See Note | NSS | Fuel Pump Harness (Caterpillar Engines Only) (Note: Not | |

| ITEM | PART NUMBER | QTY | DESCRIPTION | REV |
|---|---|---|---|---|
| | | | Available for Purchase.) | |
| 612A | 4460897 | 1 | Receptacle, Female -2 Position (Caterpillar Engines Only) | |
| 612A | 4460464 | 2 | Pin, Male (Caterpillar Engines Only) | |
| 613 | See Note | NSS | Throttle Actuator Harness (Caterpillar Engines Only) (Note: Not Available for Purchase.) | |
| 613A | 4460897 | 1 | Receptacle, Female -2 Position (Caterpillar Engines Only) | |
| 613A | 4460464 | 2 | Pin, Male (Caterpillar Engines Only) | |
| 614 | 4923379 | 1 | Harness, Glow Plug (Deutz Engine Machines Only) | |
| 615 | 1060904 | 1 | Cable, Jumper (Deutz Engine Machines Only) | |
| 616 | See Note | NSS | Drive Orientation Proximity Switch Harness (Note: Not Available for Purchase.) **(SN 0300137195 through 0300174703)** | |
| 616A | 4460320 | 1 | Plug, Male - 2 Position **(SN 0300137195 through 0300174703)** | |
| | | Ref | **OPTIONAL HARNESS COMPONENTS** | |
| 701 | | Ref | AC to Platform Receptacle Components Options: | |
| | | Ref | **Note: For use with 2500W Generator Only.** | |
| 701 | | Ref | ANSI, ANSI Export and Japanese Specs Options: | |
| 701 | 0256113 | Ref | 110V/60Hz GFI Receptacle | 4 |
| 701 | 0257175 | Ref | 220V Receptacle | 4 |
| 701 | 0256201 | Ref | Australian, Brazilian and Latin America Specs (110V/50Hz) | 3 |
| 701 | | Ref | CE Spec Options Only: | |
| 701 | 0256201 | Ref | 110V/50Hz Receptacle (No Plug) | 3 |
| 701 | 0273076 | Ref | 110V/50Hz Receptacle (See TURNTABLE SECTION for Components) | |
| 701 | 0273078 | Ref | CE Germany Specs (See TURNTABLE SECTION for Components) | |
| 701 | 1001100390 | Ref | 220V with CEE 7 Post Ground Receptacle and Plug and Circuit Breaker (2x4 Box) (With Powermite Control Box) | E |
| 701 | 0275455 | Ref | 220V with CEE 7 Post Ground Receptacle and Plug and Circuit Breaker (2x4 Box) (Without Powermite Control Box) | E |
| 701 | 1001100391 | Ref | 220V with CEE 7 Side Ground Receptacle and Plug and Circuit Breaker (2x4 Box) (With Powermite Control Box) | E |
| 701 | 0275456 | Ref | 220V with CEE 7 Side Ground Receptacle and Plug and Circuit Breaker (2x4 Box) (Without Powermite Control Box) | E |
| 701 | 1001100392 | Ref | 220V with AFSINT 107 Keyed Ground Receptacle and Plug and Circuit Breaker (2x4 Box) (With Powermite Control Box) | D |
| 701 | 0275659 | Ref | 220V with AFSINT 107 Keyed Ground Receptacle and Plug and Circuit Breaker (2x4 Box) (Without Powermite Control Box) | D |
| 701 | 1001100393 | Ref | 110V with IEC Yellow Receptacle and Plug and Circuit Breaker (With Powermite Control Box) | C |
| 701 | 0275235 | Ref | 110V with IEC Yellow Receptacle and Plug and Circuit Breaker (Without Powermite Control Box) | E |
| 701 | 1001100394 | Ref | 220V with IEC Blue Receptacle and Plug and Circuit Breaker (With Powermite Control Box) | D |
| 701 | 0275254 | Ref | 220V with IEC Blue Receptacle and Plug and Circuit Breaker (Without Powermite Control Box) | E |
| 701 | 1001100395 | Ref | 220V with CEE 7 Post Ground Receptacle and Plug and Circuit Breaker (70mm x 70mm Box) (With Powermite Control Box) | D |
| 701 | 0275237 | Ref | 220V with CEE 7 Post Ground Receptacle and Plug and Circuit Breaker (70mm x 70mm Box) (Without Powermite Control Box) | E |
| 701 | 1001100396 | Ref | 220V with CEE 7 Side Ground Receptacle and Plug and Circuit Breaker (70mm x 70mm Box) (With Powermite Control Box) | D |
| 701 | 0275253 | Ref | 220V with CEE 7 Side Ground Receptacle and Plug and | E |

| ITEM | PART NUMBER | QTY | DESCRIPTION | REV |
|---|---|---|---|---|
| | | | Circuit Breaker (70mm x 70mm Box) (Without Powermite Control Box) | |
| 701A | | Ref | Box, Switch Options: | |
| 701A | 0860038 | 1 | 0256113 & 0257175 Installations | |
| 701A | See Note | NLA | 0256201 Installation (Note: Not Available - Purchase Locally.) | |
| 701A | 0861731 | 1 | 0275455, 0275456, 0275659, 1001100390, 1001100391 & 1001100392 Installations | |
| 701A | 0861781 | 1 | 0275235, 0275254, 1001100393 & 1001100394 Installations | |
| 701A | 0861782 | NLA | 0275237, 0275253, 1001100395 & 1001100396 Installations (Note: Use p/n 1001100344 CEE 7 Side Ground Service Kit or p/n 1001100343 CEE 7 Post Ground Service Kit. Kit includes Box p/n 1001141967 and items 701B, 701C & 701E.) | |
| 701A | 1001141967 | 1 | 1001100343, 1001100344, 1001141970 & 1001141971 Kits | |
| 701B | | Ref | Receptacle Options: | |
| 701B | 4460346 | 1 | 0256113 Installation | |
| 701B | 4460125 | 1 | 0257175 Installation | |
| 701B | See Note | 1 | 0256201 Installation (Note: Not Available - Purchase Locally.) | |
| 701B | 4461244 | 1 | 0275455 & 1001100390 Installations | |
| 701B | 4461245 | 1 | 0275456 & 1001100391 Installations | |
| 701B | 4461246 | 1 | 0275659 & 1001100392 Installations | |
| 701B | 4461198 | 1 | 0275235 & 1001100393 Installations | |
| 701B | 4461201 | 1 | 0275254 & 1001100394 Installations | |
| 701B | 4461204 | NLA | 0275237 & 1001100395 Installations (Use p/n 1001100343) | |
| 701B | 4461207 | NLA | 0275253 & 1001100396 Installations (Use p/n 1001100344) | |
| 701B | 1001141968 | 1 | 1001100343 & 1001141971 Kits | |
| 701B | 1001141969 | 1 | 1001100344 & 1001141970 Kits | |
| 701C | | Ref | Shield, Cover Options: | |
| 701C | 4060700 | 1 | 0256113 Installation | |
| 701C | 4060092 | 1 | 0257175 Installation | |
| 701C | See Note | NLA | 0256201 Installation (Note: Not Available - Purchase Locally.) | |
| 701C | 4461244 | 1 | 0275455 & 1001100390 Installations | |
| 701C | 4461245 | 1 | 0275456 & 1001100391 Installations | |
| 701C | 4461246 | 1 | 0275659 & 1001100392 Installations | |
| 701C | 4461198 | 1 | 0275235 & 1001100393 Installations | |
| 701C | 4461201 | 1 | 0275254 & 1001100394 Installations | |
| 701C | 4461204 | NLA | 0275237 & 1001100395 Installations (Use p/n 1001100343) | |
| 701C | 4461207 | NLA | 0275253 & 1001100396 Installations (Use p/n 1001100344) | |
| 701C | 1001141968 | 1 | 1001100343 & 1001141971 Kits | |
| 701C | 1001141969 | 1 | 1001100344 & 1001141970 Kits | |
| 701D | | Ref | Connector, Strain Relief Options: | |
| 701D | 4460071 | 1 | 0256113 & 0257175 Installations | |
| 701D | See Note | NLA | 0256201 Installations (Note: Not Available - Purchase Locally.) | |
| 701D | 4460968 | 1 | 0275455, 0275456, 0275659, 0275235, 0275254, 0275237, 0275253, 1001100390, 1001100391, | |

| ITEM | PART NUMBER | QTY | DESCRIPTION | REV |
|---|---|---|---|---|
| | | | 1001100392, 1001100393, 1001100394, 1001100395 & 1001100396 Installations | |
| 701E | | Ref | Plug, Male Options: | |
| 701E | 4460205 | 1 | 0256113 Installation | |
| 701E | 4460233 | 1 | 0257175 Installation | |
| 701E | See Note | NLA | 0256201 Installation (Note: Not Available - Purchase Locally.) | |
| 701E | 4461202 | 1 | 0275455 & 0275237 Installations & 1001100343 & 1001141971 Kits | |
| 701E | 4461205 | 1 | 0275456 & 0275253 Installation & 1001100344 & 1001141970 Kits | |
| 701E | 4461249 | 1 | 0275659 Installation | |
| 701E | 4461196 | 1 | 0275235 Installation | |
| 701E | 4461199 | 1 | 0275254 Installation | |
| 701E | Not Required | 0 | 1001100390, 1001100391, 1001100392, 1001100393, 1001100394, 1001100395 & 1001100396 Installations | |
| 701F | | Ref | Hardware Options: | |
| 701F | 0641405 | AR | Bolt 1/4in - 20NC x 5/8in | |
| 701F | 0641407 | AR | Bolt 1/4in - 20NC x 7/8in | |
| 701F | 0641416 | AR | Bolt 1/4in - 20NC x 2in | |
| 701F | 0700408 | AR | Screw M4 x 16mm | |
| 701F | 3290405 | AR | Locknut M4 | |
| 701F | 3311405 | AR | Locknut 1/4in - 20NC | |
| 701F | 4711400 | AR | Flatwasher 1/4in Thin | |
| 701F | 4811400 | AR | Flatwasher M4 | |
| 701F | 0100011 | AR | Compound, Locking | |
| 701G | | Ref | Bracket, Receptacle Box Mounting Options: | |
| 701G | Not Required | 0 | 0256113, 0257175 & 0256201 Installations | |
| 701G | 0903484 | 1 | 0275455, 0275456, 0275659, 0275235, 0275254, 0275237, 0275253, 1001100390, 1001100391, 1001100392, 1001100393, 1001100394, 1001100395 & 1001100396 Installations | |
| 701H | | Ref | Bracket, Circuit Breaker Mounting Options: | |
| 701H | Not Required | 0 | 0256113, 0257175 & 0256201 Installations | |
| 701H | 0903611 | 1 | 0275455, 0275456, 0275659, 0275235, 0275254, 0275237, 0275253, 1001100390, 1001100391, 1001100392, 1001100393, 1001100394, 1001100395 & 1001100396 Installations **(SN 0300128000 through 0300171768)** | |
| 701H | 1001154592 | 1 | 0275455, 0275456, 0275659, 0275235, 0275254, 0275237, 0275253, 1001100390, 1001100391, 1001100392, 1001100393, 1001100394, 1001100395 & 1001100396 Installations **(SN 0300171768 through 0300174703)** | |
| 701J | | Ref | Kit, Box and Breaker (Required Only on CE Spec Installations Except 0256201 Installation): | |
| 701J | 1001109554 | AR | Kit (With Powermite Generator Control Box) | B |
| 701J | 1001096070 | AR | Kit (Without Powermite Generator Control Box) | D |
| 701J | | Ref | Circuit Breaker Options: | |
| 701J | 1001109477 | 1 | Breaker 10A | |
| 701J | 1001109475 | 1 | Breaker 16A | |
| 701J | 1001109482 | 1 | Breaker 30mA | |
| 701J | 0861880 | 1 | Breaker Box | |
| 701J | 4460956 | 1 | Terminal Block | |
| 701J | 4460957 | 1 | Terminal Block | |

| ITEM | PART NUMBER | QTY | DESCRIPTION | REV |
|---|---|---|---|---|
| 701K | 1001097150 | 2 | Connector, Strain Relief Options (Required Only on CE Spec Installations Except 0256201 Installation): | |
| 701L | 1060908 | 12 ft/3.6m | Cable, Extension (Required Only on CE Spec Installations Except 0256201 Installation): | |
| 701M | | Ref | Gasket, Cover Options: | |
| 701M | 3960422 | 1 | 0256113 & 0257175 Installations | |
| 701M | Not Required | 0 | 0256113, 0257175, 0256201, 0275455, 0275456, 0275659, 0275235, 0275254, 0275237 & 0275253 Installations | |
| 701N | 1320149 | 1 | Clamp, Hose | |
| 701P | 0275452 | | Receptacle Box Kit (220V CEE 7 Post Ground) (Not Shown) (Includes Items 701A, 701B, 701C & 701E) (0275455 Installation) | 1 |
| 701P | 1001100345 | | Receptacle Box Kit (220V CEE 7 Post Ground) (Not Shown) (Includes Items 701A, 701B, 701C & 701E) (1001100390 Installation) | 2 |
| 701P | 0275453 | | Receptacle Box Kit (220V CEE 7 Side Ground) (Not Shown) (Includes Items 701A, 701B, 701C & 701E) (0275456 Installation) | 1 |
| 701P | 1001100347 | | Receptacle Box Kit (220V CEE 7 Side Ground) (Not Shown) (Includes Items 701A, 701B, 701C & 701E) (1001100391 Installation) | 3 |
| 701P | 0275454 | | Receptacle Box Kit (220V AFSINT 107 Keyed Ground) (Not Shown) (Includes Items 701A, 701B, 701C & 701E) (0275659 Installation) | 1 |
| 701P | 1001100346 | | Receptacle Box Kit (220V AFSINT 107 Keyed Ground) (Not Shown) (Includes Items 701A, 701B, 701C & 701E) (1001100392 Installation) | 2 |
| 701P | 0275216 | | Receptacle Box Kit (110V IEC Yellow) (Not Shown) (Includes Items 701A, 701B, 701C & 701E) (0275235 Installation) | 1 |
| 701P | 1001100341 | | Receptacle Box Kit (110V IEC Yellow) (Not Shown) (Includes Items 701A, 701B, 701C & 701E) (1001100393 Installation) | 2 |
| 701P | 0275217 | | Receptacle Box Kit (220V IEC Blue) (Not Shown) (Includes Items 701A, 701B, 701C & 701E) (0275254 Installation) | 1 |
| 701P | 1001100342 | | Receptacle Box Kit (220V IEC Blue) (Not Shown) (Includes Items 701A, 701B, 701C & 701E) (1001100394 Installation) | 2 |
| 701P | 0275218 | NLA | Receptacle Box Kit (220V CEE 7 Post Ground) (Not Shown) (Includes Items 701A, 701B, 701C & 701E) (0275237 Installation) (Use p/n 1001100343) | B |
| 701P | 1001091971 | NLA | Receptacle Box Kit (220V CEE 7 Post Ground) (Not Shown) (Includes Items 701A, 701B, 701C & 701E) (1001100395 Installation) (Use p/n 1001100343) | C |
| 701P | 0275219 | NLA | Receptacle Box Kit (220V CEE 7 Side Ground) (Not Shown) (Includes Items 701A, 701B, 701C & 701E) (0275253 Installation) (Use p/n 1001100344) | B-B |
| 701P | 1001091970 | NLA | Receptacle Box Kit (220V CEE 7 Side Ground) (Not Shown) (Includes Items 701A, 701B, 701C & 701E) (1001100396 Installation) (use p/n 1001100344) | C |
| 702 | | Ref | 2500W Generator Electrical Components | |
| 702 | 4933300 | AR | 110V/60Hz | 2-A |
| 702 | 4933300 | AR | 110V/50Hz (Available on ANSI Export, Australian and CE Specs) **(SN 0300128000 through 0300132849)** | 2-A |
| 702 | 4933287 | AR | 110V/50Hz Only (Available on CE Spec - UK Only) (Not Shown) **(SN 0300128000 through 0300132849)** | 1-A |
| 702 | 4933284 | AR | 110V/50Hz Only (Available on CE Spec - Germany Only) (Not Shown) **(SN 0300128000 through 0300132849)** | 1-A |

| ITEM | PART NUMBER | QTY | DESCRIPTION | REV |
|---|---|---|---|---|
| 702 | 1001100027 | AR | 110V/50Hz (All Specs) **(SN 0300132803 through 0300174703)** | E |
| 702 | 4933300 | AR | 220V/50Hz **(SN 0300128000 through 0300132849)** | 2-A |
| 702 | 1001100027 | AR | 220V/50Hz **(SN 0300132803 through 0300174703)** | E |
| 702 | 3990010 | 1 | Diode - 6 Amp (Not Shown) | |
| 702A | 4922641 | 1 | Harness - On/Off Switch | 1-A |
| 702B | 4460226 | 2 | Socket, Female | |
| 702C | 4922970 | 1 | Powermite Control Box to Relay Harness | 1-A |
| 702D | 4460375 | 1 | Connector, Relay | |
| 702D | 4460374 | 4 | Terminal, Relay | |
| 702E | 4460961 | 1 | Connector, Female - 4 Position | |
| 702E | 4460705 | 4 | Pin, Male | |
| 702F | 4460321 | 1 | Connector, Male - 4 Position | |
| 702F | 4460906 | 4 | Socket, Female | |
| 702G | 7020193 | 1 | 2500W Generator Power Cable | |
| 703 | | Ref | 2500W Generator to Rear of Boom Harness Options: | |
| | | Ref | **Note: Harness used to connect AC at platform harness to 2500W generator receptacle to power platform receptacle.** | |
| 703 | 4921827 | 1 | ANSI and ANSI Export Specs | 1 |
| 703 | 4921956 | 1 | Australian and CE Spec | 1 |
| 703 | | Ref | Cable, Electrical - 12/3 Options: | |
| 703 | 1060494 | 20 ft/6.1m | ANSI and ANSI Export Specs | |
| 703 | 1060461 | 20 ft/6.1m | Australian and CE Spec | |
| 703A | | Ref | Plug, Male Options: | |
| 703A | 4460205 | 1 | ANSI and ANSI Export Specs | |
| 703A | See Note | NLA | Australian and CE Spec (Note: Not Available - Purchase Locally.) | |
| 703B | | Ref | Receptacle, Female Options: | |
| 703B | 4460134 | 1 | ANSI and ANSI Export Specs | |
| 703B | See Note | 1 | Australian and CE Spec (Note: Not Available - Purchase Locally.) | |
| 704 | | Ref | 7500W SKYPOWER GENERATOR INSTALLATION | |
| 704 | 0273540 | Ref | 60Hz and Caterpillar Engine | I |
| 704 | 0272255 | Ref | 60Hz and Deutz Engine | K |
| 704 | 0273541 | Ref | 50Hz Spec and Caterpillar Engine | I |
| 704 | 0272492 | Ref | 50Hz Spec and Deutz Engine Note: SkyPower Generator is Standard On ANSI and CSA Specs. Optional on All Other Specs. | J |
| 704A | | Ref | Receptacle, Female Twist-Lock Options: | |
| 704A | 4460958 | 1 | 60Hz Spec | |
| 704A | See Note | NLA | 50Hz Spec (Note: Not Available - Purchase Locally.) | |
| 704B | | Ref | Gasket Options: | |
| 704B | 3960422 | 2 | 60Hz Spec | |
| 704B | See Note | NLA | 50Hz Spec (Note: Not Available - Purchase Locally.) | |
| 704C | | Ref | Cover, Receptacle Options: | |
| 704C | 4060700 | 1 | 60Hz Spec | |
| 704C | See Note | NLA | 50Hz Spec (Note: Not Available - Purchase Locally.) | |
| 704D | | Ref | Cover, Receptacle Options: | |
| 704D | 4061043 | 1 | 60Hz Spec | |
| 704D | See Note | NLA | 50Hz Spec (Note: Not Available - Purchase Locally.) | |
| 704E | | Ref | Receptacle Options: | |
| 704E | 4460346 | 1 | 60Hz Spec | |
| 704E | See Note | NLA | 50Hz Spec (Note: Not Available - Purchase Locally.) | |

| ITEM | PART NUMBER | QTY | DESCRIPTION | REV |
|---|---|---|---|---|
| 704F | 4460051 | 1 | Connector, Strain Relief | |
| 704G | 4460071 | 1 | Connector, Strain Relief | |
| 704H | 4922925 | 1 | Harness, Generator | |
| 704J | See Note | NSS | Plug, Male - 6 Position (Note: Use Item 704H) | |
| 704J | See Note | NSS | Socket, Female (Note: Use Item 704H) | |
| 704K | 4460225 | 1 | Plug, Male - 6 Position | |
| 704K | 4460226 | 6 | Socket, Female | |
| 705 | | Ref | 7500W SkyPower Generator Junction Box Components | |
| 705 | 0861542 | Ref | 60Hz Spec | C |
| 705 | 0861567 | Ref | 50Hz Specs | B |
| 705A | | Ref | Cable, Electrical 12/3 | |
| 705A | 1060494 | 2 ft/.6m | 60Hz Spec | |
| 705A | See Note | 2 ft/.6m | 50Hz Spec (Note: Not Available - Purchase Locally.) | |
| 705B | | Ref | Cable, Electrical 10/3 | |
| 705B | 1060708 | 2.5 ft /.8m | 60Hz Spec | |
| 705B | See Note | 2.5 ft /.8m | 50Hz Spec (Note: Not Available - Purchase Locally.) | |
| 705C | 1060343 | 1.5 ft /.5m | Cable, Electrical 10/4 (60Hz Spec Only) | |
| 705D | 4460425 | 2 | Connector, Strain Relief | |
| 705E | 4460426 | 2 | Connector, Strain Relief | |
| 705F | 1671092 | 1 | Cover (60Hz Spec Only) | |
| 705F | 4460963 | 1 | Connector (60Hz Spec Only) | |
| 706 | 4933264 | Ref | 7500W Generator Electrical Diagram Components | C |
| 706A | 4922757 | 1 | Generator Harness | 3-C |
| 706B | 4460374 | 2 | Plug, Sealed Relay | |
| 706B | 4460375 | 7 | Terminal | |
| 706C | 4460967 | 1 | Plug, Male - 3 Position | |
| 706C | 4460465 | 3 | Socket, Female | |
| 706D | 2400060 | 1 | Fuseholder (Not Shown) | |
| 706D | 2400064 | 1 | Fuse - 5 Amp (Not Shown) | |
| 706E | 4922641 | 1 | Switch Harness | |
| 706F | 4460226 | 2 | Socket, Female | |
| 707 | 0257887 | 1 | Alarm Harness (Includes Alarm) | |
| 707A | 4460424 | 1 | Connector, Female - 2 Position | |
| 707A | 4460268 | 2 | Socket, Female | |
| 708 | 0272507 | 1 | Strobe Light Harness (Includes Strobe Light) | B |
| 708A | 4460320 | 1 | Plug, Male - 2 Position | |
| 708A | 4460267 | 2 | Pin, Male | |
| 709 | See Note | 1 | Headlight and Taillight Harness (Note: Not Available for Purchase.) | |
| 709 | 1060341 | 37 ft /11.3m | Cable, Electrical 16/2 | |
| 709A | 3740049 | 1 | Relay | |
| 709A | 4460259 | 3 | Terminal | |
| 709A | 4460260 | 4 | Housing, Terminal | |
| 709A | 4460297 | 1 | Terminal | |
| 709A | 4922643 | 1 | Lights Harness for Ground Control Box | 1-A |
| 709A | 4460226 | 2 | Socket, Female | |
| 710 | See Note | 1 | Work Lights Harness Components (Note: Not Available for Purchase.) | |
| 710A | 4922888 | 1 | Harness, Electric 12/3 (Aux Relay to Console Box) | |
| 710B | See Note | NSS | Work Light Harness (Note: Supplied with Work Light) | |
| 710C | 4460426 | 1 | Connector, Strain Relief | |

| ITEM | PART NUMBER | QTY | DESCRIPTION | REV |
|---|---|---|---|---|
| 710D | 2400066 | 1 | Fuseholder | |
| 710D | 2400070 | 1 | Fuse 20 Amp | |
| | | Ref | **TOOLS** | |
| | 7002821 | 1 | Crimper (For Wire to Pin/Socket Connections) (Not Shown) | |
| | 7002823 | 1 | Extractor (For Removal of Pin/Socket from Connectors) (Not Shown) | |
| | 4460467 | 1 | Extractor, Pin (Blue 16-18 Gauge) (For Removal of Pin/Socket from Connectors) (Not Shown) | |
| | 4460510 | 1 | Extractor, Pin (Yellow 12-14 Gauge) (For Removal of Pin/Socket from Connectors) (Not Shown) | |
| | 7002828 | 1 | Stripper, Wire (Not Shown) | |
| 801 | 2901443 | 1 | Analyzer/Cable Kit | |
| 801A | 1600244 | 1 | Analyzer | |
| 801B | 1060633 | 1 | Cable, Analyzer | |
| 801C | 4460321 | 2 | Plug, Male - 4 Position | |
| 801C | 4460226 | 8 | Socket, Female | |

## FIGURE 7-5. HARNESS COMPONENTS INSTALLATION (WITH UGM)

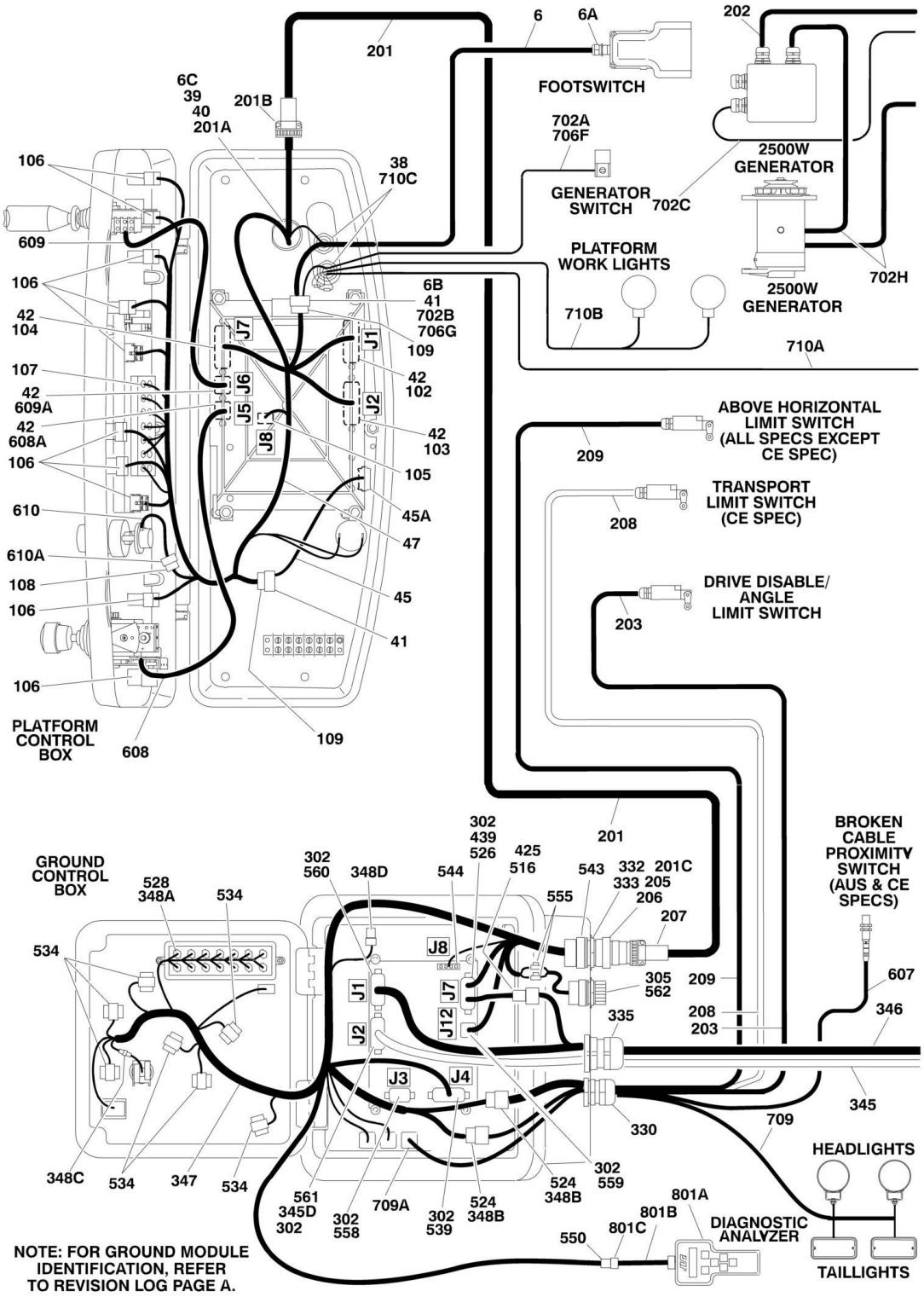

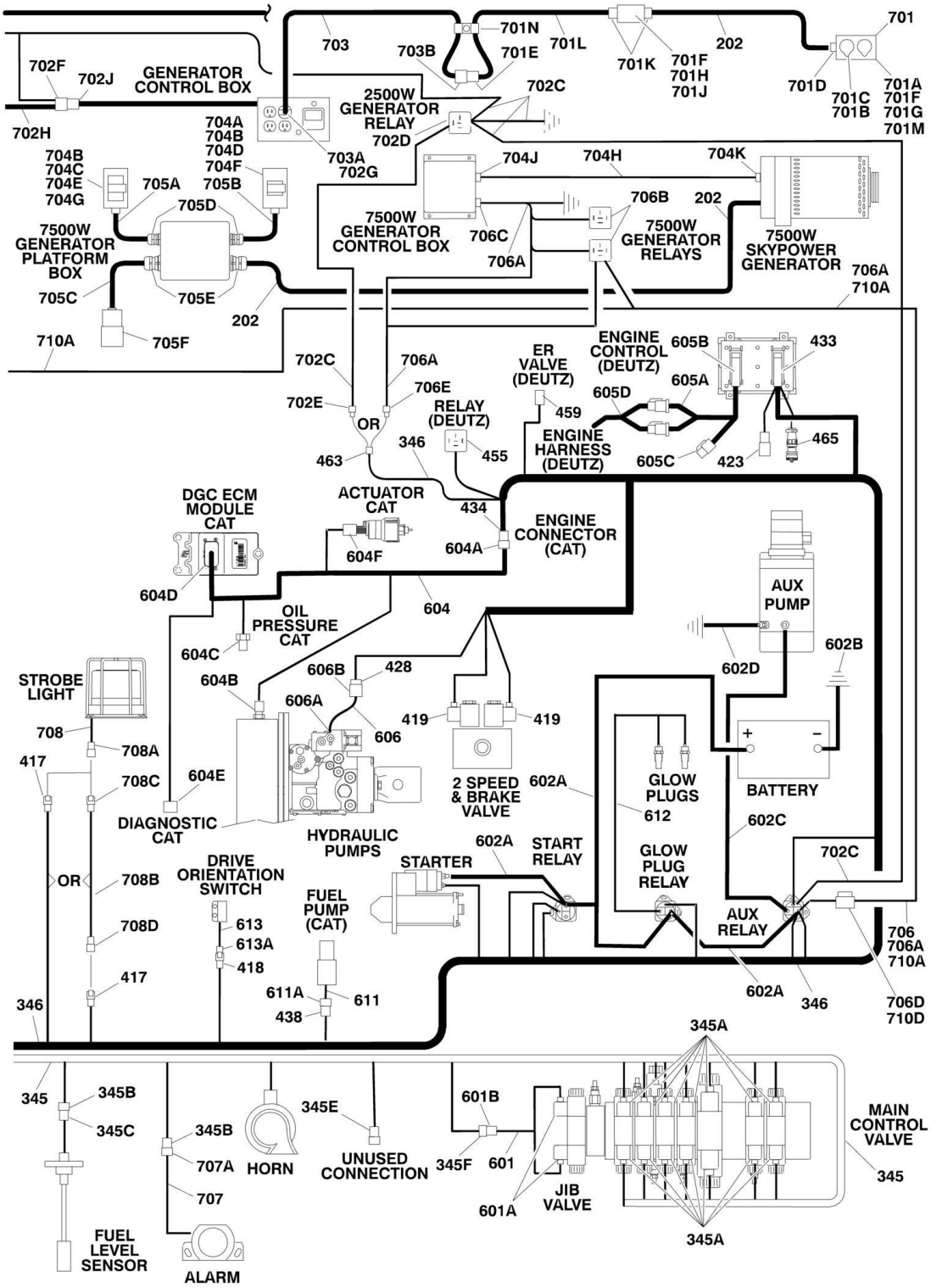
GENERATOR CONTROL BOX
702F
702J
702H
703
703B
701N
701E
701L
701K
701F
701H
701J
202
701
701D
701C
701B
701A
701F
701G
701M
2500W GENERATOR RELAY
702C
702D
704A
704B
704D
704F
703A
702G
704B
704C
704E
704G
705A
705B
705D
704J
704H
704K
706B
202
7500W GENERATOR CONTROL BOX
706C
706A
7500W GENERATOR RELAYS
7500W SKYPOWER GENERATOR
706A
710A
7500W GENERATOR PLATFORM BOX
705C
705E
202
710A
705F
702C
706A
706E
702E
OR
463
346
RELAY (DEUTZ)
455
ER VALVE (DEUTZ)
459
ENGINE CONTROL (DEUTZ)
605B
433
605A
605D
ENGINE HARNESS (DEUTZ)
605C
423
465
DGC ECM MODULE CAT
ACTUATOR CAT
434
ENGINE CONNECTOR (CAT)
604F
604A
604D
604
OIL PRESSURE CAT
604C
AUX PUMP
602B
602D
STROBE LIGHT
604B
606B
428
606A
606
419
419
708
708A
417
708C
604E
2 SPEED & BRAKE VALVE
602A
GLOW PLUGS
612
BATTERY
DIAGNOSTIC CAT
HYDRAULIC PUMPS
602C
602A
START RELAY
GLOW PLUG RELAY
702C
OR
708B
DRIVE ORIENTATION SWITCH
STARTER
FUEL PUMP (CAT)
AUX RELAY
708D
613
613A
418
706
706A
710A
417
611A
611
438
602A
346
706D
710D
346
345A
345
345B
345C
345B
707A
707
HORN
345E
UNUSED CONNECTION
601B
345F
601
601A
JIB VALVE
345A
MAIN CONTROL VALVE
345
FUEL LEVEL SENSOR
ALARM

## FIGURE 7-5. HARNESS COMPONENTS INSTALLATION (WITH UGM)

| ITEM | PART NUMBER | QTY | DESCRIPTION | REV |
|---|---|---|---|---|
| | | Ref | **Note: For Ground Module Identification, refer to Revision Log page A.** | |
| | | Ref | **HARNESS COMPONENTS INSTALLATION** | |
| | 1001108821 | Ref | **PLATFORM CONSOLE BOX COMPONENTS** | D |
| 6 | 0272970 | 1 | Harness, Footswitch (Includes Footswitch) | A |
| 6 | 1060918 | 7 ft/2.1m | Cable, Electrical - 18/3 | |
| 6A | 4460071 | 1 | Connector, Strain Relief | |
| 6B | 4460226 | 2 | Socket, Female | |
| 6C | 4460464 | 1 | Pin, Male Deutsch | |
| 38 | 4460428 | 2 | Connector, Strain Relief | |
| 39 | 4460470 | 1 | Nut, Terminal | |
| 40 | 4460471 | 1 | Lockwasher, Terminal | |
| 41 | 4460708 | 2 | Receptacle, Female - 15 Position | |
| 42 | 4460905 | 5 | Seal, Plug | |
| 45 | 4922666 | 1 | Harness, Analyzer Cable | 1-A |
| 45 | 4460226 | 4 | Socket, Female (Not Shown - Located at J2) | |
| 45A | 4460761 | 1 | Connector, Female - 4 Position | |
| 45A | 4460227 | 4 | Pin, Male | |
| 47 | 1001107753 | 1 | Harness, Platform Box (See Items 101-109 For Breakdown) | |
| | 1001107753 | Ref | **PLATFORM BOX HARNESS ASSEMBLY** | D |
| 101 | 4460866 | 1 | Connector - 19 Position | |
| 101 | 4460464 | 7 | Pin, Male 16 Ga | |
| 101 | 4460508 | 3 | Pin, Male 12 Ga | |
| 102 | 4460874 | 1 | Connector - 35 Position (Natural) | |
| 102 | 4460871 | 23 | Socket, Female | |
| 103 | 4460875 | 1 | Connector - 35 Position (Gray) | |
| 103 | 4460871 | 19 | Socket, Female | |
| 104 | 4460873 | 1 | Connector - 35 Position (Black) | |
| 104 | 4460871 | 25 | Socket, Female | |
| 105 | 4460879 | 1 | Connector, Male - 2 Position | |
| 105 | 4460887 | 2 | Terminal (12 Gauge) | |
| 106 | 4460418 | 9 | Connector, Female - 6 Position | |
| 106 | 4460419 | 27 | Socket, Female | |
| 107 | 4120035 | 13 | Base, Light | |
| 107 | 4460634 | 13 | Terminal | |
| 107 | 4460635 | 13 | Terminal | |
| 107 | 2920129 | 13 | Bulb, Light | |
| 108 | 4460225 | 1 | Plug, Male - 6 Position | |
| 108 | 4460227 | 5 | Pin, Male | |
| 109 | 4460434 | 2 | Plug, Male - 15 Position | |
| 109 | 4460227 | 28 | Pin, Male | |
| | | Ref | **BOOM CABLES INSTALLATION** | |
| | | Ref | **Boom Cables Installation 600SC:** | |
| | | Ref | **ANSI and ANSI Export Specs** | |
| | 0272042 | Ref | **Without SkyPower and without Arctic Package** | 3 |
| | 0274592 | Ref | **With SkyPower and without Arctic Package** | 1 |
| | 1001104427 | Ref | **Without SkyPower and with Arctic Package** | 1 |
| | 1001104429 | Ref | **With SkyPower and with Arctic Package** | 1 |
| | | Ref | **CE and Australian Specs** | |
| | 0272045 | Ref | **Without SkyPower** | 3 |

| ITEM | PART NUMBER | QTY | DESCRIPTION | REV |
|---|---|---|---|---|
| | 0274593 | Ref | **With SkyPower** | 1 |
| | | Ref | **Boom Cables Installation 660SJC:** | |
| | | Ref | **ANSI and ANSI Export Specs** | |
| | 0272043 | Ref | **Without SkyPower and without Arctic Package** | 2 |
| | 0274594 | Ref | **With SkyPower and without Arctic Package** | 1 |
| | 1001104428 | Ref | **Without SkyPower and with Arctic Package** | 1 |
| | 1001104430 | Ref | **With SkyPower and with Arctic Package** | 1 |
| | | Ref | **CE and Australian Specs** | |
| | 0272046 | Ref | **Without SkyPower** | 2 |
| | 0274595 | Ref | **With SkyPower** | 1 |
| 201 | | Ref | Harness, Boom (12/4 -18/8) Options: | |
| 201 | 4922468 | 1 | Harness, Boom (12/4 -18/8) 600SC without Arctic Package | 2-B |
| 201 | 4923657 | 1 | Harness, Boom (12/4 -18/8) 600SC with Arctic Package | 1 |
| 201 | 4922467 | 1 | Harness, Boom (12/4 -18/8) 660SJC without Arctic Package | 2-B |
| 201 | 4923657 | 1 | Harness, Boom (12/4 -18/8) 660SJC with Arctic Package | 1 |
| 201 | | Ref | Cable, Electrical - 12/4 & 18/8 | |
| 201 | 1060896 | 67 ft /20.4m | 4922468 Harness (600SC without Arctic Package) | |
| 201 | 4923462 | 67 ft /20.4m | 4923657 Harness (600SC with Arctic Package) | |
| 201 | 4923462 | 75 ft /22.9m | 4922467 Harness (600SC with Arctic Package) | |
| 201 | 2820118 | 8 in/18cm | Heat Shrink | |
| 201A | 4460465 | 11 | Socket, Female 18 Gauge | |
| 201A | 4460865 | 1 | Connector - 19 Position | |
| 201A | 4460509 | 4 | Socket, Female 12 Gauge | |
| 201A | 4460466 | 4 | Seal, Plug | |
| 201B | 4460473 | 1 | Clamp, Cable | |
| 201C | 4460465 | 11 | Socket, Female 18 Gauge | |
| 201C | 4460509 | 4 | Socket, Female 12 Gauge | |
| 202 | | Ref | Cable, Electrical (To Receptacle Box) Options: | |
| 202 | 4922889 | 1 | Cable, Electrical (To Receptacle Box) 600SC ANSI and ANSI Export Specs without SkyPower and without Arctic Package (12/3 Cable 70ft/21.2m Length) | |
| 202 | 4923660 | 1 | Cable, Electrical (To Receptacle Box) 600SC ANSI and ANSI Export Specs without SkyPower and with Arctic Package (12/3 Cable 70ft/21.2m Length) | |
| 202 | 4922884 | 1 | Cable, Electrical (To Receptacle Box) 600SC CE and Australian Specs without SkyPower (12/3 Cable 70ft/21.2m Length) | |
| 202 | 4922792 | 1 | Cable, Electrical (To Receptacle Box) 600SC All Specs with SkyPower (8/5 Cable 83ft/25.3m) | |
| 202 | 4922888 | 1 | Cable, Electrical (To Receptacle Box) 660SJC ANSI and ANSI Export Specs without SkyPower and without Arctic Package (12/3 Cable 77ft/23.5m Length) | |
| 202 | 4923510 | 1 | Cable, Electrical (To Receptacle Box) 660SJC ANSI and ANSI Export Specs without SkyPower and with Arctic Package (12/3 Cable 70ft/21.2m Length) | |
| 202 | 4922886 | 1 | Cable, Electrical (To Receptacle Box) 660SJC CE and Australian Specs without SkyPower (12/3 Cable 77ft/23.5m Length) | |
| 202 | 4922791 | 1 | Cable, Electrical (To Receptacle Box) 660SJC All Specs with SkyPower (8/5 Cable 90.5ft/27.6m) | |
| 203 | 1061045 | 1 | Cable, Electrical - 18/2 (To Drive Disable/Angle Switch) | |

| ITEM | PART NUMBER | QTY | DESCRIPTION | REV |
|---|---|---|---|---|
| | | | (15ft/4.6m Length) | |
| 204 | | Ref | Sleeve, Nylon Options (Not Shown - Used with Items 201 & 202): | |
| 204 | 4100026 | 10 ft/3m | Sleeve, Nylon 600SC | |
| 204 | Not Required | 0 | Sleeve, Nylon 660SJC | |
| 205 | 4460865 | 1 | Connector - 19 Position | |
| 206 | 4460466 | AR | Seal, Plug | |
| 207 | 4460473 | 2 | Clamp, Cable | |
| 208 | | Ref | Cable, Electrical - 18/3 (To Transport Switch) Options: | |
| 208 | 1061046 | 1 | Cable, Electrical - 18/3 (To Transport Switch) 600SC | |
| 208 | 1061047 | 1 | Cable, Electrical - 18/3 (To Transport Switch) 660SJC | |
| 209 | | Ref | Cable, Electrical - 18/3 (To Drive Disable/Capacity Length) Options: | |
| 209 | 1061047 | 1 | Cable, Electrical - 18/3 (To Drive Disable/Capacity Length) 600SC | |
| 209 | 1061046 | 1 | Cable, Electrical - 18/3 (To Drive Disable/Capacity Length) 660SJC | |
| | | Ref | **GROUND CONTROL BOX COMPONENTS** | |
| 302 | 0100048 | AR | Grease, Dielectric | |
| 305 | 1001106736 | 1 | Cap, Dust | |
| 330 | 4460426 | 1 | Connector, Strain Relief | |
| 332 | 4460470 | 1 | Nut, Terminal | |
| 333 | 4460471 | 1 | Washer, Terminal | |
| 335 | 4460526 | 1 | Connector, Strain Relief | |
| 345 | 4922513 | 1 | Valve Harness Assembly | 3-D |
| 345A | 4460880 | 15 | DIN Connector | |
| 345B | 4460320 | 2 | Plug, Male - 2 Position | |
| 345B | 4460267 | 4 | Pin, Male | |
| 345C | 4460424 | 1 | Connector, Female - 2 Position | |
| 345C | 4460268 | 2 | Socket, Female | |
| 345D | 4460871 | 28 | Socket, Female | |
| 345E | 4460326 | 1 | Plug, Male - 3 Position | |
| 345E | 4460267 | 1 | Pin, Male | |
| 345F | 4460445 | 1 | Connector, Female - 3 Position | |
| 345F | 4460268 | 3 | Socket, Female | |
| 346 | | Ref | Harness, Engine Options (See Items 401-465 for Breakdown): | |
| 346 | 1001108597 | 1 | Caterpillar Engine | |
| 346 | 1001108598 | 1 | Deutz Engine | |
| 347 | 1001108602 | 1 | Ground Control Box Harness Assembly (See Items 501-562 for Breakdown) | C |
| 347 | 3990010 | 2 | Diode - 6 Amp (Not Shown - Located at Power Down Relay) | |
| 348 | | Ref | Ground Control Box Wiring Diagram (Not Shown) | |
| 348 | 1001108600 | 1 | Caterpillar Engine | D |
| 348 | 1001108601 | 1 | Deutz Engine | C |
| 348A | 2920129 | AR | Bulb, Light | |
| 348B | 4460708 | 2 | Receptacle, Female - 15 Position | |
| 348B | 4460226 | 11 | Socket, Female | |
| 348B | 4922637 | 1 | Harness, Jumper (Not Shown) | |
| 348B | 4922636 | 1 | Harness, Jumper (Not Shown) | |
| 348C | 2400065 | 1 | Fuse, 30Amp | |
| 348C | 2400066 | 1 | Fuse, Holder with Cover | |
| 348D | 4460894 | 1 | Plug, Male - 6 Position | |

| ITEM | PART NUMBER | QTY | DESCRIPTION | REV |
|---|---|---|---|---|
| 348D | 4460892 | 1 | Receptacle, Female - 6 Position | |
| | | Ref | **ENGINE HARNESS ASSEMBLIES** | |
| | 1001108597 | Ref | **Caterpillar Engine Machines** | C |
| | 1001108598 | Ref | **Deutz Engine Machines** | A |
| 417 | 4460424 | 1 | Receptacle, Female - 2 Position | |
| 417 | 4460268 | 2 | Socket, Female | |
| 418 | 4460424 | 1 | Receptacle, Female - 2 Position | |
| 418 | 4460226 | 2 | Socket, Female | |
| 419 | 4460880 | 2 | DIN Connector without Diode | |
| 423 | 4461070 | 1 | Receptacle, Female With Resistor (3 Position) (Deutz Engine Only) | |
| 423 | 4461095 | 1 | Plug, Male - 3 Position (Deutz Engine Only) | |
| 423 | 4460944 | 3 | Socket, Female (Deutz Engine Only) | |
| 425 | 4460539 | 1 | Connector, Male - 3 Position | |
| 425 | 4460944 | 3 | Socket, Female | |
| 428 | 4460460 | 2 | Connector, Male - 4 Position | |
| 428 | 4460457 | 8 | Terminal, Female | |
| 428 | 4460458 | 8 | Seal, Terminal | |
| 433 | 4461052 | 1 | Connector, Receptacle - 25 Position (Deutz Engine Only) | |
| 433 | 4461005 | 5 | Terminal (Gold) (Deutz Engine Only) | |
| 433 | 4461006 | 5 | Seal, Terminal (Deutz Engine Only) | |
| 433 | 4461060 | 2 | Terminal (Tin) (Deutz Engine Only) | |
| 433 | 4461054 | 2 | Seal, Terminal (Deutz Engine Only) | |
| 433 | 4461053 | 1 | Cover, Plug (Deutz Engine Only) | |
| 433 | 4461008 | AR | Plug, Hole (Deutz Engine Only) | |
| 434 | 4460899 | 1 | Connector - 6 Position (Caterpillar Engines Only) | |
| 434 | 4460464 | 5 | Pin, Male (Caterpillar Engines Only) | |
| 434 | 4460466 | 1 | Seal, Plug (Caterpillar Engines Only) | |
| 438 | 4460891 | 1 | Plug, Male - 2 Position (Caterpillar Engines Only) | |
| 438 | 4460465 | 2 | Socket, Female (Caterpillar Engines Only) | |
| 439 | 4460871 | AR | Socket, Female | |
| 455 | 4460375 | 1 | Connector, Relay (Deutz Engines Only) | |
| 455 | 4460374 | 4 | Terminal, Relay (Deutz Engines Only) | |
| 459 | 1001102290 | 1 | Plug, Male - 2 Position (Deutz Engines Only) | |
| 459 | 1001102291 | 2 | Terminal (Deutz Engines Only) | |
| 459 | 1001102304 | 1 | Seal, Terminal (Deutz Engines Only) | |
| 463 | 4461157 | 1 | Receptacle, Female - 2 Position | |
| 463 | 4460979 | 2 | Pin, Male | |
| 463 | 4460458 | 2 | Seal, Terminal | |
| 465 | 2902443 | 1 | Kit, Receptacle (Deutz Engine Only) | |
| 465 | 4461071 | 8 | Terminal, Female (Gold) (Deutz Engine Only) | |
| 465 | 4461072 | 1 | Connector, Flange Mount (Deutz Engine Only) | |
| 465 | 4461073 | 1 | Connector, Dust Cap (Deutz Engine Only) | |
| 465 | 4461074 | 1 | Connector, Shell (Deutz Engine Only) | |
| | 1001108602 | Ref | **GROUND CONTROL HARNESS ASSEMBLY** | C |
| 516 | 4460536 | 1 | Connector, Female - 3 Position | |
| 516 | 4460943 | 3 | Pin, Male | |
| 521 | 3990010 | 2 | Diode - 6 Amp (Not Shown) | |
| 524 | 4460434 | 2 | Plug, Male 15 - Position | |
| 524 | 4460227 | 19 | Pin | |
| 526 | 4460873 | 1 | Plug, Male - 35 Position (Black) | |
| 526 | 4460871 | 17 | Socket, Female | |

| ITEM | PART NUMBER | QTY | DESCRIPTION | REV |
|---|---|---|---|---|
| 526 | 4460905 | 1 | Plug, Seal | |
| 528 | 4120035 | 6 | Base, Light | |
| 528 | 4460634 | 7 | Terminal (16 Gauge) | |
| 528 | 4460635 | 5 | Terminal (12 Gauge) | |
| 534 | 4460418 | 7 | Connector, Female - 6 Position | |
| 534 | 4460419 | 21 | Socket, Female | |
| 539 | 4460876 | 1 | Plug, Male - 35 Position (Blue) | |
| 539 | 4460871 | 24 | Socket, Female | |
| 539 | 4460905 | 1 | Plug, Seal | |
| 543 | 4460866 | 1 | Connector - 19 Position | |
| 543 | 4460464 | 7 | Pin, Male (16 Gauge) | |
| 543 | 4460508 | 3 | Pin, Male (12 Gauge) | |
| 544 | 4460878 | 1 | Housing, Terminal - 4 Position | |
| 544 | 4460887 | 3 | Terminal (12 Gauge) | |
| 550 | 4460761 | 1 | Connector, Female 4 - Position | |
| 550 | 4460227 | 4 | Pin, Male | |
| 555 | 8229242 | 2 | Fuse 5A | |
| 555 | 2400060 | 2 | Holder, Fuse | |
| 558 | 1001106339 | 1 | Connector, Male - 14 Position | |
| 558 | 4460871 | 2 | Socket, Female | |
| 558 | 4460905 | AR | Plug, Seal | |
| 559 | 1001106340 | 1 | Connector, Male - 14 Position | |
| 559 | 4460871 | 5 | Socket, Female | |
| 560 | 4460874 | 1 | Connector, Natural | |
| 560 | 4460871 | 10 | Socket, Female | |
| 560 | 4460905 | AR | Plug, Seal | |
| 561 | 4460875 | 1 | Connector, Gray | |
| 561 | 4460871 | 2 | Socket, Female | |
| 562 | 1001112612 | 1 | Connector - 9 Position | |
| 562 | 4460871 | 2 | Socket, Female | |
| | | Ref | **STANDARD HARNESS COMPONENTS** | |
| 601 | 4921927 | 1 | Jib Harness (660SJC Only) | 3-F |
| 601A | 4460499 | 2 | DIN Connector | |
| 601B | 4460326 | 1 | Plug, Male - 3 Position | |
| 601B | 4460267 | 3 | Pin, Male | |
| 602 | | Ref | Battery Cable Kit Options: | |
| 602 | 1001112763 | 1 | Caterpillar Engines Machines (2 Relays on Engine Tray) | A |
| 602 | 2902296 | 1 | Deutz Engines Machines (3 Relays on Engine Tray) | C |
| 602A | | Ref | Cable, Battery (Red) Options: | |
| 602A | 7027028 | 1 | Caterpillar Engines Machines | |
| 602A | 1001116240 | 1 | Deutz Engines Machines | |
| 602B | | Ref | Cable, Battery (Black) Options: | |
| 602B | 7027029 | 1 | Caterpillar Engines Machines | |
| 602B | 7027004 | 1 | Deutz Engines Machines | |
| 602C | 7027002 | 1 | Cable (Red) | |
| 602D | | Ref | Cable (Black) Options: | |
| 602D | 7027033 | 1 | Caterpillar Engines Machines | |
| 602D | 7027003 | 1 | Deutz Engines Machines | |
| 604 | 1001112071 | 1 | Caterpillar Engine Harness Components (Caterpillar Engine Machines Only) | B |
| 604 | | Ref | Fuse Box Components (Part of Harness - Not Shown): | |
| 604 | 70004316 | 1 | Relay (Starter) | |

| ITEM | PART NUMBER | QTY | DESCRIPTION | REV |
|---|---|---|---|---|
| 604 | 70004317 | 2 | Relay 25Amp (Shutoff & Glow Control) | |
| 604 | 70004318 | 1 | Fuse 5Amp | |
| 604 | 70004319 | 3 | Fuse 10Amp | |
| 604A | 4460894 | 1 | Plug, Male - 6 Position | |
| 604A | 4460465 | 5 | Socket, Female | |
| 604A | 4460466 | 1 | Seal, Plug | |
| 604B | 4460891 | 1 | Plug, Male - 2 Position | |
| 604B | 4460465 | 2 | Socket, Female | |
| 604C | 4460891 | 1 | Plug, Male - 2 Position | |
| 604C | 4460465 | 2 | Socket, Female | |
| 604D | 70020808 | 1 | Plug, Male - 23 Position | |
| 604D | 70020809 | 16 | Socket, Female | |
| 604E | See Note | NSS | Connector - 8 Position (Note: Not Available for Purchase.) | |
| 604F | See Note | NSS | Connector - 5 Position (Note: Not Available for Purchase.) | |
| 605 | See Note | Ref | Deutz Engine Harness Components (Deutz Engine Machines Only) (Note: Not Available for Purchase.) | |
| 605A | 7027796 | 1 | Deutz Engine Harness | |
| 605B | 4461052 | 1 | Receptacle, Female - 25 Position | |
| 605B | 4461053 | 1 | Cover, Receptacle | |
| 605B | 4461005 | 5 | Terminal | |
| 605B | 4461006 | 5 | Seal (Used with p/n 4461005) | |
| 605B | 4461060 | 2 | Terminal | |
| 605B | 4461054 | 2 | Seal (Used with p/n 4461060) | |
| 605B | 4461008 | 18 | Plug, Hole | |
| 605C | 7027793 | 1 | Plug-In, Connector | |
| 605D | 70001872 | 1 | Deutz Engine Harness (For other replacement parts refer to Deutz engine dealer) | |
| 606 | See Note | NSS | Pump Harness (Note: Not Available for Purchase.) | |
| 606A | 7007497 | 1 | Plug (Pump End) | |
| 606B | 7007498 | 1 | Plug (Engine Harness End) | |
| 607 | 4360506 | 1 | Broken Cable Proximity Switch Harness (Includes Switch) (Australian and CE Specs Only) | |
| 608 | See Note | NSS | Controller Harness Assembly (Lift and Swing) (Note: Not Available - Purchase Complete Controller) | |
| 608A | 7022819 | 1 | Plug, Male - 8 Position (Natural) | |
| 608A | 4460871 | 8 | Socket, Female | |
| 609 | See Note | NSS | Controller Harness Assembly (Drive and Steer) (Note: Not Available - Purchase Complete Controller) | |
| 609A | See Note | NSS | Connector, Female - 8 Position (Note: Use Item 609) | |
| 609A | 4460871 | 6 | Socket, Female | |
| 610 | See Note | NSS | Speed Control Harness (Note: Not Available - Purchase Complete Controller) | |
| 610A | 4460224 | 1 | Connector, Female - 6 Position | |
| 610A | 4460226 | 5 | Socket, Female | |
| 611 | See Note | NSS | Fuel Pump Harness (Caterpillar Engines Only) (Note: Not Available for Purchase.) | |
| 611A | 4460897 | 1 | Receptacle, Female -2 Position (Caterpillar Engines Only) | |
| 611A | 4460464 | 2 | Pin, Male (Caterpillar Engines Only) | |
| 612 | 4923379 | 1 | Harness, Glow Plug (Deutz Engine Machines Only) | |
| 613 | 4360517 | 1 | Switch, Proximity | |
| 613A | 4460320 | 1 | Connector - 2 Position | |
| 613A | 4460227 | 2 | Pin, Male | |
| | | Ref | **OPTIONAL HARNESS COMPONENTS** | |

| ITEM | PART NUMBER | QTY | DESCRIPTION | REV |
|---|---|---|---|---|
| 701 | | Ref | AC to Platform Receptacle Components Options: Note: For use with 2500W Generator Only. | |
| 701 | | Ref | ANSI, ANSI Export and Japanese Specs Options: | |
| 701 | 0256113 | Ref | 110V/60Hz GFI Receptacle | B |
| 701 | 0257175 | Ref | 220V Receptacle | B |
| 701 | 0256201 | Ref | Australian, Brazilian and Latin America Specs (110V/50Hz) | 3 |
| 701 | | Ref | CE Spec Options Only: | |
| 701 | 0256201 | Ref | 110V/50Hz Receptacle (No Plug) | B |
| 701 | 0273076 | Ref | 110V/50Hz Receptacle (See TURNTABLE SECTION for Components) | |
| 701 | 0273078 | Ref | CE Germany Specs (See TURNTABLE SECTION for Components) | |
| 701 | 1001100390 | Ref | 220V with CEE 7 Post Ground Receptacle and Plug and Circuit Breaker (2x4 Box) (With Powermite Control Box) | E |
| 701 | 0275455 | Ref | 220V with CEE 7 Post Ground Receptacle and Plug and Circuit Breaker (2x4 Box) (Without Powermite Control Box) | E |
| 701 | 1001100391 | Ref | 220V with CEE 7 Side Ground Receptacle and Plug and Circuit Breaker (2x4 Box) (With Powermite Control Box) | E |
| 701 | 0275456 | Ref | 220V with CEE 7 Side Ground Receptacle and Plug and Circuit Breaker (2x4 Box) (Without Powermite Control Box) | E |
| 701 | 1001100392 | Ref | 220V with AFSINT 107 Keyed Ground Receptacle and Plug and Circuit Breaker (2x4 Box) (With Powermite Control Box) | D |
| 701 | 0275659 | Ref | 220V with AFSINT 107 Keyed Ground Receptacle and Plug and Circuit Breaker (2x4 Box) (Without Powermite Control Box) | E |
| 701 | 1001100393 | Ref | 110V with IEC Yellow Receptacle and Plug and Circuit Breaker (With Powermite Control Box) | C |
| 701 | 0275235 | Ref | 110V with IEC Yellow Receptacle and Plug and Circuit Breaker (Without Powermite Control Box) | E |
| 701 | 1001100394 | Ref | 220V with IEC Blue Receptacle and Plug and Circuit Breaker (With Powermite Control Box) | D |
| 701 | 0275254 | Ref | 220V with IEC Blue Receptacle and Plug and Circuit Breaker (Without Powermite Control Box) | E |
| 701 | 1001100395 | Ref | 220V with CEE 7 Post Ground Receptacle and Plug and Circuit Breaker (70mm x 70mm Box) (With Powermite Control Box) | D |
| 701 | 0275237 | Ref | 220V with CEE 7 Post Ground Receptacle and Plug and Circuit Breaker (70mm x 70mm Box) (Without Powermite Control Box) | E |
| 701 | 1001100396 | Ref | 220V with CEE 7 Side Ground Receptacle and Plug and Circuit Breaker (70mm x 70mm Box) (With Powermite Control Box) | D |
| 701 | 0275253 | Ref | 220V with CEE 7 Side Ground Receptacle and Plug and Circuit Breaker (70mm x 70mm Box) (Without Powermite Control Box) | E |
| 701A | | Ref | Box, Switch Options: | |
| 701A | 0860038 | 1 | 0256113 & 0257175 Installations | |
| 701A | See Note | NLA | 0256201 Installation (Note: Not Available - Purchase Locally.) | |
| 701A | 0861731 | 1 | 0275455, 0275456, 0275659, 1001100390, 1001100391 & 1001100392 Installations | |
| 701A | 0861781 | 1 | 0275235, 0275254, 1001100393 & 1001100394 Installations | |
| 701A | 0861782 | NLA | 0275237, 0275253, 1001100395 & 1001100396 Installations (Note: Use p/n 1001100344 CEE 7 Side Ground Service Kit or p/n 1001100343 CEE 7 Post Ground Service Kit. Kit includes Box p/n 1001141967 and items 701B, 701C & 701E.) | |

| ITEM | PART NUMBER | QTY | DESCRIPTION | REV |
|---|---|---|---|---|
| 701B | | Ref | Receptacle Options: | |
| 701B | 4460346 | 1 | 0256113 Installation | |
| 701B | 4460125 | 1 | 0257175 Installation | |
| 701B | See Note | NLA | 0256201 Installation (Note: Not Available - Purchase Locally.) | |
| 701B | 4461244 | 1 | 0275455 & 1001100390 Installations | |
| 701B | 4461245 | 1 | 0275456 & 1001100391 Installations | |
| 701B | 4461246 | 1 | 0275659 & 1001100392 Installations | |
| 701B | 4461198 | 1 | 0275235 & 1001100393 Installations | |
| 701B | 4461201 | 1 | 0275254 & 1001100394 Installations | |
| 701B | 4461204 | NLA | 0275237 & 1001100395 Installations (Use p/n 1001100343) | |
| 701B | 4461207 | NLA | 0275253 & 1001100396 Installations (Use p/n 1001100344) | |
| 701B | 1001141968 | 1 | 1001100343 & 1001141971 Kits | |
| 701B | 1001141969 | 1 | 1001100344 & 1001141970 Kits | |
| 701C | | Ref | Shield, Cover Options: | |
| 701C | 4060700 | 1 | 0256113 Installation **(SN 0300128000 through 0300138248)** | |
| 701C | 1001110873 | 1 | 0256113 Installation **(SN 0300138249 through 0300174703)** | |
| 701C | 4060092 | 1 | 0257175 Installation | |
| 701C | See Note | NLA | 0256201 Installation (Note: Not Available - Purchase Locally.) | |
| 701C | 4461244 | 1 | 0275455 & 1001100390 Installations | |
| 701C | 4461245 | 1 | 0275456 & 1001100391 Installations | |
| 701C | 4461246 | 1 | 0275659 & 1001100392 Installations | |
| 701C | 4461198 | 1 | 0275235 & 1001100393 Installations | |
| 701C | 4461201 | 1 | 0275254 & 1001100394 Installations | |
| 701C | 4461204 | NLA | 0275237 & 1001100395 Installations (Use p/n 1001100343) | |
| 701C | 4461207 | NLA | 0275253 & 1001100396 Installations (Use p/n 1001100344) | |
| 701C | 1001141968 | 1 | 1001100343 & 1001141971 Kits | |
| 701C | 1001141969 | 1 | 1001100344 & 1001141970 Kits | |
| 701D | | Ref | Connector, Strain Relief Options: | |
| 701D | 4460071 | 1 | 0256113 & 0257175 Installations | |
| 701D | See Note | NLA | 0256201 Installations (Note: Not Available - Purchase Locally.) | |
| 701D | 4460968 | 1 | 0275455, 0275456, 0275659, 0275235, 0275254, 0275237, 0275253, 1001100390, 1001100391, 1001100392, 1001100393, 1001100394, 1001100395 & 1001100396 Installations | |
| 701E | | Ref | Plug, Male Options: | |
| 701E | 4460205 | 1 | 0256113 Installation | |
| 701E | 4460233 | 1 | 0257175 Installation | |
| 701E | See Note | NLA | 0256201 Installation (Note: Not Available - Purchase Locally.) | |
| 701E | 4461202 | 1 | 0275455 & 0275237 Installations & 1001100343 & 1001141971 Kits | |
| 701E | 4461205 | 1 | 0275456 & 0275253 Installation & 1001100344 & 1001141970 Kits | |
| 701E | 4461249 | 1 | 0275659 Installation | |
| 701E | 4461196 | 1 | 0275235 Installation | |
| 701E | 4461199 | 1 | 0275254 Installation | |

| ITEM | PART NUMBER | QTY | DESCRIPTION | REV |
|---|---|---|---|---|
| 701E | See Note | NLA | 1001100390, 1001100391, 1001100392, 1001100393, 1001100394, 1001100395 & 1001100396 Installations (Note: Not Available - Purchase Locally.) | |
| 701F | | Ref | Hardware Options: | |
| 701F | 0641405 | AR | Bolt 1/4in - 20NC x 5/8in | |
| 701F | 0641407 | AR | Bolt 1/4in - 20NC x 7/8in | |
| 701F | 0641416 | AR | Bolt 1/4in - 20NC x 2in | |
| 701F | 0700408 | AR | Screw M4 x 16mm | |
| 701F | 3290405 | AR | Locknut M4 | |
| 701F | 3311405 | AR | Locknut 1/4in - 20NC | |
| 701F | 4711400 | AR | Flatwasher 1/4in (Narrow) | |
| 701F | 4811400 | AR | Flatwasher M4 | |
| 701F | 0100011 | AR | Compound, Locking | |
| 701G | | Ref | Bracket, Receptacle Box Mounting Options: | |
| 701G | Not Required | 0 | 0256113, 0257175 & 0256201 Installations | |
| 701G | 0903484 | 1 | 0275455, 0275456, 0275659, 0275235, 0275254, 0275237, 0275253, 1001100390, 1001100391, 1001100392, 1001100393, 1001100394, 1001100395 & 1001100396 Installations | |
| 701H | | Ref | Bracket, Circuit Breaker Mounting Options: | |
| 701H | Not Required | 0 | 0256113, 0257175 & 0256201 Installations | |
| 701H | 0903611 | 1 | 0275455, 0275456, 0275659, 0275235, 0275254, 0275237, 0275253, 1001100390, 1001100391, 1001100392, 1001100393, 1001100394, 1001100395 & 1001100396 Installations **(SN 0300128000 through 0300171767)** | |
| 701H | 1001154592 | 1 | 0275455, 0275456, 0275659, 0275235, 0275254, 0275237, 0275253, 1001100390, 1001100391, 1001100392, 1001100393, 1001100394, 1001100395 & 1001100396 Installations **(SN 0300171768 through 0300174703)** | |
| 701J | | Ref | Kit, Box and Breaker (Required Only on CE Spec Installations Except 0256201 Installation): | |
| 701J | 1001109554 | AR | Kit (With Powermite Generator Control Box) | B |
| 701J | 1001096070 | AR | Kit (Without Powermite Generator Control Box) | D |
| 701J | | Ref | Circuit Breaker Options: | |
| 701J | 1001109477 | AR | Breaker 10A | |
| 701J | 1001109475 | AR | Breaker 16A | |
| 701J | 1001109482 | AR | Breaker 30mA | |
| 701J | 0861880 | 1 | Breaker Box | |
| 701J | 4460956 | 1 | Terminal Block | |
| 701J | 4460957 | 1 | Terminal Block | |
| 701K | 1001097150 | 2 | Connector, Strain Relief Options (Required Only on CE Spec Installations Except 0256201 Installation): | |
| 701L | 1060908 | 12 ft/3.6m | Cable, Extension (Required Only on CE Spec Installations Except 0256201 Installation) | |
| 701M | | Ref | Gasket, Cover Options: | |
| 701M | 3960422 | 1 | 0256113 & 0257175 Installations | |
| 701M | Not Required | 0 | 0256113, 0257175, 0256201, 0275455, 0275456, 0275659, 0275235, 0275254, 0275237 & 0275253 Installations | |
| 701N | 1320149 | 1 | Clamp, Hose | |
| 701P | 0275452 | | Receptacle Box Kit (220V CEE 7 Post Ground) (Not Shown) (Includes Items 701A, 701B, 701C & 701E) (0275455 Installation) | 1 |
| 701P | 1001100345 | | Receptacle Box Kit (220V CEE 7 Post Ground) (Not Shown) | 2 |

| ITEM | PART NUMBER | QTY | DESCRIPTION | REV |
|---|---|---|---|---|
| | | | (Includes Items 701A, 701B, 701C & 701E) (1001100390 Installation) | |
| 701P | 0275453 | | Receptacle Box Kit (220V CEE 7 Side Ground) (Not Shown) (Includes Items 701A, 701B, 701C & 701E) (0275456 Installation) | 1 |
| 701P | 1001100347 | | Receptacle Box Kit (220V CEE 7 Side Ground) (Not Shown) (Includes Items 701A, 701B, 701C & 701E) (1001100391 Installation) | 3 |
| 701P | 0275454 | | Receptacle Box Kit (220V AFSINT 107 Keyed Ground) (Not Shown) (Includes Items 701A, 701B, 701C & 701E) (0275659 Installation) | 1 |
| 701P | 1001100346 | | Receptacle Box Kit (220V AFSINT 107 Keyed Ground) (Not Shown) (Includes Items 701A, 701B, 701C & 701E) (1001100392 Installation) | 2 |
| 701P | 0275216 | | Receptacle Box Kit (110V IEC Yellow) (Not Shown) (Includes Items 701A, 701B, 701C & 701E) (0275235 Installation) | 1 |
| 701P | 1001100341 | | Receptacle Box Kit (110V IEC Yellow) (Not Shown) (Includes Items 701A, 701B, 701C & 701E) (1001100393 Installation) | 2 |
| 701P | 0275217 | | Receptacle Box Kit (220V IEC Blue) (Not Shown) (Includes Items 701A, 701B, 701C & 701E) (0275254 Installation) | 1 |
| 701P | 1001100342 | | Receptacle Box Kit (220V IEC Blue) (Not Shown) (Includes Items 701A, 701B, 701C & 701E) (1001100394 Installation) | 2 |
| 701P | 0275218 | NLA | Receptacle Box Kit (220V CEE 7 Post Ground) (Not Shown) (Includes Items 701A, 701B, 701C & 701E) (0275237 Installation) (Use p/n 1001100343) | B |
| 701P | 1001091971 | NLA | Receptacle Box Kit (220V CEE 7 Post Ground) (Not Shown) (Includes Items 701A, 701B, 701C & 701E) (1001100395 Installation) (use p/n 1001100343) | C |
| 701P | 0275219 | NLA | Receptacle Box Kit (220V CEE 7 Side Ground) (Not Shown) (Includes Items 701A, 701B, 701C & 701E) (0275253 Installation) (Use p/n 1001100344) | B |
| 701P | 1001091970 | NLA | Receptacle Box Kit (220V CEE 7 Side Ground) (Not Shown) (Includes Items 701A, 701B, 701C & 701E) (1001100396 Installation) (use p/n 1001100344) | C |
| 702 | | Ref | 2500W Generator Electrical Components | |
| 702 | 1001112743 | AR | 50Hz | B |
| 702 | 1001112588 | AR | 60Hz | A |
| 702A | 4922641 | 1 | Harness - On/Off Switch | A |
| 702B | 4460226 | 2 | Socket, Female | |
| 702C | 1001112589 | 1 | Harness, Powermite Control Box to Relay Options: | A |
| 702D | 4460374 | 1 | Connector, Seal Relay | |
| 702D | 4460705 | 4 | Terminal | |
| 702E | 4460742 | 1 | Connector, Male - 2 Position | |
| 702E | 4460743 | 2 | Socket, Female | |
| 702E | 4460458 | 2 | Seal | |
| 702F | 4460321 | 1 | Connector, Male - 4 Position (60Hz Only) | |
| 702F | 4460906 | 4 | Socket, Female (60Hz Only) | |
| 702G | 4460027 | 1 | Receptacle, Twist Lock (110V Only) | |
| 702H | 7020193 | 1 | Harness, Generator Power | |
| 702J | 4460961 | 1 | Connector, Female - 4 Position | |
| 702J | 4460705 | 4 | Pin, Male | |
| 703 | | Ref | 2500W Generator to Rear of Boom Harness Options: | |
| | | Ref | **Note: Harness used to connect AC at platform harness to 2500W generator receptacle to power platform receptacle.** | |
| 703 | 4921827 | 1 | ANSI and ANSI Export Specs | 1 |

| ITEM | PART NUMBER | QTY | DESCRIPTION | REV |
|---|---|---|---|---|
| 703 | 1060494 | 20 ft/6.1m | Cable, Electrical - 12/3 | |
| 703A | 4460205 | 1 | Plug, Male | |
| 703A | 4460027 | 1 | Receptacle, Twist Lock (110V Only) | |
| 703B | 4460134 | 1 | Receptacle, Female | |
| 704 | | Ref | 7500W SKYPOWER GENERATOR INSTALLATION | |
| 704 | 1001115398 | Ref | 60Hz and Caterpillar Engine | A |
| 704 | 1001115400 | Ref | 50Hz Spec and Caterpillar Engine | A |
| 704 | 1001115387 | Ref | 60Hz and Deutz Engine | A |
| 704 | 1001115389 | Ref | 50Hz Spec and Deutz Engine | A |
| | | Ref | **Note: SkyPower Generator is Standard On ANSI and CSA Specs. Optional on All Other Specs.** | |
| 704A | | Ref | Receptacle, Female Twist-Lock Options: | |
| 704A | 4460958 | 1 | 60Hz Spec | |
| 704A | See Note | NLA | 50Hz Spec (Note: Not Available - Purchase Locally.) | |
| 704B | | Ref | Gasket Options: | |
| 704B | 3960422 | 2 | 60Hz Spec | |
| 704B | See Note | NLA | 50Hz Spec (Note: Not Available - Purchase Locally.) | |
| 704C | | Ref | Cover, Receptacle Options: | |
| 704C | 1001110873 | 1 | 60Hz Spec | |
| 704C | See Note | NLA | 50Hz Spec (Note: Not Available - Purchase Locally.) | |
| 704D | | Ref | Cover, Receptacle Options: | |
| 704D | 1001110872 | 1 | 60Hz Spec | |
| 704D | See Note | NLA | 50Hz Spec (Note: Not Available - Purchase Locally.) | |
| 704E | | Ref | Receptacle Options: | |
| 704E | 4460346 | 1 | 60Hz Spec | |
| 704E | See Note | 1 | 50Hz Spec (Note: Not Available - Purchase Locally.) | |
| 704F | 4460051 | 1 | Connector, Strain Relief | |
| 704G | 4460071 | 1 | Connector, Strain Relief | |
| 704H | 4922925 | 1 | Harness, Generator | |
| 704J | See Note | 1 | Plug, Male - 6 Position (Note: Not Available for Purchase.) | |
| 704J | See Note | 6 | Socket, Female (Note: Not Available for Purchase.) | |
| 704K | 4460225 | 1 | Plug, Male - 6 Position | |
| 704K | 4460226 | 6 | Socket, Female | |
| 705 | | Ref | 7500W SkyPower Generator Junction Box Components | |
| 705 | 0861542 | Ref | 60Hz Spec | C |
| 705 | 0861567 | Ref | 50Hz Specs | B |
| 705A | | Ref | Cable, Electrical 12/3 | |
| 705A | 1060494 | 2 ft/.6m | 60Hz Spec | |
| 705A | See Note | 2 ft/.6m | 50Hz Spec (Note: Not Available - Purchase Locally.) | |
| 705B | | Ref | Cable, Electrical 10/3 | |
| 705B | 1060708 | 2.5 ft /.8m | 60Hz Spec | |
| 705B | See Note | 2.5 ft /.8m | 50Hz Spec (Note: Not Available - Purchase Locally.) | |
| 705C | 1060343 | 1.5 ft /.5m | Cable, Electrical 10/4 (60Hz Spec Only) | |
| 705D | 4460425 | 2 | Connector, Strain Relief | |
| 705E | 4460426 | 2 | Connector, Strain Relief | |
| 705F | 1671092 | 1 | Cover (60Hz Spec Only) | |
| 705F | 4460963 | 1 | Connector (60Hz Spec Only) | |
| 706 | 1001112586 | Ref | 7500W Generator Electrical Diagram Components | A |
| 706A | 1001112587 | 1 | Generator Harness | A |
| 706B | 4460374 | 2 | Plug, Sealed Relay | |
| 706B | 4460375 | 7 | Terminal | |
| 706C | 4460967 | 1 | Plug, Male - 3 Position | |

| ITEM | PART NUMBER | QTY | DESCRIPTION | REV |
|---|---|---|---|---|
| 706C | 4460465 | 3 | Socket, Female | |
| 706D | 2400060 | 1 | Fuseholder Options: | |
| 706D | 2400064 | 1 | Fuse - 5 Amp Options: | |
| 706E | 4460742 | 1 | Plug, Male - 2 Position | |
| 706E | 4460743 | 2 | Socket, Female | |
| 706F | 4922641 | 1 | Switch Harness | |
| 706G | 4460226 | 2 | Socket, Female | |
| 707 | 0257887 | 1 | Alarm Harness (Includes Alarm) | |
| 707A | 4460424 | 1 | Connector, Female - 2 Position | |
| 707A | 4460268 | 2 | Socket, Female | |
| 708 | | Ref | Strobe Light Harness Options (Includes Strobe Light): | |
| 708 | 0272507 | 1 | Strobe Light Harness **(SN 0300128000 through 0300171409)** | B |
| 708 | 2920161 | 1 | Strobe Light Harness **(SN 0300171410 through 0300174703)** | B |
| 708A | 4460320 | 1 | Plug, Male - 2 Position **(SN 0300128000 through 0300171409)** | |
| 708A | 4460267 | 2 | Pin, Male **(SN 0300128000 through 0300171410)** | |
| 708A | 4460891 | 1 | Plug, Male - 2 Position **(SN 0300171410 through 0300174703)** | |
| 708A | 4460465 | 2 | Socket, Female **(SN 0300171410 through 0300174703)** | |
| 708B | 1001149818 | 1 | Strobe Light Extension Harness Only **(SN 0300171410 through 0300174703)** | |
| 708C | 4460897 | 1 | Receptacle, Female -2 Position | |
| 708C | 4460464 | 2 | Pin, Male | |
| 708D | 4460320 | 2 | Plug, Male - 2 Position | |
| 708D | 4460267 | 4 | Pin, Male | |
| 709 | 4933219 | 1 | Headlight and Taillight Harness | C |
| 709 | 1060341 | 37 ft /11.3m | Cable, Electrical 16/2 | |
| 709A | 3740049 | 1 | Relay | |
| 709A | 4460259 | 3 | Terminal | |
| 709A | 4460260 | 4 | Housing, Terminal | |
| 709A | 4460297 | 1 | Terminal | |
| 709A | 4922643 | 1 | Lights Harness for Ground Control Box | 1-A |
| 709A | 4460226 | 2 | Socket, Female | |
| 710 | See Note | 1 | Work Lights Harness Components (Note: Not Available for Purchase.) | |
| 710A | 4922888 | 1 | Harness, Electric 12/3 (Aux Relay to Console Box) | |
| 710B | See Note | NSS | Work Light Harness (Supplied with Work Light) (Note: Not Available for Purchase.) | |
| 710C | 4460426 | 1 | Connector, Strain Relief | |
| 710D | 2400066 | 1 | Fuseholder | |
| 710D | 2400070 | 1 | Fuse 20 Amp | |
| | | Ref | **TOOLS** | |
| | 7002821 | 1 | Crimper (For Wire to Pin/Socket Connections) (Not Shown) | |
| | 7002823 | 1 | Extractor (For Removal of Pin/Socket from Connectors) (Not Shown) | |
| | 4460467 | 1 | Extractor, Pin (Blue 16-18 Gauge) (For Removal of Pin/Socket from Connectors) (Not Shown) | |
| | 4460510 | 1 | Extractor, Pin (Yellow 12-14 Gauge) (For Removal of Pin/Socket from Connectors) (Not Shown) | |
| | 7002828 | 1 | Stripper, Wire (Not Shown) | |
| 801 | 2901443 | 1 | Analyzer/Cable Kit | |
| 801A | 1600244 | 1 | Analyzer | |

| ITEM | PART NUMBER | QTY | DESCRIPTION | REV |
|---|---|---|---|---|
| 801B | 1060633 | 1 | Cable, Analyzer | |
| 801C | 4460321 | 2 | Plug, Male - 4 Position | |
| 801C | 4460226 | 8 | Socket, Female | |

# SECTION 8 - DECALS

## FIGURE 8-1. DECAL INSTALLATION (ANSI SPECS)

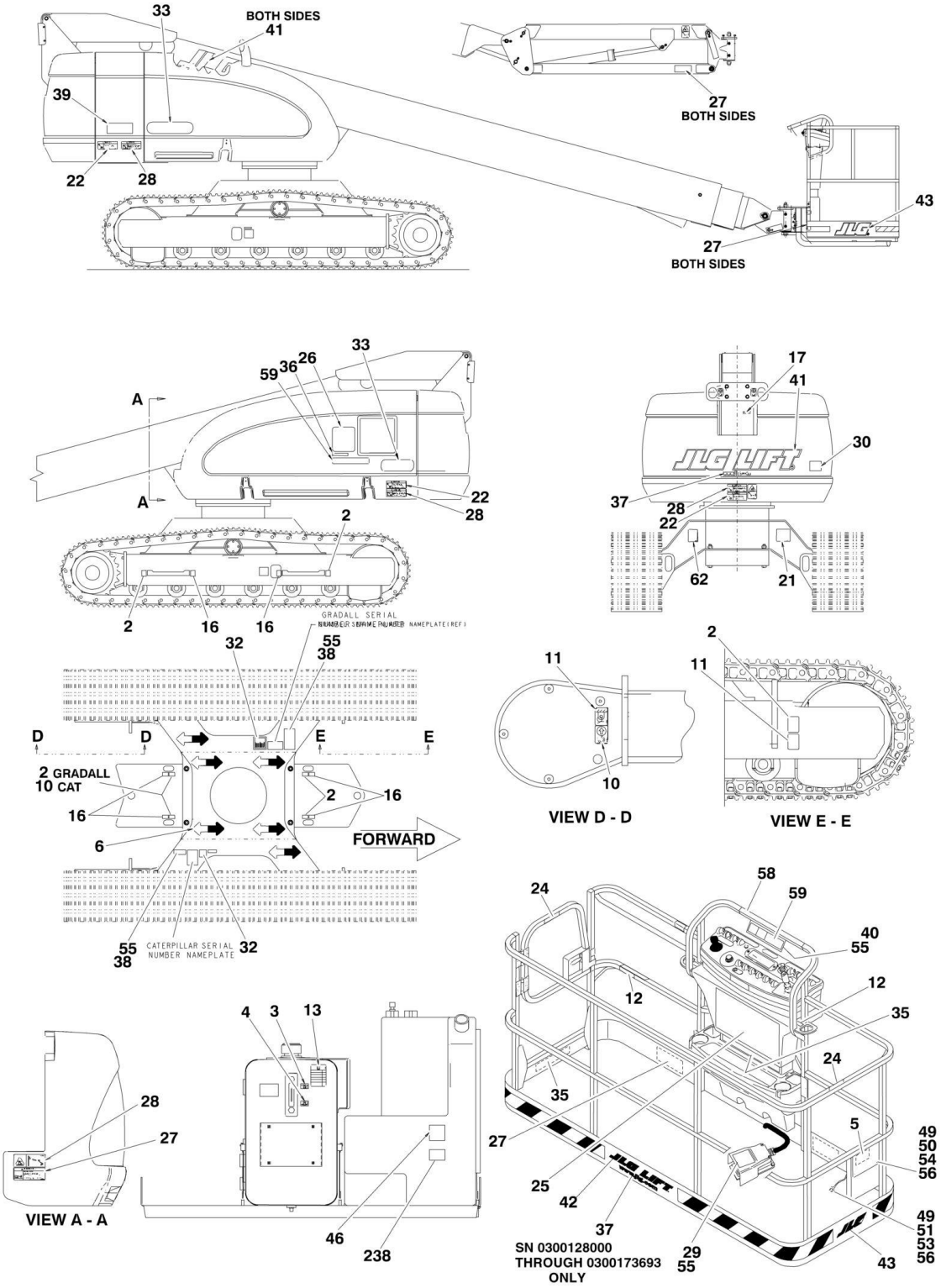

## FIGURE 8-1. DECAL INSTALLATION (ANSI SPECS)

| ITEM | PART NUMBER | QTY | DESCRIPTION | REV |
|---|---|---|---|---|
| | | Ref | **STANDARD DECAL INSTALLATIONS** | |
| | 0274093 | Ref | **JLG Logo Decals** | 2 |
| | 0273906 | Ref | **JLG Logo Decals 600SC** | B |
| | 0273908 | Ref | **JLG Logo Decals 660SJC** | B |
| 2 | 1701499 | 6 | Decal - No Lift Only **(SN 0300144413 through 0300174703)** | |
| 3 | 1701502 | 1 | Decal - High Oil Level Only **(SN 0300128000 through 0300133154)** | |
| 4 | 1701503 | 1 | Decal - Low Oil Level Only **(SN 0300128000 through 0300133154)** | |
| 5 | 1701509 | 1 | Decal - Manual | |
| 6 | 1701529 | 6 | Decal - Arrow | |
| 10 | 1703811 | 2 | Decal - Tie Down /Lift | |
| 11 | 1703814 | 4 | Decal - Danger/Electrocution | |
| 12 | 1704277 | AR | Decal - Attach Lanyard Here | |
| 13 | 1704412 | 1 | Decal - Hydraulic Oil | |
| 16 | 1704461 | 4 | Decal - No Tie Down **(SN 0300144413 through 0300174703)** | |
| 17 | | Ref | Nameplate Options: | |
| 17 | 3251243 | 1 | 120V-60Hz | |
| 17 | 3252507 | 1 | 220V-50/60Hz | |
| 21 | 1702153 | 1 | Decal - Inspection Only **(SN 0300128000 through 0300144413)** | |
| 22 | 1703953 | AR | Decal - Warning/Crushing | |
| 24 | 1702868 | 2 | Decal - No Hands | |
| 25 | 1703797 | 1 | Decal - Danger/Warning | |
| 26 | 1705336 | 1 | Decal - Warning Inspection | |
| 27 | 1703804 | AR | Decal - Warning Crushing | |
| 28 | 1703805 | 4 | Decal - Danger Electrocution | |
| 29 | 3252347 | 1 | Nameplate - Footswitch | |
| 30 | 3251813 | 1 | Decal - USA | |
| 32 | See Note | NSS | Decal - Bar Code (Note: Not Available for Purchase.) | |
| 33 | | Ref | Decal - Model Options: | |
| 33 | 1704434 | 2 | Decal - Model 600SC | |
| 33 | 1703165 | 2 | Decal - Model 660SJC | |
| 35 | | Ref | Decal - 500LBS Max Capacity Options: | |
| 35 | | Ref | Decal - 500LBS Max Capacity 600SC | |
| 35 | 1704096 | 2 | Decal - 500LBS Max Capacity **(SN 0300128000 through 0300148841)** | |
| 35 | 1001121800 | 2 | Decal - 500LBS Max Capacity **(SN 0300148842 through 0300174703)** | |
| 35 | | Ref | Decal - 500LBS Max Capacity 660SJC | |
| 35 | 1701645 | 2 | Decal - 500LBS Max Capacity **(SN 0300128000 through 0300148841)** | |
| 35 | 1001121801 | 2 | Decal - 500LBS Max Capacity **(SN 0300148842 through 0300174703)** | |
| 36 | | Ref | Decal - 500LBS Max Capacity Options: | |
| 36 | | Ref | Decal - 500LBS Max Capacity 600SC | |
| 36 | 1707014 | 1 | Decal - 500LBS Max Capacity **(SN 0300128000 through 0300148841)** | |
| 36 | 1001121813 | 1 | Decal - 500LBS Max Capacity **(SN 0300148842 through 0300174703)** | |
| 36 | | Ref | Decal - 500LBS Max Capacity 660SJC | |
| 36 | 1707013 | 1 | Decal - 500LBS Max Capacity **(SN 0300128000 through 0300148841)** | |

| ITEM | PART NUMBER | QTY | DESCRIPTION | REV |
|---|---|---|---|---|
| 36 | 1001121814 | 1 | Decal - 500LBS Max Capacity **(SN 0300148842 through 0300174703)** | |
| 37 | 1704885 | 2 | Decal - Website | |
| 38 | See Note | NSS | Nameplate - Serial Number (Note: Not Available for Purchase) | |
| 39 | 1705177 | 1 | Decal - Lifting Diagram | |
| 40 | 3572044 | 1 | Plate, Decal Mounting | |
| 41 | 1702861 | 3 | Decal - JLG Lift (8in) | |
| 42 | 1702774 | 1 | Decal - JLG Lift (3-1/2in) | |
| 43 | 1702773 | 2 | Decal - JLG (5in) | |
| 46 | 1701505 | 1 | Decal - Fuel | |
| 49 | 0100011 | AR | Compound, Locking | |
| 50 | 0641406 | 4 | Bolt 1/4in-20NC x 3/4in | |
| 51 | 0641408 | | Bolt 1/4in-20NC x 1in Only **(SN 0300128000 through 0300144061)** | |
| 52 | 0860520 | 1 | Box, Manual Storage | |
| 53 | 1060279 | 1 | Cable, Lanyard Only **(SN 0300128000 through 0300144061)** | |
| 54 | 3311405 | AR | Locknut 1/4in-20NC | |
| 55 | 3820001 | AR | Rivet | |
| 56 | 4751400 | AR | Flatwasher 1/4in Regular | |
| 57 | 1704468 | 1 | Decal - Motion Hazard | |
| 58 | | Ref | Decal - Legend Options: | |
| 58 | 1704502 | 1 | Decal - Legend **(SN 0300128000 through 0300144412)** | |
| 58 | 1001108494 | 1 | Decal - Legend **(SN 0300144413 through 0300174703)** | |
| 59 | 1706943 | 1 | Decal - Legend | |
| 62 | | Ref | Decal - Patent Options: | |
| 62 | 1700584 | 1 | Decal - Patent **(SN 0300128000 through 0300151929)** | |
| 62 | 1001131269 | 1 | Decal - Patent **(SN 0300151930 through 0300174703)** | |
| | | Ref | **ADDITIONAL DECALS** | |
| 238 | 1001108923 | 1 | Decal - EPA/Carb Fuel Specs **(SN 0300135010 through 0300174703)** | |

## FIGURE 8-2. DECAL INSTALLATION (ANSI EXPORT SPECS)

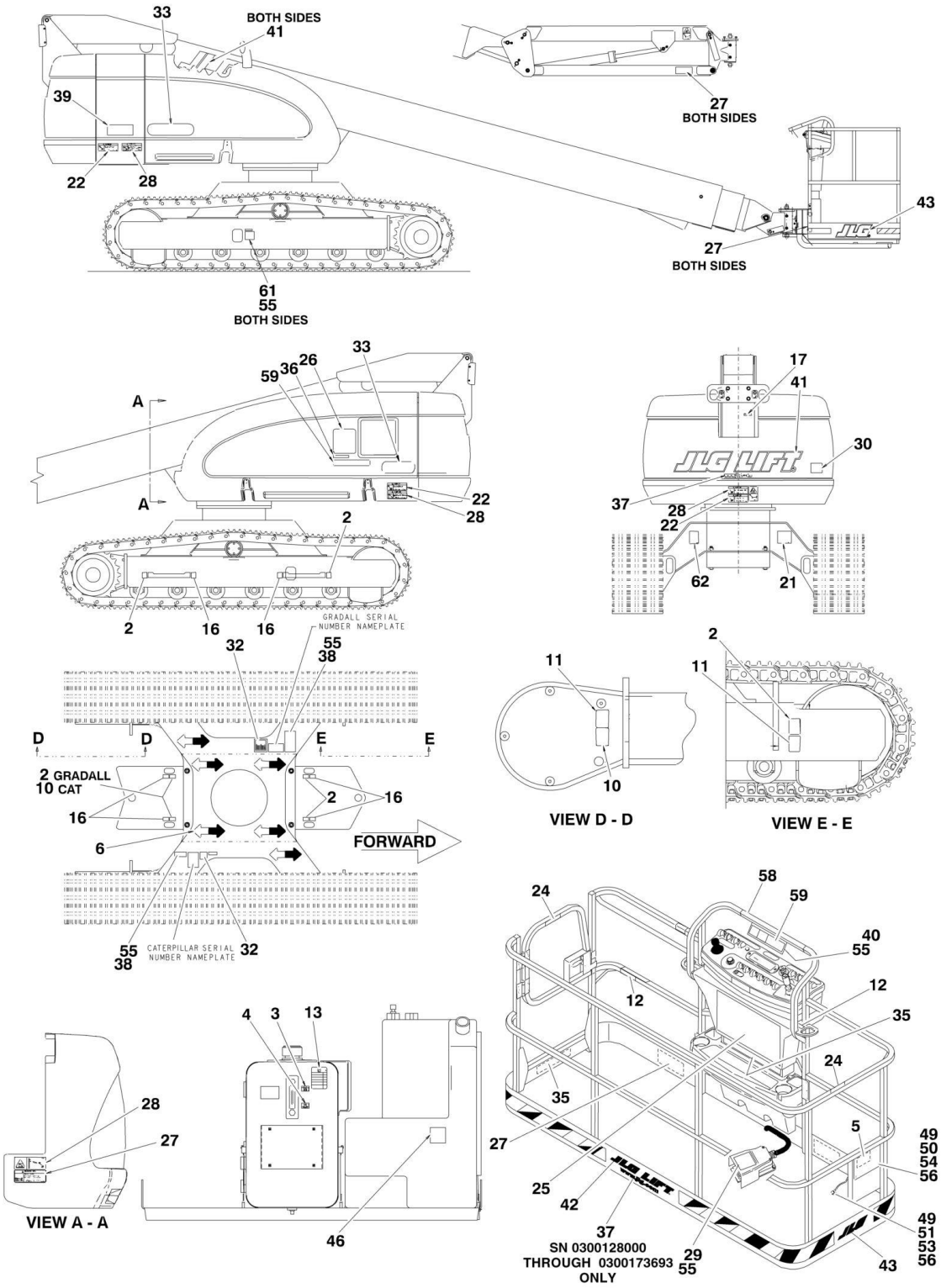

## FIGURE 8-2. DECAL INSTALLATION (ANSI EXPORT SPECS)

| ITEM | PART NUMBER | QTY | DESCRIPTION | REV |
|---|---|---|---|---|
| | | Ref | **DECAL INSTALLATIONS** | |
| | 0274093 | Ref | **JLG Logo Decals** | 2 |
| | 1001093424 | Ref | **JLG Logo Decals 600SC - Brazil Spec Decals (Portuguese/English)** | B |
| | 1001116970 | Ref | **JLG Logo Decals 600SC - Chinese Spec Decals (Simplified Chinese/English)** | B |
| | 1001116971 | Ref | **JLG Logo Decals 600SC - Chinese Spec Decals (Traditional Chinese/English)** | B |
| | 0273982 | Ref | **JLG Logo Decals 600SC - CSA Spec Decals (English/French)** | B |
| | 1001103292 | Ref | **JLG Logo Decals 660SJC - Brazil Spec Decals (Portuguese/English)** | 6 |
| | 0273984 | Ref | **JLG Logo Decals 660SJC - CSA Spec Decals (English/French)** | B |
| | 1001093554 | Ref | **Decal - High Pressure Cylinder 600SC - Brazil Spec Decals (Portuguese/English)** | 1 |
| | 1001094012 | Ref | **Decal - High Pressure Cylinder 600SC/660SJC - CSA Spec Decals (English/French)** | 1 |
| 2 | 1701499 | 6 | Decal - No Lift Only **(SN 0300144413 through 0300174703)** | |
| 3 | 1701502 | 1 | Decal - High Oil Level Only **(SN 0300128000 through 0300133154)** | |
| 4 | 1701503 | 1 | Decal - Low Oil Level Only **(SN 0300128000 through 0300133154)** | |
| 5 | 1701509 | 1 | Decal - Manual | |
| 6 | 1701529 | 6 | Decal - Arrow | |
| 10 | 1703811 | 2 | Decal - Tie Down /Lift | |
| 11 | 1703814 | 4 | Decal - Danger/Electrocution | |
| 12 | 1704277 | AR | Decal - Attach Lanyard Here | |
| 13 | 1704412 | 1 | Decal - Hydraulic Oil | |
| 16 | 1704461 | 4 | Decal - No Tie Down **(SN 0300144413 through 0300174703)** | |
| 17 | 3251243 | 1 | Nameplate - 120V-60Hz | |
| 21 | | Ref | Decal - Inspection Options: | |
| 21 | | Ref | Brazil Spec Decals (Portuguese/English) | |
| 21 | 1705901 | 1 | Brazil Spec Decals **(SN 0300128000 through 0300151929)** | |
| 21 | Not Required | 0 | Brazil Spec Decals **(SN 0300151930 through 0300174703)** | |
| 21 | Not Required | 0 | Chinese Spec Decals (Chinese/English) | |
| 21 | | Ref | CSA Spec Decals (English/French) | |
| 21 | 1704006 | 1 | CSA Spec Decals **(SN 0300128000 through 0300151929)** | |
| 21 | Not Required | 0 | CSA Spec Decals **(SN 0300151930 through 0300174703)** | |
| 22 | | Ref | Decal - Warning/Crushing Options: | |
| 22 | 1705903 | AR | Brazil Spec Decals (Portuguese/English) | |
| 22 | 1001116845 | AR | Chinese Spec Decals (Chinese-Simplified/English) | |
| 22 | 1703943 | AR | Chinese Spec Decals (Chinese-Traditional/English) | |
| 22 | 1703942 | AR | CSA Spec Decals (English/French) | |
| 24 | | Ref | Decal - No Hands Options: | |
| 24 | 1705967 | 2 | Brazil Spec Decals (Portuguese/English) | |
| 24 | 1705968 | 2 | Chinese Spec Decals (Chinese-Simplified/English) | |
| 24 | 1001116846 | 2 | Chinese Spec Decals (Chinese-Traditional/English) | |
| 24 | 1704000 | 2 | CSA Spec Decals (English/French) | |
| 25 | | Ref | Decal - Danger/Warning | |
| 25 | 1705895 | 1 | Brazil Spec Decals (Portuguese/English) | |
| 25 | 1001116847 | 1 | Chinese Spec Decals (Chinese-Simplified/English) | |
| 25 | 1703925 | 1 | Chinese Spec Decals (Chinese-Traditional/English) | |

| ITEM | PART NUMBER | QTY | DESCRIPTION | REV |
|---|---|---|---|---|
| 25 | 1703924 | 1 | CSA Spec Decals (English/French) | |
| 26 | | Ref | Decal - Warning Inspection Options: | |
| 26 | 1705896 | 1 | Brazil Spec Decals (Portuguese/English) | |
| 26 | 1001116848 | 1 | Chinese Spec Decals (Chinese-Simplified/English) | |
| 26 | 1001116849 | 1 | Chinese Spec Decals (Chinese-Traditional/English) | |
| 26 | 1705347 | 1 | CSA Spec Decals (English/French) | |
| 27 | | Ref | Decal - Warning/Crushing Options: | |
| 27 | 1705898 | AR | Brazil Spec Decals (Portuguese/English) | |
| 27 | 1001116850 | AR | Chinese Spec Decals (Chinese-Simplified/English) | |
| 27 | 1703949 | AR | Chinese Spec Decals (Chinese-Traditional/English) | |
| 27 | 1703948 | AR | CSA Spec Decals (English/French) | |
| 28 | | Ref | Decal - Electrocution Options: | |
| 28 | 1705897 | 5 | Brazil Spec Decals (Portuguese/English) | |
| 28 | 1703937 | 5 | Chinese Spec Decals (Chinese-Simplified/English) | |
| 28 | 1001116851 | 5 | Chinese Spec Decals (Chinese-Traditional/English) | |
| 28 | 1703936 | 5 | CSA Spec Decals (English/French) | |
| 29 | | Ref | Decal - Caution Options: | |
| 29 | 1705902 | 1 | Brazil Spec Decals (Portuguese/English) | |
| 29 | 1001116852 | 1 | Chinese Spec Decals (Chinese-Simplified/English) | |
| 29 | 1703982 | 1 | Chinese Spec Decals (Chinese-Traditional/English) | |
| 29 | 1703984 | 1 | CSA Spec Decals (English/French) | |
| 30 | 3251813 | 1 | Decal - USA | |
| 32 | See Note | NSS | Decal - Bar Code (Note: Not Available for Purchase.) | |
| 33 | | Ref | Decal - Model Options: | |
| 33 | 1704434 | 2 | Decal - Model 600SC | |
| 33 | 1703165 | 2 | Decal - Model 660SJC | |
| 35 | | Ref | Decal - Warning Options: | |
| 35 | | Ref | Decal - Warning **(SN 0300128000 through 0300148841)** | |
| 35 | 1706380 | 2 | Decal - Warning 600SC (Portuguese/English) | |
| 35 | 1704099 | 2 | Decal - Warning 600SC (English/French) | |
| 35 | 1001116853 | 2 | Decal - Warning 600SC(Chinese-Simplified/English) | |
| 35 | 1704101 | 2 | Decal - Warning 600SC (Chinese-Traditional/English) | |
| 35 | 1701645 | 2 | Decal - Warning 660SJC (Portuguese/English) | |
| 35 | 1707055 | 2 | Decal - Warning 660SJC (English/French) | |
| 35 | | Ref | Decal - Warning **(SN 0300148842 through 0300174703)** | |
| 35 | 1001121806 | 2 | Decal - Warning 600SC (Portuguese/English) | |
| 35 | 1001121802 | 2 | Decal - Warning 600SC (English/French) | |
| 35 | 1001121811 | 2 | Decal - Warning 600SC(Chinese-Simplified/English) | |
| 35 | 1001121809 | 2 | Decal - Warning 600SC (Chinese-Traditional/English) | |
| 35 | 1001121801 | 2 | Decal - Warning 660SJC (Portuguese/English) | |
| 35 | 1001121803 | 2 | Decal - Warning 660SJC (English/French) | |
| 36 | | Ref | Decal - 500Lbs Unrestricted Capacity | |
| 36 | | Ref | Decal - 500Lbs Unrestricted Capacity **(SN 0300128000 through 0300148841)** | |
| 36 | 1707051 | 1 | Decal - 500Lbs Unrestricted Capacity 600SC (Portuguese/English) | |
| 36 | 1707046 | 1 | Decal - 500Lbs Unrestricted Capacity 600SC (English/French) | |
| 36 | 1001116854 | 1 | Decal - 500Lbs Unrestricted Capacity 600SC(Chinese-Simplified/English) | |
| 36 | 1707045 | 1 | Decal - 500Lbs Unrestricted Capacity 600SC (Chinese-Traditional/English) | |
| 36 | 1707052 | 1 | Decal - 500Lbs Unrestricted Capacity 660SJC | |

| ITEM | PART NUMBER | QTY | DESCRIPTION | REV |
|---|---|---|---|---|
| | | | (Portuguese/English) | |
| 36 | 1707047 | 1 | Decal - 500Lbs Unrestricted Capacity 660SJC (English/French) | |
| 36 | | Ref | Decal - 500Lbs Unrestricted Capacity **(SN 0300148842 through 0300174703)** | |
| 36 | 1001121819 | 1 | Decal - 500Lbs Unrestricted Capacity 600SC (Portuguese/English) | |
| 36 | 1001121815 | 1 | Decal - 500Lbs Unrestricted Capacity 600SC (English/French) | |
| 36 | 1001121824 | 1 | Decal - 500Lbs Unrestricted Capacity 600SC(Chinese-Simplified/English) | |
| 36 | 1001121822 | 1 | Decal - 500Lbs Unrestricted Capacity 600SC (Chinese-Traditional/English) | |
| 36 | 1001121655 | 1 | Decal - 500Lbs Unrestricted Capacity 660SJC (Portuguese/English) | |
| 36 | 1001121816 | 1 | Decal - 500Lbs Unrestricted Capacity 660SJC (English/French) | |
| 37 | 1704885 | 2 | Decal - Website | |
| 38 | See Note | NSS | Nameplate - Serial Number (Note: Not Available for Purchase.) | |
| 39 | 1705177 | 1 | Decal - Lifting Diagram | |
| 40 | 1001093553 | 1 | Plate, Decal Mounting | |
| 41 | 1702861 | 1 | Decal - JLG Lift (8in) | |
| 42 | 1702774 | 1 | Decal - JLG Lift (3-1/2in) | |
| 43 | 1702773 | 2 | Decal - JLG (5in) | |
| 46 | 1701505 | 1 | Decal - Diesel Fuel | |
| 49 | 0100011 | AR | Compound, Locking | |
| 50 | 0641406 | 4 | Bolt 1/4in-20NC x 3/4in | |
| 51 | 0641408 | 1 | Bolt 1/4in-20NC x 1in | |
| 52 | 0860520 | 1 | Box, Manual Storage | |
| 53 | 1060279 | 1 | Cable, Lanyard | |
| 54 | 3311405 | 5 | Locknut 1/4in-20NC | |
| 55 | 3820001 | AR | Rivet | |
| 56 | 4751400 | 10 | Flatwasher 1/4in Regular | |
| 57 | | Ref | Decal - Motion Hazard Options: | |
| 57 | 1001093439 | 1 | Brazil Spec Decals (Portuguese/English) | |
| 57 | 1001116963 | 1 | Chinese Spec Decals (Chinese-Simplified/English) | |
| 57 | 1001116964 | 1 | Chinese Spec Decals (Chinese-Traditional/English) | |
| 57 | 1001093684 | 1 | CSA Spec Decals (English/French) | |
| 58 | | Ref | Decal - Legend Options: | |
| 58 | 1704502 | 1 | Decal - Legend **(SN 0300128000 through 0300144412)** | |
| 58 | 1001108494 | 1 | Decal - Legend **(SN 0300144413 through 0300174703)** | |
| 59 | 1706943 | 1 | Decal - Legend | |
| 61 | | Ref | Decal - Crawler Caution Options: | |
| 61 | 1001093555 | 2 | Brazil Spec Decals (Portuguese/English) | |
| 61 | Not Required | 0 | Chinese Spec Decals (Chinese/English) | |
| 61 | 1001094013 | 2 | CSA Spec Decals (English/French) | |
| 62 | | Ref | Decal - Patent Options: | |
| 62 | 1700584 | 1 | All Specs Except CSA | |
| 62 | 1700584 | 1 | CSA Spec **(SN 0300128000 through 0300151929)** | |
| 62 | 1001131269 | 1 | CSA Spec **(SN 0300151930 through 0300174703)** | |

## FIGURE 8-3. DECAL INSTALLATION (AUSTRALIAN AND CE SPECS)

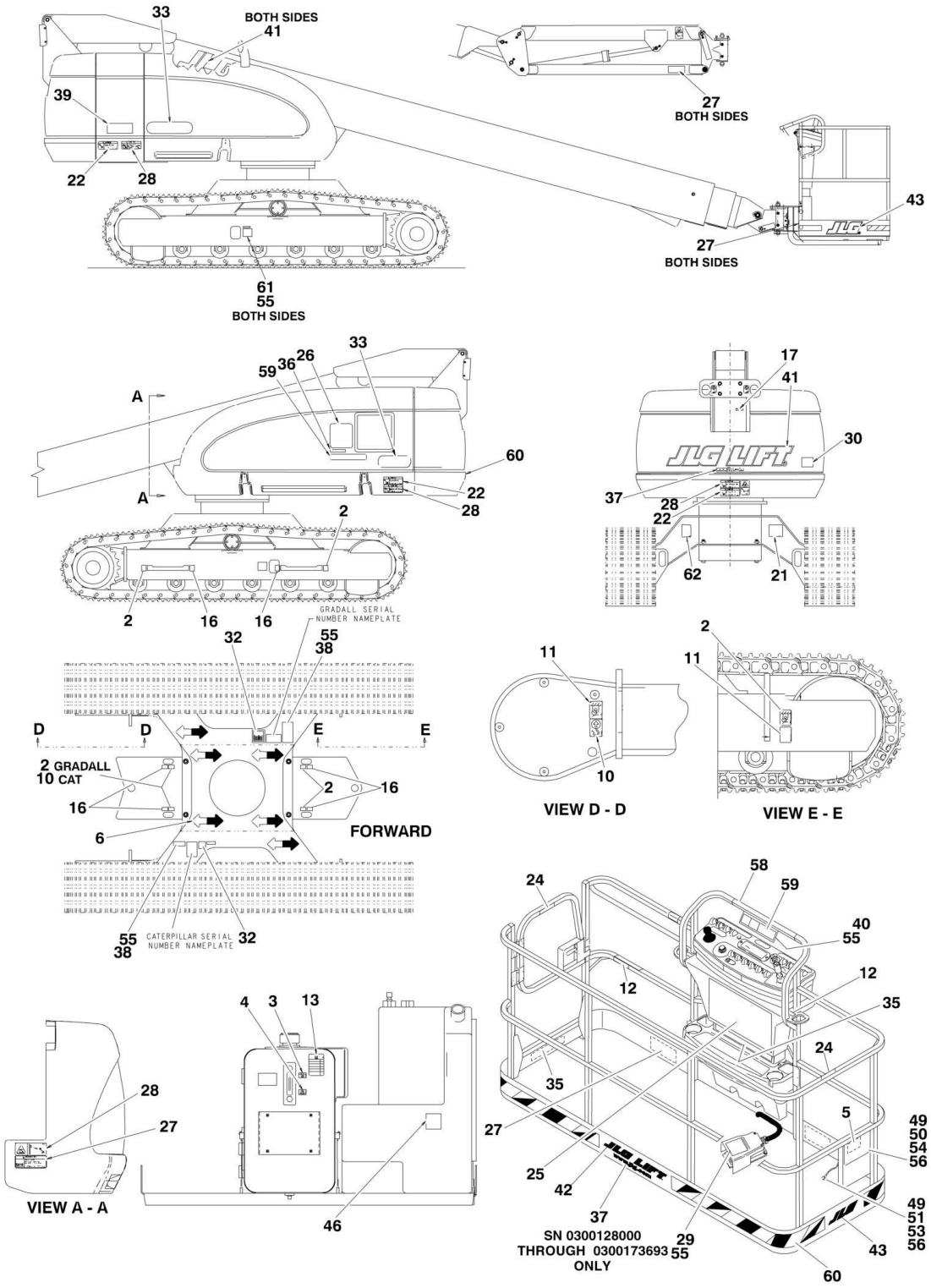

## FIGURE 8-3. DECAL INSTALLATION (AUSTRALIAN AND CE SPECS)

| ITEM | PART NUMBER | QTY | DESCRIPTION | REV |
|---|---|---|---|---|
| | | Ref | **DECAL INSTALLATIONS** | |
| | 0274093 | Ref | **JLG Logo Decals** | 2 |
| | 0273985 | Ref | **Australian/CE Spec 600SC** | B |
| | 0273987 | Ref | **Australian/CE Spec 660SJC** | B |
| | 0274006 | Ref | **Dutch Spec 600SC/660SJC** | 1 |
| | 0274008 | Ref | **French Spec 600SC/660SJC** | 1 |
| | 0274005 | Ref | **German Spec 600SC/660SJC** | 1 |
| | 0274007 | Ref | **Italian Spec 600SC/660SJC** | 1 |
| | 0274009 | Ref | **Spanish Spec 600SC/660SJC** | 1 |
| 2 | 1701499 | 6 | Decal - No Lift Only **(SN 0300144413 through 0300174703)** | |
| 3 | 1701502 | 1 | Decal - High Oil Level Only **(SN 0300128000 through 0300133154)** | |
| 4 | 1701503 | 1 | Decal - Low Oil Level Only **(SN 0300128000 through 0300133154)** | |
| 5 | 1701509 | 1 | Decal - Manual | |
| 6 | 1701529 | 6 | Decal - Arrow | |
| 10 | 1703811 | 2 | Decal - Tie Down /Lift | |
| 11 | 1703814 | 4 | Decal - Danger/Electrocution | |
| 12 | 1704277 | AR | Decal - Attach Lanyard Here | |
| 13 | 1704412 | 1 | Decal - Hydraulic Oil | |
| 16 | 1704461 | 4 | Decal - No Tie Down **(SN 0300144413 through 0300174703)** | |
| 17 | 3251243 | 1 | Nameplate - 120V-60Hz | |
| 25 | 1705921 | 1 | Decal - Tipping/Electrical | |
| 26 | 1705822 | 1 | Decal - Electrical/Safety Manual | |
| 27 | 1701518 | AR | Decal - Warning/Crushing | |
| 28 | 1705961 | 5 | Decal - Electrocution | |
| 29 | 1705828 | 1 | Decal - Footswitch | |
| 32 | See Note | NSS | Decal - Bar Code (Note: Not Available for Purchase.) | |
| 33 | | Ref | Decal - Model Options: | |
| | 1704434 | 2 | Decal - Model 600SC | |
| | 1703165 | 2 | Decal - Model 660SJC | |
| 35 | 1705978 | 1 | Decal - 230kg Capacity | |
| 36 | 1705978 | 1 | Decal - 230kg Capacity | |
| 37 | 1704885 | 2 | Decal - Website | |
| 38 | See Note | NSS | Nameplate - Serial Number (Note: Not Available for Purchase.) | |
| 39 | 1705177 | 1 | Decal - Lifting Diagram | |
| 40 | 3572044 | 1 | Plate, Decal Mounting | |
| 41 | 1702861 | 3 | Decal - JLG Lift (8in) | |
| 42 | 1702774 | 1 | Decal - JLG Lift (3-1/2in) | |
| 43 | 1702773 | 2 | Decal - JLG (5in) | |
| 46 | 1701505 | 1 | Decal - Diesel Fuel | |
| 49 | 0100011 | AR | Compound, Locking | |
| 50 | 0641406 | 4 | Bolt 1/4in-20NC x 3/4in | |
| 51 | 0641408 | 1 | Bolt 1/4in-20NC x 1in | |
| 52 | 0860520 | 1 | Box, Manual Storage | |
| 53 | 1060279 | 1 | Cable, Lanyard | |
| 54 | 3311405 | 5 | Locknut 1/4in-20NC | |
| 55 | 3820001 | 9 | Rivet | |
| 56 | 4751400 | 10 | Flatwasher 1/4in Regular | |
| 57 | 1704468 | 1 | Decal - Motion Hazard | |

| ITEM | PART NUMBER | QTY | DESCRIPTION | REV |
|---|---|---|---|---|
| 60 | 4420051 | 17.4 ft /5.3m | Stripes, Safety | |
| 61 | | Ref | Decal - Crawler Caution | |
| 61 | Not Required | 0 | Australian Spec | |
| 61 | 1705080 | 2 | Dutch Spec | |
| 61 | 1705077 | 2 | French Spec | |
| 61 | 1705078 | 2 | German Spec | |
| 61 | 1705081 | 2 | Italian Spec | |
| 61 | 1705079 | 2 | Spanish Spec | |
| 62 | 1700584 | 1 | Decal - Patent **(SN 0300128000 through 0300151930)** | |

# SECTION 9 - RECOMMENDED SERVICE PARTS STOCK

## FIGURE 9-1. MODELS 600SC/660SJC STANDARD PARTS

| ITEM | PART NUMBER | QTY | DESCRIPTION | REV |
|---|---|---|---|---|
| | | Ref | **Note: The following list will service one machine (built to current production per date on the front cover) with emergency repair parts which can be installed in the field. Parts from the list should be replaced when inventory is depleted to keep service parts stock supplied. For further information, contact your JLG dealer or the JLG Industries Parts Department.** | |
| | | Ref | **STANDARD PARTS** | |
| | 2120210 | 12 | Element Filter | |
| | 7012944 | 1 | Coil | |
| | 2120149 | 1 | Element, Filter | |
| | 7012772 | 1 | Coil | |
| | 7021376 | 1 | Coil | |
| | 70000582 | 1 | Coil | |
| | 7012664 | 12 | Element, Air Cleaner | |
| | 3740067 | 1 | Relay | |
| | 7024444 | 1 | Breather, Hydraulic Tank | |
| | 7024442 | 1 | Strainer, Hydraulic Tank | |
| | 3740049 | 1 | Relay | |
| | 4360328 | 1 | Switch, Toggle | |
| | 2860030 | 1 | Key, Replacement | |
| | 4360475 | 1 | Switch, Mushroom | |
| | 4360476 | 1 | Switch, Contact Block | |
| | 70002005 | 2 | Power Track - Repair Section | |
| | 2940074 | 1 | Latch | |
| | 1001129555 | 1 | Controller (Lift and Swing) | |
| | 1600359 | 1 | Controller (Drive and Steer) | |
| | 4360387 | 1 | Switch, Push Button | |
| | 4360407 | 1 | Controller, Speed | |
| | 4360331 | 1 | Switch, Toggle | |
| | 7022838 | 1 | Switch, Push Button | |
| | 2400065 | 2 | Fuse - 30 Amp | |

## FIGURE 9-2. MODELS 600SC/660SJC VARIABLE PARTS

| ITEM | PART NUMBER | QTY | DESCRIPTION | REV |
|---|---|---|---|---|
| | | Ref | **Note: The following list will service one machine (built to current production per date on the front cover) with emergency repair parts which can be installed in the field. Parts from the list should be replaced when inventory is depleted to keep service parts stock supplied. For further information, contact your JLG dealer or the JLG Industries Parts Department.** | |
| | | Ref | **VARIABLE PARTS** | |
| | 7026830 | 12 | Filter, Fuel (Caterpillar Engine) | |
| | 7026811 | 12 | Filter, Oil (Caterpillar Engine) | |
| | 8320270 | 12 | Filter, Fuel (Deutz Engine) | |
| | 7016331 | 12 | Filter, Oil (Deutz Engine) | |
| | 3740080 | 1 | Relay (Deutz Engine) | |
| | 4360469 | 1 | Switch, Key (ANSI and ANSI Export Specs) | |
| | 4360470 | 1 | Switch, Key (Australian and CE Specs) | |
| | 1001149676 | 1 | Module, Ground Control ADE (Without UGM) | |
| | 1001103667 | 1 | Module, Ground Control ADE (With UGM) | |
| | 1600422 | 1 | Module, Propulsion | |
| | 4360578 | 1 | Switch, Limit | |
| | 4360294 | 1 | Breaker, Circuit (Deutz Engine) | |
| | 4360336 | 1 | Switch, Toggle (Machines with Generator Option) | |
| | 3740080 | 1 | Relay (Machines with Generator Option) | |
| | 4360070 | 1 | Breaker, Circuit (SkyPower Generator Option) | |
| | 2400064 | 2 | Fuse - 15 Amp (SkyPower Generator Option) | |
| | 4360506 | 1 | Switch, Proximity (Australian and CE Specs) | |
| | 0272970 | 1 | Footswitch | |
| | 4360522 | 1 | Switch, Toggle (Headlights/Taillights) | |
| | 1600375 | 1 | Module, Platform ADE (Without UGM) | |
| | 1001106355 | 1 | Module, Platform ADE (With UGM) | |
| | 3990001 | 2 | Diode (Caterpillar Engines) | |
| | 1001109475 | 1 | Breaker, Circuit - 16A (CE Spec Only) | |
| | 1001109482 | 1 | Breaker, Circuit - 30mA (CE Spec Only) | |
| | 3990010 | 2 | Diode 6 Amp (With 2500W Powermite Generator) | |
| | 2400064 | 2 | Fuse - 5 Amp (With 7500W SkyPower Generator) | |
| | 2400070 | 2 | Fuse - 20 Amp (Worklights Option) | |

# SECTION 10 - SPECIAL OPTIONS

## FIGURE 10-1. SPECIAL OPTIONS LIST

| ITEM | PART NUMBER | QTY | DESCRIPTION | REV |
|---|---|---|---|---|
| | | Ref | **MISCELLANEOUS SPECIAL OPTIONS** | |
| | Note | Ref | **Note: This list is to accommodate machines ordered with special equipment. Options may not be applicable to all models. For more specific parts information contact JLG Parts Department.** | |
| | | Ref | **Airline to Platform Installation Options:** | |
| | 0255388 | Ref | 1/2in 600SC without Arctic Package | |
| | 1001093286 | Ref | 1/2in 600SC with Arctic Package | |
| | 0255389 | Ref | 1/2in 660SJC without Arctic Package | |
| | 0275341 | Ref | 1/2in 660SJC with Arctic Package | |
| | | Ref | **Boom Bellows Installation Options:** | |
| | 0255929 | Ref | Boom Bellows Installation 600SC | |
| | 0255930 | Ref | Boom Bellows Installation 660SJC | |
| | 0256273 | Ref | **Boom Wipers Installation** | |
| | 0256789 | Ref | **Camera Mount Assembly** | |
| | | Ref | **ClearSky Telematics (Factory Installed)** | |
| | | Ref | Note: For Replacement Parts, Contact JLG Customer Service and Request Manual p/n 3128499. | |
| | | Ref | Note: For Module (with/without UGM) Identification, refer to Revision Log page A. | |
| | | Ref | ADE MACHINES (ABS Hoods) | |
| | 1001102841 | Ref | ANSI Spec | |
| | 1001102842 | Ref | ANSI Export and Japanese Specs | |
| | 1001104985 | Ref | CSA Spec | |
| | | Ref | ADE/UGM MACHINES (ABS Hoods) | |
| | 1001112990 | Ref | ANSI Spec | |
| | 1001112991 | Ref | ANSI Export | |
| | 1001112992 | Ref | CSA Spec | |
| | | Ref | ADE/UGM MACHINES (Steel Hoods) | |
| | 1001118963 | Ref | ANSI SPEC | |
| | 1001134103 | Ref | Australian Spec | |
| | 1001127087 | Ref | Brazil/New Zealand Specs | |
| | 1001118964 | Ref | CSA SPEC | |
| | | Ref | **ClearSky Telematics (Dealer Installed)** | |
| | | Ref | ANSI Spec | |
| | 1001117251 | Ref | Pre-UGM | |
| | 1001119939 | Ref | UGM | |
| | | Ref | Australian Spec | |
| | 1001139132 | Ref | Pre-UGM | |
| | 1001139151 | Ref | UGM | |
| | | Ref | CSA Spec | |
| | 1001117258 | Ref | Pre-UGM | |
| | 1001119947 | Ref | UGM | |
| | | Ref | **Cold Weather Package** | |
| | 0273575 | Ref | Caterpillar Engines | |
| | 0271912 | Ref | Deutz Engines | |
| | | Ref | **Decal Installations Options:** | |
| | 1702788 | 1 | Decal - Biodegradable Hydraulic Fluid (English) | |
| | 1704174 | 1 | Decal - Biodegradable (Synthetic) Hydraulic Fluid (English) | |

| ITEM | PART NUMBER | QTY | DESCRIPTION | REV |
|---|---|---|---|---|
| | 1703479 | 1 | Decal - Biodegradable Hydraulic Fluid (German) | |
| | 1704175 | 1 | Decal - Biodegradable (Synthetic) Hydraulic Fluid (German) | |
| | 1001116251 | Ref | Decal - ClearSky (ANSI Spec) (ABS Hoods) | |
| | 1001116252 | Ref | Decal - ClearSky (CSA Spec) (ABS Hoods) | |
| | 1001120992 | Ref | Decal - ClearSky (Steel Hoods) | |
| | 0253550 | Ref | Decal - CSA | |
| | 0257195 | Ref | Decal - Government Warranty | |
| | 1001143504 | Ref | Decal - Hewitt the Rental Store (English) | |
| | 1001143519 | Ref | Decal - Hewitt the Rental Store (French) | |
| | 0256957 | Ref | Decal - Lanyard Attach (GM K-1 Spec) | |
| | 0256487 | Ref | Decal - Prop 65 Warning (California Spec) | |
| | 0270851 | Ref | Decal - Sunbelt | |
| | 0271032 | Ref | Decal - United Rental | |
| | | Ref | **Decal Kits Options:** | |
| | 2902307 | Ref | Decal Kit - Country Spec (ANSI and ANSI Export) | |
| | 2902329 | Ref | Decal Kit - Country Spec (Australian and CE) | |
| | 2902312 | Ref | Decal Kit - Country Spec (Brazil) | |
| | 2902322 | Ref | Decal Kit - Country Spec (CSA) | |
| | 1001116844 | Ref | Decal Kit - Country Spec (Chinese - Simplified) | |
| | 2902309 | Ref | Decal Kit - Country Spec (Chinese - Traditional) | |
| | 2902303 | Ref | Decal Kit - Master (Common Decals) **(SN 0300128000 through 0300144412)** | |
| | 1001112906 | Ref | Decal Kit - Master (Common Decals) **(SN 0300144413 through 0300174703)** | |
| | 1001238909 | Ref | Decal Kit - Platform | |
| | 1001109193 | Ref | Decal Kit - Platform Console Box (ANSI Spec without UGM) | |
| | | Ref | **Electrical Connector Kits** | |
| | 1001148902 | Ref | Amp/Tyco Electrical Connector Kit | |
| | 1001148903 | Ref | Deutsch DT Electrical Connector Kit | |
| | 1001148904 | Ref | Deutsch HD Electrical Connector Kit | |
| | 1001148905 | Ref | Packard Electrical Connector Kit | |
| | 1001148906 | Ref | Various Electrical Connectors Kit | |
| | 4932986 | Ref | **Engine Shutdown Installation (Deutz Engines)** | |
| | 1001153289 | Ref | **Exhaust Pipe Extension (Deutz Tier IVi Engine and Steel Hoods Only)** | |
| | | Ref | **Filter Kits** | |
| | | Ref | Combined Filter Kit (Hydraulic/Air and Fuel/Engine Oil) Options: | |
| | 1001114123 | NLA | Caterpillar Engines Machines (Use p/n 1001110991) | |
| | 1001114124 | NLA | Caterpillar Engines Machines (Use p/n 1001110991) | |
| | 1001110990 | Ref | Deutz Engine Machines | |
| | 1001114132 | NLA | Hydraulic/Air Filter (Use p/n 1001109684) | |
| | | Ref | Engine - Fuel/Engine Oil Filter Options: | |
| | See Note | Ref | Caterpillar Engines (Note: Not Available - Purchase Individual Components) | |
| | 1001110133 | Ref | Deutz Engines | |
| | | Ref | **Fluids Options:** | |
| | | Ref | Anti-freeze Options: | |
| | 2300004 | Ref | Caterpillar Machines without Arctic Package | |
| | 2300041 | Ref | Caterpillar Machines with Arctic Package | |
| | | Ref | Engine Oil Options: | |
| | 3020016 | Ref | Machines without Arctic Package | |
| | | Ref | Hydraulic Fluids Options: | |

| ITEM | PART NUMBER | QTY | DESCRIPTION | REV |
|---|---|---|---|---|
| | 2300039 | Ref | Exxon Univis HVI 26 | |
| | 2300014 | Ref | Mobil 424 | |
| | 2300027 | Ref | Mobil 224H Bio | |
| | 2300029 | Ref | Mobil EAL ISO 46 Bio | |
| | 2300016 | Ref | Mobil DTE 10 Excel 32 | |
| | 2300019 | Ref | Quaker State Quintolubric 888-46 Fire Res. | |
| | | Ref | **Footswitch Shield (Note: Move Decal to Shield)** | |
| | 3380652 | Ref | Footswitch Shield **(SN 0300128000 through 0300167720)** | |
| | 1001117294 | Ref | Footswitch Shield **(SN 0300167721 through 0300174703)** | |
| | 1001126287 | Ref | **Hood (Steel) Replacement Kit (Caterpillar Engine Machines)** | |
| | 1001126286 | Ref | **Hood (Steel) Replacement Kit (Deutz Engine Machines)** | |
| | | Ref | **Hose Kits** | |
| | 2902468 | Ref | Hose Kit - Boom Only (600SC) **(SN 0300128000 through 0300169157)** | |
| | 1001187491 | Ref | Hose Kit - Boom (600SC) | |
| | 2902473 | Ref | Hose Kit - Boom Only (660SJC) **(SN 0300128000 through 0300169157)** | |
| | 1001187498 | Ref | Hose Kit - Boom (660SJC) | |
| | 2902467 | Ref | Hose Kit - Standard **(SN 0300128000 through 0300169157)** | |
| | 1001189615 | Ref | **Kingpin Removal Kit** | |
| | 1001148971 | Ref | **Lanyard (Bolt-on) Kit Installation** | |
| | 1001147699 | Ref | **Manual Storage Box Relocation Kit** | |
| | 0258703 | Ref | **Platform Console Cover Installation** | |
| | | Ref | **Platform Entry Kit** | |
| | 1001142504 | Ref | Kit, Replace Swing Gate with Drop Bar | |
| | 1001142505 | Ref | Kit, Replace Drop Bar with Swing Gate | |
| | | Ref | **Platform Mesh to Top Rail** | |
| | 0273149 | Ref | 3ft x 6ft Platforms | |
| | 0273145 | Ref | 3ft x 8ft Platforms | |
| | 1702838 | Ref | Decal - No Hands (ANSI Spec) | |
| | 1704000 | Ref | Decal - No Hands (CSA Spec) | |
| | 1001149730 | Ref | **Platform Mid Rail Repair Kit** | |
| | | Ref | **Platform Top Rail Extension Installation Options:** | |
| | 0272733 | Ref | 6ft/1.83m Platform | |
| | 0272725 | Ref | 8ft/2.44m Platform | |
| | | Ref | **SkyGuard Component Options:** | |
| | 1001149560 | Ref | SkyGuard Complete Add-on Kit (Non-UGM Machines) | |
| | 1001143669 | Ref | SkyGuard Complete Installation Kit (UGM Equipped Machines) | |
| | 1001137672 | Ref | SkyGuard Platform Sensor Installation Kit (UGM Equipped Machines) (Old Style Platform) | |
| | 1001197016 | Ref | SkyGuard Platform Sensor Installation Kit (UGM Equipped Machines) (New Style Platform) | |
| | 1001137440 | 1 | SkyGuard Sensor Harness | |
| | 1001186431 | 2 | Relay | |
| | 1001143256 | Ref | SkyGuard Optional Blue Beacon Installation Kit (Use p/n 1001206311) | |
| | 1001206311 | Ref | SkyGuard Blue Beacon Installation Kit | |
| | | Ref | **Track Tensioning Kit** | |
| | Not Available | Ref | Caterpillar Chassis | |
| | 2910968 | Ref | Gradall Chassis | |
| | | Ref | **Tools for Service** | |
| | 2901443 | 1 | Analyzer Kit | |

| ITEM | PART NUMBER | QTY | DESCRIPTION | REV |
|---|---|---|---|---|
| | 8896941 | 1 | Wire Stripper | |
| | 7002821 | 1 | Wire Crimper (To install wire ends to wires) | |
| | 7002823 | 1 | Pin/Socket Extractor - Universal (To Remove Pins/Sockets from Connectors) | |
| | 4460467 | 1 | Extractor - 16-18 Gauge (For Removal of Pin/Sockets from Deutsch Connectors) | |
| | 4460510 | 1 | Extractor - 12-14 Gauge (For Removal of Pin/Sockets from Deutsch Connectors) | |
| | 7002822 | 1 | Screwdriver, Potentiometer (To Adjust Drive Controllers) | |
| | 7016654 | 1 | Screwdriver, Magnetic | |
| | 7004275 | 1 | Seal Installation Tool - 1in | |
| | 7004276 | 1 | Seal Installation Tool - 1-1/2in | |
| | 7002826 | 1 | Seal Installation Tool - 2in | |
| | 83813109 | 1 | Track Adjustment Tool | |
| | 7016655 | 1 | Wire Rope Sheave Gauge | |
| | 7014676 | 1 | U.S. Standards Tool Kit | |
| | 2900838 | 1 | U.S. Standards Hardware Kit | |
| | 1001137005 | 1 | Software Cable Kit | |
| | 2915096 | Ref | **Turntable Bearing Kit** | |
| | 1001238899 | Ref | **Wear Pad Kit (SN 0300128000 through 0300168631)** | |
| | 1001238900 | Ref | **Wear Pad Kit (SN 0300168632 through 0300174703)** | |
| | | Ref | **Weld Leads to Platform Installation Options:** | |
| | 0255399 | Ref | Weld Leads to Platform Installation 600SC | |
| | 0255895 | Ref | Weld Leads to Platform Installation 660SJC | |
| | 2910172 | Ref | **Wire Rope Kit** | |

# PART NUMBER INDEX

# PART NUMBER INDEX


0060066.....166, 177
0060067.....161, 177
0080163.....92
0080181.....72, 80
0080241.....124
0080243.....72, 80
0100009.....189
0100011....21, 27, 43, 48, 57, 72, 74, 80, 81, 82, 83, 88, 89, 90, 98, 99, 100, 113, 115, 119, 123, 124, 128, 130, 134, 135, 136, 142, 146, 149, 153, 161, 166, 169, 173, 179, 181, 185, 205, 208, 211, 213, 223, 229, 231, 235, 237, 241, 243, 249, 258, 266, 298, 314, 322, 327, 329
0100019..29, 48, 57, 130, 136, 151, 155, 161, 166
0100020....72, 74, 81, 83, 88, 90, 98, 152, 155, 158, 208
0100035.....123, 124, 189
0100038....223, 229, 231, 235, 237, 241, 243, 249, 258, 266
0100048....115, 119, 123, 124, 189, 292, 308
0100062.....151
0100063.....235, 241, 243
0100079.....113
0100081.....135, 189, 203
0140001.....48
0140011.....189
0200741.....146
0200742.....146
0200819.....142
0239585.....57
0253550.....337
0254849.....113
0255316.....58
0255388.....336
0255389.....336
0255399.....339
0255881.....139
0255895.....339
0255929.....336
0255930.....336
0256060.....274
0256113.....296, 312
0256122.....130, 136
0256201.....296, 312
0256273.....336
0256305.....123
0256487.....337
0256690.....90
0256789.....336
0256823.....130, 136
0256847.....92
0256957.....337
0257157.....274
0257175.....296, 312
0257195.....337
0257483..... 113
0257887.... 123, 301, 317
0257988..... 181
0258703..... 338
0259055..... 57
0270313..... 123
0270329..... 57
0270381..... 123
0270386..... 191
0270387..... 191
0270388..... 191
0270805..... 123
0270833..... 123
0270851..... 337
0271032..... 337
0271242..... 181
0271552..... 124, 190
0271817..... 27
0271912..... 336
0272042..... 291, 306
0272043.... 167, 291, 307
0272045..... 291, 306
0272046.... 167, 291, 307
0272070..... 179
0272136..... 161
0272138..... 161
0272146..... 166, 190
0272147..... 166, 190
0272254..... 211
0272255..... 149, 300
0272364..... 77, 94
0272399..... 186
0272418..... 203
0272435..... 152
0272448..... 208, 211
0272492..... 149, 300
0272507.... 123, 301, 317
0272521..... 213
0272588..... 213
0272589..... 152
0272590..... 205
0272599..... 205, 208
0272725..... 338
0272733..... 338
0272970... 186, 290, 306, 334
0273045..... 145
0273076..... 296, 312
0273078..... 296, 312
0273085..... 145
0273145..... 338
0273149..... 338
0273353..... 208
0273450..... 155
0273486..... 186, 274
0273490..... 186, 274
0273524..... 74
0273540..... 149, 300
0273541..... 149, 300
0273575..... 274, 336
0273687..... 155
0273906..... 321
0273908..... 321
0273982..... 325
0273984..... 325
0273985..... 329
0273987..... 329
0274005..... 329
0274006..... 329
0274007..... 329
0274008..... 329
0274009..... 329
0274081..... 141
0274082..... 145
0274086..... 145
0274087..... 141
0274090..... 145
0274091..... 141
0274093.... 321, 325, 329
0274300..... 88
0274313..... 47
0274314..... 47
0274491..... 72
0274592..... 291, 306
0274593..... 291, 307
0274594.... 167, 291, 307
0274595.... 167, 291, 307
0274751..... 128
0275216..... 299, 315
0275217..... 299, 315
0275218..... 299, 315
0275219..... 299, 315
0275235..... 296, 312
0275237..... 296, 312
0275253..... 296, 312
0275254..... 296, 312
0275256..... 72
0275341..... 336
0275452..... 299, 314
0275453..... 299, 315
0275454..... 299, 315
0275455..... 296, 312
0275456..... 296, 312
0275659..... 296, 312
0340041 .. 72, 80, 90, 100
0340046..... 72, 80
0362528..... 123
0362609..... 123
0362951..... 123
0400075.... 72, 80, 88, 98
0440233..... 57
0480120..... 142, 146
0480121..... 142, 146
0480125..... 151
0480126..... 151
0480129..... 151
0561076..... 170, 174
0561183..... 169, 173
0561184..... 169
0561185..... 169, 173
0561237..... 167
0561245..... 173
0561508..... 174
0630458.... 161, 166, 181
0630464..... 189
0630485..... 134
0630491..... 124
0630507..... 128, 134
0630518... 115, 119, 208, 211, 213
0630534... 223, 227, 229, 231, 233, 243
0630535....235, 237, 239, 243, 247, 249
0630536.....241
0630548.....115, 119
0630568.....190
0641403.....123, 170, 174
0641404....146, 150, 151, 181, 189
0641405.....150, 298, 314
0641406 72, 80, 123, 128, 134, 157, 174, 186, 205, 322, 327, 329
0641407....72, 80, 82, 90, 100, 120, 298, 314
0641408....134, 150, 186, 322, 327, 329
0641410.....88, 98, 115
0641416.....48, 167, 189, 298, 314
0641418.....185
0641505.....150
0641506.....47, 115, 119, 128, 130, 135, 136, 157
0641507.....72, 80, 81
0641508..47, 88, 98, 142, 146, 150
0641510...75, 81, 90, 100
0641512.....48, 90, 100
0641514....47, 75, 81, 88, 98
0641516.....149
0641522.....181
0641604.....161, 166
0641605.....82, 99
0641606..74, 80, 90, 100, 129, 130, 166, 169, 173, 205, 208, 211, 213
0641607.....134, 169, 173
0641608....43, 48, 72, 75, 77, 80, 83, 95, 113, 128, 130, 135, 161, 166, 170, 174, 181
0641609..72, 80, 90, 100, 139
0641610....72, 75, 80, 81, 88, 90, 98, 100, 142, 146, 157, 186
0641611. 82, 99, 134, 166
0641612.....43
0641613.....47, 169, 173
0641614....113, 166, 170, 174
0641616.....27, 134, 157, 169, 173
0641618.....151, 166
0641634.....170, 174
0641638.....170, 174
0641644.....181
0641772.....142, 146
0641807.....181
0641808....72, 75, 80, 81, 88, 89, 98, 99, 150
0641810.....155
0641812....75, 82, 89, 99, 179

0641818 ..... 90, 100, 134, 139
0641820 ..... 72, 80
0641824 ..... 169, 173
0641826 ..... 90, 100
0642010 .... 74, 81, 88, 98
0642012 .... 161, 166, 203
0642018 ..... 57
0642026 ..... 203
0642212 ..... 203
0642612 ..... 124
0642684 ..... 179
0651406 ..... 47
0681608 .... 170, 174, 179
0681610 ..... 169, 173
0681836 ..... 57
0682014 ..... 130, 136
0682023 ..... 57
0700408 ..... 298, 314
0700616 ..... 83, 135
0700620 ..... 83
0700808 ... 72, 80, 83, 90, 100
0700810 ..... 92
0700815 ..... 151
0700816 ..... 142
0701010 ..... 72, 80, 83
0701012 .... 43, 72, 80, 92
0701015 ..... 72, 80, 92
0701414 ..... 72, 80
0711125 ..... 90
0711214 ..... 73, 80
0711414 ..... 90, 100
0720808 ..... 153
0721005 ..... 147
0721006 ... 128, 142, 146, 190
0721008 ..... 129, 130
0741607 ..... 161, 166
0741612 ..... 169, 173
0760606 ..... 83
0760610 ..... 83
0761210 ..... 83, 142
0771212 ..... 74, 80
0771415 ..... 152
0771626 ..... 29
0801469 ..... 169, 173
0801479 ..... 173
0801481 ..... 173
0801483 ..... 169
0801484 ..... 169
0801498 ..... 169, 173
0801504 ..... 169, 173
0801524 ..... 169, 173
0860038 .... 150, 297, 312
0860520 .... 322, 327, 329
0861538 ..... 151
0861541 ..... 152
0861542 ... 149, 152, 301, 316
0861567 ... 150, 152, 301, 316
0861572 ..... 151
0861599 ..... 147
0861602 ..... 147
0861607 ..... 147
0861633 ..... 189, 190
0861634 .... 186, 189, 290
0861642 ..... 155
0861731 ..... 297, 312
0861781 ..... 297, 312
0861782 ..... 297, 312
0861872 ..... 115
0861880 ..... 298, 314
0902143 ..... 128
0902161 ..... 128
0902206 ..... 124
0902219 ..... 128
0902223 ..... 128
0902351 ..... 128
0902384 ..... 128
0902416 ..... 128
0902491 ..... 128
0902587 ..... 47
0902751 ..... 189
0902888 ..... 150
0902910 ..... 76
0903484 ..... 298, 314
0903611 ..... 298, 314
0920119 ..... 57
0940049 ..... 129, 134
0940070 .. 72, 80, 90, 100
0940071 ..... 128
0940088 ..... 129
0940102 ..... 203
0961845 ..... 185
0961893 ... 223, 227, 229, 231, 233, 243
0961894 .... 235, 237, 243
0961897 ..... 249
0961898 ..... 241
0961947 ... 166, 229, 231, 233, 243
0961950 ... 161, 166, 169, 173, 241
0961951 ... 161, 166, 169, 173, 235, 237, 239, 243, 247
0961986 .. 72, 80, 90, 100
0962006 ..... 161, 166
0962051 ..... 139
0962335 ..... 167
0962336 .... 223, 225, 227
0962449 ..... 142, 147
0962520 ..... 151
0962563 ..... 142
1001091179..... 90, 101
1001091892..... 90
1001091911..... 113
1001091970..... 299, 315
1001091971..... 299, 315
1001093286..... 336
1001093382.... 72, 81, 89, 99
1001093424..... 325
1001093439..... 327
1001093553..... 327
1001093554..... 325
1001093555..... 327
1001093684..... 327
1001093943..... 91, 101
1001094012..... 325
1001094013..... 327
1001094043..... 162, 167
1001094101 .. 91, 92, 101, 102
1001094321..... 91, 101
1001094375..... 153
1001094475..... 153
1001094509..... 153
1001094694..... 108
1001094828..... 57
1001096070..... 298, 314
1001097150..... 299, 314
1001097553..... 83
1001097554..... 75
1001097961..... 130
1001098012..... 208, 219
1001098508..... 90
1001098916..... 91
1001099051..... 92, 101
1001099121..... 130
1001099366..... 203
1001099367..... 203
1001099640..... 90
1001099686..... 91
1001099721..... 89
1001099722..... 88
1001099832..... 181
1001099868..... 145
1001099869..... 142, 147
1001100027..... 274, 300
1001100233..... 142
1001100234..... 142, 147
1001100308..... 145
1001100313..... 72, 75
1001100321..... 141, 145
1001100341..... 299, 315
1001100342..... 299, 315
1001100345..... 299, 314
1001100346..... 299, 315
1001100347..... 299, 315
1001100390..... 296, 312
1001100391..... 296, 312
1001100392..... 296, 312
1001100393..... 296, 312
1001100394..... 296, 312
1001100395..... 296, 312
1001100396..... 296, 312
1001100954..... 128
1001100955..... 128, 129
1001101061..... 57, 68
1001101241 .. 90, 92, 100, 102
1001101391..... 129
1001101392..... 129
1001101421..... 203
1001101422..... 203
1001101600..... 89, 99
1001101623..... 129
1001101673..... 129
1001102159..... 29
1001102161..... 116, 293
1001102244..... 115
1001102245..... 115
1001102246..... 115
1001102247..... 115
1001102290..... 294, 309
1001102291..... 294, 309
1001102304..... 294, 309
1001102504 . 29, 253, 272
1001102547 ..... 141
1001102548 ..... 141
1001102603 ..... 115, 119
1001102604 ..... 115, 119
1001102644 ..... 142
1001102647 ..... 203
1001102841 ..... 336
1001102842 ..... 336
1001103292 ..... 325
1001103563 29, 253, 272
1001103667 ..... 119, 334
1001103952 ..... 43
1001103980 ..... 43
1001104308 ..... 91
1001104328 ..... 21, 35
1001104338 ..... 261, 272
1001104340 ..... 261, 272
1001104359 ..... 261, 269
1001104361 ..... 261, 262, 269
1001104362 ..... 261
1001104363 ..... 262, 270
1001104364 ..... 262, 270
1001104425 ..... 88
1001104426 ..... 74
1001104427 ..... 291, 306
1001104428 ..... 167, 291, 307
1001104429 ..... 291, 306
1001104430 ..... 167, 291, 307
1001104433 ..... 89
1001104985 ..... 336
1001105480 ..... 261, 272
1001105833 ..... 73, 81
1001105993 ..... 72
1001106338 ..... 72
1001106339 ..... 310
1001106340 ..... 310
1001106355 ..... 189, 334
1001106401 ..... 47
1001106695 ..... 47
1001106736 ..... 119, 308
1001107109 ..... 272
1001107116 ..... 80
1001107527 ..... 189
1001107677 ..... 189
1001107705 ..... 73, 81
1001107753 ..... 190, 274, 290, 306
1001107767 ..... 43
1001107769 ..... 43
1001108126 ..... 116, 292
1001108341 ..... 161
1001108342 ..... 166, 190
1001108459 ..... 119
1001108484 ..... 119
1001108485 ..... 119
1001108486 ..... 119
1001108487 ..... 119
1001108488 ..... 119
1001108489 ..... 119
1001108490 ..... 119
1001108494 ..... 322, 327
1001108597 ..... 120, 308, 309

# PART NUMBER INDEX


1001108598.....120, 308, 309
1001108600.....274, 308
1001108601.....274, 308
1001108602.....120, 308, 309
1001108821.....186, 189, 306
1001108822.....186
1001108900.....274
1001108923.....322
1001109064.....83, 84
1001109065.....80
1001109075.29, 253, 272
1001109188.....82, 107
1001109189.83, 100, 108
1001109193.....337
1001109436.....99
1001109437.....98
1001109475.....298, 314, 334
1001109477.....298, 314
1001109482.....298, 314, 334
1001109554.....298, 314
1001109595.....81, 101
1001109599.....83, 100
1001109601.....83, 100
1001109657.....262, 270
1001109659.....262, 269
1001109660.....83
1001109661.....83
1001109662.....261
1001110092.....100, 261, 269
1001110094.....100
1001110133.....337
1001110166.....134
1001110169.....57, 65
1001110185.....100
1001110434.....189
1001110469.....83, 100
1001110665.....100
1001110795.....98
1001110796.....99
1001110797.....100
1001110872.....149, 316
1001110873.....149, 313, 316
1001110990.....337
1001111017.....119
1001111832.....82
1001111833.....82
1001111834.....81
1001111835.....81
1001112057.....83
1001112059.....83
1001112067.....83
1001112068.....83
1001112069.....83
1001112070.....83
1001112071.....84, 310
1001112072.....84
1001112073.....84
1001112075.....84
1001112077.....81, 83
1001112467.....241
1001112468..... 161, 166, 241
1001112570..... 84
1001112586..... 316
1001112587..... 316
1001112588..... 315
1001112589..... 315
1001112592..... 84
1001112612..... 310
1001112743..... 315
1001112763..... 83, 310
1001112849..... 84
1001112906..... 337
1001112990..... 336
1001112991..... 336
1001112992..... 336
1001113047..... 134
1001113466..... 21
1001114123..... 337
1001114124..... 337
1001114132..... 337
1001115387..... 149, 316
1001115389..... 149, 316
1001115398..... 149, 316
1001115400..... 149, 316
1001115404..... 141
1001115405..... 145
1001115409..... 145
1001115410..... 145
1001115413..... 141
1001115414..... 141
1001116240... 74, 88, 98, 310
1001116241..... 74, 88
1001116251..... 337
1001116252..... 337
1001116290..... 135, 136
1001116292..... 135, 136
1001116456..... 134
1001116457..... 134
1001116562..... 134
1001116595..... 84
1001116844..... 337
1001116845..... 325
1001116846..... 325
1001116847..... 325
1001116848..... 326
1001116849..... 326
1001116850..... 326
1001116851..... 326
1001116852..... 326
1001116853..... 326
1001116854..... 326
1001116963..... 327
1001116964..... 327
1001116970..... 325
1001116971..... 325
1001117172..... 186
1001117174..... 186
1001117234..... 134
1001117249..... 134
1001117251..... 336
1001117258..... 336
1001117294..... 338
1001117307..... 134
1001117320..... 186
1001117429..... 134
1001117430..... 134
1001117523..... 135
1001117525..... 135
1001117543..... 135
1001117598..... 135
1001117612..... 135
1001118264..... 135
1001118417..... 189, 195
1001118550..... 135
1001118599..... 151
1001118715..... 135
1001118716..... 135
1001118718..... 134
1001118735..... 135
1001118963..... 336
1001118964..... 336
1001119283..... 135
1001119939..... 336
1001119947..... 336
1001120508..... 135
1001120992..... 337
1001121059..... 135
1001121061..... 135
1001121118..... 135
1001121119..... 135
1001121340..... 152, 153
1001121655..... 327
1001121800..... 321
1001121801..... 321, 326
1001121802..... 326
1001121803..... 326
1001121806..... 326
1001121809..... 326
1001121811..... 326
1001121813..... 321
1001121814..... 322
1001121815..... 327
1001121816..... 327
1001121819..... 327
1001121822..... 327
1001121824..... 327
1001125097..... 135
1001126286..... 338
1001126287..... 338
1001127087..... 336
1001129555..... 332
1001131269..... 322, 327
1001134103..... 336
1001137005..... 339
1001137440..... 338
1001137458..... 48
1001137643..... 263
1001137672..... 338
1001137737..... 101, 102
1001137755..... 100
1001137756..... 99
1001137757..... 98
1001137758..... 100
1001137759..... 99
1001137760..... 98
1001138241..... 261, 269
1001138430..... 185
1001138434..... 185
1001138494..... 186
1001138514..... 186
1001138795..... 227
1001138796..... 239, 247
1001139132.....336
1001139151.....336
1001140429.....186
1001141967.....297
1001141968.....297, 313
1001141969.....297, 313
1001142504.....338
1001142505.....338
1001143256.....338
1001143365.....47
1001143453.....261
1001143454.....261
1001143504.....337
1001143519.....337
1001143669.....338
1001144021.....185
1001144022.....185
1001144023.....185
1001144024.....185
1001144319.....101, 102
1001144355.....100
1001144356.....99
1001144357.....98
1001144629.....185
1001145283.....47
1001145284.....47
1001145405.....208
1001145885.....189
1001145988.....27
1001147699.....338
1001147830.....134
1001148650.....170, 174
1001148651.....170, 174
1001148652.....169, 173
1001148653.....170, 174
1001148902.....337
1001148903.....337
1001148904.....337
1001148905.....337
1001148906.....337
1001148925.....161, 166
1001148971.....338
1001149560.....338
1001149587.....27
1001149676.....334
1001149730.....338
1001149818.....317
1001149955.....124
1001149994.....124
1001150406.....124
1001150475.....269
1001150760.....269, 272
1001150763.....269, 272
1001150998.....101
1001151059.....272
1001153289.....337
1001154592.....298, 314
1001163131.....203
1001166539.....197
1001186431.....338
1001187491.....338
1001187498.....338
1001189615.....338
1001197016.....338
1001206311.....338
1001223331.....166, 237
1001223332.....237

1001223511 ..... 231
1001223512 ..... 161, 231
1001228008 ..... 161, 233
1001228012 ..... 166, 225
1001228051 ..... 166, 239
1001228052 ..... 166, 247
1001228988 ..... 211
1001238899 ..... 339
1001238900 ..... 339
1001238909 ..... 337
1001248012 ..... 166, 227
1060279 .... 322, 327, 329
1060341 ..... 301, 317
1060343 .... 152, 301, 316
1060461 ..... 147, 300
1060494 ... 152, 300, 301, 316
1060625 .... 75, 82, 89, 99
1060626 .... 74, 83, 89, 99
1060633 ..... 302, 318
1060637 .... 72, 80, 88, 98
1060708 .... 152, 301, 316
1060896 ..... 291, 307
1060904 74, 90, 295, 296
1060908 ..... 299, 314
1060918 .... 186, 290, 306
1061045 ..... 292, 307
1061046 ..... 292, 308
1061047 ..... 292, 308
1101109188 ..... 100
1120487 ..... 113
1120555 ..... 203
1180345 ..... 181
1220078 ..... 169, 173
1260017 ..... 57
1282571 ..... 274
1283348 ..... 265, 272
1283388 ..... 257, 272
1320016 .. 72, 80, 90, 100
1320022 ... 75, 81, 88, 90, 98, 102
1320070 ..... 170, 174
1320149 ..... 299, 314
1320176 ... 75, 81, 89, 92, 99
1320177 ..... 205, 208
1320223 ... 74, 80, 82, 83, 90, 100
1320224 ..... 83, 151
1320235 ..... 161, 166
1320244 ..... 174
1320247 ..... 181
1320263 ..... 84
1320302 ... 205, 208, 211, 213
1321384 .... 129, 130, 134
1340060 .. 72, 80, 90, 100
1380147 ..... 139
14403323 ..... 11
14403364 ..... 27
1580011 ..... 72, 80
1580012 ..... 187
1580013 ..... 187
1600244 ..... 302, 317
1600317 ..... 189, 193
1600359 .... 189, 201, 332
1600361 ..... 76
1600375 ..... 189, 334
1600411 ..... 116
1600422 ..... 116, 334
1660234 ..... 92
1660239 ..... 72, 80
1660245 ..... 43
1670769 ..... 167
1670771 ..... 128
1670779 ..... 128
1670818 ..... 123
1670829 .... 115, 119, 189
1671037 ..... 189
1671055 ..... 161, 166
1671092 .... 152, 301, 316
1671093 ..... 208, 211
1671228 ..... 128, 129
1671230 ..... 130
1671231 ..... 129
1671232 ..... 129
1671233 ..... 128
1671247 ..... 128, 129
1683053 ... 223, 229, 231, 243
1683055 .... 235, 237, 243
1683057 ..... 249
1683067 ..... 241
1683250 ..... 249
1683415 ..... 161, 229
1683418 ..... 166, 235
1683609 ..... 166, 223
1683618 .... 169, 173, 249
1683619 ..... 249
1683666 .... 161, 166, 241
1683949 ..... 243
1683952 ..... 235
1683954 ..... 241
1683955 ..... 241
1683963 .... 235, 237, 243
1683972 ..... 243
1683976 ..... 229, 231
1683977 ..... 229
1684089 ..... 223
1684090 ..... 223
1684413 ..... 166, 243
1684414 ..... 161, 243
1700584 .... 322, 327, 330
1701499 .... 321, 325, 329
1701500 ..... 130, 136
1701502 .... 321, 325, 329
1701503 .... 321, 325, 329
1701505 ... 75, 82, 88, 98, 322, 327, 329
1701509 ... 203, 321, 325, 329
1701518 ..... 329
1701529 .... 321, 325, 329
1701645 ..... 321, 326
1702153 ..... 321
1702566 ..... 189
1702567 ..... 189
1702676 ..... 190
1702773 .... 322, 327, 329
1702774 .... 322, 327, 329
1702788 ..... 336
1702838 ..... 338
1702861 .... 322, 327, 329
1702868 .... 205, 208, 211, 321
1702941 ..... 75, 83, 89, 99
1702942 ..... 75, 83, 89, 99
1702943 ..... 75, 82, 89, 99
1702944 ..... 75, 83, 89, 99
1703162 ... 72, 80, 90, 101
1703165 ..... 321, 326, 329
1703479 ..... 337
1703797 ..... 321
1703804 ..... 321
1703805 ..... 321
1703811 ..... 321, 325, 329
1703814 ..... 321, 325, 329
1703924 ..... 326
1703925 ..... 325
1703936 ..... 326
1703937 ..... 326
1703942 ..... 325
1703943 ..... 325
1703948 ..... 326
1703949 ..... 326
1703953 ..... 321
1703982 ..... 326
1703984 ..... 326
1704000 ..... 325, 338
1704006 ..... 325
1704096 ..... 321
1704099 ..... 326
1704101 ..... 326
1704174 ..... 336
1704175 ..... 337
1704260 ..... 189
1704277 ..... 321, 325, 329
1704412 ..... 321, 325, 329
1704434 ..... 321, 326, 329
1704460 ..... 189
1704461 ..... 321, 325, 329
1704468 ..... 322, 329
1704502 ..... 322, 327
1704707 ..... 191
1704709 ..... 191
1704710 ..... 191
1704885 ..... 322, 327, 329
1704972 ..... 75, 89, 99
1704997 ..... 189
1705077 ..... 330
1705078 ..... 330
1705079 ..... 330
1705080 ..... 330
1705081 ..... 330
1705132 ..... 189
1705170 ..... 190
1705177 ..... 322, 327, 329
1705305 .... 205, 208, 211, 213
1705325 ..... 142, 146, 147
1705336 ..... 321
1705347 ..... 326
1705355 ..... 208, 211, 213
1705358 ..... 203
1705374 ..... 152
1705375 ..... 152, 208, 211
1705376 ..... 152
1705387 ..... 152
1705460 ..... 152
1705461 ..... 152
1705466 ... 205, 208, 211, 213
1705489 ..... 152
1705490 ..... 205, 208
1705714 ..... 147
1705715 ..... 147
1705728 ..... 147
1705822 ..... 329
1705828 ..... 329
1705836 ..... 155
1705837 ..... 155
1705886 ..... 155
1705895 ..... 325
1705896 ..... 326
1705897 ..... 326
1705898 ..... 326
1705901 ..... 325
1705902 ..... 326
1705903 ..... 325
1705921 ..... 329
1705961 ..... 329
1705967 ..... 325
1705968 ..... 325
1705978 ..... 329
1706059 ..... 75, 89, 99
1706060 ..... 75, 89, 99
1706061 ..... 75, 89, 99
1706062 ..... 75, 89, 99
1706063 ..... 75, 89, 99
1706064 ..... 75, 89, 99
1706098 ..... 75, 89, 99
1706380 ..... 326
1706712 ..... 115, 119
1706916 ..... 115
1706917 ..... 115
1706943 ..... 322, 327
1707013 ..... 321
1707014 ..... 321
1707045 ..... 326
1707046 ..... 326
1707047 ..... 327
1707051 ..... 326
1707052 ..... 326
1707055 ..... 326
1810078 ..... 115
1810079 ..... 115
1810080 ..... 115
1810081 ..... 115
1810082 ..... 115
1810083 ..... 115
1810084 ..... 115
1810085 ..... 115
1870218 ..... 274
2000283 ..... 89
2000339 ..... 91, 92
2000342 ..... 89
2000386 ..... 72, 75
2030010 ... 205, 208, 211, 213
2060025 ... 72, 80, 90, 101
2080040 .... 134, 185, 186
2080044 ..... 166
2110406 ..... 261, 269
2110408 ..... 261
2110806 ..... 269
2111212 .... 261, 263, 269
2120149 ..... 47, 332

# PART NUMBER INDEX


2120164.....47
2120209.....47
2120210.....47, 332
2130808.....261
2160003.....58
2170112.....261, 263, 269
2180344.....58
2180348.....82, 88, 98
2180380....258, 262, 266, 270
2180724....258, 262, 266, 270
2180832.....205, 208
2200222.....61, 113
2220063.....58
2220235.....241, 257, 265
2220237.....258, 262, 266
2220250.....75
2220252.....155
2220273.....74
2220313.....74, 82, 88, 98
2220372....257, 261, 265, 269
2220373....257, 262, 265, 269
2220376....108, 111, 257, 261, 265
2220380....257, 261, 265, 269
2220408....257, 261, 265, 269
2220409....258, 262, 266, 269
2220414.....258, 262, 266
2220415....257, 261, 265, 269
2220428.....257, 265
2220429.....257, 265
2220451..82, 90, 99, 101, 108, 257, 261, 262, 265, 270
2220459.....75
2220466....257, 262, 265, 269
2220468.....258, 265
2220471.....258, 265
2220472....258, 262, 266, 269
2220473....258, 262, 266, 269
2220497.....258, 266
2220498....257, 261, 265, 269
2220502.....258, 266
2220518.....108
2220578 82, 99, 108, 257, 265
2220582....108, 257, 258, 261, 265, 269
2220593.....261
2220603....258, 262, 266, 269
2220605.....257, 265
2220609.....258, 265
2220618.....108, 257
2220622....108, 257, 262, 265, 270
2220628... 257, 261, 265, 269
2220682..... 108, 258
2220700.... 108, 257, 265
2220738... 108, 258, 262, 266, 269
2220750..... 155
2220794..... 75
2220810.... 111, 257, 265
2220852..... 108, 259
2220873... 257, 259, 265, 266
2220883... 223, 225, 227, 229, 231, 233, 235, 237, 239, 241
2220885... 223, 225, 227, 229, 231, 233, 235, 237, 239, 243, 247, 249
2220887..... 241
2220893..... 47
2220909..... 258, 266
2220914..... 259, 266
2220921... 257, 261, 265, 269
2220946..... 108, 259
2220947... 108, 257, 262, 265, 269
2220948.... 108, 259, 266
2220949..... 259, 266
2220950... 258, 262, 266, 270
2220974... 258, 262, 266, 270
2221042... 108, 257, 262, 265, 270
2221086..... 262, 269
2221176..... 82, 88, 98
2230027..... 99, 266
2230046 .82, 99, 258, 266
2300004..... 73, 82, 337
2300014..... 338
2300016..... 338
2300019..... 338
2300027..... 338
2300029..... 338
2300039..... 338
2300041..... 73, 82, 337
2360574..... 11, 255, 272
2360576..... 11, 255, 272
2400060... 153, 301, 310, 317
2400064... 153, 301, 317, 334
2400065.... 294, 308, 332
2400066... 294, 302, 308, 317
2400070.... 302, 317, 334
2420165..... 153
2420172..... 115, 119
2420203.... 142, 146, 147
2460048..... 150
2460049..... 141, 145
2460050..... 150
2460055..... 141, 145
2460056..... 141, 145
2460057..... 141, 145
2560136..... 189
2560187..... 135
2580024.... 74, 83, 89, 99
2580050.... 75, 82, 89, 99
2580055..... 74, 77, 83
2580062..... 90, 100
2600209..... 130
2600233..... 129
2600280..... 134
2600281..... 185
2720058... 72, 75, 80, 82, 88, 98
2720160..... 205, 208
2720398..... 90, 101
2720434..... 72, 80, 90
2720449..... 90
2720509..... 72, 80
2720510..... 73
2720515..... 73, 80
2750532... 74, 82, 88, 98, 101
2751032..... 58
2751396..... 258, 266
2751474... 257, 262, 265, 269
2752438..... 266
2752453..... 258
2752515... 257, 262, 265, 269
2752573..... 257, 265
2752580..... 257, 265
2752581..... 261, 269
2752588... 258, 262, 265, 270
2752591... 258, 262, 266, 269
2752594..... 257, 265
2752596... 258, 262, 266, 270
2752597... 258, 262, 266, 269
2752598... 258, 262, 266, 269
2752599... 258, 262, 266, 269
2752631... 257, 261, 265, 269
2752632... 257, 261, 265, 269
2752633... 258, 262, 266, 269, 270
2752643... 258, 262, 266, 269
2752653... 257, 261, 265, 269
2752762... 257, 262, 265, 269
2752763... 257, 262, 265, 270
2752783... 259, 262, 266, 269
2752928..... 257, 265
2752981..... 258, 266
2752994..... 262, 269
2753192... 257, 261, 265, 269
2753318... 257, 261, 265, 269
2753321.....257, 265
2753472....258, 262, 266, 269
2753706.....257, 265
2753707.....257, 265
2753809.....257, 265
2753892.....266
2753893.....257, 265
2754022.....259
2754023.....258
2754024.....258
2754311.....258, 266
2760105.....115, 119, 189
2780205.....57, 61
2792593.....272
2792596.....265, 272
2792655.....257, 272
2792656.....257, 272
2820031....142, 147, 151, 187
2820035.....186
2820078.....130, 136
2820118.....291, 307
2820233.....129
2820234.....129
2820235.....129
2840016.....139
2860012.....146
2860030.....116, 119, 332
2900770.....47
2900792....223, 225, 227, 229, 231, 233, 235, 237, 239, 241
2900838.....339
2901284.....249
2901285.....241
2901301.....235, 237, 244
2901303....223, 229, 231, 233, 244
2901443.....302, 317, 338
2902065.....92, 102
2902085.....147
2902212.....203
2902217.....208, 211, 213
2902296..74, 88, 98, 295, 310
2902303.....337
2902307.....337
2902309.....337
2902312.....337
2902322.....337
2902329.....337
2902443.....294, 309
2902467.....338
2902468.....338
2902473.....338
2910172.....339
2910968.....338
2915096.....339
2920110.....124
2920113.....124
2920129....290, 294, 295, 306, 308
2920140.....186
2920161.....124, 317
2920162.....147
2920215.....123

2940045 ..... 134
2940074 ..... 185, 332
2940088 ..... 129, 130
2940173 ..... 134
2940188 ..... 129
3020016 . 73, 82, 91, 101, 337
3020021 ..... 92
3020044 .. 73, 82, 91, 101
3160273 ..... 57, 63
3200362 ..... 91, 101
3200406 .. 73, 80, 91, 101
3220103 ..... 91
3220104 ..... 92
3220113 ..... 73, 80
3251102 .... 142, 147, 187
3251243 ... 146, 321, 325, 329
3251813 ..... 321, 326
3252347 ..... 321
3252507 .... 142, 147, 321
3252764 ..... 149
3272001 ..... 174
3272401 ..... 174
3272605 ..... 179
3290405 ..... 298, 314
3290505 ..... 142, 146
3290507 ..... 83
3290601 ..... 135
3290605 ..... 208
3290606 ..... 185
3290801 ..... 73, 80
3291601 ..... 29
3300151 ... 185, 205, 208, 211, 213
3300205 ..... 115, 119
3300240 ..... 174
3300241 ..... 169, 173
3300242 ..... 174
3300353 ..... 189
3300364 ..... 134
3300396 ..... 152
3300408 ..... 115, 119
3310601 ..... 139, 152
3310604 ..... 153
3310801 ..... 123
3310805 ..... 153
3311001 ... 128, 129, 130, 147
3311005 27, 43, 124, 142, 146, 190, 208, 211, 213
3311401 ..... 115, 174
3311402 ..... 161, 166
3311405 ... 48, 73, 80, 82, 91, 101, 116, 128, 134, 157, 161, 166, 181, 186, 205, 298, 314, 322, 327, 329
3311501 ..... 128, 134
3311505 ... 73, 75, 80, 82, 88, 91, 98, 101, 128, 135, 149, 181
3311508 ..... 149
3311601 ... 113, 128, 134, 190
3311605 ... 73, 77, 80, 82, 91, 95, 99, 101, 128, 129, 134, 139, 142, 146, 157, 167, 170, 174, 181, 186, 205, 208, 211, 213
3311705 ..... 142, 146
3311801 ... 73, 80, 88, 98, 151
3311805 . 73, 81, 91, 101, 128, 134, 139, 179
3312005 ..... 203
3312201 ..... 169, 173
3312205 ..... 203
3312602 ..... 124
3321501 ..... 129
3340755 ..... 170, 174
3340757 ..... 169, 173
3340758 ..... 170, 173
3340764 ..... 181
3340844 ..... 169, 173
3340871 ... 169, 170, 173, 174
3340877 ..... 135
3340881 ..... 169, 173
3340900 ..... 170, 174
3340956 ..... 203
3380429 .... 74, 82, 88, 98
3380434 ..... 186
3380535 ..... 123
3380652 ..... 338
3421453 ..... 208
3421565 ..... 57
3421627 ..... 57
3422417 ..... 170, 174
3422424 ..... 169, 173
3422446 .... 74, 82, 88, 98
3422532 ..... 82
3422557 ..... 161, 167
3422561 ..... 167
3422562 ..... 161
3422563 ..... 161
3422564 ..... 161, 167
3422565 ..... 161
3422566 ..... 161, 167
3422569 ..... 161
3422580 ..... 161
3422583 ..... 167
3422790 ..... 167
3422860 ..... 167
3422861 ..... 167
3422867 ..... 167
3423184 ..... 161, 167
3430816 ..... 139
3450404 ..... 139
3450806 ..... 181
3460334 ..... 203
3460544 ..... 75, 82
3470003 ..... 190
3480188 .... 235, 237, 243
3480205 ..... 249
3480206 ..... 241
3480210 ... 223, 229, 231, 243
3510822 ..... 185
3510833 ..... 185
3520028 .... 142, 146, 189
3520030 ..... 134
3520034 ..... 167
3520035 ..... 116
3520054 ..... 90, 101, 189
3520071 ..... 203
3520072 ..... 185
3520189 ..... 152
3520198 ..... 185
3536089 ..... 186
3537318 ..... 57
3537416 ..... 91, 101
3537445 ..... 139
3537446 ..... 139
3538758 ..... 181
3539219 ..... 115, 119
3539563 ..... 161, 167
3539590 ..... 130, 136
3539622 ..... 170, 174
3539872 ..... 73, 91
3539955 ..... 130, 136
3539957 ..... 74, 82, 88, 98
3539971 ..... 91, 101
3571712 ..... 128
3572044 ..... 322, 329
3573400 .... 205, 208, 211, 213
3573641 ..... 205
3573642 ..... 208, 211, 213
3573643 ..... 205
3574206 ..... 73, 81
3574207 ..... 73, 81
3574208 ..... 73, 81
3574684 ..... 142
3574978 ..... 91
3576799 ..... 205, 208
3577121 ..... 208, 211, 213
3580134 ..... 142, 146
3580158 ..... 145
3580241 ..... 169, 173
3580243 ..... 169, 173
3580248 ..... 169, 173
3580249 ..... 169, 173
3580276 ..... 142, 146
3580317 ..... 151
3580318 ..... 151
3580319 ..... 151
3580320 ..... 151
3580321 ..... 151
3580322 ..... 141
3600242 ..... 74, 82, 111
3600359 ..... 75, 105, 108
3600363 ..... 74, 105, 108
3600365 ..... 48
3600386 ..... 155, 157
3600395 ..... 89, 99, 111
3600412 ..... 89, 107
3600413 ..... 89, 108
3620033 ..... 91, 101
3620034 ... 77, 82, 95, 100
3620047 ..... 73, 81
3641533 ..... 152, 153
3720021 ..... 155
3740049 .... 115, 116, 119, 301, 317, 332
3740067 .. 73, 81, 91, 101, 332
3740080 ..... 92, 102, 142, 146, 151, 334
3760170 ..... 57
3760368 ... 223, 229, 231, 243
3760369 ... 235, 237, 243, 249
3760372 ..... 241
3790012 ... 124, 167, 189, 190, 191
3790045 ..... 74, 82
3790152 ..... 82, 89, 100
3820001 ... 124, 322, 327, 329
3820020 ..... 185
3841013 ..... 181
3841143 ... 74, 82, 88, 98, 161, 167, 170, 174
3841258 ..... 161, 167
3841340 ..... 162, 167
3841456 ..... 43
3850020 ..... 243
3860050 ..... 181
3890005 ..... 169
3890006 ..... 169, 173
3890009 ..... 174
3890010 ..... 173
3900085 ..... 124
3900210 .... 134, 135, 136
3900232 ..... 128, 129
3900268 ..... 116, 119
3900316 ..... 134
3900363 ..... 135, 136
3910606 ..... 149
3910608 ..... 139, 153
3910610 ..... 152
3910804 ..... 116, 119
3911040 ..... 124
3930816 ..... 123
3930828 ..... 123
3931012 ..... 27, 43
3931408 ..... 123
3931448 ..... 249
3931508 ..... 249
3931516 ... 223, 229, 231, 233, 243
3931620 . 74, 82, 89, 100, 235, 237, 239, 243, 247, 249
3932032 ..... 241
3932224 ..... 57
3951608 ..... 169, 173
3960389 . 75, 82, 89, 100, 128, 134
3960407 ..... 91, 101
3960422 ... 149, 299, 300, 314, 316
3960438 ..... 129
3960461 ..... 124
3960462 .... 129, 130, 134
3960464 ..... 129, 130
3960468 ...73, 81, 91, 101
3960469 ...73, 81, 91, 101
3960470 ..... 128
3980007 .... 74, 83, 89, 99
3990001 ..... 293, 334
3990010 ... 292, 300, 308, 309, 334
4010608 ..... 208
4010618 ..... 185

# PART NUMBER INDEX


4031608.....142, 146
4031709.....83
4031911.....73, 81
4032015.....151
4060092.....297, 313
4060700....149, 297, 300, 313
4060802....142, 147, 149, 187
4060803.....181
4060805..74, 81, 91, 101, 170, 174
4060906.....116, 119
4060907.....123
4060918.....47
4061043.....149, 300
4061049.....151
4070410.....128
4070411.....128
4070412.....128
4070585.....147
4070863.....169, 173
4070864.....169, 173
4070895.....170, 174
4070896.....169, 173
4070897.....169, 173
4070898.....169, 173
4070929.....170, 174
4070939.....170, 174
4070940.....170, 174
4070976.....170, 174
4070987.....116, 119
4070994.....181
4070995.....181
4071004.....170, 174
4071005.....170, 174
4071007.....170, 174
4100026.....292, 308
4100033.....162, 167
4100100.....223
4120035....290, 293, 295, 306, 310
4160139.....128
4160143.....128
4160149.....174
4160194.....134
4220162.....124
4220191.....73, 81
4240018.....142, 151
4240032.....123, 124, 153
4240033.....162, 167
4240099 77, 95, 186, 205, 208, 211, 213
4240113.....113
4240149.....203
4280295.....113
4300157.....151
4340747.....155
4360031.....186
4360070.....152, 334
4360294.....147, 334
4360328....116, 119, 167, 189, 191, 332
4360330.....190
4360331.....190, 332
4360336....124, 142, 146, 149, 187, 190, 334
4360387..... 190, 332
4360407..... 190, 332
4360436..... 113
4360469.... 116, 119, 334
4360470.... 116, 119, 334
4360475... 116, 119, 190, 332
4360476... 116, 119, 190, 332
4360506... 174, 295, 311, 334
4360517..... 27, 43, 311
4360522..... 190, 334
4360540..... 147
4360541..... 147
4360542..... 147
4360578..... 123, 334
4400400..... 113
4400449..... 113
4420014..... 203
4420037.... 208, 211, 213
4420038..... 113
4420051..... 330
4420054..... 123
4420060.... 123, 146, 153
4420066..... 203
4460007..... 190
4460018..... 153
4460027... 141, 146, 315, 316
4460051.... 151, 301, 316
4460071... 151, 186, 290, 297, 301, 306, 313, 316
4460125..... 297, 313
4460134..... 300, 316
4460190..... 141, 146
4460205... 298, 300, 313, 316
4460224..... 295, 311
4460225... 290, 301, 306, 316
4460226... 198, 290, 294, 295, 300, 301, 302, 306, 308, 309, 311, 315, 316, 317, 318
4460227... 290, 293, 306, 309, 310, 311
4460233..... 298, 313
4460234.... 124, 153, 190
4460259..... 301, 317
4460260..... 301, 317
4460265..... 198
4460267... 292, 295, 301, 308, 310, 317
4460268... 292, 293, 301, 308, 309, 317
4460297..... 301, 317
4460320... 292, 296, 301, 308, 311, 317
4460321... 300, 302, 315, 318
4460326... 292, 295, 308, 310
4460339..... 294
4460346... 149, 297, 300, 313, 316
4460374... 152, 294, 300, 301, 309, 315, 316
4460375... 152, 294, 300, 301, 309, 316
4460411..... 153
4460412..... 153
4460413..... 153
4460414..... 153
4460415..... 153
4460418... 290, 292, 306, 310
4460419... 290, 293, 306, 310
4460424... 292, 293, 294, 301, 308, 309, 317
4460425.... 152, 301, 316
4460426... 116, 120, 152, 186, 292, 301, 308, 316, 317
4460428... 155, 190, 290, 306
4460434... 290, 293, 306, 309
4460445..... 292, 308
4460457..... 293, 309
4460458... 293, 295, 309, 315
4460460..... 293, 309
4460464... 290, 293, 295, 296, 306, 309, 310, 311, 317
4460465... 152, 291, 293, 294, 301, 307, 309, 311, 317
4460466... 116, 291, 292, 294, 307, 308, 309, 311
4460467.... 302, 317, 339
4460470... 116, 120, 190, 290, 292, 306, 308
4460471... 116, 120, 190, 290, 292, 306, 308
4460473... 291, 292, 307, 308
4460475..... 295
4460488.... 116, 120, 190
4460496..... 120
4460497..... 120
4460499..... 55, 295, 310
4460508... 290, 293, 306, 310
4460509..... 291, 307
4460510.... 302, 317, 339
4460526... 116, 120, 292, 308
4460536..... 293, 309
4460539.... 293, 294, 309
4460607..... 153
4460633..... 155
4460634... 290, 293, 295, 306, 310
4460635... 290, 293, 306, 310
4460705..... 300, 315
4460708... 190, 290, 294, 306, 308
4460742..... 315, 317
4460743..... 315, 317
4460761....290, 293, 306, 310
4460792.....294
4460865....291, 292, 307, 308
4460866....290, 293, 306, 310
4460871....193, 195, 201, 290, 292, 293, 294, 295, 306, 308, 309, 310, 311
4460873....290, 293, 306, 309
4460874....116, 290, 292, 306, 310
4460875....116, 290, 292, 306, 310
4460876.....293, 310
4460878.....293, 310
4460879.....290, 306
4460880....292, 293, 308, 309
4460887....290, 293, 306, 310
4460891....294, 309, 311, 317
4460892.....294, 309
4460894.....294, 308, 311
4460897.....296, 311, 317
4460899.....309
4460905....116, 190, 290, 292, 293, 306, 310
4460906.....300, 315
4460908.....294
4460909.....116, 292
4460915.....116
4460928.....293, 294
4460943.....293, 309
4460944.....293, 294, 309
4460956.....153, 298, 314
4460957.....153, 298, 314
4460958.....149, 300, 316
4460961.....300, 315
4460962.....208, 211
4460963.....152, 301, 316
4460967.....152, 301, 316
4460968....123, 143, 146, 147, 297, 313
4460971.....205, 208
4460979.....309
4460991.....147
4460995.....294
4460996.....294
4460999.....147
4461001.....153
4461005....293, 295, 309, 311
4461006....293, 295, 309, 311
4461008.....295, 309, 311
4461052....293, 295, 309, 311
4461053....294, 295, 309, 311
4461054....294, 295, 309, 311

4461060 ... 294, 295, 309, 311
4461070 ..... 293, 309
4461071 ..... 294, 309
4461072 ..... 294, 309
4461073 ..... 294, 309
4461074 ..... 294, 309
4461095 ..... 293, 309
4461157 ..... 309
4461196 ..... 298, 313
4461198 ..... 297, 313
4461199 ..... 298, 313
4461201 ..... 297, 313
4461202 ..... 298, 313
4461204 ..... 297, 313
4461205 ..... 298, 313
4461207 ..... 297, 313
4461244 ..... 297, 313
4461245 ..... 297, 313
4461246 ..... 297, 313
4461249 ..... 298, 313
4530024 ..... 205, 217
4530028 ... 208, 211, 213, 215
4566468 ... 229, 231, 235, 237, 243
4566501 ..... 241
4566644 ..... 249
4567073 ..... 73, 81
4568721 ..... 73, 81
4569171 ..... 91
4569371 ..... 76, 85
4620127 ..... 57
4640509 ... 223, 225, 227, 229, 231, 233, 235, 237, 239, 241
4640744 .... 111, 257, 265
4640750 ..... 73
4640751 ..... 101
4640906 ..... 47
4640907 ..... 47
4640908 ..... 47
4640921 ..... 47, 55
4640932 ... 229, 231, 233, 235, 237, 239
4641028 ..... 249
4641264 ..... 108, 257
4641317 ..... 48
4641489 ..... 47, 51
4711000 ..... 27, 43
4711400 ... 47, 88, 91, 98, 101, 116, 123, 150, 151, 181, 185, 298, 314
4711500 73, 81, 135, 136, 149, 181, 190
4711600 ... 43, 47, 74, 77, 81, 91, 95, 101, 151, 169, 173, 181
4711700 ..... 92
4711800 .... 139, 150, 181
4712000 ..... 203
4712200 ..... 203
4740076 ..... 128
4740158 ..... 162, 167
4740171 ..... 128, 134
4740274 .. 73, 81, 91, 101
4740314 ..... 162, 167
4740362 ..... 124, 186
4740397 .... 142, 146, 187
4740439 ..... 167
4740444 ..... 116, 120
4740490 ..... 43
4740500 ..... 129
4750600 ..... 152
4750800 ..... 153
4751000 ... 124, 129, 130, 142, 146, 190, 208, 211, 213
4751400 ... 73, 81, 82, 91, 101, 116, 120, 123, 129, 134, 151, 162, 167, 186, 190, 205, 208, 211, 213, 322, 327, 329
4751500 ... 47, 74, 75, 81, 82, 88, 98, 129, 130, 134, 136, 142, 146
4751600 ... 27, 43, 73, 81, 82, 91, 100, 101, 113, 129, 134, 142, 146, 157, 170, 174, 186, 205, 208, 211, 213
4751700 ..... 92
4751800 ... 73, 81, 89, 98, 155
4751900 ..... 142
4752000 .... 74, 82, 89, 98
4760600 ..... 152, 153
4761000 ..... 129
4761400 .... 116, 120, 151
4761500 ..... 150
4761600 ..... 157
4770600 ..... 139
4791400 81, 91, 101, 151
4811400 ..... 298, 314
4811600 ..... 83, 142, 146
4811700 ..... 83, 185, 208
4811900 .. 73, 81, 83, 152
4812000 ..... 83
4812100 .. 73, 81, 83, 142
4812200 ..... 91, 101
4831900 ..... 92
4832000 ..... 73, 81
4844815 ..... 167
4844816 ..... 167
4844817 ..... 167
4844944 ..... 162, 167
4845356 ..... 129
4845395 ..... 91, 101
4845404 ..... 91
4845411 ..... 129
4845671 ..... 181
4845819 ..... 181
4846319 ..... 169, 173
4846452 ..... 185
4846566 ..... 91, 101
4846571 ..... 205
4846573 ..... 179
4846627 .... 208, 211, 213
4846790 ..... 73, 81
4846805 ..... 73, 81
4891400 ..... 48
4891500 ..... 48
4891600 .... 74, 82, 89, 91, 100, 139, 170, 174, 179
4891800 ..... 57, 139, 170, 174, 179
4892000 . 29, 57, 130, 136
4892600 ..... 179
4921827 ..... 300, 315
4921927 ..... 48, 295, 310
4921956 ..... 300
4922314 ..... 295
4922467 ..... 291, 307
4922468 ..... 291, 307
4922513 .... 116, 120, 292, 308
4922636 ..... 294, 308
4922637 ..... 294, 308
4922639 ..... 190, 274, 290
4922641 .... 153, 300, 301, 315, 317
4922643 ..... 301, 317
4922666 ..... 190, 290, 306
4922737 ..... 73, 74, 295
4922757 ..... 152, 301
4922791 ..... 292, 307
4922792 ..... 291, 307
4922884 ..... 291, 307
4922886 ..... 292, 307
4922888 .... 186, 291, 301, 307, 317
4922889 ..... 291, 307
4922912 ..... 147
4922925 ..... 151, 301, 316
4922970 ..... 300
4923257 ..... 116, 293
4923259 ..... 294
4923379 ..... 91, 101, 296, 311
4923462 ..... 291, 307
4923510 ..... 291, 307
4923577 ..... 116, 292
4923582 ..... 116, 293
4923584 ..... 294
4923591 ..... 294
4923657 ..... 291, 307
4923660 ..... 291, 307
4932986 ..... 274, 337
4933146 ..... 274, 295
4933219 ..... 274, 317
4933264 ..... 152, 274, 301
4933284 ..... 274, 299
4933287 ..... 274, 299
4933300 ..... 274, 299, 300
4933368 ..... 274, 293, 294
4933369 ..... 274, 293, 294
70000045 ..... 92
70000122 ..... 141, 145
70000123 ..... 141, 145
70000124 ..... 141, 146
70000125 ..... 141, 146
70000126 ..... 142, 146
70000127 ..... 141, 146
70000264 ..... 94
70000342 ..... 177
70000345 ..... 94, 103
70000579 ..... 51
70000580 ..... 51
70000582 ..... 51, 332
70000583 ..... 51
70000619 ..... 152
70000782 ..... 68
70000793 ..... 92, 102
70000863 ..... 150
70000912 ..... 93, 102
70000913 ..... 93, 102
70000914 ..... 93, 102
70000915 ..... 93, 102
70000916 ..... 93, 102
70000917 ..... 93, 102
70000918 ..... 93, 102
70000919 ..... 93, 102
70000934 ..... 47
70001002 ..... 92
70001017 ..... 80, 92
70001051 ..... 76, 84
70001100 ..... 150
70001120 ..... 76, 84
70001126 ..... 94, 103
70001132 ..... 93, 102
70001181 ..... 103
70001384 ..... 150
70001423 ..... 93
70001424 ..... 219
70001425 ..... 219
70001427 ..... 219
70001428 ..... 219
70001429 ..... 219
70001430 ..... 219
70001431 ..... 219
70001432 ..... 219
70001435 ..... 93, 102
70001498 ..... 94
70001663 ..... 157
70001696 ..... 150
70001697 ..... 177
70001742 ..... 76, 84
70001835 ..... 93, 102
70001836 ..... 93, 102
70001837 ..... 93, 102
70001838 ..... 93, 102
70001839 ..... 94, 102
70001841 ..... 93, 102
70001847 ..... 94, 103
70001848 ..... 93, 102
70001850 ..... 92, 102
70001866 ..... 94, 103
70001868 ..... 94, 103
70001870 ..... 94, 103
70001872 ... 94, 103, 295, 311
70001874 ..... 93, 102
70001941 ..... 123
70001953 ..... 150
70001966 ..... 150
70001969 ..... 150
70001973 ..... 150
70001974 ..... 150
70001976 ..... 55
70002005 ..... 181, 332
70002006 ..... 181
70002065 ..... 68
70002066 ..... 68
70002067 ..... 68
70002068 ..... 68
70002069 ..... 68

# PART NUMBER INDEX


70002070.....68
70002071.....68
70002072.....68
70002073.....68
70002074.....69
70002075.....69
70002088.....150
7000209.....61
7000213.....69
7000214.....61
7000217.....61, 68
70002200.92, 93, 94, 102
70002208.....65
70002234.....94, 103
70002243.....65
7000228.....61, 68
7000229.....61, 68
70002297.....150
7000230.....61, 68
70002415.....94, 103
70002416.....94, 103
70002417.....94, 103
7000246.....61, 68
70002460.....150
70002464.....29
70002465.....29, 35
70002466.....35
70002467.....35
70002468.....35
70002469.....35
70002470.....35
70002471.....35
70002475.....31
70002476.....31
70002477.....31
70002478.....31
70002479.....31
7000248.....68
70002480.....31
70002481.....31
70002482.....31
70002483.....31
70002484.....31
70002485.....31
70002486.....31
70002487.....31
70002488.....31
70002489.....31
70002490.....31
70002491.....31
70002492.....31
70002493.....31
70002495.....33
70002496.....33
70002497.....33
70002498.....33
70002499.....33
70002500.....43
70002501.....43
70002502.....43, 253
70002503.....43, 253
70002504.....253
70002505.....253
70002506.....253
70002507.....253
70002508.....253
70002509.....253
70002510..... 253
70002511..... 253
70002512..... 253
70002513..... 253
70002514..... 253
70002515..... 253
70002516..... 43
7000253..... 61, 68
7000255..... 61, 68
7000256..... 61
7000257..... 61, 68
7000258..... 61
7000263..... 61, 68
7000269..... 61
7000270..... 61
70002705..... 80
70002706..... 80
70002730..... 195
70002731..... 195
70002732..... 195
70002733..... 195
70002734..... 195
70002735..... 195
70002761..... 77, 84
70002762..... 77, 84
70002763..... 76, 85
70002764..... 77, 84
70002765..... 77, 84
70002766..... 77
70002767..... 77
7000281..... 68
70002818..... 153
70002819..... 153
70002820..... 153
70002821..... 153
70002822..... 153
70002823..... 153
70002824..... 153
70002825..... 153
70002826..... 153
70002833..... 75, 84
70002834..... 75, 84
70002835..... 75, 84
70002841..... 77
70002843..... 76, 84
70002844..... 76, 84
70002845..... 77, 84
70002846..... 77, 84
70002847..... 76, 84
70002848..... 76, 84
70002849..... 76, 84
70002850..... 76, 84
70002851..... 76, 85
70002852..... 77, 85
70002863..... 76
70002902..... 186
70002903..... 186
70002904..... 186
70002905..... 186
70002906..... 195
70002948..... 155
70003001..... 94
70003002..... 94
70003003..... 94
70003476 .92, 93, 94, 103
70003483..... 186
70003631..... 150
70003708..... 150
70003709..... 150
70003784..... 190
70003995..... 48
70003996..... 48
70003997..... 48
70003998..... 48
70003999..... 48
70004000..... 48
70004169..... 150
70004170..... 150
70004171..... 150
70004182..... 73, 81
70004316..... 310
70004317..... 311
70004318..... 311
70004319..... 311
70004643..... 181
70004752..... 197
70004753..... 197
70004754..... 197
70004755..... 197
70004756..... 197
70004757..... 197
70004758..... 197
70004759..... 197
70004760..... 197
70004761..... 197
70004762..... 197
70004763..... 197
70004764..... 197
70004765..... 197
70004766..... 197
70004767..... 197
70004768..... 197
70004769..... 197
70004770..... 197
70004771..... 197
70004772..... 197
70004773..... 198
70004774..... 198
70004775..... 198
70005916..... 103
70005917..... 103
7000625..... 186
70006442..... 247
70006443..... 239, 247
70006444..... 239, 247
70006445..... 239, 247
70006446..... 239, 247
70006447..... 247
70006568..... 225
70006569..... 225, 233
70006570..... 225
70006571..... 225
70006572..... 225
7000663..... 94, 103
70006648..... 233
70006649..... 227, 233
70006650..... 227, 233
70006734..... 227
70006735..... 227
70006736..... 227
70006822..... 239
70006823..... 239
7001268..... 106
7001481..... 107
7001485.....105, 106
7001909.....61, 68
7001911.....61, 68
7001912.....68
7001928.....61
7001931.....61, 68
7001985.....61, 68
7001987.....61
7001988.....61
70020808.....311
70020809.....311
70023915.....225
70025082.....103
70025752.....103
70025753.....103
7002821.....302, 317, 339
7002822.....339
7002823.....302, 317, 339
7002826.....339
7002828.....302, 317
7003928.....193, 195
7003953.....193
7003974.....201
7003976.....193
7003977.....193
7003992.....193
7003993.....193
7004035.....65, 69
7004043.....65, 69
7004044.....65, 69
7004248.....48
7004275.....339
7004276.....339
7004290.....48
7005881.....63
7005882.....63
7005889.....63
7005890.....63
7005891.....63
7005892.....63
7005893.....63
7006138.....181
7006143.....181
7007289.....107
7007412.....107
7007419.....105, 107
7007470.....106, 107
7007489.....111
7007497.....311
7007498.....295, 311
7007633.....61, 68
7010103.....111
7010104.....111
7010105.....111
7010474.....61, 68
7010488.....61
7010492.....61, 68
7010494.....61
7010496.....61
7010542.....51
7010543.....47, 48, 51
7011043.....48
7011044.....48
7011048.....48
7011062.....48
7011063.....48
7011064.....48

7011065 ..... 48
7011066 ..... 48
7011112 ... 229, 231, 233, 235, 237, 239
7011328 ..... 47
70124410 ..... 103
70124440 ..... 103
7012513 ..... 141, 145
7012514 ..... 141, 145
7012518 ..... 51
7012558 ..... 141, 145
7012664 . 72, 80, 90, 101, 332
7012772 .. 51, 52, 55, 332
7012773 ..... 51, 52, 55
7012775 ..... 51
7012776 ..... 55
7012777 ..... 55
7012799 ..... 51
7012905 ..... 47
7012912 ..... 51, 52
7012914 ..... 51
7012918 ..... 51
7012941 ..... 47, 48
7012944 .. 47, 48, 51, 332
7012953 ..... 51, 55
7012965 ..... 55
7012967 ..... 51
7012972 ..... 47
7012987 ..... 111
7012988 ..... 111
7012989 ..... 51
7012998 ..... 51, 52, 55
7014676 ..... 339
7016314 ..... 113
7016319 ..... 124
7016322 ..... 139
7016331 ..... 92, 102, 334
7016372 ..... 124
7016374 ..... 139
7016380 ..... 123
7016399 ..... 186
7016422 ..... 63
7016423 ..... 63
7016424 ..... 63
7016425 ..... 63
7016426 ..... 63
7016427 ..... 63
7016530 ..... 181
7016654 ..... 339
7016655 ..... 339
7017023 ..... 68
7017028 ..... 69
7017070 ..... 61, 68
7017072 ..... 68
7017080 ..... 68
7017082 ..... 69
7017085 ..... 68
7017158 ..... 177
7017159 ..... 177
7017162 ..... 177
7017163 ..... 177
7017164 ..... 177
7017183 ..... 177
7017193 ..... 177
7017195 ..... 177
7017410 ..... 51
7017421 ..... 55
7017422 ..... 55
7017464 ..... 51
7017481 ..... 47
7018612 ..... 57
7018912 ..... 52, 55
7018942 ..... 55
7018945 ..... 55
7018991 ..... 51
7019111 ..... 193
7019122 ..... 193
7019123 ..... 193
7019141 ..... 193
7019142 ..... 193
7019143 ..... 193
7019144 ..... 193
7019145 ..... 193
7019147 ..... 193
7019149 ..... 193
7019150 ..... 193
7019171 ..... 193
7019174 ..... 193
7019177 ..... 193
7019197 ..... 193
7019658 ..... 113
7019680 ..... 141, 146
7020020 ..... 47
7020021 ..... 47
7020108 ..... 141, 145
7020109 ..... 141, 145
7020110 ..... 141, 145
7020111 ..... 141, 145
7020175 .... 116, 119, 190
7020176 .... 116, 119, 190
7020190 ..... 141, 145
7020192 ..... 142, 146
7020193 ..... 300, 315
7020194 ..... 141, 146
7020246 ..... 115, 119
7020408 ..... 93, 102
7020411 ..... 93
7020447 ..... 93
7020449 ..... 93, 102
7020459 ..... 94, 103
7020460 ..... 94
7020464 ..... 94
7020465 ..... 92, 102
7020468 ..... 92, 102
7020471 ..... 93, 102
7020479 ..... 94, 103
7020487 ..... 92, 102
7021229 ..... 107
7021236 ..... 105
7021237 ..... 105
7021238 ..... 105
7021239 ..... 105
7021240 ..... 105
7021243 ..... 105
7021248 ..... 105
7021249 ..... 105
7021250 ..... 105
7021251 ..... 105, 106
7021253 ..... 105
7021255 .... 105, 106, 107
7021256 ..... 107
7021257 ..... 106
7021259 ..... 106
7021260 ..... 106
7021265 ..... 106
7021267 ..... 105
7021269 ..... 106
7021271 ..... 106
7021272 ..... 106
7021273 ..... 106
7021274 ..... 106
7021275 ..... 106
7021276 ..... 106
7021277 ..... 106
7021278 ..... 106
7021279 ..... 106
7021280 ..... 107
7021281 ..... 107
7021283 ..... 107
7021285 ..... 107
7021289 ..... 106
7021296 ..... 107
7021297 ..... 107
7021298 ..... 107
7021299 ..... 107
7021310 ..... 52
7021373 ..... 51
7021375 ..... 51
7021376 ..... 51, 332
7022190 ..... 106
7022321 ..... 105
7022330 ..... 105
7022331 ..... 105
7022332 ..... 105
7022333 ..... 105
7022334 ..... 105
7022335 ..... 105
7022336 ..... 105
7022337 ..... 105
7022338 ..... 105
7022340 ..... 106
7022341 ..... 106
7022342 ..... 106
7022343 ..... 106
7022344 ..... 106
7022345 ..... 106
7022346 ..... 106
7022347 ..... 106
7022348 ..... 106
7022349 ..... 106
7022350 ..... 107, 295
7022351 ..... 107
7022352 ..... 107
7022353 ..... 107
7022354 ..... 105
7022355 ..... 105
7022357 ..... 106
7022358 ..... 107
7022359 ..... 107
7022521 ..... 51
7022601 ..... 31
7022603 ..... 31
7022604 ..... 33
7022605 ..... 29
7022606 ..... 35
7022607 ..... 35
7022608 ..... 35
7022609 ..... 35
7022610 ..... 31
7022612 ..... 35
7022614 ..... 35
7022617 ..... 29
7022618 ..... 33
7022622 ..... 31
7022623 ..... 33
7022624 ..... 31
7022625 ..... 33
7022626 ..... 33
7022627 ..... 31, 33
7022629 ..... 33
7022630 ..... 33
7022631 ..... 33
7022632 ..... 33
7022633 ..... 33
7022636 ..... 29
7022637 ..... 33
7022638 ..... 33
7022645 ..... 33
7022652 ..... 35
7022654 ..... 31
7022655 ..... 31
7022656 ..... 31
7022657 ..... 31
7022658 ..... 31
7022660 ..... 31
7022661 ..... 31
7022662 ..... 33
7022663 ..... 33
7022664 ..... 35
7022693 ..... 13
7022720 ..... 43
7022721 ..... 43
7022722 ..... 43
7022723 ..... 43
7022724 ..... 43
7022726 ..... 43
7022727 ..... 43
7022729 ..... 43
7022732 ..... 29
7022735 ..... 43
7022736 ..... 43
7022751 ..... 35
7022808 ..... 193, 195
7022814 ..... 193
7022815 ..... 193, 195
7022816 ..... 193
7022817 ..... 193
7022818 ..... 193
7022819 ... 193, 195, 295, 311
7022821 ..... 43
7022832 ..... 201
7022833 ..... 201
7022834 ..... 201
7022835 ..... 201
7022836 ..... 201
7022837 ..... 201
7022838 ..... 201, 332
7022839 ..... 201
7023981 ..... 47
7023996 ..... 105
7023997 ..... 105
7023998 ..... 105
7023999 ..... 105
7024100 ..... 61, 69
7024379 ..... 65, 69
7024380 ..... 65, 69

# PART NUMBER INDEX


7024381.....65, 69
7024389.....65
7024390.....65, 69
7024395.....65
7024396.....69
7024397.....249
7024398.....92
7024439.....113
7024440.....113
7024441.....113
7024442.....113, 332
7024443.....113
7024444.....113, 332
7024445.....113
7024446.....113
7024453.....65, 69
7024454.....69
7024455.....69
7024456.....69
7024458.....69
7024462.....215
7024463.....215
7024467.....215
7024469.....215
7024470.....215
7024471.....215, 219
7024472.....215
7024473.....215
7024474.....215
7024475.....215
7024478.....215
7024485.....150
7024488.....151
7024489.....151
7024519.....217
7024520.....217
7024521.....217
7024522.....217
7024523.....217
7024524.....217
7024525.....217
7024526.....217
7024527.....217
7024528.....217
7024529.....217
7024530.....217, 219
7024531.....217, 219
7024532.....217, 219
7024533.....217, 219
7024534.....217, 219
7024535.....217, 219
7024536.....217, 219
7024537.....217, 219
7024560.....92, 102
7024565.....94, 103
7024579.....94, 103
7024598.....139
7024704.....68
7024763.....68
7024784.....69
7024800.....106
7024801.....107
7024802.....107
7024803.....107
7024804.....106
7024805.....105
7026188.....150
7026199..... 141, 145
7026330..... 48
7026597..... 150
7026608..... 94, 103
7026631..... 92, 102
7026632..... 157
7026633..... 157
7026634..... 157
7026635..... 157
7026636..... 157
7026637..... 157
7026638..... 157
7026639..... 157
7026640..... 157
7026641..... 158
7026642..... 158
7026643..... 158
7026644..... 158
7026645..... 158
7026646..... 158
7026647..... 158
7026648..... 158
7026649..... 158
7026650..... 158
7026651..... 157
7026652..... 157
7026653..... 157
7026654..... 157
7026655..... 157
7026656..... 157
7026658..... 158
7026659..... 157
7026660..... 157
7026661..... 157
7026800..... 76, 84
7026801..... 76, 84
7026802..... 76, 84
7026803..... 76, 84
7026804..... 76, 84
7026805..... 76, 84
7026806..... 76, 84
7026807..... 76, 84
7026808..... 85
7026809..... 76, 85
7026810..... 76, 84
7026811..... 75, 84, 334
7026812..... 75, 84
7026813..... 75, 84
7026814..... 76, 85
7026815..... 76, 85
7026816..... 76, 84
7026817..... 76, 84
7026818..... 77
7026819..... 76, 84
7026820..... 76, 85
7026821..... 76, 85
7026822..... 76, 85
7026824..... 76
7026825..... 76
7026826..... 76, 85
7026827..... 76, 85
7026828..... 76, 85
7026829..... 76, 85
7026830..... 75, 84, 334
7026831..... 75, 85
7026832..... 77, 85
7026833..... 75, 85
7026835..... 76
7026836..... 76
7026837..... 76
7026838..... 77
7026839..... 75, 76, 84
7026840..... 76
7026841..... 76
7026843..... 76
7026882..... 76
7026887..... 76
7026888..... 75
7027000..... 295
7027001..... 74, 88, 295
7027002... 74, 83, 88, 98, 295, 310
7027003 . 74, 88, 98, 295, 310
7027004 . 74, 88, 98, 295, 310
7027028..... 83, 310
7027029..... 83, 310
7027033..... 83, 310
7027236..... 94
7027239..... 94
7027246..... 92
7027276..... 94, 103
7027412..... 73, 81
7027608..... 92
7027609..... 93
7027610..... 93
7027773..... 215
7027774..... 215
7027775..... 215
7027776..... 215
7027777..... 215
7027778..... 215
7027779..... 215
7027780..... 215
7027781..... 155
7027782..... 155
7027783..... 155
7027784..... 155
7027790..... 94, 103
7027791..... 94, 103
7027792..... 94, 103
7027793..... 94, 103, 295, 311
7027794..... 295
7027795..... 94, 103
7027796..... 94, 103, 295, 311
7027799..... 150
7027887..... 142, 146
77143013..... 119
80211039..... 11
80211144..... 27
80211147..... 27
80211148..... 27
80211154..... 11
80211160..... 27
80213004..... 11, 17
80213005..... 11, 19
80213011..... 11
80213016..... 21
80213040..... 11, 23
80213041..... 11, 25
80213042..... 11, 25
80213044.....11
80213060.....11
80213115.....27
80213116.....27
80213117.....11, 21
80213118.....11
80213119.....255
80213121.....13
80214001.....17
80214002.....17
80214003.....17
80214004.....23
80214005.....17
80214006.....17
80214007.....17
80214008.....17
80214009.....19
80214010.....19, 25
80214011.....19, 25
80214012.....19
80214013.....19
80214014.....19
80214015.....19
80214017.....19
80214018.....19
80214019.....19
80214020.....19
80214021.....19
80214022.....19
80214023.....23
80214024.....23
80214026.....23
80214027.....23
80214028.....23
80214029.....23
80214030.....23
80214031.....25
80214033.....25
80214034.....25
80214171.....14
80214172.....14
80214308.....13
80214312.....13
80214325.....13
80214326.....13
80214329.....13
80214332.....13
80214333.....13
80214334.....13
80214337.....13
80214361.....21
80214362.....21
80214363.....21
80214364.....21
80214365.....21
80214366.....21
80214367.....21
80214368.....21
80214369.....21
80214370.....21
80214371.....14
80214372.....14
80214373.....14
80214374.....14
80214375.....13
80214376.....13
80214377.....13

80214378 ..... 14
80214379 ..... 14
80215014 ..... 11, 27, 255
8021-5014 ..... 272
80215016 ..... 11, 27, 255
8021-5016 ..... 272
80216028 ..... 11
80216035 ..... 27
8021-D121 ..... 11
80424002 ..... 68
80613008 ..... 11, 25
80613009 ..... 11, 25
80614008 ..... 25
80683015 ..... 11
80914076 ..... 13
8229242 ..... 310
8303541 ..... 83
8310129 ..... 203
8310230 ..... 203
83191002 ..... 11
83191004 ..... 27
83191010 ..... 27
83191013 ..... 27
83191021 ..... 27
83191056 ..... 11
83191058 ..... 11
83201001 ..... 11
83201047 ..... 11
8320270 ..... 93, 102, 334
83304150 ..... 65
83604107 ..... 23
83694007 ..... 23
83694009 ..... 23
83694010 ..... 23
83694040 ..... 23
83694045 ..... 25
83694046 ..... 25
83694047 ..... 25
83694108 ..... 23
83813109 ..... 339
83953053 ..... 255
8405009 ..... 72, 81
8405104 ..... 72, 81
8406105 ..... 83
8406109 ..... 84
8410013 ..... 90
84718465 ..... 255
84718604 ..... 255
84719026 ..... 255
84719727 ..... 255
84719728 ..... 255
88201065 ..... 11
88201069 ..... 27
88341012 ..... 11
88501008 ..... 27
88501016 ..... 11
88521205 ... 74, 81, 89, 99
88521212 ..... 11
88551013 ..... 11, 27
88662301 ..... 255
88662329 ..... 255
88662332 ..... 255
88662346 ..... 255
88662354 ..... 255
88662421 ..... 255
88662446 ..... 255
88662448 ..... 255
8896941 ..... 339
90027187 ..... 255
90027472 ..... 11
90027475 ..... 11
90206194 ..... 134
91401281 .. 72, 81, 89, 99

3121251

An Oshkosh Corporation Company


***Corporate Office***
***JLG Industries, Inc.***
***1 JLG Drive***
***McConnellsburg, PA 17233-9533 USA***
***(717) 485-5161 (Corporate)***
***(877) 554-5438 (Customer Support)***
***(717) 485-6417***


***Visit our website forJLG Worldwide Locations***
***www.jlg.com***