Illustrated Parts Manual

Models
600A
600AJ

SN 0300177361
TO SN 0300272252

P/N
3121617

March 30, 2020 - Rev S

ANSI

AS/NZS

An Oshkosh Corporation Company

REVISION LOG

NOTES:

Note: The 600A & 600AJ Boom Lifts are manufactured by JLG Industries in the following countries: USA and China. Refer to the Serial Number Tag to identify the country of manufacture. The country of manufacture may be determined by the Serial Number. machines manufactured in the USA will have a serial number prefix of 03 (i.e. 03xxxxxxxx). Machines manufactured in China will have a serial number prefix of B3 (i.e. B3xxxxxxxx).

PARTS MANUAL REVISION LOG:

September 1, 2013 - A - Original Issue of Manual (Manual edited to 1001160000 Revision B)
September 30, 2014 - B - Revised Manual (Manual edited to 1001160000 Revision B)
April 3, 2015 - C - Revised Manual (Manual edited to 1001160000 Revision B)
June 1, 2015 - D - Revised Manual (Manual edited to 1001160000 Revision AC)
September 1, 2015 - E - Revised Manual (Manual edited to 1001160000 Revision AL) (Revision 5)
December 14, 2015 - F - Revised Manual (Manual edited to 1001160000 Revision AL) (Revision 3)
March 14, 2016 - G - Revised Manual (Manual edited to 1001160000 Revision AN) (Revision 3)
June 7, 2016 - H - Revised Manual (Manual edited to 1001160000 Revision AN) (Revision 2)
September 14, 2016 - I - Revised Manual (Manual edited to 1001160000 Revision AN) (Revision 2)
December 22, 2016 - J - Revised Manual (Manual edited to 1001160000 Revision BC) (Revision 2)
March 31, 2017 - K - Revised Manual (Manual edited to 1001160000 Revision BC) (Revision 2)
June 15, 2017 - L - Revised Manual (Manual edited to 1001160000 Revision BH) (Revision 1)
September 11, 2017 - M - Revised Manual (Manual edited to 1001160000 Revision BH) (Revision 3)
December 15, 2017 - N - Revised Manual (Manual edited to 1001160000 Revision BJ) (Revision 2)
March 9, 2018 - O - Revised Manual (Manual edited to 1001160000 Revision BL) (Revision 2)
June 22, 2018 - P - Revised Manual (Manual edited to 1001160000 Revision BQ) (Revision 2)
September 1, 2018 - Q - Revised Manual (Manual edited to 1001160000 Revision BS) (Revision 1)
December 18, 2018 - R - Revised Manual (Manual edited to 1001160000 Revision CG) (Revision 3)
March 30, 2020 - S - Revised Manual (Manual edited to 1001160000 Revision CG) (Revision 3)

GENERAL INFORMATION

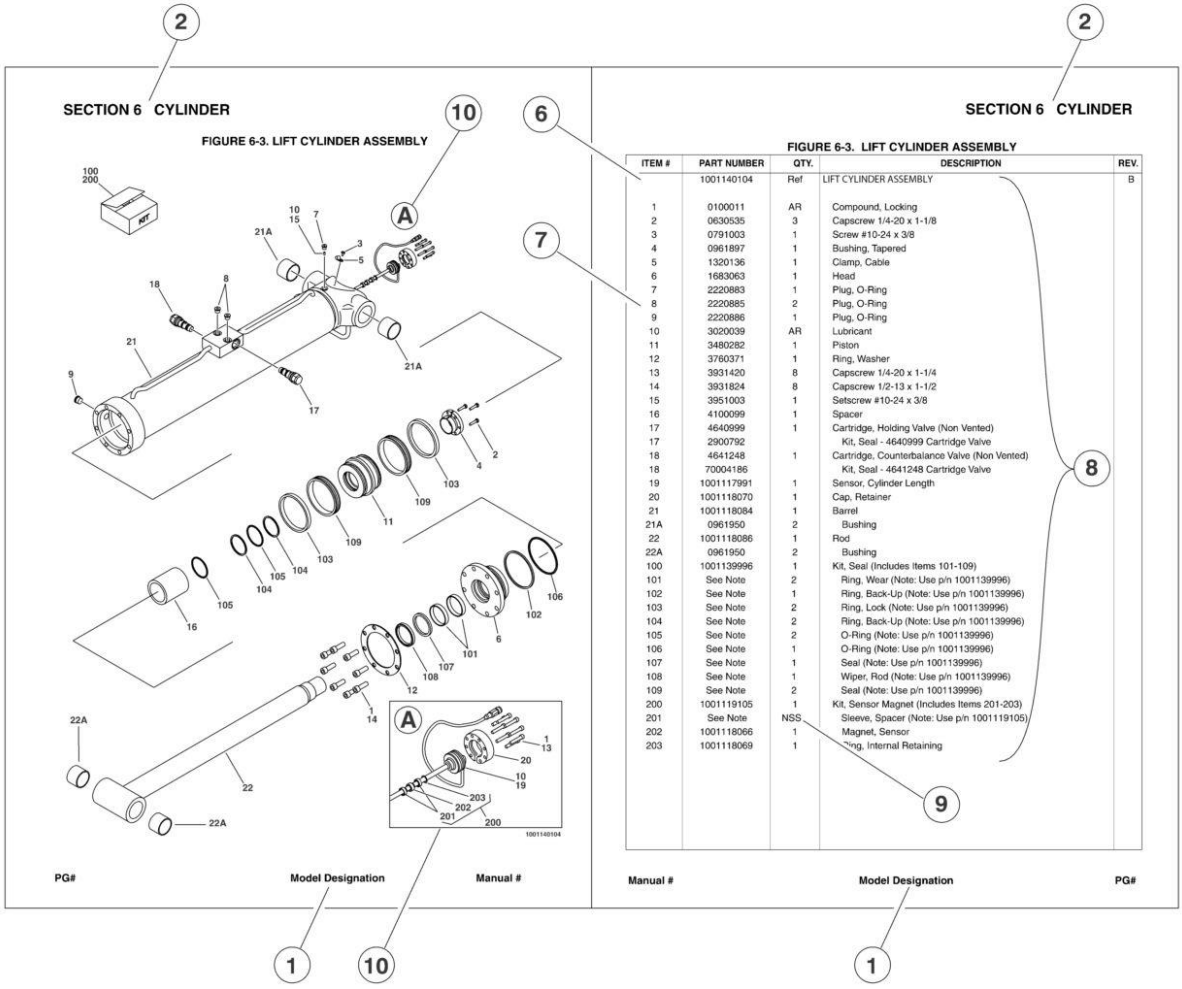

ITEM #	PART NUMBER	QTY.	DESCRIPTION	REV.
	1001140104	Ref	LIFT CYLINDER ASSEMBLY	B
1	0100011	AR	Compound, Locking	
2	0630535	3	Capscrew 1/4-20 x 1-1/8	
3	0791003	1	Screw #10-24 x 3/8	
4	0961897	1	Bushing, Tapered	
5	1320136	1	Clamp, Cable	
6	1683063	1	Head	
7	2220883	1	Plug, O-Ring	
8	2220885	2	Plug, O-Ring	
9	2220886	1	Plug, O-Ring	
10	3020039	AR	Lubricant	
11	3480282	1	Piston	
12	3760371	1	Ring, Washer	
13	3931420	8	Capscrew 1/4-20 x 1-1/4	
14	3931824	8	Capscrew 1/2-13 x 1-1/2	
15	3951003	1	Setscrew #10-24 x 3/8	
16	4100099	1	Spacer	
17	4640999	1	Cartridge, Holding Valve (Non Vented)	
17	2900792		Kit, Seal - 4640999 Cartridge Valve	
18	4641248	1	Cartridge, Counterbalance Valve (Non Vented)	
18	70004186		Kit, Seal - 4641248 Cartridge Valve	
19	1001117991	1	Sensor, Cylinder Length	
20	1001118070	1	Cap, Retainer	
21	1001118084	1	Barrel	
21A	0961950	2	Bushing	
22	1001118086	1	Rod	
22A	0961950	2	Bushing	
100	1001139996	1	Kit, Seal (Includes Items 101-109)	
101	See Note	2	Ring, Wear (Note: Use p/n 1001139996)	
102	See Note	1	Ring, Back-Up (Note: Use p/n 1001139996)	
103	See Note	2	Ring, Lock (Note: Use p/n 1001139996)	
104	See Note	2	Ring, Back-Up (Note: Use p/n 1001139996)	
105	See Note	2	O-Ring (Note: Use p/n 1001139996)	
106	See Note	1	O-Ring (Note: Use p/n 1001139996)	
107	See Note	1	Seal (Note: Use p/n 1001139996)	
108	See Note	1	Wiper, Rod (Note: Use p/n 1001139996)	
109	See Note	2	Seal (Note: Use p/n 1001139996)	
200	1001119105	1	Kit, Sensor Magnet (Includes Items 201-203)	
201	See Note	NSS	Sleeve, Spacer (Note: Use p/n 1001119105)	
202	1001118066	1	Magnet, Sensor	
203	1001118069	1	Ring, Internal Retaining	

1) MACHINE IDENTIFICATION
Machines are identified by model and in some cases a combination of models, serial number (SN) or regional standard (i.e ANSI, CE,CSA). Components may also be identified by SN or manufacturer. common components that may be identified by these characteristics are engines and hydraulic components.

2) PARTS MANUAL ORGANIZATION
Product information in this manual is organized under section titles. Frame, Cylinder, Hydraulic and Electrical are a few examples. Each section is organized by figure and page number. The information within the Figure is then organized by item number, part number, description and corresponding illustration (s).

3) TABLE OF CONTENTS
A table of contents is found toward the beginning of the manual. Figure number, description and page number are provided for quick reference to the page containing the related information.

4) RECOMMENDED SPARE PARTS
The Recommended Spare Parts, located near the end of the manual, referance most frequently used maintenance parts.

5) PART NUMBER INDEX
A numerical index listing all part numbers and the corresponding page number(s) appears at the back of the manual.

GENERAL INFORMATION

6) NON-SERVICED PARTS

In some instances, it is necessary to display non-serviced parts, assemblies or installations. In the case of assemblies and installations there will be a Ref in the Qty column. In case of parts that are not available for service within assemblies or components, there will be a NSS (Not Sold Separately) or NLA (No Longer Available) listed in the Qty. column of the manual.

7) PARTS LIST ITEM NUMBERS

Numbers shown in the item# column correspond to numbers used in the associated illustration (s). Item numbers which are missing from the sequence in the parts list are not used on that page

8) INDENTED PARTS DESCRIPTION

An indented part description is included in the item under which it is indented.

9) ABB REVIATION AND SYMBOLS

AC ..... Alternating Current
ADE. ..... Advanced Design Electronics
ANSI ..... American National Standards Institute
AR.. ..... As Required
ASSY ..... Assembly
AUX... ..... Auxiliary
AWG ..... American WireGauge
B/M.. ..... Bill of Material
CE.. ..... European Conformity
CCW ..... Counter Clockwise
cm. ..... Centimeter
CW ..... Clockwise
CSA. ..... Canadian Standards Association
CYL... ..... Cylinder
DIA. ..... Diameter
DC ..... Direct Current
EMS ..... Emergency Stop
ENG ..... Engine
FT(ft).. ..... Feet
GA(Ga).. ..... Gauge
HYD ..... Hydraulic
Hz.. ..... Hertz
ID.. ..... Inside Diameter
in... ..... inches
ISO ..... International Organization for Standards
JIC ..... Joint Industry Council
KG ..... Kilogram
L.. ..... Liter
LB ..... Pounds
LCD ..... Liquid Crystal Display
LED ..... Light Emitting Diodes
LH... ..... Left Hand
LSS ..... Load Sensing System
M(m)... ..... Metric/Meter
MM (mm) ..... Milimeter
mA. ..... Miliamps
NLA ..... No Longer Available
NPT ..... National Pipe Threads
NSS ..... Not Sold Separately
OD.. ..... Outside Diameter
ORB ..... O-Ring Boss
ORFS ..... O-Ring Face Seal
OZ (oz). ..... Ounces
PG ..... Page
P/N. ..... Part Number
qt. ..... Quarts
QTY. ..... Quantity
REF ..... Reference
REV ..... Revision Level
RH... ..... Right Hand
SAE ..... Society of Automotive Engineers
SN.. ..... Serial Number
SPEC(S) ..... Specifications
T/T. ..... Turntable
UGM ..... Universal Ground Module
V. ..... Volts
W... ..... Watts
#... ..... Number

10) ILLUSTRATION REFERANCE LETTERS

When necessary, illustrations may contain referance letters that are intended to track information (i. e. hoses, harnesses) from one point to another or to track visual enlargement of components to show details that may be located in another area on the illustration.

Note: Due to continuous product improvements, JLG Industries, Inc. reserves the right to make specification changes without prior notification. Contact JLG Industries, Inc. for updated information.

TABLE OF CONTENTS

SECTION 1 - FRAME 11

FIGURE 1-1. AXLE INSTALLATION 12
FIGURE 1-2. STEERING INSTALLATION (8FT/2.4M WIDE MACHINES WITHOUT TOW PACKAGE) 14
FIGURE 1-3. STEERING INSTALLATION (8FT/2.4M WIDE MACHINES WITH TOW PACKAGE) 18
FIGURE 1-4. STEERING INSTALLATION (7FT/2.1M WIDE MACHINES) 22
FIGURE 1-5. TIRE AND WHEEL DRIVE INSTALLATIONS 26
FIGURE 1-6. DRIVE HUB ASSEMBLY 30
FIGURE 1-7. DRIVE MOTOR ASSEMBLY 34
FIGURE 1-8. DRIVE VALVES AND SHIELDS INSTALLATION (FRAME MOUNTED) 38
FIGURE 1-9. TOW PACKAGE INSTALLATION (OPTIONAL) 42

SECTION 2 - TURNTABLE 45

FIGURE 2-1. CONTROL VALVES INSTALLATIONS 46
FIGURE 2-2. MAIN VALVE BLOCK ASSEMBLY 50
FIGURE 2-3. MAIN VALVE BLOCK ASSEMBLY 54
FIGURE 2-4. ACCESSORY VALVE ASSEMBLIES 58
FIGURE 2-5. SWING DRIVE, TURNTABLE BEARING AND LOCK INSTALLATIONS 60
FIGURE 2-6. SWING MOTOR/HUB ASSEMBLY (Prior to SN 0300269965) 62
FIGURE 2-7. SWING MOTOR/HUB ASSEMBLY (SN 0300269965 to Present) 66
FIGURE 2-8. DEUTZ D2011 ENGINE INSTALLATION 70
FIGURE 2-9. DEUTZ TD2.9L4 ENGINE INSTALLATION 80
FIGURE 2-10. BREATHER HEATER INSTALLATION - DEUTZ D2.9L4 ENGINES WITH ARCTIC PACKAGE 92
FIGURE 2-11. FORD ENGINE INSTALLATION 94
FIGURE 2-12. GM ENGINE INSTALLATION 106
FIGURE 2-13. PISTON PUMP ASSEMBLY (SN 0300177361 through 0300208081) 114
FIGURE 2-14. PISTON PUMP ASSEMBLY (SN 0300208082 through 0300272252) 118
FIGURE 2-15. GEAR PUMP ASSEMBLY 124
FIGURE 2-16. FUEL-WATER SEPARATOR INSTALLATION - DEUTZ D2011 AND DEUTZ D2011 STAGE V ENGINES 126
FIGURE 2-17. TANK INSTALLATIONS 128
FIGURE 2-18. ROTARY COUPLING INSTALLATION 132
FIGURE 2-19. GROUND CONTROL BOX ASSEMBLY (SN 0300177361 through 0300181174) 136
FIGURE 2-20. GROUND CONTROL BOX ASSEMBLY (SN 0300181175 through 0300272252) 140
FIGURE 2-21. ELECTRICAL OPTIONS INSTALLATIONS (TURNTABLE MOUNTED) 146
FIGURE 2-22. ENGINE TRAY JACK INSTALLATIONS (OPTIONAL) 150
FIGURE 2-23. HOODS INSTALLATIONS 152
FIGURE 2-24. 2500W GENERATOR INSTALLATION - DEUTZ D2011 MACHINES (OPTIONAL) 158
FIGURE 2-25. 2500W GENERATOR INSTALLATION - DEUTZ TD2.9L4 (OPTIONAL) 162
FIGURE 2-26. 2500W GENERATOR INSTALLATION - FORD MACHINES (OPTIONAL) 164
FIGURE 2-27. 2500W GENERATOR INSTALLATION - GM MACHINES (OPTIONAL) 168
FIGURE 2-28. 4000W GENERATOR INSTALLATION - DEUTZ D2011 ENGINES 172
FIGURE 2-29. 4000W GENERATOR INSTALLATION - DEUTZ TD2.9L4 ENGINES 176
FIGURE 2-30. 4000W GENERATOR INSTALLATION - GM ENGINES 180
FIGURE 2-31. 7500W SKYPOWER GENERATOR INSTALLATION - DEUTZ ENGINES 184
FIGURE 2-32. 7500W SKYPOWER GENERATOR INSTALLATION - FORD ENGINES 192
FIGURE 2-33. 7500W SKYPOWER GENERATOR INSTALLATION - GM ENGINES 196

SECTION 3 - BOOM 201

FIGURE 3-1. BOOMS AND CYLINDERS INSTALLATION - 600A 202
FIGURE 3-2. BOOMS AND CYLINDERS INSTALLATION - 600AJ 206
FIGURE 3-3. TOWER BOOM ASSEMBLY 212
FIGURE 3-4. MAIN BOOM ASSEMBLY 216
FIGURE 3-5. ROTATOR ASSEMBLIES 220
FIGURE 3-6. PLAFORM SUPPORT INSTALLATION - WITHOUT LSS OR WITH 4 CELL LSS 222
FIGURE 3-7. PLATFORM SUPPORT INSTALLATION - WITH 1 CELL LSS 226
FIGURE 3-8. VALVES AND SWITCHES INSTALLATION (BOOM MOUNTED) 228

SECTION 4 - PLATFORM 233

FIGURE 4-1. PLATFORM ASSEMBLIES 234
FIGURE 4-2. CONSOLE BOX INSTALLATION (WITH 1 CELL LSS) (SN 0300177361 through 0300259736) 238
FIGURE 4-3. CONSOLE BOX INSTALLATION (WITH 1 CELL LSS) (SN 0300259737 through 0300272252) 240
FIGURE 4-4. PLATFORM COMPONENTS INSTALLATION (FALL ARREST PLATFORM) 242
FIGURE 4-5. PLATFORM CONSOLE ASSEMBLY (WITHOUT SKYGUARD) 244

TABLE OF CONTENTS

FIGURE 4-6. PLATFORM CONSOLE ASSEMBLY (WITH SKYGUARD) 248
FIGURE 4-7. CONTROLLER ASSEMBLY (LIFT AND SWING) (SN 0300177361 through 0300188647) 252
FIGURE 4-8. CONTROLLER ASSEMBLY (LIFT AND SWING) (SN 0300188648 through 0300272252) 254
FIGURE 4-9. CONTROLLER ASSEMBLY (DRIVE AND STEER) (SN 0300177361 through 0300188647) 258
FIGURE 4-10. CONTROLLER ASSEMBLY (DRIVE AND STEER) (SN 0300188648 through 0300272252) 260
FIGURE 4-11. SKYEYE INSTALLATION 262
FIGURE 4-12. SKYGUARD SYSTEM INSTALLATION (SN 0300177361 through 0300259736) 264
FIGURE 4-13. SKYGUARD BAR INSTALLATION (SN 0300259737 through 0300272252) 266
FIGURE 4-14. SKYLINE INSTALLATION 268
FIGURE 4-15. CROSS RAIL INSTALLATION 270
FIGURE 4-16. PLATFORM PADDING INSTALLATION (30IN/76CM DEPTH PLATFORMS) (OPTIONAL) 272
FIGURE 4-17. SOFT TOUCH SYSTEM INSTALLATION (36IN/91.5CM DEPTH PLATFORMS) (OPTIONAL) 274
FIGURE 4-18. SKYGLAZIER INSTALLATION 278
FIGURE 4-19. SKYWELDER/SKYCUTTER COMBO INSTALLATION (60HZ) 282
FIGURE 4-20. SKYWELDER INSTALLATION (50HZ) 286
FIGURE 4-21. SKYWELDER INSTALLATION (60HZ) 288
FIGURE 4-22. SKYWELDER PREP PACKAGE (60HZ) 290
FIGURE 4-23. WELDER ASSEMBLY 292
FIGURE 4-24. SKYWELDER LOCKING BRACKET INSTALLATION 294
FIGURE 4-25. SKYCUTTER INSTALLATION 296
FIGURE 4-26. PLASMA CUTTER ASSEMBLY 298
FIGURE 4-27. PIPE RACKS INSTALLATION 300
FIGURE 4-28. FALL ARREST INSTALLATION (BOLT-ON EXTERNAL) (6FT/1.82M PLATFORM) 302
FIGURE 4-29. FALL ARREST INSTALLATION (BOLT-ON EXTERNAL) (6FT/1.82M TRI-ENTRY PLATFORM) 304
FIGURE 4-30. FALL ARREST INSTALLATION (BOLT-ON EXTERNAL) (8FT/2.4M PLATFORM) 306

SECTION 5 - CYLINDER 309

FIGURE 5-1. AXLE LOCKOUT CYLINDER ASSEMBLY 310
FIGURE 5-2. LEVEL (PLATFORM SLAVE) CYLINDER ASSEMBLY 312
FIGURE 5-3. LEVEL (PLATFORM SLAVE) CYLINDER ASSEMBLY - 600A (SN 0300233771 through 0300241337) 316
FIGURE 5-4. LEVEL (PLATFORM SLAVE) CYLINDER ASSEMBLY - 600A (SN 0300241338 through 0300272252) 318
FIGURE 5-5. LEVEL (PLATFORM SLAVE) CYLINDER ASSEMBLY - 600AJ WITHOUT ARCTIC PACKAGE (SN 0300229829 through 0300241337) 320
FIGURE 5-6. LEVEL (PLATFORM SLAVE) CYLINDER ASSEMBLY - 600AJ WITH ARCTIC PACKAGE (SN 0300229829 through 0300241337) 322
FIGURE 5-7. LEVEL (PLATFORM SLAVE) CYLINDER ASSEMBLY - 600AJ (SN 0300241338 through 0300272252) 324
FIGURE 5-8. LEVEL (UPRIGHT) CYLINDER ASSEMBLY (SN 0300177361 through 0300237381) 326
FIGURE 5-9. LEVEL (UPRIGHT) CYLINDER ASSEMBLY (SN 0300237382 through 0300272252) 328
FIGURE 5-10. LIFT CYLINDER ASSEMBLY - JIB - 600AJ (SN 0300177361 through 0300241337) 330
FIGURE 5-11. LIFT CYLINDER ASSEMBLY - JIB - 600AJ (SN 0300241338 through 0300244755) 332
FIGURE 5-12. LIFT CYLINDER ASSEMBLY - JIB - 600AJ (SN 0300244756 through 0300272252) 334
FIGURE 5-13. LIFT CYLINDER ASSEMBLY - MAIN BOOM (SN 0300177361 through 0300237381) 336
FIGURE 5-14. LIFT CYLINDER ASSEMBLY - MAIN BOOM (SN 0300237382 through 0300272252) 338
FIGURE 5-15. LIFT CYLINDER ASSEMBLY - TOWER BOOM (SN 0300177361 through 0300239707) 340
FIGURE 5-16. LIFT CYLINDER ASSEMBLY - TOWER BOOM (SN 03000239708 through 0300272252) 342
FIGURE 5-17. MASTER CYLINDER ASSEMBLY (SN 0300177361 through 0300241337) 344
FIGURE 5-18. MASTER CYLINDER ASSEMBLY - 600A (SN 0300241338 through 0300272252) 348
FIGURE 5-19. MASTER CYLINDER ASSEMBLY - 600AJ (SN 0300241338 through 0300272252) 350
FIGURE 5-20. STEER CYLINDER ASSEMBLY (7FT/2.1M WIDE MACHINES) 352
FIGURE 5-21. STEER CYLINDER ASSEMBLY (8FT/2.4M WIDE MACHINES) 354
FIGURE 5-22. TELESCOPE CYLINDER ASSEMBLY - MAIN BOOM (600A & 600AJ) 356
FIGURE 5-23. TELESCOPE CYLINDER ASSEMBLY - MAIN BOOM (600A & 600AJ) (SN 0300241338 through 0300272252) 358
FIGURE 5-24. TELESCOPE CYLINDER ASSEMBLY - MAIN BOOM (600AJ) (SN 0300242729 through 0300272252) 360
FIGURE 5-25. TELESCOPE CYLINDER ASSEMBLY - TOWER BOOM (SN 0300177361 through 0300237381) 362
FIGURE 5-26. TELESCOPE CYLINDER ASSEMBLY - TOWER BOOM (SN 0300237382 through 0300272252) 364

SECTION 6 - HYDRAULIC 367

FIGURE 6-1. DRIVE HYDRAULIC DIAGRAM - 2WD/2WS 368
FIGURE 6-2. DRIVE HYDRAULIC DIAGRAM - 4WD/2WS 370
FIGURE 6-3. HYDRAULIC DIAGRAM - OSCILLATING AXLE 374
FIGURE 6-4. HYDRAULIC DIAGRAM - STANDARD (SN 0300177361 through 0300181174) 376
FIGURE 6-5. HYDRAULIC DIAGRAM - STANDARD (SN 0300181175 through 0300208081) 382
FIGURE 6-6. HYDRAULIC DIAGRAM - STANDARD (SN 0300208082 through 0300272252) 386
FIGURE 6-7. HYDRAULIC DIAGRAM LIST 392

TABLE OF CONTENTS

SECTION 7 - ELECTRICAL 395

FIGURE 7-1. ELECTRICAL DIAGRAM LIST 396
FIGURE 7-2. HARNESS COMPONENTS INSTALLATION (SN 0300177361 through 0300181174) 398
FIGURE 7-3. HARNESS COMPONENTS INSTALLATION (SN 0300181175 through 0300272252) 418
FIGURE 7-4. BATERY DISCONNECT SWITCH INSTALLATION – DEUTZ 2.9L4, GM AND FORD ENGINES 440
FIGURE 7-5. BATERY DISCONNECT SWITCH INSTALLATION – DEUTZ D2011 AND D2011 (STAGE V) ENGINES 442
FIGURE 7-6. SKYEYE INTERMEDIATE HARNESS 444
FIGURE 7-7. SKYEYE EMITTER HARNESS 446
FIGURE 7-8. SKYEYE RECEIVER HARNESS 448
FIGURE 7-9. SKYLINE HARNESS 450

SECTION 8 - DECALS 453

FIGURE 8-1. DECAL INSTALLATION (ANSI SPEC) 454
FIGURE 8-2. DECAL INSTALLATION (COUNTRY SPEC) 458
FIGURE 8-3. DECAL INSTALLATION (AUSTRALIAN AND CE SPECS) 464

SECTION 9 - RECOMMENDED SERVICE PARTS STOCK 467

FIGURE 9-1. MODEL 600A/600AJ STANDARD PARTS 468
FIGURE 9-2. MODEL 600A/600AJ VARIABLE PARTS 470

SECTION 10 - SPECIAL OPTIONS 473

FIGURE 10-1. SPECIAL OPTIONS 474

PART NUMBER INDEX 483

SECTION 1 - FRAME

FIGURE 1-1. AXLE INSTALLATION

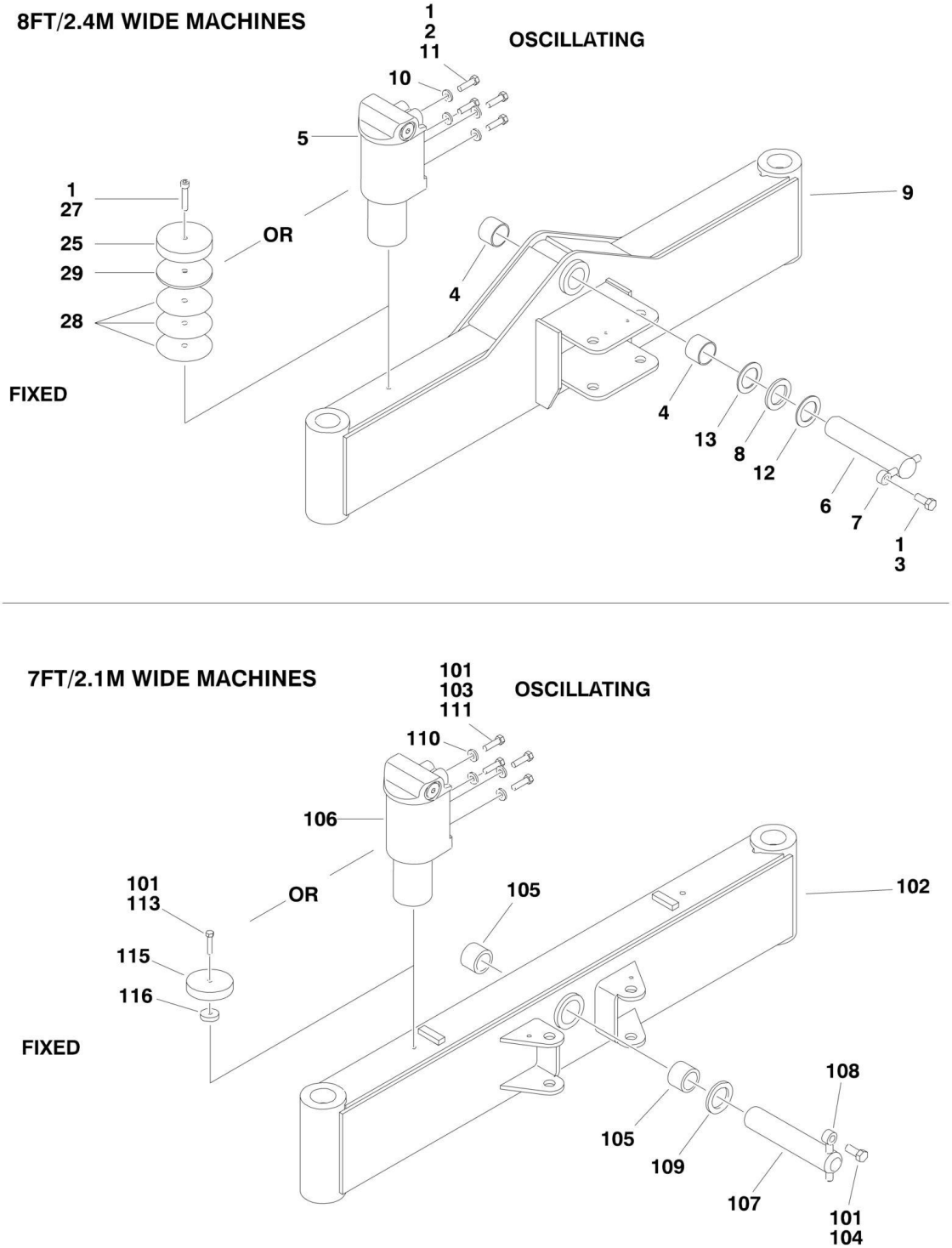

FIGURE 1-1. AXLE INSTALLATION

ITEM	PART NUMBER	QTY	DESCRIPTION	REV
		Ref	**AXLE INSTALLATIONS (8FT/2.4M WIDE MACHINES)**	
	1001148168	Ref	**Oscillating Axle without Tow Package**	C
	1001152448	Ref	**Oscillating Axle without Tow Package (With Turf Tire)**	B
	1001148170	Ref	**Oscillating Axle with Tow Package**	C
	1001148169	Ref	**Fixed Axle Machines**	C
1	0100011	AR	Compound, Locking	
2	0641814	8	Bolt 1/2in-13NC x 1-3/4in	
3	0642012	1	Bolt 5/8in-11NC x 1-1/2in	
4	0961950	2	Bearing	
5	1684465	2	Axle Lockout Cylinder Assembly (Oscillating Axle Only) (See CYLINDER SECTION for Breakdown)	
6	3423184	1	Pin	
7	3841258	1	Keeper, Pin	
8	4740158	1	Thrustwasher (1/4in Thick)	
9		Ref	Axle Weldment Options:	
9	1001148171	1	Machines without Tow Package	
9	1001151966	1	Machines without Tow Package (With Turf Tire)	
9	1001148172	1	Machines with Tow Package	
10	4891800	8	Flatwasher 1/2in Hardened	
11	0100038	AR	Primer, Locking	
12	4740229	AR	Thrustwasher (1/8in Thick)	
13	4071101	AR	Shim	
25	3539877	2	Plate, Stop (Fixed Axle Only)	
27	3931840		Capscrew 1/2in-13NC x 2-1/2in	
28	4070944	6	Shim (.06) (Fixed Axle Only)	
29	4070945	2	Shim (.25) (Fixed Axle Only)	
		Ref	**AXLE INSTALLATIONS (7FT/2.1M WIDE MACHINES)**	
	0274047	Ref	**Oscillating Axle without Tow Package**	B
	0274256	Ref	**Oscillating Axle with Tow Package**	B
	0274054	Ref	**Fixed Axle**	B
101	0100011	AR	Compound, Locking	
102		Ref	Axle Weldment Options:	
102	0280171	1	Machine without Tow Package	
102	0280185	1	Machine with Tow Package	
103	0641814	8	Bolt 1/2in-13NC x 1-3/4in	
104	0642012	1	Bolt 5/8in-11NC x 1-1/2in	
105	0961950	2	Bearing	
106	1684465	2	Axle Lockout Cylinder Assembly (Oscillating Axle Only) (See CYLINDER SECTION for Breakdown)	
107	3422592	1	Pin	
108	3841258	1	Keeper, Pin	
109	4740158	1	Thrustwasher (1/4in Thick)	
110	4891800	8	Flatwasher 1/2in Hardened	
111	0100038	AR	Primer, Locking	
113	0641816	2	Bolt 1/2in-13NC x 2in	
115	3539877	2	Plate, Stop (Fixed Axle Only)	
116	4740542	2	Spacer (Fixed Axle Only)	

FIGURE 1-2. STEERING INSTALLATION (8FT/2.4M WIDE MACHINES WITHOUT TOW PACKAGE)

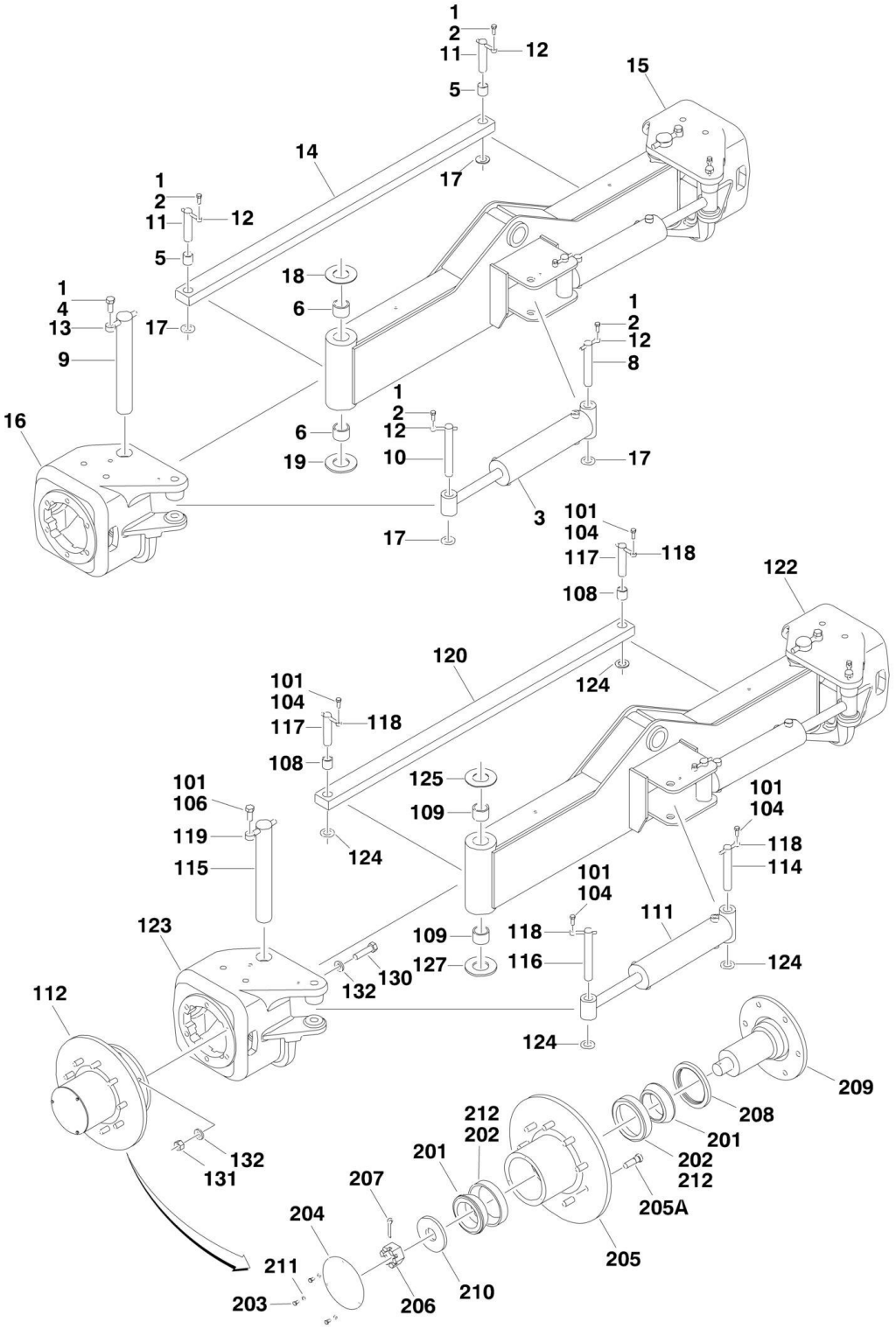

FIGURE 1-2. STEERING INSTALLATION (8FT/2.4M WIDE MACHINES WITHOUT TOW PACKAGE)

ITEM	PART NUMBER	QTY	DESCRIPTION	REV
		Ref	**4WD STEERING INSTALLATION**	
	1001148162	Ref	**4WD/2WS**	C
	1001148163	Ref	**4WD/4WS (Note: Double Qty for 4WD/4WS Machines)**	B
1	0100011	AR	Compound, Locking	
2	0641608	6	Bolt 3/8in-16NC x 1in	
3	1001097242	2	Steer Cylinder Assembly (See CYLINDER SECTION for Breakdown)	
4	0642012	2	Bolt 5/8in-11NC x 1-1/2in	
5	0962356	2	Bushing	
6	0962131	4	Bushing	
8	3422326	2	Pin	
9	3422900	2	Kingpin	
10	3422902	2	Pin	
11	3422903	2	Pin	
12	3841143	6	Keeper, Pin	
13	3841258	2	Keeper, Pin	
14	1001155574	1	Tie-Rod	
15	1001099387	1	Spindle	
16	1001099196	1	Spindle	
17	4740111	6	Thrustwasher	
18	4740256	2	Thrustwasher	
19	4740463	2	Thrustwasher	
	1001148161	Ref	**2WD STEERING INSTALLATION**	C
101	0100011	AR	Compound, Locking	
104	0641608	6	Bolt 3/8in-16NC x 1in	
106	0642012	2	Bolt 5/8in-11NC x 1-1/2in	
108	0962356	2	Bushing	
109	0962131	4	Bushing	
111	1001097242	2	Steer Cylinder Assembly (See CYLINDER SECTION for Breakdown)	
112	4130410	2	Hub Assembly (See Items 201-212 for Breakdown)	
114	3422326	2	Pin	
115	3422900	2	Kingpin	
116	3422902	2	Pin	
117	3422903	2	Pin	
118	3841143	6	Keeper, Pin	
119	3841258	2	Keeper, Pin	
120	1001155574	1	Tie-Rod	
122	1001099387	1	Spindle	
123	1001099196	1	Spindle	
124	4740111	6	Thrustwasher	
125	4740256	2	Thrustwasher	
127	4740463	2	Thrustwasher	
130	0682020	12	Bolt 5/8in-11NC x 2-1/2in (Grade 8)	
131	3272001	12	Nut 5/8in-11NC (Grade 8)	
132	4892000	24	Flatwasher 5/8in Hardened	
	4130409	Ref	**HUB ASSEMBLY**	C
201	0440170	2	Cone, Bearing	
202	0440171	2	Cup, Bearing	
203	0721003	3	Bolt #10-24NC x 3/8in	

SECTION 1 - FRAME

ITEM	PART NUMBER	QTY	DESCRIPTION	REV
204	1120304	1	Cap, Hub	
205	2780271	1	Hub	
205A	0630490	9	Stud, Wheel	
206	3323403	1	Nut, Slotted 1-1/2in -12NF	
207	3451010	1	Pin, Cotter 5/8in x 2-1/2in	
208	3960343	1	Seal, Grease	
209	4130409	1	Adapter, Spindle	
210	4740283	1	Flatwasher, Hardened	
211	4761000	3	Lockwasher #10	
212	3020017	AR	Grease, Bearing	

FIGURE 1-3. STEERING INSTALLATION (8FT/2.4M WIDE MACHINES WITH TOW PACKAGE)

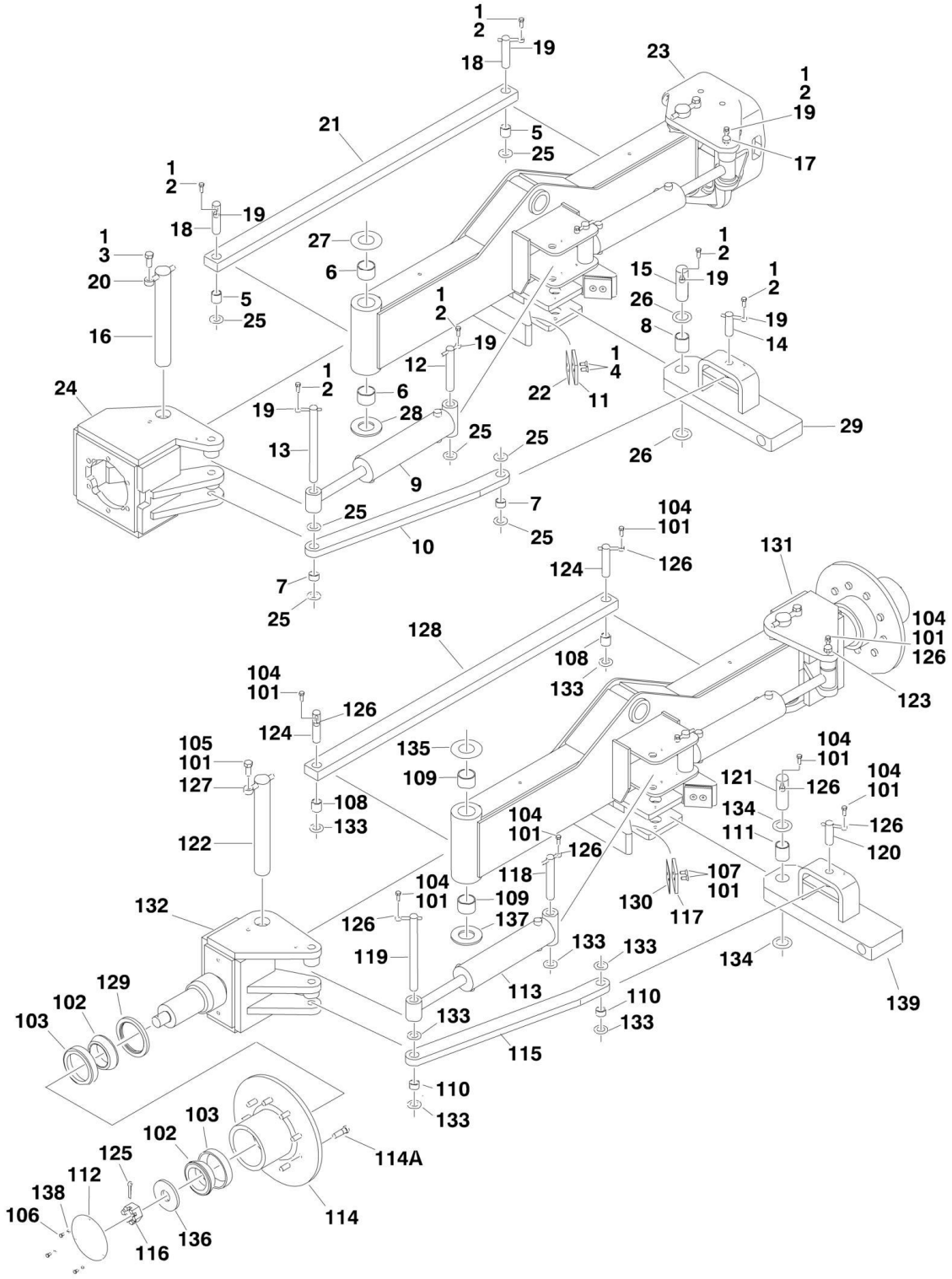

FIGURE 1-3. STEERING INSTALLATION (8FT/2.4M WIDE MACHINES WITH TOW PACKAGE)

ITEM	PART NUMBER	QTY	DESCRIPTION	REV
		Ref	**4WD STEERING INSTALLATION**	
	1001148164	Ref	**4WD/2WS**	C
	1001148166	Ref	**4WD/4WS (Note: Double Qty for 4WD/4WS Machines)**	C
1	0100011	AR	Compound, Locking	
2	0641608	8	Bolt 3/8in-16NC x 1in	
3	0642012	2	Bolt 5/8in-11NC x 1-1/2in	
4	0741607	4	Screw 3/8in-16NC x 7/8in	
5	0962356	2	Bushing	
6	0962131	4	Bushing	
7	0962292	2	Bushing	
8	0962348	1	Bushing	
9	1001097242	2	Steer Cylinder Assembly (See CYLINDER SECTION for Breakdown)	
10	1001148178	1	Link	
11	3340966	2	Pad	
12	3422326	2	Pin	
13	3422567	1	Pin	
14	3422813	1	Pin	
15	3422848	1	Pin	
16	3422900	2	Pin	
17	3422902	1	Pin	
18	3422903	2	Pin	
19	3841143	8	Keeper, Pin	
20	3841258	2	Keeper, Pin	
21	1001155574	1	Tie-Rod	
22	4071059	2	Shim	
23	1001099387	1	Spindle	
24	4130399	1	Spindle	
25	4740111	9	Thrustwasher	
26	4740155	2	Thrustwasher	
27	4740256	2	Thrustwasher	
28	4740463	2	Thrustwasher	
29	4846935	1	Pivot	
	1001148165	Ref	**2WD STEERING INSTALLATION**	C
101	0100011	AR	Compound, Locking	
102	0440170	4	Cone, Bearing	
103	0440171	4	Cup, Bearing	
104	0641608	8	Bolt 3/8in-16NC x 1in	
105	0642012	2	Bolt 5/8in-11NC x 1-1/2in	
106	0721003	6	Bolt #10-24NC x 3/8in	
107	0741607	4	Screw 3/8in-16NC x 7/8in	
108	0962356	2	Bushing	
109	0962131	4	Bushing	
110	0962292	2	Bushing	
111	0962348	1	Bushing	
112	1120304	2	Cap, Hub	
113	1001097242	2	Steer Cylinder Assembly (See CYLINDER SECTION for Breakdown)	
114	2780271	2	Hub	
114A	0630490	18	Stud, Wheel (9 Per Hub)	

SECTION 1 - FRAME

ITEM	PART NUMBER	QTY	DESCRIPTION	REV
115	1001148178	1	Link	
116	3323403	2	Nut, Slotted 1-1/2in -12NF	
117	3340966	2	Pad	
118	3422326	2	Pin	
119	3422567	1	Pin	
120	3422813	1	Pin	
121	3422848	1	Pin	
122	3422900	2	Pin	
123	3422902	1	Pin	
124	3422903	2	Pin	
125	3451010	1	Pin, Cotter 5/8in x 2-1/2in	
126	3841143	8	Keeper, Pin	
127	3841258	2	Keeper, Pin	
128	1001155574	1	Tie-Rod	
129	3960343	2	Seal, Grease	
130	4071059	2	Shim	
131	4130396	1	Spindle	
132	4130400	1	Spindle	
133	4740111	9	Thrustwasher	
134	4740155	2	Thrustwasher	
135	4740256	2	Thrustwasher	
136	4740283	2	Flatwasher, Hardened	
137	4740463	2	Thrustwasher	
138	4761000	6	Lockwasher #10	
139	4846935	1	Pivot	

FIGURE 1-4. STEERING INSTALLATION (7FT/2.1M WIDE MACHINES)

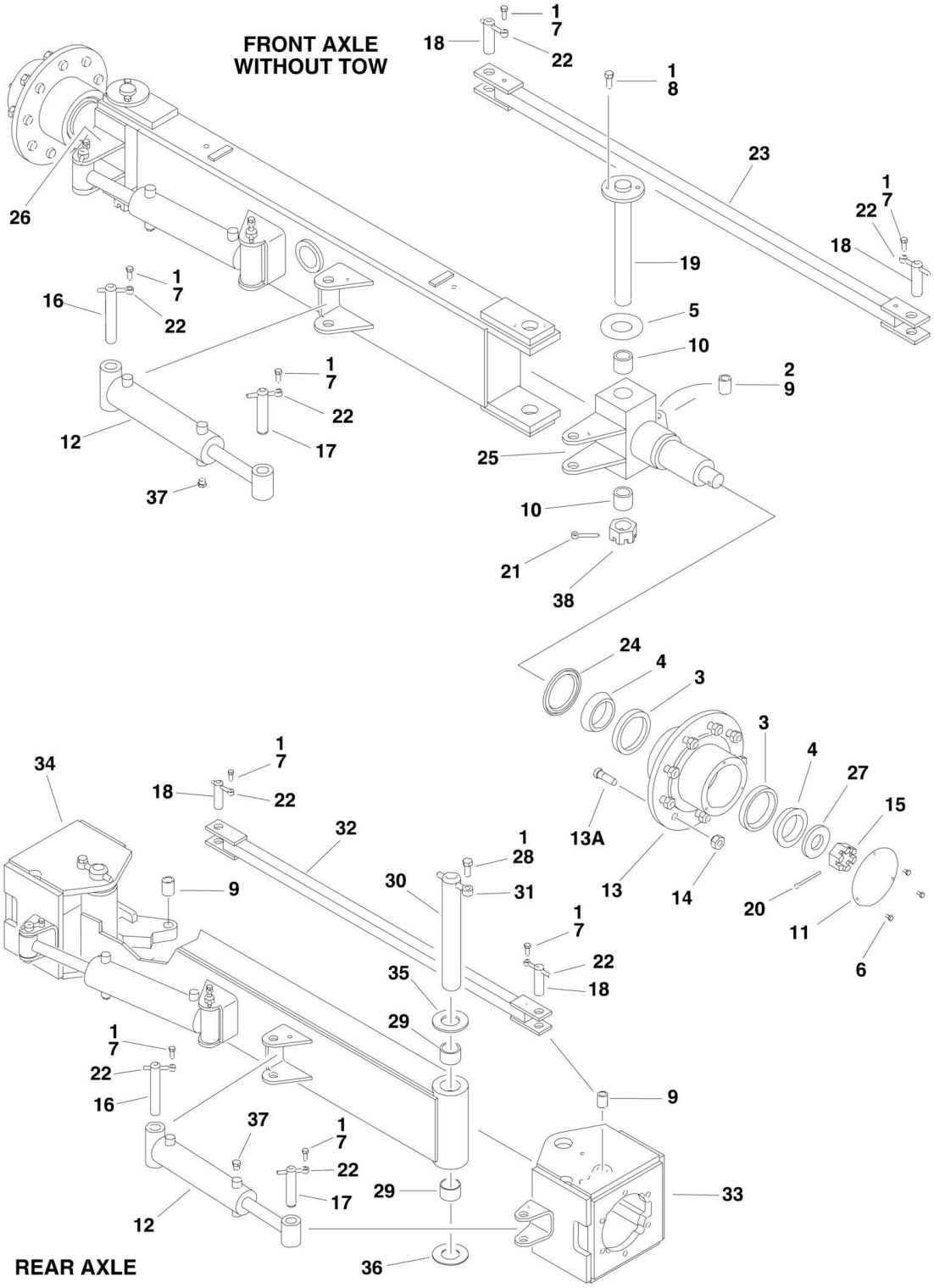

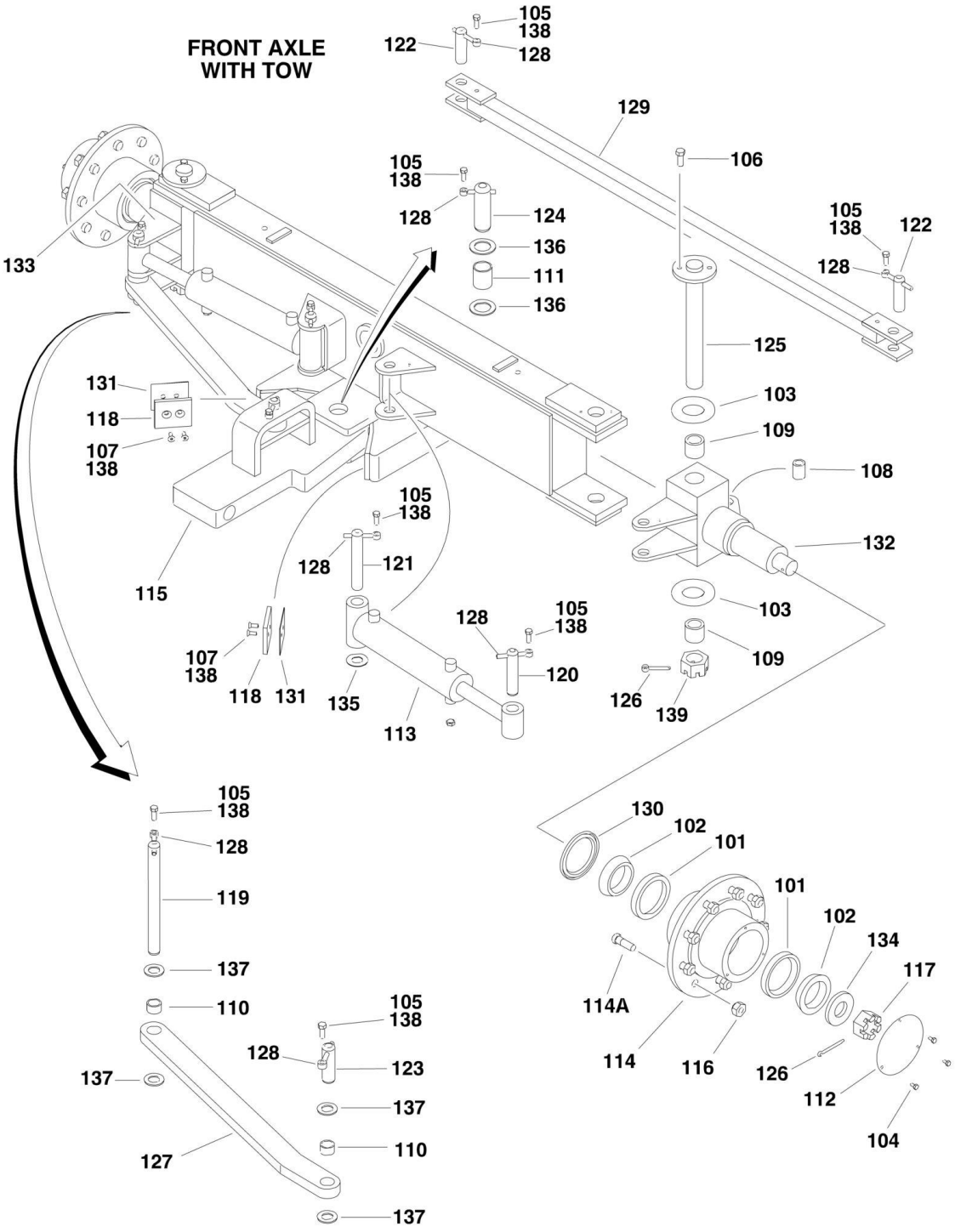
FRONT AXLE
WITH TOW
105
138
122
128
129
106
105
138
128
124
136
111
136
105
138
122
128
133
125
131
118
107
138
103
109
108
105
138
128
121
132
115
103
128
105
138
107
138
109
120
118
131
135
126
139
113
105
138
128
119
137
110
105
138
128
123
137
137
110
127
137
130
102
101
101
102
134
117
114A
114
116
126
112
104

FIGURE 1-4. STEERING INSTALLATION (7FT/2.1M WIDE MACHINES)

ITEM	PART NUMBER	QTY	DESCRIPTION	REV
		Ref	**STEERING INSTALLATION (7FT/2.1M WIDTH MACHINES)**	
	0274062	Ref	**2WD/4WS with 7ft/2.1m Width Frame without Tow Package**	I
1	0100011	AR	Compound, Locking	
2	0100063	AR	Adhesive	
3	0440018	4	Cup, Bearing	
4	0440019	4	Cone, Bearing	
5	0440161	2	Thrustwasher	
6	0641404	6	Bolt 1/4in-20NC x 1/2in	
7	0641608	12	Bolt 3/8in-16NC x 1in	
8	0681608	4	Bolt 3/8in-16NC x 1in (Grade 8)	
9	0962005	4	Bushing	
10	0962272	4	Bushing	
11	1120460	2	Cap, Hub	
12	1684418	4	Steer Cylinder Assembly (See CYLINDER SECTION for Breakdown)	
13	2780276	2	Hub	
13A	0630490	18	Stud, Wheel (9 Per Hub)	
14	3300106	18	Nut, Wheel	
15	3323403	2	Nut, Slotted 1-1/2in-12NF	
16	3422426	4	Pin	
17	3422429	4	Pin	
18	3422430	4	Pin	
19	3423175	2	Kingpin	
20	3450810	2	Pin, Cotter 1/4in x 2-1/2in	
21	3451010	2	Pin, Cotter 5/16in x 2-1/2in	
22	3841143	12	Keeper	
23	3841263	1	Tie-Rod	
24	3960098	2	Seal	
25	4130413	1	Spindle	
26	4130414	1	Spindle	
27	4740016	2	Flatwasher, Hardened	
28	0642012	2	Bolt 5/8in-11NC x 1/1/2in	
29	0962131	4	Bearing	
30	3422900	2	Kingpin	
31	3841258	2	Keeper	
32	2841677	1	Tie-Rod	
33	4130401	1	Spindle	
34	4130402	1	Spindle	
35	4740256	2	Thrustwasher	
36	4740463	2	Thrustwasher	
37	2220237	4	Plug	
38	3313403	2	Nut, Slotted 1-1/2in-6NC	
39	4360331	1	Switch, Toggle (Crab Steer) (Not Shown - Located on Platform Console Box)	
40	3790012	1	O-Ring, Toggle (Crab Steer) (Not Shown - Located on Platform Console Box)	
	0274257	Ref	**2WD/2WS with 7ft/2.1m Width Frame without Tow Package**	C
101	0440018	4	Cup, Bearing	
102	0440019	4	Cone, Bearing	
103	0440161	4	Thrustwasher	

ITEM	PART NUMBER	QTY	DESCRIPTION	REV
104	0641404	6	Bolt 1/4in-20NC x 1/2in	
105	0641608	8	Bolt 3/8in-16NC x 1in	
106	0681608	4	Bolt 3/8in-16NC x 1in (Grade 8)	
107	0741607	4	Screw, Countersunk 3/8in-16NC x 7/8in	
108	0962005	2	Bushing	
109	0962272	4	Bushing	
110	0962292	2	Bushing	
111	0962348	1	Bushing	
112	1120460	2	Cap, Hub	
113	1684418	2	Steer Cylinder Assembly (See CYLINDER SECTION for Breakdown)	
114	2780276	2	Hub	
114A	0630490	18	Stud, Wheel (9 Per Hub)	
115	2980125	1	Pivot	
116	3300106	18	Nut, Wheel	
117	3323403	2	Nut, Slotted 1-1/2in-12NF	
118	3340966	2	Pad	
119	3422327	1	Pin	
120	3422426	2	Pin	
121	3422429	AR	Pin	
122	3422430	2	Pin	
123	3422813	1	Pin	
124	3422848	1	Pin	
125	3423175	2	Kingpin	
126	3451010	4	Pin, Cotter 5/16in x 2-1/2in	
127	3575716	1	Link	
128	3841143	6	Keeper	
129	3841263	1	Tie-Rod	
130	3960098	2	Seal	
131	4071059	2	Shim	
132	4130413	1	Spindle	
133	4130414	1	Spindle	
134	4740016	2	Flatwasher, Hardened	
135	4740111	4	Thrustwasher	
136	4740155	2	Thrustwasher	
137	4740184	1	Flatwasher, Special	
138	0100011	AR	Compound, Locking	
139	3313403	2	Nut, Slotted 1-1/2in-6NC	
140	4360331	1	Switch, Toggle (Crab Steer) (Not Shown - Located on Platform Console Box)	
141	3790012	1	O-Ring, Toggle (Crab Steer) (Not Shown - Located on Platform Console Box)	

FIGURE 1-5. TIRE AND WHEEL DRIVE INSTALLATIONS

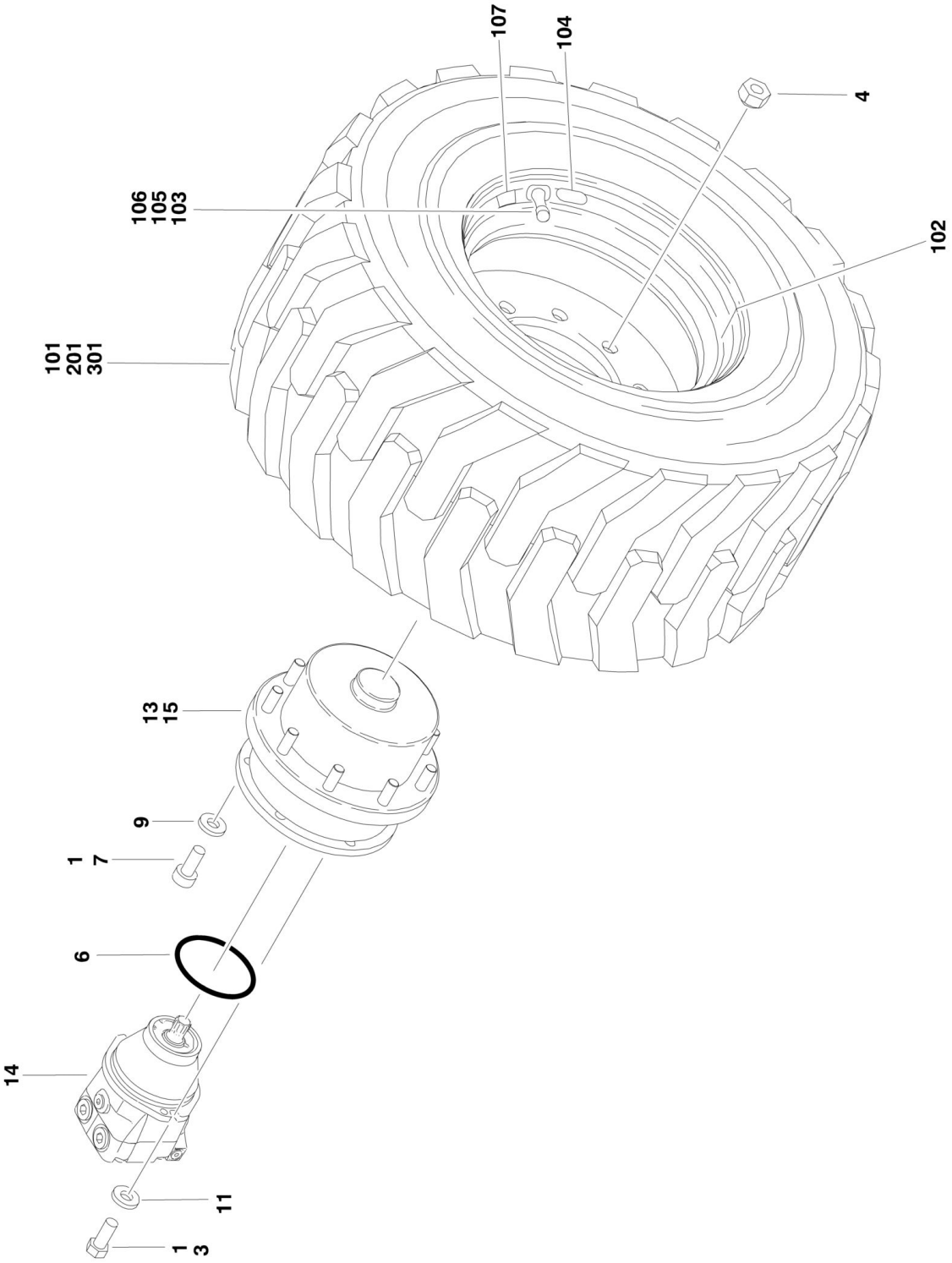

FIGURE 1-5. TIRE AND WHEEL DRIVE INSTALLATIONS

ITEM	PART NUMBER	QTY	DESCRIPTION	REV
		Ref	**WHEEL DRIVE INSTALLATIONS**	
	1001136667	Ref	**Wheel Drive Installations 2WD/2WS**	D
	1001136670	Ref	**Wheel Drive Installations 2WD/4WS**	C
	1001136668	Ref	**Wheel Drive Installations 4WD/2WS**	F
	1001136669	Ref	**Wheel Drive Installations 4WD/4WS**	E
		Ref	**Note: 2WD Qty Shown. For 4WD, Double Qty Shown.**	
1	0100011	AR	Compound, Locking	
3	0681710	4	Bolt 7/16in-14NC x 1-1/4in (Grade 8)	
4	3300106	18	Nut, Wheel	
6	3790158	2	O-Ring	
7		Ref	Capscrew Options:	
7	3932030	AR	Capscrew 5/8in-11NC x 1-7/8in	
7	3932032	AR	Capscrew 5/8in-11NC x 2in	
9	4740393	12	Flatwasher 5/8in Hardened	
11	5241000	4	Flatwasher M10 Hardened	
13	1001113984	2	Drive Hub Assembly (See DRIVE HUB ASSEMBLY for Breakdown)	
14		Ref	Drive Motor Assembly Options (See DRIVE MOTOR ASSEMBLY for Breakdown)	
14	1001136672	2	Drive Motor Assembly 2WD	
14	1001135600	2	Drive Motor Assembly 4WD	
15	3020008	AR	Lube, Gear 80W-90	
		Ref	**PNEUMATIC AND FOAM-FILLED TIRE AND WHEEL INSTALLATIONS (8FT/2.4M WIDTH MACHINES)**	
	4520328	Ref	**Tire and Wheel Installation - Pneumatic (ANSI, ANSI Export and Japanese Specs Only)**	B
	0274533	Ref	**Tire and Wheel Installation - Pneumatic W/Sealant (ANSI and ANSI Export Spec Only) (Only Available on USA Built Machines)**	C
	0275860	Ref	**Tire and Wheel Installation - Pneumatic W/Sealant (ANSI, ANSI Export and Japanese Spec Only) (Note: Not an Add-on Option - Special Counterweight Required. Consult JLG Service Dept to add to a machine)**	1
	4520346	Ref	**Tire and Wheel Installation - Foam-Filled (Available on All Specs)**	C
	1001231678	Ref	**Tire and Wheel Installation - Foam-Filled Non-Marking (Available on All Specs)**	A
		Ref	**Note: Assemblies may require ballast/foam filling to manufacturer's specifications prior to installing on a machine. Refer to Operation and Safety or Service and Maintenance Manuals.**	
		Ref	**Note: Purchase individual tire and/or rim only if able to foam fill tire and wheel assembly, otherwise, purchase complete assembly.**	
	4520289	2	Tire and Wheel Assembly - Pneumatic (Left Side)	F
	4520427	2	Tire and Wheel Assembly - Pneumatic W/Sealant (Left Side)	D
	4520290	2	Tire and Wheel Assembly - Pneumatic (Right Side)	F
	4520428	2	Tire and Wheel Assembly - Pneumatic W/Sealant (Right Side)	D
	4520674	4	Tire and Wheel Assembly - Pneumatic Turf/Sand Tire (Note: Not an Add-on Option - Special Counterweight Required. Consult JLG Service Dept to add to a machine)	B
	4520344	2	Tire and Wheel Assembly - Foam-Filled (Left Side)	H
	4520345	2	Tire and Wheel Assembly - Foam-Filled (Right Side)	H

ITEM	PART NUMBER	QTY	DESCRIPTION	REV
	1001231677	2	Tire and Wheel Assembly - Foam-Filled Non-Marking (Left Side)	A
	1001231676	2	Tire and Wheel Assembly - Foam-Filled Non-Marking (Right Side)	A
101		Ref	Tire Options (1 Per Assembly)	
101	4520288	AR	Tire - IN355/55D625	
101	1001184881	AR	Tire - IN355/55D625 Non-Marking	
101	4520256	AR	Tire - 41/18LLx22.5 Turf/Sand Tire	
102		Ref	Rim, Wheel (1 Per Assembly)	
102	4520287	AR	Tire - IN355/55D625 (24.5 x 11.75)	
102	4520672	AR	Tire - 41/18LLx22.5 Turf/Sand Tire	
103	4640113	AR	Valve, Air (1 Per Assembly) (All Assemblies Except 1001231677 and 1001231676)	
103	4641122	AR	Valve, Air (1 Per Assembly) (1001231677 and 1001231676 Assemblies)	
104		Ref	Decal - Tire Pressure Options (1 Per Assembly)	
104	1702740	AR	Tire - IN355/55D625	
104	1701643	AR	Tire - 41/18LLx22.5 Turf/Sand Tire	
		Ref	**Note: Items 105-107 used with tires with sealant only.**	
105	1120552	AR	Cap, Valve Stem (1 Per Assembly)	
106	1300019	AR	Sealant, Tire (1 Per Assembly)	
107	1705364	AR	Decal - Tire Sealant (1 Per Assembly)	
201		Ref	**AIRBOSS TIRE AND WHEEL INSTALLATIONS (7FT/2.1M WIDTH 600A/600AJ MACHINES)**	
		Ref	**Note: Available on 600A All Specs except Japanese Specs. Available on 600AJ All Specs except Australian, CE & Japanese Specs.)**	
201	4520341	Ref	**Tire and Wheel Installation - Air-Boss**	A
201	4520284	2	Tire and Wheel Assembly - Right Side	
201	4520283	2	Tire and Wheel Assembly - Left Side	
201	7016206	80	Tire Repair Section (20 Per Assembly)	
201	4520604	Ref	**Tire and Wheel Installation - Air-Boss Non Marking**	1
201	4520602	2	Tire and Wheel Assembly - Right Side	
201	4520601	2	Tire and Wheel Assembly - Left Side	
201	7020135	80	Tire Repair Section (20 Per Assembly)	
301		Ref	**SOLIDBOSS TIRE AND WHEEL INSTALLATIONS (7FT/2.1M WIDTH 600AJ MACHINES)**	
301	1001147067	Ref	**Tire and Wheel Installation - SolidBoss (Available on ANSI, ANSI Export & CSA Spec Only)**	C
301	1001146828	NLA	Tire and Wheel Assembly - Right Side (Use p/n 1001207346) **(SN 0300177361 through 0300223869)**	
301	1001207346	2	Tire and Wheel Assembly - Right Side **(SN 0300223870 through 0300272252)**	
301	1001146827	NLA	Tire and Wheel Assembly - Left Side (Use p/n 1001207345) **(SN 0300177361 through 0300223869)**	
301	1001207345	2	Tire and Wheel Assembly - Left Side **(SN 0300223870 through 0300272252)**	
301	1001147068	Ref	**Tire and Wheel Installation - SolidBoss Non Marking (Available on ANSI, ANSI Export & CSA Spec Only)**	B
301	1001147020	NLA	Tire and Wheel Assembly - Right Side (Use p/n 1001214748) **(SN 0300177361 through 0300223869)**	
301	1001214748	2	Tire and Wheel Assembly - Right Side **(SN 0300223870 through 0300272252)**	
301	1001147019	NLA	Tire and Wheel Assembly - Left Side (Use p/n 1001214747) **(SN 0300177361 through 0300223869)**	

ITEM	PART NUMBER	QTY	DESCRIPTION	REV
301	1001214747	2	Tire and Wheel Assembly - Left Side **(SN 0300223870 through 0300272252)**	

FIGURE 1-6. DRIVE HUB ASSEMBLY

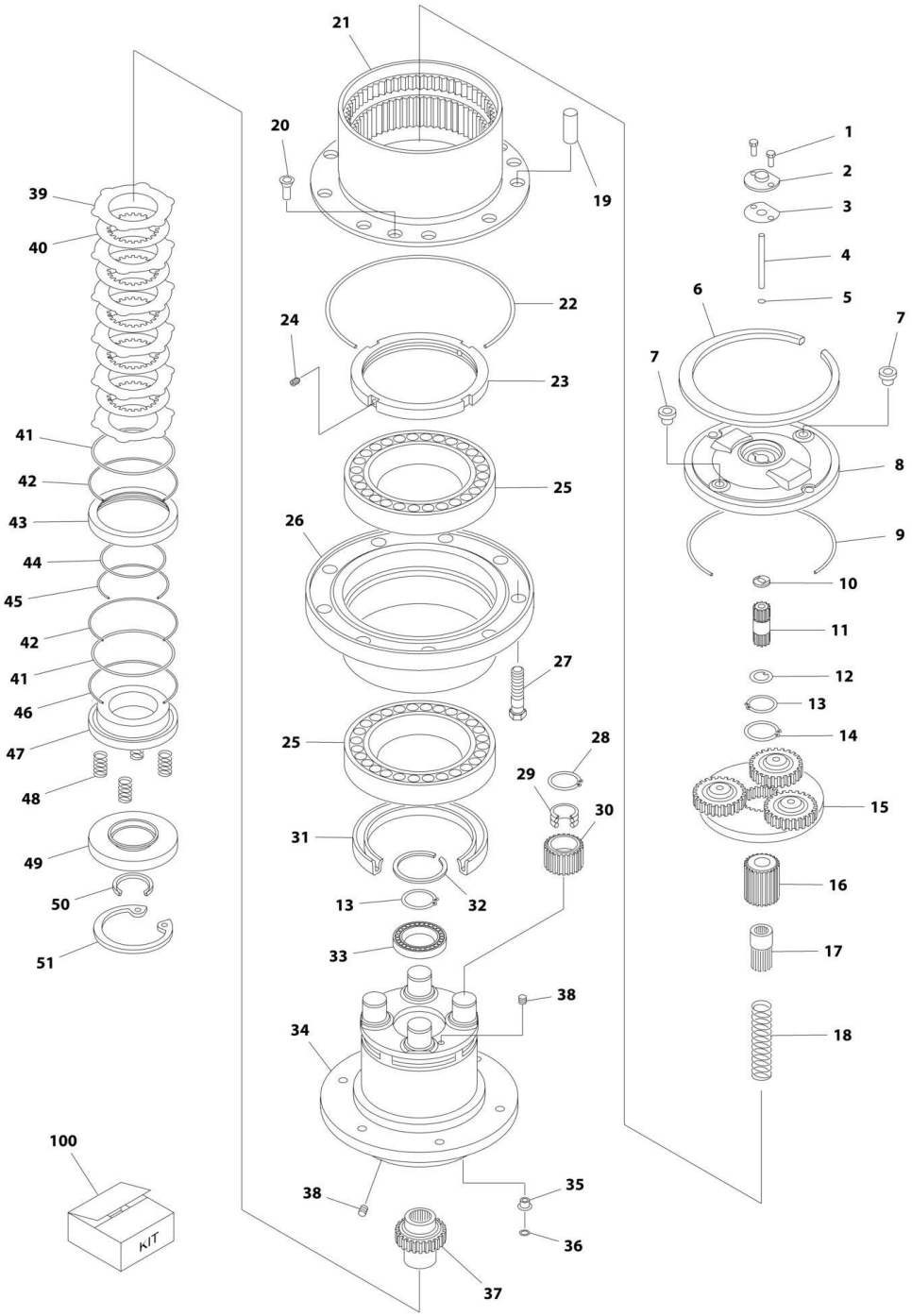

FIGURE 1-6. DRIVE HUB ASSEMBLY

ITEM	PART NUMBER	QTY	DESCRIPTION	REV
	1001113984	Ref	**DRIVE HUB ASSEMBLY**	E
1	70004353	2	Screw	
2	70005298	1	Cover, Disengagement	
3	70002201	1	Gasket	
4	70002059	1	Pin, Disengagement	
5	See Note	NSS	O-Ring (Note: Use Item 100)	
6	70005299	1	Ring	
7	70002057	4	Plug	
8	70005300	1	Cover	
9	See Note	NSS	O-Ring (Note: Use Item 100)	
10	70002054	1	Shim	
11	70005301	1	Pinion	
12	70005302	1	Shim	
13	70004355	2	Ring, Outer Retention	
14	70004356	1	Ring, Inner Retention	
15	70005303	1	Reduction Gear Assembly	
16	70005304	1	Pinion	
17	70005305	1	Coupling, Disengagement Half	
18	70005306	1	Spring, Disengagement	
19	70005307	9	Plug	
20	70004361	3	Screw	
21	70005308	1	Ring, Planetary	
22	See Note	NSS	O-Ring (Note: Use Item 100)	
23	70005309	1	Nut, Ring	
24	70004363	2	Screw	
25	70005311	2	Bearing	
26	70004365	1	Support, Hub	
27	70005312	9	Wheel Stud	
28	70004367	4	Ring, Outer Retention	
29	70005313	4	Bearing	
30	70004369	4	Wheel, Planet	
31	See Note	NSS	Seal, Oil (Note: Use Item 100)	
32	70004370	1	Ring	
33	70004371	1	Bearing	
34	70005314	1	Axle, Stub	
35	70005315	1	Plug	
36	See Note	NSS	O-Ring (Note: Use Item 100)	
37	70005316	1	Shaft, Input	
38	70004447	2	Plug	
39	70002027	6	Disc, Steel	
40	70002026	5	Disc, Sintered	
41	See Note	NSS	Seal (Note: Use Item 100)	
42	See Note	NSS	O-Ring (Note: Use Item 100)	
43	70005317	1	Spacer	
44	See Note	NSS	Seal (Note: Use Item 100)	
45	See Note	NSS	O-Ring (Note: Use Item 100)	
46	See Note	NSS	O-Ring (Note: Use Item 100)	
47	70005318	1	Piston	
48	70002020	6	Spring, Brake	
49	70005319	1	Spacer	

SECTION 1 - FRAME

ITEM	PART NUMBER	QTY	DESCRIPTION	REV
50	See Note	NSS	Seal, Oil (Note: Use Item 100)	
51	70005320	1	Ring, Inner Retention	
100	70005321	1	Seal Kit (Includes Items 5, 9, 22, 31, 36, 41, 42, 44, 45, 46 & 50)	

FIGURE 1-7. DRIVE MOTOR ASSEMBLY

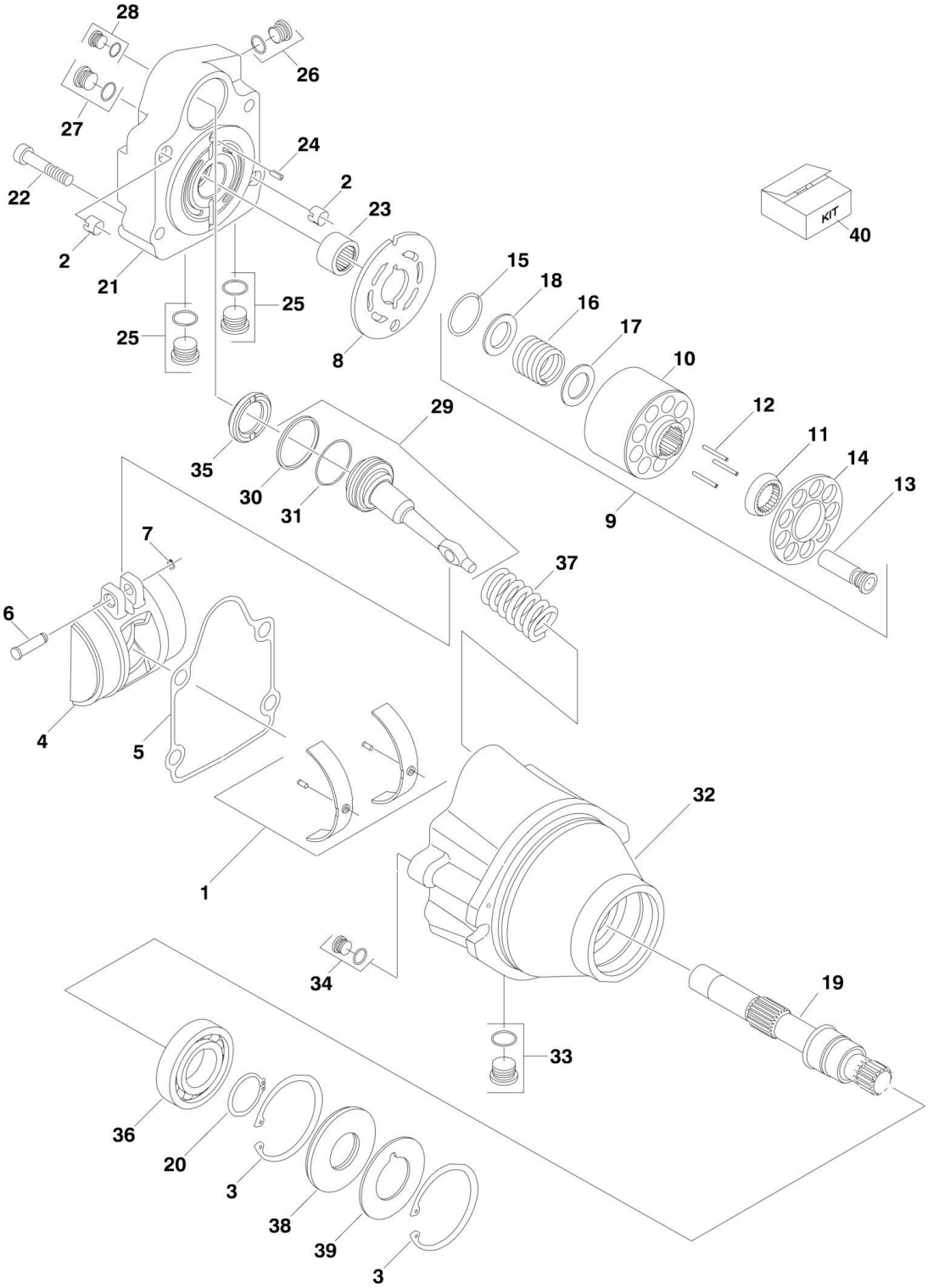

FIGURE 1-7. DRIVE MOTOR ASSEMBLY

ITEM	PART NUMBER	QTY	DESCRIPTION	REV
		Ref	**DRIVE MOTOR ASSEMBLY**	
	1001136672	Ref	**Drive Motor Assembly 2WD**	C
	1001135600	Ref	**Drive Motor Assembly 4WD**	C
1	70000852	1	Swash Plate Bearing Kit	
2	70003628	2	Pin	
3	70007438	2	Ring, Retaining	
4	70000853	1	Swash Plate	
5	See Note	NSS	Gasket (Note: Use Item 40)	
6	70004201	1	Pin	
7	70004202	1	Ring, Retaining	
8	70000854	1	Plate, Valve	
9	7027740	1	Cylinder Block Kit (Includes Items 10-18)	
10	7027740	1	Block, Cylinder	
11	70000854	1	Guide, Slipper Retainer	
12	7021275	3	Pin, Slipper Hold Down	
13	70004203	9	Piston Assembly	
14	70000857	1	Retainer, Slipper	
15	7022311	1	Ring, Retaining	
16	7024867	1	Spring	
17	7024868	1	Washer	
18	7022314	1	Retainer, Spring	
19	70000858	1	Shaft	
20	7007439	1	Ring, Retaining	
21	70004204	1	Cap, End - Axial	
22	7022368	4	Capscrew	
23	7021249	1	Bearing, Needle	
24	7007446	1	Pin	
25	7007419	2	Plug with O-Ring	
25	See Note	NSS	O-Ring (Note: Not Sold Separately - Purchase Item 25 or 40)	
26	7007420	1	Plug with O-Ring	
26	70000862	1	O-Ring (Note: Not Sold Separately - Purchase Item 26 or 40)	
27	7022321	1	Plug with O-Ring	
27	70000862	1	O-Ring (Note: Not Sold Separately - Purchase Item 27 or 40)	
28	7007420	1	Plug with O-Ring	
28	70000862	1	O-Ring (Note: Not Sold Separately - Purchase Item 28 or 40)	
29		Ref	Servo Piston Assembly Options:	
29	70004207	1	Servo - 2WD	
29	70004205	1	Servo - 4WD	
30	See Note	NSS	Ring, Piston (Note: Not Sold Separately - Purchase Item 29 or 40)	
31	See Note	NSS	O-Ring (Note: Not Sold Separately - Purchase Item 29 or 40)	
32	See Note	NSS	Housing (Note: Not Available - Purchase Complete Motor)	
33	7022321	1	Plug with O-Ring	
33	70000862	1	O-Ring (Note: Not Sold Separately - Purchase Item 33 or 40)	
34	70002133	1	Plug with O-Ring	
34	70000862	1	O-Ring (Note: Not Sold Separately - Purchase Item 34 or 40)	
35	70004205	1	Stop (4WD Motor Only)	
36	70002176	1	Bearing	
37	70000861	1	Spring	
38	See Note	NSS	Seal, Lip (Note: Use Item 40)	

SECTION 1 - FRAME

ITEM	PART NUMBER	QTY	DESCRIPTION	REV
39	7022371	1	Washer, Support	
40	70000862	1	Seal Kit (Includes Items 5, 30, 31, 38 and Plug O-Rings)	

FIGURE 1-8. DRIVE VALVES AND SHIELDS INSTALLATION (FRAME MOUNTED)

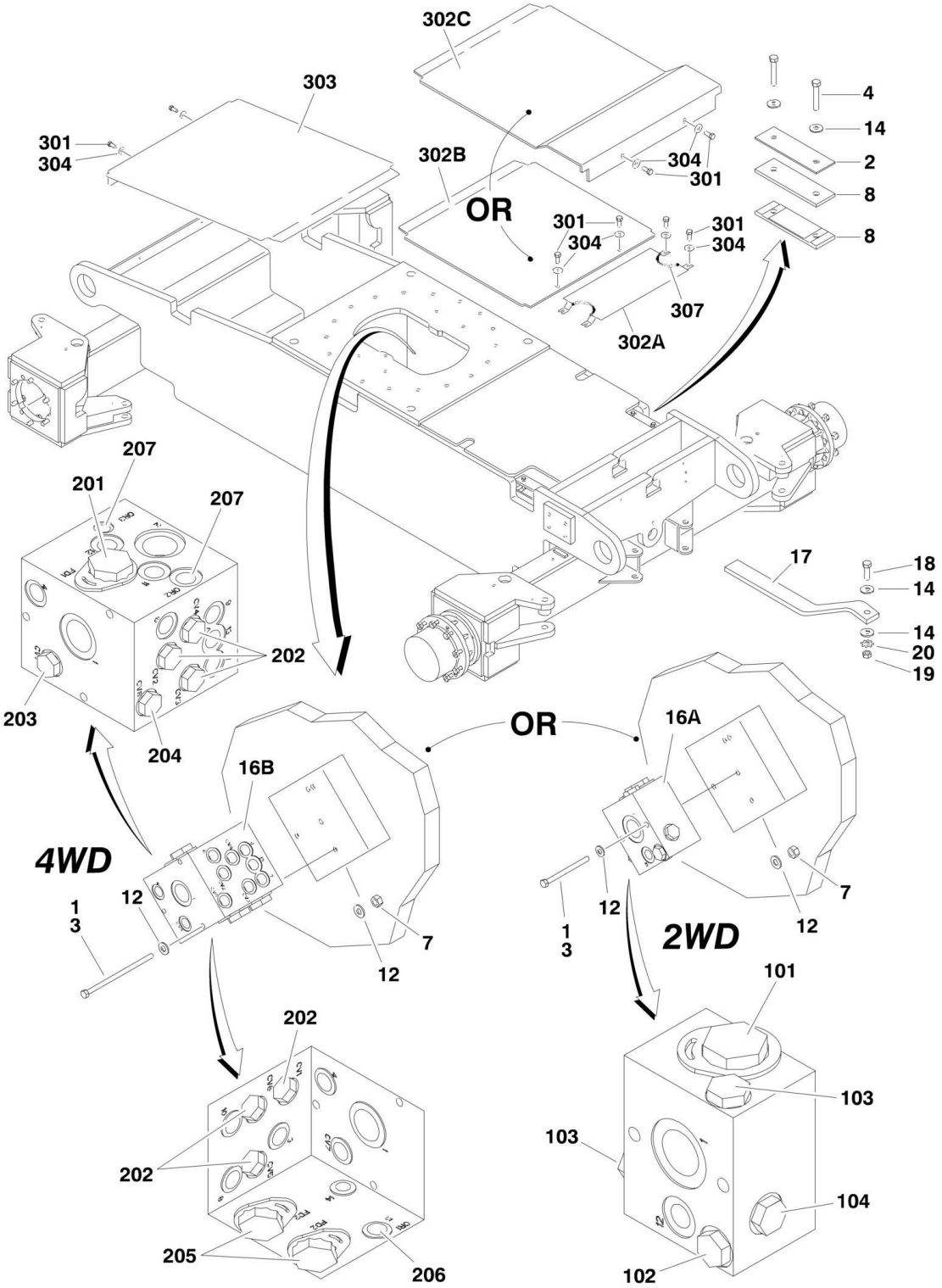

FIGURE 1-8. DRIVE VALVES AND SHIELDS INSTALLATION (FRAME MOUNTED)

ITEM	PART NUMBER	QTY	DESCRIPTION	REV
		Ref	**DRIVE VALVES INSTALLATION**	
	1001136667	Ref	**Drive Valves installation 2WD/2WS**	D
	1001136670	Ref	**Drive Valves installation 2WD/4WS**	C
	1001136668	Ref	**Drive Valves installation 4WD/2WS**	F
	1001136669	Ref	**Drive Valves installation 4WD/4WS**	E
1	0100011	AR	Compound, Locking	
2		Ref	Bar, Clamping	
2	Not Required	0	Bar, Clamping 2WD/2WS	
2	0363012	2	Bar, Clamping 2WD/2WS & 4WD/2WS	
2	0363012	4	Bar, Clamping 4WD/4WS	
3		Ref	Bolt 5/16in-18NC Options:	
3	0641530	2	3-3/4in Length (2WD)	
3	0641552	3	6-1/2in Length (4WD)	
4	0641618	4	Bolt 3/8in-16NC x 2-1/4in	
7	3311505	AR	Locknut 5/16in-18NC	
8	3340911	4	Rubber, Clamp	
12		Ref	Flatwasher Options:	
12	4751500	AR	Flatwasher 5/16in Regular	
12	4711500	AR	Flatwasher 5/16in Thin	
14	4751600	AR	Flatwasher 3/8in Regular	
16		Ref	Flow Divider Valve Assembly Options:	
16A	1001100120	1	2WD (See Items 101-104 for Breakdown)	
16B	1001098503	1	4WD (See Items 201-205 for Breakdown)	
17	4240084	1	Strap, Anti-Static (2WD/4WS Only)	
18	0641611	1	Bolt 3/8in-16NC x 2 3/8in	
19	3271601	1	Nut 3/8in-16NC (Grade 8)	
20	4791600	1	Starwasher 3/8in	
	1001100120	Ref	**FLOW DIVIDER ASSEMBLY (2WD)**	A
101	7023933	1	Valve, Cartridge (Flow Divider)	
101	7021625	1	Seal Kit - Flow Divider Cartridge	
101	70000781	1	Locking Kit	
102	7024892	1	Valve, Cartridge (Check)	
102	7023936	1	Seal Kit - Check Cartridge	
103	7022397	2	Valve, Cartridge (Check)	
103	7022399	2	Seal Kit - Check Cartridge	
104	7023935	1	Valve, Cartridge (Check)	
104	7023936	1	Seal Kit - Check Cartridge	
	1001098503	Ref	**FLOW DIVIDER ASSEMBLIES (4WD)**	B
201	7023933	1	Valve, Cartridge (Flow Divider)	
201	7021625	1	Seal Kit - Flow Divider Cartridge	
202		Ref	Valve, Cartridge (Check) Options:	
202	7022397	6	Valve p/n 4641410	
202	7022399	6	Seal Kit - Check Cartridge	
202	70003408	6	Valve p/n 1001098503	
202	7022399	6	Seal Kit - Check Cartridge	
203	7023935	1	Valve, Cartridge (Check)	
203	7023936	1	Seal Kit - Check Cartridge	
204	7024892	1	Valve, Cartridge (Check)	
204	7023936	1	Seal Kit - Check Cartridge	
205	7023917	2	Valve, Cartridge (Flow Divider)	

ITEM	PART NUMBER	QTY	DESCRIPTION	REV
205	7021625	2	Seal Kit - Flow Divider Cartridge	
206	70002063	1	Plug, Orifice	
207	70002064	2	Plug, Orifice	
		Ref	**FRAME SHIELDS INSTALLATION**	
	1001151897	Ref	**2WD/2WS**	C
	0274229	Ref	**2WD/4WS (600A/AJ Only)**	C
	1001151897	Ref	**4WD/2WS**	C
	1001152049	Ref	**4WD/4WS**	C
301		Ref	Bolt Options:	
301	0641505	AR	Bolt 5/16in-16NC x 5/8in	
301	0641608	AR	Bolt 3/8in-16NC x 7/8in	
301	0760608	AR	Bolt M6 x 16mm	
302		Ref	Shield, Frame - Front Options:	
302A	1001161761	1	Machines with 8ft/2.4m Wide Frame (Axle Cover)	
302B	1001151584	1	Machines with 8ft/2.4m Wide Frame (Flat Cover)	
302C	3380560	1	Machines with 7ft/2.1m Wide Frame (Axle/Flat Cover Combo)	
303		Ref	Shield, Frame - Rear Options:	
303	Not Required	0	2WS Machines with 8ft/2.4m Wide Frame	
303	1001152046	1	4WS Machines with 8ft/2.4m Wide Frames	
303	3380558	1	Machines with 7ft/2.1m Wide Frames	
304		Ref	Flatwasher Options:	
304	4751500	AR	Flatwasher 5/16in Regular	
304	4751600	AR	Flatwasher 3/8in Regular	
304	4811702	AR	Flatwasher M6	
307	4060804	AR	Flex-Trim	

FIGURE 1-9. TOW PACKAGE INSTALLATION (OPTIONAL)

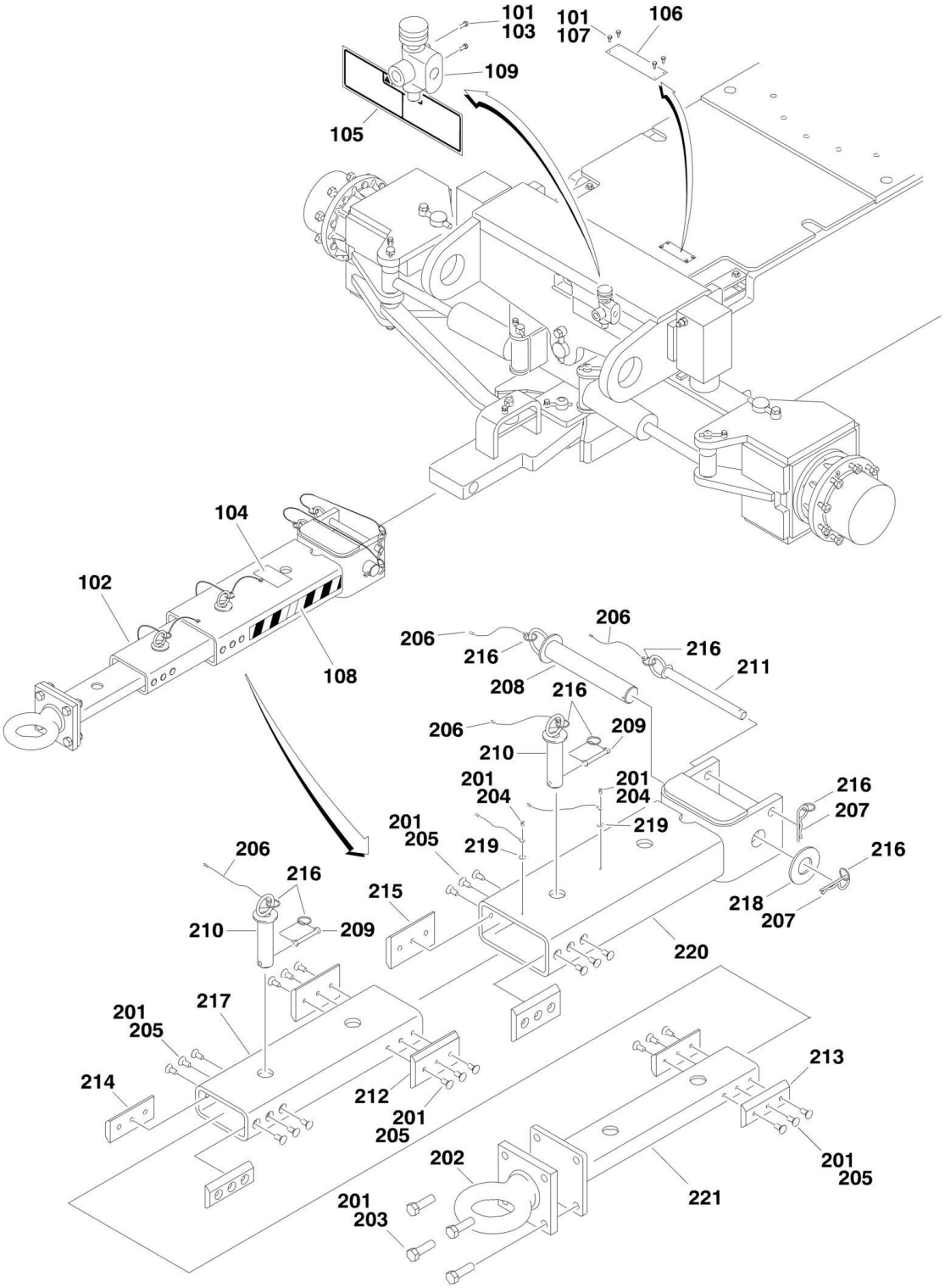

FIGURE 1-9. TOW PACKAGE INSTALLATION (OPTIONAL)

ITEM	PART NUMBER	QTY	DESCRIPTION	REV
		Ref	**TOW BAR INSTALLATIONS**	
	1001150571	Ref	**All Specs except CSA and CE Specs**	D
	1001150570	Ref	**CSA Spec**	C
	1001150569	Ref	**CE Spec**	A
101	0100011	AR	Compound, Locking	
102	0270528	1	Bar Assembly (See Items 201-221 for Breakdown)	
103	0641516	2	Bolt 5/16in-18NC x 2in	
104	1704578	2	Decal - Crushing (All Specs expect CE & CSA Specs)	
104	1706960	2	Decal - Crushing (CE Specs)	
104	1704578	2	Decal - Crushing (CSA Specs) **(SN 0300177361 through 0300223274)**	
104	1706593	2	Decal - Crushing (CSA Specs) **(SN 0300223275 through 0300272252)**	
105	1705090	1	Decal - Towing Instruction (All Specs except CSA and CE Specs)	
105	1706957	1	Decal - Towing Instruction (CE Specs)	
105	1705820	1	Decal - Towing Instruction (CSA Specs)	
106	3250872	1	Nameplate, Steer/Tow Select Valve (All Specs except CSA and CE Specs)	
106	Not Required	0	Nameplate, Steer/Tow Select Valve (CE Specs)	
106	1704272	1	Nameplate, Steer/Tow Select Valve (CSA Specs)	
107	3940604	4	Screw, Self-Tapping #6-32NF x 1/2in	
108	4420051	AR	Tape, Safety	
109	4640261	1	Valve, Float Position	
	0270528	Ref	**TOW BAR ASSEMBLY**	A
201	0100011	AR	Compound, Locking	
202	0362910	1	Pintle, Draw Eye	
203	0642010	4	Bolt 5/8in-11NC x 1-1/4in	
204	0721004	2	Screw, Hex Machine	
205	0741607	24	Screw, Countersunk 3/8in-16NC x 7/8in	
206	1060584	6	Cable, Lanyard	
207	3420372	2	Pin, Cotter	
208	3420447	1	Pin, Towing	
209	3421565	2	Pin, Snap	
210	3422841	2	Pin	
211	3422847	1	Pin	
212	3572009	2	Plate, Slide Stop	
213	3572010	2	Plate, Slide Stop	
214	3572011	2	Plate, Slide Stop	
215	3572012	2	Plate, Slide Stop	
216	3760170	8	Ring, Split	
217	4568133	1	Tube, Tow Bar	
218	4740036	1	Flatwasher	
219	4751000	2	Flatwasher #10 Regular	
220	4846295	1	Tow Bar Attach Weldment	
221	4846296	1	Pintle Attach Weldment	

SECTION 2 - TURNTABLE

FIGURE 2-1. CONTROL VALVES INSTALLATIONS

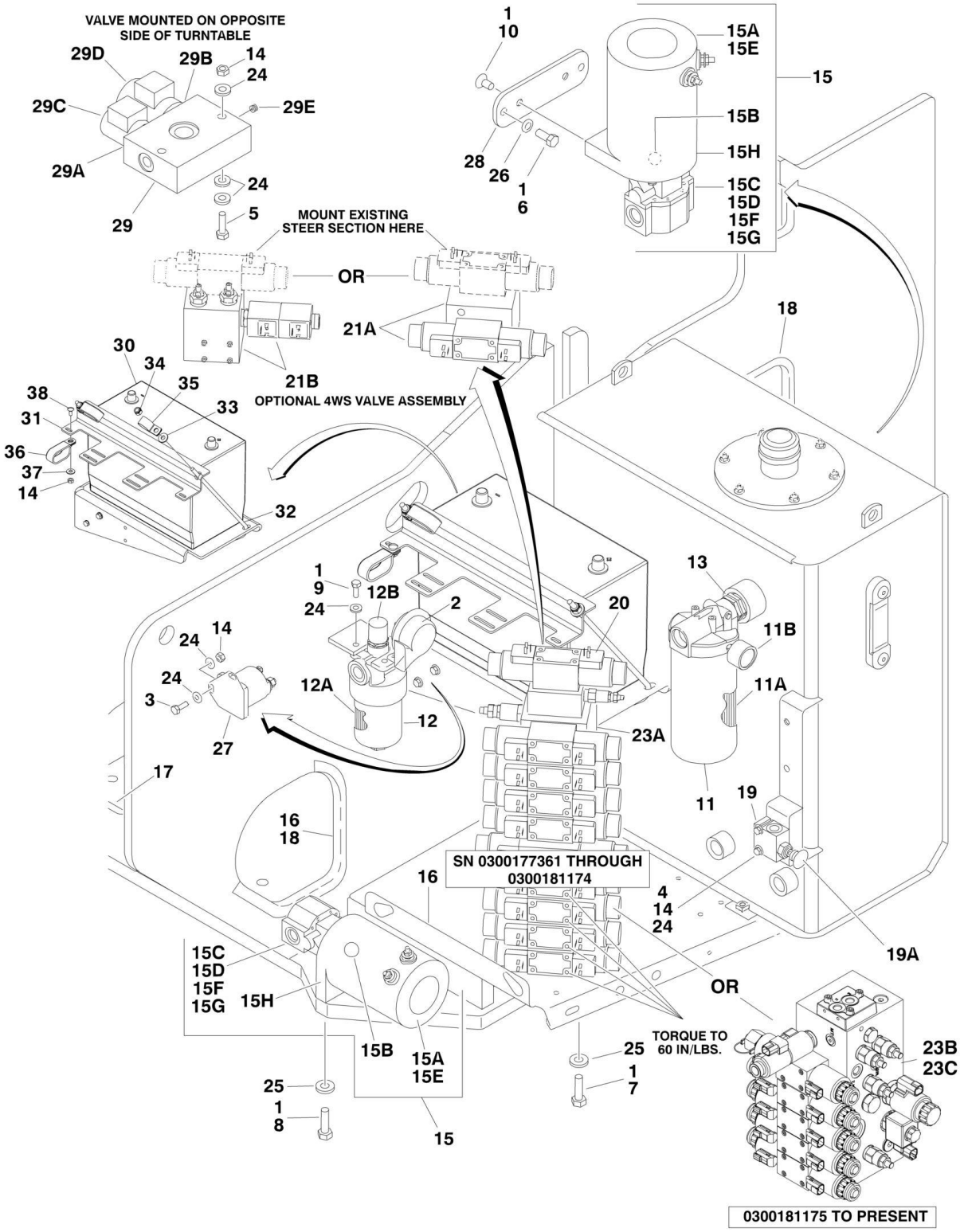

FIGURE 2-1. CONTROL VALVES INSTALLATIONS

ITEM	PART NUMBER	QTY	DESCRIPTION	REV
		Ref	**CONTROL VALVES INSTALLATIONS**	
		Ref	**Machines without LSS or with 4 Cell LSS:**	
	1001152535	Ref	**Control Valves Installations - 600A 2WS with Deutz D2011 and GM Engines (SN 0300177361 through 0300181174)**	C
	1001160038	Ref	**Control Valves Installations - 600A 2WS with Deutz D2011, Ford and GM Engines (SN 0300181175 through 0300272252)**	B
	1001145379	Ref	**Control Valves Installations - 600A 2WS with Deutz TD2.9L4 Engines (SN 0300177361 through 0300181174)**	C
	1001164168	Ref	**Control Valves Installations - 600A 2WS with Deutz TD2.9L4 Engines (SN 0300181175 through 0300272252)**	B
	1001152534	Ref	**Control Valves Installations - 600A 4WS with Deutz D2011 and GM Engines (SN 0300177361 through 0300181174)**	C
	1001160039	Ref	**Control Valves Installations - 600A 4WS with Deutz D2011, Ford and GM Engines (SN 0300181175 through 0300272252)**	B
	1001145720	Ref	**Control Valves Installations - 600A 4WS with Deutz TD2.9L4 Engines (SN 0300177361 through 0300181174)**	D
	1001164160	Ref	**Control Valves Installations - 600A 4WS with Deutz TD2.9L4 Engines (SN 0300181175 through 0300272252)**	B
	1001152537	Ref	**Control Valves Installations - 600AJ 2WS with Deutz D2011 and GM Engines (SN 0300177361 through 0300181174)**	C
	1001160068	Ref	**Control Valves Installations - 600AJ 2WS with Deutz D2011, Ford and GM Engines (SN 0300181175 through 0300272252)**	B
	1001145719	Ref	**Control Valves Installations - 600AJ 2WS with Deutz TD2.9L4 Engines (SN 0300177361 through 0300181174)**	D
	1001164164	Ref	**Control Valves Installations - 600AJ 2WS with Deutz TD2.9L4 Engines (SN 0300181175 through 0300272252)**	B
	1001152265	Ref	**Control Valves Installations - 600AJ 4WS with Deutz D2011 and GM Engines (SN 0300177361 through 0300181174)**	C
	1001164170	Ref	**Control Valves Installations - 600AJ 4WS with Deutz D2011, Ford and GM Engines (SN 0300181175 through 0300272252)**	B
	1001145721	Ref	**Control Valves Installations - 600AJ 4WS with Deutz TD2.9L4 Engines (SN 0300177361 through 0300181174)**	D
	1001160069	Ref	**Control Valves Installations - 600AJ 4WS with Deutz TD2.9L4 Engines (SN 0300181175 through 0300272252)**	B
		Ref	**Machines with 1 Cell LSS:**	
	1001219471	Ref	**Control Valves Installations - 600A 2WS with Deutz D2011 and Ford Engines**	C
	1001219477	Ref	**Control Valves Installations - 600A 2WS with Deutz TD2.9L4 Engines**	C
	1001219472	Ref	**Control Valves Installations - 600A 4WS with Deutz D2011 and Ford Engines**	C
	1001219475	Ref	**Control Valves Installations - 600A 4WS with Deutz TD2.9L4 Engines**	C
	1001219473	Ref	**Control Valves Installations - 600AJ 2WS with Deutz D2011 and Ford Engines**	B
	1001219476	Ref	**Control Valves Installations - 600AJ 2WS with Deutz TD2.9L4 Engines**	B
	1001219474	Ref	**Control Valves Installations - 600AJ 4WS with Deutz D2011 and Ford Engines**	B
	1001219478	Ref	**Control Valves Installations - 600AJ 4WS with Deutz TD2.9L4 Engines**	B
	1001137895	Ref	**Auxiliary Pump Installation (Deutz TD2.9L4 & Ford Engines)**	D
	1001239291	Ref	**Auxiliary Pump with Battery Disconnect Installation (Deutz TD2.9L4, Ford & GM Engines)**	A
1	0100011	AR	Compound, Locking	

ITEM	PART NUMBER	QTY	DESCRIPTION	REV
2	0140001	1	Horn	
3	0641406	AR	Bolt 1/4in-20NC x 3/4in	
4	0641414	2	Bolt 1/4in-20NC x 1-3/4in	
5	0641416	2	Bolt 1/4in-20NC x 2in	
6	0641607	AR	Bolt 3/8in-16NC x 7/8in	
7	0641608	3	Bolt 3/8in-16NC x 1in	
8	0641613	AR	Bolt 3/8in-16NC x 1-5/8in	
9	0651406	3	Bolt 1/4in-28NF x 3/4in	
10	0741606	AR	Screw, Countersunk 1/4in-20NC x 3/4in	
11	2120164	1	Return Filter Assembly	B
11A	2120149	1	Element, Filter	
11B	7020021	1	Manual Indicator	
12	2120209	1	Hydraulic Pressure Filter Assembly	
12A	2120210	1	Element, Filter	
12B	7020020	1	Manual Indicator	
12C	70000934	1	O-Ring, Filter Bowl (Not Shown)	
13	2220893	1	Fitting, Adapter	
14	3311405	AR	Locknut 1/4in x 20NC	
15	3600365	1	Auxiliary Pump Assembly	B
15A	7004290	1	Replacement Motor with Endhead Item 15H (was p/n 7011067)	
15A	7004248	1	Replacement Motor without Endhead Item 15H	
15A	7011065	1	Brush Kit - 7011067 Motor	
15B	7011063	1	Coupling	
15C	7011064	1	Replacement Pump	
15C	7011066	1	Seal Kit - 7011064 Pump	
15C	7004290	1	Relief Valve (Note: Not Available - Replace Complete Pump)	
15D	7011043	4	Bolt (Mounts Pump to Mounting Bracket)	
15E	See Note	2	Bolt (Motor to Bracket) (Note: Not Available for Purchase)	
15F	7011044	1	Gasket	
15G	7011048	4	Lockwasher	
15H	7011062	4	Endhead, Motor	
16	4060804	AR	Trim-Loc 3/16in	
17	4060807	AR	Trim-Loc 3/8in	
18	4060918	AR	Trim-Loc 5/8in	
19	4640866	1	Manual Pull Valve Assembly	
19	2900708	1	Seal Kit - 4640866 Valve	
19A	7012959	1	Knob	
20		Ref	Jib Valve Kit (See ACCESSORY VALVE ASSEMBLIES for Breakdown) Options:	
20	Not Required	0	Jib Valve Kit 600A	
20	4640921	1	Jib Valve Kit 600AJ **(SN 0300177361 through 0300181174)**	
20	4921927	1	Harness, Jib Valve (Not Shown - See ELECTRICAL SECTION for Breakdown) **(SN 0300177361 through 0300181174)**	
21		Ref	Valve Assembly (See ACCESSORY VALVE ASSEMBLIES for Breakdown) Options:	
21	Not Required	0	2WS	
21A	4640922	1	4WS Machines with Deutz D2011 and GM Engines **(SN 0300177361 through 0300181174)**	
21B	1001148664	1	4WS Machines with Deutz TD2.9L4 Engines **(SN 0300177361 through 0300181174)**	
21B	4921928	1	Harness, 4WS (Not Shown - See ELECTRICAL SECTION for Breakdown) **(SN 0300177361 through 0300181174)**	

ITEM	PART NUMBER	QTY	DESCRIPTION	REV
23A	4641452	1	Main Valve Block Assembly (See MAIN VALVE BLOCK ASSEMBLY for Breakdown) **(SN 0300177361 through 0300181174)**	
23B	1001152887	1	Main Valve Block Assembly - 2WS (See MAIN VALVE BLOCK ASSEMBLY for Breakdown) **(SN 0300181175 through 0300272252)**	
23C	1001152561	1	Main Valve Block Assembly - 4WS (See MAIN VALVE BLOCK ASSEMBLY for Breakdown) **(SN 0300181175 through 0300272252)**	
24	4711400	AR	Flatwasher 1/4in Thin	
24	4791400	AR	Starwasher 1/4in	
25	4711600	5	Flatwasher 3/8in Thin	
26	4761600	AR	Lockwasher 3/8in	
27	3740067	1	Relay (Machines with Deutz TD2.9L4 Engines Only)	
28	1001144041	1	Plate, Mounting (Machines with Deutz TD2.9L4 Engines Only)	
29	1001099391	1	Brake/Selector Valve Assembly	
29A	7012941	1	Cartridge without Coil	
29A	7010543	1	Seal Kit - 7012941 Cartridge	
29B	7012995	1	Cartridge without Coil	
29B	7012518	1	Seal Kit - 7012995 Cartridge	
29C	7012944	1	Coil	
29D	7012943	1	Coil	
29E	70002209	1	Orifice	
30	0400075	1	Battery **(SN 0300259737 through 0300272252)**	
31	91401281	1	Bracket, without Battery Disconnect Switch **(SN 0300259737 through 0300272252)**	
31	1001236303	1	Bracket, with Battery Disconnect Switch **(SN 0300259737 through 0300272252)**	
32	1001093382	2	Bolt	
33	4751500	2	Washer 5/16	
34	88521205	2	Nut 5/16	
35	8406201	1	Clip **(SN 0300259737 through 0300272252)**	
36	1321716	AR	Clamp **(SN 0300259737 through 0300272252)**	
37	4751400	1	Washer 1/4	
38	88411013	1	Bolt ¼ - 3/4	

FIGURE 2-2. MAIN VALVE BLOCK ASSEMBLY

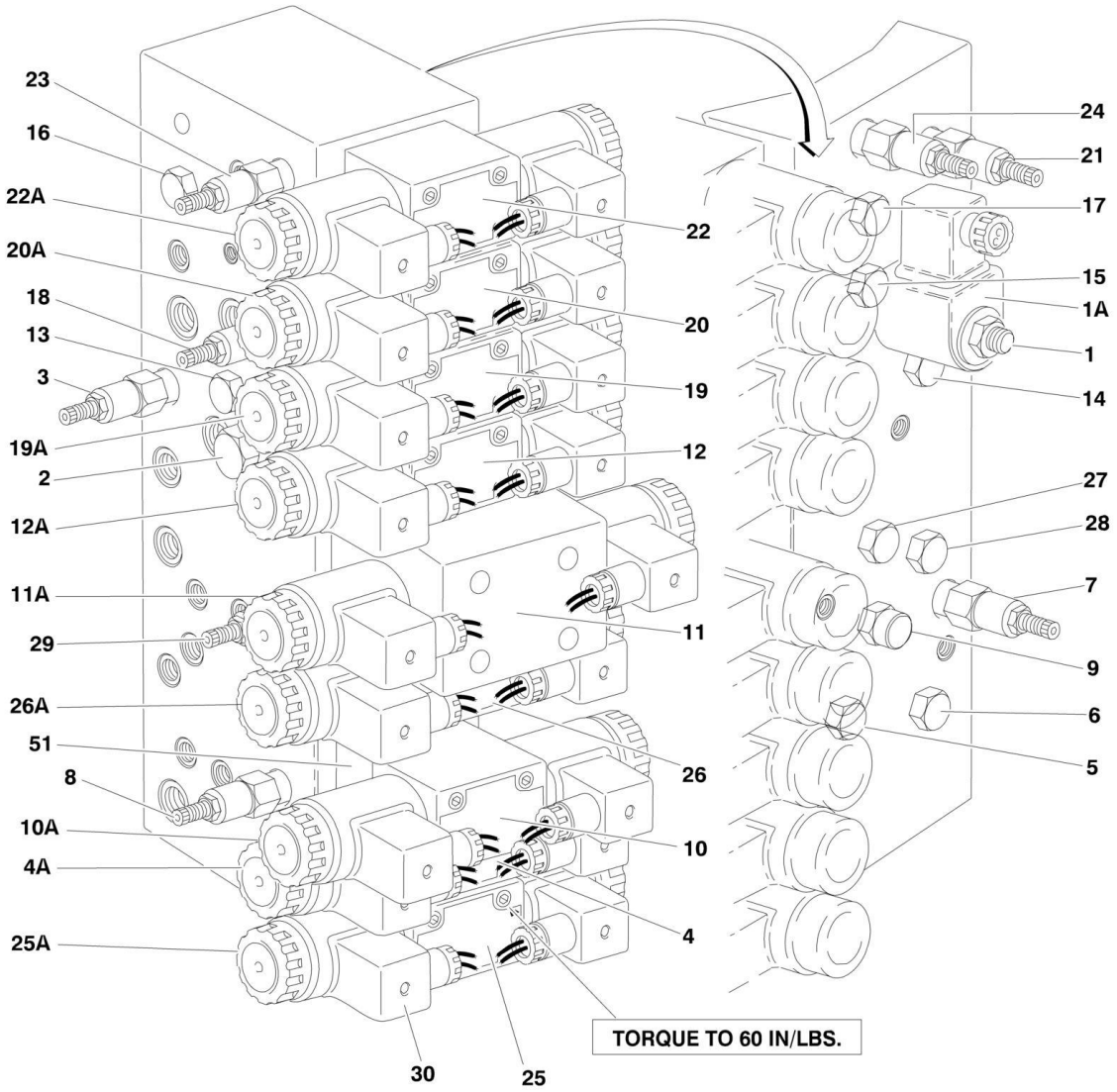

FIGURE 2-2. MAIN VALVE BLOCK ASSEMBLY

ITEM	PART NUMBER	QTY	DESCRIPTION	REV
	4641452	Ref	**MAIN VALVE BLOCK ASSEMBLY (SN 0300177361 through 0300181174)**	D
1	7017410	1	Cartridge, Without Coil	
1	7012967	1	Seal Kit - 7017410 Cartridge	
1A	7012944	1	Coil	
2	7017464	1	Cartridge, Pressure Sensing	
2	7012518	1	Seal Kit -7017464 Cartridge	
3	7017418	1	Cartridge (Main Relief)	
3	7012998	1	Seal Kit	
4	7018941	2	Orifice, 1.2mm (Located under Control Valve Assembly)	
4	70001976	1	Control Valve Assembly (Platform Level) (was p/n 7012770)	
4	7012773	1	Seal Kit	
4A	7012772	2	Coil	
4A	7021375	2	Nut	
5	7012914	1	Cartridge, Check Valve	
5	7012918	1	Seal Kit - 7012914 Cartridge	
6	7012914	1	Cartridge, Check Valve	
6	7012918	1	Seal Kit - 7012914 Cartridge	
7	7017427	1	Cartridge, Relief Valve (Platform Level Backward Relief)	
7	7012998	1	Seal Kit - 7017427 Cartridge	
8	7017428	1	Cartridge, Relief Valve (Platform Level Forward Relief)	
8	7012998	1	Seal Kit - 7017428 Cartridge	
9	7012989	1	Cartridge, Flow Control	
9	7012953	1	Seal Kit - 7012989 Cartridge	
10	70001976	1	Control Valve Assembly (Platform Rotate) (was p/n 7012770)	
10	7012773	1	Seal Kit	
10A	7012772	2	Coil	
10A	7018912	2	Nut	
11	70000579	1	Control Valve Assembly (Upper Tele)	
11	70000583	1	Seal Kit - 70000579 Cartridge	
11A	70000582	1	Coil	
11A	70000580	1	Nut, Coil	
12	7012775	1	Control Valve Assembly (Flow Control)	
12	7012773	1	Seal Kit	
12A	7012772	2	Coil	
12A	7018912	2	Nut	
13	7010542	1	Cartridge, Shuttle	
13	7010543	1	Seal Kit - 7010542 Cartridge	
14	7010542	1	Cartridge, Shuttle	
14	7010543	1	Seal Kit - 7010542 Cartridge	
15	7010542	1	Cartridge, Shuttle	
15	7010543	1	Seal Kit - 7010542 Cartridge	
16	7010542	1	Cartridge, Shuttle	
16	7010543	1	Seal Kit - 7010542 Cartridge	
17	7010542	1	Cartridge, Shuttle	
17	7010543	1	Seal Kit - 7010542 Cartridge	
18	7012912	1	Cartridge, Relief Valve	
18	7012998	1	Seal Kit - 7012912 Cartridge	
19	7012775	1	Control Valve Assembly (Upper Lift)	
19	7012773	1	Seal Kit	

ITEM	PART NUMBER	QTY	DESCRIPTION	REV
19	7012799	1	Lanyard Assembly (Not Shown)	
19A	7012772	2	Coil	
19A	7018912	2	Nut	
20	7012775	1	Control Valve Assembly (Swing)	
20	7012773	1	Seal Kit	
20A	7012772	2	Coil	
20A	7018912	2	Nut	
21	7012912	1	Cartridge, Relief Valve (Swing Right/Left Relief)	
21	7012998	1	Seal Kit - 7012912 Cartridge	
22	7012774	1	Control Valve Assembly (Steer)	
22	7012773	1	Seal Kit	
22A	7012772	2	Coil	
22A	7018912	2	Nut	
23	7017428	1	Cartridge, Relief Valve (Steer Left Relief)	
23	7012998	1	Seal Kit - 7017428 Cartridge	
24	7017428	1	Cartridge, Relief Valve (Steer Right Relief)	
24	7012998	1	Seal Kit - 7017428 Cartridge	
25	70001976	1	Control Valve Assembly (Lower Tele) (was p/n 7012770)	
25	7012773	1	Seal Kit	
25A	7012772	2	Coil	
25A	7021375	2	Nut	
26	7018952	1	Control Valve Assembly (Lower Lift)	
26	7012769	1	Seal Kit - 7018952 Cartridge	
26A	7012772	2	Coil	
26A	7018912	2	Nut	
26A	7012799	1	Lanyard Cable Assembly	
27	7012969	1	Cartridge, Check	
27	7012967	1	Seal Kit - 7012969 Cartridge	
28	7012914	1	Cartridge, Check	
28	7012918	1	Seal Kit - 7012914 Cartridge	
30	4460499	19	Connector, Din with Diode (Part of Valve Harness)	
51	2901763	1	Rotate Sandwich Valve Kit	A
51	7021310	1	Block, Valve	

FIGURE 2-3. MAIN VALVE BLOCK ASSEMBLY

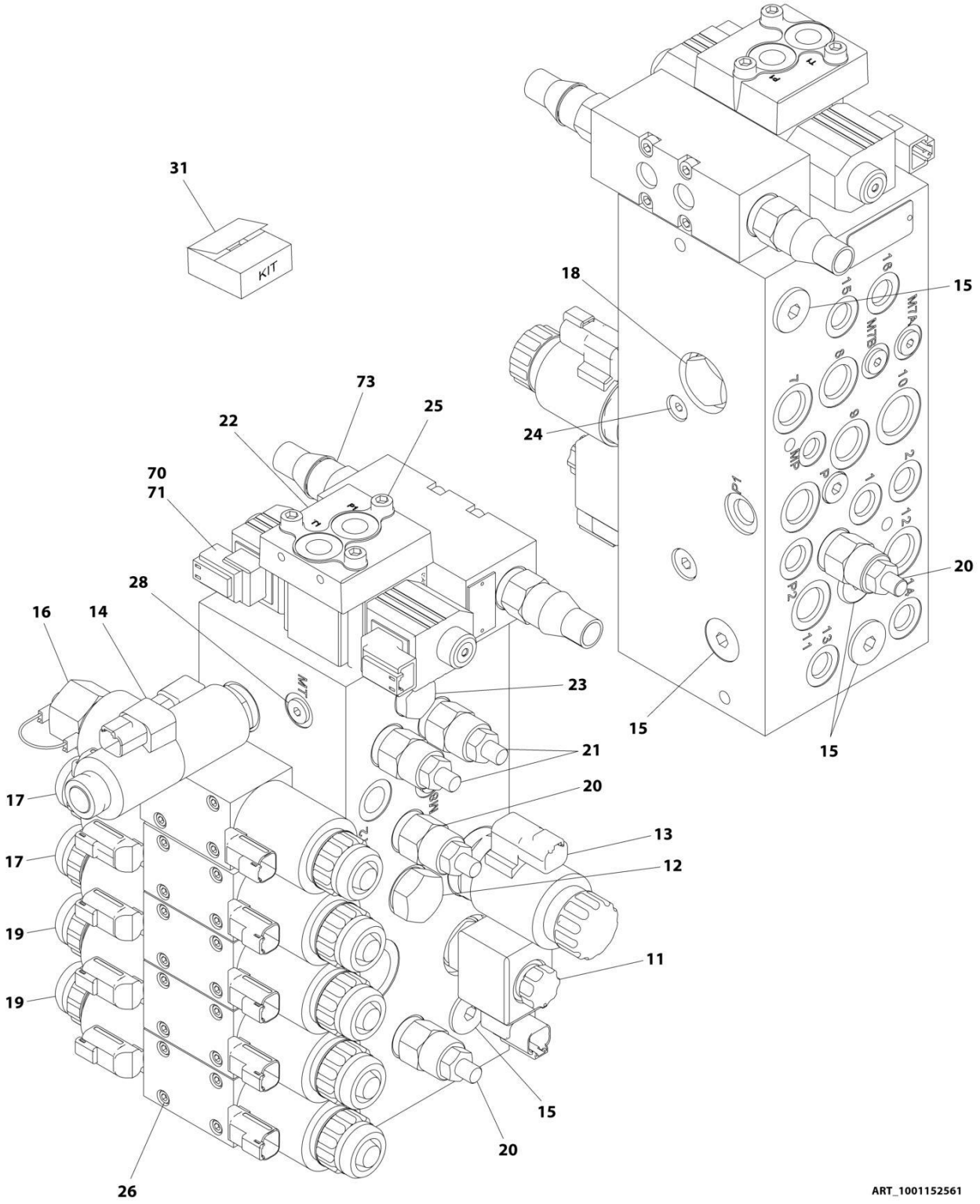

FIGURE 2-3. MAIN VALVE BLOCK ASSEMBLY

ITEM	PART NUMBER	QTY	DESCRIPTION	REV
	1001152887	Ref	**MAIN VALVE BLOCK ASSEMBLY - 2WS**	C
	1001152561	Ref	**MAIN VALVE BLOCK ASSEMBLY - 4WS**	E
11	70004652	1	Valve, Cartridge Less Coil (Dump)	
11	70023867	1	Seal kit - 70004652 Valve	
11	70004653	1	Coil	
11	70004654	1	Nut, Coil	
12	70004655	1	Valve, Cartridge	
12	70004656	1	Seal Kit - 70004655 Valve	
13	70004657	1	Valve, Cartridge Less Coil	
13	70004594	1	Seal Kit - 70004657 Valve	
13	70004595	1	Coil	
13	70004597	1	Nut, Coil	
13	70004596	1	O-Ring, Pole Tube	
14	70004659	1	Valve, Cartridge Less Coil (Steer)	
14	70004660	1	Seal - Kit - 70004659 Valve	
14	80434249	2	Coil	
14	70004661	1	Nut, Coil	
14	70024457	1	O-Ring, Pole Tube (Upper)	
14	70004662	1	O-Ring, Pole Tube (Lower)	
15	70023859	5	Valve, Cartridge	
16	70004663	1	Valve Assembly (Lower Lift)	
16	7012773	1	Seal Kit - 70004663 Valve	
16	70004660	2	Coil	
16	7021375	1	Nut, Coil (Plastic)	
16	70004661	2	O-Ring, Pole Tube	
16	70003525	1	Not, Coil (Aluminum)	
16	70004664	1	Lanyard	
17	70004459	2	Valve Assembly (Upper Tele and Lower Tele)	
17	7012773	1	Seal Kit - 70004459 Valve	
17	70004460	2	Coil	
17	7021375	2	Nut, Coil	
17	70004661	2	O-Ring, Pole Tube	
18	70004665	1	Valve, Cartridge	
18	70023862	1	Seal Kit - 70004665 Valve	
19	70004666	2	Valve Assembly (Swing and Upper Lift)	
19	7012773	1	Seal Kit - 70004666 Valve	
19	70004463	2	Coil	
19	7021375	2	Nut, Coil	
19	70004461	2	O-Ring, Pole Tube	
20	70003019	3	Valve, Cartridge	
20	70004052	3	Seal Kit - 70003019	
21	70003019	2	Valve, Cartridge	
21	70004052	2	Seal Kit - 70003019 Valve	
22	70004667	1	Cover	
23	2220886	1	Plug (2WS)	
23	70004670	1	Plug (4WS)	
24	70004668	1	Plug (2WS)	
24	70004665	1	Plug (4WS)	
25	70005201	3	Capscrew (Valve p/n 1001152887 Only)	
25	70021202	1	Bolt Kit (Valve p/n 1001152561 Only)	

ITEM	PART NUMBER	QTY	DESCRIPTION	REV
26	7018942	20	Capscrew	
27	70005202	2	O-Ring (Not Shown - Located under Item 22)	
28	70002758	6	Plug 7/16	
29	70004617	4	Plug 9/16 (Not Shown)	
30	70002759	1	Plug 3/4 (Not Shown - Located under Item 73)	
31	70005232	1	Bolt Kit (Valve p/n 1001152561 Only)	
32	91474405	2	O-Rings (Not Shown - Located under Item 73) (Valve p/n 1001152561 Only)	
70	70004671	1	Valve Assembly (4WS Rear Steer) (1001152561 Valve Only)	
70	70004672	1	Seal Kit - 70004671 Valve	
71	70004673	2	Coil (4WS Rear Steer) (1001152561 Valve Only)	
73	70004674	2	Valve, Cartridge (4WS Rear Steer) (1001152561 Valve Only)	
73	70004052	2	Seal Kit - 70004052 Valve	

FIGURE 2-4. ACCESSORY VALVE ASSEMBLIES

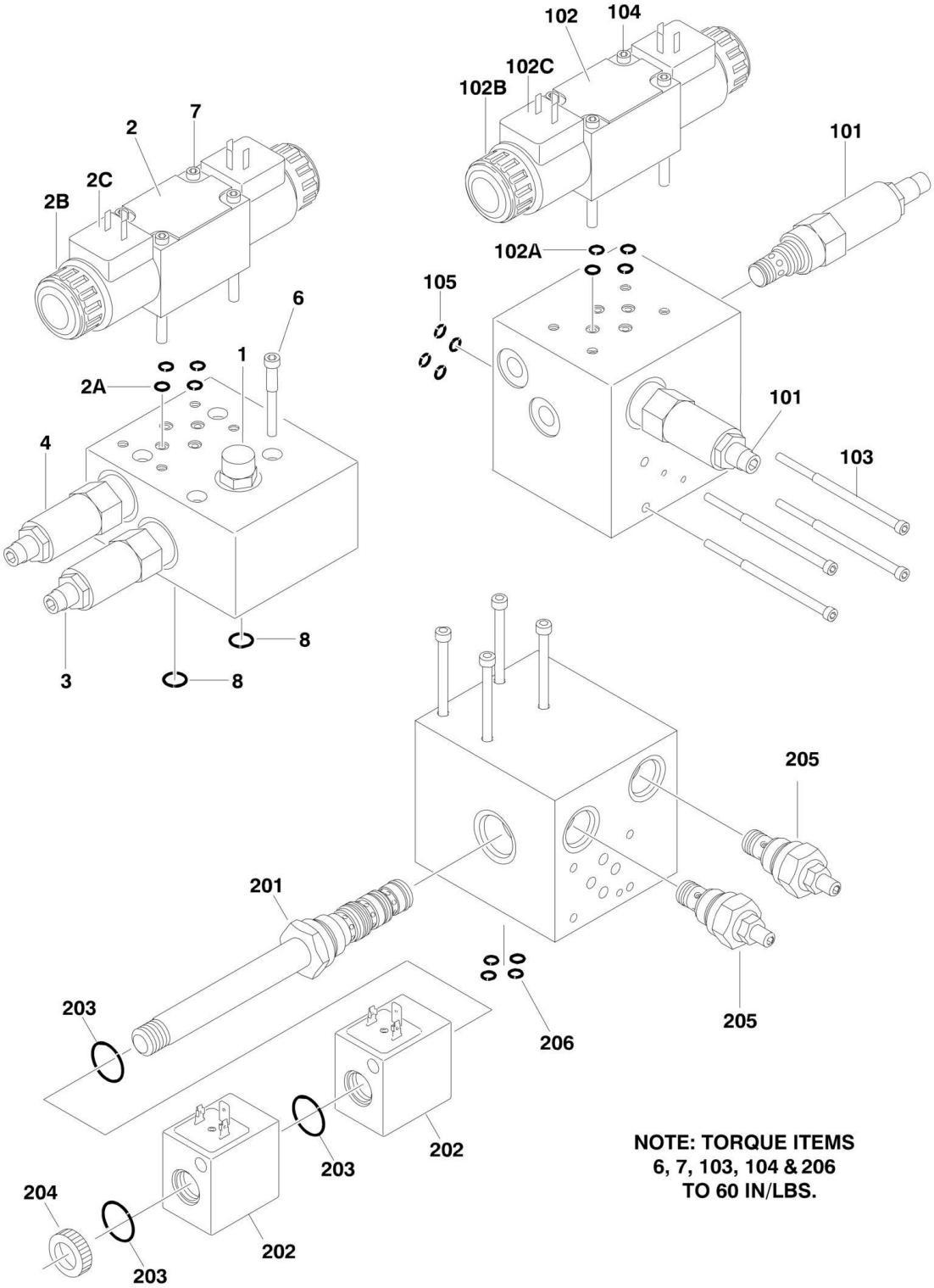

FIGURE 2-4. ACCESSORY VALVE ASSEMBLIES

ITEM	PART NUMBER	QTY	DESCRIPTION	REV
	4640921	Ref	**ARTICULATING JIB VALVE ASSEMBLY**	D
1	7012965	1	Cartridge, Flow Control	
1	7012953	1	Seal Kit - 7012965 Cartridge	
2	70001976	1	Directional Control Valve Assembly (was p/n 7012770)	
2	7012773	1	Seal Kit	
2A	7018945	4	O-Ring	
2B	7018912	2	Nut	
2C	7012772	2	Coil	
3	7017421	1	Cartridge, Relief	
3	7012998	1	Seal Kit - 7017421 Cartridge	
4	7017422	1	Cartridge, Relief	
4	7012998	1	Seal Kit - 7017422 Cartridge	
5	4460499	2	Connector, DIN with Diode (Not Shown - Part of Valve Harness)	
6	7018946	4	Capscrew, Socket Head #10-24NC x 5in (Not Shown - Used to Mount Valve Assembly)	
7	7018942	4	Capscrew, Socket Head #10-24NC x 2in	
8	7012776	4	O-Ring (Not Shown - Used to Mount to Main Valve)	
	4640922	Ref	**4WS VALVE ASSEMBLY (MACHINES WITH DEUTZ D2011 AND GM ENGINES)**	B
101	7017420	2	Cartridge, Flow Control	
101	7012998	2	Seal Kit - 7017420 Cartridge	
102	7012774	1	Directional Control Valve Assembly	
102	7012773	1	Seal Kit	
102A	7018945	4	O-Ring	
102B	7018912	2	Nut	
102C	7012772	2	Coil	
103	7018946	4	Capscrew, Socket Head #10-24NC x 5in (Used to Mount Valve Assembly)	
104	7018942	4	Capscrew, Socket Head #10-24NC x 2in	
105	7018948	4	O-Ring (Used to Mount to Main Valve)	
	1001148664	Ref	**4WS VALVE ASSEMBLY (MACHINES WITH DEUTZ TD2.9L4 ENGINES)**	B
201	70004165	1	Cartridge Less Coils	
201	70004164	1	Seal Kit - 70004165 Valve	
202	70004161	2	Coil	
203	70004163	1	Seal Kit (Includes O-Rings for between Coil, Nut and Cartridge)	
204	70004162	1	Nut, Coil	
205	70004166	2	Cartridge	
205	70004052	2	Seal Kit - 70004166 Valve (1 Per Cartridge)	
206	7018948	4	O-Ring	

FIGURE 2-5. SWING DRIVE, TURNTABLE BEARING AND LOCK INSTALLATIONS

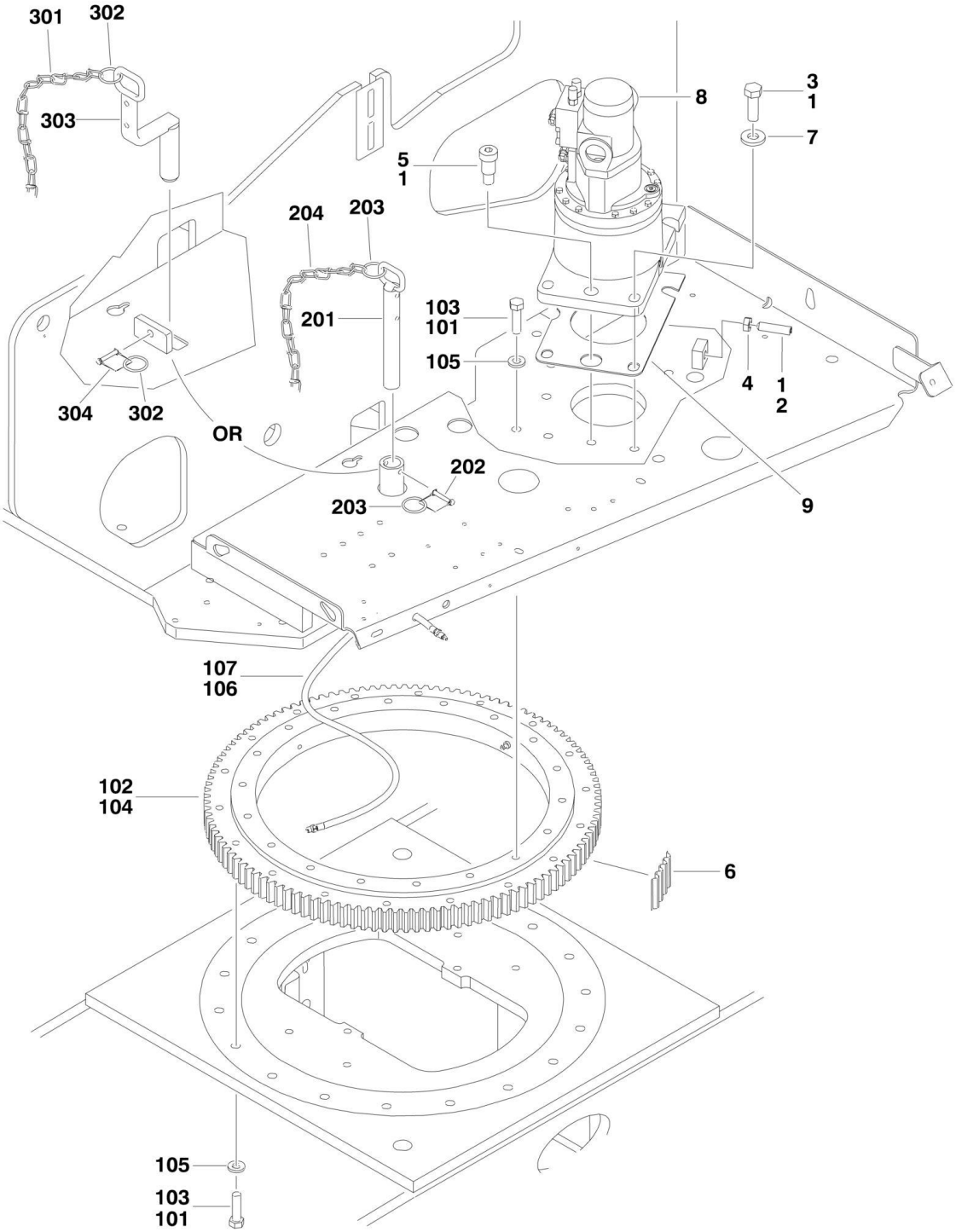

FIGURE 2-5. SWING DRIVE, TURNTABLE BEARING AND LOCK INSTALLATIONS

ITEM	PART NUMBER	QTY	DESCRIPTION	REV
	1001152181	Ref	**SWING DRIVE INSTALLATION**	E
1	0100019	AR	Compound, Locking	
2	3952020	1	Setscrew 5/8in - 11NC x 2-1/2in	
3	0682218	4	Bolt 3/4in - 10NC x 2-1/4in Grade 8	
4	3312002	1	Nut, Jam 5/8in - 11NC	
5	3900293	1	Capscrew 1in x 1-1/4in	
6	4071009	1	Shim **(SN 0300177361 through 0300181174)**	
6	1001125492	1	Shim **(SN 0300181175 through 0300272252)**	
7	4740057	4	Flatwasher, Hardened	
8	1001101060	1	Swing Hub Assembly (See SWING MOTOR/HUB ASSEMBLY for Breakdown) **(Prior to SN 0300269965)**	
8	1001229810	1	Swing Hub Assembly (See SWING MOTOR/HUB ASSEMBLY for Breakdown) **(SN 0300269965 to Present)**	
9	1001152234	1	Plate, Spacer	
	1001150391	Ref	**TURNTABLE BEARING AND REMOTE LUBE INSTALLATION**	C
101	0100019	AR	Compound, Locking	
102	0440207	1	Bearing, Turntable	
103	0682018	36	Bolt 5/8in - 11NC x 2-1/4in Grade 8	
104	3020029	AR	Lubricant	
105	4892000	36	Flatwasher 5/8in Hardened	
106	0100011	AR	Compound, Locking	
107	1001149927	1	Hose (Includes Grease Fitting and Adapter Fittings)	
	0255410	Ref	**TURNTABLE LOCK INSTALLATION (MACHINES WITH DEUTZ D2011 AND GM ENGINES)**	B
201	4844958	1	Pin	
202	3421565	1	Pin, Snap	
203	3760170	2	Ring, Quick Release	
204	1260017	9 in/23cm	Chain	
	1001137885	Ref	**TURNTABLE LOCK INSTALLATION (MACHINES WITH DEUTZ TD2.9L4 ENGINES)**	A
301	1260017	9 in/23cm	Chain	
302	3760170	2	Ring, Quick Release	
303	1001137896	1	Pin	
304	1001145292	1	Pin, Snap	

FIGURE 2-6. SWING MOTOR/HUB ASSEMBLY (Prior to SN 0300269965)

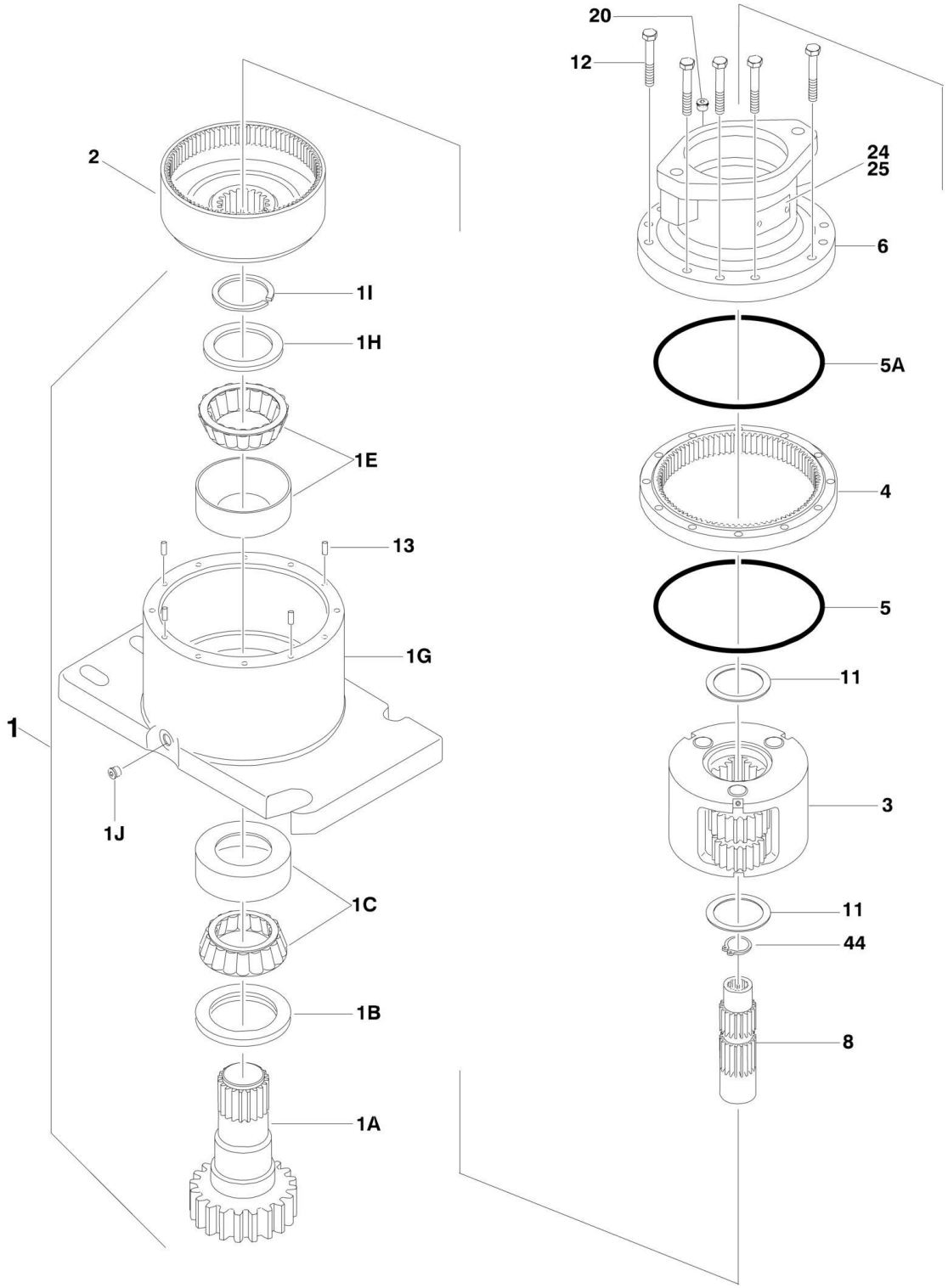

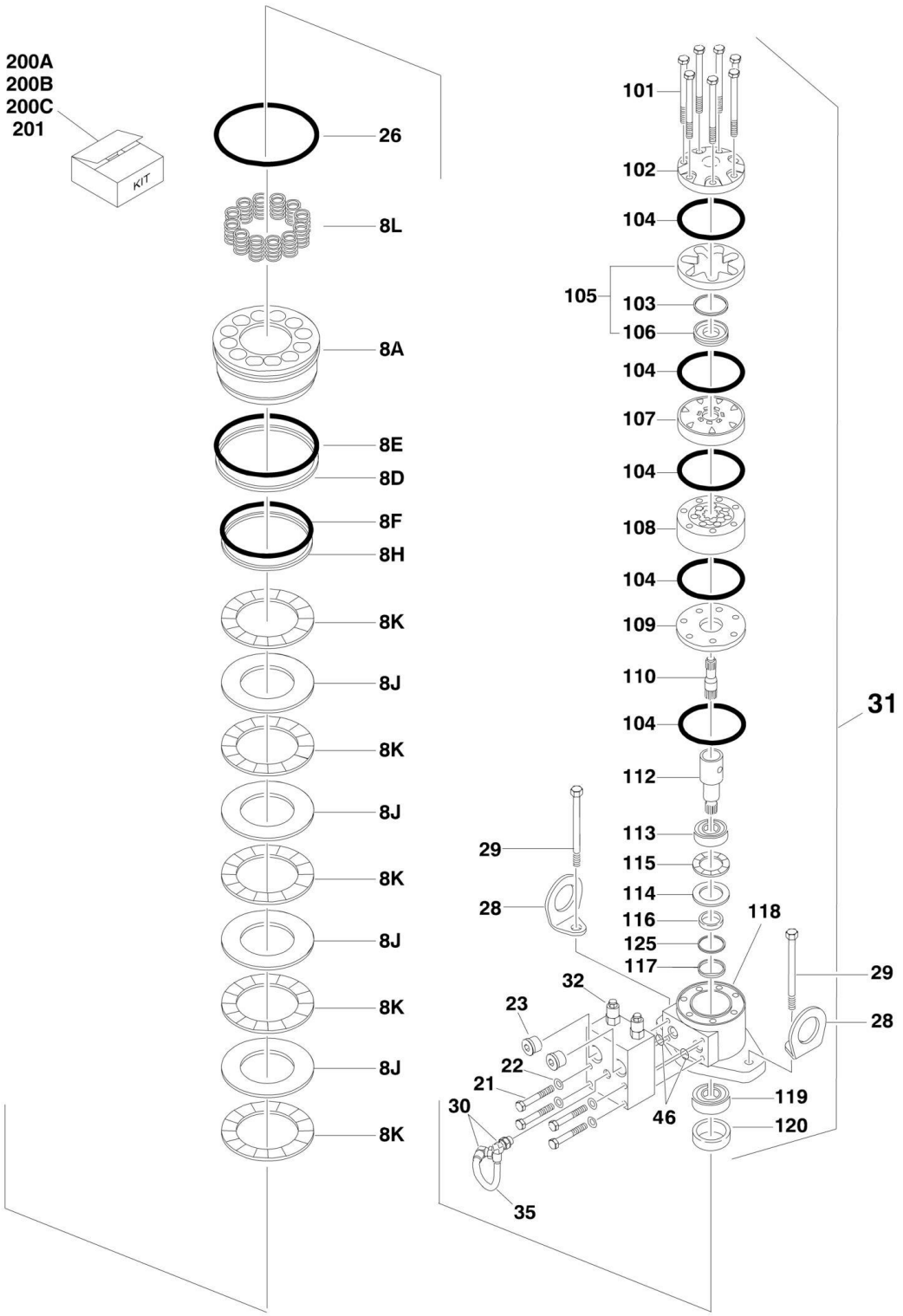
200A
200B
200C
201
KIT
26
8L
8A
8E
8D
8F
8H
8K
8J
8K
8J
8K
8J
8K
8J
8K
101
102
104
105
103
106
104
107
104
108
104
109
110
104
112
113
115
114
116
125
117
118
29
28
32
23
22
21
30
35
46
119
120
31
29
28

FIGURE 2-6. SWING MOTOR/HUB ASSEMBLY (Prior to SN 0300269965)

ITEM	PART NUMBER	QTY	DESCRIPTION	REV
	1001101060	Ref	**SWING MOTOR/HUB ASSEMBLY**	B
1	See Note	1	Housing/Shaft Assembly (Note: Not Available - Purchase Individual Components)	
1A	7010492	1	Shaft, Output	
1B	7000228	1	Seal, Lip	
1C	7000255	1	Bearing Kit (Includes Cup and Cone)	
1E	7000257	1	Bearing Kit (Includes Cup and Cone)	
1G	7024762	1	Housing	
1H	7007633	1	Washer, Thrust	
1I	7000229	1	Ring, Retaining	
1J	7017072	1	Plug, Pipe	
2	7000246	1	Gear, Internal	
3	80424002	1	Carrier Assembly	
4	7000248	1	Gear, Ring	
5	7000230	1	O-Ring	
5A	7017070	1	O-Ring	
6	1001101060	NSS	Housing, Brake (Note: Not Available - Purchase Complete Assembly)	
8	70002065	1	Gear, Sun	
8A	70000782	1	Piston	
8D	70002070	1	O-Ring	
8E	70002071	1	Ring, Back-up	
8F	70002073	1	O-Ring	
8H	70002072	1	Ring, Back-up	
8J	70002067	4	Disc, Rotor	
8K	70002068	5	Disc, Stator	
8L	70002066	14	Spring	
11	7000253	2	Washer, Thrust	
12	7000217	12	Bolt 3/8in-16NC x 2-1/4in (Grade 8)	
13	7017080	4	Pin, Dowel	
20	7017072	1	Plug, Pipe	
21	7024704	4	Bolt 5/16in-18NC x 2in (Grade 8)	
22	See Note	NSS	Lockwasher (Note: Not Available for Purchase)	
23	7017023	2	Plug, Pipe	
24	See Note	NSS	Plate, ID (Note: Not Available for Purchase)	
25	7000281	2	Screw, Drive	
26	7024763	1	O-Ring	
28	See Note	NSS	Lug, Lifting (Note: Not Available for Purchase)	
29	70002069	2	Bolt 1/2in-13NC x 2in (Grade 8)	
30	7017085	2	Elbow	
31	70002075	1	Motor Assembly (See Items 101-125 for Breakdown)	
32	7024784	1	Valve Assembly - Complete (No Serviceable Parts)	
35	70002074	1	Tube	
44	7017028	1	Ring, Internal Retaining	
46	7000213	2	O-Ring	
	70002075	Ref	**Motor Assembly**	
101	7024454	5	Bolt	
102	7004035	1	Cover, End	
103	7023318	1	Seal, Commutator	
104	7004036	5	Seal, Ring	

ITEM	PART NUMBER	QTY	DESCRIPTION	REV
105	7024453	1	Commutator and Ring Assembly	
106	7024453	1	Ring	
107	7024379	1	Manifold	
108	7024455	1	Rotor Set	
109	7024380	1	Plate, Wear	
110	7024456	1	Link, Drive	
112	7024458	1	Shaft, Coupling	
113	7024381	1	Bearing, Inner	
114	7004043	1	Washer, Thrust	
115	7004044	1	Bearing, Thrust	
116	7004049	1	Seal, Inner	
117	7004045	1	Washer, Back-up	
118	7024457	1	Housing	
119	7024390	1	Bearing, Outer	
120	7004047	1	Seal	
125	80424043	1	Washer, Back-up	
		Ref	**Kit Options:**	
200		Ref	Seal Kit Options:	
200A	7024100	1	Swing Hub (Includes Items 1B, 1I, 5, 5A & 11)	
200B	70002086	1	Swing Brake (Includes Items 8D, 8E, 8F, 8H & 26)	
200C	7024396	1	Swing Motor (Includes Items 103, 104, 116, 117, 120 & 125)	
201	70002085	1	Disc Kit - Swing Brake (Includes Items 8J & 8K)	

FIGURE 2-7. SWING MOTOR/HUB ASSEMBLY (SN 0300269965 to Present)

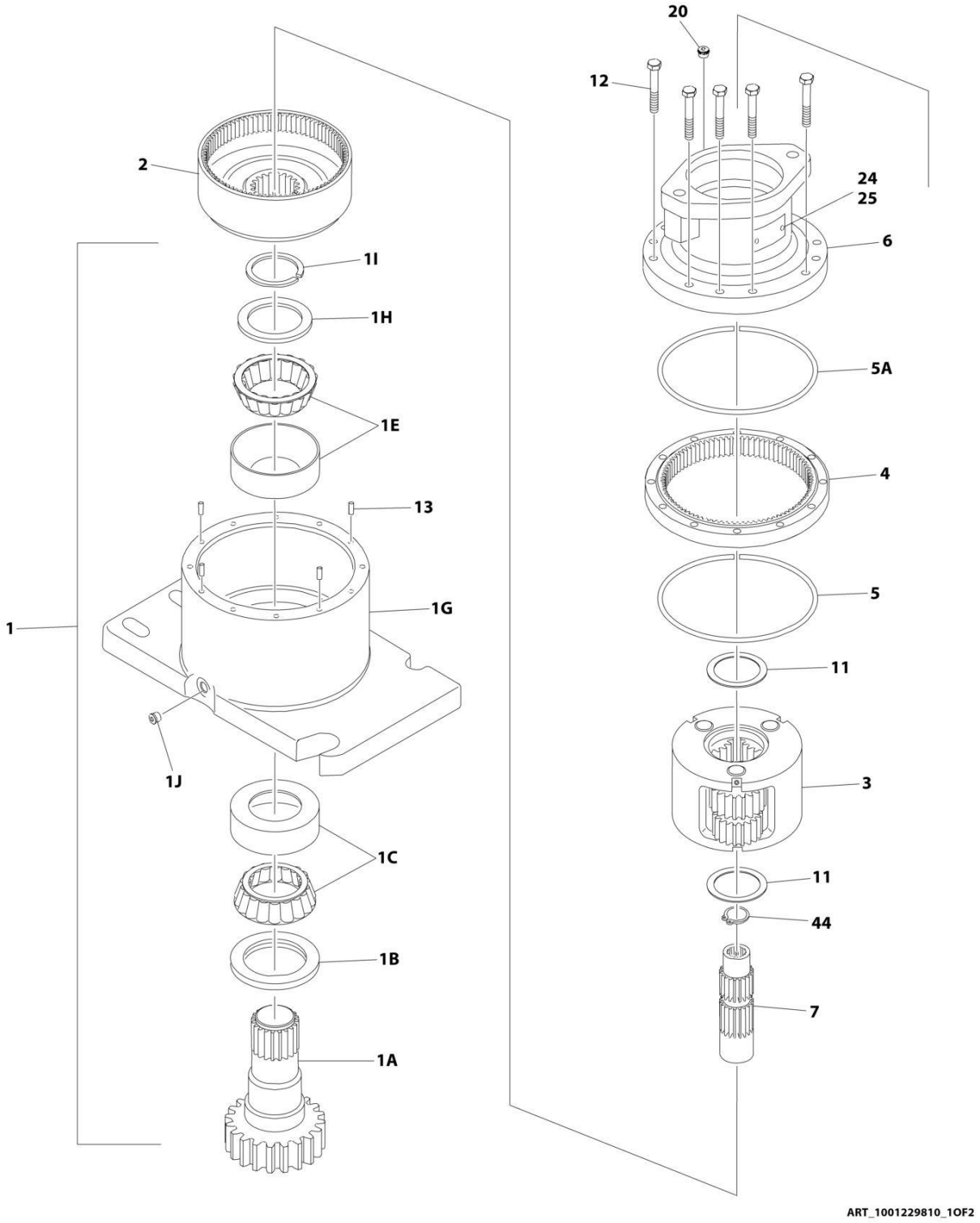

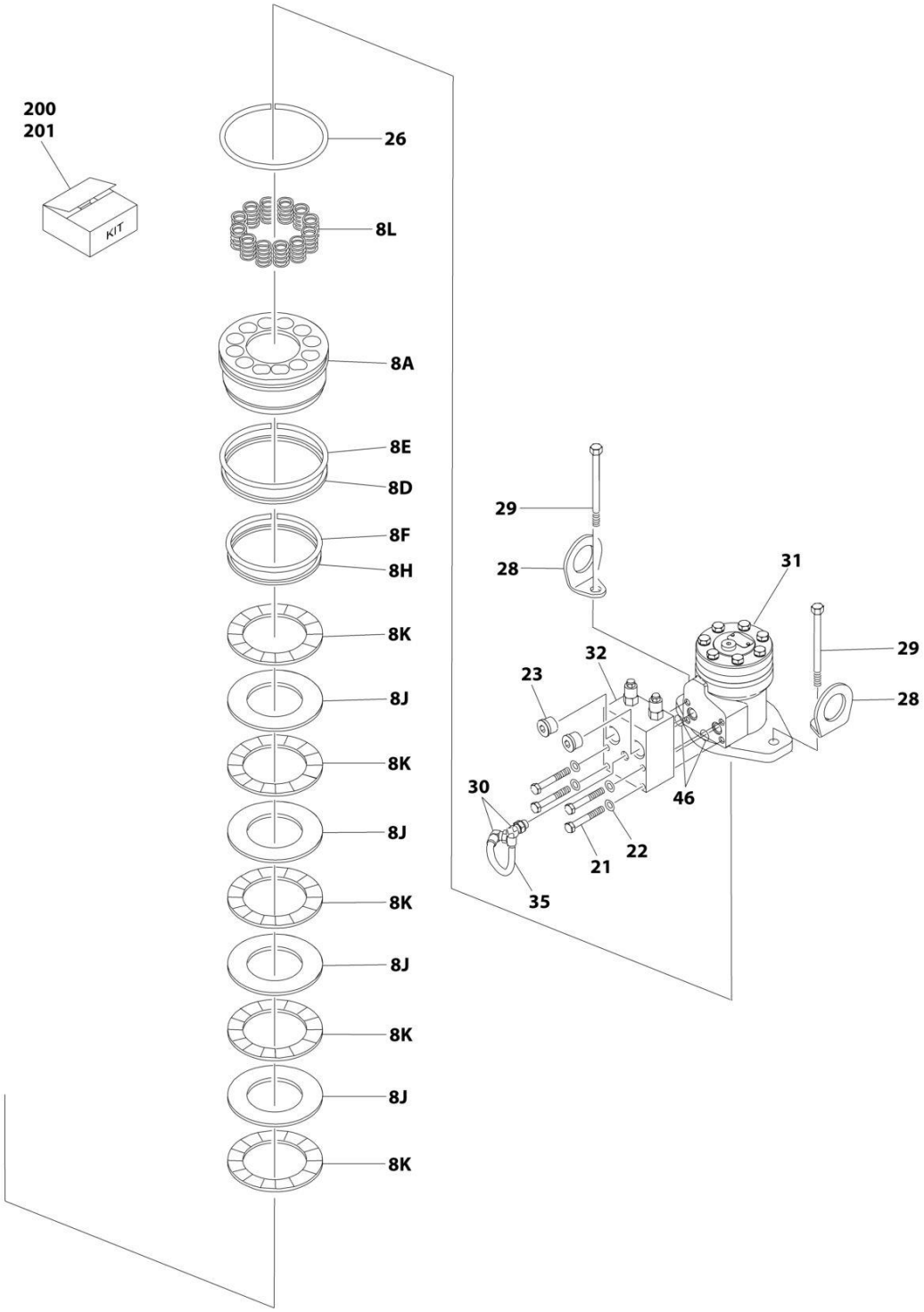

ART_1001229810_2OF2

FIGURE 2-7. SWING MOTOR/HUB ASSEMBLY (SN 0300269965 to Present)

ITEM	PART NUMBER	QTY	DESCRIPTION	REV
	1001229810	Ref	SWING MOTOR/HUB ASSEMBLY	C
1	See Note	1	Housing/Shaft Assembly (Note: Not Available - Purchase Individual Components)	
1A	7010492	1	Shaft, Output	
1B	7000228	1	Seal, Lip	
1C	7000255	1	Bearing Kit (Includes Cup and Cone)	
1E	7000257	1	Bearing Kit (Includes Cup and Cone)	
1G	7024762	1	Housing	
1H	7007633	1	Washer, Thrust	
1I	7000229	1	Ring, Retaining	
1J	7017072	1	Plug, Pipe	
2	7000246	1	Gear, Internal	
3	7000247	1	Carrier Assembly	
4	7000248	1	Gear, Ring	
5	7000230	1	O-Ring	
5A	7017070	1	O-Ring	
6	1001229810	NSS	Housing, Brake (Note: Not Available - Purchase Complete Assembly)	
7	70005203	1	Gear, Sun	
8A	70004037	1	Piston	
8D	70004041	1	O-Ring	
8E	70004044	1	Ring, Back-up	
8F	70004042	1	O-Ring	
8H	70004043	1	Ring, Back-up	
8J	70002085	4	Disc, Rotor	
8K	70002085	5	Disc, Stator	
8L	70002066	14	Spring	
11	7000253	2	Washer, Thrust	
12	7000217	12	Bolt 3/8 x 2-1/4 Grade 8	
13	7017080	4	Pin, Dowel	
20	7017072	1	Plug, Pipe	
21	7024704	4	Bolt 5/16 x 2 Grade 8	
22	70004045	4	Washer	
23	7017023	2	Plug, Pipe	
24	See Note	NSS	Plate, ID (Note: Not Available for Purchase)	
25	See Note	NSS	Rivet (Note: Not Available for Purchase)	
26	7024763	1	O-Ring	
28	See Note	NSS	Lug, Lifting (Note: Not Available for Purchase)	
29	70004040	2	Bolt 1/2 x 1 (Grade 8)	
30	7017085	2	Elbow	
31	70006304	1	Motor Assembly	
32	7024784	1	Valve Assembly - Complete (No Serviceable Parts)	
35	70004047	1	Tube	
44	7017028	1	Ring, Internal Retaining	
45	7000213	2	O-Ring	
		Ref	KIT OPTIONS:	
200	7024100	1	Seal Kit - Swing Hub (Includes Items 1B, 1I, 5, 5A & 11)	
201	70002085	1	Disc Kit - Swing Brake (Includes Items 8J & 8K)	

FIGURE 2-8. DEUTZ D2011 ENGINE INSTALLATION

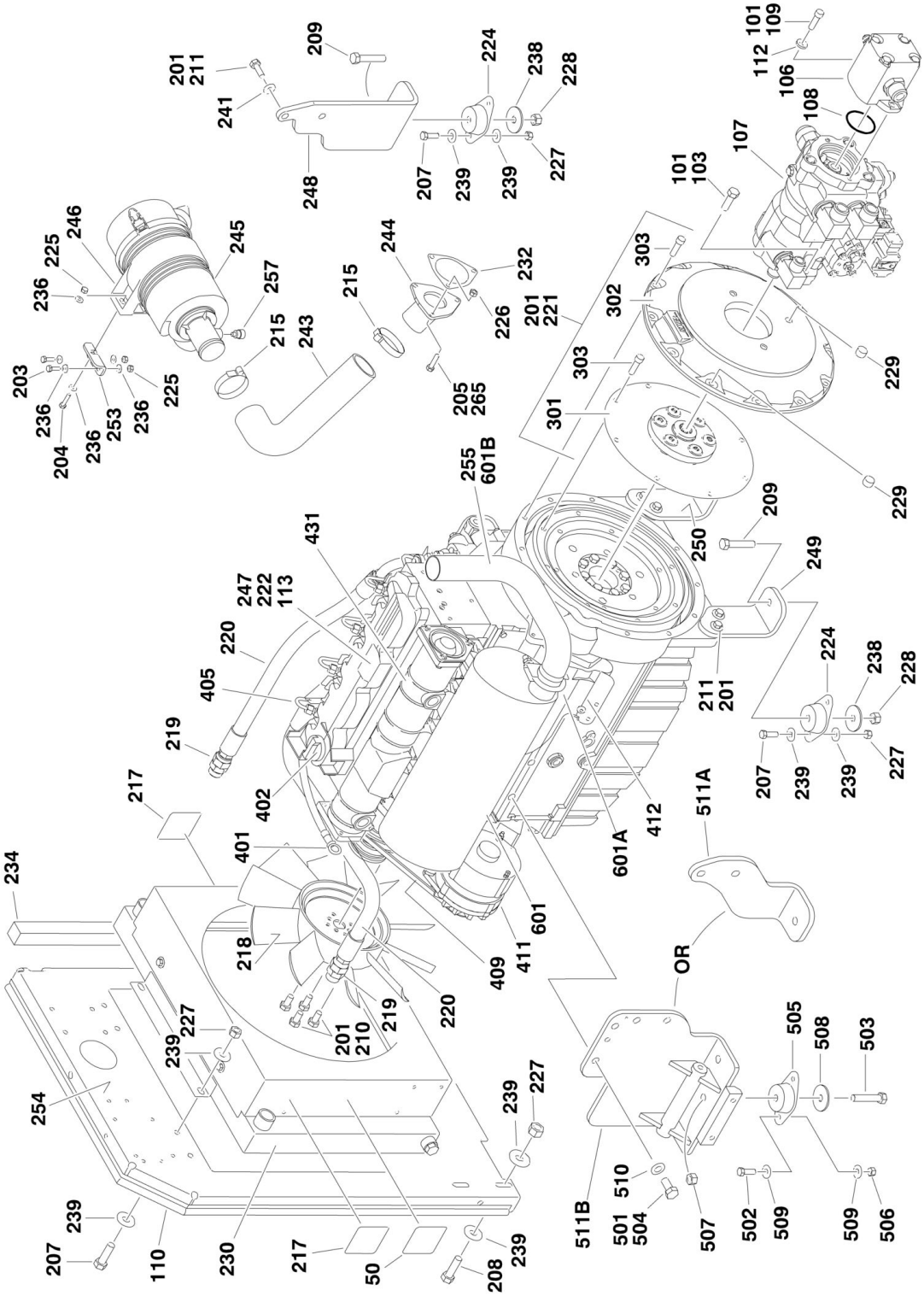

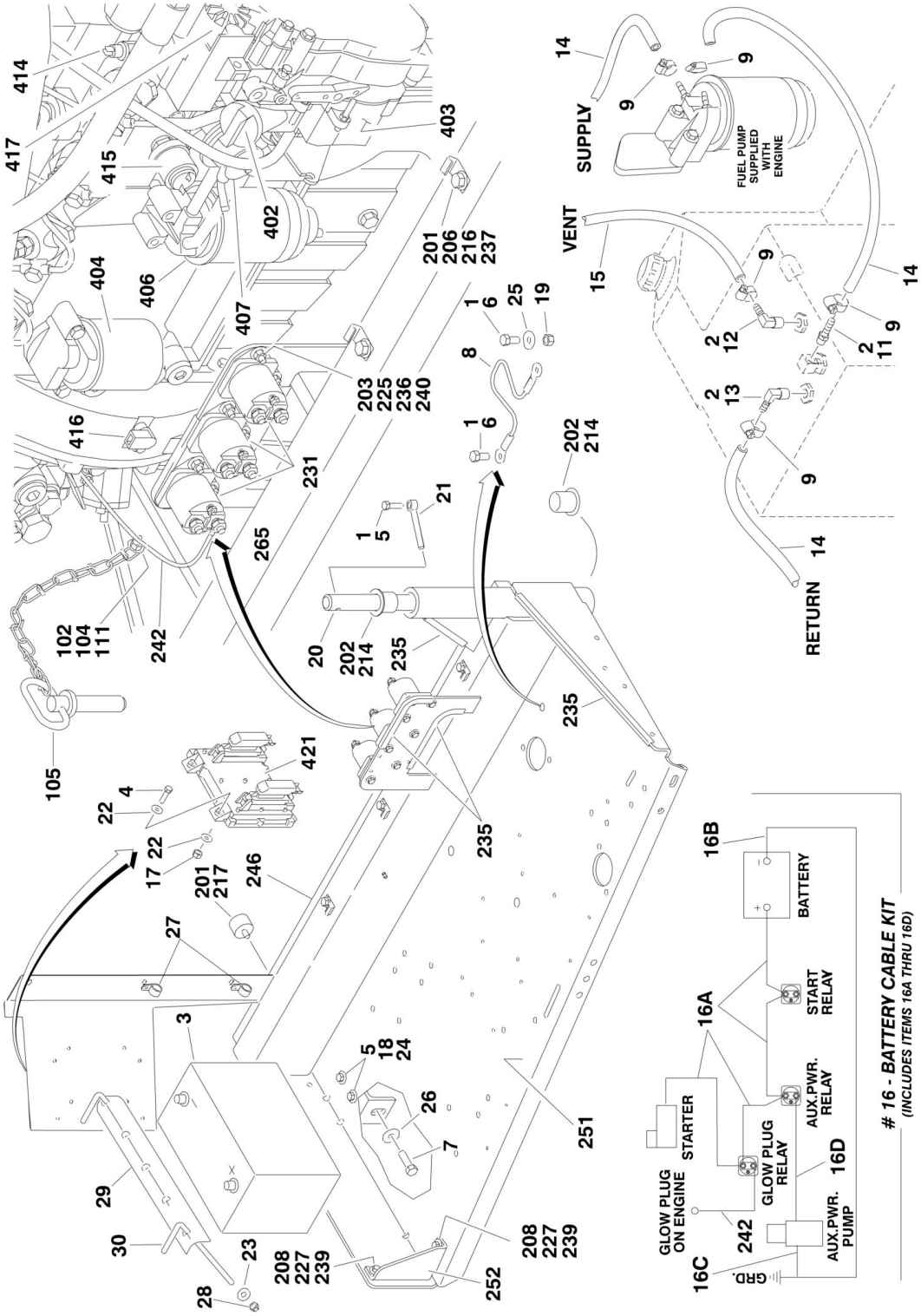
SUPPLY
VENT
RETURN
FUEL PUMP SUPPLIED WITH ENGINE
BATTERY
START RELAY
AUX.PWR. RELAY
STARTER
GLOW PLUG RELAY
GLOW PLUG ON ENGINE
AUX.PWR. PUMP
GRD.
16 - BATTERY CABLE KIT
(INCLUDES ITEMS 16A THRU 16D)

FIGURE 2-8. DEUTZ D2011 ENGINE INSTALLATION

ITEM	PART NUMBER	QTY	DESCRIPTION	REV
		Ref	**DEUTZ ENGINE INSTALLATIONS**	
		Ref	**Without Arctic Package**	
	1001152223	Ref	**Tier IVi-Flex Engines (ANSI and CSA Specs)**	A
	1001151843	Ref	**Tier IVi Engines (ANSI Export, Australian, CE and Japanese Specs) (SN 0300177361 through 0300208081)**	B
	1001188963	Ref	**Tier IVi Engines (ANSI Export, Australian and Japanese Specs) (SN 0300208082 through 0300272252)**	B
	1001188963	Ref	**Tier IVi Engines (CE Specs) (SN 0300208082 through 0300257375)**	A
	1001235466	Ref	**Tier IVi Stage V Engines (CE Specs) (SN 0300257376 through 0300272252)**	C
		Ref	**With Arctic Package**	
	1001152224	Ref	**Tier IVi-Flex Engines (ANSI and CSA Specs)**	A
	1001151844	Ref	**Tier IVi Engines (ANSI Export, Australian, CE and Japanese Specs) (SN 0300177361 through 0300208081)**	C
	1001188964	Ref	**Tier IVi Engines (ANSI Export, Australian, CE and Japanese Specs) (SN 0300208082 through 0300272252)**	C
1	0100011	AR	Compound, Locking	
2	0100020	AR	Sealant, Pipe	
3	0400075	1	Battery	
4	0641409	4	Bolt 1/4in-20NC x 1-1/8in	
5	0641610	3	Bolt 3/8in-16NC x 1-1/4in	
6	0641808	2	Bolt 1/2in-13NC x 1in	
7	0642010	1	Bolt 5/8in-11NC x 1-1/4in	
8	1060637	1	Cable, Lanyard	
9	1320022	5	Clamp, Hose	
10	1701505	1	Decal - Diesel (Not Shown - Located on Hood)	
11	2180348	1	Fitting, Straight Barbed	
12	2220313	1	Fitting, 90	
13	2221176	1	Fitting, Straight Barbed	
14	2720058	24 ft/7.3m	Hose	
15	2750532	6 ft/1.8m	Hose	
16	2902296	1	Battery Cable Kit (All Except 1001235466 Installation)	F
16	1001241578	1	Battery Cable Kit (1001235466 Installation) (No Info at Time of Printing)	A
16A	1001116240	1	Cable, Battery (Red)	
16B	7027004	1	Cable, Battery (Black)	
16C	7027003	1	Cable (Black)	
16D	7027002	1	Cable (Red)	
17	3311405	4	Locknut 1/4in-20NC	
18	3311605	AR	Locknut 3/8in-16NC	
19	3311805	1	Nut 1/2in-13NC	
20	3422448	1	Pin, Pivot	
21	3841143	1	Pin, Keeper	
22	4711400	8	Flatwasher 1/4in Thin	
23	4751500	2	Flatwasher 5/16in Regular	
24	4751600	4	Flatwasher 3/8in Regular	
25	4751800	1	Flatwasher 1/2in Regular	
26	4752000	1	Flatwasher 5/8in Regular	
27	85941017	2	Clamp	
28	88521205	2	Locknut 5/16in-18NC	

ITEM	PART NUMBER	QTY	DESCRIPTION	REV
29	91401281	1	Hold-down, Battery	
30	1001093382	2	J-Bolt	
31	1001151070	1	Angle	
50		Ref	Decal - Warning Explosion/Fire Options:	
50	1704972	1	ANSI Spec	
50	1706098	1	Australian and CE Spec	
50	1706059	1	Brazilian Spec	
50	1706060	1	Chinese Spec	
50	1706064	1	CSA Spec	
50	1706062	1	Japanese Spec	
50	1706061	1	Korean Spec	
50	1706063	1	Spanish Language	
51	1001241835	1 l	Fluid, Diesel Fuel Additive (1001235466 Installation (Not	
		Ref	**Note: Arctic Package Items 65 - 75 are Not Shown - Used on Arctic Machines Only.**	
65	1060625	1	Cable, Immersion Heater (Located on bottom of Hydraulic Oil Tank) **(SN 0300177361 through 0300206631)**	
65	1001150918	1	Cable, Immersion Heater (Located on bottom of Hydraulic Oil Tank) **(SN 0300206632 through 0300272252)**	
66	1060626	1	Cord, 3 Way Extension (Located on Left Front of Engine)	
67	1320223	2	Clamp	
68	1702941	1	Decal - Battery Heater (Located on Battery Heater)	
69	1702942	1	Decal - Engine Block Heater (Located on Right Side of Engine)	
70	1702943	1	Decal - Hydraulic Tank Heater (Located on bottom of Hydraulic Oil Tank)	
71	1702944	1	Decal - Heater Cord (Located on Left Front of Engine)	
72	2580024	1	Heater, Battery (Located on Battery)	
73	2580050	1	Heater, Hydraulic Tank (Located on bottom of Hydraulic Oil Tank) **(SN 0300177361 through 0300206631)**	
73	1001188972	1	Heater, Hydraulic Tank (Located on bottom of Hydraulic Oil Tank) **(SN 0300206632 through 0300272252)**	
75	3980007	1	Seat, Battery (Located Under Battery)	
		Ref	**ENGINE/PUMP SUBASSEMBLIES**	
		Ref	**Without Arctic Package**	
	1001152221	Ref	**Tier IVi-Flex Engines (ANSI and CSA Specs)**	A
	1001151841	Ref	**Tier IVi Engines (ANSI Export, Australian, CE and Japanese Specs) (SN 0300177361 through 0300208081)**	C
	1001188954	Ref	**Tier IVi Engines (ANSI Export, Australian and Japanese Specs) (SN 0300208082 through 0300272252)**	A
	1001188954	Ref	**Tier IVi Engines (CE Specs) (SN 0300208082 through 0300257375)**	A
	1001235467	Ref	**Tier IVi Stage V Engines (CE Specs) (SN 0300257376 through 0300272252)**	B
		Ref	**With Arctic Package**	
	1001152222	Ref	**Tier IVi-Flex Engines (ANSI and CSA Specs)**	A
	1001151842	Ref	**Tier IVi Engines (ANSI Export, Australian, CE and Japanese Specs) (SN 0300177361 through 0300208081)**	C
	1001188955	Ref	**Tier IVi Engines (ANSI Export, Australian, CE and Japanese Specs) (SN 0300208082 through 0300272252)**	A
101	0100011	AR	Compound, Locking	
102	0641407	1	Bolt 1/4in-20NC x 7/8in	
103	0641812	2	Bolt 1/2in-13NC x 1-1/2in	
104	3311405	1	Locknut 1/4in-20NC	
105	3422533	1	Pin, Hitch	

ITEM	PART NUMBER	QTY	DESCRIPTION	REV
106	3600395	1	Gear Pump Assembly with Fittings (See HOOD INSTALLATION for Breakdown)	
107	3600396	1	Piston Pump Assembly with Fittings (See PISTON PUMP ASSEMBLY for Breakdown) **(SN 0300177361 through 0300208081)**	
107	1001188952	1	Piston Pump Assembly with Fittings (See PISTON PUMP ASSEMBLY for Breakdown) **(SN 0300208082 through 0300272252)**	
108	3790152	1	O-Ring	
109	3931620	2	Capscrew 3/8in-16NC x 1-1/4in	
110	3960389	5 ft/1.5m	Seal	
111	4751400	8	Flatwasher 1/4in Regular	
112	4891600	2	Flatwasher 3/8in Hardened	
113	1001235457	1	Deutz D2011 Engine Options (1001235467 Subassembly) (See Items 401-431 for Serviced Components) **(SN 0300256415 through 0300272252)**	
		Ref	**ENGINE ASSEMBLIES**	
		Ref	**Without Arctic Package**	
	1001151631	Ref	**Tier IVi-Flex Engines (ANSI and CSA Specs)**	C
	1001150158	Ref	**Tier IVi Engines (ANSI Export, Australian and Japanese Specs)**	F
	1001150158	Ref	**Tier IVi Engines (CE Specs) (SN 0300177361 through 0300257375)**	F
	1001235468	Ref	**Tier IVi Stage V Engines (CE Specs) (SN 0300257376 through 0300272252)**	C
		Ref	**With Arctic Package**	
	1001151635	Ref	**Tier IVi-Flex Engines (ANSI and CSA Specs)**	D
	1001150179	Ref	**Tier IVi Engines (ANSI Export, Australian, CE and Japanese Specs)**	F
201	0100011	AR	Compound, Locking	
202	0100062	AR	Compound, Locking	
203	0641407	8	Bolt 1/4in-20NC x 7/8in	
204	0641410	2	Bolt 1/4in-20NC x 1-1/4in	
205	0641510	2	Bolt 5/16in-18NC x 1- 1/4in	
206	0641606	3	Bolt 3/8in-16NC x 3/4in	
207	0641609	14	Bolt 3/8in-16NC x 1-1/8in	
208	0641610	4	Bolt 3/8in-16NC x 1-1/4in	
209	0641820	3	Bolt 1/2in-13NC x 2-1/2in	
210	0700808	4	Bolt M8 x 16mm	
211	0771414	6	Bolt M14 x 30mm	
213	0940070	1	Bumper	
214	0961986	2	Bushing, Flanged	
215	1320016	2	Clamp	
216	1320223	4	J-Clip	
217	1703162	2	Decal - Caution Fan Blade	
218	2060025	1	Fan	
219	2220451	2	Fitting, Straight	
220	2720398	2	Hose, Oil Cooler	
221	2902065	1	Kit, Pump Coupling (See Items 301-302 for Breakdown)	
222		Ref	Oil, Motor Options (Not Shown)	
222	3020016	AR	Oil, Motor 15W-40 (Without Arctic Package)	
222	3020044	AR	Oil, Motor 0W-40 (With Arctic Package)	
224	3200406	3	Mount, Motor (All Except 1001235468 Assembly)	
224	3200401	1	Mount, Motor (Front) (1001235468 Assembly)	

ITEM	PART NUMBER	QTY	DESCRIPTION	REV
224	3200406	2	Mount, Motor (Rear) (1001235468 Assembly)	
225	3311405	10	Locknut 1/4in-20NC	
226	3311505	3	Locknut 5/16in-18NC	
227	3311605	18	Locknut 3/8in-16NC	
228	3311805	3	Locknut 1/2in-13NC	
229	3520054	AR	Plug, Hole	
230	1001150998	1	Radiator	
231	3740067	3	Relay	
232	3960407	1	Gasket, Air Intake	
233	3960468	1	Seal	
234	3960469	1	Seal	
235	4060805	37 in/1m	Flex-Trim	
236	4711400	14	Flatwasher 1/4in Thin	
237	4711600	3	Flatwasher 3/8in Thin	
238	4740274	3	Washer, Snubbing	
239	4751600	36	Flatwasher 3/8in Regular	
240	4791400	6	Starwasher 1/4in	
241	4812200	2	Flatwasher M14	
242	4923379	1	Harness, Glow Plug	
243	1001130041	1	Elbow	
244	1001139819	1	Adapter, Air Intake	
245	1001141693	1	Air Cleaner Assembly	
245	70003783	1	Element, Filter	
246	1001141694	1	Clamp, Air Filter	
247		Ref	Deutz D2011 Engine Options (See Items 401-427 for Serviced Components)	
247	1001151630	1	Without Arctic Package (All Except 1001235468 Assembly)	
247	1001235457	1	Without Arctic Package (1001235468 Assembly) **(SN 0300177361 through 0300256414)**	
247	1001146368	1	With Arctic Package	
248	1001149704	1	Support, Engine (Front)	
249	1001149705	1	Support, Engine (Rear)	
250	1001149706	1	Support, Engine (Rear)	
251	1001149793	1	Tray	
252	1001150915	1	Support	
253	1001151078	1	Angle	
254	1001151206	1	Plate, Radiator Mounting	
255	1001151251	1	Pipe, Exhaust	
256	0641512	1	Bolt 5/16in-18NC x 1-1/2in	
257	1001143390	1	Indicator, Air Filter Service **(SN 0300229131 through 0300272252)**	
		Ref	**Note: Arctic Package Item 275 Not Shown - Used on Arctic Machines Only.**	
275	2580062	1	Heater, Engine Block	
	2902065	Ref	**KIT PUMP COUPLING AND MOUNTING PLATE**	K
301	70000793	1	Coupling, Hayes	
302	2902065	1	Plate, Pump Adapter	
303	See Note	8	Capscrew M10 x 20 Grade 10.9 (Note: Not Available - Purchase p/n 2902065)	
304	See Note	12	Bolt M10 x 25mm Grade 10.9 (Note: Not Available - Purchase p/n 2902065)	
		Ref	**ENGINE COMPONENTS**	
	1001151630	Ref	**Without Arctic Package (All Except 1001235468 Assembly)**	C

ITEM	PART NUMBER	QTY	DESCRIPTION	REV
	1001235457	Ref	**Without Arctic Package (1001235468 Assembly)**	B
	1001146368	Ref	**With Arctic Package**	D
401	7026631	1	Dipstick	
401	7020487	1	O-Ring, Dipstick	
401	7020403	1	Seal, Dipstick Tube	
401	70001002	1	Tube, Dipstick	
402	7020465	2	Cap, Filler	
403	70001850	1	Pump, Oil Lube	
403	7020468	1	Seal Between Oil Pump and Engine Block (Not Shown)	
404	7016331	1	Filter, Oil	
404	70003473	1	Gasket, Oil Filter Bracket to Engine Block	
404	70003472	1	Bracket, Oil Filter (Includes Spring, Control Valve, Temperature Sensor, Seal and Plug)	
404	7027236	1	Sensor, Temperature	
405	70003478	4	Injector, Fuel	
405	70003136	4	Ring, Seal	
405		Ref	Pump, Injector Options:	
405	70000912	AR	Series A Injector	
405	70000913	AR	Series B Injector	
405	70000914	AR	Series C Injector	
405	70000915	AR	Series D Injector	
406	7016328	1	Filter, Fuel	
406	70001423	1	Bracket, Fuel Filter	
407	70000916	1	Pump Fuel Supply	
407	70001435	1	Repair Kit for Pump	
407	70000919	1	Hand Pump	
407	70000918	1	Seal, Hand Pump	
407	70000917	1	O-Seal Between Fuel Pump and Engine Block (Not Shown)	
408	7020471	4	Gasket, Exhaust Manifold (Not Shown)	
408	70004270	8	Stud, Exhaust Manifold (Not Shown)	
409	7020408	1	V-Belt	
410	70001871	4	Gasket, Intake Manifold to Engine Block (Not Shown)	
411	70004056	1	Alternator	
411	70001868	1	Regulator, Voltage Options (Not Shown)	
411	70001866	1	Gasket for Voltage Regulator (Not Shown)	
411	70002234	1	Bracket, Adjusting (Not Shown)	
411	70000851	1	Bracket, Mounting (Not Shown)	
412	7020479	1	Starter	
412	70004058	1	Relay	
412	70001498	1	Shield, Starter Heat	
413	70004059	1	Plug- In Connector for Analyzer (Not Shown)	
413	70004060	1	Plug- In Connector on p/n 7027796 Harness (Not Shown)	
413	7027796	1	Harness, Module to Engine Harness (Not Shown)	
413	70001872	1	Harness, Engine (Not Shown)	
413	70004103	1	Harness, Alternator (Not Shown)	
413	70004271	1	Harness, Starter (Not Shown)	
414	7027791	1	Transmitter, Temperature	
415	7027790	1	Sensor, Oil Pressure	
416	70004272	1	Sensor, Speed	
416	70003932	1	Spacer	
417	7027792	1	Actuator, Throttle	
417	7027276	1	Spring, Actuator	

ITEM	PART NUMBER	QTY	DESCRIPTION	REV
418	70003475	1	Thermostat (Located at rear of engine block - Not Shown)	
418	7020460	1	Spring, Compression	
419	70001870	1	Flywheel (Not Shown)	
419	7024579	1	Ring Gear (Located on Flywheel - Not Shown)	
421	7027795	1	Module, Control	
422	70000345	4	Plug, Glow (Not Shown)	
424	70001847	1	Breather Valve (Not Shown - Located On Front Cover)	
424	70001126	1	Seal, Breather Valve	
425	70004273	1	Set, Engine Gasket (Not Shown)	
426	70003456	1	Gasket, Head (Not Shown)	
426	70003457	1	Gasket, Head (Not Shown)	
426	70003003	1	Gasket, Head (Not Shown)	
427	70003623	1	Kit, Timing Belt/Idler (Not Shown)	
428	70002718	1	Seal, Rear Main (Not Shown)	
429	7020431	1	Gasket, Valve Cover (Not Shown)	
430	70004268	2	Fitting, Radiator Connector (Not Shown - Located Between Item 220 and Engine Block)	
430	70004269	2	Seal for Radiator Connector Fitting (Not Shown)	
431	70003470	1	Manifold, Intake	
		Ref	**RIGHT ENGINE SUPPORT INSTALLATIONS**	
	1001151253	Ref	**Machines without Generator**	A
	1001151252	Ref	**Machines with Generator**	B
501	0100011	AR	Compound, Locking	
502	0641609	2	Bolt 3/8in-16NC x 1-1/8in	
503	0641818	1	Bolt 1/2in-13NC x 2-1/4in	
504	0771414	3	Bolt 14mm x 30mm Grade 10.9	
505	3200401	1	Mount, Motor	
506	3311605	2	Locknut 3/8in-16NC	
507	3311805	1	Locknut 1/2in-13NC	
508	4740274	1	Washer, Snubbing	
509	4751600	4	Flatwasher 3/8in Regular	
510	4812200	3	Flatwasher M14	
511		Ref	Support, Engine (Right Front)	
511A	1001149703	1	Machines without Generator	
511B	1001150890	1	Machines with Generator	
		Ref	**MUFFLER INSTALLATIONS**	
		Ref	**Standard Muffler**	
	0256690	Ref	**Catalytic Muffler**	
	0256689	Ref	**Spark Arresting (SN 030087000 through 0300177361)**	
	1001182906	Ref	**Spark Arresting (SN 0300177362 through 0300272252)**	
601		Ref	Muffler Options:	
601	7000695		Standard Muffler (Includes Saddle Clamp)	
601	3220104	1	Catalytic Muffler	
601	3220103	1	Spark Arresting	
601A		Ref	Clamp Options:	
601A	Not Available		Standard Muffler	
601A	1320176	1	Catalytic Muffler	
601A	70001017	1	Spark Arresting	
601B		Ref	Tube, Exhaust Options:	
601B	See Note	1	Standard Muffler (Note: Not Part of Muffler Assembly - Must be Purchased Separately - Use Item 255)	
601B	7024398	1	Catalytic and Spark Arresting Mufflers	

ITEM	PART NUMBER	QTY	DESCRIPTION	REV
601C	7024560	1	Plug, Brass (Not Shown - 3220104 & 3220103 Mufflers Only)	
602	1001169610	1	Spacer, Hood (Not Shown) (Use with 1001182906 Installation Only)	
603	0641608	4	Bolt 3/8in-16NC x 1in (Not Shown) (Use with 1001182906 Installation Only)	

FIGURE 2-9. DEUTZ TD2.9L4 ENGINE INSTALLATION

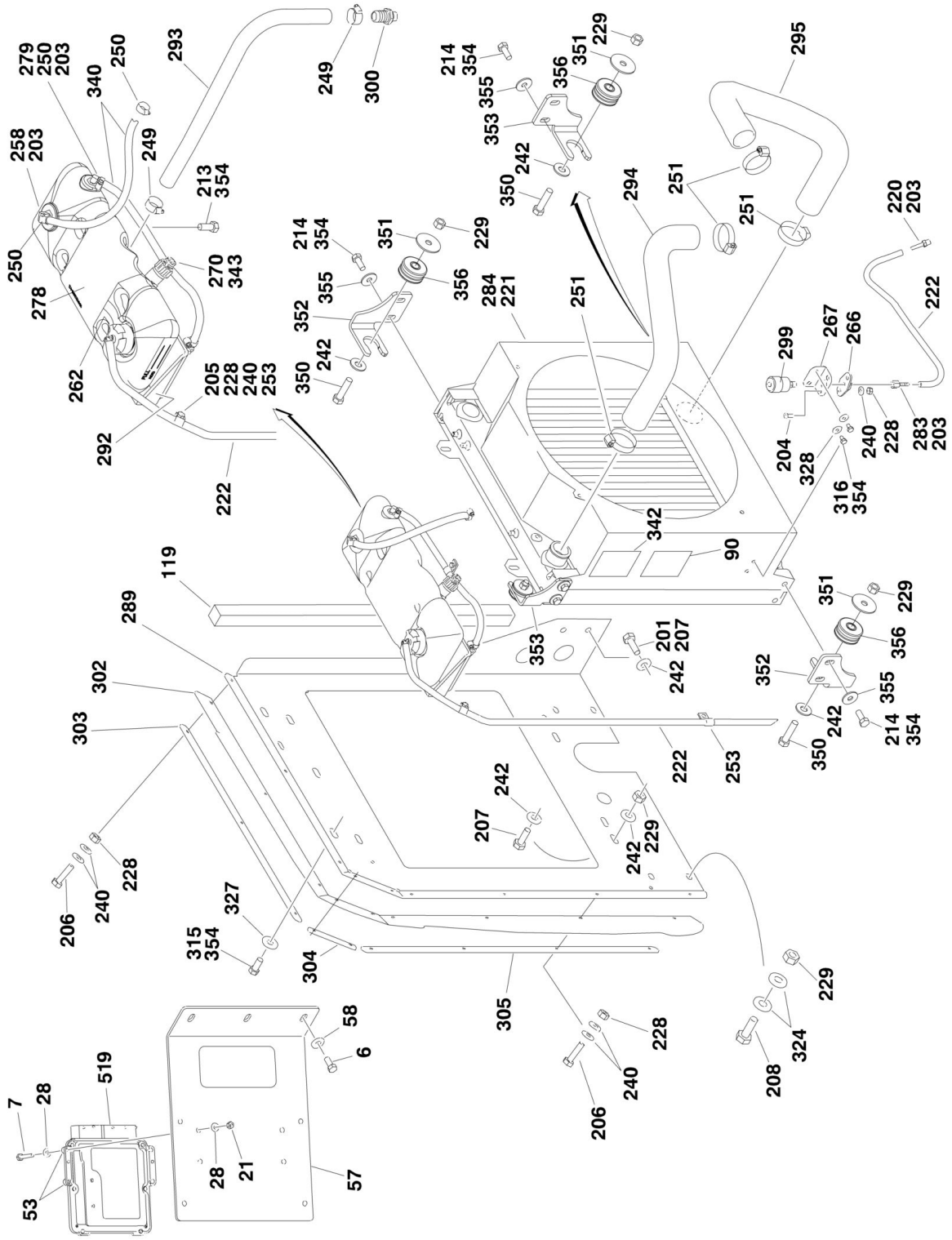

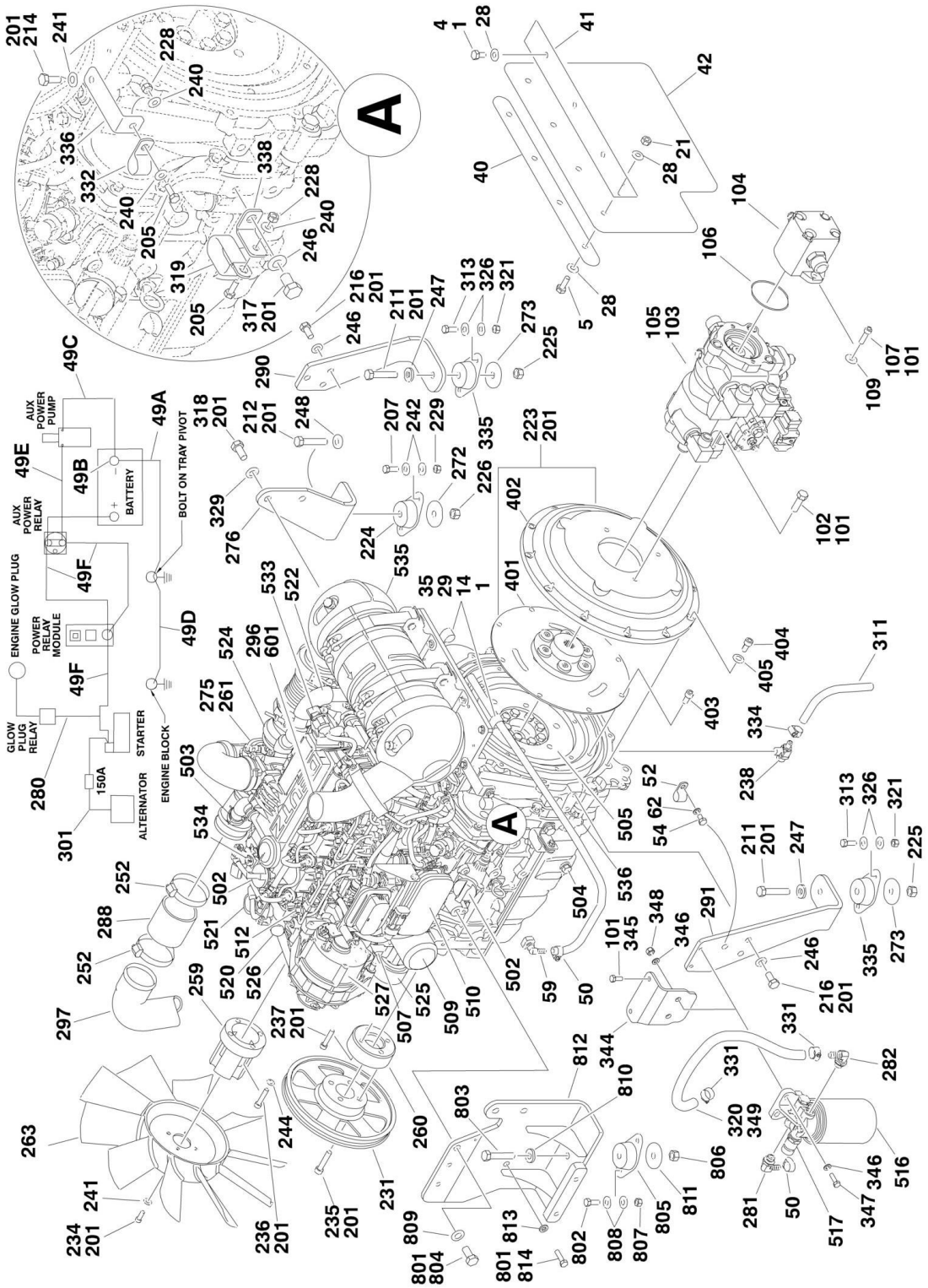
A
A
AUX POWER PUMP
AUX POWER RELAY
BATTERY
BOLT ON TRAY PIVOT
ENGINE GLOW PLUG
POWER RELAY MODULE
GLOW PLUG RELAY
STARTER
ENGINE BLOCK
ALTERNATOR
150A
49A
49B
49C
49D
49E
49F
49F

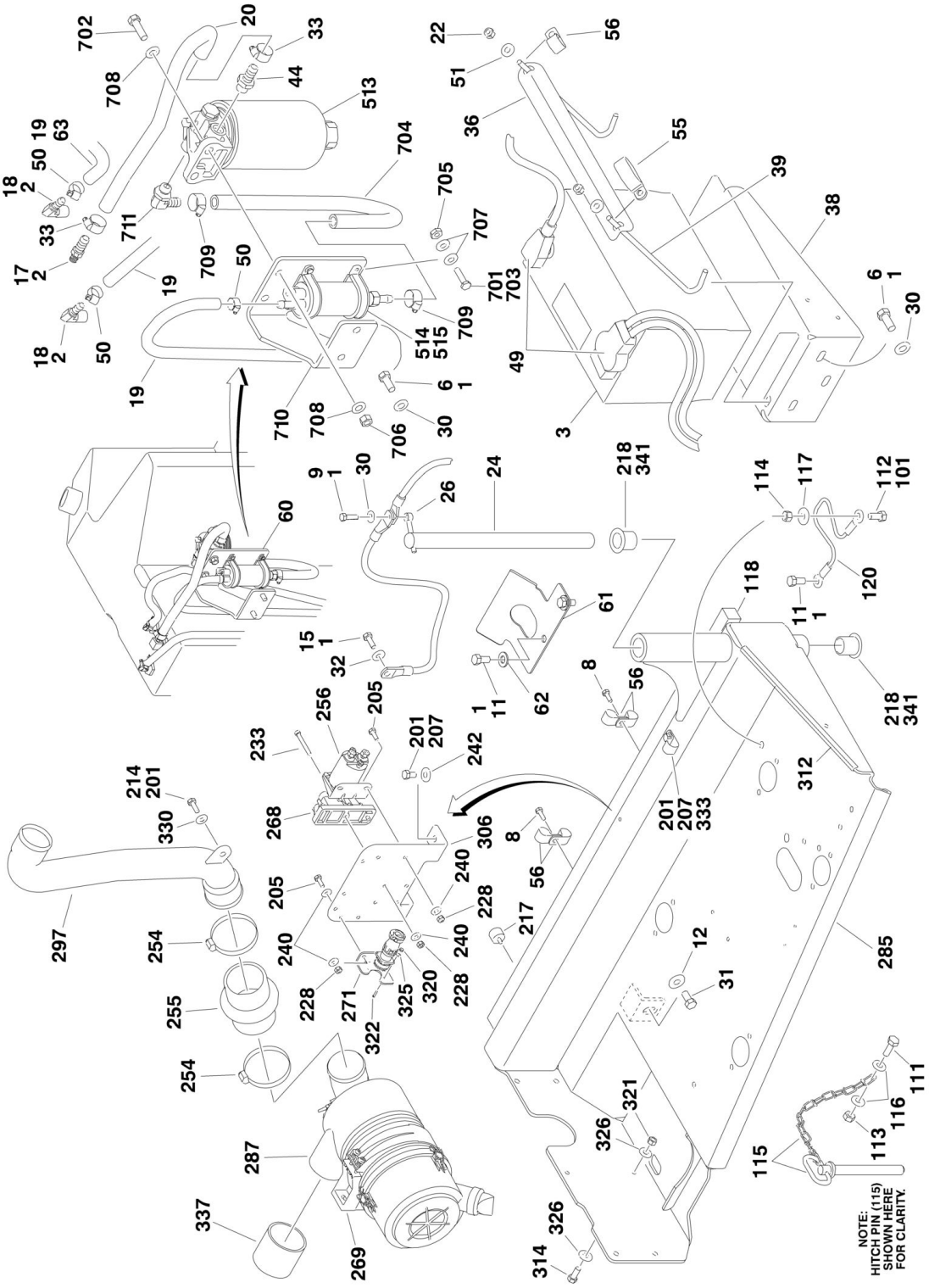
NOTE:
HITCH PIN (115)
SHOWN HERE
FOR CLARITY.

FIGURE 2-9. DEUTZ TD2.9L4 ENGINE INSTALLATION

ITEM	PART NUMBER	QTY	DESCRIPTION	REV
		Ref	**DEUTZ ENGINE INSTALLATIONS**	
	1001141928	Ref	**Without Arctic Package (SN 0300177361 through 0300208081)**	K
	1001188956	Ref	**Without Arctic Package (SN 0300208082 through 0300230455)**	C
	1001176014	Ref	**Without Arctic Package (SN 0300230456 through 0300272252)**	D
	1001141931	Ref	**With Arctic Package (SN 0300177361 through 0300208081)**	L
	1001188965	Ref	**With Arctic Package (SN 0300208082 through 0300230455)**	C
	1001176017	Ref	**With Arctic Package (SN 0300230456 through 0300272252)**	F
1	0100011	AR	Compound, Locking	
2	0100020	AR	Sealant, Pipe	
3	0400075	1	Battery **(SN 0300177361 through 0300259736)**	
4	0641404	3	Bolt 1/4in-20NC x 1/2in	
5	0641406	4	Bolt 1/4in-20NC x 3/4in	
6	0641607	9	Screw 3/8in-16NC x 7/8in	
7	0641412	4	Bolt 1/4in-20NC x 1-1/2in	
8	0641608	2	Screw 3/8in-16NC x 1in	
9	0641610	1	Screw 3/8in-16NC x 1-1/4in	
11	0641808	3	Bolt 1/2in-13NC x 1in	
12	0642010	1	Bolt 5/8in-11NC x 1-1/4in	
14	0760810	AR	Bolt M8 x 20mm	
15	0771212	1	Bolt M12 x 25mm Grade 10.9	
16	1701505	1	Decal - Diesel (Not Shown - Located on Hood)	
17	2180832	1	Fitting, Straight Barbed	
18	2220313	2	Fitting, 90 Barbed	
19	2720340	NLA	Hose (Use p/n 1001165035) **(SN 0300177361 through 0300181825)**	
19	1001165035	29 ft/8.7m	Hose **(SN 0300181826 through 0300230455)**	
19	1001165035	23.5 ft/ 7.2m	Hose **(SN 0300230456 through 0300272252)**	
20	2720615	NLA	Hose (Use p/n 1001154405) **(SN 0300177361 through 0300181825)**	
20	1001154405	3 ft/.9m	Hose **(SN 0300181826 through 0300272252)**	
21	3311405	8	Locknut 1/4in-20NC	
22	88521205	AR	Nut 5/16in-18NC	
24	3422448	1	Pin, Pivot	
26	3841143	1	Pin, Keeper	
28	4711400	19	Flatwasher 1/4in Thin	
29	4711500	AR	Flatwasher 5/16in Thin	
30	4711600	6	Flatwasher 3/8in Thin	
31	4752000	1	Flatwasher 5/8in Regular	
32	4812100	1	Flatwasher M12	
33	8405006	2	Clamp	
35	8406112	2	Clip **(SN 0300177361 through 0300219292)**	
36	91401281	1	Hold-down, Battery **(SN 0300177361 through 0300259736)**	
38	1001137868	1	Bracket, Battery	
39	1001093382	2	J-Bolt **(SN 0300177361 through 0300259736)**	
40	1001137880	1	Bracket, Battery	
41	1001137881	1	Angle	
42	1001137882	1	Support, Rubber	
44	1001141718	1	Fitting, Straight Barbed **(SN 0300177361 through 0300181825)**	
44	1001142501	1	Fitting, 90 Degree **(SN 0300181826 through 0300272252)**	

ITEM	PART NUMBER	QTY	DESCRIPTION	REV
44	1001222665	1	Harness, Fuel Pump (Pump requiring Ring Terminals) (Not Shown - See ELECTRICAL SECTION for Breakdown) **(SN 0300177361 through 0300234681)**	
48	1001138491	1	Harness, Fuel Pump (Pump requiring Push-on Terminals) (Not Shown - See ELECTRICAL SECTION for Breakdown) **(SN 0300234682 through 0300272252)**	
49	1001145047	1	Battery Cable Kit	F
49A	7027072	1	Cable, Battery (Black) (Battery - to Tray Pivot Grd)	
49B	8270147	1	Terminal, Battery (With Boot)	
49B	See Note	1	Boot, Black (Note: Not Available for Purchase)	
49C	7027073	1	Cable, Battery (Black) (Battery - to Aux Pump and Relay Grds)	
49C	See Note	1	Boot, Black (Note: Not Available for Purchase)	
49D	7027074	1	Cable, Battery (Black) (Engine to Tray Pivot Grd)	
49E	7027075	1	Cable (Red) (Aux Relay to Aux Pump)	
49E	70003952	2	Boot, Red	
49F	7027076	1	Cable (Red) (Battery + to Aux Relay/Power Module/Starter)	
49F	See Note	1	Boot, Red (Battery) (Note: Not Available for Purchase)	
50	1320022	5	Clamp	
51	4751500	2	Flatwasher 5/16in Regular	
52	1320061	1	Clamp	
53	1001110425	4	Spacer	
54	0761008	1	Bolt M10 x 16	
55	1321716	2	P-Clamp	
56	8406201	5	Clip	
57	1001137866	1	Plate, Baffle	
58	4751600	3	Flatwasher 3/8in Regular	
59	1001155823	1	Fitting, 90 Quick Disconnect	
60	1001162335	1	Bracket, Fuel Pump/Filter Assembly (See Items 701-711 for Breakdown)	
61	1001172793	1	Guide, Hose **(SN 0300185927 through 0300272252)**	
62	4711800	AR	Washer 1/2	
63	2750532	5 ft/1.6m	Hose **(SN 0300230456 through 0300272252)**	
		Ref	**Note: Arctic Package Items 77 - 88 are Not Shown - Used on Arctic Machines Only.**	
77	1060625	AR	Cable, Immersion Heater (14Ft Length)	
77	1001150918	AR	Cable, Immersion Heater (8Ft Length) **(SN 0300206632 through 0300233401)**	
78	1320223	3	Clamp, Muffler	
79	1702941	1	Decal - Battery Heater	
80	1702942	1	Decal - Engine Block Heater	
81	1702943	1	Decal - Hydraulic Tank Heater	
82	1702944	1	Decal - Heater Cord	
83	2580050	1	Heater, Hydraulic Tank **(SN 0300177361 through 0300206631)**	
83	1001188972	1	Heater, Hydraulic Tank **(SN 0300206632 through 0300272252)**	
84	3980007	1	Seat, Battery	
85	1001150918	1	Cord, 8ft Extension	
86	1060626	1	Plug, 3 Way	
87	2580024	1	Heater, Battery	
88	1001233763	Ref	Breather Heater Installation (Not Shown - See Separate Breakdown in this Section)	
90		Ref	Decal - Warning Explosion/Fire Options:	
90	1704972	1	ANSI Spec	
90	1706098	1	Australian and CE Spec	

ITEM	PART NUMBER	QTY	DESCRIPTION	REV
90	1706064	1	CSA Spec	
		Ref	**ENGINE AND PUMP ASSEMBLIES**	
	1001141927	Ref	**Without Arctic Package (SN 0300177361 through 0300208081)**	E
	1001188957	Ref	**Without Arctic Package (SN 0300208082 through 0300230455)**	C
	1001176013	Ref	**Without Arctic Package (SN 0300230456 through 0300272252)**	C
	1001141930	Ref	**With Arctic Package (SN 0300177361 through 0300208081)**	E
	1001188958	Ref	**With Arctic Package (SN 0300208082 through 0300230455)**	C
	1001176016	Ref	**With Arctic Package (SN 0300230456 through 0300272252)**	C
101	0100011	AR	Compound, Locking	
102	0641812	2	Bolt 1/2in-13NC x 1-1/2in	
103	3020037	AR	Grease, Pump Coupling	
104	3600395	1	Gear Pump Assembly with Fittings (See GEAR PUMP ASSEMBLY for Breakdown)	
105	3600396	1	Pump Assembly with Fittings (See PISTON PUMP ASSEMBLY for Breakdown) **(SN 0300177361 through 0300208081)**	
105	1001188952	1	Pump Assembly with Fittings (See PISTON PUMP ASSEMBLY for Breakdown) **(SN 0300208082 through 0300272252)**	
106	3790152	1	O-Ring	
107	3931620	2	Bolt 3/8in-16NC x 1-1/4in	
109	4891600	2	Flatwasher 3/8in Hardened	
111	0641406	1	Bolt 1/4in-20NC x 3/4in	
112	0641808	1	Bolt 1/2in-13NC x 1in	
113	3311405	1	Locknut 1/4in-20NC	
114	3311801	1	Nut 1/2in-13NC	
115	3422533	1	Pin, Hitch	
116	4711400	2	Flatwasher 1/4in Thin	
117	4751800	8	Flatwasher 1/2in Regular	
118	1001137873	1	Seal	
119	1001137874	1	Seal	
120	1060637	1	Lanyard	
		Ref	**ENGINE ASSEMBLIES**	
	1001141926	Ref	**Without Arctic Package (SN 0300177361 through 0300230455)**	R
	1001176012	Ref	**Without Arctic Package (SN 0300230456 through 0300272252)**	M
	1001141929	Ref	**With Arctic Package (SN 0300177361 through 0300230455)**	S
	1001176015	Ref	**With Arctic Package (SN 0300230456 through 0300272252)**	M
201	0100011	AR	Compound, Locking	
202	0100019	AR	Compound, Locking (Not Shown)	
203	0100020	AR	Sealant	
204	0630407	2	Screw 1/4in-20 x 5/8in	
205	0641406	AR	Bolt 1/4in-20NC x 3/4in	
206	0641408	9	Bolt 1/4in-20NC x 1in	
207	0641608	AR	Bolt 3/8in-16NC x 1in	
208	0641609	4	Bolt 3/8in-16NC x 1-1/8in	
211	0681620	2	Bolt 3/8in-16NC x 2-1/2in Grade 8	
212	0681822	AR	Bolt 1/2in-13NC x 2-3/4in Grade 8	
213	0741605	2	Screw, Flathead 3/8in-16NC x 5/8in	
214	0760810	AR	Bolt M8 x 20mm	
216	0771212	6	Bolt M12 x 25 Grade 10.9	
217	0940070	1	Bumper	
218	0961986	2	Bushing, Flanged	
220	2220315	1	Fitting, Straight Barbed	
221		Ref	Coolant Options:	

ITEM	PART NUMBER	QTY	DESCRIPTION	REV
221	2300004	AR	Without Arctic Package	
221	2300041	AR	With Arctic Package	
222	1001138248	44 in/1.1m	Tube **(SN 0300177361 through 0300230455)**	
222	1001138248	67 in/1.7m	Tube **(SN 0300230456 through 0300272252)**	
223	2902065	1	Pump Coupling Kit (See Items 401-405 for Breakdown)	
224	3200401	2	Mount, Motor	
225	3271601	2	Nut 3/8in-16NC Grade 8	
226	3271801	AR	Nut 1/2in-13NC Grade 8	
228	3311405	AR	Locknut 1/4in-20NC	
229	3311605	AR	Locknut 3/8in-16NC	
231	3580320	1	Pulley	
233	3931432	1	Capscrew 1/4in-20NC x 2in	
234	3931512	4	Capscrew 5/16in-18NC x 3/4in	
235	3931628	4	Capscrew 3/8in-16NC x 1-3/4in	
236	4031914	4	Capscrew M8 x 50mm	
237	4032014	4	Capscrew M10 x 50mm	
238	4640751	1	Valve, Oil Drain	
240	4711400	AR	Flatwasher 1/4in Thin	
241	4711500	AR	Flatwasher 5/16in Thin	
242	4751600	AR	Flatwasher 3/8in Regular	
244	4811900	4	Flatwasher M8	
246	4812100	7	Flatwasher M12	
247	4891600	2	Flatwasher 3/8in Hardened	
248	4891800	AR	Flatwasher 1/2in Hardened	
249	8405007	2	Clamp	
250	8405009	4	Clamp	
251	8405104	4	Clamp	
252	8405204	2	Clamp	
253	8406110	2	Clip	
254	8410011	2	Clamp	
255	91403244	1	Hose	
256	1001117308	1	Relay	
258	1001134488	1	Fitting, 90 Barbed (Part of Item 278)	
259	1001135138	1	Adapter	
260	1001135679	1	Adapter	
261		Ref	Oil, Motor Options:	
261	1001136079	AR	Without Arctic Package	
261	1001136172	AR	With Arctic Package	
262	1001136834	1	Cap, Tank	
263	1001137276	1	Fan	
266	1001138173	1	Support	
267	1001138175	1	Bracket	
268	1001138228	1	Relay, Power Module	
268	70023593	1	Fuse 30Amp (Battery Output)	
268	70023592	1	Fuse 20Amp (Switched Output)	
269	1001138557	1	Clamp	
270	1001138827	1	Sensor, Coolant Level (Part of Item 278)	
271	1001139240	1	Bracket	
272	1001139409	AR	Washer, Special	
273	1001139429	2	Washer, Special	
275	1001139813	1	Engine, Deutz TD2.9L4	

ITEM	PART NUMBER	QTY	DESCRIPTION	REV
276	1001140454	1	Mount, Front Engine	
278	1001140535	NLA	Tank (Use p/n 1001230635) **(SN 0300177361 through 0300241006)**	
278	1001230635	1	Tank (Includes items 258, 270 & 279) **(SN 0300241007 through 0300272252)**	
279	1001140564	1	Fitting, 90 Barbed (Part of Item 278)	
280	1001141304	1	Harness, Glow Plug (See ELECTRICAL SECTION for Breakdown)	
281	1001152489	1	Fitting, 90 Barbed	
282	1001142501	1	Fitting, 90 Barbed **(SN 0300177361 through 0300219292)**	
283	1001141995	1	Fitting, Straight Barbed	
284	1001155385	1	Radiator (RCP) **(SN 0300177361 through 0300230455)**	
284	1001167041	1	Radiator (Modine) **(SN 0300230456 through 0300272252)**	
285	1001142538	1	Tray	
287	1001142615	1	Air Cleaner Assembly Filter Element	
287	91403102	1	Element, Filter (Not Shown)	
288	1001142623	1	Hose, Inlet	
289	1001142634	1	Plate, Radiator Mounting (RCP Radiator) **(SN 0300177361 through 0300230455)**	
289	1001176723	1	Plate Radiator Mounting (Modine Radiator) **(SN 0300230456 through 0300272252)**	
290	1001142635	1	Mount, Rear Engine	
291	1001142636	1	Mount, Rear Engine **(SN 0300177361 through 0300219292)**	
291	1001205051	1	Mount, Rear Engine **(SN 0300219293 through 0300272252)**	
292	1001142648	1	Bracket, Tank (Used with RCP Radiator) **(SN 0300177361 through 0300230455)**	
292	1001176419	1	Bracket, Tank (Not Shown - Used with Modine Radiator) **(SN 0300230456 through 0300272252)**	
293	1001142668	1	Hose **(SN 0300177361 through 0300230455)**	
293	1001176511	1	Hose **(SN 0300230456 through 0300272252)**	
294	1001142669	1	Hose, Radiator - Upper (RCP Radiator) **(SN 0300177361 through 0300230455)**	
294	1001176225	1	Hose, Radiator - Upper (Modine Radiator) **(SN 0300230456 through 0300272252)**	
295	1001142670	1	Hose, Radiator - Lower (RCP Radiator) **(SN 0300177361 through 0300230455)**	
295	1001176226	1	Hose, Radiator - Lower (Modine Radiator) **(SN 0300230456 through 0300272252)**	
296	1001142689	1	Pipe, Exhaust	
297	1001142733	1	Pipe **(SN 0300177361 through 0300187632)**	
297	1001165842	1	Pipe **(SN 0300187633 through 0300272252)**	
299	1001143390	1	Indicator, Service	
300	1001143797	1	Fitting, Straight Barbed	
301	1001143907	1	Cable, Alternator Power (See ELECTRICAL SECTION for Breakdown)	
302	1001144409	1	Panel, Rubber	
303	1001144410	1	Bracket, Panel Clamp	
304	1001144411	1	Bracket, Panel Clamp	
305	1001144412	1	Bracket, Panel Clamp	
306	1001145154	1	Plate, Relay Mounting	
310	1001143726	1	Harness, Engine (Not Shown - See ELECTRICAL SECTION for Breakdown)	
311	2720340	6 in /15cm	Hose	
312	4060805	14 in /	Flex-Trim	

ITEM	PART NUMBER	QTY	DESCRIPTION	REV
		36cm		
313	0641508	4	Bolt 5/16in-18NC x 1in	
314	0641510	2	Bolt 5/16in-18NC x 1-1/4in	
315	0641708	3	Bolt 7/16in-18NC x 1in	
316	0760605	2	Bolt M6 x 10mm	
317	0761210	1	Bolt M12 x 20mm	
318	0771414	AR	Bolt M14 x 30mm Grade 10.9	
319	1321716	1	P-Clamp **(SN 0300177361 through 0300196107)**	
319	1001181899	1	Clamp **(SN 0300196108 through 0300272252)**	
320	3310401	3	Nut #4-40NC	
321	3311505	6	Locknut 5/16in-18NC	
322	3910408	3	Screw #4-40NC x 1/2in	
323	4240099	AR	Tie-Strap (Not Shown)	
324	4711600	8	Flatwasher 3/8in Thin	
325	4750400	3	Flatwasher #4 Regular	
326	4751500	12	Flatwasher 5/16in Regular	
327	4711700	3	Flatwasher 7/16in Thin	
328	4811702	2	Flatwasher M6	
329	4812200	AR	Flatwasher M14	
330	4891500	1	Flatwasher 5/16in Hardened	
331	8405006	2	Clamp **(SN 0300177361 through 0300219292)**	
332	8406102	1	Clip **(SN 0300177361 through 0300219292)**	
333	8406201	1	Clip	
334	8410013	1	Clamp	
335	1001138170	2	Mount, Motor	
336	1001138717	1	Bracket **(SN 0300177361 through 0300219292)**	
337	1001141585	1	Hose, Air Inlet	
338	1001148641	1	Bracket **(SN 0300177361 through 0300196107)**	
339	1001154405	AR	Hose (Not Shown) **(SN 0300177361 through 0300219292)**	
340	2720015	36 in/.9m	Hose	
341	0100062	AR	Adhesive	
342	1703162	1	Decal - Fan Blade	
343	1001182997	NLA	Adhesive (Use Item 203)	
344	1001178876	1	Mount **(SN 0300219293 through 0300272252)**	
345	5250810	2	Bolt M8 x 20	
346	0761015	2	Bolt M10 x 35	
347	4812000	8	Washer M10	
348	3291005	2	Nut M10	
349	1001177359	1	Hose **(SN 0300219293 through 0300272252)**	
350	0641612	AR	Bolt 3/8 x 1-1/2	
351	1001169138	AR	Washer	
352	1001204325	2	Bracket (Modine Radiator) **(SN 0300230456 through 0300272252)**	
353	1001178223	2	Bracket (Modine Radiator) **(SN 0300230456 through 0300272252)**	
354	1001180620	AR	Adhesive	
355	4811902	AR	Washer M8	
356	1001169054	4	Isolator **(SN 0300230456 through 0300272252)**	
		Ref	**Note: Arctic Package Item 399 Not Shown - Used on Arctic Machines Only.**	
399	1001140312	1	Heater, Engine Block	
399	1001181895	AR	Adhesive	

ITEM	PART NUMBER	QTY	DESCRIPTION	REV
	2902065	Ref	**KIT PUMP COUPLING AND MOUNTING PLATE**	K
401	70000793	1	Coupling	
402	2902065	1	Plate, Pump Adapter	
403	See Note	8	Capscrew M10 x 20 Grade 10.9 (Note: Not Available - Purchase Locally)	
404	See Note	12	Bolt M10 x 25 Grade 10.9 (Note: Not Available - Purchase Locally)	
405	See Note	12	Flatwasher M10 (Note: Not Available - Purchase Locally)	
	1001139813	Ref	**ENGINE COMPONENTS**	J
501	70004274	1	Dipstick (Not Shown - Located On Site Left Front)	
501	70024905	1	Seal	
502	7020465	2	Cap, Oil Fill	
503	70025111	2	Clamp	
504	70025088	1	Plug	
504	7020404	1	Seal	
505	70001870	1	Flywheel with Ring Gear	
505	7024579	1	Gear, Ring	
506		Ref	Gasket and Seal Options (Not Shown)	
506	70024906	1	Gasket, Head	
506	70025206	1	Gasket, Small Valve Cover	
506	70025207	1	Gasket, Large Valve Cover	
506	7002508	1	Gasket, Valve Cover to Air Charge Elbow	
506	70002718	1	Seal, Rear Main	
506	70024907	1	Gasket, Front Cover	
506	70025164	1	Gasket, Exhaust Manifold to Head	
506	70024912	1	Gasket, Exhaust Manifold to Turbocharger	
506	70004279	1	Gasket Kit	
507	70025091	1	Plug	
507	70025082	1	Seal	
507	70025176	1	Spring	
507	70025076	1	Valve, Pressure Control	
508	70025202	1	Pump, Oil Lube (Not Shown - Located Front Left Side)	
508	70025135	1	O-Ring	
508	70025136	1	Seal	
509	7016331	1	Filter, Oil	
510	70004275	1	Cooler, Oil	
510	70024925	1	Gasket	
511	70024924	1	Pump, High Pressure (Not Shown - Located Front Left Side)	
511	70025152	1	O-Ring (Between Pump and Spacer)	
511	70024488	1	Spacer	
511	70025152	1	O-Ring (Between Spacer and Engine Block)	
512	70025181	4	Injector, Fuel	
512	70025140	4	Washer, Sealing	
512	70025146	4	Clamp (Top of Injector)	
512	70025416	4	O-Seal	
512	70025154	4	Shoe, Clamping	
512	70000345	4	Plug, Glow	
512	70025231	1	Harness, Glow Plug (Not Shown)	
513	70025153	NLA	Filter, Fuel (Use p/n 1001225430)	
513	70024513	1	Cable, Sensor	
513	70025239	1	Seal	
514	70024486	1	Pump, Fuel	
515	70025144	2	Clamp	

ITEM	PART NUMBER	QTY	DESCRIPTION	REV
516	70025160	1	Filter with Head	
516	70025161	NLA	Filter, Fuel (Use p/n 1001225431)	
517	70024504	1	Sensor, Pressure	
517	70024920	1	Seal	
518	70025151	1	Rail, Fuel (Not Shown)	
518	70025235	1	Repair Kit	
519	70025210	1	ECU (Engine Control Unit)	
520	70024910	1	Pump, Water	
520	70025200	1	Seal	
520	70025084	2	Plug	
520	7020492	2	Seal	
521	70024473	1	Thermostat	
521	70025143	1	O-Seal	
521	70025142	1	Cover, Thermostat	
522	70025178	1	Pipe	
522	70025156	1	Valve, Shuttle	
522	70025179	2	Gasket	
522	70025180	1	Gasket	
523	70025203	1	Module, EGR (Not Shown - Located on Left Side)	
524	70004276	1	Turbocharger	
525	70025477	1	Tensioner, Belt	
526	70004277	1	Belt, Drive	
527	70024914	1	Alternator	
527	70025149	1	Regulator, Voltage	
528	70024915	1	Starter (Not Shown - Located on Left Side)	
529	70025077	1	Harness, Engine (Not Shown)	
530	70024503	2	Sensor, Speed (Not Shown - Located Left Side Front and Flywheel Housing)	
530	70024917	2	Seal	
531	70024918	1	Sender, Temperature (Not Shown - Located Top Front)	
532	70024504	1	Sensor, Pressure (Not Shown - Located Left Side Front)	
532	70024920	1	Seal	
533	70024507	1	Sensor, Pressure	
533	70025120	1	Seal	
534	70024922	1	Sender, Temperature	
534	70025212	1	Seal	
535	70004278	1	Outlet	
535	70025799	1	Muffler, Inlet	
535	70024515	1	Clamp	
535	70025801	1	Gasket	
536	70124530	1	Valve, Pressure Relief	
536	70124538	1	Spring	
536	70104570	1	Ring, Sealing	
536	70025660	1	Screw, Locking	
	1001145750	Ref	**SPARK ARRESTER INSTALLATION (OPTIONAL)**	A
601	1001145751	1	Arrester, Spark	
	1001162335	Ref	**FUEL PUMP/FILTER ASSEMBLY**	D
701	0100011	AR	Compound, Locking	
702	0641610	2	Bolt 3/8in-16NC x 1-1/4in	
703	0721006	4	Screw # .10 x .750	
704	1001154405	1.5 ft / .45m	Hose	

ITEM	PART NUMBER	QTY	DESCRIPTION	REV
705	3311001	4	Nut #10-24NC	
706	3311605	2	Locknut 3/8in-16NC	
707	4711000	8	Flatwasher #10 Thin	
708	4711600	4	Flatwasher 3/8in Thin	
709	8405006	2	Clamp	
710	1001141870	1	Plate, Mounting	
711	1001142501	1	Fitting, Barbed 90 Degree	
	1001177399	Ref	**ENGINE MOUNT INSTALLATION WITH GENERATOR**	B
	1001177043	Ref	**ENGINE MOUNT INSTALLATION WITHOUT GENERATOR**	A
801	0100011	AR	Compound, Locking	
802	0641608	2	Bolt 3/8in-16NC x 1in	
803	0681820	1	Bolt 1/2 x 2-1/2 Grade 8	
803	0681822	1	Bolt 1/2 x 2-3/4 Grade 8	
804	0771414	3	Bolt M14 x 30 Grade 10.9	
804	0771415	3	Bolt M14 x 35 Grade 10.9	
805	3200401	1	Mount, Engine	
806	3271801	1	Nut 1/2in-13NC Grade 8	
807	3311605	2	Locknut 3/8in-16NC	
808	4751600	4	Flatwasher 3/8in Regular	
809	4812200	3	Flatwasher M14	
810	4891800	1	Flatwasher 1/2in Hardened	
811	1001139409	1	Washer, Special	
812	1001140466	1	Support, Engine with Generator **(SN 0300197408 through 0300227100)**	
812	1001202368	1	Support, Engine with Generator **(SN 0300227101 through 0300272252)**	
812	1001177038	1	Support, Engine without Generator (Not Shown) **(SN 0300197408 through 0300272252)**	
812	1001140466	1	Support, Engine **(SN 0300177361 through 0300197407)**	
813	5240800	AR	Washer M8	
814	0700814	AR	Bolt M8 x 30	

FIGURE 2-10. BREATHER HEATER INSTALLATION - DEUTZ D2.9L4 ENGINES WITH ARCTIC PACKAGE

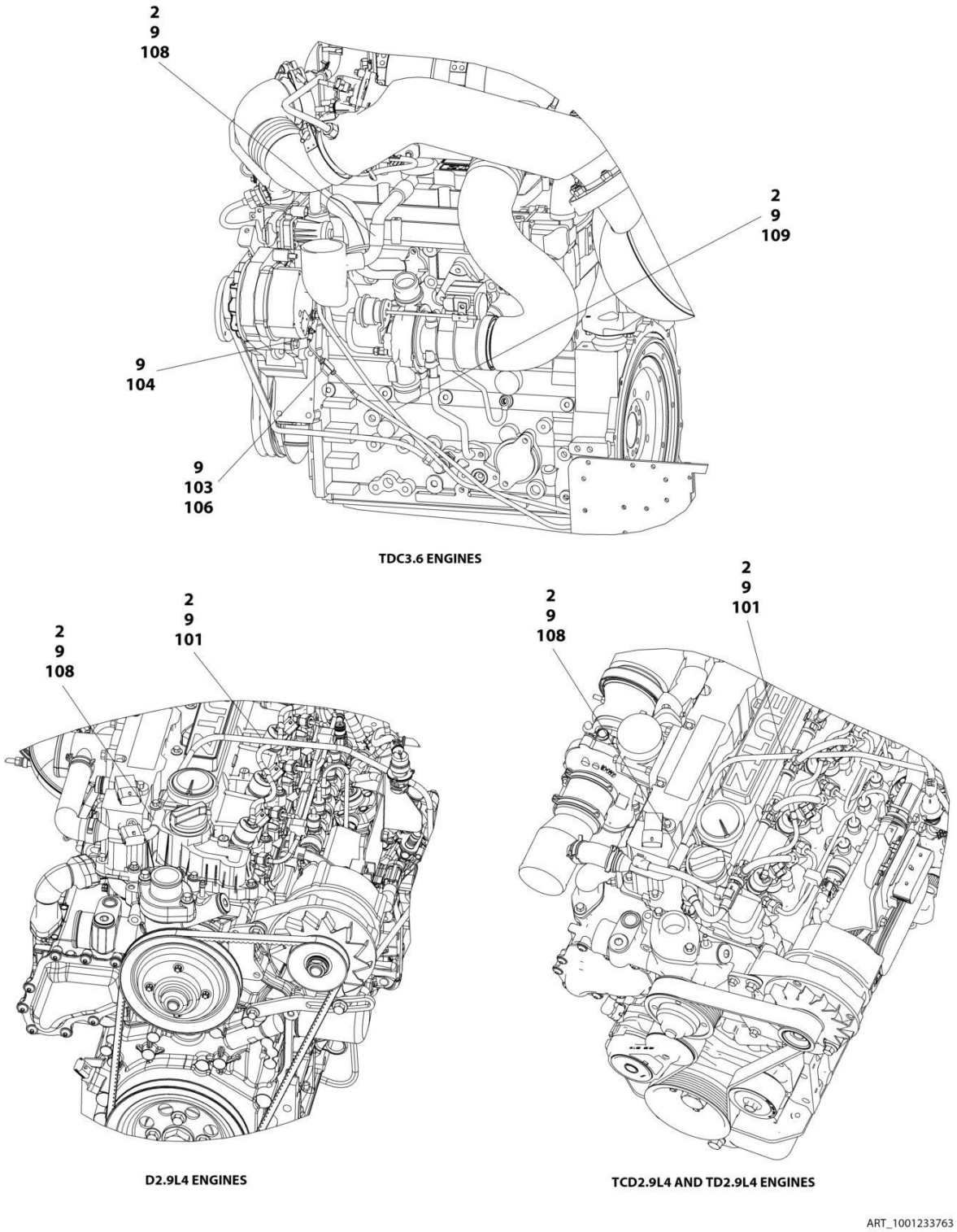

FIGURE 2-10. BREATHER HEATER INSTALLATION - DEUTZ D2.9L4 ENGINES WITH ARCTIC PACKAGE

ITEM	PART NUMBER	QTY	DESCRIPTION	REV
	1001233763	Ref	BREATHER HEATER INSTALLATION - DEUTZ ENGINES	D
2	4240099	AR	Tie-Strap	
9	1001243895	1	Breather Heater Harness	C
101	2820035	AR	Insulation	
103	2400060	1	Fuseholder with Cover	
104	4460043	1	Terminal, Ring	
105	4460722	1	Terminal, Ring (Not Shown)	
106	1001196634	1	Fuse - 2 Amp	
108	1001232842	1	Breather Heater Kit	

FIGURE 2-11. FORD ENGINE INSTALLATION

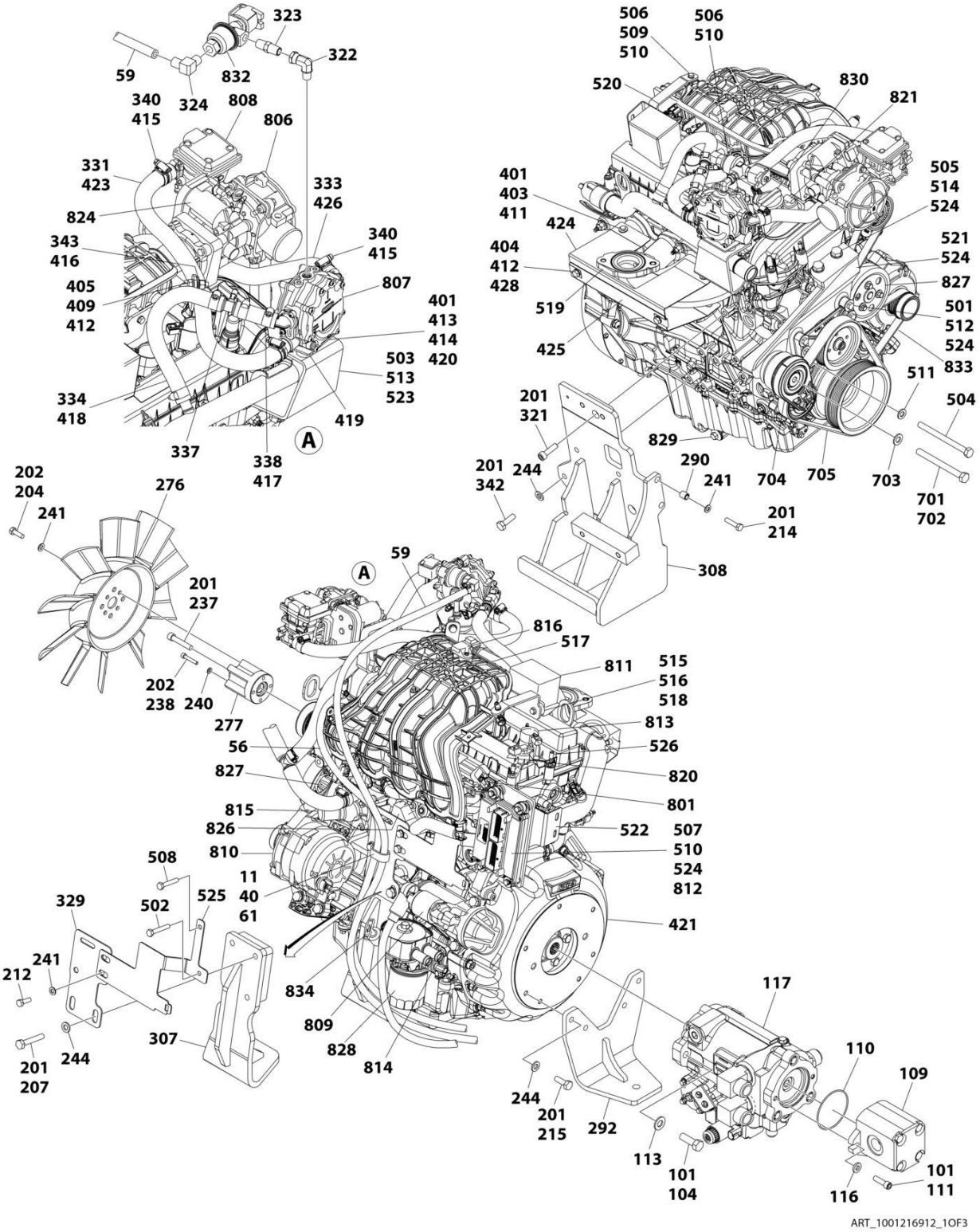

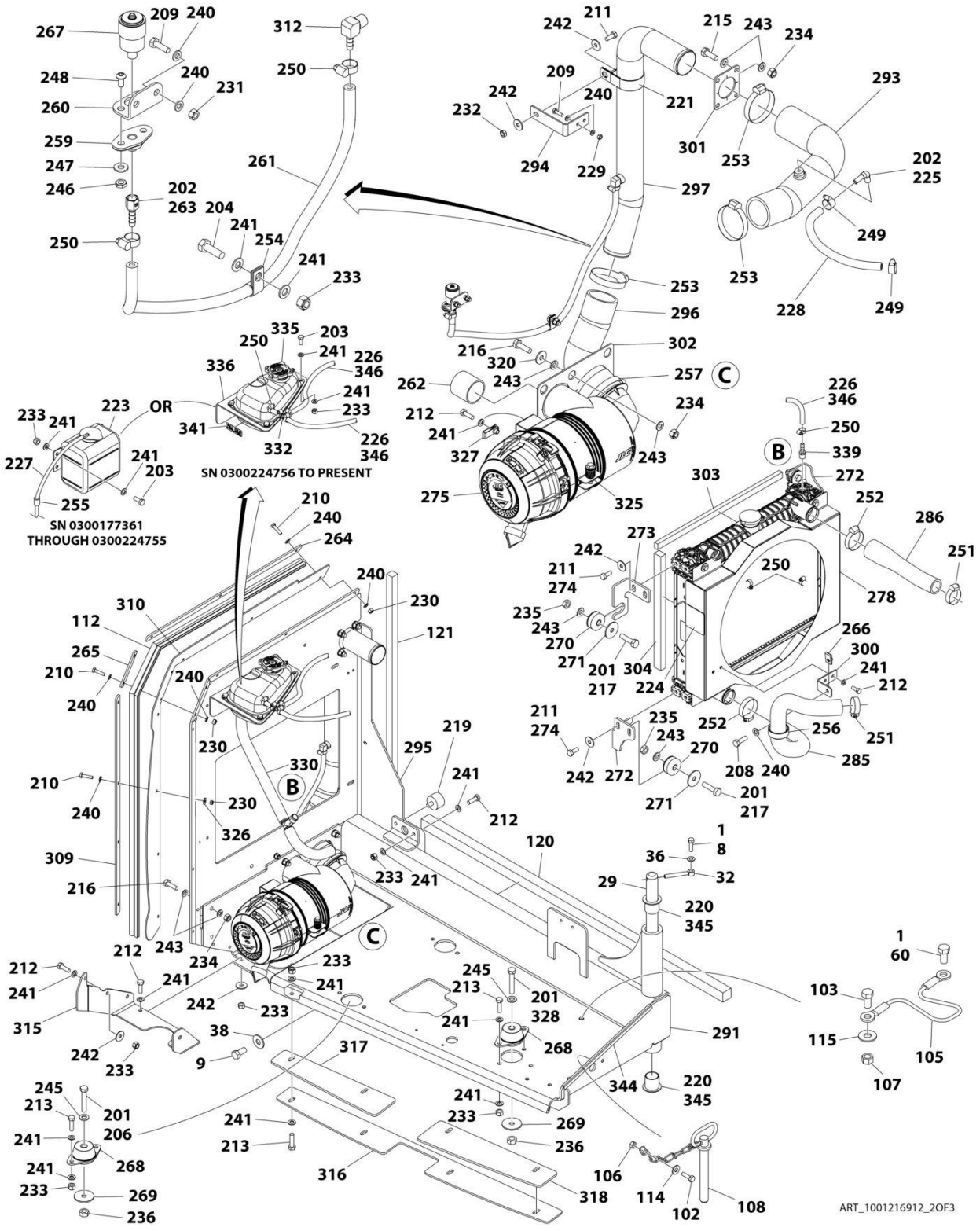
SN 0300224756 TO PRESENT
SN 0300177361
THROUGH 0300224755
ART_1001216912_2OF3

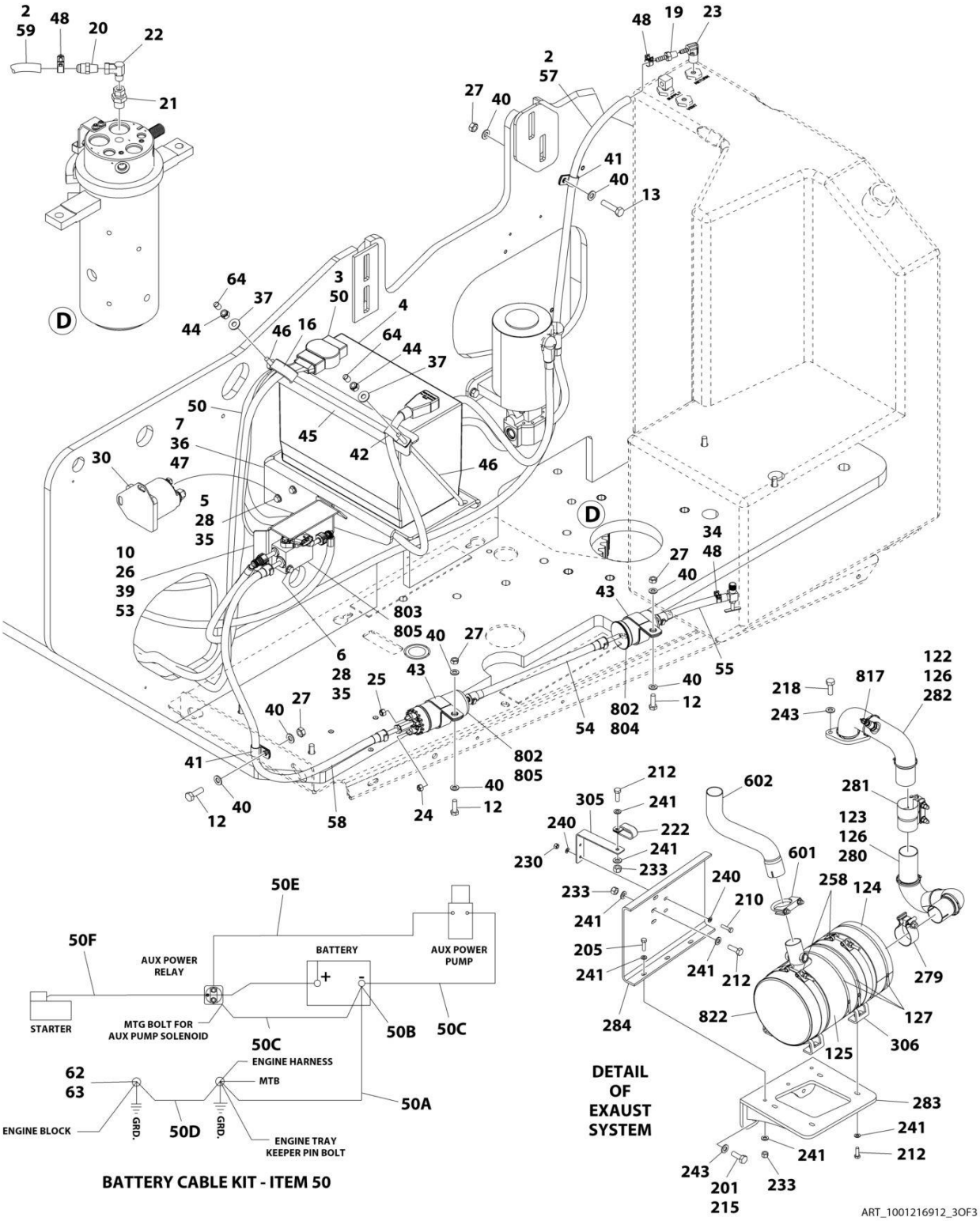
DETAIL OF EXAUST SYSTEM
BATTERY CABLE KIT - ITEM 50
AUX POWER RELAY
BATTERY
AUX POWER PUMP
STARTER
MTG BOLT FOR AUX PUMP SOLENOID
ENGINE HARNESS
MTB
ENGINE BLOCK
GRD.
ENGINE TRAY KEEPER PIN BOLT
ART_1001216912_3OF3

FIGURE 2-11. FORD ENGINE INSTALLATION

ITEM	PART NUMBER	QTY	DESCRIPTION	REV
		Ref	**FORD ENGINE INSTALLATION**	
	1001216912	Ref	**Ford Engine Installation without Arctic Package**	F
	1001219073	Ref	**Ford Engine Installation with Arctic Package**	F
1	0100011	AR	Compound, Locking	
2	0100020	AR	Sealant	
3	0100048	AR	Grease, Terminal	
4	0400075	1	Battery **(SN 0300177361 through 0300259736)**	
5	0641406	2	Bolt 1/4 x 3/4	
6	0641416	2	Bolt 1/4 x 2	
7	0641607	3	Bolt 3/8 x 7/8	
8	0641610	1	Bolt 3/8 x 1-1/4	
9	0642010	1	Bolt 5/8 x 1-1/4	
10	0760612	2	Bolt M6 x 25	
11	0760810	1	Bolt M8 x 20	
12	0760812	3	Bolt M8 x 25	
13	0760815	1	Bolt M8 x 35	
16	1321716	1	Clamp **(SN 0300177361 through 0300259736)**	
17	1701542	1	Decal - Gas (Not Shown)	
18	1701543	1	Decal - LPG (Not Shown)	
19	2180348	1	Fitting, Straight NPT/Barbed	
20	2180418	1	Fitting, Straight	
21	2220005	1	Fitting, Straight NPT	
22	2220064	1	Fitting, Straight	
23	2221176	1	Fitting, 90	
24	3290405	1	Nut M4	
25	3290505	1	Nut M5	
26	3290605	2	Nut M6	
27	3290801	4	Nut M8	
28	3311405	4	Nut 1/4	
29	3422448	1	Pin	
30	3740067	1	Relay	
31	3790012	1	O-Ring (Not Shown - Located on Platform Console Box)	
32	3841143	1	Keeper, Pin	
33	4360336	1	Switch, Toggle (Not Shown - Located on Platform Console Box)	
34	1001221488	1	Tube, Fuel Line	
35	4711400	6	Washer 1/4	
36	4711600	4	Washer 3/8	
37	4751500	2	Washer 5/16 **(SN 0300177361 through 0300259736)**	
38	4752000	1	Washer 5/8	
39	4811702	4	Washer M6	
40	4811900	9	Washer M8	
41	8406101	2	Clip	
42	8406201	1	Clip **(SN 0300177361 through 0300259736)**	
43	85941018	2	Clamp	
44	88521205	2	Nut 5/16	
45	91401281	1	Bracket, Battery Hold Down **(SN 0300177361 through 0300259736)**	
46	1001093382	2	J-Bolt **(SN 0300177361 through 0300259736)**	
47	1001137868	1	Bracket, Battery	
48	1001174486	4	Clamp	

ITEM	PART NUMBER	QTY	DESCRIPTION	REV
50	1001215142	1	Battery Cable Kit	C
50A	7027073	1	Cable, Battery - Ground to Battery -	
50B	8270147	1	Terminal, Battery with Boot	
50C	7027072	1	Cable, Battery - Auxiliary Pump/Relay to Battery -	
50D	70009018	1	Cable, Battery - Engine to Ground	
50E	7027075	1	Cable, Battery - Auxiliary Relay to Auxiliary Pump	
50F	70009019	1	Cable, Battery - Starter/Auxiliary Relay to Battery +	
53	1001217645	1	Bracket	
54	1001217418	1	Hose	
55	1001217419	1	Hose	
56	1001217420	1	Hose	
57	1001217421	1	Hose	
58	1001217422	1	Hose	
59	1001218638	1	Hose	
60	0641808	1	Bolt 1/2 x 1	
61	1321283	1	Clamp	
62	0761008	1	Bolt M10 x 16	
63	4812000	1	Washer M10	
64	1001218572	2	Cap **(SN 0300177361 through 0300259736)**	
		Ref	**Note: Arctic Package Items 80-88 Not Shown (Machines with Arctic Package Only)**	
80	1060626	1	Plug, 3 Way	
81	1702941	1	Decal - Battery Heater	
82	1702942	1	Decal - Engine Block Heater	
83	1702943	1	Decal - Hydraulic Tank Heater	
84	1702944	1	Decal - Heater Cord	
85	2560024	1	Heater, Battery	
86	3980007	1	Seal, Battery	
87	1001150918	1	Cord, Extension - 8ft	
88	1001188972	1	Heater, Hydraulic Tank Immersion	
		Ref	**FORD ENGINE AND PUMP SUB-ASSEMBLY**	
	1001216911	Ref	**Ford Engine and Pump Sub-Assembly without Arctic Package**	D
	1001219072	Ref	**Ford Engine and Pump Sub-Assembly with Arctic Package**	C
101	0100011	AR	Compound, Locking	
102	0641407	1	Bolt 1/4 x 7/8	
103	0641808	1	Bolt 1/2 x 1	
104	0681812	2	Bolt 1/2 x 1-1/2	
105	1060637	1	Cable, Lanyard	
106	3311405	1	Nut 1/4	
107	3311805	1	Nut 1/2	
108	3422533	1	Pin	
109	3600395	1	Gear Pump and Fittings Assembly (See GEAR PUMP ASSEMBLY for Breakdown)	
110	3790152	1	O-Ring	
111	3931620	2	Capscrew 3/8 x 1-1/4	
112	3960389	60 in /1.5m	Seal **(SN 0300177361 through 0300240729)**	
113	4711800	2	Washer 1/2	
114	4751400	1	Washer 1/4	
115	4751800	1	Washer 1/2	
116	4891600	2	Washer 3/8	
117	1001188953	1	Piston Pump and Fitting Assembly (See PISTON PUMP	

ITEM	PART NUMBER	QTY	DESCRIPTION	REV
			ASSEMBLY for Breakdown)	
118		Ref	Oil, Motor Options (Not Shown):	
118	1001190775	AR	Oil, Motor (Machines without Arctic Package)	
118	1001115931	AR	Oil, Motor (Machines with Arctic Package) **(SN 0300177361 through 0300240729)**	
118	1001190775	1	Oil, Motor (Machines with Arctic Package) **(SN 0300240730 through 0300272252)**	
120	1001217170	1	Seal	
121	1001217184	1	Seal	
122	1001216532	1	Insulate, Exhaust Pipe	
123	1001216533	1	Insulate, Exhaust Pipe	
124	1001216534	1	Insulate, Muffler	
125	1001216535	1	Insulate, Muffler	
126	1001100825	6	Strap	
127	1001221464	3	Strap	
		Ref	**FORD ENGINE ASSEMBLY**	
	1001215413	Ref	**Ford Engine Assembly without Arctic Package**	M
	1001219071	Ref	**Ford Engine Assembly with Arctic Package**	J
201	0100011	AR	Compound, Locking	
202	0100020	AR	Sealant	
203	0700810	AR	Bolt M8 x 20	
204	0700812	5	Bolt M8 x 25	
205	0700814	3	Bolt M8 x 30	
206	0701224	1	Bolt M12 x 80	
207	0711020	3	Bolt M10 x 60	
208	0760608	2	Bolt M6 x 16	
209	0760610	4	Bolt M6 x 20	
210	0760612	AR	Bolt M6 x 25	
211	0760810	AR	Bolt M8 x 20	
212	0760812	AR	Bolt M8 x 25	
213	0760814	AR	Bolt M8 x 30	
214	0760815	2	Bolt M8 x 35	
215	0761014	11	Bolt M10 x 30	
216	0761015	AR	Bolt M10 x 35	
217	0761016	4	Bolt M10 x 40	
218	0771014	2	Bolt M10 x 30	
219	0940070	1	Bumper	
220	0961986	2	Bearing	
221	1320110	1	Clamp	
222	1321283	1	Clamp **(SN 0300177361 through 0300240729)**	
222	1001187781	1	Tie-Strap (Not Shown) **(SN 0300240730 through 0300272252)**	
223	1580011	1	Container, Coolant Overflow **(SN 0300177361 through 0300224755)**	
224	1703162	2	Decal - Fan Blade	
225	2180467	1	Fitting, Straight NPT/Barbed	
226	2720058	AR	Hose	
227	2720271	39 in/1m	Hose **(SN 0300177361 through 0300224755)**	
228	1001165035	11 in/26cm	Hose	
229	3290601	2	Nut M6	
230	3290605	AR	Nut M6	
231	3290607	2	Nut M6	

ITEM	PART NUMBER	QTY	DESCRIPTION	REV
232	3290801	1	Nut M8	
233	3290805	AR	Nut M8	
234	3291005	AR	Nut M10	
235	3291001	4	Nut M10	
236	3291201	3	Nut M12	
237	3931632	1	Capscrew 3/8 x 2	
238	4031711	4	Capscrew M6 x 35	
239	4240099	AR	Tie-Strap (Not Shown)	
240	4811700	AR	Washer M6	
241	4811900	AR	Washer M8	
242	4811902	15	Washer M8	
243	4812000	33	Washer M10	
244	5241000	12	Washer M10	
245	5241200	3	Washer M10	
246	8305401	2	Nut 1/4	
247	8307109	2	Washer 1/4	
248	8310548	2	Screw 1/4 x 1/2	
249	8405006	2	Clamp	
250	8405009	AR	Clamp	
251	8405102	2	Clamp	
252	8405104	2	Clamp	
253	8405203	3	Clamp	
254	8406109	AR	Clip	
255	8406110	2	Clip **(SN 0300177361 through 0300224755)**	
256	8410001	1	Clamp	
257	8410011	1	Clamp	
258	1001128901	2	Strap, Clamp	
259	1001138173	1	Support	
260	1001138175	1	Bracket	
261	1001138248	31 in/ 77cm	Tube, Nylon	
262	1001141585	1	Hose, Air Cleaner Inlet	
263	1001141995	1	Fitting, Straight NPT/Barbed	
264	1001144410	1	Panel, Clamp	
265	1001144411	1	Panel, Clamp	
266	1001149160	1	Nut, Tinnerman M8	
267	1001149639	1	Indicator, Restriction	
268	1001191610	3	Mount, Motor	
269	1001168018	3	Washer	
270	1001169054	4	Isolator	
271	1001169138	4	Pad	
272	1001170035	2	Bracket	
273	1001176329	2	Bracket	
274	1001180620	AR	Adhesive	
275	1001189979	1	Air Filter Assembly	
275	70005008	1	Element, Filter	
276	1001213357	1	Fan **(SN 0300177361 through 0300224755)**	
276	1001223042	1	Fan **(SN 0300224756 through 0300272252)**	
277	1001215647	1	Spacer, Fan	
278	1001215674	1	Radiator **(SN 0300177361 through 0300224755)**	
278	1001223923	1	Radiator **(SN 0300224756 through 0300272252)**	
279	1001215681	1	Clamp	

ITEM	PART NUMBER	QTY	DESCRIPTION	REV
280	1001215899	1	Pipe, Exhaust Inlet	
281	1001215974	1	Clamp	
282	1001216075	1	Pipe, Exhaust Inlet	
283	1001216086	1	Bracket	
284	1001216092	1	Shield, Heat	
285	1001216204	1	Hose, Radiator (Lower)	
286	1001216205	1	Hose, Radiator (Upper)	
290	1001216919	2	Sleeve	
291	1001216951	1	Tray	
292	1001216995	1	Mount, Engine (Rear)	
293	1001217032	1	Tube, Air Intake	
294	1001217046	1	Bracket	
295	1001217082	1	Plate, Radiator	
296	1001217089	1	Tube, Intake (Lower)	
297	1001217090	1	Tube, Intake (Intermediate)	
300	1001217146	1	Support	
301	1001217174	1	Seal	
302	1001217175	1	Seal	
303	1001217183	2	Seal	
304	1001217185	2	Seal	
305	1001217186	1	Support	
306	1001217543	2	Mount	
307	1001218362	1	Mount, Engine (Front Left)	
308	1001218449	1	Mount, Engine (Front Right)	
309	1001218599	1	Panel, Clamp	
310	1001218600	1	Panel, Rubber	
312	1001134488	1	Fitting, 90 Barbed	
313	2300004	AR	Coolant (Not Shown)	
315	1001219445	1	Seal	
316	1001219448	1	Plate	
317	1001219454	1	Seal	
318	1001219456	1	Seal	
320	4812002	6	Washer M10	
321	4032011	AR	Capscrew M10 x 35	
321	5272010	AR	Capscrew M10 x 30	
322	2220064	1	Fitting, 90 FSNPSM/NPTF	
323	2220261	1	Fitting, Straight	
324	2180504	1	Fitting, Straight	
325	1001186426	1	Clamp, Air Cleaner	
326	4811702	1	Washer M6	
327	1001221615	2	Nut, Tinnerman M8	
328	1001098828	AR	Bolt M12 x 70 Grade 10.9	
328	0711223	AR	Bolt M12 x 75	
329	1001222033	1	Plate	
330	1001224489	1	Hose **(SN 0300224756 through 0300272252)**	
331	1001216531	1/.6m	Hose **(SN 0300224756 through 0300272252)**	
332	1001224432	1	Fitting, Tee Barbed **(SN 0300224756 through 0300240729)**	
333	1001224486	1	Hose **(SN 0300224756 through 0300272252)**	
334	82033995	13 in/ 33cm	Hose **(SN 0300224756 through 0300240729)**	
334	1001227666	24 in/ 60cm	Hose **(SN 0300240730 through 0300272252)**	

ITEM	PART NUMBER	QTY	DESCRIPTION	REV
335	1001223584	1	Tank **(SN 0300224756 through 0300272252)**	
336	1001224419	1	Bracket **(SN 0300224756 through 0300272252)**	
337	1001224431	1	Fitting, Tee **(SN 0300224756 through 0300272252)**	
338	8410009	AR	Clamp **(SN 0300224756 through 0300272252)**	
339	8420231	1	Fitting, Straight Barbed **(SN 0300224756 through 0300240729)**	
339	2180348	1	Fitting, Straight Barbed **(SN 0300240730 through 0300272252)**	
340	1001173535	6	Clamp **(SN 0300224756 through 0300272252)**	
341	1001225510	1	Decal - Full Cold **(SN 0300224756 through 0300272252)**	
342	0711014	5	Bolt M10 x 30 **(SN 0300224756 through 0300272252)**	
343	8406201	1	Clip **(SN 0300224756 through 0300272252)**	
344	4060805	16 in/.4m	Flex-Trim **(SN 0300224756 through 0300272252)**	
345	0100062	AR	Adhesive **(SN 0300224756 through 0300272252)**	
346	1001227667	1	Hose (Includes Tee) **(SN 0300240730 through 0300272252)**	
350	1001216393	1	Heater, Engine Block (Arctic Package Only) (Not Shown)	
	1001216910	Ref	**FORD ENGINE ASSEMBLY - PUMP COUPLING/ FUEL SYSTEM**	F
401	0100011	AR	Compound, Locking	
403	0760605	4	Bolt M6 x 10	
404	0760807	2	Bolt M8 x 14	
405	0760812	AR	Bolt M8 x 25	
409	3290805	AR	Nut M8	
411	4811702	4	Washer M6	
412	4811900	AR	Washer M8	
413	5250605	3	Bolt M6 x 10	
414	5260600	1	Nut M6 Class 10	
415	1001173535	4	Clamp **(SN 0300177361 through 0300227100)**	
416	8406201	1	Clip **(SN 0300177361 through 0300227100)**	
417	8410009	2	Clamp **(SN 0300177361 through 0300227100)**	
418	82033995	10 in/ 27cm	Hose **(SN 0300177361 through 0300227100)**	
419	1001211794	3	Mount, Isolator	
420	1001213045	1	Bracket **(SN 0300177361 through 0300232334)**	
420	1001227769	1	Bracket **(SN 0300232335 through 0300272252)**	
421	1001213810	1	Pump Coupling, Kit	
421	70006134	1	Coupling, Pump	
421	70006135	1	Housing, Pump Coupling	
421	70006136	1	Bolt Kit	
423	1001216531	1	Hose **(SN 0300177361 through 0300227100)**	
424	1001216768	1	Bracket	
425	1001216769	1	Bracket	
426	1001216810	1	Hose **(SN 0300177361 through 0300227100)**	
428	1001149160	2	Nut, Tinnerman M8	
	1001216065	Ref	**FORD ENGINE ASSEMBLY - BRACKETS/EXHAUST MANIFOLD**	K
501	0700816	4	Bolt M8 x 40	
502	0700818	1	Bolt M8 x 50	
503	0701014	2	Bolt M10 x 30	
504	0710827	1	Bolt M8 x 100 Grade 10.9	
505	0711216	2	Bolt M12 x 40	
506	0760610	3	Bolt M6 x 20	
507	0760615	4	Bolt M6 x 35	
508	0760817	1	Bolt M8 x 45	
509	3290601	1	Nut M6	
510	4811700	8	Washer M6	

ITEM	PART NUMBER	QTY	DESCRIPTION	REV
511	4811900	1	Washer M8	
512	4811902	4	Washer M8	
513	4812000	2	Washer M10	
514	4812100	2	Washer M12	
515	5250605	2	Bolt M6 x 10	
516	5260600	2	Nut M6 Class 10	
517	1001210448	1	Engine Ford 2.5L DF MSG425 (See FORD ENGINE COMPONENTS for Serviced Parts)	
518	1001211794	2	Mount	
519	1001214827	1	Manifold, Exhaust	
520	1001215384	1	Bracket	
521	1001216071	1	Bracket	
522	1001216144	1	Support, Muffler	
523	1001216616	1	Mount, Vaporizer **(SN 0300177361 through 0300232332)**	
523	1001227772	1	Mount, Vaporizer **(SN 0300232333 through 0300272252)**	
524	0100011	AR	Compound, Locking	
525	1001221545	1	Plate	
526	1001222641	6	Cap	
		Ref	**EXHAUST PIPE INSTALLATION**	
	1001220215	Ref	**Exhaust Pipe Installation without Spark Arrestor**	B
	1001219325	Ref	**Exhaust Pipe Installation with Spark Arrestor**	C
601	1001221397	1	Clamp	
602		Ref	Tail Pipe Options	
602	1001216160	1	Tail Pipe without Spark Arrestor	
602	1001217294	1	Tail Pipe with Spark Arrestor	
602		Ref	Insulate Options	
602	1001216536	1	Insulate without Spark Arrestor	
602	1001217562	1	Insulate with Spark Arrestor	
602	1001100825	3	Strap	
	1001220404	Ref	**DRIVE BELT INSTALLATION (MACHINES WITHOUT GENERATOR)**	C
701	0100011	AR	Compound, Locking	
702	0701026	1	Bolt M10 x 90	
703	4812002	1	Washer M10	
704	1001216300	1	Pulley	
705	1001216619	1	V-Belt	
		Ref	**FORD ENGINE COMPONENTS**	
801	70006145	4	Injector, Fuel	
801	70006147	1	Rail, Fuel	
802	70006150	1	Pump, Fuel	
802	70006154	1	Fitting M10	
803	70006151	1	Block, Fuel	
803	70006152	2	Fitting SAE6	
803	70006153	1	Fitting SAE3	
803	70006189	1	Harness, Fuel Block	
804	70006155	1	Filter, Fuel	
805	7022162	8	Clamp	
805	70006157	8	Clip, Fuel Quick Disconnect	
806	70006158	1	Mixer, LP	
806	70006168	1	Mixer Diaphragm Replacement Kit	
806	70006159	1	Adapter, Mixer to Governor	
806	70006160	1	O-Ring, Mixer to Adapter	

ITEM	PART NUMBER	QTY	DESCRIPTION	REV
806	70006161	1	Seal, Mixer to Adapter	
807	70006162	1	Regulator, LP Vapor	
807	70006166	2	Fitting, 70	
807	70006167	1	Fitting, Straight	
807	70006165	2	Isolator, Rubber	
808	70006163	1	Regulator, Direct Electronic Pressure	
808	70006164	1	Adapter, Fitting 90	
809	70006169	1	Starter	
809	70006233	1	Harness, Alternator/Starter	
810	70006170	1	Alternator	
811	70006173	1	Cover, Relay Box	
811	70006171	2	Relay (Fuel Pump & Power)	
811	70006172	1	Relay (Starter)	
811	70006175	1	Fuse - 20AMP (Starter)	
811	70006174	1	Decal - Relay Box Cover	
811	70006188	1	Harness, Engine	
811	70006165	2	Isolator, Rubber	
812	70006176	1	Module - Engine Control Unit (ECU/GCP)	
812	70006191	1	Software & Diagnostic Cable	
813	70006177	4	Coil and Boot Assembly	
813	70006178	4	Plug, Spark	
814	70006179	1	Switch, Oil Pressure	
815	70006180	1	Sensor, Knock	
816	70006181	1	Sensor, TMAP	
817	70006182	2	Sensor, O2	
818	70006183	1	Sensor, Coolant Temperature (Not Shown - Located Rear of Engine Block)	
819	70006184	1	Sensor, Crank Position (Not Shown - Located at Front RH Side of Block)	
820	70006185	1	Sensor, Cam Position	
821	70006186	1	Solenoid, Timing	
821	70006187	1	Grommet, Rubber	
822	70006194	1	Muffler	
822	70006195	1	Plug (Located at Muffler Outlet)	
823		Ref	Gasket Options (Not Shown):	
823	70006196	1	Gasket, Exhaust Manifold to Head	
823	70006197	1	Gasket, Exhaust Manifold Outlet	
823	70006200	1	Gasket, Intake Manifold to Head	
823	70006219	1	Gasket Set - Camshaft Cover	
823	70006225	1	Gasket, Cylinder Head	
824	70006198	1	Governor	
824	7027404	1	Gasket, Governor Actuator	
824	70006199	1	Gasket, Governor to Intake Manifold Adapter	
825	70006203	1	Flywheel (Not Shown)	
826	70006205	1	Thermostat (Includes Housing)	
826	70006206	1	Gasket, Water Inlet	
827	70006207	1	Pump, Water	
827	70006208	1	O-Ring, Water Pump	
827	See Note	NSS	Pulley, Water Pump (Note: Not Available for Purchase at This Time)	
828	70006213	1	Filter, Oil	
829	70006215	1	Plug, Oil Drain	

ITEM	PART NUMBER	QTY	DESCRIPTION	REV
829	70006217	1	Gasket, Oil Drain Plug	
830	70006221	1	Cap, Oil Fill	
831	70006232	1	Sensor, Crank (Not Shown)	
832	70006235	1	Valve, Lock-Off (Includes Filter)	
833	70006202	1	Belt	
834	70006236	1	Dipstick	

FIGURE 2-12. GM ENGINE INSTALLATION

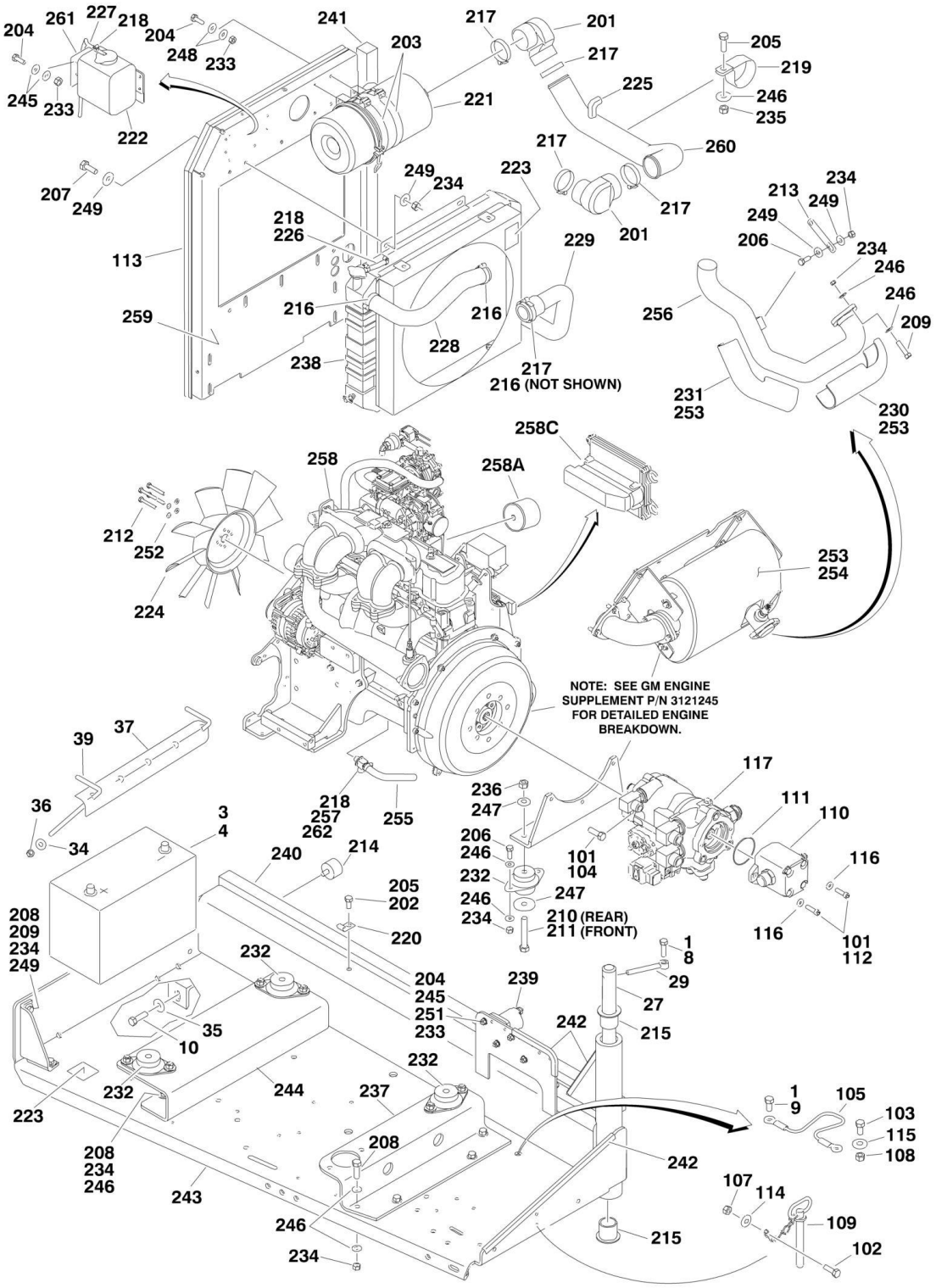

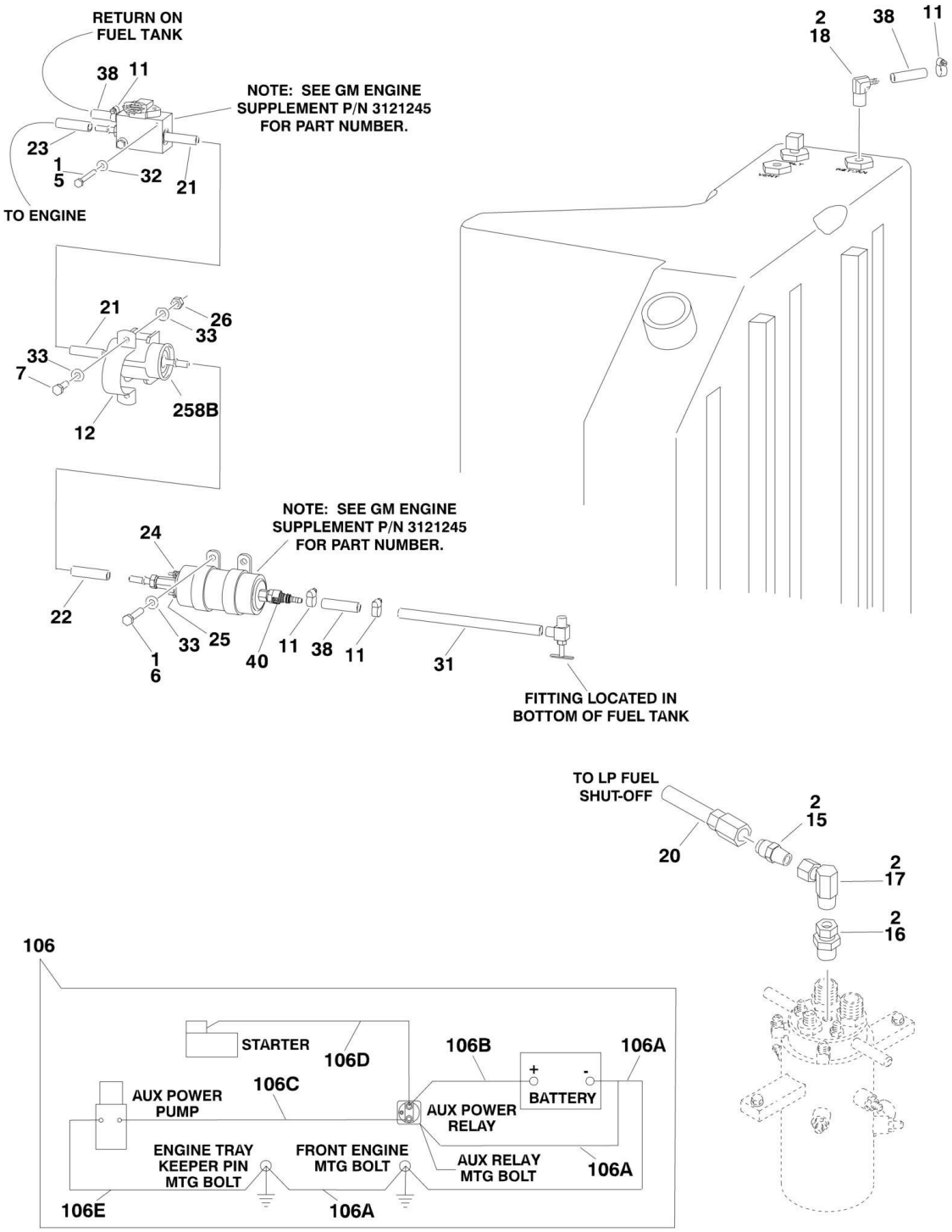
RETURN ON FUEL TANK
38
11
NOTE: SEE GM ENGINE SUPPLEMENT P/N 3121245 FOR PART NUMBER.
23
1
5
32
21
TO ENGINE
2
18
38
11
21
26
33
33
7
258B
12
NOTE: SEE GM ENGINE SUPPLEMENT P/N 3121245 FOR PART NUMBER.
24
22
1
6
33
25
40
11
38
11
31
FITTING LOCATED IN BOTTOM OF FUEL TANK
TO LP FUEL SHUT-OFF
2
15
20
2
17
2
16
106
STARTER
106D
106B
106A
+
-
BATTERY
AUX POWER PUMP
106C
AUX POWER RELAY
ENGINE TRAY KEEPER PIN MTG BOLT
FRONT ENGINE MTG BOLT
AUX RELAY MTG BOLT
106A
106E
106A

FIGURE 2-12. GM ENGINE INSTALLATION

ITEM	PART NUMBER	QTY	DESCRIPTION	REV
		Ref	**GM ENGINE INSTALLATION**	
	1001114640	Ref	**Machines without Arctic Package (SN 0300177361 through 0300208081)**	F
	1001188966	Ref	**Machines without Arctic Package (SN 0300208082 through 0300222204)**	B
	1001216848	Ref	**Machines without Arctic Package (SN 0300222205 through 0300272252)**	B
	1001114642	Ref	**Machines with Arctic Package (SN 0300177361 through 0300208081)**	F
	1001188967	Ref	**Machines with Arctic Package (SN 0300208082 through 0300222204)**	B
	1001216849	Ref	**Machines with Arctic Package (SN 0300222205 through 0300272252)**	B
1	0100011	AR	Compound, Locking	
2	0100020	AR	Sealant, Pipe	
3	0100048	AR	Grease, Dielectric	
4	0400075	1	Battery (Wet)	
5	0641416	2	Bolt 1/4in-20NC x 2in	
6	0641505	2	Bolt 5/16in-18NC x 5/8in	
7	0641506	2	Bolt 5/16in-18NC x 3/4in	
8	0641608	1	Bolt 3/8in-16NC x 1in	
9	0641808	1	Bolt 1/2in-13NC x 1in	
10	0642010	1	Bolt 5/8in-11NC x 1-1/4in	
11	1320022	NLA	Clamp, Fuel Line (Use p/n 1001174486) **(SN 0300147361 through 0300195655)**	
11	1001174486	AR	Clamp, Fuel Line **(SN 0300195656 through 0300272252)**	
12	1320323	1	Clamp	
13	1701542	1	Decal, Gas (Not Shown)	
14	1701543	1	Decal, LPG (Not Shown)	
15	2180418	1	Fitting, Straight	
16	2220005	1	Fitting, Straight	
17	2220064	1	Fitting, Adapter	
18	2221176	1	Fitting, 90	
19		Ref	Coolant Options (Not Shown):	
19	2300004	AR	Machines without Arctic Package	
19	2300041	AR	Machines with Arctic Package	
20	2720392	1	Hose, LP	
21	2720496	1	Hose, High Pressure Fuel Line **(SN 0300177361 through 0300181785)**	
21	1001156821	1	Hose, High Pressure Fuel Line **(SN 0300181786 through 0300272252)**	
22	2720566	1	Hose **(SN 0300177361 through 0300181785)**	
22	1001156823	1	Hose **(SN 0300181786 through 0300272252)**	
23	2720598	1	Hose **(SN 0300177361 through 0300181785)**	
23	1001156826	1	Hose **(SN 0300181786 through 0300272252)**	
24	3290405	1	Locknut M4 x 0.7	
25	3290505	1	Locknut M5 x 0.8	
26	3311505	2	Locknut 5/16in-18NC	
27	3422448	1	Pin	
28	3790012	1	O-Ring (Not Shown - Located in Console Box)	
29	3841143	1	Keeper	
30	4360336	1	Switch, Toggle (Not Shown - Located in Console Box)	

ITEM	PART NUMBER	QTY	DESCRIPTION	REV
31	4569385	1	Tube, Fuel Line	
32	4711400	2	Flatwasher 1/4in Thin	
33	4711500	6	Flatwasher 5/16in Thin	
34	4751500	2	Flatwasher 5/16in Regular	
35	4752000	1	Flatwasher 5/8in Regular	
36	88521205	2	Locknut 5/16in-18NC	
37	91401281	1	Angle, Battery Hold Down	
38	1001091587	6.25 ft /1.9m	Hose, Fuel Line **(SN 0300177361 through 0300181785)**	
38	1001156819	6.25 ft /1.9m	Hose, Fuel Line **(SN 0300181786 through 0300196752)**	
38	1001177157	1	Hose, Fuel Line (Fuel Supply) **(SN 0300196753 through 0300272252)**	
38	1001177161	1	Hose, Fuel Line (Tank Return Line) **(SN 0300196753 through 0300272252)**	
39	1001093382	2	Bolt, Battery Hold Down	
40	1001174093	1	Coupling, Quick Connect **(SN 0300195656 through 0300196752)**	
		Ref	**Note: Arctic Package Items 41 - 53 Not Shown - Used on Arctic Machines Only**	
41	1060625	1	Cable, Immersion Heater (Located on bottom of Hydraulic Oil Tank) **(SN 0300177361 through 0300206631)**	
41	1001150918	1	Cable, Immersion Heater (Located on bottom of Hydraulic Oil Tank) **(SN 0300206632 through 0300272252)**	
42	1060626	1	Cord, 3 Way Extension (Located on Left Front of Engine)	
43	1320223	3	Clamp	
44	1702941	1	Decal - Battery Heater (Located on Battery Heater)	
45	1702942	1	Decal - Engine Block Heater (Located on Right Side of Engine)	
46	1702943	1	Decal - Hydraulic Tank Heater (Located on bottom of Hydraulic Oil Tank)	
47	1702944	1	Decal - Heater Cord (Located on Left Front of Engine)	
48	2580024	1	Heater, Battery (Located on Battery)	
49	2580050	1	Heater, Hydraulic Tank (Located on bottom of Hydraulic Oil Tank) **(SN 0300177361 through 0300206631)**	
49	1001188972	1	Heater, Hydraulic Tank (Located on bottom of Hydraulic Oil Tank) **(SN 0300206632 through 0300272252)**	
50	2580063	1	Heater, Engine Block (Located on Right Side of Engine)	
51	3311605	2	Locknut 3/8in-16NC	
52	3980007	1	Seat, Battery (Located Under Battery)	
53	4711600	2	Flatwasher 3/8in Thin	
		Ref	**GM ENGINE AND PUMP SUB-ASSEMBLY**	
	1001114639	Ref	**Machines without Arctic Package (SN 0300177361 through 0300208081)**	E
	1001188959	Ref	**Machines without Arctic Package (SN 0300208082 through 0300222204)**	B
	1001216846	Ref	**Machines without Arctic Package (SN 0300222205 through 0300272252)**	B
	1001114641	Ref	**Machines with Arctic Package (SN 0300177361 through 0300208081)**	E
	1001188960	Ref	**Machines with Arctic Package (SN 0300208082 through 0300222204)**	B
	1001216847	Ref	**Machines with Arctic Package (SN 0300222205 through 0300272252)**	B
101	0100011	AR	Compound, Locking	
102	0641407	1	Bolt 1/4in-20NC x 7/8in	

ITEM	PART NUMBER	QTY	DESCRIPTION	REV
103	0641808	1	Bolt 1/2in-13NC x 1in	
104	0641812	2	Bolt 1/2in-13NC x 1-1/2in	
105	1060637	1	Cable, Lanyard	
106	2902531	1	Battery Cable Kit	B
106A	7016822	1	Cable (Battery - to Ground)	
106B	7027015	1	Cable (Battery + to Auxiliary Relay)	
106C	7027016	1	Cable (Relay to Auxiliary Pump)	
106D	7027017	1	Cable (Relay to Starter)	
106E	7027003	1	Cable (Auxiliary Pump to Ground)	
107	3311405	1	Locknut 1/4in-20NC	
108	3311805	1	Locknut 1/2in-13NC	
109	3422533	1	Pin, Hitch	
110	3600395	1	Gear Pump Assembly with Fittings (See GEAR PUMP ASSEMBLY for Breakdown)	
111	3790012	1	O-Ring	
112	3931620	2	Bolt 3/8in-16NC x 1-1/4in	
113	3960389	5 ft/1.5m	Seal	
114	4751400	1	Flatwasher 1/4in Regular	
115	4751800	1	Flatwasher 1/2in Regular	
116	4891600	2	Flatwasher 3/8in Hardened	
117	1001093410	1	Piston Pump Assembly with Fittings (See PISTON PUMP ASSEMBLY for Breakdown) **(SN 0300177361 through 0300208081)**	
117	1001188953	1	Piston Pump Assembly with Fittings (See PISTON PUMP ASSEMBLY for Breakdown) **(SN 0300208082 through 0300272252)**	
119		Ref	Oil, Engine (Not Shown)	
119	1001115930	AR	10W-30 - without Arctic Package	
119	1001115931	AR	5W-30 Fully Synthetic - with Arctic Package	
	1001114601	Ref	**GM ENGINE ASSEMBLY (SN 0300177361 through 0300222204)**	D
	1001216845	Ref	**GM ENGINE ASSEMBLY (SN 0300222205 through 0300272252)**	B
201	0080201	2	Fitting, 90	
202	0100011	AR	Compound, Locking	
203	0340041	2	Band, Mounting	
204	0641406	12	Bolt 1/4in-20NC x 3/4in	
205	0641606	4	Bolt 3/8in-16NC x 3/4in	
206	0641608	9	Bolt 3/8in-16NC x 1in	
207	0641609	4	Bolt 3/8in-16NC x 1-1/8in	
208	0641610	10	Bolt 3/8in-16NC x 1-1/4in	
209	0641612	4	Bolt 3/8in-16NC x 1- 1/2in	
210	0641826	2	Bolt 1/2in-13NC x 3-1/4in	
211	0641828	2	Bolt 1/2in-13NC x 3-1/2in	
212	0700810	4	Bolt M8 x 20mm	
213	0903490	1	Bracket, Exhaust Strap	
214	0940070	1	Bumper	
215	0961986	2	Bearing, Flanged	
216	1320012	3	Clamp	
217	1320016	5	Clamp	
218	1320022	4	Clamp	
219	1320219	1	Clamp	
220	1320223	3	Clamp	
221	1340060	1	Air Cleaner Assembly	

ITEM	PART NUMBER	QTY	DESCRIPTION	REV
221	7012664	1	Element, Air Cleaner	
222	1580011	1	Container, Coolant Overflow	
223	1703162	2	Decal - Caution Fan	
224	2060025	1	Fan	
225	2180877	1	Fitting 90	
226	2720058	1 ft /0.3m	Hose	
227	2720271	18 in /46cm	Hose	
228	2720563	1	Hose, Radiator (Top)	
229	2720564	1	Hose, Radiator (Bottom)	
230	2820243	1	Exhaust Elbow, Insulation	
231	2820244	1	Exhaust, Insulation	
232	3200362	4	Mount, Engine	
233	3311405	12	Locknut 1/4in-20NC	
234	3311605	27	Locknut 3/8in-16NC	
235	3311608	1	Locknut 3/8in-16NC	
236	3311805	4	Locknut 1/2in-13NC	
237	3572280	1	Plate, Engine Mount	
238	3620040	1	Radiator	
238	8180311	1	Cap, Radiator (was p/n 7019656)	
239	3740067	1	Relay	
240	3960468	1	Seal	
241	3960469	1	Seal	
242	4060805	3 ft/0.9m	Seal	
243	4341239	1	Tray, Engine	
244	4341241	1	Mount, Engine (Front)	
245	4711400	16	Flatwasher 1/4in Thin	
246	4711600	37	Flatwasher 3/8in Thin	
247	4740274	4	Flatwasher, Snubbing	
248	4751400	8	Flatwasher 1/4in Regular	
249	4751600	18	Flatwasher 3/8in Regular	
250	4751800	4	Flatwasher 1/2in Regular	
251	4791400	2	Starwasher 1/4in	
252	4831900	4	Lockwasher M8	
253	4920385	10 ft/3m	Wire, Safety	
254	1001091793	1	Insulation, Muffler	
255	1001091892	NLA	Hose (Use p/n 2750532)	
256	1001093248	1	Pipe, Exhaust	
257	1001105872	NLA	Valve, Oil Drain (Use p/n 4640952)	
258	1001114600	1	Engine, GM 3.0L (See GM Engine Supplement p/n 3121245 for Breakdown of Additional Components) **(SN 0300177361 through 0300222204)**	
258	1001216844	1	Engine, GM 3.0L with Mounting Brackets (See GM Engine Supplement p/n 3121245 for Breakdown of Additional Components) **(SN 0300222205 through 0300272252)**	
258	1001214862	1	Engine, GM 3.0L without Mounting Brackets (See GM Engine Supplement p/n 3121245 for Breakdown of Additional Components) **(SN 0300222205 through 0300272252)**	
258	70000164	1	Plug, Spark (Not Shown)	
258A	7027965	1	Filter, Oil	
258B	7027972	1	Filter, Fuel	
258C	70002895	1	Module, Control (ECU)	
259	1001116131	1	Plate, Radiator Mounting	

ITEM	PART NUMBER	QTY	DESCRIPTION	REV
260	1001116183	1	Tube, Intake	
261	1001116200	1	Bracket	
262	0100020	AR	Sealant	

FIGURE 2-13. PISTON PUMP ASSEMBLY (SN 0300177361 through 0300208081)

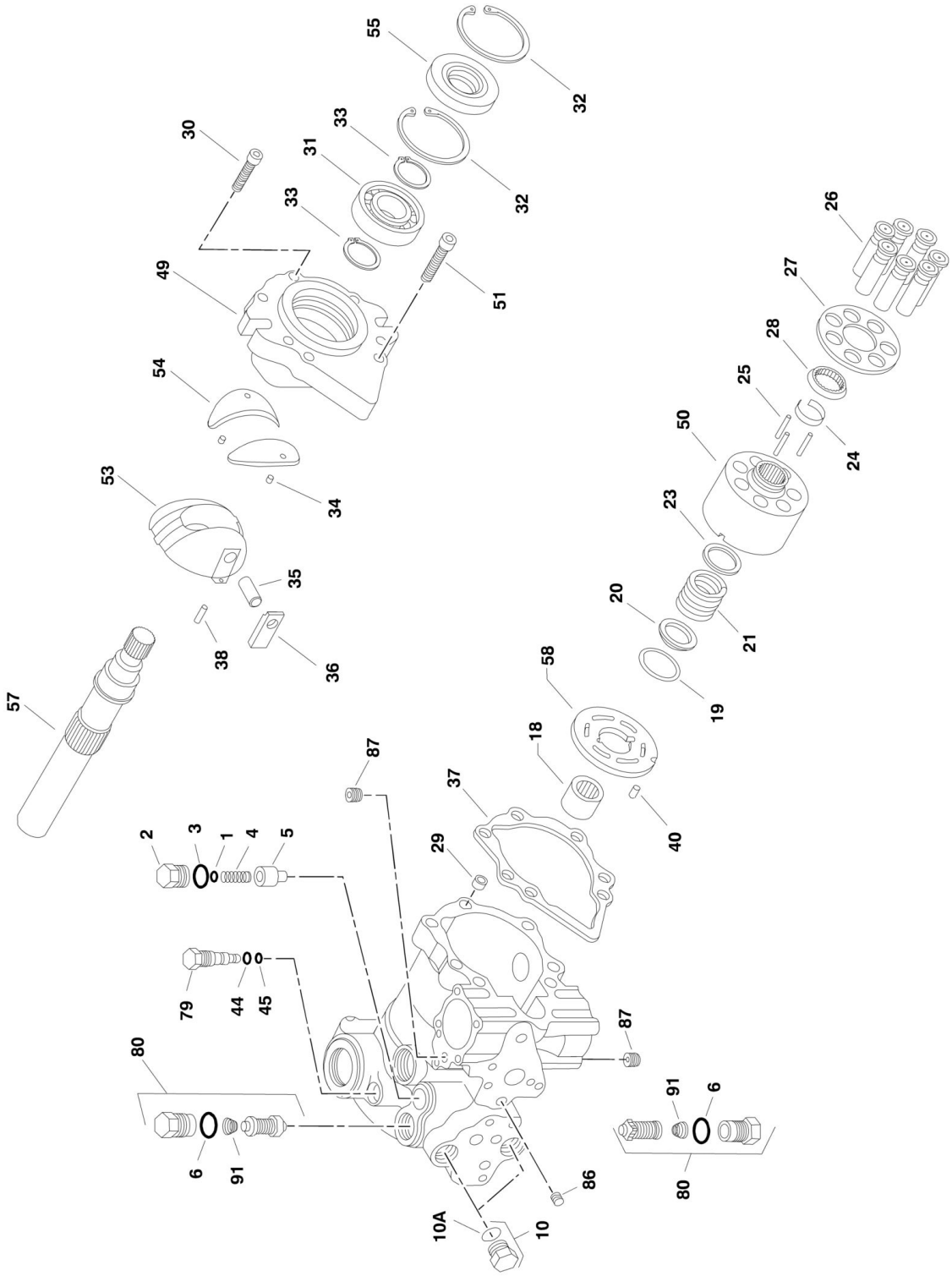

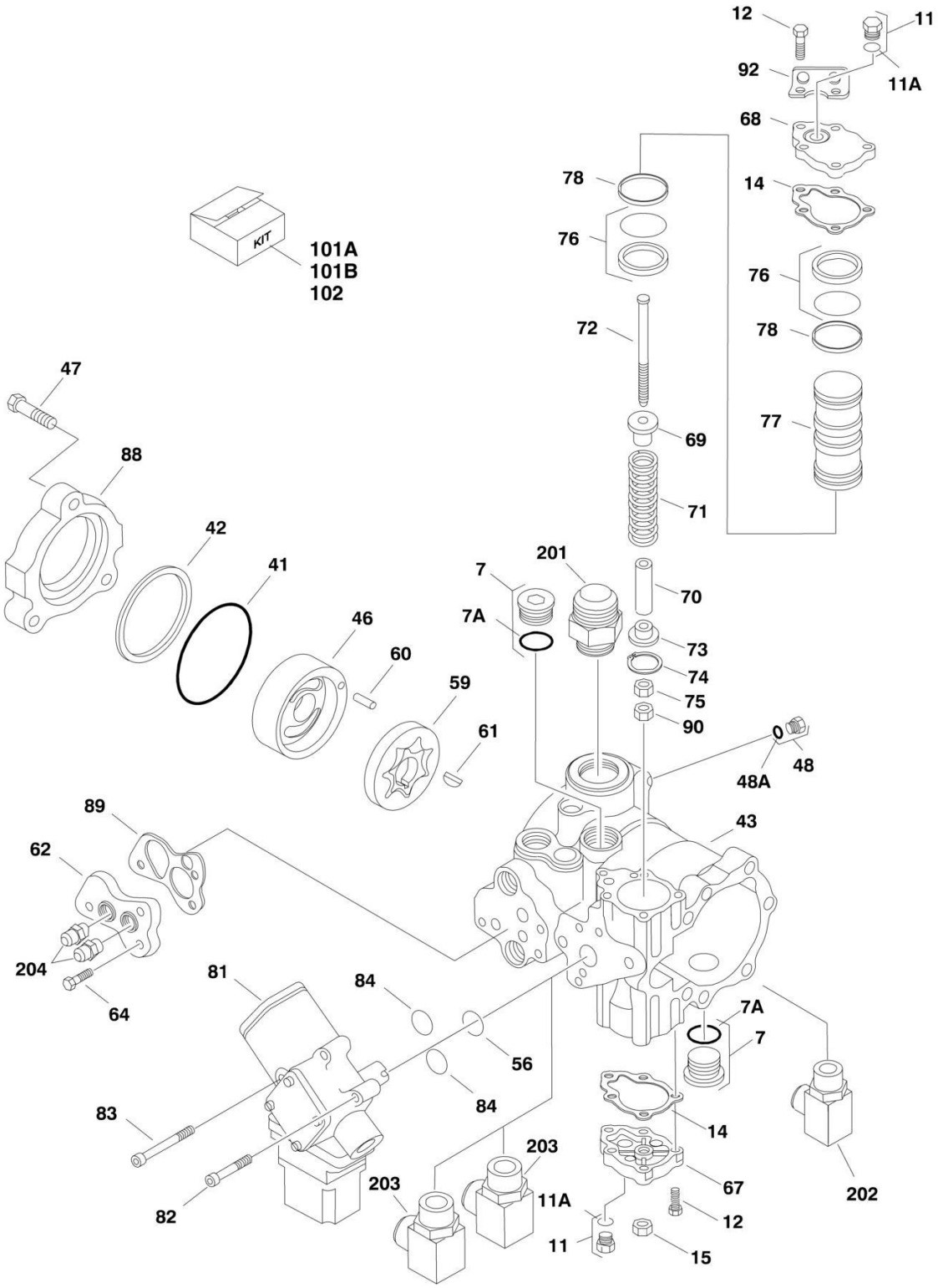
12
11
11A
92
68
78
14
76
101A
101B
102
KIT
76
72
78
47
77
69
88
71
42
201
41
7
70
7A
46
73
60
74
59
75
90
61
48
48A
89
43
62
204
81
84
64
7A
7
56
84
83
14
203
67
203
11A
202
82
12
11
15

FIGURE 2-13. PISTON PUMP ASSEMBLY (SN 0300177361 through 0300208081)

ITEM	PART NUMBER	QTY	DESCRIPTION	REV
	3600381	Ref	**PISTON PUMP ASSEMBLY**	A
1	7007413	1	Shim Kit	
2	7007414	1	Plug	
3	See Note	NSS	O-Ring (Note: Use Item 101A)	
4	7021200	1	Spring, Relief Valve	
5	7007417	1	Valve, Relief	
6	See Note	NSS	O-Ring (Note: Use Item 101A)	
7	7007419	2	Plug	
7A	7007418	2	O-Ring	
10	7007420	2	Plug	
10A	7021256	2	O-Ring	
11	7007420	2	Plug	
11A	7021256	2	O-Ring	
12	7021223	10	Screw	
14	See Note	NSS	Gasket, Servo Cover (Note: Use Item 101A)	
15	7007423	1	Nut, Special	
18	7007425	1	Bearing, Needle	
19	See Note	NSS	Ring, Retaining (Note: Use Item 102)	
20	See Note	NSS	Washer (Note: Use Item 102)	
21	See Note	NSS	Spring (Note: Use Item 102)	
23	See Note	NSS	Washer (Note: Use Item 102)	
24	See Note	NSS	Retainer (Note: Use Item 102)	
25	See Note	NSS	Pin, Slipper Holddown (Note: Use Item 102)	
26	See Note	NSS	Piston Assembly (Note: Use Item 102)	
27	See Note	NSS	Retainer, Slipper (Note: Use Item 102)	
28	See Note	NSS	Guide, Retainer (Note: Use Item 102)	
29	7007435	1	Pin, Spring	
30	7021202	1	Screw	
31	7007437	1	Bearing, Ball	
32	7007438	2	Ring, Retainer	
33	7007439	2	Ring	
34	7021203	2	Pin, Spring	
35	7007441	1	Handle, Pin	
36	7007442	1	Sleeve, Bearing	
37	See Note	NSS	Gasket, Front Cover (Note: Use Item 101A)	
38	7007444	1	Pin	
40	7007446	1	Pin	
41	7021233	1	O-Ring	
42	7007448	1	Ring, Load Temper	
43	7023977	1	Housing, Pump	
44	See Note	NSS	Ring, Back-Up (Note: Use Item 101A)	
45	See Note	NSS	O-Ring (Note: Use Item 101A)	
46	7007452	1	Cover, Gerotor	
47	7007453	3	Bolt, Hex	
48	7007208	1	Plug	
48A	7007207	1	O-Ring	
49	7007454	1	Cover, Front	
50	See Note	NSS	Block, Cylinder (Note: Use Item 102)	
51	7021207	6	Screw	
53	7007457	1	Swash Plate	

ITEM	PART NUMBER	QTY	DESCRIPTION	REV
54	7021212	1	Journal, Bearing	
55	7007459	1	Seal, Lip	
56	See Note	NSS	O-Ring (Note: Use Item 101A)	
57	7010121	1	Shaft, Main Pump	
58	7021214	1	Plate, Valve	
59	7007463	1	Gerotor Assembly	
60	7007464	1	Pin	
61	7007465	1	Key, Woodruff	
62	7007466	1	Adaptor, Remote Filtration (Without By-Pass)	
64	7021218	3	Screw	
67	7021220	1	Cover, Servo (Without Adjuster)	
68	7021219	1	Cover, Servo (Without Adjuster)	
69	7023979	1	Guide, Spring	
70	7007484	1	Stop, Servo	
71	7007485	1	Spring	
72	7021221	1	Screw	
73	7007487	1	Guide, Spring	
74	7007488	1	Ring, Retaining	
75	7021222	1	Locknut	
76	See Note	NSS	Ring, Piston (Note: Use Item 101A or 101B)	
77	7007494	1	Piston, Servo	
78	See Note	NSS	O-Ring (Note: Use Item 101A or 101B)	
79	7007472	1	Valve, Bypass	
80	7024851	2	Valve, Pressure Relief (Includes Item 6)	
81	7007474	1	Control, Dual Oil-Filled	
81	7007496	1	Coil Assembly (Pilot)	
81	7007497	1	Plug (Pump)	
81	7007498	1	Plug (Valve Harness)	
82	7001498	2	Screw	
83	7007478	2	Screw	
84	7001433	2	O-Ring	
86	7007475	1	Plug, Orifice/Screen (.156)	
87	7007477	2	Plug, Orifice (.37)	
88	7007476	1	Adapter, Auxiliary Pump	
89	7021217	1	Spacer/Gasket	
90	7021206	1	Nut	
91	7024800	2	Spring	
92	7021201	1	Bracket, Lifting	
101		Ref	Seal Kit Options:	
101A	7021232	1	Seal Kit - Complete (Includes Items 3, 6, 14, 37, 41, 42, 44, 45, 55, 56, 76, 78 & 89)	
101B	7007412	1	Seal Kit - Servo Piston (Includes Items 76 & 78)	
102	7010116	1	Cylinder Block Kit (Includes Items 19-28 & 50)	
		Ref	**PISTON PUMP AND FITTING ASSEMBLY**	
	3600396	Ref	**Deutz Engine Machines**	C
	1001093410	Ref	**GM Engine Machines**	B
201	2220377	1	Fitting, Straight	
202		Ref	Fitting, 90 Options	
202	2220578	1	3600396 Pump	
202	8770157	1	1001093410 Pump	
203	2220646	2	Fitting, 90	
204	2220947	2	Fitting, Straight	

FIGURE 2-14. PISTON PUMP ASSEMBLY (SN 0300208082 through 0300272252)

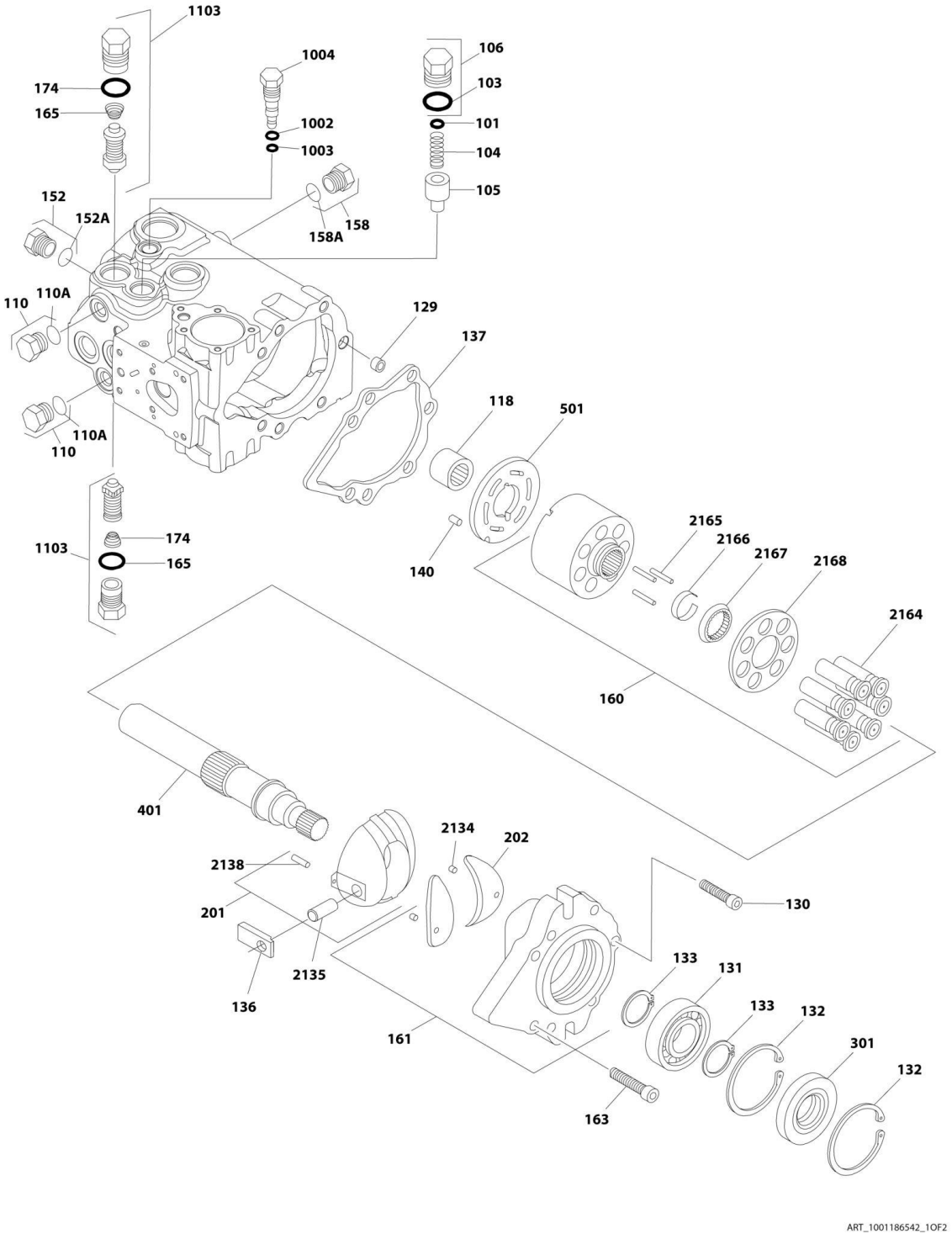

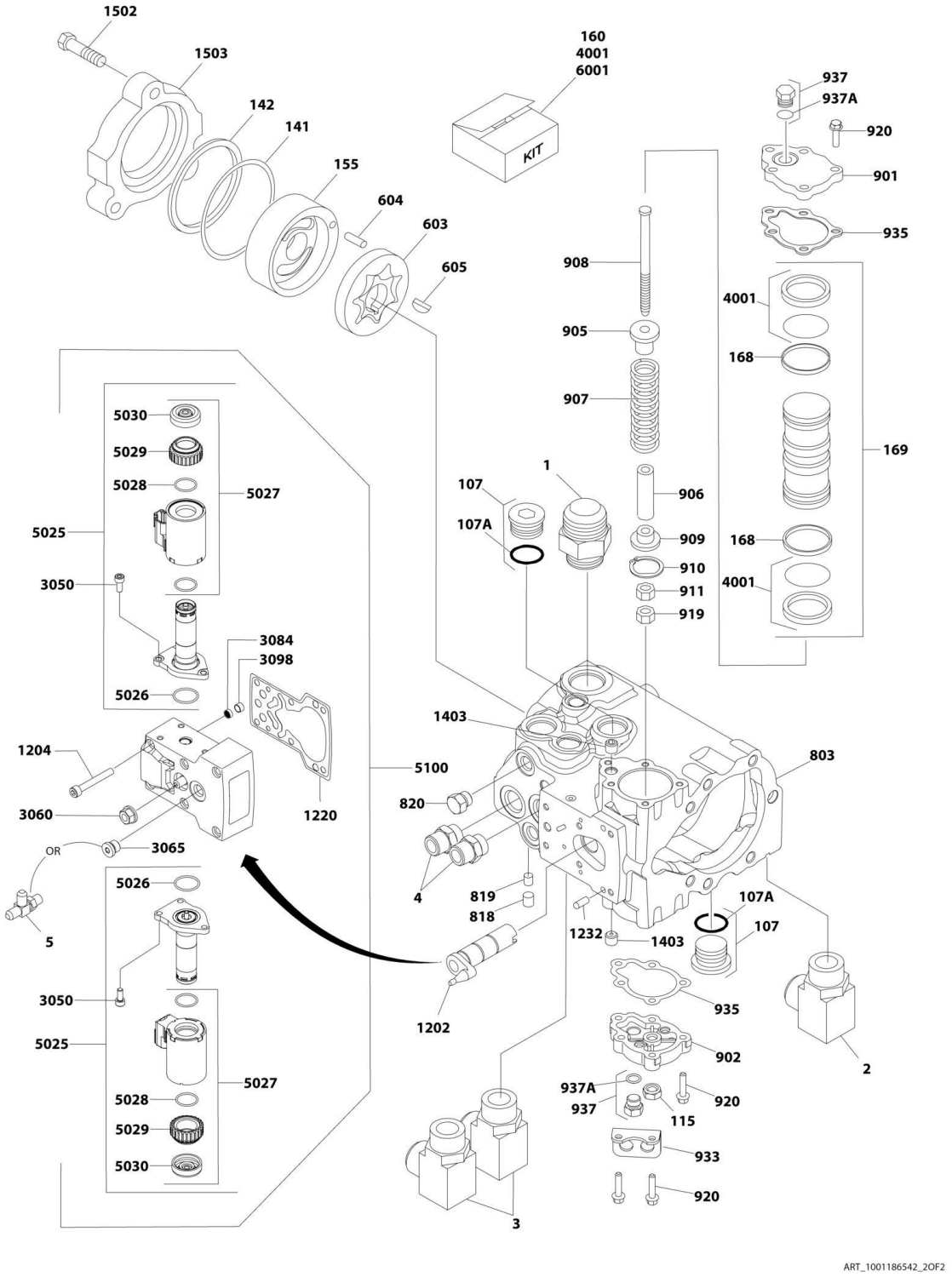

ART_1001186542_2OF2

FIGURE 2-14. PISTON PUMP ASSEMBLY (SN 0300208082 through 0300272252)

ITEM	PART NUMBER	QTY	DESCRIPTION	REV
	1001188952	Ref	**PUMP AND FITTING ASSEMBLY - DEUTZ ENGINE MACHINES**	A
	1001188953	Ref	**PUMP AND FITTING ASSEMBLY - GM & FORD ENGINE MACHINES**	A
1	2220377	1	Fitting, Straight JIC/ORB	
2	2220578	1	Fitting, 90 JIC/ORB (Deutz Engine Machines)	
2	8770157	1	Fitting, 90 JIC/ORB (GM Engine Machines)	
2	2220451	1	Fitting, Straight JIC/ORB (Ford Engine Machines)	
3	2220646	2	Fitting, 90 JIC/ORB	
4	2220947	2	Fitting, Straight JIC/ORB	
5	2221034	1	Fitting, Tee JIC/ORB (Deutz & GM Engine Machines)	
5	2220711	1	Fitting, Tee JIC/ORB (Ford Engine Machines)	
	1001186542	1	**PISTON PUMP ASSEMBLY**	B
101	7007413	1	Shim Kit	
103	7007415	1	O-Ring (Part of Item 106)	
104	7021200	1	Spring, Relief Valve	
105	7007417	1	Valve, Relief	
106	7024874	2	Plug (Includes Items 103)	
107	7007419	2	Plug	
107A	7007418	2	O-Ring	
110	7007420	2	Plug	
110A	7021256	2	O-Ring	
115	7007423	1	Nut, Special	
118	7007425	1	Bearing, Needle	
129	7007435	1	Pin, Spring	
130	7021202	1	Screw	
131	70002176	1	Bearing, Ball	
132	7007438	2	Ring, Retainer	
133	7007439	2	Ring	
136	7007442	1	Sleeve, Bearing	
137	7007443	1	Gasket, Front Cover	
140	7007446	1	Pin	
141	7021233	1	O-Ring	
142	7007448	1	Ring, Load Temper	
152	7007420	1	Plug Assembly	
152A	7021256	1	O-Ring	
155	70005466	1	Cover, Gerotor	
158	7007208	1	Plug	
158A	7007207	1	O-Ring	
160	7010116	1	Cylinder Block Kit (Includes Items 2164-2168)	
161	7024875	1	Cover Assembly - Front (Includes Items 202 & 2134)	
163	7021207	6	Screw	
165	70005467	2	Spring	
168	7021210	2	Bearing	
169	70005468	1	Servo Piston Assembly (Includes Items 168 & 4001)	
174	7007418	2	O-Ring	
201	7007457	1	Swash Plate Assembly (Includes Items 2135 & 2138)	
202	7021212	1	Journal, Bearing	
301	7007459	1	Seal, Lip	
401	7010121	1	Shaft, Main Pump	
501	7021214	1	Plate, Valve	

ITEM	PART NUMBER	QTY	DESCRIPTION	REV
603	7007463	1	Gerotor Assembly	
604	7007464	1	Pin	
605	7007465	1	Key, Woodruff	
803	See Note	NSS	Housing, Pump (Note: Use p/n 1001186542)	
818	70005469	1	Plug	
819	70005470	1	Plug	
820	70005469	1	Plug	
901	7021219	1	Cover, Servo (With Adjuster)	
902	7021220	1	Cover, Servo (Without Adjuster)	
905	7023979	1	Guide, Spring	
906	7007484	1	Stop, Servo	
907	7007485	1	Spring	
908	7021221	1	Screw	
909	7007487	1	Guide, Spring	
910	7007488	1	Ring, Retaining	
911	7021222	1	Locknut	
919	7021206	1	Nut	
920	7021223	10	Screw	
933	7021201	1	Bracket, Lifting	
935	7007422	2	Gasket, Servo Cover	
937	7007420	2	Plug	
937A	7021256	2	O-Ring	
1002	7007450	1	Ring, Back-up	
1003	70005471	1	O-Ring	
1004	7024877	1	Valve, Bypass	
1103	7024851	2	Valve, Pressure Relief (Includes Items 165 & 174)	
1202	70005472	1	Sleeve	
1204	70002156	6	Screw	
1220	70002154	1	Gasket	
1232	70002157	2	Pin	
1403	7007477	2	Plug, Orifice (.37)	
1502	7007453	3	Bolt, Hex	
1503	7007476	1	Adapter, Auxiliary Pump	
2134	7021203	2	Pin, Spring	
2135	7007441	1	Handle, Pin	
2138	7007444	1	Pin	
2164	7010117	7	Piston Assembly	
2165	7007431	3	Pin, Slipper Holddown	
2166	7007430	1	Retainer	
2167	7007434	1	Guide, Retainer	
2168	7010119	1	Retainer, Slipper	
3050	70002150	6	Screw	
3060	70005473	1	Nut, Seal	
3065	70002151	1	Plug	
3084	70002134	1	Screen	
3098	70002153	1	Ring	
4001	7007412	1	Seal Kit - Servo Piston	
5025	70002147	2	Solenoid Assembly (Includes Items 5026-5030)	
5026	70002148	2	O-Ring	
5027	70002149	2	Coil Assembly (Includes Items 5028-5030)	
5028	70005474	2	O-Ring	

ITEM	PART NUMBER	QTY	DESCRIPTION	REV
5029	70005475	2	Screw	
5030	70005476	2	Cap	
5100	70002146	1	EDC Assembly (Includes Items 1204, 1220, 3050-3098 & 5025-5030)	
6001	7021232	1	Seal Kit - Complete (Includes Items 103, 137, 141, 142, 168, 174, 301, 935, 1002, 1003, 4001 and Plug O-Ring)	

FIGURE 2-15. GEAR PUMP ASSEMBLY

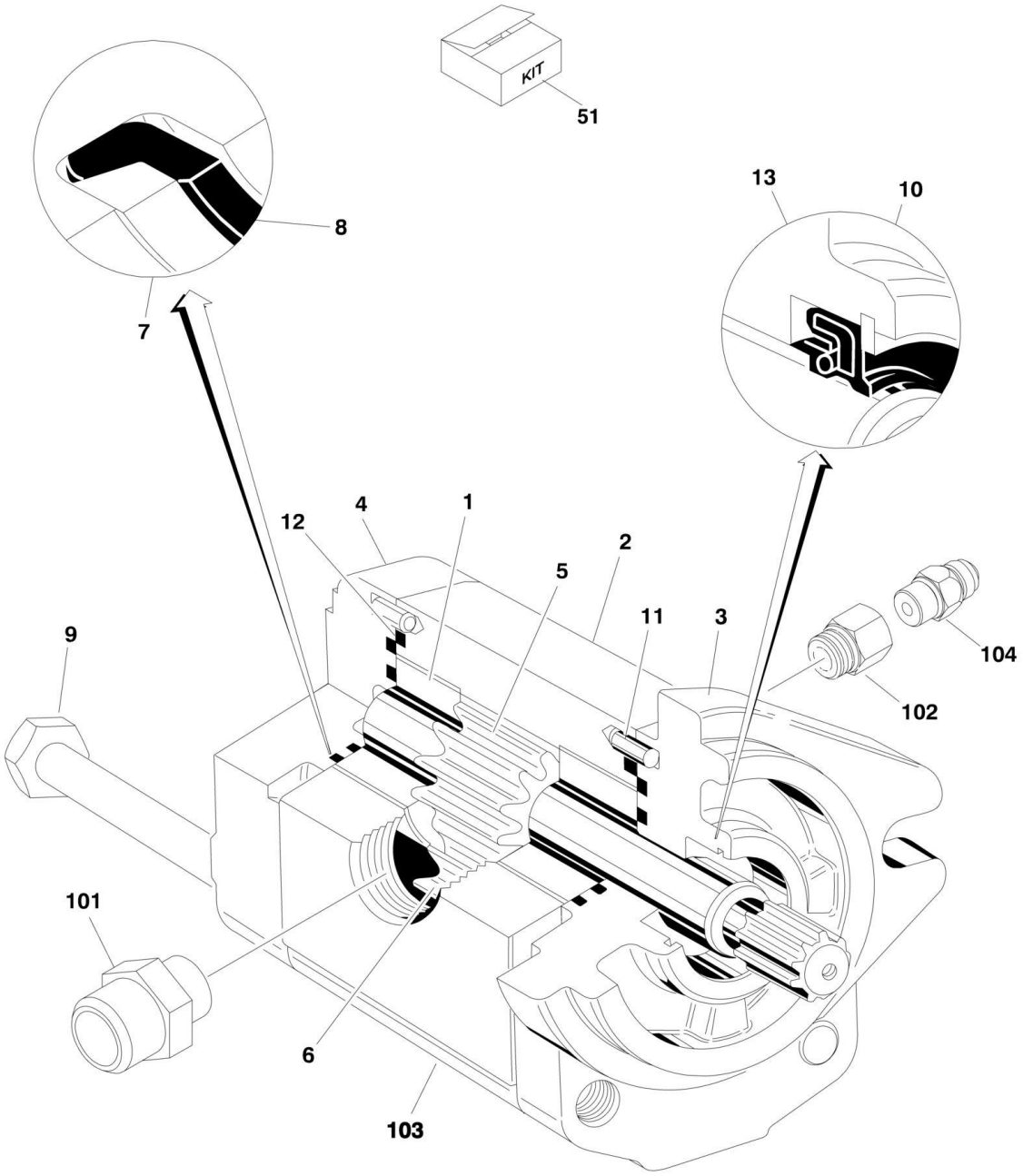

FIGURE 2-15. GEAR PUMP ASSEMBLY

ITEM	PART NUMBER	QTY	DESCRIPTION	REV
	3600242	Ref	**GEAR PUMP ASSEMBLY**	
1	7010105	2	Bearing/Bushing	
2	See Note	NSS	Housing (Note: Use Item 3600242)	
3	See Note	NSS	Flange (Note: Use Item 3600242)	
4	7010103	1	Cover	
5	7012987	1	Gear, Drive	
6	7012988	1	Gear, Idler	
7	See Note	NSS	Ring, Anti-Extrusion (Note: Use Item 51)	
8	See Note	NSS	Seal (Note: Use Item 51)	
9	See Note	4	Bolt (Note: Not Available for Purchase)	
10	7010104	1	Ring, Retaining	
11	See Note	NSS	Pin, Dowel (Note: Not Available for Purchase)	
12	See Note	NSS	Seal, O-Ring (Note: Use Item 51)	
13	See Note	NSS	Seal, Shaft (Note: Use Item 51)	
51	7007489	1	Seal Kit (Includes Items 7, 8, 12 & 13)	
	3600395	Ref	**GEAR PUMP AND FITTING ASSEMBLY**	B
101	2220376	1	Fitting, Straight	
102	2220810	1	Fitting, Reducer	
103	3600242	1	Pump (Includes Items 1 - 13)	
104	4640744	1	Fitting, Check Valve	

FIGURE 2-16. FUEL-WATER SEPARATOR INSTALLATION - DEUTZ D2011 AND DEUTZ D2011 STAGE V ENGINES

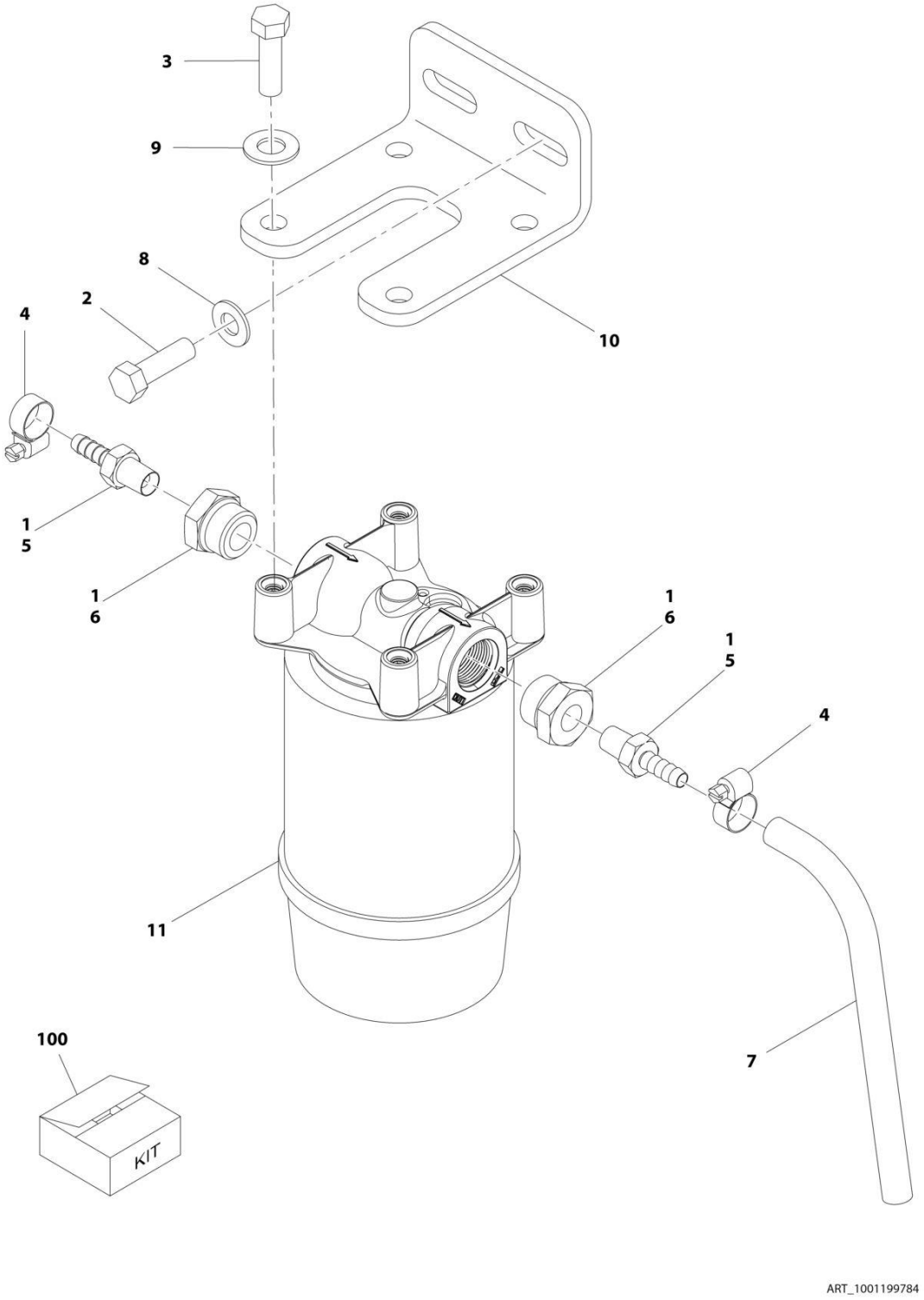

FIGURE 2-16. FUEL-WATER SEPARATOR INSTALLATION - DEUTZ D2011 AND DEUTZ D2011 STAGE V ENGINES

ITEM	PART NUMBER	QTY	DESCRIPTION	REV
	1001199784	Ref	**FUEL-WATER SEPARATOR INSTALLATION - DEUTZ D2011 AND DEUTZ D2011 STAGE V ENGINES (OPTIONAL)**	A
1	0100079	AR	Sealant	
2	0641607	2	Bolt 3/8 x 7/8	
3	0641610	4	Bolt 3/8 x 1-1/4	
4	1320022	2	Clamp	
5	2180348	2	Fitting, Straight	
6	2220816	2	Fitting, Straight	
7	2720058	12 in /31cm	Hose	
8	4711600	2	Washer 3/8	
9	4711700	4	Washer 7/16	
10	1001188884	1	Bracket	
11	1001188887	1	Fuel/Water Separator Assembly	
11	1001202280	1	Head	
11	1001202281	1	Element	
100	1001204667	1	Fuel/Water Separator Add-on Kit	

FIGURE 2-17. TANK INSTALLATIONS

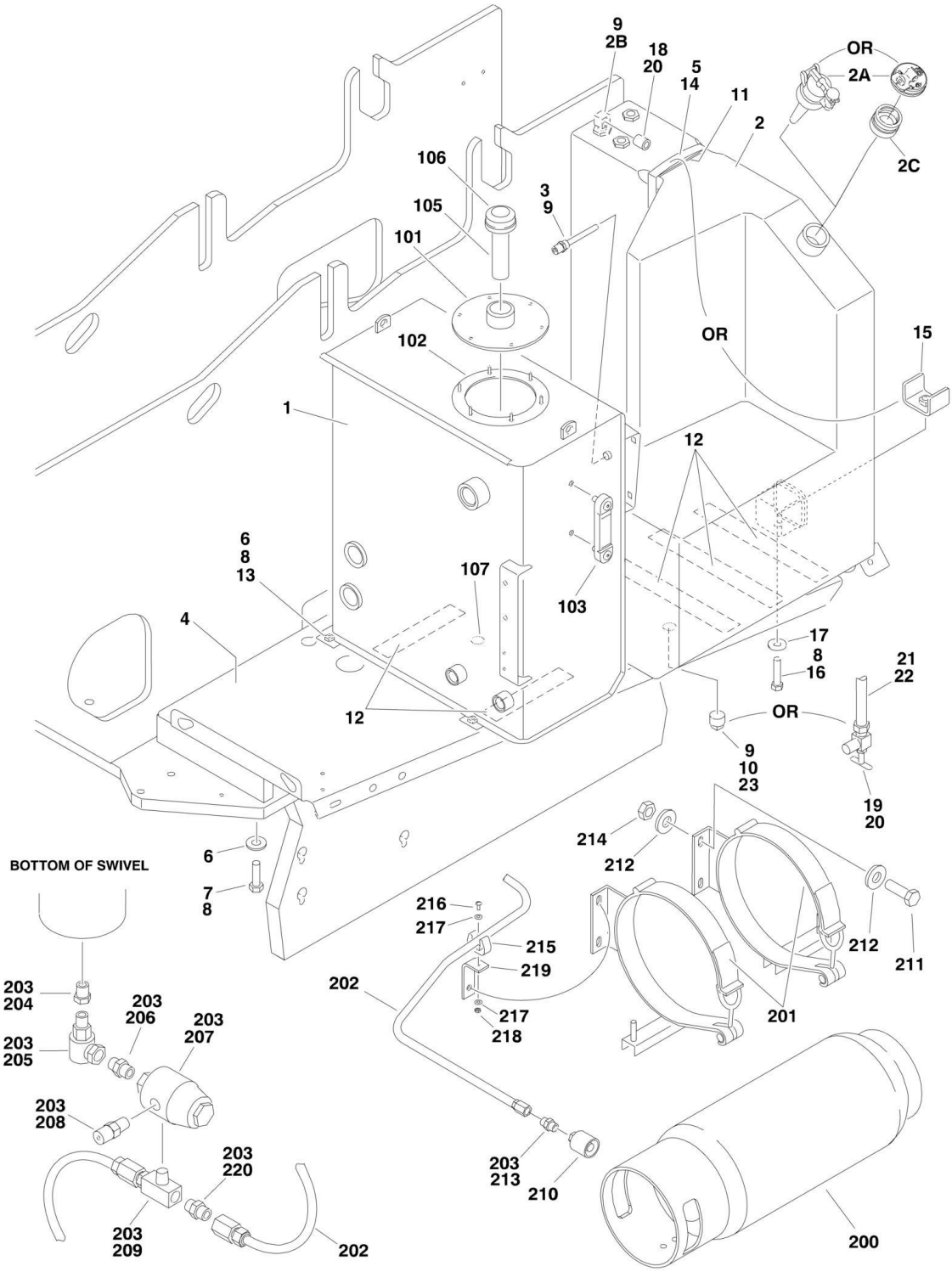

FIGURE 2-17. TANK INSTALLATIONS

ITEM	PART NUMBER	QTY	DESCRIPTION	REV
		Ref	**TANK INSTALLATIONS**	
	1001152066	Ref	**Machines with Deutz D2011 Engine**	C
	1001137865	Ref	**Machines with Deutz TD2.9L4 Engine**	F
	1001152070	Ref	**Machines with Ford & GM Engines**	D
1	1001151268	1	Hydraulic Oil Tank Assembly (See Items 101-107 for Breakdown)	
2		Ref	Tank, Fuel Options:	
2	4400399	1	Tank (Deutz Engine Machines) **(SN 0300177361 through 0300195206)**	
2	1001173896	1	Tank (Deutz Engine Machines) **(SN 0300195207 through 0300272252)**	
2	1001111514	1	Tank (Gas Engine Machines)	
2A		Ref	Cap, Fuel Tank Options:	
2A	7016314	1	Standard Black - Non-Locking (Diesel Machines)	
2A	70002715	1	Lockable Black (Gas Machines) (Lock Not Included)	
2A	1001151391	1	Lockable Red (Gas Machines) (Lock Not Included) (Note: This Cap must be Purchased Separately) **(SN 0300177361 through 0300224542)**	
2A	1120487	1	Lockable Blue (Diesel Machines) (Lock Not Included) (Note: This Cap must be Purchased Separately) **(SN 0300177361 through 0300224542)**	
2B		Ref	Fitting, 90 with Pick-Up Tube Options:	
2B	7019658	1	Diesel Machines	
2B	70004149	1	Gas Machines	
2C	70002716	1	Adapter (Gas Machines Only)	
3	4360436	1	Switch, Fuel Level	
4		Ref	Tray Options:	
4	1001152428	1	Tray -Machines with Deutz D2011 Engine	
4	1001137863	1	Tray - Machines with Deutz TD2.9L4 Engine	
4	1001152428	1	Tray - Machines with Ford & GM Engines **(SN 0300177361 through 0300227098)**	
	1001137863	1	Tray - Machines with Ford & GM Engines **(SN 0300227099 through 0300272252)**	
5	4240102	1	Strap, Tank (Diesel Machines Only)	
6	4751600	AR	Flatwasher 3/8in Regular	
7	0641614	AR	Bolt 3/8in-16NC x 1-3/4in	
8	0100011	AR	Compound, Locking	
9	0100079	AR	Sealant, Pipe **(SN 0300177361 through 0300198765)**	
9	1001182997	AR	Sealant, Pipe **(SN 0300198766 through 0300272252)**	
10	2200222	1	Plug (Diesel Machines Only)	
11	4280295	18 in /46cm	Strip, Protective (Diesel Machines Only)	
12	4420038	AR	Tape, Rubber	
13	0641606	4	Bolt 3/8in-16NC x 3/4in	
14	3311601	2	Nut 3/8in-16NC (Diesel Machines Only)	
15	1001118133	2	Bracket (Gas Machines Only)	
16	0641818	2	Bolt 1/2in-13NC x 2-1/4in (Gas Machines Only)	
17	4751800	2	Flatwasher 1/2in Regular (Gas Machines Only)	
18	2200233	1	Plug (Gas Machines Only) **(SN 0300177361 through 0300198765)**	
19	4641022	1	Valve, Needle (Gas Machines Only)	
20	0100020	AR	Sealant	
21	0100062	AR	Retaining Compound #680	

ITEM	PART NUMBER	QTY	DESCRIPTION	REV
22	4568119	1	Tube, Fuel (Gas Machines Only)	
23	0100020	AR	Sealant **(SN 0300198766 through 0300272252)**	
	1001151268	Ref	**HYDRAULIC OIL TANK ASSEMBLY**	H
101	7024439	1	Cover	
102	7024440	1	Gasket	
103	7024441	1	Gauge, Sight	
105	7024443	1	Neck, Fill (Helgensen Brand)	
105	See Note	NSS	Neck, Fill (Hydac Brand) (Note: Use Item 70004862)	
105	7024445	1	Screen (Helgensen Brand)	
105	See Note	NSS	Screen (Hydac Brand) (Note: Use Item 70004862)	
106	7024444	1	Breather/Fill Cap (Helgensen Brand)	
106	70004862	1	Breather/Fill Cap/Strainer Kit (Hydac Brand)	
107	7024446	1	Plug, Magnetic	
	1001151010	Ref	**LP TANK BRACKETS INSTALLATION (FORD & GM ENGINE MACHINES ONLY) (8FT/2.4M WIDE MACHINES)**	D
	1001178512	Ref	**LP TANK BRACKETS INSTALLATION (FORD & GM ENGINE MACHINES ONLY) (7FT/2.1M WIDE MACHINES)**	A
200		Ref	Tank, LP - 43.5 Lbs. Options:	
200	4400275	1	Aluminum	
200	4400420	1	Steel	
201	1320220	2	Clamp	
201	1320127	2	Clamp, Toggle (1 Per Clamp)	
202	2720144	2	Hose	
203	0100020	AR	Sealant, Pipe	
204	2221197	1	Fitting, Reducer	
205	2180125	1	Fitting, 90 Swivel	
206	2220261	1	Fitting, Nipple	
207	2180388	1	Fitting, Bulkhead	
208	2180389	1	Valve, Relief	
209	2220418	1	Fitting, Tee Options:	
210	2180387	2	Fitting, Straight	
211	0641617	8	Bolt 3/8in-16NC x 2-1/8in (8ft/2.4m Wide Machines)	
211	0641606	8	Bolt 3/8in-16NC x 3/4in (7ft/2.1m Wide Machines)	
212	4891600	16	Flatwasher 3/8in Hardened (8ft/2.4m Wide Machines)	
212	4751600	8	Flatwasher 3/8in Hardened (7ft/2.1m Wide Machines)	
213	2180418	2	Fitting, Connector	
214	3311605	8	Locknut 3/8in-16NC (8ft/2.4m Wide Machines)	
215	1320218	2	Clamp, Spring	
216	0720804	2	Screw, Round Head #8-32NC x 1/2in	
217	4750800	4	Flatwasher #8 Regular	
218	3310805	2	Locknut #8-32NC	
219	0181949	2	Angle, Support	
220	2221024	2	Fitting, Union Ball Check	

FIGURE 2-18. ROTARY COUPLING INSTALLATION

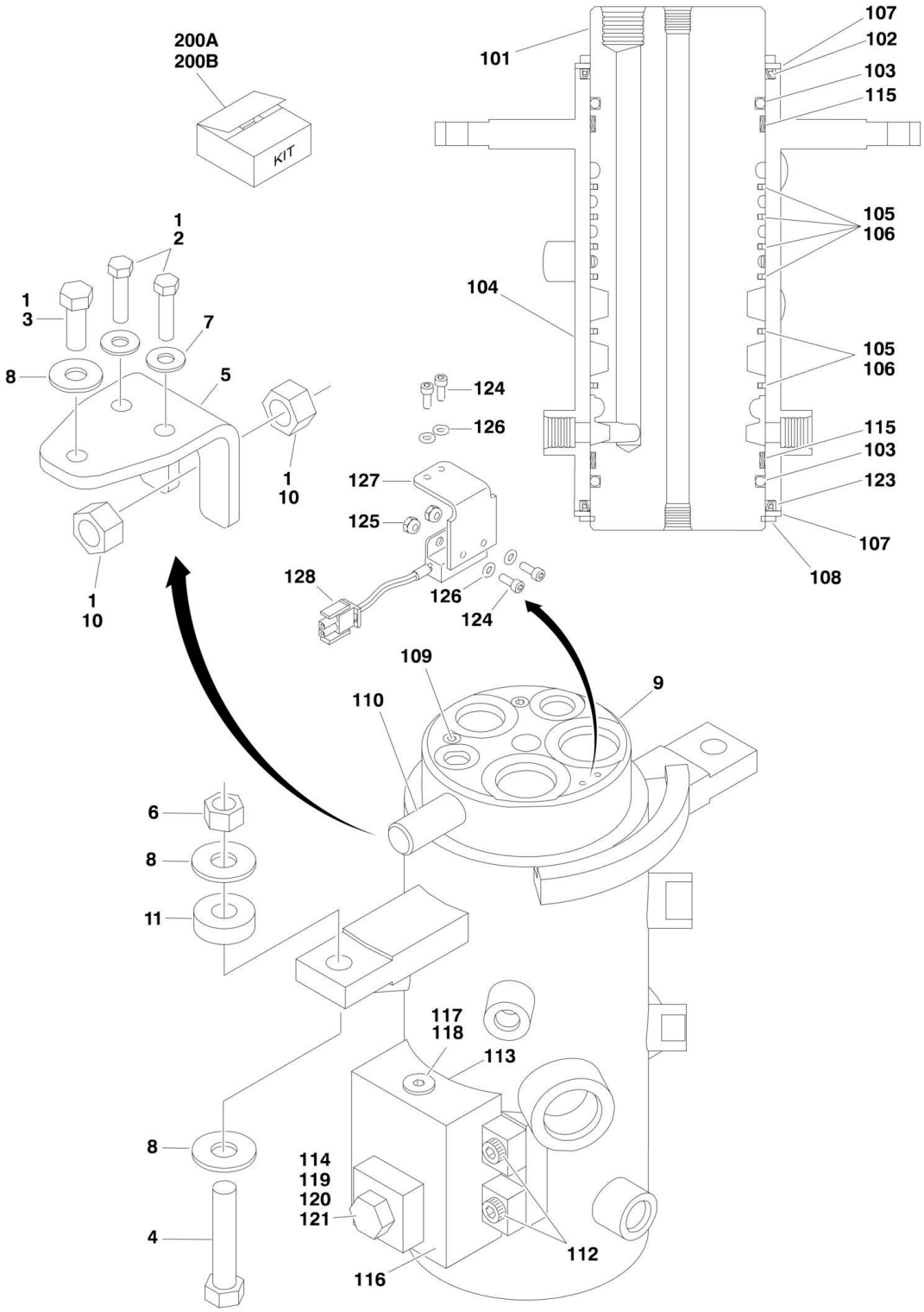

FIGURE 2-18. ROTARY COUPLING INSTALLATION

ITEM	PART NUMBER	QTY	DESCRIPTION	REV
		Ref	**ROTARY COUPLING INSTALLATION**	
	1001107498	Ref	**Rotary Coupling Installation 2WS**	B
	1001107499	Ref	**Rotary Coupling Installation 4WS**	B
1	0100011	AR	Compound, Locking	
2	0641612	2	Bolt 3/8in-16NC x 1-1/2in	
3	0641811	1	Bolt 1/2in-13NC x 1-3/8in	
4	0641820	2	Bolt 1/2in-13NC x 2-1/2in	
4	0641824	2	Bolt 1/2in-13NC x 3in	
5	0903056	1	Bracket	
6	3271805	2	Locknut 1/2in-13NC	
7	4751600	2	Flatwasher 3/8in Regular	
8	4751800	5	Flatwasher 1/2in Regular	
9		Ref	Coupling, Rotary Options (See Items 101-121 for Breakdown)	
9	1001106974	1	2WS	
9	1001106975	1	4WS	
10	3322201	2	Locknut 3/4in x 16NF	
11	1001178789	2	Shim **(SN 0300191376 through 0300272252)**	
		Ref	**ROTARY COUPLING ASSEMBLY**	
	1001106974	Ref	**Rotary Coupling Assembly 2WS**	B
	1001106975	Ref	**Rotary Coupling Assembly 4WS**	B
101	See Note	1	Body (Note: Not Available - Purchase Complete Assembly)	
102		Ref	Seal Options:	
102	70001248	1	Seal 2WS	
102	70002212	1	Seal 4WS	
103	See Note	2	O-Ring (Note: Use Item 200A or 200B) (Note: Use Item 200A or 200B)	
104	See Note	1	Housing (Note: Not Available - Purchase Complete Assembly)	
105		Ref	Seal, Cap	
105	70001248	6	Seal, Cap 2WS	
105	70002212	9	Seal, Cap 4WS	
106		Ref	O-Ring	
106	70001248	6	O-Ring 2WS	
106	70002212	9	O-Ring 4WS	
107		Ref	Ring Options:	
107	7026503	2	Ring 2WS	
107	7026511	2	Ring 4WS	
108		Ref	Ring, Retaining Options:	
108	7026504	1	Ring, Retaining 2WS	
108	7013189	1	Ring, Retaining 4WS	
109		Ref	Plug Options:	
109	80934561	2	Plug 2WS	
109	80934561	4	Plug 4WS	
110	See Note	1	Lug, Torque (Note: Not Available for Purchase)	
112	7026197	4	Bolt 5/16in-18NC x 1-1/4in	
113	See Note	NSS	O-Ring (Note: Use Item 200A or 200B)	
114	See Note	NSS	O-Ring (Note: Use Item 200A or 200B)	
115	See Note	NSS	Bearing (Note: Use Item 200A or 200B)	
116	7024404	1	Block Valve Assembly	
117	7026505	1	Plug	
118	7026506	1	Valve, Check	

SECTION 2 - TURNTABLE

ITEM	PART NUMBER	QTY	DESCRIPTION	REV
119	7026507	1	Plug	
120	7024404	1	Plunger, Valve (Note: Not Available for Purchase)	
121	7026509	1	Spring, Compression	
122	See Note	NSS	Protective Netting (Not Shown) (Note: Not Available for Purchase)	
123		Ref	Seal Options:	
123	70001248	1	Seal 2WS	
123	70002212	1	Seal 4WS	
124	See Note	4	Screw, Socket Head #10-24NC x 1/2in (Note: Not Available for Purchase)	
125	See Note	2	Locknut #10-24NC (Note: Not Available for Purchase)	
126	See Note	4	Flatwasher #10 (Note: Not Available for Purchase)	
127	70003454	1	Bracket, Switch Mounting	
128	4360517	1	Switch, Proximity	
200		Ref	Seal Kit Options:	
200A	70001248	1	2WS (Includes Items 102, 103, 105, 106, 113, 114, 115 & 123)	
200B	70002212	1	4WS (Includes Items 102, 103, 105, 106, 113, 114, 115 & 123)	

FIGURE 2-19. GROUND CONTROL BOX ASSEMBLY (SN 0300177361 through 0300181174)

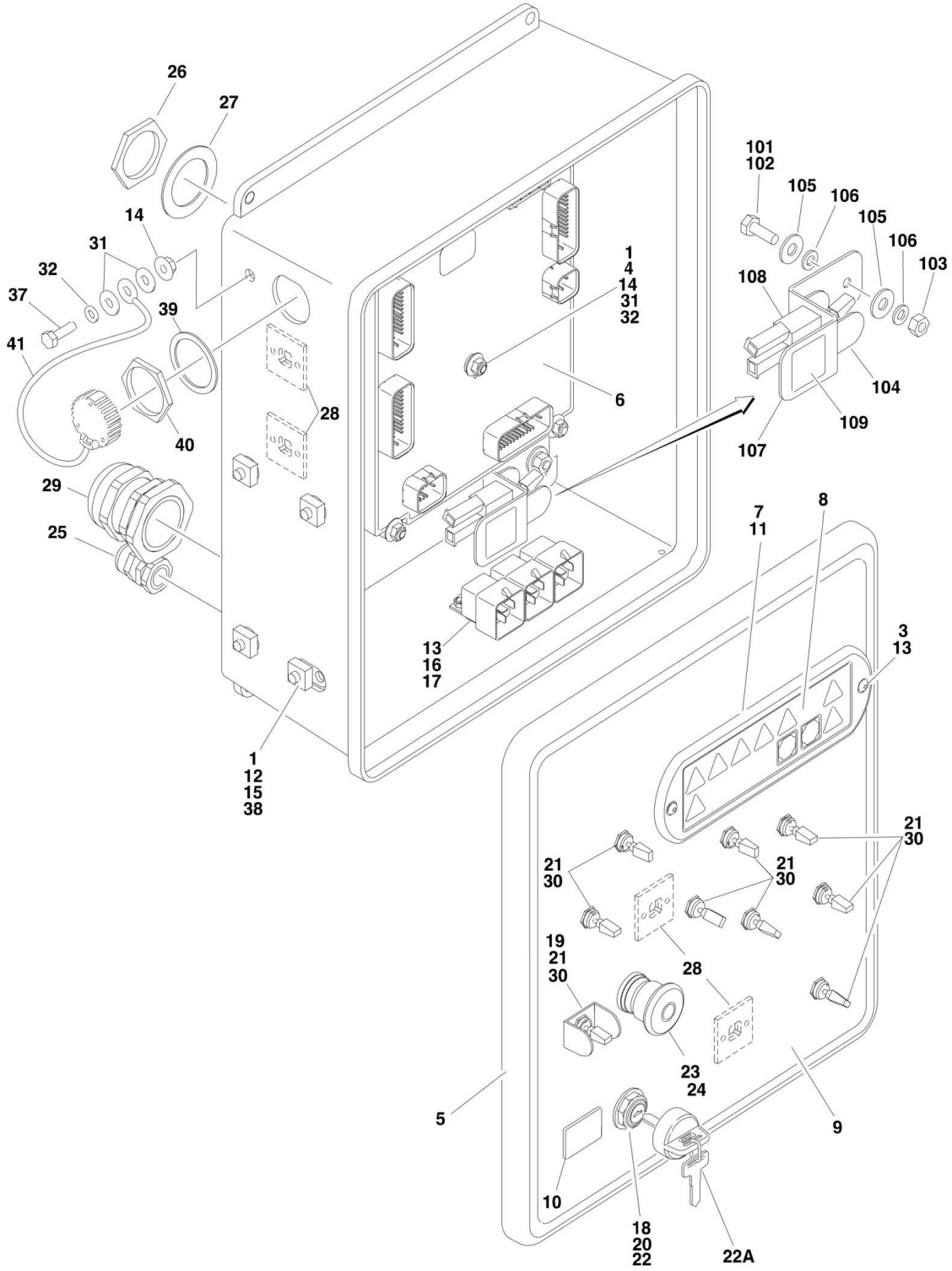

FIGURE 2-19. GROUND CONTROL BOX ASSEMBLY (SN 0300177361 through 0300181174)

ITEM	PART NUMBER	QTY	DESCRIPTION	REV
		Ref	**GROUND CONTROL BOX ASSEMBLIES (SN 0300177361 through 0300181174)**	
		Ref	**Ground Control Box Assemblies 600A**	
	1001110368	Ref	**Deutz D2011 Engine (ANSI and ANSI Export Specs)**	B
	1001110371	Ref	**Deutz D2011 Engine (ANSI Export and CE Specs)**	C
	1001145036	Ref	**Deutz TD2.9L4 Engine**	C
	1001110367	Ref	**GM Engine (ANSI and ANSI Export Specs)**	C
		Ref	**Ground Control Box Assemblies 600AJ**	
	1001110370	Ref	**Deutz D2011 Engine (ANSI, ANSI Export and Australian Spec)**	B
	1001110372	Ref	**Deutz D2011 Engine (ANSI Export and CE Specs)**	C
	1001145037	Ref	**Deutz TD2.9L4 Engine**	C
	1001110369	Ref	**GM Engine (ANSI and ANSI Export Specs)**	C
1	0100011	AR	Compound, Locking	
2	0100048	AR	Grease, Dielectric	
3	0630518	2	Capscrew, Button Head	
4	0630548	5	Tap, Bolt 2-1/2in	
5	1001111021	1	Box, Fiberglass	
6	1001103667	1	Module, Ground Control	
		Ref	Note: Re-calibration Required when Replaced.	
7	1670829	1	Bezel	
8	1706712	1	Decal - Ground Control Display	
9		Ref	Decal - Faceplate Options:	
9	1001102599	1	Decal - Faceplate 600A	
9	1001102600	1	Decal - Faceplate 600AJ	
10	2420172	1	Gauge, Hourmeter	
11	2760105	1	Housing, Display Light	
12	3300205	4	Nut, Retainer	
13	3300408	5	Locknut, Plastic Insert	
14	77143013	11	Nut 1/4in-20NC, Whiz Lock	
15	3539219	1	Plate, Reinforcement	
16	3740049	AR	Relay	
17	3900268	AR	Screw, Flange #10 x 1/2in	
18	3910804	6	Screw #8-32NC x 1/4in	
19	4060906	1	Shield, Toggle Switch	
20		Ref	Shim (.125in Dia) Options:	
20	4070987	1	Shim (.015in Thick)	
20	1001151393	1	Shim (.063in Thick)	
21	4360328	AR	Switch, Toggle Options:	
21		Ref	Switch, Toggle 600A	
21		Ref	Switch, Toggle 600AJ	
22		Ref	Switch, Key Options:	
22	4360469	1	ANSI, ANSI Export and Australian Specs	
22	4360470	1	ANSI Export and CE Specs	
22A	2860030	1	Key, Replacement (Fits Both Switches)	
23	4360475	1	Switch, Emergency Stop	
24	4360476	1	Switch, Contact Block	
25	4460426	1	Terminal, Strain Relief	
26	4460470	1	Nut, Terminal	
27	4460471	1	Lockwasher, Terminal	

ITEM	PART NUMBER	QTY	DESCRIPTION	REV
28	4460488	6	Mounting Base, Terminal	
29	4460526	1	Connector, Strain Relief	
30	4740444	AR	Washer, Special	
31	4751400	12	Flatwasher 1/4in Regular	
32	4761400	6	Lockwasher 1/4in	
33	4923224	1	Harness, Valve (See ELECTRICAL SECTION for Breakdown) (Not Shown)	
34		Ref	Harness, Engine (See ELECTRICAL SECTION for Breakdown) (Not Shown)	
34	1001110361	1	Deutz D2011 Engine	
34	1001145046	1	Deutz TD2.9L4 Engine	
34	1001110359	1	GM Engine	
35		Ref	Harness, Ground Control Box Options (See ELECTRICAL SECTION for Breakdown) (Not Shown)	
35	1001110379	1	Deutz D2011 Engine	
35	1001145992	1	Deutz TD2.9L4 Engine	
35	1001110379	1	GM Engine	
37	0641407	1	Bolt 1/4in-20NC x 7/8in	
38	0641506	4	Bolt 5/16in-18NC x 3/4in	
39	4460496	1	Lockwasher, Terminal	
40	4460497	1	Nut, Terminal	
41	1001106736	1	Cap, Dust	
	1001115918	Ref	**CRIBBING ENABLE SWITCH INSTALLATION**	A
101	0100011	AR	Compound, Locking	
102	0641406	1	Bolt 1/4in-20NC x 3/4in	
103	3311401	1	Nut 1/4in-20NC	
104	4060906	1	Guard, Switch	
105	4751400	2	Flatwasher 1/4in Regular	
106	4761400	2	Lockwasher 1/4in	
107	1001115889	1	Bracket	
108	1001115915	1	Cribbing Enable Harness	
108	4360336	1	Switch, Toggle	
108	4460226	2	Socket, Female	
109	1001115967	1	Decal - Cribbing	

FIGURE 2-20. GROUND CONTROL BOX ASSEMBLY (SN 0300181175 through 0300272252)

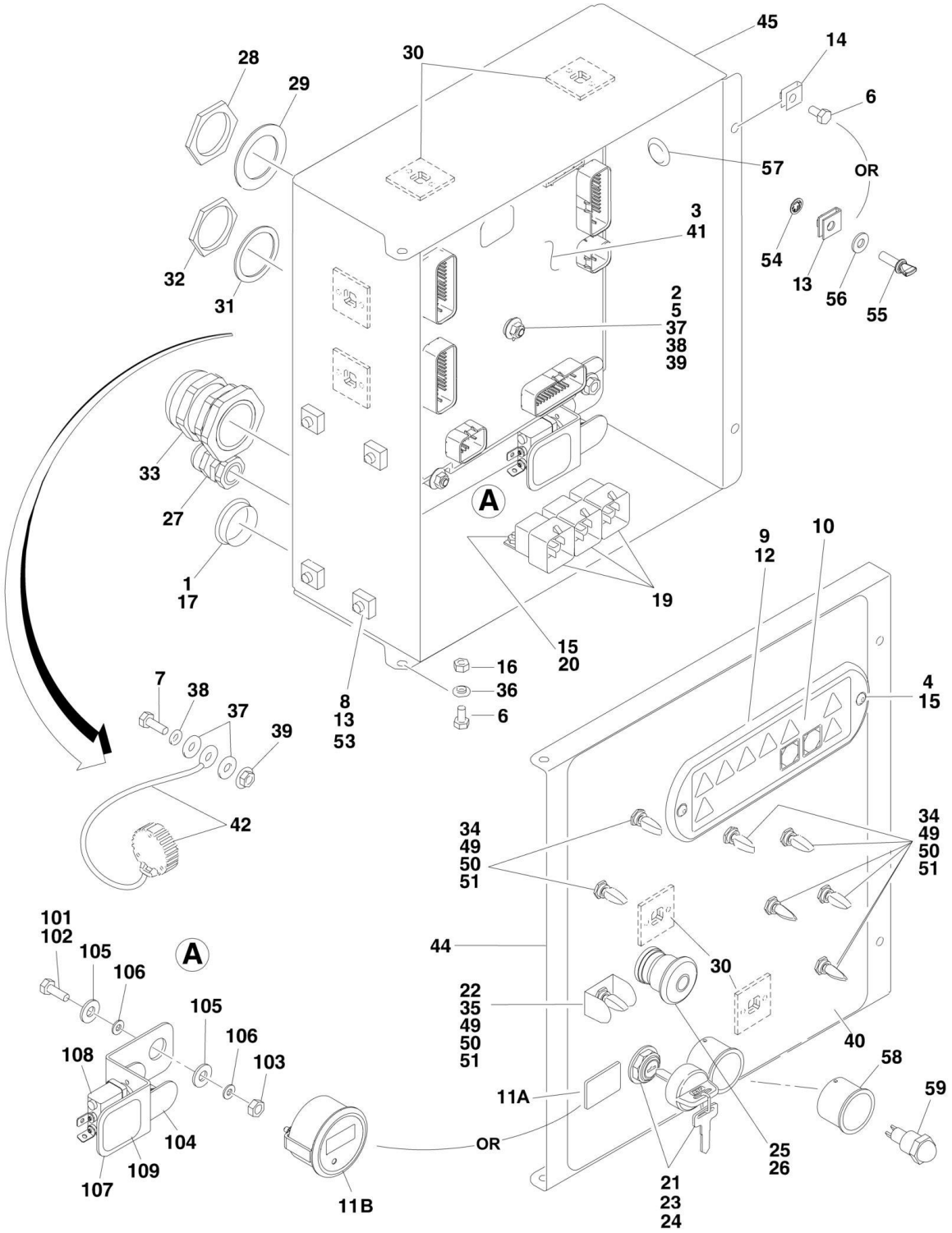

FIGURE 2-20. GROUND CONTROL BOX ASSEMBLY (SN 0300181175 through 0300272252)

ITEM	PART NUMBER	QTY	DESCRIPTION	REV
	1001165547	Ref	**GROUND CONTROL BOX ASSEMBLY - 600A DEUTZ TD2.9L4 ENGINE (ANSI AND CSA SPECS) (SN 0300181175 through 0300208081)**	D
	1001191912	Ref	**GROUND CONTROL BOX ASSEMBLY - 600A DEUTZ TD2.9L4 ENGINE (ANSI AND CSA SPECS) (SN 0300208082 through 0300272252)**	C
	1001154671	Ref	**GROUND CONTROL BOX ASSEMBLY - 600A DEUTZ D2011 ENGINE (ANSI EXPORT SPECS) (SN 0300181175 through 0300208081)**	D
	1001191878	Ref	**GROUND CONTROL BOX ASSEMBLY - 600A DEUTZ D2011 ENGINE (ANSI EXPORT SPECS) (SN 0300208082 through 0300272252)**	C
	1001154674	Ref	**GROUND CONTROL BOX ASSEMBLY - 600A DEUTZ D2011 ENGINE (CE SPECS) (SN 0300181175 through 0300200808)**	D
	1001188015	Ref	**GROUND CONTROL BOX ASSEMBLY - 600A DEUTZ D2011 ENGINE (CE SPECS) (SN 0300200809 through 0300208081)**	C
	1001191863	Ref	**GROUND CONTROL BOX ASSEMBLY - 600A DEUTZ D2011 ENGINE (CE SPECS) (SN 0300208082 through 0300272252)**	C
	1001219224	Ref	**GROUND CONTROL BOX ASSEMBLY - 600A FORD ENGINE**	B
	1001154670	Ref	**GROUND CONTROL BOX ASSEMBLY - 600A GM ENGINE (SN 0300181175 through 0300208081)**	E
	1001191877	Ref	**GROUND CONTROL BOX ASSEMBLY - 600A GM ENGINE (SN 0300208082 through 0300272252)**	C
	1001165548	Ref	**GROUND CONTROL BOX ASSEMBLY - 600AJ DEUTZ TD2.9L4 ENGINE (ANSI AND CSA SPECS) (SN 0300181175 through 0300208081)**	D
	1001191913	Ref	**GROUND CONTROL BOX ASSEMBLY - 600AJ DEUTZ TD2.9L4 ENGINE (ANSI AND CSA SPECS) (SN 0300208082 through 0300272252)**	D
	1001154673	Ref	**GROUND CONTROL BOX ASSEMBLY - 600AJ DEUTZ D2011 ENGINE (ANSI EXPORT AND AUSTRALIAN SPECS) (SN 0300181175 through 0300208081)**	D
	1001191909	Ref	**GROUND CONTROL BOX ASSEMBLY - 600AJ DEUTZ D2011 ENGINE (ANSI EXPORT AND AUSTRALIAN SPECS) (SN 0300208082 through 0300272252)**	C
	1001154675	Ref	**GROUND CONTROL BOX ASSEMBLY - 600AJ DEUTZ D2011 ENGINE (CE SPECS) (SN 0300181175 through 0300200808)**	D
	1001188016	Ref	**GROUND CONTROL BOX ASSEMBLY - 600AJ DEUTZ D2011 ENGINE (CE SPECS) (SN 0300200809 through 0300208081)**	C
	1001191862	Ref	**GROUND CONTROL BOX ASSEMBLY - 600AJ DEUTZ D2011 ENGINE (CE SPECS) (SN 0300208082 through 0300272252)**	C
	1001219225	Ref	**GROUND CONTROL BOX ASSEMBLY - 600AJ FORD ENGINE**	B
	1001154672	Ref	**GROUND CONTROL BOX ASSEMBLY - 600AJ GM ENGINE (SN 0300181175 through 0300208081)**	E
	1001191879	Ref	**GROUND CONTROL BOX ASSEMBLY - 600AJ GM ENGINE (SN 0300208082 through 0300272252)**	C
1	0100009	AR	Sealant	
2	0100011	AR	Compound, Locking	
3	0100048	AR	Grease, Dielectric	
4	0630518	2	Capscrew, button Head	
5	0630548	5	Bolt, 2-1/2in Tap	
6	0641404	4	Bolt 1/4-20 x 1/2	
7	0641407	1	Bolt 1/4-20 x 7/8	
8	0641507	AR	Bolt 5/16-18 x 7/8	
8	0641506	AR	Bolt 5/16-18 x 3/4	

ITEM	PART NUMBER	QTY	DESCRIPTION	REV
9	1670829	1	Bezel	
10	1706712	1	Decal - Ground Control Display	
11A	2420172	1	Gauge, Hourmeter	
11B	1001109503	1	Gauge, Hourmeter	
12	2760105	1	Housing, Display Light	
13	3300205	4	Nut, Retainer	
14	3300353	2	Nut, Tinnerman	
15	3300408	4	Locknut, Plastic Insert	
16	3311405	2	Nut 1/4-20	
17	3520035	1	Plug, Cap	
19	3740049	AR	Relay	
20	3900268	AR	Screw #10 x 1/2	
21	3910804	4	Screw #8-32 x 1/4	
22	4060906	1	Shield, Toggle Switch	
23	4070991	1	Shim	
24	4360469	1	Switch, Key - All Specs except CE Specs	
24	4360470	1	Switch, Key - CE Specs **(SN 0300181175 through 0300200808)**	
24	4360469	1	Switch, Key - CE Specs **(SN 0300200809 through 0300272252)**	
24	2860030	1	Key Replacement - All Specs	
25	4360475	1	Switch, Emergency Stop	
25	7020175	1	Cap, Mushroom	
25	7020176	1	Block, Contact	
26	4360476	1	Switch, Contact Block	
27	4460426	1	Connector, Strain Relief	
28	4460470	1	Nut, Terminal **(SN 0300177361 through 0300219038)**	
28	1001205043	1	Nut, Terminal **(SN 0300219039 through 0300272252)**	
29	4460471	1	Washer, Terminal **(SN 0300177361 through 0300219038)**	
29	1001205044	1	Washer, Terminal **(SN 0300219039 through 0300272252)**	
30	4460488	6	Mounting Base, Terminal	
31	4460496	1	Washer, Terminal **(SN 0300177361 through 0300219038)**	
31	1001125784	1	Washer, Terminal **(SN 0300219039 through 0300272252)**	
32	4460497	1	Nut, Terminal **(SN 0300177361 through 0300219038)**	
32	1001125785	1	Nut, Terminal **(SN 0300219039 through 0300272252)**	
33	4460526	1	Connector, Strain Relief	
34	4740397	7	Spacer	
35	4740444	1	Washer	
36	4740518	2	Washer	
37	4751400	12	Washer 1/4	
38	4761400	6	Washer 1/4	
39	77143013	11	Nut 1/4-20	
40	1001102599	1	Decal, Faceplate 600A (All Specs except CE)	
40	1001102599	1	Decal, Faceplate 600A (CE Spec) **(SN 0300181175 through 0300200808)**	
40	1001180093	1	Decal, Faceplate 600A (CE Spec) **(SN 0300200809 through 0300272252)**	
40	1001102600	1	Decal, Faceplate 600AJ (All Specs except CE)	
40	1001102600	1	Decal, Faceplate 600AJ (CE Spec) **(SN 0300181175 through 0300200808)**	
40	1001180094	1	Decal, Faceplate 600AJ (CE Spec) **(SN 0300200809 through 0300272252)**	
41	1001103667	1	Module, Ground Control	
		Ref	Note: Re-calibration Required when Replaced.	

ITEM	PART NUMBER	QTY	DESCRIPTION	REV
42	1001106736	1	Cap, Dust	
43		Ref	Harness, Ground Control Box Options (Not Shown - See ELECTRICAL SECTION for Breakdown)	
43	1001110379	1	Harness, Ground Control Box (Deutz D2011 Engines - All Specs except CE Spec)	
43	1001110379	1	Harness, Ground Control Box (Deutz D2011 Engines - CE Spec) **(SN 0300181175 through 0300200808)**	
43	1001185897	1	Harness, Ground Control Box (Deutz D2011 Engines - CE Spec) **(SN 0300200809 through 0300272252)**	
43	1001145992	1	Harness, Ground Control Box (Deutz TD2.9L4 Engines)	
43	1001110379	1	Harness, Ground Control Box (Ford Engines)	
43	1001110379	1	Harness, Ground Control Box (GM Engines)	
44	1001152173	1	Lid (All Specs except CE Spec) **(SN 0300177361 through 0300211784)**	
44	1001204150	1	Lid (All Specs except CE Spec) **(SN 0300211785 through 0300272252)**	
44	1001152173	1	Lid (CE Spec) **(SN 0300181175 through 0300200808)**	
44	1001188042	1	Lid (CE Spec) **(SN 0300200809 through 0300211784)**	
44	1001201995	1	Lid (CE Spec) **(SN 0300211785 through 0300272252)**	
45	1001152175	1	Box **(SN 0300177361 through 0300211784)**	
45	1001201996	1	Box **(SN 0300211785 through 0300272252)**	
46	1001164563	1	Harness, Deutz TD2.9L4 Engine (Not Shown - See ELECTRICAL SECTION for Breakdown) **(SN 0300181175 through 0300208081)**	
46	1001191866	1	Harness, Deutz TD2.9L4 Engine (Not Shown - See ELECTRICAL SECTION for Breakdown) **(SN 0300208082 through 0300272252)**	
46	1001154390	1	Harness, Deutz D2011 Engine (Not Shown - See ELECTRICAL SECTION for Breakdown) **(SN 0300181175 through 0300208081)**	
46	1001191868	1	Harness, Deutz D2011 Engine (Not Shown - See ELECTRICAL SECTION for Breakdown) **(SN 0300208082 through 0300272252)**	
46	1001214507	1	Harness, Ford Engine (Not Shown - See ELECTRICAL SECTION for Breakdown)	
46	1001154388	1	Harness, GM Engine (Not Shown - See ELECTRICAL SECTION for Breakdown) **(SN 0300181175 through 0300208081)**	
46	1001191867	1	Harness, GM Engine (Not Shown - See ELECTRICAL SECTION for Breakdown) **(SN 0300208082 through 0300272252)**	
47	1001154392	1	Harness, Valve (Not Shown - See ELECTRICAL SECTION for Breakdown)	
49	1001155043	AR	Washer	
50	1001155044	AR	Nut 15/32-32	
51	1001155045	AR	Switch, Toggle	
53	4891500	4	Washer 5/16	
54	1001188874	2	Nut	
55	1001103308	2	Screw 1/4	
56	4711400	2	Washer 1/4	
57	3520031	2	Plug	
58	1001176469	1	Shroud (CE Spec) **(SN 0300200809 through 0300272252)**	
59	4360387	1	Switch, Push Button (CE Spec) **(SN 0300200809 through 0300272252)**	
	1001115918	Ref	**CRIBBING ENABLE SWITCH INSTALLATION**	A
101	0100011	AR	Compound, Locking	
102	0641406	1	Bolt 1/4in-20NC x 3/4in	
103	3311401	1	Nut 1/4in-20NC	
104	4060906	1	Guard, Switch	
105	4751400	2	Flatwasher 1/4in Regular	
106	4761400	2	Lockwasher 1/4in	

ITEM	PART NUMBER	QTY	DESCRIPTION	REV
107	1001115889	1	Bracket	
108	1001115915	1	Cribbing Enable Harness	
108	4360336	1	Switch, Toggle	
108	4460226	2	Socket, Female	
109	1001115967	1	Decal - Cribbing	

FIGURE 2-21. ELECTRICAL OPTIONS INSTALLATIONS (TURNTABLE MOUNTED)

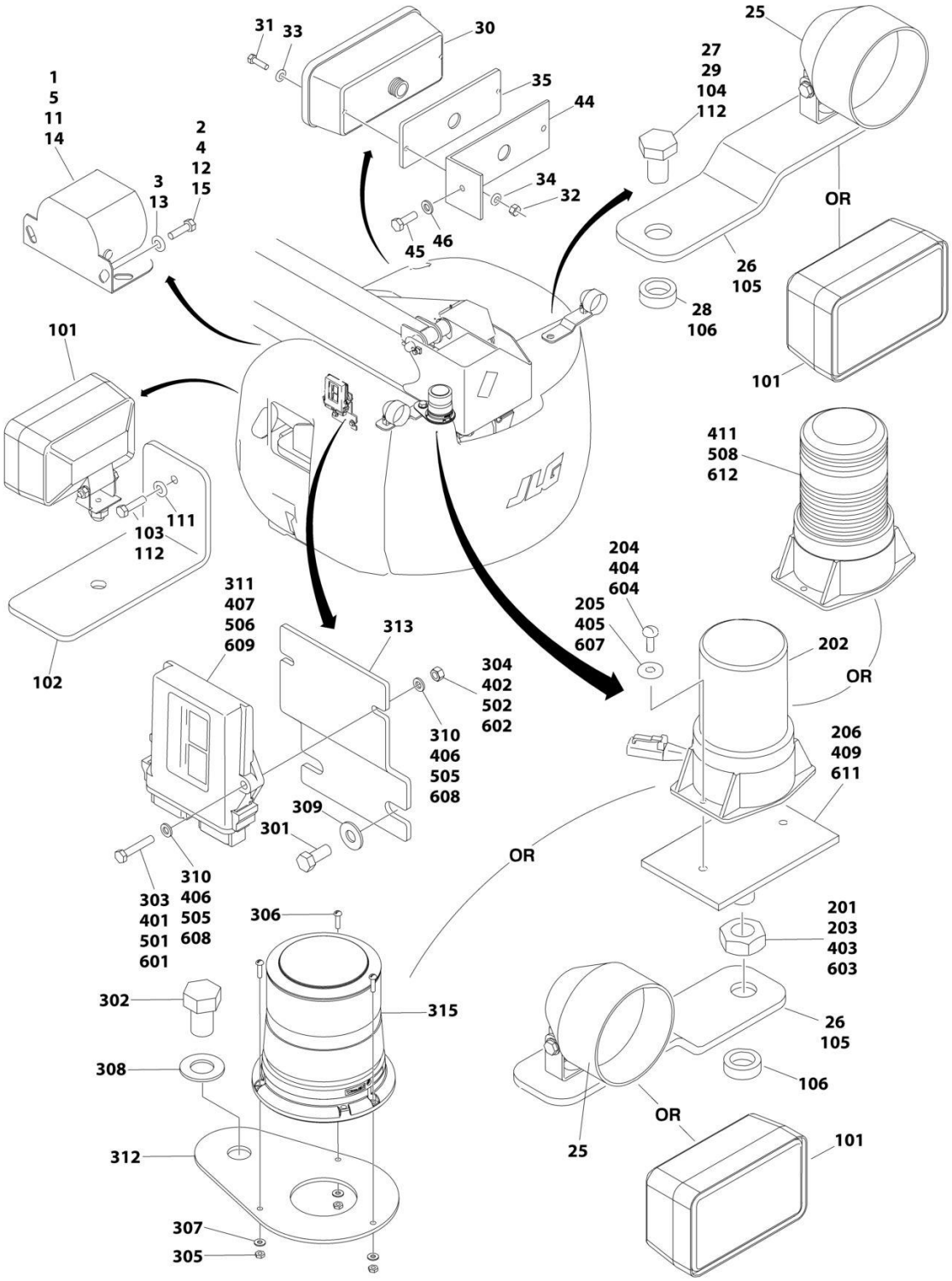

FIGURE 2-21. ELECTRICAL OPTIONS INSTALLATIONS (TURNTABLE MOUNTED)

ITEM	PART NUMBER	QTY	DESCRIPTION	REV
	0270833	Ref	**ALARMS INSTALLATIONS (SN 0300177361 through 0300181174)**	D
1	0257887	1	Alarm/Harness Assembly	
1	0140032	1	Alarm	
1	2820035	6 in/15cm	Loom	
1	4460424	1	Plug	
1	4460268	2	Socket	
2	0641406	2	Bolt 1/4in-20NC x 3/4in	
3	4711400	2	Flatwasher 1/4in Thin	
4	0100011	AR	Compound, Locking	
5	0100048	AR	Sealant, Silicone	
	1001160074	Ref	**ALARMS INSTALLATIONS (SN 0300181175 through 0300272252)**	B
11	0140044	1	Alarm	
12	0641406	2	Bolt 1/4-20 x 3/4	
13	4711400	2	Washer 1/4	
14	0100048	AR	Compound, Dielectric	
15	0100011	AR	Compound, Locking	
	0271552	Ref	**LIGHTS INSTALLATIONS (OPTIONAL) (SN 0300177361 through 0300201472)**	D
	1001176296	Ref	**LIGHTS INSTALLATIONS (OPTIONAL) (SN 0200201473 through 0300272252)**	A
25	2920110	2	Headlight	
26	0902206	2	Bracket, Mounting	
27	0642612	1	Bolt 1in-8NC x 1-1/2in	
28	4220162	2	Spacer **(SN 0300177361 through 0300184391)**	
28	4892600	2	Washer **(SN 0300184392 through 0300272252)**	
29	0100011	AR	Compound, Locking	
30	2920113	2	Tail Light	
31	3911040	4	Screw, Machine #10-24NC x 2-1/2	
32	3311005	4	Nut #10-24NC	
33	4751000	4	Flatwasher #10 Regular	
34	4740362	4	Washer, Fender	
35	3960461	2	Gasket	
37	4240032	18	Tie-Strap (Not Shown)	
38	4460234	18	Mount, Tie-Strap (Not Shown)	
39	4360522	1	Switch, Push Button (Not Shown - Located on Console)	
41	3820001	11	Pop Rivet (Not Shown)	
42	1705170	1	Decal - Lights (Not Shown - Located on Console)	
43	3311605	2	Nut 3/8 (Not Shown)	
44	0903119	2	Bracket **(SN 0300201473 through 0300272252)**	
45	0641408	2	Bolt 1/4 x 1	
46	4751400	2	Washer 1/4	
	0274200	Ref	**CHASSIS ILLUMINATION LIGHT INSTALLATION**	B
101	2920157	4	Lamp, Worklight	
102	0903119	2	Bracket, Light Mounting	
103	0642612	AR	Bolt 1/4in-20NC x 7/8in	
104	0642612	2	Bolt 1in-8NC x 1-1/2in	
105	0902206	2	Bracket, Light Mounting	
106	4220162	2	Spacer	

ITEM	PART NUMBER	QTY	DESCRIPTION	REV
109	4360522	1	Switch, Push Button (Not Shown - Located on Console)	
110	4460234	10	Mount, Cable (Not Shown)	
111	4751400	2	Flatwasher 1/4in Regular	
112	0100011	AR	Compound, Locking	
113	4240032	21	Strap, Tie (Not Shown)	
114	1705170	1	Decal - Lights	
	1001149955	Ref	**STROBE LIGHT AND HARNESS INSTALLATION (AMBER) (OPTIONAL) (SN 0300177361 through 0300181174)**	B
	1001160077	Ref	**STROBE LIGHT AND HARNESS INSTALLATION (AMBER) (OPTIONAL) (SN 0300181175 through 0300272252)**	B
	1001150406	Ref	**Strobe Light Assembly (Amber) (Optional)**	B
201	0100035	AR	Compound, Locking	
202	2920161	1	Strobe Light/Harness Assembly	
202	7016319	1	Bulb	
202	7016372	1	Lens	
203	3312602	1	Nut, Jam 1in-8NC	
204	3900085	2	Screw #10-32 x 1/2in	
205	4751000	2	Flatwasher 1/4in Thin	
206	1001149994	1	Mount Strobe	
210	1001149818	1	Harness, Strobe Light (Not Shown - See ELECTRICAL SECTION for Breakdown) **(SN 0300177361 through 0300181174)**	
	1001188857	Ref	**STROBE LIGHT AND HARNESS INSTALLATION (BLUE) (OPTIONAL) (SN 0300177361 through 0300217819)**	C
	1001207305	Ref	**STROBE LIGHT AND HARNESS INSTALLATION (RED) (OPTIONAL) (SN 0300177361 through 0300217138)**	B
301	0641607	AR	Bolt 3/8 x 7/8	
302	0642612	1	Bolt 1 x 1-1/2	
303	0700615	2	Bolt M6 x 35	
303	0700617	2	Bolt M6 x 45	
304	3290607	2	Nut M6	
305	3311005	3	Nut #10	
306	3911012	3	Screw #10 x 3/4	
307	4711000	3	Washer #10	
308	4712600	1	Washer 1	
309	4751600	AR	Washer 3/8	
310	4811700	4	Washer M6	
311	1001142683	1	Module, Beacon Light	
312	1001142694	1	Bracket	
313	1001142722	1	Bracket **(SN 0300177361 through 0300210914)**	
314	1001142736	1	Harness, Beacon Control (Module to Light) (Not Shown - See ELECTRICAL SECTION for Breakdown)	
315	1001143431	1	Light, Strobe (Blue)	
315	1001197067	1	Light, Strobe (Red)	
316	1001150944	1	Harness, Beacon Control (Module to Ground Control Box) (Not Shown - See ELECTRICAL SECTION for Breakdown) **(SN 0300177361 through 0300210914)**	
	1001205499	Ref	**STROBE LIGHT AND HARNESS INSTALLATION (BLUE) (OPTIONAL) (SN 0300217820 through 0300259736)**	E
	1001209869	Ref	**STROBE LIGHT AND HARNESS INSTALLATION (RED) (OPTIONAL) (SN 0300217820 through 0300259736)**	E
401	0700617	2	Bolt M6 x 45	
402	3290607	2	Nut M6	
403	3312602	1	Nut 1	
404	3900085	2	Screw #10 x 1/2	

ITEM	PART NUMBER	QTY	DESCRIPTION	REV
405	4751000	2	Washer #10	
406	4711700	4	Washer 7/16	
407	1001142683	1	Module, Beacon Control	
408	1001142736	1	Harness, Beacon Control (Module to Ground Control Box) (Not Shown - See ELECTRICAL SECTION for Breakdown)	
409	1001149994	1	Mount	
411	1001200910	1	Light, Strobe (Blue)	
411	1001207004	1	Light, Strobe (Red)	
412	4240032	AR	Tie-Strap (Not Shown)	
413	4460488	AR	Mount, Tie-Strap (Not Shown)	
	1001242251	Ref	STROBE LIGHT AND HARNESS INSTALLATION (BLUE) (OPTIONAL) **(SN 0300259737 through 0300272252)**	A
501	0700617	2	Bolt M6 x 45	
502	3290607	2	Nut M6	
503	4240032	AR	Tie-Strap (Not Shown)	
504	4460488	AR	Mount, Tie-Strap (Not Shown)	
505	4711700	4	Washer 7/16	
506	1001142683	1	Module, Beacon Control	
507	1001142736	1	Harness, Beacon Control (Module to Ground Control Box) (Not Shown - See ELECTRICAL SECTION for Breakdown)	
508	1001217005	1	Beacon Light Kit – Blue (Not Shown)	
	1001242252	Ref	STROBE LIGHT AND HARNESS INSTALLATION (RED) (OPTIONAL) **(SN 0300259737 through 0300272252)**	A
601	0700617	2	Bolt M6 x 45	
602	3290607	2	Nut M6	
603	3312602	1	Nut 1	
604	3900085	2	Screw #10 x 1/2	
605	4240032	AR	Tie-Strap (Not Shown)	
606	4460488	AR	Mount, Tie-Strap (Not Shown)	
607	4751000	2	Washer #10	
608	4711700	4	Washer 7/16	
609	1001142683	1	Module, Beacon Control	
610	1001142736	1	Harness, Beacon Control (Module to Ground Control Box) (Not Shown - See ELECTRICAL SECTION for Breakdown)	
611	1001149994	1	Mount	
612	1001207004	1	Beacon Light Kit – Red (Not Shown)	

FIGURE 2-22. ENGINE TRAY JACK INSTALLATIONS (OPTIONAL)

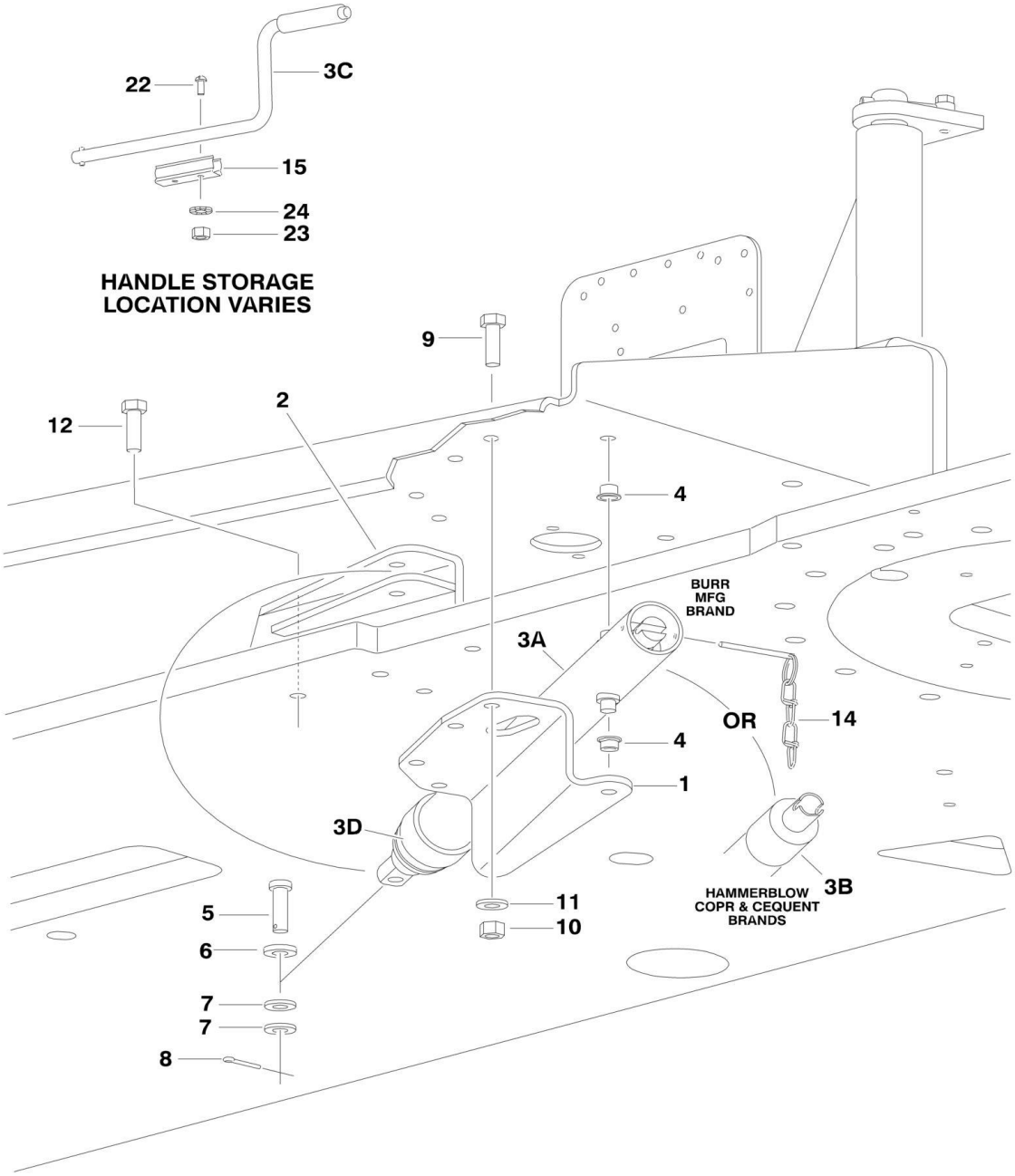

FIGURE 2-22. ENGINE TRAY JACK INSTALLATIONS (OPTIONAL)

ITEM	PART NUMBER	QTY	DESCRIPTION	REV
		Ref	**ENGINE TRAY JACK INSTALLATION**	
	0255880	Ref	**Machines with Deutz D2011 Engines**	6-H
	1001137891	Ref	**Machines with Deutz TD2.9L4 Engines**	B
	1001218548	Ref	**Machines with Ford Engines**	A
	0255880	Ref	**Machines with GM Engines**	6-H
1		Ref	Bracket Options:	
1	3537445	1	Bracket (All Except Ford Engine)	
1	1001218547	1	Bracket (Ford Engines)	
2		Ref	Bracket Options:	
2	4845163	1	Machines with Deutz D2011 Engines	
2	1001137892	1	Machines with Deutz TD2.9L4 & Ford Engines	
2	4845163	1	Machines with GM Engines	
3	2840018	1	Hydraulic Jack Assembly (Deutz D2011 & GM Engines)	
3	2840016	1	Hydraulic Jack Assembly (Deutz TD2.9L4 & Ford Engines)	
3A		Ref	Burr Manufacturing Brand	
3B		Ref	Hammerblow Corp and Cequent Brands	
3C		Ref	Handle Options:	
3C	7016374	1	Burr Manufacturing Brand	
3C	7024598	1	Hammerblow Corp and Cequent Brands	
3D	7016322	1	Wiper (Burr Manufacturing Brand Only)	
4	0962051	2	Bushing, Flanged	
5	3430816	1	Pin, Clevis	
6	4891800	1	Flatwasher 1/2in Hardened	
7	4711800	AR	Flatwasher 1/2in Thin	
8	3450404	1	Pin, Cotter 1/8in x 1in	
9	0641609	AR	Bolt 3/8 x 1-1/8	
9	0761014	AR	Bolt M10 x 30	
10	3311605	AR	Nut 3/8	
10	3291007	AR	Nut M10	
11	4891600	AR	Washer 3/8	
11	4812000	AR	Washer M10	
12	0641810	4	Bolt 1/2in-13NC x 1-1/4in	
14	Not Required	0	Not Required	
15	1380147	1	Clip, Spring	
22	3910608	2	Screw #6-32NC x 1in	
23	3310601	2	Nut #6-32NC	
24	4770600	2	Starwasher #6	

FIGURE 2-23. HOODS INSTALLATIONS

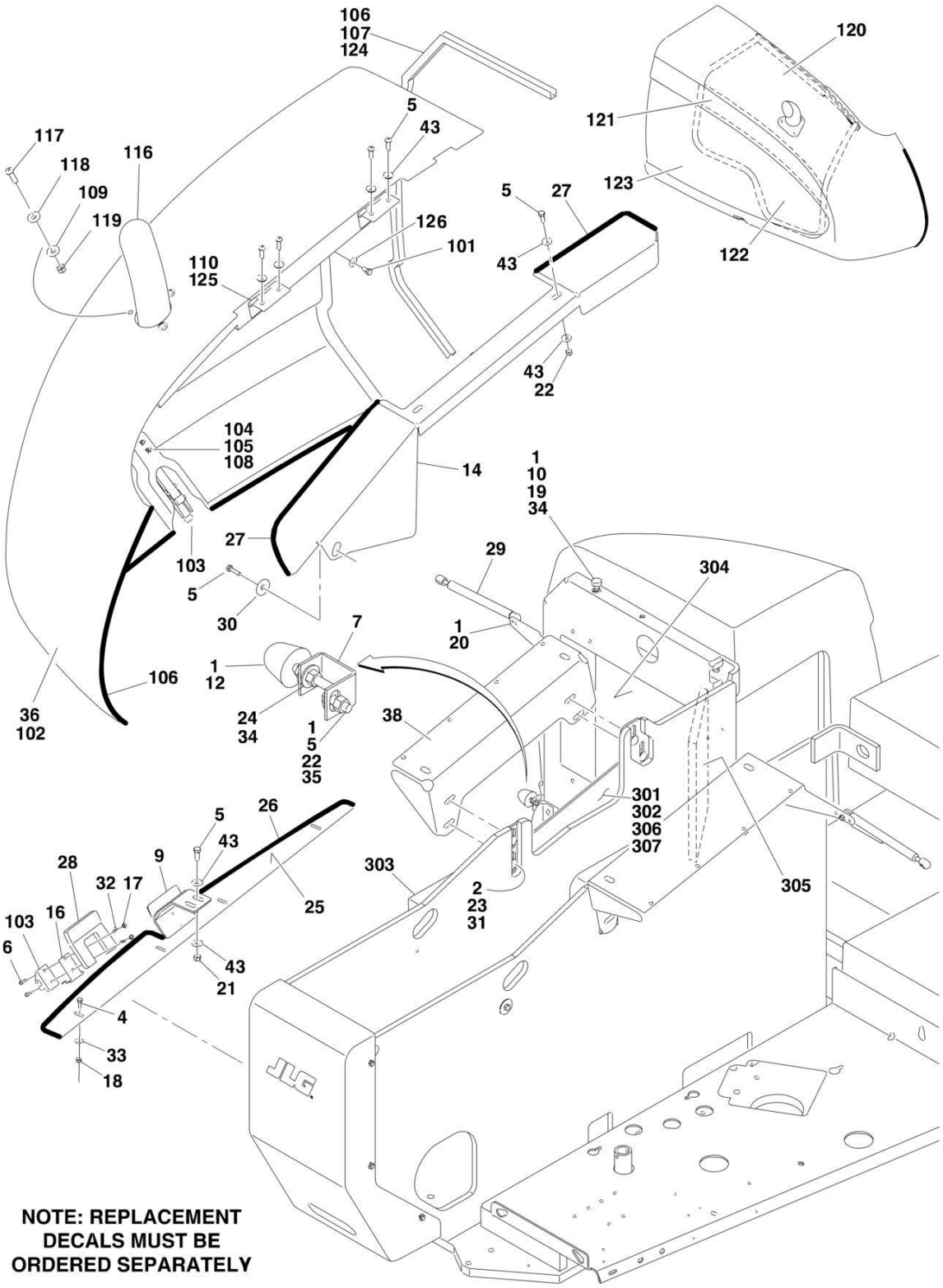

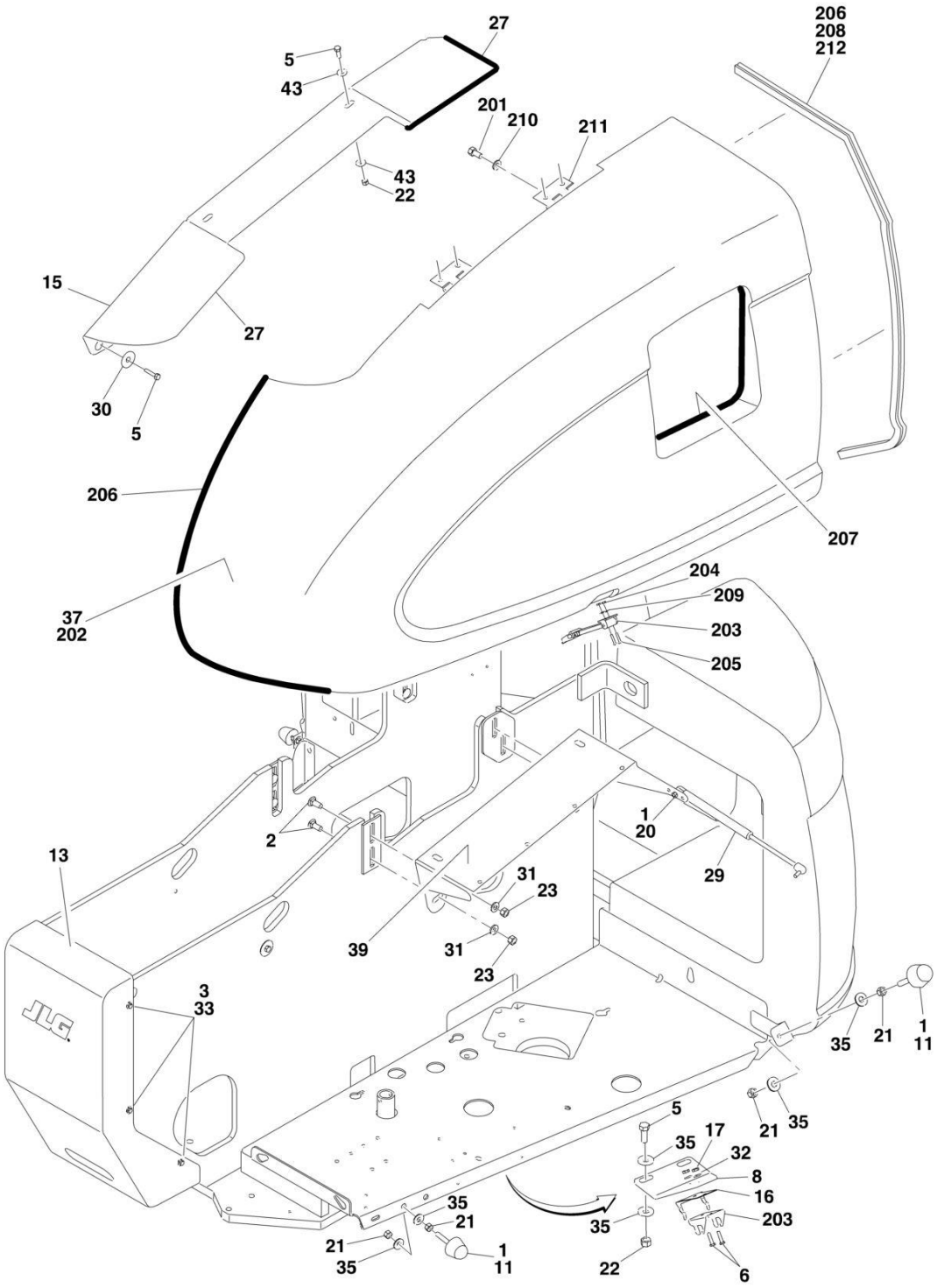

NOTE: REPLACEMENT DECALS MUST BE ORDERED SEPARATELY

FIGURE 2-23. HOODS INSTALLATIONS

ITEM	PART NUMBER	QTY	DESCRIPTION	REV
		Ref	**Note: replacement decals must be ordered separately.**	
		Ref	**HOODS INSTALLATIONS**	
	1001152433	Ref	**Hoods for Deutz D2011 Engine Machines (ANSI, ANSI Export, CSA and Japanese Specs)**	G
	1001152435	Ref	**Hoods with Noise Reduction for Deutz D2011 Engine Machines (ANSI Export, Australian, CE and Japanese Specs)**	I
	1001137845	Ref	**Hoods for Deutz TD2.9L4 & Ford Engine Machines**	G
	1001154151	Ref	**Hoods for GM Engine Machines**	H
1	0100011	AR	Compound, Locking	
2	0630507	8	Bolt, Carriage 1/2in-13NC x 1-1/4in	
3	0641405	6	Bolt 1/4in-20NC x 3/4in	
4	0641407	4	Bolt 1/4in-20NC x 7/8in	
5	0641608	19	Bolt 3/8in-16NC x 1in	
6	0721006	4	Bolt #10-24NC x 3/4in	
7	0902219	1	Bracket, Bumper	
8	1001154514	1	Bracket, Latch - Tank Side **(SN 0300177361 through 0300185143)**	
8	1001137876	1	Bracket, Latch - Tank Side **(SN 0300185144 through 0300272252)**	
9	0902335	1	Bracket, Latch - Engine Side	
10	0940049	1	Bumper	
11	0940071	2	Bumper	
12	0940088	1	Bumper	
13	1670767	1	Cover, Turntable	
14	2680433	1	Spacer, Hood (Engine Side)	
15	2680434	1	Spacer, Hood (Tank Side)	
16	2940188	2	Latch, Spring Clip	
17	3311005	4	Locknut #10-24NC	
18	3311405	4	Locknut 1/4in-20NC	
19	3311501	2	Nut 5/16in-18NC	
20	3311505	4	Locknut 5/16in-18NC	
21	3311601	6	Nut 3/8in-16NC	
22	3311605	7	Locknut 3/8in-16NC	
23	3311805	8	Locknut 1/2in-13NC	
24	3321501	2	Nut 5/16in-24NC	
25	3539923	1	Plate, Seal	
26	3960389	3.5 ft/1m	Seal, Bulb (Machines with Deutz D2011 Engine Only)	
27	3960418	7 ft/2.1m	Seal	
28	3960467	1	Seal, Foam	
29	4160143	2	Spring, Gas	
30	4740076	2	Washer, Fender	
31	4740171	8	Flatwasher 1/2in Hardened	
32	4751000	4	Flatwasher #10 Regular	
33	4751400	10	Flatwasher 1/4in Regular	
34	4751500	4	Flatwasher 5/16in Regular	
35	4751600	AR	Flatwasher 3/8in Regular	
35	0940088	1	Bumper	
36		Ref	Hood - Engine Side Options (See Items 101- 120 for Breakdown)	
36	1001160004	1	Hood for Deutz D2011 Engine Machines (ANSI, ANSI Export, CSA and Japanese Specs)	
36	1001160034	1	Hood with Noise Reduction for Deutz D2011 Engine Machines	

ITEM	PART NUMBER	QTY	DESCRIPTION	REV
			(ANSI Export, Australian, CE and Japanese Specs)	
36	1001160189	1	Hood for Deutz TD2.9L4 & Ford Engine Machines	
36	1001160047	1	Hood for GM Engine Machines	
37		Ref	Hood - Tank Side Options (See Items 201- 213 for Breakdown)	
37	1001160003	1	Hood for Deutz D2011 Engine Machines	
37	1001160190	1	Hood for Deutz TD2.9L4 & Ford Engine Machines	
37	1001160003	1	Hood for GM Engine Machines	
38	1001152556	NLA	Mount - Engine Side (Use p/n 1001235948) **(SN 0300177361 through 0300213835)**	
38	1001207792	NLA	Mount - Engine Side (Use p/n 1001235948) **(SN 0300213836 through 0300251141)**	
38	1001235948	1	Mount - Engine Side **(SN 0300251142 through 0300272252)**	
39	1001152557	1	Mount - Tank Side	
43	4891600	AR	Flatwasher 3/8in Hardened	
		Ref	**HOOD - ENGINE SIDE**	
	1001160004	Ref	**Hoods for Deutz D2011 Engine Machines (ANSI, ANSI Export, CSA and Japanese Specs)**	I
	1001160034	Ref	**Hoods with Noise Reduction for Deutz D2011 Engine Machines (ANSI Export, Australian, CE and Japanese Specs)**	I
	1001160189	Ref	**Hoods for Deutz TD2.9L4 & Ford Engine Machines**	G
	1001160047	Ref	**Hoods for GM Engine Machines**	H
101	0641606	4	Bolt 3/8in-16NC x 3/4in	
102		Ref	Hood, Engine Side Options:	
102	1001160004	1	Hood for Deutz D2011 Engine Machines (ANSI, ANSI Export, CSA and Japanese Specs)	
102	1001160034	1	Hood with Noise Reduction for Deutz D2011 Engine Machines (ANSI Export, Australian, CE and Japanese Specs)	
102	1001160189	1	Hood for Deutz TD2.9L4 & Ford Engine Machines	
102	1001160047	1	Hood for GM Engine Machines	
103	2940088	1	Latch	
104	3311005	2	Locknut #10-24NC	
105	3911016	2	Screw #10-24NC x 1in	
106	3960389	3 ft/0.9m	Seal **(SN 0300177361 through 0300181748)**	
106	1001164281	8 ft/2.4m	Seal **(SN 0300181749 through 0300272252)**	
107	3960462	68 in/1.7m	Seal	
108	4711000	2	Flatwasher #10 Thin	
109	4751600	AR	Flatwasher 3/8in Regular	
110	1001151670	2	Hinge **(SN 0300177361 through 0300206631)**	
110	1001188467	2	Hinge **(SN 0300206632 through 0300272252)**	
116		Ref	Outlet, Exhaust Options:	
116	1001160598	1	Deutz D2011 Engine Machines	
116	1001137860	1	Deutz TD2.9L4 & Ford Engine Machines	
116	1001117039	1	GM Engine Machines	
117	3900232	3	Bolt, Button Head 3/8in-16NC x 1-1/4in **(SN 0300177361 through 0300206631)**	
117	0641610	3	Bolt 3/8-16NC x 1-1/4 **(SN 0300206632 through 0300272252)**	
118	4740500	3	Washer, Nylon Shoulder **(SN 0300177361 through 0300206631)**	
119	3311605	3	Locknut 3/8in-16NC	
120		Ref	Insulation Options:	
120	1001160961	1	Insulation for Deutz D2011 Engine Machines (ANSI, ANSI Export, CSA and Japanese Specs)	
120	1001161025	1	Insulation with Noise Reduction for Deutz D2011 Engine Machines (ANSI Export, Australian, CE and Japanese Specs)	

ITEM	PART NUMBER	QTY	DESCRIPTION	REV
120	1001161059	1	Insulation for Deutz TD2.9L4 & Ford Engine Machines **(SN 0300177361 through 0300185533)**	
120	1001165741	1	Insulation for Deutz TD2.9L4 & Ford Engine Machines **(SN 0300185534 through 0300272252)**	
120	1001161059	1	Insulation for GM Engine Machines	
121	1001160962		Insulation **(SN 0300177361 through 0300181748)**	
122		Ref	Insulation Options:	
122	1001160963	1	Insulation for Deutz D2011 Engine Machines (ANSI, ANSI Export, CSA and Japanese Specs)	
122	1001161026	1	Insulation with Noise Reduction for Deutz D2011 Engine Machines (ANSI Export, Australian, CE and Japanese Specs)	
122	1001160963	1	Insulation for Deutz TD2.9L4 & Ford Engine Machines	
122	1001160963	1	Insulation for GM Engine Machines	
123	4061010	1	Insulation Options:	
123	1001160964	1	Insulation for Deutz D2011 Engine Machines (ANSI, ANSI Export, CSA and Japanese Specs)	
123	1001161027	1	Insulation with Noise Reduction for Deutz D2011 Engine Machines (ANSI Export, Australian, CE and Japanese Specs)	
123	1001160964	1	Insulation for Deutz TD2.9L4 & Ford Engine Machines	
123	1001160964	1	Insulation for GM Engine Machines	
124	4060805	62 in/1.6m	Flex-Trim **(SN 0300184421 through 0300272252)**	
125	1001169610	2	Spacer, Hinge **(SN 0300184421 through 0300272252)**	
126	4891600	AR	Flatwasher 3/8 Hardened	
	1671216	Ref	**HOOD TANK SIDE**	
	1001160003	Ref	**Hood for Deutz D2011 Engine Machines**	H
	1001160190	Ref	**Hood for Deutz TD2.9L4 & Ford Engine Machines**	G
	1001160003	Ref	**Hood for GM Engine Machines**	H
201	0641606	4	Bolt 3/8in-16NC x 3/4in	
202		Ref	Hood, Tank Side Options:	
202	1001160003	1	Hood for Deutz D2011 Engine Machines	
202	1001160190	1	Hood for Deutz TD2.9L4 & Ford Engine Machines	
202	1001160003	1	Hood for GM Engine Machines	
203	2940088	1	Latch	
204	3311005	2	Locknut #10-24NC	
205	3911016	2	Screw #10-24NC x 1in	
206	3960389	3 ft /0.9m	Seal **(SN 0300177361 through 0300181748)**	
206	1001164281	8 ft /2.5m	Seal **(SN 0300181749 through 0300272252)**	
207	3960438	4.5 ft /1.4m	Seal **(SN 0300177361 through 0300184420)**	
207	1001166394	4.5 ft /1.4m	Seal **(SN 0300184421 through 0300272252)**	
208	3960462	5.5 ft /1.6m	Seal	
209	4751000	2	Flatwasher #10 Regular	
210	4751600	4	Flatwasher 3/8in Regular **(SN 0300177361 through 0300206631)**	
210	4891600	4	Flatwasher 3/8in Hardened **(SN 0300206632 through 0300272252)**	
211	1001151670	2	Hinge **(SN 0300177361 through 0300206631)**	
211	1001188467	2	Hinge **(SN 0300206632 through 0300272252)**	
212	4060805	62 in /1.6m	Flex-Trim **(SN 0300184421 through 0300272252)**	
	1001152325	Ref	**NOISE REDUCTION INSTALLATION (DEUTZ TD2.9L4 ENGINE MACHINES ONLY)**	A

ITEM	PART NUMBER	QTY	DESCRIPTION	REV
301	0100011	AR	Compound, Locking	
302	0641606	5	Bolt 3/8in-16NC x 3/4in	
303	2820078	1	Foam, Acoustical	
304	2820082	1	Foam, Acoustical	
305	2820083	1	Foam, Acoustical	
306	3539988	1	Plate, Baffle	
307	4751600	5	Flatwasher 3/8in Regular	

FIGURE 2-24. 2500W GENERATOR INSTALLATION - DEUTZ D2011 MACHINES (OPTIONAL)

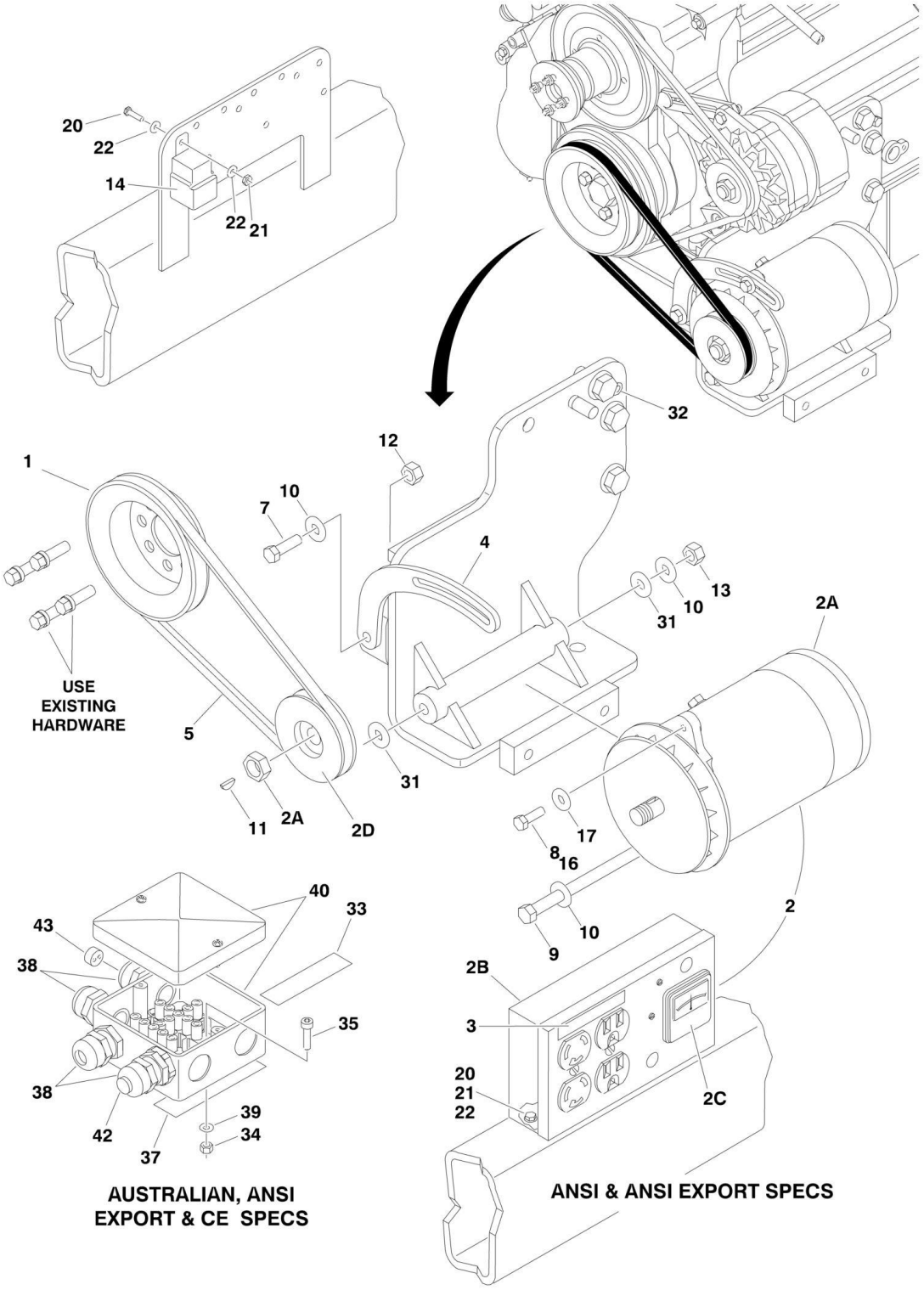

FIGURE 2-24. 2500W GENERATOR INSTALLATION - DEUTZ D2011 MACHINES (OPTIONAL)

ITEM	PART NUMBER	QTY	DESCRIPTION	REV
		Ref	**2500W GENERATOR INSTALLATIONS - DEUTZ D2011 MACHINES (OPTIONAL)**	
	1001115405	Ref	**110V/60Hz (ANSI and ANSI Export Specs)**	B
	1001115406	Ref	**220V/50Hz (ANSI Export Specs)**	B
	1001115409	Ref	**220V/50Hz (Australian and CE Specs)**	B
1	3580158	1	Pulley	
2		Ref	Generator and Control Box Assembly Options:	
2	2460055	1	110V/60Hz (ANSI and ANSI Export Specs)	
2	2460056	1	220V/50Hz (ANSI Export Specs)	
2	1001100321	1	220V/50Hz (Australian and CE Specs)	
2A	7012558	1	Generator Only - 110V/60Hz	
2A	1001100321	1	Generator Only - 220V/50Hz	
2A		Ref	**Note: Replacement Generators come standard with p/n 3580134 pulley. This pulley may not be correct for all applications. Refer to pulley options below.**	
2A		Ref	Armature with Slip Rings Options:	
2A	7026199	1	Armature with Slip Rings - 110V/60Hz	
2A	70000123	1	Armature with Slip Rings - 220V/50Hz	
2A	7012513	4	Cap, Brush Holder	
2A	7020108	4	Brush	
2A	7020109	4	Holder, Brush	
2A	7012514	1	Fan	
2A	7020110	1	Bell, Front	
2A	7020111	1	Bell, Rear	
2A	7020190	2	Bearing	
2B	7019680	1	Box, Control - 110V/60Hz	
2B	70000127	1	Box, Control - 220V/50Hz (ANSI Export Specs)	
2B	Not Required	0	Box, Control - 220V/50Hz (Australian and CE Specs)	
2B		Ref	Receptacle Options:	
2B	4460190	1	Receptacle, Standard (110V Only)	
2B	4460027	1	Receptacle, Twistlock (110V Only)	
2B	70000124	1	Receptacle, Double (220V/50Hz Only)	
2B	70000125	1	Receptacle, Single (220V/50Hz Only)	
2B		Ref	Breaker, Circuit Options:	
2B	4360542	1	Breaker 110V/60Hz	
2B	70000126	1	Breaker 220V/50Hz	
2B	3520028	1	Plug, Hole	
2C		Ref	Voltmeter Options:	
2C	2420203	1	Voltmeter - 110V	
2C	7020192	1	Voltmeter - 220V	
2D		Ref	Pulley Options:	
2D	3580276	1	Pulley - 60Hz	
2D	3580134	1	Pulley - 50Hz	
2D	7027887	1	Key, Woodruff	
3		Ref	Decal Options:	
3	3251243	1	110V/60Hz (ANSI and ANSI Export Specs)	
3	Not Required	0	220V/50Hz (ANSI Export, Australian and CE Specs)	
4	0200742	1	Arm, Adjusting	
5	0480121	1	V-Belt	
7	0641610	1	Bolt 3/8in-16NC x 1-1/4in	

ITEM	PART NUMBER	QTY	DESCRIPTION	REV
8	0100011	AR	Compound, Locking	
9	0641772	1	Bolt 7/16in-14NC x 9in	
10	4751600	6	Flatwasher 3/8in Regular	
11	2860012	1	Key, Woodruff	
12	3311605	1	Locknut 3/8in-16NC	
13	3311705	1	Locknut 7/16in-14NC	
14	3740080	1	Relay	
16	0641508	1	Bolt 5/16in-18NC x 1in	
17	4751500	AR	Flatwasher 5/16in Regular	
20	0721006	AR	Bolt #10-24NC x 3/4in	
21	3311005	AR	Locknut #10-24NC	
22	4751000	AR	Flatwasher #10 Regular	
25	4360336	1	Switch, Toggle (Not Shown - Located at Platform)	
26	4740397	1	Bushing (Not Shown - Located at Platform)	
27	4060802	1	Guard, Switch (Not Shown - Located at Platform)	
28	3252507	1	Decal - 220V - 50/60Hz (Not Shown - Located on Turntable)	
29	2820031	4 in/10cm	Heat Shrink (Not Shown - Located at Platform)	
30	3251102	1	Decal (Not Shown - Located at Platform)	
		Ref	**Note: Items 32-43 Used on ANSI Export, Australian and CE Specs Only.**	
32	0641404	1	Bolt 1/4in-20NC x 1/2	
33	3252507	2	Decal - 220V - 50Hz	
		Ref	**Note: One Decal Not Shown - Located on the Inside of Platform Rail.**	
34	3290505	1	Locknut M5 x 0.8mm	
35	4031608	1	Bolt M5 x 20mm	
36	4240018	1	Tie Strap (Not Shown)	
37	4420060	1	Tape, Double Coated Acrylic Foam	
38	4460968	3	Connector, Strain Relief	
39	4811600	1	Flatwasher M5	
40	1001099869	1	Box, Junction	
42		Ref	Light Red Options:	
42	1001100233	1	125 Vac	
42	1001100234	1	250 Vac	
43	0962449	1	Bushing	
	2902085	1	Kit, Powermite Generator Mounting	

FIGURE 2-25. 2500W GENERATOR INSTALLATION - DEUTZ TD2.9L4 (OPTIONAL)

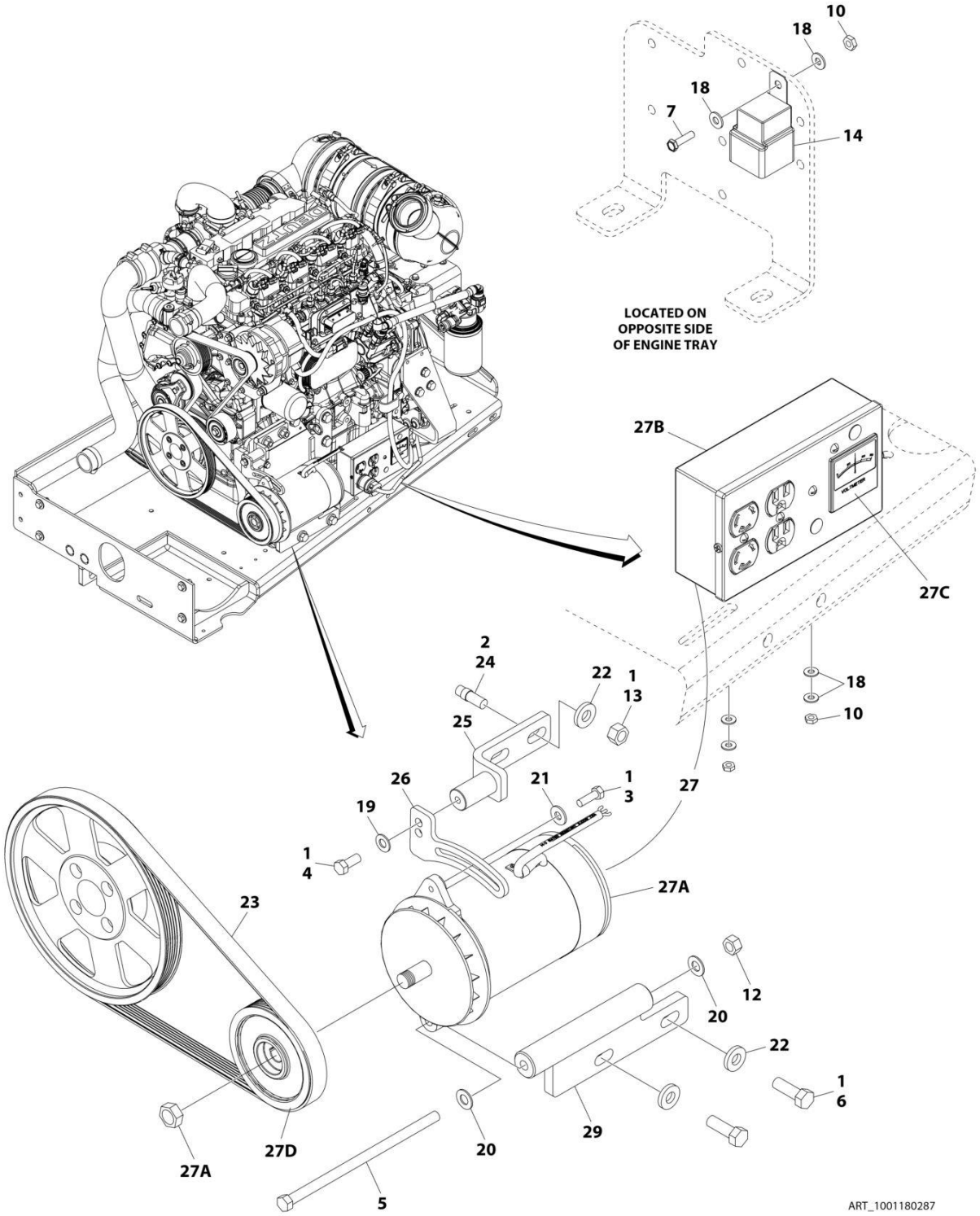

FIGURE 2-25. 2500W GENERATOR INSTALLATION - DEUTZ TD2.9L4 (OPTIONAL)

ITEM	PART NUMBER	QTY	DESCRIPTION	REV
	1001180287	Ref	**2500W GENERATOR INSTALLATION - DEUTZ TD2.9L4 (OPTIONAL)**	C
1	0100011	AR	Compound, Locking	
2	0100019	AR	Compound, Locking	
3	0641508	1	Bolt 5/16 x 1	
4	0641607	1	Bolt 3/8 x 7/8	
5	0641772	1	Bolt 7/16 x 9	
6	0641812	2	Bolt 1/2 x 1-1/2	
7	0721006	1	Screw #10 x 3/4	
8	2820031	AR	Heat Shrink (Not Shown - Located at Platform)	
9	3251102	1	Name Plate - Generator On (Not Shown - Located at Platform)	
10	3311005	3	Nut #10	
12	3311705	1	Nut 7/16	
13	3311801	2	Nut 1/2	
14	3740080	1	Relay	
15	4060802	1	Guard, Switch (Not Shown - Located at Platform)	
16	4240018	AR	Strap, Cable Tie (Not Shown)	
17	4360336	1	Switch, Toggle (Not Shown - Located at Platform)	
18	4711000	6	Washer #10	
19	4711600	1	Washer 3/8	
20	4711700	2	Washer 7/16	
21	4751500	1	Washer 5/16	
22	4891800	4	Washer 1/2	
23	1001148138	1	V-Belt	
24	1001163599	2	Stud	
25	1001216015	1	Bracket	
26	1001179837	1	Arm, Adjustment	
27	1001180001	1	Generator and Control Box Assembly	
27A	7012558	1	Generator Only - 110V/60Hz	
27A		Ref	**Note: Replacement Generators come standard with p/n 3580134 pulley. This pulley may not be correct for all applications. Refer to pulley options below.**	
27A	7026199	1	Armature with Slip Rings	
27A	7012513	4	Cap, Brush Holder	
27A	7020108	4	Brush	
27A	7020109	4	Holder, Brush	
27A	7012514	1	Fan	
27A	7020110	1	Bell, Front	
27A	7020111	1	Bell, Rear	
27A	7020190	2	Bearing	
27B	7019680	1	Box, Control - 110V/60Hz	
27B		Ref	Receptacle Options:	
27B	4460190	1	Receptacle, Standard (110V Only)	
27B	4460027	1	Receptacle, Twistlock (110V Only)	
27B	4360542	1	Breaker, Circuit	
27B	3520028	1	Plug, Hole	
27C	2420203	1	Voltmeter	
27D	1001179893	1	Pulley	
27D	7027887	1	Key, Woodruff	
29	1001181243	1	Mount, Generator	

FIGURE 2-26. 2500W GENERATOR INSTALLATION - FORD MACHINES (OPTIONAL)

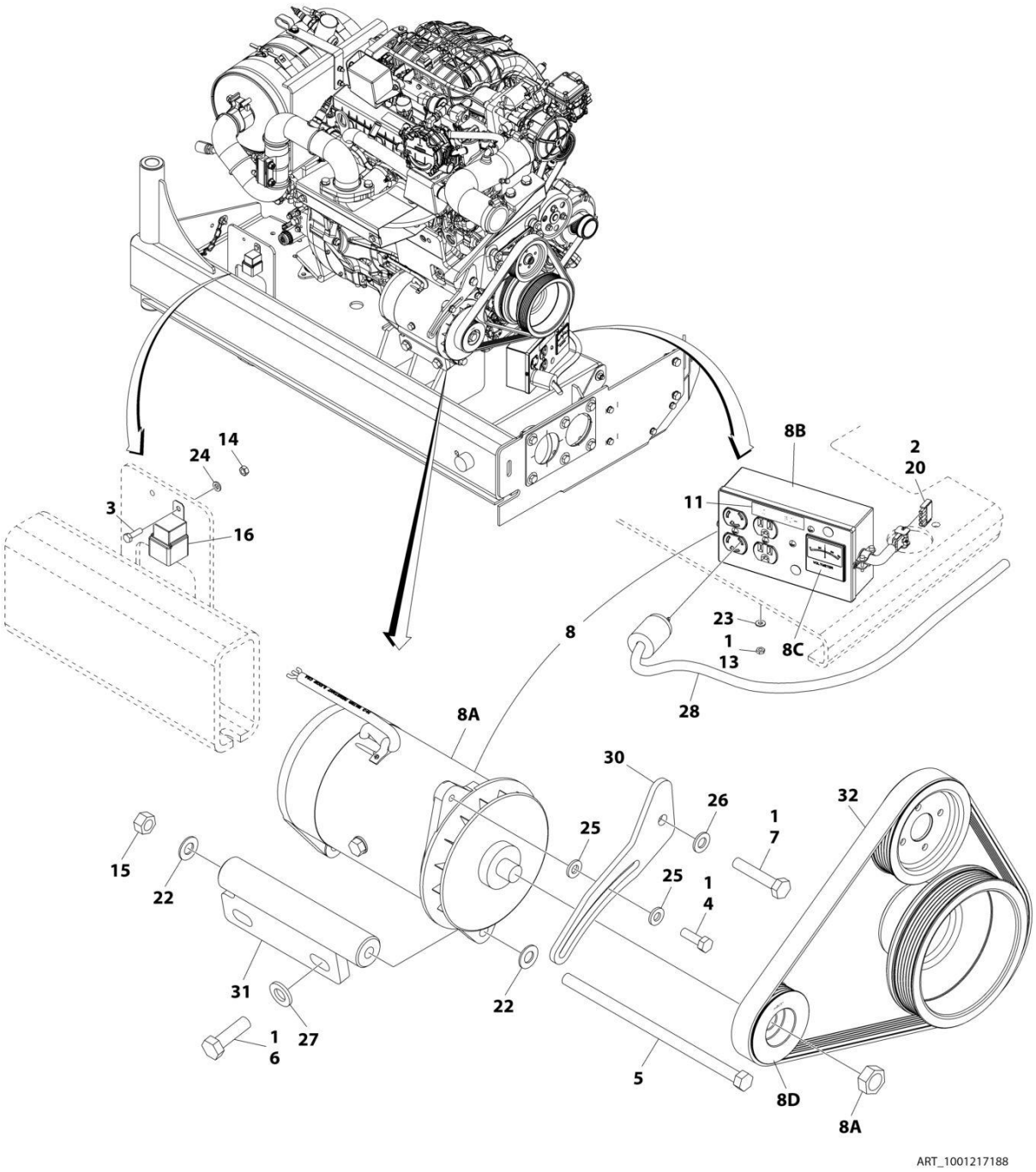

FIGURE 2-26. 2500W GENERATOR INSTALLATION - FORD MACHINES (OPTIONAL)

ITEM	PART NUMBER	QTY	DESCRIPTION	REV
	1001217188	Ref	**2500W GENERATOR INSTALLATION - FORD MACHINES (OPTIONAL)**	G
1	0100011	AR	Compound, Locking	
2	0100048	AR	Grease, Dielectric	
3	0760610	1	Bolt M6 x 20	
4	0641508	1	Bolt 5/16 x 1	
5	0641772	1	Bolt 7/16 x 9	
6	0761216	2	Bolt M12 x 40	
7	0761019	1	Bolt M10 x 55	
8	2460051	1	Generator and Control Box Assembly	
8A	7012558	1	Generator Only - 110V/60Hz	
		Ref	**Note: Replacement Generators come standard with pin 3580134 pulley. This pulley may not be correct for all applications. Refer to pulley options below.**	
8A	7026199	1	Armature with Slip Rings	
8A	7012513	4	Cap, Brush Holder	
8A	7020108	4	Brush	
8A	7020109	4	Holder, Brush	
8A	7012514	1	Fan	
8A	7020110	1	Bell, Front	
8A	7020111	1	Bell, Rear	
8A	7020190	2	Bearing	
8B	7019680	1	Box, Control - 110V/60Hz	
8B		Ref	Receptacle Options:	
8B	4460190	Ref	Receptacle, Standard (110V Only)	
8B	4460027	1	Receptacle, Twistlock (110V Only)	
8B	4360542	1	Breaker, Circuit	
8B	3520028	1	Plug, Hole	
8C	2420203	1	Voltmeter	
8D	3580324	1	Pulley	
8D	7027887	1	Key, Woodruff	
9	2820031	1	Heat Shrink (Not Shown - Located at Platform)	
10	3251102	1	Nameplate Generator (Not Shown - Located at Platform)	
11	3251243	1	Decal - 120V-60Hz	
13	3311005	2	Nut #10	
14	3290601	1	Nut M6	
15	3311705	1	Nut 7/16	
16	3740080	1	Relay	
17	4060802	1	Guard Switch (Not Shown - Located at Platform)	
18	4240099	AR	Tie-Strap (Not Shown)	
19	4360336	1	Switch, Toggle (Not Shown - Located at Platform)	
20	4460321	1	Plug, Male - 4 Position	
21	4460906	1	Socket, Female (Not Shown)	
22	4711700	2	Washer 7/16	
23	4751000	2	Washer #10	
24	4811700	1	Washer M6	
25	4891500	2	Washer 5/16	
26	4812000	1	Washer M10	
27	5241200	2	Washer M12	
28	4921829	1	Harness, Inverter	

ITEM	PART NUMBER	QTY	DESCRIPTION	REV
30	1001219632	1	Arm, Adjustment	
31	1001219630	1	Mount, Generator	
32	1001216391	1	V-Belt	

FIGURE 2-27. 2500W GENERATOR INSTALLATION - GM MACHINES (OPTIONAL)

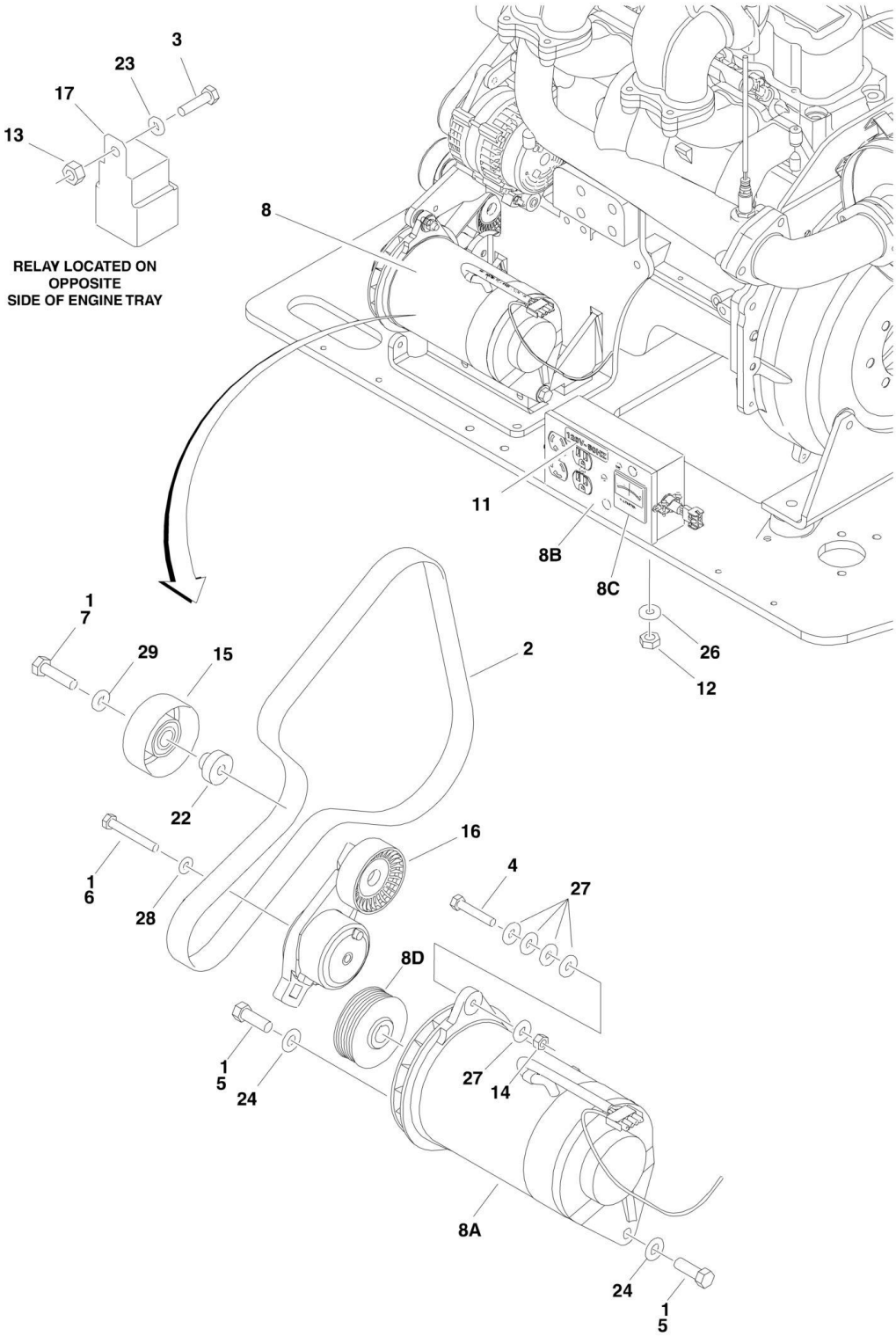

FIGURE 2-27. 2500W GENERATOR INSTALLATION - GM MACHINES (OPTIONAL)

ITEM	PART NUMBER	QTY	DESCRIPTION	REV
		Ref	**GENERATOR INSTALLATION OPTIONS:**	
	0275039	Ref	**110V Generator**	F
1	0100011	AR	Compound, Locking	
2	0480142	1	V-Belt	
3	0641405	1	Bolt 1/4in-20NC x 5/8in	
4		Ref	Bolt Options:	
4	0641514	1	Bolt 5/16in-18NC x 1-3/4in	
4	0641510	1	Bolt 5/16in-18NC x 1-1/4in	
5	0641710	2	Bolt 7/16in-14NC x 1-1/4in	
6	0700820	1	Bolt M8 x 60mm	
7	0701016	1	Bolt M10 x 340mm	
8	2460051	1	Generator and Control Box Assembly	
8A	7012558	1	Generator Only - 110V/60Hz	
		Ref	**Note: Replacement Generators come standard with p/n 3580134 pulley. This pulley may not be correct for all applications. Refer to pulley options below.**	
8A		Ref	Armature with Slip Rings Options:	
8A	7026199	1	Armature with Slip Rings - 110V/60Hz	
8A	70000123	1	Armature with Slip Rings - 220V/50Hz	
8A	7012513	4	Cap, Brush Holder	
8A	7020108	4	Brush	
8A	7020109	4	Holder, Brush	
8A	7012514	1	Fan	
8A	7020110	1	Bell, Front	
8A	7020111	1	Bell, Rear	
8A	7020190	2	Bearing	
8B	7019680	1	Box, Control - 110V/60Hz	
8B		Ref	Receptacle Options:	
8B	4460190	1	Receptacle, Standard (110V Only)	
8B	4460027	1	Receptacle, Twistlock (110V Only)	
8B	4360542	1	Breaker, Circuit	
8B	3520028	1	Plug, Hole	
8C	2420203	1	Voltmeter	
8D	3580324	1	Pulley	
8D	7027887	1	Key, Woodruff	
9	2820031	AR	Heat Shrink (Not Shown - Located at Platform)	
10	3251102	1	Nameplate - Generator (Not Shown - Located at Platform)	
11	3251243	1	Decal - 110 Volt	
12	3311005	2	Locknut # 10-24NC	
13	3311405	1	Locknut 1/4in-20NC	
14	3311505	1	Locknut 5/16in-18NC	
15	3580312	1	Pulley, Idler	
16	3580348	1	Tensioner, Belt	
17	3740080	1	Relay, Bosch	
18	4060802	1	Guard, Switch (Not Shown - Located at Platform)	
19	4240018	AR	Tie-Strap (Not Shown)	
20	4360336	1	Switch, Toggle (Not Shown - Located at Platform)	
21	4460906	3	Terminal (Not Shown)	
22	4568735	1	Spacer, Tube (Idler Pulley Grooved)	
23	4711400	1	Flatwasher 1/4in Thin	

ITEM	PART NUMBER	QTY	DESCRIPTION	REV
24	4711700	2	Flatwasher 7/16in Thin	
25	4740397	1	Spacer (Not Shown - Located at Platform)	
26	4751000	2	Flatwasher #10 Regular	
27	4751500	AR	Flatwasher 5/16in Regular	
28	4811900	1	Flatwasher M8	
29	4891600	1	Flatwasher 3/8in Hardened	

FIGURE 2-28. 4000W GENERATOR INSTALLATION - DEUTZ D2011 ENGINES

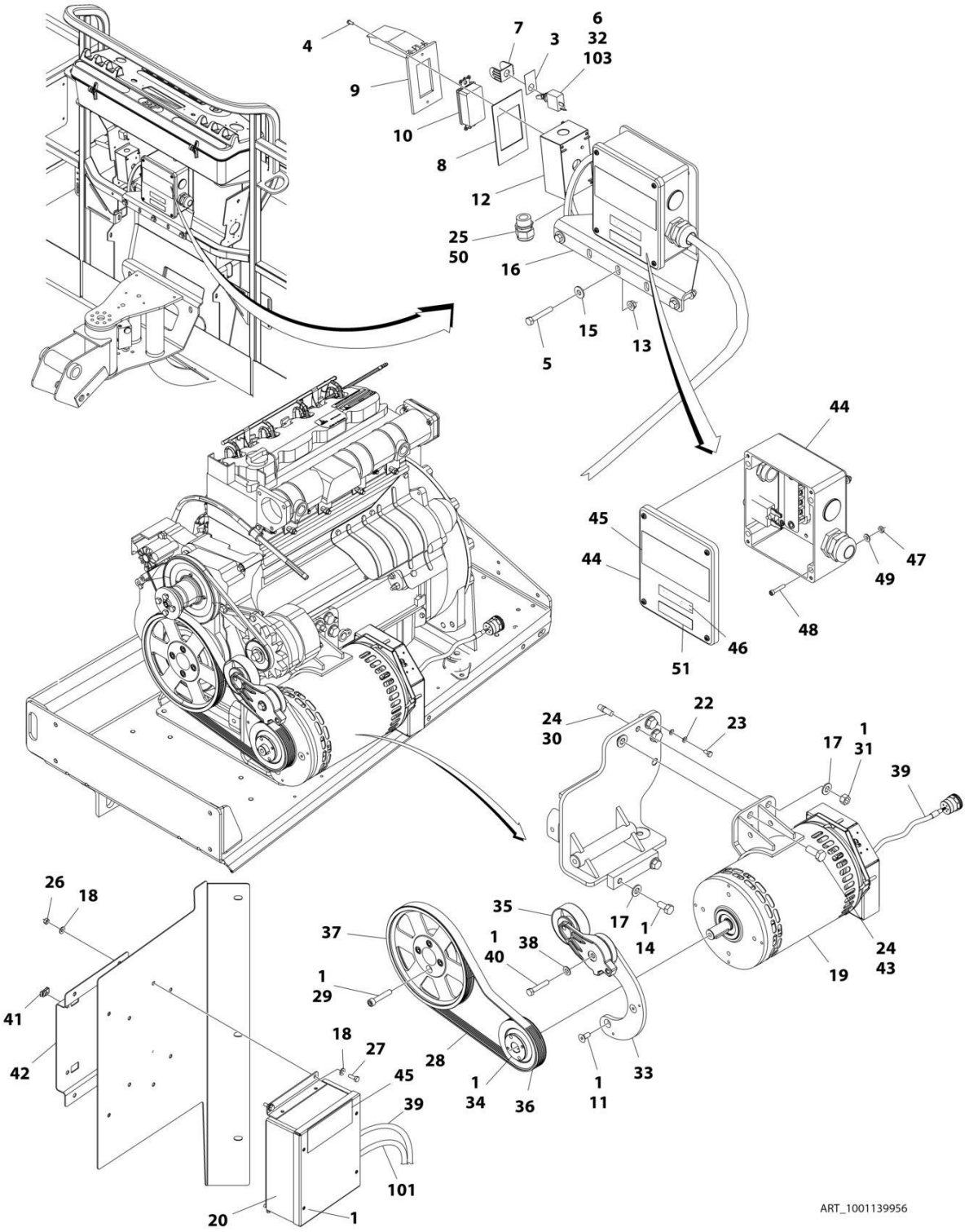

FIGURE 2-28. 4000W GENERATOR INSTALLATION - DEUTZ D2011 ENGINES

ITEM	PART NUMBER	QTY	DESCRIPTION	REV
		Ref	**4000W Generator Installation - Deutz D2011 Engines**	
	1001139956	Ref	**4000W/60Hz Generator Installation - Deutz D2011 Engines**	B
	1001139957	Ref	**4000W/50Hz Generator Installation - Deutz D2011 Engines**	D
1	0100011	1	Compound, Locking	
3	3251102	1	Nameplate, Generator	
4	3910606	4	Screw #6 x 3/8	
5	0641516	3	Bolt 5/16 x 2	
6	4360336	1	Switch, Toggle	
7	4060802	1	Guard, Switch	
8	3960422	1	Gasket, AC Receptacle (60Hz)	
9	1001110873	1	Cover, Gang Vertical Receptacle GFCI (60Hz)	
10	4460346	1	Receptacle (60Hz)	
11	0741607	3	Screw 3/8 x 7/8	
12	0860038	1	Box, Switch-Weatherhead (60Hz)	
13	3311508	3	Nut 5/16	
14	0641808	2	Bolt 1/2 x 1	
15	4751500	3	Washer 5/16	
16	0902888	1	Bracket, Junction Box (60Hz)	
17	4711800	3	Washer 1/2	
18	4711400	8	Washer 1/4	
19	1001129858	1	Generator Assembly (60Hz)	
19	1001138565	1	Generator Assembly (50Hz)	
19	70003709	1	Ring, Retaining (External)	
19	70003708	1	Ring, Retaining (Internal)	
19	70001966	1	Bearing	
19	70004092	1	Endbell (Shaft End)	
19	70004171	1	Key	
19	70004676	1	Rotor	
19	70004684	1	Stator (60Hz)	
19	70004677	1	Stator (50Hz)	
19	70004678	1	Endbell (Rear)	
19	70004679	1	Cover, Endbell (Rear)	
19	70004680	1	Enclosure, Wiring	
19	70004685	1	Cover, Enclosure (60Hz)	
19	70004681	1	Cover, Enclosure (50Hz)	
19	70004682	1	Switch, Reset (Located on Enclosure Cover)	
19	70004098	1	Connector, Strain Relief (60Hz) (Located on Enclosure Cover)	
19	70004683	1	Connector, Strain Relief (50Hz) (Located on Enclosure Cover)	
20	1001138566	1	Box, Control	
20	70006552	1	Capacitor	
20	70006553	1	Relay	
21	4240018	AR	Tie-Strap (Not Shown)	
22	4791400	2	Washer 1/4	
23	0641404	1	Bolt 1/4 x 1/2	
24	0100019	AR	Compound, Locking	
25	4460071	1	Connector, Strain Relief (60Hz)	
26	3311405	4	Nut 1/4	
27	0641406	4	Bolt 1/4 x 3/4	
28	0480129	1	Belt, Generator (60Hz)	
28	0480126	1	Belt, Generator (50Hz)	

ITEM	PART NUMBER	QTY	DESCRIPTION	REV
29	4032015	4	Capscrew M10 x 55	
30	4300157	1	Stud	
31	3311801	1	Nut 1/2	
32	2820031	AR	Heat Shrink	
33	1001139357	1	Mount, Tensioner	
34	0962520	1	Bushing, Split	
35	3580317	1	Tensioner, Belt with Pulley	
36	3580318	1	Pulley, Generator (60Hz)	
36	3580319	1	Pulley, Generator (50Hz)	
37	3580320	1	Pulley, Engine Deutz	
38	4711600	1	Washer 3/8	
39	1001152532	1	Harness, Generator	
40	0641616	1	Bolt 3/8 x 2	
41	3300454	4	Nut, U-Style 1/4	
42	3575863	1	Plate	
43	0771415	1	Bolt M14 x 35 Grade 10.9	
44	1001152457	1	Junction Box Assembly (60Hz)	
44	3300396	1	Cover, Breaker	
44	4360070	1	Breaker, Circuit - 15Amp	
44	4460425	1	Connector, Strain Relief (LH Side)	
44	4460426	1	Connector, Strain Relief (RH Side)	
44	1001152530	1	Block, Terminal	
44	1001158363	1	Cover, Terminal Block	
44	1001153260	1	Decal - Wiring Diagram	
45	1705387	3	Decal - Hazardous Voltage (60Hz)	
45	1705489	2	Decal - Hazardous Voltage (50Hz)	
46	3251243	1	Decal, 120V-60Hz (60Hz)	
47	3311005	4	Nut #10	
48	3931016	4	Capscrew #10 x 1	
49	4751000	4	Washer #10	
50	0100020	AR	Sealant	
51	1705374	1	Decal, 240V-60Hz (60Hz)	
61	1001096070	1	Breaker Box Kit (Not Shown) (50Hz) (See ELECTRICAL SECTION for Breakdown)	
62	1001153636	1	Bracket (Attaches Item 61) (Not Shown) (50Hz)	
66	0641415	2	Capscrew 1/4 x 1-7/8 (Attaches Item 61) (Not Shown) (50Hz)	
		Ref	**ELECTRICAL DIAGRAM COMPONENTS**	
101	1001153197	1	Harness, Generator	
103	4922641	1	Harness, Switch	
105	1001164091	1	Harness, Ground (50Hz) (Not Shown)	

FIGURE 2-29. 4000W GENERATOR INSTALLATION - DEUTZ TD2.9L4 ENGINES

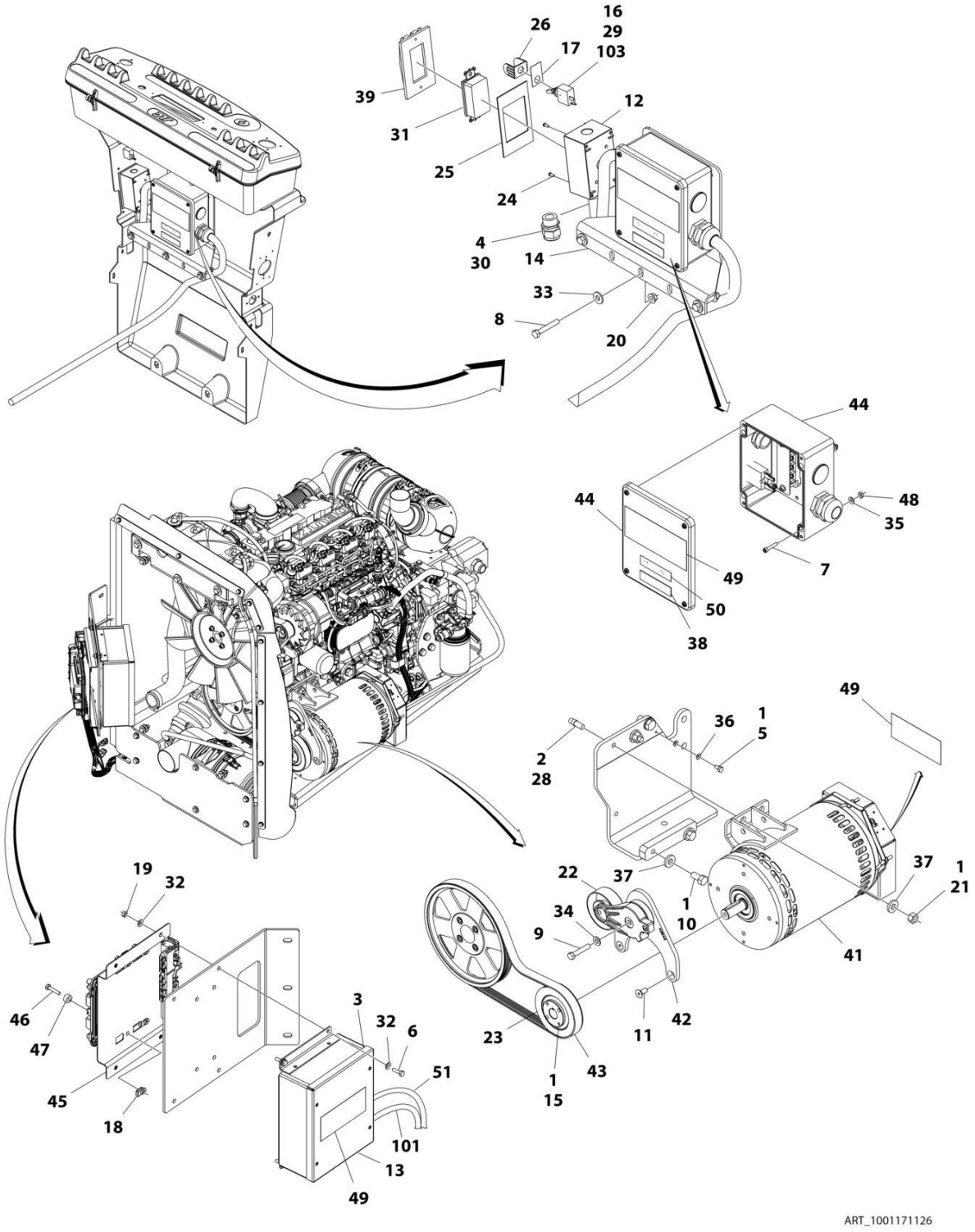

FIGURE 2-29. 4000W GENERATOR INSTALLATION - DEUTZ TD2.9L4 ENGINES

ITEM	PART NUMBER	QTY	DESCRIPTION	REV
		Ref	**4000W Generator Installation - Deutz TD2.9L4 Engines**	
	1001171126	Ref	**4000W/60Hz Generator Installation - Deutz TD2.9L4 Engines**	B
	1001171268	Ref	**4000W/50Hz Generator Installation - Deutz TD2.9L4 Engines**	C
1	0100011	AR	Compound, Locking	
2	0100019	AR	Compound, Locking	
3	0100048	AR	Grease, Dielectric	
4	0100079	AR	Sealant	
5	0641404	1	Bolt 1/4 x 1/2	
6	0641407	4	Bolt 1/4 x 7/8	
7	3931016	4	Capscrew #10 x 1	
8	0641516	3	Bolt 5/16 x 2	
9	0641616	1	Bolt 3/8 x 2 (60Hz)	
9	0641618	1	Bolt 3/8 x 2-1/4 (50Hz)	
10	0641808	2	Bolt 1/2 x 1	
11	0741607	3	Screw, Flathead 3/8in-16NC x 7/8in	
12	0860038	1	Box, Switch (60Hz)	
13	1001138566	1	Box, Control	
13	70006552	1	Capacitor	
13	70006553	1	Relay	
14	0902888	1	Bracket, Junction Box (60Hz)	
15	0962520	1	Bushing, Split	
16	2820031	0.33 ft /.10m	Heat Shrink	
17	3251102	1	Nameplate, Generator	
18	3300454	4	Nut, U-Style 1/4	
19	3311405	4	Nut 1/4	
20	3311508	3	Nut 5/16	
21	3311801	2	Nut 1/2	
22	3580317	1	Tensioner, Belt with Pulley	
23	3580318	1	Pulley, Generator (60Hz)	
23	3580319	1	Pulley, Generator (50Hz)	
24	3910606	4	Screw #6 x 3/8	
25	3960422	1	Gasket, AC Receptacle (60Hz)	
26	4060802	1	Guard, Switch	
27	4240018	AR	Tie-Strap (Not Shown)	
28	1001163599	2	Stud	
29	4360336	1	Switch, Toggle	
30	4460071	1	Connector, Strain Relief (60Hz)	
31	4460346	1	Receptacle (60Hz)	
32	4711400	8	Washer 1/4	
33	4751500	3	Washer 5/16	
34	4711600	1	Washer 3/8	
35	4751000	4	Washer #10	
36	4791400	2	Washer 1/4	
37	4891800	4	Washer 1/2	
38	1705374	1	Decal, 240V (60Hz)	
39	1001110873	1	Cover, Receptacle (60Hz)	
41	1001140346	1	Generator Assembly (60Hz)	
41	1001140347	1	Generator Assembly (50Hz)	
41	70003709	1	Ring, Retaining (External)	

ITEM	PART NUMBER	QTY	DESCRIPTION	REV
41	70003708	1	Ring, Retaining (Internal)	
41	70001966	1	Bearing	
41	70004092	1	Endbell (Shaft End)	
41	70004099	1	Key	
41	70004676	1	Rotor	
41	70004687	1	Stator (60Hz)	
41	70004686	1	Stator (50Hz)	
41	70004678	1	Endbell (Rear)	
41	70004679	1	Cover, Endbell (Rear)	
41	70004680	1	Enclosure, Wiring	
41	70004685	1	Cover, Enclosure (60Hz)	
41	70004681	1	Cover, Enclosure (50Hz)	
41	70004682	1	Switch, Reset (Located on Enclosure Cover)	
41	70004098	1	Connector, Strain Relief (60Hz) (Located on Enclosure Cover)	
41	70004683	1	Connector, Strain Relief (50Hz) (Located on Enclosure Cover)	
41	4460224	1	Receptacle, Female - 6 Position (Connects to Generator Harness)	
41	4460294	6	Pin, Male (Use with p/n 4460224)	
41	4460807	6	Seal, Terminal (Use with p/n 4460224)	
41	4460808	1	Seal, INterface (Use with p/n 4460224)	
42	1001142643	1	Support, Gen Tensioner	
43	1001142646	1	Belt, Generator (60Hz)	
43	See Note	1	Belt, Generator (50Hz)	
44	1001152457	1	Junction Box Assembly (60Hz)	
44	3300396	1	Cover, Breaker	
44	4360070	1	Breaker, Circuit - 15Amp	
44	4460425	1	Connector, Strain Relief (LH Side)	
44	4460426	1	Connector, Strain Relief (RH Side)	
44	1001152530	1	Block, Terminal	
44	1001158363	1	Cover, Terminal Block	
44	1001153260	1	Decal - Wiring Diagram	
45	1001145330	1	Bracket	
46	0641410	4	Bolt 1/4 x 1-1/4	
47	1001110425	4	Spacer	
48	3311005	4	Nut #10	
49	1705387	3	Decal - Hazardous Voltage (60Hz)	
49	1705489	2	Decal - Hazardous Voltage (50Hz)	
50	3251243	1	Decal, 120V-60Hz (60Hz)	
51	1001152532	1	Harness, Generator	
75	1001096070	1	Breaker Box Kit (Not Shown) (50Hz) (See ELECTRICAL SECTION for Breakdown)	
76	1001153636	1	Bracket (Used to Attach Item 75) (Not Shown) (50Hz)	
		Ref	**ELECTRICAL DIAGRAM COMPONENTS**	
101	1001153197	1	Harness, Generator **(SN 0300177361 through 0300213430)**	
101	1001153259	1	Harness, Generator **(SN 0300213431 through 0300272252)**	
103	4922641	1	Harness, Switch	
105	1001164091	1	Harness, Ground (50Hz) (Not Shown)	

FIGURE 2-30. 4000W GENERATOR INSTALLATION - GM ENGINES

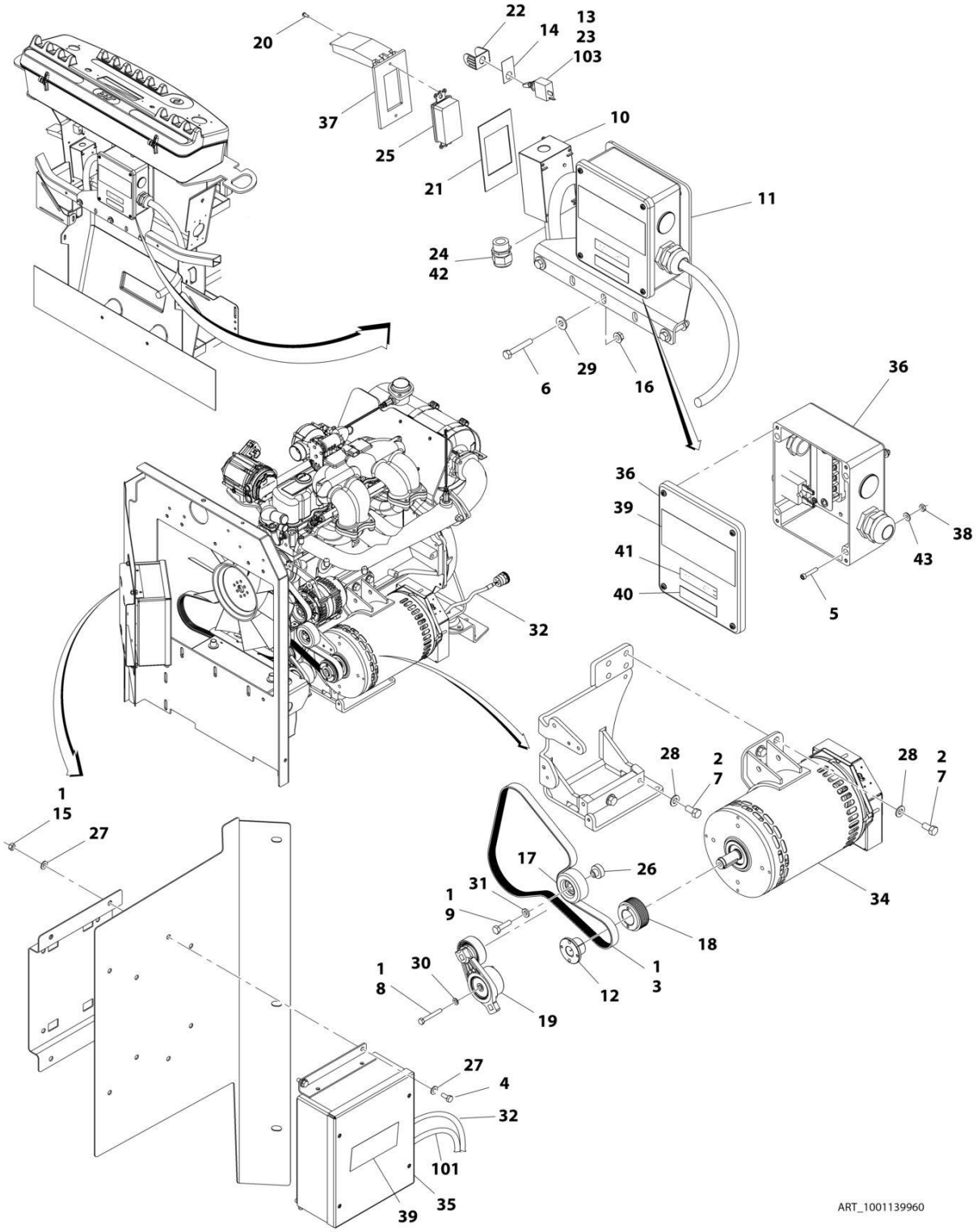

FIGURE 2-30. 4000W GENERATOR INSTALLATION - GM ENGINES

ITEM	PART NUMBER	QTY	DESCRIPTION	REV
	1001139960	Ref	**4000W GENERATOR INSTALLATION - GM ENGINES**	B
1	0100011	AR	Compound, Locking	
2	0100019	AR	Compound, Locking	
3	0480142	1	Belt, Generator	
4	0641405	4	Bolt 1/4 x 5/8	
5	3931016	4	Capscrew #10 x 1	
6	0641516	3	Bolt 5/16 x 2	
7	0641808	4	Bolt 1/2 x 1	
8	0700820	1	Bolt M8 x 60	
9	0701016	1	Bolt M10 x 40	
10	0860038	1	Box, Switch	
11	0902888	1	Bracket, Junction Box	
12	0962520	1	Bushing, Split	
13	2820031	33 ft / 10.05m	Heat Shrink	
14	3251102	1	Nameplate, Generator	
15	3311405	4	Nut 1/4	
16	3311508	3	Nut 5/16	
17	3580312	1	Pulley, Idler	
18	3580314	1	Pulley, Drive	
19	3580348	1	Tensioner, Belt with Pulley	
20	3910606	4	Screw #6 x 3/8	
21	3960422	1	Gasket	
22	4060802	1	Guard, Switch	
23	4360336	1	Switch, Toggle	
24	4460071	1	Connector, Strain Relief	
25	4460346	1	Receptacle	
26	4568735	1	Tube, Spacer	
27	4711400	8	Washer 1/4	
28	4711800	4	Washer 1/2	
29	4751500	3	Washer 5/16	
30	4811900	1	Washer, M8	
31	4891600	1	Washer 3/8	
32	1001152532	1	Harness, Generator	
34	1001129858	1	Generator Assembly	
34	70003709	1	Ring, Retaining (External)	
34	70003708	1	Ring, Retaining (Internal)	
34	70001966	1	Bearing	
34	70004092	1	Endbell (Shaft End)	
34	70004171	1	Key	
34	70004676	1	Rotor	
34	70004684	1	Stator	
34	70004678	1	Endbell (Rear)	
34	70004679	1	Cover, Endbell (Rear)	
34	70004680	1	Enclosure, Wiring	
34	70004685	1	Cover, Enclosure	
34	70004682	1	Switch, Reset (Located on Enclosure Cover)	
34	70004098	1	Connector, Strain Relief (Located on Enclosure Cover)	
35	1001138566	1	Box, Control	
35	70006552	1	Capacitor	

ITEM	PART NUMBER	QTY	DESCRIPTION	REV
35	70006553	1	Relay	
36	1001152457	1	Junction Box Assembly	
36	3300396	1	Cover, Breaker	
36	4360070	1	Breaker, Circuit - 15Amp	
36	4460425	1	Connector, Strain Relief (LH Side)	
36	4460426	1	Connector, Strain Relief (RH Side)	
36	1001152530	1	Block, Terminal	
36	1001158363	1	Cover, Terminal Block	
36	1001153260	1	Decal - Wiring Diagram	
37	1001110873	1	Cover	
38	3311005	4	Nut #10	
39	1705387	3	Decal - Hazardous Voltage	
40	1705374	1	Decal - 240V-60Hz	
41	3251243	1	Decal - 120V-60Hz	
42	0100020	AR	Sealant	
43	4751000	4	Washer #10	
		Ref	**ELECTRICAL DIAGRAM COMPONENTS**	
101	1001153197	1	Harness, Generator	
103	4922641	1	Harness, Switch	

FIGURE 2-31. 7500W SKYPOWER GENERATOR INSTALLATION - DEUTZ ENGINES

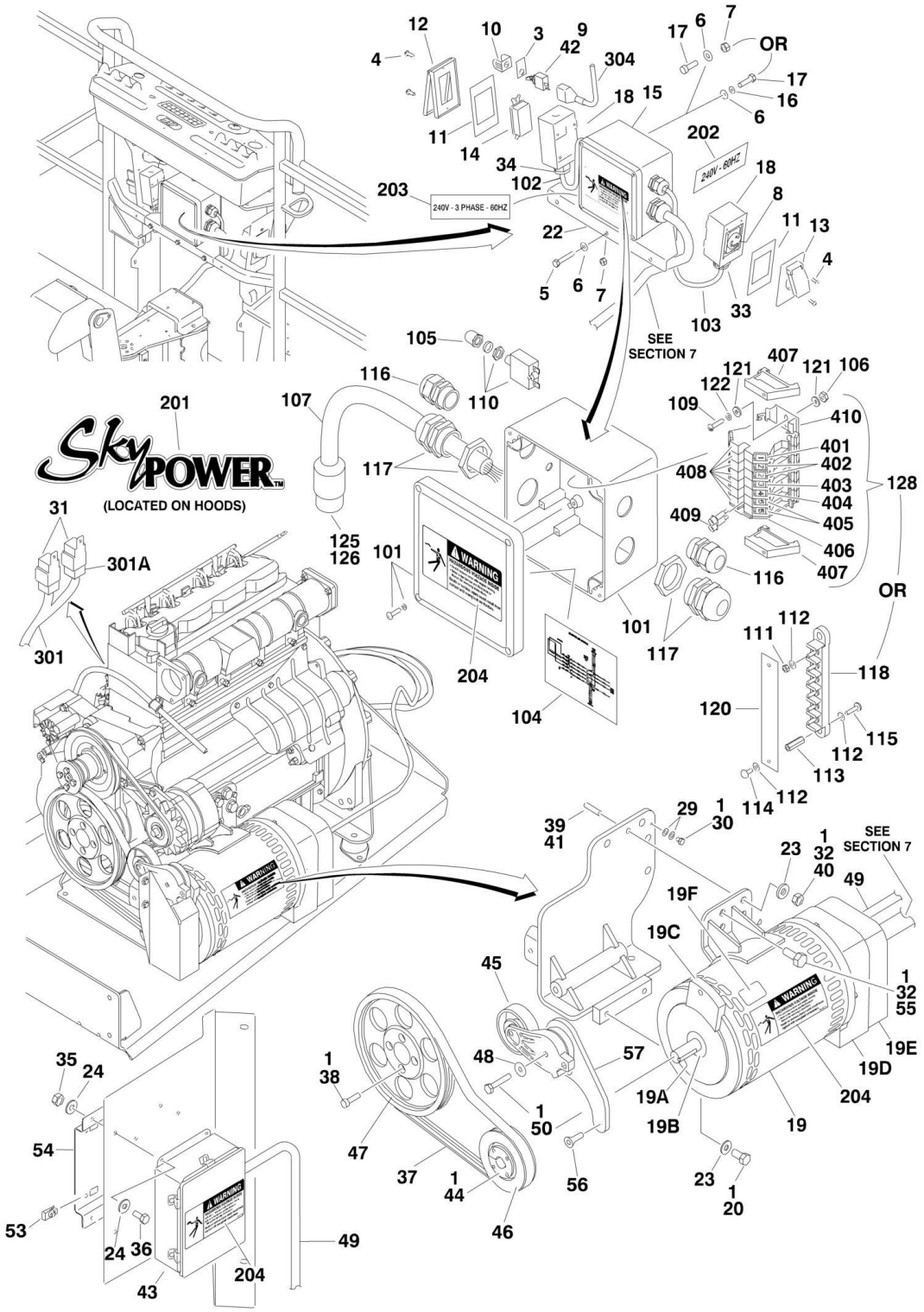

FIGURE 2-31. 7500W SKYPOWER GENERATOR INSTALLATION - DEUTZ ENGINES

ITEM	PART NUMBER	QTY	DESCRIPTION	REV
		Ref	**7500W SKYPOWER GENERATOR INSTALLATION**	
	1001115391	Ref	**60Hz and Deutz D2011 Engine (ANSI and ANSI Export Specs)**	F
	1001145227	Ref	**60Hz and Deutz TD2.9L4 Engine (ANSI and ANSI Export Specs)**	G
	1001115392	Ref	**50Hz and Deutz D2011 Engine (ANSI Export, Australian and CE Specs)**	E
	1001145228	1	50Hz and Deutz TD2.9L4 Engine (ANSI Export, Australian and CE Specs)	D
		Ref	**Note: See ELECTRICAL SECTION for Boom Cable Components.**	
1	0100011	AR	Compound, Locking	
3	3252764	1	Nameplate	
4	3910606	8	Screw #6-32NC x 3/8in	
5	0641516	3	Bolt 5/16in-18NC x 2in	
6		Ref	Flatwasher Options:	
6	4711500	AR	Flatwasher 5/16in Thin	
6	4751000	AR	Flatwasher #10 Regular	
7		Ref	Locknut Options:	
7	3311505	AR	Locknut 5/16in-18NC	
7	3311005	AR	Locknut #10-24NC	
8		Ref	Receptacle, Female Twist-Lock Options (Deutz 2011 Engines Only)	
8	4460958	1	60Hz (ANSI and ANSI Export Specs)	
8	See Note	1	50Hz (ANSI Export, Australian and CE Specs) (Note: Not Available - Purchase Locally)	
9	4360336	1	Switch, Toggle	
10	4060802	1	Guard, Switch	
11		Ref	Gasket Options:	
11	3960422	AR	60Hz (ANSI and ANSI Export Specs)	
11	See Note	AR	50Hz (ANSI Export, Australian and CE Specs) (Note: Not Available - Purchase Locally)	
12		Ref	Cover, Receptacle Options:	
12	See Note	1	Cover for 50Hz (ANSI Export, Australian and CE Specs) (Note: Not Available - Purchase Locally)	
12	1001110873	1	Cover for 60Hz (ANSI and ANSI Export Specs)	
13		Ref	Cover, Receptacle Options (Deutz D2011 Engines Only)	
13	See Note	1	Cover for 50Hz (ANSI Export, Australian and CE Specs) (Note: Not Available - Purchase Locally)	
13	1001110872	1	Cover for 60Hz (ANSI and ANSI Export Specs)	
14		Ref	Receptacle Options:	
14	4460346	1	60Hz (ANSI and ANSI Export Specs)	
14	See Note	1	50Hz (ANSI Export, Australian and CE Specs) (Note: Not Available - Purchase Locally)	
15		Ref	Junction Box Assembly Options (See Items 101-128 for Breakdown)	
15	0861542	1	60Hz and Deutz D2011 Engines (ANSI and ANSI Export Spec) **(SN 0300177361 through 0300182752)**	
15	1001157592	1	60Hz and Deutz D2011 Engines (ANSI and ANSI Export Spec) **(SN 0300182753 through 0300272252)**	
15	1001157592	1	60Hz and Deutz TD2.9L4 Engines (ANSI and ANSI Export Spec)	
15	0861567	1	50Hz and Deutz D2011 Engines (ANSI Export, Australian and CE Specs) **(SN 0300177361 through 0300182752)**	

ITEM	PART NUMBER	QTY	DESCRIPTION	REV
15	1001157525	1	50Hz and Deutz D2011 Engines (ANSI Export, Australian and CE Specs) **(SN 0300182753 through 0300272252)**	
15	0861567	1	50Hz and Deutz TD2.9L4 Engines (ANSI Export, Australian and CE Specs)	
16	4761500	4	Lockwasher 5/16in	
17		Ref	Fastener Options:	
17	0641505	4	Bolt 5/16in-18NC x 5/8in	
17	3931016	4	Capscrew #10-24NC x 1in	
18		Ref	Box, Switch Options:	
18	0860038	AR	60Hz (ANSI and ANSI Export Specs)	
18	See Note	AR	50Hz (ANSI Export, Australian and CE Specs) (Note: Not Available - Purchase Locally)	
19		Ref	Generator Assembly Options:	
19	2460048	1	Deutz D2011 Engine	D
19	1001136988	1	Deutz TD2.9L4 Engine **(SN 0300177361 through 0300226221)**	F
19	1001212223	1	Deutz TD2.9L4 Engine **(SN 03002261222 through 0300272252)**	A
19	70001100	1	Rotor (Includes p/n 70001384 & 70000863) (Not Shown)	
19	70001384	1	Bearing, Ball Radial (Not Shown)	
19	70000863	1	Fan (Not Shown)	
19		Ref	Stator Options (Not Shown)	
19	70002088	1	2460048 Generator	
19	70004093	1	1001136988 Generator	
19	70006093	1	1001212223 Generator	
19	70002297	1	Stud	
19	70003631	1	Brushholder Assembly (Not Shown) (was p/n 7024484)	
19A		Ref	Key (was p/n 7024561)	
19A	70004171	1	2460048 Generator (was p/n 7024561)	
19A	70004099	1	1001136988 & 1001212223 Generators	
19B	70001966	1	Bearing, Ball Radial (Located in Belt Tensioner Endbell)	
19B	70003708	1	Ring, Internal Retaining (Located in Belt Tensioner Endbell)	
19B	70003709	1	Ring, External Retaining (Located in Belt Tensioner Endbell)	
19C		Ref	Endbell, Belt Tensioner	
19C	70001953	1	2460048 Generator	
19C	70004092	1	1001136988 & 1001212223 Generators	
19D		Ref	Endbell, Brush Block Options (was p/n 70001385)	
19D	70004169	1	2460048 Generator (was p/n 70001385)	
19D	70004094	1	1001136988 & 1001212223 Generators	
19E		Ref	Shroud Options:	
19E	70004169	1	2460048 Generator (was p/n 70002290)	
19E	70004096	1	1001136988 Generator	
19E	70006094	1	1001212223 Generator	
19E		Ref	Block, Connector 6 Position (Not Shown)	
19E	7027799	1	2460048 Generator	
19E	70004097	1	1001136988 Generator	
19E	70002291	1	1001212223 Generator	
19E	7026626	1	Connector - 6 Position with Seal (Not Shown)	
19E	70002460	1	Nut, Brass (Attaches p/n 7027799 to Cover) (Not Shown)	
19E		Ref	Breaker, Circuit 30Amp Options (Not Shown):	
19E	7024485	1	2460048 & 1001136988 Generators	
19E	70006095	1	1001212223 Generator	

ITEM	PART NUMBER	QTY	DESCRIPTION	REV
19E		Ref	Boot, Breaker Options (Not Shown):	
19E	70001696	1	2460048 & 1001136988 Generators (was p/n 7024486)	
19E	70006096	1	1001212223 Generators	
19E	7026597	1	Connector, W/Leads (Not Shown)	
19E		Ref	Clamp, Cable (Not Shown)	
19E	7026188	1	2460048 Generator	
19E	70004098	1	1001136988 & 1001212223 Generators	
19E	70003708	1	Ring, Retaining (Internal) (Not Shown)	
19E	70003709	1	Ring, Retaining (External) (Not Shown)	
19E		Ref	Plate, End Panel Options:	
19E	70004169	1	2460048 Generator (was p/n 70002255)	
19E	70004095	1	1001136988 Generator	
19E	70006097	1	1001212223 Generator	
19E	70001974	1	Decal - Terminal Connections	
19F	70001973	1	Decal - Warning Moving Parts	
20	0641808	2	Bolt 1/2in-13NC x 1in	
22	0902888	1	Bracket, Box Mounting	
23		Ref	Flatwasher 1/2in Options:	
23	4711800	AR	Flatwasher 1/2in Thin	
23	4891800	AR	Flatwasher 1/2in Hardened	
24	4711400	AR	Flatwasher 1/4in Thin	
28	4240018	AR	Tie-Strap (Not Shown)	
29	4791400	2	Starwasher 1/4in	
30		Ref	Bolt 1/4in-20NC Options:	
30	0641403	1	Bolt 1/4in-20NC x 3/8in	
30	0641404	1	Bolt 1/4in-20NC x 1/2in	
31	3740080	2	Relay (Deutz D2011 Engines Only) **(SN 0300177361 through 0300181890)**	
32	0100019	AR	Compound, Locking	
33		Ref	Connector, Strain Relief Options (Deutz D2011 Engines Only)	
33	4460051	1	60Hz (ANSI and ANSI Export Specs)	
33	See Note	1	50Hz (ANSI Export, Australian and CE Specs) (Note: Not Available - Purchase Locally)	
34		Ref	Connector, Strain Relief Options:	
34	4460071	1	60Hz (ANSI and ANSI Export Specs)	
34	See Note	1	50Hz (ANSI Export, Australian and CE Specs) (Note: Not Available - Purchase Locally)	
35	3311405	AR	Locknut 1/4in-20NC	
36		Ref	Bolt 1/4in-20NC Options:	
36	0641406	AR	Bolt 1/4in-20NC x 3/4in	
36	0641405	AR	Bolt 1/4in-20NC x 5/8in	
37		Ref	Belt, Drive Options:	
37	0480129	1	60Hz and Deutz D2011 Engine (ANSI and ANSI Export Spec)	
37	1001142646	1	60Hz and Deutz TD2.9L4 Engine (ANSI and ANSI Export Spec)	
37	0480126	1	50Hz (ANSI Export, Australian and CE Specs)	
38	4032015	4	Capscrew M10 x 55mm	
39	4300157	1	Stud (Deutz D2011 Engine)	
39	1001163599	1	Stud (Deutz TD2.9L4 Engine)	
40	3311801	1	Nut 1/2in-13NC	
41	0100062	AR	Adhesive, Loctite #680	
42	2820031	1	Insulator	

ITEM	PART NUMBER	QTY	DESCRIPTION	REV
43		Ref	Control Box Assembly Options:	
43	0861538	1	60Hz Control Box Assembly (ANSI and ANSI Export Specs)	
43	0861572	1	50Hz Control Box Assembly (ANSI Export, Australian and CE Specs)	
43	7024488	1	Card, Circuit - Generator Power	
43	See Note	1	Fuse (Note: Not Available - Purchase Locally)	
43	7024489	1	Card, Circuit - Control	
		Ref	**Note: Same Circuit Card (p/n 7024489) is used for both 60Hz and 50Hz. When replacing card, rocker switch on card must be set for required application.**	
43	70000619	1	Harness, Circuit Card	
44	0962520	1	Bushing, Split Taper	
45	3580317	1	Tensioner, Belt	
46		Ref	Pulley Options:	
46	3580318	1	60Hz (ANSI and ANSI Export Specs)	
46	3580319	1	50Hz (ANSI Export, Australian and CE Specs)	
47	3580320	1	Pulley	
48	4711600	1	Flatwasher 3/8in Thin	
49	4922925	1	Harness, Generator	
50		Ref	Bolt 3/8in-16NC Options:	
50	0641616	1	Bolt 3/8in-16NC x 2in	
50	0641618	1	Bolt 3/8in-16NC x 2-1/4in	
53	3300454	4	Nut Special 1/4in-20NC	
54		Ref	Plate, EMR2 Mount Options:	
54	3575863	1	Deutz D2011 Engine	
54	1001145330	1	Deutz TD2.9L4 Engine	
55	0771415	1	Bolt M14 x 35mm	
56	0741607	2	Screw, Flathead 3/8in-16NC x 7/8in (Deutz TD2.9L4 Engines Only)	
57	1001142643	1	Bracket (Deutz TD2.9L4 Engines Only)	
		Ref	**JUNCTION BOX ASSEMBLY**	
	0861542	Ref	**60Hz and Deutz D2011 Engines (ANSI and ANSI Export Spec) (SN 0300177361 through 0300182752)**	E
	1001157592	Ref	**60Hz and Deutz D2011 Engines (ANSI and ANSI Export Spec) (SN 0300182753 through 0300272252)**	C
	1001157592	Ref	**60Hz and Deutz TD2.9L4 Engines (ANSI and ANSI Export Spec)**	C
	0861567	Ref	**50Hz and Deutz D2011 Engines (ANSI Export, Australian and CE Specs) (SN 0300177361 through 0300182752)**	B
	1001157525	Ref	**50Hz and Deutz D2011 Engines (ANSI Export, Australian and CE Specs) (SN 0300182753 through 0300272252)**	B
	0861567	Ref	**50Hz and Deutz TD2.9L4 Engines (ANSI Export, Australian and CE Specs)**	B
101		Ref	Box, Junction Options:	
101	0861541	1	Deutz D2011 Engines **(SN 0300177361 through 0300182752)**	
101	1001157521	1	Deutz D2011 Engines **(SN 0300182753 through 0300272252)**	
101	1001157521	1	Deutz TD2.9L4 Engines	
102		Ref	Cable, Electrical 12/3 Options:	
102	1060494	2 ft/.6m	60Hz (ANSI and ANSI Export Specs) **(SN 0300177361 through 0300205261)**	
102	1001179154	2 ft/.6m	60Hz (ANSI and ANSI Export Specs) **(SN 0300205262 through 0300272252)**	
102	See Note	2 ft/.6m	50Hz (ANSI Export, Australian and CE Specs) (Note: Not Available - Purchase Locally) **(SN 0300177361 through**	

ITEM	PART NUMBER	QTY	DESCRIPTION	REV
			0300182752)	
103		Ref	Cable, Electrical 10/3 Options:	
103	1060708	2.5 ft /.76m	60Hz and Deutz D2011 Engines (ANSI and ANSI Export Spec) **(SN 0300177361 through 0300182752)**	
103	Not Required	0	60Hz and Deutz D2011 Engines (ANSI and ANSI Export Spec) **(SN 0300182753 through 0300272252)**	
103	Not Required	0	60Hz and Deutz TD2.9L4 Engines (ANSI and ANSI Export Spec)	
103	See Note		50Hz (ANSI Export, Australian and CE Specs) (Note: Not Available - Purchase Locally)	
104		Ref	Decal - Wiring Schematic Options:	
104	1705376	1	Deutz D2011 Engines **(SN 0300177361 through 0300182752)**	
104	1001157528	1	Deutz D2011 Engines **(SN 0300182753 through 0300272252)**	
104	1001157528	1	Deutz TD2.9L4 Engines (60Hz)	
104	1705376	1	Deutz TD2.9L4 Engines (50Hz)	
105	3300396	1	Cover, Fuse	
106	3310601	2	Nut 6-32NC	
107	1060343	AR	Cable, Electrical 10/4 (60Hz Spec Only)	
109	3910610	2	Bolt 6-32NC x 5/8	
110	4360070	1	Circuit Breaker - 15 Amp	
111	3311001	6	Nut #10-24NC	
112	4711000	10	Flatwasher #10 Thin	
113	1001158008	2	Stand-Off	
114	10702077	2	Screw #10-32NF x 3/8in	
115	10702082	2	Screw #10-32NF x 3/4in	
116	4460425	AR	Strain Relief, Terminal	
116	3520192	AR	Plug (50Hz Spec Only)	
117	4460426	AR	Connector, Strain Relief (60Hz Spec Only)	
117	3520189	AR	Plug (50Hz Spec Only)	
118	1001157520	1	Block, Terminal - 6 Pole	
120	1001158007	1	Cover, PVC	
121	4750600	4	Flatwasher #6 Regular	
122	4760600	2	Lockwasher #6	
125	1671092	1	Cover (60Hz Spec Only)	
126	4460963	1	Connector (60Hz Spec Only)	
128	1001121340	1	Terminal Block Assembly (Deutz D2011 Engines) (See Items 401-410 for Breakdown) **(SN 0300177361 through 0300182752)**	
		Ref	**DECAL INSTALLATION**	
	0272435	Ref	**60Hz (ANSI and ANSI Export Specs)**	D
	0272589	Ref	**50Hz (ANSI Export, Australian and CE Specs)**	A
201	1705460	2	Decal - SkyPower	
202	1705374	1	Decal - 240V - 60Hz (60Hz Spec Only) **(SN 0300177361 through 0300201802)**	
202	3251243	1	Decal - 120V - 60Hz (60Hz Spec Only) (Located on Opposite Side) **(SN 0300222414 through 0300272252)**	
203		Ref	Decal - 240V - 3 Phase Options:	
203	1705375	1	60Hz (ANSI and ANSI Export Specs)	
203	1705461	1	50Hz (ANSI Export, Australian and CE Specs)	
204		Ref	Decal, Hazardous Voltage Options:	
204	1705387	3	60Hz (ANSI and ANSI Export Specs)	
204	1705489	3	50Hz (ANSI Export, Australian and CE Specs)	
		Ref	**ELECTRICAL DIAGRAM COMPONENTS**	
	1001112586	Ref	**Deutz D2011 Engines (SN 0300177361 through 0300182752)**	B

ITEM	PART NUMBER	QTY	DESCRIPTION	REV
	1001157769	Ref	**Deutz D2011 Engines (SN 0300182753 through 0300272252)**	B
	1001157770	Ref	**Deutz TD2.9L4 Engines**	A
301		Ref	Generator Harness Options (See ELECTRICAL SECTION for Breakdown)	
301	1001112587	1	Deutz D2011 Engines **(SN 0300177361 through 0300182752)**	B
301	1001152429	1	Deutz D2011 Engines **(SN 0300182753 through 0300272252)**	B
301	1001119968	1	Deutz TD2.9L4 Engines	C
301A	4460374	2	Plug, Sealed Relay (Deutz D2011 Engines Only) **(SN 0300177361 through 0300182752)**	
301A	4460375	7	Terminal (Deutz D2011 Engines Only) **(SN 0300177361 through 0300182752)**	
301B	4460967	1	Plug, Male - 3 Position	
301B	4460465	3	Socket, Female	
301C		Ref	Component Options:	
301C	2400060	1	Fuseholder (Deutz D2011 Engines) (Not Shown)	
301C	2400064	1	Fuse - 5 Amp (Deutz D2011 Engines) (Not Shown)	
301C	1001117078	1	Fuseholder (Includes Fuse and Cap) (Deutz TD2.9L4 Engines) (Not Shown)	
301C	See Note	1	Fuse - 5 Amp (Deutz TD2.9L4 Engines) (Not Shown) (Note: Use 1001117078 Assembly or Purchase Fuse Locally)	
301C	1001096134	1	Cover, Fuseholder (Deutz TD2.9L4 Engines) (Not Shown)	
301D	4460742	1	Connector - 2 Position (1001152429 Harness) (Not Shown)	
301D	4460743	2	Terminal (1001152429 Harness) (Not Shown)	
304	4922641	1	Switch Harness	
	1001121340	Ref	**TERMINAL BLOCK ASSEMBLY (DEUTZ D2011 ENGINES) (SN 0300177361 through 0300182752)**	A
401	70002818	2	Marker Strip #1	
402	70002819	4	Marker Strip #2	
403	70002820	2	Marker Strip #3	
404	70002821	2	Marker Strip #4	
405	70002822	4	Marker Strip #5	
406	70002823	1	Terminal, End Barrier	
407	70002824	2	Terminal, End Block	
408	70002825	7	Terminal, Block	
409	70002826	2	Terminal, Cross Connector Jumper	
410	3641533	1	Rail, Relay	

FIGURE 2-32. 7500W SKYPOWER GENERATOR INSTALLATION - FORD ENGINES

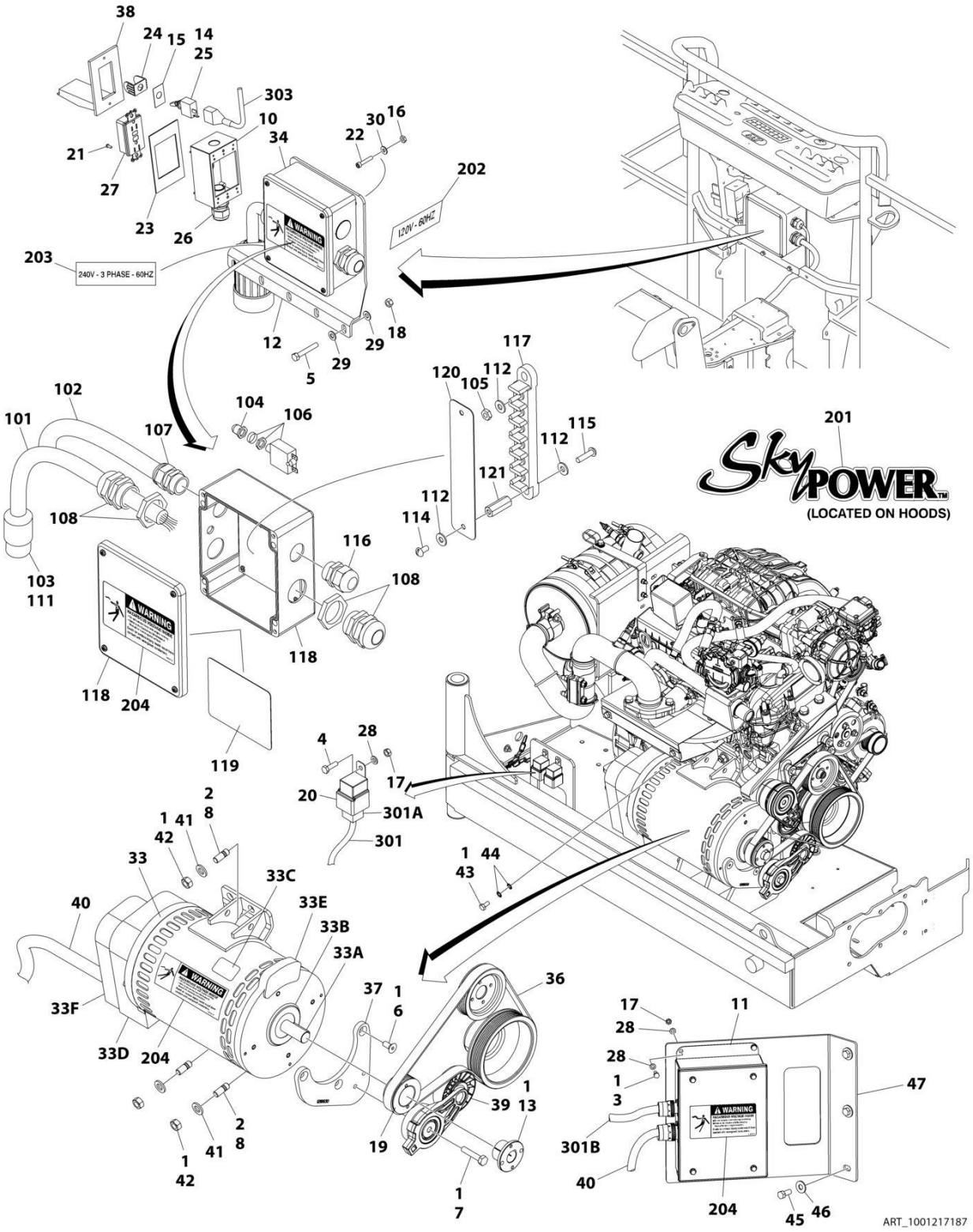

FIGURE 2-32. 7500W SKYPOWER GENERATOR INSTALLATION - FORD ENGINES

ITEM	PART NUMBER	QTY	DESCRIPTION	REV
	1001217187	Ref	**7500W SKYPOWER GENERATOR INSTALLATION - FORD ENGINES**	F
		Ref	**Note: See ELECTRICAL SECTION for Boom Cable Components.**	
1	0100011	AR	Compound, Locking	
2	0100019	AR	Compound, Locking	
3	0760608	4	Bolt M6 x 16	
4	0760610	2	Bolt M6 x 20	
5	0641516	3	Bolt 5/16 x 2	
6	0741607	3	Screw 3/8 x 7/8	
7	0761018	1	Bolt M10 x 50	
8	1001196382	4	Stud	
10	0860038	1	Box, Switch	
11	0861538	1	Control Box Assembly	
11	7024488	1	Card, Circuit - Generator Power	
11	See Note	1	Fuse (Note: Not Available - Purchase Locally)	
11	7024489	1	Card, Circuit - Control	
11	70000619	1	Harness, Circuit Card	
12	0902888	1	Bracket, Box Mounting	
13	0962520	1	Bushing, Spilt Taper	
14	2820031	1	Heat Shrink	
15	3252764	1	Nameplate - AC & Weld	
16	3311005	4	Nut #10	
17	3290601	6	Nut M6	
18	3311505	3	Nut 5/16	
19	3580314	1	Pulley	
20	3740080	2	Relay	
21	3910606	2	Screw #6 x 3/8	
22	3931016	4	Capscrew #10 x 1	
23	3960422	1	Gasket	
24	4060802	1	Guard, Switch	
25	4360336	1	Switch, Toggle	
26	4460071	1	Connector, Strain Relief	
27	4460346	1	Receptacle	
28	4811700	10	Washer #10	
29	4711500	6	Washer 5/16	
30	4751000	4	Washer #10	
33	1001136104	1	Generator Assembly	
33	70003631	1	Brushholder Assembly (Not Shown) (was p/n 7024484)	
33	7024485	1	Breaker, Circuit 30Amp (Not Shown)	
33	70001696	1	Boot, Breaker (was p/n 7024486 - Not Shown)	
33	70001966	1	Bearing, Ball Radial (Located in Belt Tensioner Endbell - Not Shown)	
33	7027799	1	Block, Connector 6 Position (Not Shown)	
33	70002460	6	Nut, Brass (Attaches p/n 7027799 to Cover) (Not Shown)	
33	7026188	1	Clamp, Cable (Not Shown)	
33	7026597	1	Connector, W/Leads (Not Shown)	
33	7026626	1	Connector - 6 Position with Seal (Not Shown)	
33	70002088	1	Stator (Not Shown)	
33	70004169	1	Panel, End (Not Shown) (was p/n 70002255)	

ITEM	PART NUMBER	QTY	DESCRIPTION	REV
33	70001974	1	Decal - Terminal Connections (Not Shown)	
33	70000863	1	Fan (Not Shown)	
33	70002297	4	Stud (Not Shown)	
33A	70004171	1	Key (was p/n 7024561)	
33A	70001100	1	Armature, Generator (Includes Radial Ball Bearing on End with Brushes and Fan)	
33A	70001384	1	Bearing, Ball Radial	
33B	70001966	1	Bearing, Radial Ball	
33B	70003708	1	Ring, Internal Retaining (Located in Belt Tensioner Endbell)	
33B	70003709	1	Ring, External Retaining (Located in Belt Tensioner Endbell)	
33C	70001973	1	Decal - Warning Moving Parts	
33D	70004169	1	Endbell, Brush Block (was p/n 70001385)	
33E	70001953	1	Endbell, Belt Tensioner	
33F	70004169	1	Endbell, Shroud Assembly (was p/n 70002290)	
34	1001157592	1	Junction Box Assembly (See Items 101-121 for Breakdown)	
36	1001216390	1	V-Belt	
37	1001218930	1	Mount, Tensioner	
38	1001110873	1	Cover, Receptacle	
39	3580317	1	Tensioner, Belt	
40	4922925	1	Harness, Generator	
41	5241200	4	Washer M12	
42	3291201	4	Nut M12	
43	0760606	1	Bolt M6 x 12	
44	4871700	2	Washer M6	
45	0641607	3	Bolt 3/8 x 7/8	
46	4751600	3	Washer 3/8	
47	1001137866	1	Bracket	
	1001157592	Ref	**JUNCTION BOX ASSEMBLY**	C
101	1060343	1.5 ft /0.5m	Cable, Electrical - 10/4 (60Hz Only)	
102	1001179154	2.5 ft /0.8m	Cable Electrical - 12/3	
103	1671092	1	Cover, Connector	
104	3300396	1	Cover, Fuse	
105	3311001	6	Nut #10	
106	4360070	1	Breaker, Circuit 15Amp	
107	4460425	1	Connector, Strain Relief	
108	4460426	2	Connector, Strain Relief	
111	4460963	1	Receptacle	
112	4711000	10	Washer #10	
114	10702077	2	Screw #10 x 3/8	
115	10702082	2	Screw #10 x 3/4	
116	1001152525	1	Plug, Hole	
117	1001157520	1	Block, Terminal Pole	
118	1001157521	1	Box, Junction	
119	1001157528	1	Decal - Box Junction	
120	1001158007	1	Cover	
121	1001158008	2	Standoff	
	0272435	Ref	**DECAL INSTALLATION**	D
201	1705460	2	Decal - SkyPower	
202	3251243	1	Decal - 120V - 60Hz (60Hz Spec Only) (Located on Opposite Side)	
203	1705375	1	Decal - 240V - 3 Phase	

ITEM	PART NUMBER	QTY	DESCRIPTION	REV
204	1705387	3	Decal, Hazardous Voltage	
	1001221498	Ref	**ELECTRICAL DIAGRAM COMPONENTS**	A
301	1001221208	1	Generator Harness	A
301A	4460374	2	Plug, Sealed Relay	
301A	4460375	8	Terminal	
301B	4460967	1	Plug, Male - 3 Position	
301B	4460465	3	Socket, Female	
301C	2400060	2	Fuseholder (Not Shown)	
301C	2400064	2	Fuse - 5 Amp (Not Shown)	
301D	4460742	1	Plug, Male - 2 Position (Not Shown)	
301D	4460743	2	Socket, Female (Not Shown)	
303	4922641	1	Switch Harness	

FIGURE 2-33. 7500W SKYPOWER GENERATOR INSTALLATION - GM ENGINES

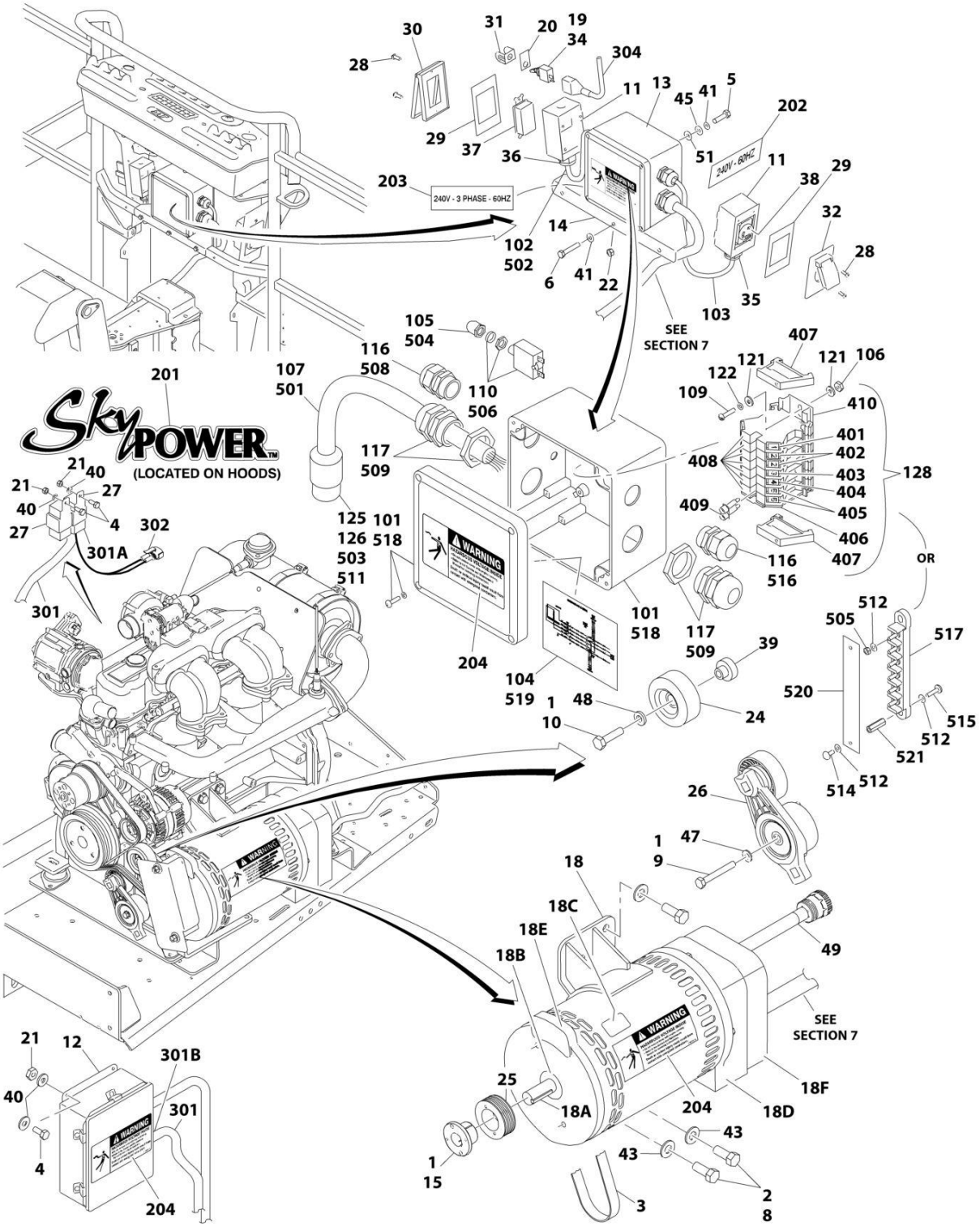

FIGURE 2-33. 7500W SKYPOWER GENERATOR INSTALLATION - GM ENGINES

ITEM	PART NUMBER	QTY	DESCRIPTION	REV
	0275257	Ref	**7500W SKYPOWER GENERATOR INSTALLATION**	H
		Ref	**Note: See ELECTRICAL SECTION for Boom Cable Components.**	
1	0100011	AR	Compound, Locking	
2	0100019	AR	Compound, Locking	
3	0480142	1	Belt, Generator	
4	0641405	6	Bolt 1/4in-20NC x 5/8in	
5	0641505	4	Bolt 5/16in-18NC x 5/8in **(SN 0300177361 through 0300182752)**	
5	3931016	4	Capscrew #10-24NC x 1in **(SN 0300182753 through 0300272252)**	
6	0641516	3	Bolt 5/16in-18NC x 2in	
8	0641808	4	Bolt 1/2in-13NC x 1in	
9	0700820	1	Bolt, Metric M8 x 60mm	
10	0701016	1	Bolt, Metric M10 x 40mm	
11	0860038	AR	Box, Switch	
12	0861538	1	Control Box Assembly	
12	7024488	1	Card, Circuit - Generator Power	
12	See Note	1	Fuse (Note: Not Available - Purchase Locally)	
12	7024489	1	Card, Circuit - Control	
12	70000619	1	Harness, Circuit Card	
13	0861542	1	Junction Box Assembly (See Items 101-128 for Breakdown) **(SN 0300177361 through 0300182752)**	
13	1001157592	1	Junction Box Assembly (See Items 501-521 for Breakdown) **(SN 0300182753 through 0300272252)**	
14	0902888	1	Bracket, Box Mounting	
15	0962520	1	Bushing, Split Taper	
18	2460048	1	Generator Assembly	
18	70003631	1	Brushholder Assembly (Not Shown) (was p/n 7024484)	
18	7024485	1	Breaker, Circuit 30Amp (Not Shown)	
18	70001696	1	Boot, Breaker (was p/n 7024486 - Not Shown)	
18	70001966	1	Bearing, Ball Radial (Located In Belt Tensioner Endbell - Not Shown)	
18	7027799	1	Block, Connector 6 Position (Not Shown)	
18	70002460	6	Nut, Brass (Attaches p/n 7027799 to Cover) (Not Shown)	
18	7026188	1	Clamp, Cable (Not Shown)	
18	7026597	1	Connector, W/Leads (Not Shown)	
18	7026626	1	Connector - 6 Position with Seal (Not Shown)	
18	70002088	1	Stator (Not Shown)	
18	70004169	1	Panel, End (Not Shown) (was p/n 70002255)	
18	70001974	1	Decal - Terminal Connections (Not Shown)	
18	70000863	1	Fan (Not Shown)	
18	70002297	4	Stud (Not Shown)	
18A	70004171	1	Key (was p/n 7024561)	
18A	70001100	1	Armature, Generator (Includes Radial Ball Bearing on End with Brushes and Fan)	
18A	70001384	1	Bearing, Ball Radial	
18B	70001966		Bearing, Radial Ball	
18B	70003708	1	Ring, Internal Retaining (Located in Belt Tensioner Endbell)	
18B	70003709	1	Ring, External Retaining (Located in Belt Tensioner Endbell)	
18C	70001973	1	Decal - Warning Moving Parts	
18D	70004169	1	Endbell, Brush Block (was p/n 70001385)	

ITEM	PART NUMBER	QTY	DESCRIPTION	REV
18E	70001953	1	Endbell, Belt Tensioner	
18F	70004169	1	Endbell, Shroud Assembly (was p/n 70002290)	
19	2820031	1	Insulator	
20	3252764	1	Nameplate	
21	3311405	6	Locknut 1/4in-20NC	
22	3311505	3	Locknut 5/16in-18NC	
24	3580312	2	Pulley, Idler	
25	3580314	1	Pulley, Drive Grooved	
26	3580348	1	Tensioner, Belt with Pulley	
27	3740080	2	Relay	
28	3910606	AR	Screw #6-32NC x 3/8in	
29	3960422	AR	Gasket	
30	1001110873	1	Cover, Receptacle	
31	4060802	1	Guard, Switch	
32	1001110872	1	Cover, Receptacle **(SN 0300177361 through 0300182752)**	
34	4360336	1	Switch, Toggle	
35	4460051	1	Connector, Strain Relief **(SN 0300177361 through 0300182752)**	
36	4460071	1	Connector, Strain Relief	
37	4460346	1	Receptacle	
38	4460958	1	Receptacle, Female Twist-Lock **(SN 0300177361 through 0300182752)**	
39	4568735	1	Tube, Spacer Pulley Grooved	
40	4711400	10	Flatwasher 1/4in Thin	
41	4711500	AR	Flatwasher 5/16in Thin	
43	4711800	4	Flatwasher 1/2in Thin	
45	4761500	AR	Lockwasher 5/16in	
45	4751000	AR	Flatwasher #10	
47	4811900	1	Flatwasher M8	
48	4891600	1	Flatwasher 3/8in Hardened	
49	4922925	1	Harness, Generator	
51	3311005	AR	Locknut #10-24	
	0861542	Ref	**JUNCTION BOX ASSEMBLY (SN 0300177361 through 0300182752)**	E
101	0861541	1	Box, Junction	
102	1060494	2 ft /.6m	Cable, Electrical 12/3 **(SN 0300177361 through 0300205261)**	
102	1001179154	2 ft /.6m	Cable, Electrical 12/3 **(SN 0300205262 through 0300272252)**	
103	1060708	2.5 ft /.76m	Cable, Electrical 10/3	
104	1705376	1	Decal - Wiring Schematic	
105	3300396	1	Cover, Fuse	
106	3310601	2	Nut 6-32NC	
107	1060343	1.5 ft /.46m	Cable, Electrical 10/4	
109	3910610	2	Bolt 6-32NC x 5/8	
110	4360070	1	Circuit Breaker - 15 Amp	
116	4460425	2	Strain Relief, Terminal	
117	4460426	2	Connector, Strain Relief	
121	4750600	4	Flatwasher #6 Regular	
122	4760600	2	Lockwasher #6	
125	1671092	1	Cover	
126	4460963	1	Connector	
128	1001121340	1	Terminal Block Assembly (See Items 401-410 for Breakdown)	

ITEM	PART NUMBER	QTY	DESCRIPTION	REV
	0272435	Ref	**DECAL INSTALLATION**	D
201	1705460	2	Decal - SkyPower	
202	1705374	1	Decal - 240V - 60Hz (60Hz Specs Only) **(SN 0300177361 through 0300201802)**	
202	3251243	1	Decal - 120V - 60Hz (60Hz Spec Only) (Located on Opposite Side) **(SN 0300222577 through 0300272252)**	
203	1705375	1	Decal - 240V - 3 Phase	
204	1705387	3	Decal, Hazardous Voltage	
	4933349	Ref	**ELECTRICAL DIAGRAM COMPONENTS (SN 0300177361 through 0300182752)**	A
	1001157768	Ref	**ELECTRICAL DIAGRAM COMPONENTS (SN 0300182753 through 0300272252)**	A
301	4923420	1	Generator Harness	A
301A	4460374	2	Plug, Sealed Relay	
301A	4460375	8	Terminal	
301B	4460967	1	Plug, Male - 3 Position	
301B	4460465	3	Socket, Female	
301C	2400060	2	Fuseholder (Not Shown)	
301C	2400064	2	Fuse - 5 Amp (Not Shown)	
302	4460742	1	Connector - 2 Position **(SN 0300177361 through 0300182752)**	
302	4460743	2	Socket, Female **(SN 0300177361 through 0300182752)**	
302	4460458	2	Seal **(SN 0300177361 through 0300182752)**	
304	4922641	1	Switch Harness	
	1001121340	Ref	**TERMINAL BLOCK ASSEMBLY**	A
401	70002818	2	Marker Strip #1	
402	70002819	4	Marker Strip #2	
403	70002820	2	Marker Strip #3	
404	70002821	2	Marker Strip #4	
405	70002822	4	Marker Strip #5	
406	70002823	1	Terminal, End Barrier	
407	70002824	2	Terminal, End Block	
408	70002825	7	Terminal, Block	
409	70002826	2	Terminal, Cross Connector Jumper	
410	3641533	1	Rail, Relay	
	1001157592	Ref	**JUNCTION BOX ASSEMBLY (SN 0300182753 through 0300272252)**	C
501	1060343	1.5 ft /.46m	Cable, Electrical - 10/4 (60Hz Only)	
502	1060494	2 ft /.6m	Cable Electrical - 12/3 **(SN 0300177361 through 0300205491)**	
502	1001179154	2.5 ft /.76m	Cable Electrical - 12/3 **(SN 0300205492 through 0300272252)**	
503	1671092	1	Cover, Connector	
504	3300396	1	Cover, Fuse	
505	3311001	6	Nut #10	
506	4360070	1	Breaker, Circuit 15Amp	
508	4460425	1	Connector, Strain Relief	
509	4460426	2	Connector, Strain Relief	
511	4460963	1	Receptacle	
512	4711000	10	Washer #10	
514	10702077	2	Screw #10 x 3/8	
515	10702082	2	Screw #10 x 3/4	
516	1001152525	1	Plug, Hole	
517	1001157520	1	Block, Terminal Pole	

ITEM	PART NUMBER	QTY	DESCRIPTION	REV
518	1001157521	1	Box, Junction	
519	1001157528	1	Decal - Box Junction	
520	1001158007	1	Cover	
521	1001158008	2	Standoff	

SECTION 3 - BOOM

FIGURE 3-1. BOOMS AND CYLINDERS INSTALLATION - 600A

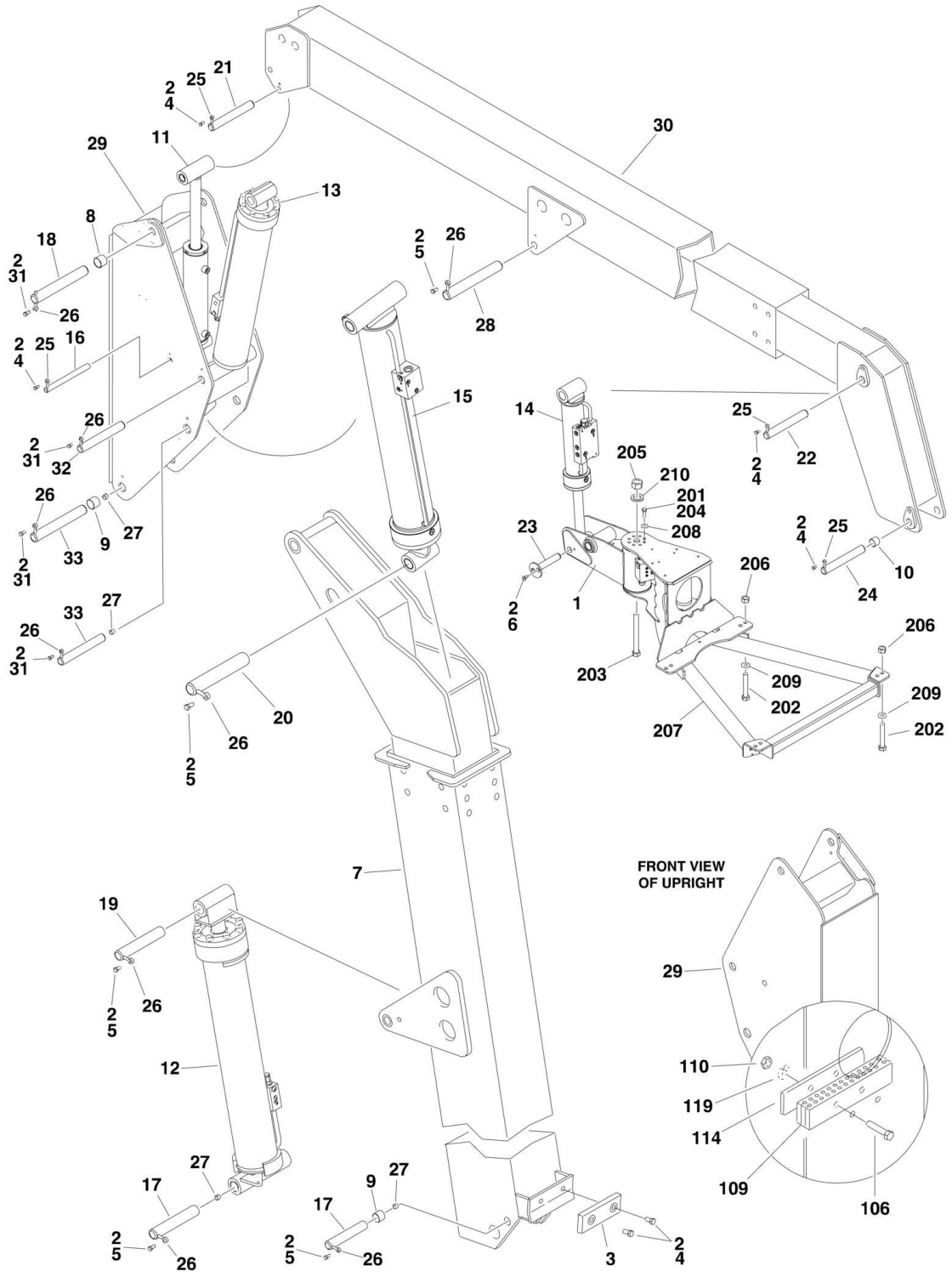

FIGURE 3-1. BOOMS AND CYLINDERS INSTALLATION - 600A

ITEM	PART NUMBER	QTY	DESCRIPTION	REV
	1001152539	Ref	**BOOMS AND CYLINDERS INSTALLATION (SN 0300177361 through 0300181174)**	D
	1001159692	Ref	**BOOMS AND CYLINDERS INSTALLATION (SN 0300181175 through 0300272252)**	J
1	0060068	1	Rotator Assembly (See ROTATOR ASSEMBLIES for Breakdown)	
1	1001157222	1	Rotator Assembly (See ROTATOR ASSEMBLIES for Breakdown) **(SN 0300181175 through 0300201144)**	
1	1001181056	1	Rotator Assembly (See ROTATOR ASSEMBLIES for Breakdown) **(SN 0300201145 through 0300272252)**	
2	0100011	AR	Compound, Locking	
3	0561076	1	Block, Boom Rest	
4	0641607	6	Bolt 3/8in-16NC x 7/8in	
5	0641810	5	Bolt 1/2in-13NC x 1-1/4in	
6	0741607	1	Screw, Countersunk 3/8in-16NC x 7/8in	
7	0801019	1	Tower Boom Assembly (See TOWER BOOM ASSEMBLY for Breakdown)	
8	0961948	2	Bushing	
9	0961949	4	Bushing	
10	0961951	2	Bushing	
11	1683266	NLA	Master Cylinder Assembly (Use p/n 1001228002) (See CYLINDER SECTION for Breakdown) **(SN 0300177361 through 0300241337)**	
11	1001228002	1	Master Cylinder Assembly (See CYLINDER SECTION for Breakdown) **(SN 0300241338 through 0300272252)**	
12	1683288	NLA	Tower Lift Cylinder Assembly (Use p/n 1001228003) (See CYLINDER SECTION for Breakdown) **(SN 0300177361 through 0300239707)**	
12	1001228003	1	Tower Lift Cylinder Assembly (See CYLINDER SECTION for Breakdown) **(SN 0300239708 through 0300272252)**	
13	1683294	NLA	Main Lift Cylinder Assembly (Use p/n 1001228004) (See CYLINDER SECTION for Breakdown) **(SN 0300177361 through 0300237381)**	
13	1001228004	1	Main Lift Cylinder Assembly (See CYLINDER SECTION for Breakdown) **(SN 0300237382 through 0300272252)**	
14	1683415	NLA	Platform Level Cylinder Assembly (See CYLINDER SECTION for Breakdown) (Use p/n 1001223512) **(SN 0300177361 through 0300233770)**	
14	1001223512	NLA	Platform Level Cylinder Assembly (Use p/n 1001228008) (See CYLINDER SECTION for Breakdown) **(SN 0300233771 through 0300241337)**	
14	1001228008	1	Platform Level Cylinder Assembly (See CYLINDER SECTION for Breakdown) **(SN 0300241338 through 0300272252)**	
15	1684498	NLA	Upright Level Cylinder Assembly (Use p/n 1001228042) (See CYLINDER SECTION FOR BREAKDOWN) **(SN 0300177361 through 0300237381)**	
15	1001228042	1	Upright Level Cylinder Assembly (See CYLINDER SECTION FOR BREAKDOWN) **(SN 0300237382 through 0300272252)**	
16	1001155098	1	Pin	
17	3422571	2	Pin **(SN 0300177361 through 0300200466)**	
17	1001158810	2	Pin **(SN 0300200467 through 0300272252)**	
18	1001155096	1	Pin	
19	3422573	1	Pin	
20	3422575	1	Pin	
21	3422577	1	Pin	
22	3422578	1	Pin	

ITEM	PART NUMBER	QTY	DESCRIPTION	REV
23	3422580	1	Pin	
24	3422582	1	Pin	
25	3841143	4	Keeper, Pin - 3/8in	
26	3841203	9	Keeper, Pin - 1/2in	
27	3900239	4	Setscrew **(SN 0300177361 through 0300200466)**	
28	1001097822	1	Pin	
29	1001152031	1	Upright Weldment	
30	1001152138	1	Main Boom Assembly (See MAIN BOOM ASSEMBLY for Breakdown)	
31	0641808	4	Bolt 1/2in-13NC x 1in	
32	1001155097	1	Pin	
33	1001155093	2	Pin	
	1001152355	Ref	**POWER TRACK INSTALLATION**	D
106	0641532	2	Bolt 5/16in-18NC x 4in	
109	1320243	1	Clamp, Block	
110	3311505	2	Nut 5/16in-18NC	
114	3570374	1	Plate	
119	4751500	2	Flatwasher 5/16in Regular	
		Ref	**PLATFORM SUPPORT INSTALLATION**	
	0272070	Ref	**Machines without LSS and without SkyGlazier**	E
	See Note	Ref	**Machines with LSS (Note: See Separate Breakdown in this Section)**	
201	0100011	AR	Compound, Locking	
202	0641812	8	Bolt 1/2in-13NC x 1-1/2in	
203	0642684	1	Bolt 1in-8NC x 10-1/2in	
204	0681608	8	Bolt 3/8in-16NC x 1in	
205	3272605	NLA	Locknut 1in-8NC (Use p/n 3300243)	
206	3311805	8	Locknut 1/2in-13NC	
207	4846573	1	Support Weldment	
208	4891600	8	Flatwasher 3/8in Hardened	
209	4891800	8	Flatwasher 1/2in Hardened	
210	4892600	1	Flatwasher 1in Hardened	

FIGURE 3-2. BOOMS AND CYLINDERS INSTALLATION - 600AJ

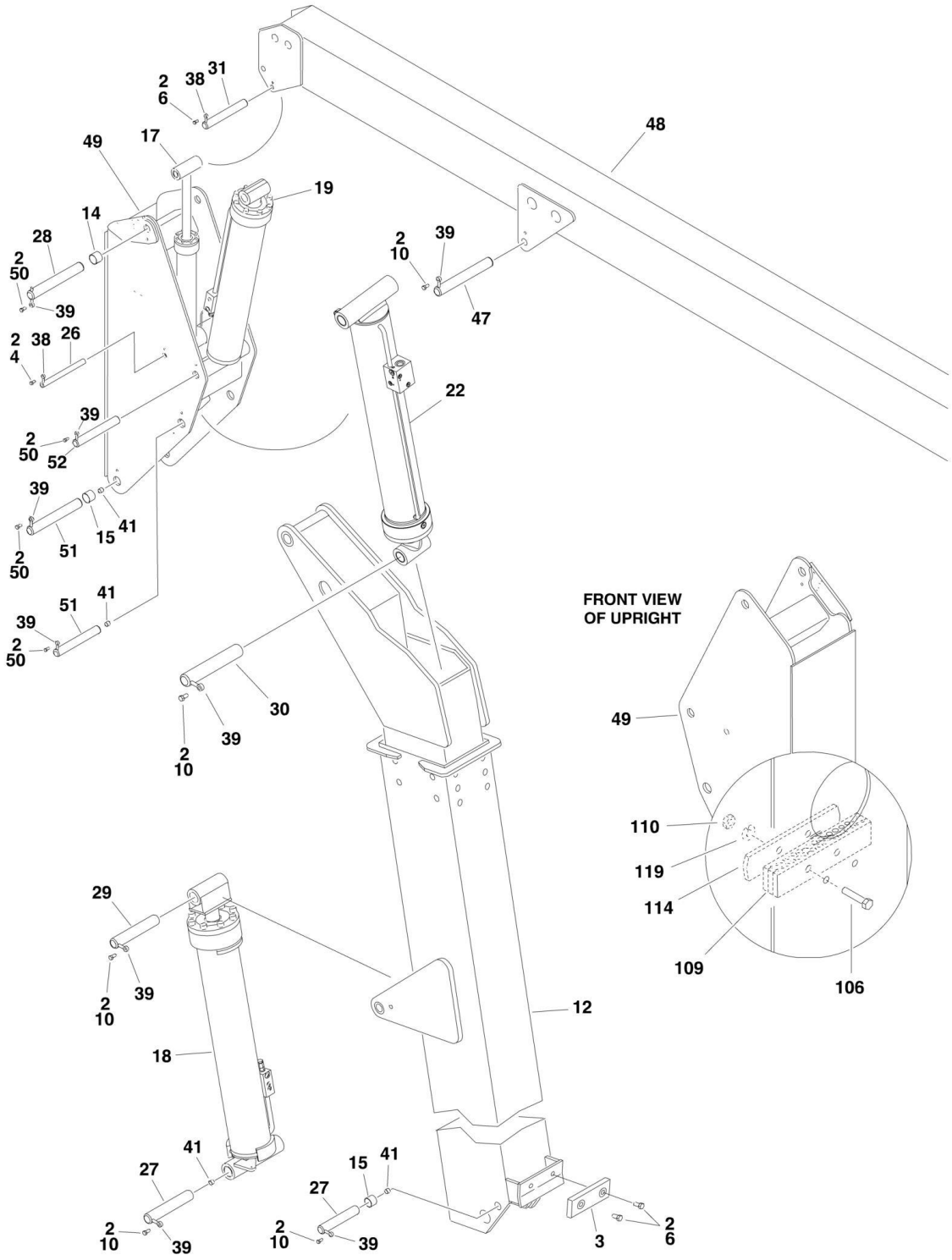

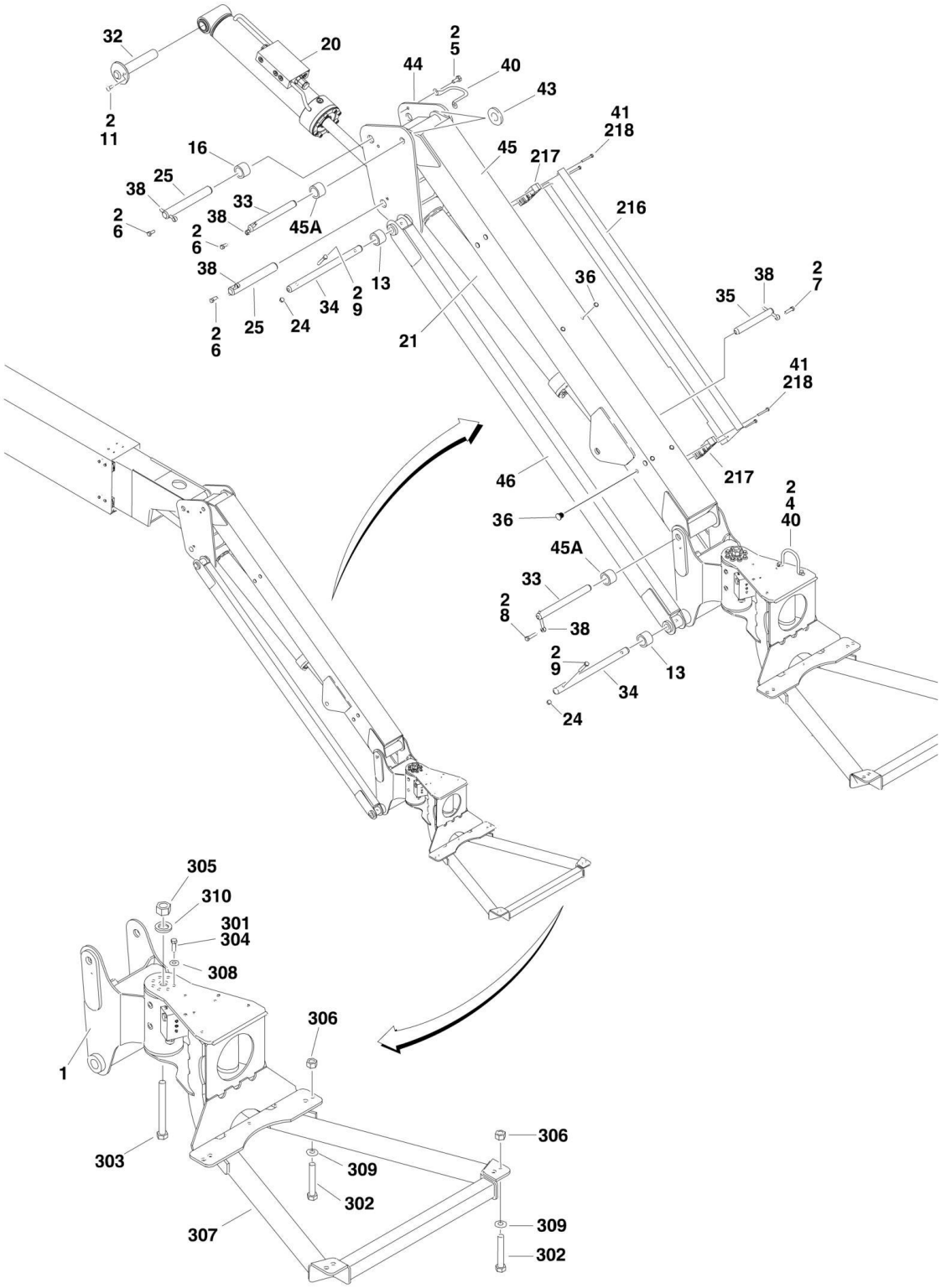
32
20
2
5
44
40
43
2
11
41
218
16
45
217
25
38
33
216
2
6
38
45A
2
6
38
13
36
38
2
7
35
34
2
9
2
6
25
24
21
41
218
46
217
2
4
40
36
45A
33
2
8
38
2
9
13
34
24
305
310
301
304
308
306
1
303
306
309
302
307
309
302

FIGURE 3-2. BOOMS AND CYLINDERS INSTALLATION - 600AJ

ITEM	PART NUMBER	QTY	DESCRIPTION	REV
		Ref	**BOOMS AND CYLINDERS INSTALLATION - 600AJ**	
	1001152540	Ref	**Machines without Arctic Package (SN 0300177361 through 0300181174)**	D
	1001159693	Ref	**Machines without Arctic Package (SN 0300181175 through 0300261799)**	P
	1001247097	Ref	**Machines without Arctic Package (SN 0300261800 through 0300272252)**	A
	1001155189	Ref	**Machines with Arctic Package (SN 0300177361 through 0300181174)**	D
	1001159694	Ref	**Machines with Arctic Package (SN 0300181175 through 0300261799)**	P
	1001247098	Ref	**Machines with Arctic Package (SN 0300261800 through 0300272252)**	A
	1001247146	Ref	**Jib Boom Installation (SN 0300261800 through 0300272252)**	A
1	0060066	1	Rotator Assembly (See ROTATOR ASSEMBLIES for Breakdown) **(SN 0300177361 through 0300181174)**	
1	1001157220	1	Rotator Assembly (See ROTATOR ASSEMBLIES for Breakdown) **(SN 0300181175 through 0300201144)**	
1	1001178256	NLA	Rotator Assembly (See ROTATOR ASSEMBLIES for Breakdown) (Use p/n 1001217780) **(SN 0300201145 through 0300235566)**	
1	1001217780	1	Rotator Assembly (See ROTATOR ASSEMBLIES for Breakdown)	
2	0100011	AR	Compound, Locking	
3	0561076	1	Block, Boom Rest	
4	0641604	AR	Bolt 3/8in-16NC x 1/2in	
5	0641606	2	Bolt 3/8in-16NC x 3/4in	
6	0641607	AR	Bolt 3/8in-16NC x 7/8in	
6	0641608	AR	Bolt 3/8in-16NC x 1in	
7	0641611	1	Bolt 3/8in-16NC x 1-3/8in	
7	0641610	1	Bolt 3/8in-16NC x 1-3/4in	
8	0641614	1	Bolt 3/8in-16NC x 1-3/4in	
8	0641608	1	Bolt 3/8in-16NC x 1in	
9	0641618	4	Bolt 3/8in-16NC x 2-1/4in	
10	0641810	5	Bolt 1/2in-13NC x 1-1/4in	
11	0741605	1	Screw, Countersunk 3/8in-16NC x 5/8in	
12	0801019	1	Tower Boom Assembly (See TOWER BOOM ASSEMBLY for Breakdown)	
13	0961947	6	Bushing	
14	0961948	2	Bushing	
15	0961949	4	Bushing	
16	0961951	2	Bushing	
17		Ref	Master Cylinder Assembly Options (See CYLINDER SECTION for Breakdown)	
17	1683263	NLA	Master Cylinder - Machines without Arctic Package (Use p/n 1001228052) **(SN 0300177361 through 0300241337)**	
17	1001228052	1	Master Cylinder - Machines without Arctic Package **(SN 0300241338 through 0300272252)**	
17	1001138799	NLA	Master Cylinder - Machines with Arctic Package (Use p/n 1001228052) **(SN 0300177361 through 0300241337)**	
17	1001228052	1	Master Cylinder - Machines with Arctic Package **(SN 0300241338 through 0300272252)**	
18	1683288	NLA	Tower Lift Cylinder Assembly (use p/n 1001228003) (See	

ITEM	PART NUMBER	QTY	DESCRIPTION	REV
			CYLINDER SECTION for Breakdown) **(SN 0300177361 through 0300239707)**	
18	1001228003	1	Tower Lift Cylinder Assembly (See CYLINDER SECTION for Breakdown) **(SN 0300239708 through 0300272252)**	
19	1683294	NLA	Main Lift Cylinder Assembly (Use p/n 1001228004) (See CYLINDER SECTION for Breakdown) **(SN 0300177361 through 0300237381)**	
19	1001228004	1	Main Lift Cylinder Assembly (See CYLINDER SECTION for Breakdown) **(SN 0300237382 through 0300272252)**	
20		Ref	Platform (Slave) Level Cylinder Assembly Options (See CYLINDER SECTION for Breakdown)	
20	1683418	NLA	Level Cylinder - Machines without Arctic Package (Use p/n 1001228051) **(SN 0300177361 through 0300229828)**	
20	1001223331	NLA	Level Cylinder - Machines without Arctic Package (Use p/n 1001228051) **(SN 0300229829 through 0300241337)**	
20	1001228051	1	Level Cylinder - Machines without Arctic Package **(SN 0300241338 through 0300272252)**	
20	1001138798	NLA	Level Cylinder - Machines with Arctic Package (Use p/n 1001228051) **(SN 0300177361 through 0300229828)**	
20	1001223335	NLA	Level Cylinder - Machines with Arctic Package (Use p/n 1001228051) **(SN 0300229829 through 0300241337)**	
20	1001228051	1	Level Cylinder - Machines with Arctic Package **(SN 0300241338 through 0300272252)**	
21		Ref	Jib Lift Cylinder Assembly Options (See CYLINDER SECTION for Breakdown)	
21	1683609	NLA	Jib Cylinder - Machines without Arctic Package (Use p/n 1001248012) **(SN 0300177361 through 0300241337)**	
21	1001138792	NLA	Jib Cylinder - Machines with Arctic Package (Use p/n 1001248012) **(SN 0300177361 through 0300241337)**	
21	1001228012	NLA	Jib Cylinder - All Machines (Use p/n 1001248012) **(SN 0300241338 through 0300244755)**	
21	1001248012	1	Jib Cylinder - All Machines **(SN 0300244756 through 0300272252)**	
22	1684498	NLA	Upright Level Cylinder Assembly (Use p/n 1001228042) (See CYLINDER SECTION for Breakdown) **(SN 0300177361 through 0300237381)**	
22	1001228042	1	Upright Level Cylinder Assembly (See CYLINDER SECTION for Breakdown) **(SN 0300237382 through 0300272252)**	
23	2080044	4	Rivnut	
24	3311605	5	Locknut 3/8in-16NC	
25	3422561	2	Pin	
26	1001155094	1	Pin	
27	3422571	2	Pin **(SN 0300177361 through 0300200466)**	
27	1001158810	2	Pin **(SN 0300200467 through 0300272252)**	
28	1001155096	1	Pin	
29	3422573	1	Pin	
30	3422575	1	Pin	
31	3422579	1	Pin	
32	3422583	1	Pin	
33	3422860	2	Pin	
34	3422861	2	Pin **(SN 0300177361 through 0300261799)**	
34	1001182064	2	Pin **(SN 0300261800 through 0300272252)**	
35	3422867	1	Pin	
36	3520034	4	Plug **(SN 0300177361 through 0300229836)**	
36	1001223899	8	Fastener **(SN 0300229837 through 0300272252)**	
38	3841143	7	Keeper, Pin - 3/8in	

ITEM	PART NUMBER	QTY	DESCRIPTION	REV
39	3841203	9	Keeper, Pin - 1/2in	
40	3841340	AR	Loop, Hose	
41	3900239	4	Setscrew **(SN 0300177361 through 0300200466)**	
43	4740439	2	Thrustwasher	
44	4844815	1	Pivot Weldment **(SN 0300177361 through 0300181174)**	
44	1001169384	1	Pivot Weldment **(SN 0300181175 through 0300272252)**	
45	4844816	1	Tube - Top	
45A	0962335	4	Bushing	
46	4844817	2	Tube - Bottom **(SN 0300177361 through 0300261799)**	
46	1001181960	2	Tube - Bottom **(SN 0300261800 through 0300272252)**	
47	1001097822	1	PIN	
48	1001152253	1	Main Boom Assembly (See MAIN BOOM ASSEMBLY for Breakdown) **(SN 0300177361 through 0300181174)**	
48	1001156501	1	Main Boom Assembly (See MAIN BOOM ASSEMBLY for Breakdown) **(SN 0300181175 through 0300272252)**	
49	1001152639	1	Upright	
50	0641808	4	Bolt 1/2in-13NC x 1in	
51	1001155093	2	Pin	
52	1001155097	1	Pin	
	1001152355	Ref	**POWER TRACK INSTALLATION**	D
106	0641532	2	Bolt 5/16in-18NC x 4in	
109	1320243	1	Clamp, Block	
110	3311505	2	Nut 5/16in-18NC	
114	3570374	1	Plate	
119	4751500	2	Flatwasher 5/16in Regular	
		Ref	**CABLE COVER INSTALLATION (600AJ ONLY)**	
	0270820	Ref	**ANSI, ANSI Export, CSA and Japanese Specs without 4000W or 7500W Generator (SN 0300117361 through 0300181174)**	6-G
	1001165366	Ref	**ANSI, ANSI Export, CSA and Japanese Specs without 4000W or 7500W Generator (SN 0300181175 through 0300272252)**	A
	1001153322	Ref	**ANSI, ANSI Export, CSA and Japanese Specs with 4000W Generator**	A
	0272625	Ref	**ANSI, ANSI Export and CSA Specs with 7500W Generator (SN 0300117361 through 0300181174)**	2-G
	1001165552	Ref	**ANSI, ANSI Export and CSA Specs with 7500W Generator (SN 0300181175 through 0300272252)**	A
	0275140	Ref	**ANSI, ANSI Export and CSA Specs with Arctic Package without 4000W or 7500W Generator (SN 0300117361 through 0300181174)**	1
	1001165556	Ref	**ANSI, ANSI Export and CSA Specs with Arctic Package without 4000W or 7500W Generator (SN 0300181175 through 0300272252)**	A
	1001093432	Ref	**ANSI, ANSI Export and CSA Specs with Arctic Package with 7500W Generator (SN 0300117361 through 0300181174)**	2-A
	1001165557	Ref	**ANSI, ANSI Export and CSA Specs with Arctic Package with 7500W Generator (SN 0300181175 through 0300272252)**	A
	1001115974	Ref	**ANSI and ANSI Export with David Clark Communication System without 7500W Generator (Note: Not Shown - Contact your JLG Parts Department) (SN 0300177361 through 0300181174)**	B
	1001165558	Ref	**ANSI and ANSI Export with David Clark Communication System without 7500W Generator (Note: Not Shown - Contact your JLG Parts Department) (SN 0300181175 through 0300272252)**	B
	1001116515	Ref	**ANSI and ANSI Export with David Clark Communication System with 7500W Generator (Note: Not Shown - Contact**	B

ITEM	PART NUMBER	QTY	DESCRIPTION	REV
			your JLG Parts Department) (SN 0300177361 through 0300181174)	
	1001165559	Ref	**ANSI and ANSI Export with David Clark Communication System with 7500W Generator (Note: Not Shown - Contact your JLG Parts Department) (SN 0300181175 through 0300272252)**	B
	0273428	Ref	**Australian Specs without 7500W Generator (SN 0300117361 through 0300181174)**	1-G
	1001165554	Ref	**Australian Specs without 7500W Generator (SN 0300181175 through 0300272252)**	A
	0273430	Ref	**Australian Specs with 7500W Generator (SN 0300117361 through 0300181174)**	1-G
	1001165555	Ref	**Australian Specs with 7500W Generator (SN 0300181175 through 0300272252)**	A
	0270821	Ref	**CE Spec without 7500W Generator (SN 0300117361 through 0300181174)**	B
	1001165551	Ref	**CE Spec without 7500W Generator (SN 0300181175 through 0300272252)**	B
	0272627	Ref	**CE and Japanese Specs with 7500W Generator (SN 0300117361 through 0300181174)**	B
	1001165553	Ref	**CE and Japanese Specs with 7500W Generator (SN 0300181175 through 0300272252)**	B
216	1670769	1	Cover **(SN 0300177361 through 0300181174)**	
216	1671034	1	Cover **(SN 0300181175 through 0300272252)**	
217		Ref	Clamp, Block Options:	
217	0561237	2	All Installations except 1001093432 **(SN 0300177361 through 0300181174)**	
217	1321700	2	1001093432 Installation Only **(SN 0300177361 through 0300181174)**	
217	1001165350	2	All Installations **(SN 0300181175 through 0300272252)**	
218	0641416	4	Bolt 1/4in-20NC x 2in	
		Ref	**PLATFORM SUPPORT INSTALLATION**	
	0272070	Ref	**Machines without LSS**	E
	See Note	Ref	**Machines with LSS (Note: See Separate Breakdown in this Section)**	
301	0100011	AR	Compound, Locking	
302	0641812	8	Bolt 1/2in-13NC x 1-1/2in	
303	0642684	1	Bolt 1in-8NC x 10-1/2in	
304	0681608	8	Bolt 3/8in-16NC x 1in	
305	3272605	NLA	Locknut 1in-8NC (Use p/n 3300243)	
306	3311805	8	Locknut 1/2in-13NC	
307		Ref	Support Weldment Options:	
307	4846573	1	Machines without Load Sensing and without SkyGlazier	
307	See Note	1	Machines without Load Sensing and with SkyGlazier (Note: Refer to JLG Supplement p/n 3124242 for Components)	
307	See Note	1	Machines with Load Sensing and without SkyGlazier (Note: Refer to JLG Supplement p/n 3124287 for Components)	
307	See Note	1	Machines with Load Sensing and with SkyGlazier (Note: Refer to JLG Supplement p/n 3124287 for Components)	
308	4891600	8	Flatwasher 3/8in Hardened	
309	4891800	8	Flatwasher 1/2in Hardened	
310	4892600	1	Flatwasher 1in Hardened	

FIGURE 3-3. TOWER BOOM ASSEMBLY

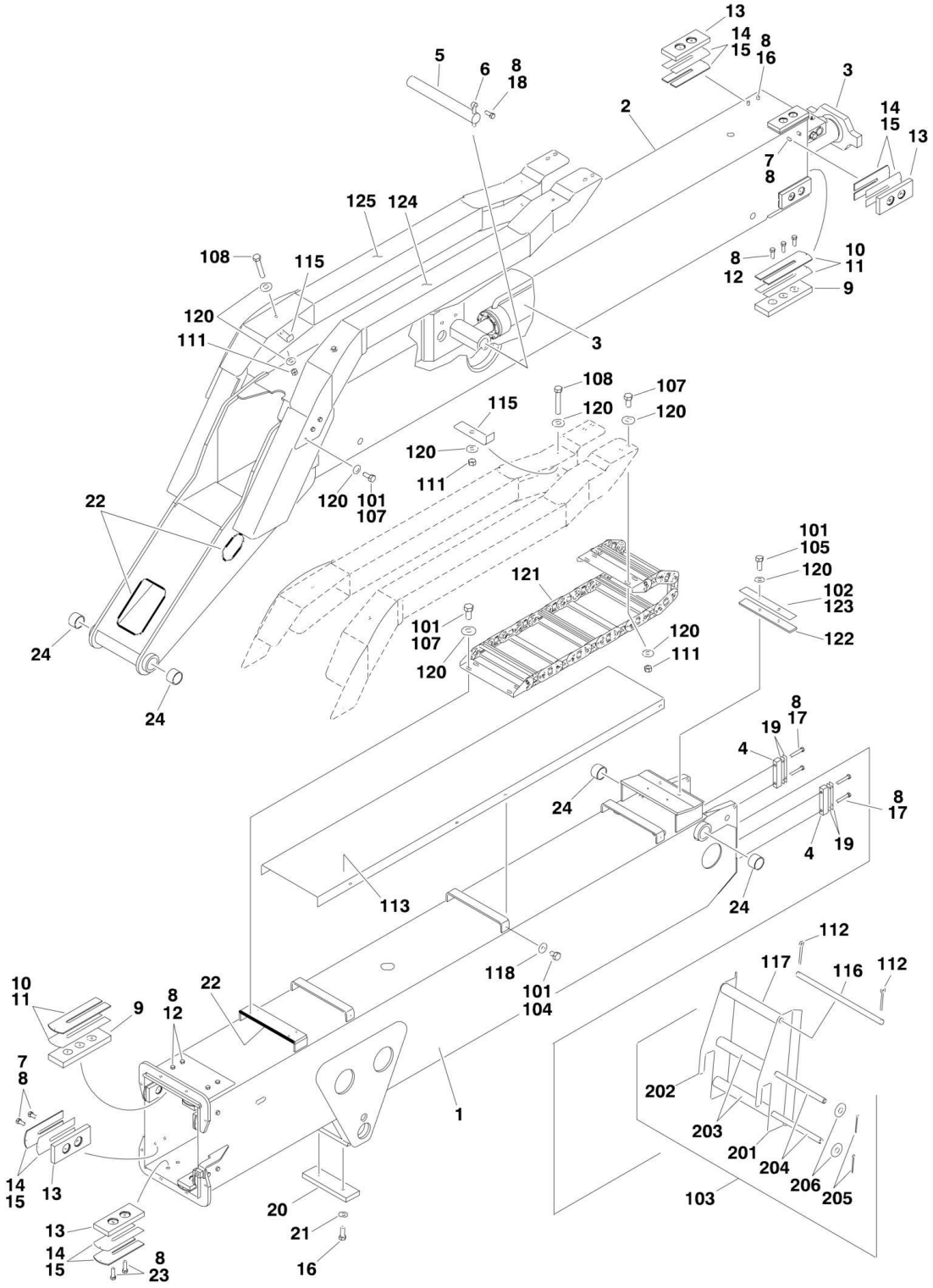

FIGURE 3-3. TOWER BOOM ASSEMBLY

ITEM	PART NUMBER	QTY	DESCRIPTION	REV
	0801019	Ref	**TOWER BOOM ASSEMBLY**	J
1	0801085	NLA	Base (Use p/n 0801622)	
2	0801637	1	Fly	
3	1683312	1	Cylinder Assembly - Tower Telescope (See CYLINDER SECTION for Breakdown) **(SN 0300177361 through 0300237381)**	
3	1001228006	1	Cylinder Assembly - Tower Telescope (See CYLINDER SECTION for Breakdown) **(SN 0300237382 through 0300272252)**	
4	0561185	2	Block, Attach	
5	3422575	1	Pin	
6	3841203	1	Keeper, Pin	
7	0641606	26	Bolt 3/8in-16NC x 3/4in	
8	0100011	AR	Compound, Locking	
9	3340871	4	Pad, Wear	
10	4070863	AR	Shim .12	
11	4070864	AR	Shim .05	
12	0641612	12	Bolt 3/8in-16NC x 1-1/2in	
13	3340881	12	Pad, Wear	
14	4070897	AR	Shim .05	
15	4070898	AR	Shim .12	
16	0641608	6	Bolt 3/8in-16NC x 1in	
17	0641618	4	Bolt 3/8in-16NC x 2-1/4in	
18	0641809	1	Bolt 3/8in-16NC x 1-1/8in	
19	4070929	AR	Shim	
20	0561248	1	Block, Boom Rest	
21	4711600	2	Flatwasher 3/8in Thin	
22	4060808	AR	Flex-Trim	
23	0641610	4	Bolt 3/8in-16NC x 1-1/4in	
24	0961949	4	Bushing	
	1001152355	Ref	**POWER TRACK INSTALLATION**	D
101	0100011	AR	Compound, Locking	
102	0100081	AR	Adhesive (Used with Item 125)	
103	0257573	1	Roller Hanger Assembly (Includes Items 201-205)	
104	0641403	10	Bolt 1/4in-20NC x 3/8in	
105	0641516	2	Bolt 5/16in-18NC x 2in	
107	0641606	14	Bolt 3/8in-16NC x 3/4in	
108	0641618	2	Bolt 3/8in-16NC x 2-1/4in	
111	3311605	8	Locknut 3/8in-16NC	
112	3450606	2	Pin, Cotter	
113	3539228	1	Plate, Cover	
115	3570375	4	Plate **(SN 0300177361 through 0300238901)**	
115	1001232880	4	Plate **(SN 0300238902 through 0300272252)**	
116	3571295	1	Rod	
117	4567241	1	Tube	
118	4711400	6	Flatwasher 1/4in Thin	
120	4751600	14	Flatwasher 3/8in Regular	
121	1001099835	1	Power Track Assembly	
121	70002001	AR	Repair Section	
121	70002002	1	Mounting Bracket Kit	
122	1001110500	1	Plate	
123	1001110501	1	Pad	

ITEM	PART NUMBER	QTY	DESCRIPTION	REV
124	1001151542	1	Bracket	
125	1001151586	1	Bracket	
	0257573	Ref	**ROLLER HANGER ASSEMBLY**	1-A
201	3570277	1	Plate (Left Side)	
202	3570270	1	Plate (Right Side)	
203	4567241	2	Roller, Tube	
204	3841347	2	Rod	
205	3450306	4	Pin, Cotter	
206	4751800	4	Flatwasher 1/2in Regular	

FIGURE 3-4. MAIN BOOM ASSEMBLY

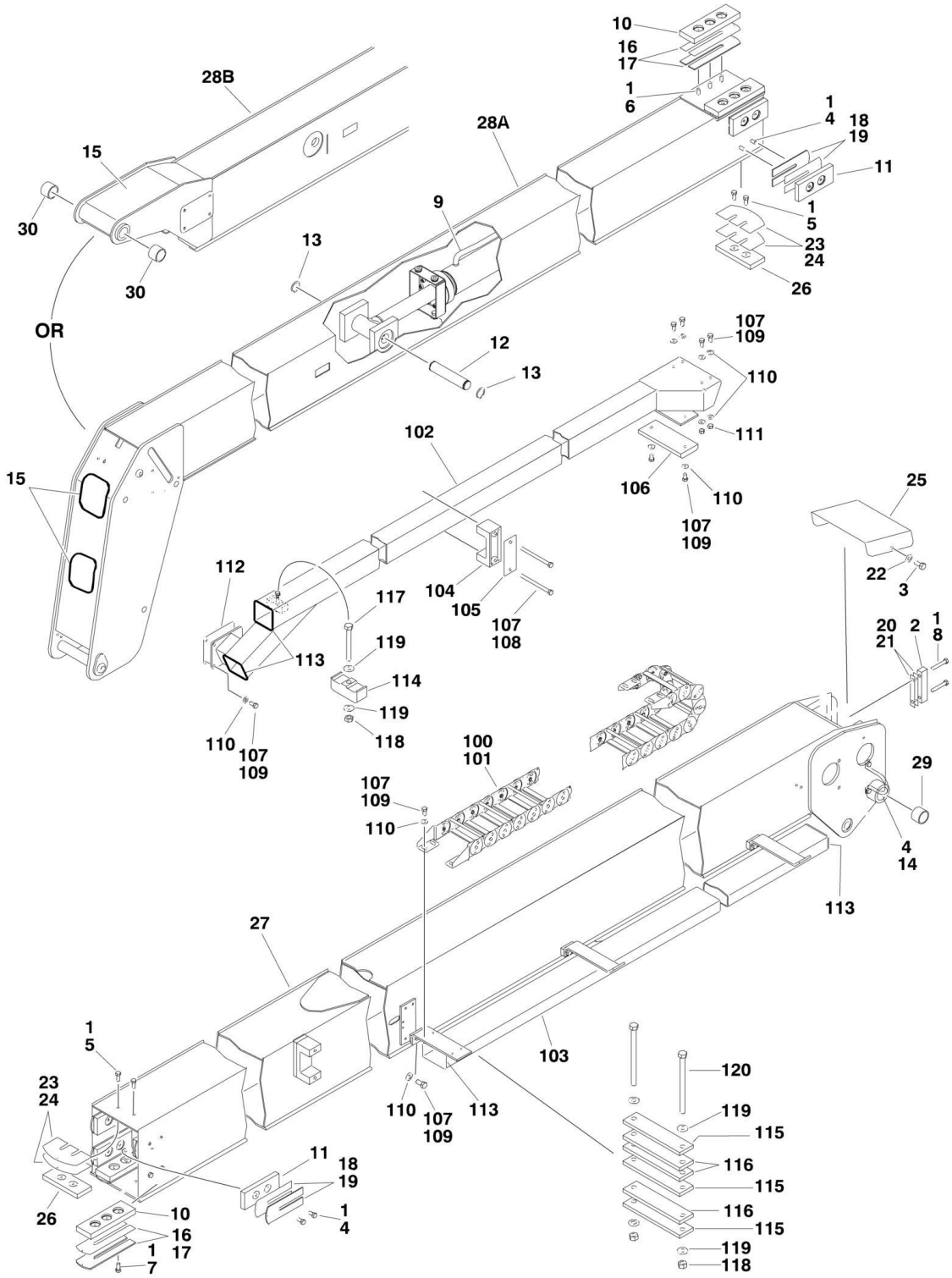

FIGURE 3-4. MAIN BOOM ASSEMBLY

ITEM	PART NUMBER	QTY	DESCRIPTION	REV
		Ref	**BOOM ASSEMBLY**	
	1001152138	Ref	**Boom Assembly 600A**	F
	1001152253	Ref	**Boom Assembly 600AJ (SN 0300177361 through 0300181174)**	E
	1001156501	Ref	**Boom Assembly 600AJ (SN 0300181175 through 0300272252)**	F
1	0100011	AR	Compound, Locking	
2	0561185	2	Block	
3	0641403	2	Bolt 1/4in-20NC x 3/8	
4	0811606	18	Bolt 3/8in-16NC x 3/4	
5	0811607	4	Bolt 3/8in-16NC x 7/8	
6	0811608	6	Bolt 3/8in-16NC x 1	
7	0811610	6	Bolt 3/8in-16NC x 1-1/4	
8	0641616	AR	Bolt 3/8in-16NC x 2	
8	0641618	AR	Bolt 3/8in-16NC x 2-1/4	
9		Ref	Telescope Cylinder Assembly Options (See CYLINDER SECTION for Breakdown)	
9	1683307	NLA	Telescope Cylinder Assembly 600A (Use p/n 1001228005) **(SN 0300177361 through 0300241337)**	
9	1001228005	1	Telescope Cylinder Assembly 600A **(SN 0300241338 through 0300272252)**	
9	1683317	NLA	Telescope Cylinder Assembly 600AJ (Use pn 1001228007) **(SN 0300177361 through 0300242728)**	
9	1001228007	1	Telescope Cylinder Assembly 600AJ **(SN 0300242729 through 0300272252)**	
10	3340871	4	Pad, Wear	
11	1001148652	8	Pad, Wear	
12	3422457	1	Pin	
13	3760133	2	Ring, Retaining	
14	3841340	1	Loop, Hose	
15	4060805	AR	Flex-Trim	
16	4070863	AR	Shim .12	
17	4070864	AR	Shim .05	
18	4070897	AR	Shim .05	
19	4070898	AR	Shim .12	
20	4070929	AR	Shim	
21	4071007	AR	Shim	
22	4751200	3	Flatwasher #12 Regular	
23	1001136590	AR	Shim 18Ga	
24	1001138436	AR	Shim 11Ga	
25	1001151826	1	Cover, Boom **(SN 0300177361 through 0300182514)**	
25	1001162828	1	Cover, Boom **(SN 0300182515 through 0300272252)**	
26	1001152127	2	Pad, Wear	
27		Ref	Base, Boom Options:	
27	1001152130	1	Base, Boom 600A	
27	1001152249	1	Base, Boom 600AJ	
28		Ref	Fly, Boom Options:	
28A	1001152131	1	Fly, Boom 600A	
28B	1001152246	1	Fly, Boom 600AJ **(SN 0300177361 through 0300181174)**	
28B	1001156502	1	Fly, Boom 600AJ **(SN 0300181175 through 0300272252)**	
29	0961948	2	Bushing	
30	0961951	2	Bushing (600AJ Only)	
		Ref	**POWER TRACK INSTALLATION**	

ITEM	PART NUMBER	QTY	DESCRIPTION	REV
	0255281	Ref	**Power Track Installation (600A)**	G
	0255288	Ref	**Power Track Installation (600AJ)**	F
100	1001107153	NLA	Power Track Assembly (600A) (Use p/n 1001224892) **(SN 0300177361 through 0300229510)**	
100	70002011	AR	Repair Section (600A) **(SN 0300177361 through 0300229510)**	
100	70002012	1	Mounting Bracket Kit (600A) **(SN 0300177361 through 0300229510)**	
100	1001224892	1	Power Track Assembly (600A) **(SN 0300229511 through 0300272252)**	
100	70006257	1	Repair Section (600A) **(SN 0300229511 through 0300272252)**	
100	70006273	1	Mounting Bracket Kit (600A) **(SN 0300229511 through 0300272252)**	
101	1001099836		Power Track Assembly (600AJ)	
101	70001999	AR	Repair Section (600AJ)	
101	70002000	1	Mounting Bracket Kit (600AJ)	
102		Ref	Tube Weldment Options:	
102	4844969	1	Tube Weldment 600A	
102	4844978	1	Tube Weldment 600AJ **(SN 030017361 through 0300200466)**	
102	1001161417	1	Tube Weldment 600AJ **(SN 0300200467 through 0300272252)**	
103		Ref	Support, Power Track Options:	
103	4844972	1	Support, Power Track 600A	
103	4844979	1	Support, Power Track 600AJ	
104	3340764	2	Pad, Wear	
105	3538758	1	Plate, Cover Support	
106		Ref	Pad Options:	
106	3340787	1	Pad 600A	
106	3340765	1	Pad 600AJ	
107	0100011	AR	Compound, Locking	
108	0641536	2	Bolt 5/16in-18NC x 4-1/2in	
109	0641606	22	Bolt 3/8in-16NC x 3/4in	
110	4711600	18	Flatwasher 3/8in Thin	
111	3311605	4	Locknut 3/8in-16NC	
112	4070932	AR	Shim	
113	4060803	4 ft/1.2m	Flex-Trim	
114	1320314	1	Clamp, Hose/Cable	
115		Ref	Plate	
115	1001106758	3	Plate 600A	
115	3574185	3	Plate 600AJ	
116		Ref	Shim Options:	
116	1001106759	3	Shim 600A	
116	4071062	3	Shim 600AJ	
117	0641522	1	Bolt 5/16in-18NC x 2-3/4in	
118	3311505	3	Locknut 5/16in-18NC	
119	4711500	6	Flatwasher 5/16in Thin	
120	0641640	2	Bolt 3/8in-16NC x 5in	

FIGURE 3-5. ROTATOR ASSEMBLIES

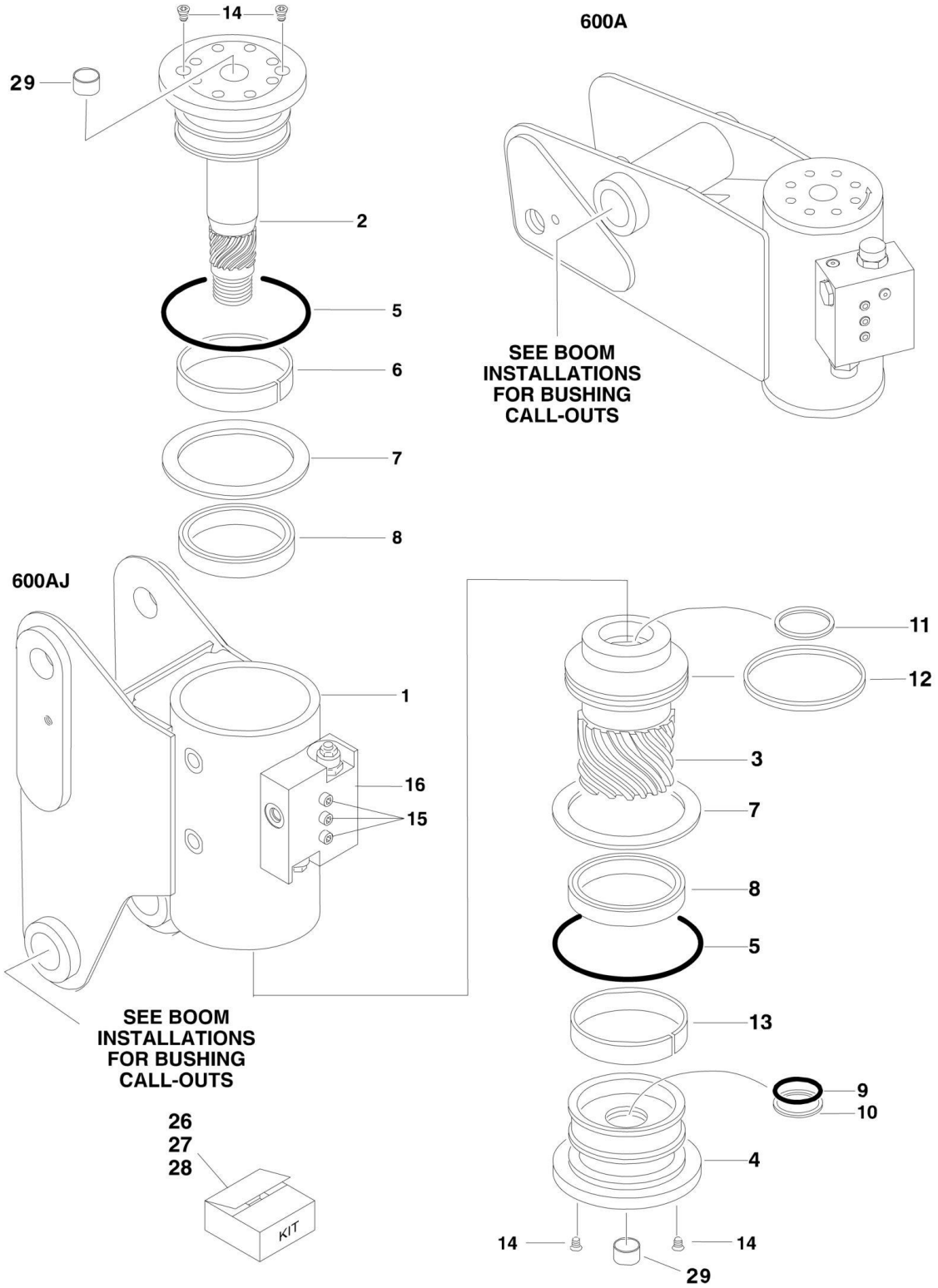

FIGURE 3-5. ROTATOR ASSEMBLIES

ITEM	PART NUMBER	QTY	DESCRIPTION	REV
		Ref	**ROTATOR ASSEMBLIES**	
	0060068	Ref	**Rotator Assemblies 600A (SN 0300177361 through 0300181174)**	A
	1001157222	Ref	**Rotator Assemblies 600A (SN 0300181175 through 0300201144)**	B
	1001181056	Ref	**Rotator Assemblies 600A (SN 0300201145 through 0300272252)**	A
	0060066	Ref	**Rotator Assemblies 600AJ (SN 0300177361 through 0300181174)**	C
	1001157220	Ref	**Rotator Assemblies 600AJ (SN 0300181175 through 0300201144)**	B
	1001178256	Ref	**Rotator Assemblies 600AJ (SN 0300201145 through 0300235566)**	B
	1001217780	Ref	**Rotator Assemblies 600AJ (SN 0300235567 through 0300272252)**	A
1	See Note	1	Housing/Ring Gear Assembly (Note: Not Available - Purchase Complete Assembly)	
2	7017162	1	Weldment, Shaft	
3	7017163	1	Piston/Sleeve Assembly	
4	7017164	1	Cap, End	
5	See Note	NSS	O-Ring (Note: Use Item 26)	
6	See Note	NSS	Bearing, Shaft (Note: Use p/n 7017159)	
7	See Note	NSS	Thrustwasher (Note: Use p/n 7017159)	
8	See Note	NSS	Packing, Bearing (Note: Use Item 26)	
9	See Note	NSS	Seal, Cap (Note: Use Item 26)	
10	See Note	NSS	Ring, Back-Up Cap (Note: Use Item 26)	
11	See Note	NSS	Seal, Rod (Note: Use Item 26)	
12	See Note	NSS	Seal, Piston (Note: Use Item 26)	
13	See Note	NSS	Bearing, Cap (Note: Use p/n 7017159)	
14	70001697	6	Capscrew 1/4in-20NC x 3/8in (Grade 8)	
15	See Note	NSS	Bolt 1/4 x 1-1/2 (Grade 8) (Note: Not Available for Purchase)	
16	7017183	1	Valve Assembly (0060068 & 0060066 Rotators)	
16	7017172	1	Valve Assembly (1001157222, 1001157220, 1001178256, 1001181056 & 1001217780 Rotators)	
16	7017193	2	Cartridge, Valve (0060068 & 0060066 Rotators)	
16	7017192	2	Cartridge, Valve (1001157222, 1001157220, 1001178256, 1001181056 & 1001217780 Rotators)	
16	See Note	NSS	Seal Kit - 7017193 & 7017192 Valve (Note: Not Available - Purchase Complete Assembly)	
16	See Note	NSS	Cartridge, Valve (Not Shown - Located on Side of Block) (Note: Not Available - Purchase Complete Assembly)	
16	See Note	NSS	Seal Kit - Valve Located on Side of Block (Note: Not Available - Purchase Complete Assembly)	
26		Ref	Seal Kit Options Rotator (Includes Items 5, 8-12 & 28)	
26	7017158	1	Standard Seal Kit	
26	70000342	1	Low Temperature Seal Kit	
27	7017159	1	Bearing Kit (Includes Items 6, 7 & 13)	
28	7017142	1	Hardware Kit (Includes Qty 2 Plugs, Qty 2 Dowel Pins and Item 14)	
29	7017195	2	Bushing	

FIGURE 3-6. PLAFORM SUPPORT INSTALLATION - WITHOUT LSS OR WITH 4 CELL LSS

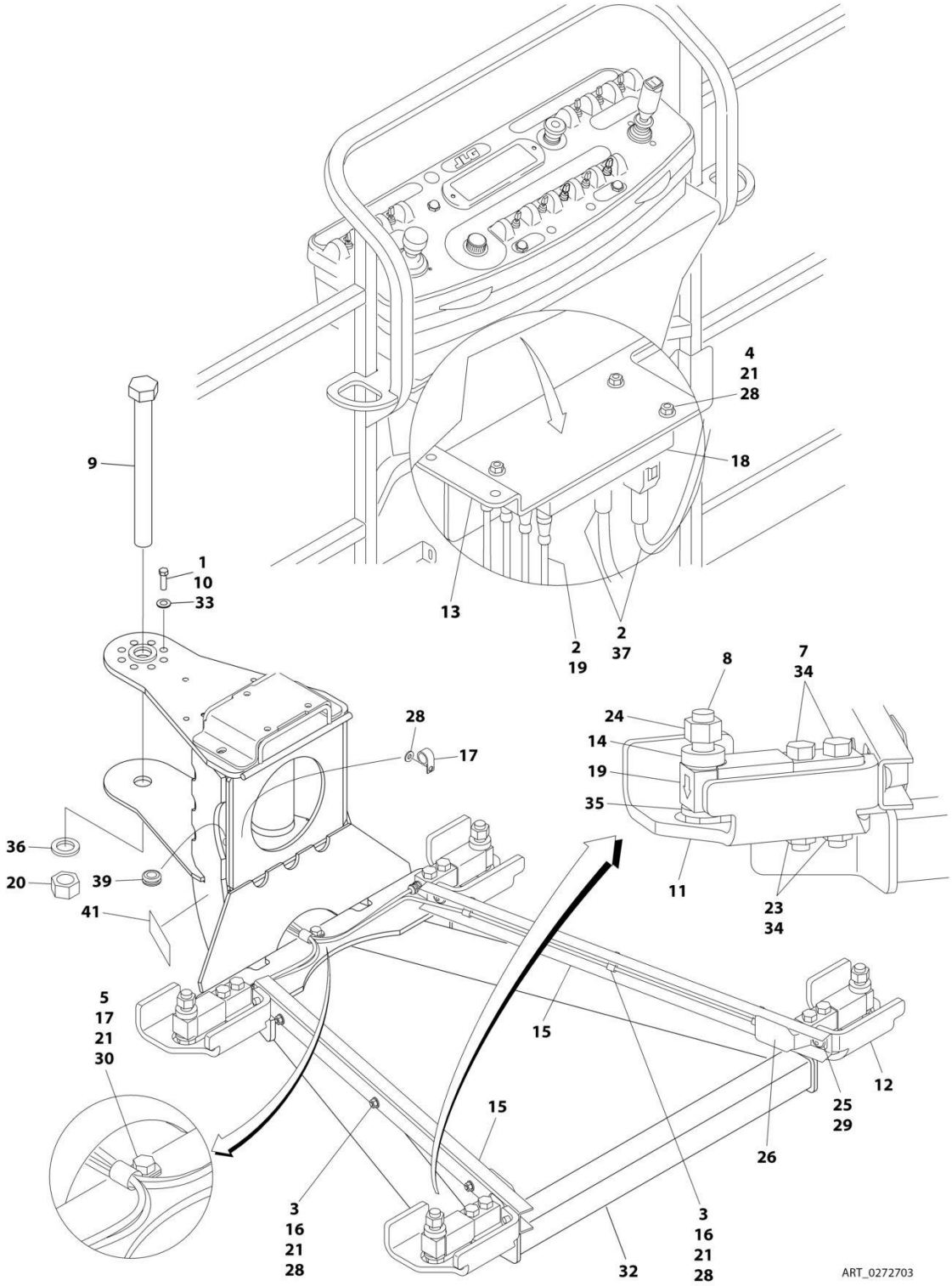

FIGURE 3-6. PLAFORM SUPPORT INSTALLATION - WITHOUT LSS OR WITH 4 CELL LSS

ITEM	PART NUMBER	QTY	DESCRIPTION	REV
	0272703	Ref	**PLAFORM SUPPORT INSTALLATION - WITHOUT LSS OR WITH 4 CELL LSS**	Q
1	0100011	AR	Compound, Locking	
2	0100048	AR	Grease, Dielectric	
3	0641405	6	Bolt 1/4 x 5/8	
4	0641416	3	Bolt 1/4 x 2	
5	0641407	1	Bolt 1/4 x 7/8	
7	0641822	8	Bolt 1/2 x 2-3/4	
8	0642024	4	Bolt 5/8 x 3	
9	0642684	1	Bolt 1 x 10-1/2	
10	0681608	8	Bolt 3/8 x 1 Grade 8	
11	0902919	2	Bracket, Cell Guard	
12	0902920	2	Bracket, Cell Guard	
13	1001113483	1	Bracket, Module Mount	
14	0962450	4	Bushing, Spacer	
15	1271538	2	Channel	
16	1320136	6	Clamp	
17	1320224	2	Clamp	
18	1600387	1	Module, Control - LSS (Note: Recalibration Required When Replaced)	
19	2420202	4	Cell, Load (Includes Cable)	
20	3272605	1	Nut 1 Grade 8	
21	3311405	10	Nut 1/4	
23	3311805	8	Nut 1/2	
24	3312005	4	Nut 5/8	
25	3900283	4	Screw 3/8 x 3/4	
26	4061054	2	Shield	
27	4240033	AR	Tie-Strap (Not Shown)	
28	4711400	10	Washer 1/4	
29	4711600	4	Washer 3/8	
30	4751400	1	Washer 1/4	
32	4846573	1	Support, Platform	
33	4891600	8	Washer 3/8	
34	4891800	8	Washer 1/2	
35	4892000	4	Washer 5/8	
36	4892600	1	Washer 1	
37	4922869	1	LSS Harness	
37	4922705	1	Analyzer Harness (Not Shown)	
37	4460761	1	Receptacle, Female - 4 Position (Not Shown)	
37	4460226	1	Socket, Female	
37	4460836	1	Connector - 12 Position (Black) (J2)	
37	4460465	1	Socket, Female	
37	4460466	1	Plug, Terminal	
37	0840055	1	Boot	
37	4460933	1	Connector - 12 Position (Grey) (J1)	
37	4460465	1	Socket, Female	
37	4460466	1	Plug, Terminal	
37	0840055	1	Boot	
39	2540038	1	Grommet	
40	2920129	1	Bulb, Light (Not Shown - Located on Ground Control Box)	

ITEM	PART NUMBER	QTY	DESCRIPTION	REV
41	1001216630	2	Decal - Tie Down/No Lift	

FIGURE 3-7. PLATFORM SUPPORT INSTALLATION - WITH 1 CELL LSS

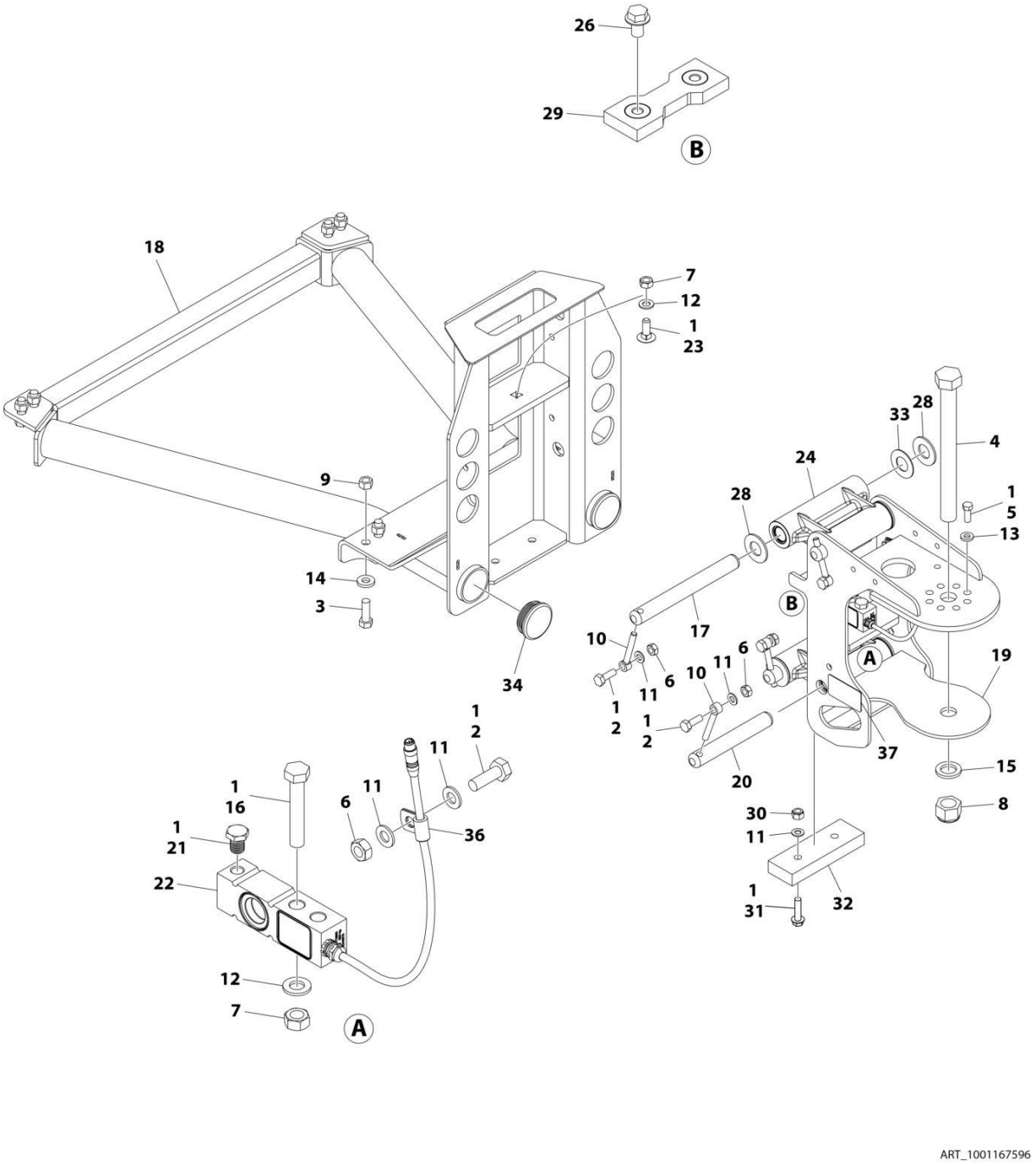

FIGURE 3-7. PLATFORM SUPPORT INSTALLATION - WITH 1 CELL LSS

ITEM	PART NUMBER	QTY	DESCRIPTION	REV
	1001167596	Ref	**PLATFORM SUPPORT INSTALLATION - WITH 1 CELL LSS**	J
1	0100011	AR	Compound, Locking	
2	0761014	5	Bolt M10 x 30	
3	0641812	8	Bolt 1/2 x 1-1/2	
3	0761216	8	Bolt M12 x 40	
4	0642684	1	Bolt 1 x 10-1/2	
5	0681608	8	Bolt 3/8 x 1	
6	3291001	5	Nut M10	
7	3291201	3	Nut M12	
8	3300243	1	Nut 1	
9	3311805	8	Nut 1/2	
9	3291205	8	Nut M12	
10	3841143	4	Keeper, Pin	
11	4812000	8	Washer M10	
12	4812100	3	Washer M12	
13	4891600	8	Washer 3/8	
14	4891800	8	Washer 1/2	
14	5241200	8	Washer M12	
15	4892600	1	Washer 1	
16	1001098828	2	Bolt M12 x 70 Grade 10.9	
17	1001167565	2	Pin	
18	1001200494	1	Support, Platform	
19	1001167567	1	Support, Rotator	
20	1001168402	2	Pin	
21	1001188622	1	Screw	
22	1001172663	1	Gauge, Load Sensing	
23	1001188844	1	Bolt M12 x 35	
24	1001201351	2	Link, LSS Assembly	
26	5251008	2	Bolt M10 x 16	
28	1001189002	8	Bearing	
29	1001190985	1	Pad, Wear	
30	3291005	2	Nut M10	
31	5251016	2	Bolt M10 x 40	
32	1001200491	1	Pad, Wear	
33	1001189001	4	Bearing	
34	1001204725	2	Plug	
36	91203039	1	Clamp	
37	1001216630	2	Decal - Tie Down/No Lift	

FIGURE 3-8. VALVES AND SWITCHES INSTALLATION (BOOM MOUNTED)

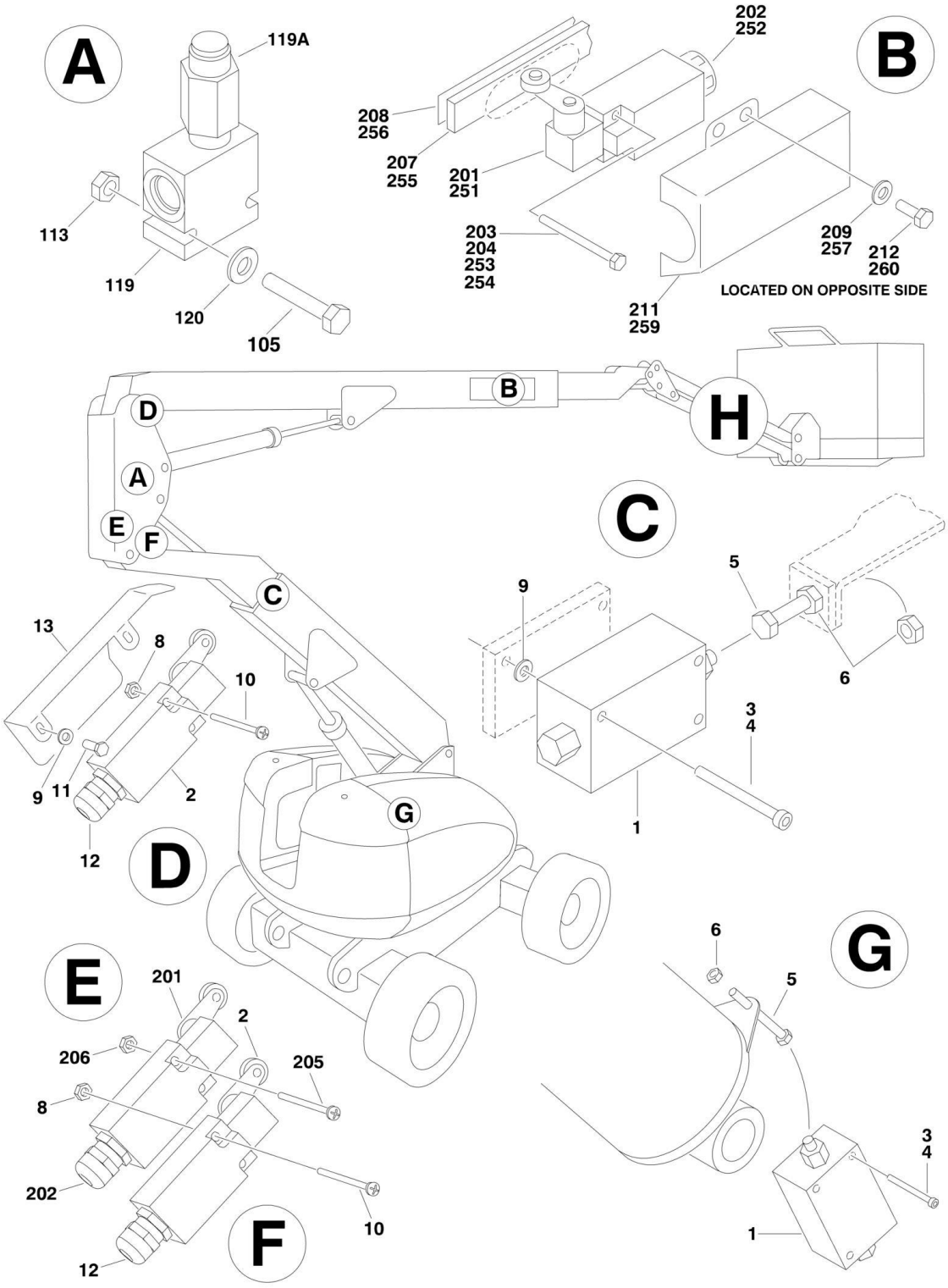

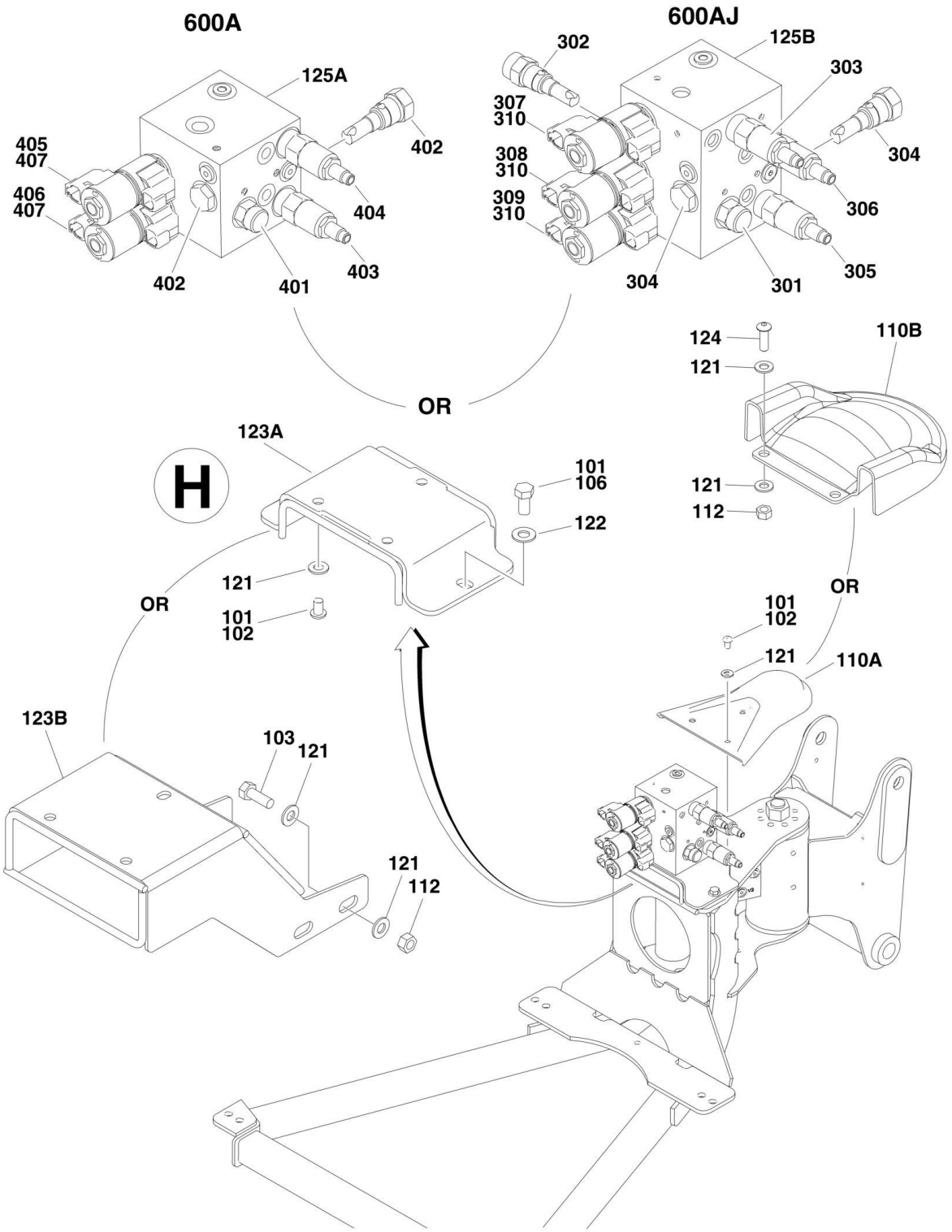
600A
125A
405
407
406
407
402
404
403
402
401
600AJ
125B
302
303
307
310
308
310
309
310
304
306
305
304
301
OR
124
121
110B
121
112
H
123A
101
106
122
121
OR
101
102
OR
101
102
121
110A
123B
103
121
121
112

FIGURE 3-8. VALVES AND SWITCHES INSTALLATION (BOOM MOUNTED)

ITEM	PART NUMBER	QTY	DESCRIPTION	REV
	1001155267	Ref	**BOOM VALVES AND LIMIT SWITCHES INSTALLATION (ALL SPECS)**	C
1	4641436	2	Valve, Manual 2-Way	
2	4360578	2	Switch, Limit	
3	3931430	6	Bolt, Socket Head 1/4in-20NC x 1-7/8in	
4	0100011	AR	Compound, Locking	
5	0630427	2	Bolt, Special	
6	3311801	3	Nut 1/2in-13NC	
8	3310801	4	Nut #8-32NC	
9	4751400	8	Flatwasher 1/4in Regular	
10	3930828	4	Bolt, Socket Head #8-32NC x 1-3/4in	
11	3931408	2	Bolt, Socket 1/4in-20NC x 1/2in	
12	4460968	2	Connector, Strain Relief	
13	1001155399	1	Cover, Switch	
		Ref	**CONTROL VALVES INSTALLATION (ALL SPECS)**	
		Ref	**Machines without LSS or 4 Cell LSS:**	
	1001152535	Ref	**Control Valves Installation 600A 2WS with Deutz D2011 and GM Engines (SN 0300177361 through 0300181174)**	C
	1001160038	Ref	**Control Valves Installation 600A 2WS with Deutz D2011, Ford and GM Engines (SN 0300181175 through 0300272252)**	B
	1001145379	Ref	**Control Valves Installation 600A 2WS with Deutz TD2.9L4 Engines (SN 0300177361 through 0300181174)**	C
	1001164168	Ref	**Control Valves Installation 600A 2WS with Deutz TD2.9L4 Engines (SN 0300181175 through 0300272252)**	B
	1001152534	Ref	**Control Valves Installation 600A 4WS with Deutz D2011 and GM Engines (SN 0300177361 through 0300181174)**	C
	1001160039	Ref	**Control Valves Installation 600A 4WS with Deutz D2011, Ford and GM Engines (SN 0300181175 through 0300272252)**	B
	1001145720	Ref	**Control Valves Installation 600A 4WS with Deutz TD2.9L4 Engines (SN 0300177361 through 0300181174)**	D
	1001164160	Ref	**Control Valves Installation 600A 4WS with Deutz TD2.9L4 Engines (SN 0300181175 through 0300272252)**	B
	1001152537	Ref	**Control Valves Installation 600AJ 2WS with Deutz D2011 and GM Engines (SN 0300177361 through 0300181174)**	C
	1001160068	Ref	**Control Valves Installation 600AJ 2WS with Deutz D2011, Ford and GM Engines (SN 0300181175 through 0300272252)**	B
	1001145719	Ref	**Control Valves Installation 600AJ 2WS with Deutz TD2.9L4 Engines (SN 0300177361 through 0300181174)**	D
	1001164164	Ref	**Control Valves Installation 600AJ 2WS with Deutz TD2.9L4 Engines (SN 0300181175 through 0300272252)**	B
	1001152265	Ref	**Control Valves Installation 600AJ 4WS with Deutz D2011 and GM Engines (SN 0300177361 through 0300181174)**	C
	1001164170	Ref	**Control Valves Installation 600AJ 4WS with Deutz D2011, Ford and GM Engines (SN 0300181175 through 0300272252)**	B
	1001145721	Ref	**Control Valves Installation 600AJ 4WS with Deutz TD2.9L4 Engines (SN 0300177361 through 0300181174)**	D
	1001160069	Ref	**Control Valves Installation 600AJ 4WS with Deutz TD2.9L4 Engines (SN 0300181175 through 0300272252)**	B
		Ref	**Machines with 1 Cell LSS:**	
	1001219471	Ref	**Control Valves Installations - 600A 2WS with Deutz D2011 and Ford Engines**	C
	1001219477	Ref	**Control Valves Installations - 600A 2WS with Deutz TD2.9L4 Engines**	C
	1001219472	Ref	**Control Valves Installations - 600A 4WS with Deutz D2011**	C

ITEM	PART NUMBER	QTY	DESCRIPTION	REV
			and Ford Engines	
	1001219475	Ref	**Control Valves Installations - 600A 4WS with Deutz TD2.9L4 Engines**	C
	1001219473	Ref	**Control Valves Installations - 600AJ 2WS with Deutz D2011 and Ford Engines**	B
	1001219476	Ref	**Control Valves Installations - 600AJ 2WS with Deutz TD2.9L4 Engines**	B
	1001219474	Ref	**Control Valves Installations - 600AJ 4WS with Deutz D2011 and Ford Engines**	B
	1001219478	Ref	**Control Valves Installations - 600AJ 4WS with Deutz TD2.9L4 Engines**	B
101	0100011	AR	Compound, Locking **(SN 0300181175 through 0300272252)**	
102	0630467	6	Screw 5/6-18 x 1/2 **(SN 0300181175 through 0300272252)**	
103	0641507	4	Bolt 5/16 x 7/8	
105	0641424	2	Bolt 1/4-20 x 3	
106	0641606	2	Bolt 3/8-16 x 3/4 **(SN 0300181175 through 0300272252)**	
110A	1670964	1	Cover (Machines without LSS or with 4 Cell LSS) **(SN 0300181175 through 0300272252)**	
110B	1001207969	1	Cover (Machines with 1 Cell LSS)	
112	3311505	6	Nut 5/16	
113	3311405	2	Nut 1/4-20	
119	4640929	1	Valve Assembly - Relief	
119A	7012970	1	Cartridge Valve	
119A	7012953	1	Seal Kit - 7012970 Valve	
120	4711400	AR	Washer 1/4	
121	4711500	AR	Washer 5/16 **(SN 0300181175 through 0300272252)**	
122	4711600	2	Washer 3/8 **(SN 0300181175 through 0300272252)**	
123A	4846218	1	Plate, Valve Mounting (Machines without LSS or with 4 Cell LSS) **(SN 0300181175 through 0300272252)**	
123B	1001226744	1	Plate, Valve Mounting (Machines with 1 Cell LSS)	
124	88261024	2	Screw 5/16 x 1	
125A	1001152564	1	Control Valve Assembly - 600A (See Items 401-409 for Breakdown) **(SN 0300181175 through 0300272252)**	
125B	1001152565	1	Control Valve Assembly - 600AJ (See Items 301-312 for Breakdown) **(SN 0300181175 through 0300272252)**	
	0255699	Ref	**LIMIT SWITCHES INSTALLATION - 600A DUAL CAPACITY (ANSI, ANSI EXPORT, CSA AND JAPANESE SPECS)**	D
201	4360578	2	Switch, Limit	
202	4460968	2	Connector, Strain Relief	
203	0100035	AR	Compound, Locking	
204	3930816	2	Bolt, Socket Head #8-32NC x 1in	
205	3930824	2	Bolt, Socket Head #8-32NC x 1-1/2in	
206	3310805	2	Locknut #8-32NC	
207	1001106480	1	Bar, Fiberglass	
208	4420060	9.8 ft/3m	Tape, Foam	
209	4751400	4	Flatwasher 1/4in Regular	
211	1670824	1	Cover, Switch	
212	0641403	4	Bolt 1/4in-20NC x 3/8in	
		Ref	**TRANSPORT POSITION SWITCHES INSTALLATION (CE SPEC ONLY)**	
	0256331	Ref	**Transport Position Switches Installation 600A**	B
	0256336	Ref	**Transport Position Switches Installation 600AJ**	C
251	4360578	1	Switch, Limit	
252	4460968	1	Connector, Strain Relief	

ITEM	PART NUMBER	QTY	DESCRIPTION	REV
253	0100035	AR	Compound, Locking	
254	3930816	2	Bolt, Socket Head #8-32NC x 1in	
255		Ref	Bar, Fiberglass	
255	0362611	1	Bar, Fiberglass 600A	
255	1001106480	1	Bar, Fiberglass 600AJ	
256	4420060	AR	Tape, Foam	
256	4420060	13.1 ft /4m	Tape, Foam 600A	
256	4420060	10.5 ft /3.2m	Tape, Foam 600AJ	
257	4751400	4	Flatwasher 1/4in Regular	
259	1670824	1	Cover, Switch	
260	0641403	4	Bolt 3/8in-16NC x 3/8in	
	1001152565	Ref	**CONTROL VALVE ASSEMBLY - 600AJ**	C
301	7012989	1	Valve, Flow	
301	7012953	1	Seal Kit - 7012989 Valves	
302	7012965	1	Valve, Flow	
302	7012953	1	Seal Kit - 7012965 Valves	
303	70003790	1	Valve, Relief	
303	7021653	1	Seal Kit - 70003790 Valve	
304	7012914	2	Valve, Cartridge	
304	7012918	2	Seal Kit - 7012914 Valve	
305	7023911	1	Valve, Relief	
305	7012967	1	Seal Kit - 7023911 Valve	
306	7023912	1	Valve, Relief	
306	7012967	1	Seal Kit - 7023912 Valve	
307	7017452	1	Valve, Solenoid (Jib)	
307	7017402	2	Seal Kit - 7017452 Valve	
308	7017452	1	Valve, Solenoid (Platform Level)	
308	7017402	1	Seal Kit - 7017452 Valve	
309	7017452	1	Valve, Solenoid (Rotator)	
309	7017402	2	Seal Kit - 7017452 Valve	
310	70002386	6	Coil	
311	70002064	2	Plug, Orifice (Not Shown)	
312	7017406	2	Plug (Not Shown)	
	1001152564	Ref	**CONTROL VALVE ASSEMBLY - 600A**	D
401	7012965	1	Valve, Flow	
401	7012953	1	Seal Kit - 7012965 Valves	
402	7012914	2	Valve, Cartridge	
402	7012918	2	Seal Kit - 7012914 Valve	
403	7023911	1	Valve, Relief	
403	7012967	1	Seal Kit - 7023911 Valve	
404	7023912	1	Valve, Relief	
404	7012967	1	Seal Kit - 7023912 Valve	
405	7017452	1	Valve, Solenoid (Platform Level)	
405	7017402	1	Seal Kit - 7017452 Valve	
406	7017452	1	Valve, Solenoid (Rotator)	
406	7017402	2	Seal Kit - 7017452 Valve	
407	70002386	4	Coil	
408	70002064	2	Plug, Orifice (Not Shown)	
409	7017406	2	Plug (Not Shown)	

SECTION 4 - PLATFORM

FIGURE 4-1. PLATFORM ASSEMBLIES

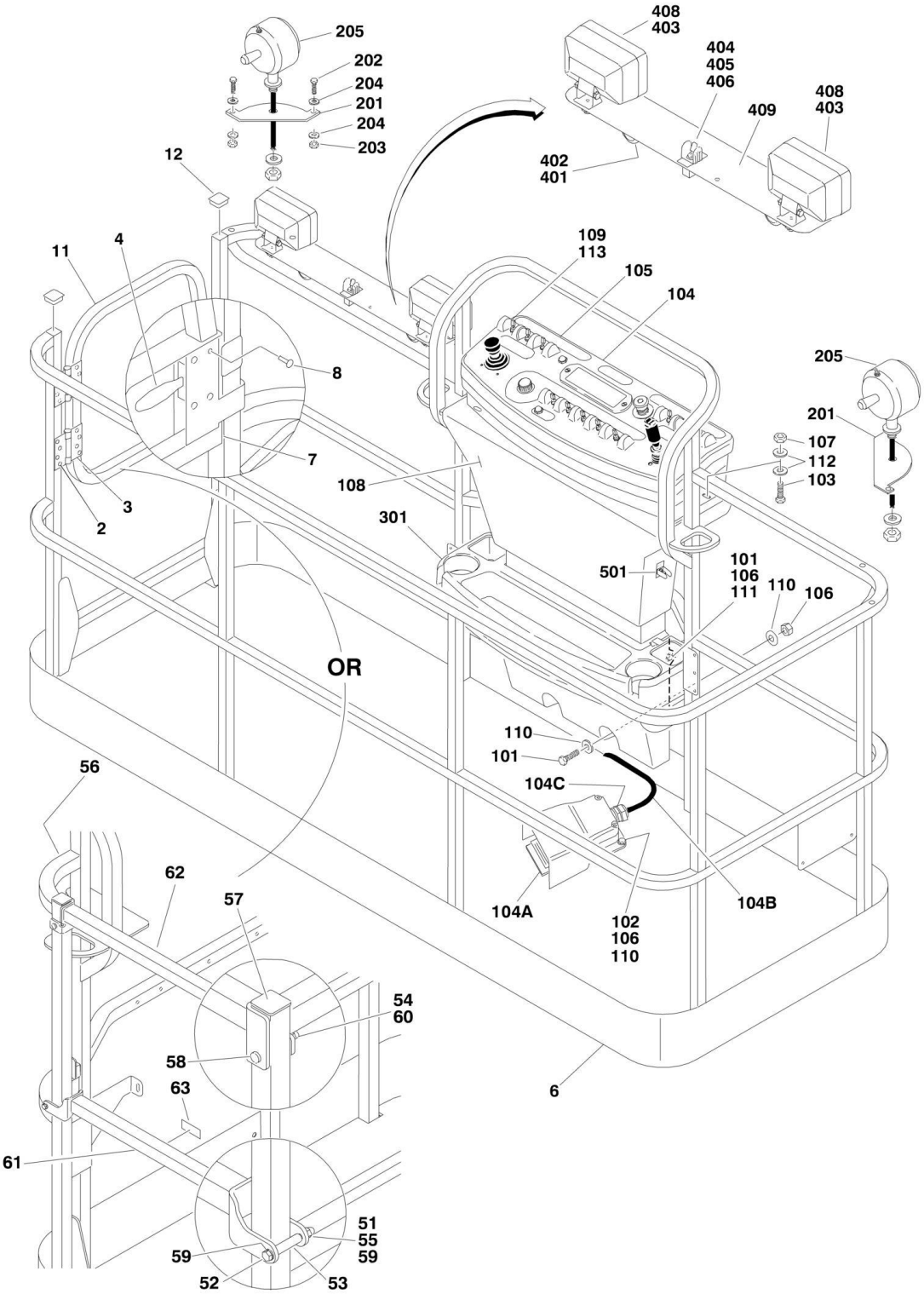

FIGURE 4-1. PLATFORM ASSEMBLIES

ITEM	PART NUMBER	QTY	DESCRIPTION	REV
		Ref	**PLATFORM ASSEMBLY WITH GATE**	
	1001144027	Ref	**2.6ft x 4ft (0.70m x 1.22m) with No Mesh (SN 0300177361 through 0300200808)**	D
	1001186387	Ref	**2.6ft x 4ft (0.70m x 1.22m) with No Mesh (SN 0300200809 through 0300272252)**	C
	1001144026	Ref	**2.6ft x 5ft (0.70m x 1.52m) with No Mesh (SN 0300177361 through 0300200808)**	D
	1001186386	Ref	**2.6ft x 5ft (0.70m x 1.52m) with No Mesh (SN 0300200809 through 0300272252)**	C
	1001144024	Ref	**3ft x 6ft (0.90m x 1.83m) with No Mesh (SN 0300177361 through 0300200808)**	D
	1001186384	Ref	**3ft x 6ft (0.90m x 1.83m) with No Mesh (SN 0300200809 through 0300272252)**	C
	1001228376	Ref	**3ft x 6ft (0.9m x 1.83m) with Tri-Entry (1 Gate/2 Drop Bars)**	A
	1001144023	Ref	**3ft x 8ft (0.90m x 2.44m) with No Mesh (SN 0300177361 through 0300200808)**	D
	1001186383	Ref	**3ft x 8ft (0.90m x 2.44m) with No Mesh (SN 0300200809 through 0300272252)**	D
	1001228243	Ref	**3ft x 8ft (0.9m x 2.44m) with Tri-Entry (1 Gate/2 Drop Bars)**	A
		Ref	**Note: Platform and Mesh must be ordered separately for Platforms with Mesh. See SPECIAL OPTIONS SECTION for Mesh Installations.**	
		Ref	**Note: Replacement Decals Must Be Purchased Separately - See DECALS SECTION.**	
		Ref	**Note: When replacing 8ft/2.44m platform with Soft Touch option, new Soft Touch Rail p/n 4846673 must be purchased to accommodate limit switch locations.**	
		Ref	**Note: When replacing platform on machines with SkyCutter option, new bracket p/n 1001145405 must be purchased to accommodate SkyCutter components.**	
2	2080040	16	Fastener, Huck	
3	2600281	2	Hinge, Self-Closing	
4	2940074	1	Latch	
6	See Note	NSS	Platform (Note: Purchase Platform Assembly)	
7	3520072	AR	Plug	
8	3820020	4	Rivet	
9	4751000	4	Flatwasher #10 Regular	
11	1001144629	1	Gate	
12	3520198	2	Plug	
14	3520072	2	Plug (Not Shown - Used on Mid Rail Behind Console Box)	
		Ref	**PLATFORM ASSEMBLY WITH DROP-BAR**	
	1001228215	Ref	**3ft x 2.5ft (1m x .76m)**	A
	1001144018	Ref	**4ft x 2.5ft (1.2m x .76m) (SN 0300177361 through 0300200808)**	D
	1001186375	Ref	**4ft x 2.5ft (1.2m x .76m) (SN 0300200809 through 0300272252)**	B
	1001144019	Ref	**5ft x 2.5ft (1.5m x .76m) (SN 0300177361 through 0300200808)**	D
	1001186377	Ref	**5ft x 2.5ft (1.5m x .76m) (SN 0300200809 through 0300272252)**	C
	1001144021	Ref	**6ft x 3ft (1.83m x .91m) (SN 0300177361 through 0300200808)**	D
	1001186379	Ref	**6ft x 3ft (1.83m x .91m) (SN 0300200809 through 0300272252)**	B
	1001228377	Ref	**3ft x 6ft (0.9m x 1.83m) with Tri-Entry (3 Drop Bars)**	A
	1001144022	Ref	**8ft x 3ft (2.44m x .91m) (SN 0300177361 through 0300200808)**	D
	1001186382	Ref	**8ft x 3ft (2.44m x .91m)**	B
	1001228375	Ref	3ft x 8ft (0.9m x 2.44m) with Tri-Entry (3 Drop Bars)	A
		Ref	**Note: replacement decals must be ordered separately - See**	

ITEM	PART NUMBER	QTY	DESCRIPTION	REV
			DECALS SECTION.	
51	0100011	AR	Compound, Locking	
52	0641418	AR	Bolt 1/4 x 2-1/4	
52	0641420	AR	Bolt 1/4 x 2-1/2	
53	0961845	2	Bushing	
54	3290606	2	Nut M6	
55	3300151	2	Nut, Acorn	
56	See Note	NSS	Platform (Note: Purchase Platform Assembly)	
57	3520198	2	Plug	
58	4010618	2	Screw M6 x 50mm	
59	4711400	4	Flatwasher 1/4in	
60	4811700	2	Flatwasher M6	
61	1001138494	1	Bar, Drop (All except 3ft x 2.5ft (1m x .76m) Platform)	
61	1001226872	1	Bar, Drop (3ft x 2.5ft (1m x .76m) Platform Only)	
62	1001138514	1	Rail (Top)	
63	1001140429	1	Decal - Drop-Bar	
64	3520072	2	Plug (Not Shown - Used on Mid Rail Behind Console Box)	
	1001145835	Ref	**CONSOLE BOX INSTALLATION (WITHOUT SKYGUARD) (SN 0300177361 through 0300181174)**	A
	1001159096	Ref	**CONSOLE BOX INSTALLATION (WITHOUT SKYGUARD) (SN 0300181175 through 0300272252)**	C
	1001190113	Ref	**CONSOLE BOX INSTALLATION (WITH SKYGUARD) (WITHOUT LSS OR WITH 4 CELL LSS)**	B
101	0641406	4	Bolt 1/4in-20NC x 3/4in	
102	0641408	3	Bolt 1/4in-20NC x 1in	
103	0641610	4	Bolt 3/8in-16NC x 1-1/4in	
104	1001145834	1	Platform Console Box Assembly (Without SkyGuard) (See PLATFORM CONSOLE ASSEMBLY for Breakdown) **(SN 0300177361 through 0300181174)**	
104	1001159099	1	Platform Console Box Assembly (Without SkyGuard) (See PLATFORM CONSOLE ASSEMBLY for Breakdown) **(SN 0300181175 through 0300188647)**	
104	1001166672	1	Platform Console Box Assembly (Without SkyGuard) (See PLATFORM CONSOLE ASSEMBLY for Breakdown) **(SN 0300188648 through 0300219885)**	
104	1001202577	1	Platform Console Box Assembly (Without SkyGuard) (See PLATFORM CONSOLE ASSEMBLY for Breakdown) **(SN 0300219886 through 0300272252)**	
104	1001190089	1	Platform Console Box Assembly (With SkyGuard) (See PLATFORM CONSOLE ASSEMBLY for Breakdown) **(SN 0300177361 through 0300219885)**	
104	1001202573	1	Platform Console Box Assembly (With SkyGuard) (See PLATFORM CONSOLE ASSEMBLY for Breakdown) **(SN 0300219886 through 0300272252)**	
104A	1001117174	1	Footswitch Assembly (Includes Footswitch and Items 104B & 104C)	
104A	1001117172	1	Footswitch	
104A	70002902	1	Block, Contact for 1001117172 Footswitch	
104A	70002903	1	Gasket for 1001117172 Footswitch	
104A	70002905	1	Cover for 1001117172 Footswitch	
104A	70002904	1	Bolt Replacement Kit for 1001117172 Footswitch	
104B	1060918	7 ft/2.14m	Cable, Electrical - 18/3	
104C	4460071	1	Connector, Strain Relief	
105	1702676		Decal	
106	3311405	7	Locknut 1/4in-20NC	

ITEM	PART NUMBER	QTY	DESCRIPTION	REV
107	3311605	4	Locknut 3/8in-16NC	
108	3380434	1	Panel, Decal Mount	
109	4360331	1	Switch, Toggle	
110	4740362	7	Washer, Fender 1/4in	
111	4751400	4	Flatwasher 1/4in Regular	
112	4751600	8	Flatwasher 3/8in Regular	
113	3790012	1	O-Ring	
	0273492	Ref	**WORKLIGHTS INSTALLATIONS (OPTIONAL)**	E
201	3536089	2	Plate, Mounting	
202		Ref	Hardware Options:	
202	0641414	4	Bolt 1/4in-20NC x 1-3/4in (USA Built Machines) **(SN 0300087000 through 0300112399)**	
202	2080040	4	Fastener, Huck (USA Built Machines) **(SN 0300112400 through 0300272252)**	
203	3311405	4	Locknut 1/4in-20NC (USA Built Machines Only) **(SN 0300087000 through 0300112400)**	
204	4711400	8	Flatwasher 1/4in Thin (USA Built Machines Only) **(SN 0300087000 through 0300112400)**	
205	2920140	NLA	Worklight (Use p/n 1001222838) **(SN 0300177361 through 0300258807)**	
205	7016399	2	Bulb, Replacement (1 Per Worklight)	
205	1001232838	1	Worklight w/Switch Kit **(SN 0300258808 through 0300272252)**	
205	1001232586	1	Worklight w/Switch	
205	1001232799	1	Harness, Light	
206	4240099	10	Tie-Strap (Not Shown)	
207	2820035	9	Loom, Vinyl (Not Shown)	
209	4460426	1	Connector, Strain Relief Options (Not Shown - Located at Console Box)	
		Ref	**TRAY INSTALLATIONS (OPTIONAL)**	
301	1580012	1	Tray, Storage (Center)	
302	1580013	1	Tray, Storage (Rail Mounted - Not Shown)	
	0274180	Ref	**FLOODLIGHT INSTALLATION**	A
401	0641518	2	Bolt 5/16in-18NC x 2-1/4in	
402	2560173	2	Handle	
403	2920157	2	Lamp, Work Light	
404	3250585	1	Nameplate - Light On	
405	4060802	1	Guard, Switch	
406	4360336	1	Switch, Toggle	
407	4420037	1	Tape, Insulation (Not Shown)	
408	4751800	2	Flatwasher 1/2in Regular	
409	4846561	1	Mount, Light	
410	4922892	1	Harness 12/3 (Lower Boom) (Not Shown)	
411	4922894	1	Harness 12/3 (Upper Boom) (Not Shown)	
		Ref	**2500W GENERATOR INSTALLATION (OPTIONAL)**	
501	4360336	1	Switch, Toggle	
501	4740397	1	Bushing	
501	4060802	1	Guard, Switch	
501	3251102	1	Decal - Generator ON/OFF	

FIGURE 4-2. CONSOLE BOX INSTALLATION (WITH 1 CELL LSS) (SN 0300177361 through 0300259736)

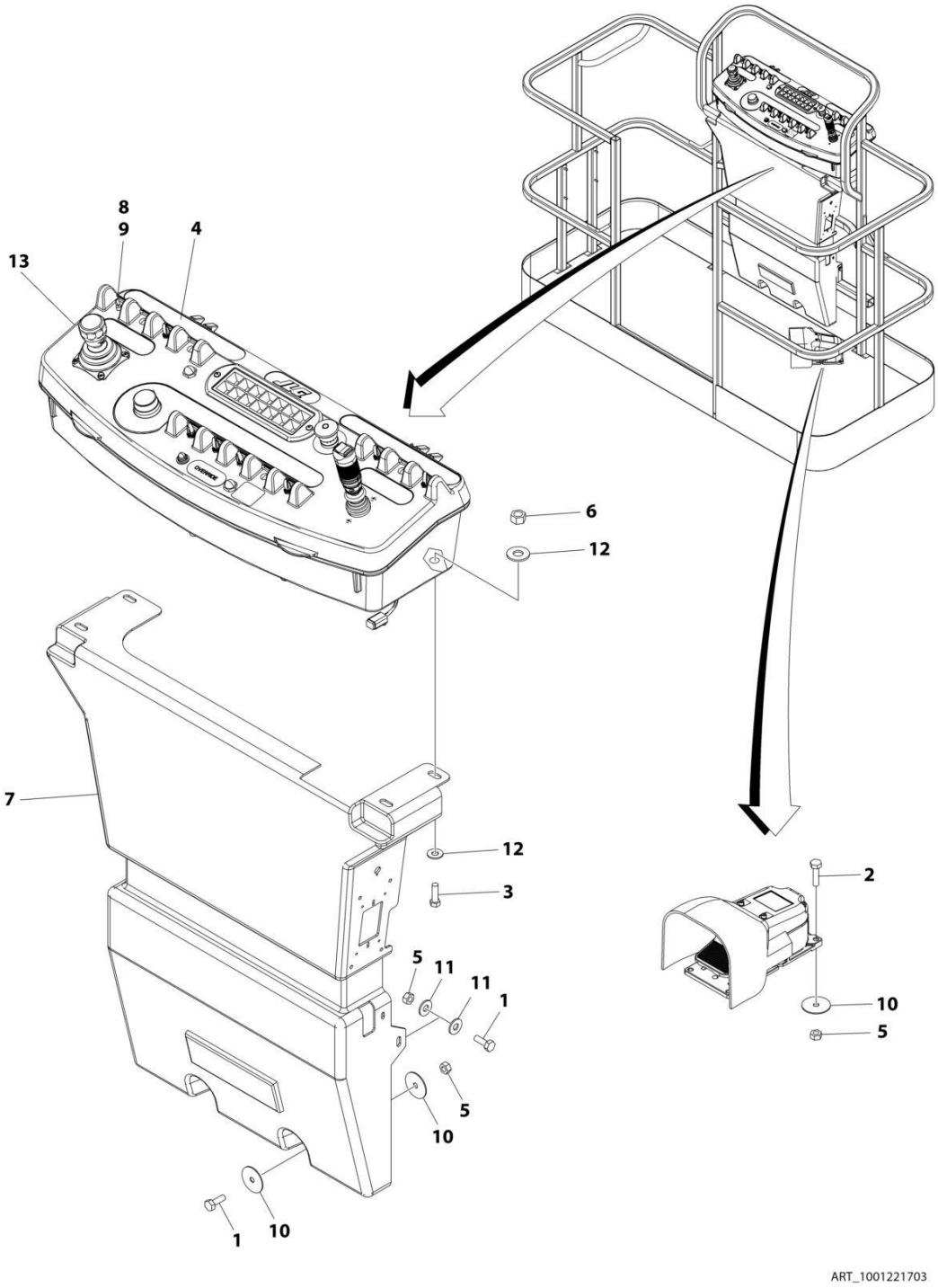

FIGURE 4-2. CONSOLE BOX INSTALLATION (WITH 1 CELL LSS) (SN 0300177361 through 0300259736)

ITEM	PART NUMBER	QTY	DESCRIPTION	REV
	1001221703	Ref	CONSOLE BOX INSTALLATION (WITH 1 CELL LSS)	B
1	0641406	4	Bolt 1/4 x 3/4	
2	0641408	3	Bolt 1/4 x 1	
3	0641610	4	Bolt 3/8 x 16	
4	1702676	1	Decal	
5	3311405	7	Nut 1/4	
6	3311605	4	Nut 3/8	
7	3380434	1	Panel, Decal Mount	
8	3790012	1	O-Ring	
9	4360331	1	Switch, Toggle	
10	4740362	7	Washer	
11	4751400	4	Washer 1/4	
12	4751600	8	Washer 3/8	
13	1001219973	NLA	Platform Console Box Assembly (Use p/n 1001241715) (See Separate Breakdown in this Section)	

FIGURE 4-3. CONSOLE BOX INSTALLATION (WITH 1 CELL LSS) (SN 0300259737 through 0300272252)

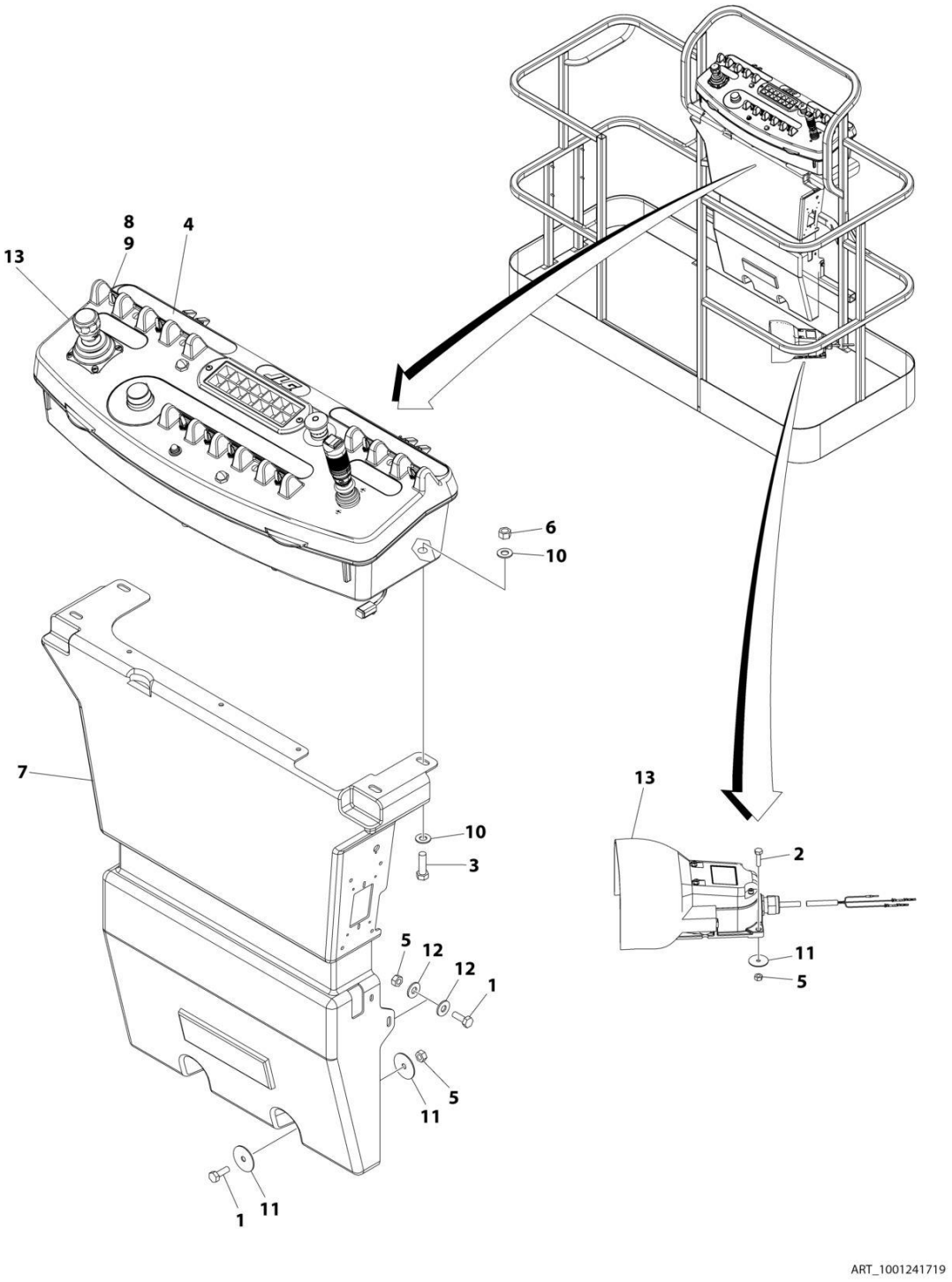

FIGURE 4-3. CONSOLE BOX INSTALLATION (WITH 1 CELL LSS) (SN 0300259737 through 0300272252)

ITEM	PART NUMBER	QTY	DESCRIPTION	REV
	1001241719	Ref	CONSOLE BOX INSTALLATION (WITH 1 CELL LSS)	A
1	0641406	4	Bolt 1/4 x 3/4	
2	0641408	3	Bolt 1/4 x 1	
3	0641610	4	Bolt 3/8 x 16	
4	1702676	1	Decal	
5	3311405	7	Nut 1/4	
6	3311605	4	Nut 3/8	
7	3380434	1	Panel, Decal Mount	
8	3790012	1	O-Ring	
9	4360331	1	Switch, Toggle	
10	4751600	8	Washer 3/8	
11	4740362	7	Washer	
12	4751400	4	Washer 1/4	
13	1001241715	1	Platform Console Box Assembly (See Separate Breakdown in this Section)	

FIGURE 4-4. PLATFORM COMPONENTS INSTALLATION (FALL ARREST PLATFORM)

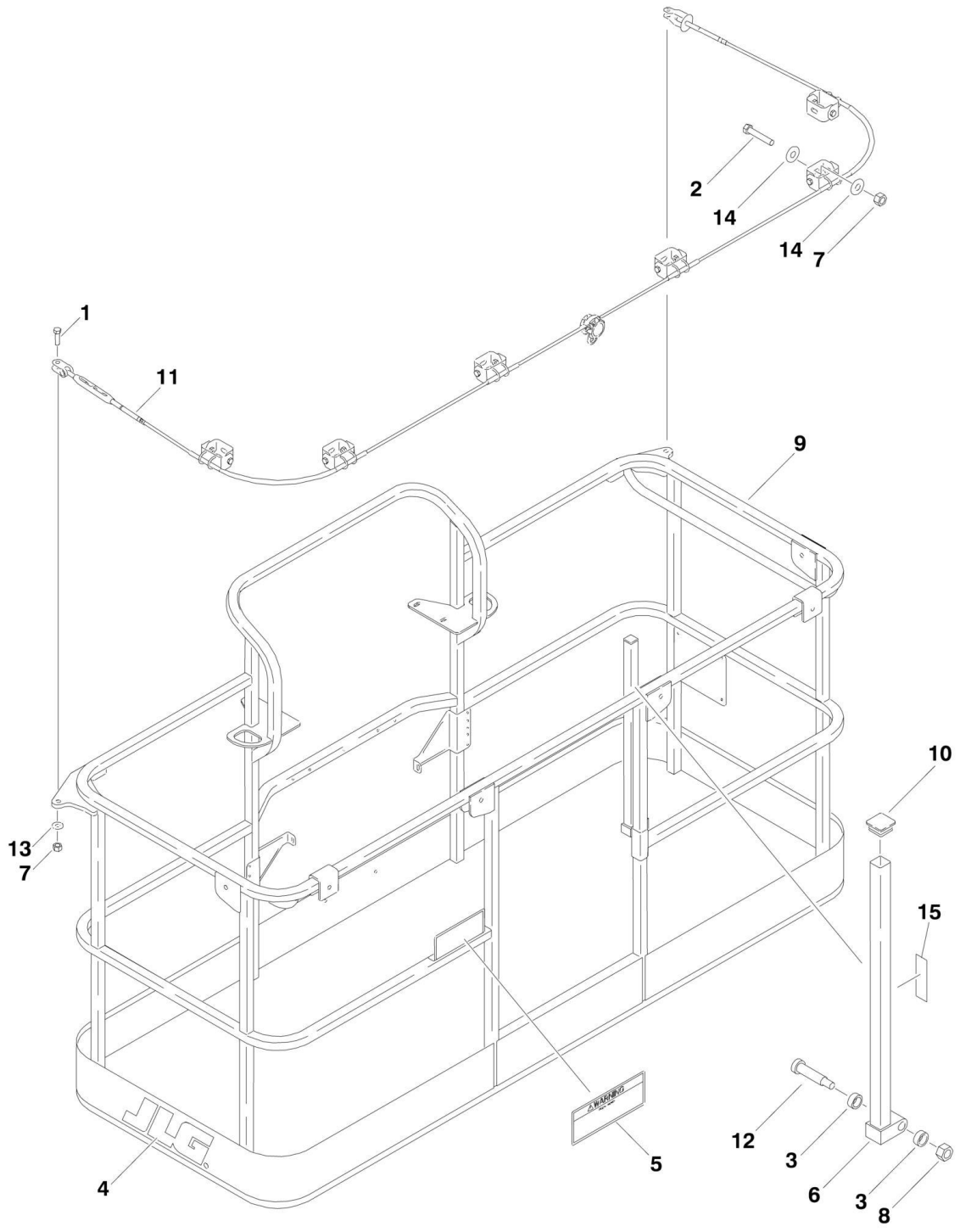

FIGURE 4-4. PLATFORM COMPONENTS INSTALLATION (FALL ARREST PLATFORM)

ITEM	PART NUMBER	QTY	DESCRIPTION	REV
		Ref	**PLATFORM ASSEMBLY (FALL ARREST)**	
		Ref	**Note: Not Available on CE Specs.**	
	3510884	Ref	**3ft x 6ft (0.9m x 1.83m) (SN 0300177361 through 0300185926)**	F
	1001144597	Ref	**3ft x 6ft (0.9m x 1.83m) (SN 0300185927 through 0300200808)**	D
	1001186333	Ref	**3ft x 6ft (0.9m x 1.83m) (SN 0300200809 through 0300272252)**	C
	3510868	Ref	**3ft x 8ft (0.9m x 2.44m) (SN 0300177361 through 0300185926)**	F
	1001144596	Ref	**3ft x 8ft (0.9m x 2.44m) (SN 0300185927 through 0300200808)**	D
	1001186334	Ref	**3ft x 8ft (0.9m x 2.44m) (SN 0300200809 through 0300272252)**	D
		Ref	**Note: Replacement Decals Must Be Purchased Separately - See DECALS SECTION.**	
1	0681814	2	Bolt 1/2in-13NC x 1-3/4in (Grade 8)	
2	0681822	AR	Bolt 1/2in-13NC x 2-3/4in (Grade 8)	
3	0962270	2	Bearing	
4	1702773	1	Decal - JLG (3ft x 8ft (0.9m x 2.44m) Platform Only)	
5	1705014	1	Decal - Safety	
6	2410014	1	Gate Weldment	
7	3271805	AR	Locknut 1/2in-13NC (Grade 8)	
8	3311605	1	Locknut 3/8in-16NC	
9	See Note	NSS	Platform (Note: Purchase Platform Assembly)	
10	3520072	1	Cap-Plug	
11		Ref	Cable, Fall Arrest Options:	
11	1060919	NLA	Cable (3ft x 6ft (0.9m x 1.83m) Platform) (Use p/n 1001203655) **(SN 0300177361 through 0300213938)**	
11	1001203655	1	Cable (3ft x 6ft (0.9m x 1.83m) Platform) **(SN 0300213939 through 0300272252)**	
11	3890040	NLA	Cable (3ft x 8ft (0.9m x 2.44m) Platform) (Use p/n 1001203656) **(SN 0300177361 through 0300215775)**	
11	1001203656	1	Cable (3ft x 8ft (0.9m x 2.44m) Platform) **(SN 0300215776 through 0300272252)**	
12	3900054	1	Bolt 1/2in-13NC x 1 3/4in	
13	4711800	AR	Flatwasher 1/2in Thin	
14	4751800	AR	Flatwasher 1/2in Regular	
15	1706385	1	Decal - Drop Bar	

FIGURE 4-5. PLATFORM CONSOLE ASSEMBLY (WITHOUT SKYGUARD)

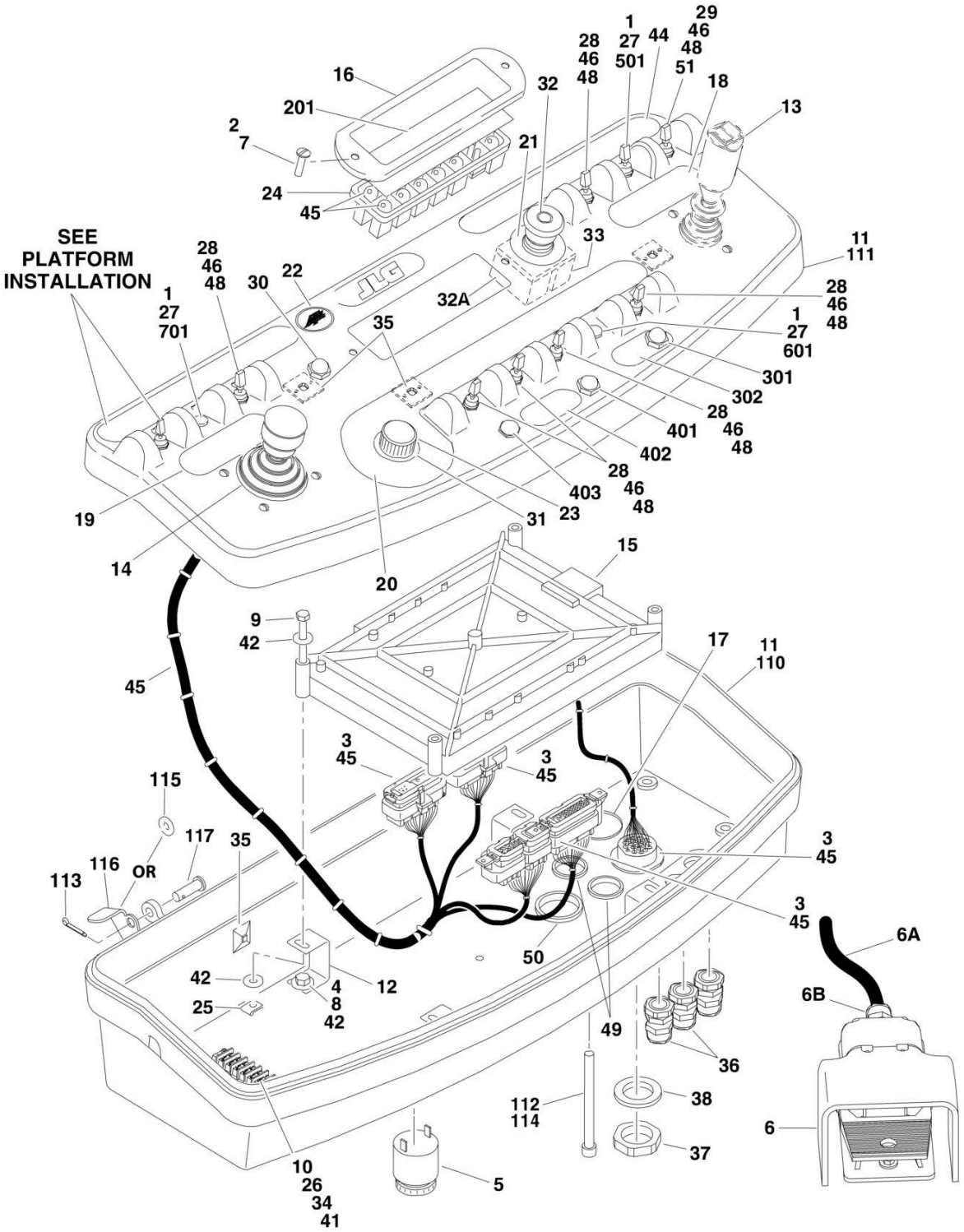

FIGURE 4-5. PLATFORM CONSOLE ASSEMBLY (WITHOUT SKYGUARD)

ITEM	PART NUMBER	QTY	DESCRIPTION	REV
	1001145834	Ref	**CONSOLE BOX AND FOOTSWITCH ASSEMBLY (SN 0300177361 through 0300181174)**	C
	1001159099	Ref	**CONSOLE BOX AND FOOTSWITCH ASSEMBLY (SN 0300181175 through 0300188647)**	B
	1001166672	Ref	**CONSOLE BOX AND FOOTSWITCH ASSEMBLY (SN 0300188648 through 0300219885)**	C
	1001202577	Ref	**CONSOLE BOX AND FOOTSWITCH ASSEMBLY (SN 0300219886 through 0300272252)**	C
1	0100009	AR	Sealant	
2	0100035	AR	Compound, Locking	
3	0100048	AR	Grease, Dielectric	
4	0100081	AR	Adhesive	
5	0140011	1	Alarm	
6	1001117174	1	Footswitch Assembly (Includes Footswitch and Items 6A & 6B)	
6	1001117172	1	Footswitch	
6	70002902	1	Block, Contact for 1001117172 Footswitch	
6	70002903	1	Gasket for 1001117172 Footswitch	
6	70002905	1	Cover for 1001117172 Footswitch	
6	70002904	1	Bolt Replacement Kit for 1001117172 Footswitch	
6A	1060918	7 ft/2.14m	Cable, Electrical - 18/3	
6A	4460042	3	Terminal, Ring (Not Shown)	
6A	4460464	1	Pin, Male	
6A	4460226	2	Socket, Female	
6B	4460071	1	Connector, Strain Relief	
6B	0100020	AR	Sealant	
7	0630464	2	Screw, Button Head #10-24NC x 1/2in	
8	0641404	4	Bolt 1/4in-20NC x 1/2in	
9	0641414	4	Bolt 1/4in-20NC x 1 3/4in	
10	0721006	2	Bolt #10-24NC x 3/4in	
11		Ref	Box, Console Options (See Items 101-117 for Breakdown):	
11	0861537	1	Box, Console **(SN 0300177361 through 0300219885)**	
11	1001201890	1	Box, Console **(SN 0300219886 through 0300272252)**	
12	0902751	4	Bracket, Card Support **(SN 0300177361 through 0300219885)**	
12	1001172760	4	Bracket, Card Support **(SN 0300219886 through 0300272252)**	
13	1001118416	NLA	Controller Assembly (Drive and Steer) (Use p/n 1001212415) (See CONTROLLER ASSEMBLY (DRIVE AND STEER) for Breakdown) **(SN 0300181175 through 0300188647)**	
13	1001166538	NLA	Controller Assembly (Drive and Steer) (Use p/n 1001212415) (See CONTROLLER ASSEMBLY (DRIVE AND STEER) for Breakdown) **(SN 0300188648 through 0300272252)**	
14	1001118417	NLA	Controller Assembly (Lift and Swing) (Use p/n 1001129555) (See CONTROLLER ASSEMBLY (LIFT AND SWING) for Breakdown) **(SN 0300181175 through 0300188647)**	
14	1001166539	NLA	Controller Assembly (Lift and Swing) (Use p/n 1001129555) (See CONTROLLER ASSEMBLY (LIFT AND SWING) for Breakdown) **(SN 0300188648 through 0300272252)**	
15	1001106355	1	Controller, Module **(SN 0300177361 through 0300181174)**	
		Ref	Note: Re-calibration Required when Replaced.	
15	1001106938	1	Controller, Module **(SN 0300181175 through 0300272252)**	
		Ref	Note: Re-calibration Required when Replaced.	
16	1670829	1	Bezel	
17	1001110434	1	Plug	

ITEM	PART NUMBER	QTY	DESCRIPTION	REV
18	1702565	1	Decal (Drive and Steer)	
19	1702566	1	Decal (Lift and Swing)	
20	1702567	1	Decal (Function Speed)	
21	1704260	1	Decal - EMS	
22	1705132	1	Decal - ADE **(SN 0300177361 through 0300219885)**	
23	2560136	1	Handle, Knob	
24	2760105	1	Housing, Display Light	
25	3300353	4	Nut, Tinnerman	
26	3311005	2	Locknut #10-24NC	
27	3520054	3	Plug, Hole	
28	4360328	6	Switch, Toggle **(SN 0300177361 through 0300181174)**	
28	1001155045	6	Switch, Toggle **(SN 0300181175 through 0300272252)**	
29	4360330	1	Switch, Toggle **(SN 0300177361 through 0300181174)**	
29	1001159256	1	Switch, Toggle **(SN 0300181175 through 0300272252)**	
30	4360387	1	Switch, Pushbutton	
31	4360407	1	Controller, Speed	
31	See Note	1	Gasket "Top Hat" (Included with Switch) (Note: Not Available - Purchase Complete Controller)	
31	70003784	1	Seal (Note: Must be purchased separately)	
32	4360475	1	Switch, Emergency Stop	
32	7020175	1	Cap, Red	
32	7020176	1	Contact Block	
33	4360476	1	Block, Contact	
34	4460007	1	Bar, Buss	
35	4460234	3	Base, Mounting	
36	4460428	2	Connector, Strain Relief	
37	4460470	1	Nut, Terminal	
38	4460471	1	Lockwasher, Terminal	
39	4460708	2	Connector, Female - 15 Position (Not Shown - See ELECTRICAL SECTION for Location)	
41	4751000	AR	Flatwasher #10 Regular	
42	4751400	8	Flatwasher 1/4in Regular	
43	4922666	1	Harness, Analyzer Cable (Not Shown - See ELECTRICAL SECTION for Breakdown)	
44	1001131168	1	Decal (Stop)	
45	1001107753	1	Harness, Platform Box (See ELECTRICAL SECTION for Breakdown)	
46	3790012	7	O-Ring	
47	1001139135	1	Platform Valve Harness (Not shown- See ELECTRICAL SECTION for Breakdown)	
48	1001155044	7	Nut **(SN 0300181175 through 0300272252)**	
49	3520033	2	Plug **(SN 0300219886 through 0300224049)**	
49	1001220486	1	Plug **(SN 0300224050 through 0300272252)**	
50	3520035	1	Plug **(SN 0300219886 through 0300272252)**	
51	4740397	1	Spacer **(SN 0300219886 through 0300272252)**	
	0861537	Ref	**CONSOLE BOX ASSEMBLY (SN 0300177361 through 0300219885)**	I
	1001201890	Ref	**CONSOLE BOX ASSEMBLY (SN 0300219886 through 0300272252)**	A
110	See Note	NSS	Console Bottom (Note: Not Available for Purchase)	
111	See Note	NSS	Console Top (Note: Not Available for Purchase)	
112	3311601	1	Nut 3/8in-16NC	
113	3470003	2	Hairpin	

ITEM	PART NUMBER	QTY	DESCRIPTION	REV
114	0630568	1	Screw 3/8in-16NC x 4-1/2in	
115	4711500	AR	Washer 5/16	
115	4751600	AR	Washer 3/8	
116	1001200575	2	Bracket	
117	3430616	2	Pin **(SN 0300219886 through 0300272252)**	
		Ref	**LIGHT PANEL DECAL INSTALLATION**	
	1001108763	Ref	**ANSI, ANSI Export, CSA and Japanese Specs**	B
	1001108764	Ref	**ANSI Export, Australian and CE Specs**	A
201		Ref	Decal - Display Options:	
201	1001121657	1	ANSI, ANSI Export, CSA and Japanese Specs	
201	1001107926	1	ANSI Export, Australian and CE Specs	
		Ref	**LIGHT SWITCH INSTALLATION**	
	0271552	Ref	**Head and Tail Lights Installation (Optional) (SN 0300177361 through 0300201472)**	D
	1001176296	Ref	**Head and Tail Lights Installation (Optional) (SN 0300201473 through 0300272252)**	
	0274200	Ref	**Chassis Illumination Light Installation (Optional)**	B
301	4360522	1	Switch, Push Button	
302	1705170	1	Decal - Lights **(SN 0300136623 through 0300272252)**	
		Ref	**SOFT TOUCH SYSTEM INSTALLATIONS**	
	0273824	Ref	**6ft Platform**	D
	0272427	Ref	**8ft Platform**	G
	1001108256	Ref	**6ft/1.8m Platform w/Fall Arrest**	C
	0273706	Ref	**8ft/2.4m Platform w/Fall Arrest**	D
401	4360387	1	Switch, Pushbutton	
402	1702938	1	Decal - Soft Touch Override	
403	2920028	1	Lamp, Indicator	
403	2920029	1	Bulb, Light	
		Ref	**DUAL FUEL SWITCH INSTALLATION (GM POWERED MACHINES ONLY)**	
501	4360336	1	Switch, Toggle	
501	3790012	1	O-Ring	
		Ref	**JIB SWITCH INSTALLATION (600AJ ONLY)**	
601	4360328	1	Switch, Toggle	
601	3790012	1	O-Ring	
		Ref	**CRAB STEER INSTALLATION (4WS ONLY)**	
701	4360331	1	Switch, Toggle	
701	3790012	1	O-Ring	

FIGURE 4-6. PLATFORM CONSOLE ASSEMBLY (WITH SKYGUARD)

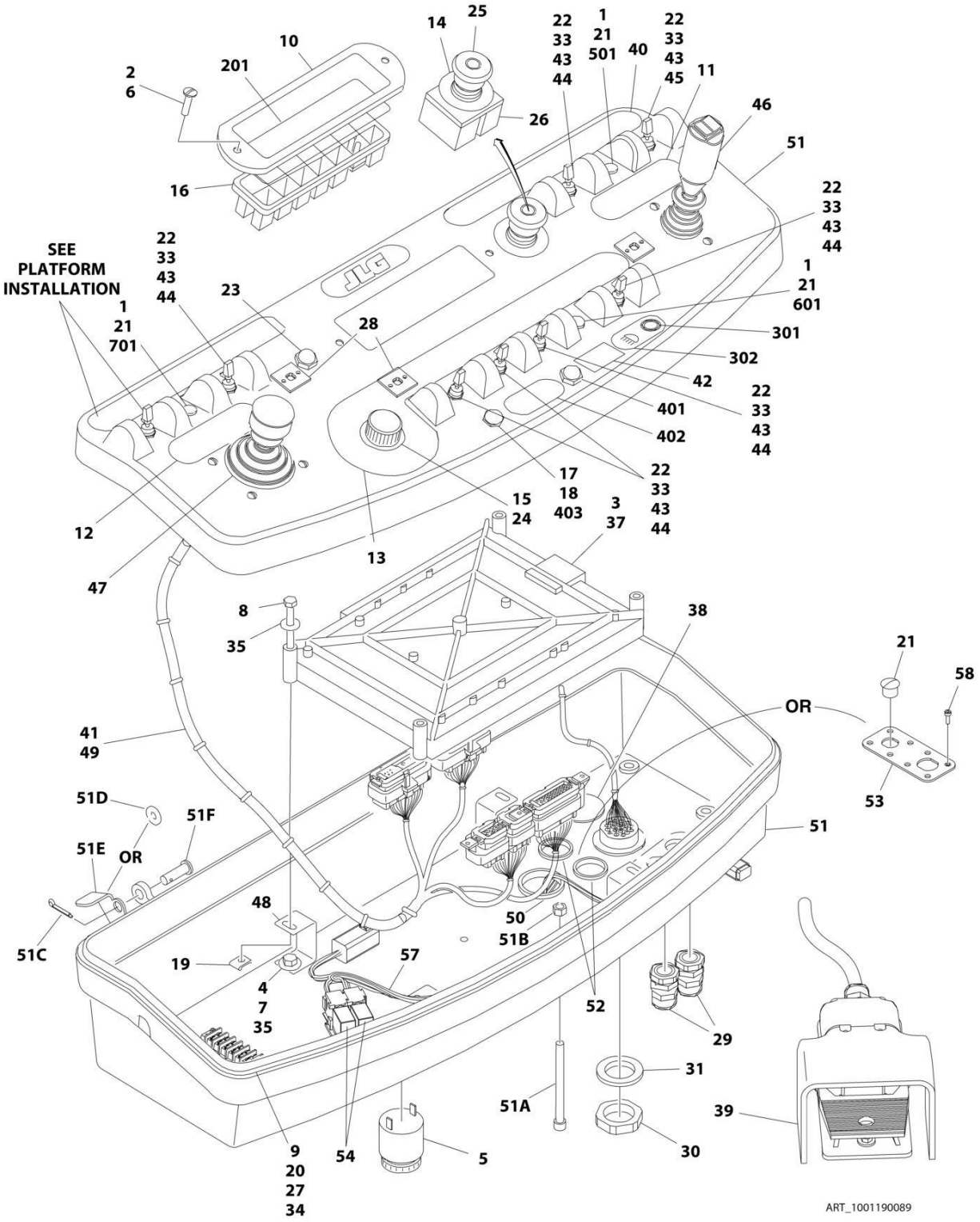

FIGURE 4-6. PLATFORM CONSOLE ASSEMBLY (WITH SKYGUARD)

ITEM	PART NUMBER	QTY	DESCRIPTION	REV
	1001190089	Ref	**PLATFORM CONSOLE ASSEMBLY - WITH SKYGUARD (WITHOUT LSS OR WITH 4 CELL LSS) (SN 0300177361 through 0300219885)**	C
	1001202573	Ref	**PLATFORM CONSOLE ASSEMBLY - WITH SKYGUARD (WITHOUT LSS OR WITH 4 CELL LSS) (SN 0300219886 through 0300272252)**	D
	1001219973	Ref	**PLATFORM CONSOLE ASSEMBLY - WITH SKYGUARD (WITH 1 CELL LSS) (SN 0300177361 through 0300259736)**	C
	1001241715	Ref	**PLATFORM CONSOLE ASSEMBLY - WITH SKYGUARD (WITH 1 CELL LSS) (SN 0300259737 through 0300272252)**	A
1	0100009	AR	Sealant	
2	0100035	AR	Compound, Locking	
3	0100048	AR	Grease, Dielectric	
4	0100081	AR	Adhesive **(SN 0300219886 through 03000300237184)**	
5	0140011	1	Alarm	
6	0630464	2	Screw #10 x 1/2	
7	0641404	4	Bolt 1/4 x 1/2	
8	0641414	4	Bolt 1/4 x 1-3/4	
9	0721006	2	Screw #10 X 3/4	
10	1670829	1	Bezel	
11	1702565	1	Decal - Drive and Steer	
12	1702566	1	Decal - Lift and Swing	
13	1702567	1	Decal - Function Speed	
14	1704260	1	Decal, Emergency Stop	
15	2560136	1	Knob	
16	2760105	1	Fixture, Light	
17	2920028	1	Light, Indicator	
18	2920029	1	Lamp, Bulb	
19	3300353	4	Nut, Tinnerman	
20	3311005	2	Nut #10	
21	3520054	AR	Plug, Hole	
22	3790012	7	O-Ring	
23	4360387	2	Switch, Push Button	
24	4360407	1	Switch, Flow Control	
24	See Note	1	Gasket "Top Hat" (Included with Switch (Note: Not Available for Purchase)	
24	70003784	1	Seal	
25	4360475	1	Switch, Emergency Stop	
25	7020175	1	Cap, Red	
25	7020176	1	Block, Contact	
26	4360476	1	Switch, Contact	
27	4460007	1	Bussbar	
28	4460234	3	Mount Cable, Tie	
29	4460428	2	Connector, Strain Relief	
30	4460470	1	Terminal, Nut	
31	4460471	1	Terminal, Washer	
32	4460708	2	Connector - 15 Position (Not Shown)	
33	4740397	7	Spacer, Washer	
34	4751000	2	Washer #10	
35	4751400	8	Washer 1/4	
36	4922666	1	Harness, Analyzer Cable (Not Shown) (See ELECTRICAL	

ITEM	PART NUMBER	QTY	DESCRIPTION	REV
			SECTION for Breakdown)	
37	1001106938	1	Module, Control	
		Ref	Note: Re-calibration Required when Replaced.	
38	1001110434	1	Plug, Hole	
39	1001117174	1	Footswitch Assembly	
39	1001117172	1	Footswitch	
39	70002902	1	Block, Contact for 1001117172 Footswitch	
39	70002903	1	Gasket for 1001117172 Footswitch	
39	70002905	1	Cover for 1001117172 Footswitch	
39	70002904	1	Bolt Replacement Kit for 1001117172 Footswitch	
39	1060918	7 ft/2.14m	Cable, Electrical - 18/3	
39	4460042	3	Terminal, Ring (Not Shown)	
39	4460464	1	Pin, Male	
39	4460226	2	Socket, Female	
39	4460071	1	Connector, Strain Relief	
39	0100020	AR	Sealant	
40	1001131168	1	Decal - Stop	
41	1001139135	1	Harness, Platform Valve (See ELECTRICAL SECTION for Breakdown)	
42	1001144433	1	Decal - No Weight SkyGuard **(SN 0300177361 through 0300259736)**	
43	1001155044	7	Nut 15/32	
44	1001155045	6	Switch, Toggle	
45	1001159256	1	Switch, Toggle	
46	1001166538	NLA	Controller Assembly - Drive/Steer (Use p/n 1001212415) (See CONTROLLER ASSEMBLY (DRIVE AND STEER) for Breakdown)	
47	1001166539	NLA	Controller Assembly - Lift/Swing (Use p/n 1001129555) (See CONTROLLER ASSEMBLY (LIFT AND SWING) for Breakdown)	
48	1001172760	4	Bracket	
49	1001185280	1	Harness, Console Box (Machines without LSS or with 4 Cell LSS) (See ELECTRICAL SECTION for Breakdown)	
49	1001220281	1	Harness, Console Box (Machines with 1 Cell LSS) (See ELECTRICAL SECTION for Breakdown)	
50	1001185281	1	Plug	
51	1001189116	1	Console Box Components (Machines without LSS or with Cell LSS) **(SN 0300177361 through 0300219885)**	D
51	1001201891	1	Console Box Components (Machines without LSS or with 4 Cell LSS) **(SN 0300219886 through 0300272252)**	A
51	1001215228	1	Console Box Components (Machines with 1 Cell LSS)	A
51A	0630568	1	Capscrew 3/8 x 4-1/2	
51B	3311601	1	Nut 3/8	
51C	3470003	1	Hairpin	
51D	4711500	AR	Washer 5/16	
51D	4751600	AR	Washer 3/8	
51E	1001200575	2	Bracket **(SN 0300219886 through 0300272252)**	
51F	3430616	2	Pin **(SN 0300219886 through 0300272252)**	
52	3520033	AR	Plug **(SN 0300219886 through 0300224049)**	
52	1001220486	AR	Plug **(SN 0300224050 through 0300272252)**	
53	1001213882	1	Mount (Machines with 1 Cell LSS)	
54	1001186431	2	Relay (Machines with 1 Cell LSS) **(SN 0300177361 through 0300259736)**	
54	4240032	AR	Tie-Strap	
54	4460488	AR	Mount, Tie-Strap	

ITEM	PART NUMBER	QTY	DESCRIPTION	REV
57	1001225580	1	Interface Harness (Machines with 1 Cell LSS)	
58	3900349	AR	Capscrew M2.5	
		Ref	**LIGHT PANEL DECAL INSTALLATION**	
	1001108763	Ref	**ANSI, ANSI Export, CSA and Japanese Specs**	B
	1001108764	Ref	**ANSI Export, Australian and CE Specs**	A
201		Ref	Decal - Display Options:	
201	1001121657	1	ANSI, ANSI Export, CSA and Japanese Specs	
201	1001107926	1	ANSI Export, Australian and CE Specs	
		Ref	**LIGHT SWITCH INSTALLATION**	
	0271552	Ref	**Head and Tail Lights Installation (Optional) (SN 0300177361 through 0300201472)**	D
	1001176296	Ref	**Head and Tail Lights Installation (Optional) (SN 0300201473 through 0300272252)**	A
	0274200	Ref	**Chassis Illumination Light Installation (Optional)**	B
301	4360522	1	Switch, Push Button	
302	1705170	1	Decal - Lights **(SN 0300136623 through 0300272252)**	
		Ref	**SOFT TOUCH SYSTEM INSTALLATIONS**	
	0273824	Ref	**6ft Platform**	D
	0272427	Ref	**8ft Platform**	G
	1001108256	Ref	**6ft/1.8m Platform with Fall Arrest**	C
	0273706	Ref	**8ft/2.4m Platform with Fall Arrest**	D
401	4360387	1	Switch, Push Button	
402	1702938	1	Decal - Soft Touch Override	
403	2920028	1	Lamp, Indicator	
403	2920029	1	Bulb, Light	
		Ref	**DUAL FUEL SWITCH INSTALLATION (GM POWERED MACHINES ONLY)**	
501	4360336	1	Switch, Toggle	
501	3790012	1	O-Ring	
		Ref	**JIB SWITCH INSTALLATION (600AJ ONLY)**	
601	4360328	1	Switch, Toggle	
601	3790012	1	O-Ring	
		Ref	**CRAB STEER INSTALLATION (4WS ONLY)**	
701	4360331	1	Switch, Toggle	
701	3790012	1	O-Ring	

FIGURE 4-7. CONTROLLER ASSEMBLY (LIFT AND SWING) (SN 0300177361 through 0300188647)

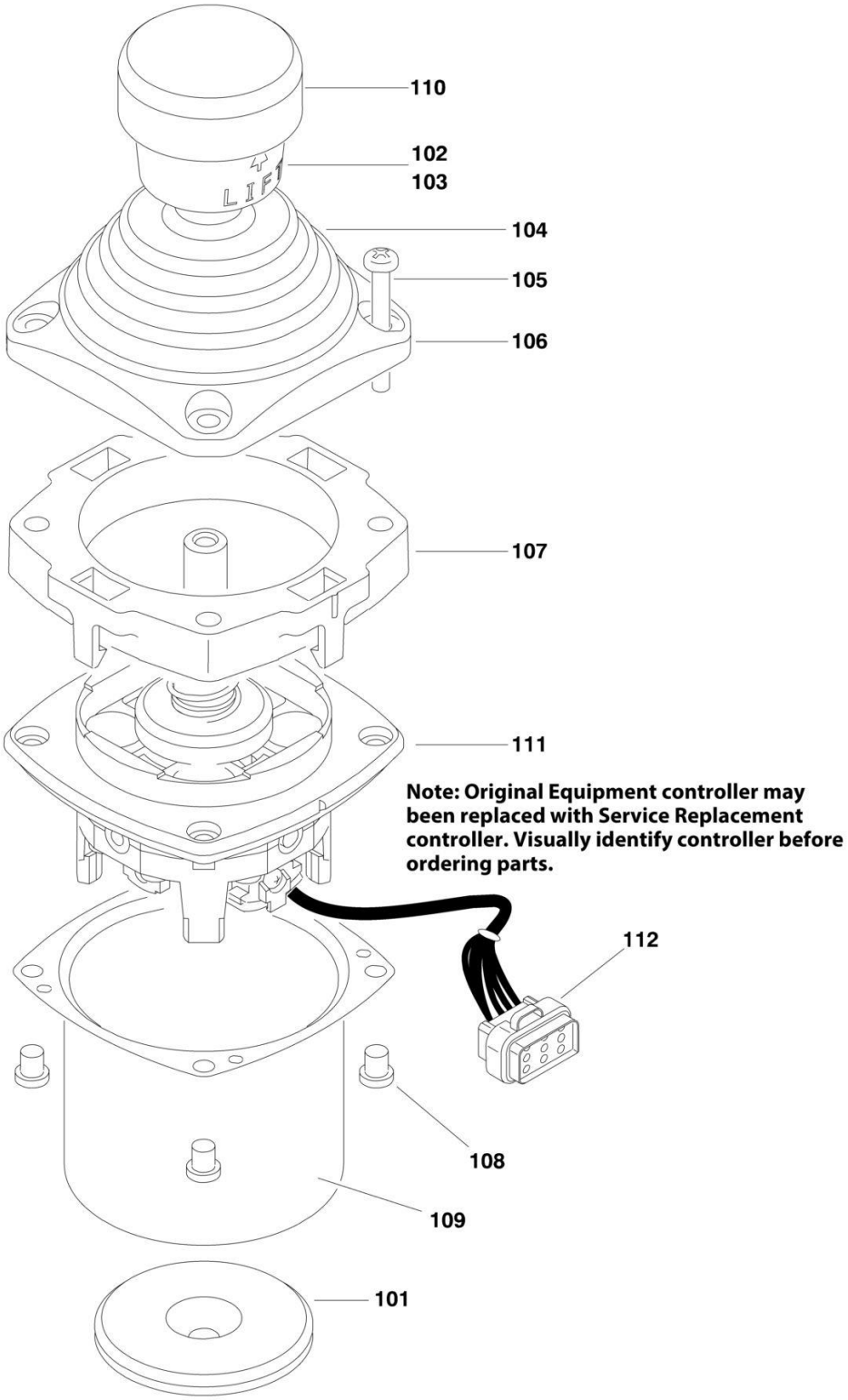

FIGURE 4-7. CONTROLLER ASSEMBLY (LIFT AND SWING) (SN 0300177361 through 0300188647)

ITEM	PART NUMBER	QTY	DESCRIPTION	REV
		Ref	**Note: Original Equipment controller may have been replaced with a Service Replacement controller. Visually identify controller before ordering parts.**	
	1001118417	Ref	**CONTROLLER ASSEMBLY (LIFT AND SWING)**	E
		Ref	**Note: Use p/n 1001129555 as Replacement.**	
101	70002730	1	Gasket	
102	7003928	1	Spring	
103	7022808	1	Cap, Lift	
104	70002731	1	Boot	
105	70002732	4	Screw	
106	7022815	1	Bezel	
107	70002733	1	Adapter	
108	70002734	4	Screw	
109	70002735	1	Can, Enclosure	
110	70002906	1	Cap	
111	See Note	NSS	Mechanical Assembly (Note: Use p/n 1001129555)	
112	7022819	1	Plug, Male 8 Position (Natural) (Not Shown)	
112	4460871	6	Socket, Female	

FIGURE 4-8. CONTROLLER ASSEMBLY (LIFT AND SWING) (SN 0300188648 through 0300272252)

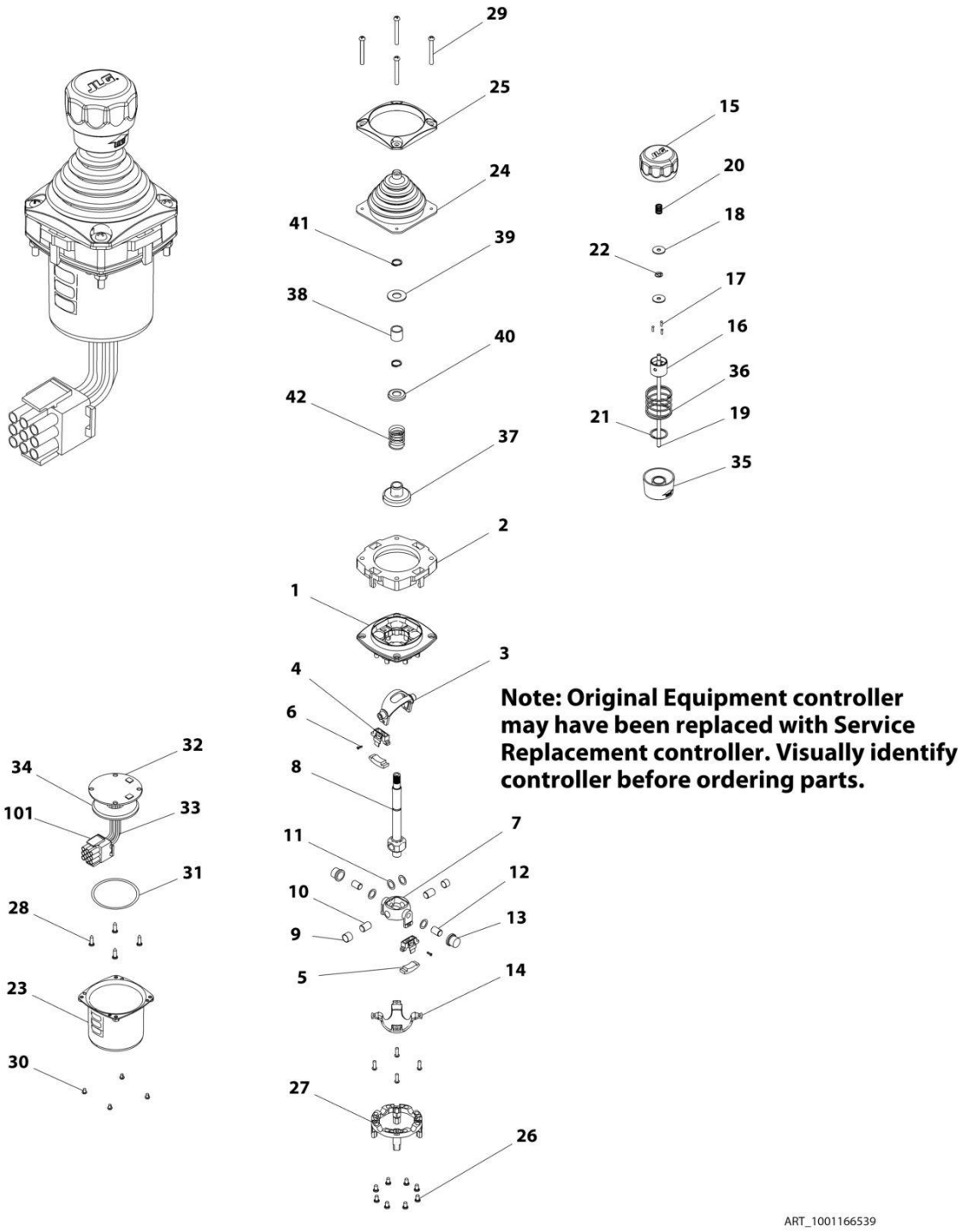

FIGURE 4-8. CONTROLLER ASSEMBLY (LIFT AND SWING) (SN 0300188648 through 0300272252)

ITEM	PART NUMBER	QTY	DESCRIPTION	REV
		Ref	**Note: Original Equipment controller may have been replaced with a Service Replacement controller. Visually identify controller before ordering parts.**	
	1001166539	Ref	**CONTROLLER ASSEMBLY (LIFT AND SWING)**	D
		Ref	**Note: Use p/n 1001129555 as replacement.**	
1	See Note	1	Main Cast Body (Note: Not Available - Purchase Complete Assembly)	
2	70004752	1	Adapter	
3	See Note	NSS	Pivot Arm, Plastic (Note: Not Available - Purchase Complete Assembly)	
4	See Note	NSS	Holder, Magnet (Note: Not Available - Purchase Complete Assembly)	
5	See Note	NSS	Arc, Magnet (Note: Not Available - Purchase Complete Assembly)	
6	See Note	NSS	Screw (Note: Not Available for Purchase)	
7	See Note	NSS	Pivot Arm, Cast (Note: Not Available - Purchase Complete Assembly)	
8	See Note	NSS	Shaft, Main (Note: Not Available - Purchase Complete Assembly)	
9	See Note	NSS	Bearing (Note: Not Available - Purchase Complete Assembly)	
10	See Note	NSS	Pin (Note: Not Available - Purchase Complete Assembly)	
11	See Note	NSS	Shim (Note: Not Available - Purchase Complete Assembly)	
12	See Note	NSS	Pin (Note: Not Available - Purchase Complete Assembly)	
13	See Note	NSS	Bearing (Note: Not Available - Purchase Complete Assembly)	
14	See Note	NSS	Dome, Centering (Note: Not Available - Purchase Complete Assembly)	
15	70004753	1	Cap	
16	70004754	1	Insert, Cap	
17	70004755	3	Pin	
18	70004756	2	Washer	
19	70004757	1	Pin, Centering	
20	70004758	1	Spring	
21	70004759	1	Ring, Retaining	
22	70004760	1	E-Ring	
23	70004761	1	Can, Enclosure	
24	70004762	1	Boot	
25	70004763	1	Bezel	
26	See Note	NSS	Screw (Note: Not Available for Purchase)	
27	See Note	NSS	Base Mounting (Note: Not Available - Purchase Complete Assembly)	
28	See Note	NSS	Screw (Note: Not Available for Purchase)	
29	70004764	4	Screw	
30	70004765	4	Screw	
31	70004766	1	O-Ring	
32	See Note	NSS	Plate (Note: Not Available - Purchase Complete Assembly)	
33	See Note	NSS	Harness (Note: Not Available - Purchase Complete Assembly)	
34	70004767	1	Grommet, Rubber	
35	70004768	1	Housing	
36	70004769	1	Spring	
37	70004770	1	Stopper	
38	70004771	1	Spacer	
39	70004772	1	Washer	
40	70004773	1	Disc	

ITEM	PART NUMBER	QTY	DESCRIPTION	REV
41	70004774	2	Ring, Retaining	
42	70004775	1	Spring	
101	4460265	1	Connector - 9 Position	
101	4460226	6	Socket, Female	

FIGURE 4-9. CONTROLLER ASSEMBLY (DRIVE AND STEER) (SN 0300177361 through 0300188647)

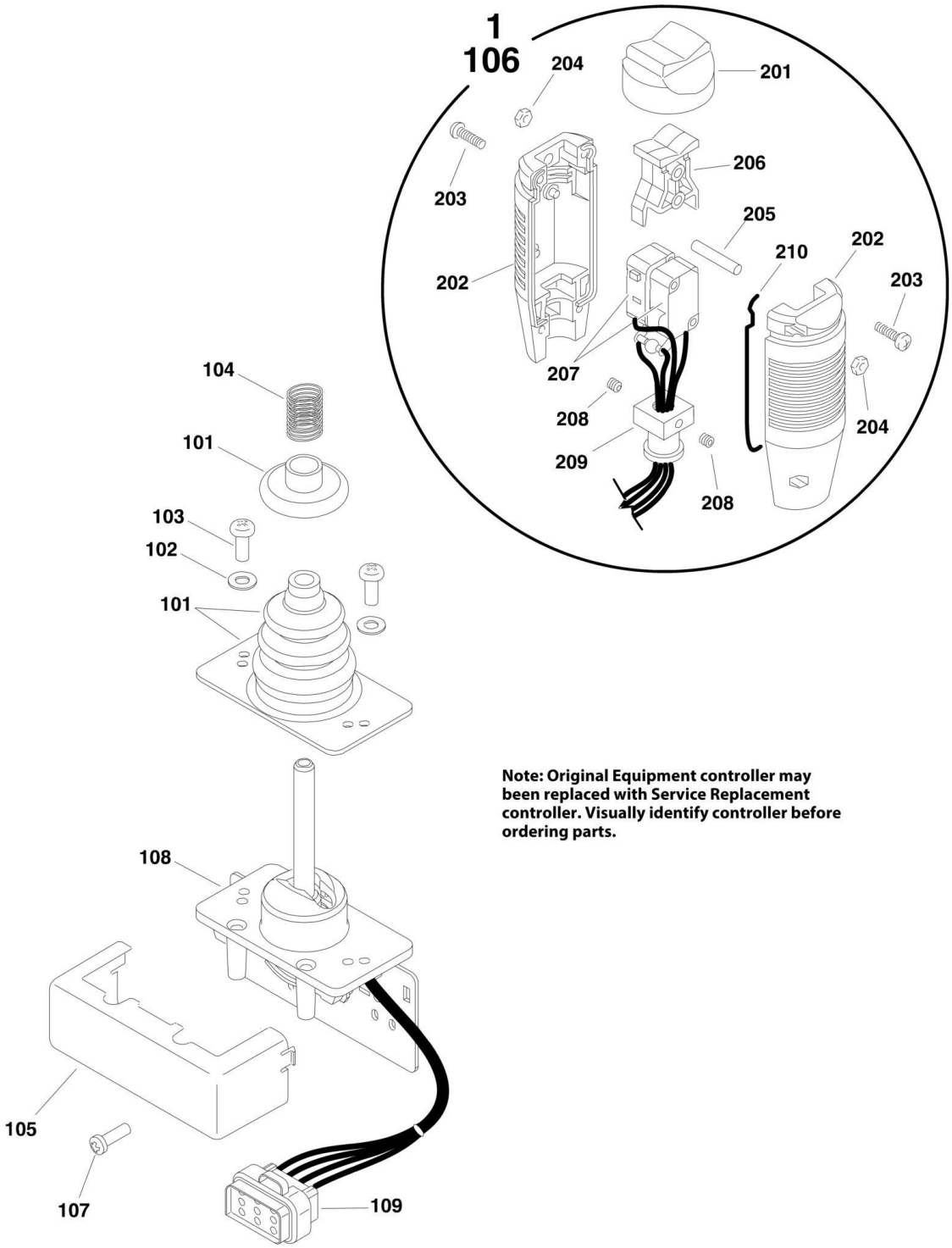

Note: Original Equipment controller may been replaced with Service Replacement controller. Visually identify controller before ordering parts.

FIGURE 4-9. CONTROLLER ASSEMBLY (DRIVE AND STEER) (SN 0300177361 through 0300188647)

ITEM	PART NUMBER	QTY	DESCRIPTION	REV
		Ref	**Note: Original Equipment controller may have been replaced with a Service Replacement controller. Visually identify controller before ordering parts.**	
	1001118416	Ref	**CONTROLLER ASSEMBLY (DRIVE AND STEER)**	D
		Ref	**Note: Use p/n 1001212415 as replacement.**	
101	70002724	1	Boot and Control Lock Assembly	
102	7003941	2	Washer	
103	70002725	2	Screw	
104	7019162	1	Spring	
105	70002726	1	Enclosure	
106	70002727	1	Handle Assembly (See Items 201-210 for Breakdown)	
107	70002728	1	Screw	
108	1001118416	NSS	Mechanical Assembly (Note: Not Available for Purchase)	
109	7022825	1	Plug, Male - 8 Position (Black)	
109	4460871	7	Socket, Female	
	70002727	Ref	**HANDLE ASSEMBLY**	
201	7003972	1	Boot, Switch	
202	7003973	2	Half, Handle	
203	7003980	4	Screw	
204	7019167	4	Nut	
205	7019164	1	Axle	
206	7019165	1	Rocker	
207	70002729	1	Wiring Assembly	
207	7003982	2	Switch, Micro	
208	7003983	2	Setscrew	
209	7019194	1	Coupling	
210	7003989	2	Gasket	

FIGURE 4-10. CONTROLLER ASSEMBLY (DRIVE AND STEER) (SN 0300188648 through 0300272252)

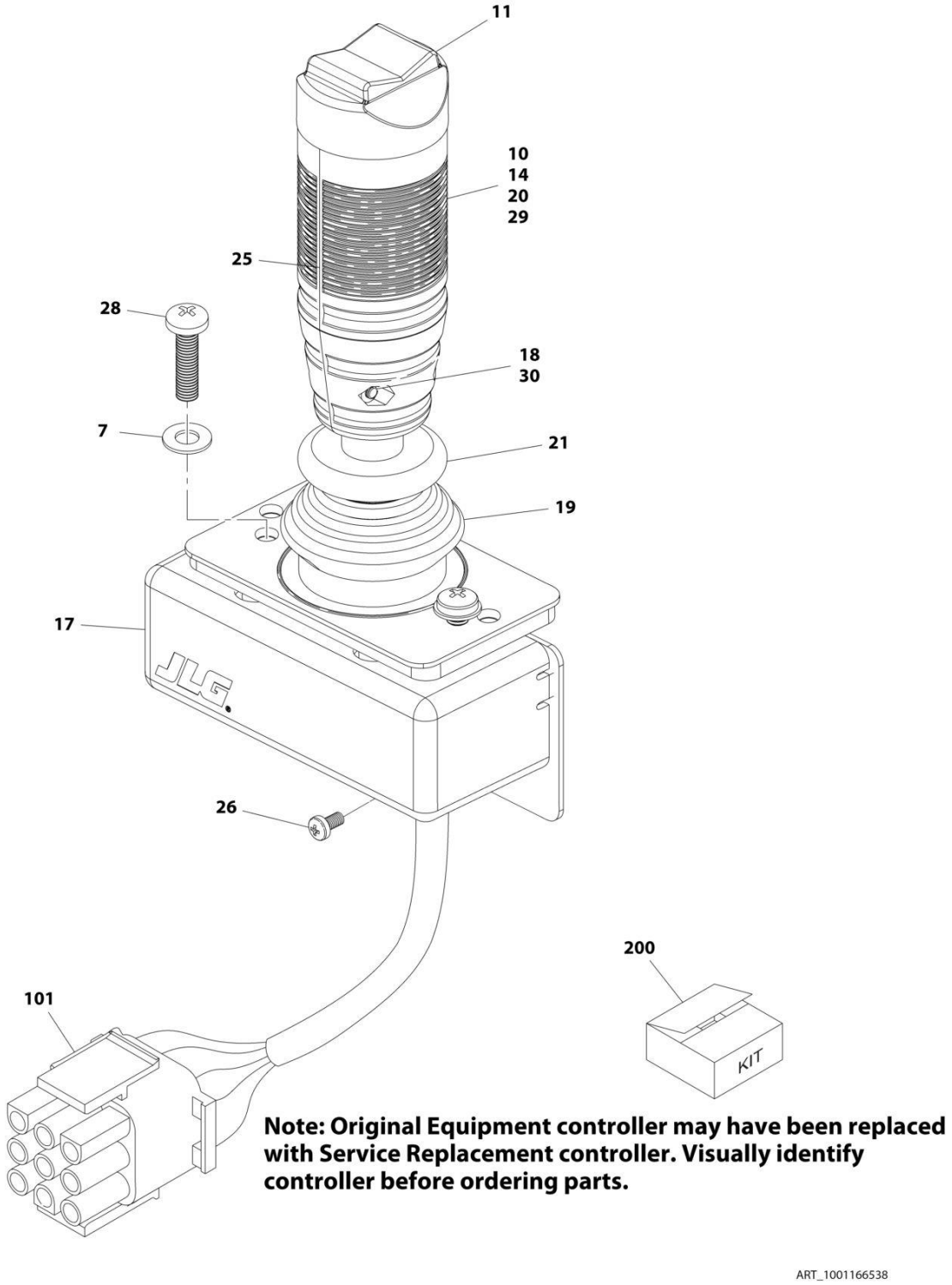

FIGURE 4-10. CONTROLLER ASSEMBLY (DRIVE AND STEER) (SN 0300188648 through 0300272252)

ITEM	PART NUMBER	QTY	DESCRIPTION	REV
		Ref	**Note: Original Equipment controller may have been replaced with a Service Replacement controller. Visually identify controller before ordering parts.**	
	1001166538	Ref	**CONTROLLER ASSEMBLY (DRIVE AND STEER)**	G
		Ref	**Note: Use p/n 1001212415 as Replacement.**	
7	70004738	2	Washer	
10	70004739	1	Roller	
11	70004740	1	Boot, Switch	
14	70004741	2	Half, Handle	
17	70004742	1	Enclosure	
18	70004743	4	Nut	
19	70004744	NLA	Boot, Controller (Use Item 200)	
20	70004745	NLA	Tube, Locking (Use Item 200)	
21	70004746	NLA	Disc, Looking (Use Item 200)	
25	70004747	2	Seal, Rope	
26	70004748	1	Screw M3 x 6mm	
28	70004749	2	Screw M5 x 20mm	
29	70004750	1	Pin, Dowel	
30	70004751	4	Screw M3 x 16mm	
101	4460265	1	Connector - 9 Position	
101	4460226	7	Socket, Female	
200	70005230	1	Boot Kit (Includes Items 19-21)	

FIGURE 4-11. SKYEYE INSTALLATION

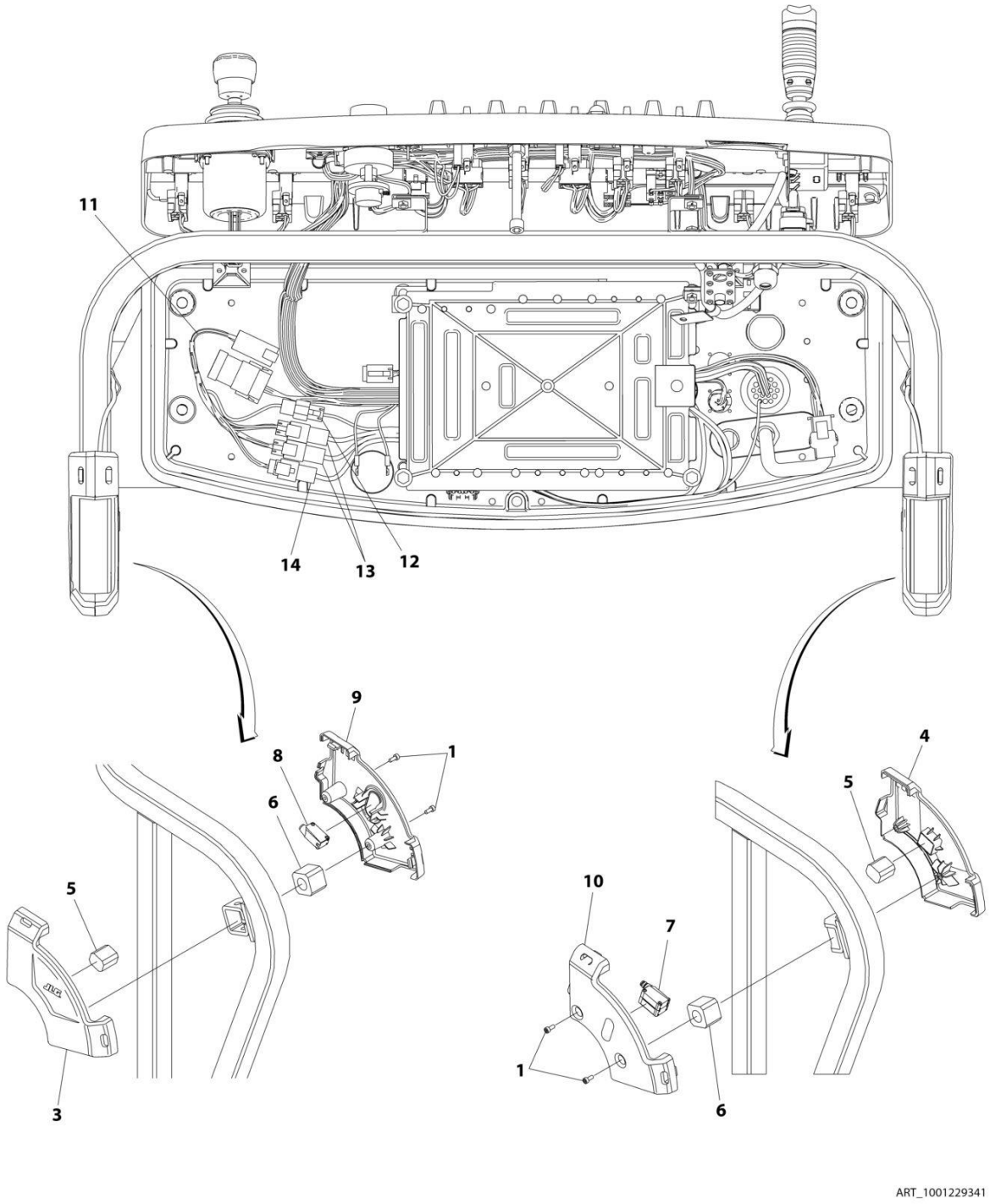

FIGURE 4-11. SKYEYE INSTALLATION

ITEM	PART NUMBER	QTY	DESCRIPTION	REV
	1001229341	Ref	SKYEYE INSTALLATION	B
1	4031505	4	Bolt M4 x 10	
2	4240033	AR	Tie-Strap (Not Shown)	
3	1001227633	1	Housing, LH Outer	
4	1001227634	1	Housing, RH Outer	
5	1001227985	2	Shim	
6	1001227987	2	Shim	
7	1001228224	2	Sensor, Receiver	
8	1001228225	1	Sensor, Emitter	
9	1001232164	1	Housing, LH Inner	
10	1001232165	1	Housing, RH Inner	
11	1001237865	1	Harness, Skyeye Intermediate (See Separate Breakdown in ELECTRICAL Section)	
12	1001238319	NLA	Harness, Skyeye Drain Jumper	
12	1001187674	1	Plug, Male - 2 Position	
12	4460942	1	Terminal	
12	4460466	1	Plug, Terminal	
12	4460508	1	Pin, Male	
13	1001237863	2	Harness, Skyeye Receiver (See Separate Breakdown in ELECTRICAL Section)	
14	1001237864	1	Harness, Skyeye Emitter (See Separate Breakdown in ELECTRICAL Section)	

FIGURE 4-12. SKYGUARD SYSTEM INSTALLATION (SN 0300177361 through 0300259736)

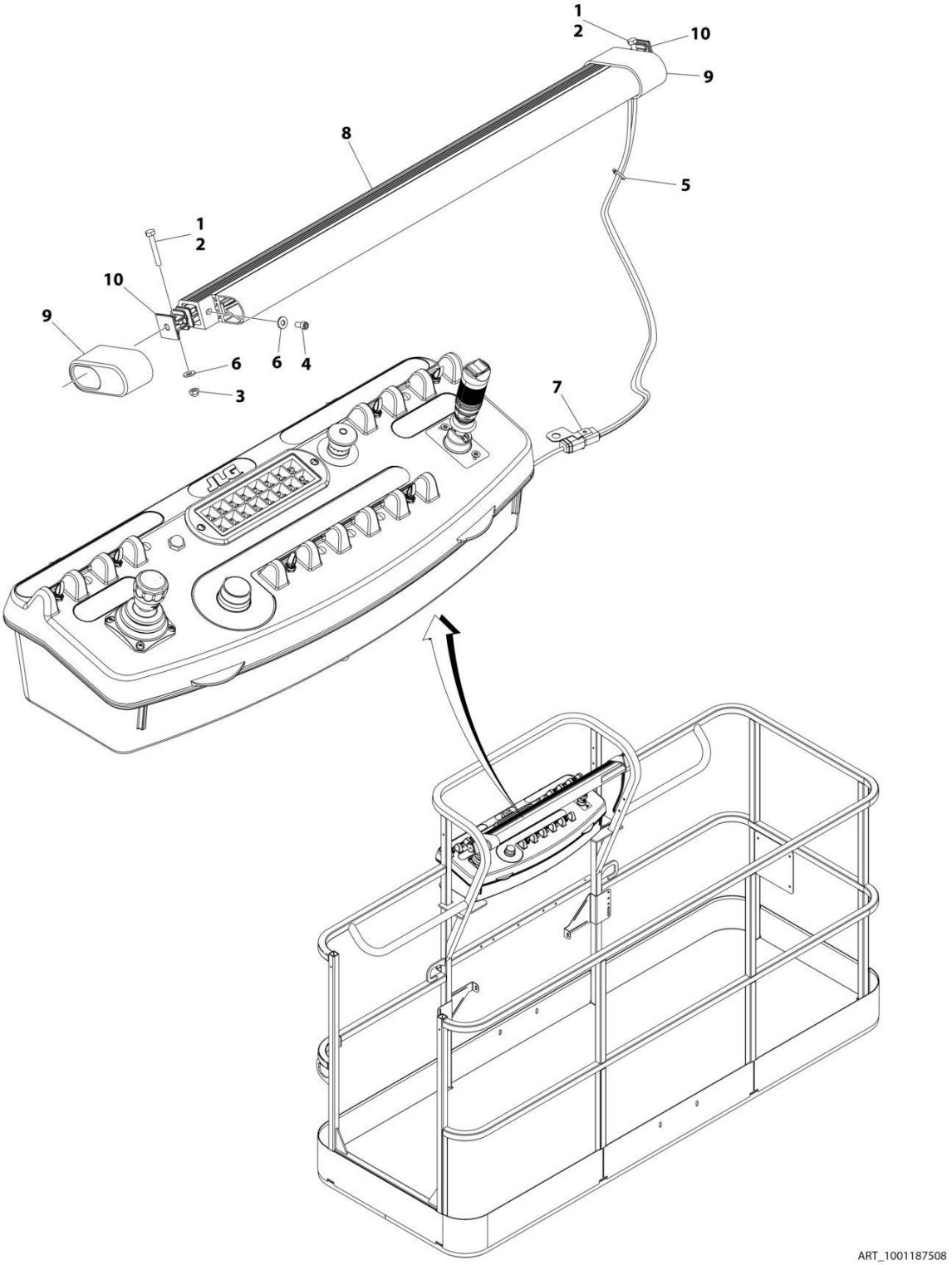

FIGURE 4-12. SKYGUARD SYSTEM INSTALLATION (SN 0300177361 through 0300259736)

ITEM	PART NUMBER	QTY	DESCRIPTION	REV
	1001187508	Ref	**SKYGUARD SYSTEM INSTALLATION**	C
		Ref	**Note: For Machines SN 0300177361 through SN 0300200808, refer to SPECIAL OPTIONS Section.**	
1	0100011	AR	Compound, Locking	
2	0641414	2	Bolt 1/4 x 1-3/4	
3	3300430	2	Nut, Acorn 1/4	
4	3931424	AR	Capscrew 1/4 x 1-1/2	
4	3931408	AR	Capscrew 1/4 x 1/2	
5	4240033	AR	Tie-Strap	
6	4711400	AR	Washer 1/4	
7	1001120328	1	Mount	
8	1001137673	1	Switch, SkyGuard Assembly	
9	1001186517	2	Cover, Platform Sensor	
10	1001188889	2	Support, Block **(SN 0300177361 through 0300241337)**	
10	1001209664	2	Support, Block **(SN 0300241338 through 0300259736)**	

FIGURE 4-13. SKYGUARD BAR INSTALLATION (SN 0300259737 through 0300272252)

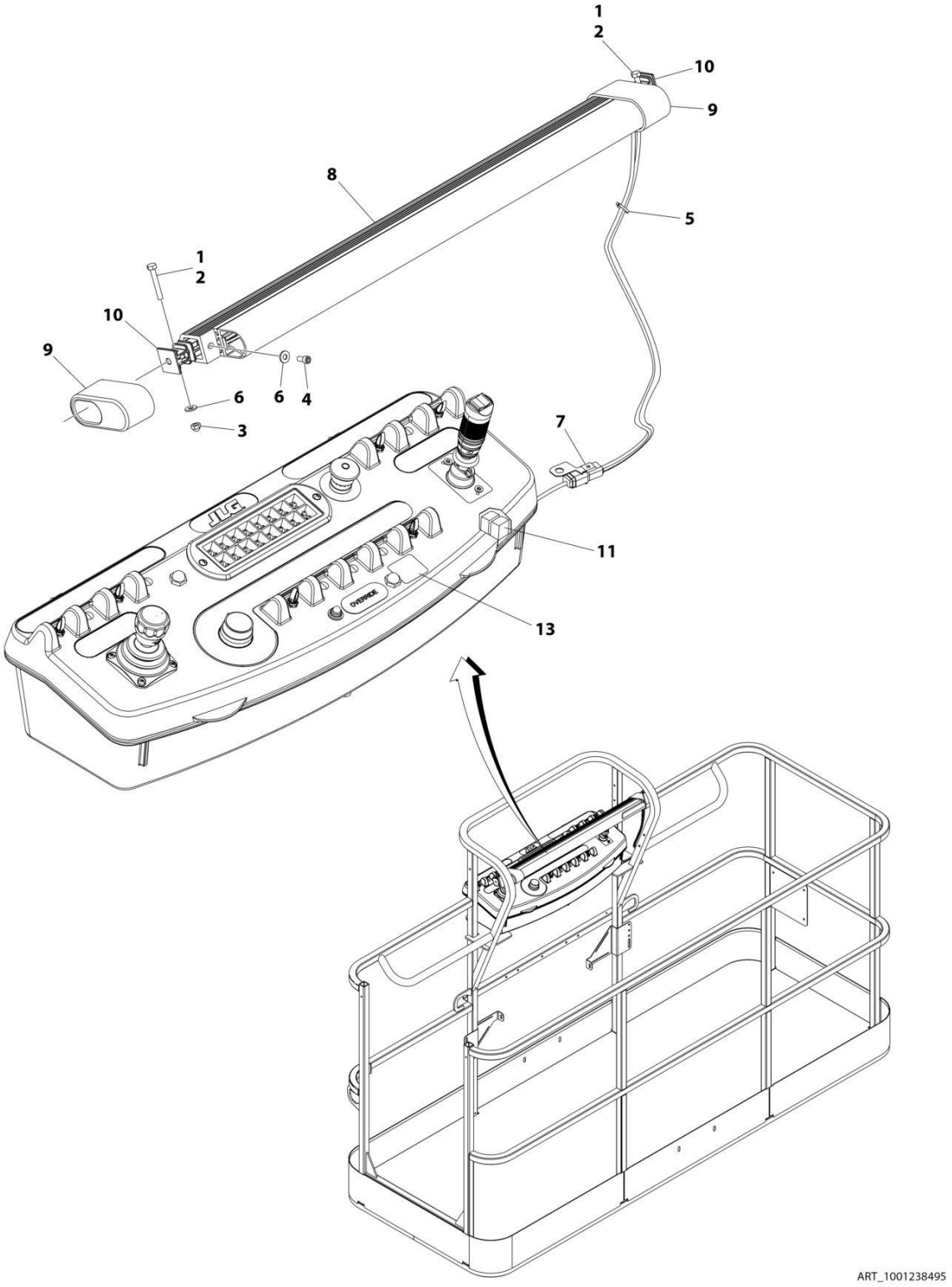

FIGURE 4-13. SKYGUARD BAR INSTALLATION (SN 0300259737 through 0300272252)

ITEM	PART NUMBER	QTY	DESCRIPTION	REV
	1001238495	Ref	SKYGUARD BAR INSTALLATION	A
1	0100011	AR	Compound, Locking	
2	0641414	2	Bolt 1/4 x 1-3/4	
3	3300430	2	Nut 1/4	
4	3931408	2	Capscrew 1/4 x 1/2	
5	4240033	8	Tie-Strap	
6	4711400	6	Washer 1/4	
7	1001120328	1	Mount	
8	1001137673	1	SkyGuard Switch Assembly	
9	1001186517	2	Cover, Platform Sensor	
10	1001209664	2	Support, Block	
11	1001186431	2	Relay	
12	1001225580	1	Interface Harness Assembly (Not Shown - Located Inside Console Box) (See Separate Breakdown in ELECTRICAL Section)	
13	1001144433	1	Decal - No Weight SkyGuard	

FIGURE 4-14. SKYLINE INSTALLATION

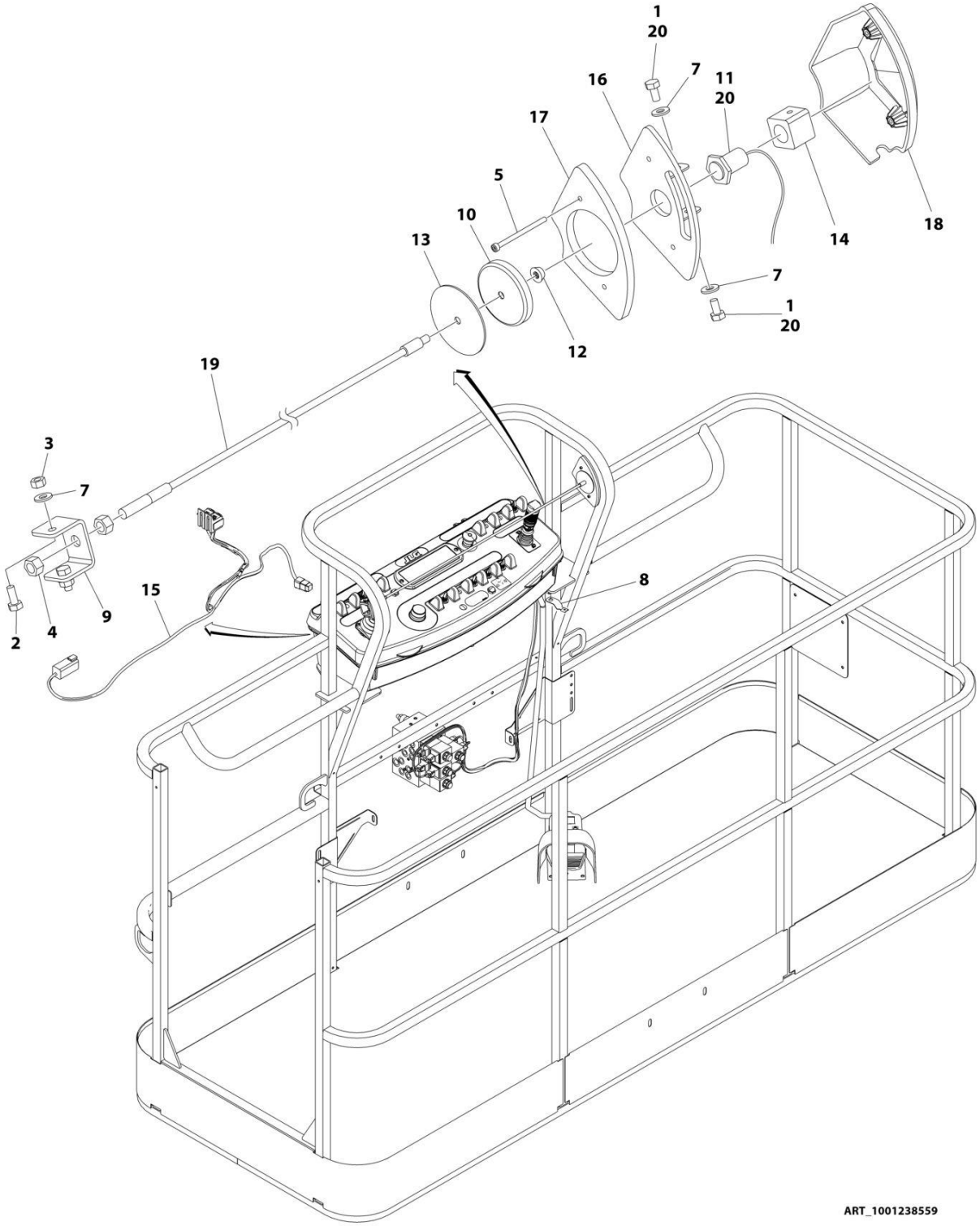

FIGURE 4-14. SKYLINE INSTALLATION

ITEM	PART NUMBER	QTY	DESCRIPTION	REV
	1001238559	Ref	SKYLINE INSTALLATION	B
1	0641404	2	Bolt 1/4 x 1/2	
2	0641405	2	Bolt 1/4 x 5/8	
3	3311405	2	Nut 1/4	
4	3311601	2	Nut 3/8	
5	4031516	2	Capscrew M4 x 60	
6	4240033	AR	Tie-Strap (Not Shown)	
7	4711400	4	Washer 1/4	
8	1001120328	1	Mount	
9	1001232642	1	Bracket	
10	1001232650	1	Magnet	
11	1001232667	1	Sensor, Proximity	
12	1001235011	1	Nut	
13	1001235013	1	Washer	
14	1001236552	1	Block	
15	1001238418	1	Harness, Skyline (See Separate Breakdown in ELECTRICAL Section)	
16	1001238472	1	Mount	
17	1001238477	1	Housing, LH	
18	1001241965	1	Housing, RH	
19	1001238824	1	Rope	
20	0100011	AR	Compound, Locking	

FIGURE 4-15. CROSS RAIL INSTALLATION

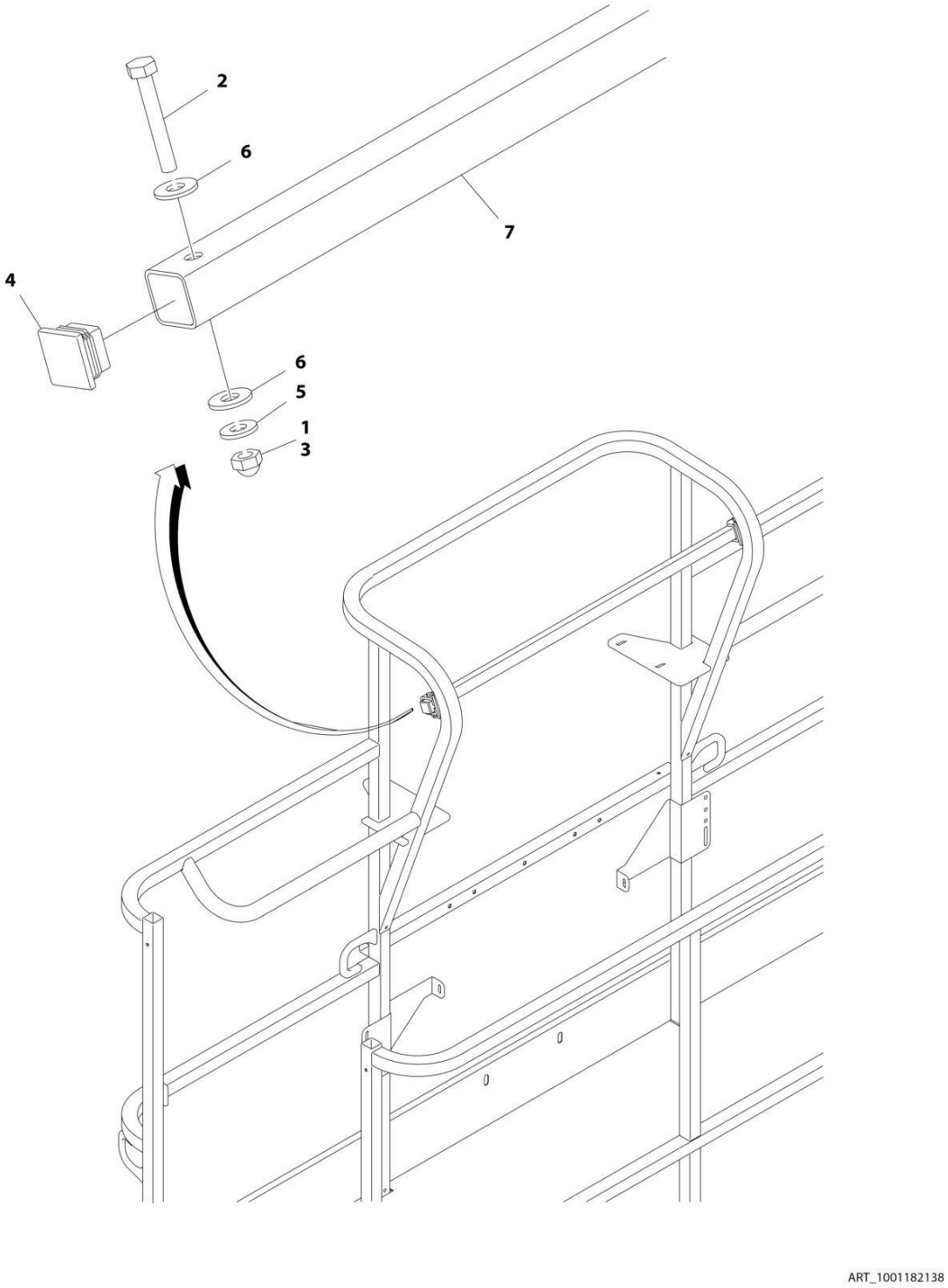

FIGURE 4-15. CROSS RAIL INSTALLATION

ITEM	PART NUMBER	QTY	DESCRIPTION	REV
	1001182138	Ref	**CROSS RAIL INSTALLATION**	A
1	0100071	AR	Compound, Locking	
2	0641414	2	Bolt 1/4 x 1-3/4	
3	3300430	2	Nut 1/4	
4	3520182	2	Plug	
5	4711400	2	Washer 1/4	
6	4751400	4	Washer 1/4	
7	1001191708	1	Bar	

FIGURE 4-16. PLATFORM PADDING INSTALLATION (30IN/76CM DEPTH PLATFORMS) (OPTIONAL)

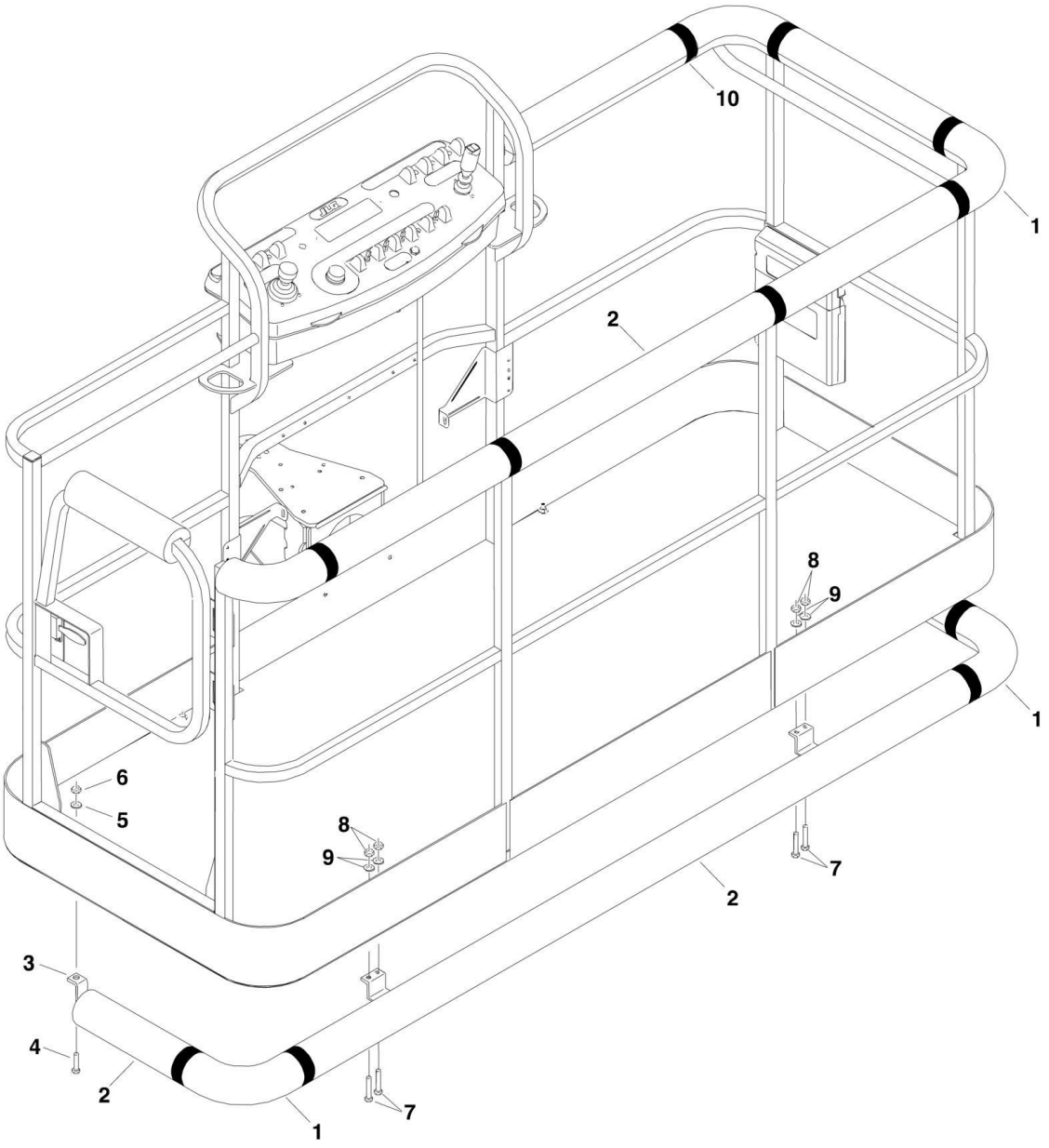

FIGURE 4-16. PLATFORM PADDING INSTALLATION (30IN/76CM DEPTH PLATFORMS) (OPTIONAL)

ITEM	PART NUMBER	QTY	DESCRIPTION	REV
	0273542	Ref	**PADDING INSTALLATION (30 X 48 SIDE ENTRY PLATFORM)**	A
		Ref	**Note: Only Available on ANSI, ANSI Export and CSA Specs**	
1	0940092	4	Bumper, Pad (Corner)	
2	0940094	9 ft/2.7m	Bumper, Pad (Square Tubing)	
3	0940131	1	Bumper, Rail	
4	0641516	2	Bolt 5/16in-18NC x 2in	
5	4751500	2	Flatwasher 5/16in Regular	
6	3311505	2	Locknut 5/16in-18NC	
7	0641813	4	Bolt 1/2in-13NC x 1-5/8in	
8	3311805	4	Locknut 1/2in-13NC	
9	4891800	4	Flatwasher 1/2in Hardened	
10	4420068	30 ft/9.1m	Tape	

FIGURE 4-17. SOFT TOUCH SYSTEM INSTALLATION (36IN/91.5CM DEPTH PLATFORMS) (OPTIONAL)

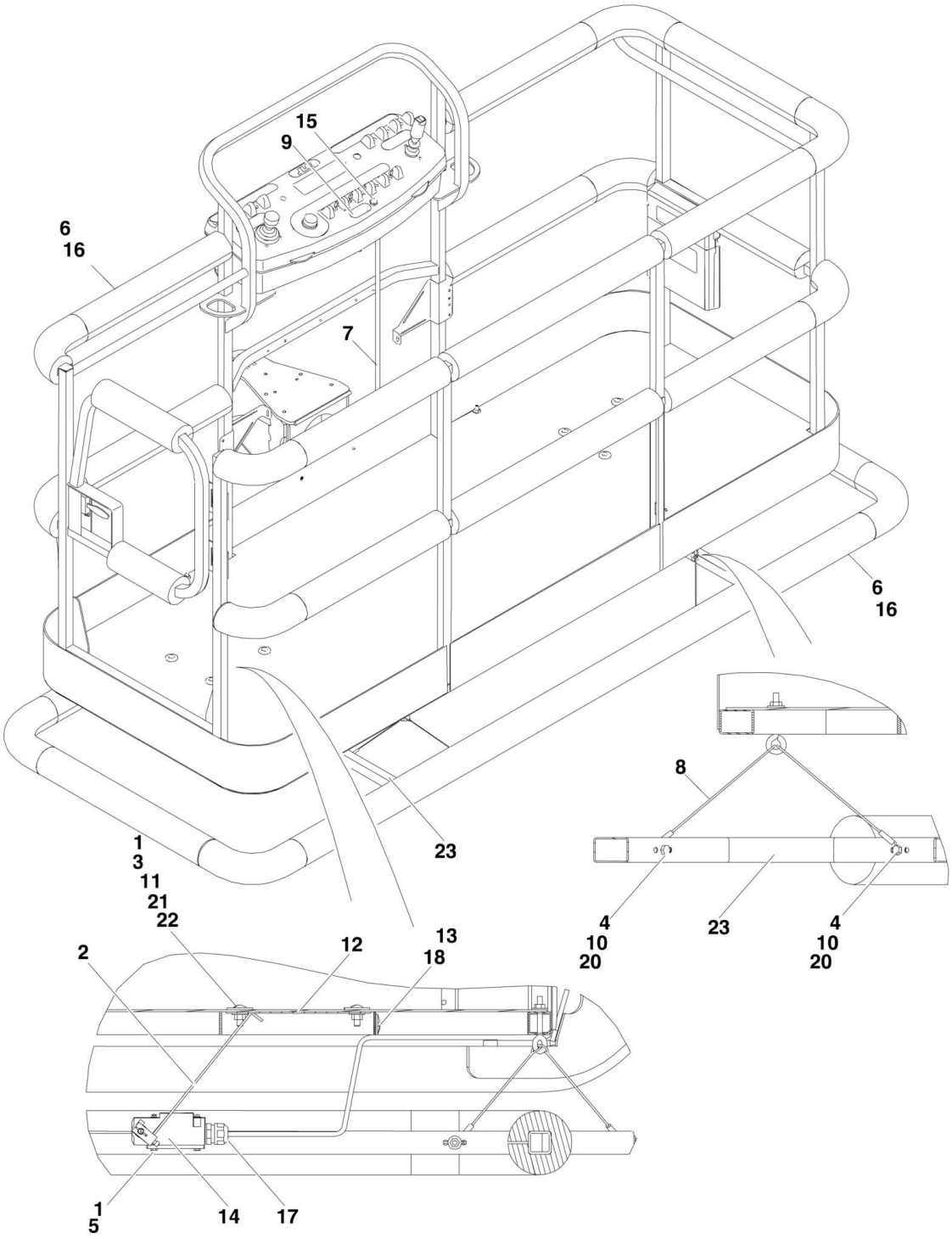

FIGURE 4-17. SOFT TOUCH SYSTEM INSTALLATION (36IN/91.5CM DEPTH PLATFORMS) (OPTIONAL)

ITEM	PART NUMBER	QTY	DESCRIPTION	REV
		Ref	**SOFT TOUCH SYSTEM INSTALLATIONS**	
	0273824	Ref	**6ft Platform**	D
	0272427	Ref	**8ft Platform**	G
	1001108256	Ref	**6ft/1.8m Platform w/Fall Arrest**	C
	0273706	Ref	**8ft/2.4m Platform w/Fall Arrest**	D
1	0100011	AR	Compound, Locking	
2	0200048	2	Arm, Switch	
3	0630462	8	Bolt, Carriage	
4	0641414	8	Bolt 1/4in-20NC x 1-3/4in	
5		Ref	Bolt Options:	
5	0721005	4	Bolt #10-24NC x 5/8in	
5	0731005	4	Bolt #10-32NF x 5/8in	
6		Ref	Bumper Kits (Includes Corners and Enough Straight Material for One Platform)	
6	0940134	1	6ft Platform	
6	0940103	1	8ft Platform	
6	0940177	1	6ft Platform with Fall Arrest	
6	0940133	1	8ft Platform with Fall Arrest	
6	0940092	1	Bumper (Corner) Options:	
6		Ref	6ft/8ft Platform without Fall Arrest	
6		Ref	6ft/8ft Platform with Fall Arrest	
6	0940094	AR	Bumper (12ft Length)	
7	1060341	23 ft/7m	Cable, Electrical - 16/2	
8	1060903	4	Wire Rope and Eyebolt Assembly	
9	1702938	1	Decal - Soft Touch Override	
10	3311401	8	Nut 1/4in-20NC	
11	3311501	8	Nut 5/16in-18NC	
12		Ref	Plate, Switch Strike Options:	
12	3575359	2	6ft Platform	
12	3574091	2	8ft Platform	
13	4240099	7	Tie-Strap	
14	4360057	2	Switch, Limit	
15	4360387	1	Switch, Push Button	
16	4420068	AR	Tape, Adhesive	
16	1001197017	AR	Tie-Strap	
17	4460049	2	Connector, Strain Relief	
18	4460234	7	Tie-Strap	
19	4460425	1	Connector, Strain Relief	
20	4751400	8	Flatwasher 1/4in Regular	
21	4751500	AR	Flatwasher 5/16in Regular	
22	4751800	8	Flatwasher 1/2in Regular	
23		Ref	Rail, Soft Touch Options:	
23	3641569	1	6ft Platform	
23	4846673	1	8ft Platform	
24		Ref	Soft-Touch Installation Kit Options (Not Shown) (Includes Items 2-23)	
		Ref	**Note: May not be available for all machines depending on existing options. Contact JLG Parts Dept before ordering.**	
24	1001121592	1	Kit - 6ft Platform without Fall Arrest	

SECTION 4 - PLATFORM

ITEM	PART NUMBER	QTY	DESCRIPTION	REV
24	1001121593	1	Kit - 8ft Platform without Fall Arrest	

FIGURE 4-18. SKYGLAZIER INSTALLATION

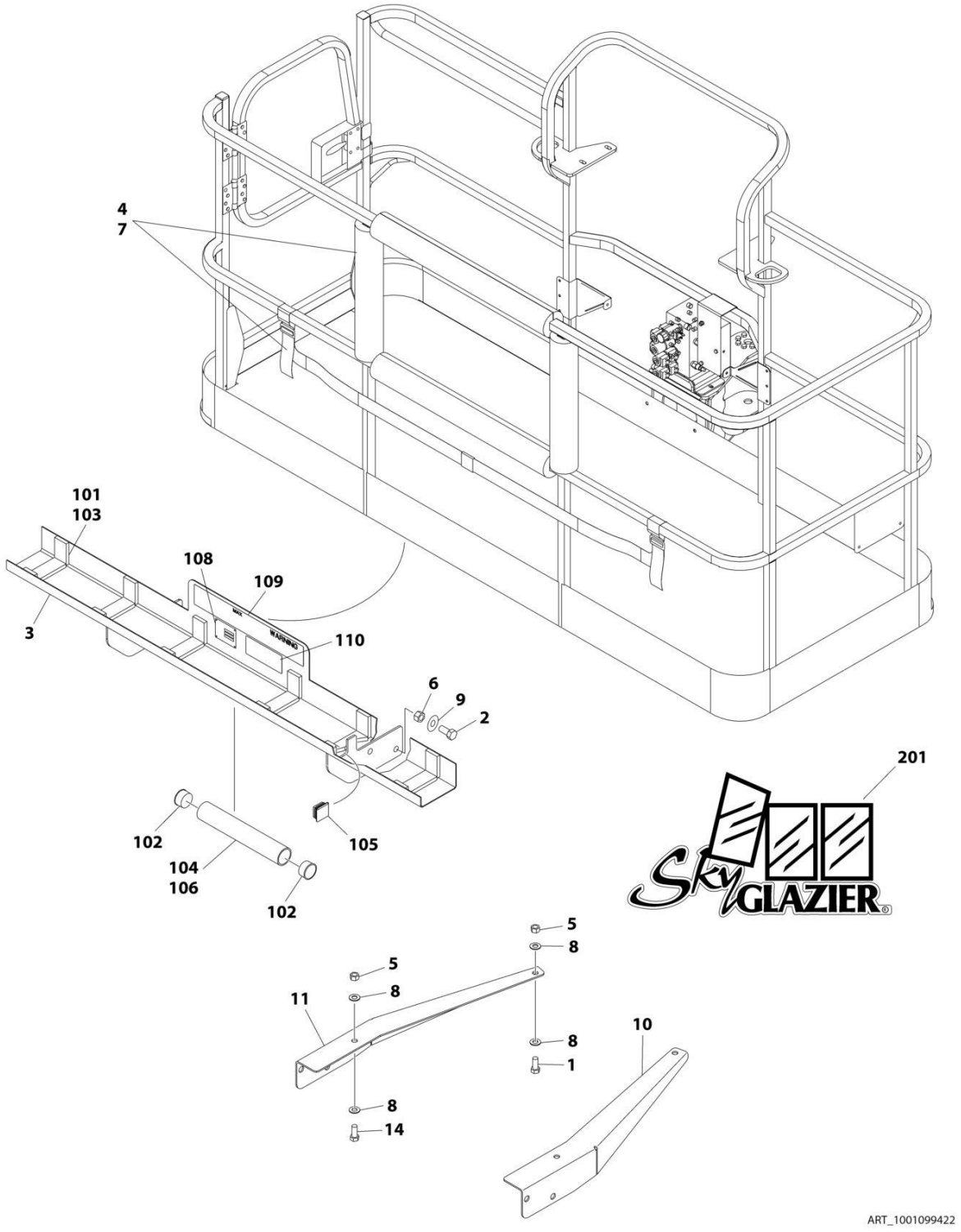

FIGURE 4-18. SKYGLAZIER INSTALLATION

ITEM	PART NUMBER	QTY	DESCRIPTION	REV
	1001101422	Ref	**SKYGLAZIER INSTALLATION (ANSI, ANSI EXPORT & CSA SPECS)**	C
	1001102647	Ref	**SKYGLAZIER INSTALLATION (AUSTRALIAN SPECS) (SN 0300177361 through 0300235566)**	C
	1001101422	Ref	**SKYGLAZIER INSTALLATION (AUSTRALIAN SPECS) (SN 0300235567 through 0300272252)**	C
	1001099422	Ref	**SKYGLAZIER INSTALLATION (AUSTRALIAN SPECS) (SN 0300235567 through 0300272252)**	C
	1001099421	Ref	**SKYGLAZIER INSTALLATION (LATIN AMERICAN SPECS)**	C
		Ref	**Note: Only Available on 600AJ for Brazil & Latin American Specs. Available on 600A & 600AJ for ANSI, ANSI Export, Australian & CSA Specs.**	
1	0642012	2	Bolt 5/8 x 1-1/2	
1	0642026	2	Bolt 5/8 x 3-1/4	
2	0642212	4	Bolt 3/4 x 1-1/2	
3	1001101421	1	Tray Assembly (All Spec except Brazil & Latin American Specs) (See Items 101-110 for Breakdown)	
3	0272951	1	Tray Assembly (Brazil Spec) (See Items 101-110 for Breakdown)	
3	0272948	1	Tray Assembly (Latin American Spec) (See Items 101-110 for Breakdown)	
4	2902212	1	Bumpers and Strap Kit	
4	0940102	1	Bumper Only	
4	4240149	1	Strap Only	
5	3312005	4	Nut 5/8	
5	1001149924	AR	Nut, Plastic 5/8	
6	3312205	4	Nut 3/4	
7	4420014	AR	Tape	
8	4712000	6	Washer 5/8	
9	4712200	8	Washer 3/4	
10	1001099366	1	Support	
11	1001099367	1	Support	
14	8310129	2	Bolt 5/8 x 2-1/2	
14	0642026	2	Bolt 5/8 X 3-1/4	
14	8310230	2	Bolt 5/8 x 4	
	1001101421	Ref	**TRAY ASSEMBLY (ALL SPECS EXCEPT BRAZIL & LATIN AMERICAN SPECS)**	E
	0272951	Ref	**TRAY ASSEMBLY (BRAZIL SPECS)**	E
	0272948	Ref	**TRAY ASSEMBLY (LATIN AMERICAN SPECS)**	E
101	0100081	AR	Adhesive	
102	1120555	2	Cap, Tube	
103	3340956	1	Pad Kit	
104	3460334	1	Tube	
105	3520071	2	Plug	
106	4420066	AR	Tape, Double Sided	
108	See Note	NSS	Nameplate - Serial Number (Note: Not Available for Purchase)	
109	1001163131	1	Decal - Glazier Capacity (All Specs except Brazil & Latin American Specs)	
109	1001163297	2	Decal - Glazier Capacity (Brazil Specs)	
109	1001163296	2	Decal - Glazier Capacity (Latin American Specs)	
110	1701509	2	Decal - Manual	
	0272418	Ref	**SKYGLAZIER DECAL INSTALLATION**	4

ITEM	PART NUMBER	QTY	DESCRIPTION	REV
201	1705358	2	Decal - SkyGlazier	

FIGURE 4-19. SKYWELDER/SKYCUTTER COMBO INSTALLATION (60HZ)

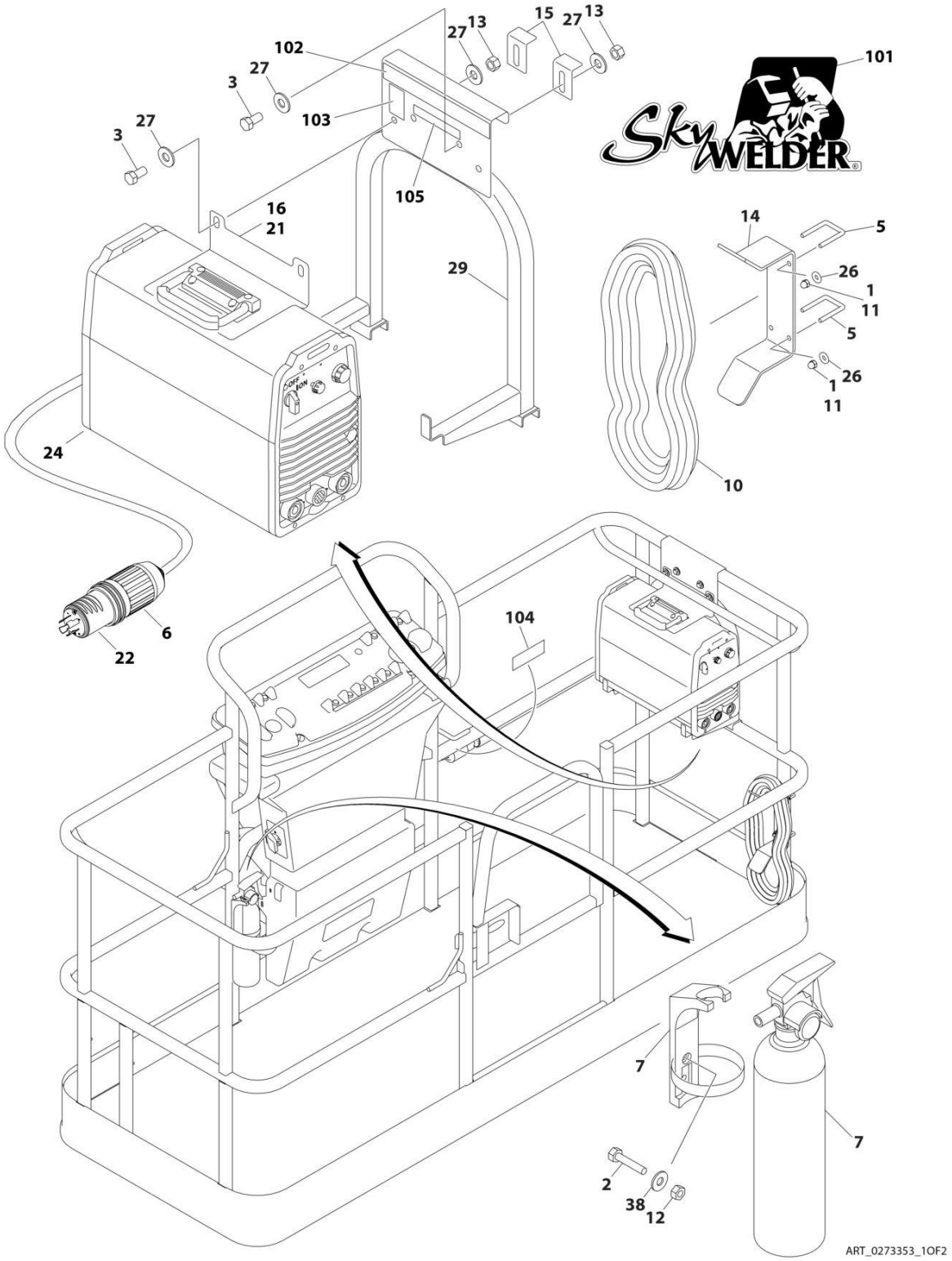

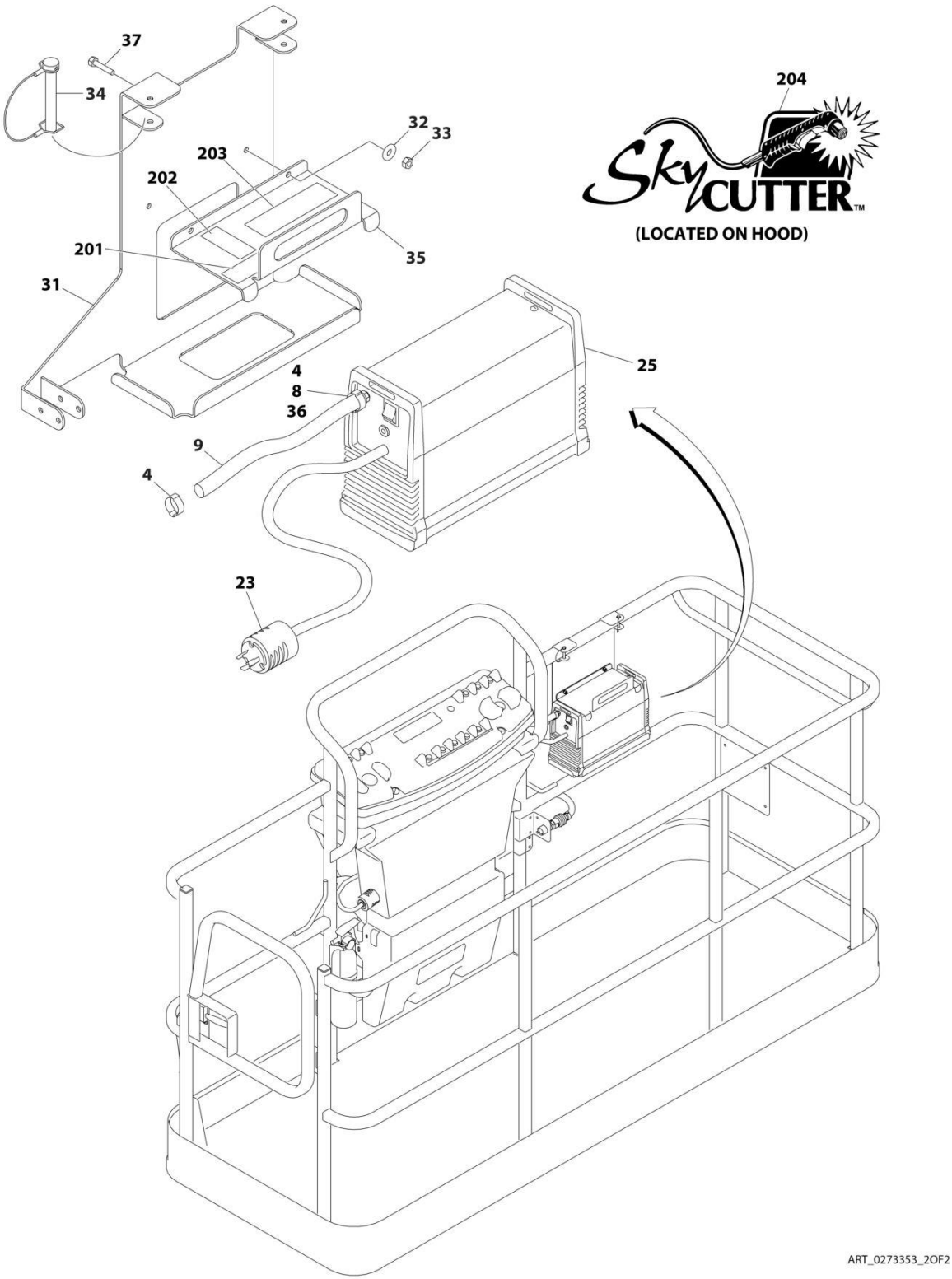
37
34
204
32
33
203
202
201
35
31
(LOCATED ON HOOD)
25
4
8
36
9
4
23
ART_0273353_2OF2

FIGURE 4-19. SKYWELDER/SKYCUTTER COMBO INSTALLATION (60HZ)

ITEM	PART NUMBER	QTY	DESCRIPTION	REV
	0273353	Ref	**SKYWELDER/SKYCUTTER COMBO INSTALLATION (60HZ)**	G
		Ref	**Note: ANSI, ANSI Export, CSA and Japanese Spec Only.**	
1	0100011	AR	Compound, Locking	
2	0630518	2	Screw #10 x 3/4	
3	0641606	4	Bolt 3/8 x 3/4	
4	1320177	2	Clamp	
5	1320302	2	Clamp	
6	1671093	1	Cover, Plug	
7	2030010	1	Extinguisher, Fire	
8	2180832	1	Fitting, Barbed/NPT	
9	2720160	4.5 ft/ 1.37m	Hose	
10	2902217	1	Weld Leads Kit	
11	3300151	4	Nut 1/4	
12	3311005	2	Nut #10	
13	3311605	4	Nut 3/8	
14	3573400	1	Bracket	
15	3577121	2	Angle	
16	3573642	1	Plate	
20	4240099	AR	Tie-Strap (Not Shown)	
21	4420037	2.36 ft/ .71m	Tape	
22	4460962	1	Plug, Twist Lock	
23	4460971	1	Plug, Twist Lock	
24	4530028	1	Welder Assembly (See WELDER ASSEMBLY for Breakdown)	
25	1001098012	1	Plasma Cutter Assembly (See PLASMA CUTTER ASSEMBLY for Breakdown)	
26	4751400	4	Washer 1/4	
27	4751600	8	Washer 3/8	
29	4846627	1	Support	
31	1001145405	1	Bracket	
32	4811700	2	Washer M6	
33	3290605	2	Nut M6	
34	3421453	3	Pin	
35	3576799	1	Plate, Hold-Down	
36	0100020	1	Sealant	
37	4010608	2	Screw M6 x 16	
38	4751000	2	Washer #10	
	0272448	Ref	**SKYWELDER DECAL INSTALLATION**	B
101	1705355	2	Decal - SkyWelder	
102	1702868	1	Decal - No Hands	
103	1705305	1	Decal - Weld Leads	
104	1705375	1	Decal - 240V - 3 Phase - 60 Hz	
105	1705466	NLA	Decal - Weight (Use p/n 1001228988) **(SN 0300177361 through 0300232659)**	
105	1001228988	1	Decal - Weight **(SN 0300232660 through 0300272252)**	
	0272599	Ref	**SKYCUTTER DECAL INSTALLATION**	B
201	1702868	1	Decal - No Hands	
202	1705305	1	Decal - Weld Leads	
203	1705466	NLA	Decal - Weight (Use p/n 1001228988) **(SN 0300177361 through 0300232659)**	

ITEM	PART NUMBER	QTY	DESCRIPTION	REV
203	1001228988	1	Decal - Weight **(SN 0300232660 through 0300272252)**	
204	1705490	2	Decal - SkyCutter	

FIGURE 4-20. SKYWELDER INSTALLATION (50HZ)

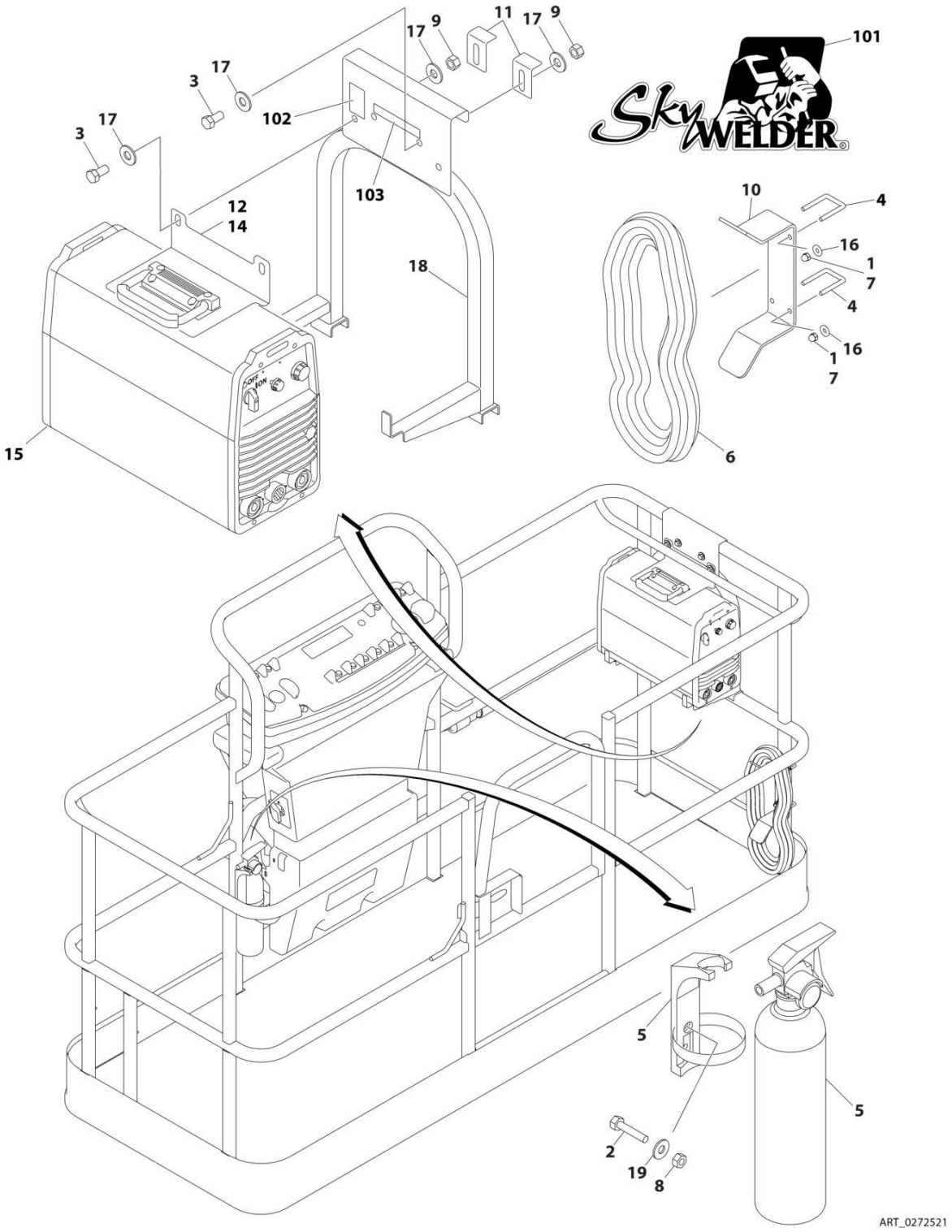

FIGURE 4-20. SKYWELDER INSTALLATION (50HZ)

ITEM	PART NUMBER	QTY	DESCRIPTION	REV
	0272521	Ref	**SKYWELDER INSTALLATION (50HZ)**	F
		Ref	**Note: ANSI Export, Australian, CE & Japanese Specs Only.**	
1	0100011	AR	Compound, Locking	
2	0630518	2	Screw #10 x 3/4	
3	0641606	4	Bolt 3/8 x 3/4	
4	1320302	2	U-Clamp	
5	2030010	1	Extinguisher, Fire	
6	2902217	1	Weld Leads Kit	
7	3300151	4	Nut 1/4	
8	3311005	2	Nut #10	
9	3311605	4	Nut 3/8	
10	3573400	1	Bracket	
11	3577121	2	Angle	
12	3573642	1	Plate	
13	4240099	AR	Tie-Strap (Not Shown)	
14	4420037	AR	Tape	
15	4530028	1	Welder Assembly (See WELDER ASSEMBLY for Breakdown)	
16	4751400	4	Washer 1/4	
17	4751600	8	Washer 3/8	
18	4846627	1	Support	
19	4751000	2	Washer #10	
	0272588	Ref	**SKYWELDER DECAL INSTALLATION**	B
101	1705355	2	Decal - SkyWelder	
102	1705305	1	Decal - Weld Lead	
103	1705466	NLA	Decal - Weight (Use p/n 1001228988) **(SN 0300177361 through 0300232659)**	
103	1001228988	1	Decal - Weight **(SN 0300232660 through 0300272252)**	

FIGURE 4-21. SKYWELDER INSTALLATION (60HZ)

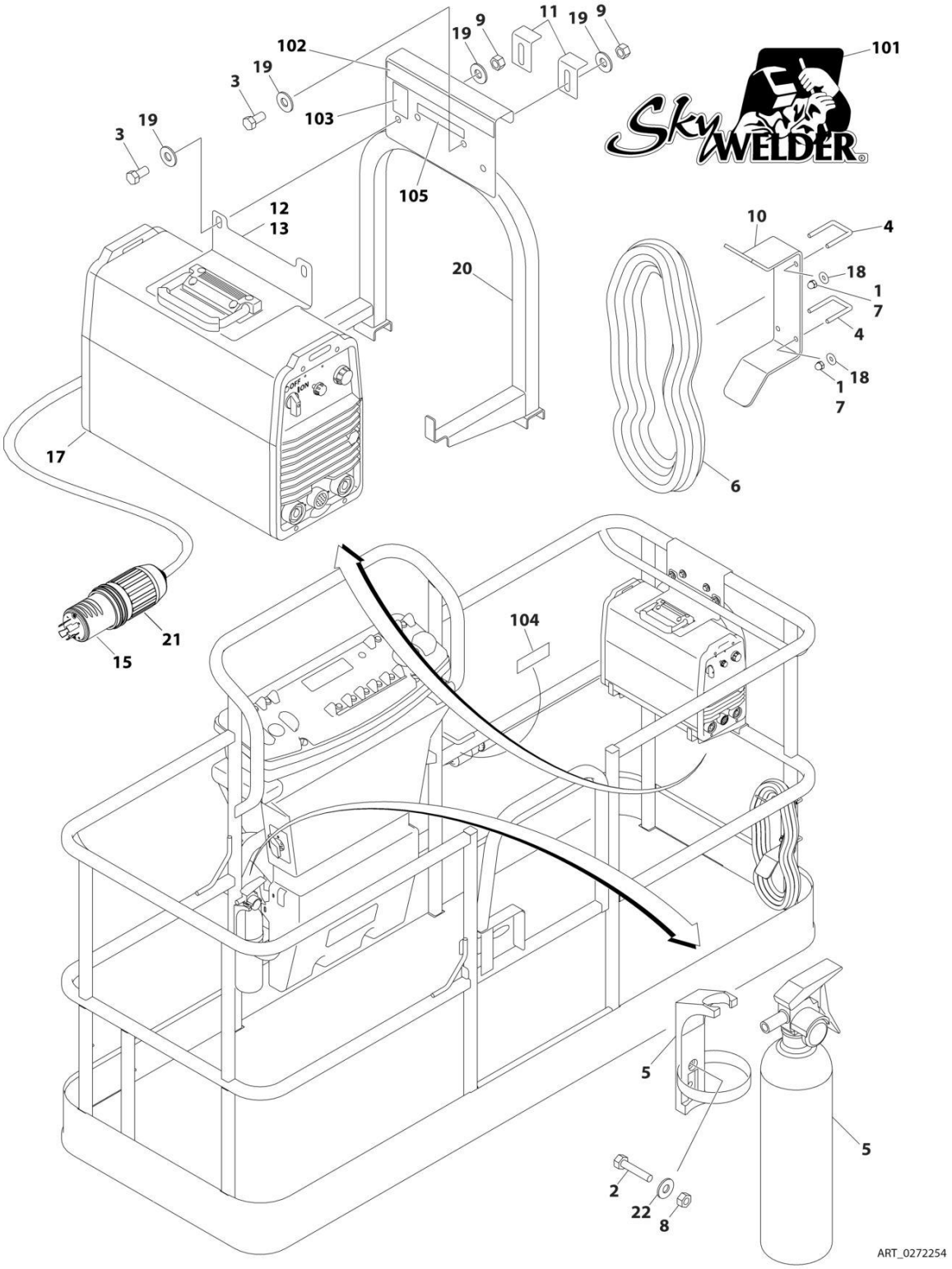

FIGURE 4-21. SKYWELDER INSTALLATION (60HZ)

ITEM	PART NUMBER	QTY	DESCRIPTION	REV
	0272254	Ref	**SKYWELDER INSTALLATION (60HZ)**	I
		Ref	**Note: ANSI, ANSI Export and CSA Specs Only.**	
1	0100011	AR	Compound, Locking	
2	0630518	2	Screw #10 x 3/4	
3	0641606	4	Bolt 3/8 x 3/4	
4	1320302	2	U-Clamp	
5	2030010	1	Extinguisher, Fire	
6	2902217	1	Weld Leads Kit	
7	3300151	4	Nut 1/4	
8	3311005	2	Nut #10	
9	3311605	4	Nut 3/8	
10	3573400	1	Bracket	
11	3577121	2	Angle	
12	3573642	1	Plate	
13	4420037	AR	Tape	
14	4240099	AR	Tie-Strap (Not Shown)	
15	4460962	1	Plug, Male Twistlock	
17	4530028	1	Welder Assembly (See WELDER ASSEMBLY for Breakdown)	
18	4751400	4	Washer 1/4	
19	4751600	8	Washer 3/8	
20	4846627	1	Support	
21	1671093	1	Cover, Plug	
22	4751000	2	Washer #10	
	0272448	Ref	**SKYWELDER DECAL INSTALLATION**	B
101	1705355	2	Decal - SkyWelder	
102	1702868	1	Decal - No Hands	
103	1705305	1	Decal - Weld Lead	
104	1705375	1	Decal - 240V - 3 Phase - 60Hz	
105	1705466	NLA	Decal - Weight (Use p/n 1001228988) **(SN 0300177361 through 0300232659)**	
105	1001228988	1	Decal - Weight **(SN 0300232660 through 0300272252)**	

FIGURE 4-22. SKYWELDER PREP PACKAGE (60HZ)

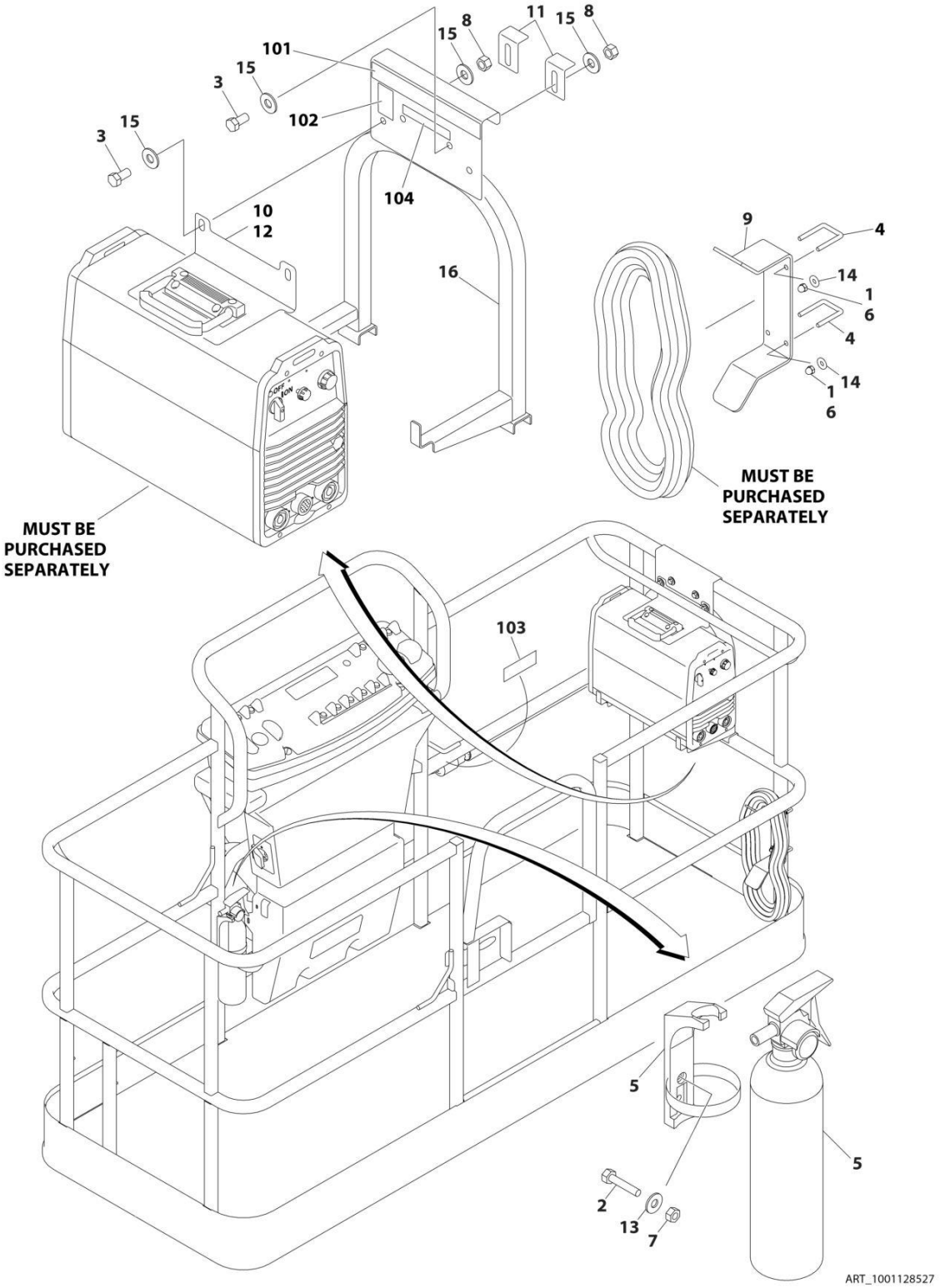

FIGURE 4-22. SKYWELDER PREP PACKAGE (60HZ)

ITEM	PART NUMBER	QTY	DESCRIPTION	REV
	1001128527	Ref	**SKYWELDER PREP PACKAGE (60HZ)**	
		Ref	**Note: ANSI, ANSI Export and CSA Specs Only.**	
1	0100011	AR	Compound, Locking	
2	0630518	2	Screw #10 x 3/4	
3	0641606	4	Bolt 3/8 x 3/4	
4	1320302	2	U-Clamp	
5	2030010	1	Extinguisher, Fire	
6	3300151	4	Nut 1/4	
7	3311005	2	Nut #10	
8	3311605	4	Nut 3/8	
9	3573400	1	Bracket	
10	3573642	1	Plate	
11	3577121	2	Angle	
12	4420037	AR	Tape	
13	4751000	2	Washer #10	
14	4751400	4	Washer 1/4	
15	4751600	8	Washer 3/8	
16	4846627	1	Support	
	1001128556	Ref	**SKYWELDER DECAL INSTALLATION**	B
101	1702868	1	Decal - No Hands	
102	1705305	1	Decal - Weld Lead	
103	1705375	1	Decal - 240V - 3 Phase - 60Hz	
104	1705466	1	Decal - Weight **(SN 0300177361 through 0300232659)**	
104	1001228988	1	Decal – Weight **(SN 0300232660 through 0300272252)**	

FIGURE 4-23. WELDER ASSEMBLY

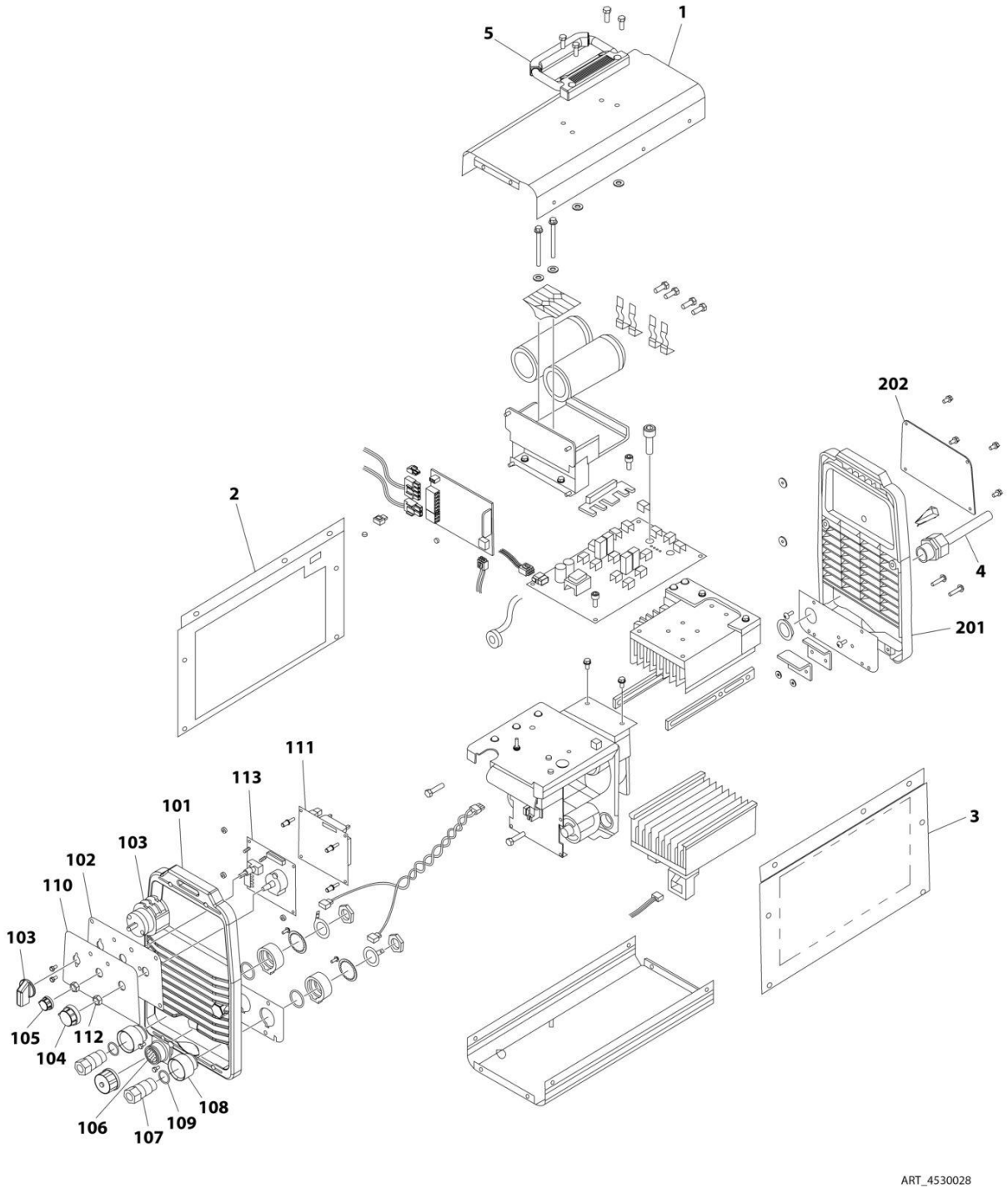

FIGURE 4-23. WELDER ASSEMBLY

ITEM	PART NUMBER	QTY	DESCRIPTION	REV
	4530028	Ref	**WELDER ASSEMBLY**	B
		Ref	**Note: For Other Components, contact your Miller Welder Dealer.**	
1	7027773	1	Cover, Top	
1	7027774	1	Decal - Static Precautionary Warning	
2	See Note	NSS	Panel, LH Side (Note: Part of Item 1. Purchase Item 1)	
3	See Note	NSS	Panel, RH Side (Note: Part of Item 1. Purchase Item 1)	
4	7024467	1	Cable, Power	
4	7027775	1	Decal - Electrical Shock Warning (Not Shown)	
5	7027776	1	Handle, Carrying	
101	7024462	1	Panel, Front	
102	7024463	1	Panel, Console	
103	7024469	1	Switch with Lead	
104	7024470	1	Knob	
105	7024471	1	Knob	
106	7024472	1	Receptacle with Leads and Plugs	
107	7024473	2	Receptacle, Twistlock Female	
108	7024474	2	Insulator	
109	7024475	2	O-Ring	
110	7027777	1	Nameplate	
111	7027779	1	Circuit Card Assembly (Process Control)	
112	7024478	2	Nut	
113	7027778	1	Circuit Card Assembly (Operator Interface)	
201	7024462	1	Panel, Rear	
202	7027780	1	Panel, Cover	

FIGURE 4-24. SKYWELDER LOCKING BRACKET INSTALLATION

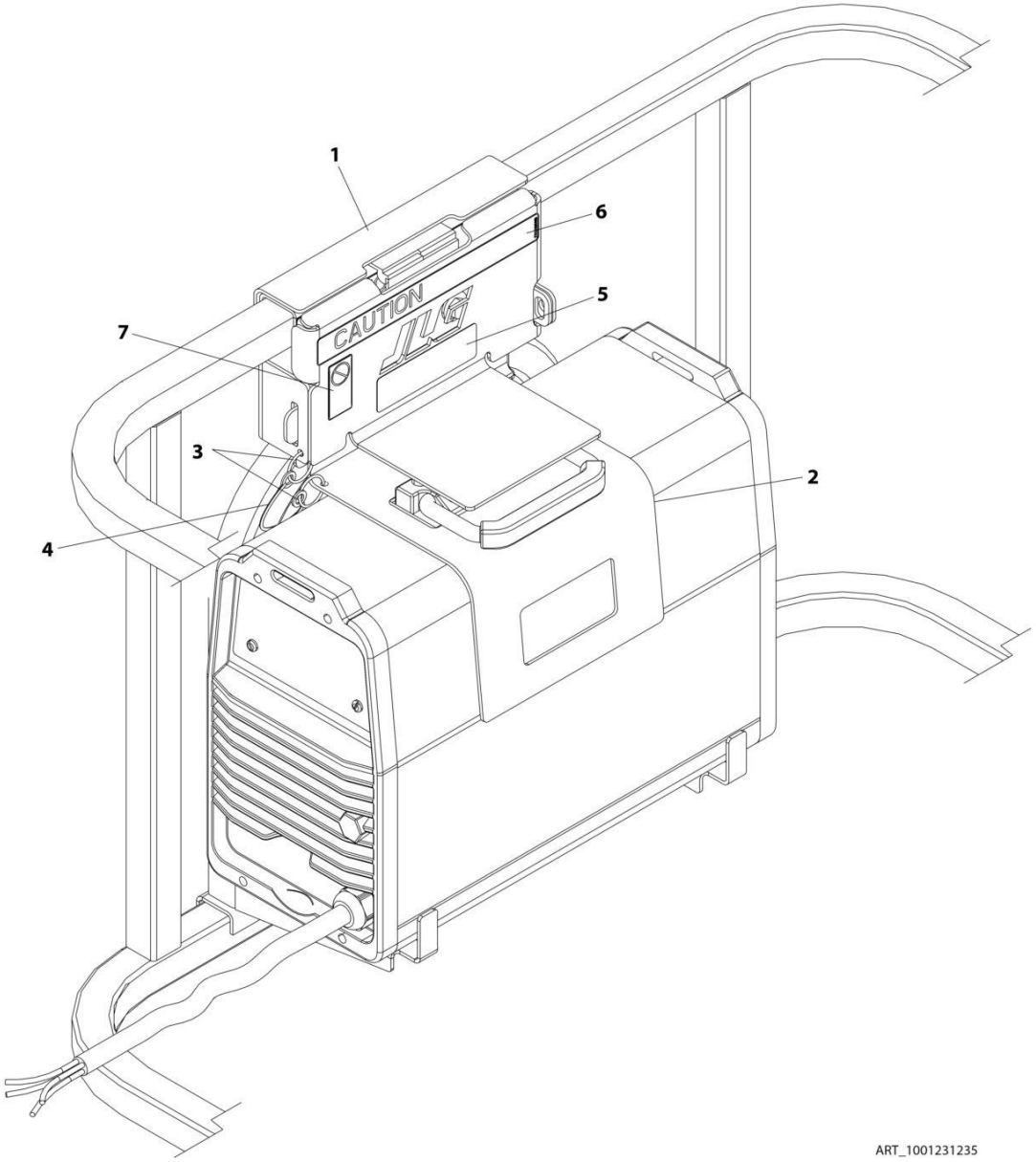

FIGURE 4-24. SKYWELDER LOCKING BRACKET INSTALLATION

ITEM	PART NUMBER	QTY	DESCRIPTION	REV
	1001231235	Ref	SKYWELDER LOCKING BRACKET INSTALLATION	A
1	1001231180	1	Bracket	
2	1001231183	1	Plate	
3	3760170	2	Ring	
4	1060379	1	Lanyard	
5	1001228988	1	Decal - Weight	
6	1702868	1	Decal - No Hands	
7	1705305	1	Decal - Weld Lead	

FIGURE 4-25. SKYCUTTER INSTALLATION

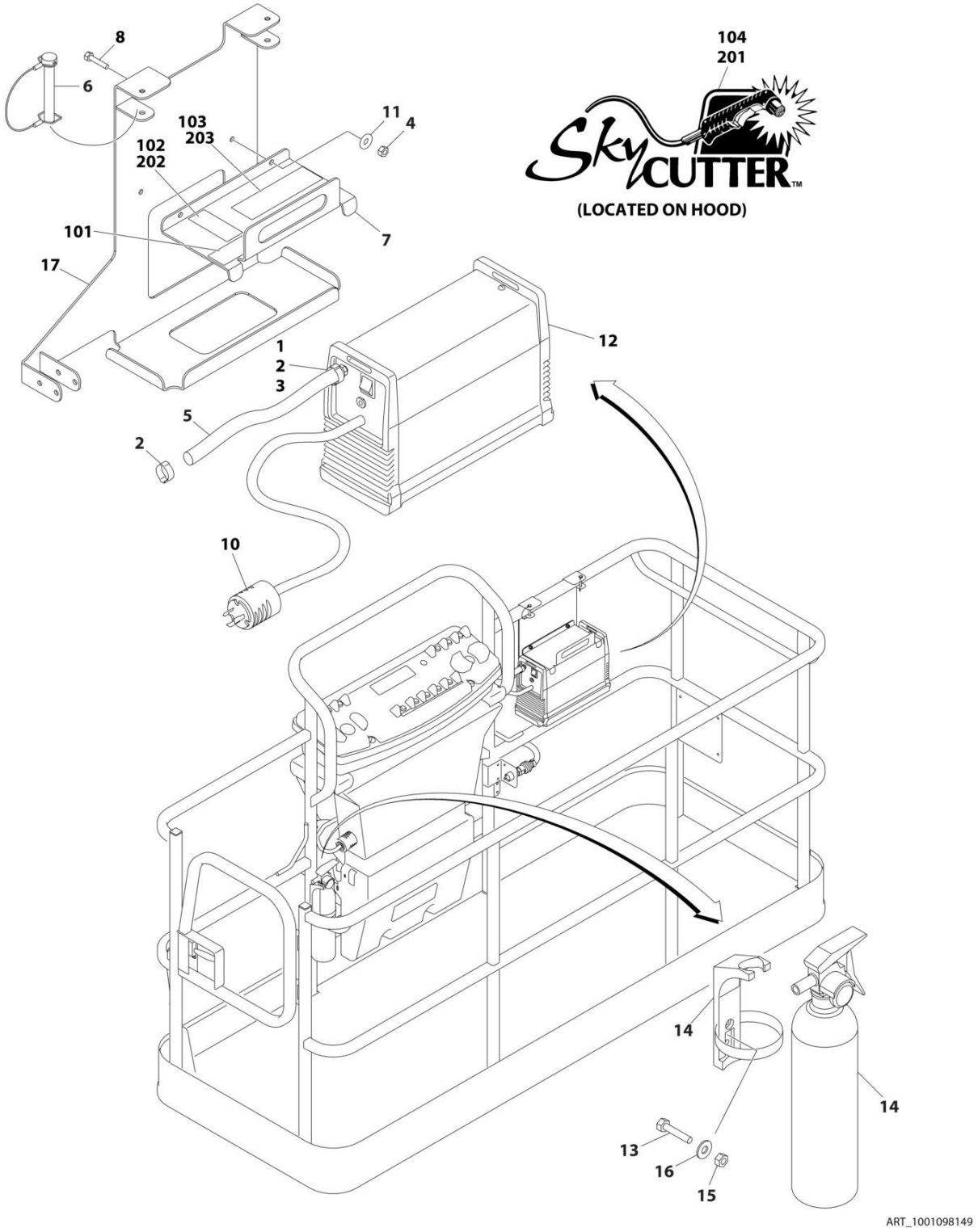

FIGURE 4-25. SKYCUTTER INSTALLATION

ITEM	PART NUMBER	QTY	DESCRIPTION	REV
	1001098149	Ref	**SKYCUTTER INSTALLATION**	D
		Ref	**Note: ANSI, ANSI Export, CSA and Japanese Specs Only.**	
		Ref	**Note: When replacing platform on machines with SkyCutter option, new bracket p/n 1001145405 must be purchased to accommodate SkyCutter components.**	
1	0100020	AR	Sealant	
2	1320177	2	Clamp, Hose	
3	2180832	1	Fitting, NPT/Barbed	
4	3290605	2	Nut M6	
5	2720160	3 ft/.9m	Hose	
6	3421453	3	Pin	
7	3576799	1	Plate, Hold-Down	
8	4010608	2	Screw M6 x 16	
10	4460971	1	Plug, Twistlock	
11	4811700	2	Washer M6	
12	1001098012	1	Plasma Cutter Assembly (See PLASMA CUTTER ASSEMBLY for Breakdown)	
13	0630518	2	Screw #10 x 3/4	
14	2030010	1	Extinguisher, Fire	
15	3311005	2	Nut #10	
16	4751000	2	Washer #10	
17	1001145405	1	Support	
	0272599	Ref	**SKYCUTTER DECAL INSTALLATION (ANSI, ANSI EXPORT & CSA SPECS)**	B
101	1702868	1	Decal - No Hands	
102	1705305	1	Decal - Weld Lead	
103	1705466	NLA	Decal - Weight (Use p/n 1001228988) **(SN 0300177361 through 0300232659)**	
103	1001228988	1	Decal - Weight **(SN 0300232660 through 0300272252)**	
104	1705490	2	Decal - SkyCutter	
	0272607	Ref	**SKYCUTTER DECAL INSTALLATION (JAPANESE SPECS)**	B
201	1705490	2	Decal - SkyCutter	
202	1705305	1	Decal - Weld Lead	
203	1705466	NLA	Decal - Weight (Use p/n 1001228988) **(SN 0300177361 through 0300232659)**	
203	1001228988	1	Decal - Weight **(SN 0300232660 through 0300272252)**	

FIGURE 4-26. PLASMA CUTTER ASSEMBLY

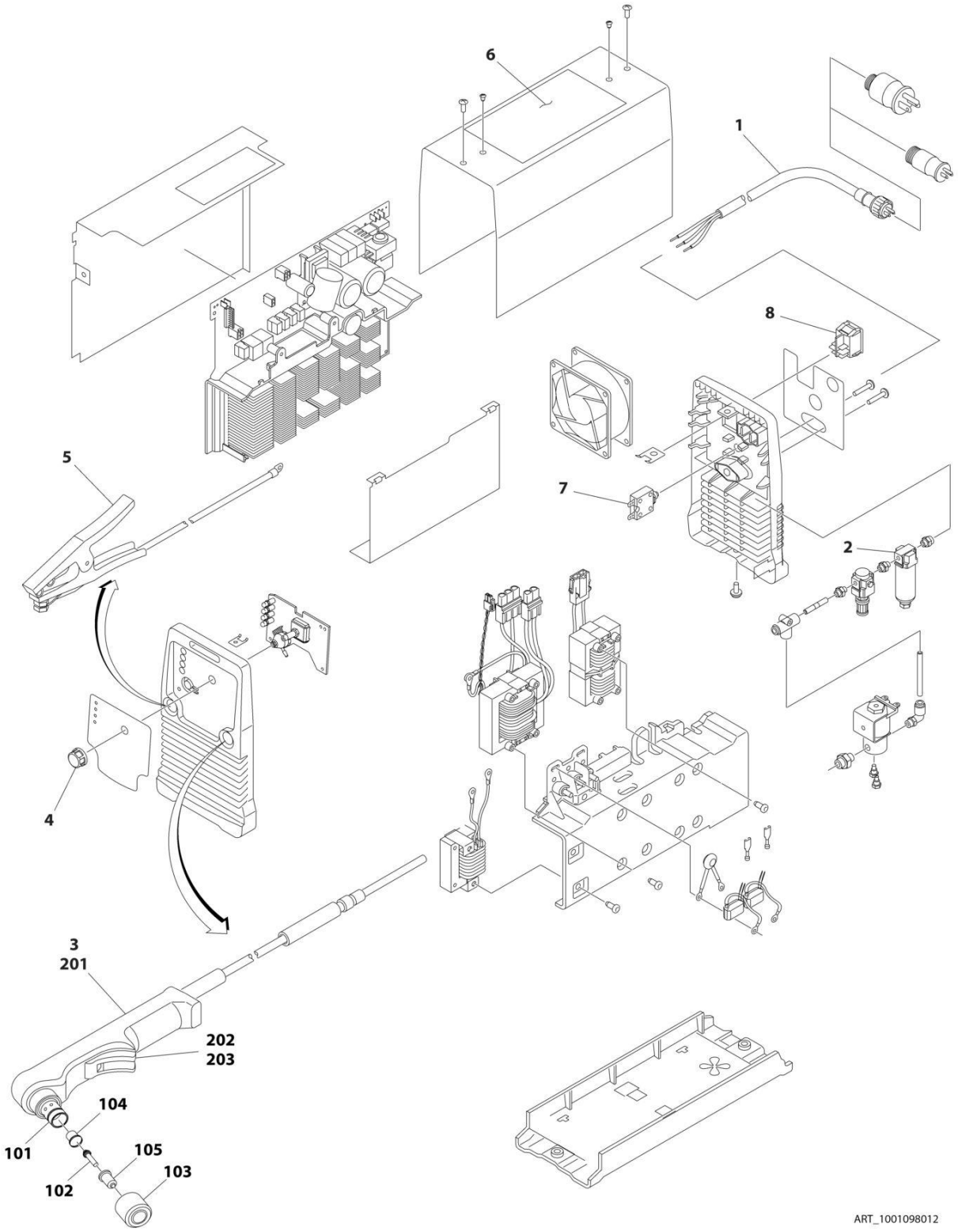

FIGURE 4-26. PLASMA CUTTER ASSEMBLY

ITEM	PART NUMBER	QTY	DESCRIPTION	REV
	1001098012	Ref	**PLASMA CUTTER ASSEMBLY**	A
		Ref	**Note: For Other Components, contact your Miller Welder Dealer.**	
1	70001424	1	Cable, Power	
1	70001425	1	Decal - Voltage Warning	
2	70001427	1	Filter, Regulator	
3	70001428	1	Torch Assembly (See Items 101-203 for Breakdown)	
4	7024471	1	Knob	
5	70001429	1	Clamp with Cable	
6	70001430	1	Decal - Caution	
7	70001431	1	Breaker, Circuit	
8	70001432	1	Switch, Rocker	
	70001428	Ref	**TORCH ASSEMBLY**	
101	7024530	1	O-Ring	
102	7024531	1	Electrode	
103	7024532	1	Cup, Retaining	
104	7024533	1	Swirl Ring	
105	7024534	1	Tip	
201	7024535	1	Handle, Torch	
202	7024536	1	Switch	
203	7024537	1	Trigger	

FIGURE 4-27. PIPE RACKS INSTALLATION

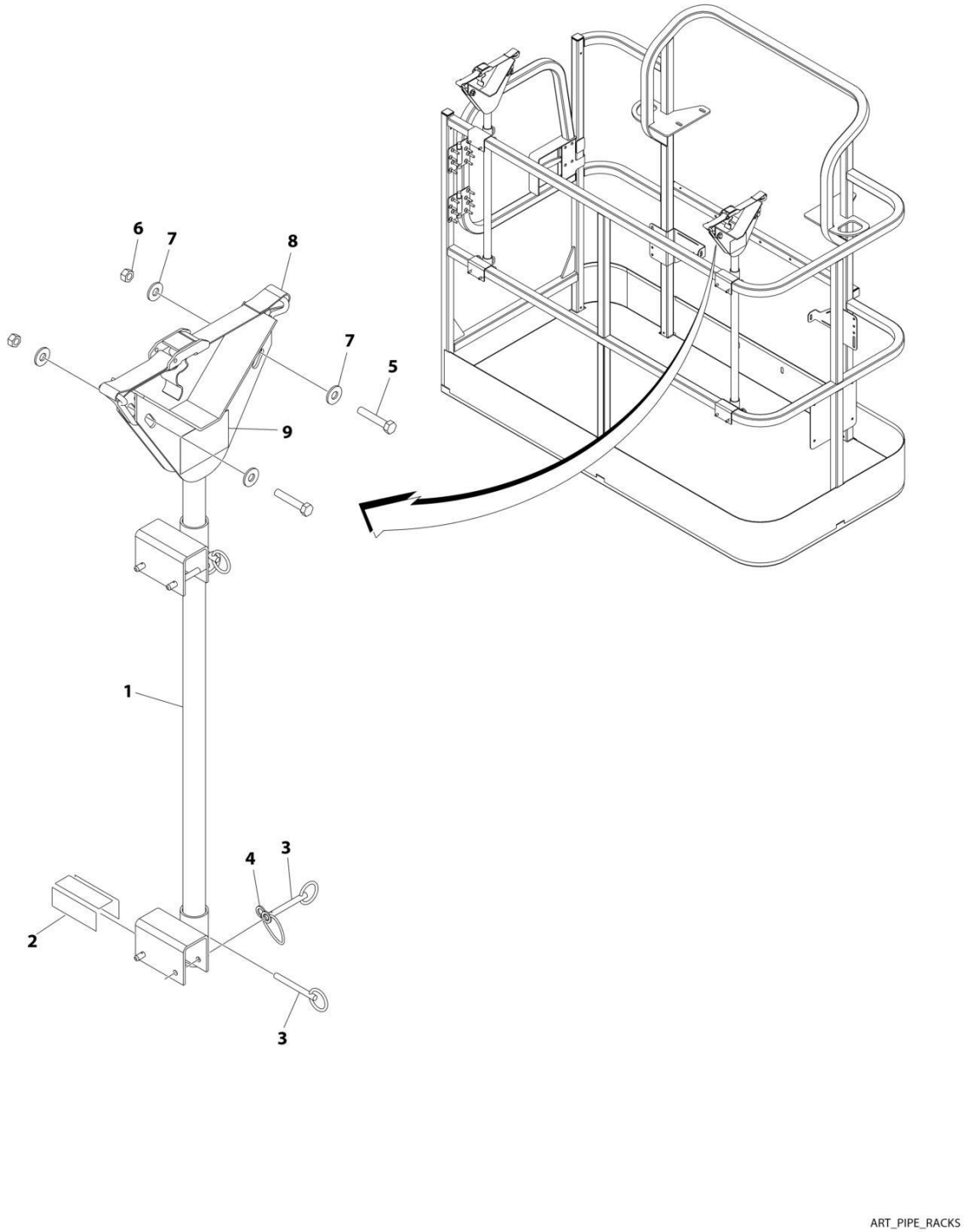

FIGURE 4-27. PIPE RACKS INSTALLATION

ITEM	PART NUMBER	QTY	DESCRIPTION	REV
	0257728	Ref	**PIPE RACK INSTALLATION (ANSI & CSA SPECS)**	2/C
	0274661	Ref	**PIPE RACK INSTALLATION (AUSTRALIAN SPECS)**	1/A
		Ref	**Note: Available on ANSI, Australian & CSA Specs**	
1	4845582	2	Rack, Pipe	
2	4420062	AR	Tape	
3	3422661	10	Pin	
4	1060379	4	Lanyard	
5	0641514	4	Bolt 5/16 x 1-3/4	
6	3311505	4	Nut 5/16	
7	4751500	8	Washer 5/16	
8	0480100	2	Tie-Down	
9	1703683	2	Decal - Capacity (ANSI & CSA Specs)	
9	1706510	2	Decal - Capacity (Australian Specs)	

FIGURE 4-28. FALL ARREST INSTALLATION (BOLT-ON EXTERNAL) (6FT/1.82M PLATFORM)

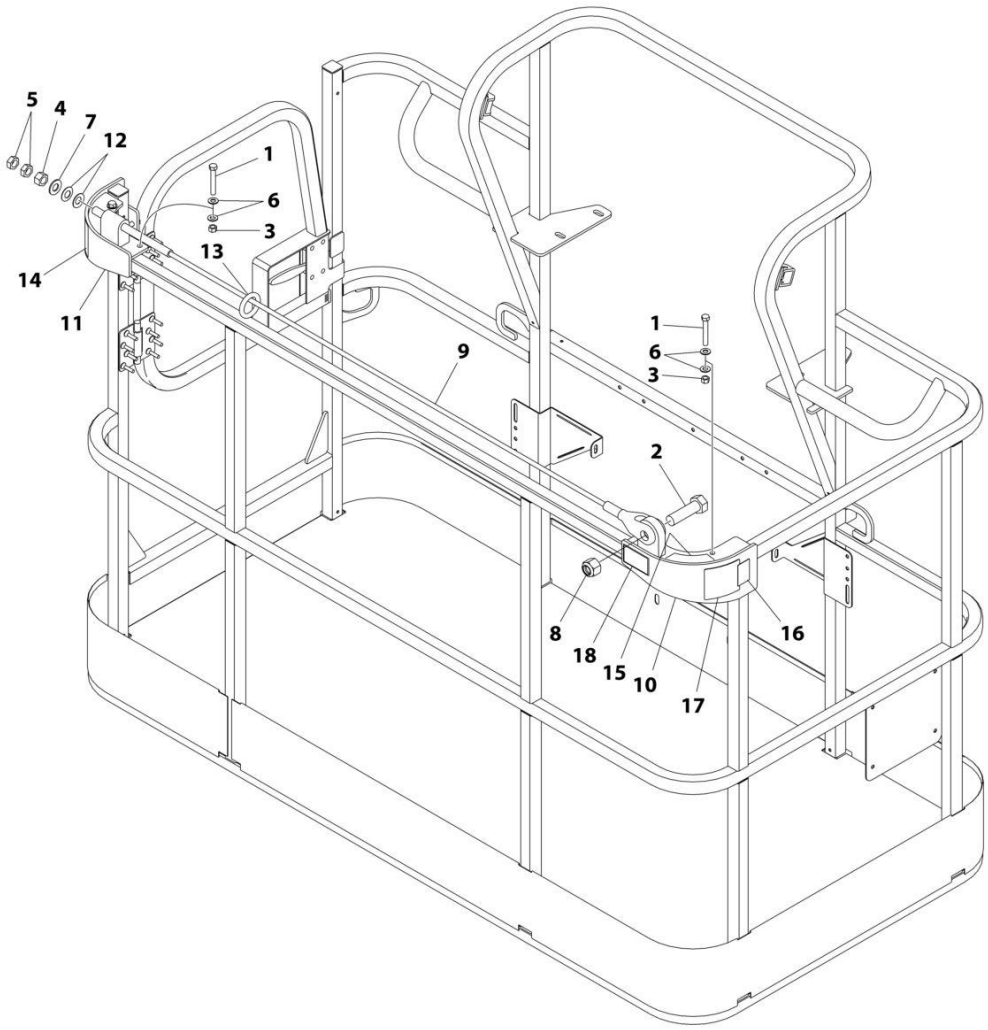

ART_1001236747

FIGURE 4-28. FALL ARREST INSTALLATION (BOLT-ON EXTERNAL) (6FT/1.82M PLATFORM)

ITEM	PART NUMBER	QTY	DESCRIPTION	REV
	1001236747	Ref	FALL ARREST INSTALLATION (BOLT - ON) 6FT/1.82M PLATFORM	C
1	0681620	6	Bolt 3/8 x 2-1/2	
2	0682424	1	Bolt 7/8 x 3	
3	3271605	6	Nut 3/8	
4	3272001	1	Nut 5/8	
5	3312002	2	Nut 5/8	
6	4711600	12	Washer 3/8	
7	4712000	1	Washer 5/8	
8	88521214	1	Nut 7/8	
9	1001231950	1	Rope	
10	1001232010	1	Bracket (RH)	
11	1001232011	1	Bracket (LH)	
12	1001236891	2	Washer	
13	1001236895	1	Ring	
14	1001238263	1	Decal - Warning Falling Hazard	
15	1001252629	1	Decal - Weight	
16	1001248140	1	Decal - Bolt Fall Arrest Re-Cert	
17	1001248141	1	Decal - Inscription	

FIGURE 4-29. FALL ARREST INSTALLATION (BOLT-ON EXTERNAL) (6FT/1.82M TRI-ENTRY PLATFORM)

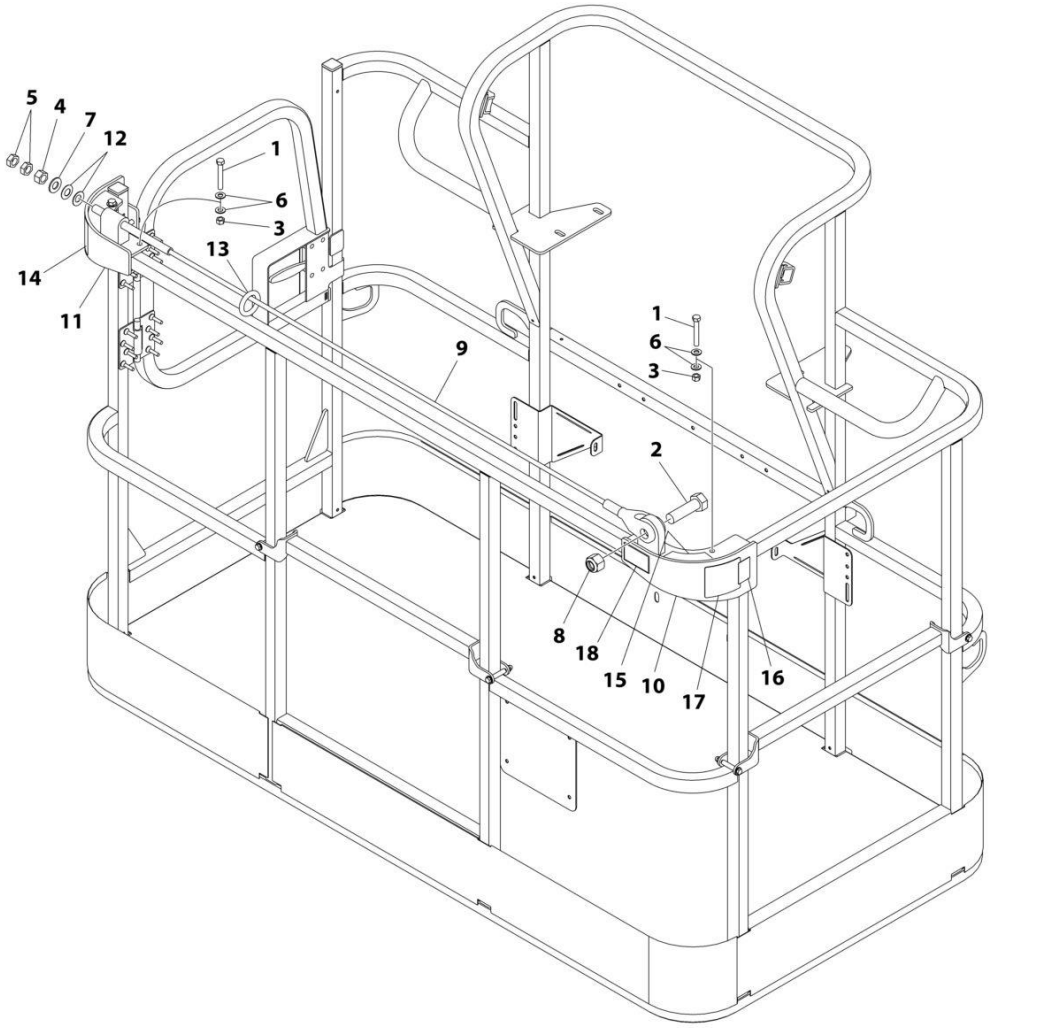

FIGURE 4-29. FALL ARREST INSTALLATION (BOLT-ON EXTERNAL) (6FT/1.82M TRI-ENTRY PLATFORM)

ITEM	PART NUMBER	QTY	DESCRIPTION	REV
	1001238463	Ref	FALL ARREST INSTALLATION (BOLT - ON) 6FT/1.82M PLATFORM	C
1	0681620	6	Bolt 3/8 x 2-1/2	
2	0682424	1	Bolt 7/8 x 3	
3	3271605	6	Nut 3/8	
4	3272001	1	Nut 5/8	
5	3312002	2	Nut 5/8	
6	4711600	12	Washer 3/8	
7	4712000	1	Washer 5/8	
8	88521214	1	Nut 7/8	
9	1001231950	1	Rope	
10	1001232010	1	Bracket (RH)	
11	1001232011	1	Bracket (LH)	
12	1001236891	2	Washer	
13	1001236895	1	Ring	
14	1001238263	1	Decal - Warning Falling Hazard	
15	1001252629	1	Decal - Weight	
16	1001248140	1	Decal - Bolt Fall Arrest Re-Cert	
17	1001248141	1	Decal - Inscription	

FIGURE 4-30. FALL ARREST INSTALLATION (BOLT-ON EXTERNAL) (8FT/2.4M PLATFORM)

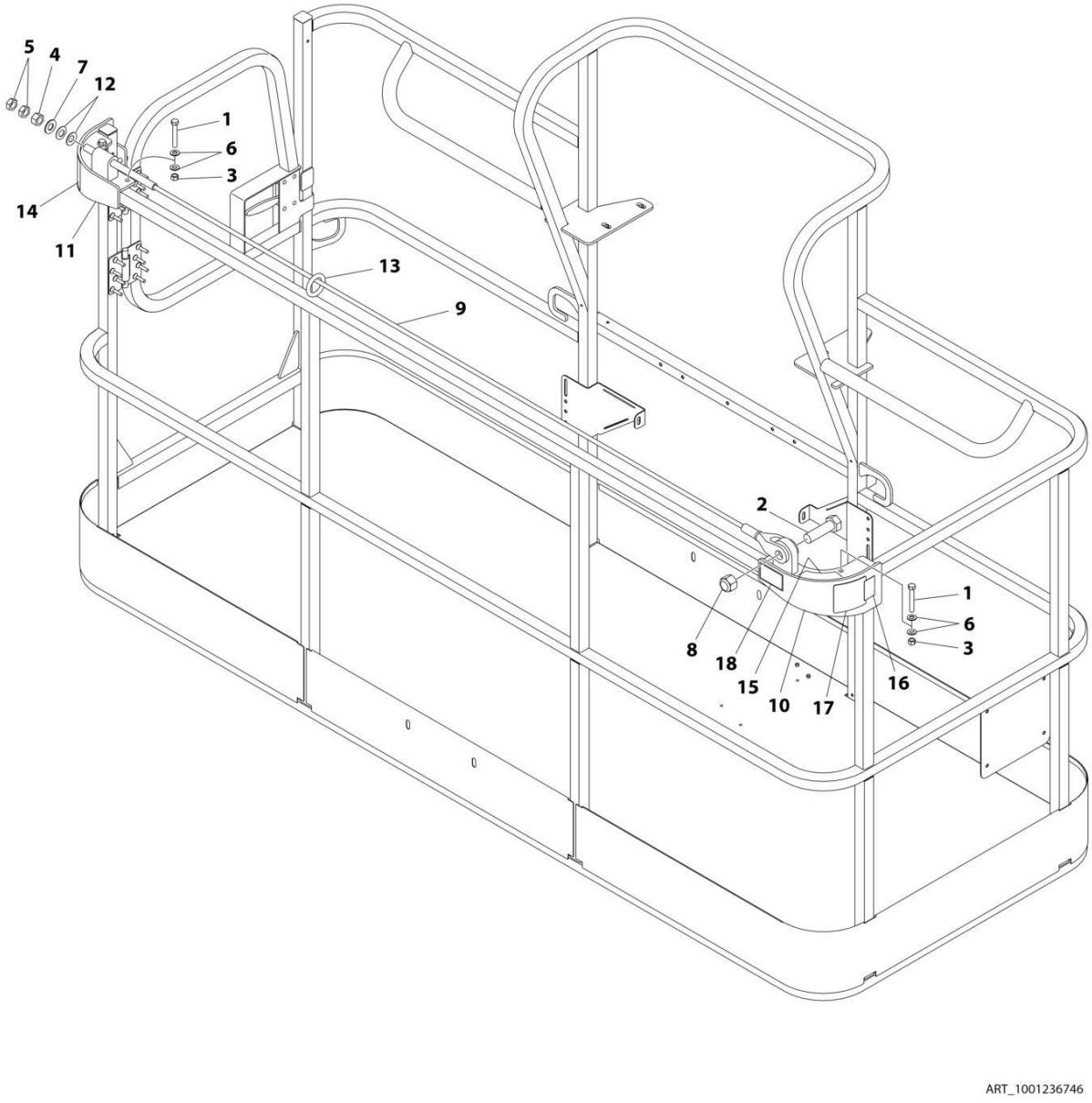

FIGURE 4-30. FALL ARREST INSTALLATION (BOLT-ON EXTERNAL) (8FT/2.4M PLATFORM)

ITEM	PART NUMBER	QTY	DESCRIPTION	REV
	1001236746	Ref	FALL ARREST INSTALLATION (BOLT - ON) 8FT/2.4M PLATFORM	C
1	0681620	6	Bolt 3/8 x 2-1/2	
2	0682424	1	Bolt 7/8 x 3	
3	3271605	6	Nut 3/8	
4	3272001	1	Nut 5/8	
5	3312002	2	Nut 5/8	
6	4711600	12	Washer 3/8	
7	4712000	1	Washer 5/8	
8	88521214	1	Nut 7/8	
9	1001231949	1	Rope	
10	1001232010	1	Bracket (RH)	
11	1001232011	1	Bracket (LH)	
12	1001236891	2	Washer	
13	1001236895	1	Ring	
14	1001238263	1	Decal - Warning Falling Hazard	
15	1001252629	1	Decal - Weight 23LBS/10.4KG	
16	1001248140	1	Decal - Bolt Fall Arrest Re-Cert	
17	1001248141	1	Decal - Inscription	

SECTION 5 - CYLINDER

FIGURE 5-1. AXLE LOCKOUT CYLINDER ASSEMBLY

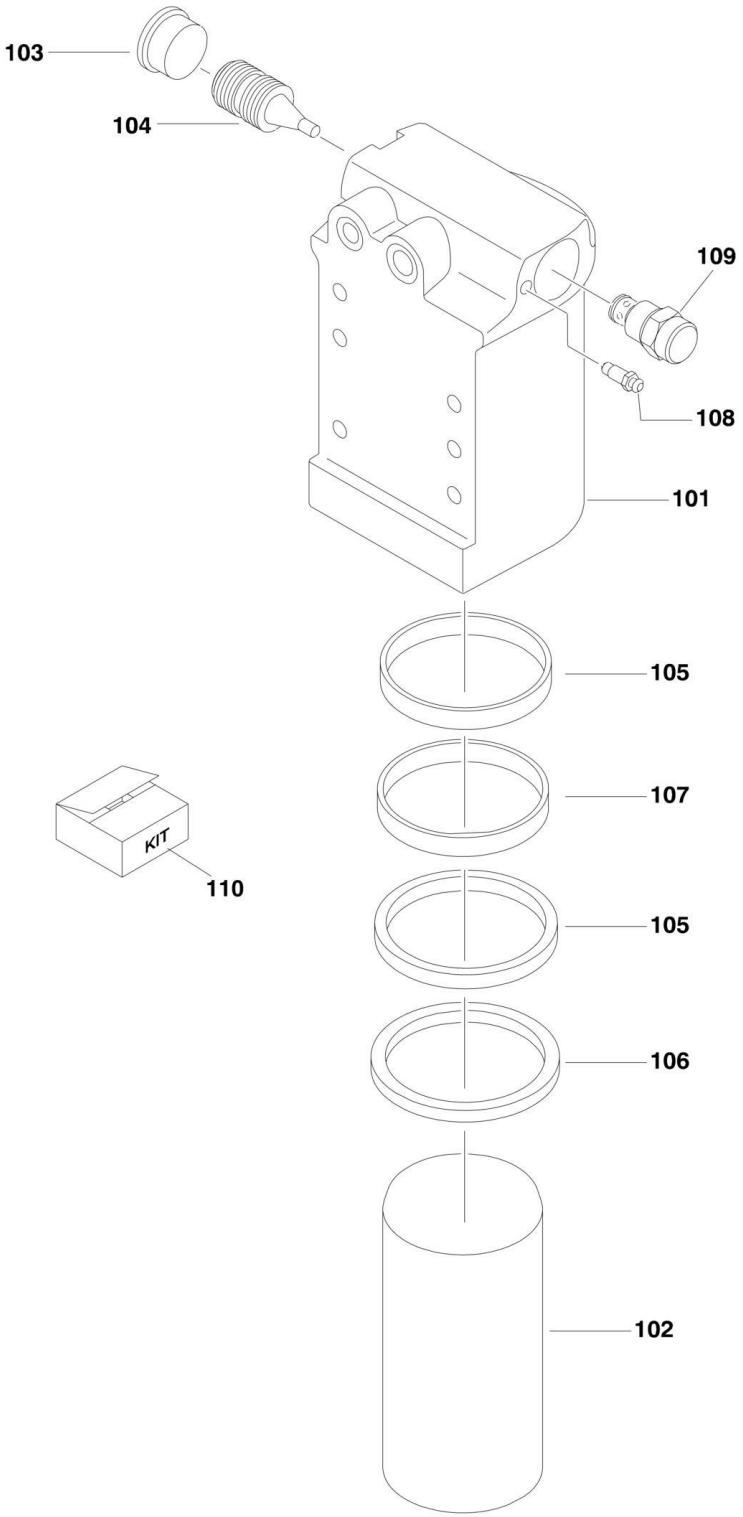

FIGURE 5-1. AXLE LOCKOUT CYLINDER ASSEMBLY

ITEM	PART NUMBER	QTY	DESCRIPTION	REV
	1684465	Ref	**AXLE LOCKOUT CYLINDER ASSEMBLY**	J
		Ref	Note: Original Cylinder may have been replaced with Service Replacement. Identify PN Stamped on Cylinder Before Ordering Parts.	
101	0370026	1	Barrel	
102	1684290	1	Rod	
103	2220890	1	Plug	
104	3480288	1	Piston, Pilot	
105	See Note	NSS	Ring, Wear (Note: Use Item 110)	
106	See Note	NSS	Wiper (Note: Use Item 110)	
107	See Note	NSS	Seal, Rod (Note: Use Item 110)	
108	4640858	1	Bleeder	
109	4641390	1	Cartridge, Valve	
109	7017496	1	Seal Kit	
110	2902266	1	Seal Kit (Includes Items 105-107)	

FIGURE 5-2. LEVEL (PLATFORM SLAVE) CYLINDER ASSEMBLY

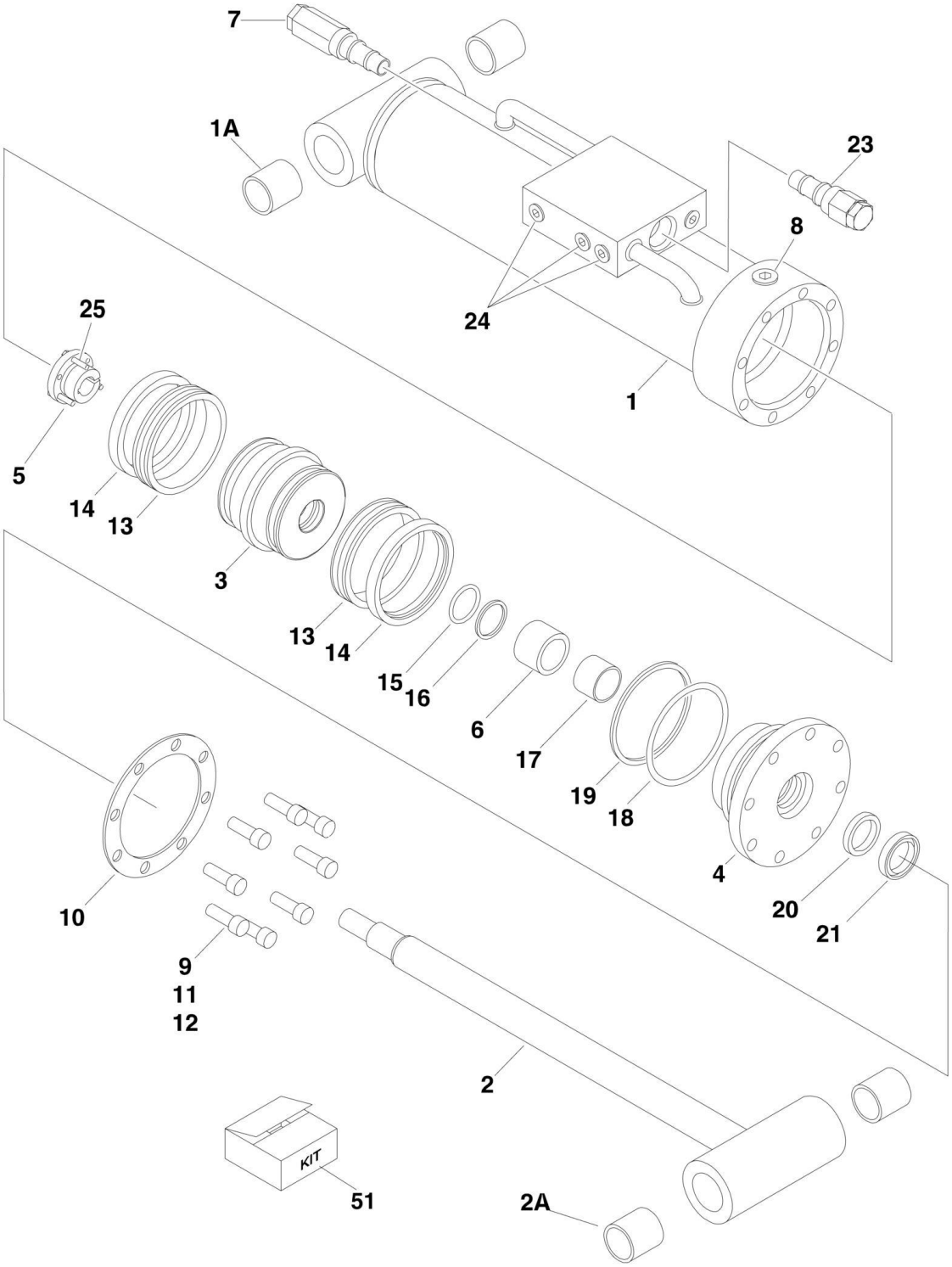

FIGURE 5-2. LEVEL (PLATFORM SLAVE) CYLINDER ASSEMBLY

ITEM	PART NUMBER	QTY	DESCRIPTION	REV
		Ref	**PLATFORM LEVEL (SLAVE) CYLINDER ASSEMBLY**	
		Ref	Note: Original Cylinder may have been replaced with Service Replacement. Identify PN Stamped on Cylinder Before Ordering Parts.	
	1683415	Ref	Platform Level (Slave) Cylinder Assembly 600A **(SN 0300177361 through 0300233770)**	H
	1683418	Ref	Platform Level (Slave) Cylinder Assembly 600AJ without Arctic Package **(SN 0300177361 through 0300233770)**	G
	1001138798	Ref	Platform Level (Slave) Cylinder Assembly 600AJ with Arctic Package **(SN 0300177361 through 0300233770)**	B
1	1683952	1	Barrel (Note: Item 1A not included - Purchase Separately)	
1A		Ref	Bushing Options:	
1A	0961947	2	Bushing 600A	
1A	0961951	2	Bushing 600AJ	
2		Ref	Rod Options:	
2	1683976	1	Rod 600A (Note: Includes Item 2A)	
2	1683963	1	Rod 600AJ (Note: Item 2A not included - Purchase Separately)	
2A		Ref	Bushing Options:	
2A	0961947	2	Bushing 600A	
2A	0961951	2	Bushing 600AJ	
3		Ref	Piston Options:	
3	3480210	1	Piston 600A	
3	3480188	1	Piston 600AJ	
4		Ref	Head Options:	
4	1683053	1	Head 600A	
4	1683055	1	Head 600AJ	
5		Ref	Bushing, Tapered (Includes Item 25) Options:	
5	0961893	1	Bushing, Tapered 600A	
5	0961894	1	Bushing, Tapered 600AJ	
6	4566468	1	Spacer	
7	4640509	1	Cartridge, Valve	
7	2900792	1	Seal Kit - 4640509 Valve	
8	2220885	1	Plug, O-Ring	
9		Ref	Capscrew, Socket Head Options:	
9	3931516	8	Capscrew 5/16 x1	
9	3931620	8	Capscrew 3/8 x 1-1/4	
10		Ref	Ring, Washer Options:	
10	3760368	1	Ring, Washer 600A	
10	3760369	1	Ring, Washer 600AJ	
11	0100011	AR	Compound, Locking	
12	0100038	AR	Primer, Locking	
13	See Note	NSS	Seal (Note: Use Item 51)	
14	See Note	NSS	Ring, Lock (Note: Use Item 51)	
15	See Note	NSS	O-Ring (Note: Use Item 51)	
16	See Note	NSS	Ring, Back-up (Note: Use Item 51)	
17	See Note	NSS	Ring, Wear (Note: Use Item 51)	
18	See Note	NSS	O-Ring (Note: Use Item 51)	
19	See Note	NSS	Ring, Back-up (Note: Use Item 51)	
20	See Note	NSS	Seal, Rod (Note: Use Item 51)	
21	See Note	NSS	Wiper (Note: Use Item 51)	
23	4640932	1	Cartridge, Valve	

ITEM	PART NUMBER	QTY	DESCRIPTION	REV
23	7011112	1	Seal Kit - 4640932 Valve	
24	2220883	8	Plug, O-Ring	
25		Ref	Bolt Options:	
25	0630534	3	Bolt 600A - Bolt #10 - 24NC x 1in	
25	0630535	3	Bolt 600AJ - Bolt 1/4in - 20NC x 1-1/8in	
51		Ref	Seal Kit Options (Includes Items 13-21)	
51	2901303	1	Seal Kit 600A	
51	2901301	1	Seal Kit 600AJ without Arctic Package	
51	1001138796	1	Seal Kit 600AJ with Arctic Package	

FIGURE 5-3. LEVEL (PLATFORM SLAVE) CYLINDER ASSEMBLY - 600A (SN 0300233771 through 0300241337)

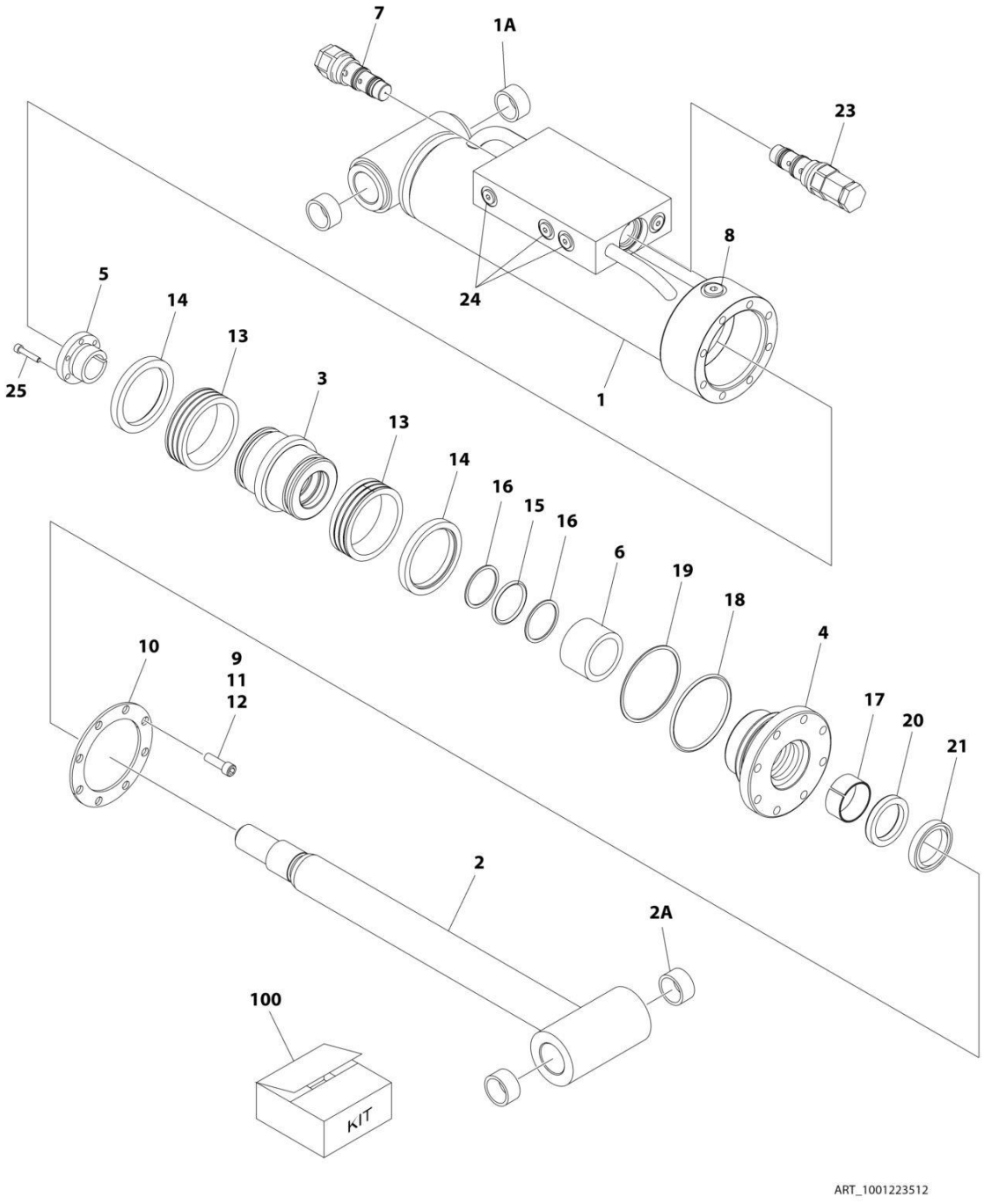

FIGURE 5-3. LEVEL (PLATFORM SLAVE) CYLINDER ASSEMBLY - 600A (SN 0300233771 through 0300241337)

ITEM	PART NUMBER	QTY	DESCRIPTION	REV
	1001223512	Ref	**PLATFORM LEVEL (SLAVE) CYLINDER ASSEMBLY - 600A (SN 0300233771 through 0300241337)**	A
		Ref	Note: Original Cylinder may have been replaced with Service Replacement. Identify PN Stamped on Cylinder Before Ordering Parts.	
1	1001223511	1	Barrel	
1A	0961947	2	Bushing	
2	1683976	1	Rod	
2A	0961947	2	Bushing	
3	3480210	1	Piston	
4	1683053	1	Head	
5	0961893	1	Bushing, Tapered	
6	4566468	1	Spacer	
7	4640509	1	Cartridge, Valve	
7	2900792	1	Seal Kit - 4640509 Valve	
8	2220885	1	Plug, O-Ring	
9	3931516	8	Capscrew, Socket Head	
10	3760368	1	Ring, Washer	
11	0100011	AR	Compound, Locking	
12	0100038	AR	Primer, Locking	
13	See Note	NSS	Seal (Note: Use Item 100)	
14	See Note	NSS	Ring, Lock (Note: Use Item 100)	
15	See Note	NSS	O-Ring (Note: Use Item 100)	
16	See Note	NSS	Ring, Back-up (Note: Use Item 100)	
17	See Note	NSS	Ring, Wear (Note: Use Item 100)	
18	See Note	NSS	O-Ring (Note: Use Item 100)	
19	See Note	NSS	Ring, Back-up (Note: Use Item 100)	
20	See Note	NSS	Seal, Rod (Note: Use Item 100)	
21	See Note	NSS	Wiper (Note: Use Item 100)	
23	4640932	1	Cartridge, Valve	
23	7011112	1	Seal Kit - 4640932 Valve	
24	2220883	8	Plug, O-Ring	
25	0630534	3	Bolt #10 x 1	
100	2901303	1	Seal Kit (Includes Items 13-21)	

FIGURE 5-4. LEVEL (PLATFORM SLAVE) CYLINDER ASSEMBLY - 600A (SN 0300241338 through 0300272252)

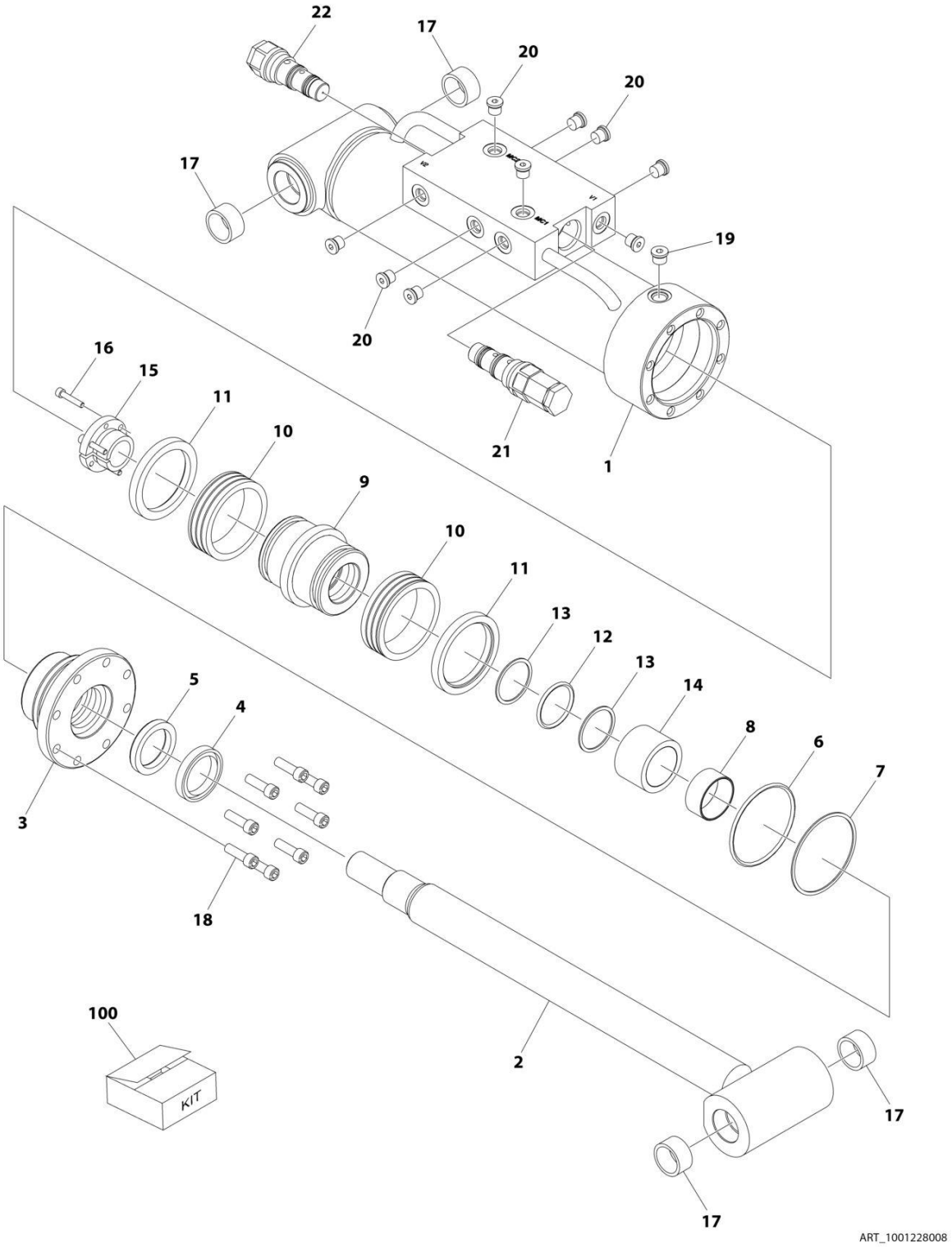

FIGURE 5-4. LEVEL (PLATFORM SLAVE) CYLINDER ASSEMBLY - 600A (SN 0300241338 through 0300272252)

ITEM	PART NUMBER	QTY	DESCRIPTION	REV
	1001228008	Ref	LEVEL CYLINDER ASSEMBLY - PLATFORM SLAVE	C
		Ref	Note: Original Cylinder may have been replaced with Service Replacement. Identify PN Stamped on Cylinder Before Ordering Parts.	
1	See Note	NSS	Barrel (Note: Use p/n 1001228008)	
2	70006648	1	Rod	
3	70006649	1	Head	
4	See Note	NSS	Wiper (Note: Use Item 100)	
5	See Note	NSS	Seal Rod (Note: Use Item 100)	
6	See Note	NSS	O-Ring (Note: Use Item 100)	
7	See Note	NSS	Ring, Back-up (Note: Use Item 100)	
8	See Note	NSS	Ring, Wear (Note: Use Item 100)	
9	70006650	1	Piston	
10	See Note	NSS	Seal (Note: Use Item 100)	
11	See Note	NSS	Ring, Lock (Note: Use Item 100)	
12	See Note	NSS	O-Ring (Note: Use Item 100)	
13	See Note	NSS	Ring, Back-up (Note: Use Item 100)	
14	70006651	1	Spacer	
15	0961893	1	Bushing, Tapered	
16	0630534	3	Bolt #10 x 1	
17	0961947	4	Bushing	
18	3931516	8	Capscrew, Socket Head	
19	2220885	AR	Plug, O-Ring	
20	2220883	10	Plug, O-Ring	
21	4640932	1	Cartridge, Valve	
21	7011112	1	Seal Kit - 4640932 Valve	
22	4640509	1	Cartridge, Valve	
22	2900792	1	Seal Kit - 4640509 Valve	
100	2901303	1	Seal Kit - 1001228008 Cylinder (Includes Items 4-8 & 10-13)	

FIGURE 5-5. LEVEL (PLATFORM SLAVE) CYLINDER ASSEMBLY - 600AJ WITHOUT ARCTIC PACKAGE (SN 0300229829 through 0300241337)

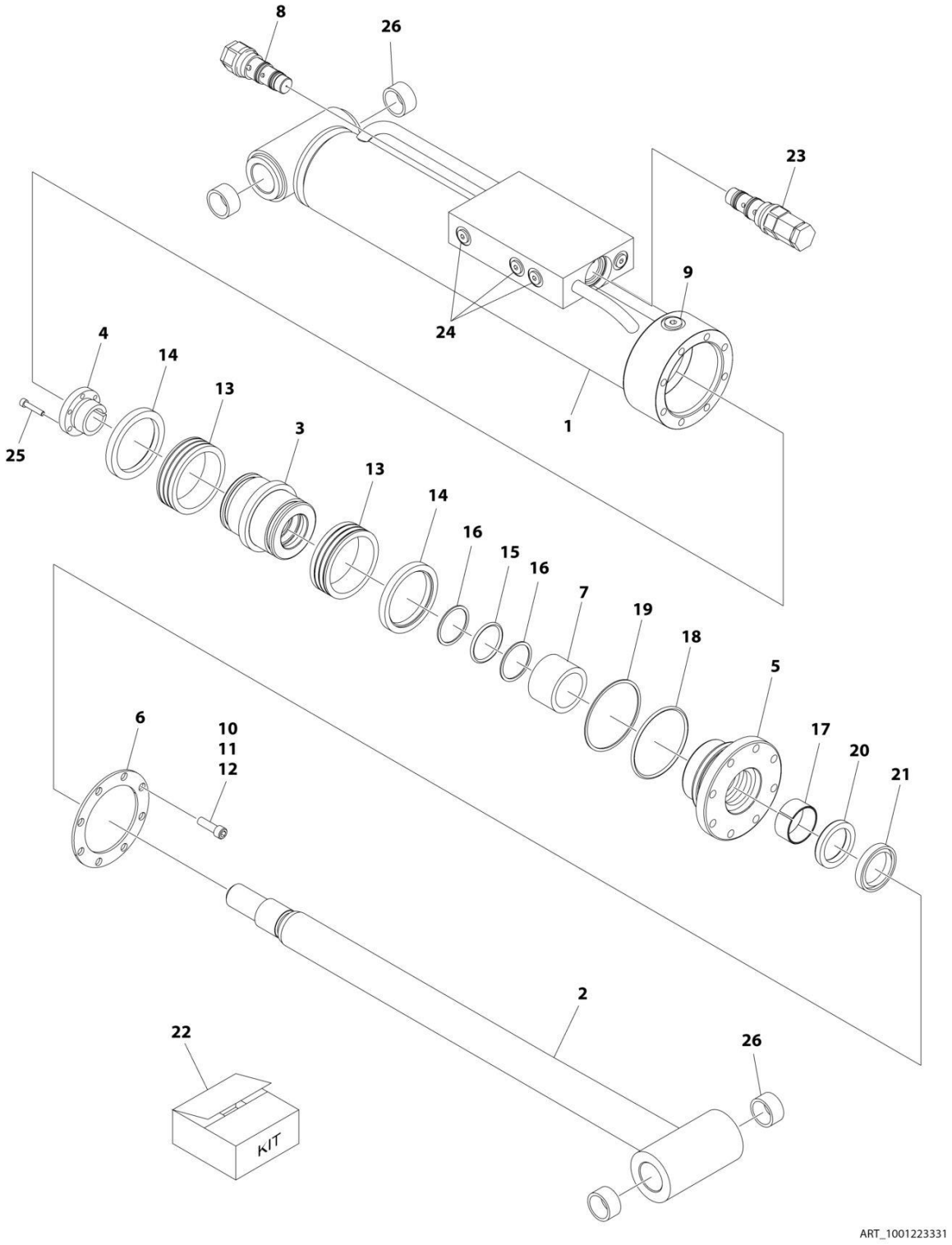

FIGURE 5-5. LEVEL (PLATFORM SLAVE) CYLINDER ASSEMBLY - 600AJ WITHOUT ARCTIC PACKAGE (SN 0300229829 through 0300241337)

ITEM	PART NUMBER	QTY	DESCRIPTION	REV
	1001223331	Ref	LEVEL CYLINDER ASSEMBLY	B
		Ref	Note: Original Cylinder may have been replaced with Service Replacement. Identify PN Stamped on Cylinder Before Ordering Parts.	
1	1001223332	1	Barrel	
2	1683963	1	Rod	
3	3480188	1	Head	
4	0961894	1	Bushing, Tapered	
5	1683055	1	Head	
6	3760369	1	Ring, Washer	
7	4566468	1	Spacer	
8	4640509	1	Cartridge, Valve	
8	2900792	1	Seal Kit - 4640509 Valve	
9	2220885	1	Plug	
10	3931620	8	Capscrew 3/8 x 1-1/4	
11	0100011	AR	Compound, Locking	
12	0100038	AR	Primer, Locking	
13	See Note	NSS	Seal (Note: Use Item 22)	
14	See Note	NSS	Ring, Lock (Note: Use Item 22)	
15	See Note	NSS	O-Ring (Note: Use Item 22)	
16	See Note	NSS	Ring, Back-up (Note: Use Item 22)	
17	See Note	NSS	Ring, Wear (Note: Use Item 22)	
18	See Note	NSS	O-Ring (Note: Use Item 22)	
19	See Note	NSS	Ring, Back-up (Note: Use Item 22)	
20	See Note	NSS	Seal (Note: Use Item 22)	
21	See Note	NSS	Wiper (Note: Use Item 22)	
22	2901301	1	Seal Kit (Includes Items 13-21)	
23	4640932	1	Cartridge, Valve	
23	7011112	1	Seal Kit - 4640932 Valve	
24	2220883	8	Plug	
25	0630535	3	Bolt 1/4 x 1-1/8	
26	0961951	4	Bushing	

FIGURE 5-6. LEVEL (PLATFORM SLAVE) CYLINDER ASSEMBLY - 600AJ WITH ARCTIC PACKAGE (SN 0300229829 through 0300241337)

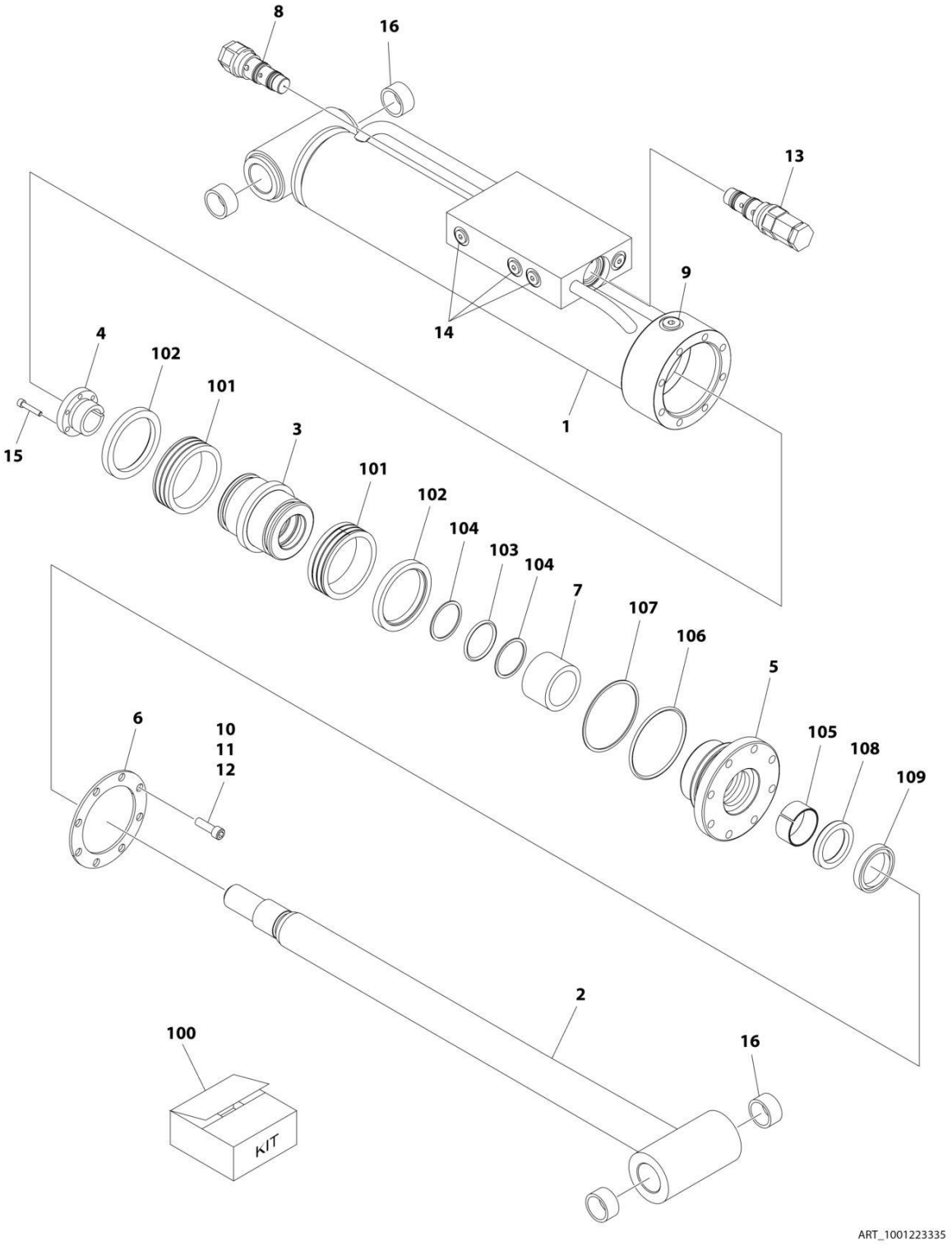

FIGURE 5-6. LEVEL (PLATFORM SLAVE) CYLINDER ASSEMBLY - 600AJ WITH ARCTIC PACKAGE (SN 0300229829 through 0300241337)

ITEM	PART NUMBER	QTY	DESCRIPTION	REV
	1001223335	Ref	LEVEL CYLINDER ASSEMBLY	B
		Ref	Note: Original Cylinder may have been replaced with Service Replacement. Identify PN Stamped on Cylinder Before Ordering Parts.	
1	1001223332	1	Barrel	
2	1683963	1	Rod	
3	3480188	1	Head	
4	0961894	1	Bushing, Tapered	
5	1683055	1	Head	
6	3760369	1	Ring, Washer	
7	4566468	1	Spacer	
8	4640509	1	Cartridge, Valve	
8	2900792	1	Seal Kit - 4640509 Valve	
9	2220885	1	Plug	
10	3931620	8	Capscrew 3/8 x 1-1/4	
11	0100011	AR	Compound, Locking	
12	0100038	AR	Primer, Locking	
13	4640932	1	Cartridge, Valve	
13	7011112	1	Seal Kit - 4640932 Valve	
14	2220883	8	Plug	
15	0630535	3	Bolt 1/4 x 1-1/8	
16	0961951	4	Bushing	
100	1001138796	1	Seal Kit (Includes Items 101-109)	
101	See Note	NSS	Seal (Note: Use Item 100)	
102	See Note	NSS	Ring, Lock (Note: Use Item 100)	
103	See Note	NSS	O-Ring (Note: Use Item 100)	
104	See Note	NSS	Ring, Back-up (Note: Use Item 100)	
105	See Note	NSS	Ring, Wear (Note: Use Item 100)	
106	See Note	NSS	O-Ring (Note: Use Item 100)	
107	See Note	NSS	Ring, Back-up (Note: Use Item 100)	
108	See Note	NSS	Seal (Note: Use Item 100)	
109	See Note	NSS	Wiper (Note: Use Item 100)	

FIGURE 5-7. LEVEL (PLATFORM SLAVE) CYLINDER ASSEMBLY - 600AJ (SN 0300241338 through 0300272252)

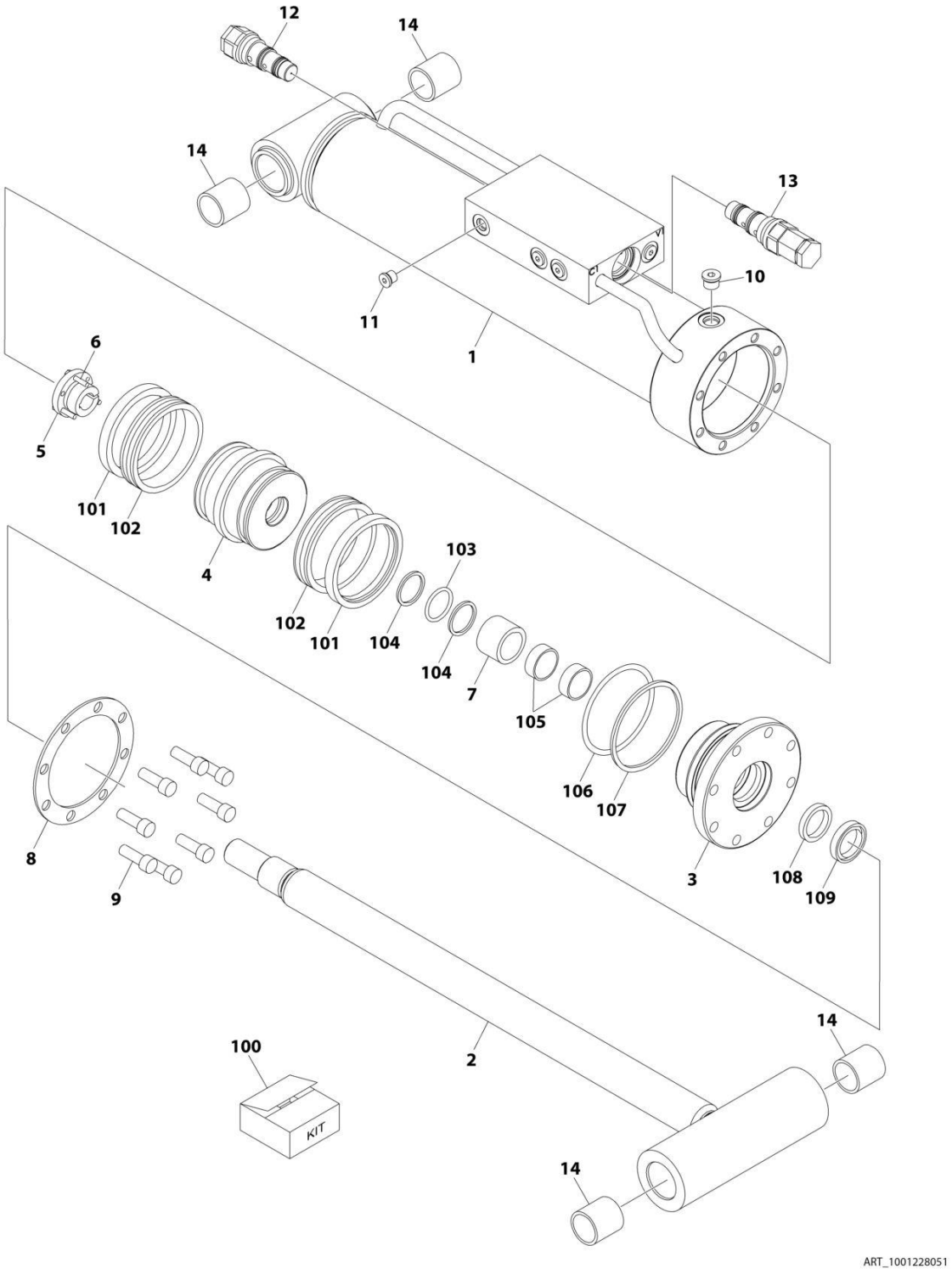

FIGURE 5-7. LEVEL (PLATFORM SLAVE) CYLINDER ASSEMBLY - 600AJ (SN 0300241338 through 0300272252)

ITEM	PART NUMBER	QTY	DESCRIPTION	REV
	1001228051	Ref	LEVEL CYLINDER ASSEMBLY	A
		Ref	Note: Original Cylinder May Have Been Replaced with Service Replacement. Identify PN Stamped on Cylinder Before Ordering Parts.	
1	See Note	NSS	Barrel (Note: Use p/n 1001228051)	
2	70006823	1	Rod	
3	70006446	1	Head	
4	70006445	1	Piston	
5	70006444	1	Bushing, Tapered	
6	0630535	3	Bolt 1/4 x 1-1/8	
7	70006443	1	Spacer	
8	70006822	1	Ring, Washer	
9	3931620	8	Capscrew 3/8 x 1-1/4	
10	2220885	1	Plug, O-Ring	
11	2220883	8	Plug, O-Ring	
12	4640509	1	Cartridge, Valve	
12	2900792	1	Seal Kit - 4640509 Valve	
13	4640932	1	Cartridge, Valve	
13	7011112	1	Seal Kit - 4640932 Valve	
14	0961951	4	Bushing	
100	1001138796	1	Seal Kit - 1001228051 Cylinder (Includes Items 101-109)	
101	See Note	NSS	Ring, Lock (Note: Use Item 100)	
102	See Note	NSS	Seal (Note: Use Item 100)	
103	See Note	NSS	O-Ring (Note: Use Item 100)	
104	See Note	NSS	Ring, Back-up (Note: Use Item 100)	
105	See Note	NSS	Ring, Wear (Note: Use Item 100)	
106	See Note	NSS	O-Ring (Note: Use Item 100)	
107	See Note	NSS	Ring, Back-up (Note: Use Item 100)	
108	See Note	NSS	Seal, Rod (Note: Use Item 100)	
109	See Note	NSS	Wiper (Note: Use Item 100)	

FIGURE 5-8. LEVEL (UPRIGHT) CYLINDER ASSEMBLY (SN 0300177361 through 0300237381)

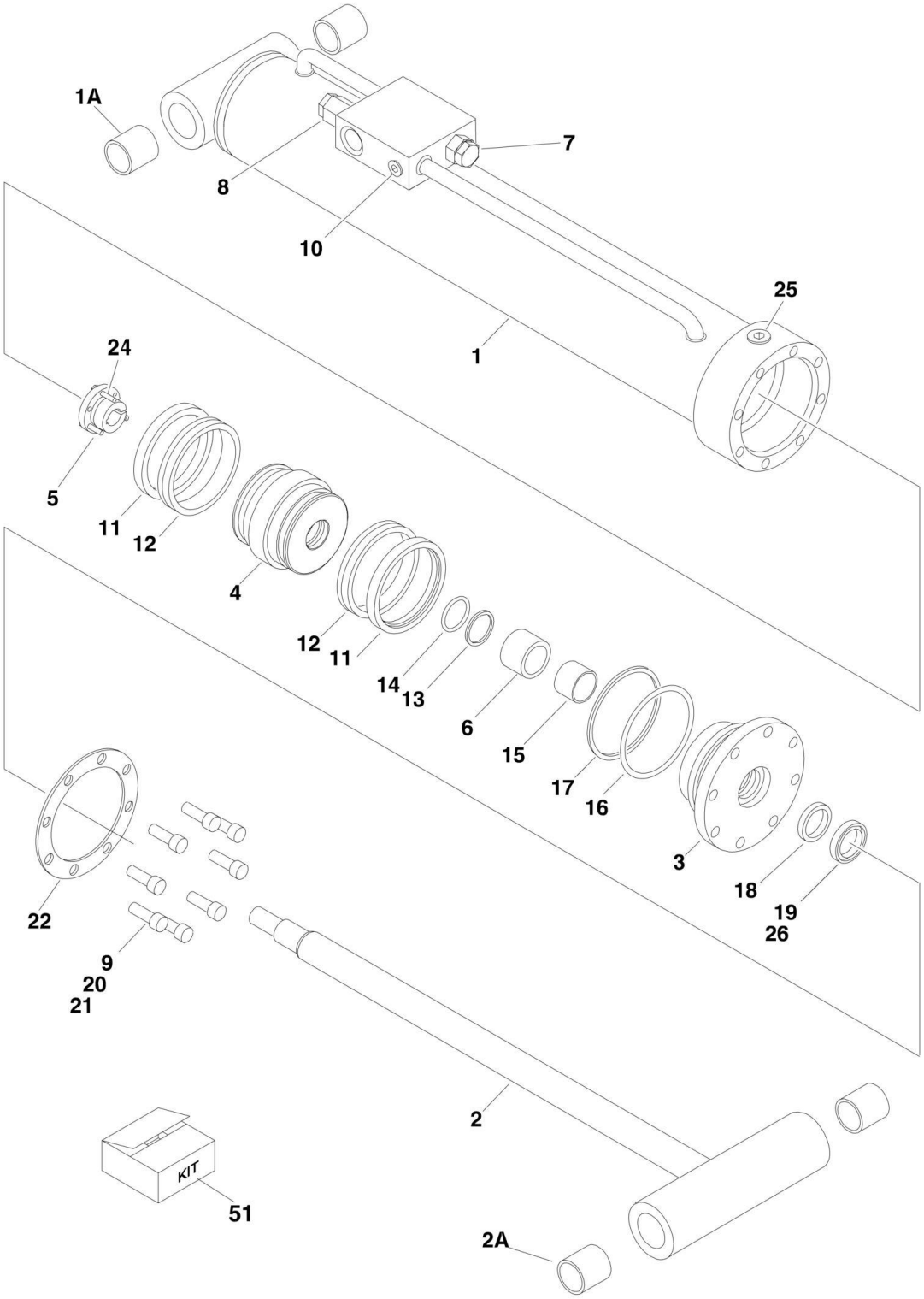

FIGURE 5-8. LEVEL (UPRIGHT) CYLINDER ASSEMBLY (SN 0300177361 through 0300237381)

ITEM	PART NUMBER	QTY	DESCRIPTION	REV
	1684498	Ref	**UPRIGHT LEVEL CYLINDER ASSEMBLY**	E
		Ref	Note: Original Cylinder may have been replaced with Service Replacement. Identify PN Stamped on Cylinder Before Ordering Parts.	
1	0370035	1	Barrel Weldment	
1A	0961949	2	Bushing	
2	1684015	1	Rod Weldment	
2A	0961949	2	Bushing	
3	1683067	1	Head	
4	3480206	1	Piston	
5	0961898	1	Bushing, Tapered (Use Item#24 in place of supplied bolts)	
6	4566501	1	Spacer, Tube	
7	4640509	1	Cartridge, Valve	
7	2900792	1	Seal Kit - 4640509 Valve	
8	4640605	1	Cartridge, Valve	
8	2900792	1	Seal Kit - 4640605 Valve	
9	3932032	8	Bolt, Socket Head 5/16in-11NC x 2in	
10	2220883	2	Plug, O-Ring	
11	See Note	NSS	Ring, Lock (Note: Use Item 51)	
12	See Note	NSS	Seal, Hydrolock (Note: Use Item 51)	
13	See Note	NSS	O-Ring (Note: Use Item 51)	
14	See Note	NSS	Ring, Back-up (Note: Use Item 51)	
15	See Note	NSS	Ring, Wear (Note: Use Item 51)	
16	See Note	NSS	O-Ring (Note: Use Item 51)	
17	See Note	NSS	Ring, Back-up (Note: Use Item 51)	
18	See Note	NSS	Seal, Rod (Note: Use Item 51)	
19	See Note	NSS	Wiper (Note: Use Item 51)	
20	0100011	AR	Compound, Locking	
21	0100038	AR	Primer, Locking	
22	3760372	1	Washer, Ring	
24	0630536	3	Bolt 3/8in-16NC x 1-1/2in	
25	2220886	1	Plug, O-Ring	
26	0100063	AR	Adhesive	
51	2901285	1	Seal Kit (Includes Items 11-19)	

FIGURE 5-9. LEVEL (UPRIGHT) CYLINDER ASSEMBLY (SN 0300237382 through 0300272252)

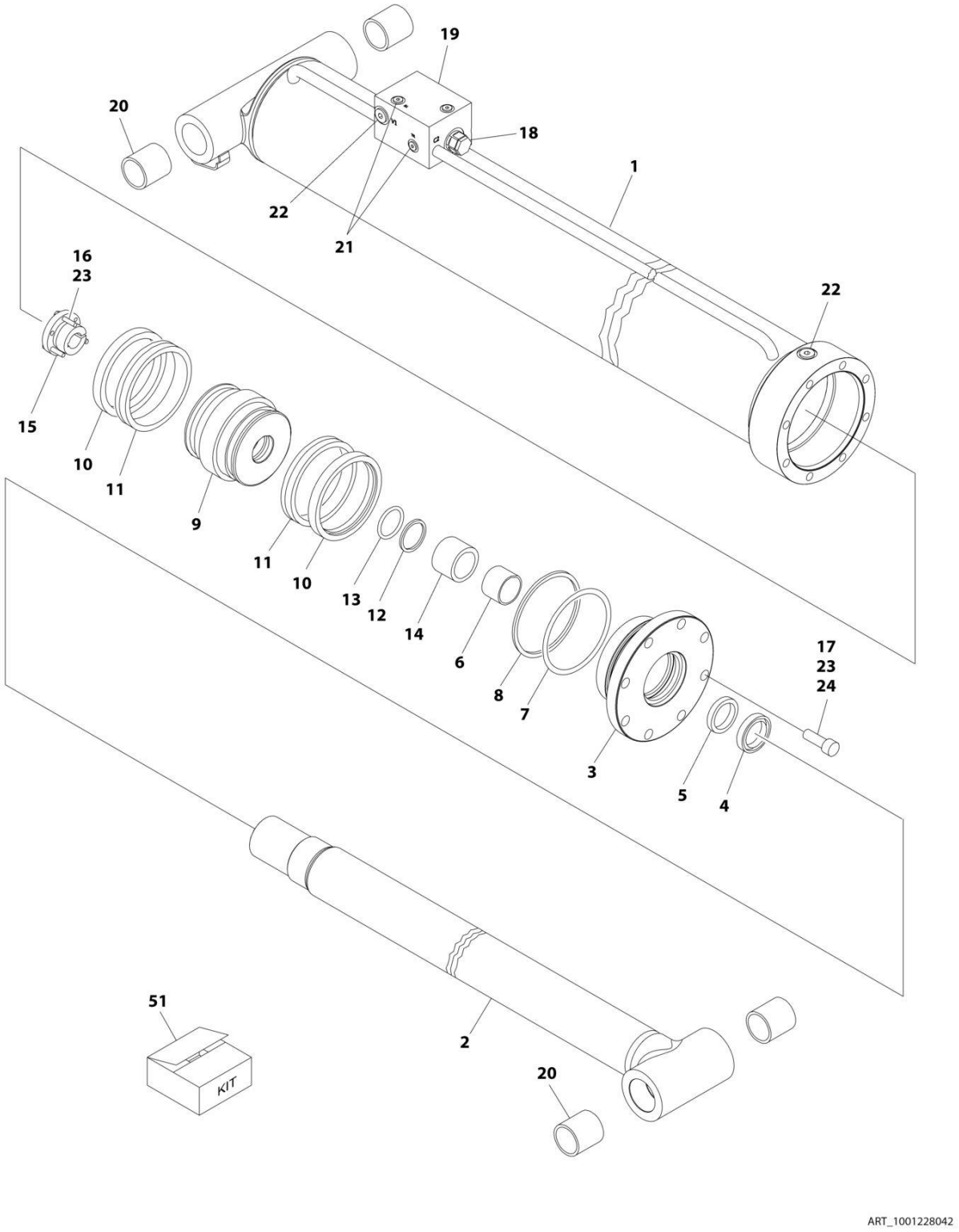

FIGURE 5-9. LEVEL (UPRIGHT) CYLINDER ASSEMBLY (SN 0300237382 through 0300272252)

ITEM	PART NUMBER	QTY	DESCRIPTION	REV
	1001228042	Ref	UPRIGHT LEVEL CYLINDER ASSEMBLY	D
		Ref	Note: Original Cylinder may have been replaced with Service Replacement. Identify PN Stamped on Cylinder Before Ordering Parts.	
1	See Note	NSS	Barrel Weldment (Note: Not Available for Purchase)	
2	70006489	1	Rod Weldment	
3	70006488	1	Head	
4	See Note	NSS	Wiper (Note: Use Item 51)	
5	See Note	NSS	Seal, Rod (Note: Use Item 51)	
6	See Note	NSS	Ring, Wear (Note: Use Item 51)	
7	See Note	NSS	O-Ring (Note: Use Item 51)	
8	See Note	NSS	Ring, Back-up (Note: Use Item 51)	
9	70006487	1	Piston	
10	See Note	NSS	Ring, Lock (Note: Use Item 51)	
11	See Note	NSS	Seal, Hydrolock (Note: Use Item 51)	
12	See Note	NSS	O-Ring (Note: Use Item 51)	
13	See Note	NSS	Ring, Back-up (Note: Use Item 51)	
14	70006486	1	Spacer, Tube	
15	0961898	1	Bushing, Tapered (Use Item #16 in place of supplied bolts)	
16	0630536	3	Bolt 3/8 x 1-1/2	
17	3932032	8	Bolt, Socket Head 5/16 x 2	
18	4640509	1	Cartridge, Valve	
18	2900792	1	Seal Kit - 4640509 Valve	
19	4640605	1	Cartridge, Valve	
19	2900792	1	Seal Kit - 4640605 Valve	
20	0961949	4	Bushing	
21	2220883	5	Plug, O-Ring	
22	2220886	AR	Plug, O-Ring	
23	0100011	AR	Compound, Locking	
24	0100038	AR	Primer, Locking	
51	2901285	1	Seal Kit (Includes Items 4-8 & 10-13)	

FIGURE 5-10. LIFT CYLINDER ASSEMBLY - JIB - 600AJ (SN 0300177361 through 0300241337)

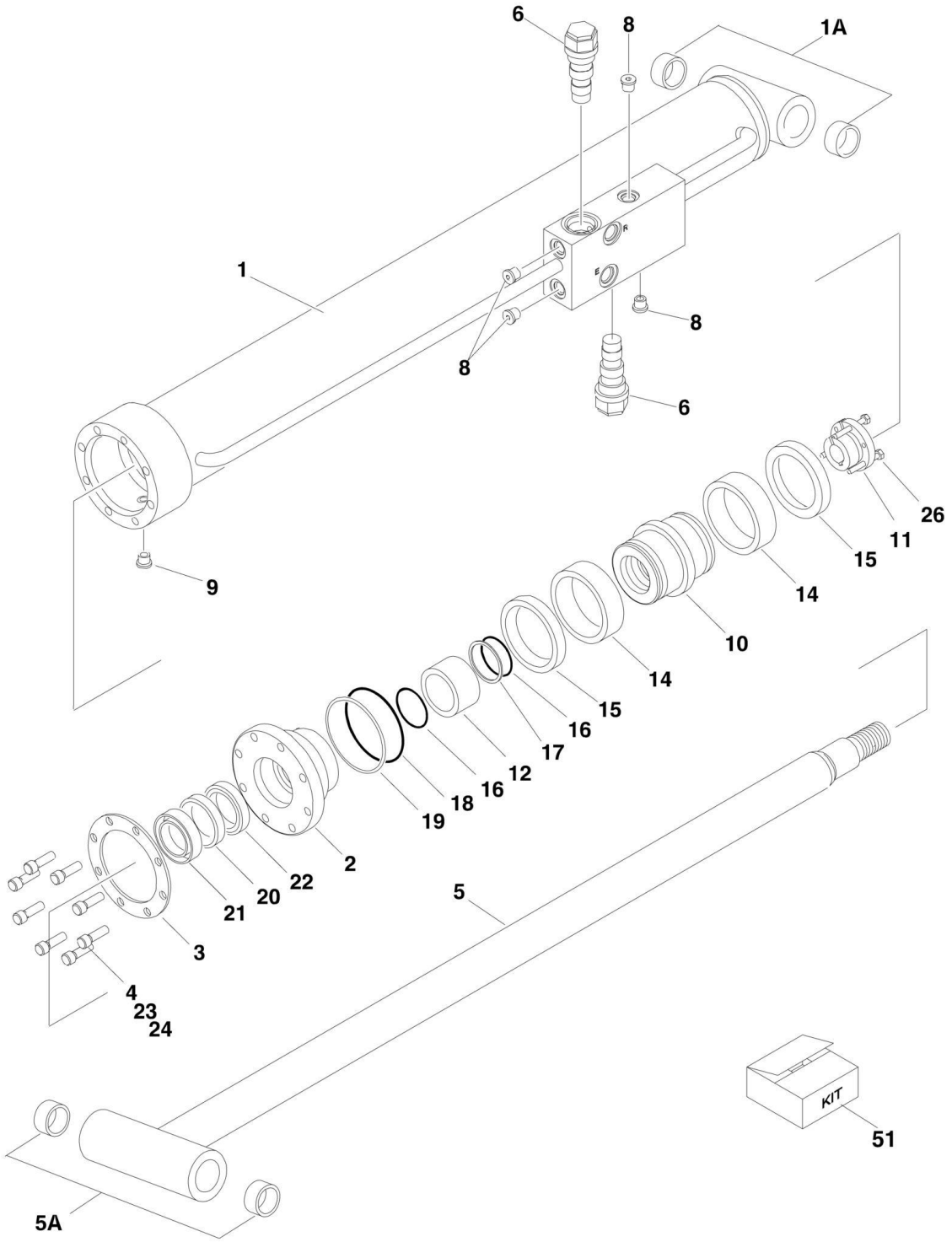

FIGURE 5-10. LIFT CYLINDER ASSEMBLY - JIB - 600AJ (SN 0300177361 through 0300241337)

ITEM	PART NUMBER	QTY	DESCRIPTION	REV
		Ref	**JIB LIFT CYLINDER ASSEMBLY - 600AJ ONLY**	
		Ref	Note: Original Cylinder may have been replaced with Service Replacement. Identify PN Stamped on Cylinder Before Ordering Parts.	
	1683609	Ref	Jib Lift Cylinder Assembly 600AJ without Arctic Package	I
	1001138792	Ref	Jib Lift Cylinder Assembly 600AJ (with Arctic Package)	A
1	1684089	1	Barrel	
1A	0962336	2	Bushing	
2	1683053	1	Head	
3	3760368	1	Ring, Washer	
4	3931516	8	Capscrew, Socket Head 5/16in-18NC x 1in	
5	1684090	1	Rod	
5A	0962336	2	Bushing	
6	4640509	2	Cartridge, Valve	
6	2900792	2	Seal Kit - 4640509 Valve	
8	2220883	2	Plug, O-Ring #4	
9	2220885	1	Plug, O-Ring #6	
10	3480210	1	Piston	
11	0961893	1	Bushing, Tapered	
12	4100100	1	Spacer, Tube	
14	See Note	NSS	Seal (Note: Use Item 51)	
15	See Note	NSS	Ring, Lock (Note: Use Item 51)	
16	See Note	NSS	O-Ring (Note: Use Item 51)	
17	See Note	NSS	Ring, Back-up (Note: Use Item 51)	
18	See Note	NSS	O-Ring (Note: Use Item 51)	
19	See Note	NSS	Ring, Back-up (Note: Use Item 51)	
20	See Note	NSS	Seal, Rod (Note: Use Item 51)	
21	See Note	NSS	Wiper (Note: Use Item 51)	
22	See Note	NSS	Ring, Wear (Note: Use Item 51)	
23	0100011	AR	Compound, Locking	
24	0100038	AR	Primer, Locking	
26	0630534	3	Bolt #10 - 24NC x 1in	
51		Ref	Seal Kit Options (Includes Items 14-22)	
51	2901303	1	Seal Kit without Arctic Package	
51	1001138795	1	Seal Kit with Arctic Package	

FIGURE 5-11. LIFT CYLINDER ASSEMBLY - JIB - 600AJ (SN 0300241338 through 0300244755)

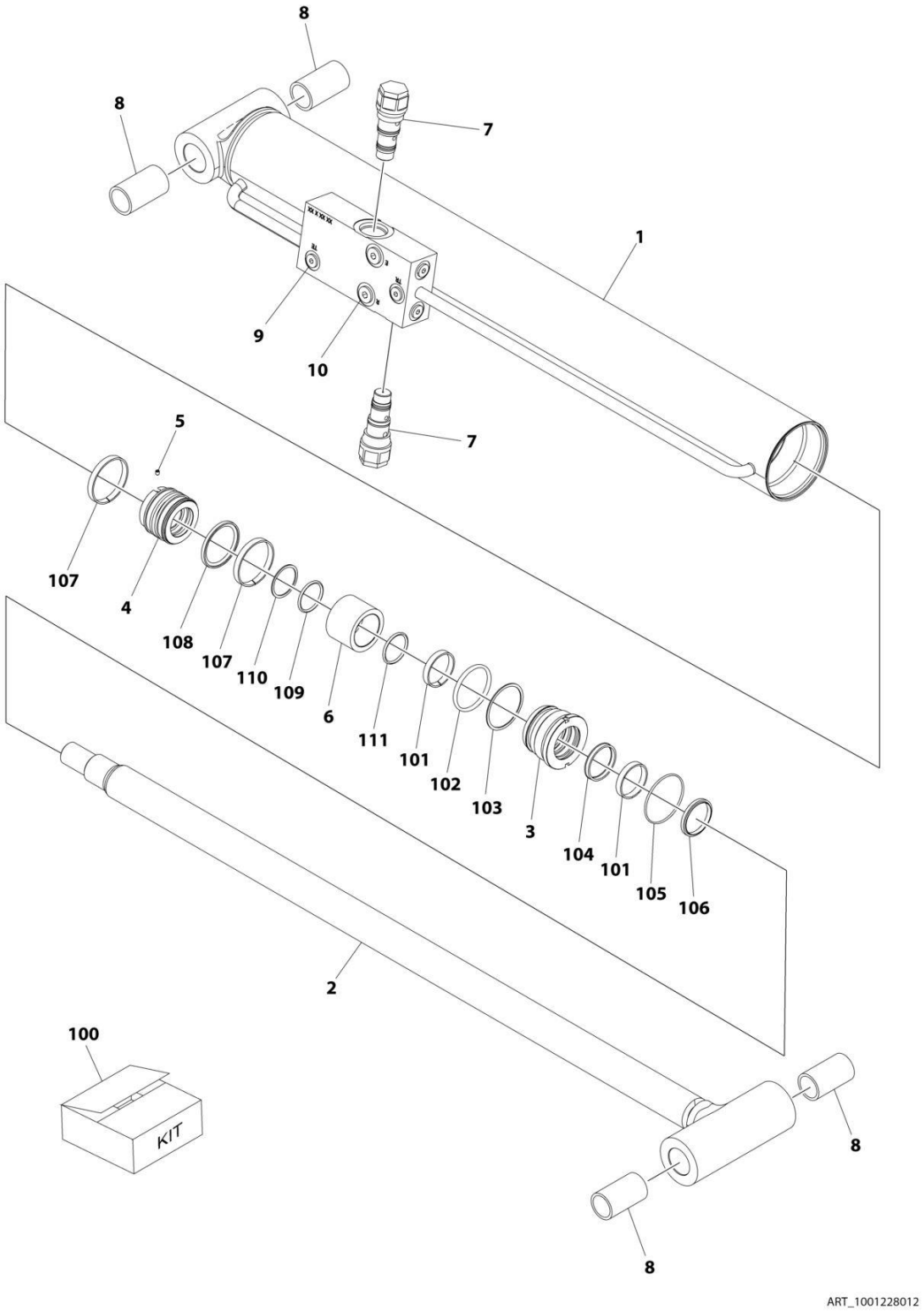

FIGURE 5-11. LIFT CYLINDER ASSEMBLY - JIB - 600AJ (SN 0300241338 through 0300244755)

ITEM	PART NUMBER	QTY	DESCRIPTION	REV
	1001228012	Ref	LIFT CYLINDER ASSEMBLY - JIB	C
		Ref	Note: Original Cylinder May Have Been Replaced with Service Replacement. Identify PN Stamped on Cylinder Before Ordering Parts.	
1	See Note	NSS	Barrel (Note: Not Available for Purchase)	
2	70006572	1	Rod	
3	70006571	1	Head	
4	70006570	1	Piston	
5	70023915	1	Screw	
6	70006569	1	Spacer	
7	4640509	2	Cartridge, Valve	
7	2900792	2	Seal Kit - 4640509 Valve	
8	0962336	4	Bushing	
9	2220883	6	Plug, O-Ring	
10	2220885	2	Plug, O-Ring	
100	70006568	1	Seal Kit (Includes Items 101-111)	
101	See Note	NSS	Ring, Wear (Note: Use Item 100)	
102	See Note	NSS	O-Ring (Note: Use Item 100)	
103	See Note	NSS	Ring, Back-up (Note: Use Item 100)	
104	See Note	NSS	Seal, Rod (Note: Use Item 100)	
105	See Note	NSS	O-Ring (Note: Use Item 100)	
106	See Note	NSS	Wiper (Note: Use Item 100)	
107	See Note	NSS	Ring, Wear (Note: Use Item 100)	
108	See Note	NSS	Seal (Note: Use Item 100)	
109	See Note	NSS	O-Ring (Note: Use Item 100)	
110	See Note	NSS	Ring, Back-up (Note: Use Item 100)	
111	See Note	NSS	O-Ring (Note: Use Item 100)	

FIGURE 5-12. LIFT CYLINDER ASSEMBLY - JIB - 600AJ (SN 0300244756 through 0300272252)

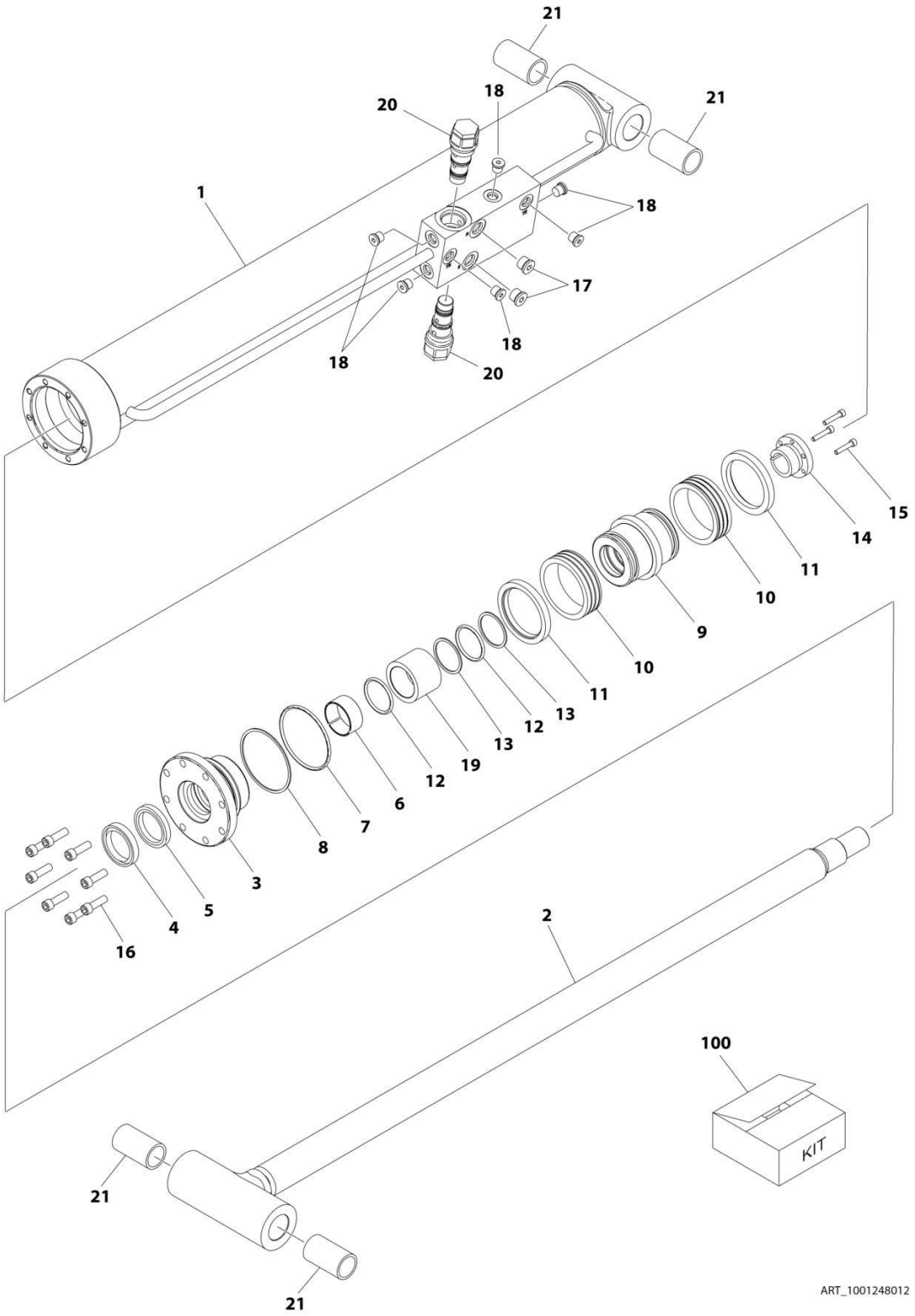

FIGURE 5-12. LIFT CYLINDER ASSEMBLY - JIB - 600AJ (SN 0300244756 through 0300272252)

ITEM	PART NUMBER	QTY	DESCRIPTION	REV
	1001248012	Ref	LIFT CYLINDER ASSEMBLY - JIB	C
		Ref	Note: Original Cylinder May Have Been Replaced with Service Replacement. Identify PN Stamped on Cylinder Before Ordering Parts.	
1	See Note	NSS	Barrel (Note: Not Available for Purchase)	
2	70006734	1	Rod	
3	70006649	1	Head	
4	See Note	NSS	Wiper (Note: Use Item 100)	
5	See Note	NSS	Seal, Rod (Note: Use Item 100)	
6	See Note	NSS	Ring, Wear (Note: Use Item 100)	
7	See Note	NSS	O-Ring (Note: Use Item 100)	
8	See Note	NSS	Ring, Back-up (Note: Use Item 100)	
9	70006650	1	Piston	
10	See Note	NSS	Seal (Note: Use Item 100)	
11	See Note	NSS	Ring, Lock (Note: Use Item 100)	
12	See Note	NSS	O-Ring (Note: Use Item 100)	
13	See Note	NSS	Ring, Back-up (Note: Use Item 100)	
14	0961893	1	Bushing, Tapered	
15	0630534	3	Capscrew, Socket Head #10 x 1	
16	70006735	8	Capscrew 5/16	
17	2220885	2	Plug, O-Ring	
18	2220883	6	Plug, O-Ring	
19	70006736	1	Spacer	
20	4640509	2	Cartridge, Valve	
20	2900792	2	Seal Kit - 4640509 Valve	
21	0962336	4	Bushing	
100	1001138795	1	Seal Kit (Includes Items 4-8 & 10-13)	

FIGURE 5-13. LIFT CYLINDER ASSEMBLY - MAIN BOOM (SN 0300177361 through 0300237381)

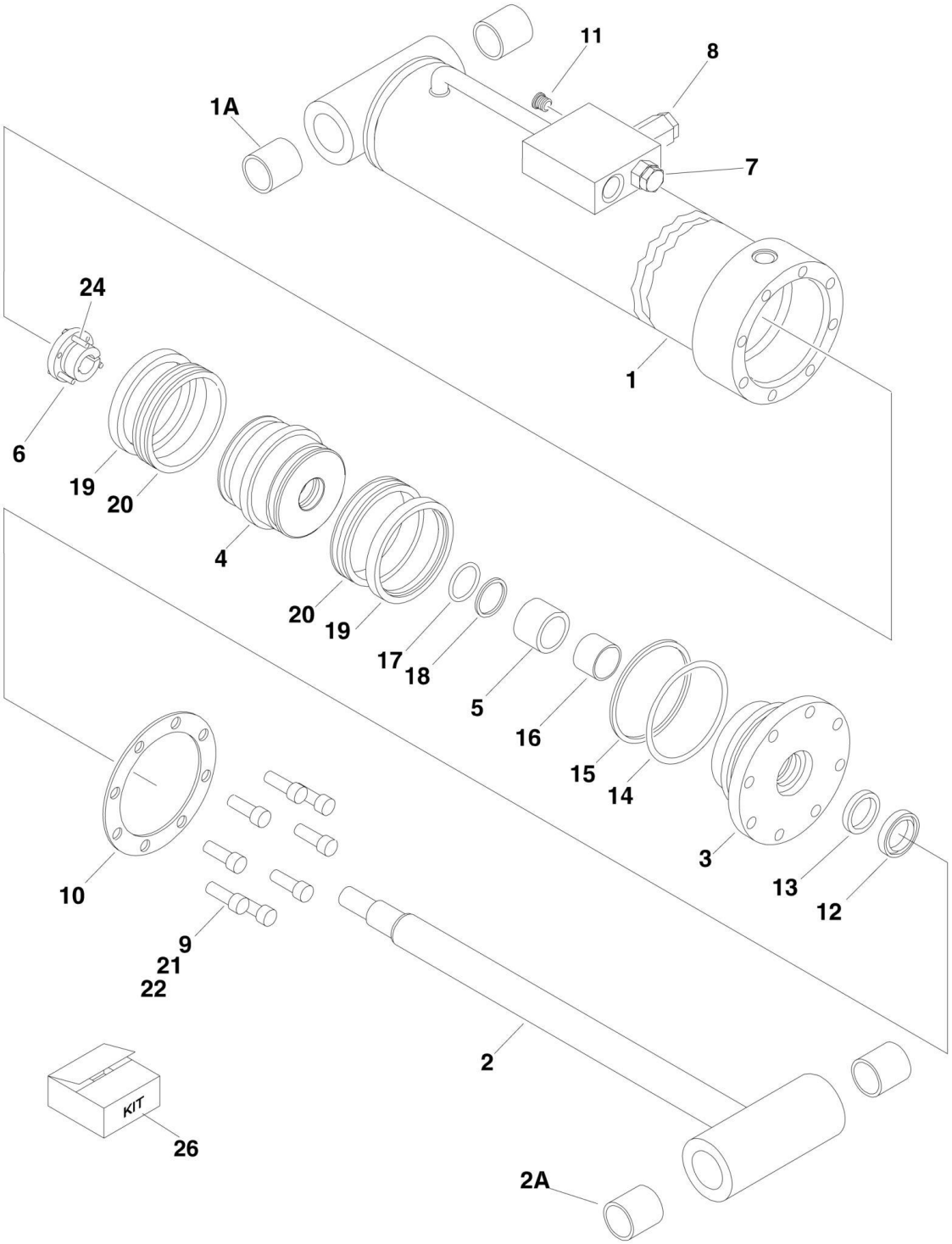

FIGURE 5-13. LIFT CYLINDER ASSEMBLY - MAIN BOOM (SN 0300177361 through 0300237381)

ITEM	PART NUMBER	QTY	DESCRIPTION	REV
	1683294	Ref	**LIFT CYLINDER ASSEMBLY - MAIN BOOM**	J
		Ref	Note: Original Cylinder may have been replaced with Service Replacement. Identify PN Stamped on Cylinder Before Ordering Parts.	
1	1684001	1	Barrel	
1A	0961948	2	Bushing	
2	1684005	1	Rod	
2A	0961948	2	Bushing	
3	1683061	1	Head	
4	3480211	1	Piston	
5	4566408	1	Spacer	
6	0961897	1	Bushing, Tapered	
7	4640438	1	Cartridge, Valve	
7	2900770	1	Seal Kit - 4640438 Valve	
8	4640509	1	Cartridge, Valve	
8	2900792	1	Seal Kit - 4640509 Valve	
9	3931720	8	Capscrew, Socket Head 7/16in-14NC x 1-1/4in	
10	3760370	1	Ring, Washer	
11	2220883	1	Plug, O-Ring #6	
12	See Note	NSS	Wiper (Note: Use Item 26)	
13	See Note	NSS	Seal, Rod (Note: Use Item 26)	
14	See Note	NSS	O-Ring (Note: Use Item 26)	
15	See Note	NSS	Ring, Back-up (Note: Use Item 26)	
16	See Note	NSS	Ring, Wear (Note: Use Item 26)	
17	See Note	NSS	O-Ring (Note: Use Item 26)	
18	See Note	NSS	Ring, Back-up (Note: Use Item 26)	
19	See Note	NSS	Ring, Lock (Note: Use Item 26)	
20	See Note	NSS	Seal (Note: Use Item 26)	
21	0100011	AR	Compound, Locking	
22	0100038	AR	Primer, Locking	
24	0630535	3	Bolt 1/4in-20NC x 1-1/8in	
26	2901273	1	Seal Kit (Includes Items 12-20)	

FIGURE 5-14. LIFT CYLINDER ASSEMBLY - MAIN BOOM (SN 0300237382 through 0300272252)

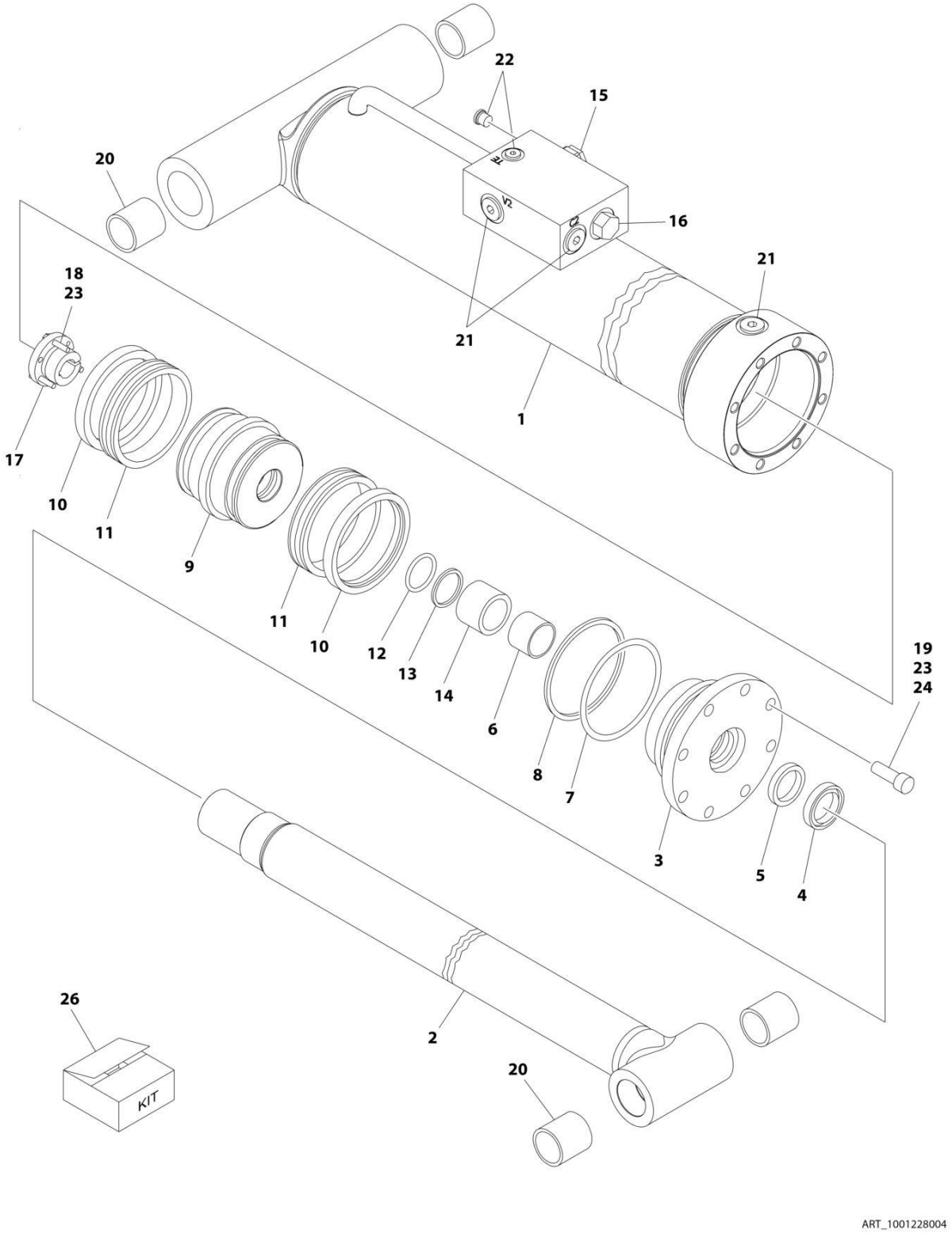

FIGURE 5-14. LIFT CYLINDER ASSEMBLY - MAIN BOOM (SN 0300237382 through 0300272252)

ITEM	PART NUMBER	QTY	DESCRIPTION	REV
	1001228004	Ref	LIFT CYLINDER ASSEMBLY - MAIN BOOM	A
		Ref	Note: Original Cylinder may have been replaced with Service Replacement. Identify PN Stamped on Cylinder Before Ordering Parts.	
1	See Note	NSS	Barrel (Note: Not Available for Purchase)	
2	70006481	1	Rod	
3	70006480	1	Head	
4	See Note	NSS	Wiper (Note: Use Item 26)	
5	See Note	NSS	Seal, Rod (Note: Use Item 26)	
6	See Note	NSS	Ring, Wear (Note: Use Item 26)	
7	See Note	NSS	O-Ring (Note: Use Item 26)	
8	See Note	NSS	Ring, Back-up (Note: Use Item 26)	
9	70006479	1	Piston	
10	See Note	NSS	Ring, Lock (Note: Use Item 26)	
11	See Note	NSS	Seal (Note: Use Item 26)	
12	See Note	NSS	O-Ring (Note: Use Item 26)	
13	See Note	NSS	Ring, Back-up (Note: Use Item 26)	
14	70006478	1	Spacer	
15	4640509	1	Cartridge, Valve	
15	2900792	1	Seal Kit - 4640509 Valve	
16	4640438	1	Cartridge, Valve	
16	2900770	1	Seal Kit - 4640438 Valve	
17	0961897	1	Bushing, Tapered	
18	0630535	3	Bolt 1/4 x 1-1/8	
19	3931720	8	Capscrew, Socket Head 7/16 x 1-1/4	
20	0961948	2	Bushing	
21	2220886	4	Plug, O-Ring	
22	2220883	3	Plug, O-Ring	
23	0100011	AR	Compound, Locking	
24	0100038	AR	Primer, Locking	
26	2901273	1	Seal Kit (Includes Items 4-8 & 10-13)	

FIGURE 5-15. LIFT CYLINDER ASSEMBLY - TOWER BOOM (SN 0300177361 through 0300239707)

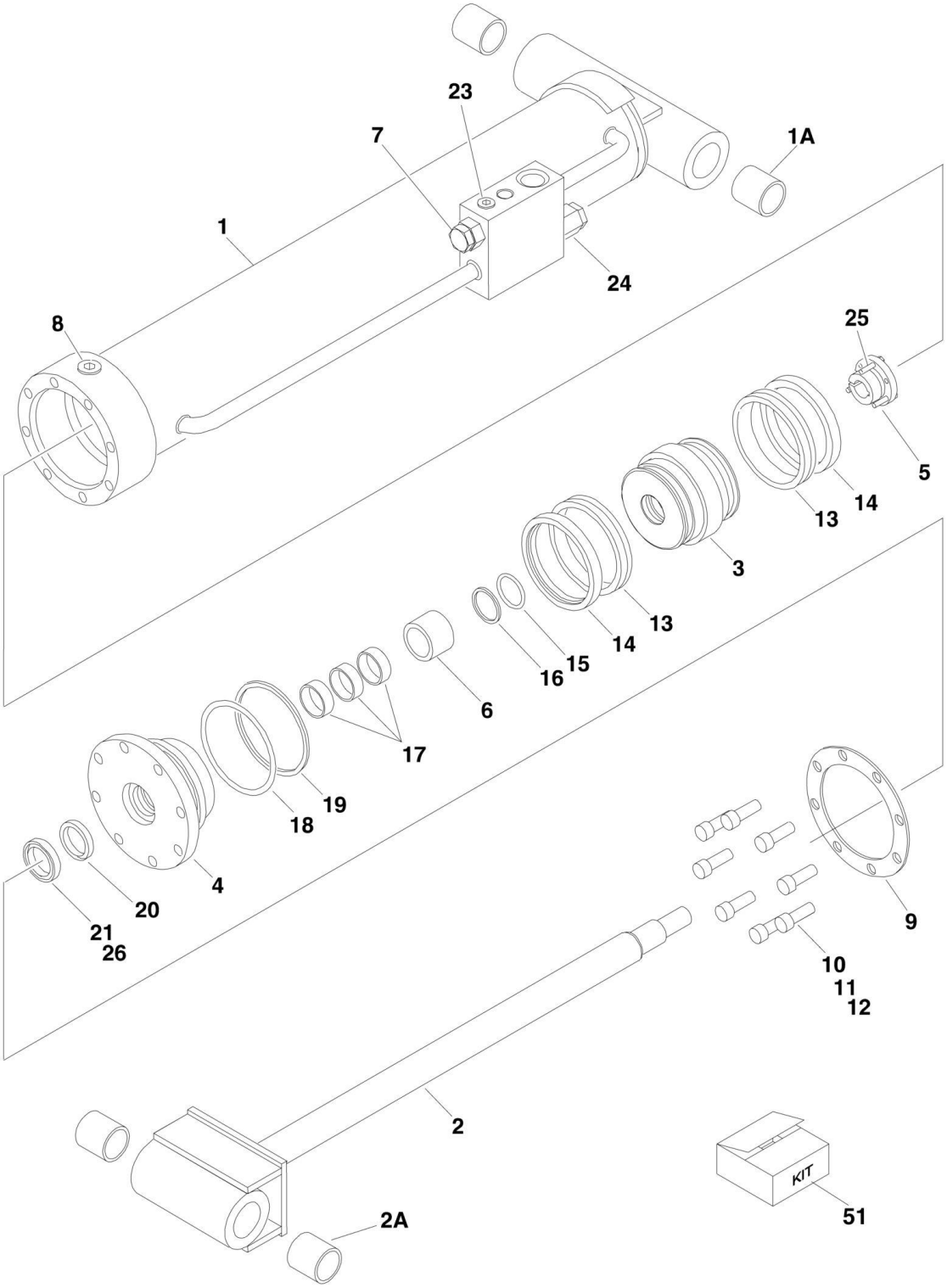

FIGURE 5-15. LIFT CYLINDER ASSEMBLY - TOWER BOOM (SN 0300177361 through 0300239707)

ITEM	PART NUMBER	QTY	DESCRIPTION	REV
	1683288	Ref	**LIFT CYLINDER ASSEMBLY - TOWER BOOM**	M
		Ref	Note: Original Cylinder may have been replaced with Service Replacement. Identify PN Stamped on Cylinder Before Ordering Parts.	
1	1684017	1	Barrel	
1A	0961949	2	Bushing	
2	1684019	1	Rod	
2A	0961949	2	Bushing	
3	3480216	1	Piston	
4	1683069	1	Head	
5	0961899	1	Bushing, Tapered	
6	4566667	1	Spacer	
7	4640605	1	Cartridge, Valve	
7	2900792	1	Seal Kit - 4640605 Valve	
8	2220888	1	Plug	
9	3760384	1	Ring, Washer	
10	3932240	8	Capscrew 3/4 x 2-1/2	
11	0100011	AR	Compound, Locking	
12	0100038	AR	Primer, Locking	
13	See Note	NSS	Seal (Note: Use Item 51)	
14	See Note	NSS	Ring, Lock (Note: Use Item 51)	
15	See Note	NSS	O-Ring (Note: Use Item 51)	
16	See Note	NSS	Ring, Back-Up (Note: Use Item 51)	
17	See Note	NSS	Ring, Wear (Note: Use Item 51)	
18	See Note	NSS	O-Ring (Note: Use Item 51)	
19	See Note	NSS	Ring, Back-Up (Note: Use Item 51)	
20	See Note	NSS	Seal, Rod (Note: Use Item 51)	
21	See Note	NSS	Wiper (Note: Use Item 51)	
23	2220883	2	Plug	
24	4640509	1	Cartridge, Valve	
24	2900792	1	Seal Kit - 4640509 Valve	
25	0630536	3	Bolt 3/8 x 1-1/2	
26	0100063	AR	Adhesive	
51	2901322	1	Seal Kit (Includes Items 13-21)	

FIGURE 5-16. LIFT CYLINDER ASSEMBLY - TOWER BOOM (SN 03000239708 through 0300272252)

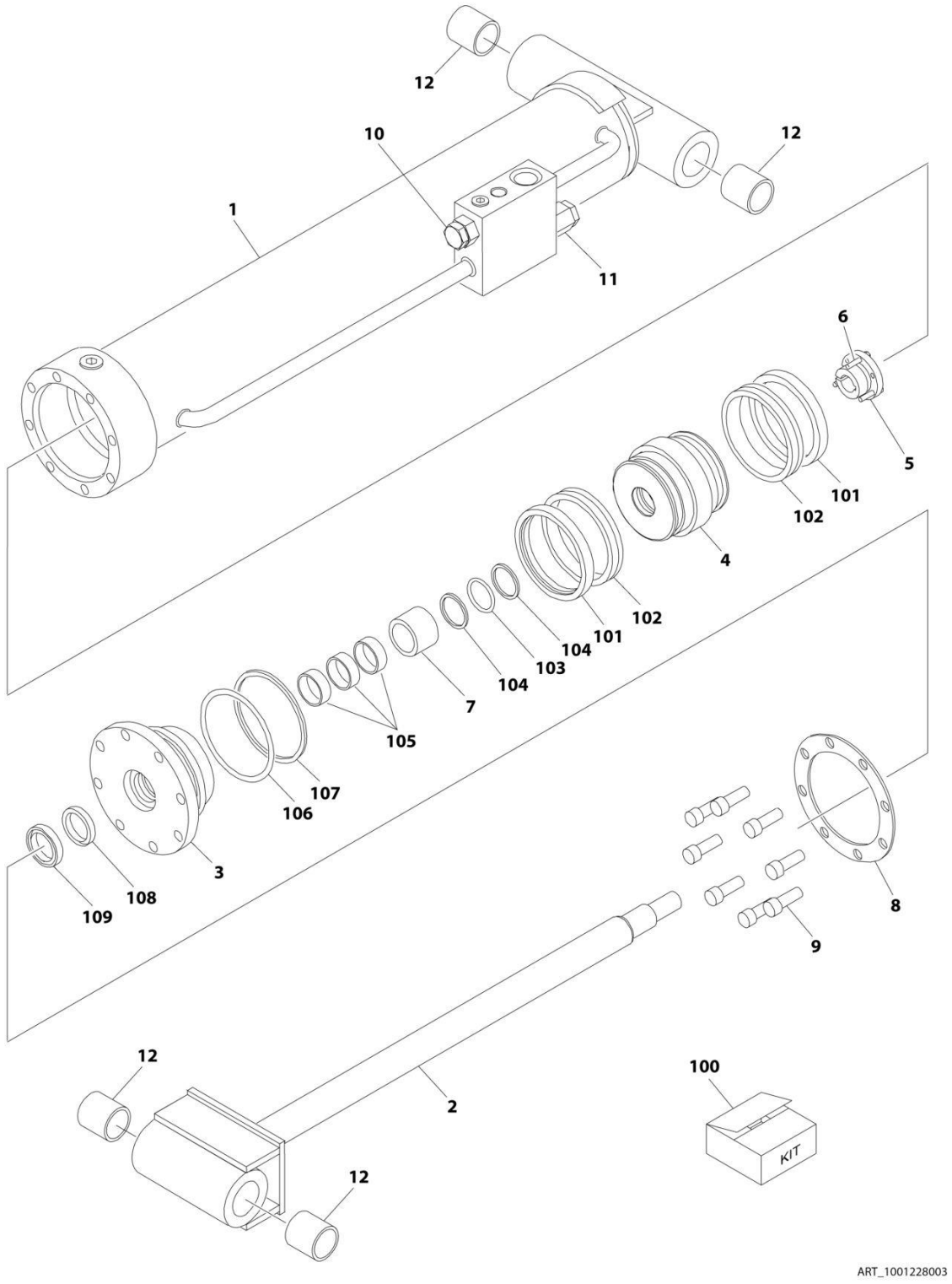

FIGURE 5-16. LIFT CYLINDER ASSEMBLY - TOWER BOOM (SN 03000239708 through 0300272252)

ITEM	PART NUMBER	QTY	DESCRIPTION	REV
	1001228003	Ref	LIFT CYLINDER ASSEMBLY	D
		Ref	Note: Original Cylinder may have been replaced with Service Replacement. Identify PN Stamped on Cylinder Before Ordering Parts.	
1	See Note	NSS	Barrel (Note: Not Available For Purchase)	
2	70006374	1	Rod	
3	70006373	1	Head	
4	70006372	1	Piston	
5	70006371	1	Bushing, Tapered	
6	0630536	3	Bolt 3/8 x 1-1/2	
7	70006370	1	Spacer	
8	70006369	1	Ring, Washer	
9	3932240	8	Capscrew 3/4 x 2-1/2	
10	4640605	1	Cartridge, Valve	
10	2900792	1	Seal Kit - 4640605 Valve	
11	4640509	1	Cartridge, Valve	
11	2900792	1	Seal Kit - 4640509 Valve	
12	0961949	4	Bushing	
100	2901322	1	Seal Kit (Includes Items 101-109)	
101	See Note	NSS	Ring, Lock (Note: Use Item 100)	
102	See Note	NSS	Seal (Note: Use Item 100)	
103	See Note	NSS	O-Ring (Note: Use Item 100)	
104	See Note	NSS	Ring, Back-up (Note: Use Item 100)	
105	See Note	NSS	Ring, Wear (Note: Use Item 100)	
106	See Note	NSS	O-Ring (Note: Use Item 100)	
107	See Note	NSS	Ring, Back-up (Note: Use Item 100)	
108	See Note	NSS	Seal, Rod (Note: Use Item 100)	
109	See Note	NSS	Wiper (Note: Use Item 100)	

FIGURE 5-17. MASTER CYLINDER ASSEMBLY (SN 0300177361 through 0300241337)

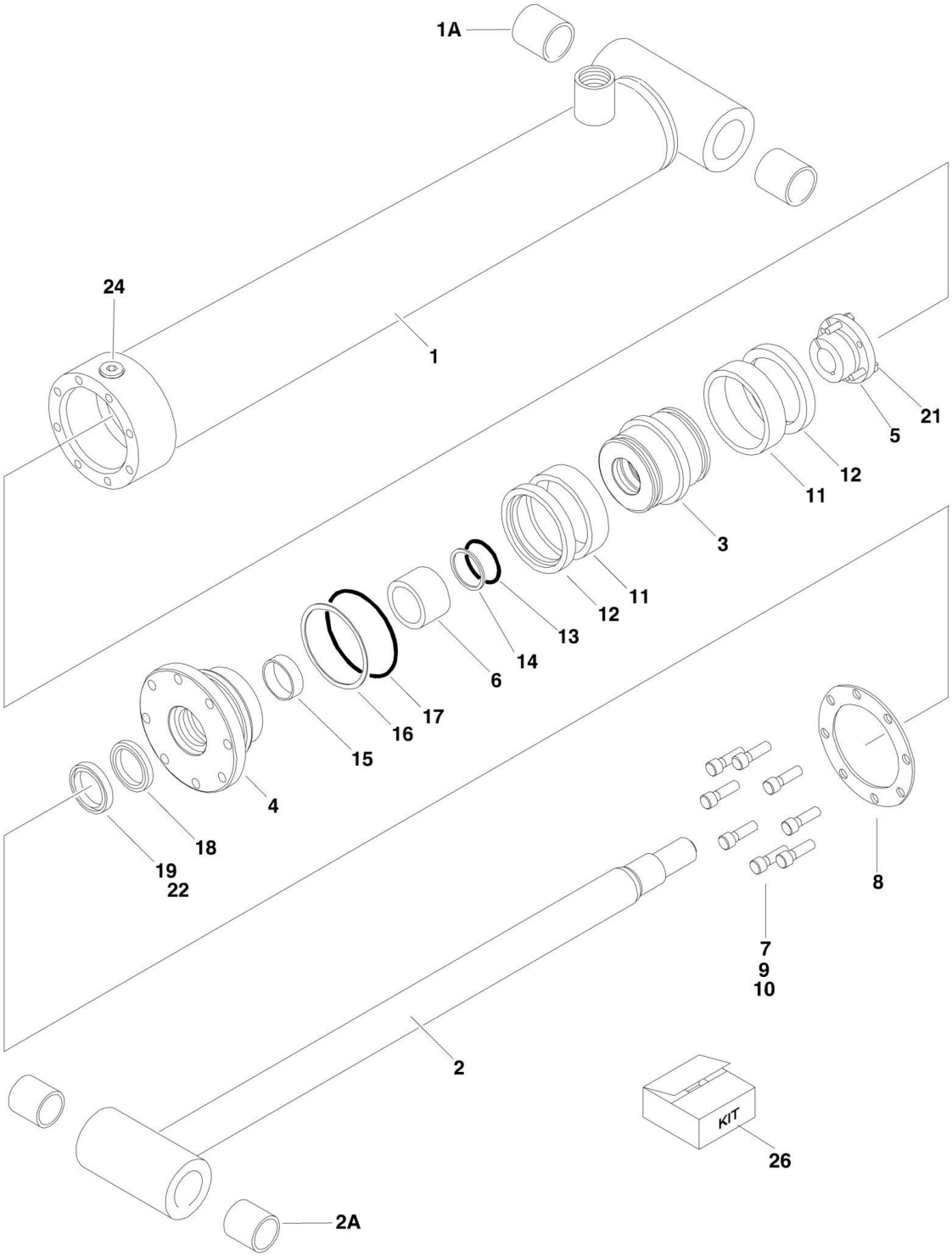

FIGURE 5-17. MASTER CYLINDER ASSEMBLY (SN 0300177361 through 0300241337)

ITEM	PART NUMBER	QTY	DESCRIPTION	REV
		Ref	**MASTER CYLINDER ASSEMBLY**	
		Ref	Note: Original Cylinder may have been replaced with Service Replacement. Identify PN Stamped on Cylinder Before Ordering Parts.	
	1683266	Ref	Master Cylinder Assembly 600A	I
	1683263	Ref	Master Cylinder Assembly 600AJ without Arctic Package	L
	1001138799	Ref	Master Cylinder Assembly 600AJ with Arctic Package	B
1		Ref	Barrel Options:	
1	1683972	1	Barrel 600A (Note: Includes Item 1A)	
1	1683949	1	Barrel 600AJ (Note: Item 1A not included - Purchase Separately)	
1A		Ref	Bushing Options:	
1A	0961947	2	Bushing 600A - Bushing	
1A	0961951	2	Bushing 600AJ - Bushing	
2		Ref	Rod Options:	
2	1683973	1	Rod 600A (Note: Includes Item 2A)	
2	1683962	1	Rod 600AJ (Note: Item 2A not included - Purchase Separately)	
2A		Ref	Bushing Options:	
2A	0961947	2	Bushing 600A - Bushing	
2A	0961951	2	Bushing 600AJ - Bushing	
3		Ref	Piston Options:	
3	3480210	1	Piston 600A	
3	3480188	1	Piston 600AJ	
4		Ref	Head Options:	
4	1683053	1	Head 600A	
4	1683055	1	Head 600AJ	
5		Ref	Bushing, Tapered Options (Use Item 21 in place of supplied bolts)	
5	0961893	1	Bushing, Tapered 600A	
5	0961894	1	Bushing, Tapered 600AJ	
6	4566468	1	Spacer	
7		Ref	Capscrew, Socket Head Options:	
7	3931516	8	Capscrew, Socket Head 600A - Capscrew, Socket Head 5/16in-18NC x 1in	
7	3931620	8	Capscrew, Socket Head 600AJ - Capscrew, Socket Head 3/8in-16NC x 1-1/4in	
8		Ref	Ring, Washer Options:	
8	3760368	1	Ring, Washer 600A	
8	3760369	1	Ring, Washer 600AJ	
9	0100011	AR	Compound, Locking	
10	0100038	AR	Primer, Locking	
11	See Note	NSS	Seal (Note: Use Item 26)	
12	See Note	NSS	Ring, Lock (Note: Use Item 26)	
13	See Note	NSS	O-Ring (Note: Use Item 26)	
14	See Note	NSS	Ring, Back-up (Note: Use Item 26)	
15	See Note	NSS	Ring, Wear (Note: Use Item 26)	
16	See Note	NSS	O-Ring (Note: Use Item 26)	
17	See Note	NSS	Ring, Back-up (Note: Use Item 26)	
18	See Note	NSS	Seal, Rod (Note: Use Item 26)	
19	See Note	NSS	Wiper (Note: Use Item 26)	
21		Ref	Bolt Options:	

SECTION 5 - CYLINDER

ITEM	PART NUMBER	QTY	DESCRIPTION	REV
21	0630534	3	Bolt 600A - Bolt #10 - 24NC x 1in	
21	0630535	3	Bolt 600AJ - Bolt 1/4in-20NC x 1-1/8in	
22	0100063	AR	Adhesive	
24	2220885	1	Plug, O-Ring #6 (600AJ Only)	
26		Ref	Seal Kit Options (Includes Items 11-19)	
26	2901303	1	Seal Kit 600A	
26	2901301	1	Seal Kit 600AJ without Arctic Package	
26	1001138796	1	Seal Kit 600AJ with Arctic Package	

FIGURE 5-18. MASTER CYLINDER ASSEMBLY - 600A (SN 0300241338 through 0300272252)

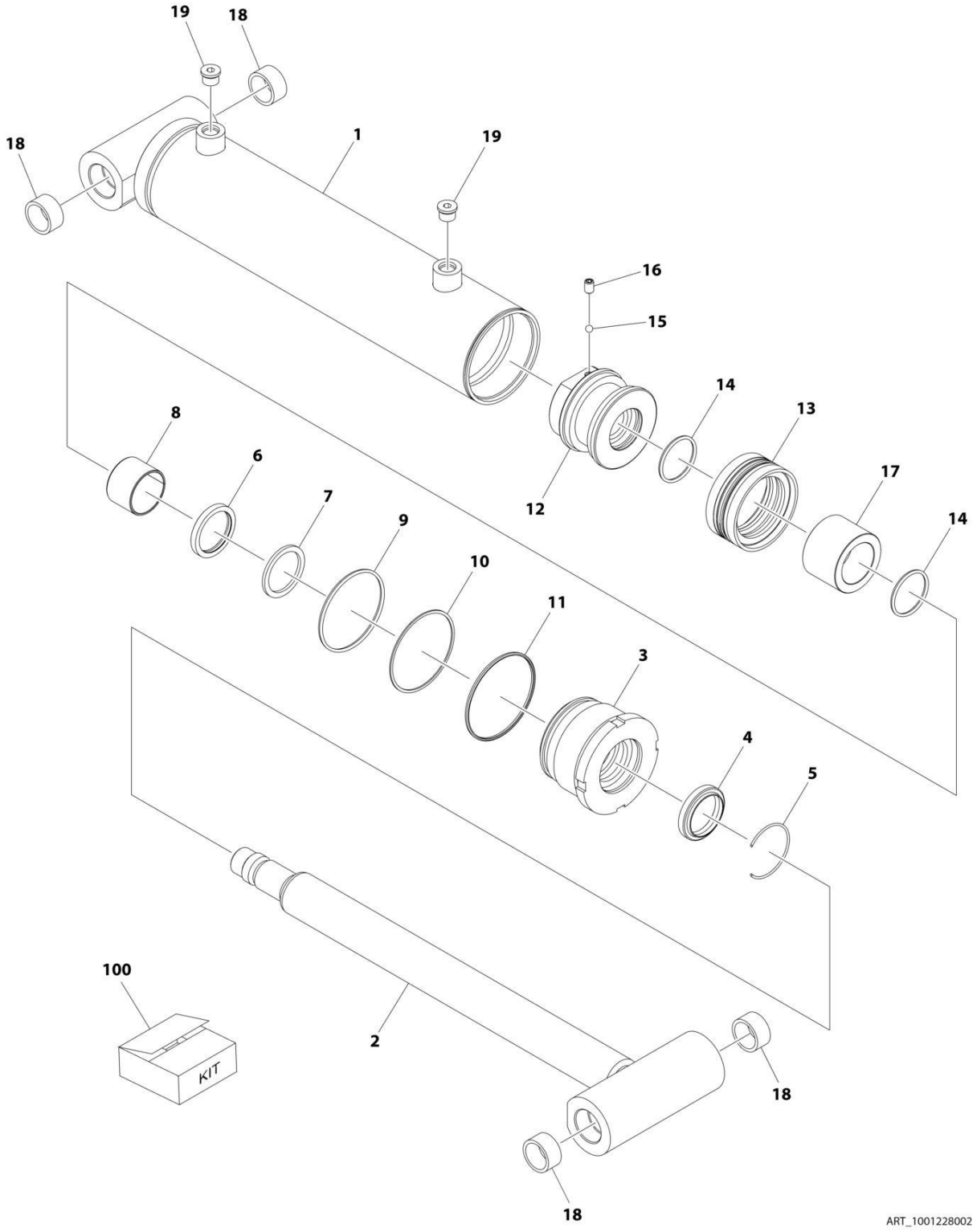

FIGURE 5-18. MASTER CYLINDER ASSEMBLY - 600A (SN 0300241338 through 0300272252)

ITEM	PART NUMBER	QTY	DESCRIPTION	REV
	1001228002	Ref	MASTER CYLINDER ASSEMBLY	B
		Ref	Note: Original Cylinder May Have Been Replaced with Service Replacement. Identify PN Stamped on Cylinder Before Ordering Parts.	
1	See Note	NSS	Barrel (Note: Not Available for Purchase)	
2	70006774	1	Rod	
3	70006599	1	Head	
4	See Note	NSS	Wiper Rod (Note: Use Item 100)	
5	70002373	1	Ring, Retaining	
6	See Note	NSS	Seal, Rod (Note: Use Item 100)	
7	See Note	NSS	Ring, Back-up (Note: Use Item 100)	
8	See Note	NSS	Ring, Wear (Note: Use Item 100)	
9	See Note	NSS	O-Ring (Note: Use Item 100)	
10	See Note	NSS	Ring, Back-up (Note: Use Item 100)	
11	See Note	NSS	O-Ring (Note: Use Item 100)	
12	70006597	1	Piston	
13	See Note	NSS	Seal Piston (Note: Use Item 100)	
14	See Note	NSS	O-Ring (Note: Use Item 100)	
15	70022564	1	Ball	
16	70006601	1	Setscrew	
17	70006775	1	Spacer	
18	0961947	4	Bushing	
19	70023371	2	Plug, O-Ring	
100	70006776	1	Seal Kit (Includes Items 4, 6-11, 13 & 14)	

FIGURE 5-19. MASTER CYLINDER ASSEMBLY - 600AJ (SN 0300241338 through 0300272252)

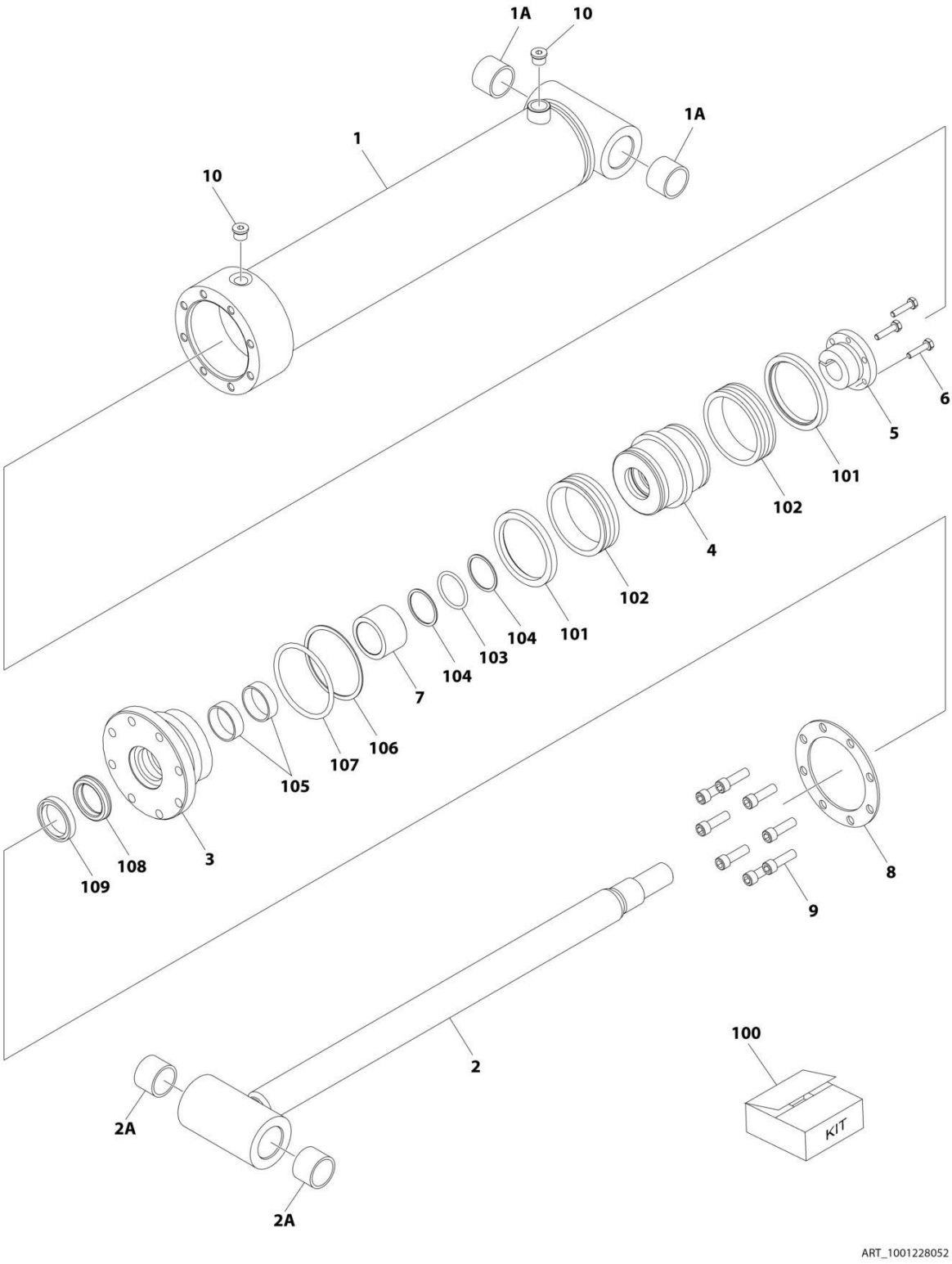

FIGURE 5-19. MASTER CYLINDER ASSEMBLY - 600AJ (SN 0300241338 through 0300272252)

ITEM	PART NUMBER	QTY	DESCRIPTION	REV
	1001228052	Ref	MASTER CYLINDER ASSEMBLY	B
		Ref	Note: Original Cylinder May Have Been Replaced with Service Replacement. Identify PN Stamped on Cylinder Before Ordering Parts.	
1	See Note	NSS	Barrel (Note: Not Available for Purchase)	
1A	0961951	2	Bushing	
2	70006447	1	Rod Weldment	
2A	0961951	2	Bushing	
3	70006446	1	Head	
4	70006445	1	Piston	
5	70006444	1	Bushing, Tapered	
6	0630535	3	Capscrew 1/4 x 1-1/8	
7	70006443	1	Spacer	
8	70006442	1	Ring, Washer	
9	3931620	8	Capscrew 3/8 x 1-1/4	
10	2220885	2	Plug, O-Ring	
100	1001138796	1	Seal Kit (Includes Items 101-109)	
101	See Note	NSS	Ring, Wear (Note: Use Item 100)	
102	See Note	NSS	Seal, Piston (Note: Use Item 100)	
103	See Note	NSS	O-Ring (Note: Use Item 100)	
104	See Note	NSS	Ring, Back-up (Note: Use Item 100)	
105	See Note	NSS	Ring, Wear (Note: Use Item 100)	
106	See Note	NSS	O-Ring (Note: Use Item 100)	
107	See Note	NSS	Ring, Back-up (Note: Use Item 100)	
108	See Note	NSS	Seal, Rod (Note: Use Item 100)	
109	See Note	NSS	Wiper, Rod (Note: Use Item 100)	

FIGURE 5-20. STEER CYLINDER ASSEMBLY (7FT/2.1M WIDE MACHINES)

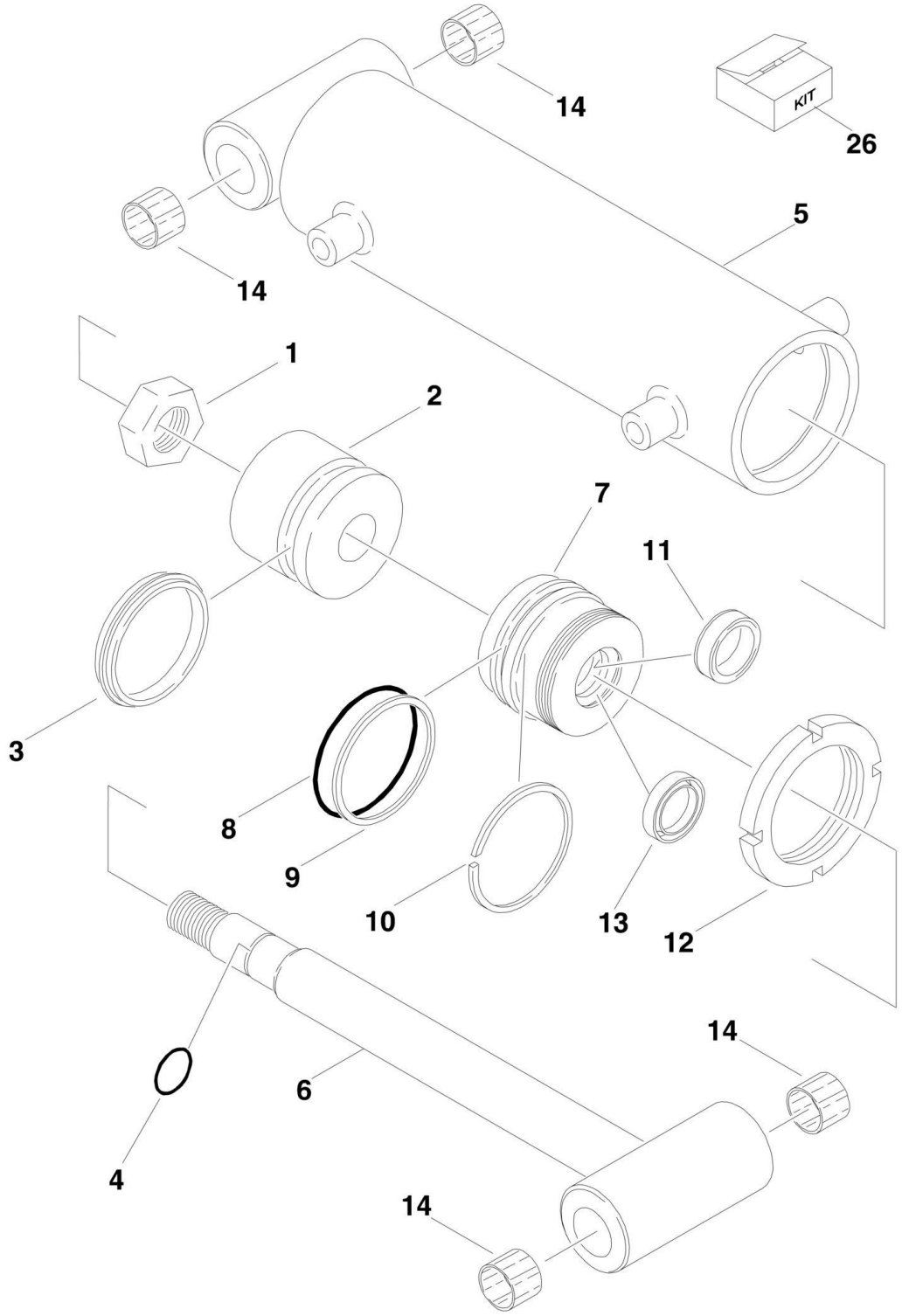

FIGURE 5-20. STEER CYLINDER ASSEMBLY (7FT/2.1M WIDE MACHINES)

ITEM	PART NUMBER	QTY	DESCRIPTION	REV
	1684418	Ref	**STEER CYLINDER ASSEMBLY (7FT/2.1M WIDE MACHINES)**	A
		Ref	Note: Original Cylinder may have been replaced with Service Replacement. Identify PN Stamped on Cylinder Before Ordering Parts.	
1	7001626	1	Locknut	
2	7001627	1	Piston	
3	7001625	1	Seal	
4	7001625	1	O-Ring	
5	See Note	1	Barrel (Note: Not Available for Purchase)	
6	7023038	1	Rod	
7	7001629	1	Guide	
8	See Note	NSS	O-Ring (Note: Use Item 26)	
9	See Note	NSS	Ring, Back-Up (Note: Use Item 26)	
10	See Note	NSS	Ring, Retaining (Note: Use Item 26)	
11	See Note	NSS	Seal, Lip (Note: Use Item 26)	
12	7001630	1	Nut, Spanner	
13	See Note	NSS	Ring, Wiper (Note: Use Item 26)	
14	0961890	4	Bushing	
26	7001625	1	Seal Kit (Includes Items 3, 4, 8-11 & 13)	

FIGURE 5-21. STEER CYLINDER ASSEMBLY (8FT/2.4M WIDE MACHINES)

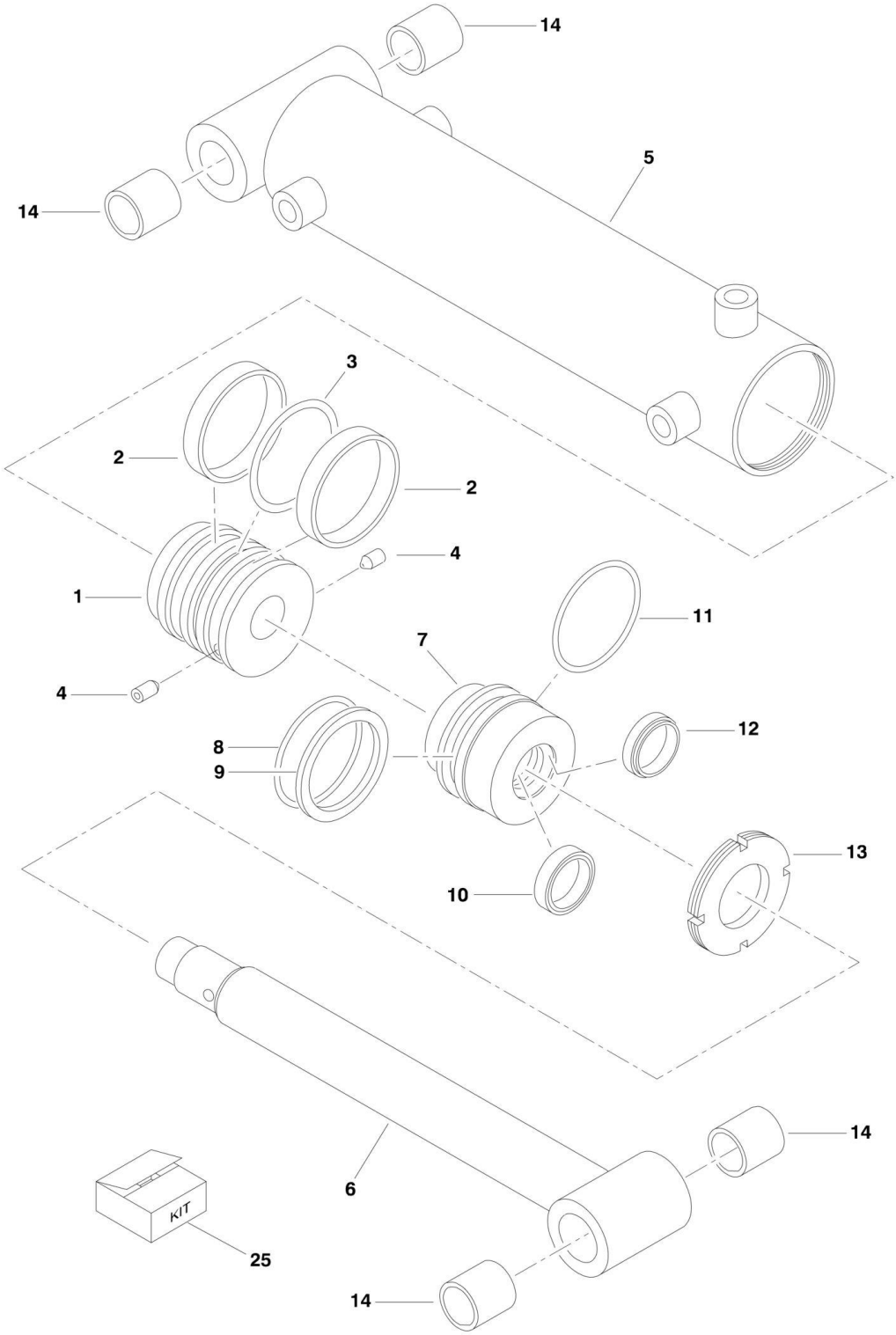

FIGURE 5-21. STEER CYLINDER ASSEMBLY (8FT/2.4M WIDE MACHINES)

ITEM	PART NUMBER	QTY	DESCRIPTION	REV
	1001097242	Ref	**STEER CYLINDER ASSEMBLY (8FT/2.4M WIDE MACHINES)**	A
		Ref	Note: Original Cylinder may have been replaced with Service Replacement. Identify PN Stamped on Cylinder Before Ordering Parts.	
1	70002752	1	Piston	
1	0100011	AR	Compound, Locking	
1	0100038	AR	Primer, Locking	
2	See Note	NSS	Seal (Note: Use Item 25)	
3	See Note	NSS	O-Ring (Note: Use Item 25)	
4	70002745	2	Setscrew	
5	70002753	1	Barrel	
6	70002754	1	Rod	
7	70002755	1	Head	
8	See Note	NSS	O-Ring (Note: Use Item 25)	
9	See Note	NSS	Ring, Back-Up (Note: Use Item 25)	
10	See Note	NSS	Seal (Note: Use Item 25)	
11	See Note	NSS	O-Ring (Note: Use Item 25)	
12	See Note	NSS	Wiper (Note: Use Item 25)	
13	70002756	1	Nut, Spanner	
13	0100011	AR	Compound, Locking	
13	0100038	AR	Primer, Locking	
14	0962356	4	Bushing	
25	70002757	1	Seal Kit (Includes Items 2, 3 & 8-12)	

FIGURE 5-22. TELESCOPE CYLINDER ASSEMBLY - MAIN BOOM (600A & 600AJ)

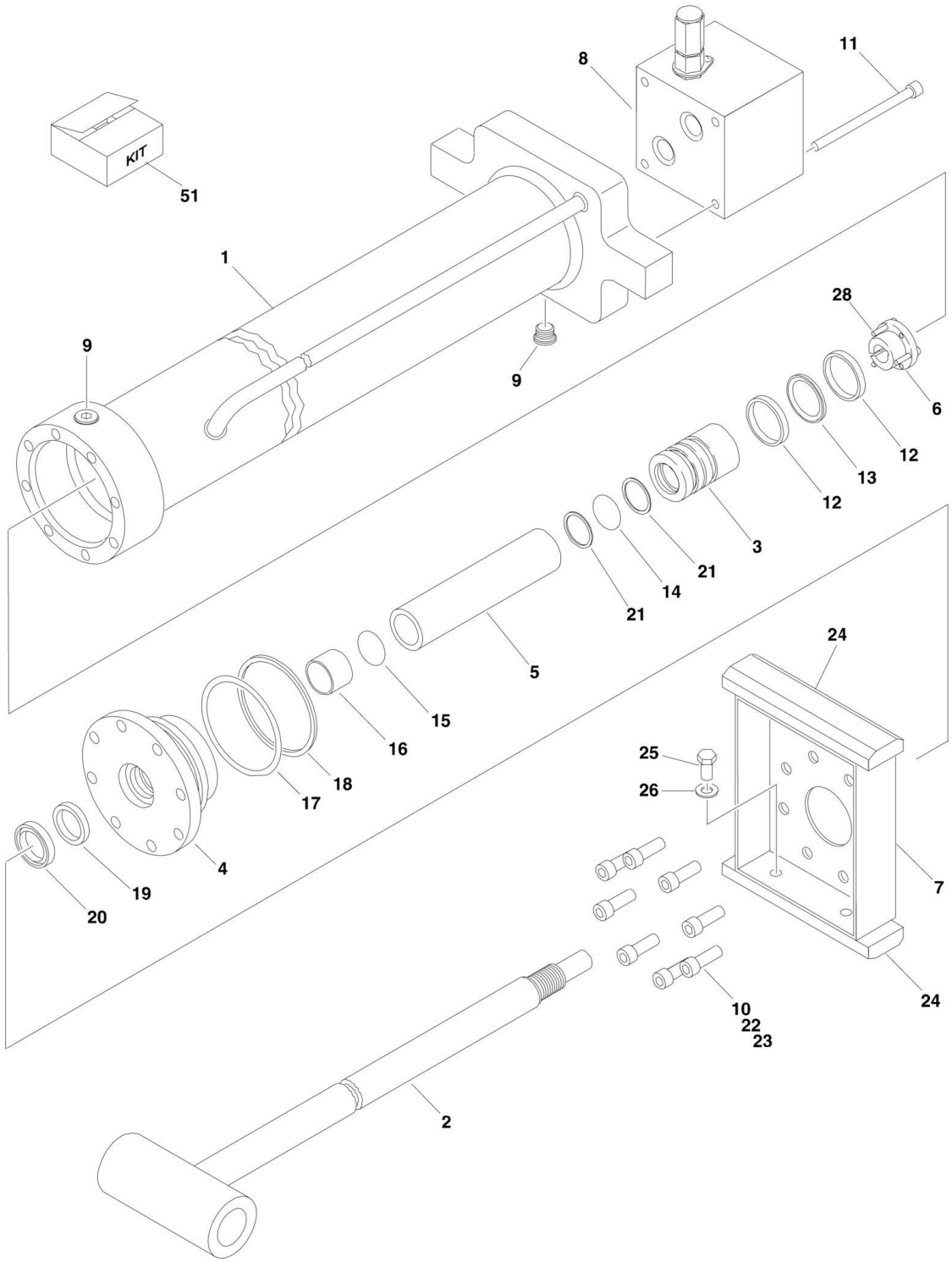

FIGURE 5-22. TELESCOPE CYLINDER ASSEMBLY - MAIN BOOM (600A & 600AJ)

ITEM	PART NUMBER	QTY	DESCRIPTION	REV
		Ref	**TELESCOPE CYLINDER ASSEMBLY - MAIN BOOM**	
		Ref	Note: Original Cylinder may have been replaced with Service Replacement. Identify PN Stamped on Cylinder Before Ordering Parts.	
	1683307	Ref	Telescope Cylinder Assembly 600A **(SN 0300177361 through 0300241337)**	H
	1683317	Ref	Telescope Cylinder Assembly 600AJ **(SN 0300177361 through 0300242728)**	6-H
1		Ref	Barrel Options:	
1	1683308	1	Barrel 600A	
1	1683318	1	Barrel 600AJ	
2		Ref	Rod Options:	
2	1684308	1	Rod 600A	
2	1684310	1	Rod 600AJ	
3	3480212	1	Piston	
4	1683054	1	Head	
5	4566425	1	Spacer	
6	0961896	1	Bushing, Tapered	
7		Ref	Plate, Wear Pad Mounting Options:	
7	3538771	1	Plate, Wear Pad Mounting 600A	
7	3538247	1	Plate, Wear Pad Mounting 600AJ	
8	4640862	1	Valve Block Assembly (Note: No Service Parts Available - Replace Complete Assembly)	
9	2220885	2	Plug, O-Ring	
10	3931516	8	Capscrew, Socket Head 5/16in-18NC x 1in	
11	3931448	4	Capscrew, Socket Head 1/4in-20NC x 3in	
12	See Note	NSS	Ring, Wear (Note: Use Item 51)	
13	See Note	NSS	Seal (Note: Use Item 51)	
14	See Note	NSS	O-Ring (Note: Use Item 51)	
15	See Note	NSS	O-Ring (Note: Use Item 51)	
16	See Note	NSS	Ring, Wear (Note: Use Item 51)	
17	See Note	NSS	O-Ring (Note: Use Item 51)	
18	See Note	NSS	Ring, Back-Up (Note: Use Item 51)	
19	See Note	NSS	Seal, Rod (Note: Use Item 51)	
20	See Note	NSS	Wiper (Note: Use Item 51)	
21	See Note	NSS	Ring, Back-Up (Note: Use Item 51)	
22	0100038	AR	Primer, Locking	
23	0100011	AR	Compound, Locking	
24	3340608	2	Pad, Wear	
25	0641604	4	Bolt 3/8in-16NC x 1/2in	
26	4751600	4	Flatwasher 3/8in Regular	
28	0630535	3	Bolt 1/4in-20NC x 1-1/8in	
51	2901861	1	Seal Kit (Includes Items 12-21)	

FIGURE 5-23. TELESCOPE CYLINDER ASSEMBLY - MAIN BOOM (600A & 600AJ) (SN 0300241338 through 0300272252)

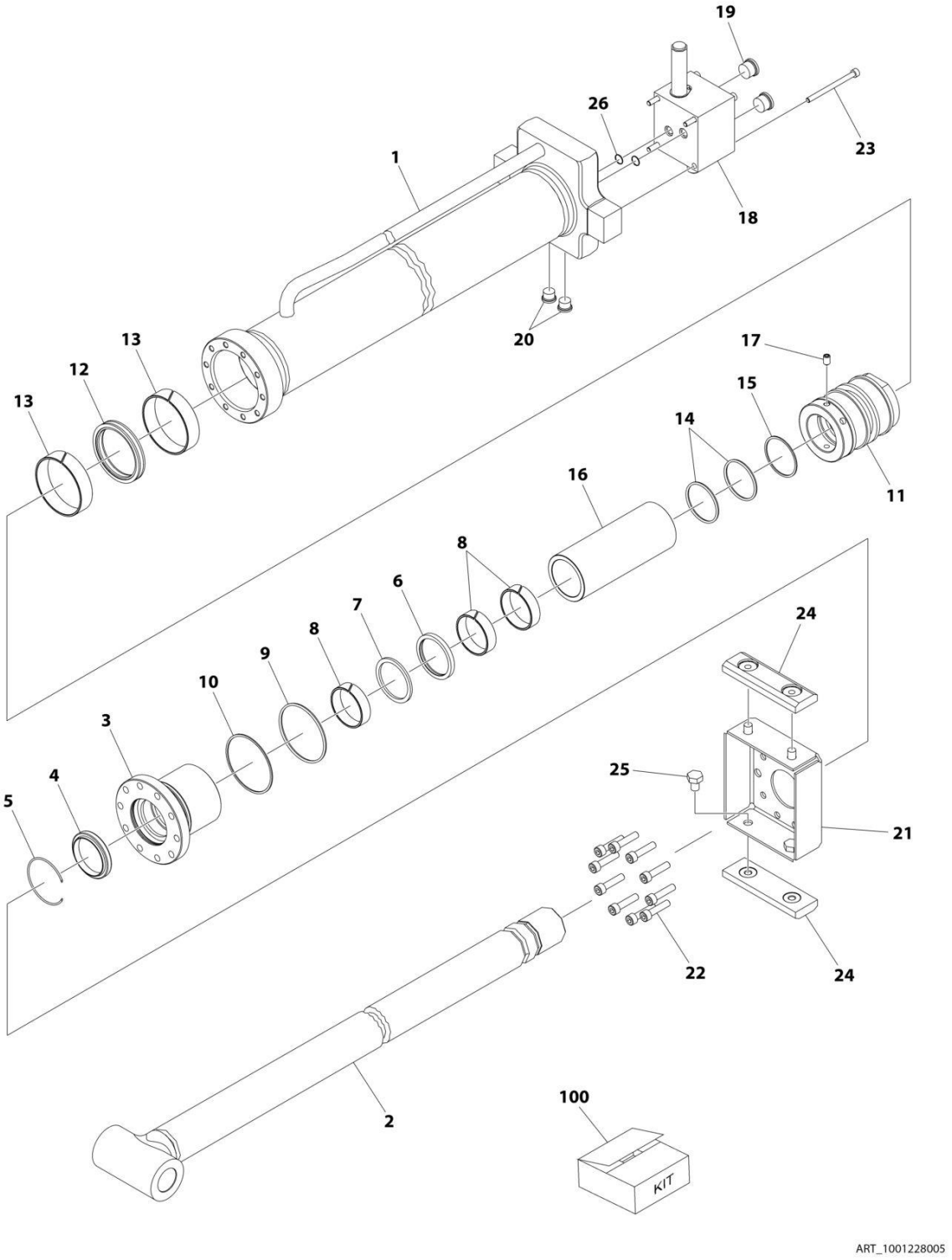

FIGURE 5-23. TELESCOPE CYLINDER ASSEMBLY - MAIN BOOM (600A & 600AJ) (SN 0300241338 through 0300272252)

ITEM	PART NUMBER	QTY	DESCRIPTION	REV
	1001228005	Ref	TELESCOPE CYLINDER ASSEMBLY - MAIN BOOM	C
		Ref	Note: Original Cylinder may have been replaced with Service Replacement. Identify PN Stamped on Cylinder Before Ordering Parts.	
1	See Note	NSS	Barrel (Note: Use p/n 1001228005)	
2	70006813	1	Rod	
3	70006814	1	Head	
4	See Note	NSS	Wiper (Note: Use Item 100)	
5	70002412	1	Ring, Retaining	
6	See Note	NSS	Seal, Rod (Note: Use Item 100)	
7	See Note	NSS	Ring, Back-up (Note: Use Item 100)	
8	See Note	NSS	Ring, Wear (Note: Use Item 100)	
9	See Note	NSS	O-Ring (Note: Use Item 100)	
10	See Note	NSS	Ring, Back-up (Note: Use Item 100)	
11	70006815	1	Piston	
12	See Note	NSS	Seal (Note: Use Item 100)	
13	See Note	NSS	Ring, Wear (Note: Use Item 100)	
14	See Note	NSS	O-Ring (Note: Use Item 100)	
15	See Note	NSS	Ring, Back-up (Note: Use Item 100)	
16	70006816	1	Spacer	
17	70006817	1	Setscrew	
18	4640862	1	Valve Block Assembly (Note: No Service Parts Available - Replace Complete Assembly)	
19	70023373	2	Plug	
20	70023371	2	Plug	
21	70006818	1	Plate, Wear Pad	
22	70006793	10	Capscrew	
23	70006819	4	Capscrew	
24	3340608	2	Pad, Wear	
25	70006820	3	Bolt	
26	3790110	2	O-Ring (Located Between Barrel & Valve)	
100	70006821	1	Seal Kit (Includes Items 4, 6-10 & 12-15)	

FIGURE 5-24. TELESCOPE CYLINDER ASSEMBLY - MAIN BOOM (600AJ) (SN 0300242729 through 0300272252)

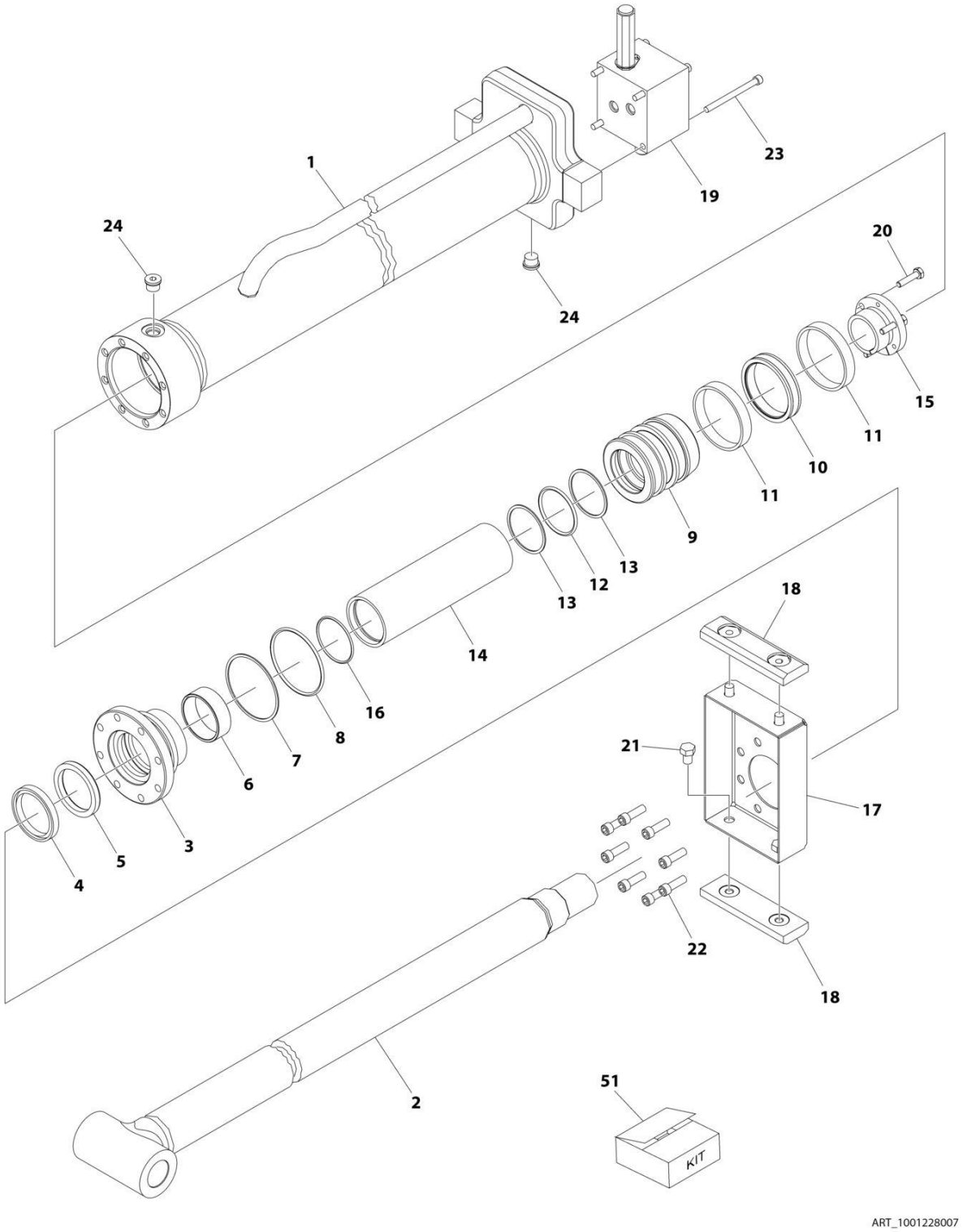

FIGURE 5-24. TELESCOPE CYLINDER ASSEMBLY - MAIN BOOM (600AJ) (SN 0300242729 through 0300272252)

ITEM	PART NUMBER	QTY	DESCRIPTION	REV
	1001228007	Ref	TELESCOPE CYLINDER ASSEMBLY	E
		Ref	Note: Original Cylinder may have been replaced with Service Replacement. Identify PN Stamped on Cylinder Before Ordering Parts.	
1	See Note	NSS	Barrel (Note: Use p/n 1001228007)	
2	70006654	1	Rod	
3	70006483	1	Head	
4	See Note	NSS	Wiper (Note: Use Item 51)	
5	See Note	NSS	Seal, Rod (Note: Use Item 51)	
6	See Note	NSS	Ring, Wear (Note: Use Item 51)	
7	See Note	NSS	O-Ring (Note: Use Item 51)	
8	See Note	NSS	Ring, Back-up (Note: Use Item 51)	
9	70006482	1	Piston	
10	See Note	NSS	Seal (Note: Use Item 51)	
11	See Note	NSS	Ring, Wear (Note: Use Item 51)	
12	See Note	NSS	O-Ring (Note: Use Item 51)	
13	See Note	NSS	Ring, Back-up (Note: Use Item 51)	
14	70006655	1	Spacer	
15	0961896	1	Bushing, Tapered	
16	See Note	NSS	O-Ring (Note: Use Item 51)	
17	3538247	1	Plate, Wear Pad Mounting	
18	3340608	2	Pad, Wear	
19	4640862	1	Valve Block Assembly (Note: No Service Part Available - Replace Complete Assembly)	
20	0630535	3	Bolt 1/4 x 1-1/8	
21	0641604	4	Bolt 3/8 x 1/2	
22	3931516	8	Capscrew 5/16 x 1	
22	0100038	AR	Primer, Locking	
22	0100011	AR	Compound, Locking	
23	3931448	4	Capscrew 1/4 x 3	
24	2220885	AR	Plug, O-Ring	
51	2901861	1	Seal Kit - 1001228007 Cylinder (Includes Item 4-8, 10-13 & 16)	

FIGURE 5-25. TELESCOPE CYLINDER ASSEMBLY - TOWER BOOM (SN 0300177361 through 0300237381)

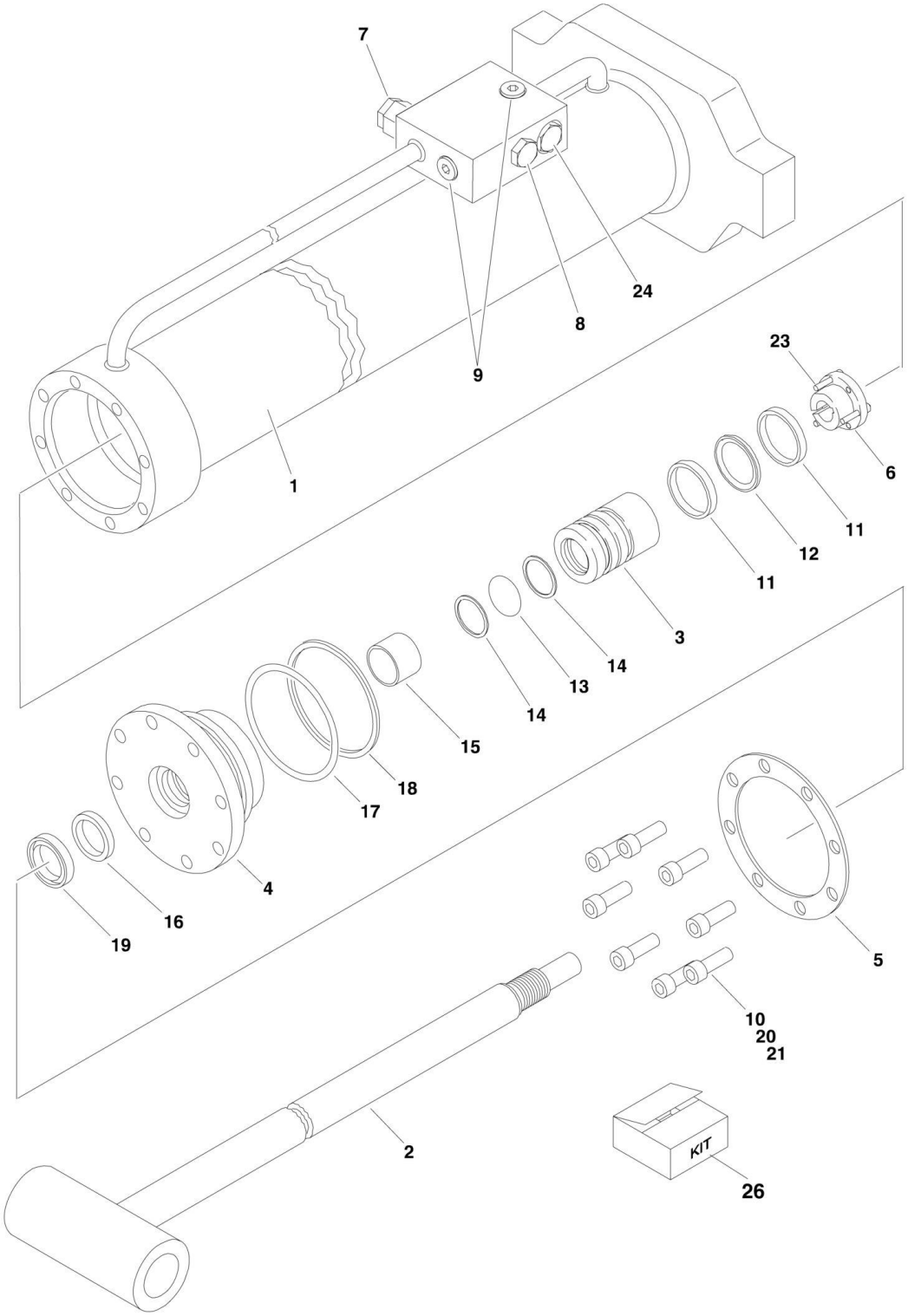

FIGURE 5-25. TELESCOPE CYLINDER ASSEMBLY - TOWER BOOM (SN 0300177361 through 0300237381)

ITEM	PART NUMBER	QTY	DESCRIPTION	REV
	1683312	Ref	**TELESCOPE CYLINDER ASSEMBLY - TOWER BOOM**	K
		Ref	Note: Original Cylinder may have been replaced with Service Replacement. Identify PN Stamped on Cylinder Before Ordering Parts.	
1	1683313	1	Barrel	
2	1683314	1	Rod	
3	3480212	1	Piston	
4	1683054	1	Head	
5	3760368	1	Ring, Washer	
5	1001228417	1	Ring, Washer	
6	0961896	1	Bushing, Tapered	
7	4640509	2	Cartridge, Valve	
7	2900792	2	Seal Kit - 4640509 Valve	
8	4640647	1	Cartridge, Valve	
8	2900770	1	Seal Kit - 4640647 Valve	
9	2220883	2	Plug, O-Ring	
10	3931516	8	Capscrew, Socket Head 5/16in-18NC x 1in	
11	See Note	NSS	Ring, Wear (Note: Use Item 26)	
12	See Note	NSS	T-Seal (Note: Use Item 26)	
13	See Note	NSS	O-Ring (Note: Use Item 26)	
14	See Note	NSS	Ring, Back-Up (Note: Use Item 26)	
15	See Note	NSS	Ring, Wear (Note: Use Item 26)	
16	See Note	NSS	Seal, Rod (Note: Use Item 26)	
17	See Note	NSS	O-Ring (Note: Use Item 26)	
18	See Note	NSS	Ring, Back-Up (Note: Use Item 26)	
19	See Note	NSS	Wiper (Note: Use Item 26)	
20	0100038	AR	Primer, Locking	
21	0100011	AR	Compound, Locking	
23	0630535	3	Bolt 1/4in-20NC x 1-1/8in	
24	4640999	1	Cartridge, Valve	
24	7011185	1	Seal Kit - 4640999 Valve	
26	2901861	1	Seal Kit (Includes Items 11-19)	

FIGURE 5-26. TELESCOPE CYLINDER ASSEMBLY - TOWER BOOM (SN 0300237382 through 0300272252)

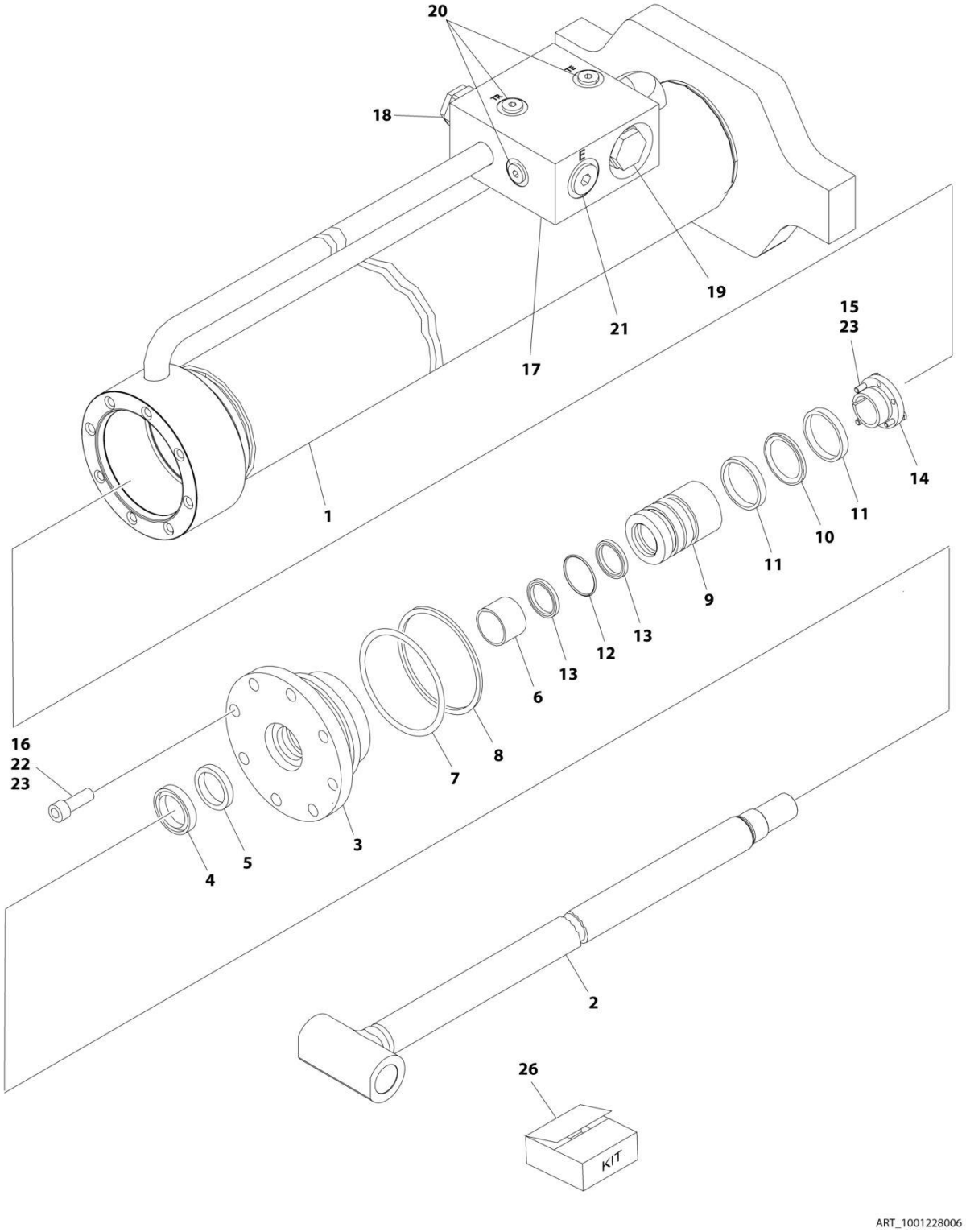

FIGURE 5-26. TELESCOPE CYLINDER ASSEMBLY - TOWER BOOM (SN 0300237382 through 0300272252)

ITEM	PART NUMBER	QTY	DESCRIPTION	REV
	1001228006	Ref	TELESCOPE CYLINDER ASSEMBLY - TOWER BOOM	C
		Ref	Note: Original Cylinder may have been replaced with Service Replacement. Identify PN Stamped on Cylinder Before Ordering Parts.	
1	See Note	NSS	Barrel (Note: Not Available for Purchase)	
2	70006484	1	Rod	
3	70006483	1	Head	
4	See Note	NSS	Wiper (Note: Use Item 26)	
5	See Note	NSS	Seal, Rod (Note: Use Item 26)	
6	See Note	NSS	Ring, Wear (Note: Use Item 26)	
7	See Note	NSS	O-Ring (Note: Use Item 26)	
8	See Note	NSS	Ring, Back-Up (Note: Use Item 26)	
9	70006482	1	Piston	
10	See Note	NSS	T-Seal (Note: Use Item 26)	
11	See Note	NSS	Ring, Wear (Note: Use Item 26)	
12	See Note	NSS	O-Ring (Note: Use Item 26)	
13	See Note	NSS	Ring, Back-Up (Note: Use Item 26)	
14	0961896	1	Bushing, Tapered	
15	0630535	3	Bolt 1/4 x 1-1/8	
16	3931516	8	Capscrew, Socket Head 5/16 x 1	
17	4640647	1	Cartridge, Valve	
17	2900770	1	Seal Kit - 4640647 Valve	
18	4640509	2	Cartridge, Valve	
18	2900792	2	Seal Kit - 4640509 Valve	
19	4640999	1	Cartridge, Valve	
19	2900792	1	Seal Kit - 4640999 Valve	
20	2220883	3	Plug, O-Ring	
21	2220886	2	Plug, O-Ring	
22	0100038	AR	Primer, Locking	
23	0100011	AR	Compound, Locking	
26	2901861	1	Seal Kit (Includes Items 4-8 & 10-13)	

SECTION 6 - HYDRAULIC

FIGURE 6-1. DRIVE HYDRAULIC DIAGRAM - 2WD/2WS

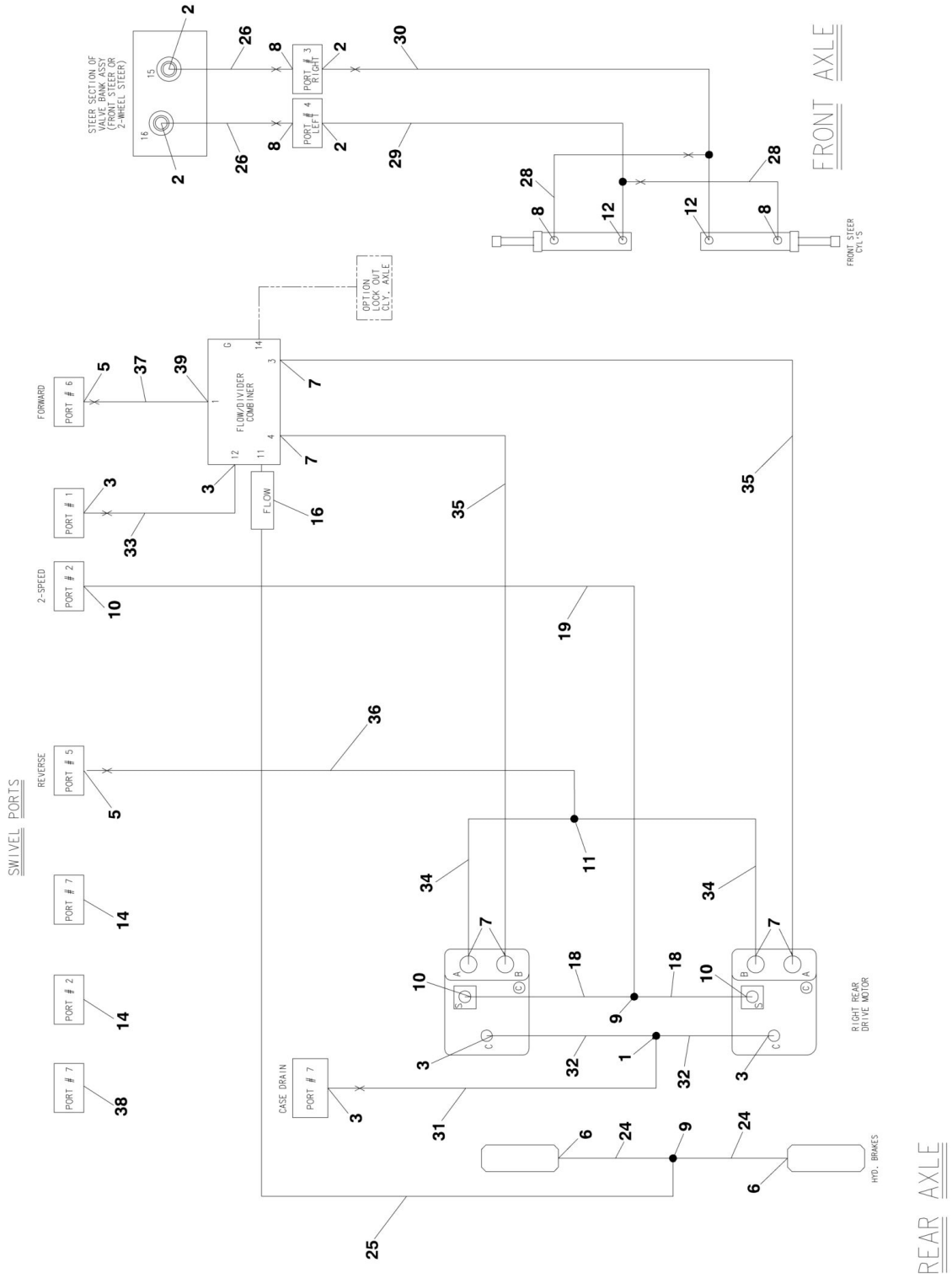

FIGURE 6-1. DRIVE HYDRAULIC DIAGRAM - 2WD/2WS

ITEM	PART NUMBER	QTY	DESCRIPTION	REV
	1001140416	Ref	**DRIVE HYDRAULIC DIAGRAM - 2WD/2WS**	D
1	2220362	1	Fitting, Tee	
2	2220371	4	Fitting, Straight	
3	2220373	5	Fitting, Straight	
5	2220377	2	Fitting, Straight	
6	2220415	2	Fitting, Straight	
7	2220451	6	Fitting, Straight	
8	2220473	4	Fitting, 90	
9	2220504	2	Fitting, Tee	
10	2220582	3	Fitting, Straight	
11	2221170	1	Fitting, Tee	
12	2220606	2	Fitting, Tee	
14	2220237	2	Fitting, Plug	
16	4641307	1	Valve, Check	
18	1001152527	2	Hose	
19	2753924	1	Hose	
24	1001152529	2	Hose (38 in Length)	
24	1001152527	2	Hose (34 in Length)	
25	1001155379	1	Hose	
26	2752620	2	Hose	
28	2753397	2	Hose	
29	2752475	1	Hose	
30	2752611	1	Hose	
31	2752928	1	Hose	
32	1001140449	2	Hose	
33	2752929	1	Hose	
34	1001151364	2	Hose	
35	1001151365	2	Hose	
36	2752341	1	Hose	
37	2754227	1	Hose	
38	2220238	1	Plug	
39	2220646	1	Fitting, 90	

FIGURE 6-2. DRIVE HYDRAULIC DIAGRAM - 4WD/2WS

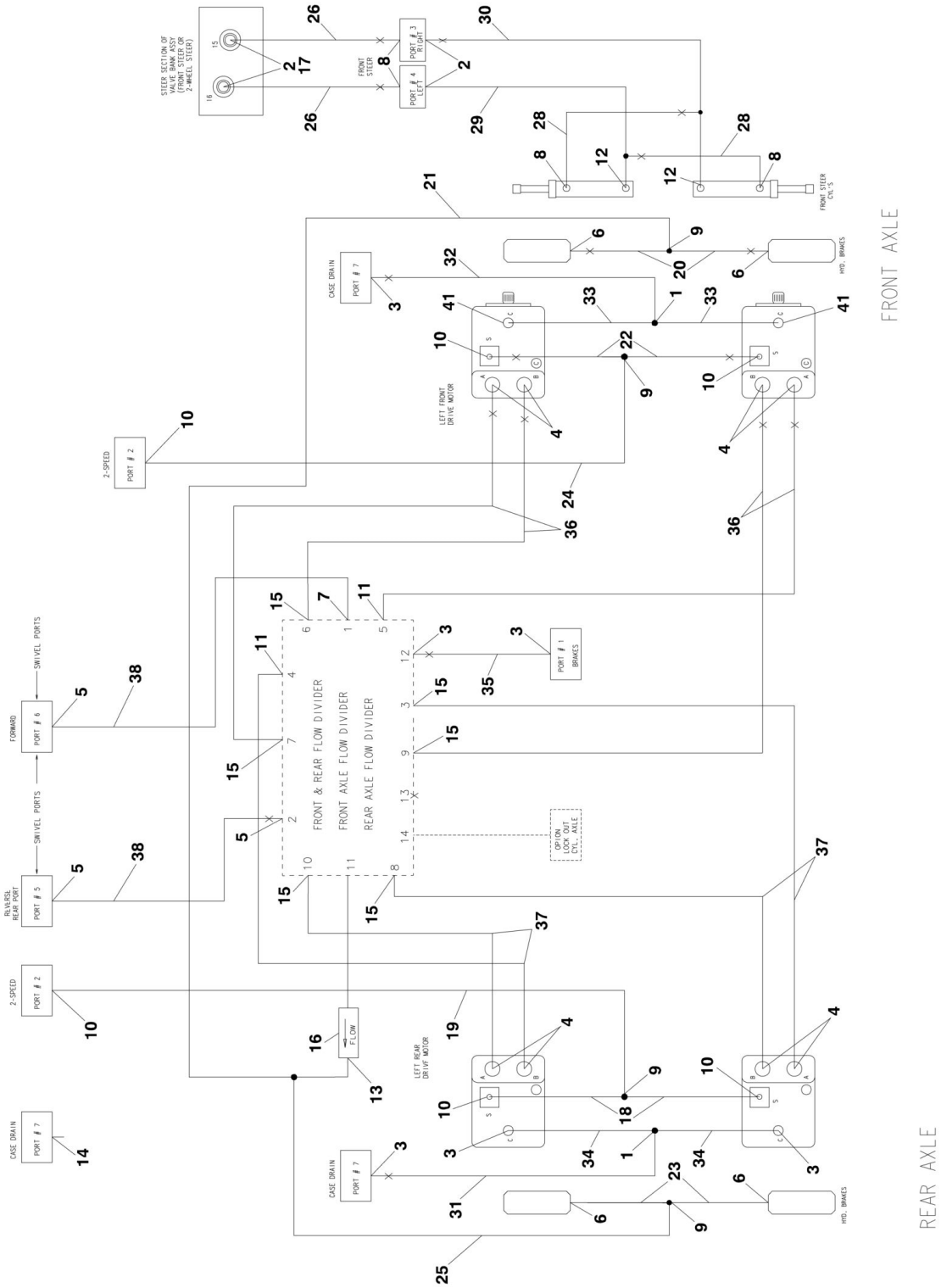

FIGURE 6-2. DRIVE HYDRAULIC DIAGRAM - 4WD/2WS

ITEM	PART NUMBER	QTY	DESCRIPTION	REV
		Ref	**DRIVE HYDRAULIC DIAGRAM - 4WD/2WS**	
	1001140418	Ref	**Machines without Arctic Package**	D
	1001140420	Ref	**Machines with Arctic Package**	D
1	2220362	2	Fitting, Tee	
2	2220371	4	Fitting, Straight	
3	2220373	6	Fitting, Straight	
4	2220375	8	Fitting, Straight	
5	2220377	3	Fitting, Straight	
6	2220415	4	Fitting, Straight	
7	2220646	1	Fitting, 90	
8	2220473	4	Fitting, 90	
9	2220504	4	Fitting, Tee	
10	2220582	6	Fitting, Straight	
11	2220596	2	Fitting, 90	
12	2220606	2	Fitting, Tee	
13	2220861	1	Fitting, Tee	
14	2220237	1	Fitting, Plug	
15		Ref	Fitting Options:	
15	2220500	6	Fitting, 45	
15	2220373	6	Fitting, Straight	
16	4641284	1	Valve, Check	
17	2220507	2	Fitting, 90 (Machines with Arctic Package Only)	
18	1001152527	2	Hose	
19	2753924	1	Hose	
20		Ref	Hose Options:	
20	2753926	2	Machines without Arctic Package	
20	2754731	2	Machines with Arctic Package	
21	2753929	1	Hose	
22		Ref	Hose Options:	
22	1001140451	2	Machines without Arctic Package	
22	1001140456	2	Machines with Arctic Package	
23	1001152529	2	Hose (38 in Length)	
23	1001152529	2	Hose (34 in Length)	
24	2752592	1	Hose	
25	2752910	1	Hose	
26	2752620	2	Hose	
28	2754235	2	Hose	
29	2752475	1	Hose	
30	2752611	1	Hose	
31	2752928	1	Hose	
32	2754231	1	Hose	
33		Ref	Hose Options:	
33	1001140455	2	Machines without Arctic Package	
33	1001140458	2	With Arctic Package	
34	1001140449	2	Hose	
35	2753929	1	Hose	
36		Ref	Hose Options:	
36	1001152491	4	Machines without Arctic Package	
36	1001152499	4	Machines with Arctic Package	
37	1001151358	4	Hose	

ITEM	PART NUMBER	QTY	DESCRIPTION	REV
38	2754227	2	Hose	
41	2220474	2	Fitting, 90	

FIGURE 6-3. HYDRAULIC DIAGRAM - OSCILLATING AXLE

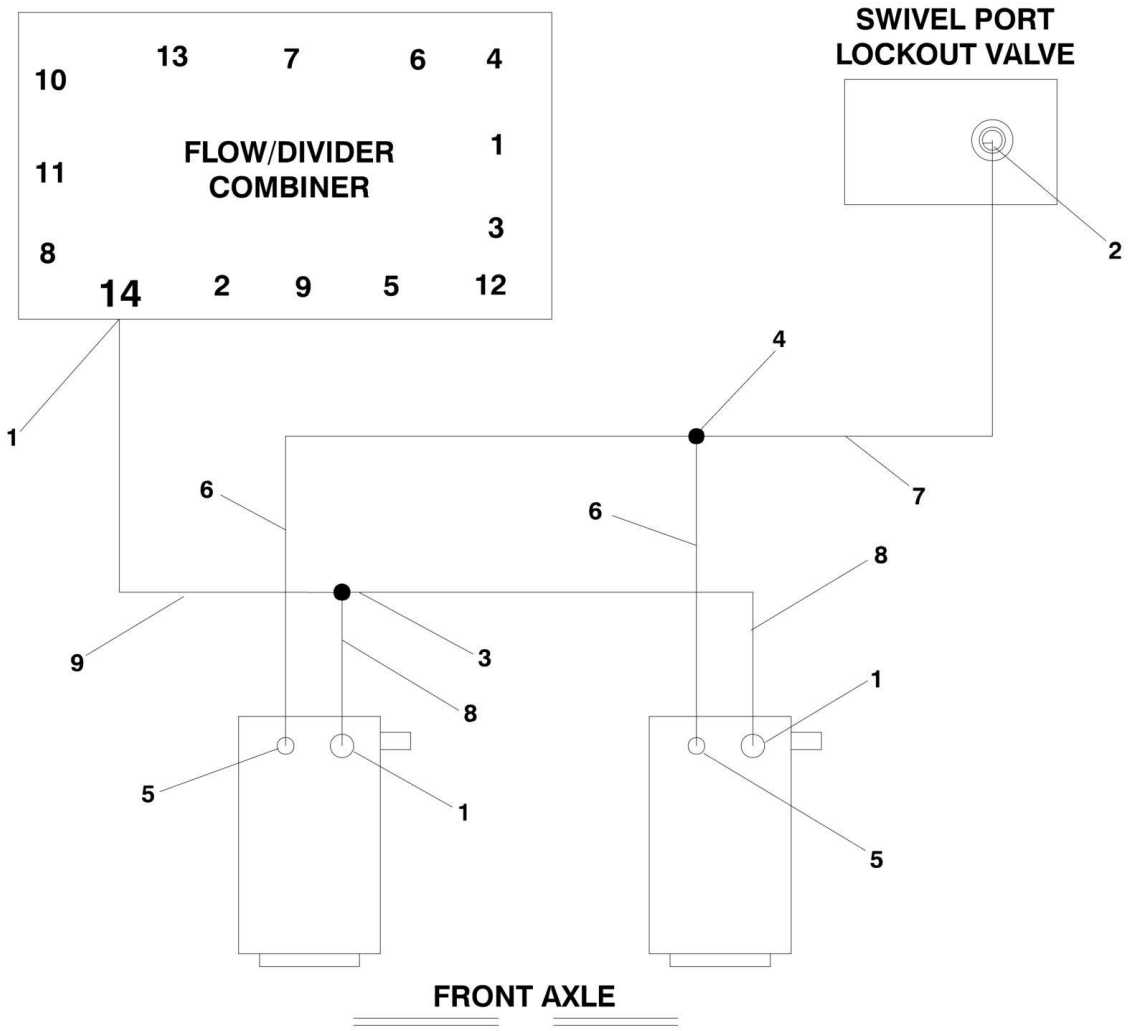

FIGURE 6-3. HYDRAULIC DIAGRAM - OSCILLATING AXLE

ITEM	PART NUMBER	QTY	DESCRIPTION	REV
		Ref	**(Illustration and Parts List Usage)**	
		Ref	**AXLE LOCKOUT DIAGRAM - OSCILLATING AXLE**	
	2792690	Ref	**7ft/2.1m Wide Machines**	1
	1283429	1	**7ft/2.1m Wide Machines**	U
	1001151349	Ref	**8ft/2.4m Wide Machines**	B
	1001151350	1	**8ft/2.4m Wide Machines**	D
1	2220371	AR	Fitting, Straight	
2	2220468	1	Fitting, Straight	
3	2220490	1	Fitting, Tee **(SN 0300177361 through 0300206978)**	
3	See Note	NSS	Fitting (Part of Item 12 - Use Item 12) **(SN 0300206979 through 0300272252)**	
4	2220504	1	Fitting, Tee	
4	See Note	NSS	Fitting (Part of Item 13 - Use Item 13)	
5	2220415	2	Fitting, Straight	
6		Ref	Hose Options:	
6	2751434	2	7ft/2.1m Wide Machines	
6	1001151366	2	8ft/2.4m Wide Machines **(SN 100117361 through 0300206978)**	
6	See Note	NSS	8ft/2.4m Wide Machines (Use Item 7) **(SN 0300206979 through 0300272252)**	
7		Ref	Hose Options:	
7	2751410	1	Hose **(SN 0300177361 through 0300206978)**	
7	1001188891	1	Hose **(SN 0300206979 through 0300272252)**	
8		Ref	Hose Options:	
8	2753933	2	7ft/2.1m Wide Machines	
8	1001151367	2	8ft/2.4m Wide Machines **(SN 0300177361 through 0300206978)**	
8	See Note	NSS	8ft/2.4m Wide Machines (Use Item 9) **(SN 0300206979 through 0300272252)**	
9		Ref	Hose Options:	
9	2752462	1	Hose **(SN 0300177361 through 0300206978)**	
9	1001188890	1	Hose **(SN 0300206979 through 0300272252)**	

FIGURE 6-4. HYDRAULIC DIAGRAM - STANDARD (SN 0300177361 through 0300181174)

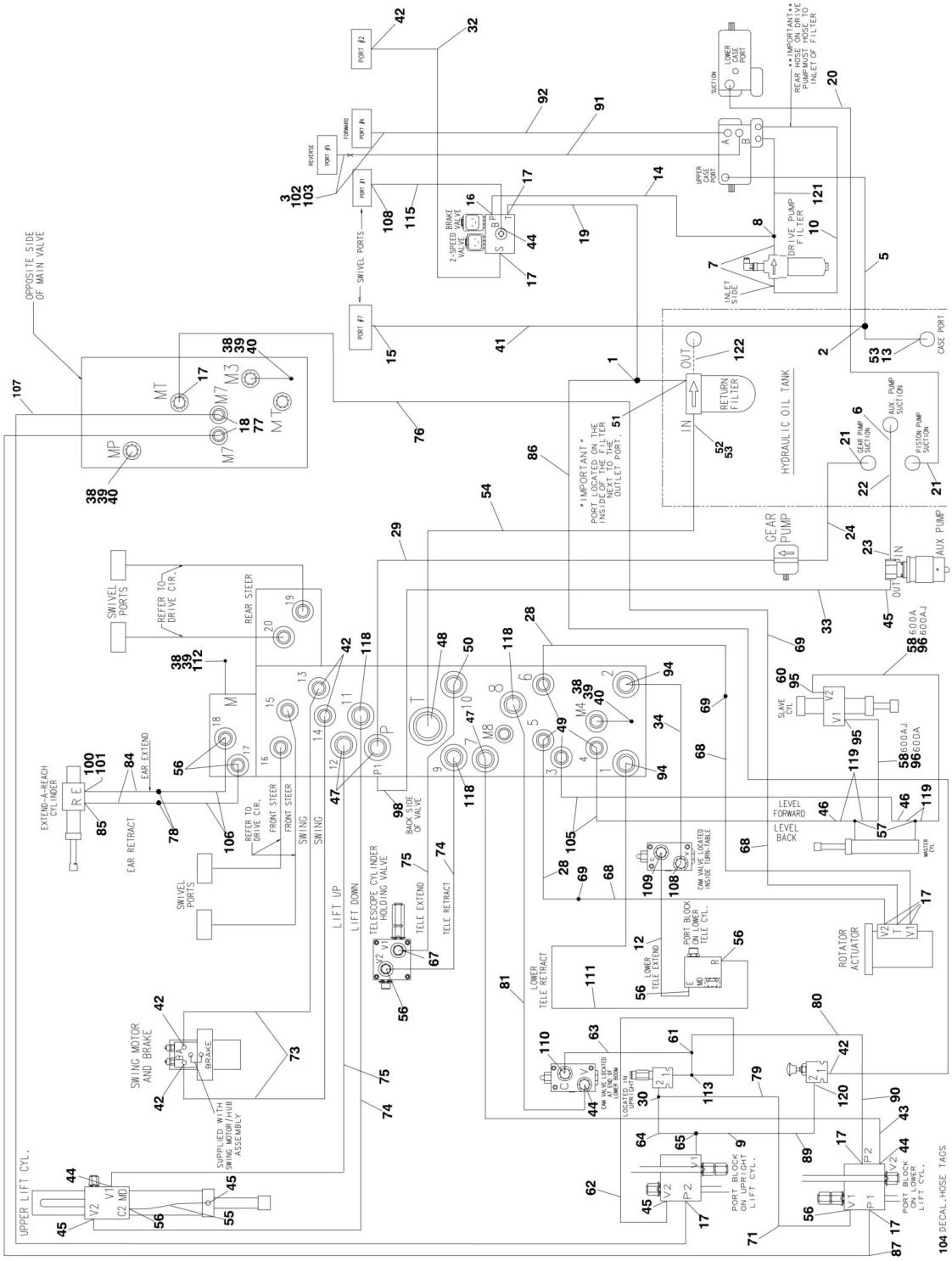

FIGURE 6-4. HYDRAULIC DIAGRAM - STANDARD (SN 0300177361 through 0300181174)

ITEM	PART NUMBER	QTY	DESCRIPTION	REV
		Ref	**Hydraulic Diagram - Standard (SN 0300177361 through 0300181174)**	
	1001152598	Ref	**Hydraulic Diagram - Standard 600A with Deutz D2011 Engine Machines**	G
	1001150727	Ref	**Hydraulic Diagram - Standard 600A with Deutz TD2.9L4 Engine Machines**	C
	1001150720	Ref	**Hydraulic Diagram – Standard 600A with Deutz TD2.9L4 Engine Machines**	C
	1001152598	Ref	**Hydraulic Diagram - Standard 600A with GM Engine Machines**	G
	1001152609	Ref	**Hydraulic Diagram - Standard 600AJ with Deutz D2011 Engine Machines**	F
	1001150728	Ref	**Hydraulic Diagram - Standard 600AJ with Deutz TD2.9L4 Engine Machines**	C
	1001150720	Ref	**Hydraulic Diagram – Standard 600AJ with Deutz TD2.9L4 Engine Machines**	C
	1001152609	Ref	**Hydraulic Diagram - Standard 600AJ with GM Engine Machines**	F
1	2220605	1	Fitting, Tee	
2	2220409	1	Fitting, 45 (Deutz D2011 and GM Engines)	
3	2220377	2	Fitting, Straight	
5		Ref	Hose Options:	
5	1001093549	1	Machines with Deutz D2011 Engines	
5	1001150714	1	Machines with Deutz TD2.9L4 Engines	
5	1001093549	1	Machines with GM Engines	
6	2220578	1	Fitting, 90 (Deutz D2011 and GM Engines)	
6	2220451	1	Fitting, 90 (Deutz TD2.9L4 Engines)	
7	2221042	2	Fitting, 90	
8	2220948	1	Fitting, Tee	
9	2220618	1	Fitting, Reducer	
10	2754329	1	Hose	
12	2753132	1	Hose	
13	2220738	1	Fitting, Tee (Deutz D2011 and GM Engines)	
14		Ref	Hose Options:	
14	2754328	1	Machines with Deutz D2011 Engines	
14	1001150717	1	Machines with Deutz TD2.9L4 Engines	
14	2754328	1	Machines with GM Engines	
15	2220375	AR	Fitting, Straight	
16		Ref	Fitting, 90 Options:	
16	2220474	1	Machines with Deutz D2011 Engines	
16	2220596	1	Machines with Deutz TD2.9L4 Engines	
16	2220474	1	Machines with GM Engines	
17	2220466	9	Fitting, 90	
18	2220415	2	Fitting, Straight	
19		Ref	Hose Options:	
19	2753325	1	Machines with Deutz D2011 Engines	
19	1001143496	1	Machines with Deutz TD2.9L4 Engines	
19	2753325	1	Machines with GM Engines	
20		Ref	Hose Options:	
20	2752723	1	Machines with Deutz D2011 Engines	
20	1001150716	1	Machines with Deutz TD2.9L4 Engines	
20	2752723	1	Machines with GM Engines	

ITEM	PART NUMBER	QTY	DESCRIPTION	REV
21	2220379	2	Fitting, Straight	
22	2752656	1	Hose	
23	2220567	1	Fitting, 90	
24		Ref	Hose Options:	
24	2752724	1	Machines with Deutz D2011 Engines	
24	1001150718	1	Machines with Deutz TD2.9L4 Engines	
24	2752724	1	Machines with GM Engines	
28	2752604	2	Hose (Note: Also Requires #69 & #68 for Complete Run Up Boom)	
29	2752929	1	Hose	
30	2220602	1	Fitting, Tee	
32	2751396	1	Hose	
33		Ref	Hose Options:	
33	2752635	1	Machines with Deutz D2011 Engines	
33	2752478	1	Machines with Deutz TD2.9L4 Engines	
33	2752635	1	Machines with GM Engines	
34	2753133	1	Hose	
38	2220428	AR	Fitting, Quick Coupling	
39	2220429	AR	Cap, Dust	
40	2220873	3	Fitting	
41	2753968	1	Hose	
42	2220582	6	Fitting, Straight	
43		Ref	Hose Options:	
43	2752506	1	Hose 600A	
43	2752516	1	Hose 600AJ	
44	2220596	4	Fitting, 90	
45	2220628	4	Fitting, 90	
46	2220609	2	Fitting, Reducer	
47	2220381	3	Fitting, Long Straight	
48	2220974	1	Fitting, Long Straight	
49	2220923	4	Fitting, Long Straight	
50	2220374	1	Fitting	
51	2220574	1	Fitting, Straight	
52	2220921	1	Fitting, Reducer	
53	2220498	AR	Fitting, 45	
54		Ref	Hose Options:	
54	2752783	1	Machines with Deutz D2011 Engines	
54	1001150712	1	Machines with Deutz TD2.9L4 Engines	
54	2752783	1	Machines with GM Engines	
55	2752469	1	Hose	
56	2220372	AR	Fitting, Straight (600A - Qty 5 / 600AJ - Qty 7)	
57	2220899	2	Fitting, Tee	
58		Ref	Hose Options:	
58	2752636	1	Hose 600A	
58	2752468	1	Hose 600AJ	
60	2220657	1	Fitting, 45 (600A Only)	
61	2221065	1	Fitting, Tee	
62	2752462	1	Hose	
63	2753134	1	Hose	
64	2752497	1	Hose	
65	2220999	1	Fitting, Tee	
67	2220500	1	Fitting, 45	

ITEM	PART NUMBER	QTY	DESCRIPTION	REV
68	2752601	3	Hose (Note: Also Requires #69 & #28 or #76 for Complete Run Up Boom)	
69	2220510	3	Fitting, Coupling	
71	2753052	1	Hose	
73	2752600	2	Hose	
74	2753055	2	Hose	
75	2752939	2	Hose	
76	2752579	1	Hose (Note: Also Requires #69 & #28 or #76 for Complete Run Up Boom)	
77	2220654	2	Fitting, 90	
78	2220511	1	Fitting, Coupling (600AJ Only)	
79	2753056	1	Hose	
80	2752991	1	Hose	
81	2753135	1	Hose	
84	2753047	2	Hose (600AJ Only) (Note: Also Requires #78 & #106 for Complete Run Up Boom)	
85	2220473	1	Fitting, 90 (600AJ Only)	
86	2752453	1	Hose	
87	2752593	1	Hose	
89	2752990	1	Hose	
90	2752985	1	Hose	
91		Ref	Hose Options:	
91	2752341	1	72in/1.83m Length	
91	10011507157	1	68in/1.73m Length	
91	2752343	1	66in/1.68m Length	
92		Ref	Hose Options:	
92	2752343	1	72in/1.83m Length	
92	2752341	1	66in/1.68m Length	
94	2220998	2	Fitting, Straight	
95	2220603	2	Fitting, Straight	
96		Ref	Hose Options:	
96	2753046	1	Hose 600A	
96	2752650	1	Hose 600AJ	
98	2220473	1	Fitting, 90	
100	2180724	1	Fitting, Modified 90 (600AJ Only)	
101	2180380	1	Plug, Orifice.06 (600AJ Only)	
102	0100011	AR	Compound, Locking	
103	0100038	AR	Primer, Locking	
104	1703534	2	Decal, Hose Tags (Not Shown)	
105	2752989	2	Hose	
106	2752618	2	Hose (600AJ Only) (Note: Also Requires #78 & #106 for Complete Run Up Boom)	
107	2752987	1	Hose	
108	2220373	2	Fitting, Straight	
109	2220947	1	Fitting, Straight	
110	2221036	1	Fitting, O-Ring	
111	2752484	1	Hose	
112	2220873	1	Fitting, Nipple (600AJ ONLY)	
113	2221053	1	Fitting, Tee	
115	2752519	1	Hose	
118	1001104423	3	Fitting, Adapter	
119	2220507	4	Fitting, 90 Adapter	

ITEM	PART NUMBER	QTY	DESCRIPTION	REV
120	2220472	1	Fitting, 90	
121	2754330	1	Hose	
122	2220893	1	Fitting, Straight	

FIGURE 6-5. HYDRAULIC DIAGRAM - STANDARD (SN 0300181175 through 0300208081)

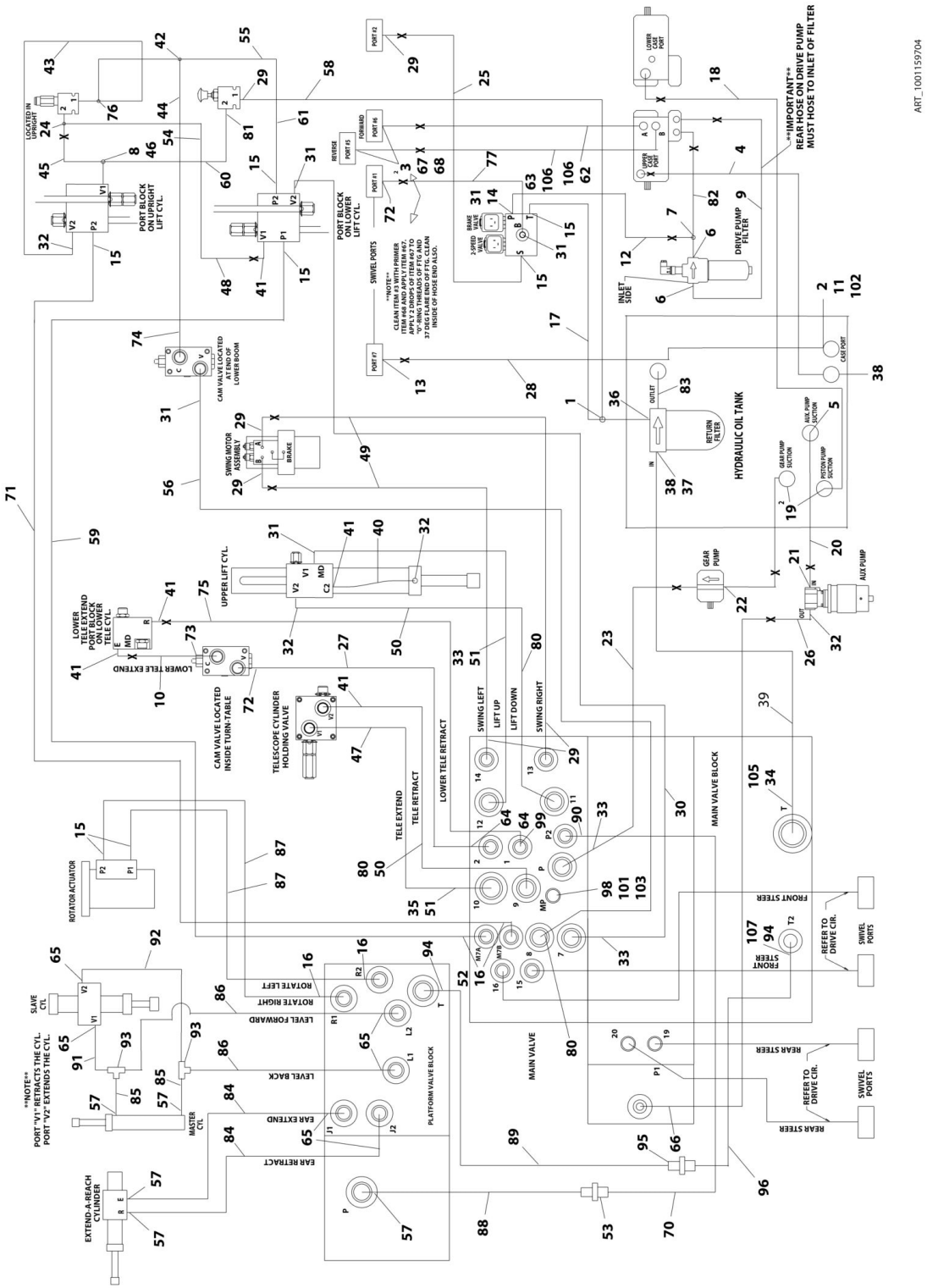

FIGURE 6-5. HYDRAULIC DIAGRAM - STANDARD (SN 0300181175 through 0300208081)

ITEM	PART NUMBER	QTY	DESCRIPTION	REV
		Ref	**HYDRAULIC DIAGRAM- STANDARD (SN 0300181175 through 0300208081)**	
	1001159703	Ref	**Standard Hydraulic Diagram 600A with Deutz D2011 Engine**	L
	1001164329	Ref	**Standard Hydraulic Diagram 600A with Deutz TD2.9L4 Engine**	K
	1001159703	Ref	**Standard Hydraulic Diagram 600A with GM Engine**	L
	1001159704	Ref	**Standard Hydraulic Diagram 600AJ with Deutz D2011 Engine**	K
	1001164277	Ref	**Standard Hydraulic Diagram 600AJ with Deutz TD2.9L4 Engine**	J
	1001159704	Ref	**Standard Hydraulic Diagram 600AJ with GM Engine**	J
1	2220605	1	Fitting, Tee	
2	2220409	AR	Fitting, 45	
3	2220377	2	Fitting, Straight	
4	1001093549	1	Hose (Deutz D2011 and GM Engines)	
4	100150714	1	Hose (Deutz TD2.9L4 Engines)	
5	2220578	1	Fitting, 90 (Deutz D2011 and GM Engines)	
5	2220451	1	Fitting, 90 (Deutz TD2.9L4 Engines)	
6	2221042	2	Fitting, 90	
7	2220948	1	Fitting, Tee	
8	2220618	1	Fitting, Straight	
9	2754329	1	Hose	
10	2753132	1	Hose	
11	2220738	1	Fitting, Tee (Deutz D2011 and GM Engines Only)	
12	2754328	1	Hose (Deutz D2011 and GM Engines)	
12	1001150717	1	Hose (Deutz TD2.9L4 Engines)	
13	2220375	1	Fitting, Straight	
14	2220474	AR	Fitting, 90	
15	2220466	AR	Fitting, 90	
16	2220415	4	Fitting, Straight	
17	2753325	1	Hose (Deutz D2011 and GM Engines)	
17	1001143496	1	Hose (Deutz TD2.9L4 Engines)	
18	2752723	1	Hose (Deutz D2011 and GM Engines)	
18	1001150716	1	Hose (Deutz TD2.9L4 Engines) **(SN 0300181175 through 0300183397)**	
18	1001172535	1	Hose (Deutz TD2.9L4 Engines) **(SN 0300183398 through 0300208081)**	
19	2220379	2	Fitting, Straight	
20	2752656	1	Hose	
21	2220567	1	Fitting, 90	
22	2752724	1	Hose (Deutz D2011 and GM Engines)	
22	1001150718	1	Hose (Deutz TD2.9L4 Engines)	
23	2752929	1	Hose	
24	2220602	1	Fitting, Tee	
25	2751396	1	Hose	
26	2752635	1	Hose (Deutz D2011 and GM Engines)	
26	2752478	1	Hose (Deutz TD2.9L4 Engines)	
27	2753133	1	Hose (Deutz D2011 and GM Engines)	
27	1001161029	1	Hose (600A Deutz TD2.9L4 Engines)	
27	2753133	1	Hose (600AJ Deutz TD2.9L4 Engines)	
28	2753968	1	Hose	
29	2220582	6	Fitting, Straight	

ITEM	PART NUMBER	QTY	DESCRIPTION	REV
30	2752506	1	Hose (600A)	
30	2752516	1	Hose (600AJ)	
31	2220596	AR	Fitting, 90	
32	2220628	4	Fitting, 90	
33	2220381	3	Fitting, Straight	
34	2220451	1	Fitting, Straight	
35	2220374	1	Fitting, Straight	
36	2220574	1	Fitting, Straight	
37	2220921	1	Fitting, Straight	
38	2220498	AR	Fitting, 45	
40	2752469	1	Hose	
41	2220372	5	Fitting, Straight	
42	2221065	1	Fitting, Tee	
43	2752462	1	Hose	
44	2753134	1	Hose	
45	2752497	1	Hose	
46	2220999	1	Fitting, Tee	
47	2220500	1	Fitting, 45	
48	2753052	1	Hose	
49	2752600	2	Hose	
50	2753055	2	Hose	
51	2752939	2	Hose	
52	2220654	2	Hose	
53	2220511	1	Fitting, Straight	
54	2753056	1	Hose	
55	2752991	1	Hose	
56	2753135	1	Hose	
57	2220473	AR	Fitting, 90	
58	2752453	1	Hose	
59	2752593	1	Hose	
60	2752900	1	Hose	
61	2752985	1	Hose	
62	2752343	1	Hose **(SN 0300181175 through 0300191375)**	
63	2752341	1	Hose **(SN 0300181175 through 0300191375)**	
64	2220998	2	Fitting, Straight	
65	2220603	AR	Fitting, Straight	
66	2220473	1	Fitting, 90	
67	0100011	AR	Compound, Locking	
68	0100038	AR	Primer, Locking	
69	1703534	2	Decal - Hose Tags (Not Shown)	
70	1001161030	1	Hose	
71	2752987	1	Hose	
72	2220373	1	Fitting, Straight	
73	2220947	1	Fitting, Straight	
74	2221036	1	Fitting, 90	
75	1001161031	1	Hose (600A with Deutz TD2.9L4) **(SN 100181175 through 0300191374)**	
75	2752484	1	Hose (600A with Deutz TD2.9L4) **(SN 0300191376 through 0300208081)**	
75	2752484	1	Hose (600AJ with Deutz TD2.9L4)	
75	2752484	1	Hose (600A and 600AJ with Deutz D2011 and GM Engine)	
76	2221053	1	Fitting, Tee	

ITEM	PART NUMBER	QTY	DESCRIPTION	REV
77	2752519	1	Hose	
80	1001104423	3	Fitting, Straight	
81	2220472	1	Fitting, 90	
82	2754330	1	Hose	
83	2220893	1	Fitting, Straight	
84	1001155672	2	Hose (600AJ only)	
85	1001161032	2	Hose (600A)	
85	1001155675	2	Hose (600AJ)	
86	1001161033	2	Hose (600A)	
86	1001155673	2	Hose (600AJ)	
87	1001159707	2	Hose (600A)	
87	1001155669	2	Hose (600AJ)	
88	1001159707	1	Hose (600A)	
88	1001155678	1	Hose (600AJ)	
89	1001161160	1	Hose (600A)	
89	1001155677	1	Hose (600AJ)	
90	80233041	1	Fitting, Straight	
91	1001161035	1	Hose (600A)	
91	1001155670	1	Hose (600AJ)	
92	1001155663	1	Hose (600A)	
92	1001155671	1	Hose (600AJ)	
93	2220490	2	Fitting, Tee	
94	2220490	AR	Fitting, Straight	
95	2220512	1	Fitting, Straight	
96	1001161036	1	Hose	
98	2220415	1	Fitting, Straight (600A with Deutz D2011 and GM Engine)	
98	2221086	1	Fitting Test (600A with Deutz TD2.9L4 Engine)	
98	2220415	1	Fitting, Straight (600AJ)	
99	2220657	1	Fitting, 45	
101	2752995	1	Hose	
102	2220578	1	Fitting, 90	
103	91143177	1	Fitting, Test Port	
104	2220726	AR	Fitting, 90 **(SN 0300181175 through 0300194599)**	
105	2220409	1	Fitting, 45	
106	1001150715	2	Hose **(SN 0300191375 through 0300208081)**	
107	2220386	1	Fitting, 90 **(SN 0300194600 through 0300208081)**	

FIGURE 6-6. HYDRAULIC DIAGRAM - STANDARD (SN 0300208082 through 0300272252)

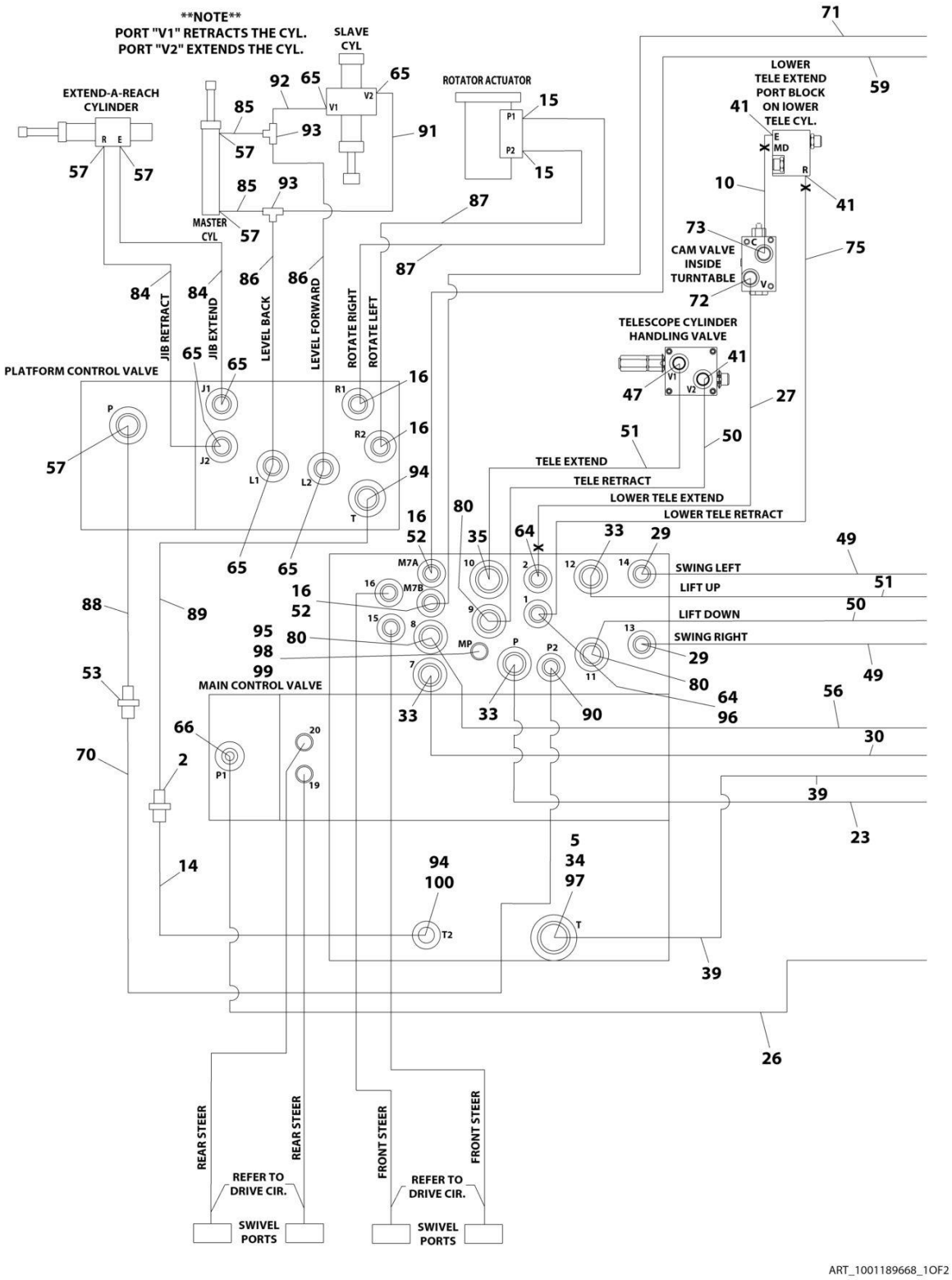

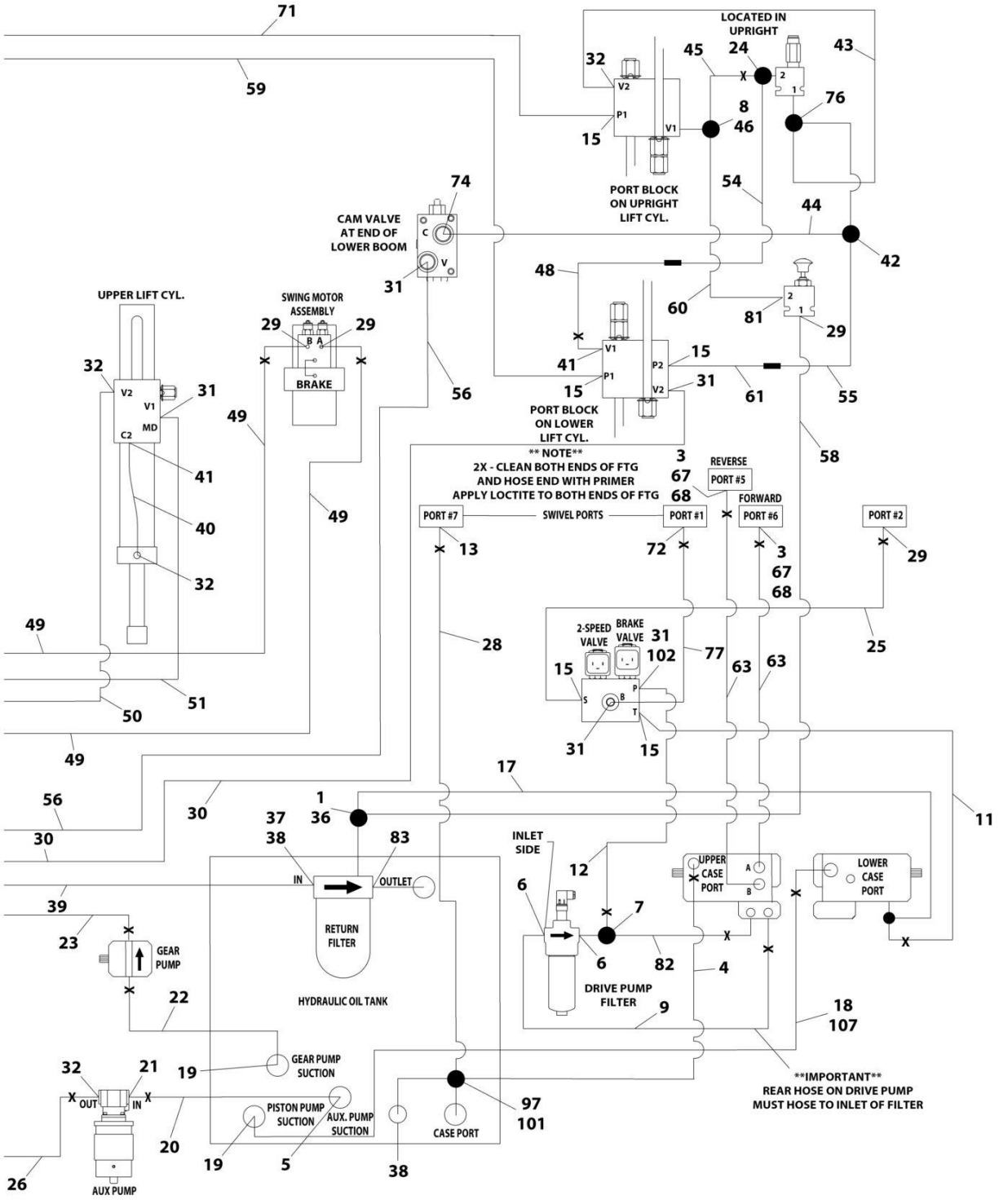
LOCATED IN UPRIGHT
PORT BLOCK ON UPRIGHT LIFT CYL.
CAM VALVE AT END OF LOWER BOOM
UPPER LIFT CYL.
SWING MOTOR ASSEMBLY
BRAKE
PORT BLOCK ON LOWER LIFT CYL.
** NOTE**
2X - CLEAN BOTH ENDS OF FTG AND HOSE END WITH PRIMER APPLY LOCTITE TO BOTH ENDS OF FTG
REVERSE
PORT #5
FORWARD
PORT #6
PORT #7
SWIVEL PORTS
PORT #1
PORT #2
2-SPEED VALVE
BRAKE VALVE
INLET SIDE
UPPER CASE PORT
LOWER CASE PORT
RETURN FILTER
OUTLET
IN
HYDRAULIC OIL TANK
GEAR PUMP
DRIVE PUMP FILTER
GEAR PUMP SUCTION
PISTON PUMP SUCTION
AUX. PUMP SUCTION
CASE PORT
AUX PUMP
OUT
IMPORTANT
REAR HOSE ON DRIVE PUMP MUST HOSE TO INLET OF FILTER
ART_1001189668_2OF2

FIGURE 6-6. HYDRAULIC DIAGRAM - STANDARD (SN 0300208082 through 0300272252)

ITEM	PART NUMBER	QTY	DESCRIPTION	REV
		Ref	**HYDRAULIC DIAGRAM- STANDARD**	
	1001189669	Ref	**Standard Hydraulic Diagram 600A with Deutz D2011 Engine**	D
	1001189667	Ref	**Standard Hydraulic Diagram 600A with Deutz TD2.9L4 Engine**	C
	1001221614	Ref	**Standard Hydraulic Diagram 600A with Ford Engine**	C
	1001189669	Ref	**Standard Hydraulic Diagram 600A with GM Engine**	D
	1001189668	Ref	**Standard Hydraulic Diagram 600AJ with Deutz D2011 Engine**	A
	1001189666	Ref	**Standard Hydraulic Diagram 600AJ with Deutz TD2.9L4 Engine**	C
	1001221613	Ref	**Standard Hydraulic Diagram 600AJ with Ford Engine**	C
	1001189668	Ref	**Standard Hydraulic Diagram 600AJ with GM Engine**	A
1	2220605	1	Fitting, Tee	
2	2220512	1	Fitting, Straight	
3	2220377	2	Fitting, Straight	
4	1001093549	1	Hose (Deutz D2011 and GM Engines)	
4	100150714	1	Hose (Deutz TD2.9L4 Engines)	
4	2751362	1	Hose (Ford Engines)	
5	2220578	1	Fitting, 90 (Deutz D2011 and GM Engines)	
5	2220451	AR	Fitting, 90 (Deutz TD2.9L4 and Ford Engines)	
6	2221042	2	Fitting, 90	
7	2220948	1	Fitting, Tee	
8	2220618	1	Fitting, Straight	
9	2754329	1	Hose	
10	2753132	1	Hose	
11	2752573	1	Hose (Deutz D2011 and GM Engines)	
11	2753002	1	Hose (Deutz TD2.9L4 Engines)	
11	2753000	1	Hose (Ford Engines)	
12	2754328	1	Hose (Deutz D2011 and GM Engines)	
12	1001150717	1	Hose (Deutz TD2.9L4 and Ford Engines)	
13	2220375	1	Fitting, Straight	
14	1001161036	1	Hose	
15	2220466	7	Fitting, 90	
16	2220415	AR	Fitting, Straight	
17	2753390	1	Hose	
18	2752723	1	Hose (Deutz D2011 and GM Engines)	
18	1001172535	1	Hose (Deutz TD2.9L4 Engines)	
18	1001150715	1	Hose (Ford Engines) **(SN 0300177361 through 0300245525)**	
19	2220379	2	Fitting, Straight	
20	2752656	1	Hose	
21	2220567	1	Fitting, 90	
22	2752724	1	Hose (Deutz D2011, Ford and GM Engines)	
22	1001150718	1	Hose (Deutz TD2.9L4 Engines)	
23	2752929	1	Hose	
24	2220602	1	Fitting, Tee	
25	2751396	1	Hose	
26	2752635	1	Hose (Deutz D2011 and GM Engines)	
26	2752478	1	Hose (Deutz TD2.9L4 and Ford Engines)	
27	2753133	1	Hose (Deutz D2011, Ford and GM Engines)	
27	1001161029	1	Hose (600A Deutz TD2.9L4 Engines)	
27	2753133	1	Hose (600AJ Deutz TD2.9L4 Engines)	
28	2753968	1	Hose	

ITEM	PART NUMBER	QTY	DESCRIPTION	REV
29	2220582	AR	Fitting, Straight	
30	2752506	1	Hose	
31	2220596	AR	Fitting, 90	
32	2220628	4	Fitting, 90	
33	2220381	3	Fitting, Straight	
34	2220451	1	Fitting, Straight	
35	2220374	1	Fitting, Straight	
36	2220574	1	Fitting, Straight	
37	2220921	1	Fitting, Straight	
38	2220498	AR	Fitting, 45	
39	2752783	1	Hose	
40	2752469	1	Hose	
41	2220372	5	Fitting, Straight	
42	2221065	1	Fitting, Tee	
43	2752462	1	Hose	
44	2753134	1	Hose	
45	2752497	1	Hose	
46	2220999	1	Fitting, Tee	
47	2220500	1	Fitting, 45	
48	2753052	1	Hose	
49	2752600	2	Hose	
50	2753055	2	Hose	
51	2752939	2	Hose	
52	2220654	2	Hose **(SN 0300208082 through 0300237381)**	
53	2220511	1	Fitting, Straight	
54	2753056	1	Hose	
55	2752991	1	Hose	
56	2753135	1	Hose	
57	2220473	AR	Fitting, 90	
58	2752453	1	Hose	
59	2752593	1	Hose	
60	2752990	1	Hose	
61	2752985	1	Hose	
63	1001150715	AR	Hose	
64	2220998	2	Fitting, Straight	
65	2220603	AR	Fitting, Straight	
66	2220473	AR	Fitting, 90	
67	0100011	AR	Compound, Locking	
68	0100038	AR	Primer, Locking	
69	1703534	2	Decal - Hose Tags (Not Shown)	
70	1001161030	1	Hose	
71	2752987	1	Hose	
72	2220373	1	Fitting, Straight	
73	2220947	1	Fitting, Straight	
74	2221036	1	Fitting, 90	
75	2752484	1	Hose	
76	2221053	1	Fitting, Tee	
77	2752519	1	Hose	
80	1001104423	3	Fitting, Straight	
81	2220582	AR	Fitting, Straight	
81	2220472	1	Fitting, 90	

ITEM	PART NUMBER	QTY	DESCRIPTION	REV
82	2754330	1	Hose	
83	2220893	1	Fitting, Straight	
84	1001155672	2	Hose (600AJ only)	
85	1001161032	2	Hose (600A)	
85	1001155675	2	Hose (600AJ)	
86	1001161033	2	Hose (600A)	
86	1001155673	2	Hose (600AJ)	
87	1001159707	2	Hose (600A)	
87	1001155669	2	Hose (600AJ)	
88	1001161034	1	Hose (600A)	
88	1001155678	1	Hose (600AJ)	
89	1001161160	1	Hose (600A)	
89	1001155677	1	Hose (600AJ)	
90	80233041	1	Fitting, Straight	
91	1001193683	1	Hose (600A)	
91	1001155670	1	Hose (600AJ)	
92	1001155663	1	Hose (600A)	
92	1001155671	1	Hose (600AJ)	
93	2220490	2	Fitting, Tee	
94	2220600	2	Fitting, Straight	
95	2220415	AR	Fitting, Straight	
96	1001161036	1	Hose	
96	2220657	1	Fitting, 45	
97	2220409	2	Fitting, 45	
98	2752995	1	Hose	
99	91143177	1	Fitting, Test	
100	2220386	1	Fitting, 90	
101	2220738	1	Fitting, Tee (Deutz D2011 and GM Engines)	
101	2220578	1	Fitting, 90 (Deutz TD2.9L4 and Ford Engines)	
102	2220474	1	Fitting, 90 (Deutz D2011 and GM Engines)	
107	2752723	1	Hose (Ford Engines) **(SN 0300245526 through 0300272252)**	

FIGURE 6-7. HYDRAULIC DIAGRAM LIST

ITEM	PART NUMBER	QTY	DESCRIPTION	REV
		Ref	**Note: Diagrams not shown are available from JLG Service/Parts Departments.**	
		Ref	**DRIVE HYDRAULIC DIAGRAMS**	
	1001140416	Ref	Drive Hydraulic Diagrams 2WD/2WS	
	1001140417	Ref	2WD/4WS **(SN 0300177361 through 0300181174)**	
	1001161038	Ref	2WD/4WS **(SN 0300181175 through 0300272252)**	
	1001140418	Ref	4WD/2WS (Machines without Arctic Package)	
	1001140420	Ref	4WD/2WS (Machines with Arctic Package)	
	1001140419	Ref	4WD/4WS (Machines without Arctic Package) **(SN 0300177361 through 0300181174)**	
	1001161039	Ref	4WD/4WS (Machines without Arctic Package) **(SN 0300181175 through 0300272252)**	
	1001140421	Ref	4WD/4WS (Machines with Arctic Package) **(SN 0300177361 through 0300181174)**	
	1001161040	Ref	4WD/4WS (Machines with Arctic Package) **(SN 0300181175 through 0300272252)**	
		Ref	**FLUSHING LOOP HYDRAULIC DIAGRAMS**	
	1001152619	Ref	**Flushing Loop Hydraulic Diagrams 2WD**	
	1001152620	Ref	**Flushing Loop Hydraulic Diagrams 4WD**	
	4641329	1	Valve, Flushing Loop (Located inside Frame) **(SN 0300177361 through 0300226518)**	
	1001224927	1	Valve, Flushing Loop (Located inside Frame) **(SN 0300226519 through 0300272252)**	
	7024881	1	Piston, Pilot	
	7021639	2	Cartridge, Check Valve	
	2900756	2	Seal Kit - 7021639 Valve	
		Ref	**OIL COOLER HYDRAULIC DIAGRAMS**	
	1001152172	Ref	**Deutz D2011 Engine Machines**	
	1001142678	Ref	**Deutz TD2.9L4 Engine Machines**	
	0272062	Ref	**GM Engine Machines**	
	1283309	1	**GM Engine Machines**	
		Ref	**OSCILLATING AXLE HYDRAULIC DIAGRAMS**	
	2792690	Ref	**7ft/2.1m Wide Machines**	
	1283429	1	**7ft/2.1m Wide Machines**	
	1001151349	Ref	**8ft/2.4m Wide Machines**	
	1001151350	1	**8ft/2.4m Wide Machines**	
		Ref	**STANDARD HYDRAULIC DIAGRAM**	
	1001152598	Ref	**Standard Hydraulic Diagram 600A with Deutz D2011 Engine (SN 0300177361 through 0300181174)**	
	1001159703	Ref	**Standard Hydraulic Diagram 600A with Deutz D2011 Engine (SN 0300181175 through 0300208081)**	
	1001189669	Ref	**Standard Hydraulic Diagram 600A with Deutz D2011 Engine (SN 0300208082 through 0300272252)**	
	1001150727	Ref	**Standard Hydraulic Diagram 600A with Deutz TD2.9L4 Engine (SN 0300177361 through 0300181174)**	
	1001164329	Ref	**Standard Hydraulic Diagram 600A with Deutz TD2.9L4 Engine (SN 0300181175 through 0300208081)**	
	1001189667	Ref	**Standard Hydraulic Diagram 600A with Deutz TD2.9L4 Engine (SN 0300208082 through 0300272252)**	
	1001152598	Ref	**Standard Hydraulic Diagram 600A with GM Engine (SN 0300177361 through 0300181174)**	

ITEM	PART NUMBER	QTY	DESCRIPTION	REV
	1001159703	Ref	**Standard Hydraulic Diagram 600A with GM Engine (SN 0300181175 through 0300208081)**	
	1001189669	Ref	**Standard Hydraulic Diagram 600A with GM Engine (SN 0300208082 through 0300272252)**	
	1001152609	Ref	**Standard Hydraulic Diagram 600AJ with Deutz D2011 Engine (SN 0300177361 through 0300181174)**	
	1001159704	Ref	**Standard Hydraulic Diagram 600AJ with Deutz D2011 Engine (SN 0300181175 through 0300208081)**	
	1001189668	Ref	**Standard Hydraulic Diagram 600AJ with Deutz D2011 Engine (SN 0300208082 through 0300272252)**	
	1001150728	Ref	**Standard Hydraulic Diagram 600AJ with Deutz TD2.9L4 Engine (SN 0300177361 through 0300181174)**	
	1001164277	Ref	**Standard Hydraulic Diagram 600AJ with Deutz TD2.9L4 Engine (SN 0300181175 through 0300208081)**	
	1001189666	Ref	**Standard Hydraulic Diagram 600AJ with Deutz TD2.9L4 Engine (SN 0300208082 through 0300272252)**	
	1001152609	Ref	**Standard Hydraulic Diagram 600AJ with GM Engine (SN 0300177361 through 0300181174)**	
	1001159704	Ref	**Standard Hydraulic Diagram 600AJ with GM Engine (SN 0300181175 through 0300208081)**	
	1001189668	Ref	**Standard Hydraulic Diagram 600AJ with GM Engine (SN 0300208082 through 0300272252)**	
		Ref	**STANDARD HYDRAULIC SCHEMATIC**	
	2792691	Ref	**Hydraulic Schematic Deutz D2011 Engine Machines (SN 0300177361 through 0300181174)**	
	1001157605	Ref	**Hydraulic Schematic Deutz D2011 Engine Machines (SN 0300181175 through 0300272252)**	
	1001152254	Ref	**Hydraulic Schematic Deutz TD2.9L4 Engine Machines (SN 0300177361 through 0300196751)**	
	1001157605	Ref	**Hydraulic Schematic Deutz TD2.9L4 Engine Machines (SN 0300196752 through 0300272252)**	
	2792691	Ref	**Hydraulic Schematic GM Engine Machines (SN 0300177361 through 0300181174)**	
	1001157605	Ref	**Hydraulic Schematic GM Engine Machines (SN 0300181175 through 0300272252)**	
	2792630	Ref	**TOW HYDRAULIC DIAGRAM**	

SECTION 7 - ELECTRICAL

FIGURE 7-1. ELECTRICAL DIAGRAM LIST

ITEM	PART NUMBER	QTY	DESCRIPTION	REV
		Ref	**Note: Diagrams are available from the JLG Service Department. Schematics are shown in Service and Maintenance Manual.**	
	4933312	Ref	**CHASSIS ILLUMINATION ELECTRICAL DIAGRAM**	
	1282571	Ref	**COLD WEATHER START ELECTRICAL DIAGRAM (GM)**	
		Ref	**DRIVE CUTOUT KIT ELECTRICAL DIAGRAMS**	
	4932990	Ref	**Drive Cutout Kit (Above Elevation Beyond Transport)**	
	4932993	Ref	**Drive Cutout Kit (Above Elevation Tilt) (ANSI, ANSI Export, Australian and Japanese Specs Only)**	
	4933308	Ref	**FLOOD LIGHTS ELECTRICAL DIAGRAM**	
		Ref	**GENERATOR ELECTRICAL DIAGRAMS**	
		Ref	**2500W Options:**	
	1001112588	Ref	**Deutz Engine with 110V/60Hz Generator**	
	1001112743	Ref	**Deutz Engine with 220V/50Hz Generator**	
	4933350	Ref	**Ford & GM Engines**	
		Ref	**4000W Options:**	
	1001194437	Ref	**4000W/50Hz (ANSI Export and Japanese Spec)**	
	1001159648	Ref	**4000W/50Hz (Australian Spec)**	
	1001153025	Ref	**4000W/50Hz (220V) (CE Spec)**	
	1001160271	Ref	**4000W/50Hz (110V) (CE UK Spec)**	
	1001132055	Ref	**4000W/60Hz (Deutz D2011 & GM Engines)**	
	1001132055	Ref	**4000W/60Hz (Deutz TD2.9L4 Engines) (SN 0300177361 through 0300213430)**	
	1001153257	Ref	**4000W/60Hz (Deutz TD2.9L4 Engines) (SN 0300213431 through 0300272252)**	
		Ref	**7500W Options:**	
	1001112586	Ref	**Deutz D2011 Engines (SN 0300177361 through 0300182752)**	
	1001157769	Ref	**Deutz D2011 Engines (SN 0300182753 through 0300272252)**	
	1001122528	Ref	**Deutz TD2.9L4 Engines**	
	1001221498	Ref	**Ford Engines**	
	4933349	Ref	**GM Engine (SN 0300177361 through 0300182752)**	
	1001157768	Ref	**GM Engine (SN 0300182753 through 0300272252)**	
		Ref	**GROUND CONTROL BOX ELECTRICAL DIAGRAMS**	
	1001110381	Ref	**Deutz D2011 Engines (SN 0300177361 through 0300181174)**	
	1001154396	Ref	**Deutz D2011 Engines (SN 0300181175 through 0300272252)**	
	1001157770	Ref	**Deutz TD2.9L4 Engines (SN 0300177361 through 0300181174)**	
	1001164564	Ref	**Deutz TD2.9L4 Engines (SN 0300181175 through 0300272252)**	
	1001110380	Ref	**GM Engines (SN 0300177361 through 0300181174)**	
	1001154395	Ref	**GM Engines (SN 0300181175 through 0300232332)**	
	1001224136	Ref	**GM Engines (SN 0300232333 through 0300272252)**	
	4933219	Ref	**HEADLIGHTS/TAILLIGHTS ELECTRICAL DIAGRAM**	
	4933218	Ref	**PLATFORM SOFT TOUCH SYSTEM ELECTRICAL DIAGRAM**	
	0273492	Ref	**PLATFORM WORKLIGHTS ELECTRICAL DIAGRAM**	
		Ref	**STANDARD ELECTRICAL SCHEMATIC**	
	1001110345	Ref	**Standard Schematic (SN 0300177361 through 0300181174)**	
	1001151752	Ref	**Standard Schematic (SN 0300181175 through 0300195160)**	
	1001178004	Ref	**Standard Schematic (SN 0300195161 through 0300272252)**	
	1001131992	Ref	**GM Engine Schematic (Engine Schematic Only. Used in addition to Standard Schematic)**	

FIGURE 7-2. HARNESS COMPONENTS INSTALLATION (SN 0300177361 through 0300181174)

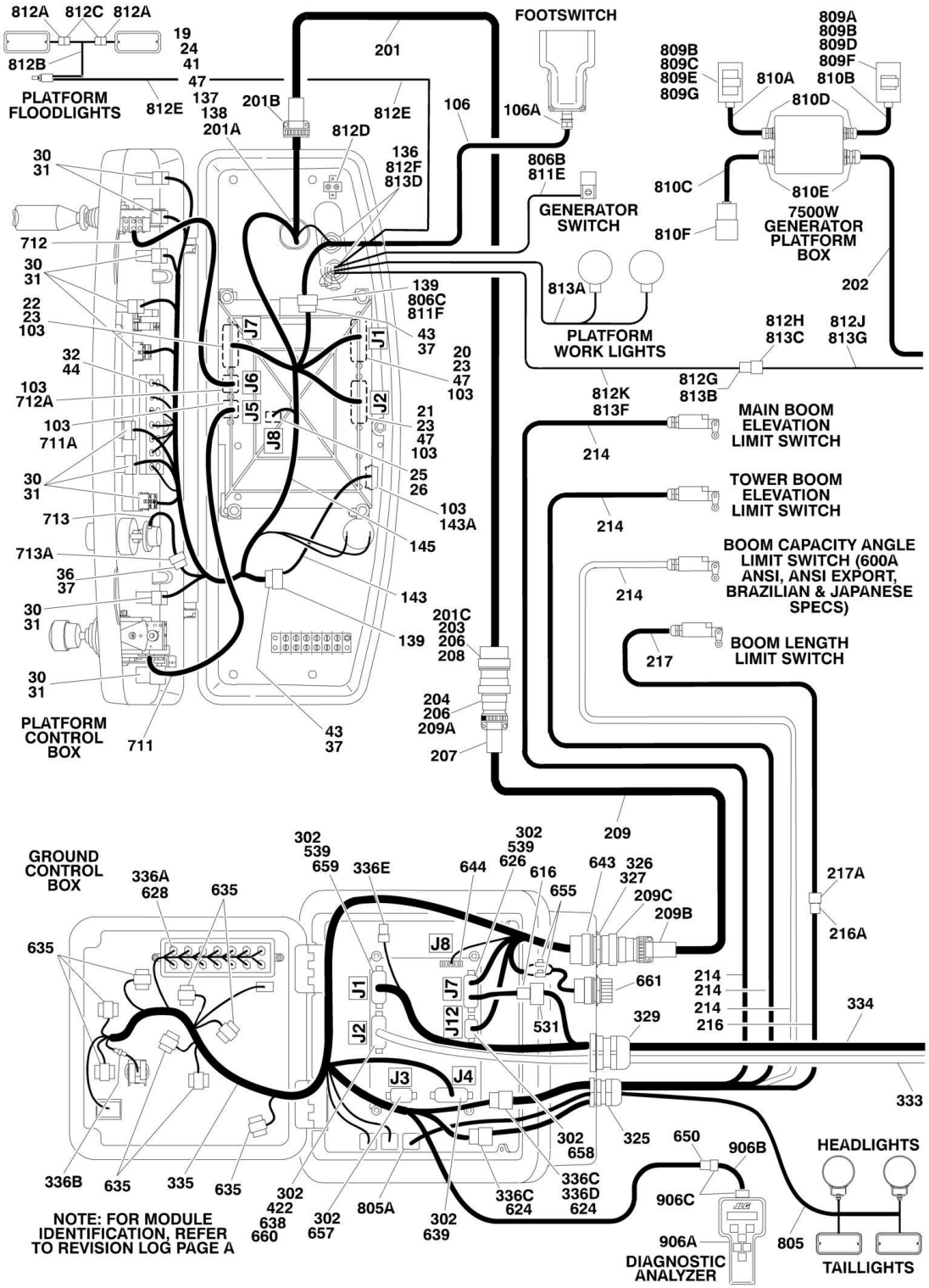

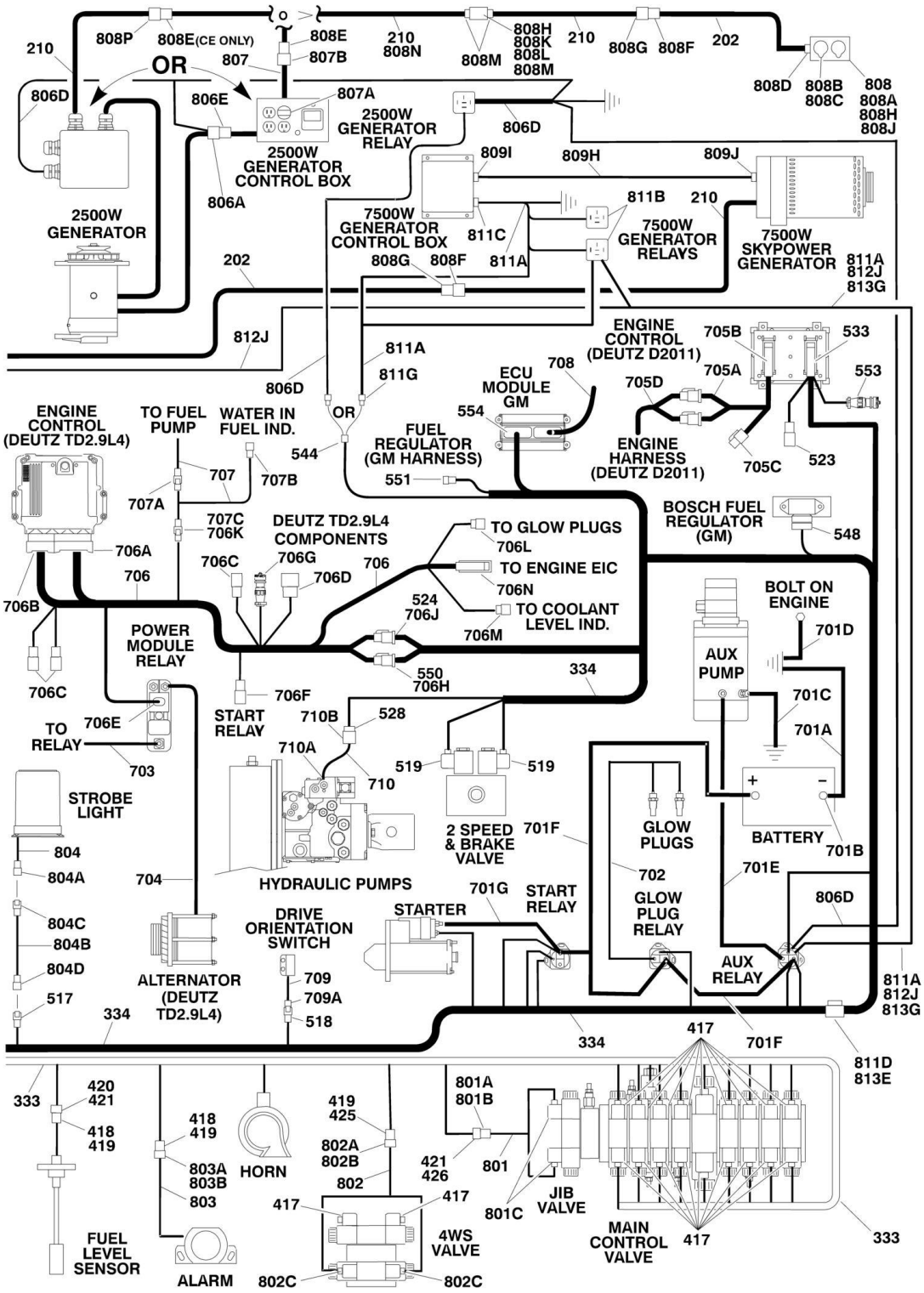
210
808P
808E (CE ONLY)
OR
807
808E
807B
210
808N
808M
808H
808K
808L
808M
210
808G
808F
202
808D
808B
808C
808
808A
808H
808J
806D
806E
807A
2500W GENERATOR RELAY
806D
2500W GENERATOR CONTROL BOX
806A
809I
809H
809J
2500W GENERATOR
811B
210
7500W GENERATOR CONTROL BOX
811C
7500W GENERATOR RELAYS
7500W SKYPOWER GENERATOR
811A
812J
813G
202
808G
808F
811A
812J
812J
806D
811A
811G
ENGINE CONTROL (DEUTZ D2011)
705B
533
708
705A
553
705D
ECU MODULE GM
554
ENGINE CONTROL (DEUTZ TD2.9L4)
TO FUEL PUMP
WATER IN FUEL IND.
OR
544
FUEL REGULATOR (GM HARNESS)
551
ENGINE HARNESS (DEUTZ D2011)
705C
523
707
707B
707A
707C
706K
DEUTZ TD2.9L4 COMPONENTS
TO GLOW PLUGS
706L
BOSCH FUEL REGULATOR (GM)
548
706A
706C
706G
706
706D
TO ENGINE EIC
706N
706B
524
706J
TO COOLANT LEVEL IND.
706M
BOLT ON ENGINE
701D
POWER MODULE RELAY
550
706H
334
AUX PUMP
706C
706F
701C
706E
START RELAY
710B
528
701A
TO RELAY
703
710A
519
519
710
STROBE LIGHT
2 SPEED & BRAKE VALVE
701F
GLOW PLUGS
BATTERY
701B
804
804A
704
HYDRAULIC PUMPS
702
701E
701G
START RELAY
806D
804C
DRIVE ORIENTATION SWITCH
STARTER
GLOW PLUG RELAY
804B
804D
ALTERNATOR (DEUTZ TD2.9L4)
709
AUX RELAY
811A
812J
813G
517
709A
334
518
334
417
701F
811D
813E
333
420
421
418
419
418
419
419
425
801A
801B
802A
802B
421
426
801
803A
803B
HORN
802
803
417
417
801C
JIB VALVE
FUEL LEVEL SENSOR
4WS VALVE
MAIN CONTROL VALVE
417
333
ALARM
802C
802C

FIGURE 7-2. HARNESS COMPONENTS INSTALLATION (SN 0300177361 through 0300181174)

ITEM	PART NUMBER	QTY	DESCRIPTION	REV
	1001107753	Ref	**PLATFORM BOX HARNESS ASSEMBLY**	D
19	4460866	1	Connector - 19 Position	
20	4460874	1	Connector - 35 Position (Natural)	
21	4460875	1	Connector - 35 Position (Gray)	
22	4460873	1	Connector - 35 Position (Black)	
23	4460871	70	Socket, Female	
24	4460464	7	Pin, Male (16 Gauge)	
25	4460879	1	Terminal, Housing 2 Position	
26	4460887	2	Terminal, (12 Gauge)	
30	4460418	9	Connector - 6 Position	
31	4460419	27	Terminal, Female	
32	4120035	13	Base, Light	
36	4460225	1	Plug, Male - 6 Position	
37	4460227	30	Pin, Male	
41	4460508	3	Pin, Male (12 Gauge)	
43	4460434	2	Connector - 15 Position	
44	2920129	13	Lamp, Indicator	
47	4460905	26	Seal, Plug	
	1001145834	Ref	**PLATFORM BOX ASSEMBLY COMPONENTS**	B
103	0100048	AR	Grease, Dielectric	
106	See Note	1	Footswitch Harness	
106	1060918	8 ft/2.4m	Cable, Electrical - 18/3	
106A	4460071	1	Connector, Strain Relief	
136	4460428	2	Connector, Strain Relief	
137	4460470	1	Nut, Terminal	
138	4460471	1	Lockwasher, Terminal	
139	4460708	2	Connector, Female - 15 Position	
143	4922666	1	Harness, Analyzer Cable	2-B
143	4460226	4	Socket, Female (Not Shown - Located at J2)	
143A	4460761	1	Connector, Female - 4 Position	
143A	4460227	4	Pin, Male	
145	1001107753	1	Harness, Platform Console Box (Includes Items 1-44)	
		Ref	**BOOM CABLES INSTALLATION**	
		Ref	**Boom Cables Installation - 600A**	
	0270818	Ref	**ANSI, ANSI Export, CSA and Japanese Specs without 7500W Generator**	6
	1001153321	Ref	**ANSI, ANSI Export, CSA and Japanese Specs with 4000W Generator**	A
	0272624	Ref	**ANSI, ANSI Export and CSA Specs with 7500W Generator**	2
	0275265	Ref	**ANSI, ANSI Export and CSA Specs with Arctic Package without 7500W Generator**	1
	1001093436	Ref	**ANSI, ANSI Export and CSA Specs with Arctic Package with 7500W Generator**	2-A
	0270819	Ref	**CE Specs without 7500W Generator**	6
	0272626	Ref	**CE and Japanese Specs with 7500W Generator**	2
		Ref	**Boom Cables Installation - 600AJ**	
	0270820	Ref	**ANSI, ANSI Export, CSA and Japanese Specs without 7500W Generator**	6-G
	0272625	Ref	**ANSI, ANSI Export and CSA Specs with 7500W Generator**	2-G
	0275140	Ref	**ANSI, ANSI Export and CSA Specs with Arctic Package without 7500W Generator**	1

ITEM	PART NUMBER	QTY	DESCRIPTION	REV
	1001093432	Ref	**ANSI, ANSI Export and CSA Specs with Arctic Package with 7500W Generator**	2-A
	1001115974	Ref	**ANSI and ANSI Export Specs with David Clark Communication System without 7500W Generator (Note: Not Shown - Contact your JLG Parts Department)**	B
	1001116515	Ref	**ANSI and ANSI Export Specs with David Clark Communication System with 7500W Generator (Note: Not Shown - Contact your JLG Parts Department)**	B
	0273428	Ref	**Australian Specs without 7500W Generator**	1-G
	0273430	Ref	**Australian Specs with 7500W Generator**	1-G
	0270821	Ref	**CE Spec without 7500W Generator**	B
	0272627	Ref	**CE and Japanese Specs with 7500W Generator**	B
201		Ref	Harness, Main Boom Options:	
201	4922493	1	Harness, Main Boom without Arctic Package	C
201	4923472	1	Harness, Main Boom with Arctic Package	1-A
201		Ref	Cable Options:	
201	1060896	45.5 ft/ 13.9m	Cable without Arctic Package	
201	4923462	45.5 ft/ 13.9m	Cable with Arctic Package	
201A	4460865	1	Connector (19 Pin)	
201A	4460465	11	Socket, Female - #16	
201A	4460509	4	Socket, Female - #12	
201A	4460466	4	Seal, Plug	
201B	4460473	1	Clamp, Cable	
201C	4460464	11	Pin, Male (16-18 Gauge)	
201C	4460508	4	Pin, Male (10-12 Gauge)	
201C	2820118	AR	Shrink, Heat	
202		Ref	Cable, Electrical (Main Boom) Options (Does not include plug ends)	
202		Ref	Without SkyPower:	
202	4922894	1	ANSI, ANSI Export, CSA and Japanese Specs (12/3)	
202	4923474	1	ANSI, ANSI Export and CSA Specs with Arctic Pkg (12/3)	
202	4922895	1	Australian and CE Specs (12/3)	
202	4922810	1	With SkyPower	
203	2820031	AR	Shrink, Heat	
204	4460865	1	Connector - 19 Position	
206	4460466	8	Seal, Plug	
207	4460473	1	Clamp, Cable	
208	4460866	1	Connector (19 Pin)	
209		Ref	Harness, Tower Boom Cable Options:	
209	4922494	1	Harness, Tower Boom Cable without Arctic Package	C
209	4923473	1	Harness, Tower Boom Cable with Arctic Package	1-A
209		Ref	Cable Options:	
209	1060896	35.5 ft/ 10.8m	Cable without Arctic Package	
209	4923462	35.5 ft/ 10.8m	Cable with Arctic Package	
209A	4460465	11	Socket, Female - #16	
209A	4460509	4	Socket, Female - #12	
209A	2820118	AR	Shrink, Heat	
209B	4460473	1	Clamp, Cable	
209C	4460865	1	Connector - 19 Position	
209C	4460465	11	Socket, Female - #16	

ITEM	PART NUMBER	QTY	DESCRIPTION	REV
209C	4460509	4	Socket, Female - #12	
209C	4460466	4	Seal, Plug	
210		Ref	Cable, Electrical (Tower Boom) Options (Does not include plug ends)	
210		Ref	Without SkyPower:	
210	4922892	1	ANSI, ANSI Export, CSA and Japanese Specs (12/3)	
210	4923475	1	ANSI, ANSI Export and CSA Specs with Arctic Package (12/3)	
210	4922893	1	Australian, CE and Latin American Specs (12/3)	
210	4922811	1	With SkyPower	
214	1061033	AR	Cable, Electrical - 18/2 Main Boom Limit Switch	
214		Ref	600A ANSI, ANSI Export, CSA and Japanese Specs	
214		Ref	600AJ ANSI, ANSI Export, CSA and Japanese Specs	
214		Ref	600A & 600AJ Australian and CE Specs	
214	4923476	3	600A ANSI, ANSI Export and CSA Spec with Arctic Package	
214	4923476	2	600AJ ANSI, ANSI Export and CSA Spec with Arctic Package	
216		Ref	Cable, Electrical - 18/2 Main Boom Length Options:	
216	4922891	1	600A All Specs except Australian Specs	1-A
216	Not Required	0	600A Australian Specs	
216	4923500	1	600A ANSI, ANSI Export and CSA Spec with Arctic Package	1-A
216	Not Required	0	600AJ All Specs except CE Spec	
216	4922891	1	600AJ CE Spec	1-A
216	Not Required	0	600AJ ANSI, ANSI Export and CSA Spec with Arctic Package	
216A	4460891	1	Plug, Male - 2 Position	
216A	4460465	2	Socket, Female	
217		Ref	Cable, Electrical - 18/2 Main Boom Length Options:	
217	4922890	1	Cable, Electrical 600A All Specs	1-A
217	4923501	1	Cable, Electrical 600A ANSI, ANSI Export and CSA Spec with Arctic Package	1-A
217	Not Required	0	Cable, Electrical 600AJ All Specs except CE Spec	
217	4922896	1	Cable, Electrical 600AJ CE Spec	1-A
217	Not Required	0	Cable, Electrical 600AJ ANSI, ANSI Export and CSA Spec with Arctic Package	
217A	4460897	1	Receptacle, Female - 2 Position	
217A	4460464	2	Pin, Male	
		Ref	**GROUND CONTROL BOX COMPONENTS**	
		Ref	**Ground Control Box Components 600A**	
	1001110368	Ref	**Deutz D2011 Engine (ANSI and ANSI Export Specs)**	A
	1001110371	Ref	**Deutz D2011 Engine (ANSI Export and CE Specs)**	A
	1001145036	Ref	**Deutz TD2.9L4 Engine**	A
	1001110367	Ref	**GM Engine**	B
		Ref	**Ground Control Box Components 600AJ**	
	1001110370	Ref	**Deutz D2011 Engine (ANSI, ANSI Export and Australian Spec)**	A
	1001110372	Ref	**Deutz D2011 Engine (ANSI Export and CE Specs)**	A
	1001145037	Ref	**Deutz TD2.9L4 Engine**	A
	1001110369	Ref	**GM Engine**	B
302	0100048	AR	Grease, Dielectric	
325	4460426	1	Terminal, Strain Relief	
326	4460470	1	Nut, Terminal	
327	4460471	1	Lockwasher, Terminal	
329	4460526	1	Connector, Strain Relief	

ITEM	PART NUMBER	QTY	DESCRIPTION	REV
333	4923224	1	Valve Harness Assembly (See 401 to 426 for Breakdown)	
334		Ref	Engine Harness Assembly (See 501 to 554 for Breakdown)	
334	1001110361	1	Deutz D2011 Engine Machines	
334	1001145046	1	Deutz TD2.9L4 Engine Machines	
334	1001110359	1	GM Engine Machines	
335		Ref	Ground Control Box Harness Assembly (See Items 601-661 for Breakdown)	
335	1001110379	1	Deutz D2011 Engine Machines	
335	1001145992	1	Deutz TD2.9L4 Engine Machines	
335	1001110379	1	GM Engine Machines	
336		Ref	Ground Control Box Wiring Diagram (Not Shown)	
336	1001110381	1	Deutz D2011 Engine Machines	F
336	1001145994	1	Deutz TD2.9L4 Engine Machines	A
336	1001110380	1	GM Engine Machines	E
336A	2920129	AR	Bulb, Light	
336B	2400065	1	Fuse, 30Amp (Deutz TD2.9L4 Engines)	
336B	2400066	1	Fuse, Holder with Cover (Deutz TD2.9L4 Engines)	
336B	1001173590	1	Fuse Holder with Fuse - 30AMP	
336C	4460708	2	Connector, Female - 15 Position	
336C	4460226	AR	Socket, Female	
336C	4460906	AR	Plug, Terminal	
336D	4922637	1	Harness, Jumper	
336E	4460894	1	Plug, Male - 6 Position	
336E	4460892	1	Connector, Female - 6 Position	
	4923224	Ref	**VALVE HARNESS ASSEMBLY**	4-E
417	4460880	19	DIN Connector	
418	4460320	2	Plug, Male - 2 Position	
419	4460267	7	Pin, Male	
420	4460424	1	Receptacle, Female - 2 Position	
421	4460268	5	Socket, Female	
422	4460871	31	Socket, Female	
425	4460326	1	Plug, Male - 3 Position	
426	4460445	1	Receptacle, Female - 3 Position	
		Ref	**ENGINE HARNESS ASSEMBLIES**	
	1001110361	Ref	**Deutz D2011 Engine Machines**	A
	1001145046	Ref	**Deutz TD2.9L4 Engine Machines**	D
	1001110359	Ref	**GM Engine Machines**	B
517	4460424	1	Receptacle, Female - 2 Position	
517	4460268	2	Socket, Female	
518	4460424	1	Receptacle, Female - 2 Position	
518	4460226	2	Socket, Female	
519	4460880	2	DIN Connector without Diode	
523	4461070	1	Receptacle, Female with Resistor (3 Position) (Deutz D2011 Engines Only)	
523	4461095	1	Plug, Male - 3 Position (Deutz D2011 Engines Only)	
523	4460944	3	Socket, Female (Deutz D2011 Engines Only)	
524	4460931	1	Connector, Male - 8 Position (Deutz TD2.9L4 Engines Only)	
524	4460464	4	Pin, Male	
524	4460466	4	Seal, Plug	
528	4460460	1	Connector, Male - 4 Position	
528	4460457	AR	Terminal, Female	
528	4460458	AR	Seal, Terminal	

ITEM	PART NUMBER	QTY	DESCRIPTION	REV
531	4460539	1	Connector, Male - 3 Position	
531	4460944	3	Socket, Female	
533	4461052	1	Connector, Receptacle - 25 Position (Deutz D2011 Engines Only)	
533	4461005	5	Terminal (Gold) (Deutz D2011 Engines Only)	
533	4461006	5	Seal, Terminal (Deutz D2011 Engines Only)	
533	4461060	2	Terminal (Tin) (Deutz D2011 Engines Only)	
533	4461054	2	Seal, Terminal (Deutz D2011 Engines Only)	
533	4461053	1	Cover, Plug (Deutz D2011 Engines Only)	
533	4461008	AR	Plug, Hole (Deutz D2011 Engines Only)	
539	4460871	AR	Socket, Female	
544	4461157	1	Receptacle, Female - 2 Position (Deutz Engines Only)	
544	4460979	2	Pin, Male (Deutz Engines Only)	
544	4460458	2	Seal, Terminal (Deutz Engines Only)	
548	4461121	1	Plug, Male - 4 Position (GM Engines Only)	
548	4461122	NLA	Socket, Female (GM Engines Only) (use p/n 1001126484)	
548	4461123	NLA	Seal, Terminal (GM Engines Only) (use p/n 1001126485)	
550	4460899	1	Connector, Male - 6 Position (Deutz TD2.9L4 Engines Only)	
550	4460464	5	Pin, Male	
550	4460943	5	Pin, Male (Gold)	
550	4460466	1	Seal, Plug	
551	4461124	1	Receptacle, Female - 4 Position (GM Engines Only)	
551	4460693	4	Pin, Male (GM Engines Only)	
551	4460608	4	Seal, Terminal (GM Engines Only)	
551	4461161	1	Lock, Terminal (GM Engines Only)	
553	2902443	1	Kit, Receptacle (Deutz Engines Only)	
553	4461071	8	Terminal, Female (Gold) (Deutz D2011 Engines Only)	
553	4461072	1	Connector, Flange Mount (Deutz D2011 Engines Only)	
553	4461073	1	Connector, Dust Cap (Deutz D2011 Engines Only)	
553	4461074	1	Connector, Shell (Deutz D2011 Engines Only)	
554	4461109	1	Plug, Male - 16 Position (GM Engines Only)	
554	4461111	7	Pin, Male (GM Engines Only)	
554	4461113	7	Seal, Terminal (GM Engines Only)	
554	4461222	9	Plug, Cavity (GM Engines Only)	
		Ref	**GROUND CONTROL HARNESS ASSEMBLY**	
	1001110379	Ref	**Deutz D2011 Engine Machines**	B
	1001145992	Ref	**Deutz TD2.9L4 Engine Machines**	A
	1001110379	Ref	**GM Engine Machines**	B
616	4460536	1	Connector, Female 3 - Position	
616	4460943	3	Pin, Male	
621	3990010	2	Diode - 6 Amp (Not Shown)	
624	4460434	2	Connector, Male 15 - Position	
624	4460227	AR	Pin	
626	4460873	1	Connector, Male - 35 Position (Black)	
626	4460871	AR	Socket, Female	
626	4460905	AR	Plug, Seal	
628	4120035	6	Base, Light	
628	4460634	7	Terminal (16 Gauge)	
628	4460635	5	Terminal (12 Gauge)	
635	4460418	9	Connector, Female - 6 Position	
635	4460419	24	Socket, Female	
638	4460871	AR	Socket, Female	

ITEM	PART NUMBER	QTY	DESCRIPTION	REV
639	4460876	1	Connector, Male - 35 Position (Blue)	
639	4460871	28	Socket, Female	
639	4460905	AR	Plug, Seal	
643	4460866	1	Connector - 19 Position	
643	4460464	7	Pin, Male (16 Gauge)	
643	4460508	3	Pin, Male (12 Gauge)	
644	4460878	1	Housing, Terminal - 4 Position	
644	4460887	3	Terminal (12 Gauge)	
650	4460761	1	Connector, Female 4 - Position	
650	4460227	4	Pin, Male	
655	8229242	2	Fuse 5A	
655	2400060	2	Holder, Fuse	
657	1001106339	1	Connector, Male - 14 Position	
657	4460871	2	Socket, Female	
657	4460905	AR	Plug, Seal	
658	1001106340	1	Connector, Male - 14 Position	
658	4460871	5	Socket, Female	
659	4460874	1	Connector, Natural	
659	4460871	10	Socket, Female	
659	4460905	AR	Plug, Seal	
660	4460875	1	Connector, Gray	
660	4460871	2	Socket, Female	
661	1001112612	1	Connector - 9 Position	
661	4460943	4	Pin, Male	
		Ref	**STANDARD HARNESS COMPONENTS**	
701		Ref	Battery Cable Kit Options:	
701	2902296	1	Deutz D2011 Engines	D
701	1001145047	1	Deutz TD2.9L4 Engines	D
701	2902531	1	GM Engine Machines	B
701A		Ref	Cable, Battery (Black) (Battery - to Tray Pivot Grd) Options:	
701A	7027004	1	Deutz D2011 Engines	
701A	7027072	1	Deutz TD2.9L4 Engines	
701A	7016822	1	GM Engine Machines	
701B	8270147	1	Terminal, Battery (with Boot) (Deutz TD2.9L4 Engines Only)	
701B	See Note	1	Boot, Black (Note: Not Available for Purchase)	
701C		Ref	Cable, Battery (Black) (Battery - to Aux Pump and Relay Grds)	
701C	7027003	1	Deutz D2011 Engines	
701C	7027073	1	Deutz TD2.9L4 Engines	
701C	7027003	1	GM Engine Machines	
701C	See Note	1	Boot, Black (Note: Not Available for Purchase)	
701D		Ref	Cable, Battery (Black) (Engine to Tray Pivot Grd)	
701D	Not Required	0	Deutz D2011 Engines	
701D	7027074	1	Deutz TD2.9L4 Engines	
701D	See Note	1	GM Engine Machines (Note: Use Item 701A)	
701E		Ref	Cable (Red) (Aux Relay to Aux Pump)	
701E	7027002	1	Deutz D2011 Engines	
701E	7027075	1	Deutz TD2.9L4 Engines	
701E	7027016	1	GM Engine Machines	
701E	See Note	2	Boot, Red (Note: Not Available for Purchase)	
701F		Ref	Cable (Red) (Battery + to Aux Relay/Power Module/Starter)	
701F	1001116240	1	Deutz D2011 Engines	

ITEM	PART NUMBER	QTY	DESCRIPTION	REV
701F	7027076	1	Deutz TD2.9L4 Engines	
701F	7027015	1	GM Engine Machines	
701F	See Note	2	Boot, Red (Note: Not Available for Purchase)	
701G		Ref	Cable (Red) (Relay to Starter)	
701G	See Note	1	Deutz D2011 Engines (Note: Use Item 701F)	
701G	See Note	1	Deutz TD2.9L4 Engines (Note: Use Item 701F)	
701G	7027017	1	GM Engine Machines	
701G	See Note	2	Boot, Red (Note: Not Available for Purchase)	
702	4923379	1	Harness, Glow Plugs (Deutz D2011 Engine Machines Only)	
703	1001141304	1	Harness, Glow Plugs (Deutz TD2.9L4 Engine Machines Only)	
704	1001143907	1	Cable, Alternator Power (Deutz TD2.9L4 Engine Machines Only)	
705		Ref	Deutz Engine Harness Components (Deutz D2011 Engine Machines Only)	
705A	7027796	1	Deutz Engine Harness	
705B	See Note	1	Receptacle, Female - 25 Position (Note: Not Available - Purchase Complete Harness)	
705B	See Note	1	Cover, Receptacle (Note: Not Available - Purchase Complete Harness)	
705B	See Note	5	Terminal (Note: Not Available - Purchase Complete Harness)	
705B	See Note	5	Seal (Note: Not Available - Purchase Complete Harness)	
705B	See Note	2	Terminal (Note: Not Available - Purchase Complete Harness)	
705B	See Note	2	Seal (Note: Not Available - Purchase Complete Harness)	
705B	See Note	18	Plug, Hole (Note: Not Available - Purchase Complete Harness)	
705C	7027793	1	Plug-In, Connector	
705D	70001872	1	Deutz Engine Harness (For other replacement parts refer to Deutz engine dealer)	
706	1001143726	1	Deutz TD2.9L4 Engine Harness	G
706A	1001133956	1	Connector (Includes Cover, Locks and Retention Plate)	
706A	1001126352	6	Terminal	
706A	1001126353	6	Seal, Terminal	
706A	1001126384	19	Terminal	
706A	1001126351	3	Terminal	
706A	1001126356	63	Plug, Seal	
706A	1001126357	2	Plug, Seal	
706B	1001133957	1	Connector (Includes Cover, Locks and Retention Plate)	
706B	1001126384	17	Terminal	
706B	1001126351	13	Terminal	
706B	1001126356	19	Plug, Seal	
706B	1001126357	11	Plug, Seal	
706C	4461070	3	Receptacle, Female with Resistor (3 Position)	
706C	4461095	6	Plug, Male - 3 Position	
706C	4460944	6	Socket, Female	
706C	4460466	2	Seal, Plug	
706D	80484084	1	Receptacle, Female - 8 Position	
706D	8229242	1	Fuse - 5A	
706D	80983191	1	Fuse - 10A	
706D	1001147264	1	Cap	
706D	1001116727	8	Plug	
706D	4460458	4	Seal	
706E	1001116952	1	Plug, Male - 2 Position	
706E	4460465	2	Socket, Female	
706F	1001138110	1	Plug, Male - 2 Position	

ITEM	PART NUMBER	QTY	DESCRIPTION	REV
706F	1001138111	2	Socket, Female	
706F	1001138113	2	Seal	
706G	2902443	1	Kit, Receptacle	
706G	4461071	8	Terminal, Female (Gold)	
706G	4461072	1	Connector, Flange Mount	
706G	4461073	1	Connector, Dust Cap	
706G	4461074	1	Connector, Shell	
706H	4460894	1	Plug, Male - 6 Position	
706H	4460465	3	Socket, Female	
706H	4460944	2	Socket, Female	
706H	4460466	1	Seal, Plug	
706J	4460930	1	Plug, Male - 8 Position	
706J	4460465	1	Socket, Female	
706J	4460466	7	Seal, Plug	
706K	4460884	1	Plug, Male - 4 Position	
706K	4460465	2	Socket, Female	
706K	4460942	2	Socket, Female	
706L	1001142938	1	Plug, Male - 2 Position	
706L	1001142940	2	Terminal, Female	
706L	1001142941	2	Seal	
706M	1001133714	1	Plug, Male - 4 Position	
706M	1001133715	3	Terminal, Female	
706M	1001135650	3	Seal	
706M	1001135651	NLA	Plug, Cavity (Use p/n 4461008)	
706N	1001126362	1	Receptacle, Female - 62 Position	
706N	1001126363	33	Terminal	
706N	1001126364	33	Seal	
706N	1001126391	23	Plug	
706N	4461008	4	Plug, Cavity	
706N	1001126365	2	Terminal	
706N	4461054	2	Seal	
707	1001138491	NLA	Fuel Harness (Deutz TD2.9L4 Engines Only) (Use p/n 1001222665 - Includes Items 707-707C)	D
707A	4460897	1	Receptacle, Female - 2 Position	
707A	4460941	2	Pin, Male	
707A	4460891	1	Plug, Male - 2 Position	
707A	4460942	2	Socket, Female	
707B	1001116983	1	Receptacle, Female - 2 Position	
707B	1001116710	2	Terminal	
707B	4461054	2	Seal	
707C	4460932	1	Receptacle, Female - 4 Position	
707C	4460941	2	Pin, Male	
707C	4460464	2	Pin, Male	
708		Ref	GM Engine Harness (GM Engine Machines Only)	
	7027991	1	Tier 1 Engines	
	70000718	1	Tier 2 Engines	
	70002898	1	Tier 3 & 4 Interim Engines	
	7027989	1	Connector, Male - 10 Position (Not Shown)	
	See Note	1	Box, Fuse (Note: Parts of Harness - Not Available for Purchase)	
	70002627	1	Cover, Fuse Box	
	70001950	2	Relay (Power and Fuel Pump)	
	70001951	1	Relay (Starter)	

ITEM	PART NUMBER	QTY	DESCRIPTION	REV
	70001931	1	Fuse - 60 Amp (Alternator)	
	See Note	1	Fuse - 20 Amp (Note: Not Available - Purchase Locally)	
	See Note	3	Fuse - 15 Amp (Note: Not Available - Purchase Locally)	
	See Note	1	Fuse - 10 Amp (Note: Not Available - Purchase Locally)	
	See Note	1	Fuse - 5 Amp (Note: Not Available - Purchase Locally)	
709	4360517	1	Switch, Proximity	
709A	4460320	1	Connector - 2 Position	
709A	4460227	2	Pin, Male	
710	See Note	1	Pump Harness (Note: Not Available for Purchase)	
710A	7007497	1	Plug (Pump End)	
710B	7007498	1	Plug (Engine Harness End)	
711	See Note	1	Controller Harness Assembly (Lift and Swing) (Note: Not Available for Purchase)	
711A	7022819	1	Plug, Male - 8 Position (Natural)	
711A	4460871	8	Socket, Female	
712	See Note	1	Controller Harness/Circuit Board Assembly (Drive and Steer) (Note: Not Available for Purchase)	
712A	7022825	1	Plug, Male - 8 Position (Black)	
712A	4460871	7	Socket, Female	
713	See Note	1	Controller Harness (Speed Control) (Note: Not Available for Purchase)	
713A	4460224	1	Receptacle, Female - 6 Position	
713A	4460226	6	Socket, Female	
		Ref	**OPTIONAL HARNESS COMPONENTS**	
801	4921927	1	Jib Valve Harness (600AJ Only)	3-F
801A	4460326	1	Plug, Male - 3 Position	
801B	4460267	3	Pin, Male	
801C	4460499	2	Connector, DIN with Diode	
802	4921928	1	4WS Valve Harness	3-E
802A	4460268	3	Socket, Female	
802B	4460445	1	Connector, Female - 3 Position	
802C	4460499	2	Connector, DIN with Diode	
803	0257887	1	Alarm Harness (Includes Alarm)	
803	0140032	1	Alarm	
803	2820035	6 in/15cm	Loom	
803A	4460424	1	Plug, Male - 2 Position	
803B	4460268	2	Socket, Female	
804	2920161	1	Strobe Light Harness (Includes Strobe Light)	B
804A	4460891	1	Plug, Male - 2 Position	
804A	4460465	2	Socket, Female	
804B	1001149818	1	Strobe Light Extension Harness	B
804C	4460897	1	Receptacle, Female -2 Position	
804C	4460464	2	Pin, Male	
804D	4460320	2	Plug, Male - 2 Position	
804D	4460267	4	Pin, Male	
805	See Note	1	Headlight and Taillight/Chassis Illumination Harness (Note: Not Available for Purchase)	
805	1060341	AR	Cable, Electrical 16/2 Options:	
805	1060341	37 ft/ 11.3m	Headlights and Taillights	
805	1060341	40 ft/ 12.2m	Chassis Illumination Lights	
805A	3740049	1	Relay	

ITEM	PART NUMBER	QTY	DESCRIPTION	REV
805A	4460259	3	Terminal	
805A	4460260	4	Housing, Terminal	
805A	4460297	1	Terminal	
805A	4922643	1	Lights Harness for Ground Control Box	B
805A	4460226	2	Socket, Female	
806		Ref	2500W Generator Electrical Components Options:	
806	1001112588	Ref	Deutz Engines 110V/220V with Generator Control Box	A
806	1001112743	Ref	Deutz Engines 110V/220V without Generator Control Box	B
806	4933350	Ref	GM Engine	A
806A	4460321	1	Connector, Male - 4 Position (Deutz and GM Engines Specs with Generator Control Box)	
806A	4460906	4	Socket, Female	
806B	4922641	1	Harness - On/Off Switch	
806C	4460226	2	Socket, Female	
806D		Ref	Powermite Control Box to Relay Options:	
806D	1001112589	1	Deutz Engines	
806D	4923445	1	GM Engines	
806D	4460374	1	Plug, Sealed Relay	
806D	4460375	3	Terminal	
806D	4460742	1	Plug, Male - 2 Position	
806D	4460743	1	Socket, Female	
806D	4460458	1	Seal, Terminal	
806E	4460961	1	Connector, Female - 4 Position (Deutz and GM Engines Specs with Generator Control Box)	
806E	4460705	4	Pin, Male	
807		Ref	Generator to Rear of Boom Harness Options:	
		Ref	**Note: Harness used to connect AC at platform harness to generator receptacle to power platform receptacle.**	
807	4921829	1	110V (ANSI, ANSI Export and Japanese Specs)	2
807	4921954	1	220V (ANSI and ANSI Export Specs)	2
807	See Note	1	110V/220V (Australian, CE, Latin American and Brazilian Specs) (Note: Not Available for Purchase)	
807		Ref	Cable, Electrical - 12/3 Options:	
807	1060494	6 ft/1.8m	110V (ANSI, ANSI Export and Japanese Specs)	
807	1060494	26 ft/8m	220V (ANSI and ANSI Export Specs)	
807	1060461	6 ft/1.8m	110V/220V (Australian, CE, Latin American and Brazilian Specs)	
807A		Ref	Plug, Male Options:	
807A	4460205	1	110V (ANSI, ANSI Export and Japanese Specs)	
807A	4460233	1	220V (ANSI and ANSI Export Specs)	
807A	Not Required	0	110V/220V (Australian, CE, Latin American and Brazilian Specs) (Purchase Locally)	
807A	4460027	1	Receptacle, Twist Lock (110V Only)	
807B		Ref	Receptacle, Female Options:	
807B	4460134	1	110V (ANSI, ANSI Export and Japanese Specs)	
807B	4460701	1	220V (ANSI and ANSI Export Specs)	
807B	Not Required	0	110V/220V (Australian, CE, Latin American and Brazilian Specs) (Purchase Locally)	
808		Ref	AC to Platform Receptacle Components Options:	
808	0255382	Ref	110V GFI Receptacle (ANSI, ANSI Export and Japanese Specs)	B
808	0257176	Ref	220V Receptacle (ANSI, ANSI Export and Japanese Specs)	B
808	0272433	Ref	SkyPower Machines (All Specs)	B
808	0274618	Ref	Dual AC (ANSI Export Spec Option)	2-B

ITEM	PART NUMBER	QTY	DESCRIPTION	REV
808	0256202	Ref	110V/220V (Australian, Latin American and Brazilian Specs)	B
808		Ref	110V/220V (CE Spec Only)	
808		Ref	**Without Powermite Generator:**	
808	0256202	Ref	110V/220V (No Plug)	B
808	0275653	Ref	220V with CEE7 Post Ground Receptacle and Plug and Circuit Breaker (2x4 Box)	C
808	0275654	Ref	220V with CEE7 Side Ground Receptacle and Plug and Circuit Breaker (2x4 Box)	C
808	0275660	Ref	220V with AFSINT 107 Keyed Ground Receptacle and Plug and Circuit Breaker (2x4 Box)	C
808	0275656	Ref	110V with IEC Yellow Receptacle and Plug and Circuit Breaker	C
808	0275652	Ref	220V with IEC Blue Receptacle and Plug and Circuit Breaker	C
808	0275655	Ref	220V with CEE7 Post Ground Receptacle and Plug and Circuit Breaker (70mm x 70mm Box)	C
808	0275651	Ref	220V with CEE7 Side Ground Receptacle and Plug and Circuit Breaker (70mm x 70mm Box)	C
808		Ref	**With Powermite Generator:**	
808	1001100397	Ref	220V with CEE7 Post Ground Receptacle and Plug and Circuit Breaker (2x4 Box)	D
808	1001100398	Ref	220V with CEE7 Side Ground Receptacle and Plug and Circuit Breaker (2x4 Box)	D
808	1001100399	Ref	220V with AFSINT 107 Keyed Ground Receptacle and Plug and Circuit Breaker (2x4 Box)	C
808	1001100400	Ref	110V with IEC Yellow Receptacle and Plug and Circuit Breaker	C
808	1001100401	Ref	220V with IEC Blue Receptacle and Plug and Circuit Breaker	C
808	1001100402	Ref	220V with CEE7 Post Ground Receptacle and Plug and Circuit Breaker (70mm x 70mm Box)	C
808	1001100403	Ref	220V with CEE7 Side Ground Receptacle and Plug and Circuit Breaker (70mm x 70mm Box)	C
808A		Ref	Box, Switch Options:	
808A	0860038	1	0255382, 0257176 & 0274618 Installations	
808A	Not Required	0	0256202 Installations (Purchase Locally)	
808A	0861731	1	0275253, 0275254, 0275660, 1001100345, 1001100397, 1001100398 & 1001100399 Installations	
808A	0861781	1	0275656, 0275652, 1001100400 & 1001100401 Installations	
808A	See Note	1	0275655, 0275651, 1001100402 & 1001100403 Installations (Note: was p/n 0861782 which is no longer available. Use p/n 1001100344 CEE7 Side Ground Service Kit or p/n 1001100343 CEE7 Post Ground Service Kit. Kit include Box p/n 1001141967 & Items 808B, 808C, 808E & 808P)	
808A	1001141967	1	1001100343, 1001100344, 1001141970 & 1001141971 Kits	
808B		Ref	Receptacle Options:	
808B	4460346	1	0255382 & 0274618 Installations	
808B	4460125	1	0257176 Installation	
808B	Not Required	0	0256202 Installation (Purchase Locally)	
808B	4461244	1	0275253, 1001100345, 1001100397 & 1001194197 Installations	
808B	4461245	1	0275654 & 1001100398 Installations	
808B	4461246	1	0275660 & 1001100399 Installations	
808B	4461198	1	0275656 & 1001100400 Installations	
808B	4461201	1	0275652 & 1001100401 Installations	
808B	4461204	NLA	0275655 & 1001100402 Installations (Use p/n 1001100343)	
808B	4461207	NLA	0275651 & 1001100403 Installations (Use p/n 1001100344)	

ITEM	PART NUMBER	QTY	DESCRIPTION	REV
808B	1001141968	1	1001100343 & 1001141971 Kits	
808B	1001141969	1	1001100344 & 1001141970 Kits	
808C		Ref	Shield, Cover Options:	
808C	1001110873	1	0255382 & 0274618 Installations (Top Hinged)	
808C	4060092	1	0257176 Installation	
808C	Not Required	0	0256202 Installation (Purchase Locally)	
808C	4461244	1	0275253, 1001100345, 1001100397 & 1001194197 Installations	
808C	4461245	1	0275654 & 1001100398 Installations	
808C	4461246	1	0275660 & 1001100399 Installations	
808C	4461198	1	0275656 & 1001100400 Installations	
808C	4461201	1	0275652 & 1001100401 Installations	
808C	4461204	NLA	0275655 & 1001100402 Installations (Use p/n 1001100343)	
808C	4461207	NLA	0275651 & 1001100403 Installations (Use p/n 1001100344)	
808C	1001141968	1	1001100343 & 1001141971 Kits	
808C	1001141969	1	1001100344 & 1001141970 Kits	
808D		Ref	Connector, Strain Relief Options:	
808D	4460071	1	0255382, 0257176 & 0274618 Installations	
808D	Not Required	0	0256202 Installations (Purchase Locally)	
808D	4460968	1	0275653, 0275654, 0275660, 0275656, 0275652, 0275655, 0275651, 1001100397, 1001100398, 1001100399, 1001100400, 1001100401, 1001100402 & 1001100403 Installations	
808E		Ref	Plug, Male Options:	
808E	4460205	1	0255382 & 0274618 Installations	
808E	4460233	1	0257176 Installation	
808E	Not Required	0	0256202 Installation (Purchase Locally)	
808E	4461202	NLA	0275653, 0275655, 1001100397 & 1001100402 Installations & 1001100343 & 1001141971 Kits (Use p/n 4461205)	
808E	4461199	1	0275652 & 1001100401 Installations	
808E	4461249	1	0275660 & 1001100399 Installations	
808E	4461196	1	0275656 & 1001100400 Installations	
808E	4461205	1	0275654, 0275651, 1001100345, 1001100398 & 1001100403 Installations & 1001100344 & 1001141970 Kits	
808F		Ref	Plug, Male Options:	
808F	4460205	1	0255382 & 0274618 Installations (Qty 4 Req'd for Dual AC)	
808F	4460233	1	0257176 Installation	
808F	4460709	1	0256202, 0275653, 0275654, 0275660, 0275656, 0275652, 0275655, 0275651, 1001100397, 1001100398, 1001100399, 1001100400, 1001100401, 1001100402 & 1001100403 Installations	
808F	4460960	1	0272433 Installation	
808F		Ref	Cover (Optional)	
808F	1671093	1	0272433 Installation	
808F	1001156352	1	0256202 Installation	
808G		Ref	Connector, Female Options:	
808G	4460134	1	0255382 & 0274618 Installations (Qty 2 Required for Dual AC)	
808G	4460701	1	0257176 Installation	
808G	4460710	1	0256202, 0275653, 0275654, 0275660, 0275656, 0275652, 0275655, 0275651, 1001100397, 1001100398, 1001100399, 1001100400, 1001100401, 1001100402 & 1001100403 Installations	
808G	4460959	1	0272433 Installation	

ITEM	PART NUMBER	QTY	DESCRIPTION	REV
808G		Ref	Cover (Optional)	
808G	1671092	1	0272433 & 1001160272 Installations	
808G	1001156351	1	0256202 Installation	
808H		Ref	Hardware Options:	
808H	0641405	AR	Bolt 1/4in - 20NC x 5/8in	
808H	0641407	AR	Bolt 1/4in - 20NC x 7/8in	
808H	0641416	AR	Bolt 1/4in - 20NC x 2in	
808H	0700408	AR	Screw M4 x 16mm	
808H	3290405	AR	Locknut M4	
808H	3311405	AR	Locknut 1/4in - 20NC	
808H	4711400	AR	Flatwasher 1/4in Thin	
808H	4811400	AR	Flatwasher M4	
808J		Ref	Bracket, Receptacle Box Mounting Options:	
808J	Not Required	0	0255382, 0274618, 0257176 & 0256202 Installations	
808J	0903484	1	0275653, 0275654, 0275660, 0275656, 0275652, 0275655, 0275651, 1001100397, 1001100398, 1001100399, 1001100401, 1001100402 & 1001100403 Installations	
808K		Ref	Bracket, Circuit Breaker Mounting Options:	
808K	Not Required	0	0255382, 0274618, 0257176 & 0256202 Installations	
808K	0903612	1	0275653, 0275654, 0275660, 0275656, 0275652, 0275655, 0275651, 1001100397, 1001100398, 1001100399, 1001100400, 1001100401, 1001100402 & 1001100403 Installations	
808L		Ref	Breaker, Circuit Kit Options (Required on All CE Spec Installations except 0256202 Installation)	
808L	1001096070	AR	Kit (Without Powermite Generator Control Box)	D
808L	1001109554	AR	Kit (With Powermite Generator Control Box)	B
808L		Ref	Circuit Breaker Options:	
808L	1001109477	NLA	Breaker 10A (Use p/n 1001181046) **(SN 0300177361 through 0300204452)**	
808L	1001109475	1	Breaker 16A	
808L	1001109482	1	Breaker 30mA	
808L	0861880	1	Breaker Box	
808L	4460957	1	Terminal Block	
808L	4460956	1	Barrier, Terminal Block End	
808M	1001101191	2	Connector, Strain Relief Options (Required Only on CE Spec Installations except 0256202 Installation)	
808N	1060908	12 ft/3.7m	Cable, Extension (Required Only on CE Spec Installations except 0256202 Installation)	
808P		Ref	Connector, Female Options:	
808P	Not Required	0	0255382, 0274618, 0257176, 0275653, 0275654, 0275660, 0275656, 0275652, 0275655 & 0275651 Installations	
808P	Not Required	0	0256202 Installation (Purchase Locally)	
808P	4461203	1	1001100402 & 1001100397 Installations & 1001100343, 1001100345 & 1001141971 Kits	
808P	4461200	1	1001100401 Installation	
808P	4461250	1	1001100399 Installation	
808P	4461197	1	1001100400 Installation	
808P	4461206	1	1001100403 & 1001100398 Installations & 1001100344 & 1001141970 Kits	
		Ref	Kit, Plug and Socket Options:	
		Ref	Without Generator:	
	0275452	1	Receptacle Box Kit (220V CEE7 Post Ground) (Includes Items 808A, 808B, 808C & 808E) (0275653 Installation)	C

ITEM	PART NUMBER	QTY	DESCRIPTION	REV
	0275453	1	Receptacle Box Kit (220V CEE7 Side Ground) (Includes Items 808A, 808B, 808C & 808E) (0275654 Installation)	1
	0275454	1	Receptacle Box Kit (220V AFSINT 107 Keyed Ground) (Includes Items 808A, 808B, 808C & 808E) (0275660 Installation)	1
	0275216	1	Receptacle Box Kit (110V IEC Yellow) (Includes Items 808A, 808B, 808C & 808E) (0275656 Installation)	1
	0275217	1	Receptacle Box Kit (220V IEC Blue) (Includes Items 808A, 808B, 808C & 808E) (0275652 Installation)	1
	0275218	NLA	Receptacle Box Kit (220V CEE7 Post Ground) (Includes Items 808A, 808B, 808C & 808E) (0275655 Installation) (Use p/n 1001100343)	C
	0275219	NLA	Receptacle Box Kit (220V CEE7 Side Ground) (Includes Items 808A, 808B, 808C & 808E) (0275651 Installation) (Use p/n 1001100344)	B-B
		Ref	With Generator:	
	1001100345	1	Receptacle Box Kit (220V CEE7 Post Ground) (Includes Items 808A, 808B, 808C, 808E & 808P) (1001100397 Installation)	2
	1001100347	1	Receptacle Box Kit (220V CEE7 Side Ground) (Includes Items 808A, 808B, 808C, 808E & 808P) (1001100398 Installation)	3
	1001100346	1	Receptacle Box Kit (220V AFSINT 107 Keyed Ground) (Includes Items 808A, 808B, 808C, 808E & 808P)(1001100399 Installation)	2
	1001100341	1	Receptacle Box Kit (110V IEC Yellow) (Includes Items 808A, 808B, 808C, 808E & 808P) (1001100400 Installation)	2
	1001100342	1	Receptacle Box Kit (220V IEC Blue) (Includes Items 808A, 808B, 808C, 808E & 808P) (1001100401 Installation)	2
	1001100343	1	Receptacle Box Kit (220V CEE7 Post Ground) (Includes Items 808A, 808B, 808C, 808E & 808P) (1001100402 Installation)	B
	1001100344	1	Receptacle Box Kit (220V CEE7 Side Ground) (Includes Items 808A, 808B, 808C, 808E & 808P) (1001100403 Installation)	B
809		Ref	7500W SKYPOWER GENERATOR INSTALLATION	
809	1001115391	Ref	60Hz and Deutz D2011 Engine	C
809	1001145227	Ref	60Hz and Deutz TD2.9L4 Engine	C
809	1001115392	Ref	50Hz Spec and Deutz D2011 Engine	B
809	0275257	Ref	60Hz Spec and GM Engine	F
		Ref	**Note: SkyPower Generator is Standard on ANSI and CSA Specs. Optional on All Other Specs.**	
809A		Ref	Receptacle, Female Twist-Lock Options:	
809A	4460958	1	60Hz Spec	
809A	See Note	1	50Hz Spec (Note: Not Available - Purchase Locally)	
809B		Ref	Gasket Options:	
809B	3960422	2	60Hz Spec	
809B	See Note	2	50Hz Spec (Note: Not Available - Purchase Locally)	
809C		Ref	Cover, Receptacle Options:	
809C	1001110873	1	60Hz Spec	
809C	See Note	1	50Hz Spec (Note: Not Available - Purchase Locally)	
809D		Ref	Cover, Receptacle Options:	
809D	1001110872	1	60Hz Spec	
809D	See Note	1	50Hz Spec (Note: Not Available - Purchase Locally)	
809E		Ref	Receptacle Options:	
809E	4460346	1	60Hz Spec	

ITEM	PART NUMBER	QTY	DESCRIPTION	REV
809E	See Note	1	50Hz Spec (Note: Not Available - Purchase Locally)	
809F	4460051	1	Connector, Strain Relief	
809G	4460071	1	Connector, Strain Relief	
809H	4922925	1	Harness, Generator	C
809I	77363233	1	Plug, Male - 6 Position	
809I	4460465	6	Socket, Female	
809J	4460225	1	Plug, Male - 6 Position	
809J	4460268	6	Socket, Female	
810		Ref	7500W SkyPower Generator Junction Box Components	
810	0861542	Ref	60Hz Spec (Deutz D2011 and GM Engines)	C
810	1001157592	Ref	60Hz (Deutz TD2.9L4 Engines)	
810	0861567	Ref	50Hz Specs	B
810A		Ref	Cable, Electrical 12/3	
810A	1060494	2 ft /.6m	60Hz Spec	
810A	See Note	2 ft /.6m	50Hz Spec (Note: Not Available - Purchase Locally)	
810B		Ref	Cable, Electrical 10/3 (Deutz D2011 and GM Engines Only)	
810B	1060708	2.5 ft/ .76m	60Hz Spec	
810B	See Note	2.5 ft/ .76m	50Hz Spec (Note: Not Available - Purchase Locally)	
810C	1060343	1.5 ft/ .46m	Cable, Electrical 10/4 (60Hz Spec Only)	
810D	4460425	2	Connector, Strain Relief (Deutz D2011 and GM Engine Machines Only)	
810D	1001152525	1	Plug (Deutz TD2.9L4 Engine Machines)	
810E		Ref	Component Options:	
810E	4460426	2	Connector, Strain Relief (60Hz Spec Only)	
810E	4460426	1	Connector, Strain Relief (50Hz Spec Only)	
810E	3520189	1	Plug (50Hz Spec Only)	
810F	1671092	1	Cover (60Hz Spec Only)	
810F	4460963	1	Connector (60Hz Spec Only)	
811		Ref	7500W Generator Electrical Diagram Components	
811	1001112586	Ref	Deutz D2011 Engine Machines	A
811	1001122528	Ref	Deutz TD2.9L4 Engine Machines	B
811	4933349	Ref	GM Engine Machines	B
811A		Ref	Generator Harness Options:	
811A	1001112587	1	Deutz D2011 Engine Machines	A
811A	1001119968	1	Deutz TD2.9L4 Engine Machines	C
811A	4923420	1	GM Engine Machines	A
811B	4460374	2	Plug, Sealed Relay	
811B	4460375	7	Terminal	
811C	4460967	1	Plug, Male - 3 Position	
811C	4460465	3	Socket, Female	
811D	2400060	1	Fuseholder	
811D	2400064	1	Fuse - 5 Amp	
811D		Ref	Component Options:	
811D	2400060	1	Fuseholder (Deutz D2011 and GM Engines)	
811D	2400064	1	Fuse - 5 Amp (Deutz D2011 and GM Engines)	
811D	1001117078	1	Fuseholder (Includes Fuse and Cap) (Deutz D2011 Engines)	
811D	See Note	1	Fuse - 5 Amp (Deutz D2011 Engines) (Note: Use 1001117078 Assembly or Purchase Fuse Locally)	
811D	1001096134	1	Cover, Fuseholder (Deutz D2011 Engines)	

ITEM	PART NUMBER	QTY	DESCRIPTION	REV
811E	4922641	1	Switch Harness	
811F	4460226	2	Socket, Female	
811G	4460742	1	Plug, Male - 2 Position	
811G	4460743	2	Socket, Female	
811G	4460458	2	Seal, Terminal	
812	4933308	1	Floodlights Harness Components	1-A
812A	4460320	2	Plug, Male - 2 Position	
812A	4460227	4	Pin, Male	
812B	4922764	1	Floodlight Harness (Lights to Switch)	1-A
812C	4460424	2	Connector, Female - 2 Position	
812C	4460226	4	Socket, Female	
812D	4360232	1	Circuit Breaker - 15 Amp	
812E	1060977	1	Cord, 2 Wire Coiled (Console Box Circuit Breaker to Switch)	
812F	4460425	1	Connector, Strain Relief	
812G	4460459	1	Plug, Male - 3 Position	
812G	4460790	3	Socket, Female	
812G	4460789	3	Seal	
812H	4460476	1	Receptacle, Female	
812H	4460850	3	Pin, Male	
812H	4460790	3	Socket, Female	
812J	1060494	33 ft/ 10.1m	Electrical Cable 12/3 (Lower Boom to Aux Relay)	
812K	1060494	47 ft/ 14.3m	Electrical Cable 12/3 (Upper Boom to Console Box)	
813		Ref	Platform Worklights Components	
813A	2920140	NLA	Platform Worklights External Harness (Use p/n 1001232838) (Includes Light and Wire Only)	
813B	4460459	1	Plug, Male - 3 Position	
813B	4460790	3	Socket, Female	
813B	4460789	3	Seal	
813C	4460476	1	Receptacle, Female	
813C	4460850	3	Pin, Male	
813C	4460790	3	Socket, Female	
813D	4460426	1	Connector, Strain Relief	
813E	2400070	1	Fuse	
813E	2400066	1	Holder, Fuse	
813F	4922894	1	Worklights Harness (Upper Boom to Worklights)	
813F	1060494	47 ft/ 14.3m	Cable, Electrical - 12/3	
813G	4922892	1	Worklights Harness (Lower Boom to Aux. Power Solenoid)	
813G	1060494	33 ft/ 10.1m	Cable, Electrical - 12/3	
		Ref	**TOOLS**	
901	7002821	1	Crimper (For Wire to Pin/Socket Connections) (Not Shown)	
902	7002823	1	Extractor (For Removal of Pin/Socket from Connectors) (Not Shown)	
903	4460467	1	Extractor, Pin (Blue 16-18 Gauge) (For Removal of Pin/Socket from Connectors) (Not Shown)	
904	4460510	1	Extractor, Pin (Yellow 12-14 Gauge) (For Removal of Pin/Socket from Connectors) (Not Shown)	
905	7002828	1	Stripper, Wire (Not Shown)	
906	2901443	1	Analyzer Kit (Not Shown)	
906A	1600244	1	Analyzer	

ITEM	PART NUMBER	QTY	DESCRIPTION	REV
906B	1060633	1	Cable, Analyzer	1-A
906C	4460321	2	Plug, Male	
906C	4460226	8	Socket, Female	
907	1001137005	1	Software Cable Kit (Not Shown)	

FIGURE 7-3. HARNESS COMPONENTS INSTALLATION (SN 0300181175 through 0300272252)

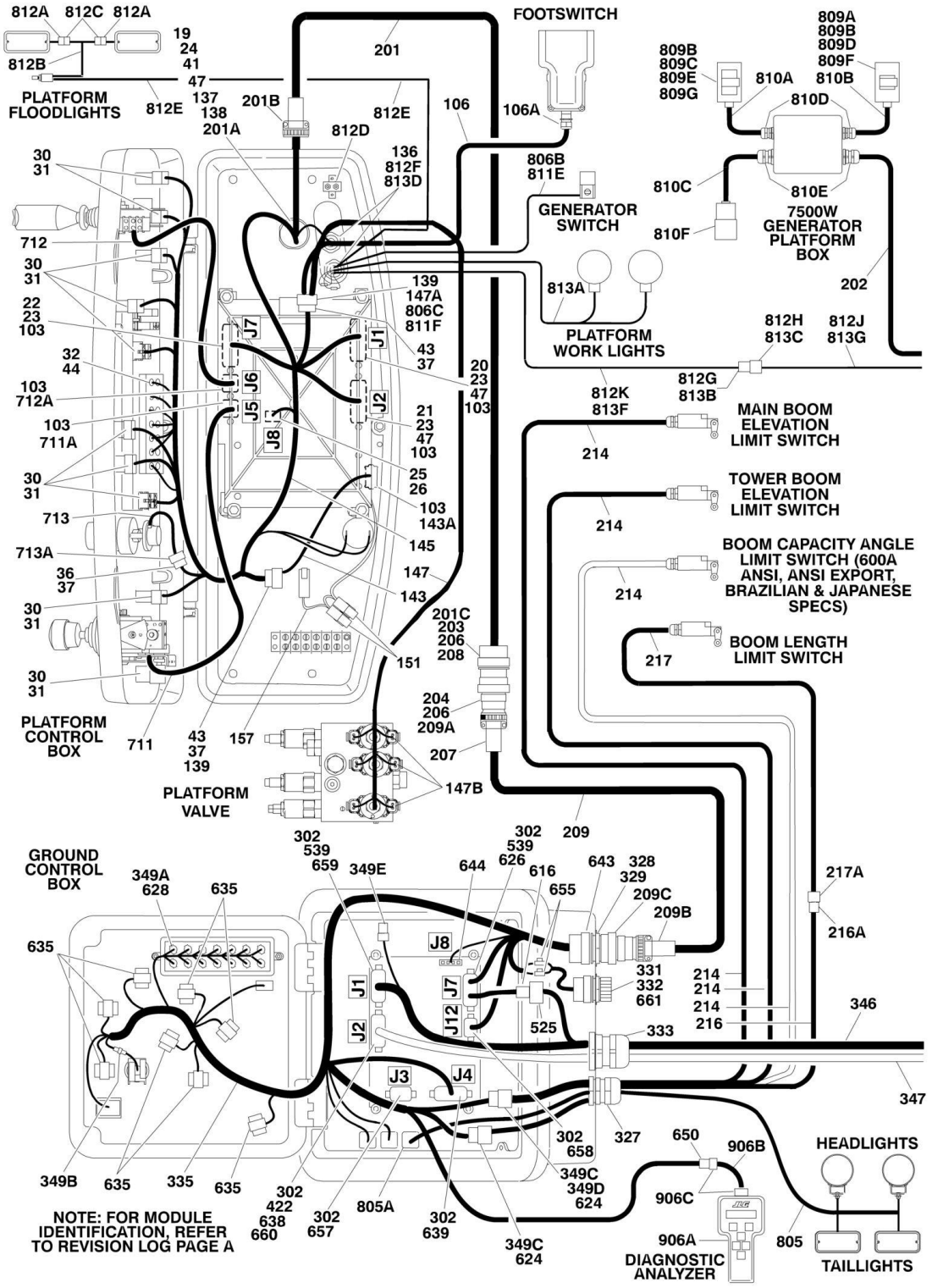

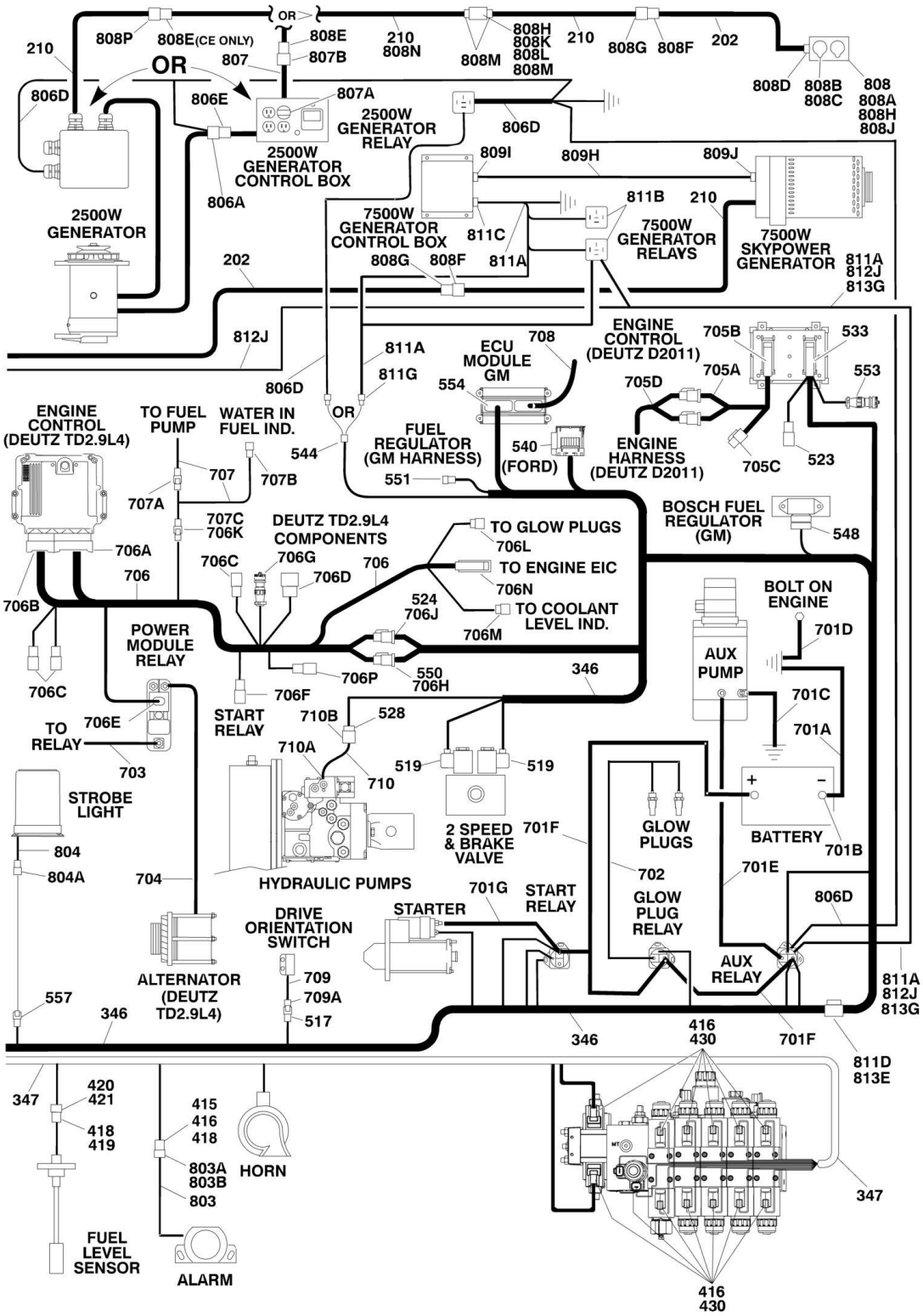
OR
808P
808E(CE ONLY)
808E
807B
210
808N
808M
808H
808K
808L
808M
210
808G
808F
202
808D
808B
808C
808
808A
808H
808J
210
OR
807
806D
806E
807A
2500W GENERATOR RELAY
806D
2500W GENERATOR CONTROL BOX
806A
2500W GENERATOR
809I
809H
809J
811B
210
7500W GENERATOR CONTROL BOX
811C
7500W GENERATOR RELAYS
7500W SKYPOWER GENERATOR
811A
812J
813G
202
808G
808F
811A
812J
811A
811G
806D
ECU MODULE GM
708
554
ENGINE CONTROL (DEUTZ D2011)
705B
533
705A
553
705D
ENGINE CONTROL (DEUTZ TD2.9L4)
TO FUEL PUMP
WATER IN FUEL IND.
OR
544
FUEL REGULATOR (GM HARNESS)
540
(FORD)
ENGINE HARNESS (DEUTZ D2011)
705C
523
707
707B
551
707A
707C
706K
DEUTZ TD2.9L4 COMPONENTS
TO GLOW PLUGS
706L
BOSCH FUEL REGULATOR (GM)
548
706A
706C
706G
706
706D
TO ENGINE EIC
706N
706
706B
524
706J
TO COOLANT LEVEL IND.
706M
BOLT ON ENGINE
701D
POWER MODULE RELAY
706P
550
706H
346
AUX PUMP
706C
706F
701C
TO RELAY
706E
START RELAY
710B
528
701A
703
710A
519
519
710
STROBE LIGHT
2 SPEED & BRAKE VALVE
701F
GLOW PLUGS
BATTERY
701B
804
804A
704
HYDRAULIC PUMPS
702
701E
701G
START RELAY
GLOW PLUG RELAY
806D
DRIVE ORIENTATION SWITCH
STARTER
AUX RELAY
ALTERNATOR (DEUTZ TD2.9L4)
709
709A
517
811A
812J
813G
557
346
346
416
430
701F
811D
813E
347
420
421
418
419
415
416
418
803A
803B
803
HORN
347
FUEL LEVEL SENSOR
ALARM
416
430

FIGURE 7-3. HARNESS COMPONENTS INSTALLATION (SN 0300181175 through 0300272252)

ITEM	PART NUMBER	QTY	DESCRIPTION	REV
	1001107753	Ref	**PLATFORM BOX HARNESS ASSEMBLY (MACHINES WITHOUT SKYGUARD)**	F
	1001185280	Ref	**PLATFORM BOX HARNESS ASSEMBLY (MACHINES WITH SKYGUARD/WITHOUT LSS OR WITH 4 CELL LSS)**	B
	1001220281	Ref	**PLATFORM BOX HARNESS ASSEMBLY (MACHINES WITH SKYGUARD/WITH 1 CELL LSS)**	F
19	4460866	1	Connector - 19 Position	
20	4460874	1	Connector - 35 Position (Natural)	
21	4460875	1	Connector - 35 Position (Gray)	
22	4460873	1	Connector - 35 Position (Black)	
23	4460871	70	Socket, Female	
24	4460464	7	Pin, Male (16 Gauge)	
25	4460879	1	Terminal, Housing 2 Position	
26	4460887	2	Terminal, (12 Gauge)	
30	4460418	9	Connector - 6 Position	
31	4460419	27	Terminal, Female	
32	4120035	13	Base, Light	
36	4460225	1	Plug, Male- 6 Position	
37	4460227	30	Pin, Male	
41	4460508	3	Pin, Male (12 Gauge)	
43	4460434	2	Connector - 15 Position	
44	2920129	13	Lamp, Indicator	
47	4460905	26	Seal, Plug	
50	4460884	1	Connector - 4 Position (Not Shown - To Platform Sensor) (With SkyGuard)	
50	4460944	4	Socket (Not Shown - To Platform Sensor) (With SkyGuard)	
50	4460932	1	Receptacle - 4 Position (Not Shown - To Platform Sensor) (With SkyGuard)	
54	4460536	1	Receptacle - 3 Position (Not Shown) (With SkyGuard)	
54	4460943	1	Pin, Male (Not Shown) (With SkyGuard)	
55	4460539	1	Plug - 3 Position (Not Shown) (With SkyGuard)	
55	4460944	1	Socket, Female (Not Shown) (With SkyGuard)	
57	4460708	1	Connector - 15 Position (Not Shown - Mates with Item 43) (With SkyGuard)	
57	4460226	3	Socket (Not Shown) (With SkyGuard)	
58	4460894	1	Plug, Male - 6 Position (Not Shown) (Machines with 1 Cell LSS)	
58	4460465	5	Socket, Female (Not Shown) (Machines with 1 Cell LSS)	
59	4460933	1	Plug, Male - 12 Position (Not Shown) (Machines with 1 Cell LSS)	
59	1001119020	1	Bussbar (Not Shown) (Machines with 1 Cell LSS)	
62	1001213447	1	Receptacle, Female - 5 Postion (Not Shown) (Machines with 1 Cell LSS)	
		Ref	**PLATFORM BOX ASSEMBLY COMPONENTS**	
103	0100048	AR	Grease, Dielectric	
106	See Note	1	Footswitch Harness	
106	1060918	8 ft/2.4m	Cable, Electrical - 18/3	
106A	4460071	1	Connector, Strain Relief	
136	4460428	2	Connector, Strain Relief	
137	4460470	1	Nut, Terminal	
138	4460471	1	Lockwasher, Terminal	
139	4460708	2	Connector, Female - 15 Position	
143	4922666	1	Harness, Analyzer Cable	C

ITEM	PART NUMBER	QTY	DESCRIPTION	REV
143	4460226	4	Socket, Female (Not Shown - Located at J2)	
143A	4460761	1	Connector, Female - 4 Position	
143A	4460227	1	Pin, Male	
145	1001107753	1	Harness, Platform Console Box (Without SkyGuard) (Includes Items 1-44)	
145	1001185280	1	Harness, Platform Console Box (With SkyGuard) (Includes Items 1-44)	
147	1001139135	1	Platform Valve Harness Assembly	
147A	4460226	7	Socket, Female	
147B	4460891	6	Plug, Male - 2 Position	
147B	1001116992	12	Socket, Female	
151	1001186431	2	Relay (Machines with 1 Cell LSS)	
157	1001225580	1	Harness, Interface (Machines with 1 Cell LSS)	
		Ref	**BOOM CABLES INSTALLATION**	
		Ref	**Boom Cables Installation 600A**	
	0270818	Ref	**ANSI, ANSI Export, CSA and Japanese Specs without 7500W Generator**	6
	1001153321	Ref	**ANSI, ANSI Export, CSA and Japanese Specs with 4000W Generator**	A
	0272624	Ref	**ANSI, ANSI Export and CSA Specs with 7500W Generator**	2
	0275265	Ref	**ANSI, ANSI Export and CSA Specs with Arctic Package without 7500W Generator**	1
	1001093436	Ref	**ANSI, ANSI Export and CSA Specs with Arctic Package with 7500W Generator**	2-A
	0270819	Ref	**CE Specs without 4000W or 7500W Generator**	6
	0272626	Ref	**CE and Japanese Specs with 7500W Generator**	2
		Ref	**Boom Cables Installation 600AJ**	
	1001165366	Ref	**ANSI, ANSI Export, CSA and Japanese Specs without 4000W or 7500W Generator**	A
	1001153322	Ref	**ANSI, ANSI Export, CSA and Japanese Specs with 4000W Generator**	A
	1001165552	Ref	**ANSI, ANSI Export and CSA Specs with 7500W Generator**	A
	1001165556	Ref	**ANSI, ANSI Export and CSA Specs with Arctic Package without 4000W or 7500W Generator**	A
	1001165557	Ref	**ANSI, ANSI Export and CSA Specs with Arctic Package with 7500W Generator**	A
	1001165558	Ref	**ANSI and ANSI Export with David Clark Communication System without 7500W Generator (Note: Not Shown - Contact your JLG Parts Department)**	B
	1001165559	Ref	**ANSI and ANSI Export with David Clark Communication System with 7500W Generator (Note: Not Shown - Contact your JLG Parts Department)**	B
	1001165554	Ref	**Australian Specs without 7500W Generator**	A
	1001165555	Ref	**Australian Specs with 7500W Generator**	A
	1001165551	Ref	**CE Spec without 7500W Generator**	B
	1001165553	Ref	**CE and Japanese Specs with 7500W Generator**	B
201		Ref	Harness, Main Boom Options:	
201	4922493	1	Harness, Main Boom without Arctic Package	D
201	4923472	1	Harness, Main Boom with Arctic Package	B
201		Ref	Cable Options	
201	1060896	45.5 ft/ 13.9m	Cable without Arctic Package	
201	4923462	45.5 ft/ 13.9m	Cable with Arctic Package	
201A	4460865	1	Connector - 19 Position	

ITEM	PART NUMBER	QTY	DESCRIPTION	REV
201A	4460465	11	Socket, Female - #16	
201A	4460509	4	Socket, Female - #12	
201A	4460466	4	Seal, Plug	
201B	4460473	1	Clamp, Cable	
201C	4460464	11	Pin, Male (16-18 Gauge)	
201C	4460508	4	Pin, Male (10-12 Gauge)	
201C	2820118	AR	Shrink, Heat	
202		Ref	Cable, Electrical (Main Boom) Options (Does not include plug ends)	
202		Ref	Without SkyPower:	
202	4922894	1	ANSI, ANSI Export, CSA and Japanese Specs (12/3)	
202	4923474	1	ANSI, ANSI Export and CSA Specs with Arctic Pkg (12/3)	
202	4922895	1	Australian and CE Specs (12/3)	
202	4922810	1	With SkyPower 7500W Generator	
202	1001156489	1	With 4000W Generator (10/4)	
203	2820031	1	Shrink, Heat	
204	4460865	1	Connector - 19 Position	
206	4460466	8	Seal, Plug	
207	4460473	1	Clamp, Cable	
208	4460866	1	Connector (19 Pin)	
209		Ref	Harness, Tower Boom Cable Options:	
209	4922494	1	Harness, Tower Boom Cable without Arctic Package	C
209	4923473	1	Harness, Tower Boom Cable Arctic Package	B
209		Ref	Cable Options:	
209	1060896	35.5 ft/ 10.8m	Cable without Arctic Package	
209	4923462	35.5 ft/ 10.8m	Cable with Arctic Package	
209A	4460465	11	Socket, Female - #16	
209A	4460509	4	Socket, Female - #12	
209A	2820118	AR	Shrink, Heat	
209B	4460473	1	Clamp, Cable	
209C	4460865	1	Connector - 19 Position	
209C	4460465	11	Connector (19 Pin)	
209C	4460509	4	Socket, Female - #12	
209C	4460466	4	Seal, Plug	
210		Ref	Cable, Electrical (Tower Boom) Options (Does not include plug ends)	
210		Ref	Without SkyPower:	
210	4922892	1	ANSI, ANSI Export, CSA and Japanese Specs (12/3)	
210	4923475	1	ANSI, ANSI Export and CSA Specs with Arctic Package (12/3)	
210	4922893	1	Australian, CE and Latin American Specs (12/3)	
210	4922811	1	With SkyPower 7500W Generator	
210	1001156490	1	With 4000W Generator (10/4)	
214	1061033	1	Cable, Electrical - 18/2 Main Boom Limit Switch	
214		Ref	600A ANSI, ANSI Export, CSA and Japanese Specs	
214		Ref	600AJ ANSI, ANSI Export, CSA and Japanese Specs	
214		Ref	600A & 600AJ Australian and CE Specs	
214	4923476	3	600A ANSI, ANSI Export and CSA Spec with Arctic Package	
214	4923476	2	600AJ ANSI, ANSI Export and CSA Spec with Arctic Package	
216		Ref	Cable, Electrical - 18/2 Main Boom Length Options:	

ITEM	PART NUMBER	QTY	DESCRIPTION	REV
216	4922891	1	600A All Specs except Australian Specs	1-A
216	Not Required	0	600A Australian Specs	
216	4923500	1	600A ANSI, ANSI Export and CSA Spec with Arctic Package	1-A
216	Not Required	0	600AJ All Specs except CE Spec	
216	4922891	1	600AJ CE Spec	1-A
216	Not Required	0	600AJ ANSI, ANSI Export and CSA Spec with Arctic Package	
216A	4460891	1	Plug, Male - 2 Position	
216A	4460465	2	Socket, Female	
217		Ref	Cable, Electrical - 18/2 Main Boom Length Options	
217	4922890	1	600A All Specs	1-A
217	4923501	1	600A ANSI, ANSI Export and CSA Spec with Arctic Package	1-A
217	Not Required	0	600AJ All Specs except CE Spec	
217	4922896	1	600AJ CE Spec	1-A
217	Not Required	0	600AJ ANSI, ANSI Export and CSA Spec with Arctic Package	
217A	4460897	1	Receptacle, Female - 2 Position	
217A	4460464	2	Pin, Male	
		Ref	**GROUND CONTROL BOX COMPONENTS**	
		Ref	**Ground Control Box Components 600A:**	
	1001154671	Ref	**Deutz D2011 Engine ((ANSI Export Specs)**	D
	1001154674	Ref	**Deutz D2011 Engine (CE Specs) (SN 0300181175 through 0300200808)**	D
	1001188015	Ref	**Deutz D2011 Engine (CE Specs) (SN 0300200809 through 0300272252)**	C
	1001165547	Ref	**Deutz TD2.9L4 Engine**	D
	1001219224	Ref	**Ford Engine**	B
	1001154670	Ref	**GM Engine**	E
		Ref	**Ground Control Box Components 600AJ:**	
	1001154673	Ref	**Deutz D2011 Engine (ANSI Export and Australian Spec)**	D
	1001154675	Ref	**Deutz D2011 Engine (CE Specs) (SN 0300181175 through 0300200808)**	D
	1001188016	Ref	**Deutz D2011 Engine (CE Specs) (SN 0300200809 through 0300272252)**	C
	1001165548	Ref	**Deutz TD2.9L4 Engine**	D
	1001219225	Ref	**Ford Engine**	B
	1001154672	Ref	**GM Engine**	E
302	0100048	1	Grease, Dielectric	
327	4460426	1	Terminal, Strain Relief	
328	4460470	1	Nut, Terminal	
329	4460471	1	Lockwasher, Terminal	
331	4460496	1	Washer, Terminal	
332	4460497	1	Nut, Terminal	
333	4460526	1	Connector, Strain Relief	
343		Ref	Ground Control Box Harness Assembly (See Items 601-661 for Breakdown)	
343	1001110379	Ref	Harness, Ground Control Box (Deutz D2011 Engines - All Specs except CE Spec)	
343	1001110379	Ref	Harness, Ground Control Box (Deutz D2011 Engines - CE Spec) **(SN 0300181175 through 0300200808)**	
343	1001185897	Ref	Harness, Ground Control Box (Deutz D2011 Engines - CE Spec) **(SN 0300200809 through 0300272252)**	
343	1001145992	Ref	Harness, Ground Control Box (Deutz TD2.9L4 Engines)	
343	1001110379	Ref	Harness, Ground Control Box (Ford and GM Engines)	
346		Ref	Engine Harness Assembly (See 517 to 557 for Breakdown)	

ITEM	PART NUMBER	QTY	DESCRIPTION	REV
346	1001154390	1	Deutz D2011 Engine Machines **(SN 0300181175 through 0300208081)**	
346	1001191868	1	Deutz D2011 Engine Machines **(SN 0300208082 through 0300272252)**	
346	1001164563	1	Deutz TD2.9L4 Engine Machines **(SN 0300181175 through 0300208081)**	
346	1001191866	1	Deutz TD2.9L4 Engine Machines **(SN 0300208082 through 0300272252)**	
346	1001214507	1	Ford Engine Machines	
346	1001154388	1	GM Engine Machines **(SN 0300181175 through 0300208081)**	
346	1001191867	1	GM Engine Machines **(SN 0300208082 through 0300272252)**	
347	1001154392	1	Valve Harness Assembly (See 401 to 430 for Breakdown)	
349		Ref	Ground Control Box Wiring Diagram (Not Shown)	
349	1001154396	1	Deutz D2011 Engine Machines	B
349	1001164564	1	Deutz TD2.9L4 Engine Machines	C
349	1001154395	1	Ford and GM Engine Machines **(SN 0300177361 through 0300232332)**	C
349	1001224136	1	Ford and GM Engine Machines **(SN 0300232333 through 0300272252)**	A
349A	2920129	AR	Bulb, Light	
349B	1001173590	AR	Fuse Assembly	A
349B	2400065	1	Fuse, 30Amp	
349B	2400066	1	Fuse, Holder with Cover	
349C	4460708	2	Connector, Female - 15 Position	
349C	4460226	AR	Socket, Female	
349D	4922637	1	Harness, Jumper	
349E	4460894	1	Plug, Male - 6 Position	
349E	4460892	1	Connector, Female - 6 Position	
	1001154392	1	**VALVE HARNESS ASSEMBLY**	C
415	4460539	1	Plug, Male - 3 Position	
416	1001116692	34	Socket, Female	
418	4460466	1	Plug, Sealing	
419	4460267	5	Pin, Male	
420	4460424	1	Receptacle, Female - 2 Position	
421	4460268	5	Socket, Female	
422	4460871	26	Socket, Female	
430	4460891	16	Plug, Male - 2 Position	
		Ref	**ENGINE HARNESS ASSEMBLIES**	
	1001154390	Ref	**Deutz D2011 Engine Machines (SN 0300181175 through 0300208081)**	B
	1001191868	Ref	**Deutz D2011 Engine Machines (SN 0300208082 through 0300272252)**	A
	1001164563	Ref	**Deutz TD2.9L4 Engine Machines (SN 0300181175 through 0300208081)**	A
	1001191866	Ref	**Deutz TD2.9L4 Engine Machines (SN 0300208082 through 0300272252)**	B
	1001214507	Ref	**Ford Engine Machines**	E
	1001154388	Ref	**GM Engine Machines (SN 0300181175 through 0300208081)**	B
	1001191867	Ref	**GM Engine Machines (SN 0300208082 through 0300272252)**	B
517	4460424	1	Receptacle, Female - 2 Position	
517	4460226	2	Socket, Female	
519	4460880	2	DIN Connector without Diode	
523	4461070	1	Receptacle, Female with Resistor (3 Position) (Deutz D2011 Engines Only)	

ITEM	PART NUMBER	QTY	DESCRIPTION	REV
523	4461095	1	Plug, Male - 3 Position (Deutz D2011 Engines Only)	
523	4460944	3	Socket, Female (Deutz D2011 Engines Only)	
524	4460931	1	Connector, Male - 8 Position (Deutz TD2.9L4 Engines Only)	
524	4460464	4	Pin, Male	
524	4460466	4	Seal, Plug	
525	4460539	1	Connector, Male - 3 Position	
525	4460944	3	Socket, Female	
528	4460460	1	Connector, Male - 4 Position **(SN 0300181175 through 0300208081)**	
528	4460457	AR	Terminal, Female **(SN 0300181175 through 0300208081)**	
528	4460891	2	Plug, Male - 2 Position **(SN 0300208082 through 0300272252)**	
528	4460465	2	Socket, Female **(SN 0300208082 through 0300272252)**	
528	4460458	AR	Seal, Terminal	
533	4461052	1	Connector, Receptacle - 25 Position (Deutz D2011 Engines Only)	
533	4461005	5	Terminal (Gold) (Deutz D2011 Engines Only)	
533	4461006	5	Seal, Terminal (Deutz D2011 Engines Only)	
533	4461060	2	Terminal (Tin) (Deutz D2011 Engines Only)	
533	4461054	1	Seal, Terminal (Deutz D2011 Engines Only)	
533	4461053	AR	Cover, Plug (Deutz D2011 Engines Only)	
533	4461008	AR	Plug, Hole (Deutz D2011 Engines Only)	
539	4460871	AR	Socket, Female	
540	1001215016	1	Connector, Ford - 42 Position	
540	1001215091	5	Pin, Male	
540	1001215534	33	Plug, Terminal	
540	1001216212	1	Pin, Male	
544	4461157	1	Receptacle, Female - 2 Position	
544	4460979	2	Pin, Male	
544	4460458	2	Seal, Terminal	
548	4461121	1	Plug, Male - 4 Position (GM Engines Only)	
548	1001126484	4	Socket, Female (GM Engines Only)	
548	1001126485	4	Seal, Terminal (GM Engines Only)	
550	4460899	1	Connector, Male - 6 Position (Deutz TD2.9L4 Engines Only)	
550	4460464	5	Pin, Male	
550	4460943	5	Pin, Male (Gold)	
550	4460466	1	Seal, Plug	
551	4461124	1	Receptacle, Female - 4 Position (GM Engines Only)	
551	4460693	4	Pin, Male (GM Engines Only)	
551	4460608	4	Seal, Terminal (GM Engines Only)	
551	4461161	1	Lock, Terminal (GM Engines Only)	
553	2902443	1	Kit, Receptacle (Deutz Engines Only)	
553	4461071	8	Terminal, Female (Gold) (Deutz D2011 Engines Only)	
553	4461072	1	Connector, Flange Mount (Deutz D2011 Engines Only)	
553	4461073	1	Connector, Dust Cap (Deutz D2011 Engines Only)	
553	4461074	1	Connector, Shell (Deutz D2011 Engines Only)	
554	4461109	1	Plug, Male - 16 Position (GM Engines Only)	
554	4461111	7	Pin, Male (GM Engines Only)	
554	4461113	7	Seal, Terminal (GM Engines Only)	
554	4461222	9	Plug, Cavity (GM Engines Only)	
557	4460897	1	Receptacle, Female - 2 Position	
557	4460464	2	Socket, Female	
		Ref	**GROUND CONTROL HARNESS ASSEMBLY**	

ITEM	PART NUMBER	QTY	DESCRIPTION	REV
	1001110379	Ref	**Harness, Ground Control Box (Deutz D2011 Engines - All Specs except CE Spec)**	F
	1001110379	Ref	**Harness, Ground Control Box (Deutz D2011 Engines - CE Spec) (SN 0300181175 through 0300200808)**	F
	1001185897	Ref	**Harness, Ground Control Box (Deutz D2011 Engines - CE Spec) (SN 0300200809 through 0300272252)**	C
	1001145992	Ref	**Harness, Ground Control Box (Deutz TD2.9L4 Engines)**	B
	1001110379	Ref	**Harness, Ground Control Box (GM Engines)**	F
616	4460536	1	Connector, Female 3- Position	
616	4460943	3	Pin, Male	
621	3990010	2	Diode - 6 Amp (Not Shown)	
624	4460434	2	Connector, Male 15 - Position	
624	4460227	AR	Pin	
626	4460873	1	Connector, Male - 35 Position (Black)	
626	4460871	AR	Socket, Female	
626	4460905	AR	Plug, Seal	
628	4120035	AR	Base, Light	
628	4460634	AR	Terminal (16 Gauge)	
628	4460635	AR	Terminal (12 Gauge)	
635	4460618	9	Connector, Female - 6 Position	
635	4460419	24	Socket, Female	
638	4460871	AR	Socket, Female	
	4460876	1	Connector, Male - 35 Position (Blue)	
639	4460871	28	Socket, Female	
639	4460905	AR	Plug, Seal	
643	4460866	1	Connector - 19 Position	
643	4460464	7	Pin, Male (16 Gauge)	
643	4460508	3	Pin, Male (12 Gauge)	
644	4460878	1	Housing, Terminal - 4 Position	
644	4460887	3	Terminal (12 Gauge)	
650	4460761	1	Connector, Female 4 - Position	
650	4460227	4	Pin, Male	
655	8229242	2	Fuse 5A	
655	2400060	2	Holder, Fuse	
657	1001106339	1	Connector, Male - 14 Position	
657	4460871	2	Socket, Female	
657	4460905	AR	Plug, Seal	
658	1001106340	1	Connector, Male - 14 Position	
658	4460871	5	Socket, Female	
659	4460874	1	Connector, Natural	
659	4460871	10	Socket, Female	
659	4460905	AR	Plug, Seal	
660	4460875	1	Connector, Gray	
660	4460871	2	Socket, Female	
661	1001112612	1	Connector - 9 Position	
661	4460943	4	Pin, Male	
662	4460868	1	Connector - 4 Position (Not Shown - MD1 Connection)	
662	4460877	4	Terminal (Not Shown - MD1 Connection)	
666	4460884	1	Connector - 4 Position (Not Shown - Telematics Connection)	
666	4460465	4	Socket, Female (Not Shown - Telematics Connection)	
666	1001192401	1	Cap, Dust (Not Shown - Telematics Connection)	
		Ref	**STANDARD HARNESS COMPONENTS**	

ITEM	PART NUMBER	QTY	DESCRIPTION	REV
701		Ref	Battery Cable Kit Options:	
701	2902296	1	Deutz D2011 Engines	F
701	1001145047	1	Deutz TD2.9L4 Engines	F
701	2902531	1	GM Engine Machines	B
701A		Ref	Cable, Battery (Black) (Battery – to Tray Pivot Grd) Options:	
701A	7027004	1	Deutz D2011 Engines	
701A	7027072	1	Deutz TD2.9L4 Engines	
701A	7016822	1	GM Engine Machines	
701B	8270147	1	Terminal, Battery (with Boot) (Deutz TD2.9L4 Engines Only)	
701B	See Note	1	Boot, Black (Note: Not Available for Purchase)	
701C		Ref	Cable, Battery (Black) (Battery – to Aux Pump and Relay Grds)	
701C	7027003	1	Deutz D2011 Engines	
701C	7027073	1	Deutz TD2.9L4 Engines	
701C	7027003	1	GM Engine Machines	
701C	See Note	1	Boot, Black (Note: Not Available for Purchase)	
701D		Ref	Cable, Battery (Black) (Engine to Tray Pivot Grd)	
701D	Not Required	0	Deutz D2011 Engines	
701D	7027074	1	Deutz TD2.9L4 Engines	
701D	See Note	1	GM Engine Machines (Note: Use Item 701A)	
701E		Ref	Cable (Red) (Aux Relay to Aux Pump)	
701E	7027002	1	Deutz D2011 Engines	
701E	7027075	1	Deutz TD2.9L4 Engines	
701E	7027016	1	GM Engine Machines	
701E	See Note	2	Boot, Red (Note: Not Available for Purchase)	
701F		Ref	Cable (Red) (Battery + to Aux Relay/Power Module/Starter)	
701F	1001116240	1	Deutz D2011 Engines	
701F	7027076	1	Deutz TD2.9L4 Engines	
701F	7027015	1	GM Engine Machines	
701F	See Note	2	Boot, Red (Note: Not Available for Purchase)	
701G		Ref	Cable (Red) (Relay to Starter)	
701G	See Note	1	Deutz D2011 Engines (Note: Use Item 701F)	
701G	See Note	1	Deutz TD2.9L4 Engines (Note: Use Item 701F)	
701G	7027017	1	GM Engine Machines	
701G	See Note	2	Boot, Red (Note: Not Available for Purchase)	
702	4923379	1	Harness, Glow Plugs (Deutz D2011 Engine Machines Only)	
703	1001141304	1	Harness, Glow Plugs (Deutz TD2.9L4 Engine Machines Only)	
704	1001143907	1	Cable, Alternator Power (Deutz TD2.9L4 Engine Machines Only)	
704	70004103	1	Cable, Alternator (Deutz D2011 Engine Machines Only)	
705		Ref	Deutz Engine Harness Components (Deutz D2011 Engine Machines Only)	
705A	7027796	1	Deutz Engine Harness (Deutz D2011 Engines)	
705B	See Note	1	Receptacle, Female - 25 Position (Deutz D2011 Engines) (Note: Not Available - Purchase Complete Harness)	
705B	See Note	1	Cover, Receptacle (Deutz D2011 Engines) (Note: Not Available - Purchase Complete Harness)	
705B	See Note	5	Terminal (Deutz D2011 Engines) (Note: Not Available - Purchase Complete Harness)	
705B	See Note	5	Seal (Deutz D2011 Engines) (Note: Not Available - Purchase Complete Harness)	
705B	See Note	2	Terminal (Deutz D2011 Engines) (Note: Not Available - Purchase Complete Harness)	
705B	See Note	2	Seal (Deutz D2011 Engines) (Note: Not Available - Purchase Complete Harness)	

ITEM	PART NUMBER	QTY	DESCRIPTION	REV
705B	See Note	18	Plug, Hole (Deutz D2011 Engines) (Note: Not Available - Purchase Complete Harness)	
705C	7027793	1	Connector, Female (Deutz D2011 Engines)	
705C	70004060	1	Plug, Male	
705D	70001872	1	Deutz Engine Harness (Deutz D2011 Engines) (For other replacement parts refer to Deutz engine dealer)	
705E	70025231	1	Glow Plug Harness (Deutz TD2.9L4 Engines) (Not Shown - Connects To 706L)	
705F	70025077	1	Fuel Injector Harness (Deutz TD2.9L4 Engines) (Not Shown)	
705G	70004271	1	Starter Harness (Deutz D2011 Engines) (Not Shown)	
706	1001143726	1	Deutz TD2.9L4 Engine Harness	K
706A	1001133956	1	Connector (Includes Cover, Locks and Retention Plate)	
706A	1001126352	6	Terminal	
706A	1001156353	6	Seal, Terminal	
706A	1001126384	19	Terminal	
706A	1001126351	3	Terminal	
706A	1001126356	63	Plug, Seal	
706A	1001126357	2	Plug, Seal	
706B	1001133957	1	Connector (Includes Cover, Locks and Retention Plate)	
706B	1001126384	17	Terminal	
706B	1001126351	13	Terminal	
706B	1001126356	19	Plug, Seal	
706B	1001126357	11	Plug, Seal	
706C	4461070	3	Receptacle, Female with Resistor (3 Position)	
706C	4461095	6	Plug, Male - 3 Position	
706C	4460944	6	Socket, Female	
706C	4460466	2	Seal, Plug	
706D	80484084	1	Receptacle, Female - 8 Position	
706D	8229242	1	Fuse - 5A	
706D	80983191	1	Fuse - 10A	
706D	1001147264	1	Cap	
706D	1001116727	8	Plug	
706D	4460458	4	Seal	
706E	1001116952	1	Plug, Male - 2 Position	
706E	4460465	2	Socket, Female	
706F	1001138110	1	Plug, Male - 2 Position	
706F	1001138111	2	Socket, Female	
706F	1001138113	2	Seal	
706G	2902443	1	Kit, Receptacle	
706G	4461071	8	Terminal, Female (Gold)	
706G	4461072	1	Connector, Flange Mount	
706G	4461073	1	Connector, Dust Cap	
706G	4461074	1	Connector, Shell	
706H	4460894	1	Plug, Male - 6 Position	
706H	4460465	3	Socket, Female	
706H	4460944	2	Socket, Female	
706H	4460466	1	Seal, Plug	
706J	4460930	1	Plug, Male - 8 Position	
706J	4460465	1	Socket, Female	
706J	4460466	7	Seal, Plug	
706K	4460884	1	Plug, Male - 4 Position **(SN 0300181175 through 0300224542)**	
706K	1001220379	1	Plug, Male - 4 Position **(SN 0300224543 through 0300272252)**	

ITEM	PART NUMBER	QTY	DESCRIPTION	REV
706K	4460465	2	Socket, Female	
706K	4460942	2	Socket, Female	
706K	4460932	1	Receptacle, Female	
706K	4460466	4	Plug, Terminal	
706L	1001142938	1	Plug, Male - 2 Position	
706L	1001142940	2	Terminal, Female	
706L	1001142941	2	Seal	
706M	1001133714	1	Plug, Male - 4 Position	
706M	1001133715	3	Terminal, Female	
706M	1001135650	3	Seal	
706M	1001135651	NLA	Plug, Cavity (Use p/n 4461008)	
706N	1001126362	1	Receptacle, Female - 62 Position	
706N	1001126363	33	Terminal	
706N	1001126364	33	Seal	
706N	1001126391	23	Plug	
706N	4461008	4	Plug, Cavity	
706N	1001126365	2	Terminal	
706N	4461054	2	Seal	
706N	1001151856	1	Conduit, 90 Elbow	
706P	4460891	1	Plug, Male - 2 Position	
706P	4460465	2	Socket, Female	
706P	1001171403	1	Resistor Assembly 1.5ohm-1/4watt	
706P	4460897	1	Receptacle, Female - 2 Position	
706P	4460464	2	Pin, Male	
707	1001222665	1	Fuel Pump Harness (Deutz TD2.9L4 Engines Only) (Note: Pump requiring Ring Terminals) **(SN 0300177361 through 0300234681)**	A
707	1001138491	1	Fuel Pump Harness (Deutz TD2.9L4 Engines Only) (Note: Pump requiring Push-on Terminals) **(SN 0300234682 through 0300272252)**	D
707A	4460897	1	Receptacle, Female - 2 Position	
707A	4460941	2	Pin, Male	
707A	4460891	1	Plug, Male - 2 Position	
707A	4460942	2	Socket, Female	
707B	1001116983	1	Receptacle, Female - 2 Position	
707B	1001116710	2	Terminal	
707B	4461054	2	Seal	
707C	4460932	1	Receptacle, Female - 4 Position	
707C	4460941	2	Pin, Male	
707C	4460464	2	Pin, Male	
708		Ref	GM Engine Harness (GM Engine Machines Only)	
	7027991	1	Tier 1 Engines	
	70000718	1	Tier 2 Engines	
	70002898	1	Tier 3 & 4 Interim Engines	
	7027989	1	Connector, Male - 10 Position (Not Shown)	
	See Note	1	Box, Fuse (Note: Parts of Harness - Not Available for Purchase)	
	70002627	1	Cover, Fuse Box	
	70001950	2	Relay (Power and Fuel Pump)	
	70001951	1	Relay (Starter)	
	70001931	1	Fuse - 60 Amp (Alternator)	
	See Note	1	Fuse - 20 Amp (Note: Not Available - Purchase Locally)	
	See Note	3	Fuse - 15 Amp (Note: Not Available - Purchase Locally)	
	See Note	1	Fuse - 10 Amp (Note: Not Available - Purchase Locally)	

ITEM	PART NUMBER	QTY	DESCRIPTION	REV
	See Note	1	Fuse - 5 Amp (Note: Not Available - Purchase Locally)	
709	4360517	1	Switch, Proximity	
709A	4460320	1	Connector - 2 Position	
709A	4460227	2	Pin, Male	
710	See Note	1	Pump Harness (Note: Not Available for Purchase) **(SN 0300181175 through 0300208081)**	
710A	7007497	1	Plug (Pump End)	
710B	7007498	1	Plug (Engine Harness End)	
711	See Note	1	Controller Harness Assembly (Lift and Swing) (Note: Not Available for Purchase)	
711A	7022819	1	Plug, Male - 8 Position (Natural)	
711A	4460871	8	Socket, Female	
712	See Note	1	Controller Harness/Circuit Board Assembly (Drive and Steer) (Note: Not Available for Purchase)	
712A	7022825	1	Plug, Male - 8 Position (Black)	
712A	4460871	7	Socket, Female	
713	See Note	1	Controller Harness (Speed Control) (Note: Not Available for Purchase)	
713A	4460224	1	Receptacle, Female - 6 Position	
713A	4460226	6	Socket, Female	
		Ref	**OPTIONAL HARNESS COMPONENTS**	
803	0257887	1	Alarm Harness (Includes Alarm)	
803	0140044	1	Alarm	
803A	4460536	1	Receptacle, Female - 3 Position	
803B	1001116693	3	Pin, Male	
804	2920161	1	Strobe Light (Amber) Harness (Includes Strobe Light)	B
804A	4460891	1	Plug, Male - 2 Position	
804A	4460465	2	Socket, Female	
804B		Ref	Strobe Light (Blue & Red) Harness Components (Not Shown)	
804A	4460897	1	Receptacle, Female - 2 Position	
804A	4460464	2	Pin, Male	
804B	1001142736	1	Beacon Control Harness (Module To Light) (Not Shown)	F
804B	1001150944	1	Beacon Control Harness (Module To Ground Control Box) (Not Shown) **(SN 0300177361 through 0300210914)**	
805	See Note	1	Headlight and Taillight/Chassis Illumination Harness (Note: Not Available for Purchase)	
805	1060341	AR	Cable, Electrical 16/2 Options:	
805	1060341	37 ft/ 11.3m	Headlights and Taillights	
805	1060341	40 ft/ 12.2m	Chassis Illumination Lights	
805A	3740049	1	Relay	
805A	4460259	3	Terminal	
805A	4460260	4	Housing, Terminal	
805A	4460297	1	Terminal	
805A	4922643	1	Lights Harness for Ground Control Box	B
805A	4460226	2	Socket, Female	
806		Ref	2500W Generator Electrical Components Options:	
806	1001112588	AR	Deutz D2011 Engines 110V/220V with Generator Control Box	B
806	1001112743	1	Deutz D2011 Engines 110V/220V without Generator Control Box	B
806	1001180050	1	Deutz TD2.9L4 Engines	A
806	4933350	1	Ford & GM Engines	C
806A	4460321	1	Connector, Male - 4 Position (Deutz and GM Engines Specs	

ITEM	PART NUMBER	QTY	DESCRIPTION	REV
			with Generator Control Box)	
806A	4460906	AR	Socket, Female	
806A	4460268	AR	Socket, Female	
806B	4922641	1	Harness - On/Off Switch	
806C	4460226	2	Socket, Female	
806D		Ref	Powermite Control Box to Relay Options	
806D	1001112589	1	Deutz D2011 Engines	
806D	1001180052	1	Deutz TD2.9L4 Engines	A
806D	4923445	1	Ford & GM Engines	
806D	4460374	AR	Plug, Sealed Relay	
806D	4460375	3	Terminal	
806D	4460742	1	Plug, Male - 2 Position	
806D	4460743	1	Socket, Female	
806D	4460458	1	Seal, Terminal	
806D	4460465	2	Socket, Female	
806E	4460961	1	Connector, Female - 4 Position (Deutz and GM Engines Specs with Generator Control Box)	
806E	4460705	4	Pin, Male	
807		Ref	Generator to Rear of Boom Harness Options:	
		Ref	**Note: Harness used to connect AC at platform harness to generator receptacle to power platform receptacle.**	
807	4921829	1	110V (ANSI, ANSI Export and Japanese Specs)	2
807	4921954	1	220V (ANSI and ANSI Export Specs)	2
807	See Note	1	110V/220V (Australian, CE, Latin American and Brazilian Specs) (Note: Not Available for Purchase)	
807		Ref	Cable, Electrical - 12/3 Options:	
807	1060494	6 ft/1.8m	110V (ANSI, ANSI Export and Japanese Specs)	
807	1060494	26 ft/8m	220V (ANSI and ANSI Export Specs)	
807	1060461	6 ft/1.8m	110V/220V (Australian, CE, Latin American and Brazilian Specs)	
807A		Ref	Plug, Male Options	
807A	4460205	1	110V (ANSI, ANSI Export and Japanese Specs)	
807A	4460233	1	220V (ANSI and ANSI Export Specs)	
807A	Not Required	0	110V/220V (Australian, CE, Latin American and Brazilian Specs) (Purchase Locally)	
807A	4460027	1	Receptacle, Twist Lock (110V Only)	
807B		Ref	Receptacle, Female Options:	
807B	4460134	1	110V (ANSI, ANSI Export and Japanese Specs)	
807B	4460701	1	220V (ANSI and ANSI Export Specs)	
807B	Not Required	0	110V/220V (Australian, CE, Latin American and Brazilian Specs) (Purchase Locally)	
808		Ref	AC to Platform Receptacle Components Options:	
808	0255382	Ref	110V GFI Receptacle (ANSI, ANSI Export and Japanese Specs)	C
808	0257176	Ref	220V Receptacle (ANSI, ANSI Export, China and Japanese Specs)	C
808	0272433	Ref	SkyPower Machines (All Specs)	D
808	0274618	Ref	Dual AC (ANSI Export Spec Option)	2-B
808	0256202	Ref	110V/220V (ANSI Export, Australian and CE Specs) **(SN 0300177361 through 0300236676)**	D
808	1001213655	Ref	110V/220V (ANSI Export, Australian, China and CE Specs) **(SN 0300236677 through 0300272252)**	A
808	1001160272	Ref	110V AC Cable used with 4000W/60Hz Generator	A
808	1001194365	Ref	220V Receptacle used with 4000W Generator (ANSI Export, Australian and Japanese Spec)	A

ITEM	PART NUMBER	QTY	DESCRIPTION	REV
808	1001171131	Ref	240V Receptacle with GFCI used with 4000W Generator (Not Shown)	
808	1001159121	Ref	240V Receptacle with GFCI used with 7500W Generator (Not Shown)	
808		Ref	110V/220V (CE Spec Only)	
808		Ref	**Without Powermite Generator (CE Specs)**	
808	0256202	Ref	110V/220V (ANSI Export, Australian, China and CE Specs) **(SN 0300177361 through 0300236676)**	D
808	1001213655	Ref	110V/220V (ANSI Export, Australian, China and CE Specs) **(SN 0300236677 through 0300272252)**	A
808	0275653	1	220V with CEE7 Post Ground Receptacle and Plug and Circuit Breaker (2x4 Box)	G
808	0275654	1	220V with CEE7 Side Ground Receptacle and Plug and Circuit Breaker (2x4 Box)	G
808	0275660	1	220V with AFSINT 107 Keyed Ground Receptacle and Plug and Circuit Breaker (2x4 Box)	G
808	0275656	1	110V with IEC Yellow Receptacle and Plug and Circuit Breaker	F
808	0275652	1	220V with IEC Blue Receptacle and Plug and Circuit Breaker	F
808	0275655	1	220V with CEE7 Post Ground Receptacle and Plug and Circuit Breaker (70mm x 70mm Box)	F
808	0275651	1	220V with CEE7 Side Ground Receptacle and Plug and Circuit Breaker (70mm x 70mm Box) **(SN 0300181175 through 0300181922)**	D
808	1001153638	1	220V with CEE7 Side Ground Receptacle and Plug and Circuit Breaker (70mm x 70mm Box) **(SN 0300181923 through 0300272252)**	D
808		Ref	**With Powermite Generator (CE Specs)**	
808	1001100397	Ref	220V with CEE7 Post Ground Receptacle and Plug and Circuit Breaker (2x4 Box)	H
808	1001100398	Ref	220V with CEE7 Side Ground Receptacle and Plug and Circuit Breaker (2x4 Box)	H
808	1001100399	Ref	220V with AFSINT 107 Keyed Ground Receptacle and Plug and Circuit Breaker (2x4 Box)	G
808	1001100400	Ref	110V with IEC Yellow Receptacle and Plug and Circuit Breaker	F
808	1001100401	Ref	220V with IEC Blue Receptacle and Plug and Circuit Breaker	F
808	1001100402	Ref	220V with CEE7 Post Ground Receptacle and Plug and Circuit Breaker (70mm x 70mm Box)	F
808	1001100403	Ref	220V with CEE7 Side Ground Receptacle and Plug and Circuit Breaker (70mm x 70mm Box)	F
808		Ref	**With 4000W Generator (CE Specs)**	
808	1001194203	Ref	110V IEC Yellow Receptacle and Plug	B
808	1001194204	Ref	220V IEC Blue Receptacle and Plug	B
808	1001194197	Ref	220V CEE7 Post Ground Receptacle and Plug (2x4 Box)	B
808	1001194198	Ref	220V CEE7 Side Ground Receptacle and Plug (2x4 Box)	B
808	1001194200	Ref	220V AFSINT 107 Keyed Ground Receptacle	B
808A		Ref	Box, Switch Options:	
808A	0860038	1	0255382, 0257176 & 0274618 Installations	
808A	Not Required	0	0255382, 0257176 & 0274618 Installations	
808A	0861731	1	0275253, 0275254, 0275660, 1001100345, 1001100397, 1001100398, 1001100399, 1001194197, 1001194198, 1001194200 & 1001194365 Installations	
808A	0861781	1	0275656, 0275652, 1001100400, 1001100401, 1001194203 & 1001194204 Installations	
808A	See Note	1	0275655, 0275651, 1001100402 & 1001100403 Installations	

ITEM	PART NUMBER	QTY	DESCRIPTION	REV
			(Note: was p/n 0861782 which is no longer available. Use p/n 1001100344 CEE7 Side Ground Service Kit or p/n 1001100343 CEE7 Post Ground Service Kit. Kit include Box p/n 1001141967 & Items 808B, 808C, 808E & 808P)	
808A	1001141967	1	1001100343, 1001100344, 1001141970 & 1001141971 Kits	
808B		Ref	Receptacle Options	
808B	4460346	1	0255382 & 0274618 Installations	
808B	4460125	1	0257176 Installation	
808B	Not Required	0	0256202 Installation (Purchase Locally)	
808B	4461244	1	0275253, 1001100345, 1001100397 & 1001194197 Installations	
808B	4461245	1	0275654, 1001100398 & 1001194198 Installations	
808B	4461246	1	0275660, 1001100399 & 1001194200 Installations	
808B	4461198	1	0275656, 1001100400 & 1001194203 Installations	
808B	4461201	1	0275652, 1001100401 & 1001194204 Installations	
808B	4461204	NLA	0275655 & 1001100402 Installations (Use p/n 1001100343)	
808B	4461207	NLA	0275651 & 1001100403 Installations (Use p/n 1001100344)	
808B	1001141968	1	1001100343 & 1001141971 Kits	
808B	1001141969	1	1001100344 & 1001141970 Kits	
808C		Ref	Shield, Cover Options	
808C	1001110873	1	0255382 & 0274618 Installations (Top Hinged)	
808C	4060092	1	0257176 Installation	
808C	Not Required	0	0256202 Installation (Purchase Locally)	
808C	4461244	1	0275253, 1001100345, 1001100397 & 1001194197 Installations	
808C	4461245	1	0275654, 1001100398 & 1001194198 Installations	
808C	4461246	1	0275654, 1001100398 & 1001194200 Installations	
808C	4461198	1	0275656, 1001100400 & 1001194203 Installations	
808C	4461201	1	0275652, 1001100401 & 1001194204 Installations	
808C	4461204	NLA	0275655 & 1001100402 Installations (Use p/n 1001100343)	
808C	4461207	NLA	0275651 & 1001100403 Installations (Use p/n 1001100344)	
808C	1001141968	1	1001100343 & 1001141971 Kits	
808C	1001141969	1	1001100344 & 1001141970 Kits	
808D		Ref	Connector, Strain Relief Options	
808D	4460071	1	0255382, 0257176 & 0274618 Installations	
808D	Not Required	0	0256202 Installations (Purchase Locally)	
808D	4460968	1	0275656, 0275652, 0275655, 0275651, 1001100400, 1001100401, 1001100402, 1001100403, 1001194203 & 1001194204 Installations	
808D	4460968	1	0275653, 0275654, 0275660, 1001100397, 1001100398, 1001100399 Installations **(SN 0300177361 through 0300223869)**	
808D	4460662	1	0275653, 0275654, 0275660, 1001100397, 1001100398, 1001100399 Installations **(SN 0300223870 through 0300272252)**	
808D	4460662	1	1001194197, 1001194198, 1001194200 & 1001194365 Installations	
808E		Ref	Plug, Male Options:	
808E	4460205	1	0255382 & 0274618 Installations	
808E	4460233	1	0257176 Installation	
808E	Not Required	0	0256202 Installation (Purchase Locally)	
808E	4461202	NLA	0275653, 0275655, 1001100397 & 1001100402 Installations & 1001100343 & 1001141971 Kits (Use p/n 4461205)	
808E	4461199	1	0275652 & 1001100401 Installations	

ITEM	PART NUMBER	QTY	DESCRIPTION	REV
808E	4461249	1	0275660 & 1001100399 Installations	
808E	4461196	1	0275656 & 1001100400 Installations	
808E	4461205	1	0275654, 0275651, 1001100345, 1001100398 & 1001100403 Installations & 1001100344 & 1001141970 Kits	
808F		Ref	Plug, Male Options:	
808F	4460205	1	0274618 Installation (Qty 4 Required for Dual AC)	
808F	4460205	1	0255382 Installation (Qty 4 Required for Dual AC) **(SN 0300177361 through 0300236676)**	
808F	1001227309	1	0255382 Installation (Qty 4 Required for Dual AC) **(SN 0300236677 through 0300272252)**	
808F	4460233	1	0257176 Installation **(SN 0300177361 through 0300236676)**	
808F	1001227309	1	0257176 Installation **(SN 0300236677 through 0300272252)**	
808F	4460709	1	0256202 Installation **(SN 0300177361 through 0300236676)**	
808F	1001213584	1	0256202 Installation **(SN 0300236677 through 0300272252)**	
808F	1001217095	1	1001213655 Installation **(SN 0300236677 through 0300272252)**	
808F	4460709	1	0275653, 0275654, 0275660, 0275656, 0275652, 0275655, 0275651, 1001100397, 1001100398, 1001100399, 1001100400, 1001100401, 1001100402 & 1001100403 Installations	
808F	4460960	1	0272433 Installation **(SN 0300181175 through 03002288563)**	
808F	1001218622	1	0272433 Installation **(SN 0300228564 through 0300272252)**	
808F	4460962	1	1001160272 Installation	
808F		Ref	Cover (Optional)	
808F	1671093	1	0272433 Installation **(SN 0300181175 through 0300228563)**	
808F	1001156352	1	0256202 Installation	
808F	1671093	1	1001160272 Installation	
808G		Ref	Connector, Female Options	
808G	4460134	1	0274618 Installation (Qty 2 Required for Dual AC)	
808G	4460134	1	0255382 Installation (Qty 2 Required for Dual AC) **(SN 0300177361 through 0300236676)**	
808G	1001227310	1	0255382 Installation (Qty 2 Required for Dual AC) **(SN 0300236677 through 0300272252)**	
808G	4460701	1	0257176 Installation **(SN 0300177361 through 0300236676)**	
808G	1001227310	1	0257176 Installation **(SN 0300236677 through 0300272252)**	
808G	4460710	1	0256202 Installation **(SN 0300177361 through 0300236676)**	
808G	1001213585	1	0256202 Installation **(SN 0300236677 through 0300272252)**	
808G	1001217096	1	1001213655 Installation **(SN 0300236677 through 0300272252)**	
808G	4460710	1	0275653, 0275654, 0275660, 0275656, 0275652, 0275655, 0275651, 1001100397, 1001100398, 1001100399, 1001100400, 1001100401, 1001100402 & 1001100403 Installations	
808G	4460959	1	0272433 Installation **(SN 0300181175 through 0300228563)**	
808G	1001218623	1	0272433 Installation **(SN 0300228564 through 0300272252)**	
808G		Ref	Cover (Optional)	
808G	1671092	1	0272433 Installation **(SN 0300181175 through 0300228563)**	
808G	1001156351	1	0256202 Installation **(SN 0300177361 through 0300236676)**	
808G	1671092	1	1001160272 Installation	
808H		Ref	Hardware Options:	
808H	0641405	AR	Bolt 1/4in - 20NC x 5/8in	
808H	0641407	AR	Bolt 1/4in - 20NC x 7/8in	
808H	0641416	AR	Bolt 1/4in - 20NC x 2in	
808H	0700408	AR	Screw M4 x 16mm	

ITEM	PART NUMBER	QTY	DESCRIPTION	REV
808H	3290405	AR	Locknut M4	
808H	3311405	AR	Locknut 1/4in - 20NC	
808H	4711400	AR	Flatwasher 1/4in Thin	
808H	4811400	AR	Flatwasher M4	
808J		Ref	Bracket, Receptacle Box Mounting Options:	
808J	Not Required	0	0255382, 0274618, 0257176 & 0256202 Installations	
808J	0903484	1	0275653, 0275654, 0275660, 0275656, 0275652, 0275655, 0275651, 1001100397, 1001100398, 1001100399, 1001100401, 1001100402 & 1001100403 Installations **(SN 0300177361 through 0300200808)**	
808J	1001193018	1	0275653, 0275654, 0275660, 0275656, 0275652, 0275655, 0275651, 1001100397, 1001100398, 1001100399, 1001100401, 1001100402 & 1001100403 Installations **(SN 0300200809 through 0300272252)**	
808J	1001193018	1	1001194197, 1001194198, 1001194200, 1001194203, 1001194204 & 1001194365 Installations	
808K		Ref	Bracket, Circuit Breaker Mounting Options:	
808K	Not Required	0	0255382, 0274618, 0257176 & 0256202 Installations	
808K	0903612	1	0275653, 0275654, 0275660, 0275656, 0275652, 0275655, 0275651, 1001100397, 1001100398, 1001100399, 1001100400, 1001100401, 1001100402, 1001100103 & 1001153638 Installations **(SN 0300177361 through 0300188307)**	
808K	1001170797	1	0275653, 0275654, 0275660, 0275656, 0275652, 0275655, 0275651, 1001100397, 1001100398, 1001100399, 1001100400, 1001100401, 1001100402, 1001100103 & 1001153638 Installations **(SN 0300188308 through 0300194781)**	
808K	1001153636	1	0275653, 0275654, 0275660, 0275656, 0275652, 0275655, 0275651, 1001100397, 1001100398, 1001100399, 1001100400, 1001100401, 1001100402, 1001100103 & 1001153638 Installations **(SN 0300194782 through 0300272252)**	
808L		Ref	Breaker, Circuit Kit Options (Required on All CE Spec Installations except 0256202 Installation)	
808L	1001096070	AR	Kit (Without Powermite Generator Control Box)	E
808L	1001109554	AR	Kit (With Powermite Generator Control Box)	C
808L		Ref	Circuit Breaker Options:	
808L	1001109477	NLA	Breaker 10A (Use p/n 1001181046) **(SN 0300177361 through 0300204452)**	
808L	1001109475	NLA	Breaker 16A (Use p/n 1001181045) **(SN 0300177361 through 0300204452)**	
808L	1001109482	NLA	Breaker 30mA (Use p/n 1001181045 for 30mA/16A Breaker Boxes or p/n 1001181046 for 30mA/10A Breaker Boxes) **(SN 0300177361 through 0300204452)**	
808L	1001181045	1	Breaker 16A/30mA Combination **(SN 0300204453 through 0300272252)**	
808L	1001181046	1	Breaker 10A/30mA Combination **(SN 0300204453 through 0300272252)**	
808L	0861880	1	Breaker Box	
808L	4460957	1	Terminal Block	
808L	4460956	1	Barrier, Terminal Block End	
800M	1001101191	2	Connector, Strain Relief Options (Required Only on CE Spec Installations except 0256202 Installation)	
808N	1060908	12 ft/3.7m	Cable, Extension (Required Only on CE Spec Installations except 0256202 Installation)	
808P		Ref	Connector, Female Options:	

ITEM	PART NUMBER	QTY	DESCRIPTION	REV
808P	Not Required	0	0255382, 0274618, 0257176, 0275653, 0275654, 0275660, 0275656, 0275652, 0275655 & 0275651 Installations	
808P	Not Required	0	0256202 Installation (Purchase Locally)	
808P	4461203	1	1001100402 & 1001100397 Installations & 1001100343, 1001100345 & 1001141971 Kits	
808P	4461200	1	1001100401 Installation	
808P	4461250	1	1001100399 Installation	
808P	4461197	1	1001100400 Installation	
808P	4461206	1	1001100403 & 1001100398 Installations & 1001100344 & 1001141970 Kits	
		Ref	Kit, Plug and Socket Options:	
		Ref	Without Generator	
	0275452	1	Receptacle Box Kit (220V CEE7 Post Ground) (Includes Items 808A, 808B, 808C & 808E) (0275653 Installation)	C
	0275453	1	Receptacle Box Kit (220V CEE7 Side Ground) (Includes Items 808A, 808B, 808C & 808E) (0275654 Installation)	1
	0275454	1	Receptacle Box Kit (220V AFSINT 107 Keyed Ground) (Includes Items 808A, 808B, 808C & 808E) (0275660 Installation)	1
	0275216	1	Receptacle Box Kit (110V IEC Yellow) (Includes Items 808A, 808B, 808C & 808E) (0275656 Installation)	1
	0275217	1	Receptacle Box Kit (220V IEC Blue) (Includes Items 808A, 808B, 808C & 808E) (0275652 Installation)	1
	0275218	NLA	Receptacle Box Kit (220V CEE7 Post Ground) (Includes Items 808A, 808B, 808C & 808E) (0275655 Installation) (Use p/n 1001100343)	C
	0275219	NLA	Receptacle Box Kit (220V CEE7 Side Ground) (Includes Items 808A, 808B, 808C & 808E) (0275651, 1001153638 & 1001160272 Installation) (Use p/n 1001100344)	B
		Ref	With Generator	
	1001100345	1	Receptacle Box Kit (220V CEE7 Post Ground) (Includes Items 808A, 808B, 808C, 808E & 808P) (1001100397 Installation)	C
	1001100347	1	Receptacle Box Kit (220V CEE7 Side Ground) (Includes Items 808A, 808B, 808C, 808E & 808P) (1001100398 Installation)	3
	1001100346	1	Receptacle Box Kit (220V AFSINT 107 Keyed Ground) (Includes Items 808A, 808B, 808C, 808E & 808P) (1001100399 Installation)	2
	1001100341	1	Receptacle Box Kit (110V IEC Yellow) (Includes Items 808A, 808B, 808C, 808E & 808P) (1001100400 Installation)	2
	1001100342	1	Receptacle Box Kit (220V IEC Blue) (Includes Items 808A, 808B, 808C, 808E & 808P) (1001100401 Installation)	2
	1001100343	1	Receptacle Box Kit (220V CEE7 Post Ground) (Includes Items 808A, 808B, 808C, 808E & 808P) (1001100402 Installation)	C
	1001100344	1	Receptacle Box Kit (220V CEE7 Side Ground) (Includes Items 808A, 808B, 808C, 808E & 808P) (1001100403 Installation)	B
809		Ref	7500W SKYPOWER GENERATOR INSTALLATION	
809	1001115391	Ref	60Hz and Deutz D2011 Engine	F
809	1001145227	Ref	60Hz and Deutz TD2.9L4 Engine	F
809	1001115392	Ref	50Hz Spec and Deutz D2011 Engine	E
809	1001145228	Ref	50Hz and Deutz TD2.9L4 Engine	D
809	1001217187	Ref	60Hz Spec and Ford Engine	F
809	0275257	Ref	60Hz Spec and GM Engine	F
		Ref	**Note: SkyPower Generator is Standard on ANSI and CSA**	

ITEM	PART NUMBER	QTY	DESCRIPTION	REV
			Specs. Optional on All Other Specs.	
809A		Ref	Receptacle, Female Twist-Lock Options	
809A	4460958	1	60Hz Spec	
809A	See Note	1	50Hz Spec (Note: Not Available - Purchase Locally)	
809B		Ref	Gasket Options:	
809B	3960422	2	60Hz Spec	
809B	See Note	2	50Hz Spec (Note: Not Available - Purchase Locally)	
809C		Ref	Cover, Receptacle Options:	
809C	1001110873	1	60Hz Spec	
809C	See Note	1	50Hz Spec (Note: Not Available - Purchase Locally)	
809D		Ref	Cover, Receptacle Options:	
809D	1001110872	1	60Hz Spec	
809D	See Note	1	50Hz Spec (Note: Not Available - Purchase Locally)	
809E		Ref	Receptacle Options:	
809E	4460346	1	60Hz Spec	
809E	See Note	1	50Hz Spec (Note: Not Available - Purchase Locally)	
809F	4460051	1	Connector, Strain Relief	
809G	4460071	1	Connector, Strain Relief	
809H	4922925	1	Harness, Generator	C
809I	77363233	1	Plug, Male - 6 Position	
809I	4460465	1	Socket, Female	
809J	4460225	1	Plug, Male - 6 Position	
809J	4460268	1	Socket, Female	
810		Ref	7500W SkyPower Generator Junction Box Components	
810	0861542	Ref	60Hz Spec (Deutz D2011 and GM Engines) **(SN 0300181175 through 0300182752)**	E
810	1001157592	Ref	60Hz Spec (Deutz D2011 and GM Engines) **(SN 0300182753 through 0300272252)**	C
810	1001157592	Ref	60Hz (Deutz TD2.9L4 and Ford Engines)	C
810	0861567	Ref	50Hz Specs (Deutz D2011 Engines) **(SN 0300181175 through 0300182752)**	B
810	1001157525	Ref	50Hz Specs (Deutz D2011 Engines) **(SN 0300182753 through 0300272252)**	B
810	0861567	Ref	50Hz Specs (Deutz TD2.9L4 Engines)	B
810A		Ref	Cable, Electrical 12/3	
810A	1060494	2 ft/.6m	60Hz Spec **(SN 0300177361 through 0300205261)**	
810A	1001179154	2 ft/.6m	60Hz Spec **(SN 0300205262 through 0300272252)**	
810A	See Note	2 ft/.6m	50Hz Spec (Note: Not Available - Purchase Locally)	
810B		Ref	Cable, Electrical 10/3 (Deutz D2011 and GM Engines Only)	
810B	1060708	2.5 ft/ .76m	60Hz Spec	
810B	See Note	2 ft/ .76m	50Hz Spec (Note: Not Available - Purchase Locally)	
810C	1060343	1.5 ft/ .46m	Cable, Electrical 10/4 (60Hz Spec Only)	
810D	4460425	2	Connector, Strain Relief (Deutz D2011 and GM Engine Machines Only)	
810D	1001152525	1	Plug (Deutz TD2.9L4 Engine Machines)	
810D	3520192	1	Plug (50Hz Spec Only)	
810E		Ref	Component Options:	
810E	4460426	2	Connector, Strain Relief (60Hz Spec Only)	
810E	4460426	1	Connector, Strain Relief (50Hz Spec Only)	
810E	3520189	1	Plug (50Hz Spec Only)	
810F	1671092	1	Cover (60Hz Spec Only)	

ITEM	PART NUMBER	QTY	DESCRIPTION	REV
810F	4460963	1	Connector (60Hz Spec Only)	
811		Ref	7500W Generator Electrical Diagram Components	
811	1001112586	Ref	Deutz D2011 Engine Machines **(SN 0300181175 through 0300182752)**	B
811	1001157769	Ref	Deutz D2011 Engine Machines **(SN 0300182753 through 0300272252)**	B
811	1001122528	Ref	Deutz TD2.9L4 Engine Machines	B
811	1001221498	Ref	Ford Engine Machines	A
811	4933349	Ref	GM Engine Machines **(SN 0300181175 through 0300182752)**	B
811	1001157768	Ref	GM Engine Machines **(SN 0300182753 through 0300272252)**	A
811A		Ref	Generator Harness Options:	
811A	1001112587	1	Deutz D2011 Engine Machines **(SN 0300177361 through 0300181890)**	B
811A	1001152429	1	Deutz D2011 Engine Machines **(SN 0300181891 through 0300272252)**	B
811A	1001119968	1	Deutz TD2.9L4 Engine Machines	B
811A	1001221208	1	Ford Engine Machines	A
811A	4923420	1	GM Engine Machines	A
811A	4460742	1	Connector - 2 Position (1001152429 Harness) (Not Shown)	
811A	4460743	2	Terminal (1001152429 Harness) (Not Shown)	
811B	4460374	2	Plug, Sealed Relay (1001112587 & 4983420 Harness)	
811B	4460375	7	Terminal (1001112587 & 4983420 Harness)	
811C	4460967	1	Plug, Male - 3 Position	
811C	4460465	3	Socket, Female	
811D	2400060	1	Fuseholder	
811D	2400064	1	Fuse - 5 Amp	
811D		Ref	Component Options:	
811D	2400060	1	Fuseholder (Deutz D2011 and GM Engines)	
811D	2400064	1	Fuse - 5 Amp (Deutz D2011 and GM Engines)	
811D	1001117078	1	Fuseholder (Includes Fuse and Cap) (Deutz D2011 Engines)	
811D	See Note	1	Fuse - 5 Amp (Deutz D2011 Engines) (Note: Use 1001117078 Assembly or Purchase Fuse Locally)	
811D	1001096134	1	Cover, Fuseholder (Deutz D2011 Engines)	
811E	4922641	1	Switch Harness	
811F	4460226	2	Socket, Female	
811G	4460742	1	Plug, Male - 2 Position	
811G	4460743	2	Socket, Female	
811G	4460458	2	Seal, Terminal	
812	4933308	1	Floodlights Harness Components	1-A
812A	4460320	2	Plug, Male - 2 Position	
812A	4460227	4	Pin, Male	
812B	4922764	1	Floodlight Harness (Lights to Switch)	1-A
812C	4460424	1	Connector, Female - 2 Position	
812C	4460226	4	Socket, Female	
812D	4360232	1	Circuit Breaker - 15 Amp	
812E	1060977	1	Cord, 2 Wire Coiled (Console Box Circuit Breaker to Switch)	
812F	4460425	1	Connector, Strain Relief	
812G	4460459	1	Plug, Male - 3 Position	
812G	4460790	3	Socket, Female	
812G	4460789	3	Seal	
812H	4460476	1	Receptacle, Female	
812H	4460850	3	Pin, Male	

ITEM	PART NUMBER	QTY	DESCRIPTION	REV
812H	4460790	3	Socket, Female	
812J	1060494	33 ft/ 10.1m	Electrical Cable 12/3 (Lower Boom to Aux Relay)	
812K	1060494	47 ft/ 14.3m	Electrical Cable 12/3 (Upper Boom to Console Box)	
813		Ref	Platform Worklights Components	
813A	2920140	NLA	Platform Worklights External Harness (Use p/n 1001232838) (Includes Light and Wire Only) **(SN 0300177361 through 0300258807)**	
813A	1001232838	1	Platform Worklight w/Switch Kit **(SN 0300258808 through 0300272252)**	
813B	4460459	1	Plug, Male - 3 Position	
813B	4460790	3	Socket, Female	
813B	4460789	3	Seal	
813C	4460476	1	Receptacle, Female	
813C	4460850	3	Pin, Male	
813C	4460790	3	Socket, Female	
813D	4460426	1	Connector, Strain Relief	
813E	2400070	1	Fuse	
813E	2400066	1	Holder, Fuse	
813F	4922894	1	Worklights Harness (Upper Boom to Worklights)	
813F	1060494	47/ 14.3mm	Cable, Electrical - 12/3	
813G	4922892	1	Worklights Harness (Lower Boom to Aux. Power Solenoid)	
813G	1060494	33 ft/ 10.1mm	Cable, Electrical - 12/3	
		Ref	**TOOLS**	
901	7002821	1	Crimper (For Wire to Pin/Socket Connections) (Not Shown)	
902	7002823	1	Extractor (For Removal of Pin/Socket from Connectors) (Not Shown)	
903	4460467	1	Extractor, Pin (Blue 16-18 Gauge) (For Removal of Pin/Socket from Connectors) (Not Shown)	
904	4460510	1	Extractor, Pin (Yellow 12-14 Gauge) (For Removal of Pin/Socket from Connectors) (Not Shown)	
905	7002828	1	Stripper, Wire (Not Shown)	
906	2901443	1	Analyzer Kit (Not Shown)	
906A	1600244	1	Analyze	
906B	1060633	1	Cable, Analyzer	
906C	4460321	2	Plug, Male	
906C	4460226	8	Socket, Female	
907	1001137005	1	Software Cable Kit (Not Shown)	

FIGURE 7-4. BATERY DISCONNECT SWITCH INSTALLATION – DEUTZ 2.9L4, GM AND FORD ENGINES

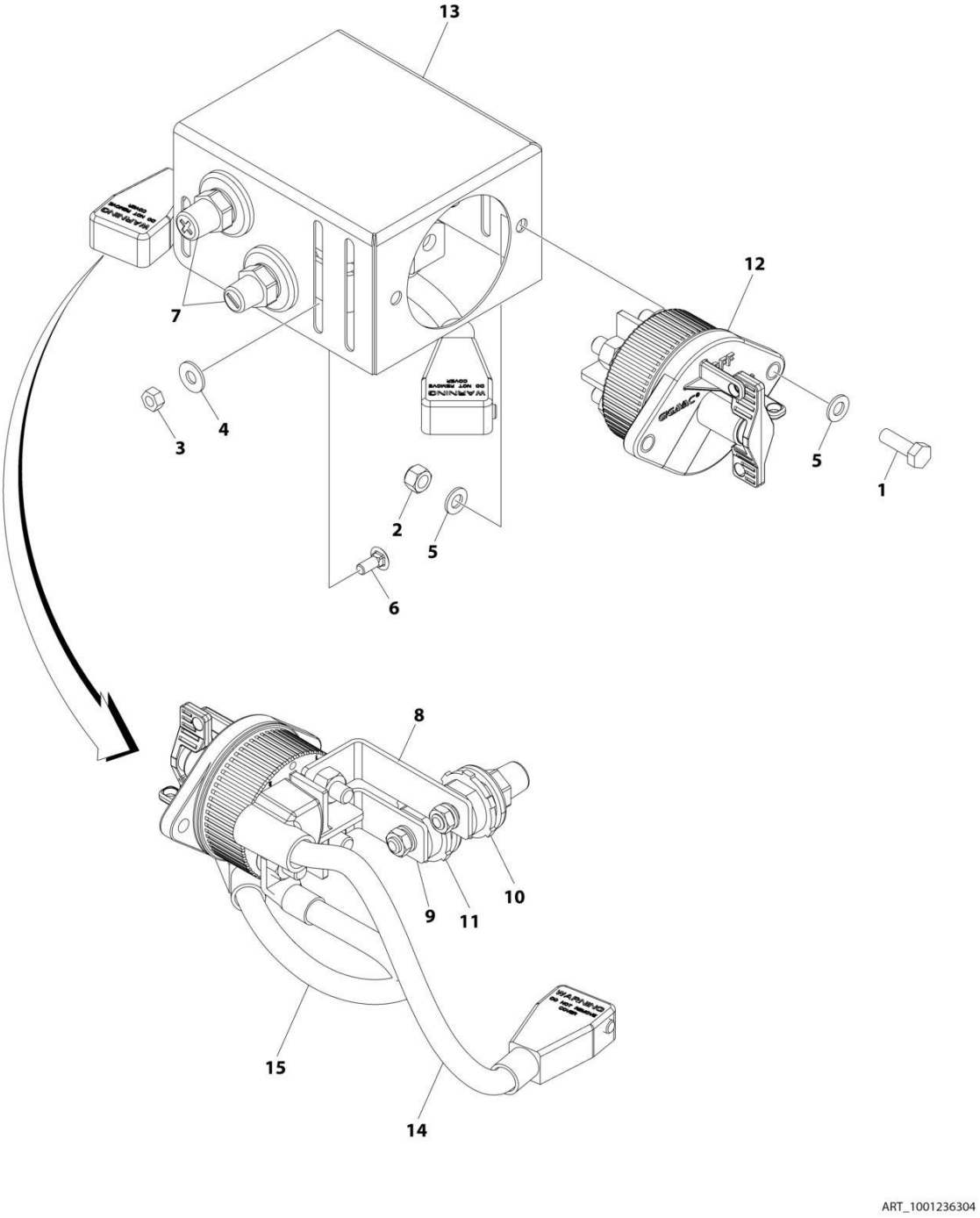

FIGURE 7-4. BATERY DISCONNECT SWITCH INSTALLATION – DEUTZ 2.9L4, GM AND FORD ENGINES

ITEM	PART NUMBER	QTY	DESCRIPTION	REV
	1001236304	Ref	BATTERY DISCONNECT SWITCH INSTALLATION	A
1	0760812	2	Bolt M8 x 25	
2	3290805	2	Nut M8	
3	3311405	3	Nut 1/4	
4	4751400	3	Washer 1/4	
5	4811900	4	Washer M8	
6	88411013	3	Bolt 1/4 x 3/4	
7	1001206476	1	Connectors, Post	
8	1001209432	1	Bussbar	
9	1001209474	1	Bussbar	
10	1001214570	1	Connector (Red)	
11	1001214571	1	Connector (Black)	
12	1001225346	1	Switch, Battery	
13	1001226531	1	Mount	
14	1001236504	1	Cable, Battery (+)	
15	1001236505	1	Cable, Battery (-)	

FIGURE 7-5. BATERY DISCONNECT SWITCH INSTALLATION – DEUTZ D2011 AND D2011 (STAGE V) ENGINES

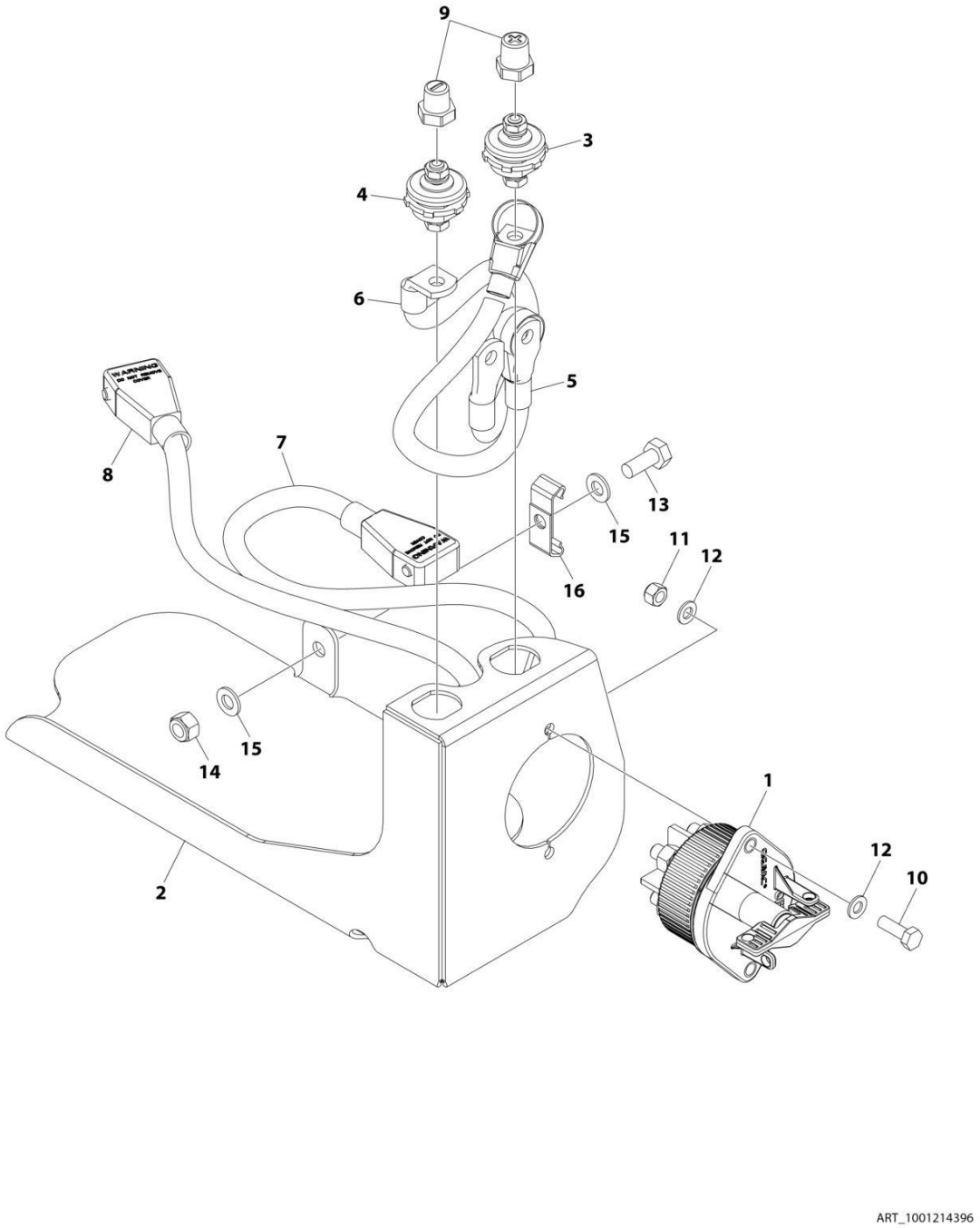

FIGURE 7-5. BATERY DISCONNECT SWITCH INSTALLATION – DEUTZ D2011 AND D2011 (STAGE V) ENGINES

ITEM	PART NUMBER	QTY	DESCRIPTION	REV
	1001214396	Ref	BATERY DISCONNECT SWITCH INSTALLATION	B
1	1001225346	1	Switch	
2	1001226529	1	Mount	
3	1001214570	1	Connector (Red)	
4	1001214571	1	Connector (Black)	
5	1001236375	1	Cable (Positive)	
6	1001236376	1	Cable (Negative)	
7	1001236377	1	Cable (Positive)	
8	1001236378	1	Cable (Negative)	
9	1001206476	1	Connector	
10	0760812	2	Bolt M8 x 25	
11	3290805	2	Nut M8	
12	4811900	4	Washer M8	
13	0761012	1	Bolt M10 x 25	
14	3291005	1	Nut M10	
15	4812000	2	Washer M10	
16	1320223	2	Clamp	

FIGURE 7-6. SKYEYE INTERMEDIATE HARNESS

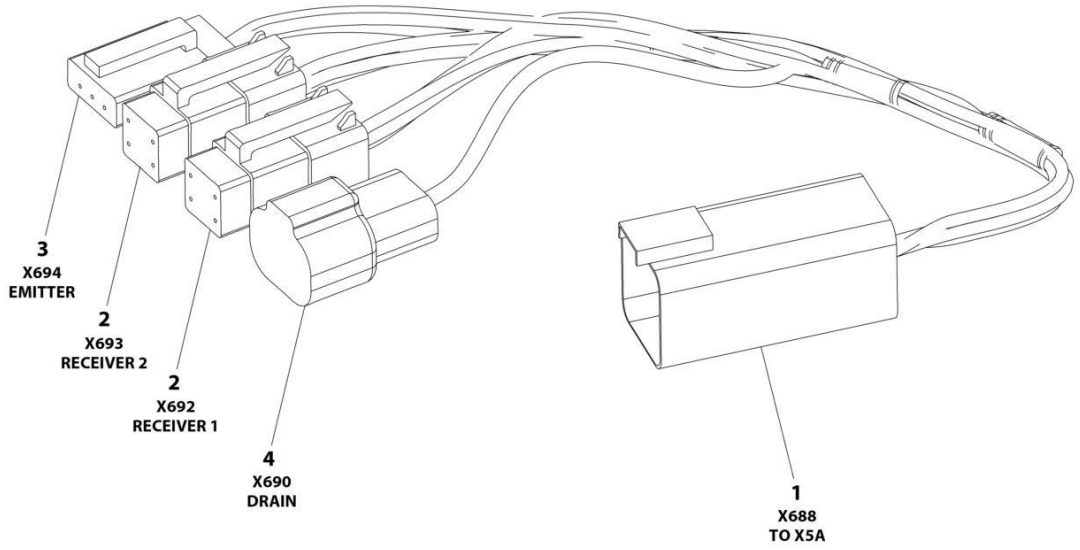

ART_1001237865

FIGURE 7-6. SKYEYE INTERMEDIATE HARNESS

ITEM	PART NUMBER	QTY	DESCRIPTION	REV
	1001237865	Ref	SKYEYE INTERMEDIATE HARNESS	A
1	4460899	1	Connector - 6 Position	
1	4460943	4	Pin, Male	
1	4460466	2	Plug, Terminal	
2	4461077	2	Connector - 4 Position	
2	1001119619	8	Socket, Female	
3	4460911	1	Connector - 3 Position	
3	1001119619	3	Socket, Female	
4	1001187681	1	Connector - 2 Position	
4	4460941	1	Pin, Male	
4	4460466	1	Plug, Terminal	

FIGURE 7-7. SKYEYE EMITTER HARNESS

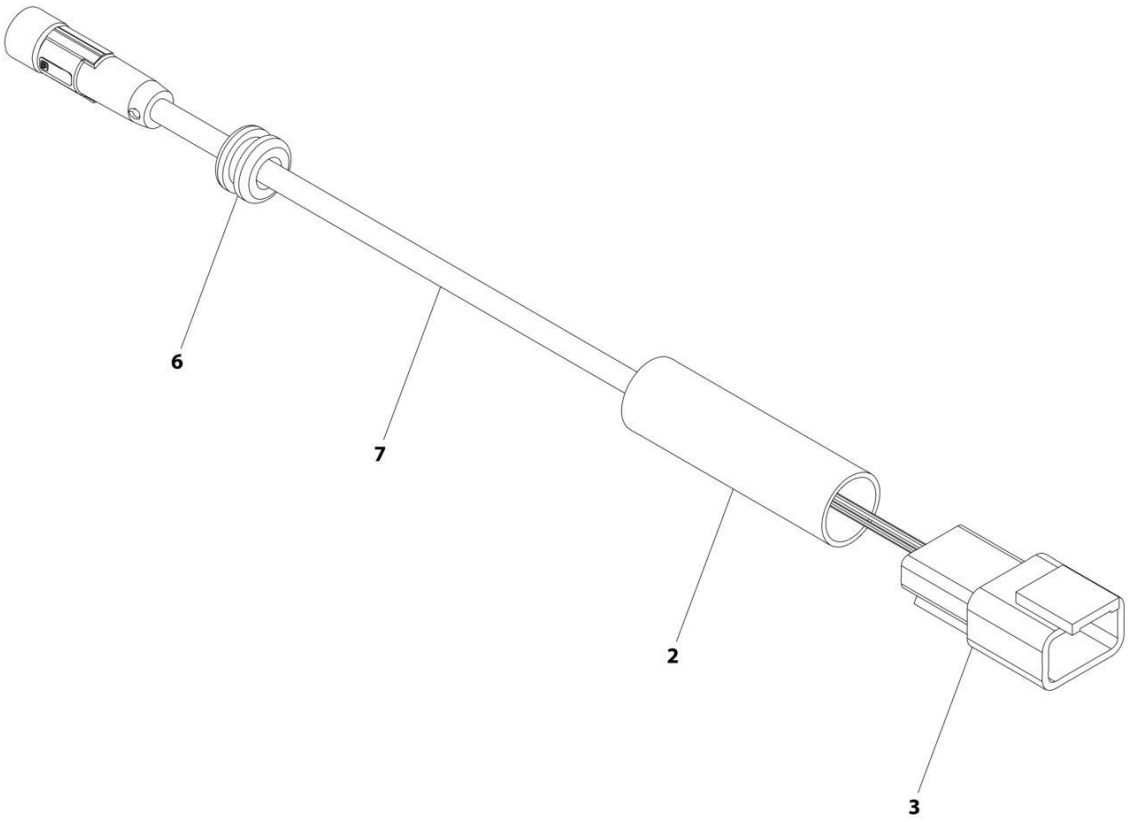

ART_1001237864

FIGURE 7-7. SKYEYE EMITTER HARNESS

ITEM	PART NUMBER	QTY	DESCRIPTION	REV
	1001237864	Ref	SKYEYE EMITTER HARNESS	A
2	2820247	AR	Tubing, Heat Shrink	
3	4460910	1	Connector - 3 Position	
3	1001119620	3	Pin, Male	
6	1001227996	1	Grommet	
7	1001237862	1	Cable, M8 Female Cordset	

FIGURE 7-8. SKYEYE RECEIVER HARNESS

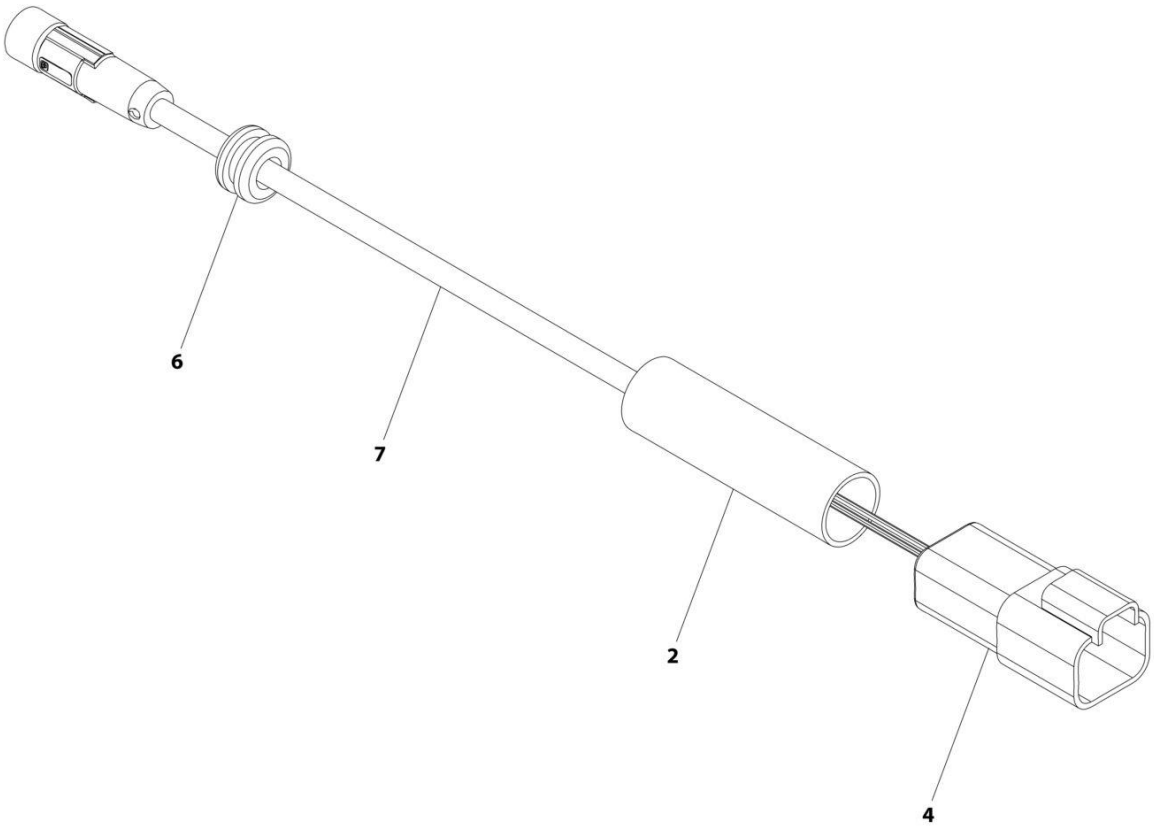

ART_1001237863

FIGURE 7-8. SKYEYE RECEIVER HARNESS

ITEM	PART NUMBER	QTY	DESCRIPTION	REV
	1001237863	Ref	SKYEYE RECEIVER HARNESS	A
2	2820247	AR	Tubing, Heat Shrink	
4	1001097051	1	Connector - 4 Position	
4	1001119620	4	Pin, Male	
6	1001227996	1	Grommet	
7	1001237862	1	Cable, M8 Female Cordset	

FIGURE 7-9. SKYLINE HARNESS

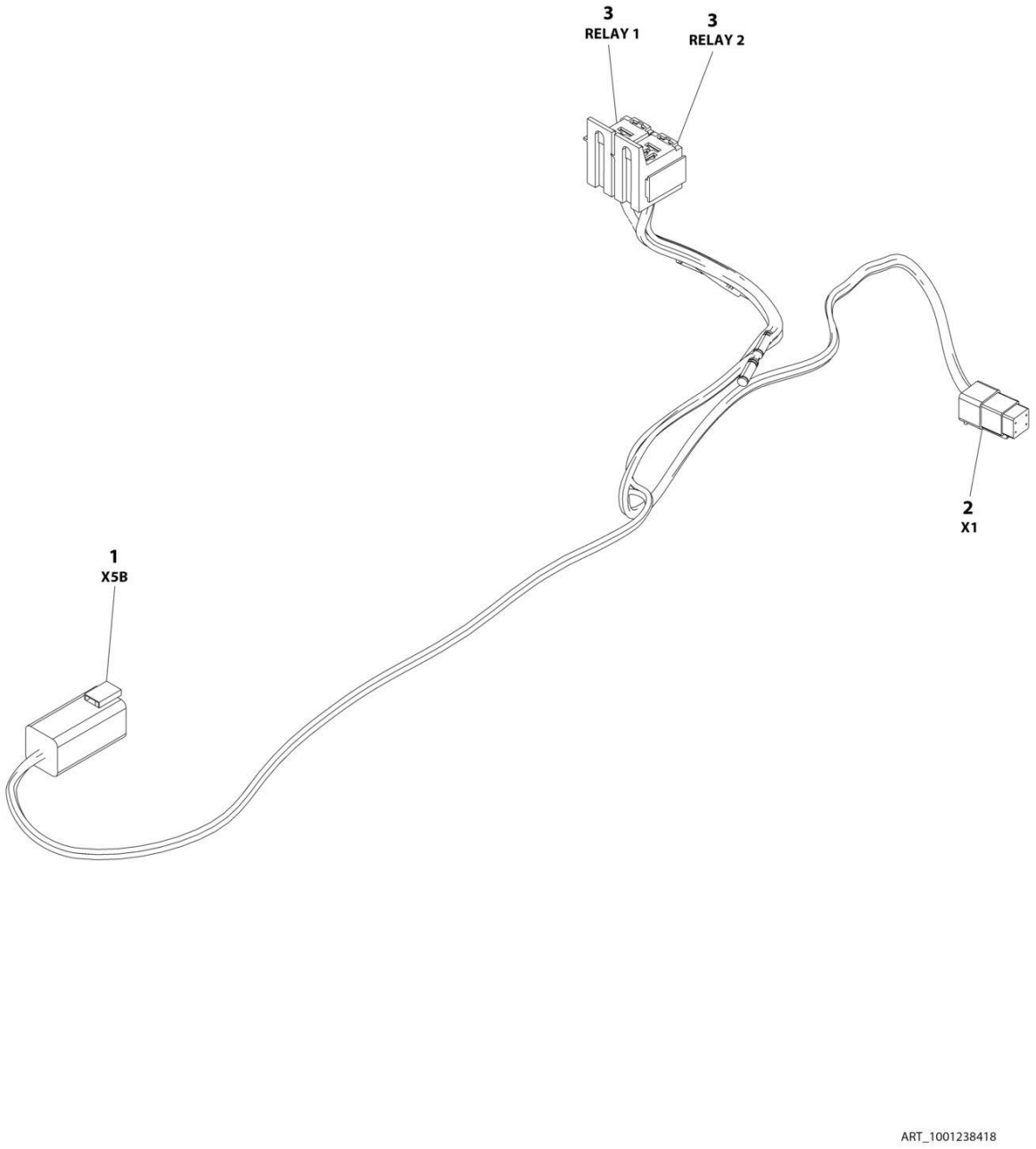

FIGURE 7-9. SKYLINE HARNESS

ITEM	PART NUMBER	QTY	DESCRIPTION	REV
	1001238418	Ref	SKYLINE HARNESS	B
1	4460899	1	Connector - 6 Position	
1	4460464	4	Pin, Male	
1	4460466	2	Plug, Terminal	
2	4461077	1	Connector - 4 Position	
2	1001126009	4	Socket, Female	
3	1001186432	2	Plug, Relay	
3	1001118388	5	Terminal	
3	1001118384	3	Terminal	
3	3740086	2	Relay	

SECTION 8 - DECALS

FIGURE 8-1. DECAL INSTALLATION (ANSI SPEC)

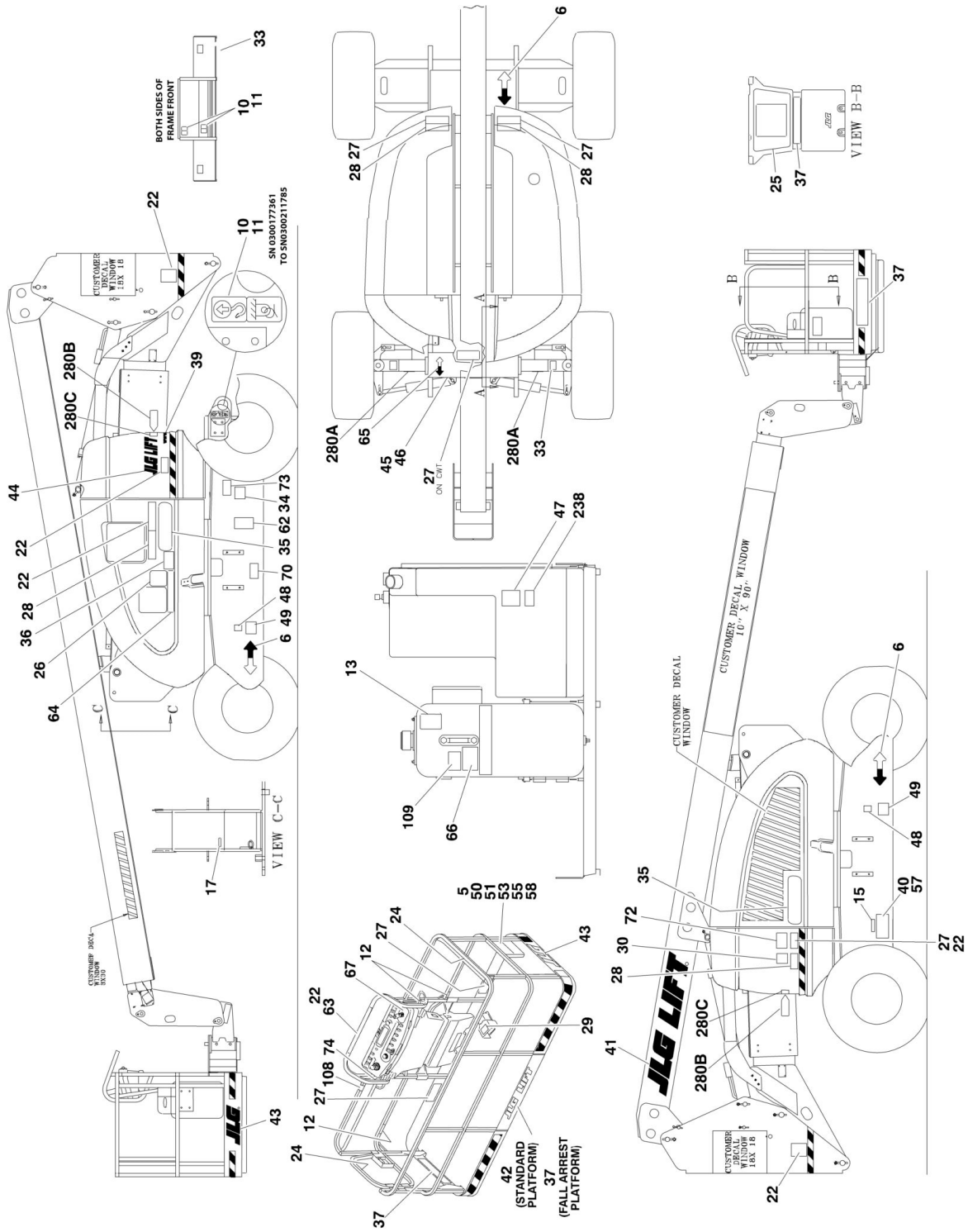

FIGURE 8-1. DECAL INSTALLATION (ANSI SPEC)

ITEM	PART NUMBER	QTY	DESCRIPTION	REV
	1283403	Ref	**Decals Installations**	AD
	0274094	Ref	**Decals Installation - JLG Logo**	C
	1001156889	Ref	**Decals Installation - 600A**	H
	1001156890	Ref	**Decal Installation - 600AJ**	H
5	1701509	1	Decal - Manual	
6	1701529	6	Decal - Arrow	
10	1703811	4	Decal - Tie Down/Lift	
11	1703814	6	Decal - Tie Down	
12	1704277	4	Decal - Attach Lanyard Here	
13	1704412	1	Decal - Hydraulic Oil Chart	
15	1705514	1	Decal - CSA **(SN 0300222711 through 0300272252)**	
17	3251243	1	Nameplate - 120V-60Hz	
22	1703953	7	Decal - Warning Crushing	
24	1702868	2	Decal - No Hands	
25	1703797	1	Decal - Warning/Danger	
26	1705336	1	Decal - Warning Inspection (MTB)	
27	1703804	6	Decal - Warning Crushing	
28	1703805	5	Decal - Danger Electrocution	
29	3252347	1	Nameplate - Footswitch	
30	3251813	1	Decal - USA	
33	1001156891	4	Decal - Max Tire Load	
34	See Note	NSS	Decal - Bar Code (Note: Not Available for Purchase)	
35		Ref	Decal Options:	
35	1702818	2	Decal - 600A	
35	1702819	2	Decal - 600AJ	
36		Ref	Decal Capacity Options:	
36	1001121813	1	Decal Capacity 600A	
36	1001121814	1	Decal Capacity 600AJ	
37		Ref	Decal Capacity Options:	
37	1001121800	2	Decal Capacity 600A	
37	1001121801	2	Decal Capacity 600AJ	
38	1001108923	1	Decal - EPA/Carb Fuel Spec	
39	1704885	1	Decal - Website	
40	See Note	NSS	Nameplate, Manufacturer Serial Number (Note: Not Available for Purchase)	
41	1702861	2	Decal - JLG Lift (8in Height)	
42	1702774	1	Decal - JLG Lift (3-1/2in Height)	
43	1702773	1	Decal - JLG (5in Height)	
44	1702860	1	Decal - JLG Lift (5in Height)	
45	3250872	1	Nameplate - Steer/Tow Selector	
46	1705090	1	Decal - Towing Instructions	
47		Ref	Decal - Fuel Options:	
47	1701505	1	Diesel	
47	1701542	1	Gas	
48	1701543	1	Decal - LP Gas (Gas Engine Machines Only)	
49	1700818	2	Decal - LP Gas (Liquid) (Gas Engine Machines Only)	
50	0100011	AR	Compound, Locking	
51	0641406	4	Bolt 1/4in-20NC x 3/4in	
53	0860520	1	Box, Manual Storage	
55	3311405	4	Locknut 1/4in-20NC	

ITEM	PART NUMBER	QTY	DESCRIPTION	REV
57	3820001	4	Rivet	
58	4751400	8	Flatwasher 1/4in Regular	
62	1001131269	1	Decal - Patent	
63	1001108493	1	Decal - Legend	
64	1706941	1	Decal - Legend (MTB)	
65	1703687	1	Decal - Direction Arrow	
66	1702265	1	Decal - Upright Level Over-Ride	
67	1705351	1	Decal - Drive/Steer Instructions	
70	1001223055	1	Decal - Yearly Inspection **(SN 0300233771 through 0300272252)**	
72	1001229007	1	Decal - Lift Diagram **(SN 0300235285 through 0300272252)**	
73	1001223453	1	Decal - ICES **(SN 0300240734 through 0300272252)**	
74	0256487	1	Decal - Prop 65 (Diesel)	
74	0256488	1	Decal - Prop 65 (Gas)	
	1001160000	Ref	**OPTIONAL DECAL COMPONENTS**	
108		Ref	Decal Installation - Warning Prop 65 Options:	
108	0256487	Ref	Installation for Diesel Machines **(SN 100177361 through 0300245525)**	2-B
108	1702962	1	Decal - Warning Prop 65 (Diesel Machines) **(SN 100177361 through 0300245525)**	
108	1001231801	1	Decal - Warning Prop 65 (Diesel Machines) **(SN 0300245526 through 0300272252)**	
108	0256488	Ref	Installation for Gas Machines **(SN 100177361 through 0300245525)**	2-B
108	1702961	1	Decal - Warning Prop 65 (Gas Machines) **(SN 100177361 through 0300245525)**	
108	1001236338	NLA	Decal - Warning Prop 65 (Gas Machines) (Use p/n 1001231801) **(SN 0300246526 through 0300256414)**	
108	1001231801	1	Decal - Warning Prop 65 **(SN 0300256415 through 0300272252)**	
109		Ref	Decal - Biodegradable Hydraulic Fluid Options:	
109	1702788	1	Biodegradable Hydraulic Fluid	
109	1704174	1	Synthetic Biodegradable Hydraulic Fluid	
238	1001125387	1	Decal - Ultra Low Sulfur Fuel (Machines with Deutz TD2.9L4 Engines Only)	
280	1001220864	Ref	Transport Decal Kit **(SN 0300224050 through 0300272252)**	
280A	1001220512	2	Decal - Lower Boom **(SN 0300224050 through 0300272252)**	
208B	1001220510	2	Decal - Warning Arrow **(SN 0300224050 through 0300272252)**	
208C	1001220511	2	Decal - Warning Stripe **(SN 0300224050 through 0300272252)**	

FIGURE 8-2. DECAL INSTALLATION (COUNTRY SPEC)

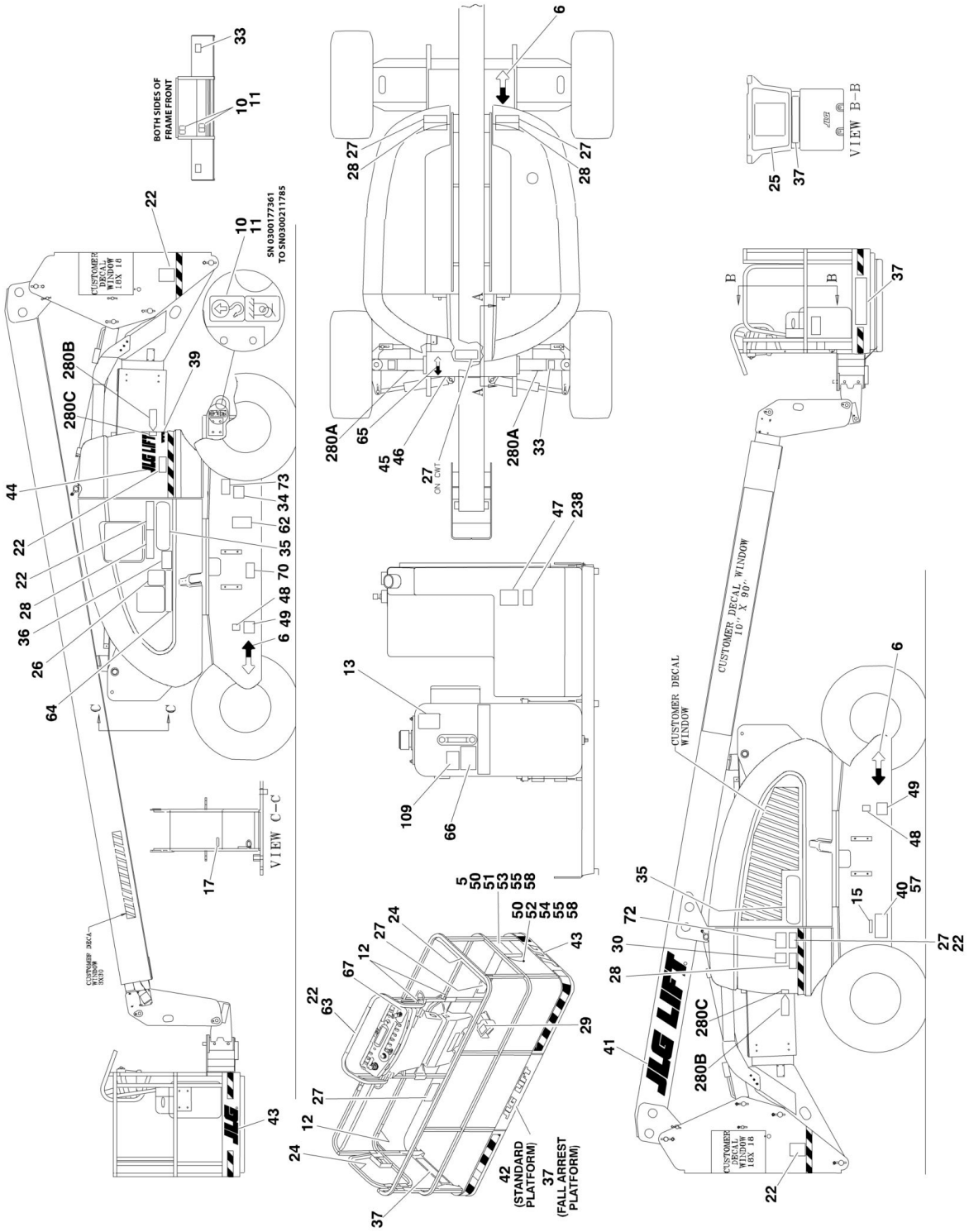

FIGURE 8-2. DECAL INSTALLATION (COUNTRY SPEC)

ITEM	PART NUMBER	QTY	DESCRIPTION	REV
	1283403	Ref	**DECALS INSTALLATIONS**	AD
	0274094	Ref	**Decals - JLG Logo**	C
	1001156974	Ref	**Decal Installations 600A Brazil Spec (Portuguese Languages)**	F
	1001156985	Ref	**Decal Installations 600A Canadian (CSA) Spec (English/French Languages)**	G
	1001156980	Ref	**Decal Installations 600A Chinese Spec (English/Simplified Chinese Languages)**	F
	1001156979	Ref	**Decal Installations 600A Chinese Spec (English/Traditional Chinese Languages)**	F
	1001156976	Ref	**Decal Installations 600A Japanese Spec**	F
	1001156983	Ref	**Decal Installations 600A Korean Spec**	F
	1001156972	Ref	**Decal Installations 600A Latin American Spec (English/Spanish Languages)**	F
	1001156975	Ref	**Decal Installations 600AJ Brazilian Spec (Portuguese Languages)**	F
	1001156986	Ref	**Decal Installations 600AJ Canadian (CSA) Spec (English/French Languages)**	G
	1001156982	Ref	**Decal Installations 600AJ Chinese Spec (English/Simplified Chinese Languages)**	F
	1001156981	Ref	**Decal Installations 600AJ Chinese Spec (English/Traditional Chinese Languages)**	F
	1001156977	Ref	**Decal Installations 600AJ Japanese Spec**	F
	1001156984	Ref	**Decal Installations 600AJ Korean Spec**	F
	1001156973	Ref	**Decal Installations 600AJ Latin American Spec (English/Spanish Languages)**	F
5	1701509	1	Decal - Manual	
6	1701529	6	Decal - Arrow	
10	1703811	4	Decal - Tie Down/Lift	
11	1703814	6	Decal - Tie Down	
12	1704277	4	Decal - Attach Lanyard Here	
13	1704412	1	Decal - Hydraulic Oil Chart	
15	1705514	1	Decal - CSA (CSA Specs Only)	
17	3251243	1	Nameplate - 120V-60HZ (All Specs except Brazil Spec)	
22		Ref	Decal - Warning Crushing Options:	
22	1705903	4	Brazil Specs	
22	1703942	4	Canadian (CSA) Spec	
22	1001116845	4	Chinese (Simplified) Spec	
22	1703943	4	Chinese (Traditional) Spec	
22	1703944	4	Japanese Spec	
22	1703945	4	Korean Spec	
22	1703941	4	Latin American Spec	
24		Ref	Decal - No Hands Options:	
24	1705967	2	Brazil Specs	
24	1704000	2	Canadian (CSA) Spec	
24	1706968	2	Chinese (Simplified) Spec	
24	1001116846	AR	Chinese (Traditional) Spec	
24	Not Required	0	Japanese Spec	
24	1705969	2	Korean Spec	
24	1704001	2	Latin American Spec	
25		Ref	Decal - Warning/Danger Options:	
25	1705895	1	Brazil Specs	
25	1703924	1	Canadian (CSA) Spec	

ITEM	PART NUMBER	QTY	DESCRIPTION	REV
25	1001116847	1	Chinese (Simplified) Spec	
25	1703925	1	Chinese (Traditional) Spec	
25	1703926	1	Japanese Spec	
25	1703927	1	Korean Spec	
25	1703923	1	Latin American Spec	
26		Ref	Decal - Warning Inspection (MTB) Options:	
26	1705896	1	Brazil Specs	
26	1705347	1	Canadian (CSA) Spec	
26	1001116848	1	Chinese (Simplified) Spec	
26	1001116849	1	Chinese (Traditional) Spec	
26	1705344	1	Japanese Spec	
26	1705345	1	Korean Spec	
26	1705917	1	Latin American Spec	
27		Ref	Decal - Warning Crushing Options:	
27	1705898	6	Brazil Specs	
27	1703948	6	Canadian (CSA) Spec	
27	1001116850	6	Chinese (Simplified) Spec	
27	1703949	6	Chinese (Traditional) Spec	
27	1703950	6	Japanese Spec	
27	1703951	6	Korean Spec	
27	1703947	6	Latin American Spec	
28		Ref	Decal - Danger Electrocution Options:	
28	1705897	5	Brazil Specs	
28	1703936	5	Canadian (CSA) Spec	
28	1703937	5	Chinese (Simplified) Spec	
28	1001116851	5	Chinese (Traditional) Spec	
28	1703938	5	Japanese Spec	
28	1703939	5	Korean Spec	
28	1703935	5	Latin American Spec	
29		Ref	Decal - Foot Switch Options:	
29	1705902	1	Brazil Specs	
29	1703984	1	Canadian (CSA) Spec	
29	1001116852	1	Chinese (Simplified) Spec	
29	1703982	1	Chinese (Traditional) Spec	
29	1703980	1	Japanese Spec	
29	1703981	2	Korean Spec	
29	1703983	1	Latin American Spec	
30	3251813	1	Decal - USA	
33	1001156891	4	Decal - Max Tire Load	
34	See Note	NSS	Decal - Bar Code (Note: Not Available for Purchase)	
35		Ref	Decal Options:	
35	1702818	2	Decal - 600A	
35	1702819	2	Decal - 600AJ	
36		Ref	Decal Capacity Options:	
36		Ref	**Decal Capacity 600A**	
36	1001121819	1	Brazil Specs	
36	1001121815	1	Canadian (CSA) Spec	
36	1001121824	1	Chinese (Simplified) Spec	
36	1001121822	1	Chinese (Traditional) Spec	
36	1001121820	1	Japanese Spec	
36	1001122201	1	Korean Spec	

ITEM	PART NUMBER	QTY	DESCRIPTION	REV
36	1001121817	1	Latin American Spec	
36		Ref	**Decal Capacity 600AJ**	
36	1001121655	1	Brazil Specs	
36	1001121816	1	Canadian (CSA) Spec	
36	1001121825	1	Chinese (Simplified) Spec	
36	1001121823	1	Chinese (Traditional) Spec	
36	1001121821	1	Japanese Spec	
36	1001121921	1	Korean Spec	
36	1001121815	1	Latin American Spec	
37		Ref	Decal Capacity Options:	
37		Ref	**Decal Capacity 600A**	
37	1001121806	1	Brazil Specs	
37	1001121802	1	Canadian (CSA) Spec	
37	1001121811	1	Chinese (Simplified) Spec	
37	1001121809	1	Chinese (Traditional) Spec	
37	1001121807	1	Japanese Spec	
37	1001122200	1	Korean Spec	
37	1001121804	1	Latin American Spec	
37		Ref	**Decal Capacity 600AJ**	
37	1001121656	1	Brazil Specs	
37	1001121803	1	Canadian (CSA) Spec	
37	1001121812	1	Chinese (Simplified) Spec	
37	1001121810	1	Chinese (Traditional) Spec	
37	1001121808	1	Japanese Spec	
37	1001121918	1	Korean Spec	
37	1001121805	1	Latin American Spec	
39	1704885	1	Decal - Website	
40	See Note	NSS	Nameplate, Manufacturers Serial Number (Note: Not Available for Purchase)	
41	1702861	2	Decal - JLG Lift (8in Height)	
42	1702774	1	Decal - JLG Lift (3-1/2in Height)	
43	1702773	1	Decal - JLG (5in Height)	
44	1702860	1	Decal - JLG Lift (5in Height)	
45	3250872	1	Nameplate - Steer/Tow Selector	
46	1705090	1	Decal - Towing Instructions	
47		Ref	Decal - Fuel	
47	1701505	1	Diesel	
47	1701542	1	Gas	
48	1701543	1	Decal - LP Gas (Gas Engine Machines Only)	
49		Ref	Decal - LP Gas (Liquid) Options (Gas Engine Machines Only)	
49	1700818	2	ANSI Export Specs	
49	Not Required	0	Brazil Specs	
49	1704271	2	Canadian (CSA) Spec	
49	Not Required	0	Chinese Specs	
49	Not Required	0	Japanese Specs	
49	Not Required	0	Korean Specs	
49	1702720	2	Latin American Spec	
50	0100011	AR	Compound, Locking	
51	0641406	4	Bolt 1/4in-20NC x 3/4in	
52	0641408	AR	Bolt 1/4in-20NC x 1in	
53	0860520	1	Box, Manual Storage	
54	1060279	AR	Cable, Lanyard (Brazil, CSA, Chinese, Japanese and Latin	

ITEM	PART NUMBER	QTY	DESCRIPTION	REV
			America Specs Only) **(SN 0300177361 through 0300195474)**	
55	3311405	AR	Locknut 1/4in-20NC	
57	3820001	4	Rivet	
58	4751400	AR	Flatwasher 1/4in Regular	
62		Ref	Decal - Patent Options:	
62	1001131269	1	CSA, Specs	
62	Not Required	0	Brazil, Chinese, Japanese and Latin American Spec	
62	1001131269	AR	Korean Specs (600A Qty 0 / 600AJ Qty 1)	
63	1001108493	1	Decal - Legend	
64	1706941	1	Decal - Legend (MTB)	
65	1703687	1	Decal - Direction Arrow (6-3/4in)	
66		Ref	Decal - Upright Level Over-Ride Options:	
66	1703544	1	Brazil Specs	
66	1703990	1	Canadian (CSA) Spec	
66	1001116861	1	Chinese (Simplified) Spec	
66	1001116862	1	Chinese (Traditional) Spec	
66	1702271	1	Japanese Specs	
66	17023987	1	Japanese Specs	
66	1702617	1	Latin American Spec	
67		Ref	Decal - Drive/Steer Instructions Options:	
67	1705905	1	Brazil Specs	
67	1705429	1	Canadian (CSA) Spec	
67	1705430	1	Chinese (Simplified) Spec	
67	1001116863	1	Chinese (Traditional) Spec	
67	1705426	1	Japanese Specs	
67	1705427	1	Korean Specs	
67	1705910	1	Latin American Spec	
70		Ref	Decal - Yearly Inspection: **(SN 0300233771 through 0300272252)**	
70	1001224052	1	Brazil Specs	
70	1001223971	1	CSA Specs	
70	1001224051	1	Chinese (Simplified) Specs	
70	1001224050	1	Chinese (Traditional) Specs	
70	1001224053	1	Japanese Specs	
70	1001224048	1	Korean Specs	
70	1001224049	1	Latin American Specs	
72	1001229007	1	Decal - Lift Diagram **(SN 0300235285 through 0300272252)**	
73	1001223453	1	Decal - ICES (CSA Spec Only) **(SN 0300240734 through 0300272252)**	
	1001160000	Ref	**OPTIONAL DECAL COMPONENTS**	
109		Ref	Decal - Biodegradable Hydraulic Fluid Options:	
109	1702788	1	Biodegradable Hydraulic Fluid (English Language)	
109	1704174	1	Synthetic Biodegradable Hydraulic Fluid (English Language)	
238	1001125387	1	Decal - Ultra Low Sulfur Fuel (CSA Machines with Deutz TD2.9L4 Engines Only)	
238	1001139654	1	Decal - Ultra Low Sulfur Fuel (Japanese Machines with Deutz TD2.9L4 Engines Only)	
253	1001143852	1	Decal - Emission Compliance (Optional on ANSI Export Diesel Machines) (Not Shown)	
280	1001220864	Ref	Transpor Decal Kit (CSA Spec Only) **(SN 0300224050 through 0300272252)**	
208A	1001220512	2	Decal - Lower Boom (CSA Spec Only) **(SN 0300224050 through 0300272252)**	

ITEM	PART NUMBER	QTY	DESCRIPTION	REV
208B	1001220510	2	Decal - Warning Arrow (CSA Spec Only) **(SN 0300224050 through 0300272252)**	
208C	1001220511	2	Decal- Warning Stripe (CSA Spec Only) **(SN 0300224050 through 0300272252)**	

FIGURE 8-3. DECAL INSTALLATION (AUSTRALIAN AND CE SPECS)

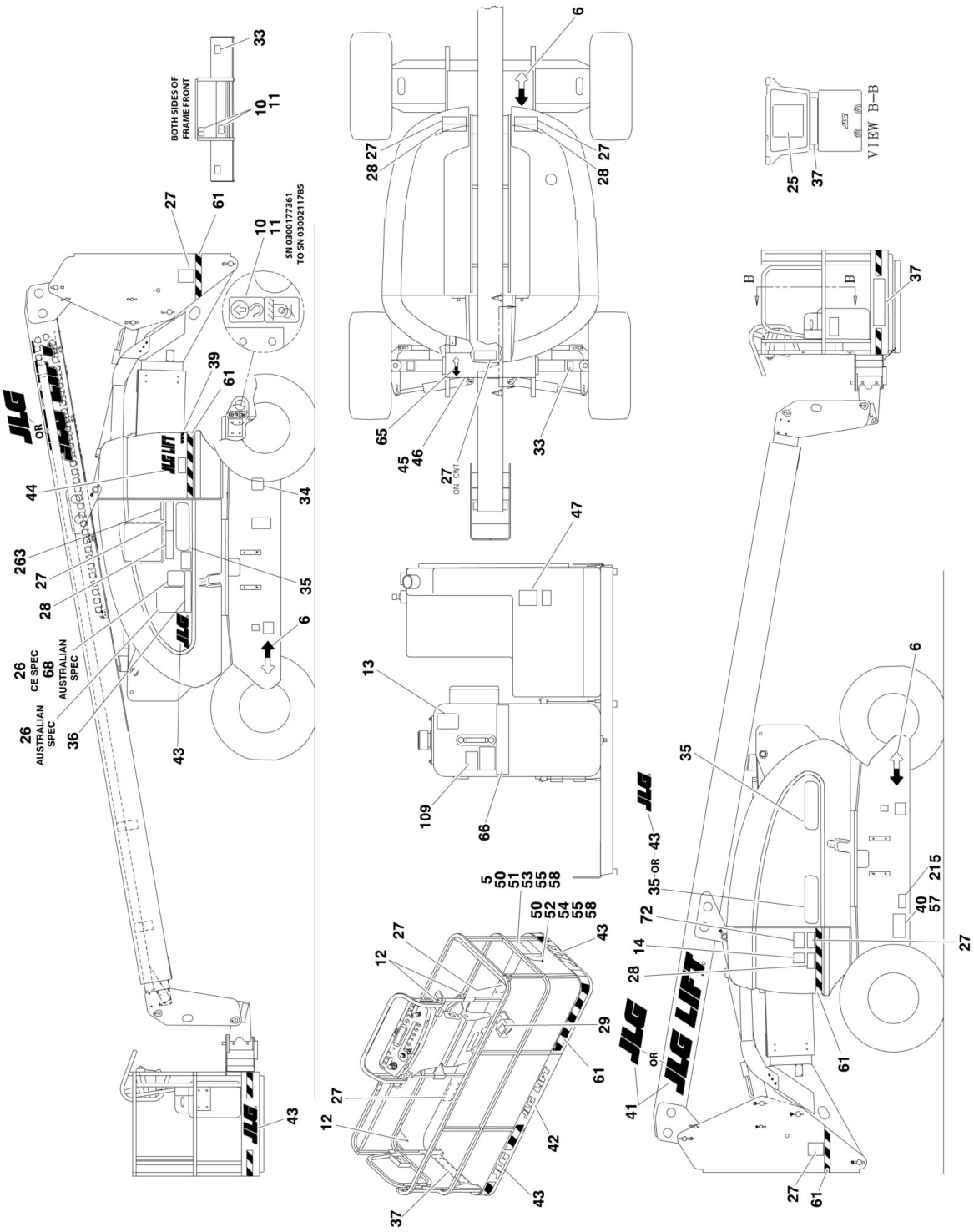

FIGURE 8-3. DECAL INSTALLATION (AUSTRALIAN AND CE SPECS)

ITEM	PART NUMBER	QTY	DESCRIPTION	REV
	1283403	Ref	**DECAL INSTALLATION - AUSTRALIAN SPECS**	AD
	1283403	Ref	**DECAL INSTALLATION - CE SPECS (SN 0300177361 through 0300220797)**	AD
	1001217567	Ref	**DECAL INSTALLATION - CE SPECS (SN 0300220798 through 0300272252)**	D
	0274094	Ref	**Decals - JLG Logo**	C
	See Note	Ref	**Decal Installation 600A Australian Spec (Note: 600A Not Available in Australia)**	
	1001156987	Ref	**Decal Installation 600A CE Spec**	H
	1001156978	Ref	**Decal Installation 600AJ Australian Spec**	F
	1001156988	Ref	**Decal Installation 600AJ CE Spec**	H
5	1701509	1	Decal - Manual	
6	1701529	3	Decal - Arrow	
10	1703811	4	Decal - Tie Down/Lift	
11	1703814	4	Decal - Tie Down	
12	1704277	AR	Decal - Attach Lanyard Here	
13	1704412	1	Decal - Hydraulic Oil Chart	
14	1705084	1	Decal - Sound Level	
25	1705921	1	Decal - Tipping/Electrical Platform	
26	1705822	1	Decal - Electrical/Safety Manual	
27	1701518	10	Decal - Warning Crushing	
28	1705961	AR	Decal - Danger Electrocution	
29	1705828	1	Decal - Footswitch	
33	1001156891	4	Decal - Max Tire Load	
34	See Note	NSS	Decal - Bar Code (Note: Not Available for Purchase) **(SN 0300195474 through 0300272252)**	
35		Ref	Decal Options:	
35	1702818	2	Decal - 600A	
35	1702819	2	Decal - 600AJ	
36	1705978	1	Decal - 230kg Capacity	
37	1705978	2	Decal - 230kg Capacity	
39	1704885	AR	Decal - Website (Australian Specs)	
39	1704885	1	Decal- Website (CE Specs) **(SN 0300177361 through 0300220797)**	
40	See Note	NSS	Nameplate, Manufacturer Serial Number (Note: Not Available for Purchase)	
41	1702861	2	Decal - JLG Lift (8in Height)	
41	1001159323	2	Decal - JLG (8in Height)	
42	1702774	1	Decal - JLG Lift (3-1/2in Height)	
43	1702773	AR	Decal - JLG (5in Height)	
44	1702860	1	Decal - JLG Lift (5in Height)	
44	1701435	1	Decal - JLG (3-1/2in Height)	
45	3250872	1	Nameplate - Steer/Tow Selector	
46	1705090	1	Decal - Towing Instructions	
47	1701505	1	Decal - Fuel (Diesel)	
50	0100011	AR	Compound, Locking	
51	0641406	4	Bolt 1/4in-20NC x 3/4in	
52	0641408	AR	Bolt 1/4in-20NC x 1in	
53	0860520	1	Box, Manual Storage	
54	1060279	1	Cable, Lanyard **(SN 0300177361 through 0300195474)**	
55	3311405	AR	Locknut 1/4in-20NC	

ITEM	PART NUMBER	QTY	DESCRIPTION	REV
57	3820001	4	Rivet	
58	4751400	AR	Flatwasher 1/4in Regular	
61	4420051	22 ft/6.7m	Decal - Warning Stripe	
65	1703687	1	Decal - Direction Arrow (6-3/4in)	
66	1705977	1	Decal - Upright Level Over-Ride	
68	1001112551	1	Decal - Emergency Controls (Australian Spec Only)	
72	1001229007	1	Decal - Lift Diagram **(SN 0300235285 through 0300272252)**	
	1001160000	Ref	**OPTIONAL DECAL COMPONENTS**	
109		Ref	Decal - Biodegradable Hydraulic Fluid Options:	
109	1702788	1	Biodegradable Hydraulic Fluid (English Language)	
109	1703479	1	Biodegradable Hydraulic Fluid (German Language)	
109	1704174	1	Synthetic Biodegradable Hydraulic Fluid (English Language)	
109	1704175	1	Synthetic Biodegradable Hydraulic Fluid (German Language)	
215	1001143852	1	Decal - Emission Compliance (Diesel Machines)	
263	1001197408	1	Decal - MSSO (CE Spec) **(SN 0300200809 through 0300272252)**	

SECTION 9 - RECOMMENDED SERVICE PARTS STOCK

FIGURE 9-1. MODEL 600A/600AJ STANDARD PARTS

ITEM	PART NUMBER	QTY	DESCRIPTION	REV
	Note	Ref	**Note: The following list will service one machine (built to current production per date on the front cover) with emergency repair parts which can be installed in the field. Parts from the list should be replaced when inventory is depleted to keep service parts stock supplied. For further information, contact your JLG dealer or the JLG Industries Parts Department.**	
		Ref	**STANDARD PARTS**	
	2120149	12	Element, Filter	
	2120210	12	Element Filter	
	3740067	1	Relay	
	7012944	1	Coil	
	7012943	1	Coil	
	70004595	1	Coil	
	80434249	1	Coil	
	70004660	1	Coil	
	70004463	1	Coil	
	70004673	1	Coil	
	4360517	1	Switch	
	3740049	1	Relay	
	4360328	1	Switch	
	2860030	1	Key, Replacement	
	4360475	1	Switch, Mushroom	
	4360476	1	Contact, Switch Block	
	70002386	1	Coil	
	2940074	1	Latch	
	4360331	1	Switch, Toggle	
	4360330	1	Switch, Toggle	
	4360387	1	Switch, Push Button	
	4360407	1	Controller	
	2400065	2	Fuse, 30Amp	
	8229242	2	Fuse, 5Amp	
	80983191	2	Fuse, 10Amp	
	3990010	2	Diode, 6Amp	

FIGURE 9-2. MODEL 600A/600AJ VARIABLE PARTS

ITEM	PART NUMBER	QTY	DESCRIPTION	REV
	Note	Ref	**Note: The following list will service one machine (built to current production per date on the front cover) with emergency repair parts which can be installed in the field. Parts from the list should be replaced when inventory is depleted to keep service parts stock supplied. For further information, contact your JLG dealer or the JLG Industries Parts Department.**	
		Ref	**VARIABLE PARTS**	
		Ref	Note: p/n Item not available at time of printing.	
	70004161	1	Coil (Machines with Deutz TD2.9L4 Engine)	
	70003783	12	Element, Air Cleaner (Machines with Deutz 2011 Engine)	
	7016328	1	Filter, Fuel (Machines with Deutz D2011 Engine)	
	7016331	4	Filter, Oil (Machines with Deutz D2011 Engine)	
	7027795	1	Engine EMR2 Control Module (Machines with Deutz D2011 Engine)	
	91403102	12	Element, Air Cleaner (Machines with Deutz TD2.9L4 Engine)	
	70025153	NLA	Filter, Fuel (Machines with Deutz TD2.9L4 Engine) (Use p/n 1001225430)	
	70025161	NLA	Filter, Fuel (Machines with Deutz TD2.9L4 Engine) (Use p/n 1001225431)	
	7016331	4	Filter, Oil (Machines with Deutz TD2.9L4 Engine)	
	70025210	1	Engine Control Module (Machines with Deutz TD209L4 Engine)	
	1001117308	1	Relay (Machines with Deutz TD2.9L4 Engine)	
	1001138228	1	Power Module/Relay (Machines with Deutz TD2.9L4 Engine)	
	70005008	12	Element, Air Cleaner (Machines with Ford Engine)	
	70006155	12	Filter, Fuel (Machines with Ford Engine)	
	70006213	12	Filter, Oil (Machines with Ford Engine)	
	70006176	1	Module - Engine Control Unit (Machines with Ford Engine)	
	7012664	12	Element, Air Cleaner (Machines with GM Engine)	
	7027972	12	Filter, Fuel (Machines with GM Engine)	
	7027965	12	Filter, Oil (Machines with GM Engine)	
	70002895	1	GM ECU Control Module (Machines with GM Engine)	
	7024444	1	Breather/Fill Cap (Helgensen Brand)	
	70004862	1	Breather/Fill Cap (Hydac Brand)	
	1001103667	1	Module, Ground Control	
	4360469	1	Switch, Key (All Specs except CE Spec)	
	4360470	1	Switch, Key (CE Specs Only)	
	4360522	1	Switch, Push Button (Machines with Lights Option)	
	4360336	1	Switch, Toggle (Machines with Ford or GM Engine or Cribbing Enable Switch or 2500W Generator)	
	3740080	1	Relay, Bosch (Machine with Generator)	
	4360336	1	Switch, Toggle (Machine with Generator)	
	4360542	1	Breaker, Circuit - 110Volt (Machines with 2500W Generator)	
	70000126	1	Breaker, Circuit - 220Volt (Machines with 2500W Generator)	
	4360070	1	Breaker, Circuit (Machines with SkyPower 7500W Generator)	
	2400064	1	Fuse - 5 Amp (Deutz D2011 and GM Machines with SkyPower 7500W Generator)	
		Ref	Fuse - 5 Amp (Deutz TD2.9L4 Machines with SkyPower 7500W Generator)	
	70002011	1	Power Track Repair Section (600A)	
	70001999	1	Power Track Repair Section (600AJ)	
	4360578	1	Switch, Limit	

ITEM	PART NUMBER	QTY	DESCRIPTION	REV
	1001106938	1	Platform Control Module	
	4360057	1	Switch, Limit (Machines with Soft Touch System Engine)	
	4360232	1	Breaker, Circuit (Machines with Floodlights Option)	
	2400070	2	Fuse (Machine with Worklights Engine)	
	1001129555	1	Lift/Swing Controller Kit	
	1001212415	1	Drive/Steer Controller Kit	

SECTION 10 - SPECIAL OPTIONS

FIGURE 10-1. SPECIAL OPTIONS

ITEM	PART NUMBER	QTY	DESCRIPTION	REV
		Ref	**Note: This list is to accommodate machines ordered with special equipment. Options may not be applicable to all models. For more specific parts information contact JLG Parts Department.**	
		Ref	**MISCELLANEOUS SPECIAL OPTIONS**	
	1001204884	Ref	**Air Intake Shut-off Valve Installation (Deutz DT2.9L4 Engines) (ANSI & CSA Specs)**	
		Ref	**Airline to Platform Installation Options:**	
	0256342	Ref	**1/2in - 600A**	
	0271475	Ref	**1/2in Airline and (1) Welding Cable - 600A**	
	0275295	Ref	**1/2in - 600A with Arctic Package**	
	0258966	Ref	**1/2in - 600AJ**	
	1001093438	Ref	**1/2in - 600AJ with Arctic Package**	
	1001205011	Ref	**Arctic Package Add-on Kit (600A without SkyPower)**	
	1001205010	Ref	**Arctic Package Add-on Kit (600A with SkyPower)**	
	1001205013	Ref	**Arctic Package Add-on Kit (600AJ without SkyPower)**	
	1001205012	Ref	**Arctic Package Add-on Kit (600AJ with SkyPower)**	
		Ref	**Boom Cable Installation with Communication System (600AJ Only)**	
	1001115974	Ref	**Intercom System**	
	1001116515	Ref	**Intercom System and 7500W Generator**	
	1001220153	Ref	**Boom Cable Add-on Kit (4000W/60Hz Generator)**	
	70006436	1	Bearing and Seal Kit	
		Ref	**Boom Wiper Installation**	
	0256276	Ref	**Boom Wiper Installation 600A**	
	0256366	Ref	**Boom Wiper Installation 600AJ**	
	1001116419	Ref	**Cable Carrier Tray Installation (30in Platform) (SN 0300177361 through 0300224542)**	
	1001116420	Ref	**Cable Carrier Tray Installation (36in Platform) (SN 0300177361 through 0300224542)**	
	1001172045	Ref	**Cable/Ladder Carrier Installation (SN 0300224543 through 0300272252)**	
		Ref	**ClearSky (Telematics) Installations (Dealer Installed)**	
	1001242409	Ref	**ClearSky (Telematics) Access Control Installation Kit (Dealer Installed) (ANSI, ANSI Export and CSA Specs)**	
	1001243183	Ref	**ClearSky (Telematics) Added-on Kit (Dealer Installed) (ANSI, ANSI Export and CSA Specs)**	
	1001243184	Ref	**ClearSky (Telematics) Added-on Kit (Dealer Installed) (CE Specs)**	
		Ref	**ClearSky Telematics Installation (Factory Installed) (SN 0300177361 through 0300232661)**	
		Ref	**Note: Refer to Manual Supplement p/n 3128499 for available replacement parts.**	
	1001152503	Ref	**ClearSky Telematics (ANSI Spec) (Factory Installed) (SN 0300177361 through 0300232661)**	
	1001152506	Ref	**ClearSky Telematics (Australian Spec) (Factory Installed) (SN 0300177361 through 0300232661)**	
	1001152505	Ref	**ClearSky Telematics (Brazil and New Zealand Specs) (Factory Installed) (SN 0300177361 through 0300232661)**	
	1001152504	Ref	**ClearSky Telematics (CSA Specs) (Factory Installed) (SN 0300177361 through 0300232661)**	
		Ref	**ClearSky Telematics Installation (Factory Installed) (SN**	

ITEM	PART NUMBER	QTY	DESCRIPTION	REV
			0300232662 through 0300272252)	
	1001227472	Ref	**ClearSky Telematics - Canbus (ANSI and CSA Specs) (Factory Installed) (SN 0300232662 through 0300272252)**	
	1001228946	Ref	**ClearSky Telematics - Canbus (ANSI Export and CE Specs) (Factory Installed) (SN 0300232662 through 0300272252)**	
	1001246522	Ref	**ClearSky Telematics - Canbus (Australian Specs) (Factory Installed)**	
	1001246523	Ref	**ClearSky Telematics - Canbus (China Specs) (Factory Installed)**	
	1001229107	Ref	**ClearSky Telematics 3-Wire Connection (ANSI and CSA Specs) (Factory Installed) (SN 0300232662 through 0300272252)**	
	1001233237	Ref	**ClearSky Telematics 3-Wire Connection (ANSI Export and CE Specs) (Factory Installed) (SN 0300232662 through 0300272252)**	
		Ref	**ClearSky Telematics Installation (Add-on Kits)**	
		Ref	**ADE Machines (Add-on Kit)**	
	1001104982	Ref	**ClearSky Telematics (ANSI Spec) (Add-on Kit)**	
	1001104983	Ref	**ClearSky Telematics (ANSI Export) (Add-on Kit)**	
	1001139130	Ref	**ClearSky Telematics (Australian Specs) (Add-on Kit)**	
	1001104984	Ref	**ClearSky Telematics (CSA Spec) (Add-on Kit)**	
		Ref	**ADE/UGM Machines (Add-on Kit)**	
	1001119942	Ref	**ClearSky Telematics (ANSI Spec) (Add-on Kit)**	
	1001121612	Ref	**ClearSky Telematics (ANSI Export) (Add-on Kit)**	
	1001139148	Ref	**ClearSky Telematics (Australian Spec) (Add-on Kit)**	
	Not Available	Ref	**ClearSky Telematics (Brazil and New Zealand Specs) (Add-on Kit)**	
	1001234099	Ref	**ClearSky Telematics (CE Specs) (Add-on Kit)**	
	1001119948	Ref	**ClearSky Telematics (CSA Spec) (Add-on Kit)**	
		Ref	**Cold Weather Package**	
	1001152340	Ref	**Cold Weather Package - Deutz D2011 Engines**	
	0274883	Ref	**Cold Weather Package with Transformer - Deutz D2011 Engines**	
	1001151900	Ref	**Cold Weather Package - Deutz TD2.9L4 Engines**	
	1001217832	Ref	**Cold Weather Package - Ford Engines**	
	0275262	Ref	**Cold Weather Package - GM Engines**	
	0273172	Ref	**Container Shipment Preparation (Wheel Installation)**	
	1001152960	Ref	**Counterweight Installation (Required for Turf/Sand Tires)**	
	1001152960	Ref	**Counterweight Installation (600A Required for Soft Touch Systems)**	
	1001157013	Ref	**Counterweight Installation (600AJ Required for Soft Touch Systems)**	
	1001115970	Ref	**Communication System (David Clark) Installation (600AJ Only)**	
		Ref	**Cylinder Bellows Installation (Boom)**	
	0255927	Ref	**Cylinder Bellows Installation (Boom) 600A**	
	0255928	Ref	**Cylinder Bellows Installation (Boom) 600AJ**	
		Ref	**Cylinder Bellows Installation (Frame)**	
	1001151379	Ref	**2WD/2WS & 4WD/2WS 8ft/2.4m Width Machines**	
	1001151380	Ref	**2WD/4WS & 4WD/4WS 8ft/2.4m Width Machines**	
	1001152771	Ref	**2WD/4WS 7ft/2.1m Width Machines**	
	1001236211	Ref	**Cylinder Valve Cover Kit - Level Cylinder**	
		Ref	**Decal Installations Options:**	
	1702788	Ref	Decal - Biodegradable Hydraulic Fluid (English Language)	

ITEM	PART NUMBER	QTY	DESCRIPTION	REV
	1703479	Ref	Decal - Biodegradable Hydraulic Fluid (German Language)	
	1704174	Ref	Decal - Biodegradable (Synthetic) Hydraulic Fluid (English Language)	
	1704175	Ref	Decal - Biodegradable (Synthetic) Hydraulic Fluid (German Language)	
	1001127095	Ref	Decal - ClearSky	
	1001214030	Ref	Decal - EAC (CIS & Russian Specs)	
	0257195	Ref	Decal - Government Warranty	
	1702868	Ref	Decal - No Hands - English Language (Platform with Mesh to Top Rail)	
	1705968	Ref	Decal - No Hands - English/Simplified Chinese Dual Language (Platform with Mesh to Top Rail)	
	1001116846	Ref	Decal - No Hands - English/Traditional Chinese Dual Language (Platform with Mesh to Top Rail)	
	1704000	Ref	Decal - No Hands - English/French Dual Language (Platform with Mesh to Top Rail)	
	1705969	Ref	Decal - No Hands - English/Korean Dual Language (Platform with Mesh to Top Rail)	
	1705967	Ref	Decal - No Hands - English/Portuguese Dual Language (Platform with Mesh to Top Rail)	
	1704001	Ref	Decal - No Hands - English/Spanish Dual Language (Platform with Mesh to Top Rail)	
	0256487	Ref	Decal - Prop 65 Warning (Diesel Machines) (California Spec)	
	0256488	Ref	Decal - Prop 65 Warning (Gasoline Machines) (California Spec)	
	1001200124	Ref	Decal - Quick Reference (Danish) (Lomax Rentals)	
	1001200121	Ref	Decal - Quick Reference (Dutch) (Lomax Rentals)	
	1001180861	Ref	Decal - Quick Reference (English) (Lomax Rentals)	
	1001200120	Ref	Decal - Quick Reference (French) (Lomax Rentals)	
	1001200122	Ref	Decal - Quick Reference (German) (Lomax Rentals)	
	1001200127	Ref	Decal - Quick Reference (Norwegian) (Lomax Rentals)	
	1001200126	Ref	Decal - Quick Reference (Spanish) (Lomax Rentals)	
	1001200125	Ref	Decal - Quick Reference (Swedish) (Lomax Rentals)	
	1001141300	Ref	Decal - SkyGuard Override	
	1001141302	Ref	Decal - SkyGuard Override (With SoftTouch)	
	0272312	Ref	Decal - Tire Sealant	
		Ref	**Decal Kits Options:**	
	2902307	Ref	Decal Kit - Country Spec (ANSI and ANSI Export)	
	2902329	Ref	Decal Kit - Country Spec (Australian and CE)	
	2902312	Ref	Decal Kit - Country Spec (Brazil)	
	2902322	Ref	Decal Kit - Country Spec (CSA)	
	1001116844	Ref	Decal Kit - Country Spec (Chinese - Simplified)	
	2902309	Ref	Decal Kit - Country Spec (Chinese - Traditional)	
	2902308	Ref	Decal Kit - Country Spec (Japanese)	
	2902310	Ref	Decal Kit - Country Spec (Korean)	
	2902311	Ref	Decal Kit - Country Spec (Latin America)	
	2902303	Ref	Decal Kit - Master	
	1001193632	Ref	Decal Kit - Machine (ANSI Spec Only)	
	1001108718	Ref	Decal Kit - Platform (600A)	
	1001238895	Ref	Decal Kit - Platform (600AJ)	
	1001119561	Ref	Decal Kit - Platform Console Box	
	1001156892	Ref	Decal Kit - Tire Load	
	4932990	Ref	**Drive Cutout Kit (Above Elevation Beyond Transport)**	
	4932993	Ref	**Drive Cutout Kit (Above Elevation Tilt) (ANSI, ANSI Export, Australian and Japanese Specs Only)**	

ITEM	PART NUMBER	QTY	DESCRIPTION	REV
		Ref	**Electrical Connector Kits**	
	1001148902	Ref	Amp/Tyco Electrical Connector Kit	
	1001148903	Ref	Deutsch DT Electrical Connector Kit	
	1001148904	Ref	Deutsch HD Electrical Connector Kit	
	1001148905	Ref	Packard Electrical Connector Kit	
	1001148906	Ref	Various Electrical Connectors Kit	
	1001218022	Ref	**Engine Block Heater Installations (Ford Engines Only)**	
	0275261	Ref	**Engine Block Heater Installations (GM Engines Only)**	
	1001246867	Ref	**Enhanced Detection System (EDS) Level 1 (2-Bar) Installation Kit**	
	1001246860	Ref	**Enhanced Detection System (EDS) Level 2 (3-Bar) Installation Kit**	
	1001237883	Ref	**Fall Arrest (Bolt-on) Add-on Kit (6ft/1.82m Platform (ANSI, ANSI Export, CHINA, CSA & Japanese Specs Only) (Fits Platform p/ns 1001186384 & 1001144024)**	
	1001237882	Ref	**Fall Arrest (Bolt-on) Add-on Kit (8ft/2.4m Platform (ANSI, ANSI Export, CHINA, CSA & Japanese Specs Only) (Fits Platform p/ns 1001186383 & 1001144023)**	
		Ref	**Fan Cover/Grille Options:**	
	1001185078	Ref	**Fan Cover Add-on Kit (Deutz D2011 Engines)**	
	1001182599	Ref	**Fan Cover Installation (Deutz D2011 and Deutz D2011 Stage V Engines)**	
	1001093389	Ref	**Fan Grille Installation (Deutz D2011 Engines)**	
	1001213223	Ref	**Fan & Belt Grille Add-on Kit (Deutz D2011 Engines without Generator)**	
	1001202122	Ref	**Fan & Belt Grille Installation (Deutz D2011 Engines without Generator)**	
	1001213222	Ref	**Fan & Belt Grille Add-on Kit (Deutz D2011 Engines with Generator)**	
	1001202398	Ref	**Fan & Belt Grille Installation (Deutz D2011 Engines with Generator)**	
	1001149126	Ref	**Fan Grille Installation (Deutz TD2.9L4 Engines) (RCP Radiator Only)**	
	1001177694	Ref	**Fan Grille Installation (Deutz TD2.9L4 Engines) (Modine Radiator Only)**	
	1001213219	Ref	**Fan & Belt Grille Add-on Kit (Deutz TD2.9L4 Engines without Generator) (Modine Radiator)**	
	1001202397	Ref	**Fan & Belt Grille Installation (Deutz TD2.9L4 Engines without Generator) (Modine Radiator)**	
	1001213220	Ref	**Fan & Belt Grille Add-on Kit (Deutz TD2.9L4 Engines without Generator) (RCP Radiator)**	
	1001202082	Ref	**Fan & Belt Grille Installation (Deutz TD2.9L4 Engines without Generator) (RCP Radiator)**	
	1001213227	Ref	**Fan & Belt Grille Add-on Kit (Deutz TD2.9L4 Engines with Generator) (Modine Radiator)**	
	1001213181	Ref	**Fan & Belt Grille Installation (Deutz TD2.9L4 Engines with Generator) (Modine Radiator)**	
	1001213221	Ref	**Fan & Belt Grille Add-on Kit (Deutz TD2.9L4 Engines with Generator) (RCP Radiator)**	
	1001202331	Ref	**Fan & Belt Grille Installation (Deutz TD2.9L4 Engines with Generator) (RCP Radiator)**	
	1001093389	Ref	**Fan Grille Installation (Ford and GM Engines)**	
		Ref	**Filter Kits:**	
		Ref	**Combined Filter Kit (Hydraulic/Air and Fuel/Engine Oil)**	
	1001166960	1	**Deutz D2011 Engine**	
	1001181148	1	**Deutz Engine (SN 0300181927 through 0300272252)**	

ITEM	PART NUMBER	QTY	DESCRIPTION	REV
	1001114127	1	**GM Engine**	
		Ref	**Hydraulic/Air Filter Kits**	
	1001109684	1	**Deutz D2011 Engine**	
	1001167020	1	**Deutz D2011 Engine**	
	1001204458	1	**Deutz TD2.9L4 Engines**	
		Ref	**Fuel/Engine Oil Filter Kits**	
	1001110133	1	**Deutz D2011 Engine**	
	1001204460	1	**Deutz TD2.9L4 Engine**	
	1001139099	Ref	**Fire Extinguisher Installation**	
		Ref	**Fluids**	
		Ref	Coolant	
	2300004	Ref	Machines without Arctic Package	
	2300041	Ref	Machines with Arctic Package	
	3020017	Ref	Lubricant (Steer Spindles)	
	3020008	Ref	Lubricant (Drive Hubs)	
	3020037	Ref	Lubricant (Pump Coupling)	
	2300040	Ref	Diesel Fuel Conditioner	
		Ref	Engine Oil	
	3020016	Ref	Motor Oil Mobil Delvac MX 15W-40 (Deutz D2011 Engine Machines without Arctic Package)	
	3020044	Ref	Motor Oil 0W-40 (Deutz D2011 Engine Machines with Arctic Package)	
	1001136079	Ref	Motor Oil Mobil Delvac MX 15W-40 (Deutz TD2.9L4 Engine Machines without Arctic Package)	
	1001136172	Ref	Motor Oil 0W-40 (Deutz TD2.9L4 Engine Machines with Arctic Package)	
	1001115930	Ref	Motor Oil 10W-30 (Ford & GM Engine Machines without Arctic Package)	
	1001115931	Ref	Motor Oil 5W-30 Synthetic (Ford Engine Machines with Arctic Package) **(SN 0300177361 through 0300240729)**	
	1001190775	Ref	Motor Oil 5W-30 Non-Synthetic (Ford Engine Machines with Arctic Package) **(SN 0300240730 through 0300272252)**	
	1001115931	Ref	Motor Oil 5W-30 Synthetic (GM Engine Machines with Arctic Package)	
		Ref	Hydraulic Fluids	
	2300014	Ref	Mobil 424	
	2300027	Ref	Mobil 224H Bio	
	2300029	Ref	Mobil EAL ISO 46 Bio	
	2300016	Ref	Mobil DTE 10 EXCEL 32 (was DTE 13 ISO 32)	
	2300019	Ref	Quaker State Quintolubric 888-46 Fire Resistant	
	2300039	Ref	Exxon Univis HV126 (Arctic Package Only)	
	1001117294	Ref	**Footswitch Shield (Arctic Package)**	
	1001202749	Ref	**Fuel Cap Cover Installation (Black) (All Machines) (Note: Lock p/n 1001102157 Must be purchased separately)**	
	1001191395	Ref	**Fuel Cap Cover Installation (Green) (Diesel Machines) (Note: Lock p/n 1001102157 Must be purchased separately)**	
	1001191394	Ref	**Fuel Cap Cover Installation (Red) (Gasoline Machines) (Note: Lock p/n 1001102157 Must be purchased separately) (SN 0300177361 through 0300261111)**	
	1001247338	Ref	**Fuel Cap Cover Installation (Red) (Gasoline Machines) (Note: Lock p/n 1001102157 Must be purchased separately) (SN 0300261112 through 0300272252)**	
		Ref	**Generator Options:**	
	See Note	Ref	**Generator (2500W) Add-on Kit (Note: Contact JLG Parts Dept)**	

ITEM	PART NUMBER	QTY	DESCRIPTION	REV
	1001175816	Ref	**Generator (4000W/50Hz) Add-on Kit - Deutz D2011**	
	1001213607	Ref	**Generator (4000W/60Hz) Add-on Kit - Deutz D2011**	
	1001211799	Ref	**Generator (4000W/50Hz) Add-on Kit - Deutz TD2.9L4**	
	1001213605	Ref	**Generator (4000W/60Hz) Add-on Kit - Deutz TD2.9L4**	
	See Note	Ref	**Generator (7500W) Add-on Kit (Note: Contact JLG Parts Dept)**	
		Ref	**Hose Kits (Contact JLG Customer Service for contents of kits):**	
	1001166791	Ref	Hose Kit - Boom Lower	
	1001209349	Ref	Hose Kit - Boom Lower **(SN 0300177361 through 0300181174)**	
	1001212515	Ref	Hose Kit - Boom Lower	
	1001209350	Ref	Hose Kit - Boom Lower (600AJ- Deutz D2011 Engine) **(SN 0300181175 through 0300208081)**	
	1001193682	Ref	Hose Kit - Boom Upper (600A - Deutz TD2.9L4/Ford/GM Engines) **(SN 0300208082 through 0300272252)**	
	1001209347	Ref	Hose Kit - Boom Upper (600A - Deutz TD2.9L4/Ford/GM Engines) **(SN 0300208082 through 0300272252)**	
	1001166790	Ref	Hose Kit - Boom Upper (600AJ - Deutz D2011 Engines) **(SN 0300181175 through 0300208081)**	
	1001166790	Ref	Hose Kit - Boom Upper (600AJ - Deutz TD2.9L4 Engines) **(SN 0300208082 through 0300272252)**	
	1001209348	Ref	Hose Kit - Boom Upper (600AJ - Deutz D2011 Engine) **(SN 0300181175 through 0300208081)**	
	1001209348	Ref	Hose Kit - Boom Upper (600AJ - Deutz TD2.9L4 Engines) **(SN 0300208082 through 0300272252)**	
	1001209628	Ref	Hose Kit - Platform Valve (600A)	
	1001209629	Ref	Hose Kit - Platform Valve (600AJ) **(SN 0300181175 through 0300272252)**	
	2902471	Ref	Hose Kit - Power Track Lower (600A)	
	1001204904	Ref	Hose Kit - Power Track Lower (600AJ) **(SN 0300177361 through 0300181174)**	
	2902470	Ref	Hose Kit - Power Track Upper (600A)	
	2902472	Ref	Hose Kit - Power Track Upper (600AJ) **(SN 0300177361 through 0300181174)**	
	1001239617	Ref	Hose Kit - Power Track Upper (600AJ) **(SN 0300181175 through 0300272252)**	
	1001241405	Ref	**Hostile Environment Add-on Kit (600A - 7FT Chassis)**	
	1001204923	Ref	**Hostile Environment Add-on Kit (600A - 8FT Chassis)**	
	1001241406	Ref	**Hostile Environment Add-on Kit (600AJ - 7FT Chassis)**	
	1001204924	Ref	**Hostile Environment Add-on Kit (600AJ - 8FT Chassis)**	
	1001094475	Ref	**Hourmeter for Generator Installation**	
	1001148971	Ref	**Lanyard (Bolt-On) Kit Installation**	
	1001183407	Ref	**Low Temperature Cut-out Switch Installation (Russian Specs) (SN 0300177361 through 0300245287)**	
	1001236951	Ref	**Low Temperature Cut-out Switch Installation (Russian Specs) (SN 0300245288 through 0300272252)**	
		Ref	**Oil Cooler Options (Requires Flushing Loop Options):**	
	1001152172	Ref	**Oil Cooler Installation (Deutz D2011 Engine)**	
	1001142678	Ref	**Oil Cooler Installation (Deutz TD2.9L4 Engine) (RCP Cooler) (SN 0300177361 through 0300227100)**	
	1001176667	Ref	**Oil Cooler Installation (Deutz TD2.9L4 Engine) (Ymer Cooler) (SN 0300227101 through 0300272252)**	
	1001204296	Ref	**Oil Cooler Replacement Kit (Deutz TD2.9L4 Engine Only) (RCP to Ymer Cooler)**	
	1001218393	Ref	**Oil Cooler Installation (Ford Engine)**	

ITEM	PART NUMBER	QTY	DESCRIPTION	REV
	0272062	Ref	**Oil Cooler Installation (GM Engine)**	
	0258703	Ref	**Platform Console Cover Installation (Clear Polycarbonate) (SN 0300177361 through 0300200808)**	
	1001195304	Ref	**Platform Console Cover Installation (Clear Polycarbonate) (SN 0300200809 through 0300272252)**	
	1001110974	Ref	**Platform Console Cover Installation (Steel) (All Specs except Chinese and Korean)**	
	1001125230	Ref	**Platform Console Cover Installation (Steel) (Chinese Specs)**	
	1001125229	Ref	**Platform Console Cover Installation (Steel) (Korean Specs)**	
	1001205175	Ref	**Platform Console Cover Add-on Kit (Steel)**	
		Ref	**Platform Entry Kit**	
	1001142504	Ref	**Kit, Replace Swing Gate with Drop Bar**	
	1001142505	Ref	**Kit, Replace Drop Bar with Swing Gate**	
		Ref	**Platform Mesh to Top Rail Add-on Kits:**	
	1001214552	Ref	**30in x 4ft (76cm x 1.22m) with Gate**	
	1001214559	Ref	**30in x 5ft (76cm x 1.52m) with Gate**	
	1001214561	Ref	**36in x 6ft (91.5cm x 1.83m) with Gate**	
	1001214562	Ref	**36in x 8ft (91.5cm x 2.44m) with Gate**	
		Ref	**Platform Mesh to Top Rail Installations**	
	0273147	Ref	**30in x 4ft (76cm x 1.22m)**	
	0273146	Ref	**30in x 5ft (76cm x 1.52m)**	
	0273149	Ref	**36in x 6ft (91.5cm x 1.83m)**	
	0273145	Ref	**36in x 8ft (91.5cm x 2.44m)**	
		Ref	**Platform Mesh to Mid Rail Add-on Kits:**	
	1001214478	Ref	**30in x 4ft (76cm x 1.22m) with Gate**	
	1001214515	Ref	**30in x 5ft (76cm x 1.52m) with Gate**	
	1001214540	Ref	**36in x 6ft (91.5cm x 1.83m) with Gate**	
	1001214548	Ref	**36in x 8ft (91.5cm x 2.44m) with Gate**	
		Ref	**Platform Mesh to Mid Rail Installation**	
	1001140318	Ref	**30in x 4ft (76cm x 1.22m)**	
	1001140315	Ref	**30in x 5ft (76cm x 1.52m)**	
	1001138772	Ref	**36in x 6ft (91.5cm x 1.83m)**	
	1001138773	Ref	**36in x 8ft (91.5cm x 2.44m)**	
	1001149730	Ref	**Platform Mid Rail Repair Kit**	
		Ref	**Platform, Top Rail Extension**	
	0272733	Ref	**3ft x 6ft Platforms**	
	0272725	Ref	**3ft x 8ft Platforms**	
	1001209059	Ref	**Platform Work Surface Installation**	
	1001200234	Ref	**Radiator Replacement Kit (RCP to Modine) (Deutz TD2.9L4 Engine Only)**	
	1001171018	Ref	**RCD Box Installation (Brazil Spec)**	
	1001157965	Ref	**RCD Box Add-on Kit**	
	1001099572	Ref	**Security Lock (Programmable) Installation**	
	1001247073	Ref	**SkyEye Retrofit Kit**	
		Ref	**SkyGuard Component Options:**	
	1001206477	Ref	SkyGuard Complete Add-on Kit (Blue Beacon)	
	1001143669	NLA	SkyGuard Complete Add-on Kit (Blue Beacon) (Use p/n 1001206477)	
	1001210026	Ref	SkyGuard Complete Add-on Kit (Red Beacon)	
	1001197016	Ref	SkyGuard Platform Sensor Kit	
	1001137672	Ref	SkyGuard Platform Sensor Kit	
	1001137440	1	SkyGuard Platform Sensor Harness	

ITEM	PART NUMBER	QTY	DESCRIPTION	REV
	1001186431	2	Relay	
	1001206311	Ref	SkyGuard Blue Beacon Kit	
	1001143256	NLA	SkyGuard Blue Beacon Kit (Use p/n 1001206311)	
	1001210025	Ref	SkyGuard Red Beacon Kit	
	1001176372	Ref	SkyGuard Removal Plug Kit	
	1001232643	Ref	**SkyLine Kit**	
		Ref	**Strobe Light Installations (Amber)**	
	1001152965	Ref	**Platform Mounted**	
	1001154231	Ref	**Platform/Ground Mounted**	
	0272301	Ref	**Tire Sealant Installation**	
		Ref	**Tools for Service**	
	2901443	1	Analyzer Kit	
	7002840	1	Antirotation Pin Removal Tool	
	8896941	1	Wire Stripper	
	7002821	1	Wire Crimper (To install wire ends to wires)	
	7002823	1	Pin/Socket Extractor - Universal (To Remove Pins/Sockets from Connectors)	
	4460467	1	Extractor - 16-18 Gauge (For Removal of Pin/Sockets from Deutsch Connectors)	
	4460510	1	Extractor - 12-14 Gauge (For Removal of Pin/Sockets from Deutsch Connectors)	
	7002822	1	Screwdriver, Potentiometer (To Adjust Drive Controllers)	
	7016654	1	Screwdriver, Magnetic	
	7004275	1	Seal Installation Tool - 1in	
	7004276	1	Seal Installation Tool - 1 1/2in	
	7002826	1	Seal Installation Tool - 2in	
	7016655	1	Wire Rope Sheave Gauge	
	7016652	1	Huck Bolt Fastener (For Small Huck Bolts Only)	
	2900838	1	U.S. Standards Fastener (Hardware) Kit	
	7014676	1	U.S. Standards Tool Kit	
	1001137005	1	Software Cable Kit	
	1001238825	Ref	**Turntable Bearing Kit**	
	0256344	Ref	**Weld Leads Installation - 600A**	
	0272772	Ref	**Weld Leads Installation - 600AJ (1 Cable)**	
	1001239346	Ref	**White Noise, Motion Alarm**	
	1001241384	Ref	**White Noise, Motion Alarm Ambient**	

PART NUMBER INDEX

0060066.....208, 221
0060068.....203, 221
0080201.....110
0100009.....141, 245, 249
0100011....13, 15, 19, 24, 25, 27, 39, 43, 47, 61, 72, 73, 74, 77, 83, 85, 90, 91, 97, 98, 99, 102, 103, 108, 109, 110, 129, 133, 137, 138, 141, 143, 147, 148, 154, 157, 160, 163, 165, 169, 173, 177, 181, 185, 193, 197, 203, 204, 208, 211, 213, 217, 218, 223, 227, 230, 231, 236, 265, 267, 269, 275, 284, 287, 289, 291, 313, 317, 321, 323, 327, 329, 331, 337, 339, 341, 345, 355, 357, 361, 363, 365, 379, 384, 389, 455, 461, 465
0100019 61, 85, 163, 173, 177, 181, 187, 193, 197
0100020....72, 83, 85, 97, 99, 108, 112, 129, 130, 174, 182, 245, 250, 284, 297
0100035....148, 231, 232, 245, 249
0100038.....13, 313, 317, 321, 323, 327, 329, 331, 337, 339, 341, 345, 355, 357, 361, 363, 365, 379, 384, 389
0100048.....97, 108, 137, 141, 147, 165, 177, 223, 245, 249, 400, 402, 420, 423
0100062 74, 88, 102, 129, 187
0100063.....24, 327, 341, 346
0100071.....271
0100079.....127, 129, 177
0100081....213, 245, 249, 279
0140001.....48
0140011.....245, 249
0140032.....147, 408
0140044.....147, 430
0181949.....130
0200048.....275
0200742.....159
0255281.....218
0255288.....218
0255382.....409, 431
0255410.....61
0255699.....231
0255880.....151
0255927.....475
0255928.....475
0256202.....410, 431, 432
0256276..... 474
0256331..... 231
0256336..... 231
0256342..... 474
0256344..... 481
0256366..... 474
0256487..... 456, 476
0256488..... 456, 476
0256689..... 77
0256690..... 77
0257176..... 409, 431
0257195..... 476
0257573..... 213, 214
0257728..... 301
0257887.... 147, 408, 430
0258703..... 480
0258966..... 474
0270528..... 43
0270818..... 400, 421
0270819..... 400, 421
0270820..... 210, 400
0270821..... 211, 401
0270833..... 147
0271475..... 474
0271552.... 147, 247, 251
0272062..... 392, 480
0272070..... 204, 211
0272254..... 289
0272301..... 481
0272312..... 476
0272418..... 279
0272427.... 247, 251, 275
0272433..... 409, 431
0272435.... 189, 194, 199
0272448..... 284, 289
0272521..... 287
0272588..... 287
0272589..... 189
0272599..... 284, 297
0272607..... 297
0272624..... 400, 421
0272625..... 210, 400
0272626..... 400, 421
0272627..... 211, 401
0272703..... 223
0272725..... 480
0272733..... 480
0272772..... 481
0272948..... 279
0272951..... 279
0273145..... 480
0273146..... 480
0273147..... 480
0273149..... 480
0273172..... 475
0273353..... 284
0273428..... 211, 401
0273430..... 211, 401
0273492..... 237, 396
0273542..... 273
0273706.... 247, 251, 275
0273824.... 247, 251, 275
0274047..... 13
0274054..... 13
0274062..... 24
0274094.... 455, 459, 465
0274180..... 237
0274200.... 147, 247, 251
0274229..... 40
0274256..... 13
0274257..... 24
0274533..... 27
0274618..... 409, 431
0274661..... 301
0274883..... 475
0275039..... 169
0275140..... 210, 400
0275216..... 413, 436
0275217..... 413, 436
0275218..... 413, 436
0275219..... 413, 436
0275257.... 197, 413, 436
0275261..... 477
0275262..... 475
0275265..... 400, 421
0275295..... 474
0275452..... 412, 436
0275453..... 413, 436
0275454..... 413, 436
0275651..... 410, 432
0275652..... 410, 432
0275653..... 410, 432
0275654..... 410, 432
0275655..... 410, 432
0275656..... 410, 432
0275660..... 410, 432
0275860..... 27
0280171..... 13
0280185..... 13
0340041..... 110
0362611..... 232
0362910..... 43
0363012..... 39
0370026..... 311
0370035..... 327
0400075... 49, 72, 83, 97, 108
0440018..... 24
0440019..... 24
0440161..... 24
0440170..... 15, 19
0440171..... 15, 19
0440207..... 61
0480100..... 301
0480121..... 159
0480126..... 173, 187
0480129..... 173, 187
0480142.... 169, 181, 197
0561076..... 203, 208
0561185..... 213, 217
0561237..... 211
0561248..... 213
0630407..... 85
0630427..... 230
0630462..... 275
0630464..... 245, 249
0630467..... 231
0630490.... 16, 19, 24, 25
0630507..... 154
0630518... 137, 141, 284, 287, 289, 291, 297
0630534....314, 317, 319, 331, 335, 346
0630535....314, 321, 323, 325, 337, 339, 346, 351, 357, 361, 363, 365
0630536....327, 329, 341, 343
0630548.....137, 141
0630568.....247, 250
0641403....187, 213, 217, 231, 232
0641404..24, 25, 83, 141, 160, 173, 177, 187, 245, 249, 269
0641405....154, 169, 181, 187, 197, 223, 269, 412, 434
0641406....48, 83, 85, 97, 110, 138, 143, 147, 173, 187, 236, 239, 241, 455, 461, 465
0641407..73, 74, 98, 109, 138, 141, 154, 177, 223, 412, 434
0641408.....85, 147, 236, 239, 241, 461, 465
0641409.....72
0641410.....74, 178
0641412.....83
0641414.....48, 237, 245, 249, 265, 267, 271, 275
0641415.....174
0641416 48, 97, 108, 211, 223, 412, 434
0641418.....236
0641420.....236
0641424.....231
0641505.....40, 108, 186, 197
0641506.....108, 138, 141
0641507.....141, 231
0641508.....88, 160, 163, 165
0641510.....74, 88, 169
0641512.....75
0641514.....169, 301
0641516.....43, 173, 177, 181, 185, 193, 197, 213, 273
0641518.....237
0641522.....218
0641530.....39
0641532.....204, 210
0641536.....218
0641552.....39
0641604.....208, 357, 361
0641606.....74, 110, 129, 130, 155, 156, 157, 208, 213, 218, 231, 284, 287, 289, 291
0641607..48, 83, 97, 127, 148, 163, 194, 203, 208
0641608....15, 19, 24, 25, 40, 48, 78, 83, 85, 91, 108, 110, 154, 208, 213

0641609 . 74, 77, 85, 110, 151
0641610 ... 72, 74, 83, 90, 97, 110, 127, 155, 159, 208, 213, 236, 239, 241
0641611 ..... 39, 208
0641612 ..... 88, 110, 133, 213
0641613 48
0641614 ..... 129, 208
0641616 ... 174, 177, 188, 217
0641617 130
0641618 ..... 39, 177, 188, 208, 213, 217
0641640 218
0641708 88
0641710 169
0641772 .... 160, 163, 165
0641808 ... 72, 83, 85, 98, 108, 110, 173, 177, 181, 187, 197, 204, 210
0641809 213
0641810 .... 151, 203, 208
0641811 133
0641812 73, 85, 110, 163, 204, 211, 227
0641813 273
0641814 13
0641816 13
0641818 ..... 77, 129
0641820 ..... 74, 133
0641822 223
0641824 133
0641826 110
0641828 110
0642010 ... 43, 72, 83, 97, 108
0642012 ... 13, 15, 19, 24, 279
0642024 223
0642026 279
0642212 279
0642612 ..... 147, 148
0642684 ... 204, 211, 223, 227
0651406 48
0681608 24, 25, 204, 211, 223, 227
0681620 ..... 85, 303, 305, 307
0681710 27
0681812 98
0681814 243
0681820 91
0681822 ..... 85, 91, 243
0682018 61
0682020 15
0682218 61
0682424 .... 303, 305, 307
0700408 ..... 412, 434
0700615 148
0700617 ..... 148, 149
0700808 74
0700810 ..... 99, 110
0700812 99
0700814 ..... 91, 99
0700816 102
0700818 102
0700820 .... 169, 181, 197
0701014 102
0701016 .... 169, 181, 197
0701026 103
0701224 99
0710827 102
0711014 102
0711020 99
0711216 102
0711223 101
0720804 130
0721003 ..... 15, 19
0721004 43
0721005 275
0721006 ..... 90, 154, 160, 163, 245, 249
0731005 275
0741605 ..... 85, 208
0741606 48
0741607 . 19, 25, 43, 173, 177, 188, 193, 203
0760605 ..... 88, 102
0760606 194
0760608 ..... 40, 99, 193
0760610 ..... 99, 102, 165, 193
0760612 ..... 97, 99
0760615 102
0760807 102
0760810 .... 83, 85, 97, 99
0760812 97, 99, 102, 441, 443
0760814 99
0760815 ..... 97, 99
0760817 102
0761008 ..... 84, 98
0761012 443
0761014 ..... 99, 151, 227
0761015 ..... 88, 99
0761016 99
0761018 193
0761019 165
0761210 88
0761216 ..... 165, 227
0771014 99
0771212 ..... 83, 85
0771414 .... 74, 77, 88, 91
0771415 ..... 91, 174, 188
0801019 .... 203, 208, 213
0801085 213
0801637 213
0811606 217
0811607 217
0811608 217
0811610 217
0840055 223
0860038 ... 173, 177, 181, 186, 193, 197, 410, 432
0860520 .... 455, 461, 465
0861537 ..... 245, 246
0861538 .... 188, 193, 197
0861541 ..... 188, 198
0861542 ... 185, 188, 197, 198, 414, 437
0861567 .... 185, 186, 188, 414, 437
0861572 188
0861731 ..... 410, 432
0861781 ..... 410, 432
0861880 ..... 412, 435
0902206 147
0902219 154
0902335 154
0902751 245
0902888 .... 173, 177, 181, 187, 193, 197
0902919 223
0902920 223
0903056 133
0903119 147
0903484 ..... 412, 435
0903490 110
0903612 ..... 412, 435
0940049 154
0940070 ... 74, 85, 99, 110
0940071 154
0940088 154
0940092 ..... 273, 275
0940094 ..... 273, 275
0940102 279
0940103 275
0940131 273
0940133 275
0940134 275
0940177 275
0961845 236
0961890 353
0961893 .... 313, 317, 319, 331, 335, 345
0961894 .... 313, 321, 323, 345
0961896 .... 357, 361, 363, 365
0961897 ..... 337, 339
0961898 ..... 327, 329
0961899 341
0961947 .... 208, 313, 317, 319, 345, 349
0961948 .... 203, 208, 217, 337, 339
0961949 .... 203, 208, 213, 327, 329, 341, 343
0961950 13
0961951 .... 203, 208, 217, 313, 321, 323, 325, 345, 351
0961986 ... 74, 85, 99, 110
0962005 ..... 24, 25
0962051 151
0962131 ..... 15, 19, 24
0962270 243
0962272 ..... 24, 25
0962292 ..... 19, 25
0962335 210
0962336 ..... 331, 333, 335
0962348 ..... 19, 25
0962356 ..... 15, 19, 355
0962449 160
0962450 223
0962520 .... 174, 177, 181, 188, 193, 197
1001091587 109
1001091793 111
1001091892 111
1001093248 111
1001093382 ... 49, 73, 83, 97, 109
1001093389 477
1001093410 ..... 110, 117
1001093432 ..... 210, 401
1001093436 ..... 400, 421
1001093438 474
1001093549 ..... 377, 383, 388
1001094475 479
1001096070 ..... 174, 178, 412, 435
1001096134 ..... 190, 414, 438
1001097051 449
1001097242 .. 15, 19, 355
1001097822 ..... 204, 210
1001098012 ..... 284, 297, 299
1001098149 297
1001098503 39
1001098828 ..... 101, 227
1001099196 15
1001099366 279
1001099367 279
1001099387 ..... 15, 19
1001099391 49
1001099421 279
1001099422 279
1001099572 480
1001099835 213
1001099836 218
1001099869 160
1001100120 39
1001100233 160
1001100234 160
1001100321 159
1001100341 ..... 413, 436
1001100342 ..... 413, 436
1001100343 ..... 413, 436
1001100344 ..... 413, 436
1001100345 ..... 413, 436
1001100346 ..... 413, 436
1001100347 ..... 413, 436
1001100397 ..... 410, 432
1001100398 ..... 410, 432
1001100399 ..... 410, 432
1001100400 ..... 410, 432
1001100401 ..... 410, 432
1001100402 ..... 410, 432
1001100403 ..... 410, 432
1001100825 ..... 99, 103
1001101060 ..... 61, 64
1001101191 ..... 412, 435
1001101421 279
1001101422 279
1001102599 ..... 137, 142
1001102600 ..... 137, 142
1001102647 279
1001103308 143
1001103667 ..... 137, 142, 470

1001104423.....379, 385, 389
1001104982.....475
1001104983.....475
1001104984.....475
1001105872.....111
1001106339.....405, 426
1001106340.....405, 426
1001106355.....245
1001106480.....231, 232
1001106736.....138, 143
1001106758.....218
1001106759.....218
1001106938.....245, 250, 471
1001106974.....133
1001106975.....133
1001107153.....218
1001107498.....133
1001107499.....133
1001107753.....246, 400, 420, 421
1001107926.....247, 251
1001108256.....247, 251, 275
1001108493.....456, 462
1001108718.....476
1001108763.....247, 251
1001108764.....247, 251
1001108923.....455
1001109475.....412, 435
1001109477.....412, 435
1001109482.....412, 435
1001109503.....142
1001109554.....412, 435
1001109684.....478
1001110133.....478
1001110345.....396
1001110359.....138, 403
1001110361.....138, 403
1001110367.....137, 402
1001110368.....137, 402
1001110369.....137, 402
1001110370.....137, 402
1001110371.....137, 402
1001110372.....137, 402
1001110379.....138, 143, 403, 404, 423, 426
1001110380.....396, 403
1001110381.....396, 403
1001110425.....84, 178
1001110434.....245, 250
1001110500.....213
1001110501.....213
1001110872.....185, 198, 413, 437
1001110873.....173, 177, 182, 185, 194, 198, 411, 413, 433, 437
1001110974.....480
1001111021.....137
1001111514.....129
1001112551.....466
1001112586.....189, 396, 414, 438
1001112587.....190, 414, 438
1001112588..... 396, 409, 430
1001112589..... 409, 431
1001112612..... 405, 426
1001112743..... 396, 409, 430
1001113483..... 223
1001113984..... 27, 31
1001114127..... 478
1001114600..... 111
1001114601..... 110
1001114639..... 109
1001114640..... 108
1001114641..... 109
1001114642..... 108
1001115391..... 185, 413, 436
1001115392..... 185, 413, 436
1001115405..... 159
1001115406..... 159
1001115409..... 159
1001115889..... 138, 144
1001115915..... 138, 144
1001115918..... 138, 143
1001115930..... 110, 478
1001115931 99, 110, 478
1001115967..... 138, 144
1001115970..... 475
1001115974..... 210, 401, 474
1001116131..... 111
1001116183..... 112
1001116200..... 112
1001116240 72, 405, 427
1001116419..... 474
1001116420..... 474
1001116515..... 210, 401, 474
1001116692..... 424
1001116693..... 430
1001116710..... 407, 429
1001116727..... 406, 428
1001116844..... 476
1001116845..... 459
1001116846..... 459, 476
1001116847..... 460
1001116848..... 460
1001116849..... 460
1001116850..... 460
1001116851..... 460
1001116852..... 460
1001116861..... 462
1001116862..... 462
1001116863..... 462
1001116952..... 406, 428
1001116983..... 407, 429
1001116992..... 421
1001117039..... 155
1001117078..... 190, 414, 438
1001117172..... 236, 245, 250
1001117174..... 236, 245, 250
1001117294..... 478
1001117308..... 86, 470
1001118133..... 129
1001118384..... 451
1001118388..... 451
1001118416..... 245, 259
1001118417..... 245, 253
1001119020..... 420
1001119561..... 476
1001119619..... 445
1001119620..... 447, 449
1001119942..... 475
1001119948..... 475
1001119968..... 190, 414, 438
1001120328..... 265, 267, 269
1001121340..... 189, 190, 198, 199
1001121592..... 275
1001121593..... 276
1001121612..... 475
1001121655..... 461
1001121656..... 461
1001121657..... 247, 251
1001121800..... 455
1001121801..... 455
1001121802..... 461
1001121803..... 461
1001121804..... 461
1001121805..... 461
1001121806..... 461
1001121807..... 461
1001121808..... 461
1001121809..... 461
1001121810..... 461
1001121811..... 461
1001121812..... 461
1001121813..... 455
1001121814..... 455
1001121815..... 460, 461
1001121816..... 461
1001121817..... 461
1001121819..... 460
1001121820..... 460
1001121821..... 461
1001121822..... 460
1001121823..... 461
1001121824..... 460
1001121825..... 461
1001121918..... 461
1001121921..... 461
1001122200..... 461
1001122201..... 460
1001122528..... 396, 414, 438
1001125229..... 480
1001125230..... 480
1001125387..... 456, 462
1001125492..... 61
1001125784..... 142
1001125785..... 142
1001126009..... 451
1001126351..... 406, 428
1001126352..... 406, 428
1001126353..... 406
1001126356..... 406, 428
1001126357..... 406, 428
1001126362..... 407, 429
1001126363.....407, 429
1001126364.....407, 429
1001126365.....407, 429
1001126384.....406, 428
1001126391.....407, 429
1001126484.....425
1001126485.....425
1001127095.....476
1001128527.....291
1001128556.....291
1001128901.....100
1001129555.....471
1001129858.....173, 181
1001130041.....75
1001131168.....246, 250
1001131269.....456, 462
1001131992.....396
1001132055.....396
1001133714.....407, 429
1001133715.....407, 429
1001133956.....406, 428
1001133957.....406, 428
1001134488.....86, 101
1001135138.....86
1001135600.....27, 35
1001135650.....407, 429
1001135651.....407, 429
1001135679.....86
1001136079.....86, 478
1001136104.....193
1001136172.....86, 478
1001136590.....217
1001136667.....27, 39
1001136668.....27, 39
1001136669.....27, 39
1001136670.....27, 39
1001136672.....27, 35
1001136834.....86
1001136988.....186
1001137005.....416, 439, 481
1001137276.....86
1001137440.....480
1001137672.....480
1001137673.....265, 267
1001137845.....154
1001137860.....155
1001137863.....129
1001137865.....129
1001137866.....84, 194
1001137868.....83, 97
1001137873.....85
1001137874.....85
1001137876.....154
1001137880.....83
1001137881.....83
1001137882.....83
1001137885.....61
1001137891.....151
1001137892.....151
1001137895.....47
1001137896.....61
1001138110.....406, 428
1001138111.....407, 428
1001138113.....407, 428
1001138170.....88
1001138173.....86, 100

1001138175 ..... 86, 100
1001138228 ..... 86, 470
1001138248 ..... 86, 100
1001138436 217
1001138491 84, 407, 429
1001138494 236
1001138514 236
1001138557 86
1001138565 173
1001138566 ..... 173, 177, 181
1001138717 88
1001138772 480
1001138773 480
1001138792 ..... 209, 331
1001138795 ..... 331, 335
1001138796 ..... 314, 323, 325, 346, 351
1001138798 ..... 209, 313
1001138799 ..... 208, 345
1001138827 86
1001139099 478
1001139130 475
1001139135 ..... 246, 250, 421
1001139148 475
1001139240 86
1001139357 174
1001139409 ..... 86, 91
1001139429 86
1001139654 462
1001139813 ..... 86, 89
1001139819 75
1001139956 173
1001139957 173
1001139960 181
1001140312 88
1001140315 480
1001140318 480
1001140346 177
1001140347 177
1001140416 ..... 369, 392
1001140417 392
1001140418 ..... 371, 392
1001140419 392
1001140420 ..... 371, 392
1001140421 392
1001140429 236
1001140449 ..... 369, 371
1001140451 371
1001140454 87
1001140455 371
1001140456 371
1001140458 371
1001140466 91
1001140535 87
1001140564 87
1001141300 476
1001141302 476
1001141304 87, 406, 427
1001141585 ..... 88, 100
1001141693 75
1001141694 75
1001141718 83
1001141870 91
1001141926 85
1001141927 85
1001141928 83
1001141929 85
1001141930 85
1001141931 83
1001141967 ..... 410, 433
1001141968 ..... 411, 433
1001141969 ..... 411, 433
1001141995 ..... 87, 100
1001142501 ..... 83, 87, 91
1001142504 480
1001142505 480
1001142538 87
1001142615 87
1001142623 87
1001142634 87
1001142635 87
1001142636 87
1001142643 ..... 178, 188
1001142646 ..... 178, 187
1001142648 87
1001142668 87
1001142669 87
1001142670 87
1001142678 ..... 392, 479
1001142683 ..... 148, 149
1001142689 87
1001142694 148
1001142722 148
1001142733 87
1001142736 ..... 148, 149, 430
1001142938 ..... 407, 429
1001142940 ..... 407, 429
1001142941 ..... 407, 429
1001143256 481
1001143390 ..... 75, 87
1001143431 148
1001143496 ..... 377, 383
1001143669 480
1001143726. 87, 406, 428
1001143797 87
1001143852 ..... 462, 466
1001143907. 87, 406, 427
1001144018 235
1001144019 235
1001144021 235
1001144022 235
1001144023 235
1001144024 235
1001144026 235
1001144027 235
1001144041 49
1001144409 87
1001144410 ..... 87, 100
1001144411 ..... 87, 100
1001144412 87
1001144433 ..... 250, 267
1001144596 243
1001144597 243
1001144629 235
1001145036 ..... 137, 402
1001145037 ..... 137, 402
1001145046 ..... 138, 403
1001145047. 84, 405, 427
1001145154 87
1001145227 ..... 185, 413, 436
1001145228 ..... 185, 436
1001145292 61
1001145330 ..... 178, 188
1001145379 ..... 47, 230
1001145405 ..... 284, 297
1001145719 ..... 47, 230
1001145720 ..... 47, 230
1001145721 ..... 47, 230
1001145750 90
1001145751 90
1001145834 ..... 236, 245, 400
1001145835 236
1001145992 ..... 138, 143, 403, 404, 423, 426
1001145994 403
1001146368 ..... 75, 76
1001146827 28
1001146828 28
1001147019 28
1001147020 28
1001147067 28
1001147068 28
1001147264 ..... 406, 428
1001148138 163
1001148161 15
1001148162 15
1001148163 15
1001148164 19
1001148165 19
1001148166 19
1001148168 13
1001148169 13
1001148170 13
1001148171 13
1001148172 13
1001148178 ..... 19, 20
1001148641 88
1001148652 217
1001148664 ..... 48, 59
1001148902 477
1001148903 477
1001148904 477
1001148905 477
1001148906 477
1001148971 479
1001149126 477
1001149160 ..... 100, 102
1001149639 100
1001149703 77
1001149704 75
1001149705 75
1001149706 75
1001149730 480
1001149793 75
1001149818 ..... 148, 408
1001149924 279
1001149927 61
1001149955 148
1001149994 ..... 148, 149
1001150158 74
1001150179 74
1001150391 61
1001150406 148
1001150569 43
1001150570 43
1001150571 43
1001150712 378
1001150714 377
1001150715 ..... 385, 388, 389
10011507157 379
1001150716 ..... 377, 383
1001150717 ..... 377, 383, 388
1001150718 ..... 378, 383, 388
1001150720 377
1001150727 ..... 377, 392
1001150728 ..... 377, 393
1001150890 77
1001150915 75
1001150918 ... 73, 84, 98, 109
1001150944 ..... 148, 430
1001150998 75
1001151010 130
1001151070 73
1001151078 75
1001151206 75
1001151251 75
1001151252 77
1001151253 77
1001151268 ..... 129, 130
1001151349 ..... 375, 392
1001151350 ..... 375, 392
1001151358 371
1001151364 369
1001151365 369
1001151366 375
1001151367 375
1001151379 475
1001151380 475
1001151391 129
1001151393 137
1001151542 214
1001151584 40
1001151586 214
1001151630 75
1001151631 74
1001151635 74
1001151670 ..... 155, 156
1001151752 396
1001151826 217
1001151841 73
1001151842 73
1001151843 72
1001151844 72
1001151856 429
1001151897 40
1001151900 475
1001151966 13
1001152031 204
1001152046 40
1001152049 40
1001152066 129
1001152070 129
1001152127 217
1001152130 217
1001152131 217
1001152138 ..... 204, 217
1001152172 ..... 392, 479
1001152173 143
1001152175 143

1001152181.....61
1001152221.....73
1001152222.....73
1001152223.....72
1001152224.....72
1001152234.....61
1001152246.....217
1001152249.....217
1001152253.....210, 217
1001152254.....393
1001152265.....47, 230
1001152325.....156
1001152340.....475
1001152355.....204, 210, 213
1001152428.....129
1001152429.....190, 438
1001152433.....154
1001152435.....154
1001152448.....13
1001152457.....174, 178, 182
1001152489.....87
1001152491.....371
1001152499.....371
1001152503.....474
1001152504.....474
1001152505.....474
1001152506.....474
1001152525.....194, 199, 414, 437
1001152527.....369, 371
1001152529.....369, 371
1001152530.....174, 178, 182
1001152532.....174, 178, 181
1001152534.....47, 230
1001152535.....47, 230
1001152537.....47, 230
1001152539.....203
1001152540.....208
1001152556.....155
1001152557.....155
1001152561.....49, 55
1001152564.....231, 232
1001152565.....231, 232
1001152598.....377, 392
1001152609.....377, 393
1001152619.....392
1001152620.....392
1001152639.....210
1001152771.....475
1001152887.....49, 55
1001152960.....475
1001152965.....481
1001153025.....396
1001153197.....174, 178, 182
1001153257.....396
1001153259.....178
1001153260.....174, 178, 182
1001153321.....400, 421
1001153322.....210, 421
1001153636.....174, 178, 435
1001153638..... 432
1001154151..... 154
1001154231..... 481
1001154388..... 143, 424
1001154390..... 143, 424
1001154392..... 143, 424
1001154395..... 396, 424
1001154396..... 396, 424
1001154405.... 83, 88, 90
1001154514..... 154
1001154670..... 141, 423
1001154671..... 141, 423
1001154672..... 141, 423
1001154673..... 141, 423
1001154674..... 141, 423
1001154675..... 141, 423
1001155043..... 143
1001155044..... 143, 246, 250
1001155045..... 143, 246, 250
1001155093..... 204, 210
1001155094..... 209
1001155096..... 203, 209
1001155097..... 204, 210
1001155098..... 203
1001155189..... 208
1001155267..... 230
1001155379..... 369
1001155385..... 87
1001155399..... 230
1001155574.... 15, 19, 20
1001155663..... 385, 390
1001155669..... 385, 390
1001155670..... 385, 390
1001155671..... 385, 390
1001155672..... 385, 390
1001155673..... 385, 390
1001155675..... 385, 390
1001155677..... 385, 390
1001155678..... 385, 390
1001155823..... 84
1001156351..... 412, 434
1001156352..... 411, 434
1001156353..... 428
1001156489..... 422
1001156490..... 422
1001156501..... 210, 217
1001156502..... 217
1001156819..... 109
1001156821..... 108
1001156823..... 108
1001156826..... 108
1001156889..... 455
1001156890..... 455
1001156891..... 455, 460, 465
1001156892..... 476
1001156972..... 459
1001156973..... 459
1001156974..... 459
1001156975..... 459
1001156976..... 459
1001156977..... 459
1001156978..... 465
1001156979..... 459
1001156980..... 459
1001156981..... 459
1001156982..... 459
1001156983..... 459
1001156984..... 459
1001156985..... 459
1001156986..... 459
1001156987..... 465
1001156988..... 465
1001157013..... 475
1001157220..... 208, 221
1001157222..... 203, 221
1001157520..... 189, 194, 199
1001157521..... 188, 194, 200
1001157525..... 186, 188, 437
1001157528..... 189, 194, 200
1001157592..... 185, 188, 194, 197, 199, 414, 437
1001157605..... 393
1001157768..... 199, 396, 438
1001157769..... 190, 396, 438
1001157770..... 190, 396
1001157965..... 480
1001158007..... 189, 194, 200
1001158008..... 189, 194, 200
1001158363..... 174, 178, 182
1001158810..... 203, 209
1001159096..... 236
1001159099..... 236, 245
1001159121..... 432
1001159256..... 246, 250
1001159323..... 465
1001159648..... 396
1001159692..... 203
1001159693..... 208
1001159694..... 208
1001159703..... 383, 392, 393
1001159704..... 383, 393
1001159707..... 385, 390
1001160000..... 456, 462, 466
1001160003..... 155, 156
1001160004..... 154, 155
1001160034..... 154, 155
1001160038..... 47, 230
1001160039..... 47, 230
1001160047..... 155
1001160068..... 47, 230
1001160069..... 47, 230
1001160074..... 147
1001160077..... 148
1001160189..... 155
1001160190..... 155, 156
1001160271..... 396
1001160272..... 431
1001160598..... 155
1001160961..... 155
1001160962..... 156
1001160963.....156
1001160964.....156
1001161025.....155
1001161026.....156
1001161027.....156
1001161029.....383, 388
1001161030.....384, 389
1001161031.....384
1001161032.....385, 390
1001161033.....385, 390
1001161034.....390
1001161035.....385
1001161036.....385, 388, 390
1001161038.....392
1001161039.....392
1001161040.....392
1001161059.....156
1001161160.....385, 390
1001161417.....218
1001161761.....40
1001162335.....84, 90
1001162828.....217
1001163131.....279
1001163296.....279
1001163297.....279
1001163599.....163, 177, 187
1001164091.....174, 178
1001164160.....47, 230
1001164164.....47, 230
1001164168.....47, 230
1001164170.....47, 230
1001164277.....383, 393
1001164281.....155, 156
1001164329.....383, 392
1001164563.....143, 424
1001164564.....396, 424
1001165035.....83, 99
1001165350.....211
1001165366.....210, 421
1001165547.....141, 423
1001165548.....141, 423
1001165551.....211, 421
1001165552.....210, 421
1001165553.....211, 421
1001165554.....211, 421
1001165555.....211, 421
1001165556.....210, 421
1001165557.....210, 421
1001165558.....210, 421
1001165559.....211, 421
1001165741.....156
1001165842.....87
1001166394.....156
1001166538.....245, 250, 261
1001166539.....245, 250, 255
1001166672.....236, 245
1001166790.....479
1001166791.....479
1001166960.....477
1001167020.....478
1001167041.....87
1001167565.....227
1001167567.....227

1001167596 227
1001168018 100
1001168402 227
1001169054 ..... 88, 100
1001169138 ..... 88, 100
1001169384 210
1001169610 ..... 78, 156
1001170035 100
1001170797 435
1001171018 480
1001171126 177
1001171131 432
1001171268 177
1001171403 429
1001172045 474
1001172535 ..... 383, 388
1001172663 227
1001172760 ..... 245, 250
1001172793 84
1001173535 102
1001173590 ..... 403, 424
1001173896 129
1001174093 109
1001174486 ..... 97, 108
1001175816 479
1001176012 85
1001176013 85
1001176014 83
1001176015 85
1001176016 85
1001176017 83
1001176225 87
1001176226 87
1001176296 ..... 147, 247, 251
1001176329 100
1001176372 481
1001176419 87
1001176469 143
1001176511 87
1001176667 479
1001176723 87
1001177038 91
1001177043 91
1001177157 109
1001177161 109
1001177359 88
1001177399 91
1001177694 477
1001178004 396
1001178223 88
1001178256 ..... 208, 221
1001178512 130
1001178789 133
1001178876 88
1001179154 ..... 188, 194, 198, 199, 437
1001179837 163
1001179893 163
1001180001 163
1001180050 430
1001180052 431
1001180093 142
1001180094 142
1001180287 163
1001180620 ..... 88, 100
1001180861 476
1001181045 435
1001181046 435
1001181056 ..... 203, 221
1001181148 477
1001181243 163
1001181895 88
1001181899 88
1001181960 210
1001182064 209
1001182138 271
1001182599 477
1001182906 77
1001182997 ..... 88, 129
1001183407 479
1001184881 28
1001185078 477
1001185280 ..... 250, 420, 421
1001185281 250
1001185897 ..... 143, 423, 426
1001186333 243
1001186334 243
1001186375 235
1001186377 235
1001186379 235
1001186382 235
1001186383 235
1001186384 235
1001186386 235
1001186387 235
1001186426 101
1001186431 ..... 250, 267, 421, 481
1001186432 451
1001186517 ..... 265, 267
1001186542 120
1001187508 265
1001187674 263
1001187681 445
1001187781 99
1001188015 ..... 141, 423
1001188016 ..... 141, 423
1001188042 143
1001188467 ..... 155, 156
1001188622 227
1001188844 227
1001188857 148
1001188874 143
1001188884 127
1001188887 127
1001188889 265
1001188890 375
1001188891 375
1001188952 ... 74, 85, 120
1001188953. 98, 110, 120
1001188954 73
1001188955 73
1001188956 83
1001188957 85
1001188958 85
1001188959 109
1001188960 109
1001188963 72
1001188964 72
1001188965 83
1001188966 108
1001188967 108
1001188972 .... 73, 84, 98, 109
1001189001 227
1001189002 227
1001189116 250
1001189666 ..... 388, 393
1001189667 ..... 388, 392
1001189668 ..... 388, 393
1001189669 ..... 388, 392, 393
1001189979 100
1001190089 ..... 236, 249
1001190113 236
1001190775 ..... 99, 478
1001190985 227
1001191394 478
1001191395 478
1001191610 100
1001191708 271
1001191862 141
1001191863 141
1001191866 ..... 143, 424
1001191867 ..... 143, 424
1001191868 ..... 143, 424
1001191877 141
1001191878 141
1001191879 141
1001191909 141
1001191912 141
1001191913 141
1001192401 426
1001193018 435
1001193632 476
1001193682 479
1001193683 390
1001194197 432
1001194198 432
1001194200 432
1001194203 432
1001194204 432
1001194365 431
1001194437 396
1001195304 480
1001196382 193
1001196634 93
1001197016 480
1001197017 275
1001197067 148
1001197408 466
1001199784 127
1001200120 476
1001200121 476
1001200122 476
1001200124 476
1001200125 476
1001200126 476
1001200127 476
1001200234 480
1001200491 227
1001200494 227
1001200575 ..... 247, 250
1001200910 149
1001201351 227
1001201890 ..... 245, 246
1001201891 250
1001201995 143
1001201996 143
1001202082 477
1001202122 477
1001202280 127
1001202281 127
1001202331 477
1001202368 91
1001202397 477
1001202398 477
1001202573 ..... 236, 249
1001202577 ..... 236, 245
1001202749 478
1001203655 243
1001203656 243
1001204150 143
1001204296 479
1001204325 88
1001204458 478
1001204460 478
1001204667 127
1001204725 227
1001204884 474
1001204904 479
1001204923 479
1001204924 479
1001205010 474
1001205011 474
1001205012 474
1001205013 474
1001205043 142
1001205044 142
1001205051 87
1001205175 480
1001205499 148
1001206311 481
1001206476 ..... 441, 443
1001206477 480
1001207004 149
1001207305 148
1001207345 28
1001207346 28
1001207792 155
1001207969 231
1001209059 480
1001209347 479
1001209348 479
1001209349 479
1001209350 479
1001209432 441
1001209474 441
1001209628 479
1001209629 479
1001209664 ..... 265, 267
1001209869 148
1001210025 481
1001210026 480
1001210448 103
1001211794 ..... 102, 103
1001211799 479
1001212223 186
1001212415 471
1001212515 479
1001213045 102
1001213181 477
1001213219 477
1001213220 477
1001213221 477

1001213222.....477
1001213223.....477
1001213227.....477
1001213357.....100
1001213447.....420
1001213584.....434
1001213585.....434
1001213605.....479
1001213607.....479
1001213655.....431, 432
1001213810.....102
1001213882.....250
1001214030.....476
1001214396.....443
1001214478.....480
1001214507.....143, 424
1001214515.....480
1001214540.....480
1001214548.....480
1001214552.....480
1001214559.....480
1001214561.....480
1001214562.....480
1001214570.....441, 443
1001214571.....441, 443
1001214747.....29
1001214748.....28
1001214827.....103
1001214862.....111
1001215016.....425
1001215091.....425
1001215142.....98
1001215228.....250
1001215384.....103
1001215413.....99
1001215534.....425
1001215647.....100
1001215674.....100
1001215681.....100
1001215899.....101
1001215974.....101
1001216015.....163
1001216065.....102
1001216071.....103
1001216075.....101
1001216086.....101
1001216092.....101
1001216144.....103
1001216160.....103
1001216204.....101
1001216205.....101
1001216212.....425
1001216300.....103
1001216390.....194
1001216391.....166
1001216393.....102
1001216531.....101, 102
1001216532.....99
1001216533.....99
1001216534.....99
1001216535.....99
1001216536.....103
1001216616.....103
1001216619.....103
1001216630.....224, 227
1001216768.....102
1001216769.....102
1001216810..... 102
1001216844..... 111
1001216845..... 110
1001216846..... 109
1001216847..... 109
1001216848..... 108
1001216849..... 108
1001216910..... 102
1001216911..... 98
1001216912..... 97
1001216919..... 101
1001216951..... 101
1001216995..... 101
1001217005..... 149
1001217032..... 101
1001217046..... 101
1001217082..... 101
1001217089..... 101
1001217090..... 101
1001217095..... 434
1001217096..... 434
1001217146..... 101
1001217170..... 99
1001217174..... 101
1001217175..... 101
1001217183..... 101
1001217184..... 99
1001217185..... 101
1001217186..... 101
1001217187..... 193, 436
1001217188..... 165
1001217294..... 103
1001217418..... 98
1001217419..... 98
1001217420..... 98
1001217421..... 98
1001217422..... 98
1001217543..... 101
1001217562..... 103
1001217567..... 465
1001217645..... 98
1001217780..... 208, 221
1001217832..... 475
1001218022..... 477
1001218362..... 101
1001218393..... 479
1001218449..... 101
1001218547..... 151
1001218548..... 151
1001218572..... 98
1001218599..... 101
1001218600..... 101
1001218622..... 434
1001218623..... 434
1001218638..... 98
1001218930..... 194
1001219071..... 99
1001219072..... 98
1001219073..... 97
1001219224..... 141, 423
1001219225..... 141, 423
1001219325..... 103
1001219445..... 101
1001219448..... 101
1001219454..... 101
1001219456..... 101
1001219471..... 47, 230
1001219472..... 47, 230
1001219473..... 47, 231
1001219474..... 47, 231
1001219475..... 47, 231
1001219476..... 47, 231
1001219477..... 47, 230
1001219478..... 47, 231
1001219630..... 166
1001219632..... 166
1001219973..... 239, 249
1001220153..... 474
1001220215..... 103
1001220281..... 250, 420
1001220379..... 428
1001220404..... 103
1001220486..... 246, 250
1001220510..... 456, 463
1001220511..... 456, 463
1001220512..... 456, 462
1001220864..... 456, 462
1001221208..... 195, 438
1001221397..... 103
1001221464..... 99
1001221488..... 97
1001221498..... 195, 396, 438
1001221545..... 103
1001221613..... 388
1001221614..... 388
1001221615..... 101
1001221703..... 239
1001222033..... 101
1001222641..... 103
1001222665..... 84, 429
1001223042..... 100
1001223055..... 456
1001223331..... 209, 321
1001223332..... 321, 323
1001223335..... 209, 323
1001223453..... 456, 462
1001223511..... 317
1001223512..... 203, 317
1001223584..... 102
1001223899..... 209
1001223923..... 100
1001223971..... 462
1001224048..... 462
1001224049..... 462
1001224050..... 462
1001224051..... 462
1001224052..... 462
1001224053..... 462
1001224136..... 396, 424
1001224419..... 102
1001224431..... 102
1001224432..... 101
1001224486..... 101
1001224489..... 101
1001224892..... 218
1001224927..... 392
1001225346..... 441, 443
1001225510..... 102
1001225580..... 251, 267, 421
1001226529..... 443
1001226531..... 441
1001226744..... 231
1001226872.....236
1001227309.....434
1001227310.....434
1001227472.....475
1001227633.....263
1001227634.....263
1001227666.....101
1001227667.....102
1001227769.....102
1001227772.....103
1001227985.....263
1001227987.....263
1001227996.....447, 449
1001228002.....203, 349
1001228003.....203, 209, 343
1001228004.....203, 209, 339
1001228005.....217, 359
1001228006.....213, 365
1001228007.....217, 361
1001228008.....203, 319
1001228012.....209, 333
1001228042.....203, 209, 329
1001228051.....209, 325
1001228052.....208, 351
1001228215.....235
1001228224.....263
1001228225.....263
1001228243.....235
1001228375.....235
1001228376.....235
1001228377.....235
1001228417.....363
1001228946.....475
1001228988.....284, 285, 287, 289, 291, 295, 297
1001229007.....456, 462, 466
1001229107.....475
1001229341.....263
1001229810.....61, 68
1001230635.....87
1001231180.....295
1001231183.....295
1001231235.....295
1001231676.....28
1001231677.....28
1001231678.....27
1001231801.....456
1001231949.....307
1001231950.....303, 305
1001232010.....303, 305, 307
1001232011.....303, 305, 307
1001232164.....263
1001232165.....263
1001232586.....237
1001232642.....269
1001232643.....481
1001232650.....269
1001232667.....269
1001232799.....237
1001232838.....237, 439
1001232842.....93

1001232880 213
1001233237 475
1001233763 ..... 84, 93
1001234099 475
1001235011 269
1001235013 269
1001235457 .... 74, 75, 76
1001235466 72
1001235467 73
1001235468 74
1001235948 155
1001236211 475
1001236303 49
1001236304 441
1001236338 456
1001236375 443
1001236376 443
1001236377 443
1001236378 443
1001236504 441
1001236505 441
1001236552 269
1001236746 307
1001236747 303
1001236891 ..... 303, 305, 307
1001236895 ..... 303, 305, 307
1001236951 479
1001237862 ..... 447, 449
1001237863 ..... 263, 449
1001237864 ..... 263, 447
1001237865 ..... 263, 445
1001237882 477
1001237883 477
1001238263 ..... 303, 305, 307
1001238319 263
1001238418 ..... 269, 451
1001238463 305
1001238472 269
1001238477 269
1001238495 267
1001238559 269
1001238824 269
1001238825 481
1001238895 476
1001239291 47
1001239346 481
1001239617 479
1001241384 481
1001241405 479
1001241406 479
1001241578 72
1001241715 ..... 241, 249
1001241719 241
1001241835 73
1001241965 269
1001242251 149
1001242252 149
1001242409 474
1001243183 474
1001243184 474
1001243895 93
1001246522 475
1001246523 475
1001246860 477
1001246867 477
1001247073 480
1001247097 208
1001247098 208
1001247146 208
1001247338 478
1001248012 ..... 209, 335
1001248140 ..... 303, 305, 307
1001248141 ..... 303, 305, 307
1001252629 ..... 303, 305, 307
100150714 ..... 383, 388
1060279 ..... 461, 465
1060341 .... 275, 408, 430
1060343 ... 189, 194, 198, 199, 414, 437
1060379 ..... 295, 301
1060461 ..... 409, 431
1060494 ... 188, 198, 199, 409, 414, 415, 431, 437, 439
1060584 43
1060625 ..... 73, 84, 109
1060626 .. 73, 84, 98, 109
1060633 ..... 416, 439
1060637 .. 72, 85, 98, 110
1060708 ... 189, 198, 414, 437
1060896 .... 401, 421, 422
1060903 275
1060908 ..... 412, 435
1060918 ... 236, 245, 250, 400, 420
1060919 243
1060977 ..... 415, 438
1061033 ..... 402, 422
10702077 .. 189, 194, 199
10702082 .. 189, 194, 199
1120304 ..... 16, 19
1120460 ..... 24, 25
1120487 129
1120552 28
1120555 279
1260017 61
1271538 223
1282571 396
1283309 392
1283403 .... 455, 459, 465
1283429 ..... 375, 392
1300019 28
1320012 110
1320016 ..... 74, 110
1320022 72, 84, 108, 110, 127
1320061 84
1320110 99
1320127 130
1320136 223
1320176 77
1320177 ..... 284, 297
1320218 130
1320219 110
1320220 130
1320223 . 73, 74, 84, 109, 110, 443
1320224 223
1320243 ..... 204, 210
1320302 .... 284, 287, 289, 291
1320314 218
1320323 108
1321283 ..... 98, 99
1321700 211
1321716 ..... 49, 84, 88, 97
1340060 110
1380147 151
1580011 ..... 99, 111
1580012 237
1580013 237
1600244 ..... 415, 439
1600387 223
1670767 154
1670769 211
1670824 ..... 231, 232
1670829 .... 137, 142, 245, 249
1670964 231
1671034 211
1671092 .... 189, 194, 198, 199, 412, 414, 434, 437
1671093 .... 284, 289, 411, 434
1671216 156
1683053 .... 313, 317, 331, 345
1683054 ..... 357, 363
1683055 .... 313, 321, 323, 345
1683061 337
1683067 327
1683069 341
1683263 ..... 208, 345
1683266 ..... 203, 345
1683288 ..... 203, 208, 341
1683294 ..... 203, 209, 337
1683307 ..... 217, 357
1683308 357
1683312 ..... 213, 363
1683313 363
1683314 363
1683317 ..... 217, 357
1683318 357
1683415 ..... 203, 313
1683418 ..... 209, 313
1683609 ..... 209, 331
1683949 345
1683952 313
1683962 345
1683963 ..... 313, 321, 323
1683972 345
1683973 345
1683976 ..... 313, 317
1684001 337
1684005 337
1684015 327
1684017 341
1684019 341
1684089 331
1684090 331
1684290 311
1684308 357
1684310 357
1684418 ..... 24, 25, 353
1684465 ..... 13, 311
1684498 .... 203, 209, 327
1700818 ..... 455, 461
1701435 465
1701505 72, 83, 455, 461, 465
1701509 ... 279, 455, 459, 465
1701518 465
1701529 .... 455, 459, 465
1701542 ..... 97, 108, 455, 461
1701543 ..... 97, 108, 455, 461
1701643 28
1702265 456
1702271 462
17023987 462
1702565 ..... 246, 249
1702566 ..... 246, 249
1702567 ..... 246, 249
1702617 462
1702676 .... 236, 239, 241
1702720 461
1702740 28
1702773 ... 243, 455, 461, 465
1702774 .... 455, 461, 465
1702788 ... 456, 462, 466, 475
1702818 .... 455, 460, 465
1702819 .... 455, 460, 465
1702860 .... 455, 461, 465
1702861 .... 455, 461, 465
1702868 ... 284, 289, 291, 295, 297, 455, 476
1702938 .... 247, 251, 275
1702941 ...73, 84, 98, 109
1702942 ...73, 84, 98, 109
1702943 ...73, 84, 98, 109
1702944 ...73, 84, 98, 109
1702961 456
1702962 456
1703162 ...74, 88, 99, 111
1703479 ..... 466, 476
1703534 .... 379, 384, 389
1703544 462
1703683 301
1703687 .... 456, 462, 466
1703797 455
1703804 455
1703805 455
1703811 .... 455, 459, 465
1703814 .... 455, 459, 465
1703923 460
1703924 459
1703925 460
1703926 460
1703927 460
1703935 460
1703936 460
1703937 460
1703938 460
1703939 460
1703941 459
1703942 459

1703943.....459
1703944.....459
1703945.....459
1703947.....460
1703948.....460
1703949.....460
1703950.....460
1703951.....460
1703953.....455
1703980.....460
1703981.....460
1703982.....460
1703983.....460
1703984.....460
1703990.....462
1704000.....459, 476
1704001.....459, 476
1704174....456, 462, 466, 476
1704175.....466, 476
1704260.....246, 249
1704271.....461
1704272.....43
1704277.....455, 459, 465
1704412.....455, 459, 465
1704578.....43
1704885.....455, 461, 465
1704972.....73, 84
1705014.....243
1705084.....465
1705090.....43, 455, 461, 465
1705132.....246
1705170....147, 148, 247, 251
1705305....284, 287, 289, 291, 295, 297
1705336.....455
1705344.....460
1705345.....460
1705347.....460
1705351.....456
1705355.....284, 287, 289
1705358.....280
1705364.....28
1705374....174, 177, 182, 189, 199
1705375....189, 194, 199, 284, 289, 291
1705376.....189, 198
1705387....174, 178, 182, 189, 195, 199
1705426.....462
1705427.....462
1705429.....462
1705430.....462
1705460.....189, 194, 199
1705461.....189
1705466....284, 287, 289, 291, 297
1705489.....174, 178, 189
1705490.....285, 297
1705514.....455, 459
1705820.....43
1705822.....465
1705828.....465
1705895.....459
1705896..... 460
1705897..... 460
1705898..... 460
1705902..... 460
1705903..... 459
1705905..... 462
1705910..... 462
1705917..... 460
1705921..... 465
1705961..... 465
1705967..... 459, 476
1705968..... 476
1705969..... 459, 476
1705977..... 466
1705978..... 465
1706059..... 73
1706060..... 73
1706061..... 73
1706062..... 73
1706063..... 73
1706064..... 73, 85
1706098..... 73, 84
1706385..... 243
1706510..... 301
1706593..... 43
1706712..... 137, 142
1706941..... 456, 462
1706957..... 43
1706960..... 43
1706968..... 459
2030010... 284, 287, 289, 291, 297
2060025..... 74, 111
2080040..... 235, 237
2080044..... 209
2120149..... 48, 468
2120164..... 48
2120209..... 48
2120210..... 48, 468
2180125..... 130
2180348.72, 97, 102, 127
2180380..... 379
2180387..... 130
2180388..... 130
2180389..... 130
2180418..... 97, 108, 130
2180467..... 99
2180504..... 101
2180724..... 379
2180832..... 83, 284, 297
2180877..... 111
2200222..... 129
2200233..... 129
2220005..... 97, 108
2220064..... 97, 101, 108
2220237..... 24, 369, 371
2220238..... 369
2220261..... 101, 130
2220313..... 72, 83
2220315..... 85
2220362..... 369, 371
2220371.... 369, 371, 375
2220372.... 378, 384, 389
2220373... 369, 371, 379, 384, 389
2220374.... 378, 384, 389
2220375... 371, 377, 383, 388
2220376..... 125
2220377... 117, 120, 369, 371, 377, 383, 388
2220379.... 378, 383, 388
2220381.... 378, 384, 389
2220386..... 385, 390
2220409... 377, 383, 385, 390
2220415... 369, 371, 375, 377, 383, 385, 388, 390
2220418..... 130
2220428..... 378
2220429..... 378
2220451..... 74, 120, 369, 377, 383, 384, 388, 389
2220466.... 377, 383, 388
2220468..... 375
2220472.... 380, 385, 389
2220473... 369, 371, 379, 384, 389
2220474... 372, 377, 383, 390
2220490.... 375, 385, 390
2220498.... 378, 384, 389
2220500... 371, 378, 384, 389
2220504.... 369, 371, 375
2220507..... 371, 379
2220510..... 379
2220511.... 379, 384, 389
2220512..... 385, 388
2220567.... 378, 383, 388
2220574.... 378, 384, 389
2220578... 117, 120, 377, 383, 385, 388, 390
2220582... 369, 371, 378, 383, 389
2220596... 371, 377, 378, 384, 389
2220600..... 390
2220602.... 378, 383, 388
2220603.... 379, 384, 389
2220605.... 377, 383, 388
2220606..... 369, 371
2220609..... 378
2220618.... 377, 383, 388
2220628.... 378, 384, 389
2220646... 117, 120, 369, 371
2220654.... 379, 384, 389
2220657.... 378, 385, 390
2220711..... 120
2220726..... 385
2220738.... 377, 383, 390
2220810..... 125
2220816..... 127
2220861..... 371
2220873..... 378, 379
2220883... 314, 317, 319, 321, 323, 325, 327, 329, 331, 333, 335, 337, 339, 341, 363, 365
2220885... 313, 317, 319, 321, 323, 325, 331, 333, 335, 346, 351, 357, 361
2220886.....55, 327, 329, 339, 365
2220888.....341
2220890.....311
2220893.....48, 380, 385, 390
2220899.....378
2220921.....378, 384, 389
2220923.....378
2220947....117, 120, 379, 384, 389
2220948.....377, 383, 388
2220974.....378
2220998.....379, 384, 389
2220999.....378, 384, 389
2221024.....130
2221034.....120
2221036.....379, 384, 389
2221042.....377, 383, 388
2221053.....379, 384, 389
2221065.....378, 384, 389
2221086.....385
2221170.....369
2221176.....72, 97, 108
2221197.....130
2300004.....86, 101, 108, 478
2300014.....478
2300016.....478
2300019.....478
2300027.....478
2300029.....478
2300039.....478
2300040.....478
2300041.....86, 108, 478
2400060.....93, 190, 195, 199, 405, 414, 426, 438
2400064....190, 195, 199, 414, 438, 470
2400065.....403, 424, 468
2400066....403, 415, 424, 439
2400070.....415, 439, 471
2410014.....243
2420172.....137, 142
2420202.....223
2420203....159, 163, 165, 169
2460048.....186, 197
2460051.....165, 169
2460055.....159
2460056.....159
2540038.....223
2560024.....98
2560136.....246, 249
2560173.....237
2580024.....73, 84, 109
2580050.....73, 84, 109
2580062.....75
2580063.....109
2600281.....235
2680433.....154
2680434.....154
2720015.....88
2720058.72, 99, 111, 127

2720144 130
2720160 ..... 284, 297
2720271 ..... 99, 111
2720340 ..... 83, 87
2720392 108
2720398 74
2720496 108
2720563 111
2720564 111
2720566 108
2720598 108
2720615 83
2750532 ..... 72, 84
2751362 388
2751396 .... 378, 383, 388
2751410 375
2751434 375
2752341 .... 369, 379, 384
2752343 ..... 379, 384
2752453 .... 379, 384, 389
2752462 ... 375, 378, 384, 389
2752468 378
2752469 .... 378, 384, 389
2752475 ..... 369, 371
2752478 .... 378, 383, 388
2752484 .... 379, 384, 389
2752497 .... 378, 384, 389
2752506 .... 378, 384, 389
2752516 ..... 378, 384
2752519 .... 379, 385, 389
2752573 388
2752579 379
2752592 371
2752593 .... 379, 384, 389
2752600 .... 379, 384, 389
2752601 379
2752604 378
2752611 ..... 369, 371
2752618 379
2752620 ..... 369, 371
2752635 .... 378, 383, 388
2752636 378
2752650 379
2752656 .... 378, 383, 388
2752723 ... 377, 383, 388, 390
2752724 .... 378, 383, 388
2752783 ..... 378, 389
2752900 384
2752910 371
2752928 ..... 369, 371
2752929 ... 369, 378, 383, 388
2752939 .... 379, 384, 389
2752985 .... 379, 384, 389
2752987 .... 379, 384, 389
2752989 379
2752990 ..... 379, 389
2752991 .... 379, 384, 389
2752995 ..... 385, 390
2753000 388
2753002 388
2753046 379
2753047 379
2753052 .... 379, 384, 389
2753055 .... 379, 384, 389
2753056 .... 379, 384, 389
2753132 .... 377, 383, 388
2753133 .... 378, 383, 388
2753134 .... 378, 384, 389
2753135 .... 379, 384, 389
2753325 ..... 377, 383
2753390 388
2753397 369
2753924 ..... 369, 371
2753926 371
2753929 371
2753933 375
2753968 .... 378, 383, 388
2754227 ..... 369, 372
2754231 371
2754235 371
2754328 .... 377, 383, 388
2754329 .... 377, 383, 388
2754330 .... 380, 385, 390
2754731 371
2760105 ... 137, 142, 246, 249
2780271 ..... 16, 19
2780276 ..... 24, 25
2792630 393
2792690 ..... 375, 392
2792691 393
2820031 ... 160, 163, 165, 169, 174, 177, 181, 187, 193, 198, 401, 422
2820035 ..... 93, 147, 237, 408
2820078 157
2820082 157
2820083 157
2820118 ..... 401, 422
2820243 111
2820244 111
2820247 ..... 447, 449
2840016 151
2840018 151
2841677 24
2860012 160
2860030 .... 137, 142, 468
2900708 48
2900756 392
2900770 ... 337, 339, 363, 365
2900792 ... 313, 317, 319, 321, 323, 325, 327, 329, 331, 333, 335, 337, 339, 341, 343, 363, 365
2900838 481
2901273 ..... 337, 339
2901285 ..... 327, 329
2901301 .... 314, 321, 346
2901303 ... 314, 317, 319, 331, 346
2901322 ..... 341, 343
2901443 .... 415, 439, 481
2901763 52
2901861 ... 357, 361, 363, 365
2902065 .... 74, 75, 86, 89
2902085 160
2902212 279
2902217 ..... 284, 287, 289
2902266 311
2902296 ..... 72, 405, 427
2902303 476
2902307 476
2902308 476
2902309 476
2902310 476
2902311 476
2902312 476
2902322 476
2902329 476
2902443 .... 404, 407, 425, 428
2902470 479
2902471 479
2902472 479
2902531 ..... 110, 405, 427
2920028 ..... 247, 249, 251
2920029 ..... 247, 249, 251
2920110 147
2920113 147
2920129 .... 223, 400, 403, 420, 424
2920140 ..... 237, 415, 439
2920157 ..... 147, 237
2920161 ..... 148, 408, 430
2940074 ..... 235, 468
2940088 ..... 155, 156
2940188 154
2980125 25
3020008 ..... 27, 478
3020016 ..... 74, 478
3020017 ..... 16, 478
3020029 61
3020037 ..... 85, 478
3020044 ..... 74, 478
3200362 111
3200401 ..... 74, 77, 86, 91
3200406 ..... 74, 75
3220103 77
3220104 77
3250585 237
3250872 ..... 43, 455, 461, 465
3251102 .... 160, 163, 165, 169, 173, 177, 181, 237
3251243 .... 159, 165, 169, 174, 178, 182, 189, 194, 199, 455, 459
3251813 ..... 455, 460
3252347 455
3252507 160
3252764 ..... 185, 193, 198
3271601 ..... 39, 86
3271605 ..... 303, 305, 307
3271801 ..... 86, 91
3271805 ..... 133, 243
3272001 ..... 15, 303, 305, 307
3272605 ..... 204, 211, 223
3290405 ..... 97, 108, 412, 435
3290505 ..... 97, 108, 160
3290601 ..... 99, 102, 165, 193
3290605 . 97, 99, 284, 297
3290606 236
3290607 ..... 99, 148, 149
3290801 ..... 97, 100
3290805 ... 100, 102, 441, 443
3291001 ..... 100, 227
3291005 ..... 88, 100, 227, 443
3291007 151
3291201 .... 100, 194, 227
3291205 227
3300106 ..... 24, 25, 27
3300151 ... 236, 284, 287, 289, 291
3300205 ..... 137, 142
3300243 227
3300353 .... 142, 246, 249
3300396 ... 174, 178, 182, 189, 194, 198, 199
3300408 ..... 137, 142
3300430 .... 265, 267, 271
3300454 .... 174, 177, 188
3310401 88
3310601 .... 151, 189, 198
3310801 230
3310805 ..... 130, 231
3311001 ..... 91, 189, 194, 199
3311005 ... 147, 148, 154, 155, 156, 160, 163, 165, 169, 174, 178, 182, 185, 193, 198, 246, 249, 284, 287, 289, 291, 297
3311401 .... 138, 143, 275
3311405 ... 48, 72, 73, 75, 83, 85, 86, 97, 98, 110, 111, 142, 154, 169, 173, 177, 181, 187, 198, 223, 231, 236, 237, 239, 241, 269, 412, 435, 441, 455, 462, 465
3311501 ..... 154, 275
3311505 . 39, 75, 88, 108, 154, 169, 185, 193, 198, 204, 210, 218, 231, 273, 301
3311508 .... 173, 177, 181
3311601 ... 129, 154, 246, 250, 269
3311605 ... 72, 75, 77, 86, 91, 109, 111, 130, 147, 151, 154, 155, 160, 209, 213, 218, 237, 239, 241, 243, 284, 287, 289, 291
3311608 111
3311705 .... 160, 163, 165
3311801 ..... 85, 163, 174, 177, 187, 230
3311805 ... 72, 75, 77, 98, 110, 111, 154, 204, 211, 223, 227, 273
3312002 ..... 61, 303, 305, 307
3312005 ..... 223, 279

SECTION 10 - SPECIAL OPTIONS

3312205.....279
3312602.....148, 149
3313403.....24, 25
3321501.....154
3322201.....133
3323403.....16, 20, 24, 25
3340608.....357, 359, 361
3340764.....218
3340765.....218
3340787.....218
3340871.....213, 217
3340881.....213
3340911.....39
3340956.....279
3340966.....19, 20, 25
3380434.....237, 239, 241
3380558.....40
3380560.....40
3420372.....43
3420447.....43
3421453.....284, 297
3421565.....43, 61
3422326.....15, 19, 20
3422327.....25
3422426.....24, 25
3422429.....24, 25
3422430.....24, 25
3422448...72, 83, 97, 108
3422457.....217
3422533...73, 85, 98, 110
3422561.....209
3422567.....19, 20
3422571.....203, 209
3422573.....203, 209
3422575.....203, 209, 213
3422577.....203
3422578.....203
3422579.....209
3422580.....204
3422582.....204
3422583.....209
3422592.....13
3422661.....301
3422813.....19, 20, 25
3422841.....43
3422847.....43
3422848.....19, 20, 25
3422860.....209
3422861.....209
3422867.....209
3422900.....15, 19, 20, 24
3422902.....15, 19, 20
3422903.....15, 19, 20
3423175.....24, 25
3423184.....13
3430616.....247, 250
3430816.....151
3450306.....214
3450404.....151
3450606.....213
3450810.....24
3451010.....16, 20, 24, 25
3460334.....279
3470003.....246, 250
3480188....313, 321, 323, 345
3480206.....327
3480210... 313, 317, 331, 345
3480211..... 337
3480212..... 357, 363
3480216..... 341
3480288..... 311
3510868..... 243
3510884..... 243
3520028... 159, 163, 165, 169
3520031..... 143
3520033..... 246, 250
3520034..... 209
3520035..... 142, 246
3520054..... 75, 246, 249
3520071..... 279
3520072.... 235, 236, 243
3520182..... 271
3520189.... 189, 414, 437
3520192..... 189, 437
3520198..... 235, 236
3536089..... 237
3537445..... 151
3538247..... 357, 361
3538758..... 218
3538771..... 357
3539219..... 137
3539228..... 213
3539877..... 13
3539923..... 154
3539988..... 157
3570270..... 214
3570277..... 214
3570374..... 204, 210
3570375..... 213
3571295..... 213
3572009..... 43
3572010..... 43
3572011..... 43
3572012..... 43
3572280..... 111
3573400... 284, 287, 289, 291
3573642... 284, 287, 289, 291
3574091..... 275
3574185..... 218
3575359..... 275
3575716..... 25
3575863..... 174, 188
3576799..... 284, 297
3577121... 284, 287, 289, 291
3580134..... 159
3580158..... 159
3580276..... 159
3580312.... 169, 181, 198
3580314.... 181, 193, 198
3580317... 174, 177, 188, 194
3580318.... 174, 177, 188
3580319.... 174, 177, 188
3580320..... 86, 174, 188
3580324..... 165, 169
3580348.... 169, 181, 198
3600242..... 125
3600365..... 48
3600381..... 116
3600395 . 74, 85, 98, 110, 125
3600396..... 74, 85, 117
3620040..... 111
3641533..... 190, 199
3641569..... 275
3740049... 137, 142, 408, 430, 468
3740067 . 49, 75, 97, 111, 468
3740080... 160, 163, 165, 169, 187, 193, 198, 470
3740086..... 451
3760133..... 217
3760170..... 43, 61, 295
3760368... 313, 317, 331, 345, 363
3760369... 313, 321, 323, 345
3760370..... 337
3760372..... 327
3760384..... 341
3790012 . 24, 25, 97, 108, 110, 237, 239, 241, 246, 247, 249, 251
3790110..... 359
3790152..... 74, 85, 98
3790158..... 27
3820001... 147, 456, 462, 466
3820020..... 235
3841143... 15, 19, 20, 24, 25, 72, 83, 97, 108, 204, 209, 227
3841203.... 204, 210, 213
3841258... 13, 15, 19, 20, 24
3841263..... 24, 25
3841340..... 210, 217
3841347..... 214
3890040..... 243
3900054..... 243
3900085..... 148, 149
3900232..... 155
3900239..... 204, 210
3900268..... 137, 142
3900283..... 223
3900293..... 61
3900349..... 251
3910408..... 88
3910606... 173, 177, 181, 185, 193, 198
3910608..... 151
3910610..... 189, 198
3910804..... 137, 142
3911012..... 148
3911016..... 155, 156
3911040..... 147
3930816..... 231, 232
3930824..... 231
3930828..... 230
3931016... 174, 177, 181, 186, 193, 197
3931408.... 230, 265, 267
3931424..... 265
3931430..... 230
3931432.....86
3931448.....357, 361
3931512.....86
3931516....313, 317, 319, 331, 345, 357, 361, 363, 365
3931620..74, 85, 98, 110, 313, 321, 323, 325, 345, 351
3931628.....86
3931632.....100
3931720.....337, 339
3931840.....13
3932030.....27
3932032.....27, 327, 329
3932240.....341, 343
3940604.....43
3952020.....61
3960098.....24, 25
3960343.....16, 20
3960389 74, 98, 110, 154, 155, 156
3960407.....75
3960418.....154
3960422....173, 177, 181, 185, 193, 198, 413, 437
3960438.....156
3960461.....147
3960462.....155, 156
3960467.....154
3960468.....75, 111
3960469.....75, 111
3980007...73, 84, 98, 109
3990010.....404, 426, 468
4010608.....284, 297
4010618.....236
4031505.....263
4031516.....269
4031608.....160
4031711.....100
4031914.....86
4032011.....101
4032014.....86
4032015.....174, 187
4060092.....411, 433
4060802....160, 163, 165, 169, 173, 177, 181, 185, 193, 198, 237
4060803.....218
4060804.....40, 48
4060805 75, 87, 102, 111, 156, 217
4060807.....48
4060808.....213
4060906....137, 138, 142, 143
4060918.....48
4061010.....156
4061054.....223
4070863.....213, 217
4070864.....213, 217
4070897.....213, 217
4070898.....213, 217
4070929.....213, 217
4070932.....218
4070944.....13
4070945.....13

4070987 137
4070991 142
4071007 217
4071009 61
4071059 ..... 19, 20, 25
4071062 218
4071101 13
4100100 331
4120035 ... 400, 404, 420, 426
4130396 20
4130399 19
4130400 20
4130401 24
4130402 24
4130409 ..... 15, 16
4130410 15
4130413 ..... 24, 25
4130414 ..... 24, 25
4160143 154
4220162 147
4240018 ... 160, 163, 169, 173, 177, 187
4240032 ... 147, 148, 149, 250
4240033 ... 223, 263, 265, 267, 269
4240084 39
4240099 88, 93, 100, 165, 237, 275, 284, 287, 289
4240102 129
4240149 279
4280295 129
4300157 ..... 174, 187
4341239 111
4341241 111
4360057 ..... 275, 471
4360070 ... 174, 178, 182, 189, 194, 198, 199, 470
4360232 .... 415, 438, 471
4360328 ... 137, 246, 247, 251, 468
4360330 ..... 246, 468
4360331 24, 25, 237, 239, 241, 247, 251, 468
4360336 ..... 97, 108, 138, 144, 160, 163, 165, 169, 173, 177, 181, 185, 193, 198, 237, 247, 251, 470
4360387 ... 143, 246, 247, 249, 251, 275, 468
4360407 .... 246, 249, 468
4360436 129
4360469 .... 137, 142, 470
4360470 .... 137, 142, 470
4360475 ... 137, 142, 246, 249, 468
4360476 ... 137, 142, 246, 249, 468
4360517 ... 134, 408, 430, 468
4360522 ... 147, 148, 247, 251, 470
4360542 ... 159, 163, 165, 169, 470
4360578 .... 230, 231, 470
4400275 130
4400399 129
4400420 130
4420014 279
4420037 ... 237, 284, 287, 289, 291
4420038 129
4420051 ..... 43, 466
4420060 .... 160, 231, 232
4420062 301
4420066 279
4420068 ..... 273, 275
4460007 ..... 246, 249
4460027 ... 159, 163, 165, 169, 409, 431
4460042 ..... 245, 250
4460043 93
4460049 275
4460051 ... 187, 198, 414, 437
4460071 ... 173, 177, 181, 187, 193, 198, 236, 245, 250, 400, 411, 414, 420, 433, 437
4460125 ..... 410, 433
4460134 ... 409, 411, 431, 434
4460190 ... 159, 163, 165, 169
4460205 ... 409, 411, 431, 433, 434
4460224 .... 178, 408, 430
4460225 ... 400, 414, 420, 437
4460226 ... 138, 144, 223, 245, 250, 256, 261, 400, 403, 408, 409, 415, 416, 420, 421, 424, 430, 431, 438, 439
4460227 ... 400, 404, 405, 408, 415, 420, 421, 426, 430, 438
4460233 ... 409, 411, 431, 433, 434
4460234 ... 147, 148, 246, 249, 275
4460259 ..... 409, 430
4460260 ..... 409, 430
4460265 ..... 256, 261
4460267 .... 403, 408, 424
4460268 ... 147, 403, 408, 414, 424, 431, 437
4460294 178
4460297 ..... 409, 430
4460320 ... 403, 408, 415, 430, 438
4460321 ... 165, 409, 416, 430, 439
4460326 ..... 403, 408
4460346 ... 173, 177, 181, 185, 193, 198, 410, 413, 433, 437
4460374 ... 190, 195, 199, 409, 414, 431, 438
4460375 ... 190, 195, 199, 409, 414, 431, 438
4460418 .... 400, 404, 420
4460419 .... 400, 404, 420, 426
4460424 .... 147, 403, 408, 415, 424, 438
4460425 .... 174, 178, 182, 189, 194, 198, 199, 275, 414, 415, 437, 438
4460426 .... 137, 142, 174, 178, 182, 189, 194, 198, 199, 237, 402, 414, 415, 423, 437, 439
4460428 .... 246, 249, 400, 420
4460434 .... 400, 404, 420, 426
4460445 ..... 403, 408
4460457 ..... 403, 425
4460458 .... 199, 403, 404, 406, 409, 415, 425, 428, 431, 438
4460459 ..... 415, 438, 439
4460460 ..... 403, 425
4460464 .... 245, 250, 400, 401, 402, 403, 404, 405, 407, 408, 420, 422, 423, 425, 426, 429, 430, 451
4460465 .... 190, 195, 199, 223, 401, 402, 406, 407, 408, 414, 420, 422, 423, 425, 426, 428, 429, 430, 431, 437, 438
4460466 .... 223, 263, 401, 402, 403, 404, 406, 407, 422, 424, 425, 428, 429, 445, 451
4460467 ..... 415, 439, 481
4460470 .... 137, 142, 246, 249, 400, 402, 420, 423
4460471 .... 137, 142, 246, 249, 400, 402, 420, 423
4460473 ..... 401, 422
4460476 ..... 415, 438, 439
4460488 .... 138, 142, 149, 250
4460496 ..... 138, 142, 423
4460497 ..... 138, 142, 423
4460499 ..... 52, 59, 408
4460508 .... 263, 400, 401, 405, 420, 422, 426
4460509 ..... 401, 402, 422
4460510 ..... 415, 439, 481
4460526 .... 138, 142, 402, 423
4460536 .... 404, 420, 426, 430
4460539 .... 404, 420, 424, 425
4460608 ..... 404, 425
4460618 426
4460634 ..... 404, 426
4460635 ..... 404, 426
4460662 433
4460693 ..... 404, 425
4460701 .... 409, 411, 431, 434
4460705 ..... 409, 431
4460708 ... 246, 249, 400, 403, 420, 424
4460709 ..... 411, 434
4460710 ..... 411, 434
4460722 93
4460742 ... 190, 195, 199, 409, 415, 431, 438
4460743 ... 190, 195, 199, 409, 415, 431, 438
4460761 ... 223, 400, 405, 421, 426
4460789 .... 415, 438, 439
4460790 .... 415, 438, 439
4460807 178
4460808 178
4460836 223
4460850 .... 415, 438, 439
4460865 .... 401, 421, 422
4460866 ... 400, 401, 405, 420, 422, 426
4460868 426
4460871 ... 253, 259, 400, 403, 404, 405, 408, 420, 424, 425, 426, 430
4460873 ... 400, 404, 420, 426
4460874 ... 400, 405, 420, 426
4460875 ... 400, 405, 420, 426
4460876 ..... 405, 426
4460877 426
4460878 ..... 405, 426
4460879 ..... 400, 420
4460880 ..... 403, 424
4460884 ... 407, 420, 426, 428
4460887 ... 400, 405, 420, 426
4460891 ... 402, 407, 408, 421, 423, 424, 425, 429, 430
4460892 ..... 403, 424
4460894 ... 403, 407, 420, 424, 428
4460897 ... 402, 407, 408, 423, 425, 429, 430
4460899 ... 404, 425, 445, 451
4460905 ... 400, 404, 405, 420, 426
4460906 ... 165, 169, 403, 409, 431
4460910 447
4460911 445
4460930 ..... 407, 428
4460931 ..... 403, 425
4460932 .... 407, 420, 429
4460933 ..... 223, 420
4460941 .... 407, 429, 445
4460942 .... 263, 407, 429
4460943 ... 404, 405, 420, 425, 426, 445
4460944 ... 403, 404, 406, 407, 420, 425, 428
4460956 ..... 412, 435

4460957.....412, 435
4460958....185, 198, 413, 437
4460959.....411, 434
4460960.....411, 434
4460961.....409, 431
4460962.....284, 289, 434
4460963....189, 194, 198, 199, 414, 438
4460967....190, 195, 199, 414, 438
4460968....160, 230, 231, 411, 433
4460971.....284, 297
4460979.....404, 425
4461005.....404, 425
4461006.....404, 425
4461008....404, 407, 425, 429
4461052.....404, 425
4461053.....404, 425
4461054....404, 407, 425, 429
4461060.....404, 425
4461070....403, 406, 424, 428
4461071....404, 407, 425, 428
4461072....404, 407, 425, 428
4461073....404, 407, 425, 428
4461074....404, 407, 425, 428
4461077.....445, 451
4461095....403, 406, 425, 428
4461109.....404, 425
4461111.....404, 425
4461113.....404, 425
4461121.....404, 425
4461122.....404
4461123.....404
4461124.....404, 425
4461157.....404, 425
4461161.....404, 425
4461196.....411, 434
4461197.....412, 436
4461198.....410, 411, 433
4461199.....411, 433
4461200.....412, 436
4461201.....410, 411, 433
4461202.....411, 433
4461203.....412, 436
4461204.....410, 411, 433
4461205.....411, 434
4461206.....412, 436
4461207.....410, 411, 433
4461222.....404, 425
4461244.....410, 411, 433
4461245.....410, 411, 433
4461246.....410, 411, 433
4461249.....411, 434
4461250.....412, 436
4520256.....28
4520283.....28
4520284.....28
4520287..... 28
4520288..... 28
4520289..... 27
4520290..... 27
4520328..... 27
4520341..... 28
4520344..... 27
4520345..... 27
4520346..... 27
4520427..... 27
4520428..... 27
4520601..... 28
4520602..... 28
4520604..... 28
4520672..... 28
4520674..... 27
4530028... 284, 287, 289, 293
4566408..... 337
4566425..... 357
4566468... 313, 317, 321, 323, 345
4566501..... 327
4566667..... 341
4567241..... 213, 214
4568119..... 130
4568133..... 43
4568735.... 169, 181, 198
4569385..... 109
4640113..... 28
4640261..... 43
4640438..... 337, 339
4640509... 313, 317, 319, 321, 323, 325, 327, 329, 331, 333, 335, 337, 339, 341, 343, 363, 365
4640605... 327, 329, 341, 343
4640647..... 363, 365
4640744..... 125
4640751..... 86
4640858..... 311
4640862.... 357, 359, 361
4640866..... 48
4640921..... 48, 59
4640922..... 48, 59
4640929..... 231
4640932... 313, 317, 319, 321, 323, 325
4640999..... 363, 365
4641022..... 129
4641122..... 28
4641284..... 371
4641307..... 369
4641329..... 392
4641390..... 311
4641436..... 230
4641452..... 49, 51
4711000..... 91, 148, 155, 163, 189, 194, 199
4711400... 49, 72, 75, 83, 85, 86, 97, 109, 111, 143, 147, 169, 173, 177, 181, 187, 198, 213, 223, 231, 236, 237, 265, 267, 269, 271, 412, 435
4711500 . 39, 83, 86, 109, 185, 193, 198, 218, 231, 247, 250
4711600 ... 49, 75, 83, 88, 91, 97, 109, 111, 127, 163, 174, 177, 188, 213, 218, 223, 231, 303, 305, 307
4711700 ..... 88, 127, 149, 163, 165, 170
4711800 84, 98, 151, 173, 181, 187, 198, 243
4712000 ... 279, 303, 305, 307
4712200 279
4712600 148
4740016 ..... 24, 25
4740036 43
4740057 61
4740076 154
4740111 .... 15, 19, 20, 25
4740155 ..... 19, 20, 25
4740158 13
4740171 154
4740184 25
4740229 13
4740256 .... 15, 19, 20, 24
4740274 ..... 75, 77, 111
4740283 ..... 16, 20
4740362 ... 147, 237, 239, 241
4740393 27
4740397 ... 142, 160, 170, 237, 246, 249
4740439 210
4740444 ..... 138, 142
4740463 .... 15, 19, 20, 24
4740500 155
4740518 142
4740542 13
4750400 88
4750600 ..... 189, 198
4750800 130
4751000 ..... 43, 147, 148, 149, 154, 156, 160, 165, 170, 174, 177, 182, 185, 193, 198, 235, 246, 249, 284, 287, 289, 291, 297
4751200 217
4751400 . 49, 74, 98, 110, 111, 138, 142, 143, 147, 148, 154, 223, 230, 231, 232, 237, 239, 241, 246, 249, 271, 275, 284, 287, 289, 291, 441, 456, 462, 466
4751500 ... 39, 40, 49, 72, 84, 88, 97, 109, 154, 160, 163, 170, 173, 177, 181, 204, 210, 273, 275, 301
4751600 ... 39, 40, 72, 75, 77, 84, 86, 91, 111, 129, 130, 133, 148, 154, 155, 156, 157, 160, 194, 213, 237, 239, 241, 247, 250, 284, 287, 289, 291, 357
4751800.. 72, 85, 98, 110, 111, 129, 133, 214, 237, 243, 275
4752000... 72, 83, 97, 109
4760600..... 189, 198
4761000..... 16, 20
4761400..... 138, 142, 143
4761500..... 186, 198
4761600..... 49
4770600..... 151
4791400 49, 75, 111, 173, 177, 187
4791600..... 39
4811400..... 412, 435
4811600..... 160
4811700.... 100, 102, 148, 165, 193, 236, 284, 297
4811702.. 40, 88, 97, 101, 102
4811900 86, 97, 100, 102, 103, 170, 181, 198, 441, 443
4811902..... 88, 100, 103
4812000 88, 98, 100, 103, 151, 165, 227, 443
4812002..... 101, 103
4812100. 83, 86, 103, 227
4812200..... 75, 77, 88, 91
4831900..... 111
4844815..... 210
4844816..... 210
4844817..... 210
4844958..... 61
4844969..... 218
4844972..... 218
4844978..... 218
4844979..... 218
4845163..... 151
4845582..... 301
4846218..... 231
4846295..... 43
4846296..... 43
4846561..... 237
4846573..... 204, 211, 223
4846627.... 284, 287, 289, 291
4846673..... 275
4846935..... 19, 20
4871700..... 194
4891500..... 88, 143, 165
4891600.... 74, 85, 86, 98, 110, 130, 151, 155, 156, 170, 181, 198, 204, 211, 223, 227
4891800.. 13, 86, 91, 151, 163, 177, 187, 204, 211, 223, 227, 273
4892000..... 15, 61, 223
4892600.... 147, 204, 211, 223, 227
4920385..... 111
4921829..... 165, 409, 431

4921927 ..... 48, 408
4921928 ..... 48, 408
4921954 ..... 409, 431
4922493 ..... 401, 421
4922494 ..... 401, 422
4922637 ..... 403, 424
4922641 ... 174, 178, 182, 190, 195, 199, 409, 415, 431, 438
4922643 ..... 409, 430
4922666 ... 246, 249, 400, 420
4922705 223
4922764 ..... 415, 438
4922810 ..... 401, 422
4922811 ..... 402, 422
4922869 223
4922890 ..... 402, 423
4922891 ..... 402, 423
4922892 ... 237, 402, 415, 422, 439
4922893 ..... 402, 422
4922894 ... 237, 401, 415, 422, 439
4922895 ..... 401, 422
4922896 ..... 402, 423
4922925 ... 188, 194, 198, 414, 437
4923224 ..... 138, 403
4923379 ..... 75, 406, 427
4923420 .... 199, 414, 438
4923445 ..... 409, 431
4923462 .... 401, 421, 422
4923472 ..... 401, 421
4923473 ..... 401, 422
4923474 ..... 401, 422
4923475 ..... 402, 422
4923476 ..... 402, 422
4923500 ..... 402, 423
4923501 ..... 402, 423
4932990 ..... 396, 476
4932993 ..... 396, 476
4933218 396
4933219 396
4933308 .... 396, 415, 438
4933312 396
4933349 ... 199, 396, 414, 438
4933350 .... 396, 409, 430
5240800 91
5241000 ..... 27, 100
5241200 ... 100, 165, 194, 227
5250605 ..... 102, 103
5250810 88
5251008 227
5251016 227
5260600 ..... 102, 103
5272010 101
70000123 ..... 159, 169
70000124 159
70000125 159
70000126 ..... 159, 470
70000127 159
70000164 111
70000342 221
70000345 ..... 77, 89
70000579 51
70000580 51
70000582 51
70000583 51
70000619 .. 188, 193, 197
70000718 ..... 407, 429
70000781 39
70000782 64
70000793 ..... 75, 89
70000851 76
70000852 35
70000853 35
70000854 35
70000857 35
70000858 35
70000861 35
70000862 ..... 35, 36
70000863 .. 186, 194, 197
70000912 76
70000913 76
70000914 76
70000915 76
70000916 76
70000917 76
70000918 76
70000919 76
70000934 48
70001002 76
70001017 77
70001100 .. 186, 194, 197
70001126 77
70001248 ..... 133, 134
70001384 .. 186, 194, 197
70001423 76
70001424 299
70001425 299
70001427 299
70001428 299
70001429 299
70001430 299
70001431 299
70001432 299
70001435 76
70001498 76
70001696 .. 187, 193, 197
70001697 221
70001847 77
70001850 76
70001866 76
70001868 76
70001870 ..... 77, 89
70001871 76
70001872 .... 76, 406, 428
70001931 ..... 408, 429
70001950 ..... 407, 429
70001951 ..... 407, 429
70001953 .. 186, 194, 198
70001966 . 173, 178, 181, 186, 193, 194, 197
70001973 .. 187, 194, 197
70001974 .. 187, 194, 197
70001976 ..... 51, 52, 59
70001999 ..... 218, 470
70002000 218
70002001 213
70002002 213
70002011 ..... 218, 470
70002012 218
70002020 31
70002026 31
70002027 31
70002054 31
70002057 31
70002059 31
70002063 40
70002064 ..... 40, 232
70002065 64
70002066 ..... 64, 68
70002067 64
70002068 64
70002069 64
70002070 64
70002071 64
70002072 64
70002073 64
70002074 64
70002075 64
70002085 ..... 65, 68
70002086 65
70002088 ... 186, 193, 197
7000213 ..... 64, 68
70002133 35
70002134 121
70002146 122
70002147 121
70002148 121
70002149 121
70002150 121
70002151 121
70002153 121
70002154 121
70002156 121
70002157 121
7000217 ..... 64, 68
70002176 ..... 35, 120
70002201 31
70002209 49
70002212 ..... 133, 134
70002234 76
7000228 ..... 64, 68
7000229 ..... 64, 68
70002291 186
70002297 ... 186, 194, 197
7000230 ..... 64, 68
70002373 349
70002386 ..... 232, 468
70002412 359
7000246 ..... 64, 68
70002460 ... 186, 193, 197
7000247 68
7000248 ..... 64, 68
7000253 ..... 64, 68
7000255 ..... 64, 68
7000257 ..... 64, 68
70002627 ..... 407, 429
70002715 129
70002716 129
70002718 ..... 77, 89
70002724 259
70002725 259
70002726 259
70002727 259
70002728 259
70002729 259
70002730 253
70002731 253
70002732 253
70002733 253
70002734 253
70002735 253
70002745 355
70002752 355
70002753 355
70002754 355
70002755 355
70002756 355
70002757 355
70002758 56
70002759 56
7000281 64
70002818 ..... 190, 199
70002819 ..... 190, 199
70002820 ..... 190, 199
70002821 ..... 190, 199
70002822 ..... 190, 199
70002823 ..... 190, 199
70002824 ..... 190, 199
70002825 ..... 190, 199
70002826 ..... 190, 199
70002895 ..... 111, 470
70002898 ..... 407, 429
70002902 .. 236, 245, 250
70002903 .. 236, 245, 250
70002904 .. 236, 245, 250
70002905 .. 236, 245, 250
70002906 253
70003003 77
70003019 55
70003136 76
70003408 39
70003454 134
70003456 77
70003457 77
70003470 77
70003472 76
70003473 76
70003475 77
70003478 76
70003525 55
70003623 77
70003628 35
70003631 .. 186, 193, 197
70003708 . 173, 178, 181, 186, 187, 194, 197
70003709 . 173, 177, 181, 186, 187, 194, 197
70003783 ..... 75, 470
70003784 ..... 246, 249
70003790 232
70003932 76
70003952 84
70004037 68
70004040 68
70004041 68
70004042 68
70004043 68
70004044 68
70004045 68
70004047 68
70004052 ..... 55, 56, 59
70004056 76

70004058.....76
70004059.....76
70004060.....76, 428
70004092..173, 178, 181, 186
70004093.....186
70004094.....186
70004095.....187
70004096.....186
70004097.....186
70004098..173, 178, 181, 187
70004099.....178, 186
70004103.....76, 427
70004149.....129
70004161.....59, 470
70004162.....59
70004163.....59
70004164.....59
70004165.....59
70004166.....59
70004169..186, 187, 193, 194, 197, 198
70004171..173, 181, 186, 194, 197
70004201.....35
70004202.....35
70004203.....35
70004204.....35
70004205.....35
70004207.....35
70004268.....77
70004269.....77
70004270.....76
70004271.....76, 428
70004272.....76
70004273.....77
70004274.....89
70004275.....89
70004276.....90
70004277.....90
70004278.....90
70004279.....89
70004353.....31
70004355.....31
70004356.....31
70004361.....31
70004363.....31
70004365.....31
70004367.....31
70004369.....31
70004370.....31
70004371.....31
70004447.....31
70004459.....55
70004460.....55
70004461.....55
70004463.....55, 468
70004594.....55
70004595.....55, 468
70004596.....55
70004597.....55
70004617.....56
70004652.....55
70004653.....55
70004654.....55
70004655.....55
70004656..... 55
70004657..... 55
70004659..... 55
70004660..... 55, 468
70004661..... 55
70004662..... 55
70004663..... 55
70004664..... 55
70004665..... 55
70004666..... 55
70004667..... 55
70004668..... 55
70004670..... 55
70004671..... 56
70004672..... 56
70004673..... 56, 468
70004674..... 56
70004676.. 173, 178, 181
70004677..... 173
70004678.. 173, 178, 181
70004679.. 173, 178, 181
70004680.. 173, 178, 181
70004681..... 173, 178
70004682.. 173, 178, 181
70004683..... 173, 178
70004684..... 173, 181
70004685.. 173, 178, 181
70004686..... 178
70004687..... 178
70004738..... 261
70004739..... 261
70004740..... 261
70004741..... 261
70004742..... 261
70004743..... 261
70004744..... 261
70004745..... 261
70004746..... 261
70004747..... 261
70004748..... 261
70004749..... 261
70004750..... 261
70004751..... 261
70004752..... 255
70004753..... 255
70004754..... 255
70004755..... 255
70004756..... 255
70004757..... 255
70004758..... 255
70004759..... 255
70004760..... 255
70004761..... 255
70004762..... 255
70004763..... 255
70004764..... 255
70004765..... 255
70004766..... 255
70004767..... 255
70004768..... 255
70004769..... 255
70004770..... 255
70004771..... 255
70004772..... 255
70004773..... 255
70004774..... 256
70004775..... 256
70004862..... 130, 470
70005008..... 100, 470
70005201..... 55
70005202..... 56
70005203..... 68
70005230..... 261
70005232..... 56
70005298..... 31
70005299..... 31
70005300..... 31
70005301..... 31
70005302..... 31
70005303..... 31
70005304..... 31
70005305..... 31
70005306..... 31
70005307..... 31
70005308..... 31
70005309..... 31
70005311..... 31
70005312..... 31
70005313..... 31
70005314..... 31
70005315..... 31
70005316..... 31
70005317..... 31
70005318..... 31
70005319..... 31
70005320..... 32
70005321..... 32
70005466..... 120
70005467..... 120
70005468..... 120
70005469..... 121
70005470..... 121
70005471..... 121
70005472..... 121
70005473..... 121
70005474..... 121
70005475..... 122
70005476..... 122
70006093..... 186
70006094..... 186
70006095..... 186
70006096..... 187
70006097..... 187
70006134..... 102
70006135..... 102
70006136..... 102
70006145..... 103
70006147..... 103
70006150..... 103
70006151..... 103
70006152..... 103
70006153..... 103
70006154..... 103
70006155..... 103, 470
70006157..... 103
70006158..... 103
70006159..... 103
70006160..... 103
70006161..... 104
70006162..... 104
70006163..... 104
70006164..... 104
70006165..... 104
70006166..... 104
70006167.....104
70006168.....103
70006169.....104
70006170.....104
70006171.....104
70006172.....104
70006173.....104
70006174.....104
70006175.....104
70006176.....104, 470
70006177.....104
70006178.....104
70006179.....104
70006180.....104
70006181.....104
70006182.....104
70006183.....104
70006184.....104
70006185.....104
70006186.....104
70006187.....104
70006188.....104
70006189.....103
70006191.....104
70006194.....104
70006195.....104
70006196.....104
70006197.....104
70006198.....104
70006199.....104
70006200.....104
70006202.....105
70006203.....104
70006205.....104
70006206.....104
70006207.....104
70006208.....104
70006213.....104, 470
70006215.....104
70006217.....105
70006219.....104
70006221.....105
70006225.....104
70006232.....105
70006233.....104
70006235.....105
70006236.....105
70006257.....218
70006273.....218
70006304.....68
70006369.....343
70006370.....343
70006371.....343
70006372.....343
70006373.....343
70006374.....343
70006436.....474
70006442.....351
70006443.....325, 351
70006444.....325, 351
70006445.....325, 351
70006446.....325, 351
70006447.....351
70006478.....339
70006479.....339
70006480.....339
70006481.....339

70006482 ..... 361, 365
70006483 ..... 361, 365
70006484 365
70006486 329
70006487 329
70006488 329
70006489 329
70006552 .. 173, 177, 181
70006553 .. 173, 177, 182
70006568 333
70006569 333
70006570 333
70006571 333
70006572 333
70006597 349
70006599 349
70006601 349
70006648 319
70006649 ..... 319, 335
70006650 ..... 319, 335
70006651 319
70006654 361
70006655 361
70006734 335
70006735 335
70006736 335
70006774 349
70006775 349
70006776 349
70006793 359
70006813 359
70006814 359
70006815 359
70006816 359
70006817 359
70006818 359
70006819 359
70006820 359
70006821 359
70006822 325
70006823 325
7000695 77
70007438 35
70009018 98
70009019 98
7001433 117
7001498 117
7001625 353
7001626 353
7001627 353
7001629 353
7001630 353
70021202 55
70022564 349
70023371 ..... 349, 359
70023373 359
70023592 86
70023593 86
70023859 55
70023862 55
70023867 55
70023915 333
70024457 55
70024473 90
70024486 89
70024488 89
70024503 90
70024504 90
70024507 90
70024513 89
70024515 90
70024905 89
70024906 89
70024907 89
70024910 90
70024912 89
70024914 90
70024915 90
70024917 90
70024918 90
70024920 90
70024922 90
70024924 89
70024925 89
70025076 89
70025077 ..... 90, 428
7002508 89
70025082 89
70025084 90
70025088 89
70025091 89
70025111 89
70025120 90
70025135 89
70025136 89
70025140 89
70025142 90
70025143 90
70025144 89
70025146 89
70025149 90
70025151 90
70025152 89
70025153 ..... 89, 470
70025154 89
70025156 90
70025160 90
70025161 ..... 90, 470
70025164 89
70025176 89
70025178 90
70025179 90
70025180 90
70025181 89
70025200 90
70025202 89
70025203 90
70025206 89
70025207 89
70025210 ..... 90, 470
70025212 90
70025231 ..... 89, 428
70025235 90
70025239 89
70025416 89
70025477 90
70025660 90
70025799 90
70025801 90
7002821 .... 415, 439, 481
7002822 481
7002823 .... 415, 439, 481
7002826 481
7002828 ..... 415, 439
7002840 481
7003928 253
7003941 259
7003972 259
7003973 259
7003980 259
7003982 259
7003983 259
7003989 259
7004035 64
7004036 64
7004043 65
7004044 65
7004045 65
7004047 65
7004049 65
7004248 48
7004275 481
7004276 481
7004290 48
7007207 ..... 116, 120
7007208 ..... 116, 120
7007412 ..... 117, 121
7007413 ..... 116, 120
7007414 116
7007415 120
7007417 ..... 116, 120
7007418 ..... 116, 120
7007419 ..... 35, 116, 120
7007420 ..... 35, 116, 120, 121
7007422 121
7007423 ..... 116, 120
7007425 ..... 116, 120
7007430 121
7007431 121
7007434 121
7007435 ..... 116, 120
7007437 116
7007438 ..... 116, 120
7007439 ..... 35, 116, 120
7007441 ..... 116, 121
7007442 ..... 116, 120
7007443 120
7007444 ..... 116, 121
7007446 ..... 35, 116, 120
7007448 ..... 116, 120
7007450 121
7007452 116
7007453 ..... 116, 121
7007454 116
7007457 ..... 116, 120
7007459 ..... 117, 120
7007463 ..... 117, 121
7007464 ..... 117, 121
7007465 ..... 117, 121
7007466 117
7007472 117
7007474 117
7007475 117
7007476 ..... 117, 121
7007477 ..... 117, 121
7007478 117
7007484 ..... 117, 121
7007485 ..... 117, 121
7007487 ..... 117, 121
7007488 ..... 117, 121
7007489 125
7007494 117
7007496 117
7007497 .... 117, 408, 430
7007498 .... 117, 408, 430
7007633 ..... 64, 68
7010103 125
7010104 125
7010105 125
7010116 ..... 117, 120
7010117 121
7010119 121
7010121 ..... 117, 120
70104570 90
7010492 ..... 64, 68
7010542 51
7010543 ..... 49, 51
7011043 48
7011044 48
7011048 48
7011062 48
7011063 48
7011064 48
7011065 48
7011066 48
7011112 ... 314, 317, 319, 321, 323, 325
7011185 363
70124530 90
70124538 90
7012513 ... 159, 163, 165, 169
7012514 ... 159, 163, 165, 169
7012518 ..... 49, 51
7012558 ... 159, 163, 165, 169
7012664 ..... 111, 470
7012769 52
7012772 ..... 51, 52, 59
7012773 .... 51, 52, 55, 59
7012774 ..... 52, 59
7012775 ..... 51, 52
7012776 59
7012799 52
7012912 ..... 51, 52
7012914 ..... 51, 52, 232
7012918 ..... 51, 52, 232
7012941 49
7012943 ..... 49, 468
7012944 ..... 49, 51, 468
7012953 .51, 59, 231, 232
7012959 48
7012965 ..... 59, 232
7012967 ..... 51, 52, 232
7012969 52
7012970 231
7012987 125
7012988 125
7012989 ..... 51, 232
7012995 49
7012998 ..... 51, 52, 59
7013189 133
7014676 481
7016206 28
7016314 129
7016319 148

7016322.....151
7016328.....76, 470
7016331.....76, 89, 470
7016372.....148
7016374.....151
7016399.....237
7016652.....481
7016654.....481
7016655.....481
7016822.....110, 405, 427
7017023.....64, 68
7017028.....64, 68
7017070.....64, 68
7017072.....64, 68
7017080.....64, 68
7017085.....64, 68
7017142.....221
7017158.....221
7017159.....221
7017162.....221
7017163.....221
7017164.....221
7017172.....221
7017183.....221
7017192.....221
7017193.....221
7017195.....221
7017402.....232
7017406.....232
7017410.....51
7017418.....51
7017420.....59
7017421.....59
7017422.....59
7017427.....51
7017428.....51, 52
7017452.....232
7017464.....51
7017496.....311
7018912.....51, 52, 59
7018941.....51
7018942.....56, 59
7018945.....59
7018946.....59
7018948.....59
7018952.....52
7019162.....259
7019164.....259
7019165.....259
7019167.....259
7019194.....259
7019658.....129
7019680....159, 163, 165, 169
7020020.....48
7020021.....48
7020108....159, 163, 165, 169
7020109....159, 163, 165, 169
7020110....159, 163, 165, 169
7020111....159, 163, 165, 169
7020135.....28
7020175.....142, 246, 249
7020176.....142, 246, 249
7020190... 159, 163, 165, 169
7020192..... 159
7020403..... 76
7020404..... 89
7020408..... 76
7020431..... 77
7020460..... 77
7020465..... 76, 89
7020468..... 76
7020471..... 76
7020479..... 76
7020487..... 76
7020492..... 90
7021200..... 116, 120
7021201..... 117, 121
7021202..... 116, 120
7021203..... 116, 121
7021206..... 117, 121
7021207..... 116, 120
7021210..... 120
7021212..... 117, 120
7021214..... 117, 120
7021217..... 117
7021218..... 117
7021219..... 117, 121
7021220..... 117, 121
7021221..... 117, 121
7021222..... 117, 121
7021223..... 116, 121
7021232..... 117, 122
7021233..... 116, 120
7021249..... 35
7021256.... 116, 120, 121
7021275..... 35
7021310..... 52
7021375..... 51, 52, 55
7021625..... 39, 40
7021639..... 392
7021653..... 232
7022162..... 103
7022311..... 35
7022314..... 35
7022321..... 35
7022368..... 35
7022371..... 36
7022397..... 39
7022399..... 39
7022808..... 253
7022815..... 253
7022819.... 253, 408, 430
7022825.... 259, 408, 430
7023038..... 353
7023318..... 64
7023911..... 232
7023912..... 232
7023917..... 39
7023933..... 39
7023935..... 39
7023936..... 39
7023977..... 116
7023979..... 117, 121
7024100..... 65, 68
7024379..... 65
7024380..... 65
7024381..... 65
7024390..... 65
7024396..... 65
7024398..... 77
7024404..... 133, 134
7024439..... 130
7024440..... 130
7024441..... 130
7024443..... 130
7024444..... 130, 470
7024445..... 130
7024446..... 130
7024453..... 65
7024454..... 64
7024455..... 65
7024456..... 65
7024457..... 65
7024458..... 65
7024462..... 293
7024463..... 293
7024467..... 293
7024469..... 293
7024470..... 293
7024471..... 293, 299
7024472..... 293
7024473..... 293
7024474..... 293
7024475..... 293
7024478..... 293
7024485.... 186, 193, 197
7024488.... 188, 193, 197
7024489.... 188, 193, 197
7024530..... 299
7024531..... 299
7024532..... 299
7024533..... 299
7024534..... 299
7024535..... 299
7024536..... 299
7024537..... 299
7024560..... 78
7024579..... 77, 89
7024598..... 151
7024704..... 64, 68
7024762..... 64, 68
7024763..... 64, 68
7024784..... 64, 68
7024800..... 117
7024851..... 117, 121
7024867..... 35
7024868..... 35
7024874..... 120
7024875..... 120
7024877..... 121
7024881..... 392
7024892..... 39
7026188.... 187, 193, 197
7026197..... 133
7026199... 159, 163, 165, 169
7026503..... 133
7026504..... 133
7026505..... 133
7026506..... 133
7026507..... 134
7026509..... 134
7026511..... 133
7026597.... 187, 193, 197
7026626.... 186, 193, 197
7026631.....76
7027002.....72, 405, 427
7027003.....72, 110, 405, 427
7027004.....72, 405, 427
7027015.....110, 406, 427
7027016.....110, 405, 427
7027017.....110, 406, 427
7027072.84, 98, 405, 427
7027073.84, 98, 405, 427
7027074.....84, 405, 427
7027075.84, 98, 405, 427
7027076.....84, 406, 427
7027236.....76
7027276.....76
7027404.....104
7027740.....35
7027773.....293
7027774.....293
7027775.....293
7027776.....293
7027777.....293
7027778.....293
7027779.....293
7027780.....293
7027790.....76
7027791.....76
7027792.....76
7027793.....406, 428
7027795.....77, 470
7027796.....76, 406, 427
7027799.....186, 193, 197
7027887....159, 163, 165, 169
7027965.....111, 470
7027972.....111, 470
7027989.....407, 429
7027991.....407, 429
77143013.....137, 142
77363233.....414, 437
80233041.....385, 390
80424002.....64
80424043.....65
80434249.....55, 468
80484084.....406, 428
80934561.....133
80983191...406, 428, 468
8180311.....111
82033995.....101, 102
8229242....405, 406, 426, 428, 468
8270147.84, 98, 405, 427
8305401.....100
8307109.....100
8310129.....279
8310230.....279
8310548.....100
8405006...83, 88, 91, 100
8405007.....86
8405009.....86, 100
8405102.....100
8405104.....86, 100
8405203.....100
8405204.....86
8406101.....97
8406102.....88
8406109.....100

8406110 ..... 86, 100
8406112 83
8406201 ... 49, 84, 88, 97, 102
8410001 100
8410009 102
8410011 ..... 86, 100
8410013 88
8420231 102
85941017 72
85941018 97
8770157 ..... 117, 120
88261024 231
88411013 ..... 49, 441
88521205 .. 49, 72, 83, 97, 109
88521214 ... 303, 305, 307
8896941 481
91143177 ..... 385, 390
91203039 227
91401281 . 49, 73, 83, 97, 109
91403102 ..... 87, 470
91403244 86
91474405 56

3121617

An Oshkosh Corporation Company

Corporate Office
JLG Industries, Inc.
1 JLG Drive
McConnellsburg, PA 17233-9533 USA
(717) 485-5161 (Corporate)
(877) 554-5438 (Customer Support)
(717) 485-6417

Visit our website for JLG Worldwide Locations.
www.jlg.com