# Illustrated Parts Manual

## *Models*
## *600A*
## *600AJ*

SN 0300087000 to SN 0300177361
SN B300000100 to SN B300005764
excluding B300005620

**P/N**
**3121206**

April 17, 2020 - Rev AP

***ANSI***

***AS/NZS***

An Oshkosh Corporation Company

# REVISION LOG

**NOTES:**

**NOTE: The 600A & 600AJ Boom Lifts are manufactured by JLG Industries in the following countries: USA and China. Refer to the Serial Number Tag to identify the country of manufacture. The country of manufacture may be determined by the Serial Number. Machines manufactured in the USA will have a serial number prefix of 03 (i.e. 03XXXXXXXX). Machines manufactured in the China will have a serial number prefix of B3 (i.e. B3XXXXXXXX).**

**NOTE: SN 0300173686 is a pilot build model built to 1001160010 specs. Contact JLG Customer Service to identify machine component built list.**

**NOTE: SN 0300176207 is a pilot build model. Use Illustrated Parts Manual p/n 3121617 or contact JLG Customer Service to identify machine component built list.**

**NOTE: GROUND MODULE IDENTIFICATION**

**GROUND MODULE IDENTIFICATION**

**MODULE ON MACHINES "WITHOUT UGM" (UNIVERSAL GROUND MODULE)**

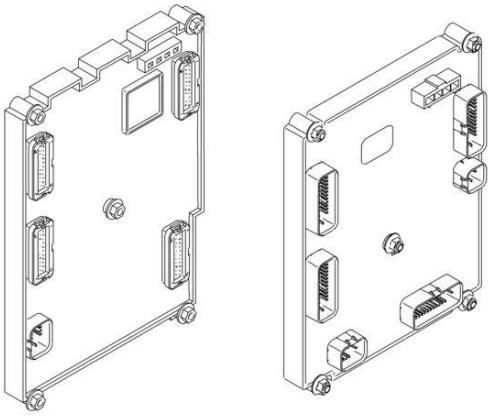

**MODULE ON MACHINES "WITH UGM" (UNIVERSAL GROUND MODULE)**

**PARTS MANUAL REVISION LOG:**

**June 1, 2005 - A - Original Issue Of Manual (Manual edited to 0010629 Revision 14)**
**August 26, 2005 - B - Revised Manual (Manual edited to 0010629 Revision 17)**
**November 21, 2005 - C - Revised Manual (Manual edited to 0010629 Revision 21)**
**April 18, 2006 - D - Revised Manual (Manual edited to 0010629 Revision 27)**
**July 31, 2006 - E - Revised Manual (Manual edited to 0010629 Revision 31)**
**December 12, 2006 - F - Revised Manual (Manual edited to 0010629 Revision 32)**
**May 1, 2007 - G - Revised Manual (Manual edited to 0010629 Revision 40)**

# REVISION LOG

**August 16, 2007 - H - Revised Manual (Manual edited to 0010629 Revision 42)**

**December 4, 2007 - I - Revised Manual (Manual edited to 0010629 Revision 44)**

**March 31, 2008 - J - Revised Manual (Manual edited to 0010629 Revision 45)**

**September 2, 2008 - K - Revised Manual (Manual edited to 0010629 Revision 45)**

**February 15, 2009 - L - Revised Manual (Manual edited to 0010629 Revision 65)**

**August 1, 2009 - M - Revised Manual (Manual edited to 0010629 Revision 65)**

**March 25, 2010 - N - Revised Manual (Manual edited to 0010629 Revision 76)**

**August 15, 2010 - O - Revised Manual (Manual edited to 0010629 Revision 80 & 0010722 Revision 3)**

**February 24, 2011 - P - Revised Manual (Manual edited to 0010629 Revision 85 & 00107 Revision 5)**

**May 27, 2011 - Q - Revised Manual (Manual edited to 0010629 Revision 86 & 0010722 Revision 5)**

**August 29, 2011 - R - Revised Manual (Manual edited to 0010629 Revision 86 & 0010722 Revision 5)**

**December 23, 2011 - S - Revised Manual (Manual edited to 0010629 Revision B & 00107 Revision B)**

**April 27, 2012 - T - Revised Manual (Manual edited to 0010629 Revision E & 010722 Revi**

**July 24, 2012 - U - Revised Manual (Manual edited to 0010629 Revision E & 0010722 Rev**

**November 2, 2012 - V - Revised Manual (Manual edited to 0010629 Revision E & 001072 Revision D)**

**March 6, 2013 - W - Revised Manual (Manual edited to 0010629 Revision E & 0010722 Re**

**June 6, 2013 - X - Revised Manual (Manual edited to 0010629 Revision E & 0010722 Revi**

**September 1, 2013 - Y - Revised Manual (Manual edited to 0010629 Revision L & 001072 Revision D)**

**April 3, 2015 - Z - Revised Manual (Manual edited to 0010629 Revision L & 0010722 Revision D)**

**June 1, 2015 - AA - Revised Manual (Manual edited to 0010629 Revision AE & 0010722 Revision Z)**

**September 1, 2015 - AB - Revised Manual (Manual edited to 0010629 Revision AE & 0010722 Revision AC) (Revision 4)**

**December 14, 2015 - AC - Revised Manual (Manual edited to 0010629 Revision AE & 0010722 Revision AC) (Revision 3)**

**March 14, 2016 - AD - Revised Manual (Manual edited to 0010629 Revision AE & 001072 Revision AC) (Revision 3)**

**June 7, 2016 - AE - Revised Manual (Manual edited to 0010629 Revision AE & 0010722 Revision AC) (Revision 2)**

**September 14, 2016 - AF - Revised Manual (Manual edited to 0010629 Revision AE & 001 Revision AC) (Revision 2)**

**December 22, 2016 - AG - Revised Manual (Manual edited to 0010629 Revision AE & 00 Revision AI) (Revision 2)**

# REVISION LOG

**March 31, 2017 - AH - Revised Manual (Manual edited to 0010629 Revision AE & 0010722 Revision AI) (Revision 2)**

**June 15, 2017 - AI - Revised Manual (Manual edited to 0010629 Revision AE & 0010722 Revision AK) (Revision 1)**

**September 11, 2017 - AJ - Revised Manual (Manual edited to 0010629 Revision AE & 0010722 Revision AK) (Revision 3)**

**December 15, 2017 - AK - Revised Manual (Manual edited to 0010629 Revision AE & 0010722 Revision AM) (Revision 1)**

**March 9, 2018 - AL - Revised Manual (Manual edited to 0010629 Revision AE & 0010722 Revision AO) (Revision 2)**

**June 22, 2018 - AM - Revised Manual (Manual edited to 0010629 Revision AE & 0010722 Revision AO) (Revision 2)**

**September 1, 2018 - AN - Revised Manual (Manual edited to 0010629 Revision AE & 0010722 Revision AS) (Revision 1)**

**December 18, 2018 - AO - Revised Manual (Manual edited to 0010629 Revision AE & 0010722 Revision AS) (Revision 3)**

**April 17, 2020 - AP - Revised Manual (Manual edited to 0010629 Revision AE & 0010722 Revision AS) (Revision 3)**

# GENERAL INFORMATION

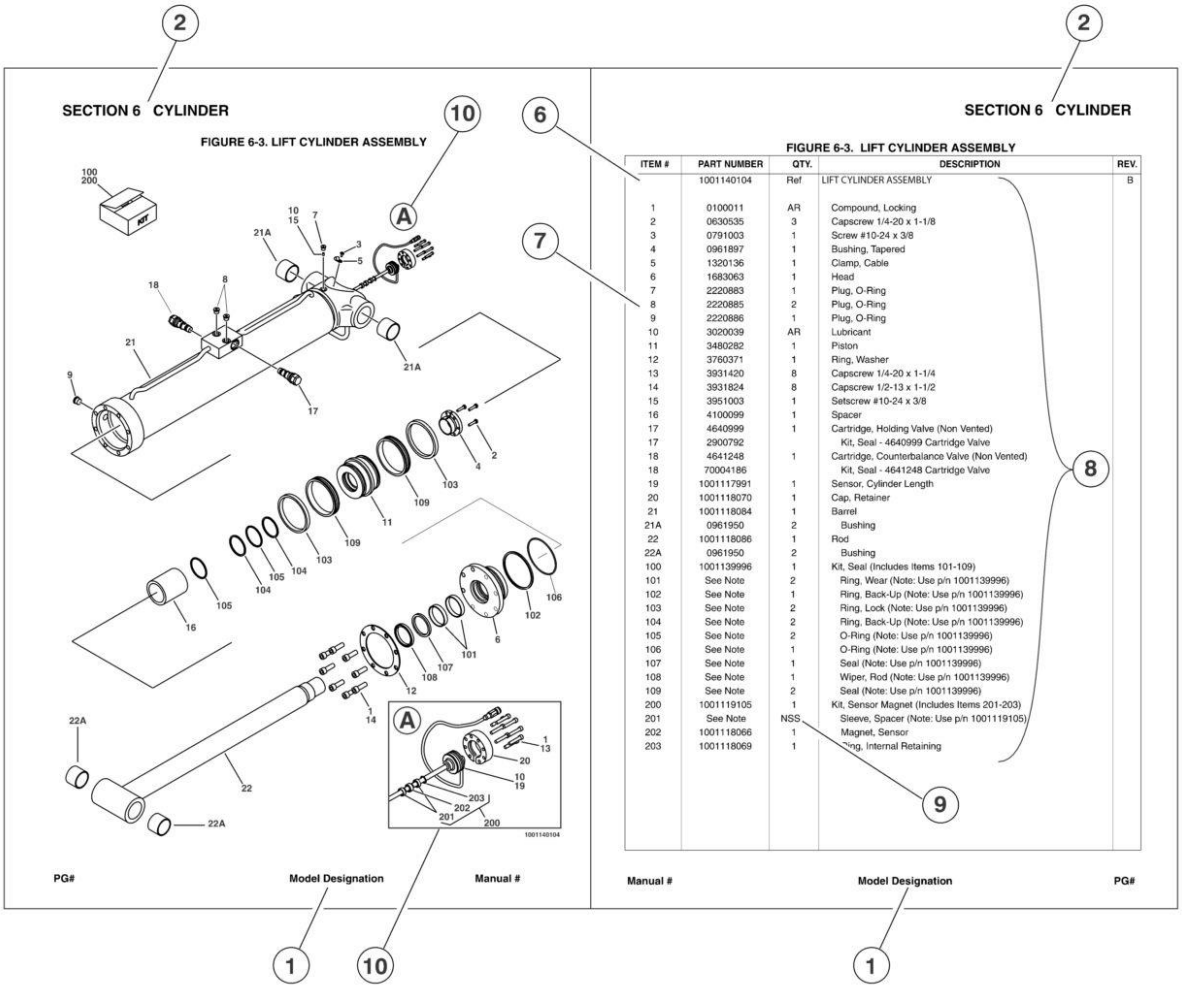


**1) MACHINE IDENTIFICATION**
Machines are identified by model and in some cases a combination of models, serial number (SN) or regional standard (i.e ANSI, CE,CSA). Components may also be identified by SN or manufacturer. common components that may be identified by these characteristics are engines and hydraulic components.

**2) PARTS MANUAL ORGANIZATION**
Product information in this manual is organized under section titles. Frame, Cylinder, Hydraulic and Electrical are a few examples. Each section is organized by figure and page number. The information within the Figure is then organized by item number, part number, description and corresponding illustration (s).

**3) TABLE OF CONTENTS**
A table of contents is found toward the beginning of the manual. Figure number, description and page number are provided for quick reference to the page containing the related information.

**4) RECOMMENDED SPARE PARTS**
The Recommended Spare Parts, located near the end of the manual, referance most frequently used maintenance parts.

**5) PART NUMBER INDEX**
A numerical index listing all part numbers and the corresponding page number(s) appears at the back of the manual.

# GENERAL INFORMATION

**6) NON-SERVICED PARTS**
In some instances, it is necessary to display non-serviced parts, assemblies or installations. In the case of assemblies and installations there will be a Ref in the Qty column. In case of parts that are not available for service within assemblies or components, there will be a NSS (Not Sold Separately) or NLA (No Longer Available) listed in the Qty. column of the manual.

**7) PARTS LIST ITEM NUMBERS**
Numbers shown in the item# column correspond to numbers used in the associated illustration (s). Item numbers which are missing from the sequence in the parts list are not used on that page

**8) INDENTED PARTS DESCRIPTION**
An indented part description is included in the item under which it is indented.

**9) ABB REVIATION AND SYMBOLS**

AC ..... Alternating Current
ADE. ..... .Advanced Design Electronics
ANSI ..... .American National Standards Institute
AR.. ..... ..As Required
ASSY ..... Assembly
AUX... ..... ..Auxiliary
AWG ..... ..American WireGauge
B/M. ..... Bill of Material
CE.. ..... ..European Conformity
CCW ..... .Counter Clockwise
cm. ..... Centimeter
CW ..... .Clockwise
CSA. ..... ..Canadian Standards Association
CYL... ..... .Cylinder
DIA. ..... .Diameter
DC ..... .Direct Current
EMS ..... Emergency Stop
ENG ..... .Engine
FT(ft).. ..... .Feet
GA(Ga).. ..... .Gauge
HYD ..... Hydraulic
Hz.. ..... Hertz
ID. ..... .Inside Diameter
in... ..... .inches
ISO ..... ....International Organization for Standards
JIC ..... .Joint Industry Council
KG ..... .Kilogram
L.. ..... .Liter
LB ..... ..Pounds

LCD ..... Liquid Crystal Display
LED ..... Light Emitting Diodes
LH... ..... Left Hand
LSS ..... .Load Sensing System
M(m)... ..... Metric/Meter
MM (mm) ..... .....Milimeter
mA. ..... Miliamps
NLA..... .....No Longer Available
NPT ..... National Pipe Threads
NSS .....Not Sold Separately
OD. ..... ..Outside Diameter
ORB ..... O-Ring Boss
ORFS ..... O-Ring Face Seal
OZ (oz). ..... .Ounces
PG ..... .Page
P/N. ..... ..Part Number
qt. ..... ..Quarts
QTY. ..... .Quantity
REF ..... .Reference
REV ..... ..Revision Level
RH... ..... Right Hand
SAE..... Society of Automotive Engineers
SN.. ..... ..Serial Number
SPEC(S).....Specifications
T/T. .....Turntable
UGM ..... .....Universal Ground Module
V. ..... ..Volts
W... ..... Watts
#... ..... Number

**10) ILLUSTRATION REFERANCE LETTERS**
When necessary, illustrations may contain referance letters that are intended to track information (i. e. hoses, harnesses) from one point to another or to track visual enlargement of components to show details that may be located in another area on the illustration.

*Note: Due to continuous product improvements, JLG Industries, Inc. reserves the right to make specification changes without prior notification. Contact JLG Industries, Inc. for updated information.*

# TABLE OF CONTENTS


SECTION 1 - FRAME ..... 13

FIGURE 1-1. 2WD FRONT AXLE AND STEERING INSTALLATIONS ..... 14
FIGURE 1-2. 4WD FRONT AXLE AND STEERING INSTALLATIONS ..... 18
FIGURE 1-3. 4WS REAR STEERING INSTALLATIONS ..... 22
FIGURE 1-4. TIRE AND WHEEL DRIVE INSTALLATIONS ..... 24
FIGURE 1-5. DRIVE HUB ASSEMBLY ..... 28
FIGURE 1-6. DRIVE MOTOR ASSEMBLY (USA BUILT MACHINES) (ORIGINAL EQUIPMENT) (SN 0300087000 through 0300098765) ..... 32
FIGURE 1-7. DRIVE MOTOR ASSEMBLY (USA BUILT MACHINES AND CHINA BUILT MACHINES) (SERVICE REPLACEMENT) (SN 0300098766 through 0300177361, SN B300000100 through B300005764) ..... 36
FIGURE 1-8. DRIVE VALVES AND SHIELDS INSTALLATION (FRAME MOUNTED) ..... 38
FIGURE 1-9. TOW PACKAGE INSTALLATION (OPTIONAL) ..... 42

SECTION 2 - TURNTABLE ..... 45

FIGURE 2-1. CONTROL VALVES INSTALLATIONS ..... 46
FIGURE 2-2. MAIN VALVE ASSEMBLY (SN 0300087000 through 0300177361, SN B300000100 through B300001392) ..... 50
FIGURE 2-3. MAIN VALVE ASSEMBLY (SN B300001393 through B300005764) ..... 54
FIGURE 2-4. ACCESSORY VALVE ASSEMBLIES (SN 0300087000 through 0300177361, SN B300000100 through B300001392) ..... 58
FIGURE 2-5. SWING DRIVE, TURNTABLE BEARING AND LOCK INSTALLATIONS ..... 60
FIGURE 2-6. SWING HUB ASSEMBLY (USA BUILT MACHINES) (SN 0300087000 through 0300137452) ..... 64
FIGURE 2-7. SWING MOTOR ASSEMBLY (WHITE ROLLER STATOR) (USA BUILT MACHINES) (SN 0300087000 through 0300137452) ..... 66
FIGURE 2-8. SWING MOTOR ASSEMBLY (PARKER) (USA BUILT MACHINES) (SN 0300087000 through 0300137452) ..... 68
FIGURE 2-9. SWING MOTOR/BRAKE/HUB ASSEMBLY (PARKER/FAIRFIELD) (USA BUILT MACHINES AND CHINA BUILT MACHINES) (SN 0300137453 through 0300177361, SN B300000100 through B300004344) ..... 70
FIGURE 2-10. SWING MOTOR/BRAKE/HUB ASSEMBLY (PARKER/FAIRFIELD) (CHINA BUILT MACHINES) (SN B300004345 through B300005764) ..... 74
FIGURE 2-11. CATERPILLAR ENGINE INSTALLATION (USA BUILT MACHINES) (SN 0300087000 through 0300140368) ..... 78
FIGURE 2-12. CATERPILLAR ENGINE INSTALLATION (USA BUILT MACHINES AND CHINA BUILT MACHINES) (SN 0300140369 through 0300177361, SN B300000100 through B300005764) ..... 86
FIGURE 2-13. DEUTZ ENGINE INSTALLATION ..... 94
FIGURE 2-14. FORD ENGINE INSTALLATION ..... 106
FIGURE 2-15. GM ENGINE INSTALLATION (USA BUILT MACHINES) (SN 0300087000 through 0300139353) ..... 112
FIGURE 2-16. GM ENGINE INSTALLATION (USA BUILT MACHINES) (SN 0300139354 through 0300177361) ..... 120
FIGURE 2-17. PISTON PUMP ASSEMBLY ..... 126
FIGURE 2-18. GEAR PUMP ASSEMBLY ..... 132
FIGURE 2-19. TANK INSTALLATIONS ..... 134
FIGURE 2-20. ROTARY COUPLING INSTALLATIONS (USA BUILT MACHINES) (SN 0300087000 through 0300138648) ..... 138
FIGURE 2-21. ROTARY COUPLING INSTALLATIONS (USA BUILT MACHINES AND CHINA BUILT MACHINES) (SN 0300138649 through 0300177361, SN B300000100 through B300005764) ..... 142
FIGURE 2-22. GROUND CONTROL BOX ASSEMBLY (WITHOUT UGM) ..... 146
FIGURE 2-23. GROUND CONTROL BOX ASSEMBLY (WITH UGM) (SN 0300087000 through 0300177361, SN B300000100 through B300001392) ..... 150
FIGURE 2-24. GROUND CONTROL BOX ASSEMBLY (WITH UGM) (SN B300001393 through B300001985) ..... 154
FIGURE 2-25. GROUND CONTROL BOX ASSEMBLY (WITH UGM) (SN B300001986 through B300005764) ..... 158
FIGURE 2-26. ELECTRICAL OPTIONS INSTALLATIONS (TURNTABLE MOUNTED) ..... 162
FIGURE 2-27. ENGINE TRAY JACK INSTALLATIONS (OPTIONAL) ..... 168
FIGURE 2-28. HOODS INSTALLATIONS (USA BUILT MACHINES) (SN 0300087000 through 0300089988) ..... 170
FIGURE 2-29. HOODS INSTALLATIONS (USA BUILT MACHINES AND CHINA BUILT MACHINES) (SN 0300089989 through 0300177361, SN B300000100 through B300005764) ..... 174
FIGURE 2-30. 2500W GENERATOR INSTALLATION - CATERPILLAR MACHINES (OPTIONAL) ..... 180
FIGURE 2-31. 2500W GENERATOR INSTALLATION - DEUTZ MACHINES (OPTIONAL) ..... 184
FIGURE 2-32. 2500W GENERATOR INSTALLATION - FORD MACHINES (OPTIONAL) ..... 188
FIGURE 2-33. 2500W GENERATOR INSTALLATION - GM MACHINES (OPTIONAL) ..... 192
FIGURE 2-34. 4000W GENERATOR INSTALLATION - DEUTZ D2011 ENGINES ..... 196
FIGURE 2-35. 7500W SKYPOWER GENERATOR INSTALLATION - CATERPILLAR AND DEUTZ ENGINES ..... 200
FIGURE 2-36. 7500W SKYPOWER GENERATOR INSTALLATION - FORD ENGINES ..... 208
FIGURE 2-37. 7500W SKYPOWER GENERATOR INSTALLATION - GM ENGINES ..... 212
FIGURE 2-38. WHITE NOISE ALARM INSTALLATION ..... 218

SECTION 3 - BOOM ..... 221

FIGURE 3-1. USA BUILT MACHINES/BOOMS AND CYLINDERS INSTALLATION - 600A ..... 222

# TABLE OF CONTENTS


FIGURE 3-2. USA BUILT MACHINES/BOOMS AND CYLINDERS INSTALLATION - 600AJ....226
FIGURE 3-3. CHINA BUILT MACHINES/BOOMS AND CYLINDERS INSTALLATION - 600A....232
FIGURE 3-4. CHINA BUILT MACHINES/BOOMS AND CYLINDERS INSTALLATION - 600AJ....236
FIGURE 3-5. TOWER BOOM ASSEMBLY....242
FIGURE 3-6. MAIN BOOM ASSEMBLY....246
FIGURE 3-7. ROTATOR ASSEMBLIES....252
FIGURE 3-8. PLATFORM SUPPORT INSTALLATION - WITH LSS....254
FIGURE 3-9. VALVES AND SWITCHES INSTALLATION (BOOM MOUNTED)....258

SECTION 4 - PLATFORM....263

FIGURE 4-1. PLATFORM ASSEMBLIES....264
FIGURE 4-2. PLATFORM COMPONENTS INSTALLATION (FALL ARREST PLATFORM)....270
FIGURE 4-3. PLATFORM CONSOLE ASSEMBLY (SN 0300087000 through 0300177361, SN B300000100 through B300001392)....272
FIGURE 4-4. PLATFORM CONSOLE ASSEMBLY (WITHOUT SKYGUARD) (SN B300001393 through B300005764, Excluding B300005620)....278
FIGURE 4-5. PLATFORM CONSOLE ASSEMBLY (WITH SKYGUARD) (SN B300001393 through B300005764, Excluding B300005620)....282
FIGURE 4-6. CONTROLLER ASSEMBLY (LIFT AND SWING)....286
FIGURE 4-7. CONTROLLER ASSEMBLY (LIFT AND SWING)....288
FIGURE 4-8. CONTROLLER ASSEMBLY (LIFT AND SWING)....290
FIGURE 4-9. CONTROLLER ASSEMBLY (DRIVE AND STEER)....294
FIGURE 4-10. CONTROLLER ASSEMBLY (DRIVE AND STEER)....298
FIGURE 4-11. CONTROLLER ASSEMBLY (DRIVE AND STEER)....300
FIGURE 4-12. SKYEYE INSTALLATION....302
FIGURE 4-13. SKYGUARD SYSTEM INSTALLATION....304
FIGURE 4-14. SKYLINE INSTALLATION....306
FIGURE 4-15. CROSS RAIL INSTALLATION....308
FIGURE 4-16. PLATFORM PADDING INSTALLATION (30IN/76CM DEPTH PLATFORMS) (OPTIONAL)....310
FIGURE 4-17. SOFT TOUCH SYSTEM INSTALLATION (36IN/91.5CM DEPTH PLATFORMS) (OPTIONAL)....312
FIGURE 4-18. SKYGLAZIER INSTALLATION (USA MACHINES BUILT YEARS 2005-2007)....316
FIGURE 4-19. SKYGLAZIER INSTALLATION (USA MACHINES BUILT YEARS 2008-2013 AND CHINA BUILT MACHINES BUILT 2008-2019)....318
FIGURE 4-20. SKYWELDER/SKYCUTTER COMBO INSTALLATION (60HZ)....322
FIGURE 4-21. SKYWELDER INSTALLATION (50HZ)....326
FIGURE 4-22. SKYWELDER INSTALLATION (60HZ)....328
FIGURE 4-23. SKYWELDER PREP PACKAGE....330
FIGURE 4-24. WELDER ASSEMBLY....332
FIGURE 4-25. SKYWELDER LOCKING BRACKET INSTALLATION....334
FIGURE 4-26. SKYCUTTER INSTALLATION....336
FIGURE 4-27. PLASMA CUTTER ASSEMBLY....338
FIGURE 4-28. PIPE RACKS INSTALLATION....340

SECTION 5 - CYLINDER....343

FIGURE 5-1. AXLE LOCKOUT CYLINDER ASSEMBLY....344
FIGURE 5-2. LEVEL CYLINDER ASSEMBLY - PLATFORM SLAVE....346
FIGURE 5-3. LEVEL CYLINDER ASSEMBLY - PLATFORM SLAVE (600A) (SN B300002697 through B300005764)....350
FIGURE 5-4. LEVEL CYLINDER ASSEMBLY - PLATFORM SLAVE (600A) (SERVICE REPLACEMENT)....352
FIGURE 5-5. LEVEL CYLINDER ASSEMBLY - PLATFORM SLAVE (600AJ) (SN B300002697 through B300002948)....354
FIGURE 5-6. LEVEL CYLINDER ASSEMBLY - PLATFORM SLAVE (600AJ) (SN B300002949 through B300005764)....356
FIGURE 5-7. LEVEL CYLINDER ASSEMBLY - PLATFORM SLAVE (600AJ WITH ARCTIC PACKAGE) (SERVICE REPLACEMENT)....358
FIGURE 5-8. LEVEL CYLINDER ASSEMBLY - UPRIGHT (SN 0300087000 through 0300177361, SN B300000100 through B300002477)....360
FIGURE 5-9. LEVEL CYLINDER ASSEMBLY- UPRIGHT (SN B300002478 through B300005764)....362
FIGURE 5-10. LIFT CYLINDER ASSEMBLY - ARTICULATING JIB - 600AJ (ORIGINAL EQUIPMENT) (SN 0300087000 through 0300177361, SN B300000100 through B300002658)....364
FIGURE 5-11. LIFT CYLINDER ASSEMBLY - ARTICULATING JIB - 600AJ (ORIGINAL EQUIPMENT) (SN B300002659 through B300005764)....366
FIGURE 5-12. LIFT CYLINDER ASSEMBLY - ARTICULATING JIB - 600AJ (SERVICE REPLACEMENT) (SN 0300087000 through 0300177361)....368
FIGURE 5-13. LIFT CYLINDER ASSEMBLY - ARTICULATING JIB - 600AJ (SERVICE REPLACEMENT) (SN 0300087000 through 0300177361)....370
FIGURE 5-14. LIFT CYLINDER ASSEMBLY - MAIN BOOM (SN 0300087000 through 0300177361, SN B300000100 through B300002477)....372

FIGURE 5-15. LIFT CYLINDER ASSEMBLY - MAIN BOOM (SN B300002478 through B300005764) ..... 374
FIGURE 5-16. LIFT CYLINDER ASSEMBLY - TOWER BOOM (SN 0300087000 through 0300177361, SN B300000100 through B300002804) ..... 376
FIGURE 5-17. LIFT CYLINDER ASSEMBLY - TOWER BOOM (SN B300002805 through B300005764) ..... 378
FIGURE 5-18. MASTER CYLINDER ASSEMBLY ..... 380
FIGURE 5-19. MASTER CYLINDER ASSEMBLY - 600A ..... 384
FIGURE 5-20. MASTER CYLINDER ASSEMBLY - 600AJ ..... 386
FIGURE 5-21. STEER CYLINDER ASSEMBLY ..... 388
FIGURE 5-22. STEER CYLINDER ASSEMBLY ..... 390
FIGURE 5-23. TELESCOPE CYLINDER ASSEMBLY - MAIN BOOM (600A & 600AJ) (SN 0300087000 through 0300177361, SN B300000100 through B300002835) ..... 392
FIGURE 5-24. TELESCOPE CYLINDER ASSEMBLY - MAIN BOOM (600A & 600AJ) (SN B300002836 through B300005764) 394
FIGURE 5-25. TELESCOPE CYLINDER ASSEMBLY - MAIN BOOM (600AJ) (SN B300002836 through B300005764) ..... 396
FIGURE 5-26. TELESCOPE CYLINDER ASSEMBLY - TOWER BOOM (SN 0300087000 through 0300177361, SN B300000100 through B300002477) ..... 398
FIGURE 5-27. TELESCOPE CYLINDER ASSEMBLY - TOWER BOOM (SN B300002478 through B300005764) ..... 400

SECTION 6 - HYDRAULIC ..... 403

FIGURE 6-1. DRIVE HYDRAULIC DIAGRAM - 2WD/2WS ..... 404
FIGURE 6-2. DRIVE HYDRAULIC DIAGRAM - 4WD/2WS ..... 406
FIGURE 6-3. HYDRAULIC DIAGRAM - OSCILLATING AXLE ..... 410
FIGURE 6-4. HYDRAULIC DIAGRAM - STANDARD (SN 0300087000 through 0300137452) ..... 412
FIGURE 6-5. HYDRAULIC DIAGRAM - STANDARD (SN 0300137453 through 0300177361, SN B300000100 through B300005764) ..... 416
FIGURE 6-6. HYDRAULIC DIAGRAM LIST ..... 424

SECTION 7 - ELECTRICAL ..... 427

FIGURE 7-1. ELECTRICAL DIAGRAM LIST ..... 428
FIGURE 7-2. HARNESS COMPONENTS INSTALLATION (WITHOUT UGM) ..... 430
FIGURE 7-3. HARNESS COMPONENTS INSTALLATION (WITH UGM) (SN 0300087000 through 0300177361, SN B300000100 through B300001392) ..... 450
FIGURE 7-4. HARNESS COMPONENTS INSTALLATION (WITH UGM) (SN B300001393 through B300005764) ..... 470
FIGURE 7-5. SKYEYE INTERMEDIATE HARNESS ..... 484
FIGURE 7-6. SKYEYE EMITTER HARNESS ..... 486
FIGURE 7-7. SKYEYE RECEIVER HARNESS ..... 488
FIGURE 7-8. SKYLINE HARNESS ..... 490

SECTION 8 - DECALS ..... 493

FIGURE 8-1. DECAL INSTALLATION (ANSI SPEC) ..... 494
FIGURE 8-2. DECAL INSTALLATION (ANSI EXPORT SPEC) ..... 498
FIGURE 8-3. DECAL INSTALLATION (AUSTRALIAN AND CE SPECS) ..... 508

SECTION 9 - RECOMMENDED SERVICE PARTS STOCK ..... 513

FIGURE 9-1. MODEL 600A/600AJ STANDARD PARTS ..... 514
FIGURE 9-2. MODEL 600A/600AJ VARIABLE PARTS ..... 516

SECTION 10 - SPECIAL OPTIONS ..... 517

FIGURE 10-1. SPECIAL OPTIONS ..... 518

PART NUMBER INDEX ..... 525

# SECTION 1 - FRAME

## FIGURE 1-1. 2WD FRONT AXLE AND STEERING INSTALLATIONS

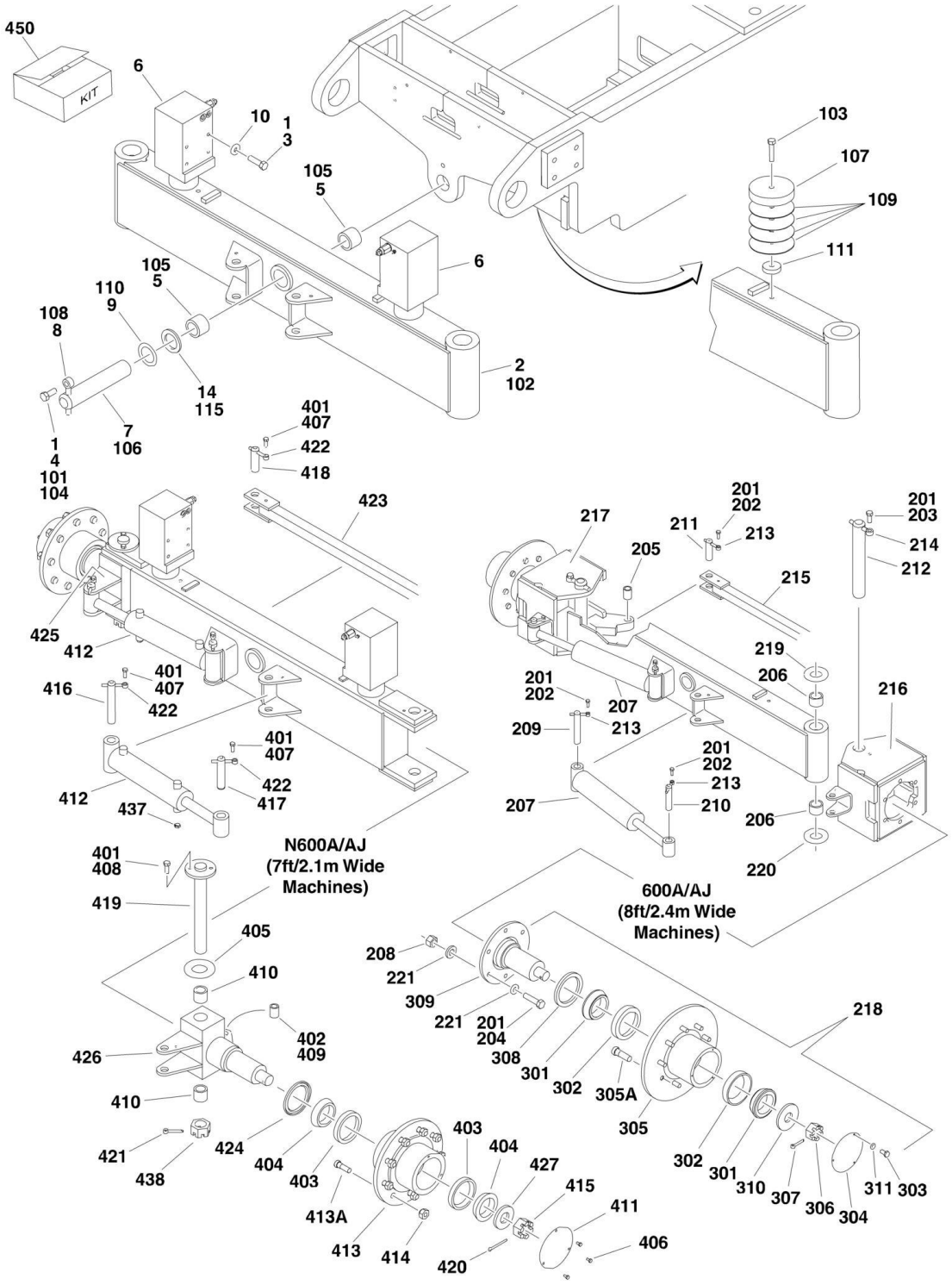

## FIGURE 1-1. 2WD FRONT AXLE AND STEERING INSTALLATIONS

| ITEM | PART NUMBER | QTY | DESCRIPTION | REV |
|---|---|---|---|---|
| | | Ref | **AXLE INSTALLATIONS - OSCILLATING** | |
| | 0273954 | Ref | **8ft/2.4m Wide Machines without Tow Package** | E |
| | 0274234 | Ref | **8ft/2.4m Wide Machines with Tow Package** | B |
| | 0274922 | Ref | **8ft/2.4m Wide Machines without Tow Package (With Turf Tire)** | B |
| | 0274047 | Ref | **7ft/2.1m Wide Machines without Tow Package** | B |
| | 0274256 | Ref | **7ft/2.1m Wide Machines with Tow Package** | B |
| 1 | 0100011 | AR | Compound, Locking | |
| 2 | | Ref | Axle Weldment Options: | |
| 2 | 0280167 | 1 | 8 ft/2.4m Wide Machine without Tow Package | |
| 2 | 0280183 | 1 | 8 ft/2.4m Wide Machine with Tow Package | |
| 2 | 0280209 | 1 | 8 ft/2.4m Wide Machine with Tow Package (With Turf Tire) | |
| 2 | 0280171 | 1 | 7 ft/2.1m Wide Machine without Tow Package | |
| 2 | 0280185 | 1 | 7 ft/2.1m Wide Machine with Tow Package | |
| 3 | 0641814 | 8 | Bolt 1/2in-13NC x 1-3/4in | |
| 4 | 0642012 | 1 | Bolt 5/8in-11NC x 1-1/2in | |
| 5 | 0961950 | 2 | Bushing | |
| 6 | | Ref | Lockout Cylinder Assembly Options (See CYLINDER SECTION for Breakdown): | |
| 6 | 1684280 | NLA | Lockout Cylinder Assembly (Use p/n 1001167359) **(SN 0300087000 through 0300089731)** | |
| 6 | 1684465 | 2 | Lockout Cylinder Assembly **(SN 0300089732 through 0300177361)** | |
| 7 | 3422592 | 1 | Pin, Pivot | |
| 8 | 3841258 | 1 | Keeper, Pin | |
| 9 | 4740158 | 1 | Thrustwasher | |
| 10 | 4891800 | 8 | Flatwasher 1/2in Hardened | |
| 14 | 4071101 | AR | Shim | |
| | | Ref | **AXLE INSTALLATIONS - FIXED** | |
| | 0273959 | Ref | **8ft/2.4m Wide Machines (USA Built Machines)** | D |
| | 0273959 | Ref | **8ft/2.4m Wide Machines (China Built Machines)** | D |
| | 0274054 | Ref | **7ft/2.1m Wide Machines** | B |
| 101 | 0100011 | AR | Compound, Locking | |
| 102 | | Ref | Axle Weldment Options: | |
| 102 | 0280167 | 1 | 8ft/2.4m Wide Machines | |
| 102 | 0280171 | 1 | 7ft/2.1 Wide Machines | |
| 103 | | Ref | Bolt 1/2in-13NC Options: | |
| 103 | 0641818 | 2 | 8ft/2.4m Wide Machines (2-1/4in Length) | |
| 103 | 0641816 | 2 | 7ft/2.1 Wide Machines (2in Length) | |
| 104 | 0642012 | 1 | Bolt 5/8in-11NC x 1-1/2in | |
| 105 | 0961950 | 2 | Bushing | |
| 106 | 3422592 | 1 | Pin, Pivot | |
| 107 | 3539877 | 2 | Plate, Stop | |
| 108 | 3841258 | 1 | Keeper, Pin | |
| 109 | | Ref | Shim Options: | |
| 109 | 4070944 | 12 | Shim (.06) for 8ft/2.4m Wide Machines (USA Built Machines) | |
| 109 | 3539878 | 2 | Shim (.38) for 8ft/2.4m Wide Machines (China Built Machines) | |
| 109 | 4070945 | 2 | Shim (.25) for 7ft/2.1 Wide Machines | |
| 110 | 4740158 | 1 | Thrustwasher | |
| 111 | | Ref | Spacer Options: | |
| 111 | 4071101 | 2 | 8ft/2.4m Wide Machines | |

# SECTION 1 - FRAME

| ITEM | PART NUMBER | QTY | DESCRIPTION | REV |
|---|---|---|---|---|
| 111 | 4740543 | 2 | 7ft/2.1 Wide Machines | |
| 115 | 4071101 | AR | Shim | |
| | | Ref | **STEERING INSTALLATION (8FT/2.4M WIDTH MACHINES)** | |
| | 0274132 | Ref | **2WD/2WS without Tow Bar** | D |
| | 0274801 | Ref | **2WD/2WS with Tow Bar** | B |
| 201 | 0100011 | AR | Compound, Locking | |
| 202 | 0641608 | 6 | Bolt 3/8in-16NC x 1in | |
| 203 | 0642012 | 2 | Bolt 5/8in-11NC x 1-1/2in | |
| 204 | 0682020 | 12 | Bolt 5/8in-11NC x 2-1/2in (Grade 8) | |
| 205 | 0962005 | 2 | Bushing | |
| 206 | 0962131 | 4 | Bushing | |
| 207 | | Ref | Steer Cylinder Assembly Options (See CYLINDER SECTION for Breakdown): | |
| 207 | 1683208 | 2 | Steer Cylinder Assembly **(SN 0300087000 through 0300142624)** | |
| 207 | 1001097242 | 2 | Steer Cylinder Assembly **(SN 0300142625 through 0300177361)** | |
| 208 | 3272001 | 12 | Nut 5/8in-11NC (Grade 8) | |
| 209 | | Ref | Pin Options: | |
| 209 | 3422426 | 2 | Without Tow Bar | |
| 209 | 3422326 | 2 | With Tow Bar | |
| 210 | 3422429 | 2 | Pin | |
| 211 | 3422430 | 2 | Pin | |
| 212 | 3422900 | 2 | Kingpin | |
| 213 | 3841143 | 6 | Keeper | |
| 214 | 3841258 | 2 | Keeper | |
| 215 | 3841285 | 1 | Tie-Rod | |
| 216 | 4130401 | 1 | Spindle (Left Side) | |
| 217 | | Ref | Spindle (Right Side) Options: | |
| 217 | 4130402 | 1 | Without Tow Bar | |
| 217 | 4130412 | 1 | With Tow Bar | |
| 218 | 4130410 | 2 | Hub Assembly (See Items 301-311 for Breakdown) | |
| 219 | 4740256 | 2 | Thrustwasher | |
| 220 | 4740463 | 2 | Thrustwasher | |
| 221 | 4892000 | 24 | Flatwasher 5/8in Hardened | |
| | 4130410 | Ref | **HUB ASSEMBLY (8FT/2.4M WIDTH MACHINES)** | C |
| | | Ref | **Note: Qty is Per Assembly** | |
| 301 | 0440170 | 2 | Cone, Bearing | |
| 302 | 0440171 | 2 | Cup, Bearing | |
| 303 | 0721003 | 3 | Screw #10-24NC x 3/8in | |
| 304 | 1120304 | 2 | Cap, Hub | |
| 305 | 2780271 | 1 | Hub | |
| 305A | 0630490 | 9 | Stud, Wheel | |
| 306 | 3323403 | 1 | Nut, Slotted 1-1/2in-12NF | |
| 307 | 3451010 | 1 | Pin, Cotter 5/16in x 2-1/2in | |
| 308 | 3960343 | 1 | Seal | |
| 309 | 4130409 | 1 | Adapter, Spindle | |
| 310 | 4740283 | 1 | Flatwasher, Hardened | |
| 311 | 4761000 | 3 | Lockwasher #10 | |
| 312 | 3020017 | AR | Lubricant (Not Shown) | |
| | | Ref | **STEERING INSTALLATION (7FT/2.1M WIDTH MACHINES)** | |
| | 0274257 | Ref | **2WS with 7ft/2.1m Wide Frame with Tow Package** | C |

| ITEM | PART NUMBER | QTY | DESCRIPTION | REV |
|---|---|---|---|---|
| | 0274062 | Ref | **4WS with 7ft/2.1m Width Frame without Tow Package** | I |
| 401 | 0100011 | AR | Compound, Locking | |
| 402 | 0100063 | AR | Loctite # RC609 | |
| 403 | 0440018 | 4 | Cup, Bearing | |
| 404 | 0440019 | 4 | Cone, Bearing | |
| 405 | 0440161 | 2 | Thrustwasher | |
| 406 | 0641404 | 6 | Bolt 1/4in-20NC x 1/2in | |
| 407 | 0641608 | 4 | Bolt 3/8in-16NC x 1in | |
| 408 | 0681608 | 4 | Bolt 3/8in-16NC x 1in (Grade 8) | |
| 409 | 0962005 | 4 | Bushing | |
| 410 | 0962272 | 4 | Bushing | |
| 411 | 1120460 | 2 | Cap, Hub | |
| 412 | 1684418 | 2 | Steer Cylinder Assembly (See CYLINDER SECTION for Breakdown) | |
| 413 | | Ref | Hub Options: | |
| 413 | 2780276 | 2 | Without Tow Package | |
| 413 | 4130413 | 1 | With Tow Package (Left Side) | |
| 413 | 4130415 | 1 | With Tow Package (Right Side) | |
| 413A | 0630490 | 18 | Stud, Wheel (9 Per Hub) | |
| 414 | 3300106 | 18 | Nut, Wheel | |
| 415 | 3323403 | 2 | Nut, Slotted 1-1/2in-12NF | |
| 416 | 3422426 | 2 | Pin | |
| 417 | | Ref | Pin Options: | |
| 417 | 3422429 | 2 | Without Tow Package | |
| 417 | 3422429 | 1 | With Tow Package | |
| 417 | 3422427 | 1 | With Tow Package | |
| 418 | 3422430 | 2 | Pin | |
| 419 | 3423175 | 2 | Kingpin | |
| 420 | 3450810 | 2 | Pin, Cotter 1/4in x 2-1/2in | |
| 421 | 3451010 | 2 | Pin, Cotter 5/16in x 2-1/2in | |
| 422 | 3841143 | 6 | Keeper | |
| 423 | 3841263 | 1 | Tie-Rod | |
| 424 | 3960098 | 2 | Seal | |
| 425 | 4130413 | 1 | Spindle (Right Side) | |
| 426 | 4130414 | 1 | Spindle (Left Side) | |
| 427 | 4740016 | 2 | Flatwasher, Hardened | |
| 437 | 2220237 | 2 | Plug | |
| 438 | 3313403 | 2 | Nut, Slotted 1-1/2in-6NC | |
| 439 | 4360331 | 1 | Switch, Toggle (Crab Steer) (Not Shown - Located on Platform Console Box) | |
| 440 | 3790012 | 1 | O-Ring, Toggle (Crab Steer) (Not Shown - Located on Platform Console Box) | |
| 450 | 2890245 | 1 | Wheel Bearing Retention Washer Replacement Kit (Includes Items 420 & 427) | |

## FIGURE 1-2. 4WD FRONT AXLE AND STEERING INSTALLATIONS

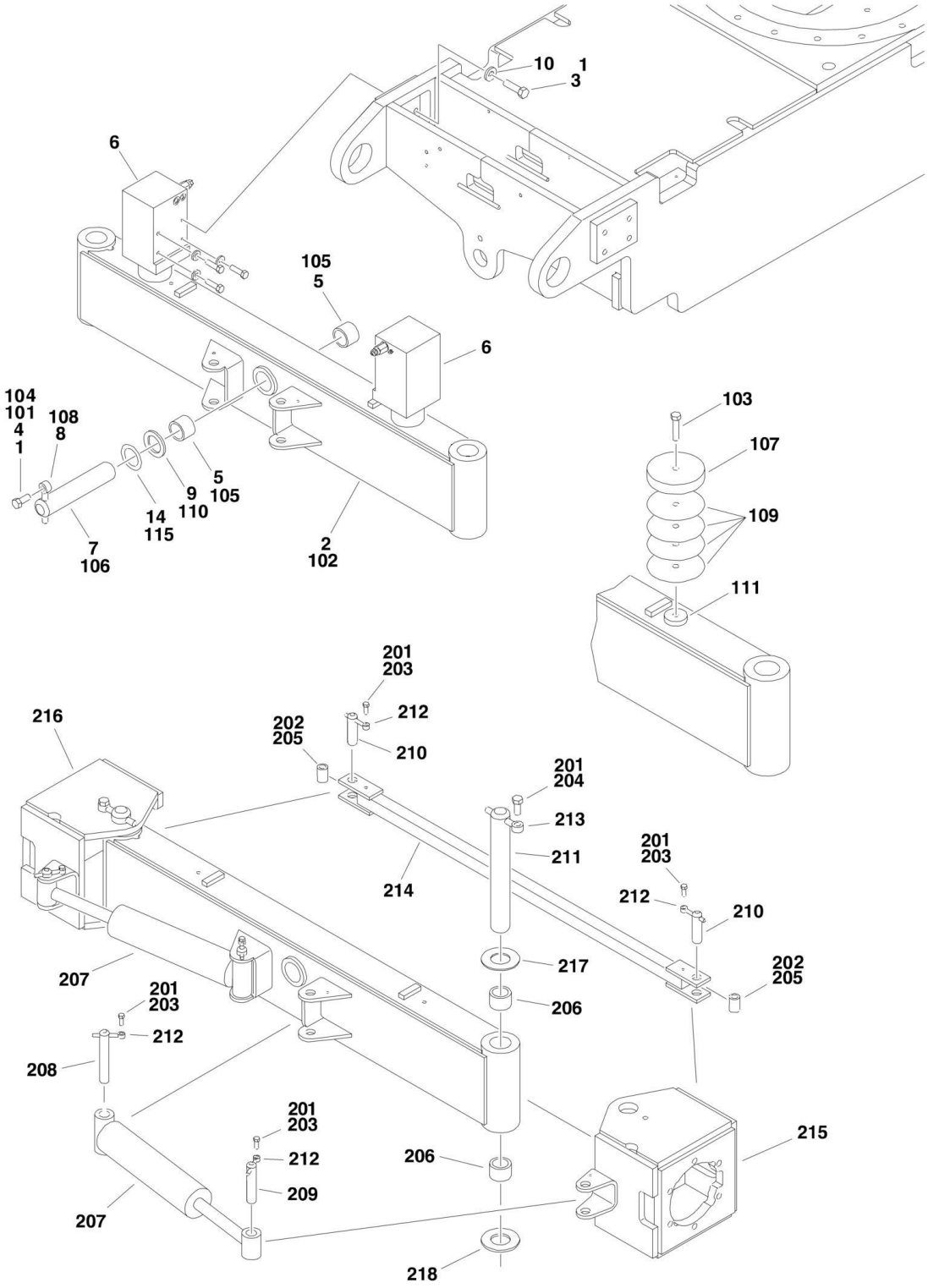

## FIGURE 1-2. 4WD FRONT AXLE AND STEERING INSTALLATIONS

| ITEM | PART NUMBER | QTY | DESCRIPTION | REV |
|---|---|---|---|---|
| | | Ref | **AXLE INSTALLATIONS - OSCILLATING** | |
| | | Ref | **USA Built Machines (SN 0300087000 through 0300177361)** | |
| | 0273954 | Ref | **8ft/2.4m Wide Machines without Tow Package** | E |
| | 0274234 | Ref | **8ft/2.4m Wide Machines with Tow Package** | B |
| | 1001113537 | Ref | **China Built Machines (SN B300000100 through B300005764, Excluding B300005620)** | C |
| 1 | 0100011 | AR | Compound, Locking | |
| 1 | 0100038 | AR | Primer, Locking | |
| 2 | | Ref | Axle Weldment Options: | |
| 2 | | Ref | USA Built Machines: | |
| 2 | 0280167 | 1 | 8 ft/2.4m Wide Machine without Tow Package | |
| 2 | 0280183 | 1 | 8 ft/2.4m Wide Machine with Tow Package | |
| 2 | 1001113539 | 1 | China Built Machines | |
| 3 | 0641814 | 8 | Bolt 1/2in-13NC x 1-3/4in | |
| 4 | 0642012 | 1 | Bolt 5/8in-11NC x 1-1/2in | |
| 5 | 0961950 | 2 | Bushing | |
| 6 | | Ref | Lockout Cylinder Assembly Options (See CYLINDER SECTION for Breakdown): | |
| 6 | 1684280 | NLA | USA Built Machines (Use p/n 1001167359) **(SN 0300087000 through 0300089731)** | |
| 6 | 1684465 | 2 | USA Built Machines **(SN 0300089732 through 0300177361)** | |
| 6 | 1684465 | 2 | China Built Machines **(SN B300000100 through B300005764, Excluding B300005620)** | |
| 7 | 3422592 | 1 | Pin, Pivot | |
| 8 | 3841258 | 1 | Keeper, Pin | |
| 9 | 4740158 | 1 | Thrustwasher | |
| 10 | 4891800 | 8 | Flatwasher 1/2in Hardened | |
| 14 | 4071101 | AR | Shim | |
| | 0273959 | Ref | **AXLE INSTALLATIONS - FIXED** | D |
| | | Ref | **Note: Available Only on USA Built Machines.** | |
| 101 | 0100011 | AR | Compound, Locking | |
| 102 | 0280167 | 1 | Axle Weldment | |
| 103 | 0641818 | 2 | Bolt 1/2in-13NC x 2-1/4in | |
| 104 | 0642012 | 1 | Bolt 5/8in-11NC x 1-1/2in | |
| 105 | 0961950 | 2 | Bushing | |
| 106 | 3422592 | 1 | Pin, Pivot | |
| 107 | 3539877 | 2 | Plate, Stop | |
| 108 | 3841258 | 1 | Keeper, Pin | |
| 109 | 4070944 | 12 | Shim (.06) | |
| 110 | 4740158 | 1 | Thrustwasher | |
| 111 | 3539878 | 2 | Spacer | |
| 115 | 4071101 | AR | Shim | |
| | | Ref | **STEERING INSTALLATION** | |
| | | Ref | **USA Built Machines (SN 0300087000 through 0300177361)** | |
| | 0273940 | Ref | **2WS without Tow Package** | C |
| | 0274220 | Ref | **2WS with Tow Package** | C |
| | 0274121 | Ref | **4WS without Tow Package** | C |
| | 0274220 | Ref | **4WS with Tow Package** | C |
| | | Ref | **China Built Machines (SN B300000100 through B300005764, Excluding B300005620)** | |
| | 1001113654 | Ref | **China Built Machines 2WS** | B |

# SECTION 1 - FRAME

| ITEM | PART NUMBER | QTY | DESCRIPTION | REV |
|---|---|---|---|---|
| | 1001121244 | Ref | **China Built Machines 4WS** | A |
| 201 | 0100011 | AR | Compound, Locking | |
| 202 | 0100063 | AR | Loctite # RC609 | |
| 203 | 0641608 | 6 | Bolt 3/8in-16NC x 1in | |
| 204 | 0642012 | 2 | Bolt 5/8in-11NC x 1-1/2in | |
| 205 | 0962005 | 2 | Bushing | |
| 206 | 0962131 | 4 | Bushing | |
| 207 | | Ref | Steer Cylinder Assembly Options (See CYLINDER SECTION for Breakdown): | |
| 207 | 1683208 | 2 | USA Built Machines **(SN 0300087000 through 030014624)** | |
| 207 | 1001097242 | 2 | USA Built Machines **(SN 030014625 through 0300177361)** | |
| 207 | 1001097242 | 2 | China Built Machines **(SN B300000100 through B300005764, Excluding B300005620)** | |
| 208 | 3422426 | 2 | Pin | |
| 209 | | Ref | Pin Options: | |
| 209 | 3422429 | 2 | Without Tow Package | |
| 209 | 3422429 | 1 | With Tow Package | |
| 209 | 3422427 | 1 | With Tow Package | |
| 210 | 3422430 | 2 | Pin | |
| 211 | 3422900 | 2 | Kingpin | |
| 212 | 3841143 | 6 | Keeper | |
| 213 | 3841258 | 2 | Keeper | |
| 214 | | Ref | Tie-Rod Options: | |
| 214 | 3841285 | 1 | USA Built Machines | |
| 214 | 1001113715 | 1 | China Built Machines | |
| 215 | | Ref | Spindle (Left Side) Options: | |
| 215 | 4130401 | 1 | USA Built Machines | |
| 215 | 1001113655 | 1 | China Built Machines | |
| 216 | | Ref | Spindle (Right Side) Options: | |
| 216 | 4130402 | 1 | USA Built Machines without Tow Package | |
| 216 | 4130412 | 1 | USA Built Machines with Tow Package | |
| 216 | 1001113656 | 1 | China Built Machines | |
| 217 | 4740256 | 2 | Thrustwasher | |
| 218 | 4740463 | 2 | Thrustwasher | |

## FIGURE 1-3. 4WS REAR STEERING INSTALLATIONS

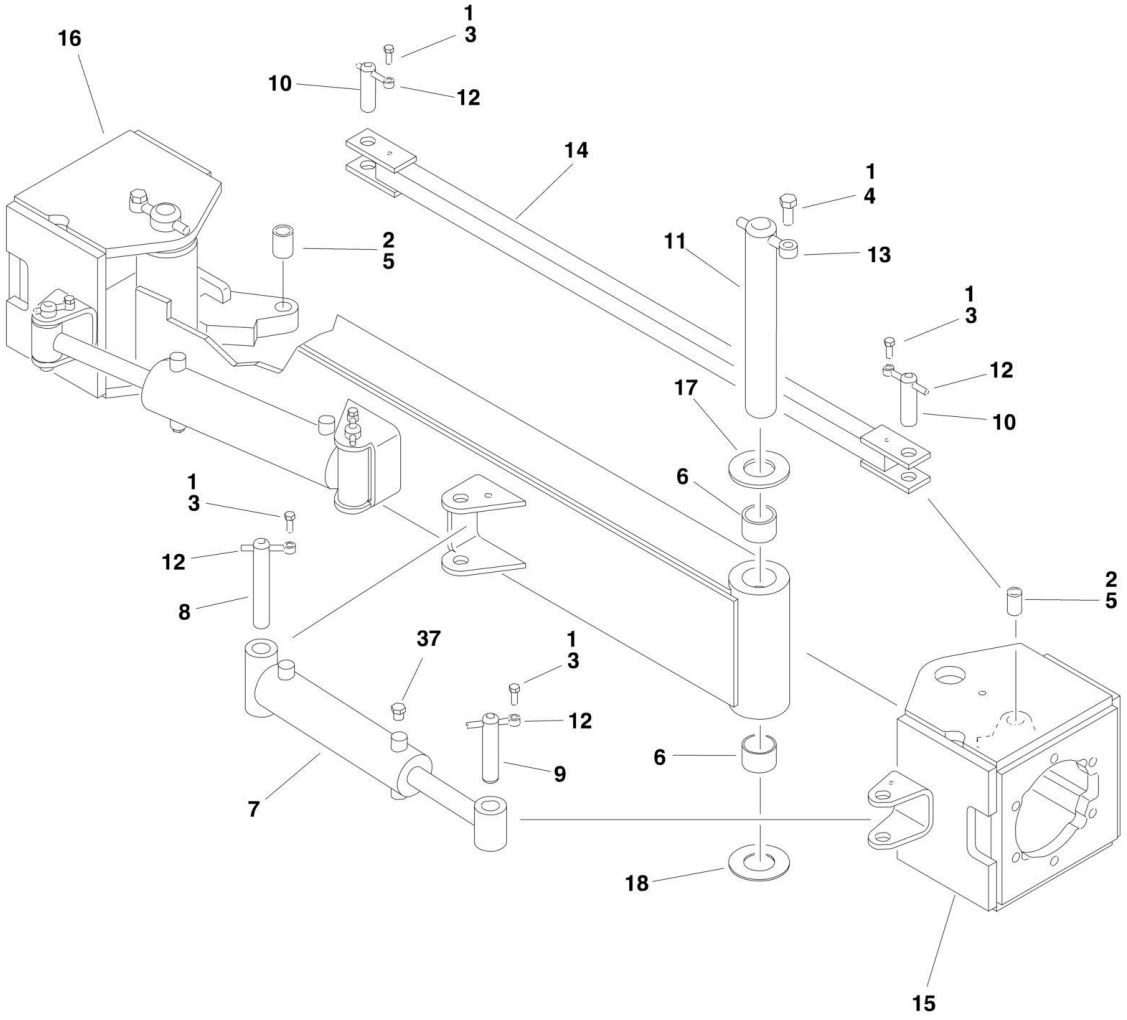

## FIGURE 1-3. 4WS REAR STEERING INSTALLATIONS

| ITEM | PART NUMBER | QTY | DESCRIPTION | REV |
|---|---|---|---|---|
| | | Ref | **4WS REAR STEERING INSTALLATIONS OPTIONS:** | |
| | See Note | NLA | **2WD/4WS 8ft/2.4m Wide Machines (Note: No Longer Available)** | |
| | 0274062 | Ref | **2WD/4WS 7ft/2.1m Wide Machines** | I |
| | 0274121 | Ref | **4WD/4WS Machines** | C |
| 1 | 0100011 | AR | Compound, Locking | |
| 2 | 0100063 | AR | Loctite # RC609 | |
| 3 | 0641608 | 6 | Bolt 3/8in-16NC x 1in | |
| 4 | 0642012 | 2 | Bolt 5/8in-11NC x 1-1/2in | |
| 5 | 0962005 | 2 | Bushing | |
| 6 | 0962131 | 4 | Bushing | |
| 7 | | Ref | Steer Cylinder Assembly Option (See CYLINDER SECTION for Breakdown): | |
| 7 | 1684418 | 2 | 7ft/2.1m Wide Machines | |
| 7 | 1683208 | 2 | 8ft/2.4m Wide Machines | |
| 8 | 3422426 | 2 | Pin | |
| 9 | 3422429 | 2 | Pin | |
| 10 | 3422430 | 2 | Pin | |
| 11 | 3422900 | 2 | Kingpin | |
| 12 | 3841143 | 6 | Keeper | |
| 13 | 3841258 | 2 | Keeper | |
| 14 | | Ref | Tie-Rod Options: | |
| 14 | 3841677 | 1 | 7ft/2.1m Wide Machines | |
| 14 | 3841285 | 1 | 8ft/2.4m Wide Machines | |
| 15 | 4130401 | 1 | Spindle (Left Side) | |
| 16 | 4130402 | 1 | Spindle (Right Side) | |
| 17 | 4740256 | 2 | Thrustwasher | |
| 18 | 4740463 | 2 | Thrustwasher | |

**FIGURE 1-4. TIRE AND WHEEL DRIVE INSTALLATIONS**

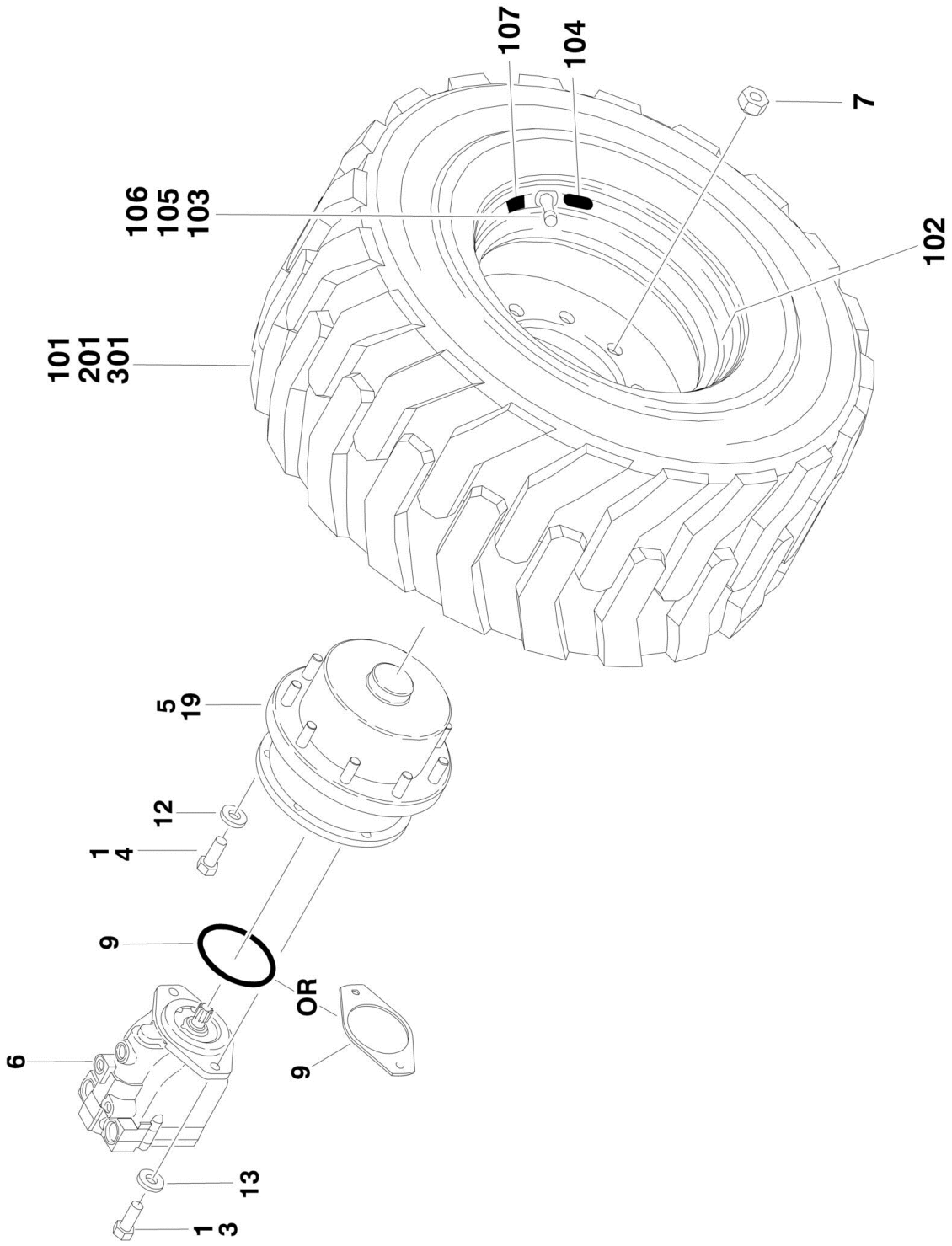

## FIGURE 1-4. TIRE AND WHEEL DRIVE INSTALLATIONS

| ITEM | PART NUMBER | QTY | DESCRIPTION | REV |
|---|---|---|---|---|
| | | Ref | **WHEEL DRIVE INSTALLATIONS** | |
| | 0273049 | Ref | **Wheel Drive Installations 2WD/2WS** | J |
| | 0274441 | Ref | **Wheel Drive Installations 2WD/4WS** | G |
| | 0273048 | Ref | **Wheel Drive Installations 4WD/2WS** | L |
| | 0273366 | Ref | **Wheel Drive Installations 4WD/4WS** | J |
| | | Ref | **Note: 2WD Qty Shown. For 4WD, Double Qty Shown.** | |
| 1 | 0100011 | AR | Compound, Locking | |
| 3 | 0681810 | 4 | Bolt 1/2in-13NC x 1-1/4in (Grade 8) | |
| 4 | 0682016 | 12 | Bolt 5/8in-11NC x 2in (Grade 8) | |
| 5 | 2780269 | 2 | Drive Hub Assembly (See DRIVE HUB ASSEMBLY for Breakdown) | |
| 6 | | Ref | Drive Motor Assembly Options: | |
| 6 | | Ref | USA Built Machines (See DRIVE MOTOR ASSEMBLY for Breakdown): **(SN 0300087000 through 0300098765)** | |
| 6 | 3160299 | NLA | 2WD (Use p/n 3160349) | |
| 6 | 3160300 | NLA | 4WD (Use p/n 3160350) | |
| 6 | | Ref | USA Built Machines (See DRIVE MOTOR ASSEMBLY for Breakdown): **(SN 0300098766 through 0300177361)** | |
| 6 | 3160349 | 2 | USA Built Machines 2WD | |
| 6 | 3160350 | 2 | USA Built Machines 4WD | |
| 6 | 3160350 | 2 | China Built Machines (See DRIVE MOTOR ASSEMBLY for Breakdown) **(SN B300000100 through B300005764, Excluding B300005620)** | |
| 7 | 3300106 | 18 | Nut, Wheel | |
| 9 | | Ref | Hardware Options: | |
| 9 | 3790045 | 1 | O-Ring (USA Built Machines) **(SN 0300087000 through 0300102232)** | |
| 9 | 3960526 | 1 | Gasket (USA Built Machines) **(SN 0300102233 through 0300177361)** | |
| 9 | 3960526 | 1 | Gasket (China Built Machines) **(SN B300000100 through B300005764, Excluding B300005620)** | |
| 12 | 4891800 | 4 | Flatwasher 1/2in Hardened | |
| 13 | 4740393 | 12 | Flatwasher 5/8in Hardened | |
| 19 | 3020008 | AR | Lube, Gear 80W - 90 | |
| | | Ref | **PNEUMATIC AND FOAM-FILLED TIRE AND WHEEL INSTALLATIONS (8 FT/2.4M WIDTH MACHINES)** | |
| | 4520328 | Ref | **Tire and Wheel Installation - Pneumatic (ANSI and ANSI Export Spec Only)** | B |
| | 4520346 | Ref | **Tire and Wheel Installation - Foam Filled (Available on All Specs)** | C |
| | 1001231678 | Ref | **Tire and Wheel Installation - Foam Filled/Non-Marking (Available on All Specs)** | A |
| | 0274533 | Ref | **Tire and Wheel Installation - Pneumatic with Sealant (ANSI and ANSI Export Spec Only) (Only Available on USA Built Machines)** | C |
| | 0274322 | Ref | **Tire and Wheel Installation - Pneumatic Turf Tire (ANSI and ANSI Export Spec Only) (Note: Not an Add-on Option - Special Axle Required. Only Available on USA Built Machines)** | 1 |
| | | Ref | **Note: Assemblies may require ballast/foam filling to manufacturer's specifications prior to installing on a machine. Refer to Operation and Safety or Service and Maintenance Manuals.** | |
| | | Ref | **Purchase individual tire and/or rim only if able to foam fill tire and wheel assembly, otherwise, purchase complete** | |

| ITEM | PART NUMBER | QTY | DESCRIPTION | REV |
|---|---|---|---|---|
| | | | **assembly.** | |
| | 4520289 | 2 | Tire and Wheel Assembly - Pneumatic (Left Side) | F |
| | 4520344 | 2 | Tire and Wheel Assembly - Foam-Filled (Left Side) | H |
| | 1001231677 | 2 | Tire and Wheel Assembly - Foam-Filled/Non-Marking (Left Side) | A |
| | 4520427 | 2 | Tire and Wheel Assembly - Pneumatic with Sealant (Left Side) | D |
| | 4520290 | 2 | Tire and Wheel Assembly - Pneumatic (Right Side) | F |
| | 4520345 | 2 | Tire and Wheel Assembly - Foam-Filled (Right Side) | H |
| | 1001231676 | 2 | Tire and Wheel Assembly - Foam-Filled/Non-Marking (Right Side) | A |
| | 4520428 | 2 | Tire and Wheel Assembly - Pneumatic with Sealant (Right Side) | D |
| | 4520357 | 4 | Tire and Wheel Assembly - Pneumatic Turf Tire (Note: Not an Add-on Option - Special Axle Required) | B |
| 101 | | Ref | Tire Options (1 Per Assembly) | |
| 101 | 4520288 | AR | Tire - IN355/55D625 | |
| 101 | 1001184881 | 1 | Tire - IN355/55D625 Non-Marking | |
| 101 | 4520356 | AR | Tire - 18 x 625 Turf Tire | |
| 102 | | Ref | Rim, Wheel (1 Per Assembly) | |
| 102 | 4520287 | AR | Rim - IN355/55D625 (24.5 x 11.75) | |
| 102 | 4520355 | AR | Rim - 18 x 625 Turf Tire (24.5 x 15) | |
| 103 | 4640113 | AR | Valve, Air (1 Per Assembly) (All except p/n 1001231676 & 1001231677 Assemblies) | |
| 103 | 4641122 | AR | Valve, Air (1 Per Assembly) (P/N 1001231676 & 1001231677 Assemblies) | |
| 104 | | Ref | Decal - Tire Pressure Options (1 Per Assembly) | |
| 104 | 1702740 | AR | Tire - IN355/55D625 | |
| 104 | 1702137 | AR | Tire - 18 x 625 Turf Tire (USA Built Machines) **(SN 0300087000 through 0300092171)** | |
| 104 | 1706846 | AR | Tire - 18 x 625 Turf Tire **(SN 0300092172 through 0300177361)** | |
| | | Ref | **Note: Items 105-107 used with tires with sealant only.** | |
| 105 | 1120552 | AR | Cap, Valve Stem (1 Per Assembly) | |
| 106 | 1300019 | AR | Sealant, Tire (1 Per Assembly) | |
| 107 | 1705364 | AR | Decal - Tire Sealant (1 Per Assembly) | |
| 201 | | Ref | **AIRBOSS TIRE AND WHEEL INSTALLATIONS (7FT/2.1M WIDTH 600A/600AJ MACHINES)** | |
| 201 | 4520341 | Ref | **Tire and Wheel Installation - Air-Boss (Available on All Specs)** | A |
| 201 | 4520284 | 2 | Tire and Wheel Assembly - Right Side | |
| 201 | 4520283 | 2 | Tire and Wheel Assembly - Left Side | |
| 201 | 7016206 | 80 | Tire Repair Section (20 Per Assembly) | |
| 301 | 4520604 | Ref | **Tire and Wheel Installation - Air-Boss Non Marking (Available on All Specs)** | 1 |
| 301 | 4520602 | 2 | Tire and Wheel Assembly - Right Side | |
| 301 | 4520601 | 2 | Tire and Wheel Assembly - Left Side | |
| 301 | 7020135 | 80 | Tire Repair Section (20 Per Assembly) | |
| 301 | | Ref | **SOLIDBOSS TIRE AND WHEEL INSTALLATIONS (7FT/2.1M WIDTH 600AJ MACHINES)** | |
| 301 | 1001147067 | Ref | **Tire and Wheel Installation - SolidBoss (Available on ANSI and CSA Specs Only)** | B |
| 301 | 1001146828 | NLA | Tire and Wheel Assembly - Right Side (Use p/n 1001207346) **(SN 0300087000 through 0300177361, SN B300000100 through B300001622)** | |
| 301 | 1001207346 | 2 | Tire and Wheel Assembly - Right Side **(SN B300001623 through B300005764, Excluding B300005620)** | |

| ITEM | PART NUMBER | QTY | DESCRIPTION | REV |
|---|---|---|---|---|
| 301 | 1001146827 | NLA | Tire and Wheel Assembly - Left Side (Use p/n 1001207345) **(SN 0300087000 through 0300177361, SN B300000100 through B300001622)** | |
| 301 | 1001207345 | 2 | Tire and Wheel Assembly - Left Side **(SN B300001623 through B300005764, Excluding B300005620)** | |
| 301 | 1001147068 | Ref | **Tire Wheel Installation - SolidBoss Non Marking (Available on ANSI and CSA Specs Only)** | B |
| 301 | 1001147020 | NLA | Tire and Wheel Assembly - Right Side (Use p/n 1001214748) **(SN 0300087000 through 0300177361, SN B300000100 through B300001622)** | |
| 301 | 1001214748 | 2 | Tire and Wheel Assembly - Right Side **(SN B300001623 through B300005764, Excluding B300005620)** | |
| 301 | 1001147019 | NLA | Tire and Wheel Assembly - Left Side (Use p/n 1001214747) **(SN 0300087000 through 0300177361, SN B300000100 through B300001622)** | |
| 301 | 1001214747 | 2 | Tire and Wheel Assembly - Left Side **(SN B300001623 through B300005764, Excluding B300005620)** | |

## FIGURE 1-5. DRIVE HUB ASSEMBLY

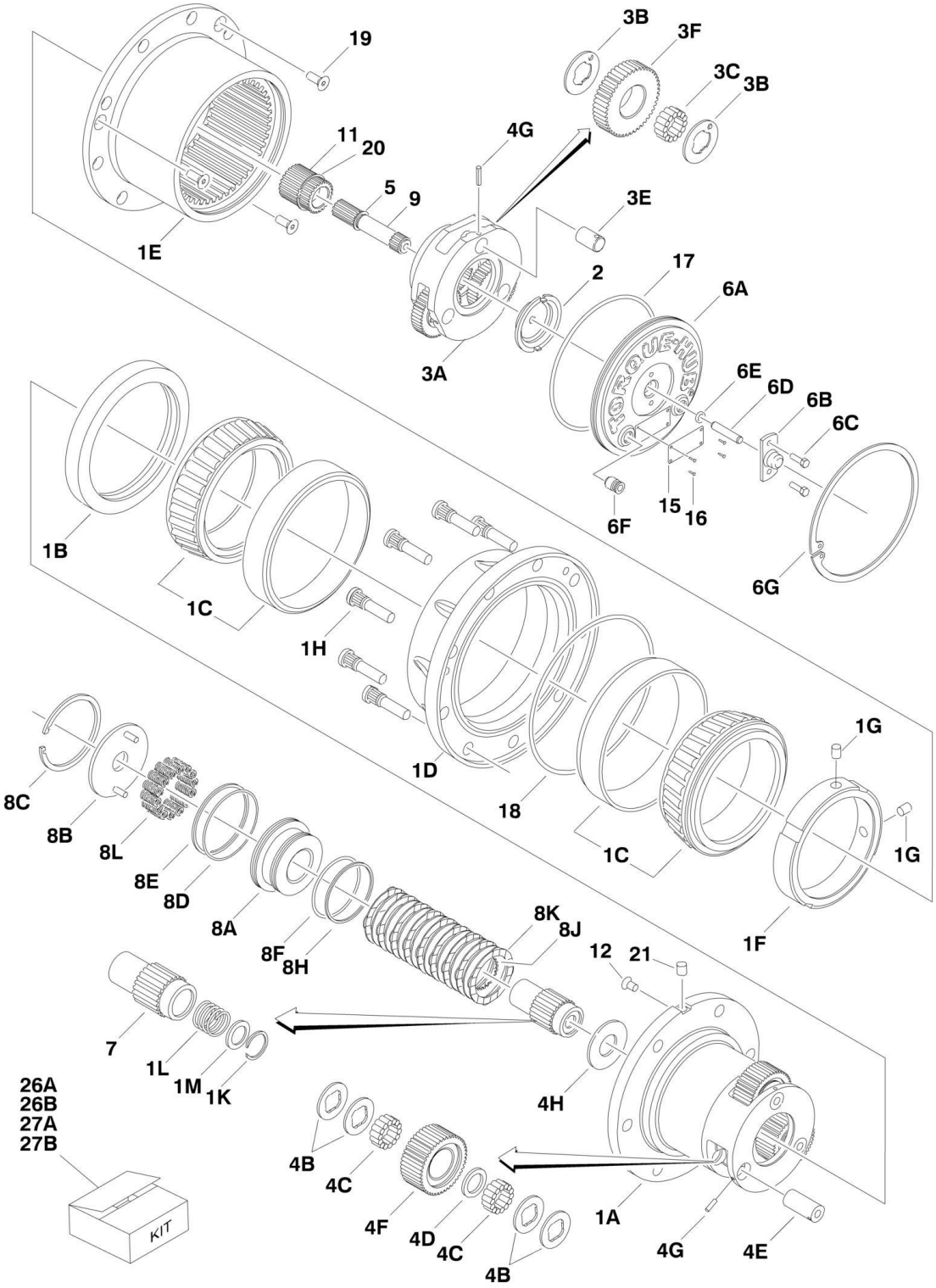

## FIGURE 1-5. DRIVE HUB ASSEMBLY

| ITEM | PART NUMBER | QTY | DESCRIPTION | REV |
|---|---|---|---|---|
| | 2780269 | Ref | **DRIVE HUB/BRAKE ASSEMBLY** | E |
| 1 | See Note | NSS | Spindle/Housing Assembly (Note: Not Available - Purchase Individual Components) | |
| 1A | 7024729 | 1 | Spindle | |
| 1B | 70001119 | 1 | Seal, Lip | |
| 1C | 7024735 | 2 | Bearing (Includes Cup and Cone) | |
| 1D | 2780269 | 1 | Housing (Note: Not Available for Purchase) | |
| 1E | 7024730 | 1 | Ring, Gear | |
| 1F | 7024744 | 1 | Nut, Bearing | |
| 1G | See Note | NSS | Setscrew 1/4in-28NF x 1/2in (Note: Use Item 26A, 26B, 27A or 27B) | |
| 1H | 7024732 | 9 | Stud, Wheel | |
| 1K | 7024125 | 1 | Ring, Retaining | |
| 1L | 7024124 | 1 | Spring | |
| 1M | 7024129 | 1 | Thrustwasher | |
| 2 | 7024741 | 1 | Thrustwasher | |
| 3 | See Note | NSS | Carrier Assembly (Note: Not Available - Purchase Individual Components) | |
| 3A | 7024725 | 1 | Carrier | |
| 3B | 7024127 | 6 | Thrustwasher | |
| 3C | 7024733 | 42 | Bearing, Needle | |
| 3E | 7024724 | 3 | Shaft, Planet | |
| 3F | 7024727 | 3 | Gear, Planet | |
| 4 | See Note | NSS | Planet Gear Sub-Assembly (Note: Not Available - Purchase Individual Components) | |
| 4B | 7024740 | 12 | Thrustwasher | |
| 4C | 7024734 | 84 | Bearing, Needle | |
| 4D | 7024736 | 3 | Spacer, Thrust | |
| 4E | 7024726 | 3 | Shaft, Planet | |
| 4F | 7024728 | 3 | Gear, Planet | |
| 4G | 7001913 | 6 | Roll Pin | |
| 4H | 7024742 | 1 | Thrustwasher | |
| 5 | 7017027 | 1 | Ring, Retaining | |
| 6 | See Note | NSS | Cover Assembly (Note: Not Available - Purchase Individual Components) | |
| 6A | 7024731 | 1 | Plate, Cover | |
| 6B | 7017093 | 1 | Cap, Disengage | |
| 6C | 7000216 | 2 | Bolt 1/2in-20NC x 1/2in | |
| 6D | 7024739 | 1 | Pin, Dowel | |
| 6E | 7017095 | 1 | O-Ring | |
| 6F | 7017072 | 2 | Plug, Pipe with O-Ring | |
| 6G | 7024738 | 1 | Ring, Retaining | |
| 7 | 7024722 | 1 | Coupling | |
| 8 | See Note | NSS | Brake, Input (Note: Not Available - Purchase Individual Components) | |
| 8A | 70000782 | 1 | Piston, Brake | |
| 8B | 7024743 | 1 | Plate, Pressure | |
| 8C | See Note | NSS | Ring, Retaining (Note: Use Item 26B, 27A or 27B) | |
| 8D | See Note | NSS | O-Ring (Note: Use Item 26B or 27A) | |
| 8E | See Note | NSS | Ring, Back-up (Note: Use Item 26B or 27A) | |
| 8F | See Note | NSS | O-Ring (Note: Use Item 26B or 27A) | |

# SECTION 1 - FRAME

| ITEM | PART NUMBER | QTY | DESCRIPTION | REV |
|---|---|---|---|---|
| 8H | See Note | NSS | Ring, Back-up (Note: Use Item 26B or 27A) | |
| 8J | See Note | NSS | Rotor, Brake (Note: Use Item 27A) | |
| 8K | See Note | NSS | Stator, Brake (Note: Use Item 27A) | |
| 8L | See Note | NSS | Spring, Brake (Note: Use Item 27B) | |
| 9 | 7024721 | 1 | Shaft, Input | |
| 11 | 7024723 | 1 | Gear, Sun | |
| 12 | See Note | NSS | Plug (Note: Not Available for Purchase) | |
| 15 | See Note | NSS | Plate, ID (Not Shown) (Note: Not Available for Purchase) | |
| 16 | 7000281 | 4 | Screw, Drive | |
| 17 | 7024134 | 1 | O-Ring | |
| 18 | See Note | NSS | O-Ring (Note: Use Item 26A) | |
| 19 | 7017022 | 3 | Screw, Countersunk 3/8in-16NC | |
| 20 | 7024737 | 1 | Ring, Retaining | |
| 21 | See Note | NSS | Plug (Note: Not Available for Purchase) | |
| 26 | | Ref | Seal Kit Options: | |
| 26A | 7024744 | 1 | Hub Seal Kit (Includes Items 1B, 1F, 1G, 17, 18 & 19) | |
| 26B | 7024765 | 1 | Brake Seal Kit (Includes Items 1G, 8C, 8D, 8E, 8F & 8H) | |
| 27 | | Ref | Repair Kit Options: | |
| 27A | 7024764 | 1 | Brake Lining Kit (Includes Items 1G, 8C, 8D, 8E, 8F, 8H, 8J & 8K) | |
| 27B | 7024766 | 1 | Brake Spring Kit (Includes Items 1G, 8C & 8L) | |

**FIGURE 1-6. DRIVE MOTOR ASSEMBLY (USA BUILT MACHINES) (ORIGINAL EQUIPMENT) (SN 0300087000 through 0300098765)**

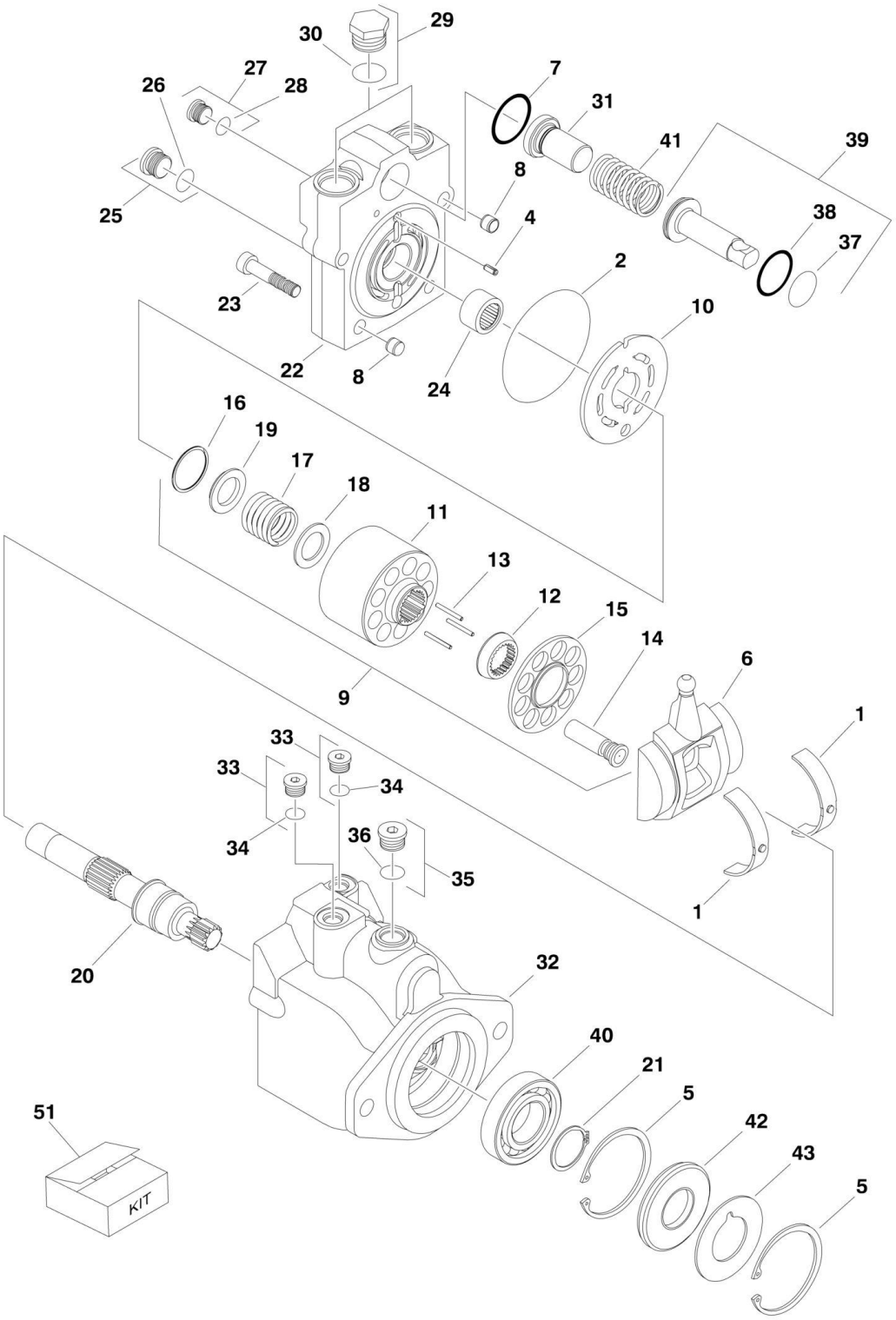

## FIGURE 1-6. DRIVE MOTOR ASSEMBLY (USA BUILT MACHINES) (ORIGINAL EQUIPMENT) (SN 0300087000 through 0300098765)

| ITEM | PART NUMBER | QTY | DESCRIPTION | REV |
|---|---|---|---|---|
| | | Ref | **DRIVE MOTOR ASSEMBLY (ORIGINAL EQUIPMENT)** | |
| | 3160299 | Ref | **Drive Motor Assembly 2WD** | E |
| | 3160300 | Ref | **Drive Motor Assembly 4WD** | E |
| | | Ref | **Note: Original Equipment Motor p/n 3160299 & p/n 3160300 uses 4 bolts to assemble the motor. Service Replacement Motor p/n 3160349 & p/n 3160350 motors use 5 bolts to assemble the motor.** | |
| | | Ref | **Visually identify component before ordering parts. If equipped with 3160349 or 3160350 refer to next illustration.** | |
| 1 | 7022302 | 2 | Bearing, Journal | |
| 2 | See Note | NSS | O-Ring (Note: Use Item 51) | |
| 3 | See Note | NSS | O-Ring (Note: Use Item 51) | |
| 4 | 7007446 | 1 | Pin | |
| 5 | 7007438 | 2 | Ring, Retaining | |
| 6 | 7024861 | 1 | Swash Plate | |
| 7 | See Note | NSS | O-Ring (Note: Use Item 51) | |
| 8 | 7007435 | 2 | Pin | |
| 9 | 7022320 | 1 | Cylinder Block Kit (Includes Items 11-19) | |
| 10 | 7024862 | 1 | Plate, Valve | |
| 11 | 7024863 | 1 | Block, Cylinder | |
| 12 | 7024864 | 1 | Guide, Slipper Retainer | |
| 13 | 7021275 | 3 | Pin, Slipper Hold Down | |
| 14 | 7024865 | 9 | Piston Assembly | |
| 15 | 7024866 | 1 | Retainer, Slipper | |
| 16 | 7022311 | 1 | Ring, Retaining | |
| 17 | 7024867 | 1 | Spring | |
| 18 | 7024868 | 1 | Washer | |
| 19 | 7022314 | 1 | Retainer, Spring | |
| 20 | 7023910 | 1 | Shaft | |
| 21 | 7007439 | 1 | Ring, Retaining | |
| 22 | 7024869 | 1 | Cap, End - Axial | |
| 23 | 7022368 | 4 | Screw | |
| 24 | 7021249 | 1 | Bearing, Needle | |
| 25 | 7022321 | 1 | Plug (Includes Item 26) | |
| 26 | See Note | NSS | O-Ring (Note: Use Item 26 or 51) | |
| 27 | 7022318 | 1 | Plug (Includes Item 28) | |
| 28 | See Note | NSS | O-Ring (Note: Use Item 28 or 51) | |
| 29 | 7027419 | 2 | Plug (Includes Item 30) | |
| 30 | See Note | NSS | O-Ring (Note: Use Item 30 or 51) | |
| 31 | | Ref | Seat, Spring Options: | |
| 31 | 7024853 | 1 | Seat, Spring 2WD/2WS | |
| 31 | 7022372 | 1 | Seat, Spring 2WD/4WS, 4WD/2WS & 4WD/4WS | |
| 32 | 7022370 | 1 | Housing | |
| 33 | 7022318 | 2 | Plug (Includes Item 34) | |
| 34 | See Note | NSS | O-Ring (Note: Use Item 34 or 51) | |
| 35 | 7022321 | 1 | Plug (Includes Item 36) | |
| 36 | See Note | NSS | O-Ring (Note: Use Item 36 or 51) | |
| 37 | See Note | NSS | O-Ring (Note: Use Item 51) | |
| 38 | See Note | NSS | Ring, Seal (Note: Use Item 51) | |
| 39 | 7024871 | 1 | Piston, Servo | |

# SECTION 1 - FRAME

| ITEM | PART NUMBER | QTY | DESCRIPTION | REV |
|---|---|---|---|---|
| 40 | 7007437 | 1 | Bearing | |
| 41 | 7022326 | 1 | Spring | |
| 42 | See Note | NSS | Seal, Lip (Note: Use Item 51) | |
| 43 | 7022371 | 1 | Washer, Support | |
| 51 | 7022328 | 1 | Seal Kit (Includes Items 2, 3, 7, 26, 28, 30, 34, 36, 37, 38 & 42) | |

**FIGURE 1-7. DRIVE MOTOR ASSEMBLY (USA BUILT MACHINES AND CHINA BUILT MACHINES) (SERVICE REPLACEMENT) (SN 0300098766 through 0300177361, SN B300000100 through B300005764)**

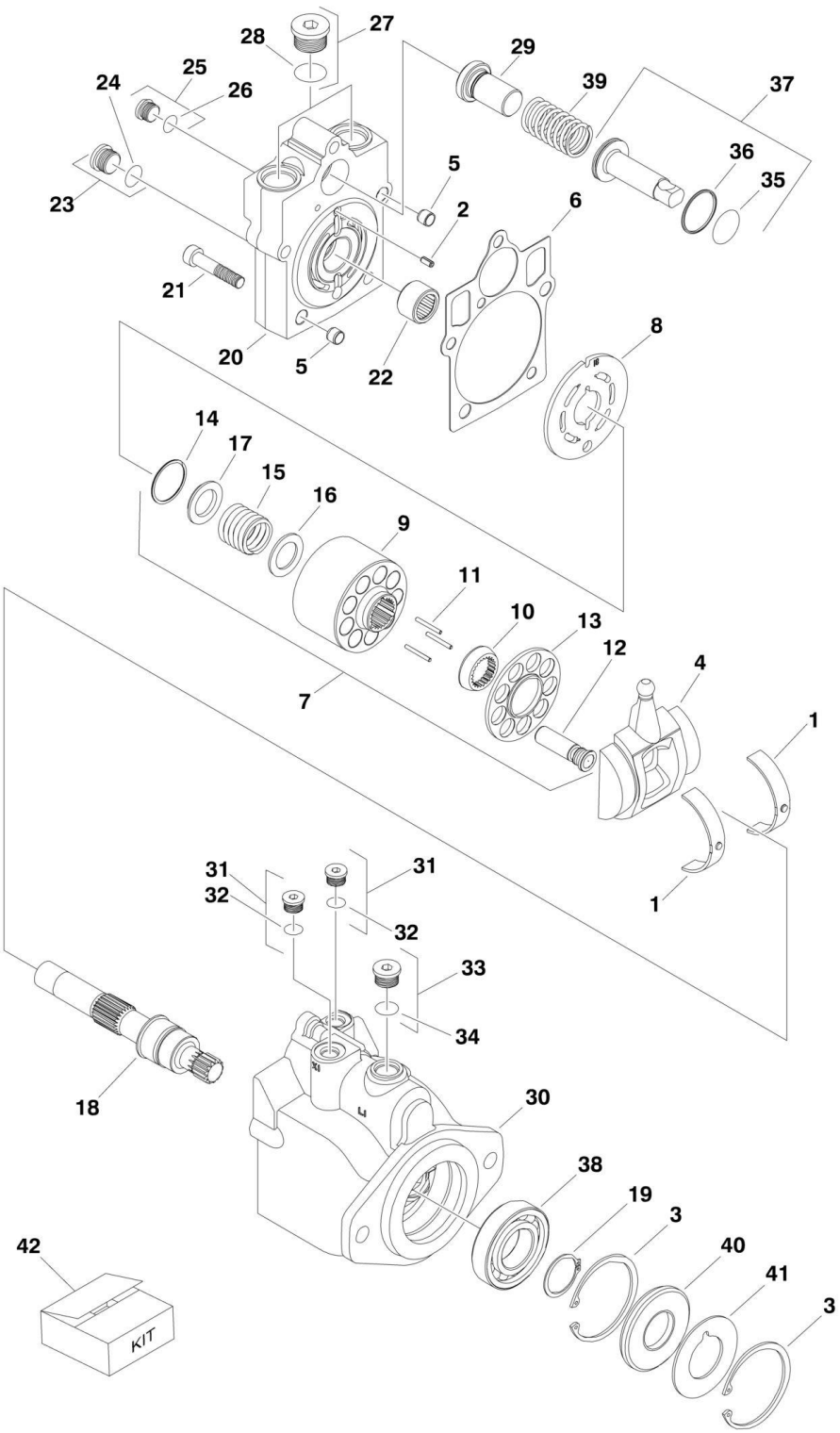

## FIGURE 1-7. DRIVE MOTOR ASSEMBLY (USA BUILT MACHINES AND CHINA BUILT MACHINES) (SERVICE REPLACEMENT) (SN 0300098766 through 0300177361, SN B300000100 through B300005764)

| ITEM | PART NUMBER | QTY | DESCRIPTION | REV |
|---|---|---|---|---|
| | | Ref | **DRIVE MOTOR ASSEMBLY (SERVICE REPLACEMENT)** | |
| | 3160349 | Ref | **2WD (Service Replacement Motor for p/n 3160299)** | B |
| | 3160350 | Ref | **4WD (Service Replacement Motor for p/n 3160300)** | C |
| 1 | 7022302 | 2 | Bearing, Journal | |
| 2 | 7007446 | 1 | Pin | |
| 3 | 7007438 | 2 | Ring, Retaining | |
| 4 | 70000794 | 1 | Swash Plate | |
| 5 | See Note | NSS | Pin (Note: Not Available for Purchase) | |
| 6 | See Note | NSS | Gasket (Note: Use Item 42) | |
| 7 | 7027740 | 1 | Cylinder Block Kit (Includes Items 9-17) | |
| 8 | 7024862 | 1 | Plate, Valve | |
| 9 | 7027740 | 1 | Block, Cylinder | |
| 10 | 7027740 | 1 | Guide, Slipper Retainer | |
| 11 | 7021275 | 3 | Pin, Slipper Hold Down | |
| 12 | 7024865 | 9 | Piston Assembly | |
| 13 | 7027740 | 1 | Retainer, Slipper | |
| 14 | 7022311 | 1 | Ring, Retaining | |
| 15 | 7024867 | 1 | Spring | |
| 16 | 7022313 | 1 | Washer | |
| 17 | 7022314 | 1 | Retainer, Spring | |
| 18 | 7023910 | 1 | Shaft | |
| 19 | 7007439 | 1 | Ring, Retaining | |
| 20 | 70000795 | 1 | Cap, End - Axial | |
| 21 | 7022368 | 5 | Screw | |
| 22 | 7021249 | 1 | Bearing, Needle | |
| 23 | 2220886 | 1 | Plug (Includes Item 24) | |
| 24 | See Note | NSS | O-Ring (Note: Use Item 23 or 42) | |
| 25 | 2220883 | 1 | Plug (Includes Item 26) | |
| 26 | See Note | NSS | O-Ring (Note: Use Item 25 or 42) | |
| 27 | 7027419 | 2 | Plug (Includes Item 28) | |
| 28 | See Note | NSS | O-Ring (Note: Use Item 27 or 42) | |
| 29 | | Ref | Seat, Spring Options: | |
| 29 | 7024853 | 1 | Seat, Spring 2WD/2WS | |
| 29 | 7022372 | 1 | Seat, Spring 2WD/4WS, 4WD/2WS & 4WD/4WS | |
| 30 | See Note | NSS | Housing (Note: Not Available - Purchase Complete Assembly) | |
| 31 | 2220883 | 2 | Plug (Includes Item 32) | |
| 32 | See Note | NSS | O-Ring (Note: Use Item 31 or 42) | |
| 33 | 2220886 | 1 | Plug (Includes Item 34) | |
| 34 | See Note | NSS | O-Ring (Note: Use Item 33 or 42) | |
| 35 | See Note | NSS | O-Ring (Note: Use Item 42) | |
| 36 | See Note | NSS | Ring, Seal (Note: Use Item 42) | |
| 37 | 7024871 | 1 | Piston, Servo | |
| 38 | 7007437 | 1 | Bearing | |
| 39 | 7022326 | 1 | Spring | |
| 40 | See Note | NSS | Seal, Lip (Note: Use Item 42) | |
| 41 | 7022371 | 1 | Washer, Support | |
| 42 | 7022328 | 1 | Seal Kit (Includes Items 6, 24, 26, 28, 32, 34, 35, 36 & 40) | |

## FIGURE 1-8. DRIVE VALVES AND SHIELDS INSTALLATION (FRAME MOUNTED)

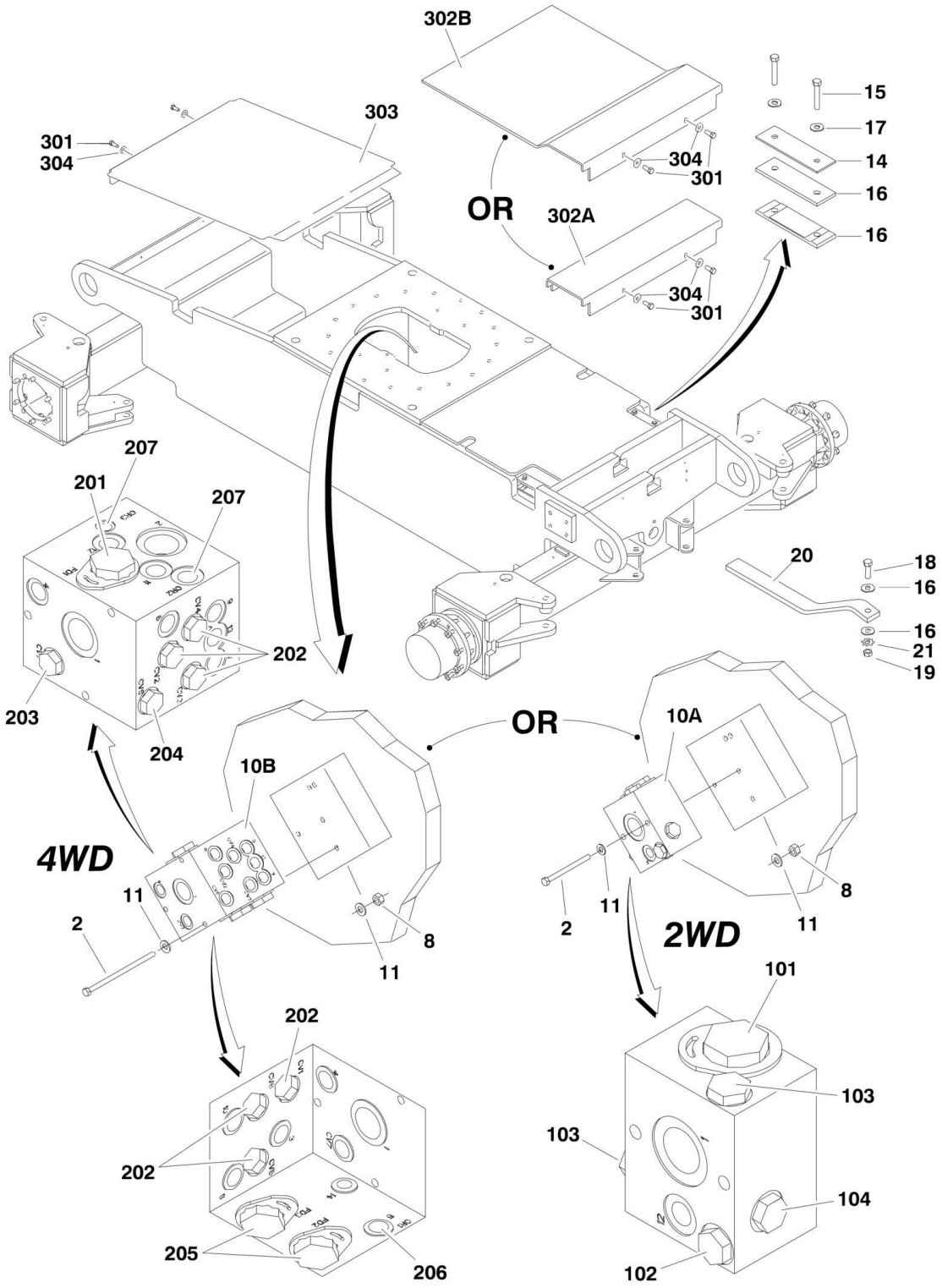

## FIGURE 1-8. DRIVE VALVES AND SHIELDS INSTALLATION (FRAME MOUNTED)

| ITEM | PART NUMBER | QTY | DESCRIPTION | REV |
|---|---|---|---|---|
| | | Ref | **DRIVE VALVES INSTALLATION** | |
| | 0273049 | Ref | **Drive Valve Installation 2WD/2WS** | J |
| | 0274441 | Ref | **Drive Valve Installation 2WD/4WS** | G |
| | 0273048 | Ref | **Drive Valve Installation 4WD/2WS** | L |
| | 0273366 | Ref | **Drive Valve Installation 4WD/4WS** | J |
| 2 | | Ref | Bolt 5/16in-18NC Options: | |
| 2 | 0641532 | 2 | 4in Length (2WD) | |
| 2 | 0641552 | 3 | 6-1/2in Length (4WD) | |
| 8 | 3311505 | AR | Locknut 5/16in-18NC | |
| 10 | | Ref | Flow Divider Valve Assembly Options: | |
| 10A | 4641409 | NLA | 2WD (See Items 101-104 for Breakdown) (Use p/n 1001100120) | |
| 10B | 4641410 | NLA | 4WD (See Items 201-205 for Breakdown) (Use p/n 1001098503) | |
| | | Ref | **Note: Original Equipment Valve may have been replaced with Service Replacement Valve. Identify p/n stamped on valve before ordering parts.** | |
| 11 | 4711500 | AR | Flatwasher 5/16in Thin | |
| 14 | | Ref | Bar, Clamping | |
| 14 | Not Required | 0 | Bar, Clamping 2WD/2WS | |
| 14 | 0363012 | 2 | Bar, Clamping 2WD/2WS, 4WD/2WS & 4WD/4WS | |
| 15 | 0641618 | 4 | Bolt 3/8in-16NC x 2-1/4in | |
| 16 | 3340911 | 4 | Rubber, Clamp | |
| 17 | 4751600 | AR | Flatwasher 3/8in Regular | |
| 18 | 0641611 | 1 | Bolt 3/8in-16NC x 2-3/8in | |
| 19 | 3271601 | 1 | Nut 3/8in-16NC (Grade 8) | |
| 20 | 4240084 | 1 | Strap, Anti-Static (2WD/4WS USA Built Machines Only) **(SN 0300137895 through 0300177361)** | |
| 21 | 4791600 | 1 | Starwasher 3/8in | |
| | | Ref | **FLOW DIVIDER ASSEMBLY (2WD)** | |
| | 4641409 | Ref | **USA Built Machines (SN 0300087000 through 0300140863)** | B |
| | 1001100120 | Ref | **USA Built Machines (SN 0300140864 through 0300177361)** | A |
| 101 | 7023933 | 1 | Valve, Cartridge (Flow Divider) | |
| 101 | 7021625 | 1 | Seal Kit - Flow Divider Cartridge | |
| 101 | 70000781 | 1 | Locking Kit | |
| 102 | 7024892 | 1 | Valve, Cartridge (Check) | |
| 102 | 7023936 | 1 | Seal Kit - Check Cartridge | |
| 103 | 7022397 | 2 | Valve, Cartridge (Check) | |
| 103 | 7022399 | 2 | Seal Kit - Check Cartridge | |
| 104 | 7023935 | 1 | Valve, Cartridge (Check) | |
| 104 | 7023936 | 1 | Seal Kit - Check Cartridge | |
| | | Ref | **FLOW DIVIDER ASSEMBLIES (4WD)** | |
| | 4641410 | Ref | **USA Built Machines (SN 0300087000 through 0300142848)** | B |
| | 1001098503 | Ref | **USA Built Machines (SN 0300142849 through 0300177361)** | B |
| | 1001098503 | Ref | **China Built Machines (SN B300000100 through B300005764, Excluding B300005620)** | B |
| 201 | 7023933 | 1 | Valve, Cartridge (Flow Divider) | |
| 201 | 7021625 | 1 | Seal Kit - Flow Divider Cartridge | |
| 202 | | Ref | Valve, Cartridge (Check) Options: | |
| 202 | 7022397 | 6 | Valve p/n 4641410 | |
| 202 | 7022399 | 6 | Seal Kit - Check Cartridge | |

# SECTION 1 - FRAME

| ITEM | PART NUMBER | QTY | DESCRIPTION | REV |
|---|---|---|---|---|
| 202 | 70003408 | 6 | Valve p/n 1001098503 | |
| 202 | 7022399 | 6 | Seal Kit - Check Cartridge | |
| 203 | 7023935 | 1 | Valve, Cartridge (Check) | |
| 203 | 7023936 | 1 | Seal Kit - Check Cartridge | |
| 204 | 7024892 | 1 | Valve, Cartridge (Check) | |
| 204 | 7023936 | 1 | Seal Kit - Check Cartridge | |
| 205 | 7023917 | 2 | Valve, Cartridge (Flow Divider) | |
| 205 | 7021625 | 2 | Seal Kit - Flow Divider Cartridge | |
| 206 | 70002063 | 1 | Plug, Orifice | |
| 207 | 70002064 | 2 | Plug, Orifice | |
| | | Ref | **FRAME SHIELDS INSTALLATION** | |
| | | Ref | **USA Built Machines** | |
| | 0274349 | Ref | **USA Built Machines 2WD/2WS** | A |
| | 0274229 | Ref | **USA Built Machines 2WD/4WS (600A/AJ Only)** | C |
| | 0274349 | Ref | **USA Built Machines 4WD/2WS** | A |
| | 0274348 | Ref | **USA Built Machines 4WD/4WS** | E |
| | | Ref | **China Built Machines** | |
| | 0274349 | Ref | **China Built Machines 2WD/2WS** | A |
| | 0274348 | Ref | **China Built Machines 4WD/4WS** | E |
| 301 | 0641608 | AR | Bolt, 3/8in-16NC x 7/8in | |
| 302 | | Ref | Shield, Frame - Front Options: | |
| 302A | | Ref | Machines with 8ft/2.4m Wide Frames | |
| 302A | 3380557 | 1 | USA Built Machines **(SN 0300087000 through 0300175048)** | |
| 302A | 3380557 | 1 | China Built Machines **(SN B300000100 through B300001138)** | |
| 302A | Not Required | 0 | China Built Machines **(SN B300001139 through B300001160)** | |
| 302A | 3380557 | 1 | China Built Machines **(SN B300001161 through B300005764, Excluding B300005620)** | |
| 302B | | Ref | Machines with 7ft/2.1m Wide Frames | |
| 302B | 3380560 | 1 | USA Built Machines | |
| 302B | Not Required | 0 | China Built Machines | |
| 303 | | Ref | Shield, Frame - Rear Options: | |
| 303 | | Ref | USA Built Machines | |
| 303 | Not Required | 0 | 2WS Machines with 8ft/2.4m Wide Frames | |
| 303 | 3380573 | 1 | 4WS Machines with 8ft/2.4m Wide Frames **(SN 0300087000 through 0300101764)** | |
| 303 | 3380558 | 1 | 4WS Machines with 8ft/2.4m Wide Frames **(SN 0300101765 through 0300177361)** | |
| 303 | 3380558 | 1 | Machines with 7ft/2.1m Wide Frames | |
| 303 | | Ref | China Built Machines | |
| 303 | 3380558 | 1 | 4WS Machines with 8ft/2.4m Wide Frames **(SN B300000100 through B300005764, Excluding B300005620)** | |
| 304 | 4751600 | AR | Flatwasher 3/8in Regular | |

## FIGURE 1-9. TOW PACKAGE INSTALLATION (OPTIONAL)

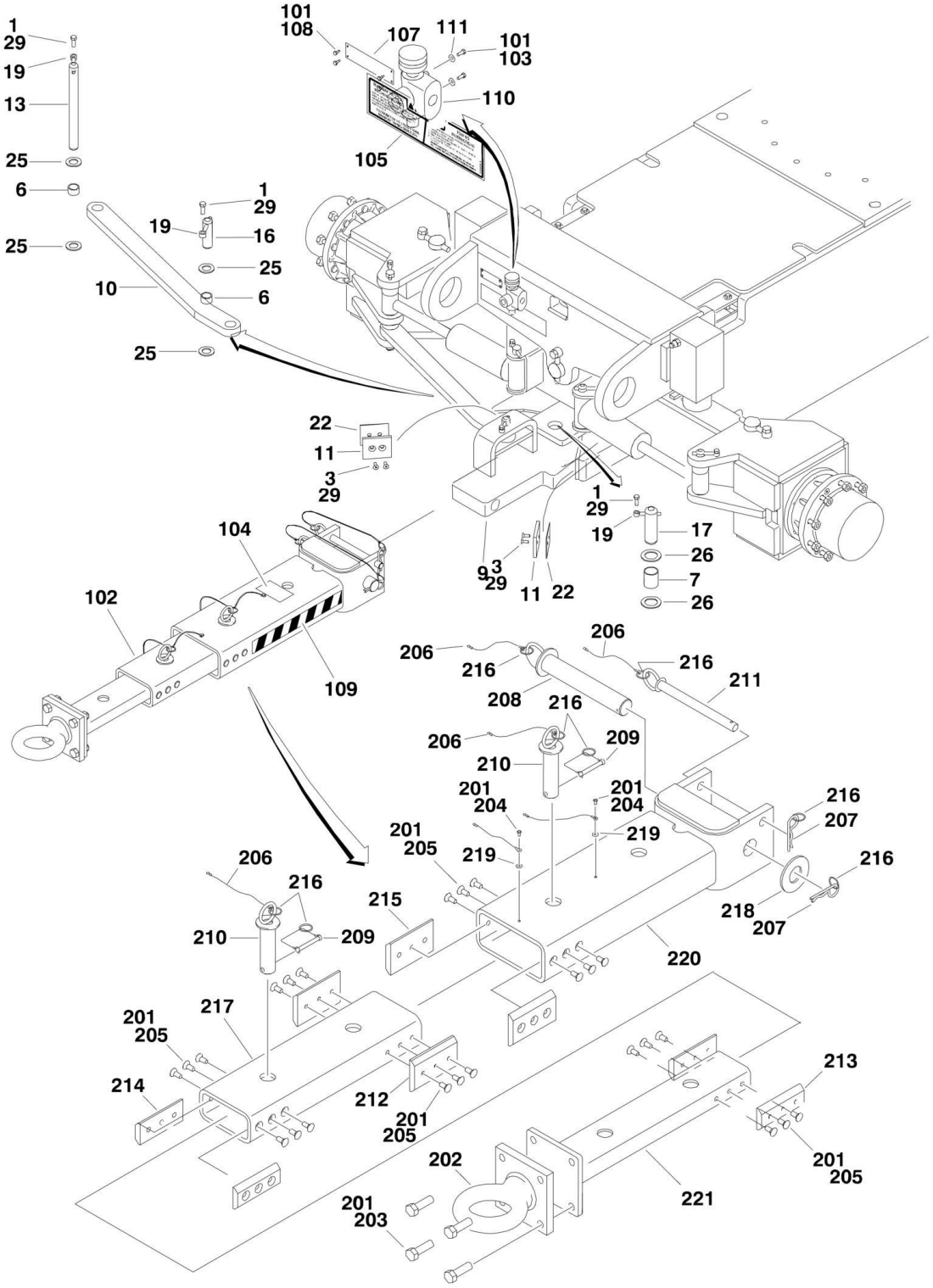

## FIGURE 1-9. TOW PACKAGE INSTALLATION (OPTIONAL)

| ITEM | PART NUMBER | QTY | DESCRIPTION | REV |
|---|---|---|---|---|
| | | Ref | **NOTE: ONLY AVAILABLE ON USA BUILT MACHINES.** | |
| | | Ref | **TOW INSTALLATIONS** | |
| | 0274257 | Ref | **7ft/2.1m Width Machines** | B |
| | 0274220 | Ref | **8ft/2.4m Width Machines** | B |
| | 0274801 | Ref | **8ft/2.4m Width Machines (2WD) (USA Built Machines) (SN 0300087035 through 0300177361)** | A |
| 1 | 0641608 | 3 | Bolt 3/8in-16NC x 1in | |
| 3 | 0741607 | AR | Bolt 3/8in-16NC x 1in | |
| 6 | 0962292 | 2 | Bushing | |
| 7 | 0962348 | 1 | Bushing | |
| 9 | 2980125 | 1 | Pivot | |
| 10 | | Ref | Link, Tow Options: | |
| 10 | 2575716 | 1 | 7ft/2.1m Width Machines | |
| 10 | 3010141 | 1 | 8ft/2.4m Width Machines | |
| 11 | 3340966 | 4 | Pad, Stop | |
| 13 | 3422327 | 1 | Pin | |
| 16 | 3422813 | 1 | Pin | |
| 17 | 3422848 | 1 | Pin | |
| 19 | 3841143 | 3 | Keeper, Pin | |
| 22 | 4071059 | 2 | Shim | |
| 25 | | Ref | Thrustwasher Options: | |
| 25 | 4740184 | 1 | 7ft/2.1m Width Machines | |
| 25 | 4740111 | 2 | 8ft/2.4m Width Machines | |
| 26 | 4740155 | 2 | Thrustwasher | |
| 29 | 0100011 | AR | Compound, Locking | |
| | | Ref | **TOW BAR INSTALLATIONS** | |
| | 0274235 | Ref | **All Specs except CSA** | B |
| | 0274687 | Ref | **CSA Spec** | A |
| 101 | 0100011 | AR | Compound, Locking | |
| 102 | 0270528 | 1 | Bar Assembly (See Items 201-221 for Breakdown) | |
| 103 | 0641516 | 2 | Bolt 5/16in-18NC x 2in | |
| 104 | | Ref | Decal - Crushing Options: | |
| 104 | 1704578 | 2 | All Specs except CSA | |
| 104 | 1706593 | 2 | CSA Spec | |
| 105 | | Ref | Decal - Towing Instructions Options: | |
| 105 | 1705090 | 1 | All Specs except CSA | |
| 105 | 1705820 | 1 | CSA Spec | |
| 107 | | Ref | Nameplate, Steer/Tow Select Valve Options: | |
| 107 | 3250872 | 1 | All Specs except CSA | |
| 107 | 1704272 | 1 | CSA Spec | |
| 108 | 3940604 | 4 | Screw, Self-Tapping #6-32NF x 1/2in | |
| 109 | 4420051 | AR | Tape, Safety | |
| 110 | 4640261 | 1 | Valve, Float Position | |
| 111 | 4751500 | 2 | Flatwasher 5/16in Regular | |
| | 0270528 | Ref | **TOW BAR ASSEMBLY** | A |
| 201 | 0100011 | AR | Compound, Locking | |
| 202 | 0362910 | 1 | Pintle, Draw Eye | |
| 203 | 0642010 | 4 | Bolt 5/8in-11NC x 1-1/4in | |
| 204 | 0721004 | 2 | Screw, Hex Machine | |
| 205 | 0741607 | 24 | Screw, Countersunk 3/8in-16NC x 7/8in | |

# SECTION 1 - FRAME

| ITEM | PART NUMBER | QTY | DESCRIPTION | REV |
|---|---|---|---|---|
| 206 | 1060584 | 6 | Cable, Lanyard | |
| 207 | 3420372 | 2 | Pin, Cotter | |
| 208 | 3420447 | 1 | Pin, Towing | |
| 209 | 3421565 | 2 | Pin, Snap | |
| 210 | 3422841 | 2 | Pin | |
| 211 | 3422847 | 1 | Pin | |
| 212 | 3572009 | 2 | Plate, Slide Stop | |
| 213 | 3572010 | 2 | Plate, Slide Stop | |
| 214 | 3572011 | 2 | Plate, Slide Stop | |
| 215 | 3572012 | 2 | Plate, Slide Stop | |
| 216 | 3760170 | 8 | Ring, Split | |
| 217 | 4568133 | 1 | Tube, Tow Bar | |
| 218 | 4740036 | 1 | Flatwasher | |
| 219 | 4751000 | 2 | Flatwasher #10 Regular | |
| 220 | 4846295 | 1 | Tow Bar Attach Weldment | |
| 221 | 4846296 | 1 | Pintle Attach Weldment | |

# SECTION 2 - TURNTABLE

## FIGURE 2-1. CONTROL VALVES INSTALLATIONS

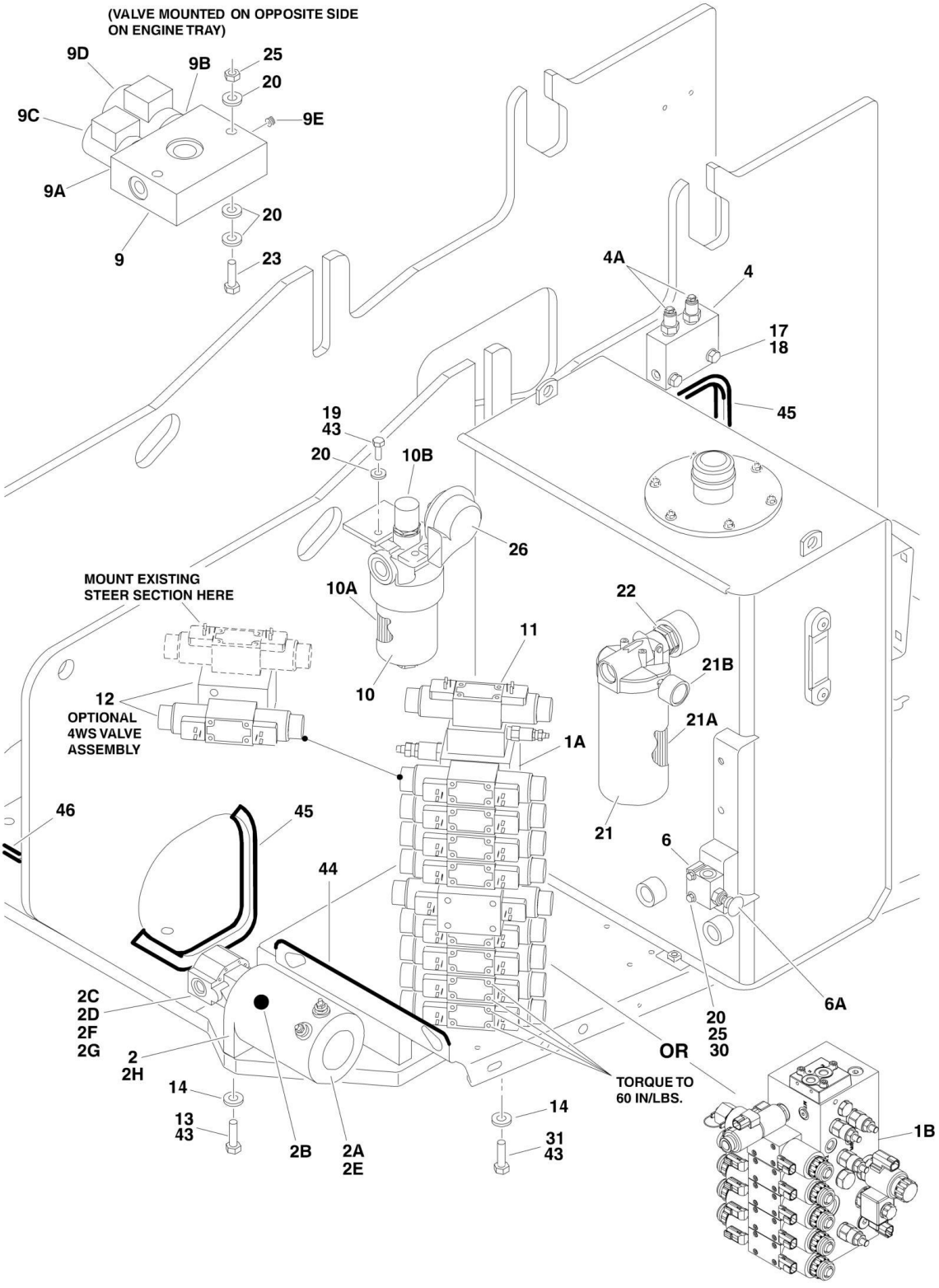

## FIGURE 2-1. CONTROL VALVES INSTALLATIONS

| ITEM | PART NUMBER | QTY | DESCRIPTION | REV |
|---|---|---|---|---|
| | | Ref | **CONTROL VALVES INSTALLATIONS** | |
| | 0274309 | Ref | **Control Valves 600A 2WS (SN 0300087000 through 0300177361)** | 4 |
| | 0274309 | Ref | **Control Valves 600A 2WS (SN B300000100 through B300001392)** | 4 |
| | 1001160038 | Ref | **Control Valves 600A 2WS (SN B300001393 through B300001985)** | B |
| | 0274309 | Ref | **Control Valves 600A 2WS (SN B300001986 through B300005764, Excluding B300005620)** | 4 |
| | 0274311 | Ref | **Control Valves 600A 4WS (SN 0300087000 through 0300177361)** | 4 |
| | 0274311 | Ref | **Control Valves 600A 4WS (SN B300000100 through B300001392)** | 4 |
| | 1001160039 | Ref | **Control Valves 600A 4WS (SN B300001393 through B300001985)** | B |
| | 0274311 | Ref | **Control Valves 600A 4WS (SN B300001986 through B300005764, Excluding B300005620)** | 4 |
| | 0274310 | Ref | **Control Valves 600AJ 2WS (SN 0300087000 through 0300177361)** | 4 |
| | 0274310 | Ref | **Control Valves 600AJ 2WS (SN B300000100 through B300001392)** | 4 |
| | 1001160068 | Ref | **Control Valves 600AJ 2WS (SN B300001393 through B300001985)** | B |
| | 0274310 | Ref | **Control Valves 600AJ 2WS (SN B300001986 through B300005764, Excluding B300005620)** | 4 |
| | 0274312 | Ref | **Control Valves 600AJ 4WS (SN 0300087000 through 0300177361)** | 4 |
| | 0274312 | Ref | **Control Valves 600AJ 4WS (SN B300000100 through B300001392)** | 4 |
| | 1001160069 | Ref | **Control Valves 600AJ 4WS (SN B300001393 through B300001985)** | B |
| | 0274312 | Ref | **Control Valves 600AJ 4WS (SN B300001986 through B300005764, Excluding B300005620)** | 4 |
| 1 | | Ref | Main Valve Assembly Options (See MAIN VALVE ASSEMBLY for Breakdown): | |
| 1A | 4641097 | NLA | USA Built Machines (Use p/n 4641452) **(SN 0300087000 through 0300092879)** | |
| 1A | 4641452 | 1 | USA Built Machines **(SN 0300092880 through 0300177361)** | |
| 1A | 4641452 | 1 | China Built Machines **(SN B300000100 through B300001392)** | |
| 1B | 1001152887 | 1 | China Built Machines (600A) **(SN B300001393 through B300005764, Excluding B300005620)** | |
| 1B | 1001152561 | 1 | China Built Machines (600AJ) **(SN B300001393 through B300005764, Excluding B300005620)** | |
| 2 | 3600365 | 1 | Auxiliary Pump Assembly | B |
| 2A | 7004290 | 1 | Replacement Motor with Endhead Item 2H (was p/n 7011067) | |
| 2A | 7004248 | 1 | Replacement Motor without Endhead Item 2H | |
| 2A | 7011065 | 1 | Brush Kit - 7011067 Motor | |
| 2B | 7011063 | 1 | Coupling | |
| 2C | 7011064 | 1 | Replacement Pump | |
| 2C | 7011066 | 1 | Seal Kit - 7011064 Pump | |
| 2C | 7004290 | 1 | Relief Valve (Note: Not Available - Replace Complete Pump) | |
| 2D | 7011043 | 4 | Bolt (Mounts Pump to Mounting Bracket) | |
| 2E | See Note | 2 | Bolt (Motor to Bracket) (Note: Not Available for Purchase) | |
| 2F | 7011044 | 1 | Gasket | |

| ITEM | PART NUMBER | QTY | DESCRIPTION | REV |
|---|---|---|---|---|
| 2G | 7011048 | 4 | Lockwasher | |
| 2H | 7011062 | 4 | Endhead, Motor | |
| 4 | 4640908 | 1 | Counterbalance Valve Assembly (USA Built Machines Only) **(SN 0300087000 through 0300137453)** | B |
| 4A | 7011328 | 2 | Cartridge, Counterbalance | |
| 4A | 2900770 | 2 | Seal Kit - 7011328 Cartridge | |
| 6 | 4640866 | 1 | Manual Pull Valve Assembly | |
| 6 | 2900708 | 1 | Seal Kit - 4640866 Valve | |
| 6A | 7012959 | 1 | Knob | |
| 9 | | Ref | Brake Valve Assembly Options: | |
| 9 | 4641108 | NLA | USA Built Machines (Use p/n 1001099391) **(SN 0300087000 through 0300139755)** | |
| 9 | 1001099391 | 1 | USA Built Machines **(SN 0300139756 through 0300177361)** | |
| 9 | 1001099391 | 1 | China Built Machines **(SN B300000100 through B300005764, Excluding B300005620)** | |
| 9A | 7012941 | 1 | Cartridge without Coil | |
| 9A | 7010543 | 1 | Seal Kit - 7012941 Cartridge | |
| 9B | 7012995 | 1 | Cartridge without Coil | |
| 9B | 7012518 | 1 | Seal Kit - 7012995 Cartridge | |
| 9C | 7012944 | 1 | Coil | |
| 9D | 7012943 | 1 | Coil | |
| 9E | 70002209 | 1 | Orifice (1001099391 Valve Only) | |
| 10 | 2120209 | 1 | Hydraulic Pressure Filter Assembly | |
| 10A | 2120210 | 1 | Element, Filter | |
| 10B | 7020020 | 1 | Manual Indicator | |
| 10C | 70000934 | 1 | O-Ring, Filter Bowl (Not Shown) | |
| 11 | | Ref | Articulating Jib Valve Kit (See ACCESSORY VALVE ASSEMBLIES for Breakdown) Options: | |
| 11 | Not Required | 0 | Articulating Jib Valve Kit 600A | |
| 11 | 4640921 | 1 | Articulating Jib Valve Kit 600AJ **(SN 0300087000 through 0300177361)** | |
| 11 | 4640921 | 1 | Articulating Jib Valve Kit 600AJ **(SN B300000100 through B300001392)** | |
| 11 | 4921927 | 1 | Harness, Articulating Jib (Not Shown - See ELECTRICAL SECTION for Breakdown) **(SN 0300087000 through 0300177361)** | |
| 11 | 4921927 | 1 | Harness, Articulating Jib (Not Shown - See ELECTRICAL SECTION for Breakdown) **(SN B300000100 through B300001392)** | |
| 12 | | Ref | 4WS Valve Assembly (See ACCESSORY VALVE ASSEMBLIES for Breakdown) Options: | |
| 12 | Not Required | 0 | Valve Assembly 2WS | |
| 12 | 4640922 | 1 | Valve Assembly 4WS **(SN 0300087000 through 0300177361)** | |
| 12 | 4640922 | 1 | Valve Assembly 4WS **(SN B300000100 through B300001392)** | |
| 12 | Not Required | 0 | Valve Assembly 4WS (Part of Item 1 Valve) **(SN B300001393 through B300005764, Excluding B300005620)** | |
| 12 | 4921928 | 1 | Harness, 4WS (Not Shown - See ELECTRICAL SECTION for Breakdown) **(SN 0300087000 through 0300177361)** | |
| 12 | 4921928 | 1 | Harness, 4WS (Not Shown - See ELECTRICAL SECTION for Breakdown) **(SN B300000100 through B300001392)** | |
| 13 | 0641613 | 2 | Bolt 3/8in-16NC x 1-5/8in | |
| 14 | 4711600 | 5 | Flatwasher 3/8in Thin | |
| 17 | 4711500 | AR | Flatwasher 5/16in Thin | |
| 18 | 0641514 | AR | Bolt 5/16in-18NC x 1-3/4in | |

| ITEM | PART NUMBER | QTY | DESCRIPTION | REV |
|---|---|---|---|---|
| 19 | 0651406 | 3 | Bolt 1/4in-28NF x 3/4in | |
| 20 | 4711400 | 19 | Flatwasher 1/4in Thin | |
| 21 | 2120164 | 1 | Return Filter Assembly | B |
| 21A | 2120149 | 1 | Element, Filter | |
| 21B | 7020021 | 1 | Manual Indicator | |
| 22 | 2220893 | 1 | Fitting, Adaptor | |
| 23 | 0641416 | 2 | Bolt 1/4in-20NC x 2in | |
| 25 | 3311405 | 6 | Locknut 1/4in x 20NC | |
| 26 | 0140001 | 1 | Horn **(SN 0300087000 through 0300177361)** | |
| 26 | 0140001 | 1 | Horn **(SN B300000100 through B300001392)** | |
| 30 | 0641414 | 2 | Bolt 1/4in-20NC x 1-3/4in | |
| 31 | 0641608 | 3 | Bolt 3/8in-16NC x 1in | |
| 43 | 0100011 | AR | Compound, Locking | |
| 44 | 4060804 | 16 in/ 40cm | Flex-Trim 3/16in | |
| 45 | 4060918 | 79 in/ 1.9m | Flex-Trim 5/8in | |
| 46 | 4060807 | 18 in/ 46cm | Flex-Trim 3/8in | |

**FIGURE 2-2. MAIN VALVE ASSEMBLY (SN 0300087000 through 0300177361, SN B300000100 through B300001392)**

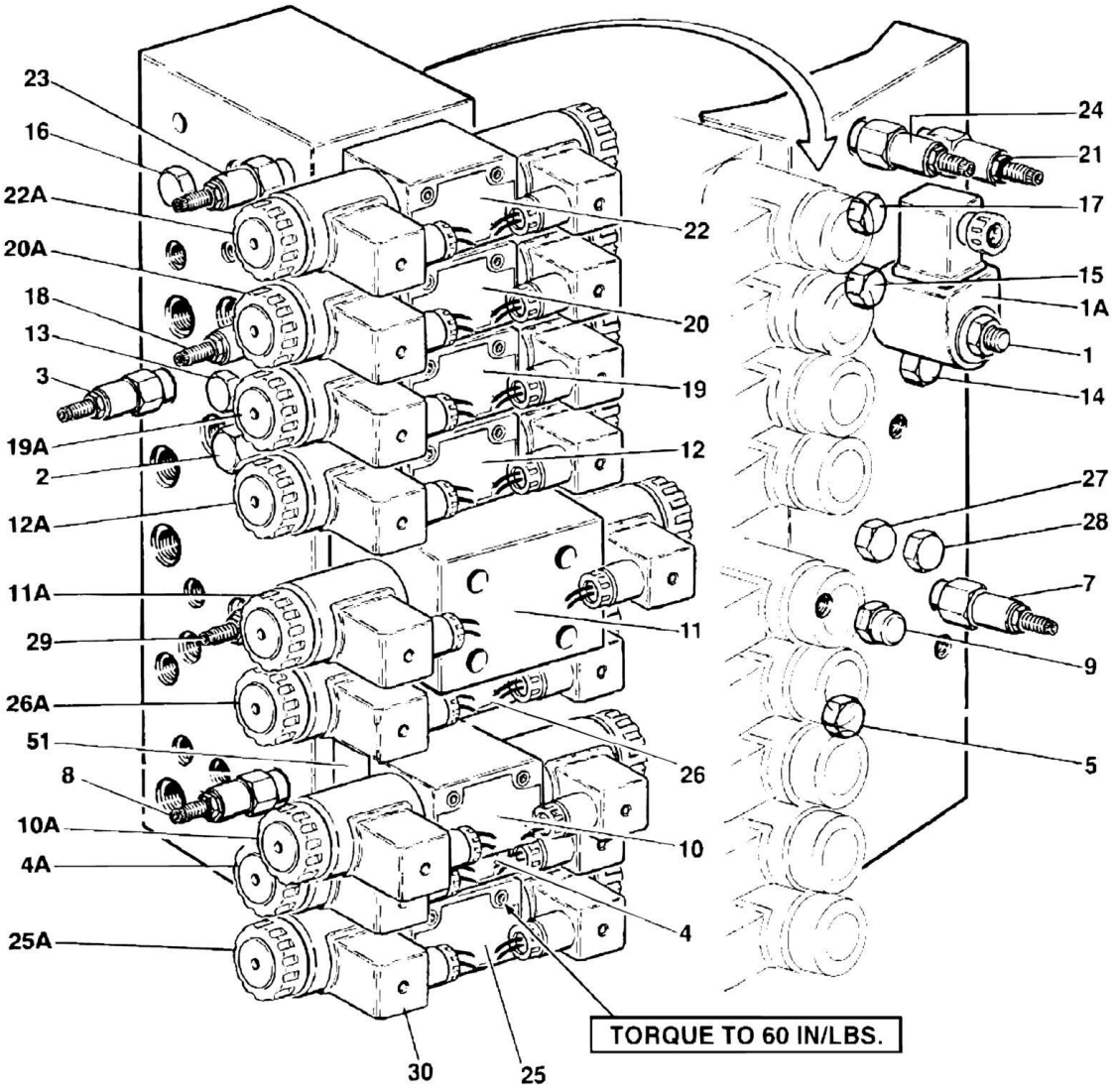

## FIGURE 2-2. MAIN VALVE ASSEMBLY (SN 0300087000 through 0300177361, SN B300000100 through B300001392)

| ITEM | PART NUMBER | QTY | DESCRIPTION | REV |
|---|---|---|---|---|
| | | Ref | **MAIN VALVE ASSEMBLY (SN 0300087000 through 0300177361, SN B300000100 through B300001392)** | |
| | 4641097 | Ref | **USA Built Machines (SN 0300087000 through 0300092879)** | B |
| | 4641452 | Ref | **USA Built Machines (SN 0300092880 through 0300177361)** | C |
| | 4641452 | Ref | **China Built Machines (SN B300000100 through B300001392)** | C |
| 1 | 7017410 | 1 | Cartridge, Without Coil | |
| 1 | 7012967 | 1 | Seal Kit - 7017410 Cartridge | |
| 1A | 7012944 | 1 | Coil | |
| 2 | | Ref | Cartridge, Pressure Sensing Options: | |
| 2 | 7017411 | 1 | Valve p/n 4641097 | |
| 2 | 7012518 | 1 | Seal Kit -7017411 Cartridge | |
| 2 | 7017464 | 1 | Valve p/n 4641452 | |
| 2 | 7012518 | 1 | Seal Kit -7017464 Cartridge | |
| 3 | 7017418 | 1 | Cartridge (Main Relief) | |
| 3 | 7012998 | 1 | Seal Kit | |
| 4 | 7018941 | 2 | Orifice, 1.2mm (Located under Control Valve Assembly) | |
| 4 | 70001976 | 1 | Control Valve Assembly (Platform Level) (was p/n 7012770) | |
| 4 | 7012773 | 1 | Seal Kit | |
| 4A | 7012772 | 2 | Coil | |
| 4A | 7021375 | 2 | Nut | |
| 5 | 7012914 | 1 | Cartridge, Check Valve | |
| 5 | 7012918 | 1 | Seal Kit - 7012914 Cartridge | |
| 6 | 7012914 | 1 | Cartridge, Check Valve | |
| 6 | 7012918 | 1 | Seal Kit - 7012914 Cartridge | |
| 7 | 7017427 | 1 | Cartridge, Relief Valve (Platform Level Backward Relief) | |
| 7 | 7012998 | 1 | Seal Kit - 7017427 Cartridge | |
| 8 | 7017428 | 1 | Cartridge, Relief Valve (Platform Level Forward Relief) | |
| 8 | 7012998 | 1 | Seal Kit - 7017428 Cartridge | |
| 9 | 7012989 | 1 | Cartridge, Flow Control | |
| 9 | 7012953 | 1 | Seal Kit - 7012989 Cartridge | |
| 10 | 70001976 | 1 | Control Valve Assembly (Platform Rotate) (was p/n 7012770) | |
| 10 | 7012773 | 1 | Seal Kit | |
| 10A | 7012772 | 2 | Coil | |
| 10A | 7018912 | 2 | Nut | |
| 11 | | Ref | Control Valve Assembly Options (Upper Tele): | |
| 11 | 70000579 | 1 | USA Built Machines (was p/n 7012766) **(SN 0300087000 through 0300092879)** | |
| 11 | 70000579 | 1 | USA Built Machines **(SN 0300092880 through 0300177361)** | |
| 11 | 70000579 | 1 | China Built Machines **(SN B300000100 through B300001392)** | |
| | | Ref | **Note: Refer to Vendor P/N on Valve Nameplate before ordering Parts. 7012766 is RR00567495 or R900567495. 70000579 is R900930080.** | |
| 11 | | Ref | Seal Kit Options: | |
| 11 | 7012769 | 1 | 7012766 Valve | |
| 11 | 70000583 | 1 | 70000579 Valve | |
| 11A | | Ref | Coil Options: | |
| 11A | 7012772 | 1 | 7012766 Valve (was p/n 7012768) | |
| 11A | 70000582 | 1 | 70000579 Valve | |
| 11A | | Ref | Nut, Coil Options: | |
| 11A | 7018912 | 1 | 7012766 Valve | |

# SECTION 2 - TURNTABLE

| ITEM | PART NUMBER | QTY | DESCRIPTION | REV |
|---|---|---|---|---|
| 11A | 70000580 | 1 | 70000579 Valve | |
| 12 | 7012775 | 1 | Control Valve Assembly (Flow Control) | |
| 12 | 7012773 | 1 | Seal Kit | |
| 12A | 7012772 | 2 | Coil | |
| 12A | 7018912 | 2 | Nut | |
| 13 | 7010542 | 1 | Cartridge, Shuttle | |
| 13 | 7010543 | 1 | Seal Kit - 7010542 Cartridge | |
| 14 | 7010542 | 1 | Cartridge, Shuttle | |
| 14 | 7010543 | 1 | Seal Kit - 7010542 Cartridge | |
| 15 | 7010542 | 1 | Cartridge, Shuttle | |
| 15 | 7010543 | 1 | Seal Kit - 7010542 Cartridge | |
| 16 | 7010542 | 1 | Cartridge, Shuttle | |
| 16 | 7010543 | 1 | Seal Kit - 7010542 Cartridge | |
| 17 | 7010542 | 1 | Cartridge, Shuttle | |
| 17 | 7010543 | 1 | Seal Kit - 7010542 Cartridge | |
| 18 | | Ref | Cartridge, Relief Valve | |
| 18 | 7017420 | 1 | Valve p/n 4641097 | |
| 18 | 7012998 | 1 | Seal Kit - 7017420 Cartridge | |
| 18 | 7012912 | 1 | Valve p/n 4641452 | |
| 18 | 7012998 | 1 | Seal Kit - 7012912 Cartridge | |
| 19 | 7012775 | 1 | Control Valve Assembly (Upper Lift) | |
| 19 | 7012773 | 1 | Seal Kit | |
| 19 | 7012799 | 1 | Lanyard Assembly (Not Shown) | |
| 19A | 7012772 | 2 | Coil | |
| 19A | 7018912 | 2 | Nut | |
| 20 | 7012775 | 1 | Control Valve Assembly (Swing) | |
| 20 | 7012773 | 1 | Seal Kit | |
| 20A | 7012772 | 2 | Coil | |
| 20A | 7018912 | 2 | Nut | |
| 21 | | Ref | Cartridge, Relief Valve (Swing Right/Left Relief) | |
| 21 | 7017423 | 1 | Valve p/n 4641097 | |
| 21 | 7012998 | 1 | Seal Kit - 7017423 Cartridge | |
| 21 | 7012912 | 1 | Valve p/n 4641452 | |
| 21 | 7012998 | 1 | Seal Kit - 7012912 Cartridge | |
| 22 | 7012774 | 1 | Control Valve Assembly (Steer) | |
| 22 | 7012773 | 1 | Seal Kit | |
| 22A | 7012772 | 2 | Coil | |
| 22A | 7018912 | 2 | Nut | |
| 23 | 7017428 | 1 | Cartridge, Relief Valve (Steer Left Relief) | |
| 23 | 7012998 | 1 | Seal Kit - 7017428 Cartridge | |
| 24 | 7017428 | 1 | Cartridge, Relief Valve (Steer Right Relief) | |
| 24 | 7012998 | 1 | Seal Kit - 7017428 Cartridge | |
| 25 | 70001976 | 1 | Control Valve Assembly (Lower Tele) (was p/n 7012770) | |
| 25 | 7012773 | 1 | Seal Kit | |
| 25A | 7012772 | 2 | Coil | |
| 25A | 7021375 | 2 | Nut | |
| 26 | 7018952 | 1 | Control Valve Assembly (Lower Lift) | |
| 26 | 7012769 | 1 | Seal Kit - 7018952 Cartridge | |
| 26A | 7012772 | 2 | Coil | |
| 26A | 7018912 | 2 | Nut | |
| 26A | 7012799 | 1 | Lanyard Cable Assembly | |

| ITEM | PART NUMBER | QTY | DESCRIPTION | REV |
|---|---|---|---|---|
| 27 | 7012969 | 1 | Cartridge, Check | |
| 27 | 7012967 | 1 | Seal Kit - 7012969 Cartridge | |
| 28 | 7012914 | 1 | Cartridge, Check | |
| 28 | 7012918 | 1 | Seal Kit - 7012914 Cartridge | |
| 30 | 4460499 | 19 | Connector, Din with Diode (Part of Valve Harness) | |
| | 2901763 | 1 | Rotate Sandwich Valve Kit | A |
| 51 | 7021310 | 1 | Block, Valve | |

## FIGURE 2-3. MAIN VALVE ASSEMBLY (SN B300001393 through B300005764)

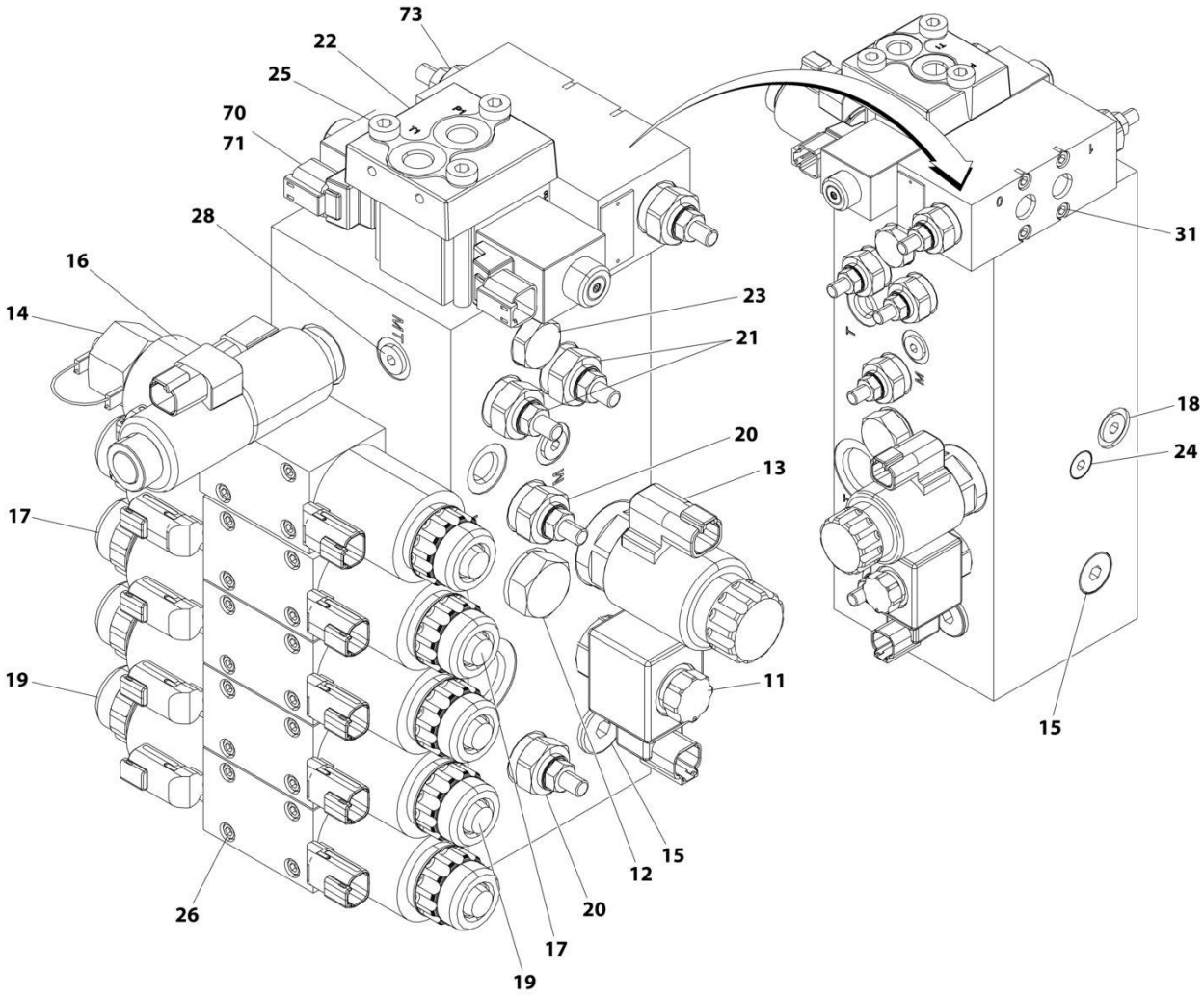

## FIGURE 2-3. MAIN VALVE ASSEMBLY (SN B300001393 through B300005764)

| ITEM | PART NUMBER | QTY | DESCRIPTION | REV |
|---|---|---|---|---|
| | 1001152887 | Ref | **MAIN VALVE ASSEMBLY - 2WS** | C |
| | 1001152561 | Ref | **MAIN VALVE ASSEMBLY - 4WS** | E |
| 11 | 70004652 | 1 | Valve, Cartridge Less Coil (Dump) | |
| 11 | 70023867 | 1 | Seal Kit - 70004652 Valve | |
| 11 | 70004653 | 1 | Coil | |
| 11 | 70004654 | 1 | Nut, Coil | |
| 12 | 70004655 | 1 | Valve, Cartridge | |
| 12 | 70004656 | 1 | Seal Kit - 70004655 Valve | |
| 13 | 70004657 | 1 | Valve, Cartridge Less Coil | |
| 13 | 70004594 | 1 | Seal Kit - 70004657 Valve | |
| 13 | 70004595 | 1 | Coil | |
| 13 | 70004597 | 1 | Nut, Coil | |
| 13 | 70004596 | 1 | O-Ring, Pole Tube | |
| 14 | 70004659 | 1 | Valve, Cartridge Less Coil (Steer) | |
| 14 | 70004660 | 1 | Seal Kit - 70004659 Valve | |
| 14 | 80434249 | 2 | Coil | |
| 14 | 70004661 | 1 | Nut, Coil | |
| 14 | 70024457 | 1 | O-Ring, Pole Tube (Upper) | |
| 14 | 70004662 | 1 | O-Ring, Pole Tube (Lower) | |
| 15 | 70023859 | 5 | Valve, Cartridge | |
| 16 | 70004663 | 1 | Valve Assembly (Lower Lift) | |
| 16 | 7012773 | 1 | Seal Kit - 70004663 Valve | |
| 16 | 70004660 | 2 | Coil | |
| 16 | 7021375 | 1 | Nut, Coil (Plastic) | |
| 16 | 70004661 | 2 | O-Ring, Pole Tube | |
| 16 | 70003525 | 1 | Nut, Coil (Aluminum) | |
| 16 | 70004664 | 1 | Lanyard | |
| 17 | 70004459 | 2 | Valve Assembly (Upper Tele and Lower Tele) | |
| 17 | 7012773 | 1 | Seal Kit - 70004459 Valve | |
| 17 | 70004460 | 2 | Coil | |
| 17 | 7021375 | 2 | Nut, Coil | |
| 17 | 70004661 | 2 | O-Ring, Pole Tube | |
| 18 | 70004665 | 1 | Valve, Cartridge | |
| 18 | 70023862 | 1 | Seal Kit - 70004665 Valve | |
| 19 | 70004666 | 2 | Valve Assembly (Swing and Upper Lift) | |
| 19 | 7012773 | 1 | Seal Kit - 70004666 Valve | |
| 19 | 70004463 | 2 | Coil | |
| 19 | 7021375 | 2 | Nut, Coil | |
| 19 | 70004461 | 2 | O-Ring, Pole Tube | |
| 20 | 70003019 | 3 | Valve, Cartridge | |
| 20 | 70004052 | 3 | Seal Kit - 70003019 Valve | |
| 21 | 70003019 | 2 | Valve, Cartridge | |
| 21 | 70004052 | 2 | Seal Kit - 70003019 Valve | |
| 22 | 70004667 | 1 | Cover | |
| 23 | 2220886 | 1 | Plug (2WS) | |
| 23 | 70004670 | 1 | Plug (4WS) | |
| 24 | 70004668 | 1 | Plug (2WS) | |
| 24 | 70004665 | 1 | Plug (4WS) | |
| 25 | 70005201 | 3 | Capscrew (Valve p/n 1001152887 Only) | |
| 25 | 70021202 | 1 | Bolt Kit (Valve p/n 1001152561 Only) | |

# SECTION 2 - TURNTABLE

| ITEM | PART NUMBER | QTY | DESCRIPTION | REV |
|---|---|---|---|---|
| 26 | 7018942 | 20 | Capscrew | |
| 27 | 70005202 | 2 | O-Ring (Not Shown - Located under Item 22) | |
| 28 | 70002758 | 6 | Plug 7/16 | |
| 29 | 70004617 | 4 | Plug 9/16 (Not Shown) | |
| 30 | 70002759 | 1 | Plug 3/4 (Not Shown - Located under Item 73) | |
| 31 | 70005232 | 1 | Bolt Kit (Valve p/n 1001152561 Only) | |
| 32 | 91474405 | 2 | O-Rings (Not Shown - Located under Item 73) (Valve p/n 1001152561 Only) | |
| 70 | 70004671 | 1 | Valve Assembly (4WS Rear Steer) (1001152561 Valve Only) | |
| 70 | 70004672 | 1 | Seal Kit - 70004671 Valve | |
| 71 | 70004673 | 2 | Coil (4WS Rear Steer) (1001152561 Valve Only) | |
| 73 | 70004674 | 2 | Valve, Cartridge (4WS Rear Steer) (1001152561 Valve Only) | |
| 73 | 70004052 | 2 | Seal Kit - 70004674 Valve | |

**FIGURE 2-4. ACCESSORY VALVE ASSEMBLIES (SN 0300087000 through 0300177361, SN B300000100 through B300001392)**

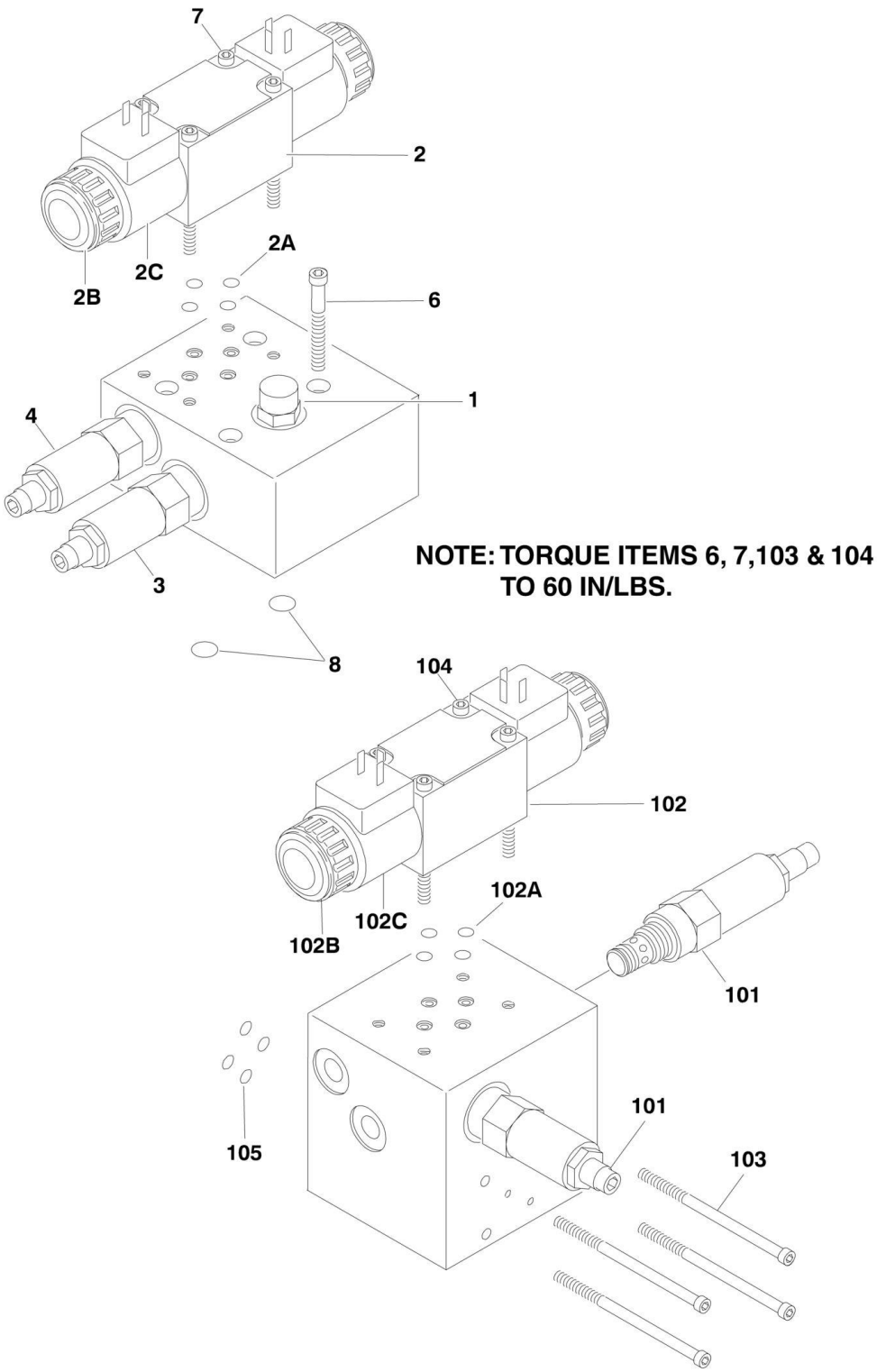

## FIGURE 2-4. ACCESSORY VALVE ASSEMBLIES (SN 0300087000 through 0300177361, SN B300000100 through B300001392)

| ITEM | PART NUMBER | QTY | DESCRIPTION | REV |
|---|---|---|---|---|
| | 4640921 | Ref | **ARTICULATING JIB VALVE ASSEMBLY (SN 0300087000 through 0300177361, SN B300000100 through B300001392)** | |
| 1 | 7012965 | 1 | Cartridge, Flow Control | |
| 1 | 7012953 | 1 | Seal Kit - 7012965 Cartridge | |
| 2 | 70001976 | 1 | Directional Control Valve Assembly (was p/n 7012770) | |
| 2 | 7012773 | 1 | Seal Kit | |
| 2A | 7018945 | 4 | O-Ring | |
| 2B | 7018912 | 2 | Nut | |
| 2C | 7012772 | 2 | Coil | |
| 3 | 7017421 | 1 | Cartridge, Relief | |
| 3 | 7012998 | 1 | Seal Kit - 7017421 Cartridge | |
| 4 | 7017422 | 1 | Cartridge, Relief | |
| 4 | 7012998 | 1 | Seal Kit - 7017422 Cartridge | |
| 5 | 4460499 | 2 | Connector, DIN with Diode (Not Shown - Part of Valve Harness) | |
| 6 | 7018946 | 4 | Capscrew, Socket Head #10-24NC x 5in (Not Shown - Used to Mount Valve Assembly) | |
| 7 | 7018942 | 4 | Capscrew, Socket Head #10-24NC x 2in | |
| 8 | 7012776 | 4 | O-Ring (Not Shown - Used to Mount to Main Valve) | |
| | 4640922 | Ref | **4WS VALVE ASSEMBLY (SN 0300087000 through 0300177361, SN B300000100 through B300001392)** | B |
| 101 | 7017420 | 2 | Cartridge, Flow Control | |
| 101 | 7012998 | 2 | Seal Kit - 7017420 Cartridge | |
| 102 | 7012774 | 1 | Directional Control Valve Assembly | |
| 102 | 7012773 | 1 | Seal Kit | |
| 102A | 7018945 | 4 | O-Ring | |
| 102B | 7018912 | 2 | Nut | |
| 102C | 7012772 | 2 | Coil | |
| 103 | 7018946 | 4 | Capscrew, Socket Head #10-24NC x 5in (Used to Mount Valve Assembly) | |
| 104 | 7018942 | 4 | Capscrew, Socket Head #10-24NC x 2in | |
| 105 | 7018948 | 4 | O-Ring (Used to Mount to Main Valve) | |

**FIGURE 2-5. SWING DRIVE, TURNTABLE BEARING AND LOCK INSTALLATIONS**

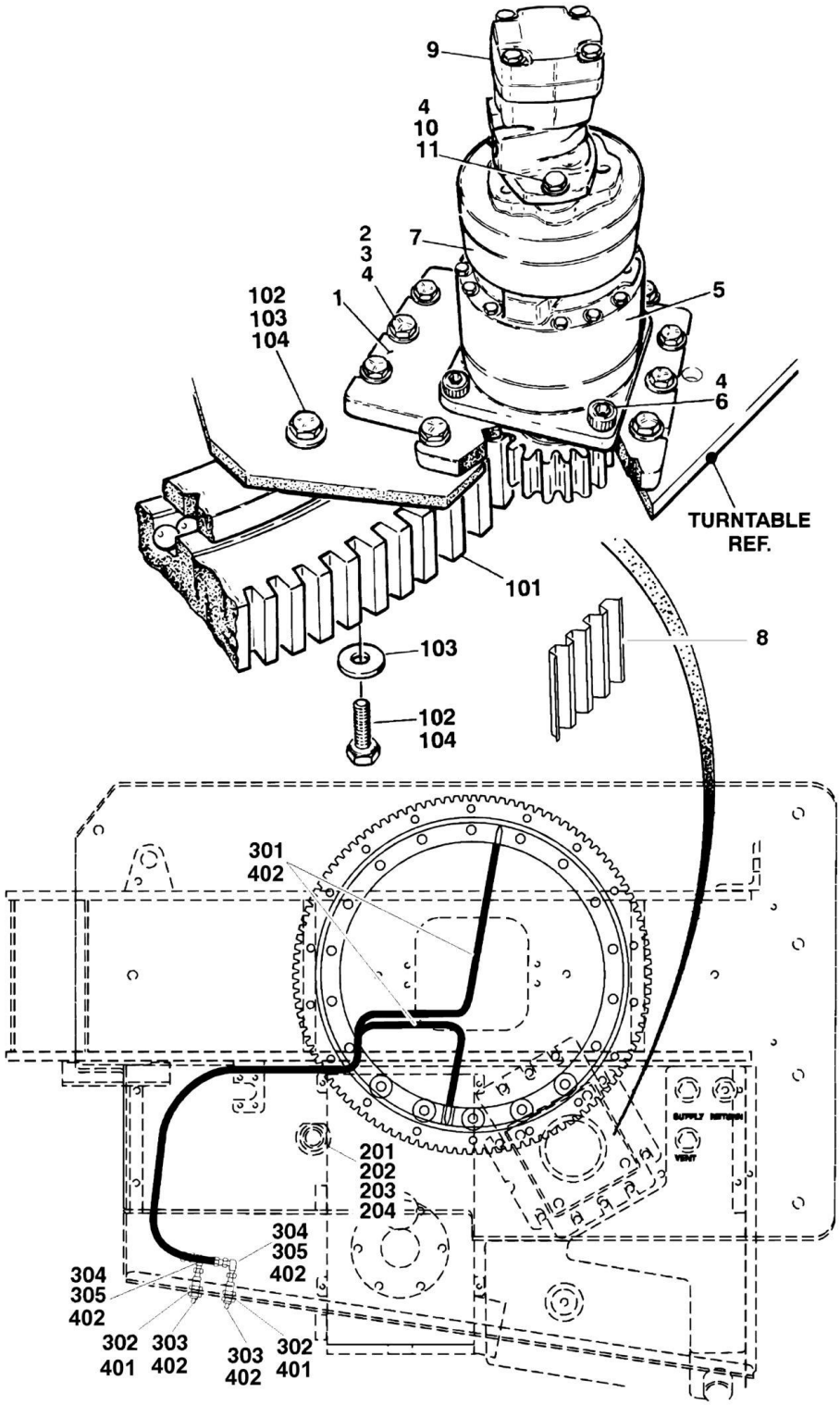

## FIGURE 2-5. SWING DRIVE, TURNTABLE BEARING AND LOCK INSTALLATIONS

| ITEM | PART NUMBER | QTY | DESCRIPTION | REV |
|---|---|---|---|---|
| | | Ref | **SWING DRIVE INSTALLATIONS** | |
| | 0270329 | Ref | **USA Built Machines (SN 0300087000 through 0300137452)** | C |
| | 1001094828 | Ref | **USA Built Machines (SN 0300137453 through 0300177361)** | C |
| | 1001094828 | Ref | **China Built Machines (SN B300000100 through B300005764, Excluding B300005620)** | D |
| 1 | 3537318 | 1 | Plate, Swing Drive Mounting | |
| 2 | 0642018 | 10 | Bolt 5/8in - 11NC x 2-1/4in | |
| 3 | 4892000 | 10 | Flatwasher 5/8in Hardened | |
| 4 | 0100011 | AR | Compound, Locking | |
| 5 | | Ref | Swing Hub Assembly Options: | |
| 5 | 2780205 | 1 | Hub USA Built Machines (See SWING HUB ASSEMBLY for Breakdown) **(SN 0300087000 through 0300137452)** | |
| 5 | 1001101061 | 1 | Hub USA Built Machines (See SWING MOTOR/BRAKE/HUB ASSEMBLY for Breakdown) **(SN 0300137453 through 0300177361)** | |
| 5 | 1001101061 | 1 | Hub China Built Machines (See SWING MOTOR/BRAKE/HUB ASSEMBLY for Breakdown) **(SN B300000100 through B300004344)** | |
| 5 | 1001248468 | 1 | Hub China Built Machines (See SWING MOTOR/BRAKE/HUB ASSEMBLY for Breakdown) **(SN B300004345 through B300005764, Excluding B300005620)** | |
| 6 | 3932224 | 4 | Bolt 1/2in-13NC x 1-1/2in | |
| 7 | | Ref | Swing Brake Assembly Options: | |
| 7 | 0920119 | 1 | Brake USA Built Machines **(SN 0300087000 through 0300137452)** | |
| 7 | 7018612 | 1 | Repair Kit - 0920119 Brake (Note: Kit is only repair part available) | |
| 7 | 1001101061 | 1 | Brake USA Built Machines (See SWING MOTOR/BRAKE/HUB ASSEMBLY for Breakdown) **(SN 0300137453 through 0300177361)** | |
| 7 | 1001101061 | 1 | Brake China Built Machines (See SWING MOTOR/BRAKE/HUB ASSEMBLY for Breakdown) **(SN B300000100 through B300004344)** | |
| 7 | 1001248468 | 1 | Brake China Built Machines (See SWING MOTOR/BRAKE/HUB ASSEMBLY for Breakdown) **(SN B300004345 through B300005764, Excluding B300005620)** | |
| 8 | 4071009 | 1 | Shim **(SN 0300087000 through 0300177361)** | |
| 8 | 4071009 | 1 | Shim **(SN B300000100 through B300000917)** | |
| 8 | 1001125492 | 1 | Shim **(SN B300000918 through B300005764, Excluding B300005620)** | |
| 9 | | Ref | Swing Motor Assembly Options: | |
| 9 | | Ref | Motor USA Built Machines Options: **(SN 0300087000 through 0300137452)** | |
| 9 | 3160273 | NLA | White Roller Stator Motor (Use p/n 1001110169 See SWING MOTOR ASSEMBLY (WHITE ROLLER STATOR) for Breakdown) | |
| 9 | 1001110169 | 1 | Parker Motor (See SWING MOTOR ASSEMBLY (PARKER) For Breakdown) | |
| 9 | 1001101061 | 1 | Motor USA Built Machines (See SWING MOTOR/BRAKE/HUB ASSEMBLY (PARKER/FAIRFIELD) for Breakdown) **(SN 0300137453 through 0300177361)** | |
| 9 | 1001101061 | 1 | Motor China Built Machines (See SWING MOTOR/BRAKE/HUB ASSEMBLY (PARKER/FAIRFIELD) for Breakdown) **(SN B300000100 through B300004344)** | |
| 9 | 1001248468 | 1 | Motor China Built Machines (See SWING | |

| ITEM | PART NUMBER | QTY | DESCRIPTION | REV |
|---|---|---|---|---|
| | | | MOTOR/BRAKE/HUB ASSEMBLY (PARKER/FAIRFIELD) for Breakdown) **(SN B300004345 through B300005764, Excluding B300005620)** | |
| 10 | | Ref | Bolt Options: | |
| 10 | 0681836 | 2 | Bolt 1/2in-13NC x 4-1/2in USA Built Machines **(SN 0300087000 through 0300137452)** | |
| 10 | | Ref | Bolt USA Built Machines (See SWING MOTOR/BRAKE/HUB ASSEMBLY for Breakdown) **(SN 0300137453 through 0300177361)** | |
| 11 | | Ref | Flatwasher 1/2in Hardened Options: | |
| 11 | 4891800 | 2 | Flatwasher USA Built Machines **(SN 0300087000 through 0300137452)** | |
| 11 | | Ref | Flatwasher USA Built Machines (See SWING MOTOR/BRAKE/HUB ASSEMBLY for Breakdown) **(SN 0300137453 through 0300177361)** | |
| | | Ref | **TURNTABLE BEARING INSTALLATIONS** | |
| | 0254798 | Ref | **USA Built Machines (SN 0300087000 through 0300112399)** | 2-B |
| | 1001095359 | Ref | **USA Built Machines (SN 0300112400 through 0300118364)** | 2-B |
| | 0254798 | Ref | **USA Built Machines (SN 0300118365 through 0300177361)** | 2-B |
| | 0254798 | Ref | **China Built Machines (SN B300000100 through B300005764, Excluding B300005620)** | 2-B |
| 101 | 0440207 | NLA | Bearing, Turntable | |
| 102 | 0682016 | 36 | Bolt 5/8in - 11NC x 2in (Grade 8) | |
| 103 | 4892000 | 36 | Flatwasher 5/8in Hardened | |
| 104 | 0100019 | AR | Compound, Locking | |
| | 0255410 | Ref | **TURNTABLE LOCK INSTALLATION** | B |
| 201 | 4844958 | 1 | Pin | |
| 202 | 3421565 | 1 | Pin, Snap | |
| 203 | 3760170 | 2 | Ring, Quick Release | |
| 204 | 1260017 | 9 in/23cm | Chain | |
| | 0255444 | Ref | **REMOTE BEARING LUBE INSTALLATION (SN 0300087000 through 0300177361, SN B300000100 through B300002815)** | 2-E |
| 301 | 2751032 | 2 | Hose, Grease | |
| 302 | 2180344 | 2 | Fitting, Bulkhead | |
| 303 | 2160002 | 2 | Fitting, Grease | |
| 304 | 2220001 | 2 | Fitting, Straight | |
| 305 | 2220063 | 2 | Fitting, 90 | |
| | 1001236973 | Ref | **REMOTE BEARING LUBE INSTALLATION (SN B300002816 through B300005764, Excluding B300005620)** | A |
| 401 | 4711600 | 4 | Washer 3/8 | |
| 402 | 1001151646 | 2 | Hose (Includes Fittings) | |

## FIGURE 2-6. SWING HUB ASSEMBLY (USA BUILT MACHINES) (SN 0300087000 through 0300137452)

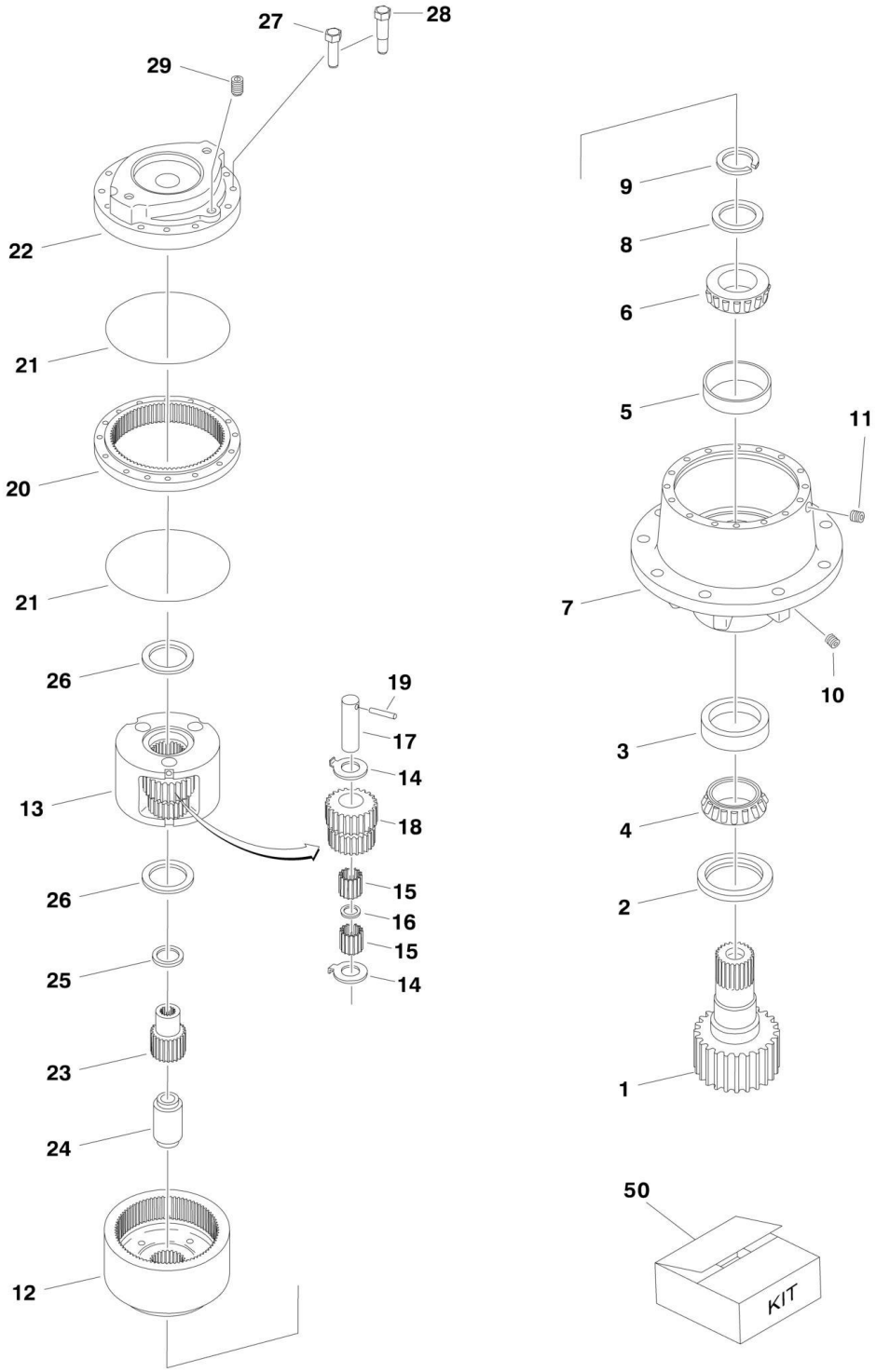

## FIGURE 2-6. SWING HUB ASSEMBLY (USA BUILT MACHINES) (SN 0300087000 through 0300137452)

| ITEM | PART NUMBER | QTY | DESCRIPTION | REV |
|---|---|---|---|---|
| | 2780205 | Ref | **SWING HUB ASSEMBLY** | B |
| | | Ref | **Housing Assembly** | |
| 1 | 7010492 | 1 | Shaft, Output | |
| 2 | 7000228 | 1 | Seal, Lip | |
| 3 | 7000255 | 1 | Cup, Bearing | |
| 4 | 7000256 | 1 | Cone, Bearing | |
| 5 | 7000257 | 1 | Cup, Bearing | |
| 6 | 7000258 | 1 | Cone, Bearing | |
| 7 | 7017089 | 1 | Housing | |
| 8 | 7007633 | 1 | Thrustwasher | |
| 9 | 7000229 | 1 | Ring, Retaining | |
| 10 | 7010494 | 2 | Pipe, Plug | |
| 11 | 7001928 | 2 | Pipe, Plug | |
| 12 | 7000246 | 2 | Gear, Internal | |
| | | Ref | **Carrier Assembly** | |
| 13 | 7001931 | 1 | Carrier | |
| 14 | 7001985 | 6 | Thrustwasher, Tanged | |
| 15 | 7001909 | 96 | Bearing, Needle | |
| 16 | 7000263 | 3 | Spacer, Thrust | |
| 17 | 7001911 | 3 | Shaft, Planet | |
| 18 | 7001987 | 3 | Gear, Cluster | |
| 19 | 7010474 | 3 | Roll Pin | |
| 20 | 7001988 | 1 | Ring Gear | |
| 21 | 7000230 | 2 | O-Ring | |
| 22 | 7000209 | 1 | Cover, Input | |
| 23 | 7010488 | 1 | Gear, Sun | |
| 24 | 7000269 | 1 | Spacer, Input | |
| 25 | 7000270 | 1 | Thrustwasher | |
| 26 | 7000253 | 2 | Thrustwasher | |
| 27 | 7000217 | 8 | Bolt | |
| 28 | 7000214 | 4 | Bolt, Shoulder | |
| 29 | 7000242 | 1 | Pipe, Plug | |
| 50 | 7024100 | 1 | Seal Kit (Includes Items 2, 9, 21 & 26) | |

**FIGURE 2-7. SWING MOTOR ASSEMBLY (WHITE ROLLER STATOR) (USA BUILT MACHINES) (SN 0300087000 through 0300137452)**

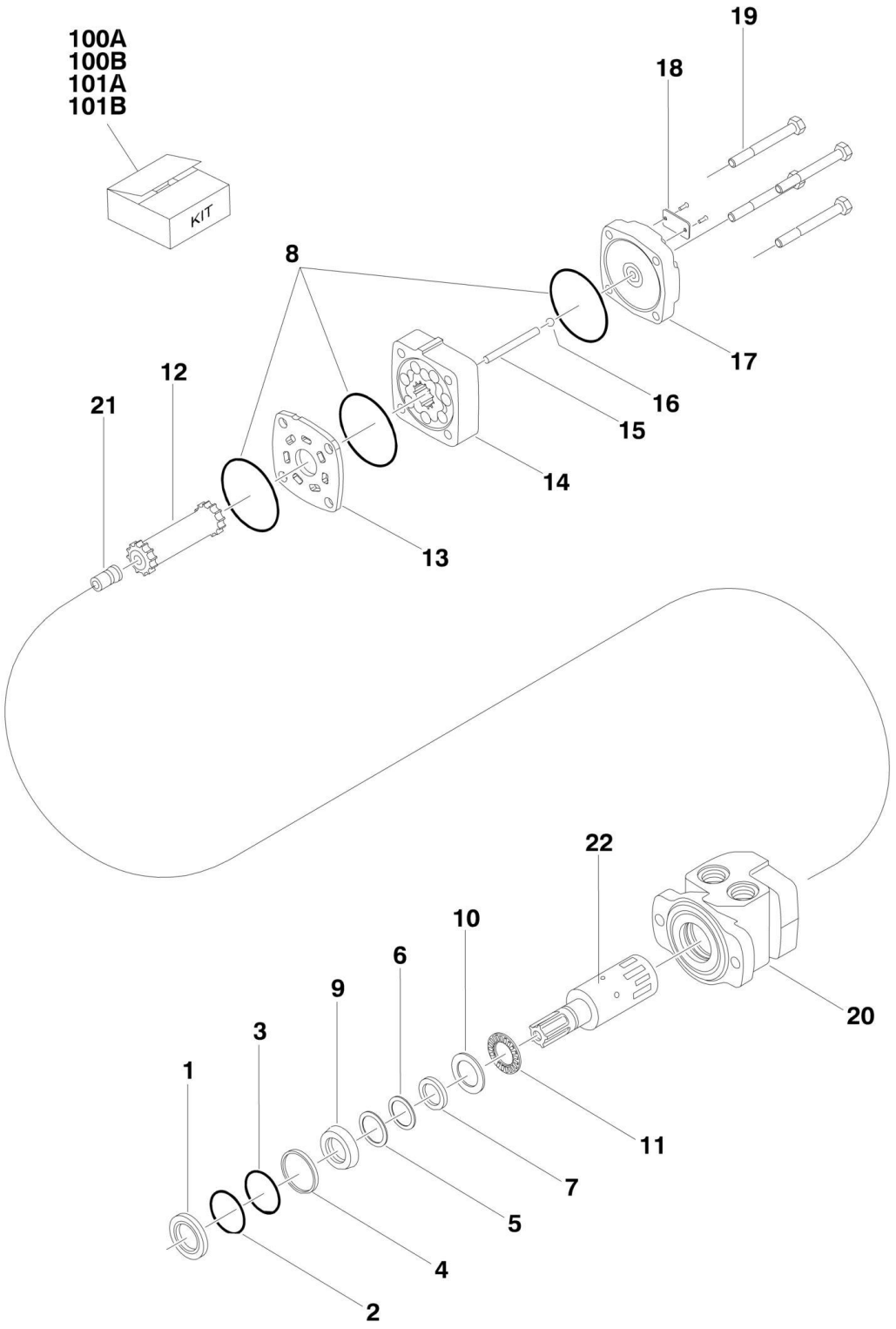

## FIGURE 2-7. SWING MOTOR ASSEMBLY (WHITE ROLLER STATOR) (USA BUILT MACHINES) (SN 0300087000 through 0300137452)

| ITEM | PART NUMBER | QTY | DESCRIPTION | REV |
|---|---|---|---|---|
| | 3160273 | Ref | **SWING MOTOR ASSEMBLY (WHITE ROLLER STATOR)** | D |
| 1 | 7005881 | 1 | Seal, Dust | |
| 2 | 7005881 | 1 | Ring, Split Wire | |
| 3 | 7005881 | 1 | Shim, Metal Back-up | |
| 4 | 7005881 | 1 | Seal, High Pressure | |
| 5 | 7005881 | 1 | Shim, Metal Back-up | |
| 6 | 7005881 | 1 | Seal, Teflon Back-up | |
| 7 | 7005881 | 1 | Seal, Shaft | |
| 8 | 7005881 | 3 | Seal, Body | |
| 9 | 7005882 | 1 | Carrier, Seal | |
| 10 | 7005882 | 1 | Thrustwasher | |
| 11 | 7016422 | 1 | Bearing, Thrust | |
| 12 | 7005889 | 1 | Link, Drive | |
| 13 | 7016423 | 1 | Plate, Wear | |
| 14 | 7005890 | 1 | Rotor Assembly | |
| 15 | 7005891 | 1 | Pin, Drive Link | |
| 16 | 7016424 | 1 | Ball | |
| 17 | 7016424 | 1 | Cover, End | |
| 18 | See Note | NSS | Tag, I.D. (Note: Not Available for Purchase) | |
| 19 | 7005892 | 4 | Bolt | |
| 20 | 7016425 | 1 | Housing | |
| 21 | 7005893 | 1 | Plug, Cooling | |
| 22 | 7016426 | 1 | Shaft | |
| 100 | | Ref | Seal Kit Options: | |
| 100A | 7005881 | 1 | Seal Kit (Includes Items 1-8) | |
| 100B | 7005882 | 1 | Seal Carrier Kit (Includes Items 9 & 10) | |
| 101 | | Ref | Repair Kit Options: | |
| 101A | 7016424 | 1 | End Cover Kit (Includes Items 16 & 17) | |
| 101B | 7016427 | 1 | Housing/Shaft Kit (Includes Items 20-22) | |

**FIGURE 2-8. SWING MOTOR ASSEMBLY (PARKER) (USA BUILT MACHINES) (SN 0300087000 through 0300137452)**

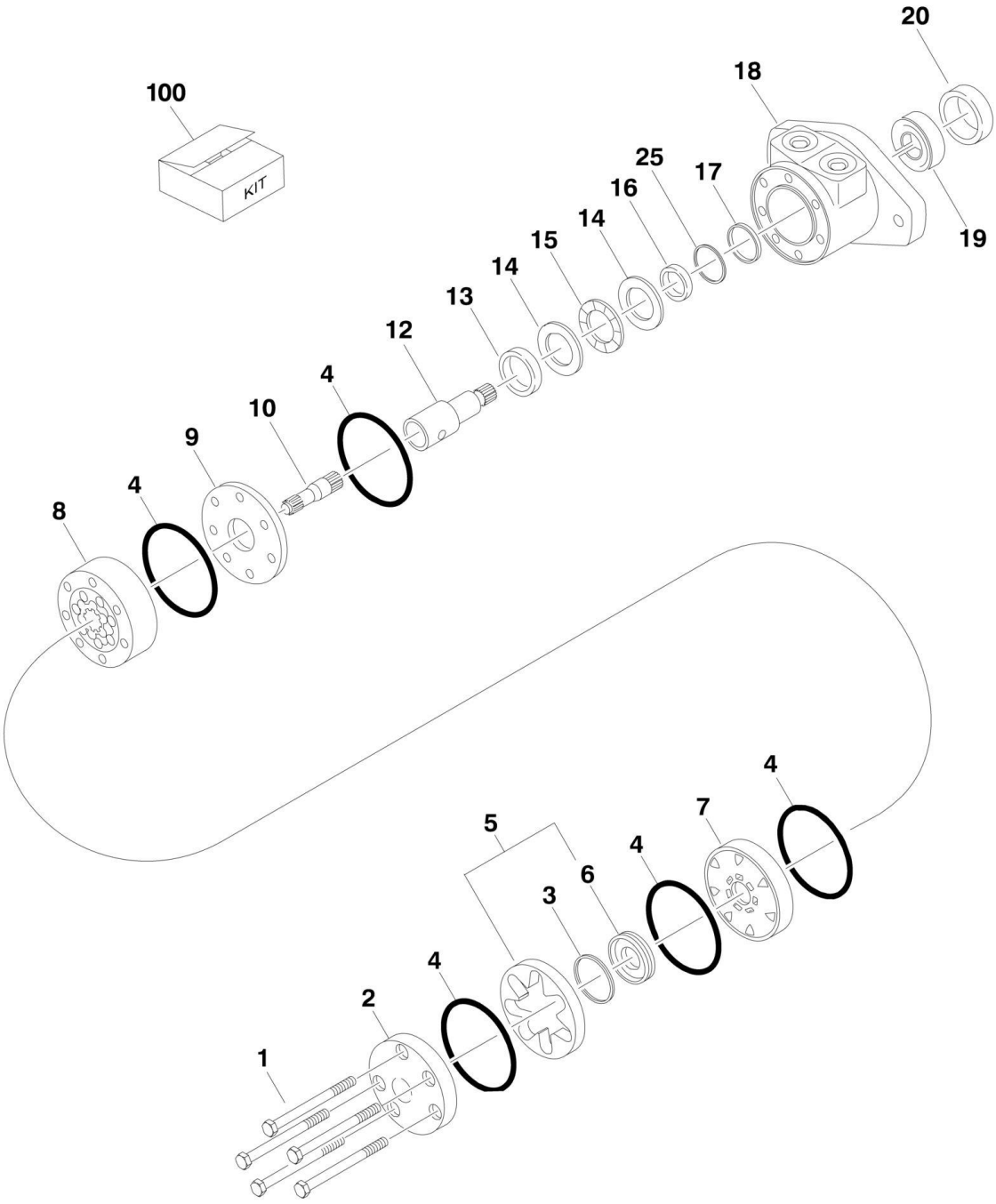

## FIGURE 2-8. SWING MOTOR ASSEMBLY (PARKER) (USA BUILT MACHINES) (SN 0300087000 through 0300137452)

| ITEM | PART NUMBER | QTY | DESCRIPTION | REV |
|---|---|---|---|---|
| | 1001110169 | Ref | **SWING MOTOR ASSEMBLY (PARKER)** | B |
| 1 | 70002243 | 5 | Bolt | |
| 2 | 7004035 | 1 | Cover, End | |
| 3 | See Note | NSS | Seal, Commutator (Note: Use Item 100) | |
| 4 | See Note | NSS | Seal, Ring (Note: Use Item 100) | |
| 5 | 7024453 | 1 | Commutator and Ring Assembly | |
| 6 | 7024453 | 1 | Ring | |
| 7 | 7024379 | 1 | Manifold | |
| 8 | 70002208 | 1 | Rotor Set | |
| 9 | 7024380 | 1 | Plate, Wear | |
| 10 | 83304150 | 1 | Link, Drive | |
| 12 | 7024395 | 1 | Shaft, Coupling | |
| 13 | 7024381 | 1 | Bushing, Bronze | |
| 14 | 7004043 | 2 | Thrustwasher | |
| 15 | 7004044 | 1 | Bearing, Thrust | |
| 16 | See Note | NSS | Seal, Inner (Note: Use Item 100) | |
| 17 | See Note | NSS | Washer, Back-up (Note: Use Item 100) | |
| 18 | 1001110169 | NSS | Housing (Note: Not Available for Purchase) | |
| 19 | 7024390 | 1 | Bearing | |
| 20 | See Note | NSS | Seal (Note: Use Item 100) | |
| 25 | See Note | NSS | Washer, Back-up (Note: Use Item 100) | |
| 100 | 7024389 | 1 | Seal Kit (Includes Items 3, 4, 16, 17, 20 & 25) | |

**FIGURE 2-9. SWING MOTOR/BRAKE/HUB ASSEMBLY (PARKER/FAIRFIELD) (USA BUILT MACHINES AND CHINA BUILT MACHINES) (SN 0300137453 through 0300177361, SN B300000100 through B300004344)**

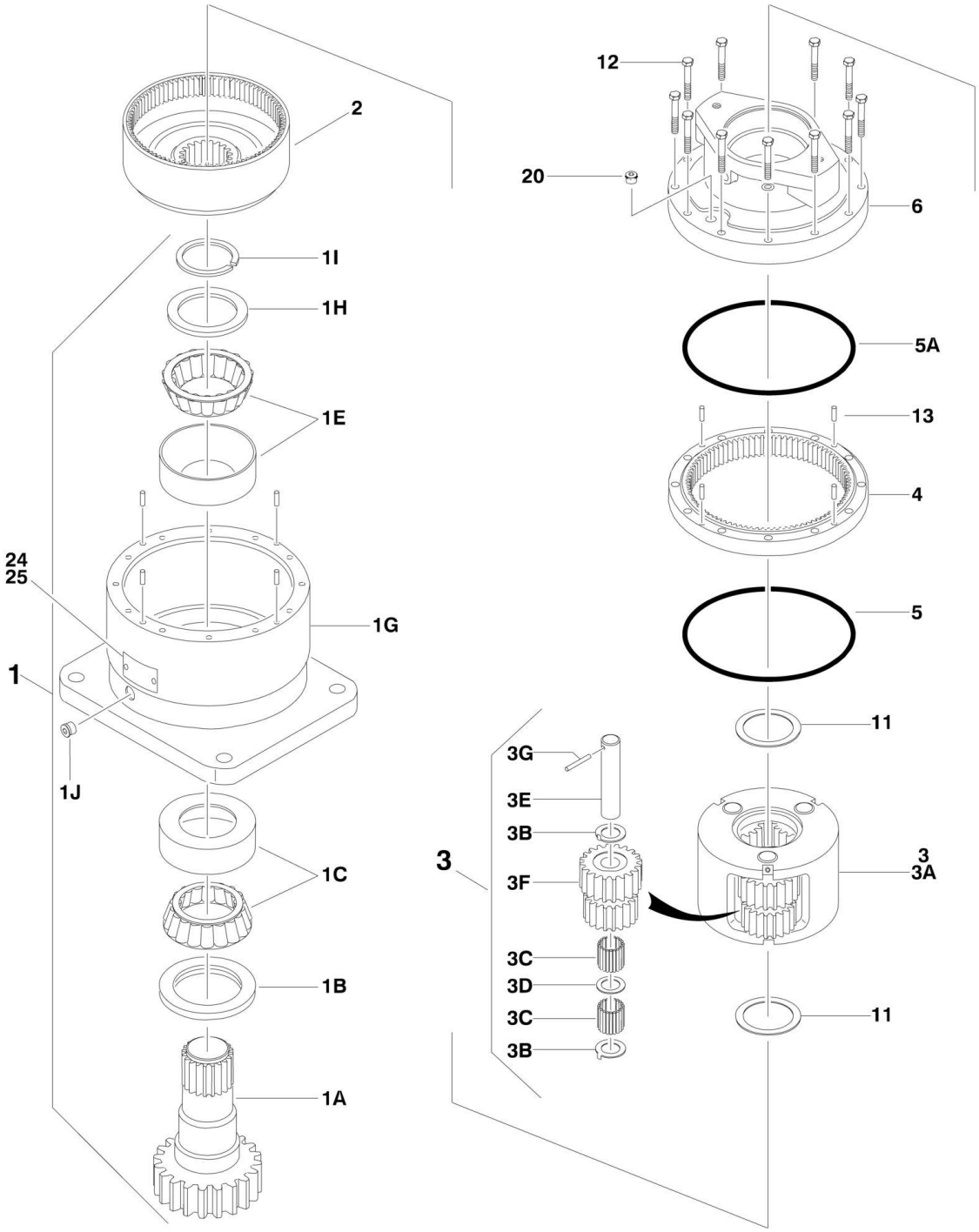

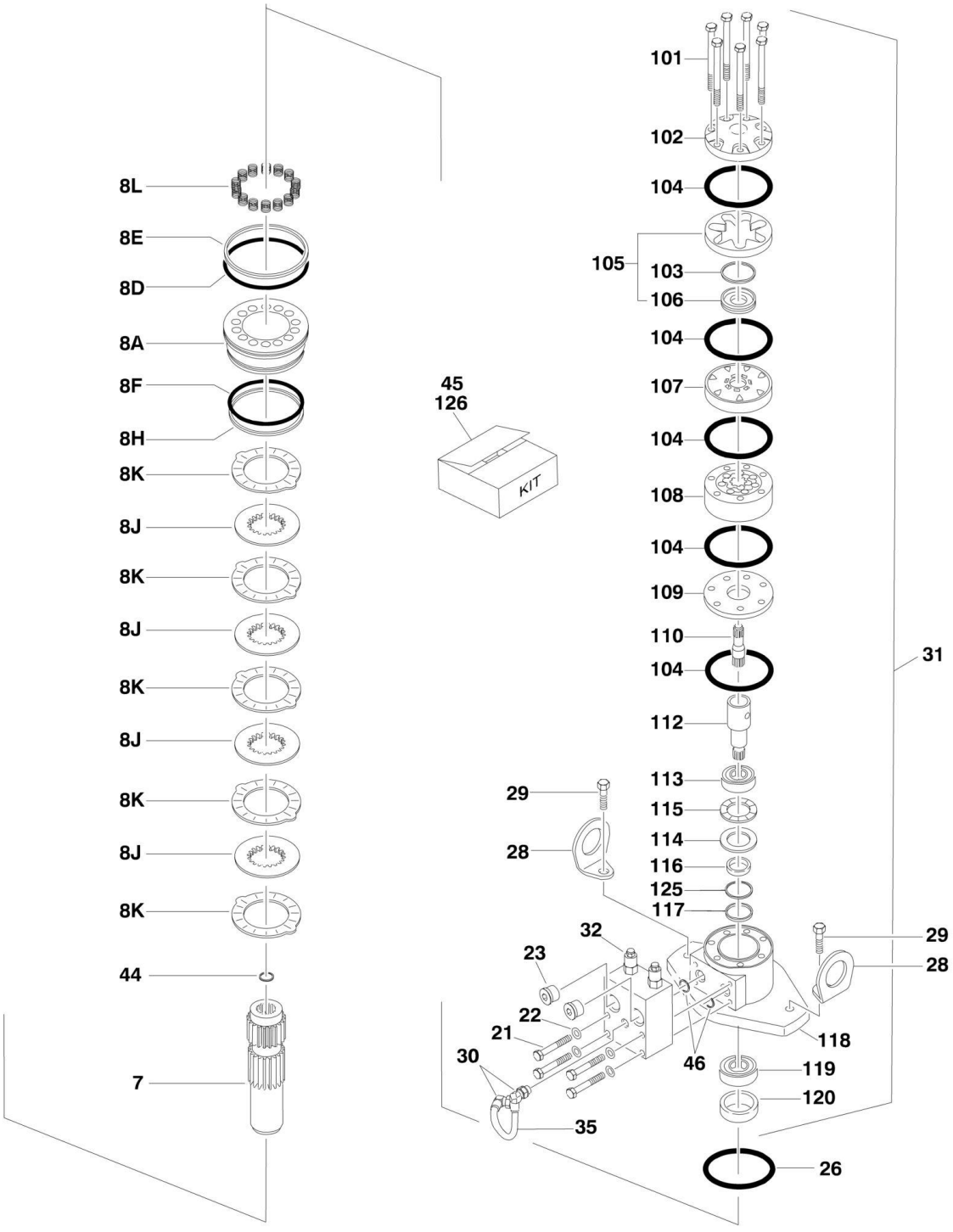
8L
8E
8D
8A
8F
8H
8K
8J
8K
8J
8K
8J
8K
8J
8K
44
7
45
126
KIT
101
102
104
105
103
106
104
107
104
108
104
109
110
104
112
113
115
114
116
125
117
31
29
28
32
23
22
21
30
46
118
119
120
35
26

## FIGURE 2-9. SWING MOTOR/BRAKE/HUB ASSEMBLY (PARKER/FAIRFIELD) (USA BUILT MACHINES AND CHINA BUILT MACHINES) (SN 0300137453 through 0300177361, SN B300000100 through B300004344)

| ITEM | PART NUMBER | QTY | DESCRIPTION | REV |
|---|---|---|---|---|
| | 1001101061 | Ref | **SWING MOTOR/HUB ASSEMBLIES** | B |
| 1 | 1001101061 | 1 | Housing/Shaft Assembly (Note: Not Available for Purchase) | |
| 1A | 7010492 | 1 | Shaft, Output | |
| 1B | 7000228 | 1 | Seal, Lip | |
| 1C | 7000255 | 1 | Bearing Kit (Includes Cup and Cone) | |
| 1E | 7000257 | 1 | Bearing Kit (Includes Cup and Cone) | |
| 1G | 1001101061 | 1 | Housing (Note: Not Available for Purchase) | |
| 1H | 7007633 | 1 | Thrustwasher | |
| 1I | 7000229 | 1 | Ring, Retaining | |
| 1J | 7017072 | 1 | Plug, Pipe | |
| 2 | 7000246 | 1 | Gear, Internal | |
| 3 | 80424002 | 1 | Carrier Assembly | |
| 3A | 7001931 | 1 | Carrier | |
| 3B | 7001985 | 6 | Washer, Tanged | |
| 3C | 7001909 | 96 | Bearing, Needle | |
| 3D | 7000263 | 3 | Thrustwasher | |
| 3E | 7001911 | 3 | Shaft, Planet | |
| 3F | 7001912 | 3 | Gear, Cluster | |
| 3G | 7010474 | 3 | Roll Pin | |
| 4 | 7000248 | 1 | Gear, Ring | |
| 5 | 7000230 | 1 | O-Ring (Black) | |
| 5A | 7017070 | 1 | O-Ring (White) | |
| 6 | 1001101061 | 1 | Housing, Brake (Note: Not Available for Purchase) | |
| 7 | 70002065 | 1 | Gear, Sun | |
| 8 | | Ref | Brake Components | |
| 8A | 70000782 | 1 | Piston, Brake | |
| 8D | 70002070 | 1 | O-Ring | |
| 8E | 70002071 | 1 | Ring, Back-up | |
| 8F | 70002073 | 1 | O-Ring | |
| 8H | 70002072 | 1 | Ring, Back-up | |
| 8J | 70002067 | 4 | Rotor, Brake | |
| 8K | 70002068 | 5 | Stator, Brake | |
| 8L | 70002066 | 14 | Spring, Brake | |
| 11 | 7000253 | 2 | Thrustwasher | |
| 12 | 7000217 | 12 | Bolt 5/16in-18NC x 2-1/4in (Grade 8) | |
| 13 | 7017080 | 4 | Pin, Dowel | |
| 20 | 7017072 | 1 | Plug, Pipe | |
| 21 | 7024704 | 4 | Bolt 5/16in-18NC x 2in (Grade 8) | |
| 22 | See Note | 4 | Lockwasher (Note: Not Available for Purchase) | |
| 23 | 7017023 | 2 | Plug, Pipe | |
| 24 | See Note | NSS | Plate, ID (Note: Not Available for Purchase) | |
| 25 | 7000281 | 2 | Screw, Drive | |
| 26 | 7024763 | 1 | O-Ring | |
| 28 | See Note | NSS | Lug, Lifting (Note: Not Available for Purchase) | |
| 29 | 70002069 | 2 | Bolt 1/2in-13NC x 2in (Grade 8) | |
| 30 | 7017085 | 2 | Elbow | |
| 31 | 70002075 | 1 | Motor Assembly (See Items 101-121 for Breakdown) | |
| 32 | 7024784 | 1 | Valve (No Serviceable Parts) | |

| ITEM | PART NUMBER | QTY | DESCRIPTION | REV |
|---|---|---|---|---|
| 33 | 7017082 | 1 | Plug, Pipe (Not Shown) | |
| 35 | 70002074 | 1 | Tube | |
| 44 | 7017028 | 1 | Ring, Retaining | |
| 45 | 7024100 | 1 | Seal Kit - Swing Hub (Includes Items 1B, 1I, 5, 5A & 11) | |
| 46 | 7000213 | 2 | O-Ring | |
| | 70002075 | Ref | **MOTOR ASSEMBLY** | |
| 101 | 7024454 | 6 | Bolt | |
| 102 | 7004035 | 1 | Cover, End | |
| 103 | See Note | NSS | Seal, Commutator (Note: Use Item 126) | |
| 104 | See Note | NSS | Seal, Ring (Note: Use Item 126) | |
| 105 | 7024453 | 1 | Commutator and Ring Assembly | |
| 106 | See Note | NSS | Ring (Note: Use Item 105) | |
| 107 | 7024379 | 1 | Manifold | |
| 108 | 7024455 | 1 | Rotor Set | |
| 109 | 7024380 | 1 | Plate, Wear | |
| 110 | 7024456 | 1 | Link, Drive | |
| 112 | 7024458 | 1 | Shaft, Coupling | |
| 113 | 7024381 | 1 | Bushing, Bronze | |
| 114 | 7004043 | 1 | Thrustwasher | |
| 115 | 7004044 | 1 | Bearing, Thrust | |
| 116 | See Note | NSS | Seal, Inner (Note: Use Item 126) | |
| 117 | See Note | NSS | Washer, Back-up (Note: Use Item 126) | |
| 118 | 70002075 | 1 | Housing (Note: Not Available for Purchase) | |
| 119 | 7024390 | 1 | Bearing | |
| 120 | See Note | NSS | Seal (Note: Use Item 126) | |
| 125 | See Note | NSS | Washer, Back-up (Note: Use Item 126) | |
| 126 | 7024396 | 1 | Seal Kit, Motor (Includes Items 103, 104, 116, 117, 120 & 125) | |

**FIGURE 2-10. SWING MOTOR/BRAKE/HUB ASSEMBLY (PARKER/FAIRFIELD) (CHINA BUILT MACHINES) (SN B300004345 through B300005764)**

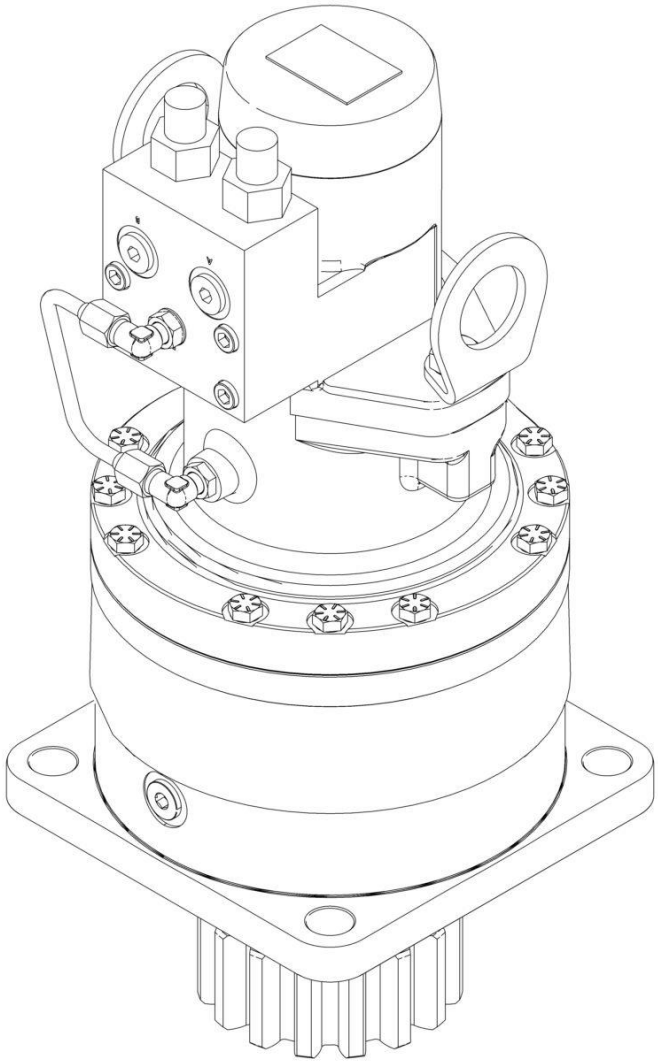

ART_1001248468

## FIGURE 2-10. SWING MOTOR/BRAKE/HUB ASSEMBLY (PARKER/FAIRFIELD) (CHINA BUILT MACHINES) (SN B300004345 through B300005764)

| ITEM | PART NUMBER | QTY | DESCRIPTION | REV |
|---|---|---|---|---|
| | 1001248468 | Ref | SWING MOTOR/HUB ASSEMBLIES | A |
| 1 | See Note | Ref | Housing/Shaft Assembly (Note: Not Available - Purchase Individual Components) | |
| 1A | 7010492 | 1 | Shaft, Output | |
| 1B | 7000228 | 1 | Seal, Lip | |
| 1C | 7000255 | 1 | Bearing Kit (Includes Cup and Cone) | |
| 1E | 7000257 | 1 | Bearing Kit (Includes Cup and Cone) | |
| 1G | See Note | NSS | Housing (Note: Not Available for Purchase) | |
| 1H | 7007633 | 1 | Washer, Thrust | |
| 1I | 7000229 | 1 | Ring, Retaining | |
| 1J | 7017072 | 1 | Plug, Pipe | |
| 2 | 7000246 | 1 | Gear, Internal | |
| 3 | 7000247 | 1 | Carrier Assembly | |
| 3A | 7001931 | 1 | Carrier | |
| 3B | 7001985 | 6 | Washer, Tanged | |
| 3C | 7001909 | 96 | Bearing, Needle | |
| 3D | 7000263 | 3 | Thrustwasher | |
| 3E | 7001911 | 3 | Shaft, Planet | |
| 3F | 7001912 | 3 | Gear, Cluster | |
| 3G | 7010474 | 3 | Roll Pin | |
| 4 | 7000248 | 1 | Gear, Ring | |
| 5 | 7000230 | 1 | O-Ring | |
| 5A | 7017070 | 1 | O-Ring | |
| 6 | 1001248468 | NSS | Housing, Brake (Note: Not Available - Purchase Complete Assembly) | |
| 7 | 70005203 | 1 | Gear, Sun | |
| 8 | | Ref | Brake Components | |
| 8A | 70004037 | 1 | Piston | |
| 8B | 7024743 | 1 | Plate, Pressure | |
| 8C | 70004039 | 1 | Ring, Retaining | |
| 8D | 70004041 | 1 | O-Ring | |
| 8E | 70004044 | 1 | Ring, Back-up | |
| 8F | 70004042 | 1 | O-Ring | |
| 8H | 70004043 | 1 | Ring, Back-up | |
| 8J | 70002085 | 4 | Disc, Rotor | |
| 8K | 70002085 | 5 | Disc, Stator | |
| 8L | 70002066 | 14 | Spring | |
| 11 | 7000253 | 2 | Washer, Thrust | |
| 12 | 7000217 | 12 | Bolt 3/8 x 2-1/4 Grade 8 | |
| 13 | 7017080 | 4 | Pin, Dowel | |
| 20 | 7017072 | 3 | Plug, Pipe | |
| 21 | 7024704 | 4 | Bolt 5/16 x 2 Grade 8 | |
| 22 | 70004045 | 4 | Washer | |
| 23 | 7017023 | 2 | Plug, Pipe | |
| 24 | See Note | NSS | Plate, ID (Note: Not Available for Purchase) | |
| 25 | See Note | NSS | Rivet (Note: Not Available for Purchase) | |
| 26 | 7024763 | 1 | O-Ring | |
| 28 | See Note | NSS | Lug, Lifting (Note: Not Available for Purchase) | |
| 29 | 70004040 | 2 | Bolt 1/2 x 1 (Grade 8) | |

# SECTION 2 - TURNTABLE

| ITEM | PART NUMBER | QTY | DESCRIPTION | REV |
|---|---|---|---|---|
| 30 | 7017085 | 2 | Elbow | |
| 31 | 70004048 | 1 | Motor Assembly (See Items 101-126 for Breakdown) | |
| 32 | 7024784 | 1 | Valve Assembly - Complete (No Serviceable Parts) | |
| 33 | 7017082 | 1 | Plug, Pipe (Not Shown) | |
| 35 | 70004047 | 1 | Tube | |
| | 70004048 | Ref | Motor Assembly | |
| 101 | See Note | NSS | Bolt (Note: Not Available for Purchase) | |
| 102 | See Note | NSS | Cover, End (Note: Not Available for Purchase) | |
| 103 | See Note | 1 | Seal, Commutator (Note: Use p/n 7024389) | |
| 104 | See Note | 5 | Seal, Ring (Note: Use p/n 7024389) | |
| 105 | 7024453 | 1 | Commutator and Ring Assembly | |
| 106 | See Note | 1 | Ring (Note: Use p/n 7024453) | |
| 107 | 7024379 | 1 | Manifold | |
| 108 | See Note | NSS | Rotor Set (Note: Not Available for Purchase) | |
| 109 | 7024380 | 1 | Plate, Wear | |
| 110 | See Note | NSS | Link, Drive (Note: Not Available for Purchase) | |
| 112 | 7024458 | 1 | Shaft, Coupling | |
| 113 | 7024381 | 1 | Bushing, Bronze | |
| 114 | 7004043 | 1 | Thrustwasher | |
| 115 | 7004044 | 1 | Bearing, Thrust | |
| 116 | See Note | 1 | Seal, Inner (Note: Use p/n 7024389) | |
| 117 | See Note | 1 | Washer, Back-up (Note: Use p/n 7024389) | |
| 118 | See Note | NSS | Housing (Note: Not Available for Purchase) | |
| 119 | 7024390 | 1 | Bearing | |
| 120 | See Note | 1 | Seal (Note: Use p/n 7024389) | |
| 125 | See Note | 1 | Washer, Back-up (Note: Use p/n 7024389) | |
| 126 | 7024389 | 1 | Seal Kit, Motor (Includes Items 103, 104, 116, 117, 120 & 125) | |
| | | Ref | KIT OPTIONS: | |
| 200 | 7024100 | 1 | Seal Kit - Swing Hub (Includes Items 1B, 1I, 5, 5A & 11) | |

## FIGURE 2-11. CATERPILLAR ENGINE INSTALLATION (USA BUILT MACHINES) (SN 0300087000 through 0300140368)

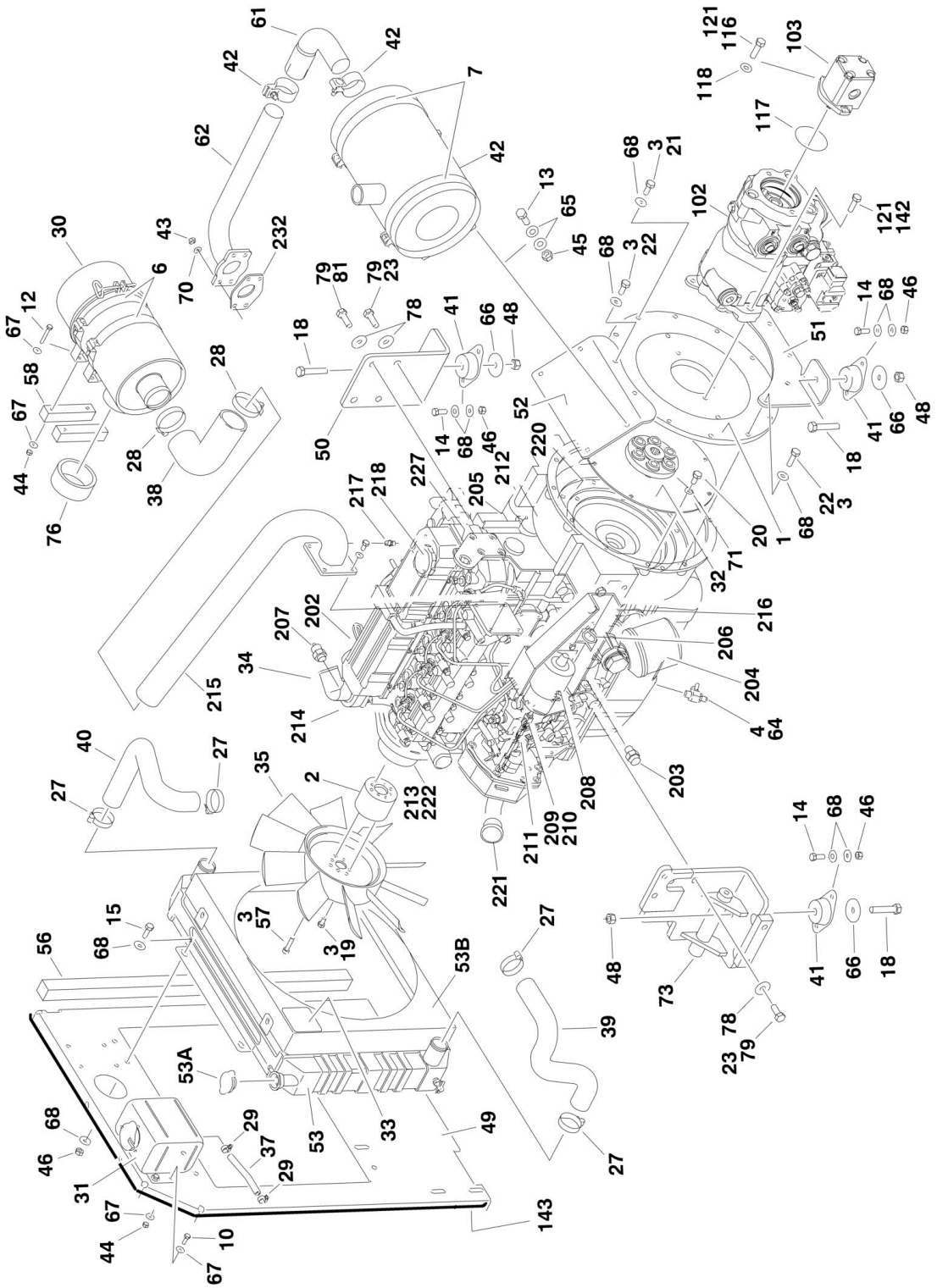

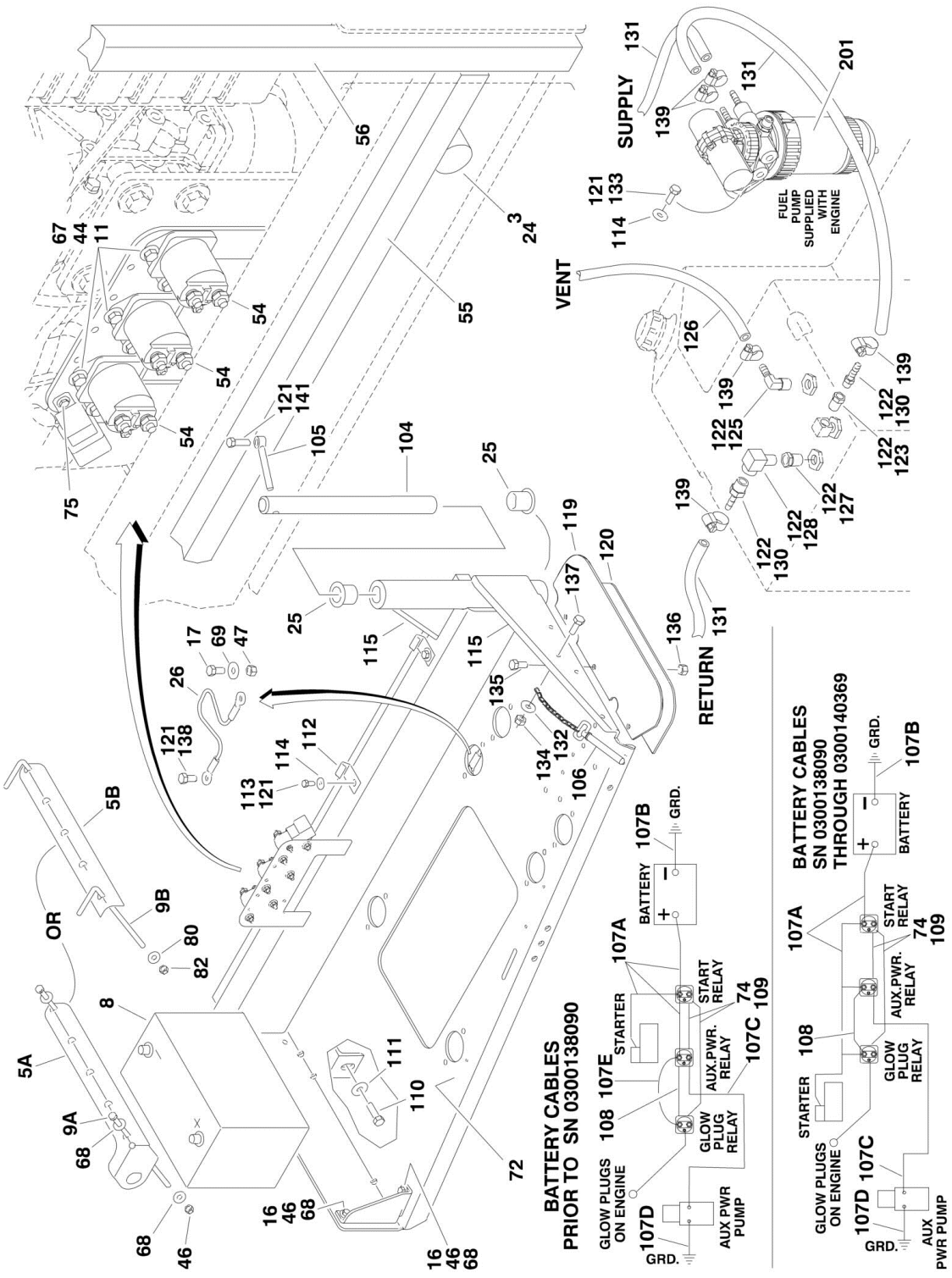
SUPPLY
VENT
RETURN
FUEL PUMP SUPPLIED WITH ENGINE
BATTERY CABLES PRIOR TO SN 0300138090
BATTERY CABLES SN 0300138090 THROUGH 0300140369
GLOW PLUGS ON ENGINE
STARTER
START RELAY
AUX.PWR. RELAY
GLOW PLUG RELAY
AUX PWR PUMP
BATTERY
GRD.

## FIGURE 2-11. CATERPILLAR ENGINE INSTALLATION (USA BUILT MACHINES) (SN 0300087000 through 0300140368)

| ITEM | PART NUMBER | QTY | DESCRIPTION | REV |
|---|---|---|---|---|
| | | Ref | **CATERPILLAR ENGINE ASSEMBLIES:** | |
| | | Ref | **Without Arctic Package** | |
| | 0274491 | Ref | **Tier II (SN 0300087000 through 0300135240)** | L |
| | 1001105993 | Ref | **Tier III/Tier IVi (SN 0300135241 through 0300140368)** | D |
| | | Ref | **With Arctic Package** | |
| | 0275256 | Ref | **Tier II (SN 0300087000 through 0300135240)** | I |
| | 1001106338 | Ref | **Tier III/Tier IVi (SN 0300135241 through 0300140368)** | D |
| 1 | 0080181 | 1 | Adapter, Pump Mounting Plate | |
| 2 | 0080243 | 1 | Adapter, Fan Spacer | |
| 3 | 0100011 | AR | Compound, Locking | |
| 4 | 0100020 | AR | Sealant, Thread | |
| 5 | | Ref | Hold-Down, Battery Options: | |
| 5A | 0181727 | 1 | Hold-Down, Battery **(SN 0300087000 through 0300110503)** | |
| 5B | 91401281 | 1 | Hold-Down, Battery **(SN 0300110504 through 0300140368)** | |
| 6 | 0340041 | 2 | Band, Mounting | |
| 7 | 0340046 | 2 | Band, Muffler | |
| 8 | 0400075 | 1 | Battery | |
| 9 | | Ref | Rod, Hold-Down Options: | |
| 9A | 0630498 | 2 | Rod, Hold-Down **(SN 0300087000 through 0300110503)** | |
| 9B | 1001093382 | 2 | Rod, Hold-Down **(SN 0300110504 through 0300140368)** | |
| 10 | 0641406 | 4 | Bolt 1/4in-20NC x 3/4in | |
| 11 | 0641407 | 6 | Bolt 1/4in-20NC x 7/8in | |
| 12 | 0701414 | 4 | Bolt 1/4in-20NC x 3/4in | |
| 13 | 0641507 | 4 | Bolt 5/16in-18NC x 7/8in | |
| 14 | 0641608 | AR | Bolt 3/8-16NC x 1in | |
| 15 | 0641609 | 4 | Bolt 3/8-16NC x 1-1/8in | |
| 16 | 0641610 | 4 | Bolt 3/8-16NC x 1-1/4in | |
| 17 | 0641808 | 1 | Bolt 1/2in-13NC x 1in | |
| 18 | 0641820 | 4 | Bolt 1/2in-13NC x 2-1/2in | |
| 19 | 0700808 | 4 | Bolt M8 x 16mm | |
| 20 | 0701010 | 8 | Bolt M10 x 20mm | |
| 21 | 0701012 | 4 | Bolt M10 x 25mm | |
| 22 | 0701015 | 8 | Bolt M10 x 35mm | |
| 23 | | Ref | Bolt Options: | |
| 23 | 0701214 | 8 | Bolt M12 x 30mm **(SN 0300087000 through 0300098804)** | |
| 23 | 0711214 | 5 | Bolt M12 x 30mm **(SN 0300098805 through 0300140368)** | |
| 24 | 0940070 | 1 | Bumper, Rubber | |
| 25 | 0961986 | 2 | Bearing, Flange | |
| 26 | 1060637 | 1 | Lanyard | |
| 27 | 8405104 | 4 | Clamp, Hose | |
| 28 | 1320016 | 2 | Clamp, Hose | |
| 29 | 8405009 | 2 | Clamp, Hose | |
| 30 | 1340060 | 1 | Air Cleaner Assembly | |
| 30 | 7012664 | 1 | Element, Air Cleaner | |
| 31 | 1580011 | 1 | Container, Coolant Overflow | |
| 32 | 1660239 | 1 | Coupling, Pump | |
| 33 | 1703162 | 2 | Decal - Fan Blade | |
| 34 | | Ref | Caterpillar Engine Assembly Options: | |
| 34 | 2000194 | NLA | Tier II (Use p/n 1001109762) **(SN 0300087000 through** | |

| ITEM | PART NUMBER | QTY | DESCRIPTION | REV |
|---|---|---|---|---|
| | | | **0300105047)** | |
| 34 | 2000386 | NLA | Tier II (Use p/n 1001109762) **(SN 0300087000 through 0300105047)** | |
| 34 | 2000386 | NLA | Tier II (Use p/n 1001109762) **(SN 0300105048 through 0300135240)** | |
| 34 | 1001100313 | 1 | Tier III/Tier IVi **(SN 0300135241 through 0300140368)** | |
| 35 | 2060025 | 1 | Fan | |
| 37 | 2720058 | 0.33 ft /0.1m | Hose | |
| 38 | 2720434 | 1 | Elbow, Rubber | |
| 39 | 2720509 | 1 | Hose, Radiator (Bottom) | |
| 40 | | Ref | Hose, Radiator (Top) Options: | |
| 40 | 2720510 | 1 | Tier II **(SN 0300087000 through 0300135240)** | |
| 40 | 1001107705 | 1 | Tier III/Tier IVi **(SN 0300135241 through 0300140368)** | |
| 41 | 3200406 | 4 | Mount, Engine | |
| 42 | | Ref | Muffler Options: | |
| 42 | 3220113 | 1 | Muffler, Spark Arresting (Standard) | |
| 42 | 70001017 | 1 | Clamp | |
| 42 | 3220154 | NLA | Muffler, Catalytic (Optional) (Use p/n 1001107116) | |
| 42 | 70002705 | 1 | Clamp | |
| 42 | 70002706 | 1 | Plug | |
| 43 | 3290801 | 4 | Nut M8 | |
| 44 | 3311405 | 14 | Locknut 1/4in-20NC | |
| 45 | 3311505 | AR | Locknut 5/16in-18NC | |
| 46 | 3311605 | AR | Locknut 3/8in-16NC | |
| 47 | 3311801 | 1 | Nut 1/2in-13NC | |
| 48 | 3311805 | 4 | Locknut 1/2in-13NC | |
| 49 | 3539872 | 1 | Plate, Radiator Mounting | |
| 50 | 3574206 | 1 | Plate, Motor Mount | |
| 51 | 3574207 | 1 | Plate, Engine Mount (Rear) | |
| 52 | 3574208 | 1 | Bracket, Muffler | |
| 53 | 3620047 | 1 | Radiator | |
| 53A | 7027412 | 1 | Cap | |
| 53B | 70004182 | 1 | Shroud, Fan | |
| 54 | 3740067 | 3 | Relay, Solenoid Assembly | |
| 55 | 3960468 | 1 | Seal, Foam Gasket | |
| 56 | 3960469 | 1 | Seal, Foam Gasket | |
| 57 | 4031911 | 4 | Bolt M8 x 35mm | |
| 58 | 4220191 | 2 | Block, Spacer | |
| 61 | 4567073 | 1 | Tube, Exhaust | |
| 62 | 4568721 | 1 | Exhaust Tube Weldment | |
| 64 | 1001105833 | NLA | Valve, Oil Drain (Use p/n 4640750) | |
| 65 | 4711500 | 8 | Flatwasher 5/16in Thin | |
| 66 | 4740274 | 4 | Washer, Snubbing | |
| 67 | 4751400 | 28 | Flatwasher 1/4in Regular | |
| 68 | 4751600 | AR | Flatwasher 3/8in Regular | |
| 69 | 4751800 | 1 | Flatwasher 1/2in Regular | |
| 70 | 4811900 | 4 | Flatwasher M8 | |
| 71 | 4832000 | 8 | Lockwasher M10 | |
| 72 | 4846790 | 1 | Tray Engine | |
| 73 | 4846805 | 1 | Mount, Engine/Generator - Left | |
| 74 | 4922737 | 1 | Harness, Relay Ground | |

| ITEM | PART NUMBER | QTY | DESCRIPTION | REV |
|---|---|---|---|---|
| 75 | 0721006 | 1 | Bolt #10-24NC x 3/4in **(SN 0300087000 through 0300098805)** | |
| 76 | 2720515 | 1 | Seal, Air Cleaner | |
| 78 | | Ref | Flatwasher Options: | |
| 78 | 4751800 | 8 | Flatwasher 1/2in **(SN 0300087000 through 0300098804)** | |
| 78 | 4812100 | 8 | Flatwasher M12 **(SN 0300098805 through 0300140368)** | |
| 79 | 0100019 | AR | Compound, Locking | |
| 80 | 4751500 | 2 | Flatwasher 5/16in Regular | |
| 81 | | Ref | Bolt Options: | |
| 81 | 0711214 | 3 | Bolt M12 x 30mm **(SN 0300098805 through 0300111413)** | |
| 81 | 0771212 | 3 | Bolt M12 x 25mm **(SN 0300111414 through 0300140368)** | |
| 82 | | Ref | Locknut 5/16in-18NC Options: | |
| 82 | 3311505 | 2 | Locknut 5/16in-18NC **(SN 0300087000 through 0300121552)** | |
| 82 | 88521205 | 2 | Locknut 5/16in-18NC **(SN 0300121553 through 0300140368)** | |
| | | Ref | **Note: Arctic Package Items 90-96 Not Shown - Used on Arctic Machines Only** | |
| 90 | 1060626 | 1 | Cord, 3-Way Extension (Located on Left Front of Engine) | |
| 91 | 1320223 | 2 | Clamp | |
| 92 | 2300041 | AR | Coolant | |
| 93 | 2580024 | 1 | Heater, Battery (Located on Battery) | |
| 94 | 2580055 | 1 | Heater, Block (Located on Left Side of Engine) | |
| 95 | 3020044 | AR | Oil, Motor 0W-40 (Not Shown) | |
| 96 | 3980007 | 1 | Seat, Battery (Located Under Battery) | |
| | | Ref | **CATERPILLAR ENGINE INSTALLATIONS** | |
| | | Ref | **Without Arctic Package** | |
| | 0274525 | Ref | **Tier II (SN 0300087000 through 0300135240)** | 6-E |
| | 1001107238 | Ref | **Tier III/Tier IVi (SN 0300135241 through 0300140368)** | 3-B |
| | | Ref | **With Arctic Package** | |
| | 0275264 | Ref | **Tier II (SN 0300087000 through 0300135240)** | 5-D |
| | 1001107239 | Ref | **Tier III/Tier IVi (SN 0300135241 through 0300140368)** | 3-B |
| 102 | 3600396 | 1 | Piston Pump Assembly (See PISTON PUMP ASSEMBLY for Breakdown) | |
| 103 | 3600395 | 1 | Gear Pump Assembly (See GEAR PUMP ASSEMBLY for Breakdown) | |
| 104 | 3422448 | 1 | Pin, Pivot | |
| 105 | 3841143 | 1 | Keeper, Pin | |
| 106 | 3422533 | 1 | Pin, Hitch | |
| 107 | 2902296 | 1 | Battery Cable Kit | D |
| | | Ref | **Note: 2902296 Rev A version is no longer available. Verify whether machine is equipped with 2 or 3 relays on the engine tray. If there are 3 relays, purchase latest revision of 2902296 kit. If there are 2 relays, purchase individual items as replacement.** | |
| 107A | 1001116241 | 1 | Cable, Battery (Red) (Machines with 2 Relays on Engine Tray) (was p/n 7027000) | |
| 107A | 1001116240 | 1 | Cable, Battery (Red) (Machines with 3 Relays on Engine Tray) (was p/n 7027000) | |
| 107B | 7027004 | 1 | Cable, Battery (Black) | |
| 107C | 7027002 | 1 | Cable (Red) | |
| 107D | 7027003 | 1 | Cable (Black) | |
| 107E | 7027001 | 1 | Cable (Red) (No Longer Part of 2902296 Kit) | |
| 108 | 1060904 | 1 | Cable, Battery | |
| 109 | 4922737 | 1 | Harness, Relay Ground | |
| 110 | 0642010 | 1 | Bolt 5/8in-11NC x 1-1/4in | |

| ITEM | PART NUMBER | QTY | DESCRIPTION | REV |
|---|---|---|---|---|
| 111 | 4752000 | 1 | Flatwasher 5/8in Regular | |
| 112 | 1320223 | AR | J-Clip 1/2in | |
| 113 | 0641606 | 2 | Bolt 3/8in-16NC x 3/4in | |
| 114 | 4711600 | 4 | Flatwasher 3/8in Thin | |
| 115 | 4060805 | 2 ft/0.7m | Flex-Trim 1/4in | |
| 116 | 3931620 | 2 | Bolt 3/8in-16NC x 1-1/4in | |
| 117 | 3790152 | 1 | O-Ring | |
| 118 | 4891600 | 2 | Flatwasher 3/8in Hardened | |
| 119 | 3380428 | 1 | Panel, Rubber | |
| 120 | 3539956 | 1 | Plate, Support | |
| 121 | 0100011 | AR | Compound, Locking | |
| 122 | 0100020 | AR | Sealant, Thread | |
| 123 | | Ref | Fitting Options: | |
| 123 | 2220273 | 1 | Fitting **(SN 0300087000 through 0300135240)** | |
| 123 | 2180348 | 1 | Fitting **(SN 0300135241 through 0300140368)** | |
| 125 | 2220313 | 1 | Fitting, 90 | |
| 126 | 2750532 | 6 ft/1.8m | Hose 3/8in | |
| 127 | 2220250 | 1 | Fitting, Reducer **(SN 0300087000 through 0300140368)** | |
| 128 | | Ref | Fitting Options: | |
| 128 | 2220459 | 1 | Fitting (Fitting, 90) **(SN 0300087000 through 0300135240)** | |
| 128 | 2221176 | 1 | Fitting (Fitting, 90 Barbed) **(SN 0300135241 through 0300140368)** | |
| 130 | 2220794 | 2 | Fitting, Barbed **(SN 0300087000 through 0300140368)** | |
| 131 | 2720058 | 30 ft/9.1m | Hose | |
| 132 | 4751400 | AR | Flatwasher 1/4in Regular | |
| 133 | 0641608 | 2 | Bolt 3/8-16NC x 1in | |
| 134 | 3311405 | AR | Locknut 1/4in-20NC | |
| 135 | 0641507 | 3 | Bolt 5/16in-18NC x 1-1/4in | |
| 136 | 3311505 | 3 | Locknut 5/16in-18NC | |
| 137 | 0641407 | 1 | Bolt 1/4in-20NC x 7/8in | |
| 138 | 0641808 | 1 | Bolt 1/2in-13NC x 1in | |
| 139 | 1320022 | 7 | Clamp, Hose | |
| 140 | 1701505 | 1 | Decal - Diesel (Not Shown - Located on Hood) | |
| 141 | 0641610 | 1 | Bolt 3/8-16NC x 1-1/4in | |
| 142 | 0641812 | 2 | Bolt 1/2in-18NC x 1-3/4in | |
| 143 | 3960389 | 5 ft/1.5m | Seal, Hood | |
| | | Ref | **Note: Arctic Package Items 150-151 Not Shown - Used on Arctic Machines Only** | |
| 150 | 2580050 | 1 | Heater, Hydraulic Tank | |
| 151 | 1060625 | 1 | Cable, Immersion Heater | |
| | | Ref | **ENGINE COMPONENTS** | |
| | 2000194 | Ref | **Tier II (SN 0300087000 through 0300105047)** | E |
| | 2000386 | Ref | **Tier II (SN 0300105048 through 0300135240)** | B |
| | 1001100313 | Ref | **Tier III/Tier IVi (SN 0300135241 through 0300140368)** | C |
| 201 | 7026839 | 1 | Fuel Filter Assembly | |
| 201 | 7026830 | 1 | Filter, Fuel | |
| 201 | 70002833 | 1 | Ring, Retaining | |
| 201 | 70002834 | 1 | Bowl, Water Separator | |
| 201 | 70002835 | 1 | Seal Kit, Water Separator | |
| 202 | 7026831 | 1 | Alternator | |
| 203 | 1001097554 | 1 | Switch, Oil Pressure (was p/n 7026844) | |
| 204 | 7026811 | 1 | Filter, Oil | |

| ITEM | PART NUMBER | QTY | DESCRIPTION | REV |
|---|---|---|---|---|
| 204 | 7026812 | 1 | Seal - O-Ring (Oil Filter Head) | |
| 204 | 7026813 | 1 | Seal - O-Ring (Oil Filter Head) | |
| 205 | 7026833 | 1 | Starter | |
| 206 | | Ref | Dipstick Oil Level Options: | |
| 206 | 7026834 | 1 | 2000194 Engines | |
| 206 | 7026888 | 1 | 2000386 Engines | |
| 206 | 70002844 | 1 | 1001100313 Engines | |
| 206 | 70002843 | 1 | Seal, Dipstick Tube (1001100313 Engines Only) | |
| 207 | 7026840 | 1 | Switch, Engine Temperature | |
| 207 | 7026882 | 1 | Washer, Seal for Engine Temperature Switch | |
| 208 | 1600361 | 1 | Actuator/Linkage Assembly - Throttle | |
| 208 | 1600361 | 1 | Actuator and Electrical Connector Kit (was p/n 7026842) | |
| 208 | 7026835 | 1 | Connector, Actuator | |
| 208 | 7026837 | AR | Contact, Crimp | |
| 209 | 7026843 | 1 | Actuator, Linkage Kit | |
| 210 | 0902910 | 1 | Mounting Bracket, Actuator | |
| 211 | | Ref | Pump, Fuel Supply Options: | |
| 211 | 7026839 | 1 | 2000194 & 2000386 Engines | |
| 211 | 70002849 | 1 | 1001100313 Engines | |
| 211 | 70002850 | 1 | Coil (1001100313 Engines) | |
| 211 | 70002848 | 1 | Gasket | |
| 211 | 70002847 | 1 | Seal, O-Ring (Gear Cover to Fuel Supply Pump) | |
| 212 | 7026841 | 1 | Sensor, Tach | |
| 212 | 7026836 | 1 | Connector, Speed Sensor (Not Shown) | |
| 212 | 7026837 | AR | Contact, Crimp for Speed Sensor (Not Shown) | |
| 213 | | Ref | Pump, Water Options: | |
| 213 | | Ref | Caterpillar Engine p/n 2000194 | |
| 213 | 7026823 | 1 | Caterpillar Engine SNs (Not Machine SN) (Prior to SN 3440833) | |
| 213 | 70001120 | 1 | Caterpillar Engine SNs (Not Machine SN) (SN 3440833 to Present) | |
| 213 | 7026823 | 1 | Caterpillar Engine p/ns 2000386 & 1001100313 | |
| 213 | 7026824 | 1 | Gasket (Between Pump and Pump Cover) | |
| 213 | 7026825 | 1 | Gasket (Between Pump Cover and Engine Block) | |
| 213 | 70001742 | 1 | Pulley | |
| 214 | 7026822 | 1 | Thermostat | |
| 214 | 7026820 | 1 | Gasket, Thermostat Housing | |
| 214 | 7026821 | 1 | Gasket, Coolant (Not Shown) | |
| 215 | | Ref | Tube, Air Intake Weldment Options: | |
| 215 | 4569177 | 1 | 2000194 Engines | |
| 215 | 4569371 | 1 | 2000386 & 1001100313 Engines | |
| 216 | 0903220 | NLA | Bracket, Throttle Actuator (Use p/n 7026887) | |
| 217 | | Ref | Hardware Options: | |
| 217 | 2220767 | 1 | Fitting (2000194 Engines) | |
| 217 | 70001051 | 1 | Valve, Air Intake Check (2000386 & 1001100313 Engines) | |
| 218 | 7026800 | 1 | Cap, Oil Fill (Valve Cover) | |
| 219 | | Ref | Gasket Kit Options (Not Shown): | |
| 219 | See Note | NSS | 2000194 Engines (Note: Not Available for Purchase) | |
| 219 | 70002851 | 1 | 2000386 & 1001100313 Engines | |
| 219 | 7026801 | 1 | Gasket, Valve Cover (Not Shown) | |
| 219 | 7026804 | 1 | Gasket, Rear (Not Shown) | |
| 219 | 7026805 | 1 | Seal, Rear Main (Not Shown) | |

| ITEM | PART NUMBER | QTY | DESCRIPTION | REV |
|---|---|---|---|---|
| 219 | 7026807 | 1 | Seal, Front Main (Not Shown) | |
| 219 | 7026809 | 1 | Gasket, Oil Pan (Not Shown) | |
| 219 | 7026826 | 1 | Gasket, Exhaust Manifold (Not Shown) | |
| 219 | 7026827 | 1 | Gasket, Exhaust (Not Shown) | |
| 219 | 7026829 | 1 | Gasket, Inlet Manifold (Not Shown) | |
| 219 | 7026828 | 1 | Gasket, Inlet (Not Shown) | |
| 219 | | Ref | Gasket, Fuel Line Options (Not Shown): | |
| 219 | See Note | NSS | 2000194 Engines (Note: Not Available for Purchase) | |
| 219 | 70002763 | 1 | 2000386 & 1001100313 Engines | |
| 219 | | Ref | Seal, Fuel Injector Bolt Options (Not Shown): | |
| 219 | See Note | NSS | 2000194 & 2000386 Engines (Note: Not Available for Purchase) | |
| 219 | 70002863 | 4 | 1001100313 Engines | |
| 220 | 7026802 | 1 | Flywheel with Ring Gear | |
| 220 | 7026803 | 1 | Gear, Ring | |
| 221 | 7026806 | 1 | Cap, Oil Fill (Lower Front) | |
| 222 | 7026810 | 1 | V-Belt | |
| 223 | 7026814 | 1 | Valve, Relief (Engine Oil Pressure) (Not Shown) | |
| 223 | 7026815 | 1 | Gasket, Relief Valve (Not Shown) | |
| 224 | 7026819 | 1 | Cooler, Oil (Not Shown) | |
| 224 | 7026816 | 1 | O-Ring, Oil Cooler (Not Shown) | |
| 224 | 7026817 | 1 | O-Ring, Oil Cooler (Not Shown) | |
| 224 | 7026818 | 1 | Gasket, Oil Cooler (Not Shown) | |
| 225 | 7026832 | 4 | Plug, Glow (Not Shown) | |
| 226 | 2580055 | 1 | Heater Kit, Engine Block (Optional) (Not Shown) (was p/n 7026845) | |
| 226 | 7026838 | 1 | Gasket, Engine Block Heater (Not Shown) | |
| 226 | 70002841 | 1 | Cord, Engine Block Heater (Not Shown) | |
| 227 | 70002766 | 1 | Head, Cylinder (2000386 & 1001100313 Engines Only) | |
| 227 | 70002761 | AR | Bolt, Head (Not Shown) (2000386 & 1001100313 Engines Only) | |
| 227 | 70002762 | 8 | Seal, Cylinder Head Valve (Not Shown) (2000386 & 1001100313 Engines Only) | |
| 227 | 70002767 | 1 | Gasket, Cylinder Head (Not Shown) (2000386 & 1001100313 Engines Only) | |
| 227 | 70002764 | 1 | Gasket, Rear Cylinder Head (Not Shown) (2000386 & 1001100313 Engines Only) | |
| 228 | | Ref | Hose, Bypass Options (Not Shown): | |
| 228 | See Note | NSS | 2000194 Engines (Note: Not Available for Purchase) | |
| 228 | 70002765 | 1 | 2000386 & 1001100313 Engines | |
| 229 | 70002852 | AR | Stud, Exhaust Manifold (Not Shown) (1001100313 Engines Only) | |
| 230 | 70002845 | 1 | Pump, Oil (Not Shown) (1001100313 Engines Only) | |
| 230 | 70002846 | 1 | Gasket, Oil Pump (Not Shown) (1001100313 Engines Only) | |
| 232 | 7026827 | 1 | Gasket, Exhaust | |

**FIGURE 2-12. CATERPILLAR ENGINE INSTALLATION (USA BUILT MACHINES AND CHINA BUILT MACHINES) (SN 0300140369 through 0300177361, SN B300000100 through B300005764)**

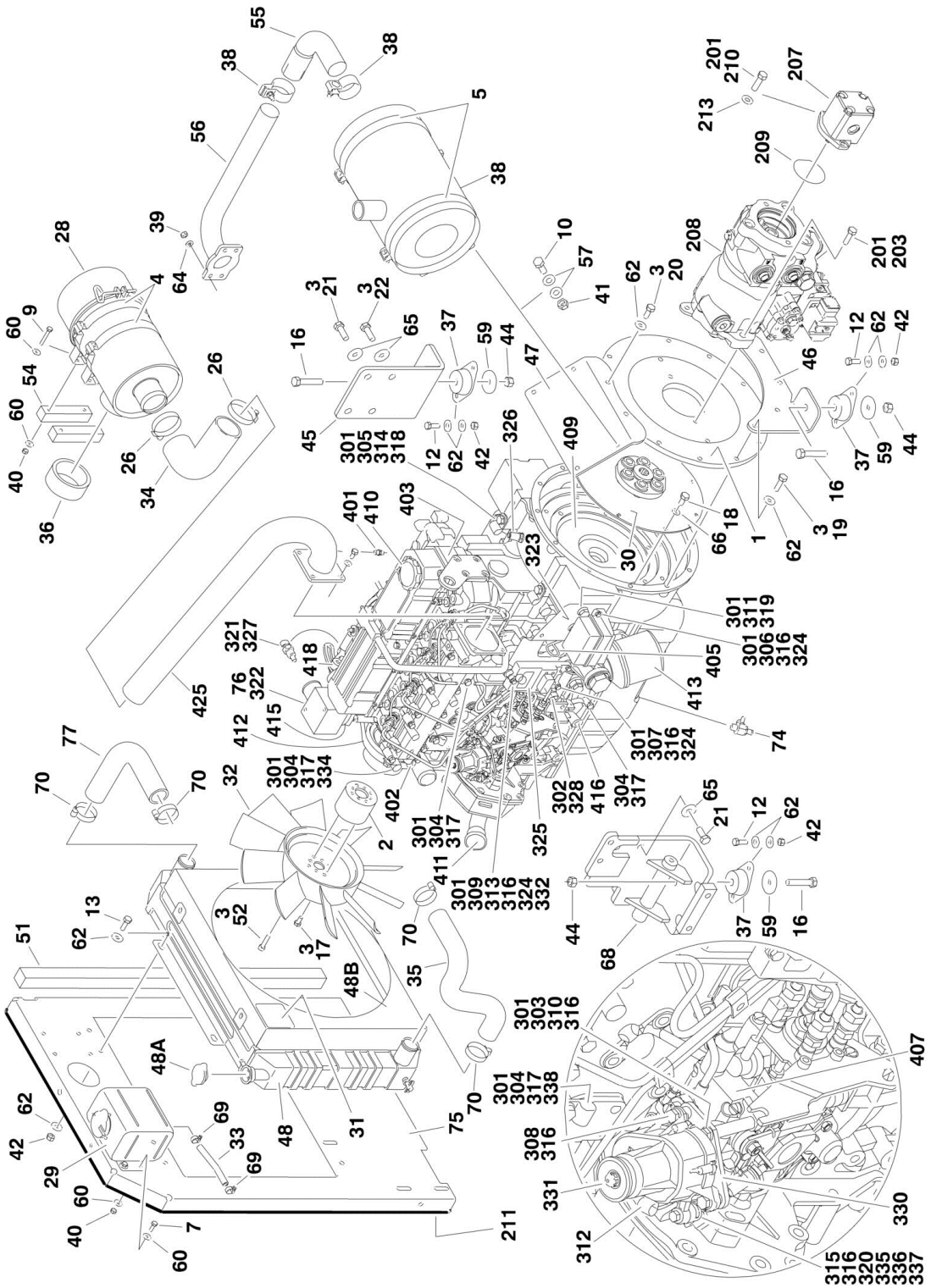

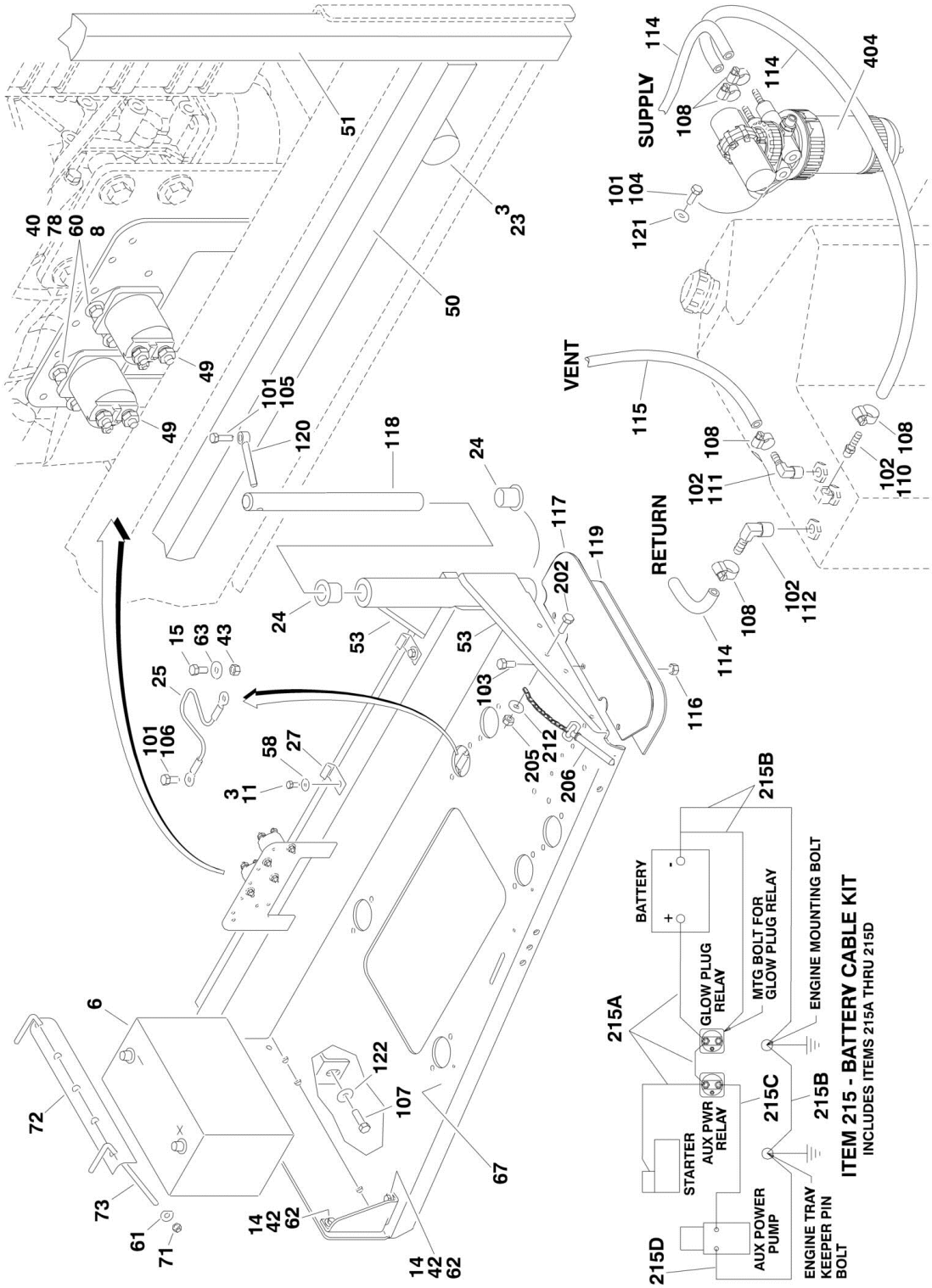
SUPPLY
RETURN
VENT
BATTERY
GLOW PLUG RELAY
MTG BOLT FOR GLOW PLUG RELAY
ENGINE MOUNTING BOLT
STARTER
AUX PWR RELAY
AUX POWER PUMP
ENGINE TRAY KEEPER PIN BOLT
ITEM 215 - BATTERY CABLE KIT
INCLUDES ITEMS 215A THRU 215D

## FIGURE 2-12. CATERPILLAR ENGINE INSTALLATION (USA BUILT MACHINES AND CHINA BUILT MACHINES) (SN 0300140369 through 0300177361, SN B300000100 through B300005764)

| ITEM | PART NUMBER | QTY | DESCRIPTION | REV |
|---|---|---|---|---|
| | 1001109065 | Ref | **CATERPILLAR TIER IVi ENGINE ASSEMBLIES** | C |
| 1 | 0080181 | 1 | Adapter, Pump Mounting Plate | |
| 2 | 0080243 | 1 | Adapter, Fan Spacer | |
| 3 | 0100011 | AR | Compound, Locking | |
| 4 | 0340041 | 2 | Band, Mounting | |
| 5 | 0340046 | 2 | Band, Muffler | |
| 6 | 0400075 | 1 | Battery | |
| 7 | 0641406 | 4 | Bolt 1/4in-20NC x 3/4in | |
| 8 | 0641407 | 4 | Bolt 1/4in-20NC x 7/8in | |
| 9 | 0701414 | 4 | Bolt 1/4in-20NC x 3/4in | |
| 10 | 0641507 | 4 | Bolt 5/16in-18NC x 7/8in | |
| 11 | 0641606 | 2 | Bolt 3/8in-16NC x 3/4in | |
| 12 | 0641608 | 8 | Bolt 3/8-16NC x 1in | |
| 13 | 0641609 | 4 | Bolt 3/8-16NC x 1-1/8in | |
| 14 | 0641610 | 4 | Bolt 3/8-16NC x 1-1/4in | |
| 15 | 0641808 | 1 | Bolt 1/2in-13NC x 1in | |
| 16 | 0641820 | 4 | Bolt 1/2in-13NC x 2-1/2in | |
| 17 | 0700808 | 4 | Bolt M8 x 16mm | |
| 18 | 0701010 | 8 | Bolt M10 x 20mm | |
| 19 | 0701012 | 4 | Bolt M10 x 25mm | |
| 20 | 0701015 | 8 | Bolt M10 x 35mm | |
| 21 | 0711214 | 5 | Bolt M12 x 30mm | |
| 22 | 0771212 | 3 | Bolt M12 x 25mm | |
| 23 | 0940070 | 1 | Bumper, Rubber | |
| 24 | 0961986 | 2 | Bearing, Flange | |
| 25 | 1060637 | 1 | Lanyard | |
| 26 | 1320016 | 2 | Clamp, Hose | |
| 27 | 1320223 | 4 | Clamp | |
| 28 | 1340060 | 1 | Air Cleaner Assembly | |
| 28 | 7012664 | 1 | Element, Air Cleaner | |
| 29 | 1580011 | 1 | Container, Coolant Overflow | |
| 30 | 1660239 | 1 | Coupling, Pump | |
| 31 | 1703162 | 2 | Decal - Fan Blade | |
| 32 | 2060025 | 1 | Fan | |
| 33 | 2720058 | 0.33 ft /0.1m | Hose | |
| 34 | 2720434 | 1 | Elbow, Rubber | |
| 35 | 2720509 | 1 | Hose, Radiator (Bottom) | |
| 36 | 2720515 | 1 | Seal, Air Cleaner | |
| 37 | 3200406 | 4 | Mount, Engine | |
| 38 | | Ref | Muffler Options: | |
| 38 | 3220113 | 1 | Muffler, Spark Arresting (Standard) | |
| 38 | 70001017 | 1 | Clamp (Used on p/n 3220113) | |
| 38 | 1001107116 | 1 | Muffler, Catalytic (Optional) | |
| 38 | 70002705 | 1 | Clamp (Used on p/n 1001107116) | |
| 38 | 70002706 | 1 | Plug | |
| 39 | 3290801 | 4 | Nut M8 | |
| 40 | 3311405 | 12 | Locknut 1/4in-20NC | |
| 41 | 3311505 | 4 | Locknut 5/16in-18NC | |

| ITEM | PART NUMBER | QTY | DESCRIPTION | REV |
|---|---|---|---|---|
| 42 | 3311605 | 16 | Locknut 3/8in-16NC | |
| 43 | 3311801 | 1 | Nut 1/2in-13NC | |
| 44 | 3311805 | 4 | Locknut 1/2in-13NC | |
| 45 | 3574206 | 1 | Plate, Motor Mount | |
| 46 | 3574207 | 1 | Plate, Engine Mount (Rear) | |
| 47 | 3574208 | 1 | Bracket, Muffler | |
| 48 | 3620047 | 1 | Radiator | |
| 48A | 7027412 | 1 | Cap | |
| 48B | 70004182 | 1 | Shroud, Fan | |
| 49 | 3740067 | 2 | Relay, Solenoid Assembly | |
| 50 | 3960468 | 1 | Seal, Foam Gasket | |
| 51 | 3960469 | 1 | Seal, Foam Gasket | |
| 52 | 4031911 | 4 | Bolt M8 x 35mm | |
| 53 | 4060805 | 2 ft /0.7mm | Flex-Trim 1/4in | |
| 54 | 4220191 | 2 | Block, Spacer | |
| 55 | 4567073 | 1 | Tube, Exhaust | |
| 56 | 4568721 | 1 | Exhaust Tube Weldment | |
| 57 | 4711500 | 8 | Flatwasher 5/16in Thin | |
| 58 | 4711600 | 2 | Flatwasher 3/8in Thin | |
| 59 | 4740274 | 4 | Washer, Snubbing | |
| 60 | 4751400 | 24 | Flatwasher 1/4in Regular | |
| 61 | 4751500 | 2 | Flatwasher 5/16in Regular | |
| 62 | 4751600 | 44 | Flatwasher 3/8in Regular | |
| 63 | 4751800 | 1 | Flatwasher 1/2in Regular | |
| 64 | 4811900 | 4 | Flatwasher M8 | |
| 65 | 4812100 | 8 | Flatwasher M12 | |
| 66 | 4832000 | 8 | Lockwasher M10 | |
| 67 | 4846790 | 1 | Tray Engine | |
| 68 | 4846805 | 1 | Mount, Engine/Generator - Left | |
| 69 | 8405009 | 2 | Clamp, Hose | |
| 70 | 8405104 | 4 | Clamp, Hose | |
| 71 | 88521205 | 2 | Locknut 5/16in-18NC | |
| 72 | 91401281 | 1 | Hold-down, Battery | |
| 73 | 1001093382 | 2 | Rod, Hold-Down | |
| 74 | 1001105833 | 1 | Valve, Oil Drain | |
| 75 | 1001109595 | 1 | Plate, Radiator Mounting | |
| 76 | 1001112077 | 1 | Caterpillar Tier IVi Engine Assembly | |
| 77 | 1001107705 | 1 | Hose, Radiator (Top) | |
| 78 | 4791400 | 4 | Starwasher 1/4in | |
| | | Ref | **CATERPILLAR TIER IVi ENGINE WITH PUMPS ASSEMBLIES** | |
| | 1001109067 | Ref | **Without Arctic Package** | C |
| | 1001110208 | Ref | **With Arctic Package** | D |
| 101 | 0100011 | AR | Compound, Locking | |
| 102 | 0100020 | AR | Sealant, Thread | |
| 103 | 0641507 | 3 | Bolt 5/16in-18NC x 7/8in | |
| 104 | 0641608 | 2 | Bolt 3/8in-16NC x 1in | |
| 105 | 0641610 | 1 | Bolt 3/8in-16NC x 1-1/4in | |
| 106 | 0641808 | 1 | Bolt 1/2in-13NC x 1in | |
| 107 | 0642010 | 1 | Bolt 5/8in-11NC x 1-1/4in | |
| 108 | 1320022 | 7 | Clamp, Hose | |
| 109 | 1701505 | 1 | Decal - Diesel (Not Shown - Located on Hood) | |

| ITEM | PART NUMBER | QTY | DESCRIPTION | REV |
|---|---|---|---|---|
| 110 | 2180348 | 1 | Fitting | |
| 111 | 2220313 | 1 | Fitting, 90 | |
| 112 | 2221176 | 1 | Fitting | |
| 113 | | Ref | Coolant Options (Not Shown): | |
| 113 | 2300004 | AR | Machines without Arctic Package | |
| 113 | 2300041 | AR | Machines with Arctic Package | |
| 114 | 2720058 | 30 ft/9.1m | Hose | |
| 115 | 2750532 | 6 ft/1.8m | Hose 3/8in | |
| 116 | 3311505 | 3 | Locknut 5/16in-18NC | |
| 117 | 3380428 | 1 | Panel, Rubber | |
| 118 | 3422448 | 1 | Pin, Pivot | |
| 119 | 3539956 | 1 | Plate, Support | |
| 120 | 3841143 | 1 | Keeper, Pin | |
| 121 | 4711600 | 2 | Flatwasher 3/8in Thin | |
| 122 | 4752000 | 1 | Flatwasher 5/8in Regular | |
| | | Ref | **Note: Arctic Package Items 124-127 Not Shown - Used on Arctic Machines Only** | |
| 124 | 1060625 | 1 | Cable, Immersion Heater **(SN 0300140369 through 0300177361)** | |
| 124 | 1060625 | 1 | Cable, Immersion Heater **(SN B300000100 through B300001279)** | |
| 124 | 1001150918 | 1 | Cable, Immersion Heater **(SN B300001280 through B300005764, Excluding B300005620)** | |
| 125 | 1320223 | 1 | J-Clip 1/2in | |
| 126 | 1702943 | 1 | Decal - Hydraulic Tank Heater (Located on bottom of Hydraulic Oil Tank) | |
| 127 | 2580050 | 1 | Heater, Hydraulic Tank **(SN 0300140369 through 0300177361)** | |
| 127 | 2580050 | 1 | Heater, Hydraulic Tank **(SN B300000100 through B300001279)** | |
| 127 | 1001188972 | 1 | Heater, Hydraulic Tank **(SN B300001280 through B300005764, Excluding B300005620)** | |
| | | Ref | **CATERPILLAR TIER IVi ENGINE WITH PUMPS ASSEMBLIES** | |
| | 1001109066 | Ref | **Without Arctic Package** | D |
| | 1001110200 | Ref | **With Arctic Package** | C |
| 201 | 0100011 | AR | Compound, Locking | |
| 202 | 0641407 | 1 | Bolt 1/4in-20NC x 7/8in | |
| 203 | 0641812 | 2 | Bolt 1/2in-18NC x 1-3/4in | |
| 204 | | Ref | Oil, Motor Options (Not Shown): | |
| 204 | 3020016 | AR | Oil, Motor 15W-40 (Without Arctic Package) | |
| 204 | 3020044 | AR | Oil, Motor 0W-40 (With Arctic Package) | |
| 205 | 3311405 | 1 | Locknut 1/4in-20NC | |
| 206 | 3422533 | 1 | Pin, Hitch | |
| 207 | 3600395 | 1 | Gear Pump Assembly (See GEAR PUMP ASSEMBLY for Breakdown) | |
| 208 | 3600396 | 1 | Piston Pump Assembly (See PISTON PUMP ASSEMBLY for Breakdown) | |
| 209 | 3790152 | 1 | O-Ring | |
| 210 | 3931620 | 2 | Bolt 3/8in-16NC x 1-1/4in | |
| 211 | 3960389 | 5 ft/1.5m | Seal, Hood | |
| 212 | 4751400 | 1 | Flatwasher 1/4in Regular | |
| 213 | 4891600 | 2 | Flatwasher 3/8in Hardened | |
| 215 | 1001112763 | 1 | Battery Cable Kit | B |
| 215A | 7027028 | 1 | Cable, Battery (Red) | |
| 215B | 7027029 | 1 | Cable, Battery (Black) | |

| ITEM | PART NUMBER | QTY | DESCRIPTION | REV |
|---|---|---|---|---|
| 215C | 7027002 | 1 | Cable (Red) | |
| 215D | 7027033 | 1 | Cable (Black) | |
| | | Ref | **Note: Arctic Package Items 216-226 Not Shown - Used on Arctic Machines Only** | |
| 216 | 0641608 | 2 | Bolt 3/8in-16NC x 1in | |
| 217 | 1060626 | 1 | Cord, 3-Way Extension (Located on Left Front of Engine) | |
| 218 | 1320223 | 2 | Clamp | |
| 219 | 1702941 | 1 | Decal - Battery Heater (Located on Battery Heater) | |
| 220 | 1702942 | 1 | Decal - Engine Block Heater (Located on Right Side of Engine) | |
| 221 | 1702944 | 1 | Decal - Heater Cord (Located on Left Front of Engine) | |
| 222 | 2580024 | 1 | Heater, Battery (Located on Battery) | |
| 223 | 2580055 | 1 | Heater, Block (Located on Left Side of Engine) | |
| 224 | 3311605 | 2 | Locknut 3/8in-16NC | |
| 225 | 3980007 | 1 | Seat, Battery (Located Under Battery) | |
| 226 | 4751600 | 2 | Flatwasher 3/8in Regular | |
| | 1001112077 | Ref | **CATERPILLAR TIER IVi ENGINE WITH ECM ASSEMBLY** | E |
| 301 | 0100011 | AR | Compound, Locking | |
| 302 | 0100020 | AR | Sealant, Thread | |
| 303 | 0700620 | 1 | Bolt M6 x 60mm | |
| 304 | 0700808 | 5 | Bolt M8 x 16mm | |
| 305 | 0701010 | 2 | Bolt M10 x 20mm | |
| 306 | 0760606 | 2 | Bolt M6 x 12mm | |
| 307 | 0760610 | 2 | Bolt M6 x 20mm | |
| 308 | 4031709 | 3 | Capscrew M6 x 25mm | |
| 309 | 8303541 | 1 | Screw M6 x 35mm | |
| 310 | 0700616 | 2 | Bolt M6 x 40mm | |
| 311 | 0761210 | 2 | Bolt M12 x 20mm | |
| 312 | 8406009 | 1 | Clamp, Cable | |
| 313 | 1320224 | 1 | Clamp, Cable | |
| 314 | 8406105 | 2 | Clip, Tube | |
| 315 | 3290507 | 1 | Locknut M5 | |
| 316 | 4811700 | 12 | Flatwasher 6mm | |
| 317 | 4811900 | 5 | Flatwasher 8mm | |
| 318 | 4812000 | 2 | Flatwasher 10mm | |
| 319 | 4812100 | 2 | Flatwasher 12mm | |
| 320 | 4811600 | 1 | Flatwasher 5mm | |
| 321 | 1001097553 | 1 | Washer, Coolant Sensor | |
| 322 | 1001109064 | 1 | Caterpillar Tier IVi Engine Assembly | |
| 323 | 1001112057 | 1 | Bracket | |
| 324 | 1001112059 | 5 | Bumper | |
| 325 | 1001112067 | 1 | ECM | |
| 326 | 1001112068 | 1 | Sensor, Speed | |
| 327 | 1001112069 | 1 | Sensor, Temperature | |
| 328 | 1001112070 | 1 | Switch, Oil Pressure | |
| 329 | 1001112071 | 1 | Harness, Engine (Not Shown - See ELECTRICAL SECTION for Breakdown) | |
| 330 | 1001112072 | 1 | Bracket | |
| 331 | 1001112073 | 1 | Actuator | |
| 331 | 1001112849 | 1 | Linkage Assembly | |
| 332 | 1001112570 | 1 | Spacer | |
| 334 | 1320263 | 1 | Clamp, Cable | |
| 335 | 1001112075 | 1 | Bolt | |

| ITEM | PART NUMBER | QTY | DESCRIPTION | REV |
|---|---|---|---|---|
| 336 | 1001112592 | 1 | Bearing | |
| 337 | 1001116595 | 1 | Spacer | |
| 338 | 8406109 | 1 | Clip, Tube | |
| | 1001109064 | Ref | **ENGINE COMPONENTS** | B |
| 401 | 70001051 | 1 | Valve, Crankcase Actuator Shut-Off | |
| 402 | 70001120 | 1 | Pump, Water | |
| 402 | 70001742 | 1 | Pulley, Water Pump | |
| 402 | 70002765 | 1 | Hose, By-Pass (Not Shown) | |
| 403 | See Note | NSS | Head, Cylinder (Note: Not Available for Purchase) | |
| 403 | 7026801 | 1 | Gasket, Valve Cover | |
| 403 | 70002764 | 1 | Gasket, Rear Head | |
| 403 | 70002762 | 15 | Seat, Valve | |
| 403 | 70002761 | 17 | Bolt, Head | |
| 404 | 7026839 | 1 | Pump, Fuel Supply | |
| 404 | 7026830 | 1 | Element, Fuel Filter | |
| 404 | 70002834 | 1 | Bowl, Water Collection | |
| 404 | 70002835 | 1 | Seal Kit - Water Separator | |
| 404 | 70002833 | 1 | Ring, Fuel Pump Retaining | |
| 405 | 70002844 | 1 | Dipstick Oil Level | |
| 405 | 70002843 | 1 | Seal, Dipstick Tube | |
| 406 | 70002845 | 1 | Pump, Oil (Not Shown) | |
| 406 | 70002846 | 1 | O-Ring, Oil Pump (Not Shown) | |
| 407 | 70002849 | 1 | Pump, Fuel Injection | |
| 407 | 70002847 | 1 | O-Ring, Fuel Injection Pump Flange | |
| 407 | 70002848 | 1 | Gasket, Fuel Injection Pump | |
| 407 | 70002850 | 1 | Solenoid, Fuel Shut-Off | |
| 409 | 7026802 | 1 | Flywheel | |
| 409 | 7026803 | 1 | Gear, Flywheel | |
| 409 | 7026804 | 1 | Gasket (Not Shown - Between Flywheel Housing and Engine Block) | |
| 409 | 7026805 | 1 | Seal, Rear Main (Not Shown - Rear of Flywheel Housing) | |
| 409 | 7026807 | 1 | Seal, Front Main (Located in Front Housing) | |
| 410 | 7026800 | 1 | Cap Oil Filler (Top of Valve Cover) | |
| 411 | 7026806 | 1 | Cap, Filler (Front Side of Engine) | |
| 412 | 7026810 | 1 | V-Belt | |
| 413 | 7026811 | 1 | Filter, Oil | |
| | | Ref | **Note: Machines with SkyPower use Remote Mounted Oil Filter - See SPECIAL OPTIONS SECTION. The same oil filter is used for all applications.** | |
| 413 | 7026812 | 1 | O-Ring (Between Bolt and Oil Filter Bracket) | |
| 413 | 7026813 | 1 | O-Ring (Between Oil Filter Bracket and Engine Block) | |
| 414 | 7026819 | 1 | Engine Cooler Assembly (Not Shown) | |
| 414 | 7026816 | 2 | O-Ring (Between Cover and Cooler) | |
| 414 | 7026817 | 4 | O-Ring (Between Cover and Cooler) | |
| 415 | 7026822 | 1 | Thermostat | |
| 415 | 7026821 | 1 | Gasket (Between Regulator and Thermostat Housing) | |
| 415 | 7026820 | 1 | Gasket (Between Regulator and Engine Head) | |
| 416 | 7026814 | 1 | Relief Valve, Oil Pressure | |
| 416 | 7026815 | 1 | Gasket, Relief Valve | |
| 417 | See Note | NSS | Injector, Fuel (Not Shown) (Note: Not Available for Purchase) | |
| 417 | 70002763 | 4 | Gasket, Fuel Line (Not Shown) | |
| 418 | 7026831 | 1 | Alternator | |

| ITEM | PART NUMBER | QTY | DESCRIPTION | REV |
|---|---|---|---|---|
| 419 | 7026832 | 1 | Plug, Glow (Not Shown) | |
| 420 | 7026833 | 1 | Starter (Not Shown - Located on other side of engine) | |
| 421 | 7026826 | 1 | Gasket, Exhaust Manifold to Cylinder Head (Not Shown) | |
| 421 | 7026827 | 1 | Gasket, Exhaust Manifold to Exhaust Pipe (Not Shown) | |
| 421 | 70002852 | 4 | Stud, Exhaust Manifold (Not Shown) | |
| 422 | 7026829 | 1 | Gasket, Intake Manifold to Cylinder Head (Not Shown) | |
| 422 | 7026828 | 1 | Gasket, Intake Manifold to Intake Tube (Not Shown) | |
| 423 | 7026808 | 1 | Plug, Oil Pan (Not Shown) | |
| 423 | 7026809 | 1 | Gasket, Oil Plug | |
| 424 | 70002851 | 1 | Gasket Kit (Not Shown) | |
| 425 | 4569371 | 1 | Tube, Intake | |

## FIGURE 2-13. DEUTZ ENGINE INSTALLATION

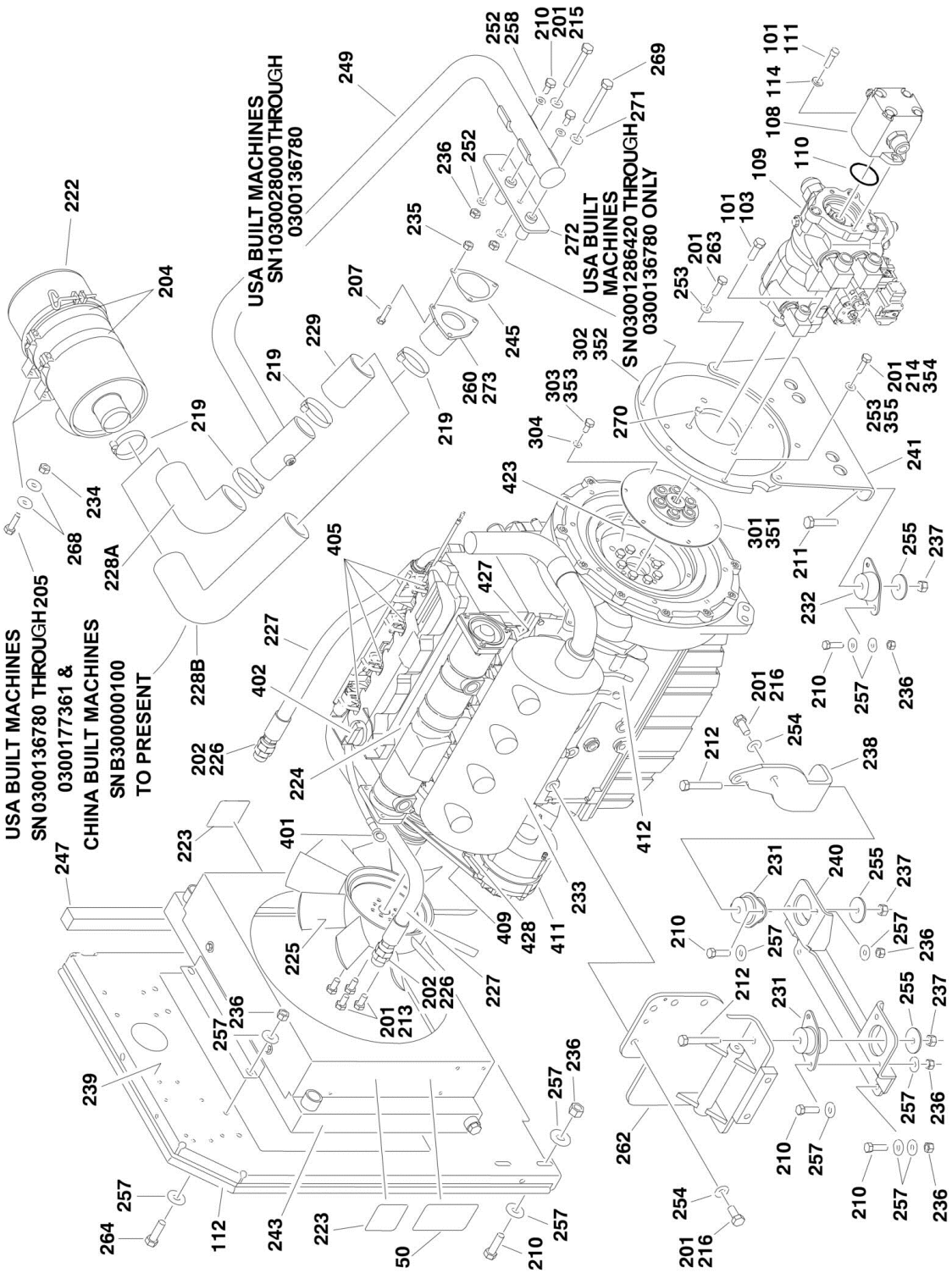

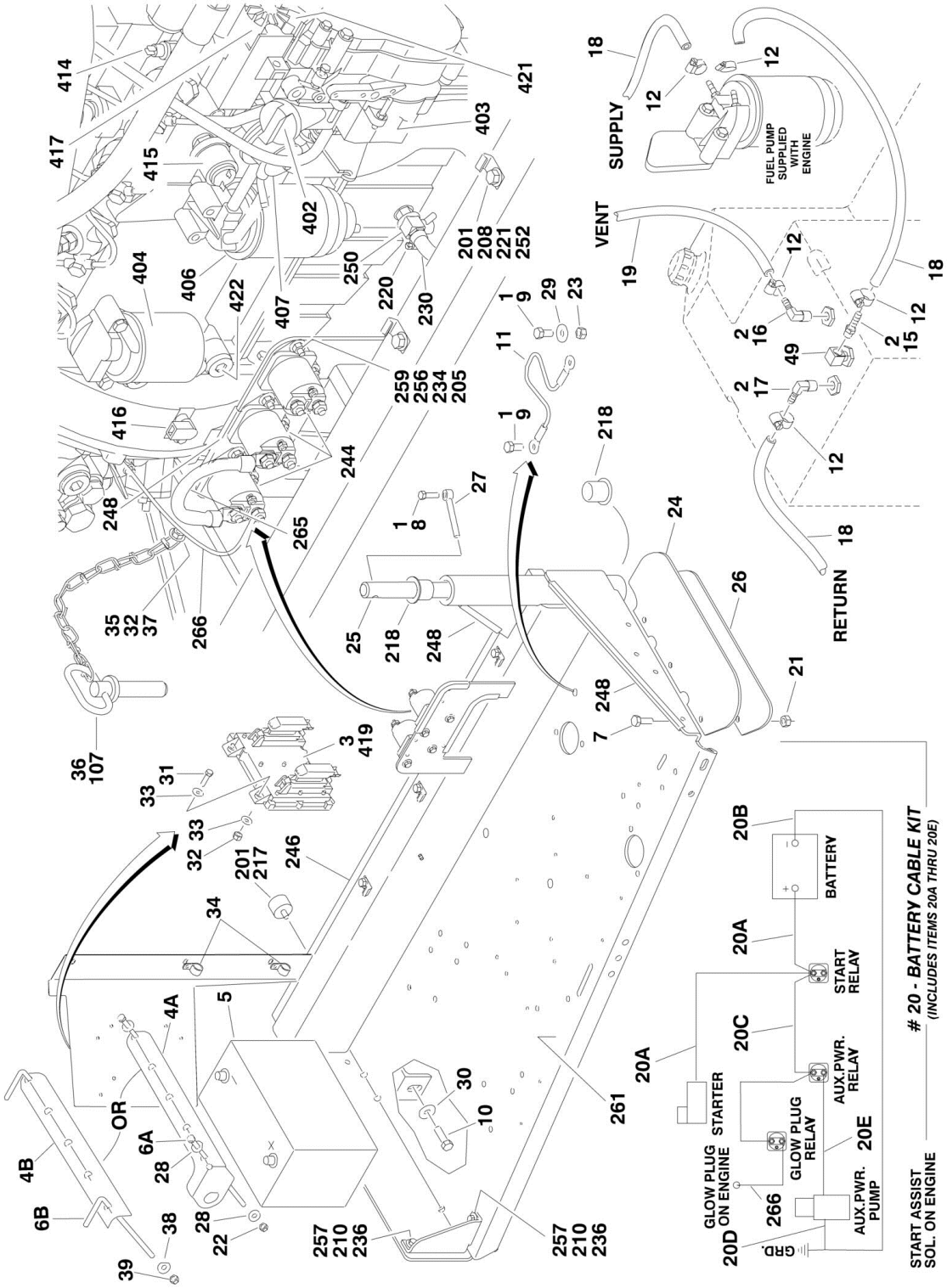
SUPPLY
VENT
RETURN
FUEL PUMP SUPPLIED WITH ENGINE
BATTERY
START RELAY
AUX.PWR. RELAY
GLOW PLUG RELAY
STARTER
GLOW PLUG ON ENGINE
AUX.PWR. PUMP
START ASSIST SOL. ON ENGINE
# 20 - BATTERY CABLE KIT
(INCLUDES ITEMS 20A THRU 20E)

## FIGURE 2-13. DEUTZ ENGINE INSTALLATION

| ITEM | PART NUMBER | QTY | DESCRIPTION | REV |
|---|---|---|---|---|
| | | Ref | **DEUTZ ENGINE INSTALLATIONS** | |
| | | Ref | **Without Arctic Package** | |
| | | Ref | **USA Built Machines** | |
| | 0274299 | Ref | **Tier II Engines (SN 0300087000 through 0300126419)** | I |
| | 1001098266 | Ref | **Tier III/IVi Engines (SN 0300126420 through 0300169952)** | E |
| | 1001098266 | Ref | **Tier III/IVi Engines (All Specs except ANSI and CSA Specs) (SN 0300169953 through 0300177361)** | E |
| | 1001137751 | Ref | **Tier IVi-Flex Engines (ANSI and CSA Specs) (SN 0300169953 through 0300177361)** | B |
| | | Ref | **China Built Machines** | |
| | 1001098266 | Ref | **Tier III/IVi Engines (SN B300000100 through B300005764, Excluding B300005620)** | E |
| | | Ref | **With Arctic Package** | |
| | | Ref | **USA Built Machines** | |
| | 0275142 | Ref | **Tier II Engines (SN 0300087000 through 0300126419)** | E |
| | 1001098474 | Ref | **Tier III/IVi Engines (SN 0300126420 through 0300169952)** | E |
| | 1001098474 | Ref | **Tier III/IVi Engines (ANSI Export Specs) (SN 0300169953 through 0300177361)** | E |
| | 1001137754 | Ref | **Tier IVi-Flex Engines (ANSI and CSA Specs) (SN 0300169953 through 0300177361)** | B |
| | | Ref | **China Built Machines** | |
| | 1001098474 | Ref | **Tier III/IVi Engines (SN B300000100 through B300005764, Excluding B300005620)** | E |
| 1 | 0100011 | AR | Compound, Locking | |
| 2 | 0100020 | AR | Sealant, Pipe | |
| 3 | 0100048 | AR | Grease, Dielectric | |
| 4 | | Ref | Hold-Down, Battery Options: | |
| 4A | 0181727 | 1 | USA Built Machines **(SN 0300087000 through 0300110503)** | |
| 4B | 91401281 | 1 | USA Built Machines **(SN 0300110504 through 0300177361)** | |
| 4B | 91401281 | 1 | China Built Machines **(SN B300000100 through B300005764, Excluding B300005620)** | |
| 5 | 0400075 | 1 | Battery | |
| 6 | | Ref | Bolt, Battery Hold-down Options: | |
| 6A | 0630498 | 2 | USA Built Machines **(SN 0300087000 through 0300110503)** | |
| 6B | 1001093382 | 2 | USA Built Machines **(SN 0300110504 through 0300177361)** | |
| 6B | 1001093382 | 2 | China Built Machines **(SN B300000100 through B300005764, Excluding B300005620)** | |
| 7 | 0641507 | AR | Bolt 5/16in-18NC x 7/8in | |
| 8 | 0641610 | 1 | Bolt 3/8in-16NC x 1-1/4in | |
| 9 | 0641808 | 2 | Bolt 1/2in-13NC x 1in | |
| 10 | 0642010 | 1 | Bolt 5/8in-11NC x 1-1/4in | |
| 11 | 1060637 | 1 | Cable, Lanyard | |
| 12 | 1320022 | 5 | Clamp, Hose | |
| 13 | 1701505 | 1 | Decal - Diesel (Not Shown - Located on Hood) | |
| 15 | 2180348 | 1 | Fitting, Straight Barbed | |
| 16 | 2220313 | 1 | Fitting, 90 | |
| 17 | 2221176 | 1 | Fitting, Straight Barbed | |
| 18 | 2720058 | AR | Hose Options: | |
| 18 | 2720058 | 30 ft/9.2m | USA Built Machines **(SN 0300087000 through 0300126419)** | |
| 18 | 2720058 | 24 ft/7.3m | USA Built Machines **(SN 0300126420 through 0300177361)** | |
| 18 | 2720058 | 24 ft/7.3m | China Built Machines **(SN B300000100 through B300005764, Excluding B300005620)** | |

| ITEM | PART NUMBER | QTY | DESCRIPTION | REV |
|---|---|---|---|---|
| 19 | 2750532 | 6 ft/1.8m | Hose | |
| 20 | 2902296 | 1 | Battery Cable Kit | F |
| | | Ref | **Note: 2902296 Rev A version is no longer available. Verify whether machine is equipped with 2 or 3 relays on the engine tray. If there are 3 relays, purchase latest revision of 2902296 kit. If there are 2 relays, purchase individual items as replacement.** | |
| 20A | | Ref | Cable, Battery (Red) | |
| 20A | 1001116241 | 1 | Machines with 2 Relays on Engine Tray (was p/n 7027000) | |
| 20A | 1001116240 | 1 | Machines with 3 Relays on Engine Tray (was p/n 7027000) | |
| 20B | 7027004 | 1 | Cable, Battery (Black) | |
| 20C | 7027001 | 1 | Cable (Red) (No Longer Part of 2902296 Kit) | |
| 20D | 7027003 | 1 | Cable (Black) | |
| 20E | 7027002 | 1 | Cable (Red) | |
| 21 | 3311505 | AR | Locknut 5/16in-18NC | |
| 22 | 3311605 | AR | Locknut 3/8in-16NC | |
| 23 | 3311801 | 1 | Nut 1/2in-13NC | |
| 24 | 3380428 | 1 | Panel, Rubber | |
| 25 | 3422448 | 1 | Pin, Pivot | |
| 26 | 3539956 | 1 | Plate, Support | |
| 27 | 3841143 | 1 | Pin, Keeper | |
| 28 | 4751600 | AR | Flatwasher 3/8in Regular | |
| 29 | 4751800 | 1 | Flatwasher 1/2in Regular | |
| 30 | 4752000 | 1 | Flatwasher 5/8in Regular | |
| 31 | 0641409 | 4 | Bolt 1/4in-20NC x 1-1/8in | |
| 32 | 3311405 | AR | Locknut 1/4in-20NC | |
| 33 | 4711400 | 8 | Flatwasher 1/4in Thin | |
| 34 | 85941017 | 2 | Clamp | |
| 35 | 0641407 | 1 | Bolt 1/4in-20NC x 7/8in | |
| 36 | | Ref | Pin, Hitch Options: | |
| 36 | See Note | NLA | USA Built Machines (Note: Use p/n 3422533) **(SN 0300087000 through 0300101240)** | |
| 36 | 3422533 | 1 | USA Built Machines **(SN 0300101241 through 0300177361)** | |
| 36 | 3422533 | 1 | China Built Machines **(SN B300000100 through B300005764, Excluding B300005620)** | |
| 37 | 4751400 | 1 | Flatwasher 1/4in Regular | |
| 38 | 4751500 | AR | Flatwasher 5/16in Regular | |
| 39 | 3311505 | NLA | Locknut 5/16in-18NC (Use p/n 88521205) | |
| 49 | 7019658 | 1 | Fitting, 90 with Pick-Up Tube (Part of Fuel Tank) | |
| 50 | | Ref | Decal - Warning Explosion/Fire Options: | |
| 50 | 1704972 | 1 | ANSI Spec | |
| 50 | 1706098 | 1 | Australian and CE Spec | |
| 50 | 1706059 | 1 | Brazilian Spec | |
| 50 | 1706060 | 1 | Chinese Spec | |
| 50 | 1706064 | 1 | CSA Spec | |
| 50 | 1706062 | 1 | Japanese Spec | |
| 50 | 1706061 | 1 | Korean Spec | |
| 50 | 1706063 | 1 | Spanish Language | |
| | | Ref | **Note: Arctic Package Items 51-62 Not Shown - Used on Arctic Machines Only** | |
| 51 | 1060625 | 1 | Cable, Immersion Heater (Located on bottom of Hydraulic Oil Tank) | |
| 52 | 1060626 | 1 | Cord, 3 Way Extension (Located on Left Front of Engine) | |

| ITEM | PART NUMBER | QTY | DESCRIPTION | REV |
|---|---|---|---|---|
| 53 | 1320223 | 2 | Clamp | |
| 54 | 0641608 | 1 | Bolt 3/8in-16NC x 1in | |
| 55 | 4711600 | 2 | Flatwasher 3/8in Thin | |
| 56 | 1702941 | 1 | Decal - Battery Heater (Located on Battery Heater) | |
| 57 | 1702942 | 1 | Decal - Engine Block Heater (Located on Right Side of Engine) | |
| 58 | 1702943 | 1 | Decal - Hydraulic Tank Heater (Located on bottom of Hydraulic Oil Tank) | |
| 59 | 1702944 | 1 | Decal - Heater Cord (Located on Left Front of Engine) | |
| 60 | 2580024 | 1 | Heater, Battery (Located on Battery) | |
| 61 | 2580050 | 1 | Heater, Hydraulic Tank (Located on bottom of Hydraulic Oil Tank) | |
| 62 | 3980007 | 1 | Seat, Battery (Located Under Battery) | |
| | | Ref | **ENGINE/PUMP SUB-ASSEMBLIES** | |
| | | Ref | **Without Arctic Package** | |
| | | Ref | **USA Built Machines** | |
| | 2000280 | Ref | **Tier II Engines (SN 0300087000 through 0300126419)** | E |
| | 1001094103 | Ref | **Tier III Engines (SN 0300126420 through 0300169952)** | G |
| | 1001139358 | Ref | **Tier III Engines (All Specs except ANSI and CSA Specs) (SN 0300169953 through 0300177361)** | D |
| | 1001137814 | Ref | **Tier IVi-Flex Engines (ANSI and CSA Specs) (SN 0300169953 through 0300177361)** | B |
| | | Ref | **China Built Machines** | |
| | 1001094103 | Ref | **Tier III Engines (SN B300000100 through B300005764, Excluding B300005620)** | G |
| | | Ref | **With Arctic Package** | |
| | | Ref | **USA Built Machines** | |
| | 2000366 | Ref | **Tier II Engines (SN 0300087000 through 0300126419)** | C |
| | 1001098475 | Ref | **Tier III Engines (SN 0300126420 through 0300169952)** | F |
| | 1001139359 | Ref | **Tier III Engines (ANSI Export Specs) (SN 0300169953 through 0300177361)** | D |
| | 1001137815 | Ref | **Tier IVi-Flex Engines (ANSI and CSA Specs) (SN 0300169953 through 0300177361)** | B |
| | | Ref | **China Built Machines** | |
| | 1001098475 | Ref | **Tier III Engines (SN B300000100 through B300005764, Excluding B300005620)** | F |
| 101 | 0100011 | AR | Compound, Locking | |
| 103 | 0641812 | 2 | Bolt 1/2in-13NC x 1-1/2in | |
| 105 | 3020016 | AR | Oil, Motor (Not Shown) | |
| 107 | | Ref | Pin, Hitch Options: | |
| 107 | 3422532 | 1 | USA Built Machines **(SN 0300087000 through 0300101240)** | |
| 107 | See Note | NSS | USA Built Machines (Note: Use Item 36) **(SN 0300101241 through 0300177361)** | |
| 107 | See Note | NSS | China Built Machines (Note: Use Item 36) **(SN B300000100 through B300005764, Excluding B300005620)** | |
| 108 | 3600395 | 1 | Gear Pump Assembly with Fittings (See GEAR PUMP ASSEMBLY for Breakdown) | |
| 109 | 1001117799 | NLA | Piston Pump Assembly with Fittings Options (See PISTON PUMP ASSEMBLY for Breakdown) (Use p/n 3600396) | |
| 110 | 3790152 | 1 | O-Ring | |
| 111 | 3931620 | 2 | Capscrew 3/8in-16NC x 1-1/4in | |
| 112 | 3960389 | 5 ft/1.5m | Seal | |
| 114 | 4891600 | 2 | Flatwasher 3/8in Hardened | |
| | | Ref | **ENGINE ASSEMBLIES** | |

| ITEM | PART NUMBER | QTY | DESCRIPTION | REV |
|---|---|---|---|---|
| | | Ref | **Without Arctic Package** | |
| | | Ref | **USA Built Machines** | |
| | 2000279 | Ref | **Tier II Engines (SN 0300087000 through 0300092726)** | E |
| | 2000342 | Ref | **Tier II Engines (SN 0300092727 through 0300126419)** | A |
| | 1001094102 | Ref | **Tier III/IVi Engines (SN 0300126420 through 0300169952)** | K |
| | 1001094102 | Ref | **Tier III/IVi Engines (All Specs except ANSI and CSA Specs) (SN 0300169953 through 0300177361)** | K |
| | 1001137749 | Ref | **Tier IVi-Flex Engines (ANSI and CSA Specs) (SN 0300169953 through 0300177361)** | B |
| | | Ref | **China Built Machines** | |
| | 1001094102 | Ref | **Tier III/IVi Engines (SN B300000100 through B300005764, Excluding B300005620)** | M |
| | | Ref | **With Arctic Package** | |
| | | Ref | **USA Built Machines** | |
| | 2000365 | Ref | **Tier II Engines (SN 0300087000 through 0300126419)** | A |
| | 1001098476 | Ref | **Tier III/IVi Engines (SN 0300126420 through 0300169952)** | L |
| | 1001098476 | Ref | **Tier III/IVi Engines (ANSI Export Specs) (SN 0300169953 through 0300177361)** | L |
| | 1001137752 | Ref | **Tier IVi-Flex Engines (ANSI and CSA Specs) (SN 0300169953 through 0300177361)** | B |
| | | Ref | **China Built Machines** | |
| | 1001098476 | Ref | **Tier III/IVi Engines (SN B300000100 through B300005764, Excluding B300005620)** | M |
| | 0256690 | Ref | **MUFFLER INSTALLATION - CATALYTIC** | |
| | 1001182906 | Ref | **MUFFLER INSTALLATION - SPARK ARRESTER** | B |
| 201 | 0100011 | AR | Compound, Locking | |
| 202 | 0100020 | AR | Sealant, Pipe | |
| 204 | 0340041 | 2 | Band, Air Cleaner | |
| 205 | 0641407 | AR | Bolt 1/4in-20NC x 7/8in | |
| 207 | 0641510 | 3 | Bolt 5/16in-18NC x 1- 1/4in | |
| 208 | 0641606 | 3 | Bolt 3/8in-16NC x 3/4in | |
| 210 | 0641610 | AR | Bolt 3/8in-16NC x 1-1/4in | |
| 211 | 0641818 | 2 | Bolt 1/2in-13NC x 2-1/4in | |
| 212 | 0641826 | 2 | Bolt 1/2in-13NC x 3-1/4in | |
| 213 | 0700808 | 4 | Bolt M8 x 16mm | |
| 214 | 0701012 | AR | Bolt M10 x 25mm | |
| 215 | 0701015 | AR | Bolt M10 x 35mm | |
| 216 | 0711414 | 6 | Bolt M14 x 130mm | |
| 217 | 0940070 | 1 | Bumper | |
| 218 | 0961986 | 2 | Bushing, Flanged | |
| 219 | 1320016 | AR | Clamp | |
| 220 | 1320022 | AR | Clamp, Hose | |
| 221 | 1320223 | AR | J-Clip | |
| 222 | 1340060 | 1 | Air Cleaner Assembly Filter Element | |
| 222 | 7012664 | 1 | Element, Filter (Not Shown) | |
| 223 | 1703162 | 2 | Decal - Caution Fan Blade | |
| 224 | | Ref | Engine, Deutz Options: | |
| 224 | | Ref | USA Built Machines | |
| 224 | 2000274 | 1 | Tier II **(SN 0300087000 through 0300092726)** | |
| 224 | 2000339 | 1 | Tier II **(SN 0300092727 through 0300126419)** | |
| 224 | 1001098211 | 1 | Tier III/Tier IVi **(SN 0300126420 through 0300169952)** | |
| 224 | 1001098211 | 1 | Tier III/Tier IVi (All Specs except ANSI and CSA Specs) **(SN 0300169953 through 0300177361)** | |

| ITEM | PART NUMBER | QTY | DESCRIPTION | REV |
|---|---|---|---|---|
| 224 | 1001137748 | 1 | Tier IVi-Flex (ANSI and CSA Specs) **(SN 0300169953 through 0300177361)** | |
| 224 | | Ref | China Built Machines | |
| 224 | 1001098211 | 1 | Tier III/Tier IVi **(SN B300000100 through B300001622))** | |
| 224 | 1001146368 | 1 | Tier III/Tier IVi **(SN B300001623 through B300005764, Excluding B300005620)** | |
| 225 | 2060025 | 1 | Fan | |
| 226 | 2220451 | 2 | Fitting, Straight | |
| 227 | 2720398 | 2 | Hose, Oil Cooler | |
| 228 | | Ref | Elbow, Rubber Options: | |
| 228A | 2720434 | 1 | USA Built Machines **(SN 0300087000 through 0300136779)** | |
| 228B | 1001091179 | 1 | USA Built Machines **(SN 0300136780 through 0300177361)** | |
| 228B | 1001091179 | 1 | China Built Machines **(SN B300000100 through B300005764, Excluding B300005620)** | |
| 229 | 2720449 | 1 | Hose, Air Cleaner (USA Built Machines Only) **(SN 0300087000 through 0300136780)** | |
| 230 | 1001091892 | NLA | Hose, Oil Drain (Use p/n 2750532) | |
| 231 | 3200362 | 2 | Mount, Motor | |
| 232 | 3200406 | 2 | Mount, Motor | |
| 233 | | Ref | Muffler Options: | |
| 233 | 3220104 | 1 | Muffler, Catalytic | |
| 233 | 3220103 | 1 | Muffler, Spark Arresting | |
| 233 | | Ref | Clamp Options: | |
| 233 | 1320176 | 1 | Muffler p/n 3220103 | |
| 233 | 70001017 | 1 | Muffler p/n 3220104 | |
| 233 | 7024398 | 1 | Tube, Exhaust | |
| 233 | 7024560 | 1 | Plug, Brass | |
| 233 | 70003476 | 8 | Nut, Muffler Attaching | |
| 233 | 7000699 | 1 | Seal (Doughnut) | |
| 233 | 7020471 | 4 | Gasket (Muffler to Head) | |
| 233 | 1001169610 | 1 | Spacer, Hood (Not Shown) (Use with 1001182906 Muffler Installation) | |
| 234 | 3311405 | AR | Locknut 1/4in-20NC | |
| 235 | 3311505 | 3 | Locknut 5/16in-18NC | |
| 236 | 3311605 | AR | Locknut 3/8in-16NC | |
| 237 | 3311805 | 4 | Locknut 1/2in-13NC | |
| 238 | 3537416 | 1 | Plate, Engine Mounting (Front Right Side) | |
| 239 | 3539872 | 1 | Plate, Radiator Mounting | |
| 240 | 3539971 | 1 | Plate, Engine Mounting (Front Bottom) | |
| 241 | | Ref | Plate, Engine Mounting (Rear) Options: | |
| 241 | 3574978 | 1 | USA Built Machines **(SN 0300087000 through 0300126419)** | |
| 241 | 1001093943 | 1 | USA Built Machines (Not Shown) **(SN 0300126420 through 0300177361)** | |
| 243 | | Ref | Radiator Options: | |
| 243 | 3620033 | 1 | USA Built Machines **(SN 0300087000 through 0300171709)** | |
| 243 | 1001150998 | 1 | USA Built Machines **(SN 0300171710 through 0300177361)** | |
| 243 | 3620033 | 1 | China Built Machines **(SN B300000100 through B300000765)** | |
| 243 | 1001150998 | 1 | China Built Machines **(SN B300000766 through B300005764, Excluding B300005620)** | |
| 244 | 3740067 | Ref | Relay Options: | |
| 244 | 3740067 | 2 | Relay USA Built Machines **(SN 0300087000 through 0300092726)** | |
| 244 | 3740067 | 3 | Relay USA Built Machines **(SN 0300092727 through** | |

| ITEM | PART NUMBER | QTY | DESCRIPTION | REV |
|---|---|---|---|---|
| | | | **0300177361)** | |
| 244 | 3740067 | 3 | Relay China Built Machines **(SN B300000100 through B300005764, Excluding B300005620)** | |
| 245 | 3960407 | 1 | Gasket, Air Intake | |
| 246 | 3960468 | 1 | Seal | |
| 247 | 3960469 | 1 | Seal | |
| 248 | 4060805 | 37 in/1m | Flex-Trim | |
| 249 | | Ref | Tube, Tuning Options: | |
| 249 | 4569171 | 1 | USA Built Machines **(SN 0300087000 through 0300126419)** | |
| 249 | 1001094521 | 1 | USA Built Machines **(SN 0300126420 through 0300136779)** | |
| 249 | Not Required | 0 | USA Built Machines **(SN 0300136780 through 0300177361)** | |
| 249 | Not Required | 0 | China Built Machines | |
| 250 | 1001104308 | NLA | Valve, Oil Drain (Use p/n 4640751) | |
| 252 | 4711600 | AR | Flatwasher 3/8in Thin | |
| 253 | 4711700 | AR | Flatwasher 7/16in Thin | |
| 254 | | Ref | Flatwasher Options: | |
| 254 | 4711900 | 6 | Flatwasher 9/16in Thin | |
| 254 | 4812200 | 6 | Flatwasher M14 | |
| 255 | 4740274 | 4 | Washer, Snubbing | |
| 256 | 4751400 | NLA | Flatwasher 1/4in Thin (Use p/n 4711400) | |
| 257 | 4751600 | AR | Flatwasher 3/8in Regular | |
| 258 | 4751700 | AR | Flatwasher 7/16in Regular | |
| 259 | 4791400 | AR | Starwasher 1/4in | |
| 260 | 4845395 | 1 | Adapter, Air Intake **(SN B300000100 through B300002408)** | |
| 260 | 1001224965 | 1 | Adapter, Air Intake **(SN B300002409 through B300005764, Excluding B300005620)** | |
| 261 | | Ref | Tray, Engine Options: | |
| 261 | 4845404 | 1 | USA Built Machines **(SN 0300087000 through 0300126419)** | |
| 261 | 1001094321 | 1 | USA Built Machines (Not Shown) **(SN 0300126420 through 0300177361)** | |
| 261 | 1001094321 | 1 | China Built Machines (Not Shown) **(SN B300000100 through B300005764, Excluding B300005620)** | |
| 262 | 4846566 | 1 | Plate, Engine Mounting (Front Left Side) | |
| 263 | | Ref | Bolt Options: | |
| 263 | 0701014 | 4 | Bolt M10 x 30mm | |
| 263 | 0701015 | 4 | Bolt M10 x 35mm | |
| 264 | | Ref | Bolt Options: | |
| 264 | 0641610 | 4 | Bolt 3/8in-16NC x 1-1/4in | |
| 264 | 0641609 | 6 | Bolt 3/8in-16NC x 1-1/8in | |
| 265 | 1060904 | 1 | Cable, Jumper (USA Built Machines) **(SN 0300092727 through 0300177361)** | |
| 265 | 1060904 | 1 | Cable, Jumper (All China Built Machines) **(SN B300000100 through B300001561)** | |
| 266 | 4923379 | 1 | Harness, Glow Plugs (USA Built Machines) **(SN 0300092727 through 0300177361)** | |
| 266 | 4923379 | 1 | Harness, Glow Plugs (All China Built Machines) | |
| 267 | | Ref | Oil, Motor Options (Not Shown): | |
| 267 | 3020016 | AR | Oil, Motor 15W-40 (Without Arctic Package) | |
| 267 | 3020044 | AR | Oil, Motor 0W-40 (With Arctic Package) | |
| 268 | 4751400 | 8 | Flatwasher 1/4in Regular | |
| 269 | 0711025 | AR | Bolt M10 x 85mm | |
| 270 | 3520054 | AR | Plug, Hole | |
| 271 | 4891600 | AR | Flatwasher 3/8in Hardened | |

| ITEM | PART NUMBER | QTY | DESCRIPTION | REV |
|---|---|---|---|---|
| 272 | 1001098916 | 1 | Support, Resonator (USA Built Machines Only) **(SN 0300126420 through 0300136780)** | |
| 273 | 1001149639 | 1 | Indicator, Air Intake Restriction **(SN B300002409 through B300005764, Excluding B300005620)** | |
| | | Ref | **Note: Arctic Package Item 274 Not Shown - Used on Arctic Machines Only** | |
| 274 | 2580062 | 1 | Heater, Engine Block | |
| | 0256847 | Ref | **PUMP COUPLING INSTALLATION (USA BUILT MACHINES) (SN 0300087000 through 0300126419)** | 2 |
| 301 | 1660234 | 1 | Coupling, Hayes | |
| 302 | 0080163 | 1 | Plate, Pump Adapter | |
| 303 | 0700810 | 63 | Bolt Metric M8 x 20mm | |
| 304 | 4831900 | 6 | Lockwasher M8 | |
| 307 | 3020021 | AR | Grease, Coupling (Not Shown) | |
| | 2902065 | Ref | **KIT PUMP COUPLING AND MOUNTING PLATE (USA BUILT MACHINES) (SN 0300126420 through 0300177361)** | K |
| | 2902065 | Ref | **KIT PUMP COUPLING AND MOUNTING PLATE (CHINA BUILT MACHINES) (SN B300000100 through B300005764, Excluding B300005620)** | K |
| 351 | 70000793 | 1 | Coupling, Hayes | |
| 352 | 2902065 | 1 | Plate, Pump Adapter | |
| 353 | See Note | 8 | Capscrew M10 x 20 Grade 10.9 (Note: Not Available - Purchase Locally) | |
| 354 | See Note | NSS | Bolt M10 x 25 Grade 10.9 (Note: Not Available - Purchase Locally) | |
| 355 | See Note | NSS | Flatwasher M10 (Note: Not Available - Purchase Locally) | |
| | | Ref | **ENGINE COMPONENTS** | |
| | | Ref | **USA Built Machines** | |
| | 2000274 | Ref | **Tier II (SN 0300087000 through 0300092726)** | B |
| | 2000339 | Ref | **Tier II (SN 0300092727 through 0300126419)** | B |
| | 1001098211 | Ref | **Tier III/Tier IVi (SN 0300126420 through 0300169952)** | E |
| | 1001098211 | Ref | **Tier III/Tier IVi (All Specs except ANSI and CSA Specs) (SN 0300169953 through 0300177361)** | E |
| | 1001137748 | Ref | **Tier IVi-Flex (ANSI and CSA Specs) (SN 0300169953 through 0300177361)** | B |
| | | Ref | **China Built Machines** | |
| | 1001098211 | Ref | **Tier III/Tier IVi (SN B300000100 through B300001622)** | E |
| | 1001146368 | Ref | **Tier III/Tier IVi (SN B300001623 through B300005764, Excluding B300005620)** | D |
| 401 | 7026631 | 1 | Dipstick | |
| 401 | 7020487 | 1 | O-Ring, Dipstick | |
| 401 | 70001002 | 1 | Tube, Dipstick | |
| 401 | 7020403 | 1 | Seal, Dipstick Tube | |
| 402 | 7020465 | 2 | Cap, Filler | |
| 403 | | Ref | Pump, Oil Lube | |
| 403 | 70000045 | 1 | Tier II - 2000274 & 2000339 Engines | |
| 403 | 70001850 | 1 | Tier III/Tier IVi - 1001098211 & 1001146368 Engines and Tier IVi-Flex - 1001137748 Engines | |
| 403 | 7020468 | 1 | Seal Between Oil Pump and Engine Block (Not Shown) | |
| 404 | 7016331 | 1 | Filter, Oil | |
| 405 | 70003478 | 4 | Injector, Fuel | |
| 405 | | Ref | Pump, Injector Options: | |
| 405 | | Ref | Injector Pumps for Tier II - 2000274 & 2000339 Engines | |
| 405 | 7027246 | 4 | Series A Injector | |
| 405 | 7027608 | 4 | Series B Injector | |

| ITEM | PART NUMBER | QTY | DESCRIPTION | REV |
|---|---|---|---|---|
| 405 | 7027609 | 4 | Series C Injector | |
| 405 | 7027610 | 4 | Series D Injector | |
| 405 | | Ref | Injector Pumps for Tier III - 1001098211 & 1001146368 Engines and Tier IVi-Flex - 1001137748 Engines | |
| 405 | 70000912 | 4 | Series A Injector | |
| 405 | 70000913 | 4 | Series B Injector | |
| 405 | 70000914 | 4 | Series C Injector | |
| 405 | 70000915 | 4 | Series D Injector | |
| 405 | | Ref | Gasket Options (1 Per Injector): | |
| 405 | 7020447 | 4 | Tier II - 2000274 & 2000339 Engines | |
| 405 | See Note | NSS | Tier III/Tier IVi - 1001098211 Engines and Tier IVi-Flex - 1001137748 Engines (Note: Not Available for Purchase) | |
| 406 | 7016328 | 1 | Filter, Fuel | |
| 407 | 70000916 | 1 | Pump Fuel Supply (Includes Seals, Hand Pump and Repair Kit) | |
| 407 | 70001435 | 1 | Repair Kit - Fuel Pump | |
| 407 | | Ref | O-Seal Options Between Fuel Pump and Engine Block (Not Shown) | |
| 407 | 7020411 | 1 | Tier II - 2000274 & 2000339 Engines | |
| 407 | 70000917 | 1 | Tier III/Tier IVi - 1001098211 & 1001146368 Engines and Tier IVi-Flex - 1001137748 Engines | |
| 407 | 70000919 | 1 | Hand Pump | |
| 407 | 70000918 | 1 | Ring, Sealing Between Fuel Pump and Hand Pump (Not Shown) | |
| 408 | 7020449 | 4 | Gasket, Intake Manifold (Not Shown) | |
| 410 | 70001871 | 1 | Gasket, Intake Manifold to Engine Block (1001146368 Engines) (Not Shown) | |
| 409 | 7020408 | 1 | V-Belt | |
| 410 | 7020471 | 4 | Gasket, Exhaust Manifold to Engine Block (Not Shown) | |
| 410 | See Note | NSS | Gasket, Exhaust Manifold to Exhaust Pipe (Not Shown) (Note: Not Available for Purchase) | |
| 411 | 7000663 | 1 | Alternator | |
| 411 | 70004056 | 1 | Alternator (1001146368 Engines) | |
| 411 | | Ref | Regulator, Voltage Options (Not Shown): | |
| 411 | 7020464 | 1 | Tier II - 2000274 & 2000339 Engines | |
| 411 | 70001868 | 1 | Tier III/Tier IVi - 1001098211 & 1001146368 Engines and Tier IVi-Flex - 1001137748 Engines | |
| 411 | 70001866 | 1 | Seal, Voltage Regulator (Tier III - 1001098211 & 1001146368 Engines and Tier IVi-Flex - 1001137748) | |
| 412 | 7020479 | 1 | Starter | |
| 412 | 7026608 | 1 | Relay | |
| 413 | 7027793 | 1 | Plug-In Connector (Not Shown - See ELECTRICAL SECTION for Breakdown) | |
| 414 | 7027791 | 1 | Transmitter, Temperature | |
| 414 | See Note | NSS | Ring, Sealing (Note: Not Available for Purchase) | |
| 415 | 7027790 | 1 | Sensor, Oil Pressure | |
| 416 | 7024565 | 1 | Sensor, Speed | |
| 416 | 70004272 | 1 | Sensor, Speed (1001146368 Engines) | |
| 417 | 7027792 | 1 | Throttle Actuator | |
| 417 | 7027276 | 2 | Spring | |
| 418 | | Ref | Sensor, Temperature (Not Shown) | |
| 418 | 7027236 | 1 | Tier II - 2000274 & 2000339 Engines | |
| 418 | See Note | NSS | Tier III/Tier IVi - 1001098211 Engines and Tier IVi-Flex - 1001137748 Engines (Note: Not Available for Purchase) | |
| 419 | 7027795 | 1 | Deutz EMR2 Controller, Module | |

| ITEM | PART NUMBER | QTY | DESCRIPTION | REV |
|---|---|---|---|---|
| 420 | 70000345 | 4 | Plug, Glow (Not Shown - Use with p/n 2000339, 1001098211 & 1001137748 Engines Only) | |
| 421 | | Ref | Start Solenoid Options: | |
| 421 | 7027239 | 1 | Tier II - 2000274 & 2000339 Engines | |
| 421 | See Note | NSS | Tier III/Tier IVi - 1001098211 & 1001146368 Engines and Tier IVi-Flex - 1001137748 Engines (Note: Not Available for Purchase) | |
| 422 | 7020459 | 1 | Thermostat and Spring | |
| 422 | 70003475 | 1 | Thermostat and Spring (1001146368 Engines) | |
| 422 | 7020460 | 1 | Spring | |
| 423 | | Ref | Flywheel and Gear Rim Assembly Options: | |
| 423 | 70000264 | 1 | Tier II - 2000274 & 2000339 Engines | |
| 423 | 70001870 | 1 | Tier III/Tier IVi - 1001098211 & 1001146368 Engines and Tier IVi-Flex - 1001137748 Engines | |
| 423 | 7024579 | 1 | Gear Rim Only | |
| 424 | | Ref | Breather Valve Options (Not Shown - Located in Front Cover): | |
| 424 | See Note | NSS | Tier II - 2000274 & 2000339 Engines (Note: Not Available for Purchase) | |
| 424 | 70001847 | 1 | Tier III/Tier IVi - 1001098211 & 1001146368 Engines and Tier IVi-Flex - 1001137748 Engines | |
| 424 | | Ref | O-Ring, Breather Valve Options (Not Shown): | |
| 424 | See Note | NSS | Tier II - 2000274 & 2000339 Engines (Note: Not Available for Purchase) | |
| 424 | 70001126 | 1 | Tier III/Tier IVi - 1001098211 & 1001146368 Engines and Tier IVi-Flex - 1001137748 Engines | |
| 425 | | Ref | Harness, Engine Options (Not Shown - See ELECTRICAL SECTION for Breakdown): | |
| 425 | 7027794 | 1 | Tier II - 2000274 & 2000339 Engines | |
| 425 | 70001872 | 1 | Tier III/Tier IVi - 1001098211 & 1001146368 Engines and Tier IVi-Flex - 1001137748 Engines | |
| 426 | 7027796 | 1 | Harness, EMR2 (Not Shown - See ELECTRICAL SECTION for Breakdown) | |
| 427 | 70002200 | 1 | Stud | |
| 428 | 70002234 | 1 | Bracket, Support | |
| 429 | | Ref | Gasket, Head Options (Not Shown): | |
| 429 | 70003001 | 1 | Gasket with 1 Notch | |
| 429 | 70003002 | 1 | Gasket with 2 Notches | |
| 429 | 70003003 | 1 | Gasket with 3 Notches | |
| 430 | 70003623 | 1 | Kit, Timing Belt/Idler (Not Shown) | |

## FIGURE 2-14. FORD ENGINE INSTALLATION

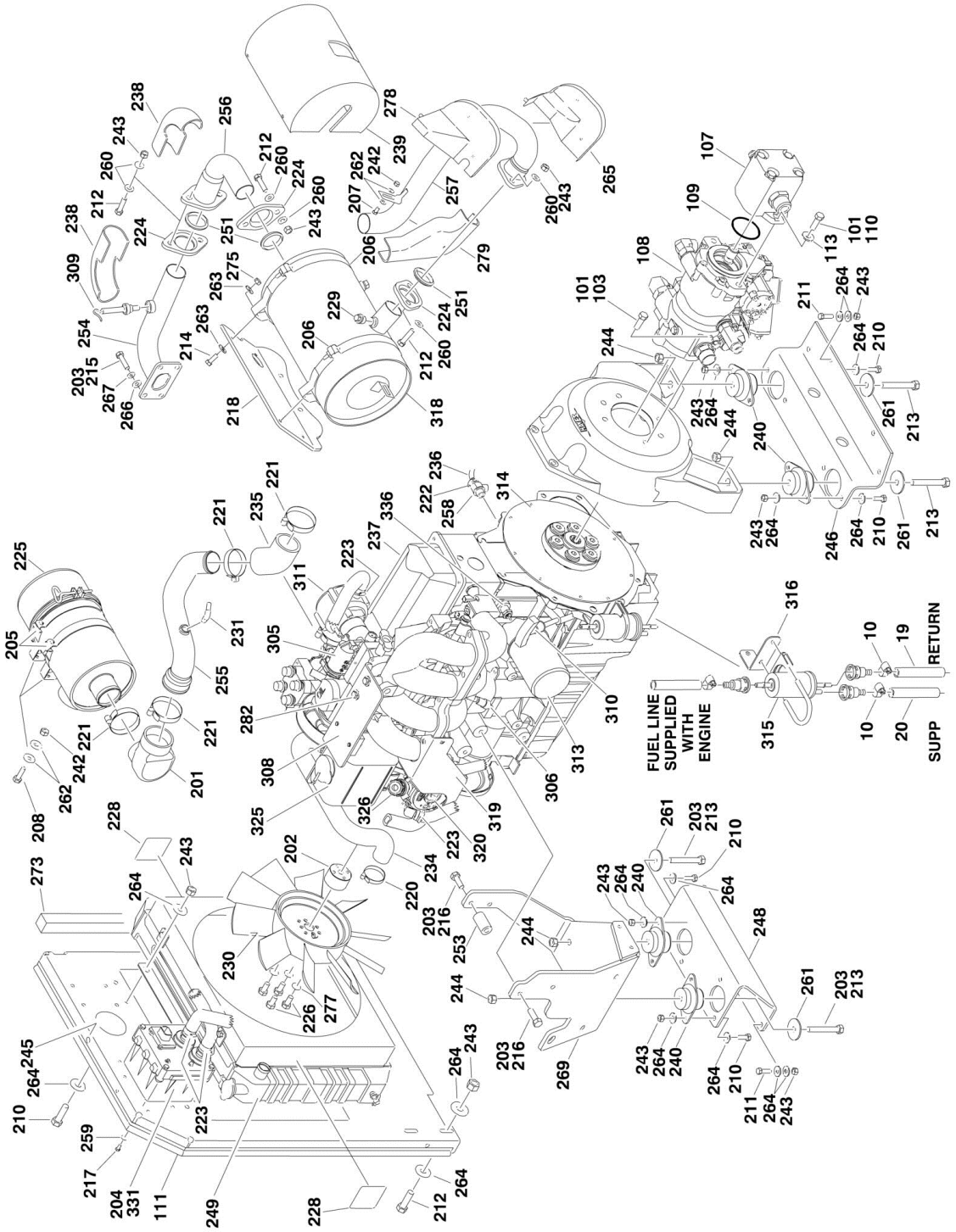

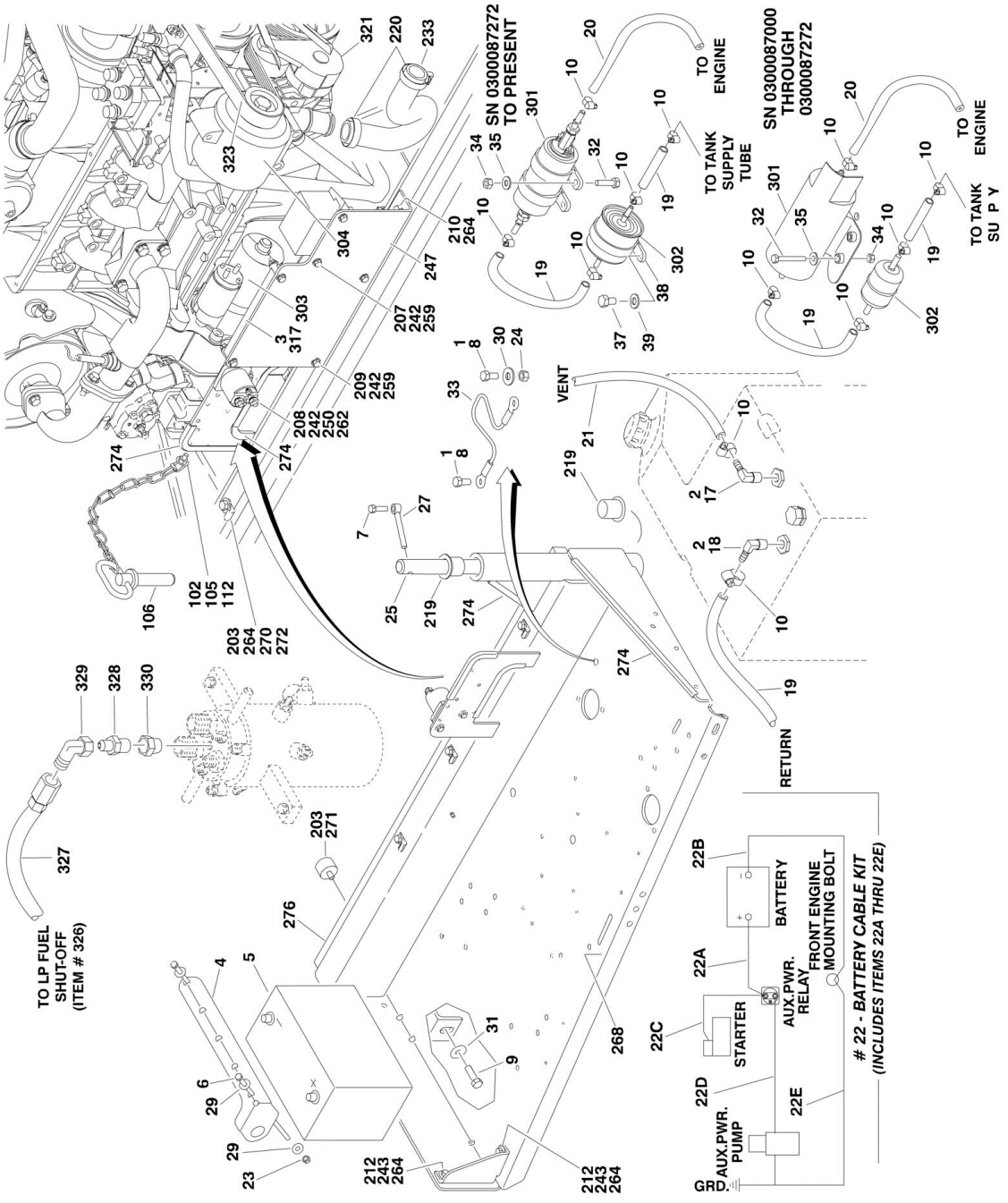
SN 0300087272 TO PRESENT
SN 0300087000 THROUGH 0300087272
TO ENGINE
TO TANK SUPPLY TUBE
VENT
RETURN
TO LP FUEL SHUT-OFF (ITEM # 326)
BATTERY
FRONT ENGINE MOUNTING BOLT
AUX.PWR. RELAY
STARTER
AUX.PWR. PUMP
GRD.
# 22 - BATTERY CABLE KIT
(INCLUDES ITEMS 22A THRU 22E)

## FIGURE 2-14. FORD ENGINE INSTALLATION

| ITEM | PART NUMBER | QTY | DESCRIPTION | REV |
|---|---|---|---|---|
| | | Ref | **Note: Only Available on USA Built Machines.** | |
| | 0274521 | Ref | **ENGINE INSTALLATION** | B |
| 1 | 0100011 | AR | Compound, Locking | |
| 2 | 0100020 | AR | Sealant | |
| 3 | 0100048 | AR | Grease, Dielectric | |
| 4 | 0181727 | 1 | Angle, Battery Hold-Down | |
| 5 | 0400075 | 1 | Battery | |
| 6 | 0630498 | 2 | Bolt, Battery Hold-Down | |
| 7 | 0641608 | 1 | Bolt 3/8in-16NC x 1in | |
| 8 | 0641808 | 2 | Bolt 1/2in-13NC x 1in | |
| 9 | 0642010 | 1 | Bolt 5/8in-11NC x 1-1/4in | |
| 10 | 1320022 | 7 | Clamp (Not Shown - Located on Turntable to clamp fuel line) | |
| 11 | 1701542 | 1 | Decal - Gas (Not Shown - Located on Hood) | |
| 12 | 1701543 | 1 | Decal - LP (Not Shown - Located on Frame) | |
| 17 | 2220313 | 1 | Fitting, 90 | |
| 18 | 2221176 | 1 | Fitting, 90 | |
| 19 | 2720058 | 12 ft/3.7m | Hose, Fuel Line | |
| 20 | 2720472 | 1 | Hose, Fuel Line | |
| 21 | 2720532 | 5 ft/1.5m | Hose, Fuel Line | |
| 22 | 2902297 | 1 | Battery Cable Kit | A |
| 22A | 7027006 | 1 | Cable, Battery (Red) | |
| 22B | 7027005 | 1 | Cable, Battery (Black) | |
| 22C | 7027007 | 1 | Cable (Red) | |
| 22D | 7027002 | 1 | Cable (Red) | |
| 22E | 7027003 | 1 | Cable (Black) | |
| 23 | 3311605 | 2 | Locknut 3/8in-16NC | |
| 24 | 3311801 | 1 | Nut 1/2in-13NC | |
| 25 | 3422448 | 1 | Pin | |
| 26 | 3790012 | 1 | O-Ring (Not Shown - Located at Platform Console Box) | |
| 27 | 3841143 | 1 | Pin, Keeper | |
| 28 | 4360336 | 1 | Switch, Toggle (Not Shown - Located at Platform Console Box) | |
| 29 | 4751600 | 4 | Flatwasher 3/8in Regular | |
| 30 | 4751800 | 1 | Flatwasher 1/2in Regular | |
| 31 | 4752000 | 1 | Flatwasher 5/8in Regular | |
| 32 | | Ref | Bolt Options: | |
| 32 | 0641410 | 3 | Bolt 1/4in-20NC x 1-1/4in **(SN 0300087000 through 0300087271)** | |
| 32 | 0641408 | 2 | Bolt 1/4in-20NC x 1in **(SN 0300087272 through 0300177361)** | |
| 33 | 1060637 | 1 | Cable, Lanyard | |
| 34 | 3311405 | AR | Locknut 1/4in-20NC | |
| 35 | 4711400 | AR | Flatwasher 1/4in Thin | |
| 37 | 0641504 | 1 | Bolt 5/16in-18NC x 1/2in **(SN 0300087272 through 0300177361)** | |
| 38 | 1321339 | 1 | Clamp, Loop **(SN 0300087272 through 0300177361)** | |
| 39 | 4711500 | 1 | Flatwasher 5/16in Thin **(SN 0300087272 through 0300177361)** | |
| | 2000300 | Ref | **ENGINE AND PUMP ASSEMBLY** | A |
| 101 | 0100011 | AR | Compound, Locking | |
| 102 | 0641407 | 1 | Bolt 1/4in-20NC x 7/8in | |
| 103 | 0641812 | 2 | Bolt 1/2in-13NC x 1-1/2in | |
| 105 | 3311405 | 1 | Locknut 1/4in-20NC | |
| 106 | 3422532 | 1 | Pin, Hitch | |

| ITEM | PART NUMBER | QTY | DESCRIPTION | REV |
|---|---|---|---|---|
| 107 | 3600395 | 1 | Gear Pump Assembly with Fittings (See GEAR PUMP ASSEMBLY for Breakdown) | |
| 108 | 3600396 | 1 | Piston Pump Assembly with Fittings (See PISTON PUMP ASSEMBLY for Breakdown) | |
| 109 | 3790012 | 1 | O-Ring | |
| 110 | 3931620 | 2 | Bolt 3/8in-16NC x 1-1/4in | |
| 111 | 3960389 | 5 ft/1.5m | Seal | |
| 112 | 4751400 | 1 | Flatwasher 1/4in Regular | |
| 113 | 4891600 | 2 | Flatwasher 3/8in Hardened | |
| | 2000299 | Ref | **ENGINE ASSEMBLY** | B |
| 201 | 0080201 | 1 | Adapter 90 Elbow | |
| 202 | 0080214 | 1 | Adapter, Fan Spacer | |
| 203 | 0100011 | AR | Compound, Locking | |
| 204 | 0100020 | AR | Sealant, Pipe | |
| 205 | 0340041 | 2 | Band, Air Cleaner | |
| 206 | 0340046 | 2 | Band, Muffler | |
| 207 | 0641406 | 3 | Bolt 1/4in-20NC x 3/4in | |
| 208 | 0641408 | 6 | Bolt 1/4in-20NC x 1in | |
| 209 | 0641414 | 4 | Bolt 1/4in-20NC x 1-3/4in | |
| 210 | 0641608 | 14 | Bolt 3/8in-16NC x 1in | |
| 211 | 0641610 | 10 | Bolt 3/8in-16NC x 1-1/4in | |
| 212 | 0641612 | 8 | Bolt 3/8in-16NC x 1-1/2in | |
| 213 | 0641828 | 4 | Bolt 1/2in-13NC x 3-1/2in | |
| 214 | 0641507 | 4 | Bolt 5/16in-18NC x 7/8in | |
| 215 | 0701012 | 4 | Bolt M10 x 25mm | |
| 216 | 0701014 | 4 | Bolt M10 x 30mm | |
| 217 | 0760606 | 4 | Bolt M6 x 12mm | |
| 218 | 0903079 | 1 | Bracket, Muffler | |
| 219 | 0961986 | 2 | Bushing, Flanged | |
| 220 | 1320012 | 4 | Clamp | |
| 221 | 1320016 | 3 | Clamp | |
| 222 | 1320022 | 1 | Clamp, Hose | |
| 223 | 1320033 | 8 | Clamp, Hose | |
| 224 | 1321138 | 3 | Plate, Exhaust Flange | |
| 225 | 1340060 | 1 | Air Cleaner Assembly Filter Element | |
| 225 | 7012664 | 1 | Element, Air Cleaner (Not Shown) | |
| 226 | 0700819 | 4 | Bolt M8 x 55mm | |
| 228 | 1703162 | 2 | Decal - Caution Fan Blade | |
| 229 | 1120588 | 1 | Plug | |
| 230 | 2060025 | 1 | Fan | |
| 231 | 2180467 | 1 | Fitting | |
| 233 | 2720435 | 1 | Hose, Radiator (Bottom) | |
| 234 | 2720436 | 1 | Hose, Radiator (Upper) | |
| 235 | 2720514 | 1 | Hose, 45 Elbow | |
| 236 | 2750532 | 6 in/15cm | Hose, Oil Drain | |
| 237 | 2000272 | 1 | Engine (See Items 301-331 for Engine Components) | |
| 238 | 2820173 | 2 | Insulation, Exhaust (Elbow) | |
| 239 | 2820180 | 1 | Insulation, Catalytic Muffler | |
| 240 | 3200362 | 4 | Mount, Motor | |
| 242 | 3311405 | 13 | Locknut 1/4in-20NC | |
| 243 | 3311605 | 30 | Locknut 3/8in-16NC | |
| 244 | 3311805 | 4 | Locknut 1/2in-13NC | |

# SECTION 2 - TURNTABLE

| ITEM | PART NUMBER | QTY | DESCRIPTION | REV |
|---|---|---|---|---|
| 245 | 3539872 | 1 | Plate, Radiator Mounting | |
| 246 | 3572280 | 1 | Plate, Engine Mount | |
| 247 | 3574162 | 1 | Plate, ECM/Relay Mount | |
| 248 | 3574504 | 1 | Plate, Engine Mount | |
| 249 | 3620040 | 1 | Radiator | |
| 250 | 3740067 | 1 | Relay | |
| 251 | 3960591 | 3 | Gasket, Exhaust | |
| 253 | 4566605 | 1 | Tube, Spacer | |
| 254 | 4569203 | 1 | Tube, Exhaust | |
| 255 | 4569173 | 1 | Tube, Intake | |
| 256 | 4569083 | 1 | Tube, Exhaust | |
| 257 | 4569092 | 1 | Tube, Exhaust | |
| 258 | 4640989 | 1 | Valve, Oil Drain | |
| 259 | 4711400 | 16 | Flatwasher 1/4in Thin | |
| 260 | 4711600 | 12 | Flatwasher 3/8in Thin | |
| 261 | 4740274 | 4 | Washer, Snubbing | |
| 262 | 4751400 | 12 | Flatwasher 1/4in Regular | |
| 263 | 4751500 | 8 | Flatwasher 5/16in Regular | |
| 264 | 4751600 | 51 | Flatwasher 3/8in Regular | |
| 265 | 2820186 | 1 | Insulation, Exhaust (Shield) | |
| 266 | 4812000 | 4 | Flatwasher M10 | |
| 267 | 4832000 | 4 | Lockwasher M10 | |
| 268 | 4845404 | 1 | Tray, Engine | |
| 269 | 4846806 | 1 | Plate, Engine Mounting | |
| 270 | 0641606 | 1 | Bolt 3/8in-16NC x 3/4in | |
| 271 | 0940070 | 1 | Bumper | |
| 272 | 1320223 | 3 | J-Clip | |
| 273 | 3960469 | 1 | Seal | |
| 274 | 4060805 | 37 in/1m | Flex-Trim | |
| 275 | 3311505 | 4 | Locknut 5/16in-18NC | |
| 276 | 3960468 | 1 | Seal | |
| 277 | 4831900 | 4 | Lockwasher M8 | |
| 278 | 2820187 | 1 | Insulation, Exhaust | |
| 279 | 2820188 | 1 | Insulation, Shell | |
| 280 | 4920385 | 10 ft/3m | Wire, Safety (Not Shown) | |
| 281 | 2300004 | AR | Fluid, Anti-Freeze (Not Shown) | |
| 282 | 4711500 | 2 | Flatwasher 5/16 Thin | |
| | 2000272 | Ref | **ENGINE COMPONENTS** | B |
| 301 | 7022133 | 1 | Fuel Pump and Isolator Assembly | |
| 302 | 91083218 | 1 | Filter, Fuel (was p/n 7022135) | |
| 303 | 7012679 | 1 | Starter | |
| 304 | 7019977 | 1 | Alternator with Regulator and Pulley | |
| 305 | 7023683 | 1 | Actuator, Throttle | |
| 305 | 7027404 | 1 | Gasket, Actuator (Not Shown) | |
| 306 | 7019996 | 1 | Sensor, Air Temperature | |
| 307 | 7023681 | 1 | Harness, Engine Control (Not Shown) | |
| 308 | 7022139 | 1 | Sensor, MAP | |
| 309 | 7023682 | 1 | Sensor, EGR | |
| 310 | 2420187 | 1 | Dipstick | |
| 311 | 7027400 | 1 | Mixer Assembly | |
| 313 | 7021868 | 1 | Filter, Oil (was p/n 7022147 & 7022173) | |

| ITEM | PART NUMBER | QTY | DESCRIPTION | REV |
|---|---|---|---|---|
| 314 | 1660250 | 1 | Coupling, Pump | |
| 315 | 7019993 | 1 | Pressure Regulator and Filter Assembly | |
| 316 | 0902539 | 1 | Bracket | |
| 317 | 1600374 | 1 | Module, EPM | |
| 318 | 3220134 | 1 | Muffler | |
| 319 | 0903010 | 1 | Bracket, LP Regulator | |
| 320 | 7023698 | 1 | Regulator, LP | |
| 321 | 70002567 | 1 | Tensioner, Belt | |
| 322 | 7022143 | 1 | Gasket, Exhaust Manifold-Head (was p/n 7027401 - Not Shown) | |
| 322 | 70002307 | 1 | Gasket, Exhaust Manifold to Pipe (Not Shown) | |
| 323 | 7027402 | 1 | Belt, Drive Belt | |
| 324 | 7027405 | 4 | Spark Plug (Not Shown) | |
| 325 | 1580011 | 1 | Bottle, Overflow | |
| 326 | 7027409 | 1 | LP Filter Shutoff with Leads | |
| 327 | 2720392 | 1 | Hose (Connects to Item 326) | |
| 328 | 2180418 | 1 | Fitting, Straight | |
| 329 | 2220064 | 1 | Fitting, 90 | |
| 330 | 2220005 | 1 | Fitting, Reducer | |
| 331 | 7023699 | 1 | Megajector | |
| 331 | 70001690 | 1 | Kit, Megajector Hose | |
| 332 | 7019976 | 1 | Flywheel (Not Shown) | |
| 333 | 7022180 | 1 | Gear, Ring (Not Shown - Located on Flywheel) | |
| 334 | 7019925 | 1 | PCV Valve (Not Shown - Located on Oil Vent) | |
| 335 | 7022134 | 1 | Harness, Fuel Pump (Not Shown) | |
| 336 | 7022155 | 1 | Sensor, Water Temperature | |
| 337 | 7027410 | 1 | Harness, Megajector (Not Shown) | |
| 338 | 7027413 | 1 | Harness, EPM Jumper (Not Shown) | |
| 339 | 7019994 | 1 | Sensor, Oxygen (Not Shown) | |
| 340 | 7022150 | 1 | Belt, Timing (Not Shown) | |

## FIGURE 2-15. GM ENGINE INSTALLATION (USA BUILT MACHINES) (SN 0300087000 through 0300139353)

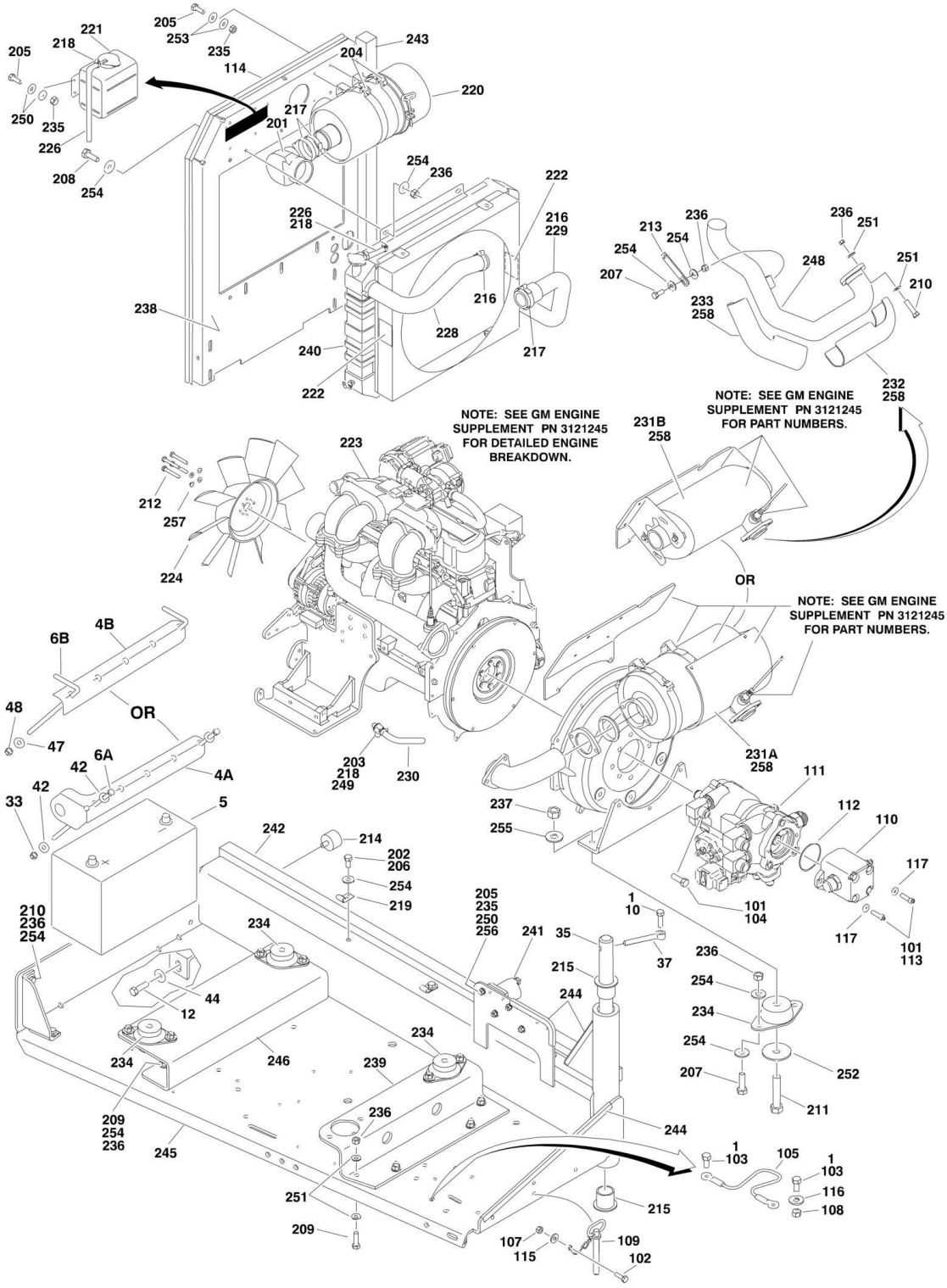

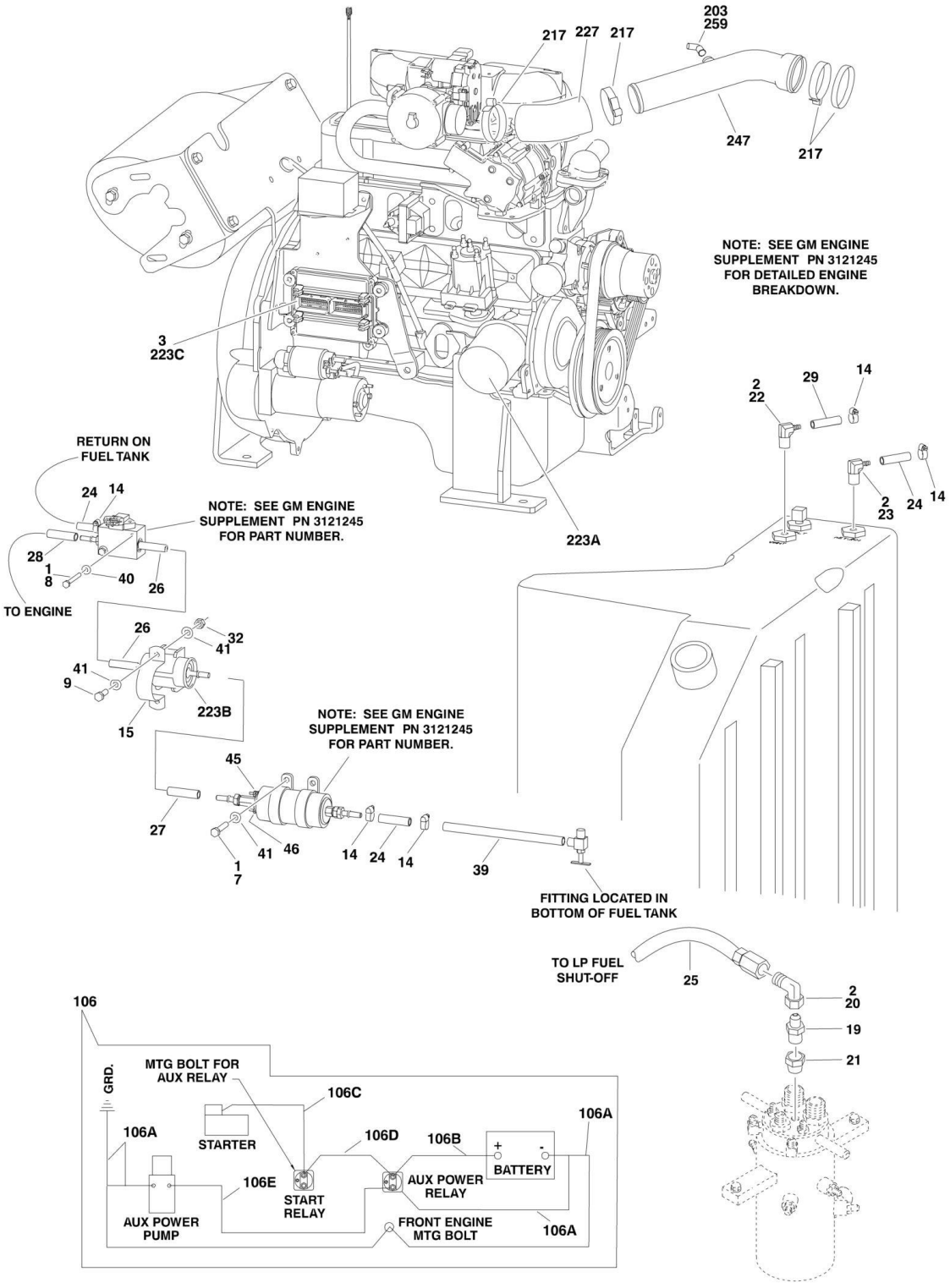
203
259
217
227
217
247
217
NOTE: SEE GM ENGINE SUPPLEMENT PN 3121245 FOR DETAILED ENGINE BREAKDOWN.
3
223C
223A
2
22
29
14
2
23
24
14
RETURN ON FUEL TANK
24
14
NOTE: SEE GM ENGINE SUPPLEMENT PN 3121245 FOR PART NUMBER.
28
1
8
40
26
TO ENGINE
26
32
41
41
9
223B
15
NOTE: SEE GM ENGINE SUPPLEMENT PN 3121245 FOR PART NUMBER.
45
27
41
46
14
24
14
1
7
39
FITTING LOCATED IN BOTTOM OF FUEL TANK
TO LP FUEL SHUT-OFF
25
2
20
19
21
106
GRD.
MTG BOLT FOR AUX RELAY
106C
106A
STARTER
106D
106B
106A
+
-
BATTERY
106E
START RELAY
AUX POWER RELAY
AUX POWER PUMP
FRONT ENGINE MTG BOLT
106A

## FIGURE 2-15. GM ENGINE INSTALLATION (USA BUILT MACHINES) (SN 0300087000 through 0300139353)

| ITEM | PART NUMBER | QTY | DESCRIPTION | REV |
|---|---|---|---|---|
| | | Ref | **Note: Only Available on USA Built Machines.** | |
| | | Ref | **GM ENGINE INSTALLATION** | |
| | 0275229 | Ref | **Machines without Arctic Package (SN 0300087000 through 0300109297)** | D |
| | 1001091604 | Ref | **Machines without Arctic Package (SN 0300109298 through 0300139353)** | F |
| | 1001101820 | Ref | **Machines with Arctic Package (SN 0300087000 through 0300139353)** | B |
| 1 | 0100011 | AR | Compound, Locking | |
| 2 | 0100020 | AR | Sealant, Pipe | |
| 3 | 0100048 | AR | Grease, Dielectric | |
| 4 | | Ref | Angle, Battery Hold Down Options: | |
| 4A | 0181727 | 1 | Angle, Battery Hold Down **(SN 0300087000 through 0300110503)** | |
| 4B | 91401281 | 1 | Angle, Battery Hold Down **(SN 0300110504 through 0300139353)** | |
| 5 | 0400075 | 1 | Battery (Wet) | |
| 6 | | Ref | Bolt, Battery Hold Down Options: | |
| 6A | 0630498 | 2 | Bolt, Battery Hold Down **(SN 0300087000 through 0300110503)** | |
| 6B | 1001093382 | 2 | Bolt, Battery Hold Down **(SN 0300110504 through 0300139353)** | |
| 7 | 0641505 | 2 | Bolt 5/16in-18NC x 5/8in | |
| 8 | 0641416 | 2 | Bolt 1/4in-20NC x 2in | |
| 9 | 0641506 | 2 | Bolt 5/16in-18NC x 3/4in | |
| 10 | 0641608 | 1 | Bolt 3/8in-16NC x 1in | |
| 12 | 0642010 | 1 | Bolt 5/8in-11NC x 1 1/4in | |
| 14 | 1320022 | 5 | Clamp, Fuel Line | |
| 15 | 1320323 | 1 | Clamp | |
| 16 | 1701542 | 1 | Decal, Gas (Not Shown) | |
| 17 | 1701543 | 1 | Decal, LPG (Not Shown) | |
| 19 | 2180418 | 1 | Fitting, Straight | |
| 20 | 2220005 | 1 | Fitting, Straight | |
| 21 | 2220064 | 1 | Fitting, Adapter | |
| 22 | 2220313 | 1 | Fitting, 90 Barbed Only **(SN 0300087000 through 0300109298)** | |
| 23 | 2221176 | 1 | Fitting, 90 | |
| 24 | | Ref | Hose, Fuel Line Options: | |
| 24 | 2720058 | 5.25 ft /1.6m | Hose, Fuel Line **(SN 0300087000 through 0300109297)** | |
| 24 | 1001091587 | 5.25 ft /1.6m | Hose, Fuel Line **(SN 0300109298 through 0300139353)** | |
| 25 | 2720392 | 1 | Hose, LP | |
| 26 | 2720496 | 1 | Hose, High Pressure Fuel Line | |
| 27 | 2720566 | 1 | Hose (6in/15cm Length) | |
| 28 | 2720598 | 1 | Hose (92in/234cm Length) | |
| 29 | 2750532 | 5 ft/1.5m | Hose Only **(SN 0300087000 through 0300109298)** | |
| 32 | 3311505 | 2 | Locknut 5/16in-18NC | |
| 33 | 3311605 | AR | Locknut 3/8in-16NC **(SN 0300087000 through 0300110504)** | |
| 35 | 3422448 | 1 | Pin | |
| 36 | 3790012 | 1 | O-Ring (Not Shown - Located in Console Box) | |
| 37 | 3841143 | 1 | Keeper | |

| ITEM | PART NUMBER | QTY | DESCRIPTION | REV |
|---|---|---|---|---|
| 38 | 4360336 | 1 | Switch, Toggle (Not Shown - Located in Console Box) | |
| 39 | 4569385 | 1 | Tube, Fuel Line | |
| 40 | 4711400 | 2 | Flatwasher 1/4in Narrow | |
| 41 | 4711500 | 4 | Flatwasher 5/16in Narrow | |
| 42 | 4751600 | 4 | Flatwasher 3/8in Wide **(SN 0300087000 through 0300109298)** | |
| 43 | | Ref | Coolant Options (Not Shown): | |
| 43 | 2300004 | AR | Machines without Arctic Package | |
| 43 | 2300041 | AR | Machines with Arctic Package | |
| 44 | 4752000 | 1 | Flatwasher 5/8in Wide | |
| 45 | 3290405 | 1 | Locknut M4 x 0.7 | |
| 46 | 3290505 | 1 | Locknut M5 x 0.8 | |
| 47 | 4751500 | 4 | Flatwasher 5/16in Wide | |
| 48 | | Ref | Locknut 5/16in-18NC Options: | |
| 48 | 3311505 | 2 | Locknut 5/16in-18NC **(SN 0300087000 through 0300121552)** | |
| 48 | 88521205 | 2 | Locknut 5/16in-18NC **(SN 0300121553 through 0300139353)** | |
| | | Ref | **Note: Arctic Package Items 51 - 64 Not Shown - Used on Arctic Machines Only** | |
| 51 | 0641808 | 1 | Bolt 1/2in-13NC x 1in | |
| 52 | 1060625 | 1 | Cable, Immersion Heater (Located on bottom of Hydraulic Oil Tank) | |
| 53 | 1060626 | 1 | Cord, 3 Way Extension (Located on Left Front of Engine) | |
| 54 | 1320223 | AR | Clamp | |
| 55 | 1702941 | 1 | Decal - Battery Heater (Located on Battery Heater) | |
| 56 | 1702942 | 1 | Decal - Engine Block Heater (Located on Right Side of Engine) | |
| 57 | 1702943 | 1 | Decal - Hydraulic Tank Heater (Located on bottom of Hydraulic Oil Tank) | |
| 58 | 1702944 | 1 | Decal - Heater Cord (Located on Left Front of Engine) | |
| 59 | 2580024 | 1 | Heater, Battery (Located on Battery) | |
| 60 | 2580050 | 1 | Heater, Hydraulic Tank (Located on bottom of Hydraulic Oil Tank) | |
| 61 | 2580063 | 1 | Heater, Engine Block (Located on Right Side of Engine) | |
| 62 | 3980007 | 1 | Seat, Battery (Located Under Battery) | |
| 63 | 3311605 | 1 | Locknut 3/8in-16NC | |
| 64 | 4711600 | 2 | Flatwasher 3/8in Narrow | |
| | | Ref | **GM ENGINE AND PUMP SUB-ASSEMBLY** | |
| | 2000370 | Ref | **Machines without Arctic Package (SN 0300087000 through 0300109297)** | B |
| | 1001091605 | Ref | **Machines without Arctic Package (SN 0300109298 through 0300139353)** | E |
| | 1001101821 | Ref | **Machines with Arctic Package (SN 0300087000 through 0300139353)** | C |
| 101 | 0100011 | AR | Compound, Locking | |
| 102 | 0641407 | 1 | Bolt 1/4in-20NC x 7/8in | |
| 103 | 0641808 | 2 | Bolt 1/2in-13NC x 1in | |
| 104 | 0641812 | 2 | Bolt 1/2in-13NC x 1-1/2in | |
| 105 | 1060637 | 1 | Cable, Lanyard | |
| 106 | 2902531 | 1 | Battery Cable Kit | B |
| 106A | 7016822 | 1 | Cable (Battery - to Ground) | |
| 106B | 7027015 | 1 | Cable (Battery + to Auxiliary Relay) | |
| 106C | 7027016 | 1 | Cable (Starter Relay to Starter) | |
| 106D | 7027017 | 1 | Cable (Auxiliary Relay to Starter Relay) | |
| 106E | 7027003 | 1 | Cable (Auxiliary Relay to Auxiliary Pump) | |
| 107 | 3311405 | 1 | Locknut 1/4in-20NC | |

| ITEM | PART NUMBER | QTY | DESCRIPTION | REV |
|---|---|---|---|---|
| 108 | 3311805 | 1 | Locknut 1/2in-13NC | |
| 109 | 3422533 | 1 | Pin, Hitch | |
| 110 | 3600395 | 1 | Gear Pump Assembly with Fittings (See GEAR PUMP ASSEMBLY for Breakdown) | |
| 111 | | Ref | Piston Pump Assembly with Fittings Options (See PISTON PUMP ASSEMBLY for Breakdown): | |
| 111 | 3600396 | 1 | Piston Pump Assembly with Fittings **(SN 0300087000 through 0300109297)** | |
| 111 | 1001093410 | 1 | Piston Pump Assembly with Fittings **(SN 0300109298 through 0300139353)** | |
| 112 | 3790012 | 1 | O-Ring | |
| 113 | 3931620 | 2 | Bolt 3/8in-16NC x 1 1/4in | |
| 114 | 3960389 | 5 ft/1.5m | Seal | |
| 115 | 4751400 | 1 | Flatwasher 1/4in Wide | |
| 116 | 4751800 | 1 | Flatwasher 1/2in Wide | |
| 117 | 4891600 | 2 | Flatwasher, Hardened | |
| | | Ref | **GM ENGINE ASSEMBLY** | |
| | 2000371 | Ref | **Machines without Arctic Package (SN 0300087000 through 0300109297)** | E |
| | 1001091603 | Ref | **Machines without Arctic Package (SN 0300109298 through 0300139353)** | F |
| | 1001101822 | Ref | **Machines with Arctic Package (SN 0300087000 through 0300139353)** | C |
| 201 | 0080201 | 1 | Fitting, 90 | |
| 202 | 0100011 | AR | Compound, Locking | |
| 203 | 0100020 | AR | Sealant **(SN 0300087000 through 0300136641)** | |
| 204 | 0340041 | 2 | Band, Mounting | |
| 205 | 0641406 | 10 | Bolt 1/4in-20NC x 3/4in | |
| 206 | 0641606 | 3 | Bolt 3/8in-16NC x 3/4in | |
| 207 | 0641608 | 9 | Bolt 3/8in-16NC x 1in | |
| 208 | 0641609 | 4 | Bolt 3/8in-16NC x 1-1/8in | |
| 209 | 0641610 | 10 | Bolt 3/8in-16NC x 1-1/4in | |
| 210 | 0641612 | 4 | Bolt 3/8in-16NC x 1-1/2in | |
| 211 | | Ref | Bolt 1/2in-13NC x 3-1/2in Options: | |
| 211 | 0641828 | 2 | Bolt 1/2in-13NC x 3-1/2in (Front) | |
| 211 | 0641826 | 2 | Bolt 1/2in-13NC x 3-1/4in (Rear) | |
| 212 | 0700810 | 4 | Bolt M8 x 20mm | |
| 213 | 0903490 | 1 | Bracket, Exhaust Strap | |
| 214 | 0940070 | 1 | Bumper | |
| 215 | 0961986 | 2 | Bearing, Flanged | |
| 216 | 1320012 | 3 | Clamp | |
| 217 | 1320016 | 5 | Clamp | |
| 218 | 1320022 | 3 | Clamp | |
| 219 | 1320223 | 3 | Clamp | |
| 220 | 1340060 | 1 | Air Cleaner Assembly | |
| 220 | 7012664 | 1 | Element, Air Cleaner | |
| 221 | 1580011 | 1 | Container, Coolant Overflow | |
| 222 | 1703162 | 2 | Decal - Caution Fan | |
| 223 | | Ref | Engine, GM 3.0L Options (See GM Engine Supplement P/N 3121245 for Breakdown of Additional Components): | |
| 223 | 2000354 | 1 | Machines without Arctic Package **(SN 0300087000 through 0300109297)** | |
| 223 | 1001091768 | 1 | Machines without Arctic Package **(SN 0300109298 through 0300139353)** | |

| ITEM | PART NUMBER | QTY | DESCRIPTION | REV |
|---|---|---|---|---|
| 223 | 1001101823 | 1 | Machines with Arctic Package **(SN 0300087000 through 0300139353)** | |
| 223 | 70000164 | 4 | Plug, Spark (Not Shown) | |
| 223A | 7027965 | 1 | Filter, Oil | |
| 223B | 7027972 | 1 | Filter, Fuel | |
| 223C | 7027994 | 1 | Module, Control (ECU) | |
| 224 | 2060025 | 1 | Fan | |
| 226 | 2720058 | 4 in/10cm | Hose | |
| 227 | 2720514 | 1 | Hose | |
| 228 | 2720563 | 1 | Hose, Radiator (Top) | |
| 229 | 2720564 | 1 | Hose, Radiator (Bottom) | |
| 230 | | Ref | Hose Options: | |
| 230 | 2750532 | 6 in /15.2cm | Hose **(SN 0300087000 through 0300136640)** | |
| 230 | 1001091892 | 6 in /15.2cm | Hose **(SN 0300136641 through 0300139353)** | |
| 231 | | Ref | Insulation, Muffler Options: | |
| 231A | 2820180 | 1 | Insulation, Muffler **(SN 0300087000 through 0300109297)** | |
| 231B | 1001091793 | 1 | Insulation, Muffler **(SN 0300109298 through 0300139353)** | |
| 232 | 2820243 | 1 | Exhaust Elbow, Insulation | |
| 233 | 2820244 | 1 | Exhaust, Insulation | |
| 234 | 3200362 | 4 | Mount, Engine | |
| 235 | 3311405 | 10 | Locknut 1/4in-20NC | |
| 236 | 3311605 | 27 | Locknut 3/8in-16NC | |
| 237 | 3311805 | 4 | Locknut 1/2in-13NC | |
| 238 | 3539872 | 1 | Plate, Radiator Mounting | |
| 239 | 3572280 | 1 | Plate, Engine Mount | |
| 240 | 3620040 | 1 | Radiator | |
| 240 | 7019656 | 1 | Cap, Radiator | |
| 241 | 3740067 | 1 | Relay | |
| 242 | 3960468 | 1 | Seal | |
| 243 | 3960469 | 1 | Seal | |
| 244 | 4060805 | 3 ft/0.9m | Seal | |
| 245 | 4341239 | 1 | Tray, Engine | |
| 246 | 4341241 | 1 | Mount, Engine (Front) | |
| 247 | 4569342 | 1 | Tube, Intake | |
| 248 | | Ref | Pipe, Exhaust Options: | |
| 248 | 4569384 | 1 | Pipe, Exhaust **(SN 0300087000 through 0300109297)** | |
| 248 | 1001093248 | 1 | Pipe, Exhaust **(SN 0300109298 through 0300139353)** | |
| 249 | | Ref | Valve, Oil Drain Options: | |
| 249 | 4640989 | NLA | Valve (Use p/n 4640952) **(SN 0300087000 through 0300136640)** | |
| 249 | 1001105872 | 1 | Valve **(SN 0300136641 through 0300139353)** | |
| 250 | 4711400 | AR | Flatwasher 1/4in Narrow | |
| 251 | 4711600 | AR | Flatwasher 3/8in Narrow | |
| 252 | 4740274 | 4 | Flatwasher, Snubbing | |
| 253 | 4751400 | 8 | Flatwasher 1/4in Wide | |
| 254 | 4751600 | AR | Flatwasher 3/8in Wide | |
| 255 | 4751800 | AR | Flatwasher 1/2in Wide | |
| 256 | 4791400 | 2 | Starwasher 1/4in | |
| 257 | 4831900 | 4 | Lockwasher 8mm | |
| 258 | 4920385 | 10 ft/3m | Wire, Safety | |

| ITEM | PART NUMBER | QTY | DESCRIPTION | REV |
|---|---|---|---|---|
| 259 | 2720271 | 18 in /46cm | Hose **(SN 0300136641 through 0300139353)** | |
| 260 | 2180877 | 1 | Fitting 90 | |

## FIGURE 2-16. GM ENGINE INSTALLATION (USA BUILT MACHINES) (SN 0300139354 through 0300177361)

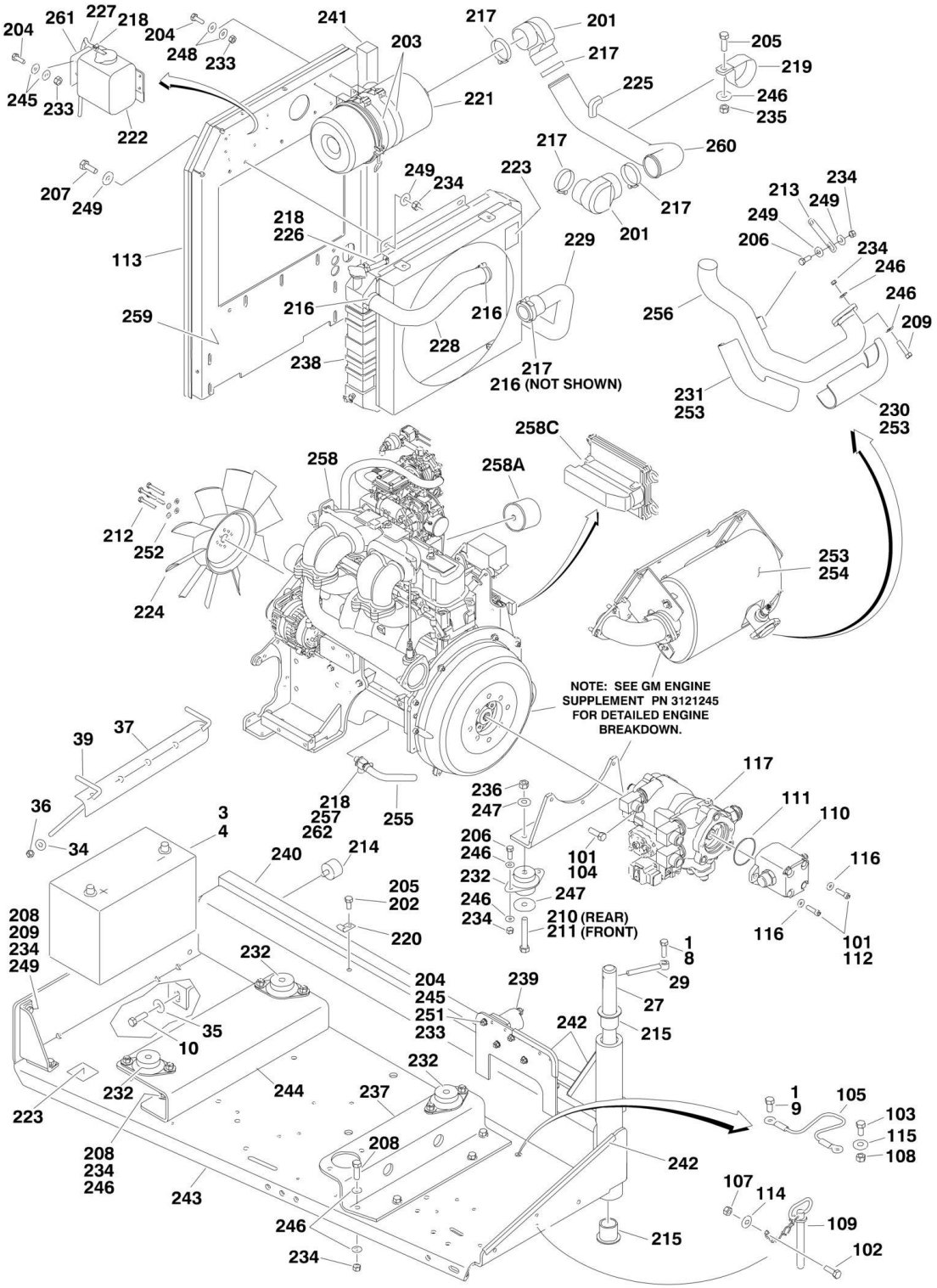

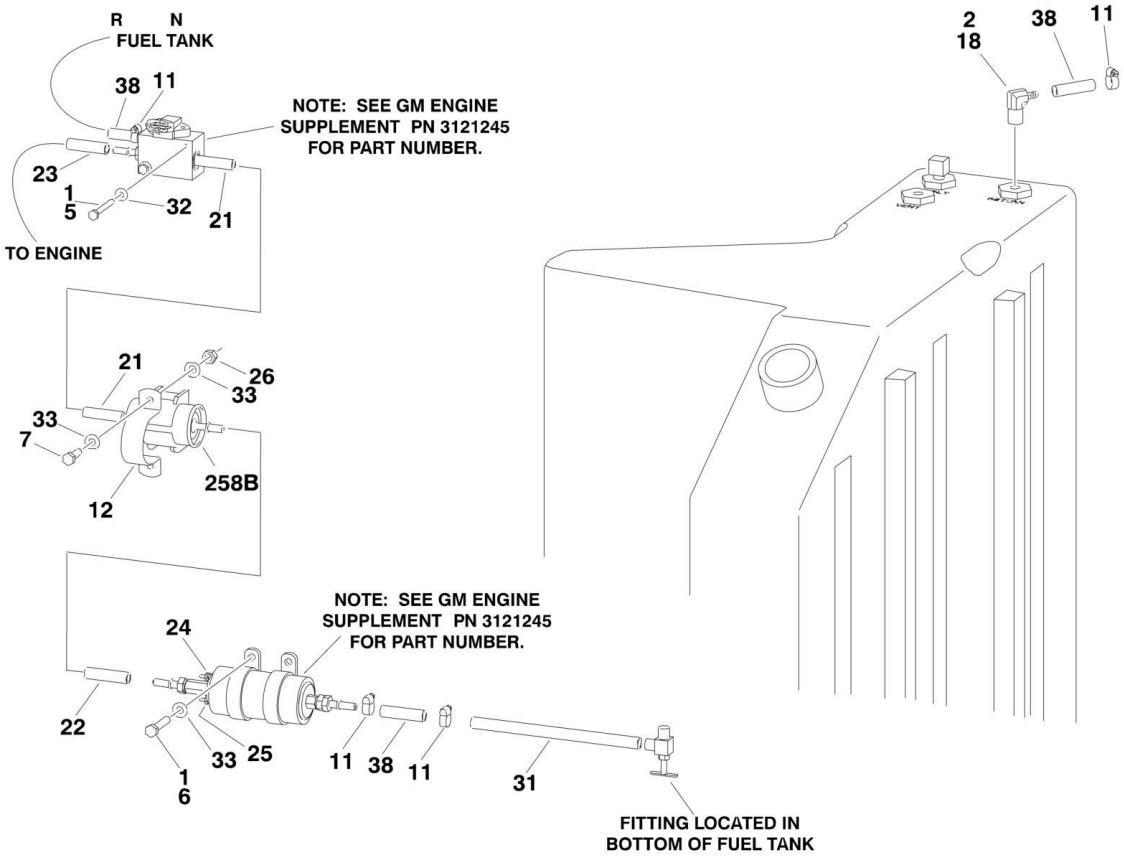
R N
FUEL TANK
38 11
NOTE: SEE GM ENGINE SUPPLEMENT PN 3121245 FOR PART NUMBER.
23
1
5
32
21
TO ENGINE
21
26
33
33
7
258B
12
NOTE: SEE GM ENGINE SUPPLEMENT PN 3121245 FOR PART NUMBER.
24
22
33
25
1
6
11
38
11
31
FITTING LOCATED IN BOTTOM OF FUEL TANK
2
18
38
11

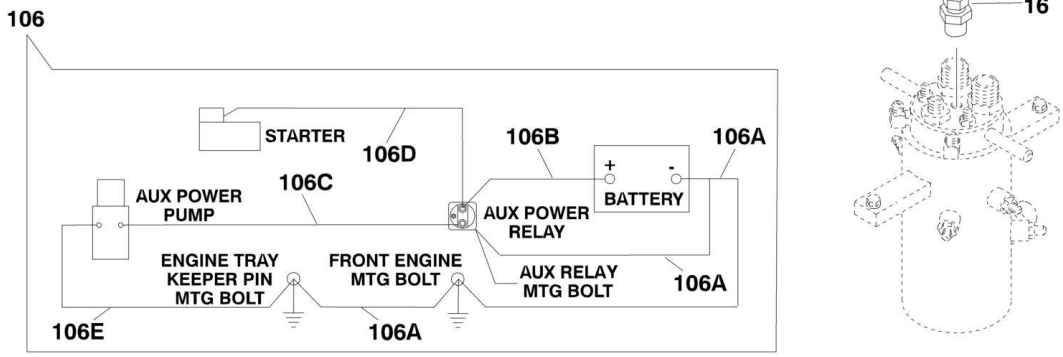
106
STARTER
106D
106B
106A
106C
AUX POWER PUMP
AUX POWER RELAY
BATTERY
ENGINE TRAY KEEPER PIN MTG BOLT
FRONT ENGINE MTG BOLT
AUX RELAY MTG BOLT
106A
106E
106A


TO LP FUEL SHUT-OFF
2
15
20
2
17
2
16

## FIGURE 2-16. GM ENGINE INSTALLATION (USA BUILT MACHINES) (SN 0300139354 through 0300177361)

| ITEM | PART NUMBER | QTY | DESCRIPTION | REV |
|---|---|---|---|---|
| | | Ref | **Note: Only Available on USA Built Machines.** | |
| | | Ref | **GM ENGINE INSTALLATION** | |
| | 1001114640 | Ref | **Machines without Arctic Package** | B |
| | 1001114642 | Ref | **Machines with Arctic Package** | A |
| 1 | 0100011 | AR | Compound, Locking | |
| 2 | 0100020 | AR | Sealant, Pipe | |
| 3 | 0100048 | AR | Grease, Dielectric | |
| 4 | 0400075 | 1 | Battery (Wet) | |
| 5 | 0641416 | 2 | Bolt 1/4in-20NC x 2in | |
| 6 | 0641505 | 2 | Bolt 5/16in-18NC x 5/8in | |
| 7 | 0641506 | 2 | Bolt 5/16in-18NC x 3/4in | |
| 8 | 0641608 | 1 | Bolt 3/8in-16NC x 1in | |
| 9 | 0641808 | 1 | Bolt 1/2in-13NC x 1in | |
| 10 | 0642010 | 1 | Bolt 5/8in-11NC x 1-1/4in | |
| 11 | 1320022 | AR | Clamp, Fuel Line | |
| 12 | 1320323 | 1 | Clamp | |
| 13 | 1701542 | 1 | Decal, Gas (Not Shown) | |
| 14 | 1701543 | 1 | Decal, LPG (Not Shown) | |
| 15 | 2180418 | 1 | Fitting, Straight | |
| 16 | 2220005 | 1 | Fitting, Straight | |
| 17 | 2220064 | 1 | Fitting, Adapter | |
| 18 | 2221176 | 1 | Fitting, 90 | |
| 19 | | Ref | Coolant Options (Not Shown): | |
| 19 | 2300004 | AR | Machines without Arctic Package | |
| 19 | 2300041 | AR | Machines with Arctic Package | |
| 20 | 2720392 | 1 | Hose, LP | |
| 21 | 2720496 | 1 | Hose, High Pressure Fuel Line | |
| 22 | 2720566 | 1 | Hose (6in/15cm Length) | |
| 23 | 2720598 | 1 | Hose (92in/234cm Length) | |
| 24 | 3290405 | 1 | Locknut M4 x 0.7 | |
| 25 | 3290505 | 1 | Locknut M5 x 0.8 | |
| 26 | 3311505 | 2 | Locknut 5/16in-18NC | |
| 27 | 3422448 | 1 | Pin | |
| 28 | 3790012 | 1 | O-Ring (Not Shown - Located in Console Box) | |
| 29 | 3841143 | 1 | Keeper | |
| 30 | 4360336 | 1 | Switch, Toggle (Not Shown - Located in Console Box) | |
| 31 | 4569385 | 1 | Tube, Fuel Line | |
| 32 | 4711400 | 2 | Flatwasher 1/4in Thin | |
| 33 | 4711500 | 6 | Flatwasher 5/16in Thin | |
| 34 | 4751500 | 2 | Flatwasher 5/16in Regular | |
| 35 | 4752000 | 1 | Flatwasher 5/8in Regular | |
| 36 | 88521205 | 2 | Locknut 5/16in-18NC | |
| 37 | 91401281 | 1 | Angle, Battery Hold Down | |
| 38 | 1001091587 | 6.25 ft /1.9m | Hose, Fuel Line | |
| 39 | 1001093382 | 2 | Bolt, Battery Hold Down | |
| | | Ref | **Note: Arctic Package Items 41-53 Not Shown - Used on Arctic Machines Only** | |
| 41 | 1060625 | 1 | Cable, Immersion Heater (Located on bottom of Hydraulic Oil | |

| ITEM | PART NUMBER | QTY | DESCRIPTION | REV |
|---|---|---|---|---|
| | | | Tank) | |
| 42 | 1060626 | 1 | Cord, 3 Way Extension (Located on Left Front of Engine) | |
| 43 | 1320223 | 3 | Clamp | |
| 44 | 1702941 | 1 | Decal - Battery Heater (Located on Battery Heater) | |
| 45 | 1702942 | 1 | Decal - Engine Block Heater (Located on Right Side of Engine) | |
| 46 | 1702943 | 1 | Decal - Hydraulic Tank Heater (Located on bottom of Hydraulic Oil Tank) | |
| 47 | 1702944 | 1 | Decal - Heater Cord (Located on Left Front of Engine) | |
| 48 | 2580024 | 1 | Heater, Battery (Located on Battery) | |
| 49 | 2580050 | 1 | Heater, Hydraulic Tank (Located on bottom of Hydraulic Oil Tank) | |
| 50 | 2580063 | 1 | Heater, Engine Block (Located on Right Side of Engine) | |
| 51 | 3311605 | 2 | Locknut 3/8in-16NC | |
| 52 | 3980007 | 1 | Seat, Battery (Located Under Battery) | |
| 53 | 4711600 | 2 | Flatwasher 3/8in Thin | |
| | | Ref | **GM ENGINE AND PUMP SUB-ASSEMBLY** | |
| | 1001114639 | Ref | **Machines without Arctic Package** | C |
| | 1001114641 | Ref | **Machines with Arctic Package** | C |
| 101 | 0100011 | AR | Compound, Locking | |
| 102 | 0641407 | 1 | Bolt 1/4in-20NC x 7/8in | |
| 103 | 0641808 | 1 | Bolt 1/2in-13NC x 1in | |
| 104 | 0641812 | 2 | Bolt 1/2in-13NC x 1-1/2in | |
| 105 | 1060637 | 1 | Cable, Lanyard | |
| 106 | 2902531 | 1 | Battery Cable Kit | B |
| 106A | 7016822 | 1 | Cable (Battery - to Ground) | |
| 106B | 7027015 | 1 | Cable (Battery + to Auxiliary Relay) | |
| 106C | 7027016 | 1 | Cable (Relay to Auxiliary Pump) | |
| 106D | 7027017 | 1 | Cable (Relay to Starter) | |
| 106E | 7027003 | 1 | Cable (Relay to Auxiliary Pump) | |
| 107 | 3311405 | 1 | Locknut 1/4in-20NC | |
| 108 | 3311805 | 1 | Locknut 1/2in-13NC | |
| 109 | 3422533 | 1 | Pin, Hitch | |
| 110 | 3600395 | 1 | Gear Pump Assembly with Fittings (See GEAR PUMP ASSEMBLY for Breakdown) | |
| 111 | 3790012 | 1 | O-Ring | |
| 112 | 3931620 | 2 | Bolt 3/8in-16NC x 1-1/4in | |
| 113 | 3960389 | 5 ft/1.5m | Seal | |
| 114 | 4751400 | 1 | Flatwasher 1/4in Regular | |
| 115 | 4751800 | 1 | Flatwasher 1/2in Regular | |
| 116 | 4891600 | 2 | Flatwasher 3/8in Hardened | |
| 117 | 1001093410 | 1 | Piston Pump Assembly with Fittings (See PISTON PUMP ASSEMBLY for Breakdown) | |
| 119 | | Ref | Oil, Engine (Not Shown) | |
| 119 | 1001115930 | AR | 10W-30 - Without Arctic Package | |
| 119 | 1001115931 | AR | 5W-30 Fully Synthetic - With Arctic Package | |
| | 1001114601 | Ref | **GM ENGINE ASSEMBLY** | B |
| 201 | 0080201 | 2 | Fitting, 90 | |
| 202 | 0100011 | AR | Compound, Locking | |
| 203 | 0340041 | 2 | Band, Mounting | |
| 204 | 0641406 | 12 | Bolt 1/4in-20NC x 3/4in | |
| 205 | 0641606 | 4 | Bolt 3/8in-16NC x 3/4in | |
| 206 | 0641608 | 9 | Bolt 3/8in-16NC x 1in | |

# SECTION 2 - TURNTABLE

| ITEM | PART NUMBER | QTY | DESCRIPTION | REV |
|---|---|---|---|---|
| 207 | 0641609 | 4 | Bolt 3/8in-16NC x 1-1/8in | |
| 208 | 0641610 | 10 | Bolt 3/8in-16NC x 1-1/4in | |
| 209 | 0641612 | 4 | Bolt 3/8in-16NC x 1- 1/2in | |
| 210 | 0641826 | 2 | Bolt 1/2in-13NC x 3-1/4in | |
| 211 | 0641828 | 2 | Bolt 1/2in-13NC x 3-1/2in | |
| 212 | 0700810 | 4 | Bolt M8 x 20mm | |
| 213 | 0903490 | 1 | Bracket, Exhaust Strap | |
| 214 | 0940070 | 1 | Bumper | |
| 215 | 0961986 | 2 | Bearing, Flanged | |
| 216 | 1320012 | 3 | Clamp | |
| 217 | 1320016 | 5 | Clamp | |
| 218 | 1320022 | 4 | Clamp | |
| 219 | 1320219 | 1 | Clamp | |
| 220 | 1320223 | 3 | Clamp | |
| 221 | 1340060 | 1 | Air Cleaner Assembly | |
| 221 | 7012664 | 1 | Element, Air Cleaner | |
| 222 | 1580011 | 1 | Container, Coolant Overflow | |
| 223 | 1703162 | 2 | Decal - Caution Fan | |
| 224 | 2060025 | 1 | Fan | |
| 225 | 2180877 | 1 | Fitting 90 | |
| 226 | 2720058 | 1 ft/0.3m | Hose | |
| 227 | 2720271 | 18 in /46cm | Hose | |
| 228 | 2720563 | 1 | Hose, Radiator (Top) | |
| 229 | 2720564 | 1 | Hose, Radiator (Bottom) | |
| 230 | 2820243 | 1 | Exhaust Elbow, Insulation | |
| 231 | 2820244 | 1 | Exhaust, Insulation | |
| 232 | 3200362 | 4 | Mount, Engine | |
| 233 | 3311405 | 12 | Locknut 1/4in-20NC | |
| 234 | 3311605 | 27 | Locknut 3/8in-16NC | |
| 235 | 3311608 | 1 | Locknut 3/8in-16NC | |
| 236 | 3311805 | 4 | Locknut 1/2in-13NC | |
| 237 | 3572280 | 1 | Plate, Engine Mount | |
| 238 | 3620040 | 1 | Radiator | |
| 238 | 7019656 | 1 | Cap, Radiator | |
| 239 | 3740067 | 1 | Relay | |
| 240 | 3960468 | 1 | Seal | |
| 241 | 3960469 | 1 | Seal | |
| 242 | 4060805 | 3 ft/0.9m | Seal | |
| 243 | 4341239 | 1 | Tray, Engine | |
| 244 | 4341241 | 1 | Mount, Engine (Front) | |
| 245 | 4711400 | 16 | Flatwasher 1/4in Thin | |
| 246 | 4711600 | 37 | Flatwasher 3/8in Thin | |
| 247 | 4740274 | 4 | Flatwasher, Snubbing | |
| 248 | 4751400 | 8 | Flatwasher 1/4in Regular | |
| 249 | 4751600 | 18 | Flatwasher 3/8in Regular | |
| 250 | 4751800 | 4 | Flatwasher 1/2in Regular | |
| 251 | 4791400 | 2 | Starwasher 1/4in | |
| 252 | 4831900 | 4 | Lockwasher M8 | |
| 253 | 4920385 | 10 ft/3m | Wire, Safety | |
| 254 | 1001091793 | 1 | Insulation, Muffler | |
| 255 | 1001091892 | NLA | Hose (Use p/n 2750532) | |

| ITEM | PART NUMBER | QTY | DESCRIPTION | REV |
|---|---|---|---|---|
| 256 | 1001093248 | 1 | Pipe, Exhaust | |
| 257 | 1001105872 | NLA | Valve, Oil Drain (Use p/n 4640952) | |
| 258 | 1001114600 | 1 | Engine, GM 3.0L Options (See GM Engine Supplement P/N 3121245 for Breakdown of Additional Components): | |
| 258 | 70000164 | 1 | Plug, Spark (Not Shown) | |
| 258A | 7027965 | 1 | Filter, Oil | |
| 258B | 7027972 | 1 | Filter, Fuel | |
| 258C | 70002895 | 1 | Module, Control (ECU) | |
| 259 | 1001116131 | 1 | Plate, Radiator Mounting | |
| 260 | 1001116183 | 1 | Tube, Intake | |
| 261 | 1001116200 | 1 | Bracket | |
| 262 | 0100020 | AR | Sealant | |

## FIGURE 2-17. PISTON PUMP ASSEMBLY

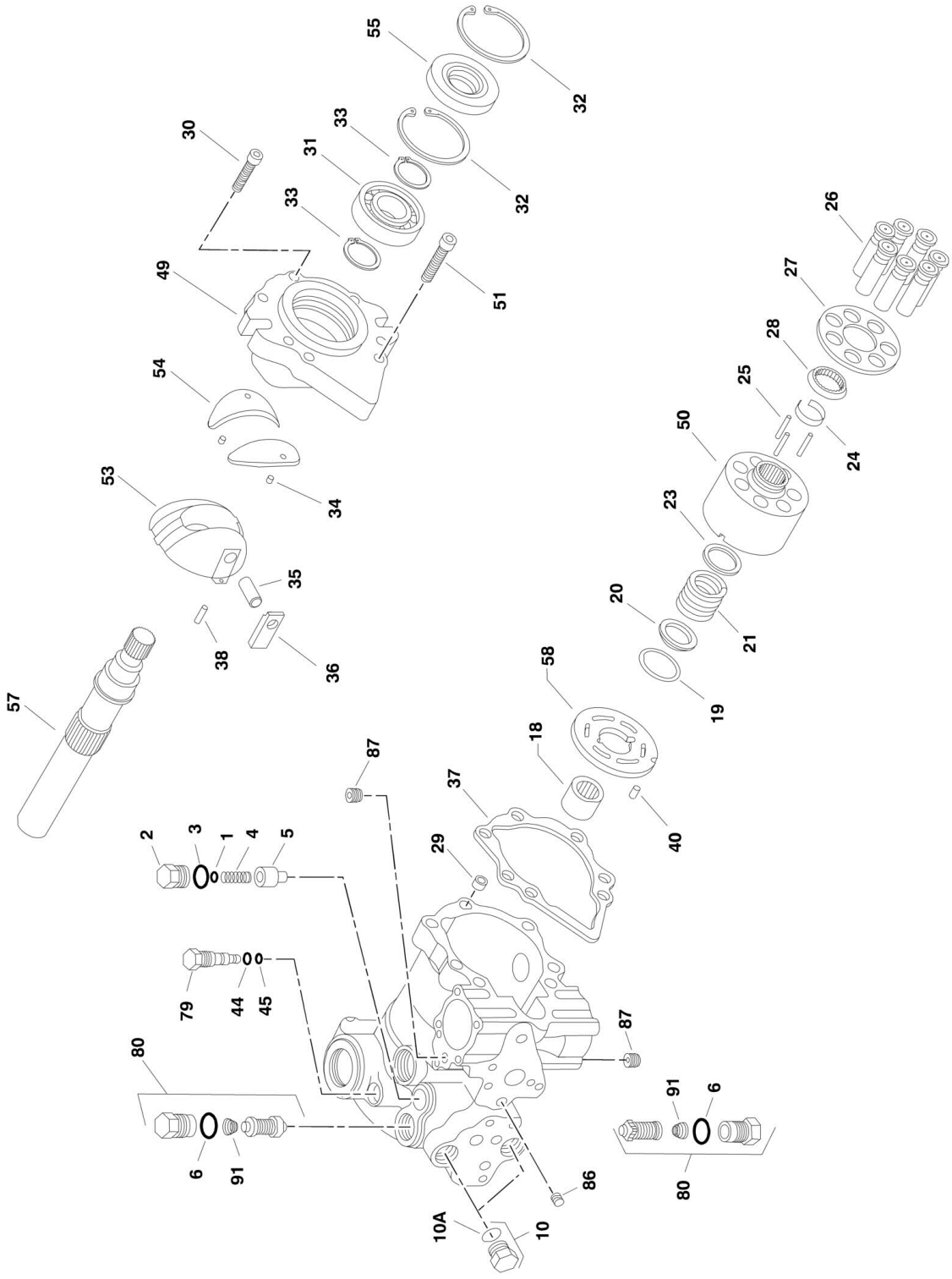

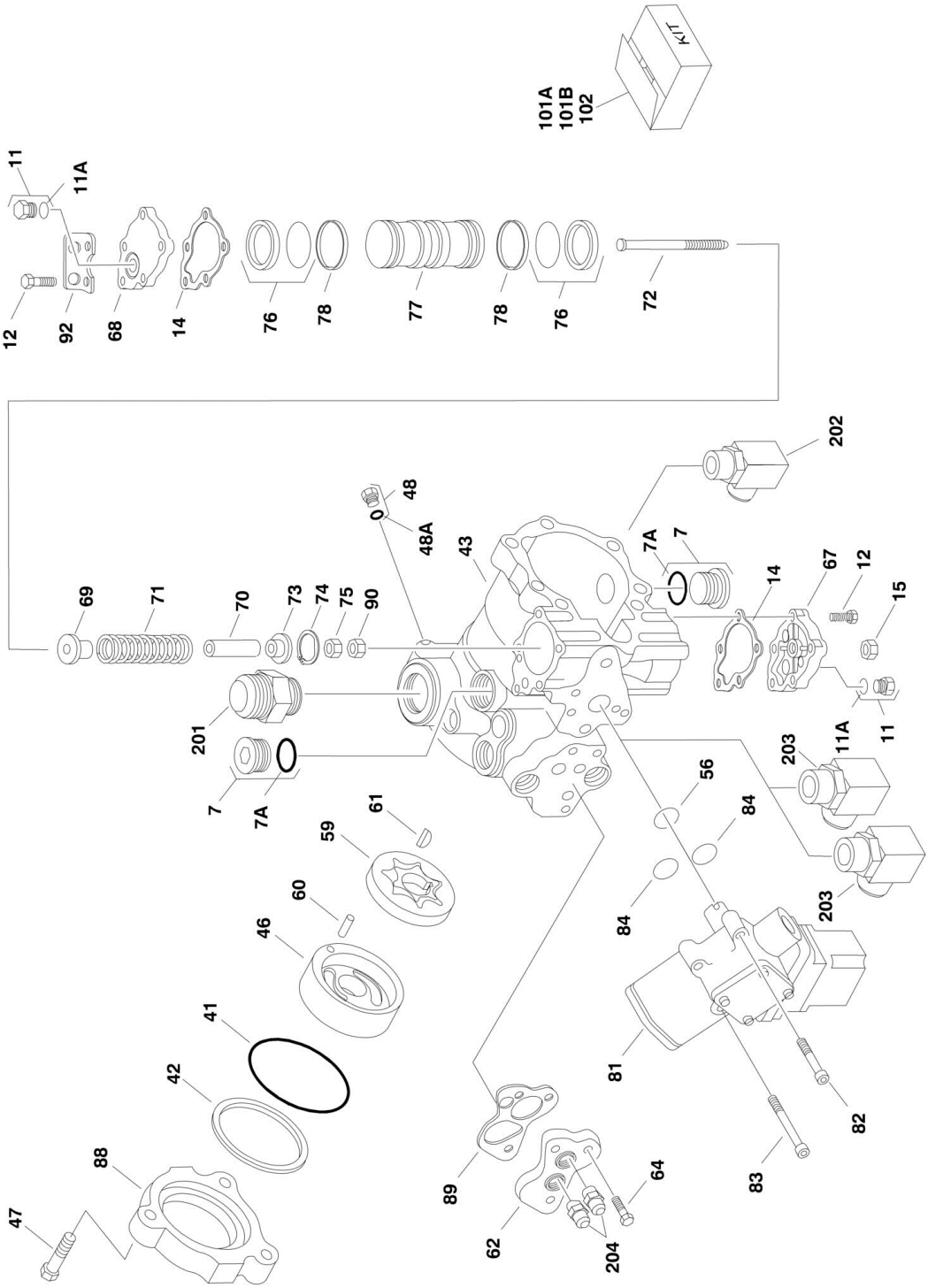
KIT
101A
101B
102
11
11A
12
92
68
14
76
78
77
78
76
72
202
48
48A
43
7A
7
67
12
15
14
69
71
70
73
74
75
90
201
7
7A
203
11A
11
56
84
61
59
60
46
41
42
88
47
89
62
64
204
81
82
83

## FIGURE 2-17. PISTON PUMP ASSEMBLY

| ITEM | PART NUMBER | QTY | DESCRIPTION | REV |
|---|---|---|---|---|
| | 3600381 | Ref | **PISTON PUMP ASSEMBLY** | A |
| 1 | 7007413 | 1 | Shim Kit | |
| 2 | 7007414 | 1 | Plug | |
| 3 | See Note | NSS | O-Ring (Note: Use Item 101A) | |
| 4 | 7021200 | 1 | Spring, Relief Valve | |
| 5 | 7007417 | 1 | Valve, Relief | |
| 6 | See Note | NSS | O-Ring (Note: Use Item 101A) | |
| 7 | 7007419 | 2 | Plug | |
| 7A | 7007418 | 2 | O-Ring | |
| 10 | 7007470 | 2 | Plug | |
| 10A | 7021256 | 2 | O-Ring | |
| 11 | 7007470 | 2 | Plug | |
| 11A | 7021256 | 2 | O-Ring | |
| 12 | 7021223 | 10 | Screw | |
| 14 | See Note | NSS | Gasket, Servo Cover (Note: Use Item 101A) | |
| 15 | 7007423 | 1 | Nut, Special | |
| 18 | 7007425 | 1 | Bearing, Needle | |
| 19 | See Note | NSS | Ring, Retaining (Note: Use Item 102) | |
| 20 | See Note | NSS | Washer (Note: Use Item 102) | |
| 21 | See Note | NSS | Spring (Note: Use Item 102) | |
| 23 | See Note | NSS | Washer (Note: Use Item 102) | |
| 24 | See Note | NSS | Retainer (Note: Use Item 102) | |
| 25 | See Note | NSS | Pin, Slipper Holddown (Note: Use Item 102) | |
| 26 | See Note | NSS | Piston Assembly (Note: Use Item 102) | |
| 27 | See Note | NSS | Retainer, Slipper (Note: Use Item 102) | |
| 28 | See Note | NSS | Guide, Retainer (Note: Use Item 102) | |
| 29 | 7007435 | 1 | Pin, Spring | |
| 30 | 7021202 | 1 | Screw | |
| 31 | 7007437 | 1 | Bearing, Ball | |
| 32 | 7007438 | 2 | Ring, Retainer | |
| 33 | 7007439 | 2 | Ring | |
| 34 | 7021203 | 2 | Pin, Spring | |
| 35 | 7007441 | 1 | Handle, Pin | |
| 36 | 7007442 | 1 | Sleeve, Bearing | |
| 37 | See Note | NSS | Gasket, Front Cover (Note: Use Item 101A) | |
| 38 | 7007444 | 1 | Pin | |
| 40 | 7007446 | 1 | Pin | |
| 41 | See Note | NSS | O-Ring (Note: Use Item 101A) | |
| 42 | See Note | NSS | Ring, Load Temper (Note: Use Item 101A) | |
| 43 | 7023977 | 1 | Housing, Pump | |
| 44 | See Note | NSS | Ring, Back-up (Note: Use Item 101A) | |
| 45 | See Note | NSS | O-Ring (Note: Use Item 101A) | |
| 46 | 7007452 | 1 | Cover, Gerotor | |
| 47 | 7007453 | 3 | Bolt, Hex | |
| 48 | 7007208 | 1 | Plug | |
| 48A | 7007207 | 1 | O-Ring | |
| 49 | 7007454 | 1 | Cover, Front | |
| 50 | 7010116 | 1 | Block, Cylinder | |
| 51 | 7021207 | 6 | Screw | |
| 53 | 7007457 | 1 | Swash Plate | |

| ITEM | PART NUMBER | QTY | DESCRIPTION | REV |
|---|---|---|---|---|
| 54 | 7021212 | 1 | Journal, Bearing | |
| 55 | 7007459 | 1 | Seal, Lip | |
| 56 | See Note | NSS | O-Ring (Note: Use Item 101A) | |
| 57 | 7010121 | 1 | Shaft, Main Pump | |
| 58 | 7021214 | 1 | Plate, Valve | |
| 59 | 7007463 | 1 | Gerotor Assembly | |
| 60 | 7007464 | 1 | Pin | |
| 61 | 7007465 | 1 | Key, Woodruff | |
| 62 | 7007466 | 1 | Adaptor, Remote Filtration (Without By-Pass) | |
| 64 | 7021218 | 3 | Screw | |
| 67 | 7021220 | 1 | Cover, Servo (Without Adjuster) | |
| 68 | 7021219 | 1 | Cover, Servo (Without Adjuster) | |
| 69 | 7023979 | 1 | Guide, Spring | |
| 70 | 7007484 | 1 | Stop, Servo | |
| 71 | 7007485 | 1 | Spring | |
| 72 | 7021221 | 1 | Screw | |
| 73 | 7007487 | 1 | Guide, Spring | |
| 74 | 7007488 | 1 | Ring, Retaining | |
| 75 | 7021222 | 1 | Locknut | |
| 76 | See Note | NSS | Ring, Piston (Note: Use Item 101A or 101B) | |
| 77 | 7007494 | 1 | Piston, Servo | |
| 78 | See Note | NSS | O-Ring (Note: Use Item 101A or 101B) | |
| 79 | 7007472 | 1 | Valve, Bypass | |
| 80 | 7024851 | 2 | Valve, Pressure Relief (Includes Item 6) | |
| 81 | 7007474 | 1 | Control, Dual Oil-Filled | |
| 81 | 7007496 | 1 | Coil Assembly (Pilot) | |
| 81 | 7007497 | 1 | Plug (Pump) | |
| 81 | 7007498 | 1 | Plug (Valve Harness) | |
| 82 | 7001498 | 2 | Screw | |
| 83 | 7007478 | 2 | Screw | |
| 84 | 7001433 | 2 | O-Ring | |
| 86 | 7007475 | 1 | Plug, Orifice/Screen (.156) | |
| 87 | 7007477 | 2 | Plug, Orifice (.37) | |
| 88 | 7007476 | 1 | Adapter, Auxiliary Pump | |
| 89 | 7021217 | 1 | Spacer/Gasket | |
| 90 | 7021206 | 1 | Nut | |
| 91 | 7024800 | 2 | Spring | |
| 92 | 7021201 | 1 | Bracket, Lifting | |
| 101 | | Ref | Seal Kit Options: | |
| 101A | 7021232 | 1 | Seal Kit - Complete (Includes Items 3, 6, 14, 37, 41, 42, 44, 45, 55, 56, 76, 78 & 89) | |
| 101B | 7007412 | 1 | Seal Kit - Servo Piston (Includes Items 76 & 78) | |
| 102 | 7010116 | 1 | Cylinder Block Kit (Includes Items 19-28 & 50) | |
| | | Ref | **PISTON PUMP AND FITTING ASSEMBLY** | |
| | 3600396 | Ref | **Caterpillar Engine Machines** | A |
| | 3600396 | Ref | **Ford Engine Machines** | C |
| | 1001117799 | Ref | **Deutz Engine Machines** | C |
| | 3600396 | Ref | **GM Engine Machines (SN 0300087000 through 0300109297)** | C |
| | 1001093410 | Ref | **GM Engine Machines (SN 0300109298 through 0300177361)** | B |
| 201 | | Ref | Fitting, Straight Options: | |
| 201 | 2220479 | 1 | Caterpillar/Ford/GM Engine (USA Built Machines) **(SN 0300087000 through 0300109297)** | |

# SECTION 2 - TURNTABLE

| ITEM | PART NUMBER | QTY | DESCRIPTION | REV |
|---|---|---|---|---|
| 201 | 2220377 | 1 | Caterpillar/Ford/GM Engine (USA Built Machines) **(SN 0300109298 through 0300177361)** | |
| 201 | 2220377 | 1 | Caterpillar Engine (China Built Machines) **(SN B300000100 through B300005764, Excluding B300005620)** | |
| 201 | 2220479 | NLA | Deutz Engine (Use p/n 2220377) | |
| 202 | | Ref | Fitting, 90 Options | |
| 202 | 2220578 | 1 | 3600396 Pump | |
| 202 | 8770157 | 1 | 1001093410 Pump | |
| 203 | 2220646 | 2 | Fitting, 90 | |
| 204 | 2220947 | 2 | Fitting, Straight | |

**FIGURE 2-18. GEAR PUMP ASSEMBLY**

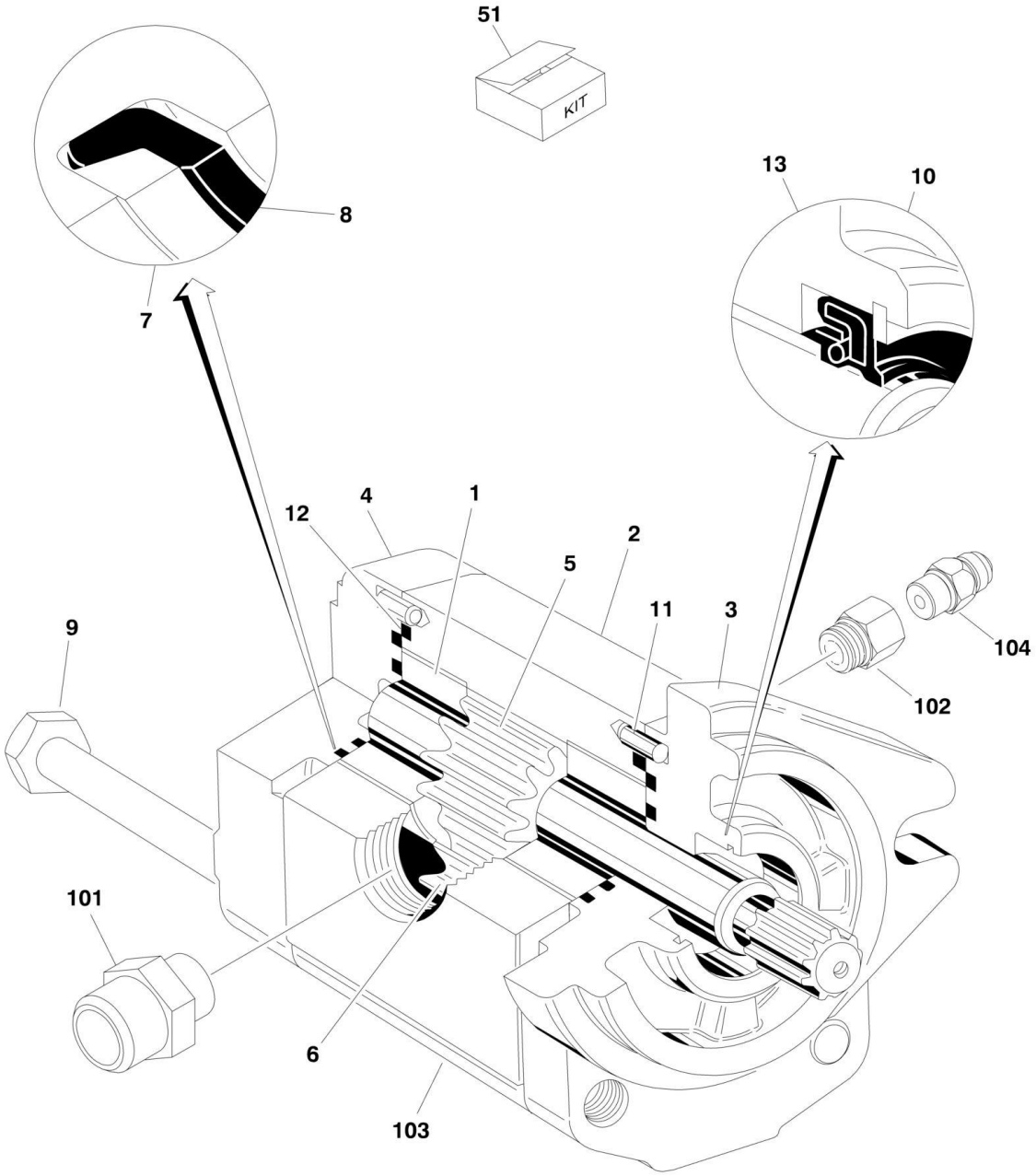

## FIGURE 2-18. GEAR PUMP ASSEMBLY

| ITEM | PART NUMBER | QTY | DESCRIPTION | REV |
|---|---|---|---|---|
| | 3600242 | Ref | **GEAR PUMP ASSEMBLY** | |
| 1 | 7010105 | 2 | Bearing/Bushing | |
| 2 | See Note | NSS | Housing (Note: Use p/n 3600242) | |
| 3 | See Note | NSS | Flange (Note: Use p/n 3600242) | |
| 4 | 7010103 | 1 | Cover | |
| 5 | 7012987 | 1 | Gear, Drive | |
| 6 | 7012988 | 1 | Gear, Idler | |
| 7 | See Note | NSS | Ring, Anti-Extrusion (Note: Use Item 51) | |
| 8 | See Note | NSS | Seal (Note: Use Item 51) | |
| 9 | See Note | 4 | Bolt (Note: Not Available for Purchase) | |
| 10 | 7010104 | 1 | Ring, Retaining | |
| 11 | See Note | 4 | Pin, Dowel (Note: Not Available for Purchase) | |
| 12 | See Note | NSS | Seal, O-Ring (Note: Use Item 51) | |
| 13 | See Note | NSS | Seal, Shaft (Note: Use Item 51) | |
| 51 | 7007489 | 1 | Seal Kit (Includes Items 7, 8, 12 & 13) | |
| | 3600395 | Ref | **GEAR PUMP AND FITTING ASSEMBLY** | B |
| 101 | 2220376 | 1 | Fitting, Straight | |
| 102 | 2220810 | 1 | Fitting, Reducer | |
| 103 | 3600242 | 1 | Pump (Includes Items 1-13) | |
| 104 | 4640744 | 1 | Fitting, Check Valve | |

## FIGURE 2-19. TANK INSTALLATIONS

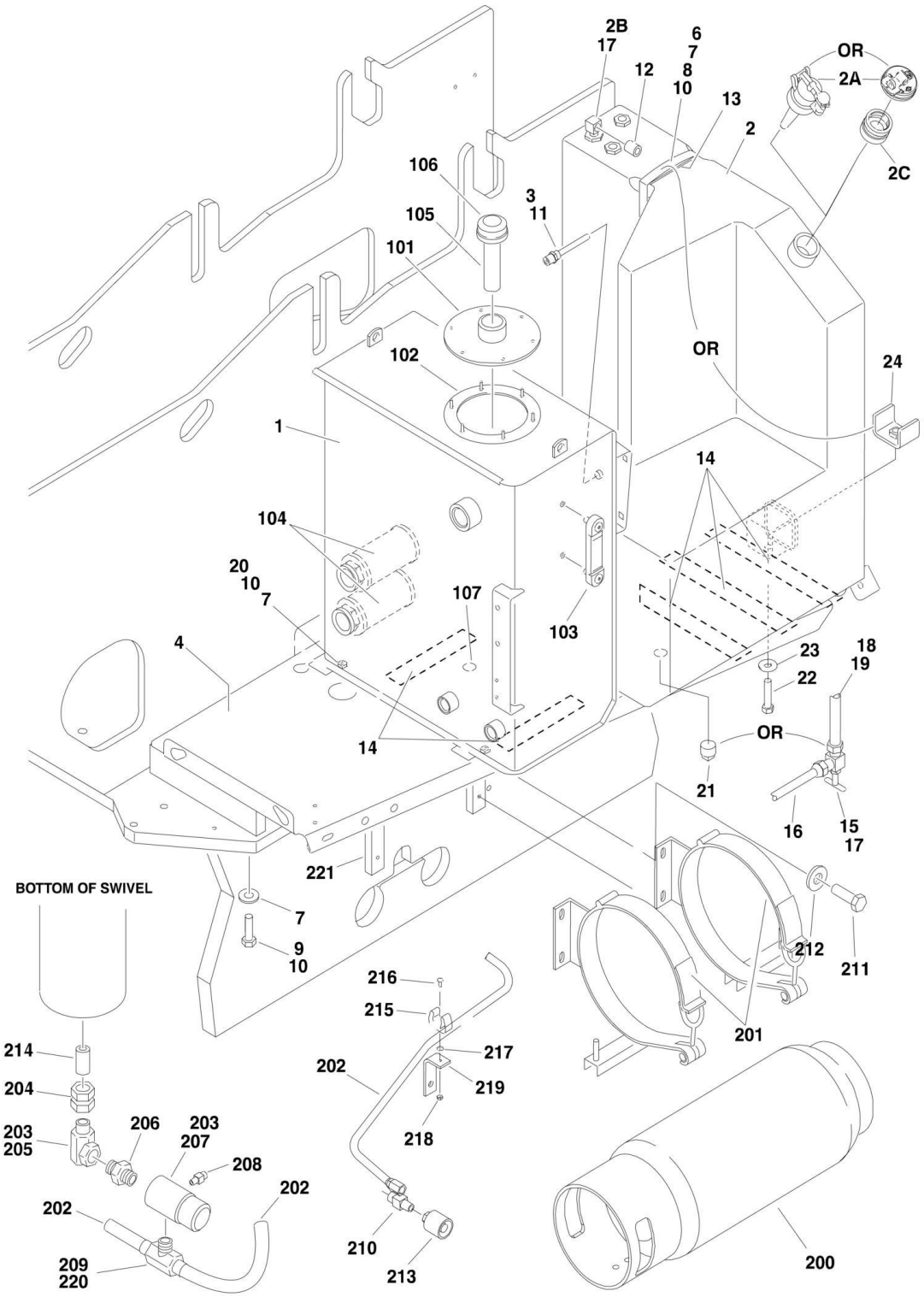

## FIGURE 2-19. TANK INSTALLATIONS

| ITEM | PART NUMBER | QTY | DESCRIPTION | REV |
|---|---|---|---|---|
| | | Ref | **Note: Gas Machines Only Available as USA Built Machines.** | |
| | | Ref | **TANK INSTALLATIONS** | |
| | 0255409 | Ref | **Diesel Machines** | I |
| | 0270395 | Ref | **Gas Machines (SN 0300087000 through 0300140988)** | E |
| | 1001116340 | Ref | **Gas Machines (SN 0300140989 through 0300177361)** | B |
| 1 | | Ref | Hydraulic Tank Assembly Options (See Items 101-107 for Breakdown): | |
| 1 | 4400454 | NLA | Tank (Use p/n 1001151268) **(SN 0300087000 through 0300177361)** | |
| 1 | 4400454 | NLA | Tank (Use p/n 1001151268) **(SN B300000100 through B300001018)** | |
| 1 | 1001151268 | 1 | Tank **(SN B300001019 through B300005764, Excluding B300005620)** | |
| 2 | | Ref | Tank, Fuel Options: | |
| 2 | 4400399 | 1 | Tank Diesel Machines **(SN 0300087000 through 0300177361)** | |
| 2 | 4400399 | 1 | Tank Diesel Machines **(SN B30000100 through B300001062)** | |
| 2 | 1001173896 | 1 | Tank Diesel Machines **(SN B300001063 through B300005764, Excluding B300005620)** | |
| 2 | 4400399 | 1 | Tank Gas Machines **(SN 0300087000 through 0300109297)** | |
| 2 | 1001091561 | NLA | Tank Gas Machines (Use p/n 1001117052) **(SN 0300109298 through 0300140988)** | |
| 2 | 1001111514 | 1 | Gas Machines **(SN 0300140989 through 0300177361)** | |
| 2A | | Ref | Cap, Fuel Tank Options: | |
| 2A | 7016314 | 1 | Cap - Standard - Non-Locking (Diesel Machines) | |
| 2A | 7016314 | 1 | Cap - Standard - Non-Locking (Gas Machines) **(SN 0300087000 through 0300109297)** | |
| 2A | 70001103 | 1 | Cap - Standard - Non-Locking (Gas Machines) **(SN 0300109298 through 0300140988)** | |
| 2A | 70002715 | 1 | Cap - Standard - Lockable (Lock Not Included) (Gas Machines) **(SN 0300140989 through 0300177361)** | |
| 2A | 1120484 | NLA | Cap - Red - Gas/Dual Fuel Machines (Lockable - Non-Vented) (Note: This Cap must be Purchased Separately. Lock Not Included) (Note: Emission Regulations do Not allow this cap to be installed on machines) **(SN 0300109298 through 0300177361)** | |
| 2A | 1001151391 | NLA | Cap - Red - Gas/Dual Fuel Machines (Lockable - Vented) (Note: This Cap must be Purchased Separately. Lock Not Included) (Note: Available on Machines) **(SN 0300176430 through 0300177361)** | |
| 2A | 1120487 | 1 | Cap - Blue - Diesel Machines (Note: This Cap must be Purchased Separately. Lock Not Included) | |
| 2B | | Ref | Fitting, 90 with Pick-Up Tube Options: | |
| 2B | 7019658 | 1 | Diesel Machines | |
| 2B | 70004149 | 1 | Gas Machines | |
| 2C | 70002716 | 1 | Adapter - Use with p/n 1120484 Cap (Gas/Dual Fuel Machines) | |
| 2C | 1001151389 | 1 | Adapter - Use with p/n 1001151391 Cap (Gas/Dual Fuel Machines) | |
| 3 | 4360436 | 1 | Switch, Fuel Level | |
| 3 | 1001182997 | AR | Sealant | |
| 4 | 4844964 | 1 | Hydraulic Tray Weldment | |
| 6 | | Ref | Strap, Tank Options (Not Required on UL Machines): | |
| 6 | 4240102 | 0 | Diesel Machines | |
| 6 | 4240102 | 0 | Gas Machines **(SN 0300087000 through 0300140988)** | |

| ITEM | PART NUMBER | QTY | DESCRIPTION | REV |
|---|---|---|---|---|
| 6 | Not Required | 0 | Gas Machines **(SN 0300140989 through 0300177361)** | |
| 7 | 4751600 | AR | Flatwasher 3/8in Regular | |
| 8 | 3311601 | AR | Nut 3/8in-16NC | |
| 9 | 0641614 | AR | Bolt 3/8in-16NC x 1-3/4in | |
| 10 | 0100011 | AR | Compound, Locking | |
| 11 | 0100079 | AR | Sealant, Pipe | |
| 12 | 2200233 | 1 | Plug (Gas Machines Only) | |
| 13 | | Ref | Strip, Protective Options: | |
| 13 | 4280295 | 18 in /46cm | Diesel Machines | |
| 13 | 4280295 | 18 in /46cm | Gas Machines **(SN 0300087000 through 0300140988)** | |
| 13 | Not Required | 0 | Gas Machines **(SN 0300140989 through 0300177361)** | |
| 14 | 4420038 | AR | Tape, Rubber | |
| 15 | 4641022 | 1 | Valve, Needle (Gas Machines Only) | |
| 16 | | Ref | Tube, Fuel Options (Gas Machines Only): | |
| 16 | 4568116 | 1 | Ford Engine Machines | |
| 16 | 4569385 | 1 | GM Engine Machines | |
| 17 | 0100020 | AR | Sealant | |
| 18 | 0100062 | AR | Retaining Compound #680 | |
| 19 | 4568119 | 1 | Tube, Fuel (Gas Machines Only) | |
| 20 | 0641606 | 4 | Bolt 3/8in-16NC x 3/4in | |
| 21 | 2200222 | 1 | Plug (Diesel Machines Only) | |
| 22 | 0641818 | 2 | Bolt 1/2in-13NC x 2-1/4in (Gas Machines Only) **(SN 0300140989 through 0300177361)** | |
| 23 | 4751800 | 2 | Flatwasher 1/2in Regular (Gas Machines Only) **(SN 0300140989 through 0300177361)** | |
| 24 | 1001118133 | 2 | Bracket (Gas Machines Only) **(SN 0300140989 through 0300177361)** | |
| | 4400454 | Ref | **HYDRAULIC OIL TANK ASSEMBLY (SN 0300087000 through 0300177361)** | G |
| | 4400454 | Ref | **HYDRAULIC OIL TANK ASSEMBLY (SN B300000100 through B300001018)** | G |
| | 1001151268 | Ref | **HYDRAULIC OIL TANK ASSEMBLY (SN B300001019 through B300005764, Excluding B300005620)** | H |
| 101 | 7024439 | 1 | Cover | |
| 102 | 7024440 | 1 | Gasket | |
| 103 | 7024441 | 1 | Gauge, Sight | |
| 104 | 7024442 | 2 | Strainer 1-1/4in NPT (p/n 4400454 Tank Only) | |
| 105 | 7024443 | 1 | Neck, Fill (Helgensen Brand) | |
| 105 | See Note | NSS | Neck, Fill (Hydac Brand) (Note: Use p/n 70004862) | |
| 105 | 7024445 | 1 | Screen (Helgensen Brand) | |
| 105 | See Note | NSS | Screen (Hydac Brand) (Note: Use p/n 70004862) | |
| 106 | 7024444 | 1 | Breather/Fill Cap (Helgensen Brand) | |
| 106 | 70004862 | 1 | Breather/Fill Cap/Strainer Kit (Hydac Brand) | |
| 107 | 7024446 | 1 | Plug, Magnetic | |
| | 0255524 | Ref | **LP TANK BRACKETS INSTALLATION (GAS MACHINES ONLY)** | 9-F |
| 200 | | Ref | Tank, LP Options: | |
| 200 | 4400275 | 1 | Aluminum | |
| 200 | 4400420 | 1 | Steel | |
| 201 | 1320220 | 2 | Clamp | |
| 201 | 1320127 | 2 | Clamp, Toggle (1 Per Clamp) | |
| 202 | 2720144 | 2 | Hose | |

| ITEM | PART NUMBER | QTY | DESCRIPTION | REV |
|---|---|---|---|---|
| 203 | 0100020 | AR | Sealant, Pipe | |
| 204 | 2221197 | 1 | Fitting, Reducer | |
| 205 | 2180125 | 1 | Fitting, 90 Swivel | |
| 206 | 2220261 | 1 | Fitting, Nipple | |
| 207 | 2180388 | 1 | Fitting, Bulkhead | |
| 208 | 2180389 | 1 | Valve, Relief | |
| 209 | 2220418 | 1 | Fitting, Tee | |
| 210 | 2180387 | 2 | Fitting, Straight | |
| 211 | 0641606 | 8 | Bolt 3/8in-16NC x 3/4in | |
| 212 | 4751600 | 8 | Flatwasher 3/8in Regular | |
| 213 | 2180418 | 2 | Fitting, Connector | |
| 214 | 2221018 | 1 | Fitting, Nipple | |
| 215 | 1320218 | 2 | Clamp, Spring | |
| 216 | 3910808 | 2 | Screw #8-32NC x 1/2in | |
| 217 | 4750800 | 4 | Flatwasher #8 Regular | |
| 218 | 3310805 | 2 | Locknut #8-32NC | |
| 219 | 0181949 | 2 | Angle, Support | |
| 220 | 2221024 | 2 | Fitting, Union Ball Check | |
| 221 | 0362519 | 4 | Bar | |

**FIGURE 2-20. ROTARY COUPLING INSTALLATIONS (USA BUILT MACHINES) (SN 0300087000 through 0300138648)**

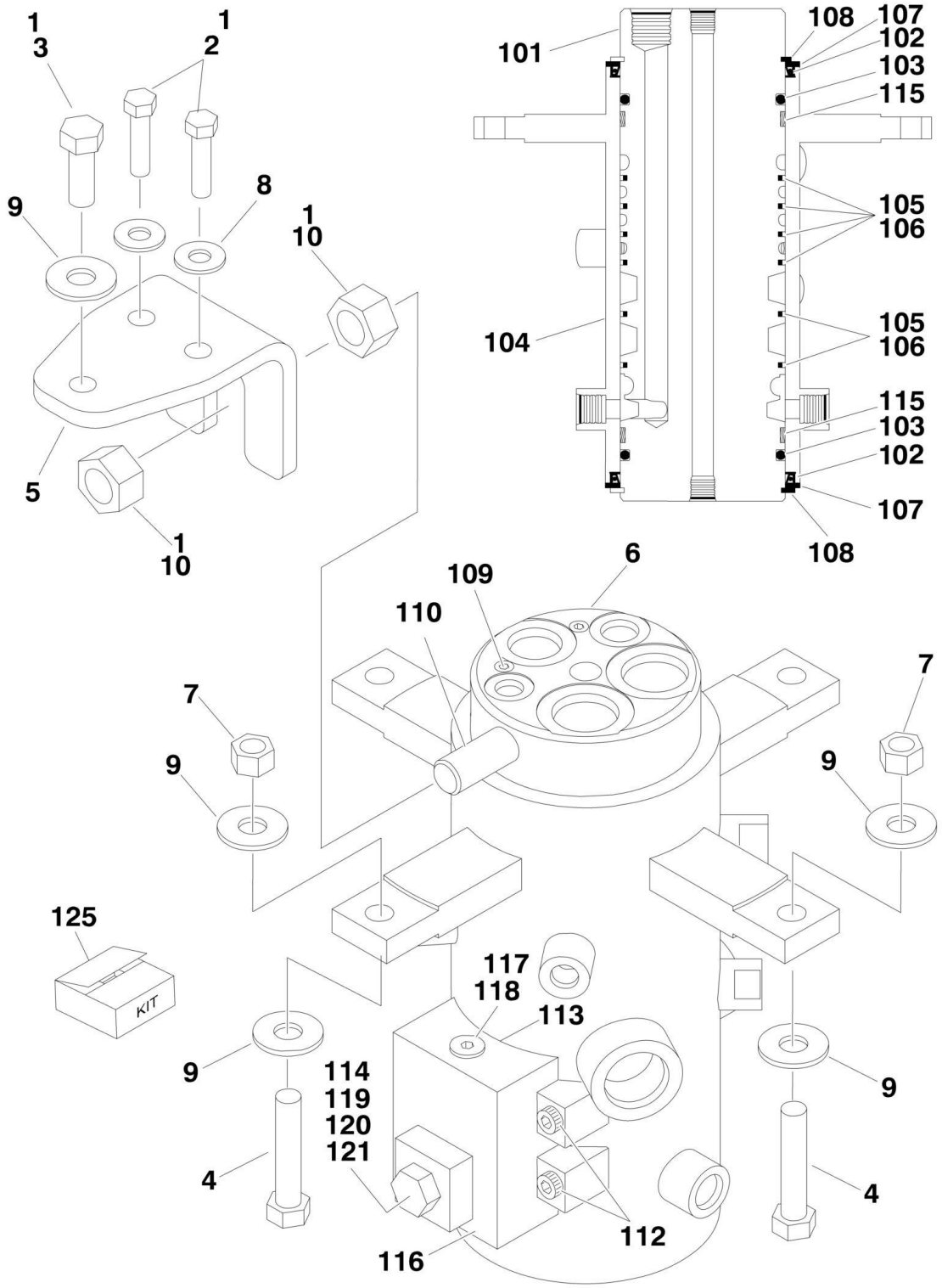

## FIGURE 2-20. ROTARY COUPLING INSTALLATIONS (USA BUILT MACHINES) (SN 0300087000 through 0300138648)

| ITEM | PART NUMBER | QTY | DESCRIPTION | REV |
|---|---|---|---|---|
| | | Ref | **ROTARY COUPLING INSTALLATIONS** | |
| | 0273052 | Ref | **Rotary Coupling Installations 2WS** | G |
| | 0273161 | Ref | **Rotary Coupling Installations 4WS** | G |
| 1 | 0100011 | AR | Compound, Locking | |
| 2 | 0641612 | 2 | Bolt 3/8in-16NC x 1-1/2in | |
| 3 | 0641811 | 1 | Bolt 1/2in-13NC x 1-3/8in | |
| 4 | 0641820 | 2 | Bolt 1/2in-13NC x 2-1/2in | |
| 5 | 0903056 | 1 | Bracket | |
| 6 | | Ref | Coupling, Rotary Options (See Items 101-122 for Breakdown): | |
| 6 | | Ref | Coupling, Rotary 2WS | |
| 6 | 1660257 | NLA | Coupling, Rotary (Use p/n 1660303) (Original Equipment) **(SN 0300087000 through 0300113549)** | |
| 6 | 1660303 | 1 | Coupling, Rotary (Service Replacement) **(SN 0300113550 through 0300138648)** | |
| | | Ref | **Note: Original Equipment Rotary may have been replaced with Service Replacement Rotary. Identify p/n stamped on rotary before ordering parts.** | |
| 6 | | Ref | Coupling, Rotary 4WS | |
| 6 | 1660258 | NLA | Coupling, Rotary (Use p/n 1660304) (Original Equipment) **(SN 0300087000 through 0300113549)** | |
| 6 | 1660304 | 1 | Coupling, Rotary (Service Replacement) **(SN 0300113550 through 0300138648)** | |
| | | Ref | **Note: Original Equipment Rotary may have been replaced with Service Replacement Rotary. Identify p/n stamped on rotary before ordering parts.** | |
| 7 | 3271805 | 2 | Locknut 1/2in-13NC | |
| 8 | 4751600 | 2 | Flatwasher 3/8in Regular | |
| 9 | 4751800 | 5 | Flatwasher 1/2in Regular | |
| 10 | 3322201 | 2 | Nut 3/4in-16NC | |
| | | Ref | **ROTARY COUPLING ASSEMBLIES** | |
| | | Ref | **Rotary Coupling Assemblies 2WS** | |
| | 1660257 | Ref | **Rotary Coupling Assemblies (Original Equipment) (SN 0300087000 through 0300113549)** | D |
| | 1660303 | Ref | **Rotary Coupling Assemblies (Service Replacement) (SN 0300113550 through 0300138648)** | B |
| | | Ref | **Rotary Coupling Assemblies 4WS** | |
| | 1660258 | Ref | **Rotary Coupling Assemblies (Original Equipment) (SN 0300087000 through 0300113549)** | D |
| | 1660304 | Ref | **Rotary Coupling Assemblies (Service Replacement) (SN 0300113550 through 0300138648)** | A |
| 101 | See Note | NSS | Body (Note: Not Available - Purchase Complete Assembly) | |
| 102 | | Ref | Seal Options: | |
| 102 | | Ref | Seal 2WS | |
| 102 | 7026189 | 2 | Seal **(SN 0300087000 through 0300113549)** | |
| 102 | See Note | NSS | Seal (Note: Use Item 125) **(SN 0300113550 through 0300138648)** | |
| 102 | See Note | NSS | Seal 4WS (Note: Use Item 125) | |
| 103 | See Note | NSS | O-Ring (Note: Use Item 125) | |
| 104 | See Note | NSS | Housing (Note: Not Available - Purchase Complete Assembly) | |
| 105 | See Note | NSS | Seal, Cap (Note: Use Item 125) | |
| 105 | | Ref | Seal, Cap 2WS | |

| ITEM | PART NUMBER | QTY | DESCRIPTION | REV |
|---|---|---|---|---|
| 105 | | Ref | Seal, Cap 4WS | |
| 106 | See Note | AR | O-Ring (Note: Use Item 125) | |
| 106 | | Ref | O-Ring 2WS | |
| 106 | | Ref | O-Ring 4WS | |
| 107 | | Ref | Ring Options: | |
| 107 | 7026503 | 2 | Ring 2WS | |
| 107 | 7026511 | 2 | Ring 4WS | |
| 108 | | Ref | Ring, Retaining Options: | |
| 108 | 7026504 | 2 | Ring, Retaining 2WS | |
| 108 | 7013189 | 2 | Ring, Retaining 4WS | |
| 109 | | Ref | Plug Options: | |
| 109 | | Ref | Plug 2WS | |
| 109 | See Note | NSS | Plug (Note: Not Available for Purchase) **(SN 0300087000 through 0300113549)** | |
| 109 | 80934561 | 2 | Plug **(SN 0300113550 through 0300138648)** | |
| 109 | | Ref | Plug 4WS | |
| 109 | See Note | NSS | Plug (Note: Not Available for Purchase) **(SN 0300087000 through 0300113549)** | |
| 109 | 80934561 | 4 | Plug **(SN 0300113550 through 0300138648)** | |
| 110 | See Note | NSS | Lug, Torque (Note: Not Available for Purchase) | |
| 112 | 7026197 | 4 | Bolt 5/16in-18NC x 1-1/4in | |
| 113 | See Note | NSS | O-Ring (Note: Use Item 125) | |
| 114 | See Note | NSS | O-Ring (Note: Use Item 125) | |
| 115 | See Note | NSS | Bearing (Note: Use Item 125) | |
| 116 | 7024404 | 1 | Block Valve Assembly | |
| 117 | 7026505 | 1 | Plug | |
| 118 | 7026506 | 1 | Valve, Check | |
| 119 | 7026507 | 1 | Plug | |
| 120 | | Ref | Plunger, Valve Options: | |
| 120 | 7026508 | 1 | Plunger, Valve **(SN 0300087000 through 0300113549)** | |
| 120 | 7024404 | 1 | Plunger, Valve **(SN 0300113550 through 0300138648)** | |
| 121 | 7026509 | 1 | Spring, Compression | |
| 122 | See Note | AR | Protective Netting (Not Shown) (Note: Not Available for Purchase) **(SN 0300087000 through 0300113550)** | |
| 125 | | Ref | Seal Kit Options: | |
| 125 | | Ref | Seal Kit **(SN 0300087000 through 0300113549)** | |
| 125 | 7026510 | 1 | 2WS (Includes Items 103, 105, 106, 113, 114 & 115) | |
| 125 | 7026512 | 1 | 4WS (Includes Items 102, 103, 105, 106, 113, 114 & 115) | |
| 125 | | Ref | Seal Kit **(SN 0300113550 through 0300138648)** | |
| 125 | 70001248 | 1 | 2WS (Includes Items 102, 103, 105, 106, 113, 114 & 115) | |
| 125 | 70002212 | 1 | 4WS (Includes Items 102, 103, 105, 106, 113, 114 & 115) (was p/n 70001249) | |

## FIGURE 2-21. ROTARY COUPLING INSTALLATIONS (USA BUILT MACHINES AND CHINA BUILT MACHINES) (SN 0300138649 through 0300177361, SN B300000100 through B300005764)

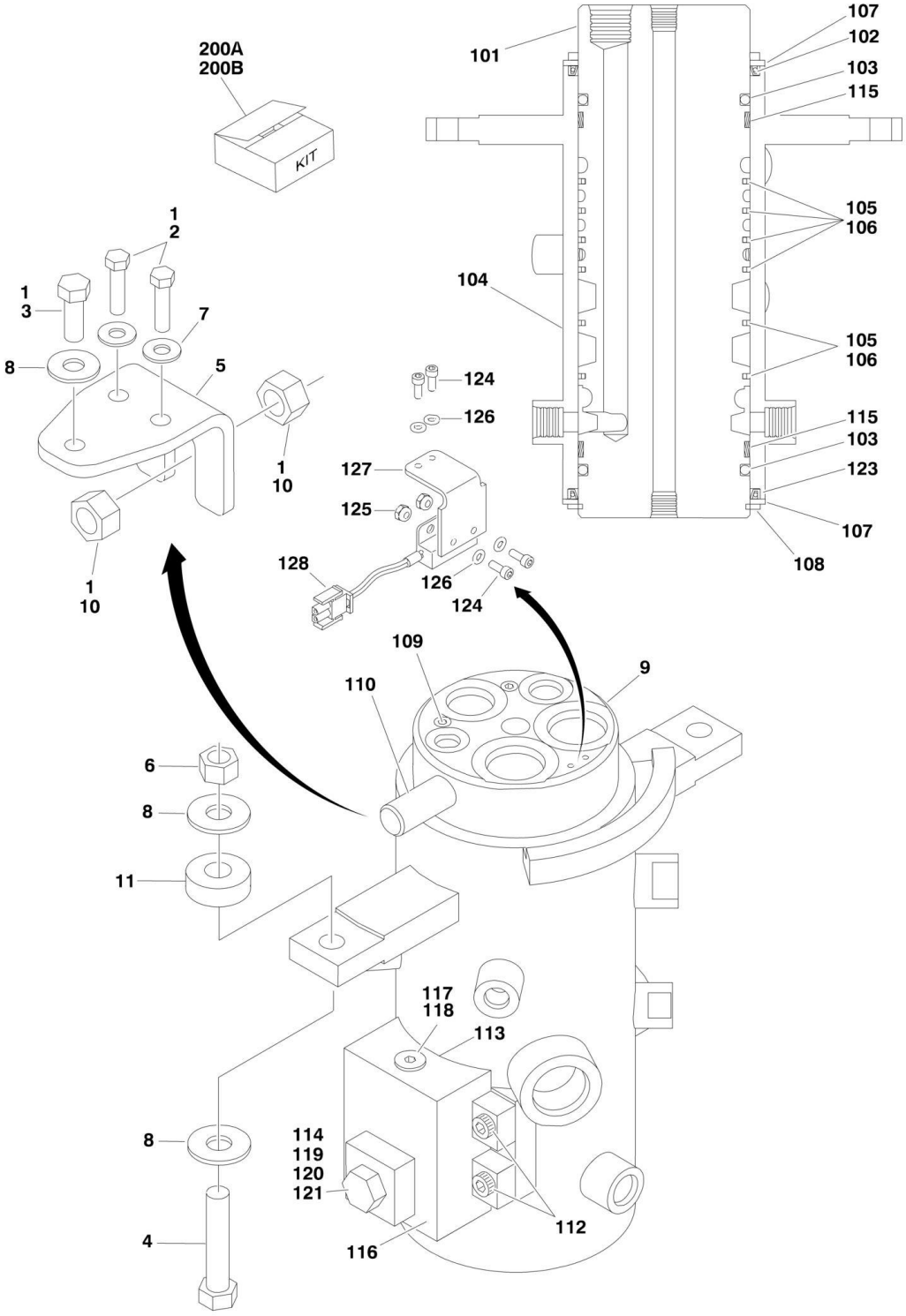

## FIGURE 2-21. ROTARY COUPLING INSTALLATIONS (USA BUILT MACHINES AND CHINA BUILT MACHINES) (SN 0300138649 through 0300177361, SN B300000100 through B300005764)

| ITEM | PART NUMBER | QTY | DESCRIPTION | REV |
|---|---|---|---|---|
| | | Ref | **ROTARY COUPLING INSTALLATION** | |
| | 1001107498 | Ref | **Rotary Coupling Installation 2WS** | B |
| | 1001107499 | Ref | **Rotary Coupling Installation 4WS** | B |
| 1 | 0100011 | AR | Compound, Locking | |
| 2 | 0641612 | 2 | Bolt 3/8in-16NC x 1-1/2in | |
| 3 | 0641811 | 1 | Bolt 1/2in-13NC x 1-3/8in | |
| 4 | 0641820 | 2 | Bolt 1/2in-13NC x 2-1/2in | |
| 4 | 0641824 | 2 | Bolt 1/2in-13NC x 3in | |
| 5 | 0903056 | 1 | Bracket | |
| 6 | 3271805 | 2 | Locknut 1/2in-13NC | |
| 7 | 4751600 | 2 | Flatwasher 3/8in Regular | |
| 8 | 4751800 | 5 | Flatwasher 1/2in Regular | |
| 9 | | Ref | Coupling, Rotary Options (See Items 101-121 for Breakdown): | |
| 9 | 1001106974 | 1 | Coupling, Rotary 2WS | |
| 9 | 1001106975 | 1 | Coupling, Rotary 4WS | |
| 10 | 3322201 | 2 | Locknut 3/4in x 16NF | |
| 11 | 1001178789 | 2 | Shim **(SN B300000969 through B300005764, Excluding B300005620)** | |
| | | Ref | **ROTARY COUPLING ASSEMBLY** | |
| | 1001106974 | Ref | **Rotary Coupling Assembly 2WS** | B |
| | 1001106975 | Ref | **Rotary Coupling Assembly 4WS** | B |
| 101 | See Note | NSS | Body (Note: Not Available - Purchase Complete Assembly) | |
| 102 | | Ref | Seal Options: | |
| 102 | 70001248 | 1 | Seal 2WS | |
| 102 | 70002212 | 1 | Seal 4WS | |
| 103 | See Note | NSS | O-Ring (Note: Use Item 200A or 200B) | |
| 104 | See Note | NSS | Housing (Note: Not Available - Purchase Complete Assembly) | |
| 105 | | Ref | Seal, Cap | |
| 105 | 70001248 | 6 | Seal, Cap 2WS | |
| 105 | 70002212 | 9 | Seal, Cap 4WS | |
| 106 | | Ref | O-Ring | |
| 106 | 70001248 | 6 | O-Ring 2WS | |
| 106 | 70002212 | 9 | O-Ring 4WS | |
| 107 | | Ref | Ring Options: | |
| 107 | 7026503 | 2 | Ring 2WS | |
| 107 | 7026511 | 2 | Ring 4WS | |
| 108 | | Ref | Ring, Retaining Options: | |
| 108 | 7026504 | 1 | Ring, Retaining 2WS | |
| 108 | 7013189 | 1 | Ring, Retaining 4WS | |
| 109 | | Ref | Plug Options: | |
| 109 | 80934561 | 2 | Plug 2WS | |
| 109 | 80934561 | 4 | Plug 4WS | |
| 110 | See Note | NSS | Lug, Torque (Note: Not Available for Purchase) | |
| 112 | 7026197 | 4 | Bolt 5/16in-18NC x 1-1/4in | |
| 113 | See Note | NSS | O-Ring (Note: Use Item 200A or 200B) | |
| 114 | See Note | NSS | O-Ring (Note: Use Item 200A or 200B) | |
| 115 | See Note | NSS | Bearing (Note: Use Item 200A or 200B) | |
| 116 | 7024404 | 1 | Block Valve Assembly | |
| 117 | 7026505 | 1 | Plug | |

# SECTION 2 - TURNTABLE

| ITEM | PART NUMBER | QTY | DESCRIPTION | REV |
|---|---|---|---|---|
| 118 | 7026506 | 1 | Valve, Check | |
| 119 | 7026507 | 1 | Plug | |
| 120 | 7024404 | 1 | Plunger, Valve (Note: Not Available for Purchase) | |
| 121 | 7026509 | 1 | Spring, Compression | |
| 122 | See Note | NSS | Protective Netting (Not Shown) (Note: Not Available for Purchase) | |
| 123 | | Ref | Seal Options: | |
| 123 | 70001248 | 1 | Seal 2WS | |
| 123 | 70002212 | 1 | Seal 4WS | |
| 124 | See Note | NSS | Screw, Socket Head #10-24NC x 1/2in (Note: Not Available for Purchase) | |
| 125 | See Note | NSS | Locknut #10-24NC (Note: Not Available for Purchase) | |
| 126 | See Note | NSS | Flatwasher #10 (Note: Not Available for Purchase) | |
| 127 | 70003454 | 1 | Bracket, Switch Mounting | |
| 128 | 4360517 | 1 | Switch, Proximity | |
| 200 | | Ref | Seal Kit Options: | |
| 200A | 70001248 | 1 | 2WS (Includes Items 102, 103, 105, 106, 113, 114, 115 & 123) | |
| 200B | 70002212 | 1 | 4WS (Includes Items 102, 103, 105, 106, 113, 114, 115 & 123) | |

## FIGURE 2-22. GROUND CONTROL BOX ASSEMBLY (WITHOUT UGM)

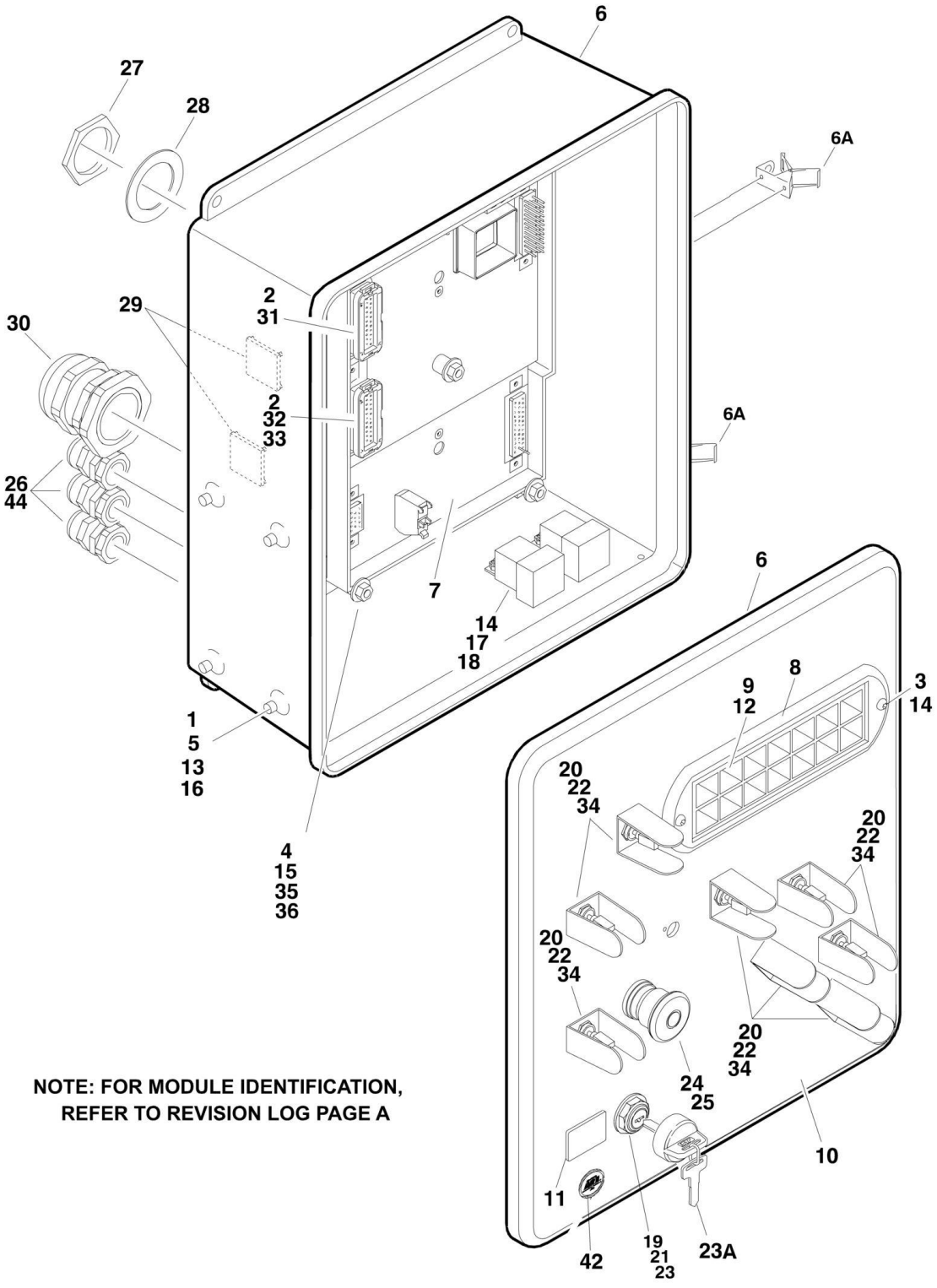

## FIGURE 2-22. GROUND CONTROL BOX ASSEMBLY (WITHOUT UGM)

| ITEM | PART NUMBER | QTY | DESCRIPTION | REV |
|---|---|---|---|---|
| | | Ref | **Note: Only Available on USA Built Machines.** | |
| | | Ref | **GROUND CONTROL BOX ASSEMBLIES** | |
| | | Ref | **Ground Control Box Assemblies 600A:** | |
| | | Ref | **Ground Control Box Assemblies (SN 0300087000 through 0300099060)** | |
| | 0861700 | Ref | **Caterpillar Engine (ANSI and ANSI Export Specs)** | B |
| | 0861702 | Ref | **Caterpillar Engine (Australian and CE Specs)** | B |
| | 0861689 | Ref | **Deutz Engine (ANSI and ANSI Export Specs)** | B |
| | 0861691 | Ref | **Deutz Engine (Australian and CE Specs)** | B |
| | 0861704 | Ref | **Ford Engine (ANSI and ANSI Export Specs)** | B |
| | 0861786 | Ref | **GM Engine (ANSI and ANSI Export Specs)** | B |
| | | Ref | **Ground Control Box Assemblies (SN 0300099061 through 0300177361)** | |
| | 1810061 | Ref | **Caterpillar Engine (ANSI and ANSI Export Specs)** | D |
| | 1810062 | Ref | **Caterpillar Engine (Australian and CE Specs)** | E |
| | 1810059 | Ref | **Deutz Engine (ANSI and ANSI Export Specs)** | C |
| | 1810060 | Ref | **Deutz Engine (Australian and CE Specs)** | C |
| | 1810058 | Ref | **GM Engine (ANSI and ANSI Export Specs)** | C |
| | | Ref | **Ground Control Box Assemblies 600AJ:** | |
| | | Ref | **Ground Control Box Assemblies (SN 0300087000 through 0300099060)** | |
| | 0861701 | Ref | **Caterpillar Engine (ANSI and ANSI Export Specs)** | B |
| | 0861703 | Ref | **Caterpillar Engine (Australian and CE Specs)** | B |
| | 0861690 | Ref | **Deutz Engine (ANSI and ANSI Export Specs)** | B |
| | 0861692 | Ref | **Deutz Engine (ANSI and ANSI Export Specs)** | B |
| | 0861705 | Ref | **Ford Engine (ANSI and ANSI Export Specs)** | B |
| | 0861787 | Ref | **GM Engine (ANSI and ANSI Export Specs)** | B |
| | | Ref | **Ground Control Box Assemblies (SN 0300099061 through 0300177361)** | |
| | 1810066 | Ref | **Caterpillar Engine (ANSI and ANSI Export Specs)** | D |
| | 1810067 | Ref | **Caterpillar Engine (Australian and CE Specs)** | E |
| | 1810064 | Ref | **Deutz Engine (ANSI and ANSI Export Specs)** | C |
| | 1810065 | Ref | **Deutz Engine (ANSI and ANSI Export Specs)** | C |
| | 1810065 | Ref | **Deutz Engine (ANSI and ANSI Export Specs)** | B |
| | 1810063 | Ref | **GM Engine (ANSI and ANSI Export Specs)** | C |
| 1 | 0100011 | AR | Compound, Locking | |
| 2 | 0100048 | AR | Grease, Dielectric | |
| 3 | 0630518 | 2 | Capscrew, Button Head | |
| 4 | 0630548 | 5 | Tap, Bolt 2-1/2in | |
| 5 | 0641506 | 4 | Bolt 5/16in-18NC x 3/4in | |
| 6 | 0861407 | 1 | Box, Fiberglass | |
| 6A | 7020246 | 2 | Latch | |
| 7 | | Ref | Module, Ground Control Options | |
| | | Ref | Note: Re-calibration Required when Replaced. | |
| 7 | 1600364 | 1 | Ford Engine | |
| 7 | 1600364 | 1 | Caterpillar Engine **(SN 0300087000 through 0300099060)** | |
| 7 | 1600411 | 1 | Caterpillar Engine **(SN 0300099061 through 0300177361)** | |
| 7 | 1600411 | 1 | Deutz/GM Engine | |
| 8 | 1670829 | 1 | Bezel | |
| 9 | | Ref | Decal - Ground Control Display Options: | |

| ITEM | PART NUMBER | QTY | DESCRIPTION | REV |
|---|---|---|---|---|
| 9 | 1705753 | 1 | Decal **(SN 0300087000 through 0300099060)** | |
| 9 | 1706712 | 1 | Decal **(SN 0300099061 through 0300177361)** | |
| 10 | | Ref | Decal - Faceplate Options: | |
| 10 | 1703467 | 1 | Decal 600A **(SN 0300087000 through 0300099060)** | |
| 10 | 1706912 | 1 | Decal 600A **(SN 0300099061 through 0300135300)** | |
| 10 | 1001102599 | 1 | Decal 600A **(SN 0300135301 through 0300177361)** | |
| 10 | 1703468 | 1 | Decal 600AJ **(SN 0300087000 through 0300099060)** | |
| 10 | 1706913 | 1 | Decal 600AJ **(SN 0300099061 through 0300135300)** | |
| 10 | 1001102600 | 1 | Decal 600AJ **(SN 0300135301 through 0300177361)** | |
| 11 | 2420172 | 1 | Gauge, Hourmeter | |
| 12 | 2760105 | 1 | Housing, Display Light | |
| 13 | 3300205 | 4 | Nut, Retainer | |
| 14 | 3300408 | AR | Locknut, Plastic Insert | |
| 15 | 3311401 | AR | Nut 1/4in-20NC | |
| 16 | 3539219 | 1 | Plate, Reinforcement | |
| 17 | 3740049 | AR | Relay | |
| 18 | 3900268 | 2 | Screw, Flange #10 x 1/2in | |
| 19 | 3910804 | 6 | Screw #8-32NC x 1/4in | |
| 20 | 4060906 | AR | Shield, Toggle Switch | |
| 20 | | Ref | Shield **(SN 0300087000 through 0300135300)** | |
| 20 | | Ref | Shield **(SN 0300135301 through 0300177361)** | |
| 21 | 4070987 | 1 | Shim (.125in) | |
| 22 | 4360328 | AR | Switch, Toggle | |
| 23 | | Ref | Switch, Key Options: | |
| 23 | 4360469 | 1 | ANSI and ANSI Export Specs | |
| 23 | 4360470 | 1 | Australian and CE Specs | |
| 23A | 2860030 | 1 | Key, Replacement (Fits Both Switches) | |
| 24 | 4360475 | 1 | Switch, Emergency Stop | |
| 25 | 4360476 | 1 | Switch, Contact Block | |
| 26 | 4460426 | AR | Terminal, Strain Relief | |
| 27 | 4460470 | 1 | Nut, Terminal | |
| 28 | 4460471 | 1 | Lockwasher, Terminal | |
| 29 | 4460488 | AR | Mounting Base, Terminal | |
| 30 | 4460526 | 1 | Connector, Strain Relief | |
| 31 | 4460874 | 1 | Connector, Natural | |
| 32 | 4460875 | 1 | Connector, Gray | |
| 33 | 4460905 | 4 | Connector, Amp Seal Plug | |
| 34 | 4740444 | AR | Washer, Special | |
| 35 | 4751400 | 20 | Flatwasher 1/4in Regular | |
| 36 | 4761400 | AR | Lockwasher 1/4in | |
| 42 | 1705132 | 1 | Decal - Control ADE **(SN 0300087000 through 0300099061)** | |
| 44 | 3520035 | AR | Plug, Cap | |

## FIGURE 2-23. GROUND CONTROL BOX ASSEMBLY (WITH UGM) (SN 0300087000 through 0300177361, SN B300000100 through B300001392)

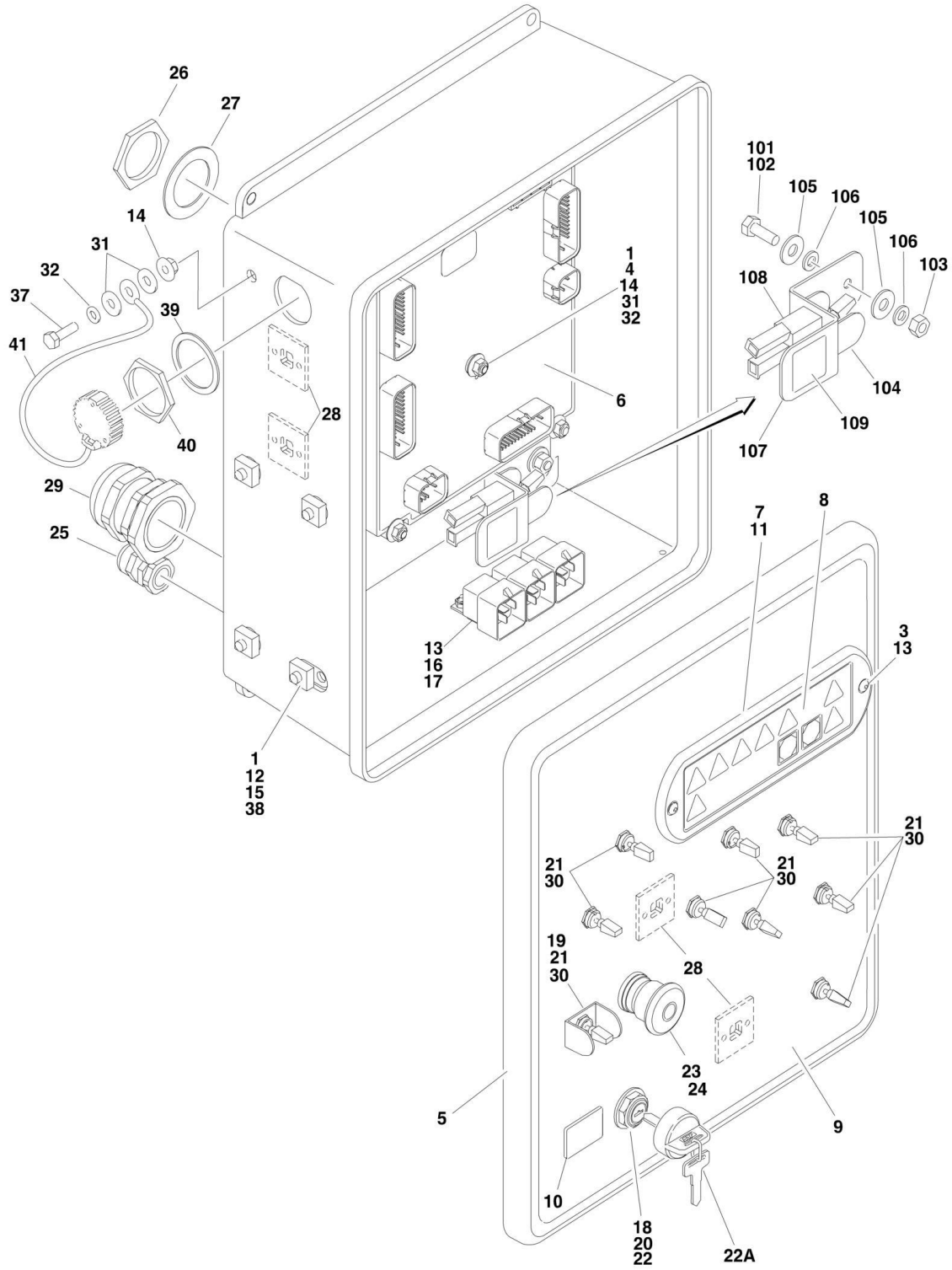

## FIGURE 2-23. GROUND CONTROL BOX ASSEMBLY (WITH UGM) (SN 0300087000 through 0300177361, SN B300000100 through B300001392)

| ITEM | PART NUMBER | QTY | DESCRIPTION | REV |
|---|---|---|---|---|
| | | Ref | **GROUND CONTROL BOX ASSEMBLIES** | |
| | | Ref | **Ground Control Box Assemblies 600A:** | |
| | 1001110373 | Ref | **Caterpillar Engine (ANSI and ANSI Export Specs)** | B |
| | 1001110375 | Ref | **Caterpillar Engine (Australian and ANSI Export Spec USA Built Machines) (SN 0300087000 through 0300148899)** | B |
| | 1001110375 | Ref | **Caterpillar Engine (Australian and ANSI Export Spec China Built Machines) (SN B300000100 through B300000258)** | B |
| | 1001110373 | Ref | **Caterpillar Engine (Australian and ANSI Export Spec USA Built Machines) (SN 0300148900 through 0300177361)** | B |
| | 1001110373 | Ref | **Caterpillar Engine (Australian and ANSI Export Spec China Built Machines) (SN B300000259 through B300001392)** | B |
| | 1001110375 | Ref | **Caterpillar Engine (ANSI Export and CE Specs)** | B |
| | 1001110368 | Ref | **Deutz Engine (ANSI and ANSI Export Specs)** | B |
| | 1001110371 | Ref | **Deutz Engine (Australian and ANSI Export Spec USA Built Machines) (SN 0300087000 through 0300148899)** | B |
| | 1001110371 | Ref | **Deutz Engine (Australian and ANSI Export Spec China Built Machines) (SN B300000100 through B300000258)** | B |
| | 1001110368 | Ref | **Deutz Engine (Australian and ANSI Export Spec USA Built Machines) (SN 0300148900 through 0300177361)** | B |
| | 1001110368 | Ref | **Deutz Engine (Australian and ANSI Export Spec China Built Machines) (SN B300000259 through B300001392)** | B |
| | 1001110371 | Ref | **Deutz Engine (ANSI Export and CE Specs)** | B |
| | 1001110367 | Ref | **GM Engine (ANSI and ANSI Export Specs)** | B |
| | | Ref | **Ground Control Box Assemblies 600AJ:** | |
| | 1001110374 | Ref | **Caterpillar Engine (ANSI and ANSI Export Specs)** | B |
| | 1001110376 | Ref | **Caterpillar Engine (Australian and ANSI Export Spec USA Built Machines) (SN 0300087000 through 0300148899)** | B |
| | 1001110376 | Ref | **Caterpillar Engine (Australian and ANSI Export Spec China Built Machines) (SN B300000100 through B300000258)** | B |
| | 1001110374 | Ref | **Caterpillar Engine (Australian and ANSI Export Spec USA Built Machines) (SN 0300148900 through 0300177361)** | B |
| | 1001110374 | Ref | **Caterpillar Engine (Australian and ANSI Export Spec China Built Machines) (SN B300000259 through B300001392)** | B |
| | 1001110376 | Ref | **Caterpillar Engine (ANSI Export and CE Specs)** | B |
| | 1001110370 | Ref | **Deutz Engine (ANSI and ANSI Export Specs)** | B |
| | 1001110372 | Ref | **Deutz Engine (Australian and ANSI Export Spec USA Built Machines) (SN 0300087000 through 0300148899)** | B |
| | 1001110372 | Ref | **Deutz Engine (Australian and ANSI Export Spec China Built Machines) (SN B300000100 through B300000258)** | B |
| | 1001110370 | Ref | **Deutz Engine (Australian and ANSI Export Spec USA Built Machines) (SN 0300148900 through 0300177361)** | B |
| | 1001110370 | Ref | **Deutz Engine (Australian and ANSI Export Spec China Built Machines) (SN B300000259 through B300001392)** | B |
| | 1001110372 | Ref | **Deutz Engine (ANSI Export and CE Specs)** | B |
| | 1001110369 | Ref | **GM Engine (ANSI and ANSI Export Specs)** | B |
| 1 | 0100011 | AR | Compound, Locking | |
| 2 | 0100048 | AR | Grease, Dielectric | |
| 3 | 0630518 | 2 | Capscrew, Button Head | |
| 4 | 0630548 | 5 | Tap, Bolt 2-1/2in | |
| 5 | 1001111021 | 1 | Box, Fiberglass | |
| 6 | 1001103667 | 1 | Module, Ground Control Options | |
| | | Ref | Note: Re-calibration Required when Replaced. | |

| ITEM | PART NUMBER | QTY | DESCRIPTION | REV |
|---|---|---|---|---|
| 7 | 1670829 | 1 | Bezel | |
| 8 | 1706712 | 1 | Decal - Ground Control Display | |
| 9 | | Ref | Decal - Faceplate Options: | |
| 9 | 1001102599 | 1 | Decal 600A | |
| 9 | 1001102600 | 1 | Decal 600AJ | |
| 10 | 2420172 | 1 | Gauge, Hourmeter | |
| 11 | 2760105 | 1 | Housing, Display Light | |
| 12 | 3300205 | 4 | Nut, Retainer | |
| 13 | 3300408 | 5 | Locknut, Plastic Insert | |
| 14 | 77143013 | 11 | Nut 1/4in-20NC, Whiz Lock | |
| 15 | 3539219 | 1 | Plate, Reinforcement | |
| 16 | 3740049 | Ref | Relay Options: | |
| 16 | 3740049 | 3 | Relay Caterpillar Engine | |
| 16 | 3740049 | 2 | Relay GM Engine | |
| 17 | 3900268 | AR | Screw, Flange #10 x 1/2in | |
| 18 | 3910804 | 6 | Screw #8-32NC x 1/4in | |
| 19 | 4060906 | 1 | Shield, Toggle Switch | |
| 20 | | Ref | Shim (.125in Dia) Options: | |
| 20 | 4070987 | 1 | Shim (.015in Thick) | |
| 20 | 1001151393 | 1 | Shim (.063in Thick) | |
| 21 | 4360328 | Ref | Switch, Toggle Options: | |
| 21 | 4360328 | 8 | Switch, Toggle 600A | |
| 21 | 4360328 | 9 | Switch, Toggle 600AJ | |
| 22 | | Ref | Switch, Key Options: | |
| 22 | 4360469 | 1 | ANSI and ANSI Export Specs | |
| 22 | 4360470 | 1 | Australian and ANSI Export Spec USA Built Machines **(SN 0300087000 through 0300148899)** | |
| 22 | 4360469 | 1 | Australian and ANSI Export Spec USA Built Machines **(SN 0300148900 through 0300177361)** | |
| 22 | 4360470 | 1 | Australian and ANSI Export Spec China Built Machines **(SN B300000100 through B300000258)** | |
| 22 | 4360469 | 1 | Australian and ANSI Export Spec China Built Machines **(SN B300000259 through B300001392)** | |
| 22 | 4360470 | 1 | ANSI Export and CE Specs | |
| 22A | 2860030 | 1 | Key, Replacement (Fits Both Switches) | |
| 23 | 4360475 | 1 | Switch, Emergency Stop | |
| 24 | 4360476 | 1 | Switch, Contact Block | |
| 25 | 4460426 | 1 | Terminal, Strain Relief | |
| 26 | 4460470 | 1 | Nut, Terminal | |
| 27 | 4460471 | 1 | Lockwasher, Terminal | |
| 28 | 4460488 | 6 | Mounting Base, Terminal | |
| 29 | 4460526 | 1 | Connector, Strain Relief | |
| 30 | 4740444 | AR | Washer, Special | |
| 31 | 4751400 | 12 | Flatwasher 1/4in Regular | |
| 32 | 4761400 | 6 | Lockwasher 1/4in | |
| 33 | 4923224 | 1 | Harness, Valve (See ELECTRICAL SECTION for Breakdown) (Not Shown) | |
| 34 | | Ref | Harness, Engine (See ELECTRICAL SECTION for Breakdown) (Not Shown) | |
| 34 | 1001110362 | 1 | Caterpillar Engine | |
| 34 | 1001110361 | 1 | Deutz Engine | |
| 34 | 1001110359 | 1 | GM Engine | |
| 35 | 1001110379 | 1 | Harness, Ground Control Box (See ELECTRICAL SECTION for | |

| ITEM | PART NUMBER | QTY | DESCRIPTION | REV |
|---|---|---|---|---|
| | | | Breakdown) (Not Shown) | |
| 37 | 0641407 | 1 | Bolt 1/4in-20NC x 7/8in | |
| 38 | 0641506 | 4 | Bolt 5/16in-18NC x 3/4in | |
| 39 | 4460496 | 1 | Lockwasher, Terminal | |
| 40 | 4460497 | 1 | Nut, Terminal | |
| 41 | 1001106736 | 1 | Cap, Dust | |
| | 1001115918 | Ref | **CRIBBING ENABLE SWITCH INSTALLATION** | A |
| 101 | 0100011 | AR | Compound, Locking | |
| 102 | 0641406 | 1 | Bolt 1/4in-20NC x 3/4in | |
| 103 | 3311401 | 1 | Nut 1/4in-20NC | |
| 104 | 4060906 | 1 | Guard, Switch | |
| 105 | 4751400 | 2 | Flatwasher 1/4in Regular | |
| 106 | 4761400 | 2 | Lockwasher 1/4in | |
| 107 | 1001115889 | 1 | Bracket | |
| 108 | 1001115915 | 1 | Cribbing Enable Harness | |
| 108 | 4360336 | 1 | Switch, Toggle | |
| 108 | 4460226 | 2 | Socket, Female | |
| 109 | 1001115967 | 1 | Decal - Cribbing | |

## FIGURE 2-24. GROUND CONTROL BOX ASSEMBLY (WITH UGM) (SN B300001393 through B300001985)

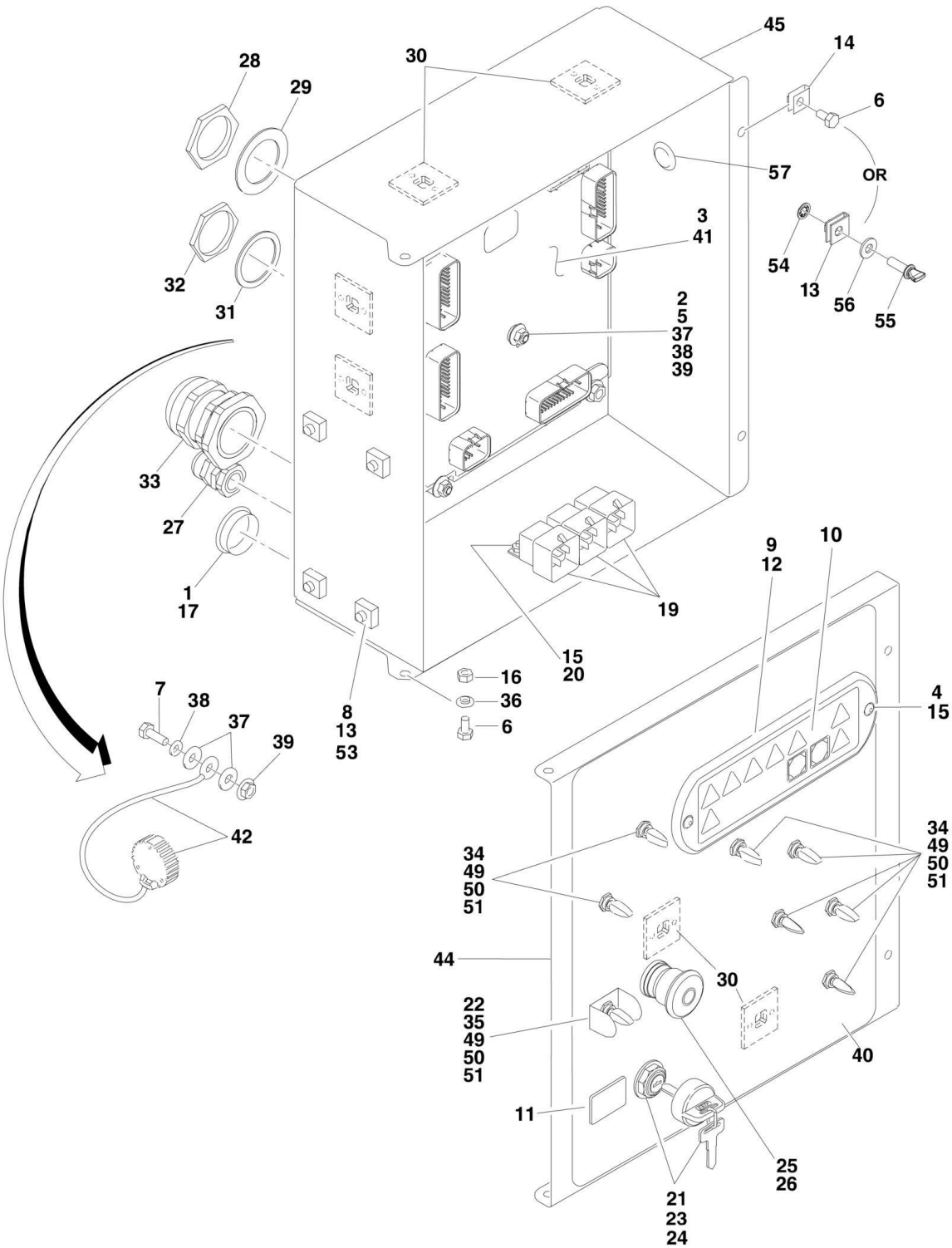

## FIGURE 2-24. GROUND CONTROL BOX ASSEMBLY (WITH UGM) (SN B300001393 through B300001985)

| ITEM | PART NUMBER | QTY | DESCRIPTION | REV |
|---|---|---|---|---|
| | 1001154671 | Ref | **GROUND CONTROL BOX ASSEMBLY - 600A DEUTZ D2011 ENGINE** | D |
| | 1001154673 | Ref | **GROUND CONTROL BOX ASSEMBLY - 600AJ DEUTZ D2011 ENGINE** | D |
| 1 | 0100009 | AR | Sealant | |
| 2 | 0100011 | AR | Compound, Locking | |
| 3 | 0100048 | AR | Grease, Dielectric | |
| 4 | 0630518 | 2 | Capscrew, Button Head | |
| 5 | 0630548 | 5 | Bolt, 2-1/2in Tap | |
| 6 | 0641404 | 4 | Bolt 1/4-20 x 1/2 | |
| 7 | 0641407 | 1 | Bolt 1/4-20 x 7/8 | |
| 8 | 0641507 | 4 | Bolt 5/16-18 x 7/8 | |
| 9 | 1670829 | 1 | Bezel | |
| 10 | 1706712 | 1 | Decal - Ground Control Display | |
| 11 | 2420172 | 1 | Gauge, Hourmeter | |
| 12 | 2760105 | 1 | Housing, Display Light | |
| 13 | 3300205 | 4 | Nut, Retainer | |
| 14 | 3300353 | 2 | Nut, Tinnerman | |
| 15 | 3300408 | 4 | Locknut, Plastic Insert | |
| 16 | 3311405 | 2 | Nut 1/4-20 | |
| 17 | 3520035 | 1 | Plug, Cap | |
| 19 | 3740049 | AR | Relay | |
| 20 | 3900268 | AR | Screw #10 x 1/2 | |
| 21 | 3910804 | 4 | Screw #8-32 x 1/4 | |
| 22 | 4060906 | 1 | Shield, Toggle Switch | |
| 23 | 4070991 | 1 | Shim | |
| 24 | 4360469 | 1 | Switch, key - All Specs except CE Specs | |
| 24 | 2860030 | 1 | Key Replacement - All Specs | |
| 25 | 4360475 | 1 | Switch, Emergency Stop | |
| 25 | 7020175 | 1 | Cap, Mushroom | |
| 25 | 7020176 | 1 | Block, Contact | |
| 26 | 4360476 | 1 | Switch, Contact Block | |
| 27 | 4460426 | 1 | Connector, Strain Relief | |
| 28 | 4460470 | 1 | Nut, Terminal | |
| 29 | 4460471 | 1 | Lockwasher, Terminal | |
| 30 | 4460488 | 6 | Mounting Base, Terminal | |
| 31 | 4460496 | 1 | Washer, Terminal | |
| 32 | 4460497 | 1 | Nut, Terminal | |
| 33 | 4460526 | 1 | Connector, Strain Relief | |
| 34 | 4740397 | 7 | Spacer | |
| 35 | 4740444 | 1 | Washer | |
| 36 | 4740518 | 2 | Washer | |
| 37 | 4751400 | 12 | Washer 1/4 | |
| 38 | 4761400 | 6 | Washer 1/4 | |
| 39 | 77143013 | 11 | Nut 1/4-20 | |
| 40 | 1001102599 | 1 | Decal - Face Plate 600A | |
| 40 | 1001102600 | 1 | Decal - Face Plate 600AJ | |
| 41 | 1001103667 | 1 | Module, Ground Control (Note: Re-calibration Required when Replaced) | |

| ITEM | PART NUMBER | QTY | DESCRIPTION | REV |
|---|---|---|---|---|
| 42 | 1001106736 | 1 | Cap, Dust | |
| 43 | 1001110379 | 1 | Harness, Ground Control Box (Not Shown - See ELECTRICAL SECTION for Breakdown) | |
| 44 | 1001152173 | 1 | Lid | |
| 45 | 1001152175 | 1 | Box | |
| 46 | 1001154390 | 1 | Engine Harness - Deutz D2011 (Not Shown - See ELECTRICAL SECTION for Breakdown) | |
| 47 | 1001154392 | 1 | Harness, Valve (Not Shown - See ELECTRICAL SECTION for Breakdown) | |
| 49 | 1001155043 | AR | Washer | |
| 50 | 1001155044 | AR | Nut 15/32-32 | |
| 51 | 1001155045 | AR | Switch, Toggle | |
| 53 | 4891500 | 4 | Washer 5/16 | |
| 54 | 1001188874 | 2 | Nut | |
| 55 | 1001103308 | 2 | Screw 1/4 | |
| 56 | 4711400 | 2 | Washer 1/4 | |
| 57 | 3520031 | 2 | Plug | |

## FIGURE 2-25. GROUND CONTROL BOX ASSEMBLY (WITH UGM) (SN B300001986 through B300005764)

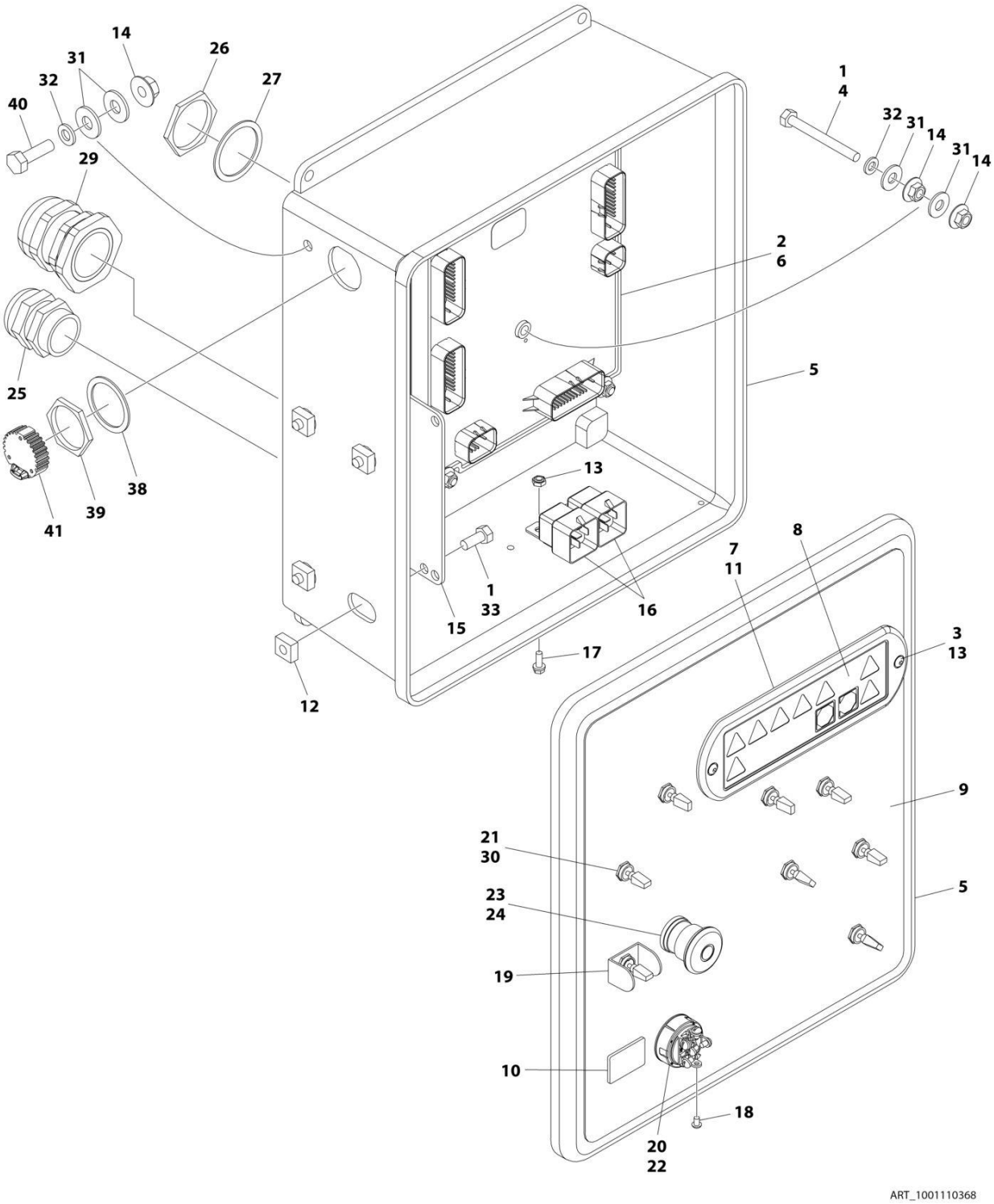

## FIGURE 2-25. GROUND CONTROL BOX ASSEMBLY (WITH UGM) (SN B300001986 through B300005764)

| ITEM | PART NUMBER | QTY | DESCRIPTION | REV |
|---|---|---|---|---|
| | 1001110368 | Ref | **GROUND CONTROL BOX ASSEMBLY - 600A DEUTZ D2011 ENGINE** | B |
| | 1001110373 | Ref | **GROUND CONTROL BOX ASSEMBLY - 600A CATERPILLAR ENGINE** | B |
| | 1001110370 | Ref | **GROUND CONTROL BOX ASSEMBLY - 600AJ DEUTZ D2011 ENGINE** | B |
| | 1001110374 | Ref | **GROUND CONTROL BOX ASSEMBLY - 600AJ CATERPILLAR ENGINE** | B |
| 1 | 0100011 | AR | Compound, Locking | |
| 2 | 0100048 | AR | Grease, Dielectric | |
| 3 | 0630518 | 2 | Capscrew, Button Head | |
| 4 | 0630548 | 5 | Bolt, 2-1/2in Tap | |
| 5 | 1001111021 | 1 | Box, Fiberglass | |
| 6 | 1001103667 | 1 | Module, Ground Control (Note: Re-calibration Required when Replaced) | |
| 7 | 1670829 | 1 | Bezel | |
| 8 | 1706712 | 1 | Decal - Ground Control Display | |
| 9 | 1001102599 | 1 | Decal - Face Plate 600A | |
| 9 | 1001102600 | 1 | Decal - Face Plate 600AJ | |
| 10 | 2420172 | 1 | Gauge, Hourmeter | |
| 11 | 2760105 | 1 | Housing, Display Light | |
| 12 | 3300205 | 4 | Nut, Retainer | |
| 13 | 3300408 | 4 | Locknut, Plastic Insert | |
| 14 | 77143013 | 11 | Nut 1/4-20 | |
| 15 | 3539219 | 1 | Plate, Reinforcement | |
| 16 | 3740049 | 2 | Relay | |
| 17 | 3900268 | 2 | Screw #10 x 1/2 | |
| 18 | 3910804 | 6 | Screw #8-32 x 1/4 | |
| 19 | 4060906 | 1 | Shield, Toggle Switch | |
| 20 | 1001151393 | 1 | Shim (.063in Thick) | |
| 21 | 4360328 | 8 | Switch, Toggle | |
| 22 | 4360469 | 1 | Switch, Key - All Specs except CE Specs | |
| 22 | 2860030 | 1 | Key Replacement - All Specs | |
| 23 | 4360475 | 1 | Switch, Emergency Stop | |
| 23 | 7020175 | 1 | Cap, Mushroom | |
| 23 | 7020176 | 1 | Block, Contact | |
| 24 | 4360476 | 1 | Switch, Contact Block | |
| 25 | 4460426 | 1 | Connector, Strain Relief | |
| 26 | 4460470 | 1 | Nut, Terminal | |
| 27 | 4460471 | 1 | Lockwasher, Terminal | |
| 28 | 4460488 | 6 | Mounting Base, Terminal (Not Shown) | |
| 29 | 4460526 | 1 | Connector, Strain Relief | |
| 30 | 4740444 | 4 | Washer | |
| 31 | 4751400 | 12 | Washer 1/4 | |
| 32 | 4761400 | 6 | Washer 1/4 | |
| 33 | 0641506 | 4 | Bolt 5/16in-18NC x 3/4in | |
| 34 | 4923224 | 1 | Harness, Valve (Not Shown - See ELECTRICAL SECTION for Breakdown) | |
| 35 | 1001110361 | 1 | Engine Harness - Deutz D2011 (Not Shown - See ELECTRICAL SECTION for Breakdown) | |

| ITEM | PART NUMBER | QTY | DESCRIPTION | REV |
|---|---|---|---|---|
| 35 | 1001110362 | 1 | Engine Harness - Caterpillar (Not Shown - See ELECTRICAL SECTION for Breakdown) | |
| 36 | 1001110379 | 1 | Harness, Ground Control Box (Not Shown - See ELECTRICAL SECTION for Breakdown) | |
| 37 | 1001110381 | 1 | Ground Control Box Wiring Diagram - Deutz Engine (Not Shown) | |
| 38 | 4460496 | 1 | Washer, Terminal | |
| 39 | 4460497 | 1 | Nut, Terminal | |
| 40 | 0641407 | 1 | Bolt 1/4-20 x 7/8 | |
| 41 | 1001106736 | 1 | Cap, Dust | |

## FIGURE 2-26. ELECTRICAL OPTIONS INSTALLATIONS (TURNTABLE MOUNTED)

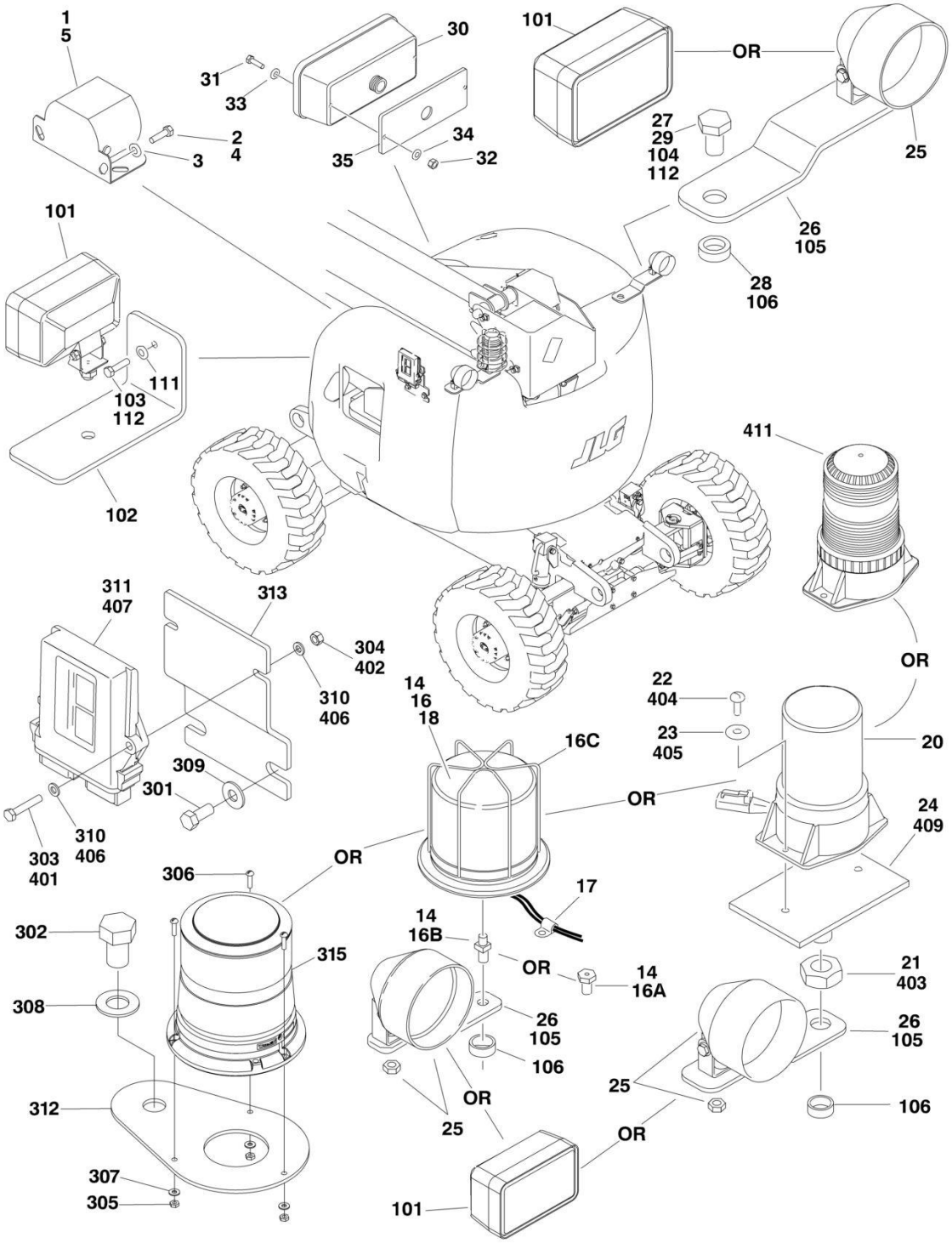

## FIGURE 2-26. ELECTRICAL OPTIONS INSTALLATIONS (TURNTABLE MOUNTED)

| ITEM | PART NUMBER | QTY | DESCRIPTION | REV |
|---|---|---|---|---|
| | 0270833 | Ref | **ALARM INSTALLATION (SN 0300087000 through 0300177361)** | C |
| | 0270833 | Ref | **ALARM INSTALLATION (SN B300000100 through B300001392)** | C |
| | 1001160074 | Ref | **ALARM INSTALLATION (SN B300001393 through B300001985)** | A |
| | 0270833 | Ref | **ALARM INSTALLATION (SN B300001986 through B300005764, Excluding B300005620)** | C |
| 1 | 0257887 | 1 | Alarm/Harness Assembly **(SN 0300087000 through 0300177361)** | |
| 1 | 0257887 | 1 | Alarm/Harness Assembly **(SN B300000100 through B300001392)** | |
| 1 | 0140032 | 1 | Alarm | |
| 1 | 2820035 | 6 in/15cm | Loom | |
| 1 | 4460424 | 1 | Plug | |
| 1 | 4460268 | 2 | Socket | |
| 1 | 0140044 | 1 | Alarm **(SN 0300001393 through 0300177361)** | |
| 2 | 0641406 | 2 | Bolt 1/4in-20NC x 3/4in | |
| 3 | 4711400 | 2 | Flatwasher 1/4in Thin | |
| 4 | 0100011 | AR | Compound, Locking | |
| 5 | 0100048 | AR | Sealant, Silicone | |
| | 0270805 | Ref | **STROBE LIGHT INSTALLATION (AMBER) (USA BUILT MACHINES) (OPTIONAL) (SN 0300087000 through 0300171709)** | D |
| | 0270805 | Ref | **STROBE LIGHT INSTALLATION (AMBER) (CHINA BUILT MACHINES) (OPTIONAL) (SN B300000100 through B300001392)** | D |
| 14 | 0100011 | AR | Compound, Locking | |
| 15 | 4240032 | 1 | Wire-Tie (Not Shown) | |
| 16 | 0272507 | 1 | Strobe Light/Guard/Harness Assembly (USA Built Machines) | C |
| 16 | 0272507 | 1 | Strobe Light/Guard/Harness Assembly (China Built Machines) **(SN B300000100 through B300000924)** | C |
| 16 | 1001150406 | 1 | Strobe Light/Guard/Harness Assembly (China Built Machines) **(SN B300000925 through B300005764, Excluding B300005620)** | |
| 16 | 2920130 | NLA | Lamp, Amber (Use p/n 0272507) | |
| 16 | 2920214 | NLA | Lamp, Amber (Use p/n 0272507) | |
| 16 | 2920161 | NLA | Lamp, Amber (Use p/n 1001150406) | |
| 16 | 7016380 | 1 | Bulb, Replacement used with ECCO Model 6640 | |
| 16 | 70001941 | 1 | Bulb, Replacement used with ECCO Model 6650 | |
| 16 | 7016319 | 1 | Bulb, Replacement used with ECCO Model 6220 | |
| 16 | 7016372 | 1 | Len, Replacement used with ECCO Model 6220 | |
| 16 | | Ref | Adapter Options: | |
| 16A | 0630491 | 1 | Adapter used with ECCO Model 6640 | |
| 16B | 0080241 | 1 | Adapter used with ECCO Model 6650 | |
| 16B | | Ref | Adapter used with ECCO Model 6220 (Note: Use Item 24) | |
| 16C | | Ref | Guard Options: | |
| 16C | 4060907 | 1 | Guard used with ECCO Model 6640 | |
| 16C | 2920215 | 1 | Guard used with ECCO Model 6650 | |
| 17 | 4460234 | 1 | Clamp (Not Shown) | |
| 18 | 0100048 | AR | Sealant, Silicone (Not Shown) | |
| | 1001149955 | Ref | **STROBE LIGHT INSTALLATION (AMBER) (USA BUILT MACHINES) (OPTIONAL) (SN 0300171710 through 0300177361)** | C |
| | 1001160077 | Ref | **STROBE LIGHT INSTALLATION (AMBER) (CHINA BUILT MACHINES) (OPTIONAL) (SN B300001393 through B300002247)** | B |
| | 1001149955 | Ref | **STROBE LIGHT INSTALLATION (AMBER) (CHINA BUILT MACHINES) (OPTIONAL) (SN B300002248 through B300005764, Excluding B300005620)** | B |
| | 1001150406 | Ref | **STROBE LIGHT ASSEMBLY (AMBER)** | B |
| 20 | 2920161 | 1 | Strobe Light/Harness Assembly | |

| ITEM | PART NUMBER | QTY | DESCRIPTION | REV |
|---|---|---|---|---|
| 20 | 7016319 | 1 | Bulb | |
| 20 | 7016372 | 1 | Lens | |
| 21 | 3312602 | 1 | Nut, Jam 1in-8NC | |
| 21 | 0100035 | AR | Compound, Locking | |
| 22 | 3900085 | 2 | Screw #10-32 x 1/2in | |
| 23 | 4751000 | 2 | Flatwasher #10 Regular | |
| 24 | 1001149994 | 1 | Mount Strobe | |
| 24A | 1001149818 | 1 | Harness, Strobe Light Extension (Not Shown - See ELECTRICAL SECTION for Breakdown) **(SN B300002266 through B300005764, Excluding B300005620)** | |
| | 0271552 | Ref | **LIGHTS INSTALLATIONS (OPTIONAL)** | E |
| 25 | 2920110 | 2 | Headlight | |
| 26 | 0902206 | 2 | Bracket, Mounting | |
| 27 | 0642612 | 1 | Bolt 1in-8NC x 1-1/2in | |
| 28 | 4220162 | 2 | Spacer (USA Built Machines) | |
| 28 | 4220162 | 2 | Spacer (China Built Machines) **(SN B300000100 through B300000868)** | |
| 28 | 4892600 | 1 | Washer 1 (China Built Machines) **(SN B300000869 through B300005764, Excluding B300005620)** | |
| 29 | 0100011 | AR | Compound, Locking | |
| 30 | 2920113 | 2 | Taillight | |
| 31 | 3911040 | 4 | Screw, Machine #10-24NC x 2-1/2 | |
| 32 | 3311005 | 4 | Nut #10-24NC | |
| 33 | 4751000 | 4 | Flatwasher #10 Regular | |
| 34 | 4740362 | 4 | Washer, Fender | |
| 35 | 3960461 | 2 | Gasket | |
| 37 | 4240032 | 18 | Tie-Strap (Not Shown) | |
| 38 | 4460234 | 18 | Mount, Tie-Strap (Not Shown) | |
| 39 | 4360336 | 1 | Switch Options (Not Shown - Located on Console): | |
| 39 | | Ref | Switch, Toggle (Not Shown - Located at Platform Console Box): | |
| 39 | 4360336 | 1 | Switch, Toggle (USA Built Machines) **(SN 0300087000 through 0300136622)** | |
| 39 | 4360522 | 1 | Switch, Push Button (USA Built Machines) **(SN 0300136623 through 0300177361)** | |
| 39 | 4360522 | 1 | Switch, Push Button (China Built Machines) **(SN B300000100 through B300005764, Excluding B300005620)** | |
| 40 | 3790012 | AR | O-Ring (Not Shown - Located on Console) (USA Built Machines) **(SN 0300087000 through 0300136623)** | |
| 41 | 3820001 | 11 | Pop Rivet (Not Shown) | |
| 42 | 1705170 | 1 | Decal - Lights (Not Shown - Located on Console) (USA Built Machines) **(SN 0300136623 through 0300177361)** | |
| 42 | 1705170 | 1 | Decal - Lights (Not Shown - Located on Console) (China Built Machines) **(SN B300000100 through B300005764, Excluding B300005620)** | |
| 43 | 3311605 | 1 | Nut 3/8 (Not Shown) | |
| | 0274200 | Ref | **CHASSIS ILLUMINATION LIGHT INSTALLATION** | B |
| 101 | 2920157 | 4 | Lamp, Worklight | |
| 102 | 0903119 | 2 | Bracket, Light Mounting | |
| 103 | 0642612 | AR | Bolt 1/4in-20NC x 7/8in | |
| 104 | 0642612 | 2 | Bolt 1in-8NC x 1-1/2in | |
| 105 | 0902206 | 2 | Bracket, Light Mounting | |
| 106 | 4220162 | 2 | Spacer | |
| 108 | 3790012 | AR | O-Ring (Not Shown - Located at Platform Console Box) | |
| 109 | | Ref | Switch Options (Not Shown - Located at Platform Console Box): | |

| ITEM | PART NUMBER | QTY | DESCRIPTION | REV |
|---|---|---|---|---|
| 109 | 4360336 | 1 | Switch, Toggle (USA Built Machines) **(SN 0300087000 through 0300136622)** | |
| 109 | 4360522 | 1 | Switch, Push Button (USA Built Machines) **(SN 0300136623 through 0300177361)** | |
| 109 | 4360522 | 1 | Switch, Push Button (China Built Machines) **(SN B300000100 through B300005764, Excluding B300005620)** | |
| 110 | 4460234 | 10 | Mount, Cable (Not Shown) | |
| 111 | 4751400 | 2 | Flatwasher 1/4in Regular | |
| 112 | 0100011 | AR | Compound, Locking | |
| 113 | 4240032 | 21 | Strap, Tie (Not Shown) | |
| 114 | 1705170 | 1 | Decal - Lights | |
| | 1001188857 | Ref | **STROBE LIGHT AND HARNESS INSTALLATION (BLUE) (OPTIONAL) (SN B300000100 through B300001697)** | C |
| | 1001207305 | Ref | **STROBE LIGHT AND HARNESS INSTALLATION (RED) (OPTIONAL) (SN B300000100 through B300001697)** | B |
| 301 | 0641607 | AR | Bolt 3/8 x 7/8 | |
| 302 | 0642612 | 1 | Bolt 1 x 1-1/2 | |
| 303 | 0700615 | 2 | Bolt M6 x 35 | |
| 303 | 0700617 | 2 | Bolt M6 x 45 | |
| 304 | 3290607 | 2 | Nut M6 | |
| 305 | 3311005 | 3 | Nut #10 | |
| 306 | 3911012 | 3 | Screw #10 x 3/4 | |
| 307 | 4711000 | 3 | Washer #10 | |
| 308 | 4712600 | 1 | Washer 1 | |
| 309 | 4751600 | AR | Washer 3/8 | |
| 310 | 4811700 | 4 | Washer M6 | |
| 311 | 1001142683 | 1 | Module, Beacon Control | |
| 312 | 1001142694 | 1 | Bracket | |
| 313 | 1001142722 | 1 | Bracket **(SN B300000100 through B300001365)** | |
| 314 | 1001142736 | 1 | Harness, Beacon Control (Module to Light) (Not Shown - See ELECTRICAL SECTION for Breakdown) | |
| 315 | 1001143431 | 1 | Lamp, Beacon (Blue) | |
| 315 | 1001197067 | 1 | Lamp, Beacon (Red) | |
| 316 | 1001150944 | 1 | Harness, Beacon Control (Module to Ground Control Box) (Not Shown - See ELECTRICAL SECTION for Breakdown) **(SN B300000100 through B300001365)** | |
| | 1001205499 | Ref | **STROBE LIGHT AND HARNESS INSTALLATION (BLUE) (OPTIONAL) (SN B300001698 through B300005764, Excluding B300005620)** | D |
| | 1001209869 | Ref | **STROBE LIGHT AND HARNESS INSTALLATION (RED) (OPTIONAL) (SN B300001698 through B300005764, Excluding B300005620)** | D |
| 401 | 0700617 | 2 | Bolt M6 x45 | |
| 402 | 3290607 | 2 | Nut M6 | |
| 403 | 3312602 | 1 | Nut 1 | |
| 404 | 3900085 | 2 | Screw #10 x 1/2 | |
| 405 | 4751000 | 2 | Washer #10 | |
| 406 | 4711700 | 4 | Washer 7/16 | |
| 407 | 1001142683 | 1 | Module, Beacon Control | |
| 408 | 1001142736 | 1 | Beacon Control Harness (Module to Ground Control Box (Not Shown - See ELECTRICAL SECTION for Breakdown) | |
| 409 | 1001149994 | 1 | Mount | |
| 411 | 1001200910 | 1 | Light, Strobe (Blue) | |
| 411 | 1001207004 | 1 | Light, Strobe (Red) | |

| ITEM | PART NUMBER | QTY | DESCRIPTION | REV |
|---|---|---|---|---|
| 412 | 4240032 | AR | Tie-Strap (Not Shown) | |
| 413 | 4460488 | AR | Mount, Tie-Strap (Not Shown) | |

## FIGURE 2-27. ENGINE TRAY JACK INSTALLATIONS (OPTIONAL)

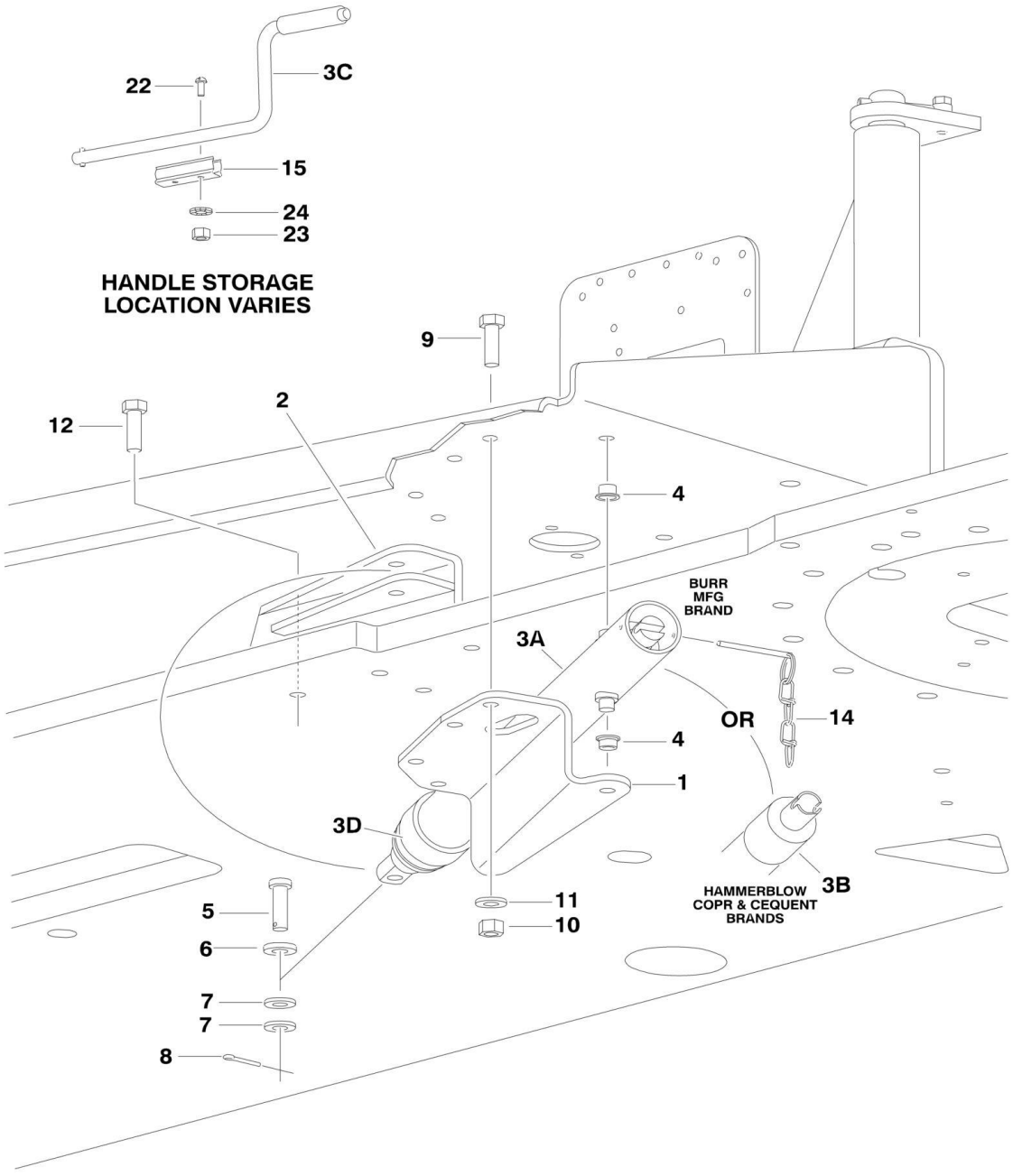

## FIGURE 2-27. ENGINE TRAY JACK INSTALLATIONS (OPTIONAL)

| ITEM | PART NUMBER | QTY | DESCRIPTION | REV |
|---|---|---|---|---|
| | 0255880 | Ref | **ENGINE TRAY JACK INSTALLATION** | 6-H |
| 1 | 3537445 | 1 | Bracket | |
| 2 | 4845163 | 1 | Bracket | |
| 3 | 2840018 | 1 | Hydraulic Jack Assembly | |
| 3A | | Ref | Burr Manufacturing Brand | |
| 3B | | Ref | Hammerblow Corp and Cequent Brands | |
| 3C | | Ref | Handle Options: | |
| 3C | 7016374 | 1 | Burr Manufacturing Brand | |
| 3C | 7024598 | 1 | Hammerblow Corp and Cequent Brands | |
| 3D | 7016322 | 1 | Wiper (Burr Manufacturing Brand Only) | |
| 4 | 0962051 | 2 | Bushing, Flanged | |
| 5 | 3430816 | 1 | Pin, Clevis | |
| 6 | 4891800 | 1 | Flatwasher 1/2in Hardened | |
| 7 | 4711800 | AR | Flatwasher 1/2in Thin | |
| 8 | 3450404 | 1 | Pin, Cotter 1/8in x 1in | |
| 9 | 0641609 | 4 | Bolt 3/8in-16NC x 1-1/8in | |
| 10 | 3311605 | 4 | Locknut 3/8in-16NC | |
| 11 | 4891600 | 4 | Flatwasher 3/8in Hardened | |
| 12 | 0641810 | 4 | Bolt 1/2in-13NC x 1-1/4in | |
| 14 | Not Required | 0 | Not Required | |
| 15 | 1380147 | 1 | Clip, Spring | |
| 22 | 3910608 | 2 | Screw #6-32NC x 1in | |
| 23 | 3310601 | 2 | Nut #6-32NC | |
| 24 | 4770600 | 2 | Star washer #6 | |

**FIGURE 2-28. HOODS INSTALLATIONS (USA BUILT MACHINES) (SN 0300087000 through 0300089988)**

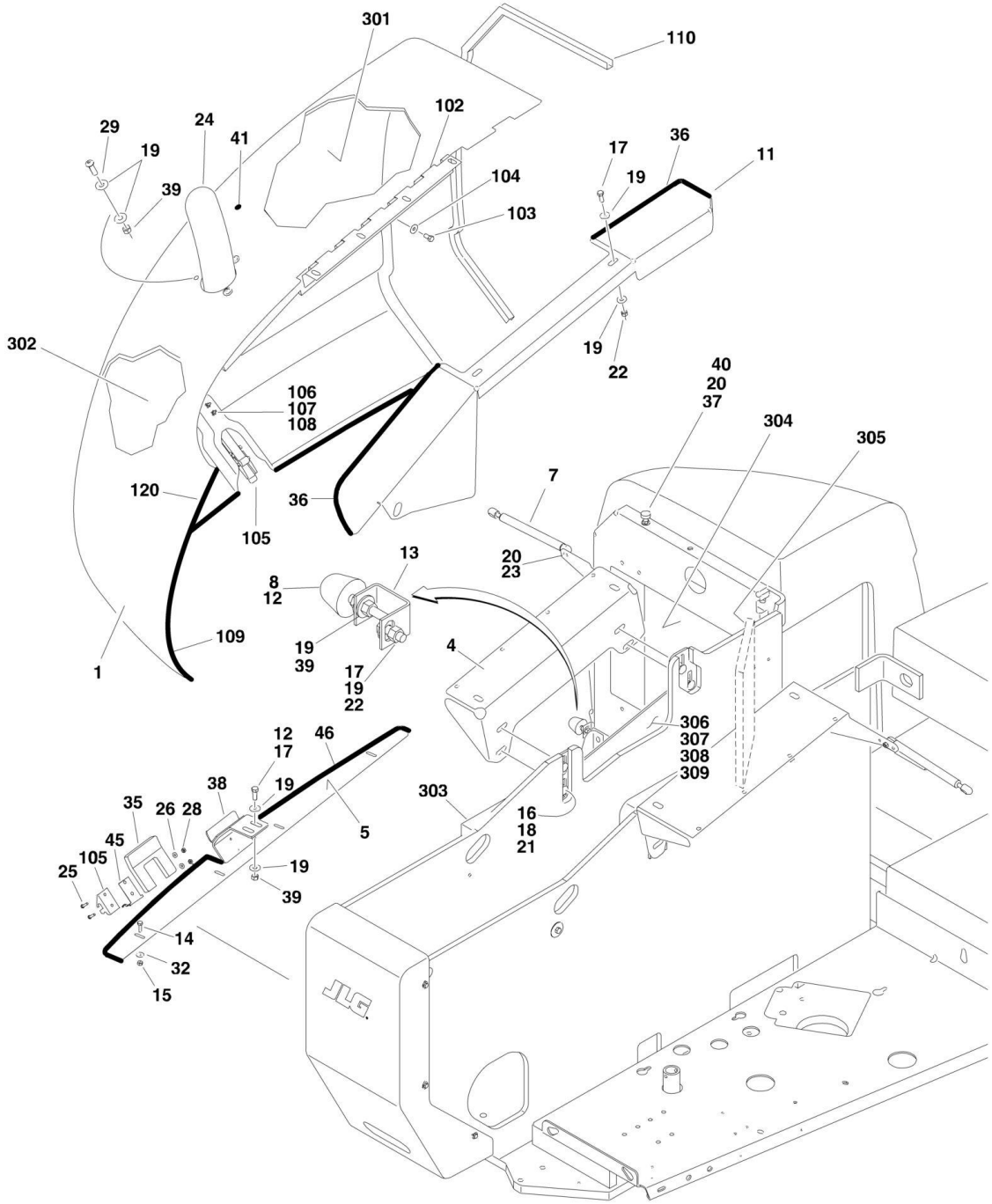

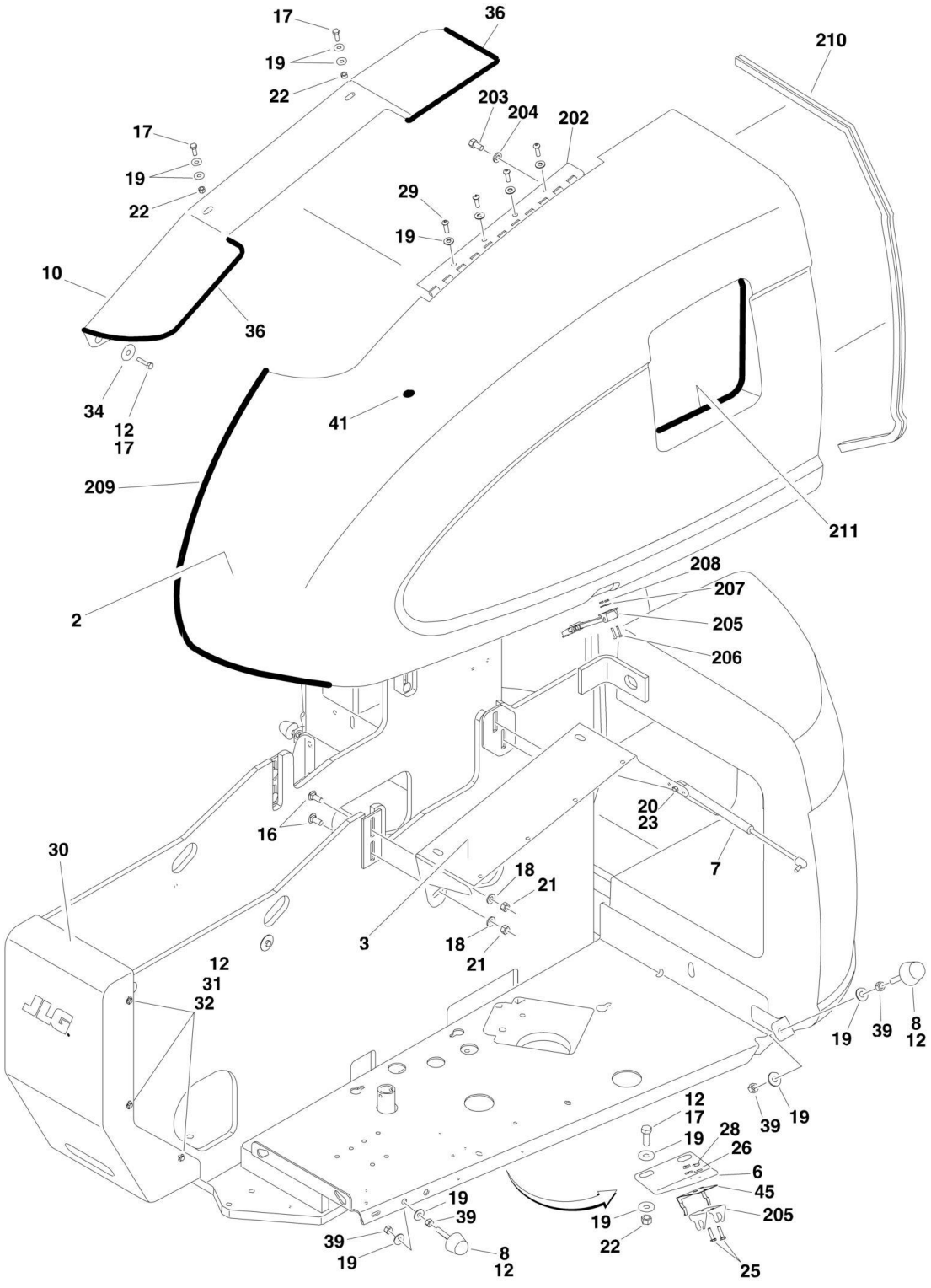
17
36
19
22
210
203
204
202
17
19
22
29
19
10
36
34
12
17
41
209
211
2
208
207
205
206
20
23
16
7
30
18
21
3
18
21
12
31
32
JLG
19
39
8
12
12
17
19
28
26
6
45
205
25
19
39
39
19
8
12
19
22

## FIGURE 2-28. HOODS INSTALLATIONS (USA BUILT MACHINES) (SN 0300087000 through 0300089988)

| ITEM | PART NUMBER | QTY | DESCRIPTION | REV |
|---|---|---|---|---|
| | | Ref | **Note: Replacement Decals Must Be Ordered Separately - See DECALS SECTION.** | |
| | | Ref | **HOODS INSTALLATIONS** | |
| | 0256821 | Ref | **Caterpillar and Deutz Engine Machines** | 5 |
| | 0274204 | Ref | **Ford Engine Machines** | 2 |
| 1 | | Ref | Hood - Engine Side Options (See Items 101-120 for Breakdown): | |
| 1 | 2680440 | NLA | Caterpillar and Deutz Engine Machines (Use p/n 1671218) | |
| 1 | 1671179 | NLA | Ford Engine Machines (Use p/n 1671217) | |
| 2 | 2680441 | NLA | Hood - Tank Side (Use p/n 1671216 - See Items 201-211 for Breakdown) | |
| 3 | 4845203 | 1 | Mount - Tank Side | |
| 4 | 4845414 | 1 | Mount - Engine Side | |
| 5 | 3539923 | 1 | Plate, Seal | |
| 6 | 0902242 | 1 | Bracket, Latch - Tank Side | |
| 7 | 4160143 | 2 | Spring, Gas | |
| 8 | 0940071 | 3 | Bumper | |
| 10 | 2680434 | 1 | Spacer, Hood (Tank Side) | |
| 11 | 2680433 | 1 | Spacer, Hood (Engine Side) | |
| 12 | 0100011 | AR | Compound, Locking | |
| 13 | 0902219 | 1 | Bracket, Bumper | |
| 14 | 0641407 | 4 | Bolt 1/4in-20NC x 7/8in | |
| 15 | 3311405 | 4 | Locknut 1/4in-20NC | |
| 16 | 0630507 | 8 | Bolt, Carriage 1/2in-13NC x 1-1/4in | |
| 17 | 0641608 | 11 | Bolt 3/8in-16NC x 1in | |
| 18 | 4740171 | 8 | Flatwasher 1/2in Hardened | |
| 19 | 4751600 | AR | Flatwasher 3/16in Regular | |
| 20 | 4751500 | AR | Flatwasher 5/16in Regular | |
| 21 | 3311805 | 8 | Locknut 1/2in-13NC | |
| 22 | 3311605 | AR | Locknut 3/8in-16NC | |
| 23 | 3311505 | AR | Locknut 5/16in-18NC | |
| 24 | | Ref | Outlet, Exhaust Options: | |
| 24 | 4845194 | 1 | Caterpillar and Deutz Engine Machines | |
| 24 | 3460420 | 1 | Ford Engine Machines | |
| 25 | 0721006 | 4 | Bolt #10-24NC x 3/4in | |
| 26 | 4751000 | 4 | Flatwasher #10 Regular | |
| 27 | 4761000 | 4 | Lockwasher #10 | |
| 28 | 3311005 | 4 | Locknut #10-24NC | |
| 29 | 3900232 | AR | Bolt, Button Head 3/8in-16NC x 1in | |
| 30 | 1670767 | 1 | Cover, Turntable | |
| 31 | | Ref | Bolt Options: | |
| 31 | 0641404 | 6 | Bolt 1/4in-20NC x 1/2in - Caterpillar and Deutz Engine Machines | |
| 31 | 0641405 | 6 | Bolt 1/4in-20NC x 3/4in - Ford Engine Machines | |
| 32 | 4751400 | AR | Flatwasher 1/4in Regular | |
| 33 | 0641606 | AR | Bolt 3/8in-16NC x 3/4in (Not Shown) | |
| 34 | 4740076 | 2 | Washer, Fender | |
| 35 | 3960467 | 1 | Seal, Foam | |
| 36 | 3960418 | 7 ft/2.1m | Seal | |
| 37 | 0940049 | 1 | Bumper | |

| ITEM | PART NUMBER | QTY | DESCRIPTION | REV |
|---|---|---|---|---|
| 38 | 0902335 | 1 | Bracket, Latch - Engine Side | |
| 39 | 3311601 | 11 | Nut 3/8in-16NC | |
| 40 | 3311501 | 2 | Nut 5/16in-18NC | |
| 41 | 3520033 | 2 | Plug | |
| 43 | 3311601 | 1 | Nut 3/8in-16NC | |
| 44 | 4751600 | 2 | Flatwasher 3/16in Regular | |
| 45 | 2940188 | 2 | Latch, Spring Clip | |
| | | Ref | **HOOD - ENGINE SIDE** | |
| | 2680440 | Ref | **Caterpillar and Deutz Engine Machines** | 2 |
| | 1671179 | Ref | **Ford Engine Machines** | 2 |
| 102 | 2600210 | 1 | Hinge | |
| 103 | 0641612 | 4 | Bolt 3/8in-16NC x 1-1/2in | |
| 104 | 4711600 | 4 | Flatwasher 3/8in Thin | |
| 105 | 2940088 | 1 | Latch, Hood | |
| 106 | 0721008 | 2 | Screw #10-24NC x 1in | |
| 107 | 4751000 | 2 | Flatwasher #10 Regular | |
| 108 | 3311005 | 2 | Locknut #10 | |
| 109 | 3960389 | AR | Seal | |
| 110 | 3960462 | AR | Trim | |
| | 2680441 | 1 | **HOOD - TANK SIDE** | |
| | | Ref | **Note: Use p/n 1671216 for replacement. See next illustration for breakdown** | |
| 202 | 2600210 | 1 | Hinge | |
| 203 | 0641612 | 4 | Bolt 3/8in-16NC x 1-1/2in | |
| 204 | 4711600 | 4 | Flatwasher 3/8in Thin | |
| 205 | 2940088 | 1 | Latch, Hood | |
| 206 | 0721008 | 2 | Screw #10-24NC x 1in | |
| 207 | 4751000 | 2 | Flatwasher #10 Regular | |
| 208 | 3311005 | 2 | Locknut #10 | |
| 209 | 3960389 | AR | Seal | |
| 210 | 3960462 | AR | Trim | |
| 211 | 3960438 | AR | Trim | |
| | 0256822 | Ref | **NOISE REDUCTION INSTALLATION (CATERPILLAR AND DEUTZ ENGINE MACHINES ONLY)** | 1 |
| 301 | 2820076 | 1 | Foam, Acoustical | |
| 302 | 2820077 | 1 | Foam, Acoustical | |
| 303 | 2820078 | 1 | Foam, Acoustical | |
| 304 | 2820082 | 1 | Foam, Acoustical | |
| 305 | 2820083 | 1 | Foam, Acoustical | |
| 306 | 3539988 | 1 | Plate, Baffle | |
| 307 | 0641606 | 5 | Bolt 3/8in-16NC x 3/4in | |
| 308 | 4751600 | 5 | Flatwasher 3/8in Regular | |
| 309 | 0100011 | AR | Compound, Locking | |

## FIGURE 2-29. HOODS INSTALLATIONS (USA BUILT MACHINES AND CHINA BUILT MACHINES) (SN 0300089989 through 0300177361, SN B300000100 through B300005764)

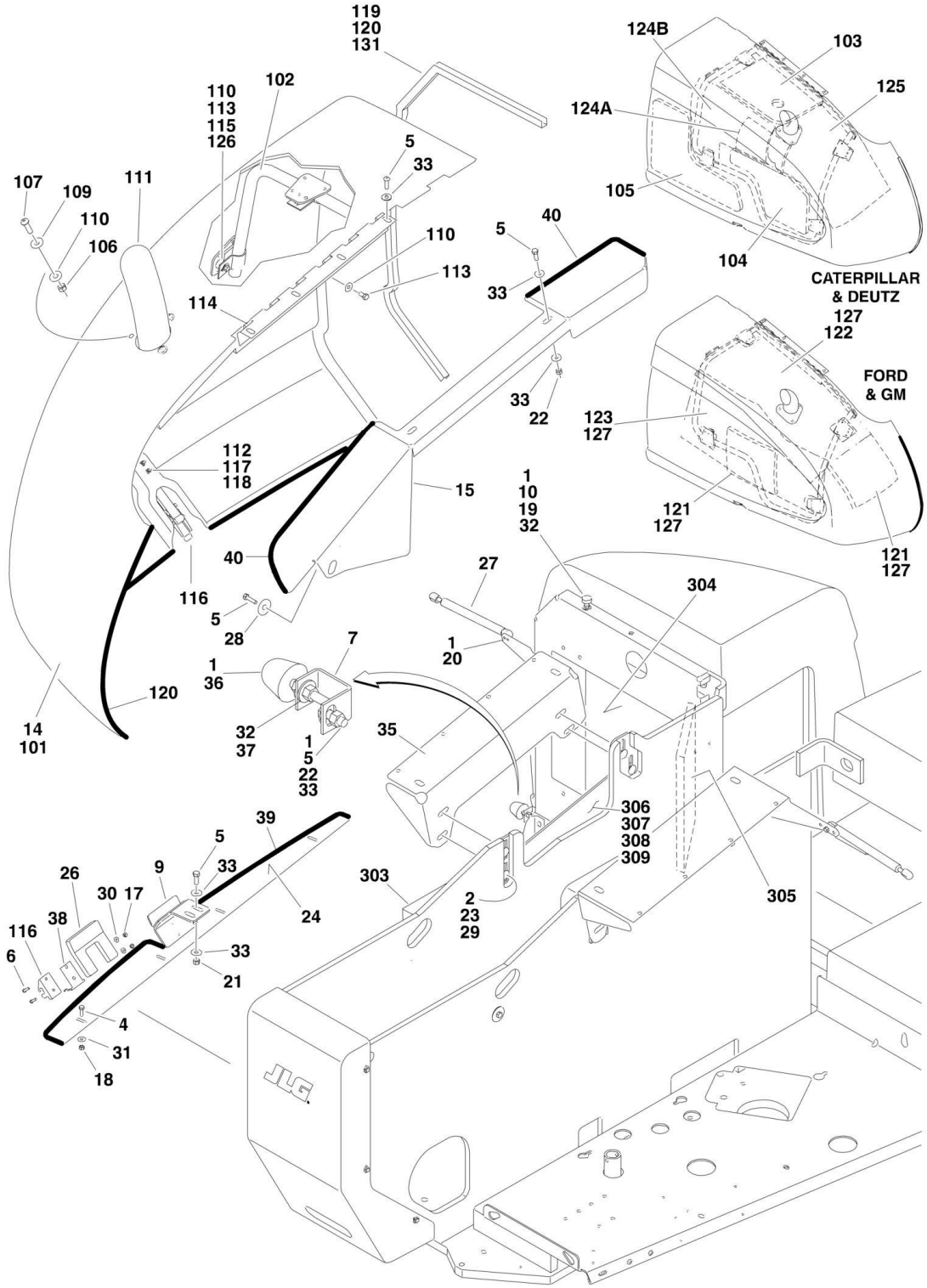

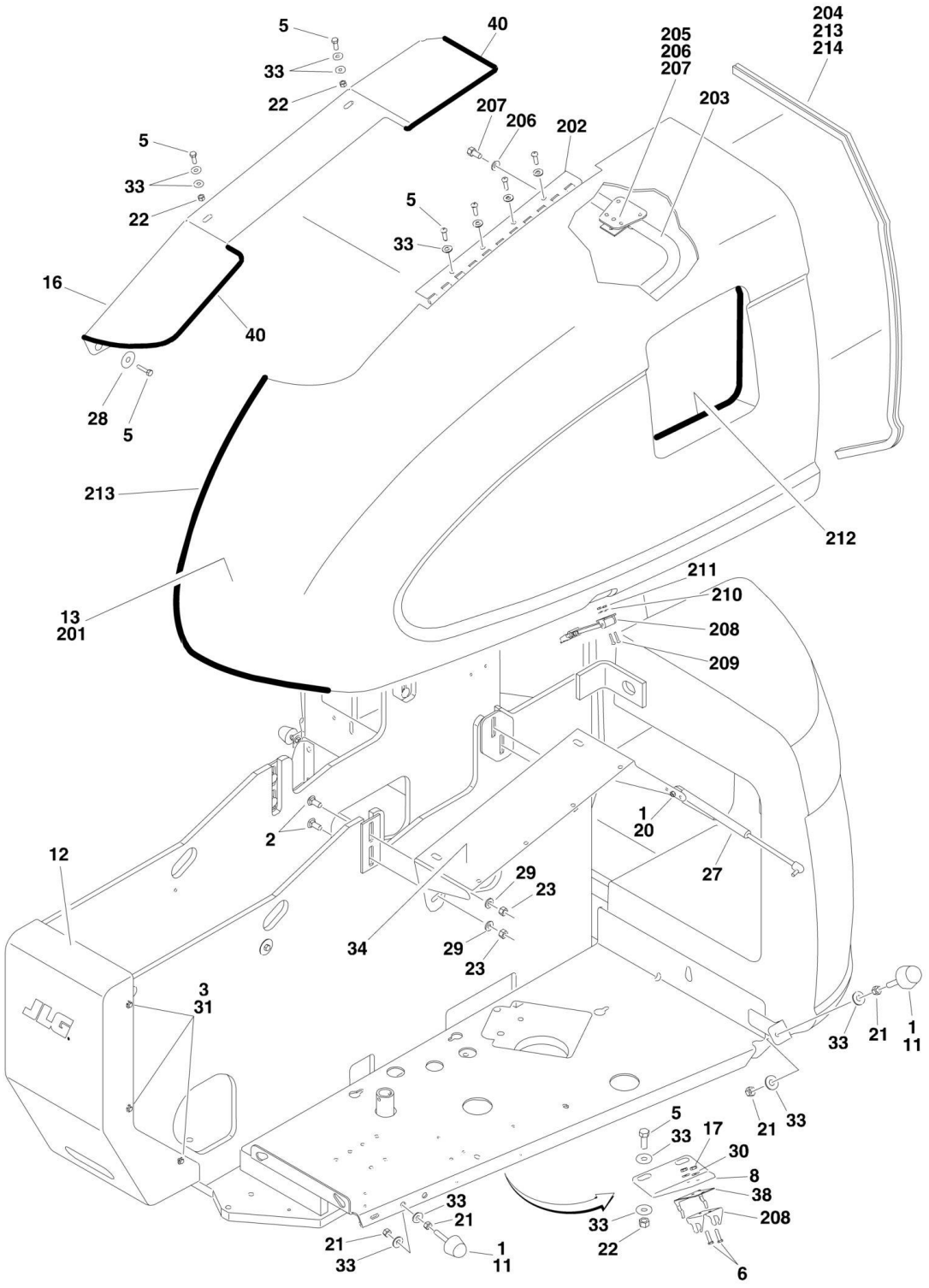
5
40
33
22
204
213
214
205
206
207
203
207
206
202
5
33
22
5
33
16
40
28
5
213
212
13
201
211
210
208
209
1
20
2
12
27
29
23
34
29
23
3
31
33
21
1
11
5
33
17
21
33
30
8
38
208
33
22
6
21
33
33
21
1
11

## FIGURE 2-29. HOODS INSTALLATIONS (USA BUILT MACHINES AND CHINA BUILT MACHINES) (SN B300000100 through B300005764, SN 0300089989 through 0300177361)

| ITEM | PART NUMBER | QTY | DESCRIPTION | REV |
|---|---|---|---|---|
| | | Ref | **Note: Replacement decals must be ordered separately - See DECALS SECTION.** | |
| | | Ref | **HOODS INSTALLATIONS** | |
| | 0274620 | Ref | **Caterpillar Engine Machines** | F |
| | 0274620 | Ref | **Deutz Engine Machines (SN 0300089989 through 0300177361)** | F |
| | 0274620 | Ref | **Deutz Engine Machines (SN B300000100 through B300001018)** | F |
| | 1001152435 | Ref | **Deutz Engine Machines (SN B300001019 through B300005764, Excluding B300005620)** | I |
| | 0275023 | Ref | **Ford and GM Engine Machines** | H |
| 1 | 0100011 | AR | Compound, Locking | |
| 2 | 0630507 | 8 | Bolt, Carriage 1/2in-13NC x 1-1/4in | |
| 3 | 0641405 | 6 | Bolt 1/4in-20NC x 3/4in | |
| 4 | 0641407 | 4 | Bolt 1/4in-20NC x 7/8in | |
| 5 | 0641608 | AR | Bolt 3/8in-16NC x 1in | |
| 6 | 0721006 | 4 | Bolt #10-24NC x 3/4in | |
| 7 | 0902219 | 1 | Bracket, Bumper | |
| 8 | 0902242 | 1 | Bracket, Latch - Tank Side (0274620 & 0275023 Installations) | |
| 8 | 1001137876 | 1 | Bracket, Latch - Tank Side (1001152435 Installation) | |
| 9 | 0902335 | 1 | Bracket, Latch - Engine Side | |
| 10 | 0940049 | 1 | Bumper | |
| 11 | 0940071 | 2 | Bumper | |
| 12 | 1670767 | 1 | Cover, Turntable | |
| 13 | | Ref | Hood - Tank Side Options (See Items 201- 213 for Breakdown): | |
| 13 | 1671216 | 1 | Hood (0274620 & 0275023 Installations) | |
| 13 | 1001160003 | 1 | Hood (1001152435 Installation) | |
| 14 | | Ref | Hood - Engine Side Options (See Items 101- 120 for Breakdown): | |
| 14 | 1671217 | 1 | Ford and GM Engine Machines (USA Built Machines) **(SN 0300089989 through 0300139353)** | |
| 14 | 1001117044 | 1 | GM Engine Machines (USA Built Machines) **(SN 0300139354 through 0300177361)** | |
| 14 | 1671218 | 1 | Caterpillar Engine Machines | |
| 14 | 1671218 | 1 | Deutz Engine Machines (0274620 Installation) | |
| 14 | 1001160034 | 1 | Deutz Engine Machine (1001152435 Installation) | |
| 15 | 2680433 | 1 | Spacer, Hood (Engine Side) | |
| 16 | 2680434 | 1 | Spacer, Hood (Tank Side) | |
| 17 | 3311005 | 4 | Locknut #10-24NC | |
| 18 | 3311405 | 4 | Locknut 1/4in-20NC | |
| 19 | 3311501 | 2 | Nut 5/16in-18NC | |
| 20 | 3311505 | AR | Locknut 5/16in-18NC | |
| 21 | 3311601 | 6 | Nut 3/8in-16NC | |
| 22 | 3311605 | 7 | Locknut 3/8in-16NC | |
| 23 | 3311805 | 8 | Locknut 1/2in-13NC | |
| 24 | 3539923 | 1 | Plate, Seal | |
| 26 | 3960467 | 1 | Seal, Foam | |
| 27 | 4160143 | 2 | Spring, Gas | |
| 28 | 4740076 | 2 | Washer, Fender | |
| 29 | 4740171 | 8 | Flatwasher 1/2in Hardened | |
| 30 | 4751000 | 4 | Flatwasher #10 Regular | |
| 31 | 4751400 | 10 | Flatwasher 1/4in Regular | |

| ITEM | PART NUMBER | QTY | DESCRIPTION | REV |
|---|---|---|---|---|
| 32 | 4751500 | 4 | Flatwasher 5/16in Regular | |
| 33 | 4751600 | AR | Flatwasher 3/8in Regular | |
| 33 | 4891600 | AR | Flatwasher 3/8in Hardened | |
| 34 | 4845203 | 1 | Mount - Tank Side (0274620 & 0275023 Installations) | |
| 34 | 1001152557 | 1 | Mount - Tank Side (1001152435 Installation) | |
| 35 | 4845414 | 1 | Mount - Engine Side (0274620 & 0275023 Installations) | |
| 35 | 1001152556 | NLA | Mount - Engine Side (1001152435 Installation) (Use p/n 1001235948) **(SN B300000100 through B300001502)** | |
| 35 | 1001207792 | NLA | Mount - Engine Side (1001152435 Installation) (Use p/n 1001235948) **(SN B300001503 through B300003189)** | |
| 35 | 1001235948 | 1 | Mount - Engine Side (1001152435 Installation) **(SN B300003190 through B300005764, Excluding B300005620)** | |
| 36 | 0940088 | 1 | Bumper | |
| 37 | 3321501 | 2 | Nut 5/16in-24NC | |
| 38 | 2940188 | 1 | Latch, Spring Clip | |
| 39 | 3960389 | 3.5 ft/1m | Seal, Bulb | |
| 40 | 3960418 | 7 ft/2.1m | Seal | |
| | | Ref | **HOOD - ENGINE SIDE** | |
| | 1671218 | Ref | **Caterpillar Engine Machines** | F |
| | 1671218 | Ref | **Deutz Engine Machines (0274620 Installation)** | F |
| | 1001160034 | Ref | **Deutz Engine Machines (1001152435 Installation)** | G |
| | 1671217 | Ref | **Ford and GM Engine Machines (USA Built Machines) (SN 0300089989 through 0300139353)** | G |
| | 1001117044 | Ref | **GM Engine Machines (USA Built Machines) (SN 0300139354 through 0300177361)** | A |
| 101 | | Ref | Hood, Engine Side Options: | |
| 101 | 1671245 | NLA | Caterpillar Engine Machines | |
| 101 | 1671245 | NLA | Deutz Engine Machines (0274620 Installation) (Use p/n 1001097959) | |
| 101 | See Note | NSS | Deutz Engine Machines (1001152435 Installation) (Note: Use p/n 1001160034) | |
| 101 | 1671258 | NLA | Ford and GM Engine Machines (Use p/n 1001097958) | |
| 102 | 1671246 | 1 | Frame, Engine Cover (0274620 & 0275023 Installations Only) | |
| 103 | 2820077 | 1 | Insulation, Sound Reduction (Caterpillar and Deutz Engines Only) (0274620 Installation) | |
| 103 | See Note | NSS | Insulation (1001152435 Installation) (Note: Use Item 125) | |
| 104 | 2820237 | 1 | Insulation, Sound Reduction (Caterpillar and Deutz Engines Only) (0274620 Installation) | |
| 104 | 1001161026 | 1 | Insulation (1001152435 Installation) | |
| 105 | 2820238 | 1 | Insulation, Sound Reduction (Caterpillar and Deutz Engines Only) (0274620 Installation) | |
| 105 | 1001161027 | 1 | Insulation (1001152435 Installation) | |
| 106 | 3311605 | 3 | Locknut 3/8in-16NC | |
| 107 | 3900232 | 3 | Bolt, Button Head 3/8in-16NC x 1-1/4in | |
| 108 | 4061010 | 1 | Gasket, Heat Shield (USA Built Machines) **(SN 0300089989 through 0300128836)** | |
| 109 | 4740500 | 3 | Washer, Nylon Shoulder | |
| 110 | 4751600 | 11 | Flatwasher 3/8in Regular | |
| 111 | | Ref | Outlet, Exhaust Options: | |
| 111 | 4845194 | 1 | Caterpillar Engine Machines | |
| 111 | 4845194 | 1 | Deutz Engine Machines (0274620 Installation) | |
| 111 | 1001160598 | 1 | Deutz Engine Machines (1001152435 Installation) | |
| 111 | 3460420 | 1 | Ford and GM Engine Machines (USA Built Machines) **(SN 0300089989 through 0300139353)** | |

| ITEM | PART NUMBER | QTY | DESCRIPTION | REV |
|---|---|---|---|---|
| 111 | 1001117039 | 1 | GM Engine Machines Only **(SN 0300139354 through 0300177361)** | |
| 112 | 4751000 | 2 | Flatwasher #10 Regular | |
| 113 | 0641606 | 8 | Bolt 3/8in-16NC x 3/4in | |
| 114 | 2600210 | 1 | Hinge (0274620 & 0275023 Installations) | |
| 114 | 1001151670 | 2 | Hinge (1001152435 Installation) | |
| 115 | 1321384 | 4 | Hold Down | |
| 116 | 2940088 | 1 | Latch | |
| 117 | 3311005 | 2 | Locknut #10-24NC | |
| 118 | 3911016 | 2 | Screw #10-24NC x 1in | |
| 119 | 3960462 | 5.5 ft /1.7m | Seal | |
| 120 | 3960389 | 3 ft/.09m | Seal (USA Built Machines) | |
| 120 | 3960389 | 3 ft/0.9m | Seal (China Built Machines) **(SN B300000100 through B300000869)** | |
| 120 | 1001164281 | 8 ft/2.4m | Seal (China Built Machines) **(SN B300000870 through B300005764, Excluding B300005620)** | |
| 121 | | Ref | Insulation, Heat Shield (Ford and GM Engine Machines Only) | |
| 121 | 2820176 | 1 | USA Built Machines (Hood Side) **(SN 0300092153 through 0300128835)** | |
| 121 | Not Required | 0 | USA Built Machines **(SN 0300128836 through 0300136640)** | |
| 121 | 2820176 | NLA | USA Built Machines (Hood Front) (Use p/n 1001117139) **(SN 0300136641 through 0300139353)** | |
| 121 | 1001117139 | AR | Only **(SN 0300139354 through 0300177361)** | |
| 122 | | Ref | Insulation, Heat Shield Options (Ford and GM Engine Machines Only) | |
| 122 | 2820236 | 1 | USA Built Machines **(SN 0300089989 through 0300128835)** | |
| 122 | 1001102914 | NLA | USA Built Machines (Use p/n 1001117139) **(SN 0300128836 through 0300139353)** | |
| 122 | 1001117139 | AR | USA Built Machines Only **(SN 0300139354 through 0300177361)** | |
| 123 | | Ref | Insulation, Heat Shield Options (Ford and GM Engine Machines): | |
| 123 | 1001102913 | NLA | USA Built Machines Only (Use p/n 1001117139) **(SN 0300128836 through 0300139353)** | |
| 123 | 1001117139 | AR | USA Built Machines Only **(SN 0300139354 through 0300177361)** | |
| 124 | | Ref | Insulation, Heat Shield (Caterpillar and Deutz Engine Machines - USA Built Machines) **(SN 0300092153 through 0300177361)** | |
| 124 | | Ref | Insulation, Heat Shield (Caterpillar and Deutz Engine Machines - China Built Machines) **(SN B300000099 through B300005764, Excluding B300005620)** | |
| 124 | Not Required | 0 | USA Built Machines **(SN 0300092153 through 0300128835)** | |
| 124A | 2820176 | 1 | USA Built Machines **(SN 0300092153 through 0300128835)** | |
| 124B | 1001101947 | 1 | USA Built Machines **(SN 0300128836 through 0300177361)** | |
| 124B | 1001101947 | 1 | China Built Machines **(SN B300000100 through B300001018)** | |
| 124B | 1001160692 | 1 | China Built Machines **(SN B300001019 through B300000869)** | |
| 125 | 1001101945 | 1 | Insulation, Heat Shield (Caterpillar and Deutz Engine Machines - USA Built Machines) **(SN 0300128836 through 0300177361)** | |
| 125 | 1001101945 | 1 | Insulation, Heat Shield (Caterpillar and Deutz Engine Machines - China Built Machines) **(SN B300000100 through B300001018)** | |
| 125 | 1001161025 | 1 | Insulation, Heat Shield (Caterpillar and Deutz Engine Machines - China Built Machines) **(SN B300001019 through B300005764, Excluding B300005620)** | |
| 126 | 0100011 | AR | Compound, Locking (GM Engine Machines - USA Built Machines Only) **(SN 0300139354 through 0300177361)** | |

| ITEM | PART NUMBER | QTY | DESCRIPTION | REV |
|---|---|---|---|---|
| 127 | 1001117140 | AR | Tape, Aluminized Polyester (GM Engine Machines - USA Built Machines Only) **(SN 0300139354 through 0300177361)** | |
| 130 | | Ref | Hood Kit (Engine Side) Options: | |
| 130A | 1001097959 | 1 | Caterpillar and Deutz Engine Machines (Includes Hood and Insulation) | |
| 130B | 1001097958 | 1 | Ford and GM Engine Machines (Includes Hood, Insulation and Tape) | |
| 131 | 4060805 | 62 in/1.6m | Flex-Trim **(SN B300000870 through B300005764, Excluding B300005620)** | |
| | 1671216 | Ref | **HOOD TANK SIDE (0274620 & 0275023 Installations)** | B |
| | 1001160003 | Ref | **HOOD TANK SIDE (1001132435 Installation)** | G |
| 132 | 1001169610 | 2 | Spacer Hinge (Not Shown) (1001152435 Installation) | |
| 201 | 1671243 | 1 | Hood, Tank Side (0274620 & 0275023 Installations) | |
| 201 | See Note | NSS | Hood, Tank Side (1001152435 Installation) (Note: Use p/n 1001160003) | |
| 202 | 2600210 | 1 | Hinge (0274620 & 0275023 Installations) | |
| 202 | 1001151670 | 2 | Hinge (1001152435 Installation) | |
| 203 | 1671244 | 1 | Frame, Tank Side (1671216 Hood Only) | |
| 204 | 3960462 | 5.5 ft /1.7m | Seal | |
| 205 | 2080051 | 4 | Hold Down | |
| 206 | 4751600 | 8 | Flatwasher 3/8in Regular | |
| 207 | 0641606 | 8 | Bolt 3/8in-16NC x 3/4in | |
| 208 | 2940088 | 1 | Latch | |
| 209 | 3911016 | 2 | Screw #10-24NC x 1in | |
| 210 | 4751000 | 2 | Flatwasher #10 Regular | |
| 211 | 3311005 | 2 | Locknut #10-24NC | |
| 212 | 3960438 | 4.5 ft /1.4m | Seal (USA Built Machines) | |
| 212 | 3960438 | 4.5 ft /1.4m | Seal (China Built Machines) **(SN B300000100 through B300000869)** | |
| 212 | 1001166394 | 4.5 ft /1.4m | Seal (China Built Machines) **(SN B300000870 through B300005764, Excluding B300005620)** | |
| 213 | 3960389 | 3 ft/0.9m | Seal (USA Built Machines) | |
| 213 | 3960389 | 3 ft/0.9m | Seal (China Built Machines) **(SN B300000100 through B300000866)** | |
| 213 | 1001164281 | 8 ft/2.5m | Seal (China Built Machines) **(SN B300000867 through B300005764, Excluding B300005620)** | |
| 214 | 4060805 | 62 in /1.6m | Flex-Trim **(SN B300000870 through B300005764, Excluding B300005620)** | |
| | 0256822 | Ref | **NOISE REDUCTION INSTALLATION (CATERPILLAR AND DEUTZ ENGINE MACHINES ONLY)** | 1 |
| 303 | 2820078 | 1 | Foam, Acoustical | |
| 304 | 2820082 | 1 | Foam, Acoustical | |
| 305 | 2820083 | 1 | Foam, Acoustical | |
| 306 | 3539988 | 1 | Plate, Baffle | |
| 307 | 0641606 | 5 | Bolt 3/8in-16NC x 3/4in | |
| 308 | 4751600 | 5 | Flatwasher 3/8in Regular | |
| 309 | 0100011 | AR | Compound, Locking | |

## FIGURE 2-30. 2500W GENERATOR INSTALLATION - CATERPILLAR MACHINES (OPTIONAL)

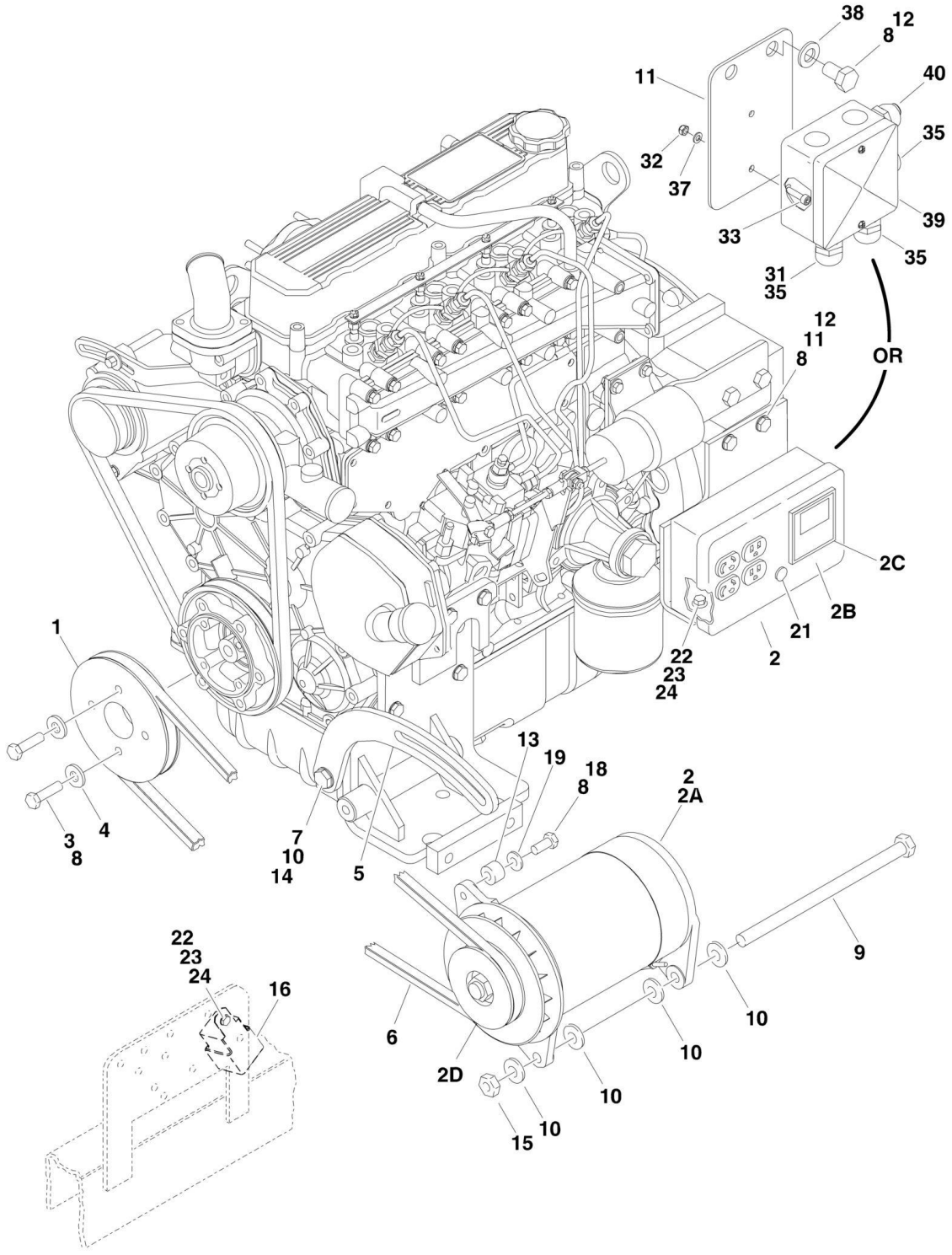

## FIGURE 2-30. 2500W GENERATOR INSTALLATION - CATERPILLAR MACHINES (OPTIONAL)

| ITEM | PART NUMBER | QTY | DESCRIPTION | REV |
|---|---|---|---|---|
| | | Ref | **GENERATOR INSTALLATION OPTIONS:** | |
| | | Ref | **110V/60Hz (ANSI and ANSI Export Specs)** | |
| | 0274081 | Ref | **USA Built Machines (SN 0300087000 through 0300144387)** | 1-A |
| | 1001115404 | Ref | **USA Built Machines (SN 0300144388 through 0300177361)** | A |
| | 1001115404 | Ref | **China Built Machines (SN B300000239 through B300005764, Excluding B300005620)** | A |
| | | Ref | **110V/50Hz (CE Spec) (Only Available on USA Built Machines)** | |
| | 0274091 | Ref | **USA Built Machines (SN 0300087000 through 0300132839)** | 3-B |
| | 1001102547 | Ref | **USA Built Machines (SN 0300132840 through 0300144387)** | B |
| | 1001115413 | Ref | **USA Built Machines (SN 0300144388 through 0300177361)** | A |
| | | Ref | **220V/50Hz (ANSI Export, Australian and CE Specs)** | |
| | 0274087 | Ref | **USA Built Machines (SN 0300087000 through 0300132839)** | 3-B |
| | 1001102548 | Ref | **USA Built Machines (SN 0300132840 through 0300144387)** | B |
| | 1001115414 | Ref | **USA Built Machines (SN 0300144388 through 0300177361)** | A |
| | 1001115414 | Ref | **China Built Machines (SN B300000239 through B300005764, Excluding B300005620)** | A |
| 1 | 3580322 | 1 | Pulley | |
| 2 | | Ref | Generator and Control Box Assembly Options: | |
| 2 | 2460055 | 1 | 110V/60Hz (ANSI and ANSI Export Specs) | |
| 2 | 2460057 | 1 | 110V/50Hz (CE Spec - USA Built Machines) **(SN 0300087000 through 0300132839)** | |
| 2 | 2460049 | 1 | 110V/50Hz (CE Spec - USA Built Machines) (Generator Only) **(SN 0300132840 through 0300177361)** | |
| 2 | 2460056 | 1 | 220V/50Hz (ANSI Export, Australian and CE Specs - USA Built Machines) **(SN 0300087000 through 0300132839)** | |
| 2 | 1001100321 | 1 | 220V/50Hz (ANSI Export, Australian and CE Specs - USA Built Machines) (Generator Only) **(SN 0300132840 through 0300177361)** | |
| 2 | 1001100321 | 1 | 220V/50Hz (ANSI Export, Australian and CE Specs - China Built Machines) (Generator Only) **(SN B300000100 through B300005764, Excluding B300005620)** | |
| 2A | 7012558 | 1 | Generator Only - 110V/60Hz | |
| 2A | 2460049 | 1 | Generator Only - 110V/50Hz | |
| 2A | 1001100321 | 1 | Generator Only - 220V/50Hz | |
| | | Ref | **Note: Replacement Generators come standard with p/n 3580134 pulley. This pulley may not be correct for all applications. Refer to pulley options below.** | |
| 2A | | Ref | Armature with Slip Rings Options: | |
| 2A | 7026199 | 1 | Armature with Slip Rings - 110V/60Hz | |
| 2A | 70000122 | 1 | Armature with Slip Rings - 110V/50Hz | |
| 2A | 70000123 | 1 | Armature with Slip Rings - 220V/50Hz | |
| 2A | 7012513 | 4 | Cap, Brush Holder | |
| 2A | 7020108 | 4 | Brush | |
| 2A | 7020109 | 4 | Holder, Brush | |
| 2A | 7012514 | 1 | Fan | |
| 2A | 7020110 | 1 | Bell, Front | |
| 2A | 7020111 | 1 | Bell, Rear | |
| 2A | 7020190 | 2 | Bearing | |
| 2B | 7019680 | 1 | Box, Control - 110V/60Hz | |
| 2B | 7019680 | 1 | Box, Control - 110V/50Hz (USA Built Machines) **(SN 0300087000 through 0300132839)** | |
| 2B | Not Required | 0 | Box, Control - 110V/50Hz (USA Built Machines) **(SN** | |

| ITEM | PART NUMBER | QTY | DESCRIPTION | REV |
|---|---|---|---|---|
| | | | **0300132840 through 0300177361)** | |
| 2B | 70000127 | 1 | Box, Control - 220V/50Hz (USA Built Machines) **(SN 0300087000 through 0300132839)** | |
| 2B | Not Required | 0 | Box, Control - 220V/50Hz (USA Built Machines) **(SN 0300132840 through 0300177361)** | |
| 2B | Not Required | 0 | Box, Control - 220V/50Hz (China Built Machines) **(SN B300000100 through B300005764, Excluding B300005620)** | |
| 2B | | Ref | Receptacle Options: | |
| 2B | 4460190 | 1 | Receptacle, Standard (110V Only) | |
| 2B | 4460027 | 1 | Receptacle, Twistlock (110V Only) | |
| 2B | 70000124 | 1 | Receptacle, Double (220V/50Hz Only) | |
| 2B | 70000125 | 1 | Receptacle, Single (220V/50Hz Only) | |
| 2B | | Ref | Breaker, Circuit Options: | |
| 2B | 4360542 | 1 | Breaker 110V/60Hz | |
| 2B | 4360542 | 1 | Breaker 110V/50Hz (USA Built Machines) **(SN 0300087000 through 0300132839)** | |
| 2B | Not Required | 0 | Breaker - 110V/50Hz (USA Built Machines) **(SN 0300132840 through 0300177361)** | |
| 2B | 70000126 | 1 | Breaker 220V/50Hz (USA Built Machines) **(SN 0300087000 through 0300132839)** | |
| 2B | Not Required | 0 | Breaker - 220V/50Hz (USA Built Machines) **(SN 0300132840 through 0300177361)** | |
| 2B | Not Required | 0 | Breaker - 220V/50Hz (China Built Machines) **(SN B300000239 through B300005764, Excluding B300005620)** | |
| 2B | 3520028 | 1 | Plug, Hole | |
| 2C | | Ref | Voltmeter Options: | |
| 2C | 2420203 | 1 | Voltmeter - 110V | |
| 2C | 7020192 | 1 | Voltmeter - 220V | |
| 2D | | Ref | Pulley Options: | |
| 2D | 3580276 | 1 | Pulley - 60Hz | |
| 2D | 3580134 | 1 | Pulley - 50Hz | |
| 2D | 7027887 | 1 | Key, Woodruff | |
| 2D | 0480120 | 1 | 110V/50Hz | |
| 2D | 0480120 | 1 | 220V/50Hz | |
| 3 | 0700816 | 4 | Bolt M8 x 40mm | |
| 4 | 4811900 | 4 | Flatwasher M8 | |
| 5 | 0200819 | 1 | Arm, Adjusting | |
| 6 | | Ref | V-Belt Options: | |
| 6 | 0480121 | 1 | 110V/60Hz (ANSI and ANSI Export Specs) | |
| 6 | 0480120 | 1 | 110V/50Hz (CE Spec) | |
| 6 | 0480120 | 1 | 220V/50Hz (ANSI Export, Australian and CE Specs) | |
| 7 | 0641610 | 1 | Bolt 3/8in-16NC x 1-1/4in | |
| 8 | 0100011 | AR | Compound, Locking | |
| 9 | 0641772 | 1 | Bolt 7/16in-14NC x 9in | |
| 10 | 4751600 | 6 | Flatwasher 3/8in Regular | |
| 11 | | Ref | Plate, Box Mounting Options: | |
| 11 | 3574684 | 1 | ANSI and ANSI Export Specs | |
| 11 | | Ref | ANSI Export, Australian and CE Specs | |
| 11 | 3574684 | 1 | USA Built Machines **(SN 0300087000 through 0300132839)** | |
| 11 | 1001102644 | 1 | USA Built Machines **(SN 0300132840 through 0300177361)** | |
| 11 | 1001102644 | 1 | China Built Machines **(SN B300000239 through B300005764, Excluding B300005620)** | |
| 12 | 0761210 | 2 | Bolt M12 x 20mm | |

| ITEM | PART NUMBER | QTY | DESCRIPTION | REV |
|---|---|---|---|---|
| 13 | 0962563 | 1 | Bushing, Spacer | |
| 14 | 3311605 | 1 | Locknut 3/8in-16NC | |
| 15 | 3311705 | 1 | Locknut 7/16in-14NC | |
| 16 | 3740080 | 1 | Relay | |
| 18 | 0641508 | 1 | Bolt 5/16in-18NC x 1in | |
| 19 | 4751500 | 1 | Flatwasher 5/16in Regular | |
| 21 | 3520028 | 1 | Plug, Hole | |
| 22 | 0721006 | AR | Bolt #10-24NC x 3/4in | |
| 23 | 3311005 | AR | Locknut #10-24NC | |
| 24 | 4751000 | AR | Flatwasher #10 Regular | |
| 25 | 4360336 | 1 | Switch, Toggle (Not Shown - Located at Platform) | |
| 27 | 4060802 | 1 | Guard, Switch (Not Shown - Located at Platform) | |
| 28 | | Ref | Decal - Voltage Options (Not Shown): | |
| 28 | See Note | NSS | 110V/60Hz (ANSI and ANSI Export Specs) (Note: Not Available for Purchase) | |
| 28 | 1705325 | 1 | 110V/50Hz (CE Spec) | |
| 28 | 3252507 | 1 | 220V/50Hz (ANSI Export, Australian and CE Specs) | |
| 29 | 2820031 | AR | Heat Shrink (Not Shown - Located at Platform) | |
| 30 | 3251102 | 1 | Decal (Not Shown - Located at Platform) | |
| | | Ref | **Note: Items 31-40 Used on ANSI Export, Australian and CE Specs USA Built Machines (SN 0300132840 through 0300177361)** | |
| | | Ref | **Note: Items 31-40 Used on ANSI Export, Australian and CE Specs China Built Machines (SN B300000239 through B300005764, Excluding B300005620)** | |
| 31 | 0962449 | 1 | Bushing, Silicone | |
| 32 | 3290505 | 2 | Locknut M5 | |
| 33 | 4031608 | 2 | Screw M5 x 20mm | |
| 34 | 4240018 | AR | Strap, Tie (Not Shown) | |
| 35 | 4460968 | 3 | Connector, Strain Relief | |
| 37 | 4811600 | 2 | Flatwasher M5 | |
| 38 | 4812100 | 2 | Flatwasher M12 | |
| 39 | 1001099869 | 1 | Box, Junction | |
| 40 | | Ref | Lamp, Red Options: | |
| 40 | 1001100233 | 1 | 110V/50Hz | |
| 40 | 1001100234 | 1 | 220V/50Hz | |
| 41 | 4740397 | 1 | Shim (Not Shown - Used on Toggle Switch Located at Platform) | |

## FIGURE 2-31. 2500W GENERATOR INSTALLATION - DEUTZ MACHINES (OPTIONAL)

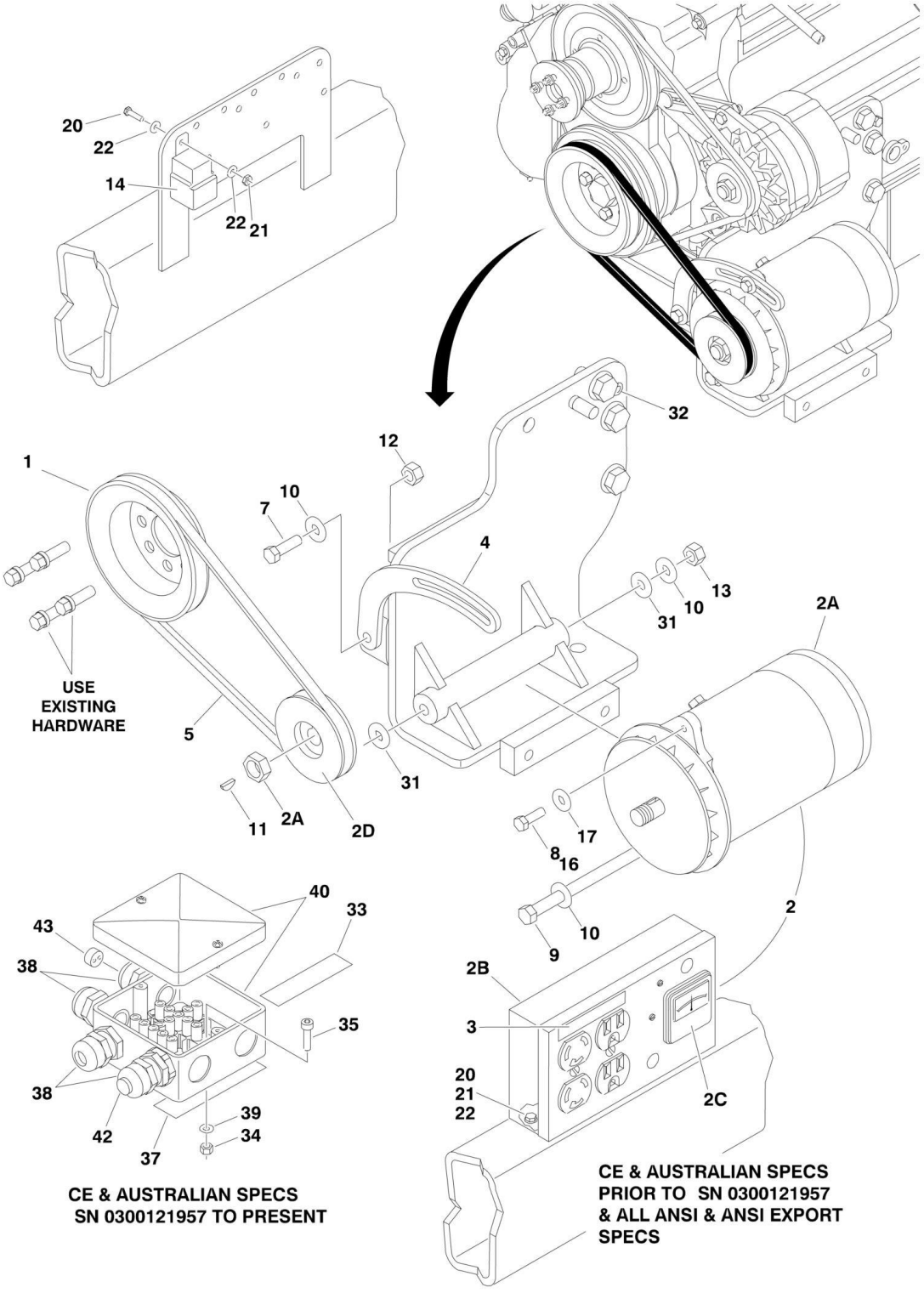

## FIGURE 2-31. 2500W GENERATOR INSTALLATION - DEUTZ MACHINES (OPTIONAL)

| ITEM | PART NUMBER | QTY | DESCRIPTION | REV |
|---|---|---|---|---|
| | | Ref | **GENERATOR INSTALLATIONS** | |
| | | Ref | **USA Built Machines: (SN 0300087000 through 0300139040)** | |
| | 0274082 | Ref | **110V/60Hz (ANSI and ANSI Export Specs)** | 3-C |
| | 0274090 | Ref | **110V/50Hz (ANSI Export Spec)** | 1-A |
| | 0274090 | Ref | **110V/50Hz (CE Spec) (SN 0300087000 through 0300121956)** | 1-A |
| | 1001100308 | Ref | **110V/50Hz (CE Spec) (SN 0300121957 through 0300139041)** | D |
| | 0274086 | Ref | **220V/50Hz (ANSI Export Specs)** | 1-A |
| | 0274086 | Ref | **220V/50Hz (Australian and CE Specs) (SN 0300087000 through 0300121956)** | 1-A |
| | 1001099868 | Ref | **220V/50Hz (Australian and CE Specs) (SN 0300121957 through 0300139040)** | D |
| | | Ref | **USA Built Machines: (SN 0300139041 through 0300177361)** | |
| | 1001115405 | Ref | **110V/60Hz (ANSI and ANSI Export Specs)** | B |
| | 1001115407 | Ref | **110V/50Hz (ANSI Export Spec)** | A |
| | 1001115410 | Ref | **110V/50Hz (CE Spec)** | B |
| | 1001115406 | Ref | **220V/50Hz (ANSI Export Specs)** | B |
| | 1001115409 | Ref | **220V/50Hz (Australian and CE Specs)** | B |
| | | Ref | **China Built Machines: (SN B300000100 through B300005764, Excluding B300005620)** | |
| | 1001115405 | Ref | **110V/60Hz (ANSI and ANSI Export Specs)** | B |
| | 1001115409 | Ref | **220V/50Hz (Australian and CE Specs)** | B |
| 1 | 3580158 | 1 | Pulley | |
| 2 | | Ref | Generator and Control Box Assembly Options: | |
| 2 | 2460055 | 1 | 110V/60Hz (ANSI and ANSI Export Specs) | |
| 2 | 2460057 | 1 | 110V/50Hz (ANSI Export Specs) | |
| 2 | | Ref | 110V/50Hz Options (CE Spec): | |
| 2 | 2460057 | 1 | USA Built Machines **(SN 0300087000 through 0300121956)** | |
| 2 | 2460049 | 1 | USA Built Machines **(SN 0300121957 through 0300177361)** | |
| 2 | 2460056 | 1 | 220V/50Hz Options (ANSI Export Specs): | |
| 2 | | Ref | 220V/50Hz Options (Australian and CE Specs): | |
| 2 | 2460056 | 1 | USA Built Machines **(SN 0300087000 through 0300121956)** | |
| 2 | 1001100321 | 1 | USA Built Machines **(SN 0300121957 through 0300177361)** | |
| 2A | 7012558 | 1 | Generator Only - 110V/60Hz | |
| 2A | 2460049 | 1 | Generator Only - 110V/50Hz | |
| 2A | 1001100321 | 1 | Generator Only - 220V/50Hz | |
| | | Ref | **Note: Replacement Generators come standard with p/n 3580134 pulley. This pulley may not be correct for all applications. Refer to pulley options below.** | |
| 2A | | Ref | Armature with Slip Rings Options: | |
| 2A | 7026199 | 1 | Armature with Slip Rings - 110V/60Hz | |
| 2A | 70000122 | 1 | Armature with Slip Rings - 110V/50Hz | |
| 2A | 70000123 | 1 | Armature with Slip Rings - 220V/50Hz | |
| 2A | 7012513 | 4 | Cap, Brush Holder | |
| 2A | 7020108 | 4 | Brush | |
| 2A | 7020109 | 4 | Holder, Brush | |
| 2A | 7012514 | 1 | Fan | |
| 2A | 7020110 | 1 | Bell, Front | |
| 2A | 7020111 | 1 | Bell, Rear | |
| 2A | 7020190 | 2 | Bearing | |
| 2B | 7019680 | 1 | Box, Control - 110V/60Hz | |
| 2B | 7019680 | 1 | Box, Control - 110V/50Hz (ANSI Export Specs) | |

# SECTION 2 - TURNTABLE

| ITEM | PART NUMBER | QTY | DESCRIPTION | REV |
|---|---|---|---|---|
| 2B | 7019680 | 1 | Box, Control - 110V/50Hz (Australian and CE Specs USA Built Machines) **(SN 0300087000 through 0300121956)** | |
| 2B | Not Required | 1 | Box, Control - 110V/50Hz (Australian and CE Specs USA Built Machines) **(SN 0300121957 through 0300177361)** | |
| 2B | 70000127 | 1 | Box, Control - 220V/50Hz (ANSI Export Specs) | |
| 2B | 70000127 | 1 | Box, Control - 220V/50Hz (Australian and CE Specs USA Built Machines) **(SN 0300087000 through 0300121956)** | |
| 2B | Not Required | 0 | Box, Control - 220V/50Hz (Australian and CE Specs USA Built Machines) **(SN 0300121957 through 0300177361)** | |
| | Not Required | 0 | Box, Control - 220V/50Hz (Australian and CE Specs China Built Machines) **(SN B300000100 through B300005764, Excluding B300005620)** | |
| 2B | | Ref | Receptacle Options: | |
| 2B | 4460190 | 1 | Receptacle, Standard (110V Only) | |
| 2B | 4460027 | 1 | Receptacle, Twistlock (110V Only) | |
| 2B | 70000124 | 1 | Receptacle, Double (220V/50Hz Only) | |
| 2B | 70000125 | 1 | Receptacle, Single (220V/50Hz Only) | |
| 2B | | Ref | Breaker, Circuit Options: | |
| 2B | 4360542 | 1 | Breaker 110V/60Hz | |
| 2B | 4360542 | 1 | Breaker 110V/50Hz | |
| 2B | 70000126 | 1 | Breaker 220V/50Hz | |
| 2B | 3520028 | 1 | Plug, Hole | |
| 2C | | Ref | Voltmeter Options: | |
| 2C | 2420203 | 1 | Voltmeter - 110V | |
| 2C | 7020192 | 1 | Voltmeter - 220V | |
| 2D | | Ref | Pulley Options: | |
| 2D | 3580276 | 1 | Pulley - 60Hz | |
| 2D | 3580134 | 1 | Pulley - 50Hz | |
| 2D | 7027887 | 1 | Key, Woodruff | |
| 3 | | Ref | Decal Options: | |
| 3 | 3251243 | 1 | 110V/60Hz (ANSI and ANSI Export Specs) | |
| 3 | 3255325 | 1 | 110V/50Hz (CE Spec) | |
| 3 | Not Required | 0 | 220V/50Hz (ANSI Export, Australian and CE Specs) | |
| 4 | 0200742 | 1 | Arm, Adjusting | |
| 5 | 0480121 | 1 | V-Belt | |
| 7 | 0641610 | 1 | Bolt 3/8in-16NC x 1-1/4in | |
| 8 | 0100011 | AR | Compound, Locking | |
| 9 | 0641772 | 1 | Bolt 7/16in-14NC x 9in | |
| 10 | 4751600 | 6 | Flatwasher 3/8in Regular | |
| 11 | 2860012 | 1 | Key, Woodruff | |
| 12 | 3311605 | 1 | Locknut 3/8in-16NC | |
| 13 | 3311705 | 1 | Locknut 7/16in-14NC | |
| 14 | 3740080 | 1 | Relay | |
| 16 | 0641508 | 1 | Bolt 5/16in-18NC x 1in | |
| 17 | 4751500 | AR | Flatwasher 5/16in Regular | |
| 20 | 0721006 | AR | Bolt #10-24NC x 3/4in | |
| 21 | 3311005 | AR | Locknut #10-24NC | |
| 22 | 4751000 | AR | Flatwasher #10 Regular | |
| 25 | 4360336 | 1 | Switch, Toggle (Not Shown - Located at Platform) | |
| 26 | 4740397 | 1 | Bushing (Not Shown - Located at Platform) | |
| 27 | 4060802 | 1 | Guard, Switch (Not Shown - Located at Platform) | |
| 28 | 3252507 | 1 | Decal - 220V - 50/60Hz (Not Shown - Located on Turntable) | |
| 29 | 2820031 | 4 in/10cm | Heat Shrink (Not Shown - Located at Platform) | |

| ITEM | PART NUMBER | QTY | DESCRIPTION | REV |
|---|---|---|---|---|
| 30 | 3251102 | 1 | Decal (Not Shown - Located at Platform) | |
| 31 | 4070585 | AR | Shim (ANSI Export, Australian and CE Specs) (USA Built Machines) **(SN 0300087000 through 0300126420)** | |
| | | Ref | **Note: Items 32-43 Used on ANSI Export, Australian and CE Specs USA Built Machines (SN 0300121957 through 0300177361)** | |
| | | Ref | **Note: Items 32-43 Used on ANSI Export, Australian and CE Specs China Built Machines (SN B300000100 through B300005764, Excluding B300005620)** | |
| 32 | 0641404 | 1 | Bolt 1/4in-20NC x 1/2 | |
| 33 | | Ref | Decal Options: | |
| 33 | 1705325 | 2 | Decal - 110V - 50Hz | |
| 33 | 3252507 | 2 | Decal - 220V - 50Hz | |
| | | Ref | **Note: One Decal Not Shown - Located on the Inside of Platform Rail.** | |
| 34 | 3290505 | 1 | Locknut M5 x 0.8mm | |
| 35 | 4031608 | 1 | Bolt M5 x 20mm | |
| 36 | 4240018 | 1 | Tie Strap (Not Shown) | |
| 37 | 4420060 | 1 | Tape, Double Coated Acrylic Foam | |
| 38 | 4460968 | 3 | Connector, Strain Relief | |
| 39 | 4811600 | 1 | Flatwasher M5 | |
| 40 | 1001099869 | 1 | Box, Junction | |
| 42 | | Ref | Light Red Options: | |
| 42 | 1001100233 | 1 | 125 Vac | |
| 42 | 1001100234 | 1 | 250 Vac | |
| 43 | 0962449 | 1 | Bushing | |
| | 2902085 | 1 | Kit, Powermite Generator Mounting | |

## FIGURE 2-32. 2500W GENERATOR INSTALLATION - FORD MACHINES (OPTIONAL)

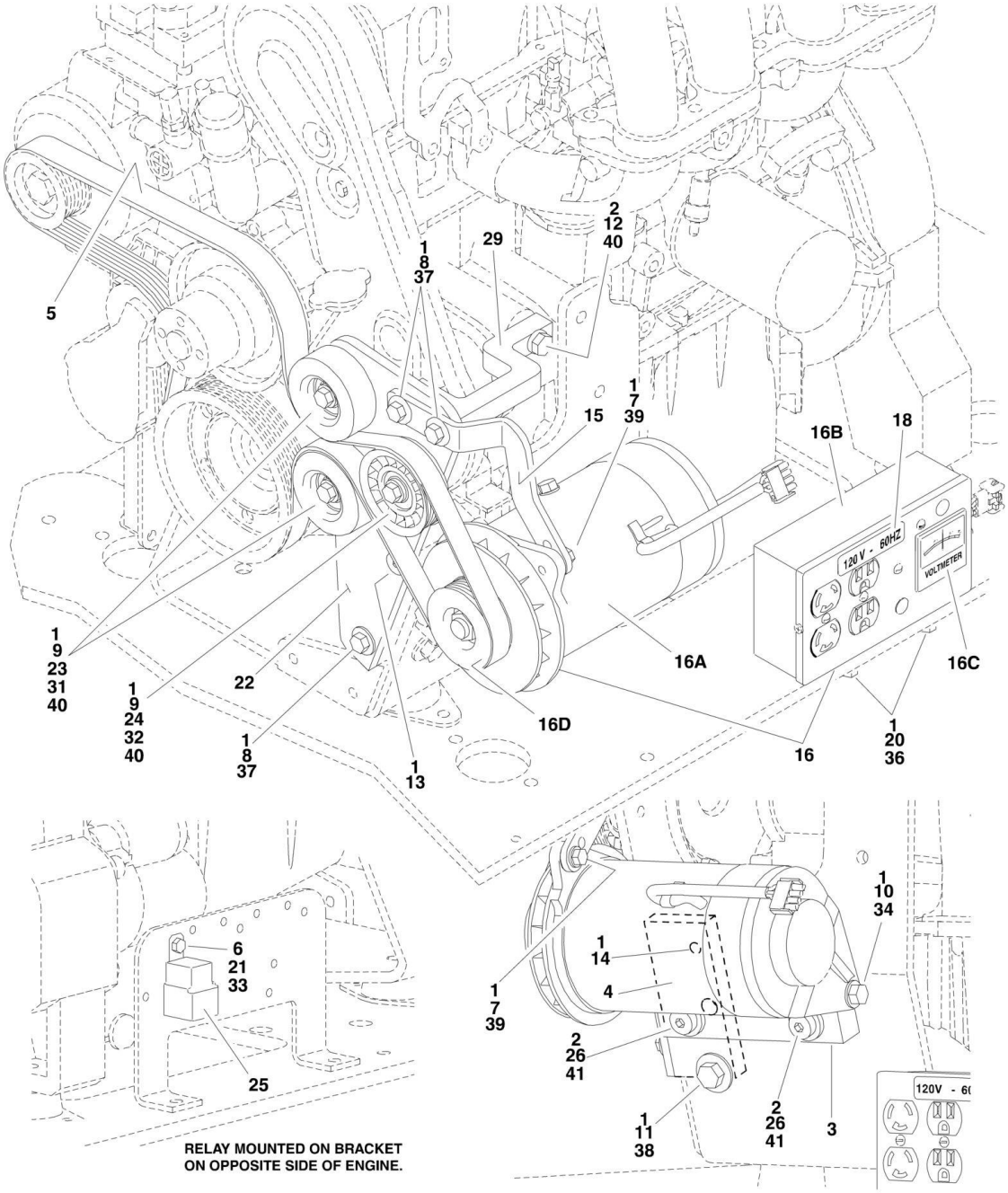

## FIGURE 2-32. 2500W GENERATOR INSTALLATION - FORD MACHINES (OPTIONAL)

| ITEM | PART NUMBER | QTY | DESCRIPTION | REV |
|---|---|---|---|---|
| | | Ref | **Note: Only Available on USA Built Machines.** | |
| | | Ref | **GENERATOR INSTALLATION OPTIONS:** | |
| | 0273507 | Ref | **110V Generator** | C |
| | 0273511 | Ref | **220V Generator** | C |
| 1 | 0100011 | AR | Compound, Locking | |
| 2 | 0100019 | AR | Compound, Locking | |
| 3 | 0363082 | 1 | Bar, Generator Adjuster | |
| 4 | 0363097 | 1 | Bar, Pulley Mounting | |
| 5 | 0480135 | 1 | V-Belt | |
| 6 | 0641405 | 1 | Bolt 1/4in-20NC x 5/8in | |
| 7 | 0641508 | 1 | Bolt 5/16in-18NC x 1in | |
| 8 | 0641611 | 3 | Bolt 3/8in-16NC x 1-3/8in | |
| 9 | 0641612 | 3 | Bolt 3/8in-16NC x 1-1/2in | |
| 10 | 0641718 | 2 | Bolt 7/16in-14NC x 2-1/4in | |
| 11 | 0641810 | 1 | Bolt 1/2in-13NC x 1-1/4in | |
| 12 | 0701015 | 1 | Bolt 10mm x 35mm | |
| 13 | 0741606 | 1 | Screw, Countersunk 3/8in-16NC x 3/4in | |
| 14 | 0741808 | 1 | Screw, Countersunk 1/2in-13NC x 1in | |
| 15 | 0902952 | 1 | Bracket, Generator Mounting | |
| 16 | | Ref | Generator and Control Box Assembly Options: | |
| 16 | 2460051 | 1 | 110Volt Assembly | |
| 16 | 2460052 | 1 | 220Volt Assembly | |
| 16A | 7012558 | 1 | Generator Only - 110V/60Hz | |
| 16A | 1001100321 | 1 | Generator Only - 220V/50Hz | |
| | | Ref | **Note: Replacement Generators come standard with p/n 3580134 pulley. This pulley may not be correct for all applications. Refer to pulley options below.** | |
| 16A | | Ref | Armature with Slip Rings Options: | |
| 16A | 7026199 | 1 | Armature with Slip Rings - 110V/60Hz | |
| 16A | 70000123 | 1 | Armature with Slip Rings - 220V/50Hz | |
| 16A | 7012513 | 4 | Cap, Brush Holder | |
| 16A | 7020108 | 4 | Brush | |
| 16A | 7020109 | 4 | Holder, Brush | |
| 16A | 7012514 | 1 | Fan | |
| 16A | 7020110 | 1 | Bell, Front | |
| 16A | 7020111 | 1 | Bell, Rear | |
| 16A | 7020190 | 2 | Bearing | |
| 16B | 7019680 | 1 | Box, Control - 110V/60Hz | |
| 16B | 70000127 | 1 | Box, Control - 220V/50Hz | |
| 16B | | Ref | Receptacle Options: | |
| 16B | 4460190 | 1 | Receptacle, Standard (110V Only) | |
| 16B | 4460027 | 1 | Receptacle, Twistlock (110V Only) | |
| 16B | 70000124 | 1 | Receptacle, Double (220V/50Hz Only) | |
| 16B | 70000125 | 1 | Receptacle, Single (220V/50Hz Only) | |
| 16B | | Ref | Breaker, Circuit Options: | |
| 16B | 4360542 | 1 | Breaker 110V/60Hz | |
| 16B | 70000126 | 1 | Breaker 220V/50Hz | |
| 16B | 3520028 | 1 | Plug, Hole | |
| 16C | | Ref | Voltmeter Options: | |
| 16C | 2420203 | 1 | Voltmeter - 110V | |

# SECTION 2 - TURNTABLE

| ITEM | PART NUMBER | QTY | DESCRIPTION | REV |
|---|---|---|---|---|
| 16C | 7020192 | 1 | Voltmeter - 220V | |
| 16D | | Ref | Pulley Options: | |
| 16D | 3580324 | 1 | Pulley - 60Hz | |
| 16D | 3580325 | 1 | Pulley - 50Hz | |
| 16D | 7027887 | 1 | Key, Woodruff | |
| 17 | 2820031 | AR | Heat Shrink (Not Shown - Located at Platform) | |
| 18 | | Ref | Decal | |
| 18 | 1702590 | 1 | 110V Generator | |
| 18 | 3251243 | 1 | 220V Generator | |
| 19 | 3251102 | 1 | Nameplate Options (Not Shown - Located at Platform) | |
| 20 | 3311005 | 2 | Locknut #10-24NC | |
| 21 | 3311405 | 1 | Locknut 1/4in-20NC | |
| 22 | 3574225 | 1 | Plate, Pulley Mounting | |
| 23 | 3580312 | 1 | Pulley, Idler | |
| 24 | 3580313 | 1 | Pulley, Grooved Idler | |
| 25 | 3740080 | 1 | Relay, Bosch | |
| 26 | 3900322 | 2 | Screw, Shoulder | |
| 27 | 4060802 | 1 | Guard, Switch (Not Shown - Located at Platform) | |
| 28 | 4240018 | AR | Tie-Strap | |
| 29 | 4340738 | 1 | Support, Idler Pulley | |
| 30 | 4360336 | 1 | Switch, Toggle (Not Shown - Located at Platform) | |
| 31 | 4568734 | 1 | Spacer, Tube (Idler Pulley Non-Grooved) | |
| 32 | 4568735 | 1 | Spacer, Tube (Idler Pulley Grooved) | |
| 33 | 4711400 | 1 | Flatwasher 1/4in Narrow | |
| 34 | 4711700 | 2 | Flatwasher 7/16in Narrow | |
| 35 | 4740397 | 1 | Spacer | |
| 36 | 4751000 | 2 | Flatwasher #10 Wide | |
| 37 | 4751600 | 3 | Flatwasher 3/8in Wide | |
| 38 | 4751800 | 1 | Flatwasher 1/2in Wide | |
| 39 | 4891500 | 1 | Flatwasher 5/16in Hardened | |
| 40 | 4891600 | 4 | Flatwasher 3/8in Hardened | |
| 41 | 4892000 | 2 | Flatwasher 5/8in Hardened | |

## FIGURE 2-33. 2500W GENERATOR INSTALLATION - GM MACHINES (OPTIONAL)

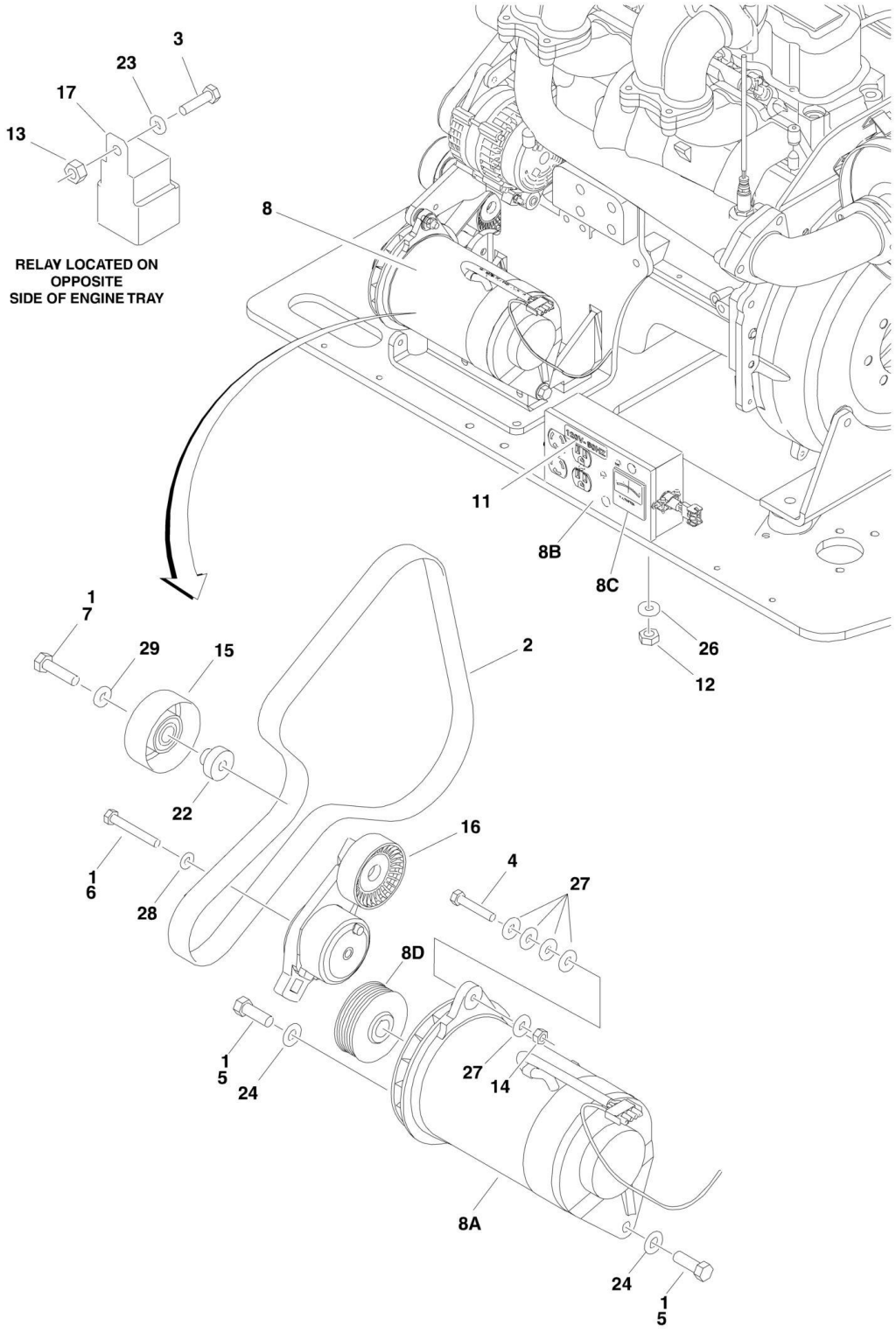

## FIGURE 2-33. 2500W GENERATOR INSTALLATION - GM MACHINES (OPTIONAL)

| ITEM | PART NUMBER | QTY | DESCRIPTION | REV |
|---|---|---|---|---|
| | | Ref | **Note: Only Available on USA Built Machines.** | |
| | | Ref | **GENERATOR INSTALLATION OPTIONS:** | |
| | 0275039 | Ref | **110V Generator** | F |
| | See Note | Ref | **220V Generator (Note: Not Available for Purchase)** | |
| 1 | 0100011 | AR | Compound, Locking | |
| 2 | 0480142 | 1 | V-Belt | |
| 3 | 0641405 | 1 | Bolt 1/4in-20NC x 5/8in | |
| 4 | | Ref | Bolt Options: | |
| 4 | 0641514 | 1 | Bolt 5/16in-18NC x 1-3/4in | |
| 4 | 0641510 | 1 | Bolt 5/16in-18NC x 1-1/4in | |
| 5 | 0641710 | 2 | Bolt 7/16in-14NC x 1-1/4in | |
| 6 | 0700820 | 1 | Bolt M8 x 60mm | |
| 7 | 0701016 | 1 | Bolt M10 x 340mm | |
| 8 | | Ref | Generator and Control Box Assembly Options: | |
| 8 | 2460051 | 1 | 110Volt Assembly | |
| 8 | 2460052 | 1 | 220Volt Assembly | |
| 8A | 7012558 | 1 | Generator Only - 110V/60Hz | |
| 8A | 1001100321 | 1 | Generator Only - 220V/50Hz | |
| | | Ref | **Note: Replacement Generators come standard with p/n 3580134 pulley. This pulley may not be correct for all applications. Refer to pulley options below.** | |
| 8A | | Ref | Armature with Slip Rings Options: | |
| 8A | 7026199 | 1 | Armature with Slip Rings - 110V/60Hz | |
| 8A | 70000123 | 1 | Armature with Slip Rings - 220V/50Hz | |
| 8A | 7012513 | 4 | Cap, Brush Holder | |
| 8A | 7020108 | 4 | Brush | |
| 8A | 7020109 | 4 | Holder, Brush | |
| 8A | 7012514 | 1 | Fan | |
| 8A | 7020110 | 1 | Bell, Front | |
| 8A | 7020111 | 1 | Bell, Rear | |
| 8A | 7020190 | 2 | Bearing | |
| 8B | 7019680 | 1 | Box, Control - 110V/60Hz | |
| 8B | 70000127 | 1 | Box, Control - 220V/50Hz | |
| 8B | | Ref | Receptacle Options: | |
| 8B | 4460190 | 1 | Receptacle, Standard (110V Only) | |
| 8B | 4460027 | 1 | Receptacle, Twistlock (110V Only) | |
| 8B | 70000124 | 1 | Receptacle, Double (220V/50Hz Only) | |
| 8B | 70000125 | 1 | Receptacle, Single (220V/50Hz Only) | |
| 8B | | Ref | Breaker, Circuit Options: | |
| 8B | 4360542 | 1 | Breaker 110V/60Hz | |
| 8B | 70000126 | 1 | Breaker 220V/50Hz | |
| 8B | 3520028 | 1 | Plug, Hole | |
| 8C | | Ref | Voltmeter Options: | |
| 8C | 2420203 | 1 | Voltmeter - 110V | |
| 8C | 7020192 | 1 | Voltmeter - 220V | |
| 8D | | Ref | Pulley Options: | |
| 8D | 3580324 | 1 | Pulley - 60Hz | |
| 8D | 3580325 | 1 | Pulley - 50Hz | |
| 8D | 7027887 | 1 | Key, Woodruff | |
| 9 | 2820031 | AR | Heat Shrink (Not Shown - Located at Platform) | |

# SECTION 2 - TURNTABLE

| ITEM | PART NUMBER | QTY | DESCRIPTION | REV |
|---|---|---|---|---|
| 10 | 3251102 | 1 | Nameplate - Generator (Not Shown - Located at Platform) | |
| 11 | | Ref | Decal | |
| 11 | 3251243 | 1 | 110 Volt Generator | |
| 11 | 1702590 | 1 | 220 Volt Generator | |
| 12 | 3311005 | 2 | Locknut # 10-24NC | |
| 13 | 3311405 | 1 | Locknut 1/4in-20NC | |
| 14 | 3311505 | 1 | Locknut 5/16in-18NC | |
| 15 | 3580312 | 1 | Pulley, Idler | |
| 16 | 3580348 | 1 | Tensioner, Belt | |
| 17 | 3740080 | 1 | Relay, Bosch | |
| 18 | 4060802 | 1 | Guard, Switch (Not Shown - Located at Platform) | |
| 19 | 4240018 | AR | Tie-Strap (Not Shown) | |
| 20 | 4360336 | 1 | Switch, Toggle (Not Shown - Located at Platform) | |
| 21 | 4460906 | 3 | Terminal (Not Shown) | |
| 22 | 4568735 | 1 | Spacer, Tube (Idler Pulley Grooved) | |
| 23 | 4711400 | 1 | Flatwasher 1/4in Thin | |
| 24 | 4711700 | 2 | Flatwasher 7/16in Thin | |
| 25 | 4740397 | 1 | Spacer (Not Shown - Located at Platform) | |
| 26 | 4751000 | 2 | Flatwasher #10 Regular | |
| 27 | 4751500 | AR | Flatwasher 5/16in Regular | |
| 28 | 4811900 | 1 | Flatwasher M8 | |
| 29 | 4891600 | 1 | Flatwasher 3/8in Hardened | |

## FIGURE 2-34. 4000W GENERATOR INSTALLATION - DEUTZ D2011 ENGINES

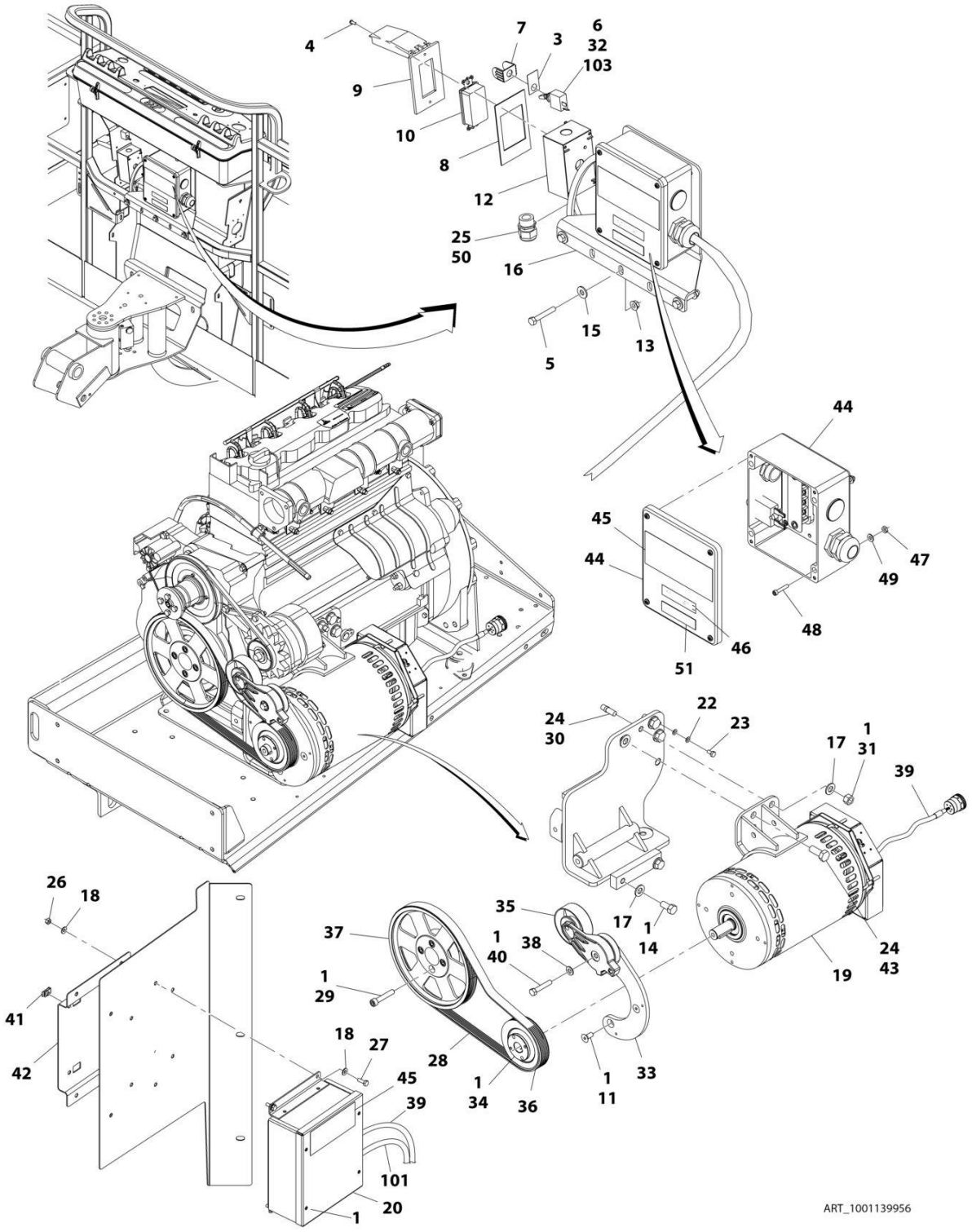

## FIGURE 2-34. 4000W GENERATOR INSTALLATION - DEUTZ D2011 ENGINES

| ITEM | PART NUMBER | QTY | DESCRIPTION | REV |
|---|---|---|---|---|
| | | Ref | **4000W GENERATOR INSTALLATION - DEUTZ D2011 ENGINES** | |
| | 1001139956 | Ref | **4000W/60Hz Generator Installation - Deutz D2011 Engines** | B |
| | 1001139957 | Ref | **4000W/50Hz Generator Installation - Deutz D2011 Engines** | D |
| 1 | 0100011 | 1 | Compound, Locking | |
| 3 | 3251102 | 1 | Nameplate, Generator | |
| 4 | 3910606 | 4 | Screw #6 x 3/8 | |
| 5 | 0641516 | 3 | Bolt 5/16 x 2 | |
| 6 | 4360336 | 1 | Switch, Toggle | |
| 7 | 4060802 | 1 | Guard, Switch | |
| 8 | 3960422 | 1 | Gasket, AC Receptacle (60Hz) | |
| 9 | 1001110873 | 1 | Cover, Gang Vertical Receptacle GFCI (60Hz) | |
| 10 | 4460346 | 1 | Receptacle (60Hz) | |
| 11 | 0741607 | 3 | Screw 3/8 x 7/8 | |
| 12 | 0860038 | 1 | Box, Switch-Weatherhead (60Hz) | |
| 13 | 3311508 | 3 | Nut 5/16 | |
| 14 | 0641808 | 2 | Bolt 1/2 x 1 | |
| 15 | 4751500 | 3 | Washer 5/16 | |
| 16 | 0902888 | 1 | Bracket, Junction Box (60Hz) | |
| 17 | 4711800 | 3 | Washer 1/2 | |
| 18 | 4711400 | 8 | Washer 1/4 | |
| 19 | 1001129858 | 1 | Generator Assembly (60Hz) | |
| 19 | 1001138565 | 1 | Generator Assembly (50Hz) | |
| 19 | 70003709 | 1 | Ring, Retaining (External) | |
| 19 | 70003708 | 1 | Ring, Retaining (Internal) | |
| 19 | 70001966 | 1 | Bearing | |
| 19 | 70004092 | 1 | Endbell (Shaft End) | |
| 19 | 70004171 | 1 | Key | |
| 19 | 70004676 | 1 | Rotor | |
| 19 | 70004684 | 1 | Stator (60Hz) | |
| 19 | 70004677 | 1 | Stator (50Hz) | |
| 19 | 70004678 | 1 | Endbell (Rear) | |
| 19 | 70004679 | 1 | Cover, Endbell (Rear) | |
| 19 | 70004680 | 1 | Enclosure, Wiring | |
| 19 | 70004685 | 1 | Cover, Enclosure (60Hz) | |
| 19 | 70004681 | 1 | Cover, Enclosure (50Hz) | |
| 19 | 70004682 | 1 | Switch, Reset (Located on Enclosure Cover) | |
| 19 | 70004098 | 1 | Connector, Strain Relief (60Hz) (Located on Enclosure Cover) | |
| 19 | 70004683 | 1 | Connector, Strain Relief (50Hz) (Located on Enclosure Cover) | |
| 20 | 1001138566 | 1 | Box, Control | |
| 20 | 70006552 | 1 | Capacitor | |
| 20 | 70006553 | 1 | Relay | |
| 21 | 4240018 | AR | Tie-Strap (Not Shown) | |
| 22 | 4791400 | 2 | Washer 1/4 | |
| 23 | 0641404 | 1 | Bolt 1/4 x 1/2 | |
| 24 | 0100019 | AR | Compound, Locking | |
| 25 | 4460071 | 1 | Connector, Strain Relief (60Hz) | |
| 26 | 3311405 | 4 | Nut 1/4 | |
| 27 | 0641406 | 4 | Bolt 1/4 x 3/4 | |
| 28 | 0480129 | 1 | Belt, Generator (60Hz) | |
| 28 | 0480126 | 1 | Belt, Generator (50Hz) | |

# SECTION 2 - TURNTABLE

| ITEM | PART NUMBER | QTY | DESCRIPTION | REV |
|---|---|---|---|---|
| 29 | 4032015 | 4 | Capscrew M10 x 55 | |
| 30 | 4300157 | 1 | Stud | |
| 31 | 3311801 | 1 | Nut 1/2 | |
| 32 | 2820031 | AR | Heat Shrink | |
| 33 | 1001139357 | 1 | Mount, Tensioner | |
| 34 | 0962520 | 1 | Bushing, Split | |
| 35 | 3580317 | 1 | Tensioner, Belt with Pulley | |
| 36 | 3580318 | 1 | Pulley, Generator (60Hz) | |
| 36 | 3580319 | 1 | Pulley, Generator (50Hz) | |
| 37 | 3580320 | 1 | Pulley, Engine Deutz | |
| 38 | 4711600 | 1 | Washer 3/8 | |
| 39 | 1001152532 | 1 | Harness, Generator | |
| 40 | 0641616 | 1 | Bolt 3/8 x 2 | |
| 41 | 3300454 | 4 | Nut, U-Style 1/4 | |
| 42 | 3575863 | 1 | Plate | |
| 43 | 0771415 | 1 | Bolt M14 x 35 Grade 10.9 | |
| 44 | 1001152457 | 1 | Junction Box Assembly (60Hz) | |
| 44 | 3300396 | 1 | Cover, Breaker | |
| 44 | 4360070 | 1 | Breaker, Circuit - 15Amp | |
| 44 | 4460425 | 1 | Connector, Strain Relief (LH Side) | |
| 44 | 4460426 | 1 | Connector, Strain Relief (RH Side) | |
| 44 | 1001152530 | 1 | Block, Terminal | |
| 44 | 1001158363 | 1 | Cover, Terminal Block | |
| 44 | 1001153260 | 1 | Decal - Wiring Diagram | |
| 45 | 1705387 | 3 | Decal - Hazardous Voltage (60Hz) | |
| 45 | 1705489 | 2 | Decal - Hazardous Voltage (50Hz) | |
| 46 | 3251243 | 1 | Decal, 120V-60Hz (60Hz) | |
| 47 | 3311005 | 4 | Nut #10 | |
| 48 | 3931016 | 4 | Capscrew #10 x 1 | |
| 49 | 4751000 | 4 | Washer #10 | |
| 50 | 0100020 | AR | Sealant | |
| 51 | 1705374 | 1 | Decal, 240V-60Hz (60Hz) | |
| 61 | 1001096070 | 1 | Breaker Box Kit (Not Shown) (50Hz) (See ELECTRICAL SECTION for Breakdown) | |
| 62 | 1001153636 | 1 | Bracket (Attaches Item 61) (Not Shown) (50Hz) | |
| 66 | 0641415 | 2 | Capscrew 1/4 x 1-7/8 (Attaches Item 61) (Not Shown) (50Hz) | |
| | | Ref | **ELECTRICAL DIAGRAM COMPONENTS** | |
| 101 | 1001153197 | 1 | Harness, Generator | |
| 103 | 4922641 | 1 | Harness, Switch | |
| 105 | 1001164091 | 1 | Harness, Ground (50Hz) (Not Shown) (ANSI Export Specs) | |

## FIGURE 2-35. 7500W SKYPOWER GENERATOR INSTALLATION - CATERPILLAR AND DEUTZ ENGINES

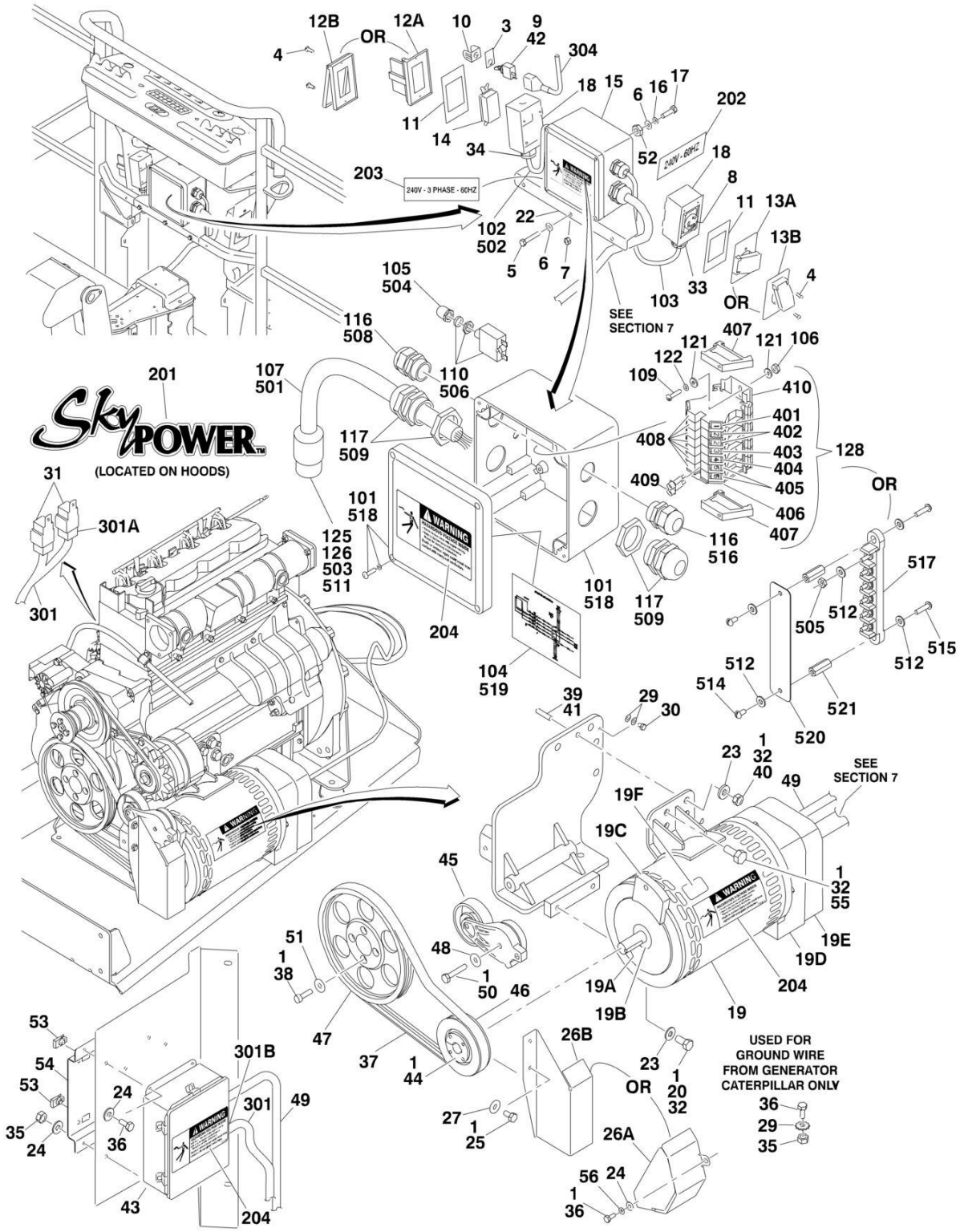

## FIGURE 2-35. 7500W SKYPOWER GENERATOR INSTALLATION - CATERPILLAR AND DEUTZ ENGINES

| ITEM | PART NUMBER | QTY | DESCRIPTION | REV |
|---|---|---|---|---|
| | | Ref | **7500W SKYPOWER GENERATOR INSTALLATION** | |
| | | Ref | **USA Built Machines without UGM:** | |
| | 0273576 | Ref | **60Hz and Caterpillar Engine (ANSI and ANSI Export Specs)** | I |
| | 0273577 | Ref | **50Hz and Caterpillar Engine (ANSI Export, Australian and CE Specs)** | G |
| | 0272618 | Ref | **60Hz and Deutz Engine (ANSI and ANSI Export Specs)** | K |
| | 0272619 | Ref | **50Hz and Deutz Engine (ANSI Export, Australian and CE Specs)** | G |
| | | Ref | **USA Built Machines with UGM:** | |
| | 1001115401 | Ref | **60Hz and Caterpillar Engine (ANSI and ANSI Export Specs)** | C |
| | 1001115402 | Ref | **50Hz and Caterpillar Engine (ANSI Export, Australian and CE Specs)** | C |
| | 1001115391 | Ref | **60Hz and Deutz Engine (ANSI and ANSI Export Specs)** | C |
| | 1001115392 | Ref | **50Hz and Deutz Engine (ANSI Export, Australian and CE Specs)** | B |
| | | Ref | **China Built Machines:** | |
| | 1001115401 | Ref | **60Hz and Caterpillar Engine (ANSI and ANSI Export Specs)** | C |
| | 1001115402 | Ref | **50Hz and Caterpillar Engine (ANSI Export, Australian, CE and Japanese Specs)** | C |
| | 1001115391 | Ref | **60Hz and Deutz Engine (ANSI and ANSI Export Specs)** | F |
| | 1001115392 | Ref | **50Hz and Deutz Engine (ANSI Export, Australian, CE and Japanese Specs)** | E |
| | | Ref | **Note: For 4000W Generator Installations , See SPECIAL OPTIONS SECTION.** | |
| | | Ref | **Note: See ELECTRICAL SECTION for Boom Cable Components.** | |
| 1 | 0100011 | AR | Compound, Locking | |
| 3 | 3252764 | 1 | Nameplate | |
| 4 | 3910606 | 8 | Screw #6-32NC x 3/8in | |
| 5 | 0641516 | 3 | Bolt 5/16in-18NC x 2in | |
| 6 | 4711500 | 10 | Flatwasher 5/16in Thin | |
| 7 | 3311505 | 3 | Locknut 5/16in-18NC | |
| 8 | | Ref | Receptacle, Female Twist-Lock Options: | |
| 8 | 4460958 | 1 | 60Hz (ANSI and ANSI Export Specs) | |
| 8 | See Note | NSS | 50Hz (ANSI Export, Australian and CE Specs) (Note: Not Available - Purchase Locally) | |
| 9 | 4360336 | 1 | Switch, Toggle | |
| 10 | 4060802 | 1 | Guard, Switch | |
| 11 | | Ref | Gasket Options: | |
| 11 | 3960422 | AR | 60Hz (ANSI and ANSI Export Specs) | |
| 11 | See Note | NSS | 50Hz (ANSI Export, Australian and CE Specs) (Note: Not Available - Purchase Locally) | |
| 12 | | Ref | Cover, Receptacle Options: | |
| 12 | See Note | NSS | Cover for 50Hz (ANSI Export, Australian and CE Specs) (Note: Not Available - Purchase Locally) | |
| 12A | 4060700 | 1 | Cover - Side Hinged for 60Hz (ANSI and ANSI Export Specs USA Built Machines) **(SN 0300087000 through 0300138089)** | |
| 12B | 1001110873 | 1 | Cover - Top Hinged for 60Hz (ANSI and ANSI Export Specs USA Built Machines) **(SN 0300138090 through 0300177361)** | |
| 12B | 1001110873 | 1 | Cover - Top Hinged for 60Hz (ANSI and ANSI Export Specs China Built Machines) **(SN B300000100 through B300005764, Excluding B300005620)** | |

| ITEM | PART NUMBER | QTY | DESCRIPTION | REV |
|---|---|---|---|---|
| 13 | | Ref | Cover, Receptacle Options: | |
| 13 | See Note | NSS | Cover for 50Hz (ANSI Export, Australian and CE Specs) (Note: Not Available - Purchase Locally) | |
| 13A | 4061043 | 1 | Cover - Side Hinged for 60Hz (ANSI and ANSI Export Specs USA Built Machines) **(SN 0300087000 through 0300138089)** | |
| 13B | 1001110872 | 1 | Cover - Top Hinged for 60Hz (ANSI and ANSI Export Specs USA Built Machines) **(SN 0300138090 through 0300177361)** | |
| 13B | 1001110872 | 1 | Cover - Top Hinged for 60Hz (ANSI and ANSI Export Specs China Built Machines) **(SN B300000100 through B300005764, Excluding B300005620)** | |
| 14 | | Ref | Receptacle Options: | |
| 14 | 4460346 | 1 | 60Hz (ANSI and ANSI Export Specs) | |
| 14 | See Note | NSS | 50Hz (ANSI Export, Australian and CE Specs) (Note: Not Available - Purchase Locally) | |
| 15 | | Ref | Junction Box Assembly Options: | |
| 15 | 0861542 | 1 | 60Hz (ANSI and ANSI Export Specs) (See Items 101-128 for Breakdown) **(SN 0300087000 through 0300177360)** | |
| 15 | 0861542 | 1 | 60Hz (ANSI and ANSI Export Specs) (See Items 101-128 for Breakdown) **(SN B300000100 through B300000866)** | |
| 15 | 1001155792 | 1 | 60Hz (ANSI and ANSI Export Specs) (See Items 501-521 for Breakdown) **(SN B300000867 through B300005764, Excluding B300005620)** | |
| 15 | 0861567 | 1 | 50Hz (ANSI Export, Australian and CE Specs) (See Items 101-128 for Breakdown) **(SN 0300087000 through 0300177360)** | |
| 15 | 0861567 | 1 | 50Hz (ANSI Export, Australian and CE Specs) (See Items 101-128 for Breakdown) **(SN B300000100 through B300000866)** | |
| 15 | 1001157525 | 1 | 50Hz (ANSI Export, Australian and CE Specs) (See Items 501-521 for Breakdown) **(SN B300000867 through B300005764, Excluding B300005620)** | |
| 16 | 4751500 | AR | Flatwasher 5/16in Regular | |
| 16 | 4751000 | AR | Flatwasher #10 Regular | |
| 17 | 0641505 | AR | Bolt 5/16in-18NC x 5/8in | |
| 17 | 3931016 | AR | Capscrew #10-24NC x 1in | |
| 18 | | Ref | Box, Switch Options: | |
| 18 | 0860038 | AR | 60Hz (ANSI and ANSI Export Specs) | |
| 18 | See Note | AR | 50Hz (ANSI Export, Australian and CE Specs) (Note: Not Available - Purchase Locally) | |
| 19 | | Ref | Generator Assembly Options: | |
| 19 | 2460050 | 1 | Caterpillar Engine | E |
| 19 | 2460048 | 1 | Deutz Engine | D |
| 19 | 70001100 | 1 | Rotor (Includes p/ns 70001384 & 70000863) (Not Shown) | |
| 19 | 70001384 | 1 | Bearing, Ball Radial (Not Shown) | |
| 19 | 70000863 | 1 | Fan (Not Shown) | |
| 19 | | Ref | Stator Options (Not Shown): | |
| 19 | 70001969 | 1 | 2460050 Generator | |
| 19 | 70002088 | 1 | 2460048 Generator | |
| 19 | 70002297 | 1 | Stud | |
| 19 | 70003631 | 1 | Brushholder Assembly (Not Shown) (was p/n 7024484) | |
| 19A | 70004171 | 1 | Key (was p/n 7024561) | |
| 19B | 70001966 | 1 | Bearing, Ball Radial (Located in Belt Tensioner Endbell) | |
| 19B | 70003708 | 1 | Ring, Internal Retaining (Located in Belt Tensioner Endbell) | |
| 19B | 70003709 | 1 | Ring, External Retaining (Located in Belt Tensioner Endbell) | |
| 19C | 70001953 | 1 | Endbell, Belt Tensioner | |

| ITEM | PART NUMBER | QTY | DESCRIPTION | REV |
|---|---|---|---|---|
| 19D | | Ref | Endbell, Brush Block Options (was p/n 70001385) | |
| 19D | 70004170 | 1 | Caterpillar Engine Machines | |
| 19D | 70004169 | 1 | Deutz Engine Machines | |
| 19E | | Ref | Shroud Options: | |
| 19E | 70004170 | 1 | Caterpillar Engine (was p/ns 70001970 & 70001971) | |
| 19E | 70004169 | 1 | Deutz Engine (was p/n 70002290) | |
| 19E | 7027799 | 1 | Block, Connector 6 Position (Not Shown) | |
| 19E | 7026626 | 1 | Connector - 6 Position with Seal (Not Shown) | |
| 19E | 70002460 | 1 | Nut, Brass (Attaches p/n 7027799 to Cover) (Not Shown) | |
| 19E | 7024485 | 1 | Breaker, Circuit 30Amp (Not Shown) | |
| 19E | 70001696 | 1 | Boot, Breaker (was p/n 7024486 - Not Shown) | |
| 19E | 7026597 | 1 | Connector, with Leads (Not Shown) | |
| 19E | 7026188 | 1 | Clamp, Cable (Not Shown) | |
| 19E | | Ref | Plate, End Panel Options: | |
| 19E | 70004170 | 1 | Caterpillar Engine (was p/n 70001972) | |
| 19E | 70004169 | 1 | Deutz Engine (was p/n 70002255) | |
| 19E | 70001974 | 1 | Decal - Terminal Connections | |
| 19F | 70001973 | 1 | Decal - Warning Moving Parts | |
| 20 | 0641808 | 2 | Bolt 1/2in-13NC x 1in | |
| 22 | 0902888 | 1 | Bracket, Box Mounting | |
| 23 | 4711800 | AR | Flatwasher 1/2in Thin | |
| 24 | 4711400 | AR | Flatwasher 1/4in Thin | |
| 25 | 0641404 | AR | Bolt 1/4in-20NC x 1/2in | |
| 26 | | Ref | Shield Options: | |
| 26A | 1001118599 | 1 | Caterpillar Engine (USA Built Machines) **(SN 0300143952 through 0300172670)** | |
| 26A | 1001118599 | 1 | Caterpillar Engine (China Built Machines) **(SN B300000231 through B300000763)** | |
| 26B | 4061049 | 1 | Deutz Engine (USA Built Machines) **(SN 0300087000 through 0300172670)** | |
| 26B | 4061049 | 1 | Deutz Engine (China Built Machines) **(SN B300000100 through B300000763)** | |
| 27 | 4751400 | 2 | Flatwasher 1/4in Regular (USA Built Machines) **(SN 0300087000 through 0300172670)** | |
| 27 | 4751400 | 1 | Flatwasher 1/4in Regular (China Built Machines) **(SN B300000100 through B300000763)** | |
| 28 | 4240018 | AR | Tie-Strap (Not Shown) | |
| 29 | 4791400 | 2 | Starwasher 1/4in | |
| 30 | 0641403 | 1 | Bolt 1/4in-20NC x 3/8in | |
| 31 | 3740080 | 2 | Relay **(SN 0300087000 through 0300177361, SN B300000100 through B300000865)** | |
| 32 | 0100019 | AR | Compound, Locking | |
| 33 | | Ref | Connector, Strain Relief Options: | |
| 33 | 4460051 | 1 | 60Hz (ANSI and ANSI Export Specs) | |
| 33 | See Note | NSS | 50Hz (ANSI Export, Australian and CE Specs) (Note: Not Available - Purchase Locally) | |
| 34 | | Ref | Connector, Strain Relief Options: | |
| 34 | 4460071 | 1 | 60Hz (ANSI and ANSI Export Specs) | |
| 34 | See Note | NSS | 50Hz (ANSI Export, Australian and CE Specs) (Note: Not Available - Purchase Locally) | |
| 35 | 3311405 | AR | Locknut 1/4in-20NC | |
| 36 | 0641406 | AR | Bolt 1/4in-20NC x 3/4in | |
| 36 | 0641405 | AR | Bolt 1/4in-20NC x 5/8in | |

| ITEM | PART NUMBER | QTY | DESCRIPTION | REV |
|---|---|---|---|---|
| 37 | | Ref | Belt, Drive Options: | |
| 37 | 0480129 | 1 | 60Hz (ANSI and ANSI Export Specs) | |
| 37 | 0480125 | 1 | 50Hz with Caterpillar Engine (ANSI Export, Australian and CE Specs) | |
| 37 | 0480126 | 1 | 50Hz with Deutz Engine (ANSI Export, Australian and CE Specs) | |
| 38 | | Ref | Bolt, Metric Options: | |
| 38 | 0700815 | 4 | Caterpillar Engine (Bolt M8 x 35mm) | |
| 38 | 4032015 | 4 | Deutz Engine (Capscrew M10 x 55mm) | |
| 39 | 4300157 | 1 | Stud | |
| 40 | 3311801 | 1 | Nut 1/2in-13NC | |
| 41 | 0100062 | 1 | Loctite, #RC680 | |
| 42 | 2820031 | 1 | Insulator | |
| 43 | | Ref | Control Box Assembly Options: | |
| 43 | 0861538 | 1 | 60Hz Control Box Assembly (ANSI and ANSI Export Specs) | |
| 43 | 0861572 | 1 | 50Hz Control Box Assembly (ANSI Export, Australian and CE Specs) | |
| 43 | 7024488 | 1 | Card, Circuit - Generator Power | |
| 43 | See Note | NSS | Fuse (Note: Not Available - Purchase Locally) | |
| 43 | 7024489 | 1 | Card, Circuit - Control | |
| | | Ref | **Note: Same Circuit Card (P/N 7024489) is used for both 60Hz & 50Hz. When replacing card, rocker switch on card must be set for required application.** | |
| 43 | 70000619 | 1 | Harness, Circuit Card | |
| 44 | 0962520 | 1 | Bushing, Split Taper | |
| 45 | 3580317 | 1 | Tensioner, Belt | |
| 46 | | Ref | Pulley Options: | |
| 46 | 3580318 | 1 | 60Hz (ANSI and ANSI Export Specs) | |
| 46 | 3580319 | 1 | 50Hz (ANSI Export, Australian and CE Specs) | |
| 47 | | Ref | Pulley Options: | |
| 47 | 3580321 | 1 | Caterpillar Engine | |
| 47 | 3580320 | 1 | Deutz Engine | |
| 48 | 4711600 | 1 | Flatwasher 3/8in Thin | |
| 49 | 4922925 | 1 | Harness, Generator | |
| 50 | | Ref | Bolt 3/8in-16NC x 2-1/4in Options: | |
| 50 | 3931632 | 1 | Socket Head Capscrew | |
| 50 | 0641618 | 1 | Hex Head Bolt | |
| 51 | 4811900 | 4 | Flatwasher M8 (Caterpillar Engine Only) | |
| 52 | 3311005 | AR | Nut #10-24NC | |
| 53 | 3300454 | 4 | Nut Special 1/4in-20NC (Deutz Engine Only) | |
| 54 | 3575863 | 1 | Plate, EMR2 Mount (Deutz Engine Only) | |
| 55 | | Ref | Bolt Options: | |
| 55 | 0641808 | 2 | Bolt 1/2in-13NC x 1in (Caterpillar Engine Only) | |
| 55 | 0771415 | 1 | Bolt Metric M14 x 35mm (Deutz Engine Only) | |
| 56 | 4761400 | 2 | Lockwasher 1/4in (Caterpillar Engine Only) (USA Built Machines) **(SN 0300143952 through 0300168349)** | |
| 56 | 4761400 | 1 | Lockwasher 1/4in (Caterpillar Engine Only) (China Built Machines) **(SN B300000231 through B300000734)** | |
| | | Ref | **JUNCTION BOX ASSEMBLY** | |
| | 0861542 | Ref | **60Hz (ANSI and ANSI Export Specs) (SN 0300087000 through 0300177360)** | E |
| | 0861542 | Ref | **60Hz (ANSI and ANSI Export Specs) (SN B300000100 through B300000866)** | E |

| ITEM | PART NUMBER | QTY | DESCRIPTION | REV |
|---|---|---|---|---|
| | 0861567 | Ref | **50Hz (ANSI Export, Australian and CE Specs) (SN 0300087000 through 0300177360)** | B |
| | 0861567 | Ref | **50Hz (ANSI Export, Australian and CE Specs) (SN B300000100 through B300000866)** | B |
| 101 | 0861541 | 1 | Box, Junction | |
| 102 | | Ref | Cable, Electrical 12/3 Options: | |
| 102 | 1060494 | 2 ft/.6m | 60Hz (ANSI and ANSI Export Specs) **(SN 0300087000 through 0300177361, SN B300000100 through B300001242)** | |
| 102 | 1001179154 | 2 ft/.6m | 60Hz (ANSI and ANSI Export Specs) **(SN B300001243 through B300005764, Excluding B300005620)** | |
| 102 | See Note | 2 ft/.6m | 50Hz (ANSI Export, Australian and CE Specs) (Note: Not Available - Purchase Locally) | |
| 103 | | Ref | Cable, Electrical 10/3 Options: | |
| 103 | 1060708 | 2.5 ft /.76m | 60Hz (ANSI and ANSI Export Specs) | |
| 103 | See Note | 2.5 ft /.76m | 50Hz (ANSI Export, Australian and CE Specs) (Note: Not Available - Purchase Locally) | |
| 104 | 1705376 | 1 | Decal - Wiring Schematic | |
| 105 | 3300396 | 1 | Cover, Fuse | |
| 106 | 3310601 | 2 | Nut 6-32NC | |
| 107 | 1060343 | 1.5 ft /.46m | Cable, Electrical 10/4 (60Hz Spec Only) | |
| 107 | 3520189 | 1 | Plug (50Hz Spec Only) | |
| 109 | 3910610 | 2 | Bolt 6-32NC x 5/8 | |
| 110 | 4360070 | 1 | Circuit Breaker - 15Amp | |
| 116 | 4460425 | 2 | Strain Relief, Terminal | |
| 117 | 4460426 | 2 | Connector, Strain Relief | |
| 121 | 4750600 | 4 | Flatwasher #6 Regular | |
| 122 | 4760600 | 2 | Lockwasher #6 | |
| 125 | 1671092 | 1 | Cover (60Hz Spec Only) | |
| 126 | 4460963 | 1 | Connector (60Hz Spec Only) | |
| 128 | | Ref | Terminal Block Assembly Options (See Items 401-410 for Breakdown): | |
| 128 | NPN | 1 | Gray Terminal Block Assembly | |
| 128 | 1001121340 | 1 | Tan Terminal Block Assembly | |
| | | Ref | **DECAL INSTALLATION** | |
| | 0272435 | Ref | **60Hz (ANSI and ANSI Export Specs)** | B |
| | 0272589 | Ref | **50Hz (ANSI Export, Australian and CE Specs)** | A |
| 201 | 1705460 | 2 | Decal - SkyPower | |
| 202 | 1705374 | 1 | Decal - 240V - 60Hz (60Hz Spec Only) | |
| 203 | | Ref | Decal - 240V - 3 Phase Options: | |
| 203 | 1705375 | 1 | 60Hz (ANSI and ANSI Export Specs) | |
| 203 | 1705461 | 1 | 50Hz (ANSI Export, Australian and CE Specs) | |
| 204 | | Ref | Decal, Hazardous Voltage Options: | |
| 204 | 1705387 | 3 | 60Hz (ANSI and ANSI Export Specs) | |
| 204 | 1705489 | 3 | 50Hz (ANSI Export, Australian and CE Specs) | |
| | | Ref | **ELECTRICAL DIAGRAM COMPONENTS** | |
| | 4933264 | Ref | **USA Built Machines (SN 0300087000 through 0300139040)** | C |
| | 1001112586 | Ref | **USA Built Machines (SN 0300139041 through 0300177361)** | A |
| | 1001112586 | Ref | **China Built Machines (SN B300000100 through B300000866)** | B |
| | 1001157769 | Ref | **China Built Machines (SN B300000867 through B300005764, Excluding B300005620)** | B |
| 301 | | Ref | Generator Harness Options (See ELECTRICAL SECTION for Breakdown): | |

| ITEM | PART NUMBER | QTY | DESCRIPTION | REV |
|---|---|---|---|---|
| 301 | 4922757 | 1 | USA Built Machines without UGM | 3-C |
| 301 | 1001112587 | 1 | USA Built Machines with UGM | B |
| 301 | 1001112587 | 1 | China Built Machines **(SN B300000100 through B300000865)** | B |
| 301 | 1001152429 | 1 | China Built Machines **(SN B300000866 through B300005764, Excluding B300005620)** | C |
| 301A | 4460374 | 2 | Plug, Sealed Relay (4922757 & 1001112587 Harness) | |
| 301A | 4460375 | 7 | Terminal (4822757 & 1001112587 Harness) | |
| 301B | 4460967 | 1 | Plug, Male - 3 Position | |
| 301B | 4460465 | 3 | Socket, Female | |
| 301C | 2400060 | 1 | Fuseholder (Not Shown) | |
| 301C | 2400064 | 1 | Fuse - 5Amp (Not Shown) | |
| 301D | 4460742 | 1 | Connector - 2 Position (1001152429 Harness) (Not Shown) | |
| 301D | 4460743 | 2 | Terminal (1001152429 Harness) (Not Shown) | |
| 304 | 4922641 | 1 | Switch Harness | |
| | | Ref | **TERMINAL BLOCK ASSEMBLY (SN 0300087000 through 0300177360)** | |
| | | Ref | **TERMINAL BLOCK ASSEMBLY (SN B300000100 through B300000866)** | |
| | NPN | Ref | **Gray Terminal Block Assembly (Complete Assembly Not Available - Purchase Individual Components)** | |
| | 1001121340 | Ref | **Tan Terminal Block Assembly** | A |
| 401 | | Ref | Marker Strip #1 Options: | |
| 401 | 4460411 | 2 | Gray Terminal Block Assembly | |
| 401 | 70002818 | 2 | Tan Terminal Block Assembly | |
| 402 | | Ref | Marker Strip #2 Options: | |
| 402 | 4460412 | 4 | Gray Terminal Block Assembly | |
| 402 | 70002819 | 4 | Tan Terminal Block Assembly | |
| 403 | | Ref | Marker Strip #3 Options: | |
| 403 | 4460413 | 2 | Gray Terminal Block Assembly | |
| 403 | 70002820 | 2 | Tan Terminal Block Assembly | |
| 404 | | Ref | Marker Strip #4 Options: | |
| 404 | 4460414 | 2 | Gray Terminal Block Assembly | |
| 404 | 70002821 | 2 | Tan Terminal Block Assembly | |
| 405 | | Ref | Marker Strip #5 Options: | |
| 405 | 4460415 | 4 | Gray Terminal Block Assembly | |
| 405 | 70002822 | 4 | Tan Terminal Block Assembly | |
| 406 | | Ref | Terminal, End Barrier Options: | |
| 406 | 4460956 | 1 | Gray Terminal Block Assembly | |
| 406 | 70002823 | 1 | Tan Terminal Block Assembly | |
| 407 | | Ref | Terminal, End Block Options: | |
| 407 | 4460607 | 2 | Gray Terminal Block Assembly | |
| 407 | 70002824 | 2 | Tan Terminal Block Assembly | |
| 408 | | Ref | Terminal, Block Options: | |
| 408 | 4460957 | 7 | Gray Terminal Block Assembly | |
| 408 | 70002825 | 7 | Tan Terminal Block Assembly | |
| 409 | | Ref | Terminal, Cross Connector Jumper Options: | |
| 409 | 4461001 | 2 | Gray Terminal Block Assembly | |
| 409 | 70002826 | 2 | Tan Terminal Block Assembly | |
| 410 | 3641533 | 1 | Rail, Relay | |
| | 1001157592 | Ref | **JUNCTION BOX ASSEMBLY (60Hz) (SN B300000867 through B300005764, Excluding B300005620)** | C |
| | 1001157525 | Ref | **JUNCTION BOX ASSEMBLY (50Hz) (SN B300000867 through B300005764, Excluding B300005620)** | B |

| ITEM | PART NUMBER | QTY | DESCRIPTION | REV |
|---|---|---|---|---|
| 501 | 1060343 | 1.5 ft /0.46m | Cable, Electrical - 1014 (60Hz Only) | |
| 502 | 1060494 | 2 ft/0.6m | Cable, Electrical - 12/3 (60Hz) **(SN B300000100 through B300001242)** | |
| 502 | 1001179154 | 2 ft /0.76m | Cable, Electrical - 12/3 (60Hz) **(SN B300001243 through B300005764, Excluding B300005620)** | |
| 503 | 1671092 | 1 | Cover, Connector (60Hz) | |
| 504 | 3300396 | 1 | Cover, Fuse | |
| 505 | 3311001 | 6 | Nut #10 | |
| 506 | 4360070 | 1 | Breaker, Circuit 15Amp | |
| 508 | 4460425 | 1 | Connector, Strain Relief | |
| 508 | 3520192 | 1 | Plug (50Hz) | |
| 509 | 4460426 | 2 | Connector, Strain Relief | |
| 509 | 3520189 | 1 | Plug (50Hz) | |
| 511 | 4460963 | 1 | Receptacle (60Hz) | |
| 512 | 4711000 | 10 | Washer #10 | |
| 514 | 10702077 | 2 | Screw #10 x 3/8 | |
| 515 | 10702082 | 2 | Screw #10 x 3/4 | |
| 516 | 1001152525 | 1 | Plug, Hole | |
| 517 | 1001157520 | 1 | Block, Terminal Pole | |
| 518 | 1001157521 | 1 | Box, Junction | |
| 519 | 1001157528 | 1 | Decal - Box Junction | |
| 520 | 1001158007 | 1 | Cover | |
| 521 | 1001158008 | 2 | Standoff | |

## FIGURE 2-36. 7500W SKYPOWER GENERATOR INSTALLATION - FORD ENGINES

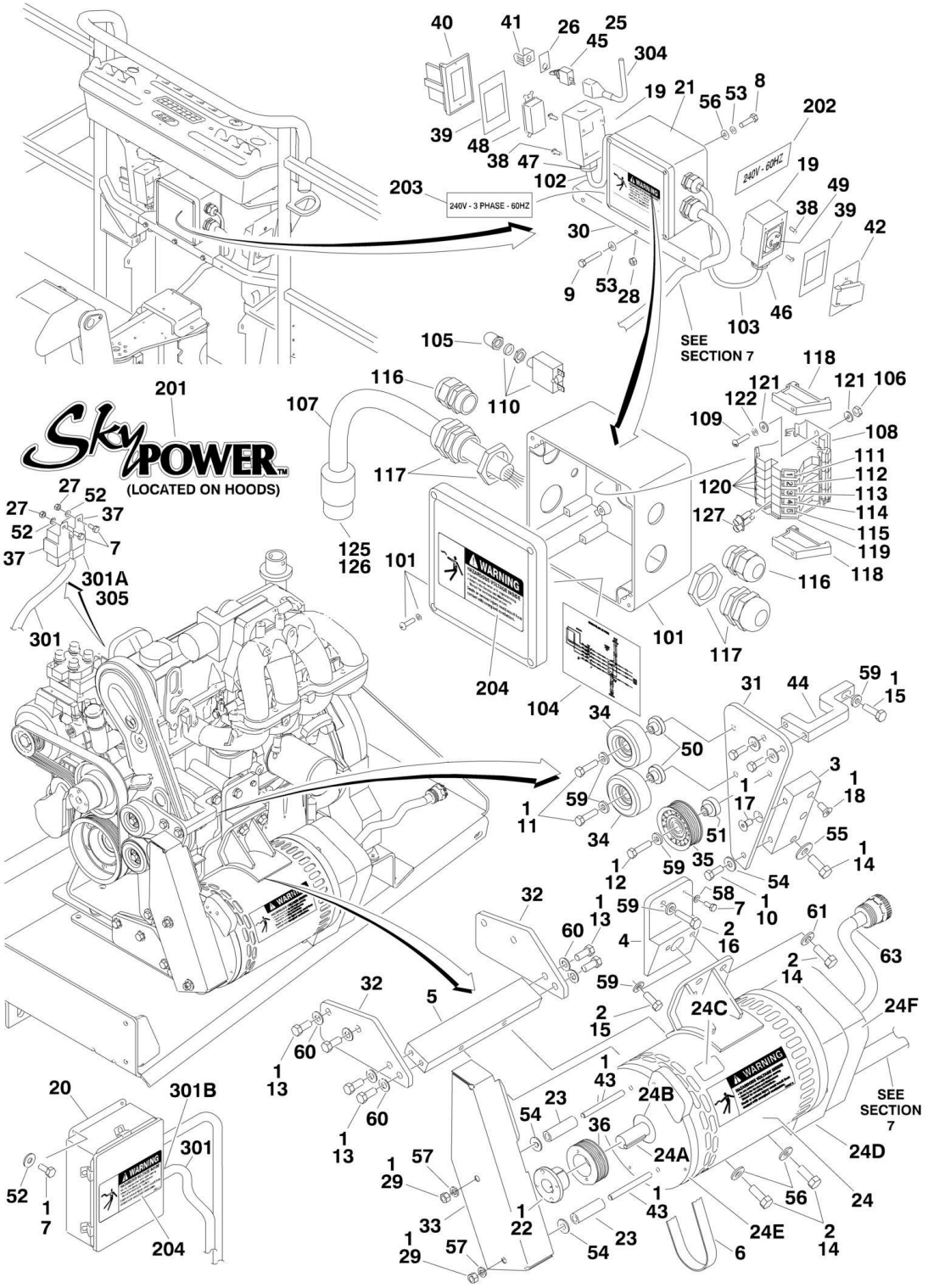

## FIGURE 2-36. 7500W SKYPOWER GENERATOR INSTALLATION - FORD ENGINES

| ITEM | PART NUMBER | QTY | DESCRIPTION | REV |
|---|---|---|---|---|
| | | Ref | **Note: Only Available on USA Built Machines.** | |
| | 0273109 | Ref | **7500W SKYPOWER GENERATOR INSTALLATION** | F |
| | | Ref | **Note: See ELECTRICAL SECTION for Boom Cable Components.** | |
| 1 | 0100011 | AR | Compound, Locking | |
| 2 | 0100019 | AR | Compound, Locking | |
| 3 | 0363097 | 1 | Bar, Pulley Mount | |
| 4 | 0363201 | 1 | Bar, Generator Mount (Top) | |
| 5 | 0363202 | 1 | Bar, Generator Mount (Bottom) | |
| 6 | 0480130 | 1 | Belt, Generator | |
| 7 | 0641405 | AR | Bolt 1/4in-20NC x 5/8in | |
| 8 | 0641505 | 4 | Bolt 5/16in-18NC x 5/8in | |
| 9 | 0641516 | 3 | Bolt 5/16in-18NC x 2in | |
| 10 | 0641608 | 3 | Bolt 3/8in-16NC x 1in | |
| 11 | 0641611 | 2 | Bolt 3/8in-16NC x 1-3/8in | |
| 12 | 0641612 | 1 | Bolt 3/8in-16NC x 1-1/2in | |
| 13 | 0641708 | 8 | Bolt 7/16in-14NC x 1in | |
| 14 | 0641810 | 5 | Bolt 1/2in-13NC x 1-1/4in | |
| 15 | 0701015 | 2 | Bolt, Metric M10 x 35mm | |
| 16 | 0701016 | 1 | Bolt, Metric M10 x 40mm | |
| 17 | 0741606 | 1 | Screw, Flathead Countersunk 3/8in-16NC x 3/4in | |
| 18 | 0741808 | 1 | Screw, Flathead Countersunk 1/2in-13NC x 1in | |
| 19 | 0860038 | 2 | Box, Switch | |
| 20 | 0861538 | 1 | Control Box Assembly (was p/n 7024487) | |
| 20 | 7024488 | 1 | Card, Circuit - Generator Power | |
| 20 | See Note | 1 | Fuse (Note: Not Available - Purchase Locally) | |
| 20 | 7024489 | 1 | Card, Circuit - Control | |
| 20 | 70000619 | 1 | Harness, Circuit Card | |
| 21 | 0861542 | 1 | Junction Box Assembly (See Items 101-127 for Breakdown) | |
| 22 | 0962520 | 1 | Bushing, Split Taper | |
| 23 | 0962521 | 2 | Spacer, Tube | |
| 24 | 2460048 | 1 | Generator Assembly | |
| 24 | 70003631 | 1 | Brushholder Assembly (Not Shown) (was p/n 7024484) | |
| 24 | 7024485 | 1 | Breaker, Circuit 30Amp (Not Shown) | |
| 24 | 70001696 | 1 | Boot, Breaker (was p/n 7024486 - Not Shown) | |
| 24 | 70001966 | 1 | Bearing, Ball Radial (Located In Belt Tensioner Endbell - Not Shown) | |
| 24 | 7027799 | 1 | Block, Connector 6 Position (Not Shown) | |
| 24 | 70002460 | 6 | Nut, Brass (Attaches p/n 7027799 to Cover) (Not Shown) | |
| 24 | 7026188 | 1 | Clamp, Cable (Not Shown) | |
| 24 | 7026597 | 1 | Connector, with Leads (Not Shown) | |
| 24 | 7026626 | 1 | Connector - 6 Position with Seal (Not Shown) | |
| 24 | 70002088 | 1 | Stator (Not Shown) | |
| 24 | 70004169 | 1 | Panel, End (Not Shown) (was p/n 70002255) | |
| 24 | 70001974 | 1 | Decal - Terminal Connections (Not Shown) | |
| 24 | 70000863 | 1 | Fan (Not Shown) | |
| 24 | 70002297 | 4 | Stud (Not Shown) | |
| 24A | 70004171 | 1 | Key (was p/n 7024561) | |
| 24A | 70001100 | 1 | Armature, Generator (Includes Radial Ball Bearing on End with Brushes and Fan) | |

# SECTION 2 - TURNTABLE

| ITEM | PART NUMBER | QTY | DESCRIPTION | REV |
|---|---|---|---|---|
| 24A | 70001384 | 1 | Bearing, Ball Radial | |
| 24B | 70001966 | 1 | Bearing, Radial Ball (Located in Belt Tensioner Endbell) | |
| 24B | 70003708 | 1 | Ring, Internal Retaining (Located in Belt Tensioner Endbell) | |
| 24B | 70003709 | 1 | Ring, External Retaining (Located in Belt Tensioner Endbell) | |
| 24C | 70001973 | 1 | Decal - Warning Moving Parts | |
| 24D | 70004169 | 1 | Endbell, Brush Block (was p/n 70001385) | |
| 24E | 70001953 | 1 | Endbell, Belt Tensioner | |
| 24F | 70004169 | 1 | Endbell, Shroud Assembly (was p/n 70002290) | |
| 25 | 2820031 | 1 | Insulator | |
| 26 | 3252764 | 1 | Nameplate | |
| 27 | 3311405 | 6 | Locknut 1/4in-20NC | |
| 28 | 3311505 | 3 | Locknut 5/16in-18NC | |
| 29 | 3311601 | 2 | Nut 3/8in-16NC | |
| 30 | 0902888 | 1 | Bracket, Box Mounting | |
| 31 | 3574225 | 1 | Plate, Pulley Mounting | |
| 32 | 3574229 | 2 | Plate, Gusset Generator Mounting | |
| 33 | 3574262 | 1 | Plate, Shield | |
| 34 | 3580312 | 2 | Pulley, Idler | |
| 35 | 3580313 | 1 | Pulley, Idler Grooved | |
| 36 | 3580314 | 1 | Pulley, Drive Grooved | |
| 37 | 3740080 | 2 | Relay | |
| 38 | 3910606 | 8 | Screw #6-32NC x 3/8in | |
| 39 | 3960422 | 2 | Gasket | |
| 40 | 4060700 | 1 | Cover, Receptacle | |
| 41 | 4060802 | 1 | Guard, Switch | |
| 42 | 4061043 | 1 | Cover, Receptacle | |
| 43 | 4300111 | 2 | Stud, Chain Assembly | |
| 44 | 4340738 | 1 | Support, Idler Pulley Mount | |
| 45 | 4360336 | 1 | Switch, Toggle | |
| 46 | 4460051 | 1 | Connector, Strain Relief | |
| 47 | 4460071 | 1 | Connector, Strain Relief | |
| 48 | 4460346 | 1 | Receptacle | |
| 49 | 4460958 | 1 | Receptacle, Female Twist-Lock | |
| 50 | 4568734 | 2 | Tube, Spacer Pulley | |
| 51 | 4568735 | 1 | Tube, Spacer Pulley Grooved | |
| 52 | 4711400 | 10 | Flatwasher 1/4in Thin | |
| 53 | 4711500 | 10 | Flatwasher 5/16in Thin | |
| 54 | 4711600 | 5 | Flatwasher 3/8in Thin | |
| 55 | 4711800 | 1 | Flatwasher 1/2in Thin | |
| 56 | 4761500 | 4 | Lockwasher 5/16in | |
| 57 | 4761600 | 2 | Lockwasher 3/8in | |
| 58 | 4791400 | 1 | Starwasher 1/4in | |
| 59 | 4891600 | 6 | Flatwasher 3/8in Hardened | |
| 60 | 4891700 | 8 | Flatwasher 7/16n Hardened | |
| 61 | 4891800 | 4 | Flatwasher 1/2in Hardened | |
| 63 | 4922905 | 1 | Harness, Generator | |
| | 0861542 | Ref | **JUNCTION BOX ASSEMBLY** | C |
| 101 | 0861541 | 1 | Box, Junction | |
| 102 | 1060494 | 2 ft/.6m | Cable, Electrical 12/3 | |
| 103 | 1060708 | 2.5 ft /.76m | Cable, Electrical 10/3 | |
| 104 | 1705376 | 1 | Decal - Wiring Schematic | |

| ITEM | PART NUMBER | QTY | DESCRIPTION | REV |
|---|---|---|---|---|
| 105 | 3300396 | 1 | Cover, Fuse | |
| 106 | 3310601 | 2 | Nut 6-32NC | |
| 107 | 1060343 | 1.5 ft /.46m | Cable, Electrical 10/4 | |
| 108 | 3641533 | 1 | Rail, Relay | |
| 109 | 3910610 | 2 | Bolt 6-32NC x 5/8 | |
| 110 | 4360070 | 1 | Circuit Breaker - 15Amp | |
| 111 | 4460411 | 2 | Marker Strip #1 | |
| 112 | 4460412 | 4 | Marker Strip #2 | |
| 113 | 4460413 | 2 | Marker Strip #3 | |
| 114 | 4460414 | 2 | Marker Strip #4 | |
| 115 | 4460415 | 4 | Marker Strip #5 | |
| 116 | 4460425 | 2 | Strain Relief, Terminal | |
| 117 | 4460426 | 2 | Connector, Strain Relief | |
| 118 | 4460607 | 2 | Terminal, End Stop | |
| 119 | 4460956 | 1 | Terminal, Block End | |
| 120 | 4460957 | 7 | Terminal, Block | |
| 121 | 4750600 | 4 | Flatwasher, #6 Regular | |
| 122 | 4760600 | 2 | Lockwasher #6 | |
| 125 | 1671092 | 1 | Cover | |
| 126 | 4460963 | 1 | Connector | |
| 127 | 4461001 | 2 | Terminal, Cross Connector | |
| | 0272435 | Ref | **DECAL INSTALLATION** | B |
| 201 | 1705460 | 2 | Decal - SkyPower | |
| 202 | 1705374 | 1 | Decal - 240V - 60Hz | |
| 203 | 1705375 | 1 | Decal - 240V - 3 Phase | |
| 204 | 1705387 | 3 | Decal, Hazardous Voltage | |
| | 4933283 | Ref | **ELECTRICAL DIAGRAM COMPONENTS** | 2-B |
| 301 | 4922905 | 1 | Generator Harness | 2-B |
| 301A | 4460374 | 2 | Plug, Sealed Relay | |
| 301A | 4460375 | 7 | Terminal | |
| 301B | 4460967 | 1 | Plug, Male - 3 Position | |
| 301B | 4460465 | 3 | Socket, Female | |
| 301C | 2400060 | 2 | Fuseholder (Not Shown) | |
| 301C | 2400064 | 2 | Fuse - 5Amp (Not Shown) | |
| 304 | 4922641 | 1 | Switch Harness | |
| 305 | 4460375 | 1 | Terminal | |

## FIGURE 2-37. 7500W SKYPOWER GENERATOR INSTALLATION - GM ENGINES

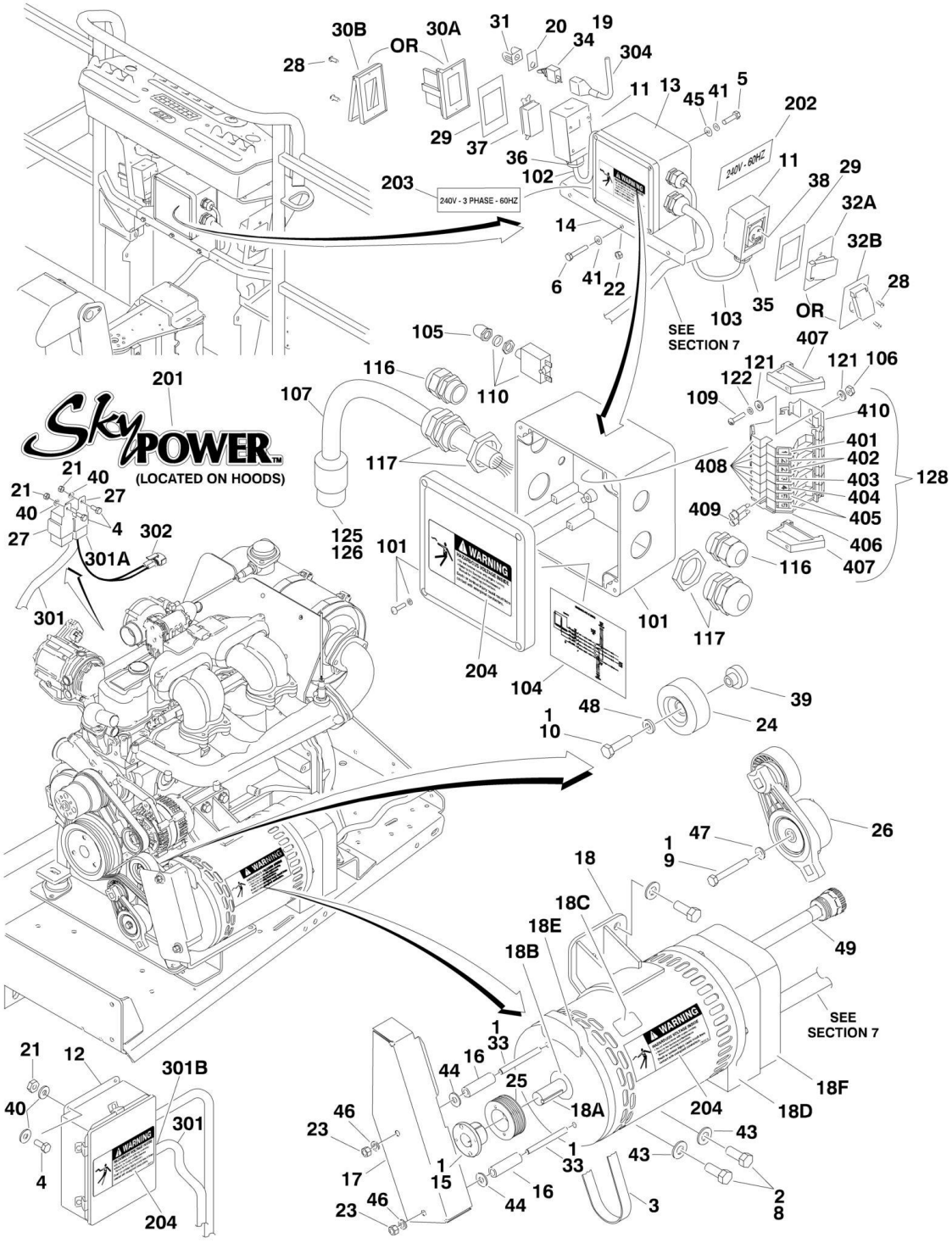

## FIGURE 2-37. 7500W SKYPOWER GENERATOR INSTALLATION - GM ENGINES

| ITEM | PART NUMBER | QTY | DESCRIPTION | REV |
|---|---|---|---|---|
| | | Ref | **Note: Only Available on USA Built Machines.** | |
| | 0275257 | Ref | **7500W SKYPOWER GENERATOR INSTALLATION** | F |
| | | Ref | **Note: For 4000W Generator Installations , See SPECIAL OPTIONS SECTION** | |
| | | Ref | **Note: See ELECTRICAL SECTION for Boom Cable Components.** | |
| 1 | 0100011 | AR | Compound, Locking | |
| 2 | 0100019 | AR | Compound, Locking | |
| 3 | 0480142 | 1 | Belt, Generator | |
| 4 | 0641405 | 6 | Bolt 1/4in-20NC x 5/8in | |
| 5 | 0641505 | 4 | Bolt 5/16in-18NC x 5/8in | |
| 6 | 0641516 | 3 | Bolt 5/16in-18NC x 2in | |
| 8 | 0641808 | 4 | Bolt 1/2in-13NC x 1in | |
| 9 | 0700820 | 1 | Bolt, Metric M8 x 60mm | |
| 10 | 0701016 | 1 | Bolt, Metric M10 x 40mm | |
| 11 | 0860038 | 2 | Box, Switch | |
| 12 | 0861538 | 1 | Control Box Assembly | |
| 12 | 7024488 | 1 | Card, Circuit - Generator Power | |
| 12 | See Note | 1 | Fuse (Note: Not Available - Purchase Locally) | |
| 12 | 7024489 | 1 | Card, Circuit - Control | |
| 12 | 70000619 | 1 | Harness, Circuit Card | |
| 13 | 0861542 | 1 | Junction Box Assembly (See Items 101-128 for Breakdown) | |
| 14 | 0902888 | 1 | Bracket, Box Mounting | |
| 15 | 0962520 | 1 | Bushing, Split Taper | |
| 16 | 0962521 | 2 | Spacer, Tube (USA Built Machines) **(SN 0300087000 through 0300172670)** | |
| 16 | 0962521 | 1 | Spacer, Tube (China Built Machines) **(SN B300000100 through B300000763)** | |
| 17 | 1671311 | 1 | Cover, Generator Belt (USA Built Machines) **(SN 0300087000 through 0300172670)** | |
| 17 | 1671311 | 1 | Cover, Generator Belt (China Built Machines) **(SN B300000100 through B300000763)** | |
| 18 | 2460048 | 1 | Generator Assembly | |
| 18 | 70003631 | 1 | Brushholder Assembly (Not Shown) (was p/n 7024484) | |
| 18 | 7024485 | 1 | Breaker, Circuit 30Amp (Not Shown) | |
| 18 | 70001696 | 1 | Boot, Breaker (was p/n 7024486 - Not Shown) | |
| 18 | 70001966 | 1 | Bearing, Ball Radial (Located In Belt Tensioner Endbell - Not Shown) | |
| 18 | 7027799 | 1 | Block, Connector 6 Position (Not Shown) | |
| 18 | 7026626 | 1 | Connector - 6 Position with Seal (Not Shown) | |
| 18 | 70002460 | 6 | Nut, Brass (Attaches p/n 7027799 to Cover) (Not Shown) | |
| 18 | 7026188 | 1 | Clamp, Cable (Not Shown) | |
| 18 | 7026597 | 1 | Connector, with Leads (Not Shown) | |
| 18 | 70002088 | 1 | Stator (Not Shown) | |
| 18 | 70004169 | 1 | Panel, End (Not Shown) (was p/n 70002255) | |
| 18 | 70001974 | 1 | Decal - Terminal Connections (Not Shown) | |
| 18 | 70000863 | 1 | Fan (Not Shown) | |
| 18 | 70002297 | 4 | Stud (Not Shown) | |
| 18A | 70004171 | 1 | Key (was p/n 7024561) | |
| 18A | 70001100 | 1 | Armature, Generator (Includes Radial Ball Bearing on End with Brushes and Fan) | |

# SECTION 2 - TURNTABLE

| ITEM | PART NUMBER | QTY | DESCRIPTION | REV |
|---|---|---|---|---|
| 18A | 70001384 | 1 | Bearing, Ball Radial | |
| 18B | 70001966 | 1 | Bearing, Radial Ball | |
| 18B | 70003708 | 1 | Ring, Internal Retaining (Located in Belt Tensioner Endbell) | |
| 18B | 70003709 | 1 | Ring, External Retaining (Located in Belt Tensioner Endbell) | |
| 18C | 70001973 | 1 | Decal - Warning Moving Parts | |
| 18D | 70004169 | 1 | Endbell, Brush Block (was p/n 70001385) | |
| 18E | 70001953 | 1 | Endbell, Belt Tensioner | |
| 18F | 70004169 | 1 | Endbell, Shroud Assembly (was p/n 70002290) | |
| 19 | 2820031 | 1 | Insulator | |
| 20 | 3252764 | 1 | Nameplate | |
| 21 | 3311405 | 6 | Locknut 1/4in-20NC | |
| 22 | 3311505 | 3 | Locknut 5/16in-18NC | |
| 23 | 3311601 | 2 | Nut 3/8in-16NC (USA Built Machines) **(SN 0300087000 through 0300172670)** | |
| 23 | 3311601 | 1 | Nut 3/8in-16NC (China Built Machines) **(SN B300000100 through B300000763)** | |
| 24 | 3580312 | 2 | Pulley, Idler | |
| 25 | 3580314 | 1 | Pulley, Drive Grooved | |
| 26 | 3580348 | 1 | Tensioner, Belt with Pulley | |
| 27 | 3740080 | 2 | Relay | |
| 28 | 3910606 | 8 | Screw #6-32NC x 3/8in | |
| 29 | 3960422 | 2 | Gasket | |
| 30 | | Ref | Cover, Receptacle Options: | |
| 30A | 4060700 | 1 | Cover - Side Hinged **(SN 0300087000 through 0300137769)** | |
| 30B | 1001110873 | 1 | Cover - Top Hinged **(SN 0300137770 through 0300177361)** | |
| 31 | 4060802 | 1 | Guard, Switch | |
| 32 | | Ref | Cover, Receptacle Options: | |
| 32A | 4061043 | 1 | Cover - Side Hinged **(SN 0300087000 through 0300137769)** | |
| 32B | 1001110872 | 1 | Cover - Top Hinged **(SN 0300137770 through 0300177361)** | |
| 33 | 4300111 | 2 | Stud, Chain Assembly (USA Built Machines) **(SN 0300087000 through 0300172670)** | |
| 33 | 4300111 | 1 | Stud, Chain Assembly (China Built Machines) **(SN B300000100 through B300000763)** | |
| 34 | 4360336 | 1 | Switch, Toggle | |
| 35 | 4460051 | 1 | Connector, Strain Relief | |
| 36 | 4460071 | 1 | Connector, Strain Relief | |
| 37 | 4460346 | 1 | Receptacle | |
| 38 | 4460958 | 1 | Receptacle, Female Twist-Lock | |
| 39 | 4568735 | 1 | Tube, Spacer Pulley Grooved | |
| 40 | 4711400 | 10 | Flatwasher 1/4in Thin | |
| 41 | 4711500 | 10 | Flatwasher 5/16in Thin | |
| 43 | 4711800 | 4 | Flatwasher 1/2in Thin | |
| 44 | 4751600 | 2 | Flatwasher 3/8in Regular (USA Built Machines) **(SN 0300087000 through 0300172670)** | |
| 44 | 4751600 | 1 | Flatwasher 3/8in Regular (China Built Machines) **(SN B300000100 through B300000763)** | |
| 45 | 4761500 | 4 | Lockwasher 5/16in | |
| 46 | 4761600 | 2 | Lockwasher 3/8in (USA Built Machines) **(SN 0300087000 through 0300172670)** | |
| 46 | 4761600 | 1 | Lockwasher 3/8in (China Built Machines) **(SN B300000100 through B300000763)** | |
| 47 | 4811900 | 1 | Flatwasher M8 | |
| 48 | 4891600 | 1 | Flatwasher 3/8in Hardened | |

| ITEM | PART NUMBER | QTY | DESCRIPTION | REV |
|---|---|---|---|---|
| 49 | 4922925 | 1 | Harness, Generator | |
| | 0861542 | Ref | **JUNCTION BOX ASSEMBLY** | E |
| 101 | 0861541 | 1 | Box, Junction | |
| 102 | 1060494 | 2 ft/.6m | Cable, Electrical 12/3 **(SN 0300087000 through 0300177361, SN B300000100 through B300001242)** | |
| | 1001179154 | 2 ft/.6m | Cable, Electrical 12/3 **(SN B300001243 through B300005764, Excluding B300005620)** | |
| 103 | 1060708 | 2.5 ft /.76m | Cable, Electrical 10/3 | |
| 104 | 1705376 | 1 | Decal - Wiring Schematic | |
| 105 | 3300396 | 1 | Cover, Fuse | |
| 106 | 3310601 | 2 | Nut 6-32NC | |
| 107 | 1060343 | 1.5 ft /.46m | Cable, Electrical 10/4 | |
| 109 | 3910610 | 2 | Bolt 6-32NC x 5/8 | |
| 110 | 4360070 | 1 | Circuit Breaker - 15Amp | |
| 116 | 4460425 | 2 | Strain Relief, Terminal | |
| 117 | 4460426 | 2 | Connector, Strain Relief | |
| 121 | 4750600 | 4 | Flatwasher #6 Regular | |
| 122 | 4760600 | 2 | Lockwasher #6 | |
| 125 | 1671092 | 1 | Cover | |
| 126 | 4460963 | 1 | Connector | |
| 128 | | Ref | Terminal Block Assembly Options (See Items 401-410 for Breakdown): | |
| 128 | NPN | 1 | Gray Terminal Block Assembly | |
| 128 | 1001121340 | 1 | Tan Terminal Block Assembly | |
| | 0272435 | Ref | **DECAL INSTALLATION** | B |
| 201 | 1705460 | 2 | Decal - SkyPower | |
| 202 | 1705374 | 1 | Decal - 240V - 60Hz | |
| 203 | 1705375 | 1 | Decal - 240V - 3 Phase | |
| 204 | 1705387 | 3 | Decal, Hazardous Voltage | |
| | 4933349 | Ref | **ELECTRICAL DIAGRAM COMPONENTS** | A |
| 301 | 4923420 | 1 | Generator Harness | A |
| 301A | 4460374 | 2 | Plug, Sealed Relay | |
| 301A | 4460375 | 8 | Terminal | |
| 301B | 4460967 | 1 | Plug, Male - 3 Position | |
| 301B | 4460465 | 3 | Socket, Female | |
| 301C | 2400060 | 2 | Fuseholder (Not Shown) | |
| 301C | 2400064 | 2 | Fuse - 5Amp (Not Shown) | |
| 302 | 4460742 | 1 | Connector - 2 Position | |
| 302 | 4460743 | 2 | Socket, Female | |
| 302 | 4460458 | 2 | Seal | |
| 304 | 4922641 | 1 | Switch Harness | |
| | | Ref | **TERMINAL BLOCK ASSEMBLY** | |
| | NPN | Ref | **Gray Terminal Block Assembly (Complete Assembly Not Available - Purchase Individual Components)** | |
| | 1001121340 | Ref | **Tan Terminal Block Assembly** | A |
| 401 | | Ref | Marker Strip #1 Options | |
| 401 | 4460411 | 2 | Gray Terminal Block Assembly | |
| 401 | 70002818 | 2 | Tan Terminal Block Assembly | |
| 402 | | Ref | Marker Strip #2 Options: | |
| 402 | 4460412 | 4 | Gray Terminal Block Assembly | |
| 402 | 70002819 | 4 | Tan Terminal Block Assembly | |

| ITEM | PART NUMBER | QTY | DESCRIPTION | REV |
|---|---|---|---|---|
| 403 | | Ref | Marker Strip #3 Options: | |
| 403 | 4460413 | 2 | Gray Terminal Block Assembly | |
| 403 | 70002820 | 2 | Tan Terminal Block Assembly | |
| 404 | | Ref | Marker Strip #4 Options: | |
| 404 | 4460414 | 2 | Gray Terminal Block Assembly | |
| 404 | 70002821 | 2 | Tan Terminal Block Assembly | |
| 405 | | Ref | Marker Strip #5 Options: | |
| 405 | 4460415 | 4 | Gray Terminal Block Assembly | |
| 405 | 70002822 | 4 | Tan Terminal Block Assembly | |
| 406 | | Ref | Terminal, End Barrier Options: | |
| 406 | 4460956 | 1 | Gray Terminal Block Assembly | |
| 406 | 70002823 | 1 | Tan Terminal Block Assembly | |
| 407 | | Ref | Terminal, End Block Options: | |
| 407 | 4460607 | 2 | Gray Terminal Block Assembly | |
| 407 | 70002824 | 2 | Tan Terminal Block Assembly | |
| 408 | | Ref | Terminal, Block Options: | |
| 408 | 4460957 | 7 | Gray Terminal Block Assembly | |
| 408 | 70002825 | 7 | Tan Terminal Block Assembly | |
| 409 | | Ref | Terminal, Cross Connector Jumper Options: | |
| 409 | 4461001 | 2 | Gray Terminal Block Assembly | |
| 409 | 70002826 | 2 | Tan Terminal Block Assembly | |
| 410 | 3641533 | 1 | Rail, Relay | |

## FIGURE 2-38. WHITE NOISE ALARM INSTALLATION

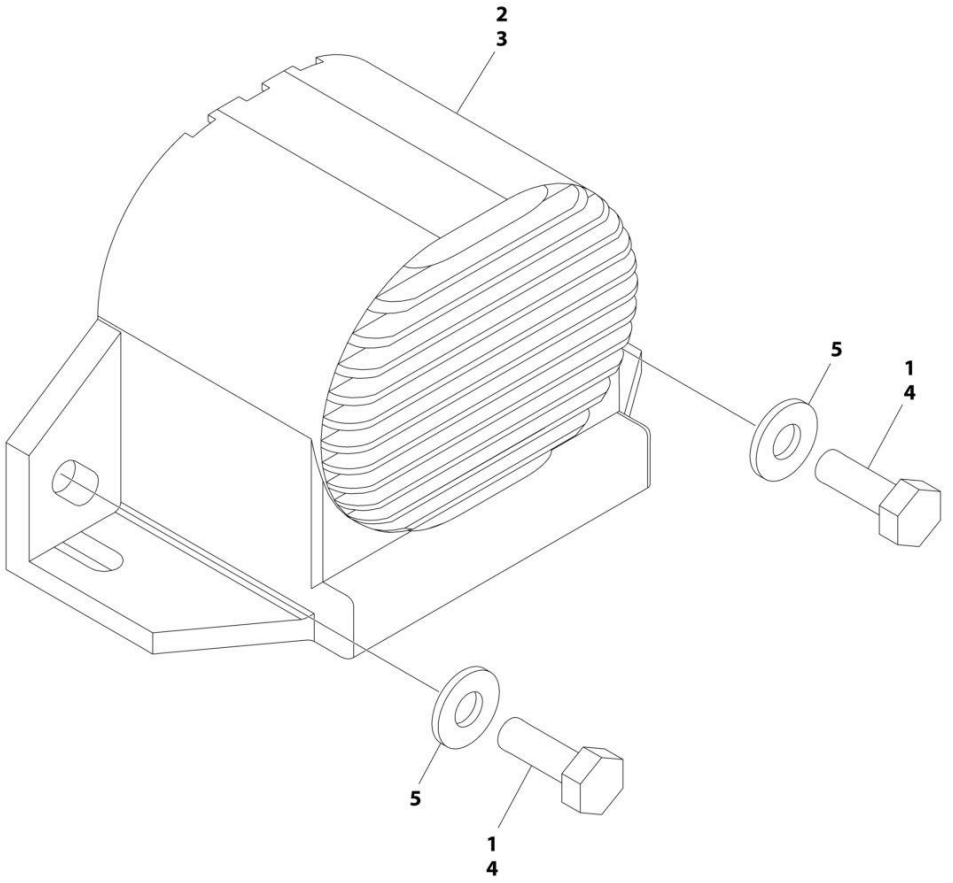

## FIGURE 2-38. WHITE NOISE ALARM INSTALLATION

| ITEM | PART NUMBER | QTY | DESCRIPTION | REV |
|---|---|---|---|---|
| | 1001247385 | Ref | BACKUP ALARM AMBIENT (WHITE NOISE) INSTALLATION | A |
| 1 | 0100011 | AR | Compound, Locking | |
| 2 | 0100048 | AR | Grease, Dielectric | |
| 3 | 1001182806 | 1 | Alarm | |
| 3 | 4460897 | 1 | Connector - 2 Position | |
| 3 | 4460464 | 2 | Pin, Male | |
| 4 | 0641406 | 2 | Bolt 1/4 x 3/4 | |
| 5 | 4711400 | 2 | Washer 1/4 | |

# SECTION 3 - BOOM

## FIGURE 3-1. USA BUILT MACHINES/BOOMS AND CYLINDERS INSTALLATION - 600A

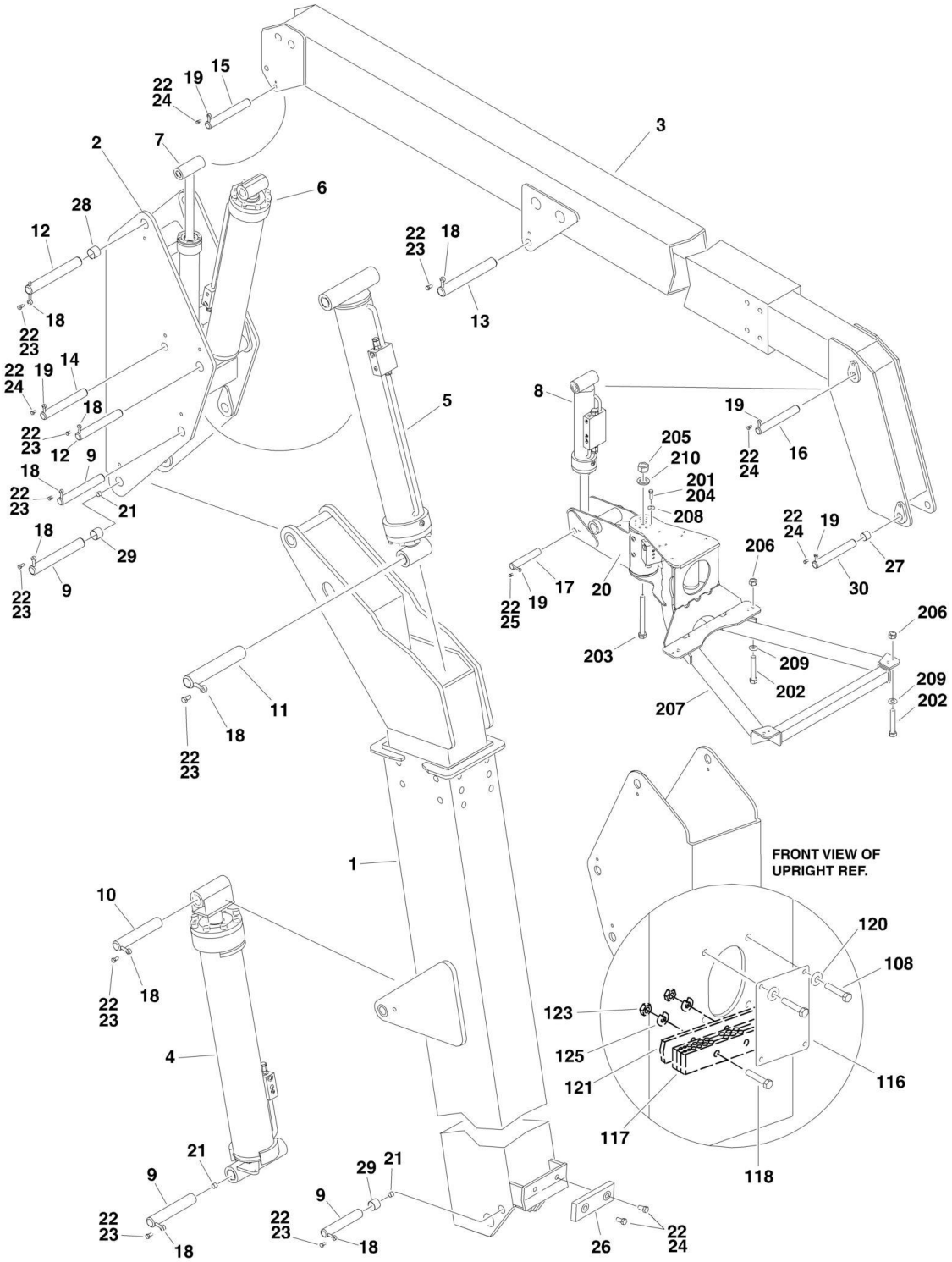

## FIGURE 3-1. USA BUILT MACHINES/BOOMS AND CYLINDERS INSTALLATION - 600A

| ITEM | PART NUMBER | QTY | DESCRIPTION | REV |
|---|---|---|---|---|
| | | Ref | **Note: USA Built Machines SNs start with "03" Prefix.** | |
| | | Ref | **Note: China Built Machines SNs start with "B3" Prefix.** | |
| | 0272326 | Ref | **BOOMS AND CYLINDERS INSTALLATION - 600A** | E |
| 1 | 0801019 | 1 | Tower Boom Assembly (See TOWER BOOM ASSEMBLY for Breakdown) | |
| 2 | 4846005 | 1 | Upright Weldment | |
| 3 | 0801022 | 1 | Main Boom Assembly (See MAIN BOOM ASSEMBLY for Breakdown) | |
| 4 | 1683288 | NLA | Tower Lift Cylinder Assembly (Use p/n 1001228003) (See CYLINDER SECTION for Breakdown) | |
| 5 | | Ref | Upright Level Cylinder Assembly Options (See CYLINDER SECTION for Breakdown): | |
| 5 | 1683299 | NLA | USA Built Machines (Use p/n 1001228042) **(SN 0300087000 through 0300097637)** | |
| 5 | 1684498 | NLA | USA Built Machines (Use p/n 1001228042) **(SN 0300097638 through 0300177361)** | |
| 6 | 1683294 | NLA | Main Lift Cylinder Assembly (Use p/n 1001228004) (See CYLINDER SECTION for Breakdown) | |
| 7 | 1683266 | NLA | Master Cylinder Assembly (Use p/n 1001228002) (See CYLINDER SECTION for Breakdown) | |
| 8 | 1683415 | NLA | Level Cylinder Assembly Platform Slave (Use p/n 1001228008) (See CYLINDER SECTION for Breakdown) | |
| 9 | 3422571 | NLA | Pin (Use p/n 1001158810) | |
| 10 | 3422573 | 1 | Pin | |
| 11 | 3422575 | 1 | Pin | |
| 12 | 3422572 | 2 | Pin | |
| 13 | | Ref | Pin Options: | |
| 13 | 3422576 | 1 | USA Built Machines **(SN 0300087000 through 0300115419)** | |
| 13 | 1001097822 | 1 | USA Built Machines **(SN 0300115420 through 0300177361)** | |
| 14 | 3422565 | 1 | Pin | |
| 15 | 3422577 | 1 | Pin | |
| 16 | 3422578 | 1 | Pin | |
| 17 | 3422580 | 1 | Pin | |
| 18 | 3841203 | 9 | Keeper, Pin - 1/2in | |
| 19 | 3841143 | 5 | Keeper, Pin - 3/8in | |
| 20 | 0060068 | 1 | Rotator Assembly (See ROTATOR ASSEMBLIES for Breakdown) | |
| 21 | 3900239 | 4 | Setscrew | |
| 22 | 0100011 | AR | Compound, Locking | |
| 23 | 0641810 | 15 | Bolt 1/2in-13NC x 1-1/4in | |
| 24 | 0641607 | AR | Bolt 3/8in-16NC x 7/8in | |
| 25 | 3900166 | 1 | Screw, Socket Head Countersunk - 3/8in-16NC x 7/8in | |
| 26 | 0561076 | 1 | Block, Boom Rest | |
| 27 | 0961951 | 2 | Bushing | |
| 28 | 0961948 | 2 | Bushing | |
| 29 | 0961949 | 4 | Bushing | |
| 30 | 3422582 | 1 | Pin | |
| | 0255423 | Ref | **POWER TRACK INSTALLATION** | N |
| 108 | 0641403 | 4 | Bolt 1/4in-20NC x 3/8in | |
| 116 | 3539779 | 1 | Plate, Cover | |
| 117 | 1320243 | 1 | Clamp, Block | |
| 118 | 0641532 | 2 | Bolt 5/16in-18NC x 4in | |
| 120 | 4751400 | 4 | Flatwasher 1/4in Regular | |

| ITEM | PART NUMBER | QTY | DESCRIPTION | REV |
|---|---|---|---|---|
| 121 | 3570374 | 1 | Plate | |
| 123 | 3311505 | 2 | Nut 5/16in-18NC | |
| 125 | 4751500 | 2 | Flatwasher 5/16in Regular | |
| | | Ref | **PLATFORM SUPPORT INSTALLATION** | |
| | 0272070 | Ref | **Machines without LSS and without SkyGlazier** | E |
| | 0272390 | Ref | **Machines without LSS & with SkyGlazier (Machines Built Years 2005-2007) (Note: See SkyGlazier Installation in Platform Section for Additional Components)** | H |
| | 0272070 | Ref | **Machines without LSS & with SkyGlazier (Machines Built Years 2008-2013)** | |
| | See Note | Ref | **Machines with LSS with or without Glazier (Note: See Separate Breakdown in this Section)** | |
| 201 | 0100011 | AR | Compound, Locking | |
| 202 | 0641812 | 8 | Bolt 1/2in-13NC x 1-1/2in | |
| 202 | 0641822 | 8 | Bolt 1/2 x 2-3/4 | |
| 203 | 0642684 | 1 | Bolt 1in-8NC x 10-1/2in | |
| 204 | 0681608 | 8 | Bolt 3/8in-16NC x 1in | |
| 205 | 3272605 | NLA | Locknut 1in-8NC (Use p/n 3300243) | |
| 206 | 3311805 | 8 | Locknut 1/2in-13NC | |
| 207 | 4846573 | 1 | Support, Platform | |
| 208 | 4891600 | 8 | Flatwasher 3/8in Hardened | |
| 209 | 4891800 | 8 | Flatwasher 1/2in Hardened | |
| 210 | 4892600 | 1 | Flatwasher 1in Hardened | |

## FIGURE 3-2. USA BUILT MACHINES/BOOMS AND CYLINDERS INSTALLATION - 600AJ

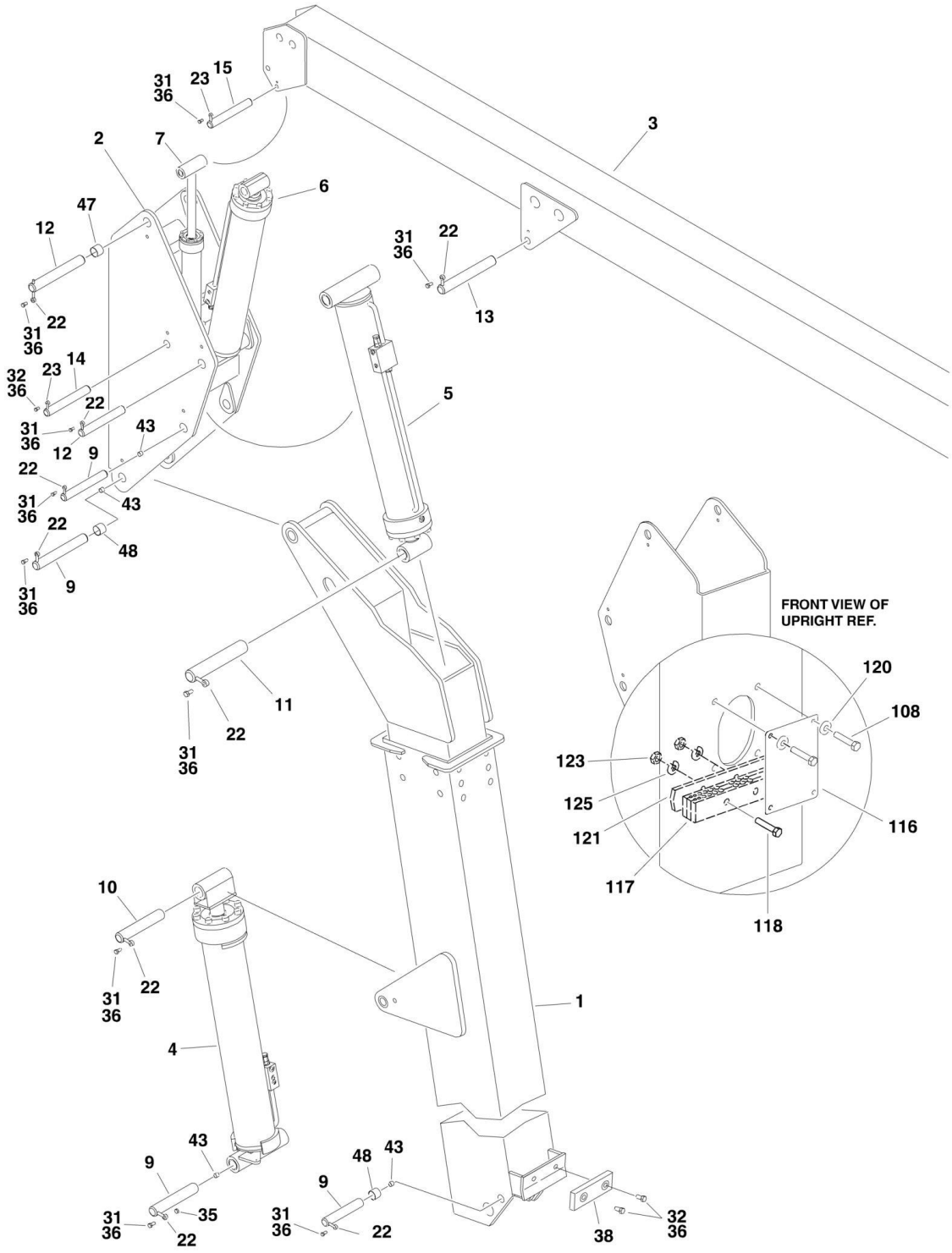

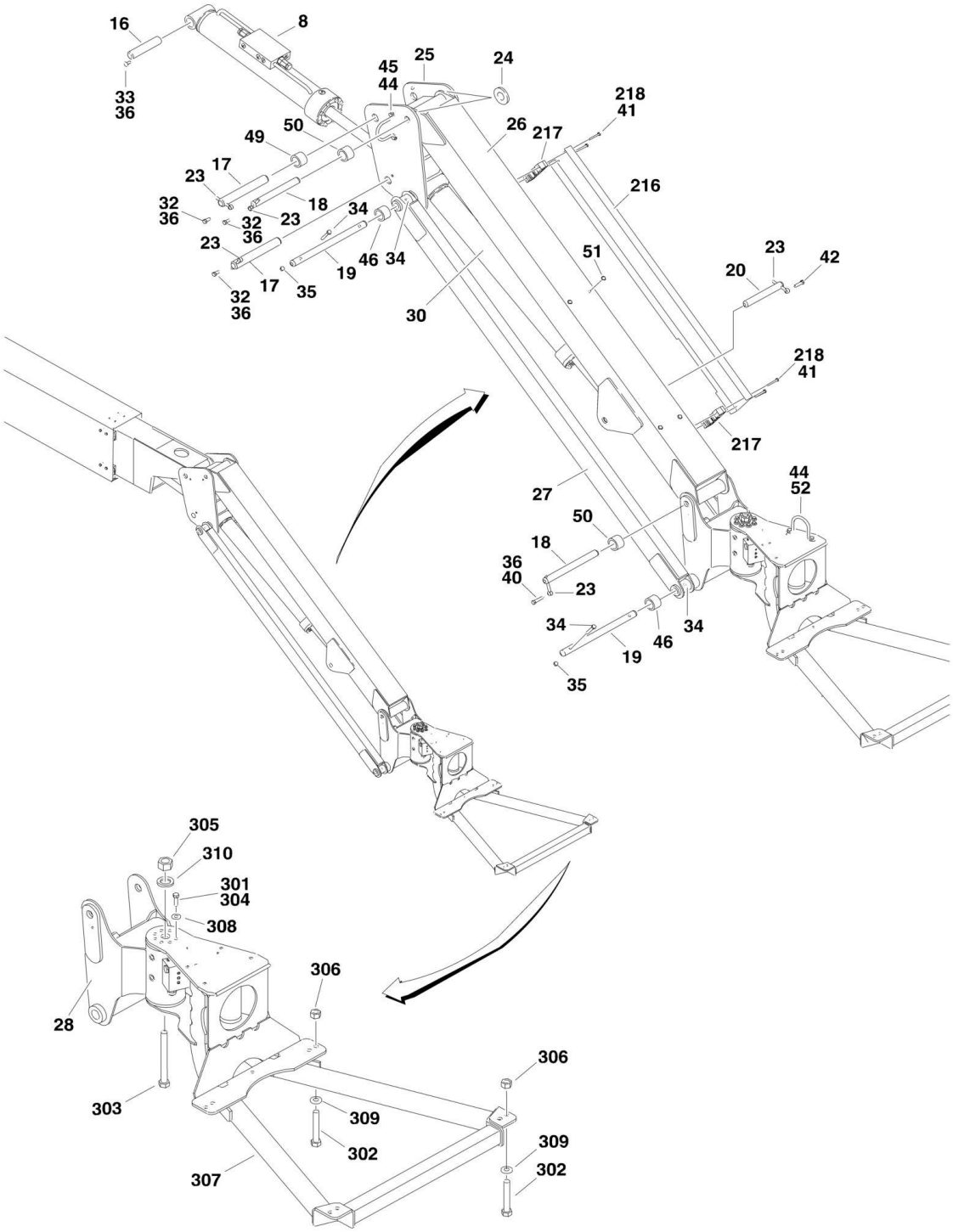
16
8
33
36
45
44
25
24
218
41
50
49
26
217
17
23
216
32
36
18
34
23
32
36
23
46
34
51
23
42
20
19
17
35
32
36
30
218
41
217
27
44
52
50
18
36
40
23
34
34
46
19
35
305
310
301
304
308
306
28
306
303
309
302
309
302
307

## FIGURE 3-2. USA BUILT MACHINES/BOOMS AND CYLINDERS INSTALLATION - 600AJ

| ITEM | PART NUMBER | QTY | DESCRIPTION | REV |
|---|---|---|---|---|
| | | Ref | **Note: USA Built Machines SNs start with "03" Prefix.** | |
| | | Ref | **Note: China Built Machines SNs start with "B3" Prefix.** | |
| | | Ref | **BOOMS AND CYLINDERS INSTALLATION - 600AJ** | |
| | 0272135 | Ref | **Machines without Arctic Package** | E |
| | 1001138797 | Ref | **Machines with Arctic Package** | B |
| 1 | 0801019 | 1 | Tower Boom Assembly (See TOWER BOOM ASSEMBLY for Breakdown) | |
| 2 | 4846006 | 1 | Upright Weldment | |
| 3 | 0801025 | 1 | Main Boom Assembly (See MAIN BOOM ASSEMBLY for Breakdown) | |
| 4 | 1683288 | NLA | Tower Lift Cylinder Assembly (Use p/n 1001228003) (See CYLINDER SECTION for Breakdown) | |
| 5 | | Ref | Upright Level Cylinder Assembly Options (See CYLINDER SECTION for Breakdown): | |
| 5 | 1683299 | NLA | USA Built Machines (Use p/n 1001228042) **(SN 0300087000 through 0300097637)** | |
| 5 | 1684498 | NLA | USA Built Machines (Use p/n 1001228042) **(SN 0300097638 through 0300177361)** | |
| 6 | 1683294 | NLA | Main Lift Cylinder Assembly (Use p/n 1001228004) (See CYLINDER SECTION for Breakdown) | |
| 7 | | Ref | Master Cylinder Assembly Options (See CYLINDER SECTION for Breakdown): | |
| 7 | 1683263 | NLA | Machines without Arctic Package (Use p/n 1001228052) | |
| 7 | 1001138799 | NLA | Machines with Arctic Package (Use p/n 1001228052) | |
| 8 | | Ref | Platform Level Cylinder Assembly Options (See CYLINDER SECTION for Breakdown): | |
| 8 | 1683418 | NLA | Cylinder - Machines without Arctic Package (Use p/n 1001223331) | |
| 8 | 1001138798 | NLA | Cylinder - Machines with Arctic Package (Use p/n 1001228051) | |
| 9 | 3422571 | NLA | Pin (Use p/n 1001158810) | |
| 10 | 3422573 | 1 | Pin | |
| 11 | 3422575 | 1 | Pin | |
| 12 | 3422572 | 2 | Pin | |
| 13 | | Ref | Pin Options: | |
| 13 | 3422576 | 1 | USA Built Machines **(SN 0300087000 through 0300115419)** | |
| 13 | 1001097822 | 1 | USA Built Machines **(SN 0300115420 through 0300177361)** | |
| 14 | 3422566 | 1 | Pin | |
| 15 | 3422579 | 1 | Pin | |
| 16 | 3422583 | 1 | Pin | |
| 17 | 3422561 | 2 | Pin | |
| 18 | 3422860 | 2 | Pin | |
| 19 | 3422861 | 2 | Pin | |
| 20 | 3422867 | 1 | Pin | |
| 22 | 3841203 | 9 | Keeper, Pin - 1/2in | |
| 23 | 3841143 | 7 | Keeper, Pin - 3/8in | |
| 24 | 4740439 | 2 | Thrustwasher | |
| 25 | 4844815 | 1 | Pivot Weldment | |
| 26 | 4844816 | 1 | Tube Weldment - Top | |
| 27 | 4844817 | 2 | Tube Weldment - Bottom | |
| 28 | 0060066 | NLA | Rotator Assembly (See ROTATOR ASSEMBLIES for Breakdown) (Use p/n 1001178269) **(SN B300000100 through B300001315)** | |

| ITEM | PART NUMBER | QTY | DESCRIPTION | REV |
|---|---|---|---|---|
| 28 | 1001178269 | 1 | Rotator Assembly (See ROTATOR ASSEMBLIES for Breakdown) **(SN B300001316 through B300005764, Excluding B300005620)** | |
| 30 | | Ref | Jib Lift Cylinder Assembly Options (See CYLINDER SECTION for Breakdown) | |
| 30 | 1683609 | NLA | Machines without Arctic Package (Use p/n 1001248012) | |
| 30 | 1001138792 | NLA | Machines with Arctic Package (Use p/n 1001248012) | |
| 31 | 0641810 | 10 | Bolt 1/2in-13NC x 1-1/4in | |
| 32 | 0641607 | 10 | Bolt 3/8in-16NC x 7/8in | |
| 33 | | Ref | Screw Options: | |
| 33 | 0741607 | 1 | Screw, Countersunk 3/8in-16NC x 7/8in | |
| 33 | 0741605 | 1 | Screw, Countersunk 3/8in-16NC x 5/8in | |
| 34 | 0641618 | 4 | Bolt 3/8in-16NC x 2-1/4in | |
| 35 | 3311605 | 5 | Locknut 3/8in-16NC | |
| 36 | 0100011 | AR | Compound, Locking | |
| 38 | 0561076 | 1 | Block, Boom Rest | |
| 40 | 0641614 | 1 | Bolt 3/8in-16NC x 1-3/4in | |
| 41 | 2080044 | 4 | Rivnut | |
| 42 | 0641611 | 1 | Bolt 3/8in-16NC x 1-3/8in | |
| 43 | 3900239 | 4 | Setscrew | |
| 44 | 3841340 | 2 | Loop, Hose | |
| 45 | 0641606 | 2 | Bolt 3/8in-16NC x 3/4in | |
| 46 | 0961947 | 6 | Bushing | |
| 47 | 0961948 | 2 | Bushing | |
| 48 | 0961949 | 4 | Bushing | |
| 49 | 0961951 | 2 | Bushing | |
| 50 | 0962335 | 4 | Bushing | |
| 51 | 3520034 | 4 | Plug **(SN 0300111747 through 0300177361)** | |
| 52 | 0641604 | 2 | Bolt 3/8in-16NC x 1/2in | |
| | 0255423 | Ref | **POWER TRACK INSTALLATION** | N |
| 108 | 0641403 | 4 | Bolt 1/4in-20NC x 3/8in | |
| 116 | 3539779 | 1 | Plate, Cover | |
| 117 | 1320243 | 1 | Clamp, Block | |
| 118 | 0641532 | 2 | Bolt 5/16in-18NC x 4in | |
| 120 | 4751400 | 4 | Flatwasher 1/4in Regular | |
| 121 | 3570374 | 1 | Plate | |
| 123 | 3311505 | 2 | Nut 5/16in-18NC | |
| 125 | 4751500 | 2 | Flatwasher 5/16in Regular | |
| | | Ref | **CABLE COVER INSTALLATION (600AJ ONLY)** | |
| | 0270820 | Ref | **ANSI, ANSI Export, Brazilian, Japanese Specs without 7500W Generator** | 6 |
| | 0272625 | Ref | **ANSI and ANSI Export Specs with 7500W Generator** | 2 |
| | 0275140 | Ref | **ANSI and ANSI Export Specs with Arctic Package without 7500W Generator** | 1 |
| | 1001093432 | Ref | **ANSI and ANSI Export Specs with Arctic Package with 7500W Generator** | 2 |
| | 0273428 | Ref | **Australian and Latin American Specs without 7500W Generator** | 2 |
| | 0273430 | Ref | **Australian and Latin American Specs with 7500W Generator** | 2 |
| | 0270821 | Ref | **CE Spec without 7500W Generator** | 7 |
| | 0272627 | Ref | **CE Spec with 7500W Generator** | 2 |
| 216 | 1670769 | 1 | Cover | |
| 217 | | Ref | Clamp, Block Options: | |

| ITEM | PART NUMBER | QTY | DESCRIPTION | REV |
|---|---|---|---|---|
| 217 | 0561237 | 2 | All Installations except 1001093432 | |
| 217 | 1321700 | 2 | 1001093432 Installation Only | |
| 218 | 0641416 | 4 | Bolt 1/4in-20NC x 2in | |
| | | Ref | **PLATFORM SUPPORT INSTALLATION** | |
| | 0272070 | Ref | **Machines without LSS and without SkyGlazier** | E |
| | 0272390 | Ref | **Machines without LSS & with SkyGlazier (Machines Built Years 2005-2007) (Note: See SkyGlazier Installation in Platform Section for Additional Components)** | H |
| | 0272070 | Ref | **Machines without LSS & with SkyGlazier (Machines Built Years 2008-2013)** | |
| | See Note | Ref | **Machines with LSS & with or without SkyGlazier (Note: See Separate Breakdown in this Section)** | |
| 301 | 0100011 | AR | Compound, Locking | |
| 302 | 0641812 | 8 | Bolt 1/2in-13NC x 1-1/2in | |
| 302 | 0641822 | 8 | Bolt 1/2 x 2-3/4 | |
| 303 | 0642684 | 1 | Bolt 1in-8NC x 10-1/2in | |
| 304 | 0681608 | 8 | Bolt 3/8in-16NC x 1in | |
| 305 | 3272605 | NLA | Locknut 1in-8NC (Use p/n 3300243) | |
| 306 | 3311805 | 8 | Locknut 1/2in-13NC | |
| 307 | 4846573 | 1 | Support, Platform | |
| 308 | 4891600 | 8 | Flatwasher 3/8in Hardened | |
| 309 | 4891800 | 8 | Flatwasher 1/2in Hardened | |
| 310 | 4892600 | 1 | Flatwasher 1in Hardened | |

## FIGURE 3-3. CHINA BUILT MACHINES/BOOMS AND CYLINDERS INSTALLATION - 600A

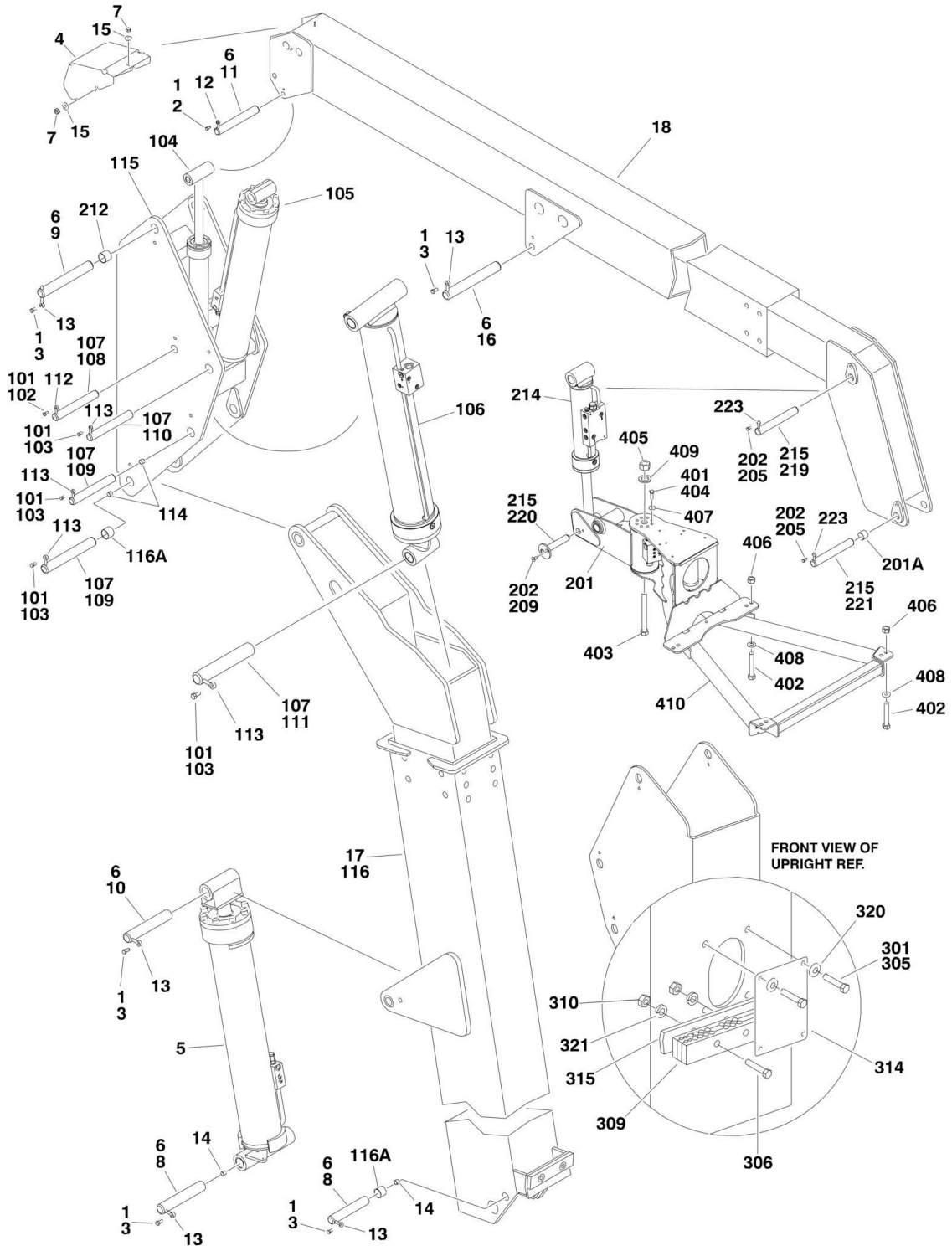

## FIGURE 3-3. CHINA BUILT MACHINES/BOOMS AND CYLINDERS INSTALLATION - 600A

| ITEM | PART NUMBER | QTY | DESCRIPTION | REV |
|---|---|---|---|---|
| | | Ref | **Note: USA Built Machines SNs start with "03" Prefix.** | |
| | | Ref | **Note: China Built Machines SNs start with "B3" Prefix.** | |
| | 1001115555 | Ref | **BOOMS AND CYLINDERS INSTALLATION - 600A** | C |
| 1 | 0100011 | AR | Compound, Locking | |
| 2 | 0641607 | 1 | Bolt 3/8in-16NC x 7/8in | |
| 3 | 0641810 | 5 | Bolt 1/2in-13NC x 1-1/4in | |
| 4 | 1670768 | 1 | Cover, Boom End | |
| 5 | 1683288 | NLA | Tower Lift Cylinder Assembly (Use PN 1001228003) (See CYLINDER SECTION for Breakdown) **(SN B300000100 through B300002804)** | |
| 5 | 1001228003 | 1 | Tower Lift Cylinder Assembly (See CYLINDER SECTION for Breakdown) **(SN B300002805 through B300005764, Excluding B300005620)** | |
| 6 | 3020039 | AR | Lubricant | |
| 7 | 3311401 | 3 | Nut 1/4in-20NC | |
| 8 | 3422571 | 2 | Pin | |
| 9 | 3422572 | 1 | Pin | |
| 10 | 3422573 | 1 | Pin | |
| 11 | 3422577 | 1 | Pin | |
| 12 | 3841143 | 5 | Keeper, Pin 3/8in OD | |
| 13 | 3841203 | 2 | Keeper, Pin 1/2in OD | |
| 14 | 3900239 | 4 | Setscrew | |
| 15 | 4751400 | 4 | Flatwasher 1/4in Regular | |
| 16 | 1001097822 | 1 | PIN | |
| 17 | 1001115552 | 1 | Tower Boom Sub-Assembly (See Items 101-116 for Breakdown) | |
| 18 | 1001115554 | 1 | Main Boom Assembly (See Items 201-223 and MAIN BOOM ASSEMBLY for Breakdown) | |
| | 1001115552 | Ref | **TOWER BOOM SUB-ASSEMBLY** | E |
| 101 | 0100011 | AR | Compound, Locking | |
| 102 | 0641607 | 1 | Bolt 3/8in-16NC x 7/8in | |
| 103 | 0641810 | 5 | Bolt 1/2in-13NC x 1-1/4in | |
| 104 | 1683266 | NLA | Master Cylinder Assembly (Use p/n 1001228002) (See CYLINDER SECTION for Breakdown) **(SN B300000100 through B300002776)** | |
| 104 | 1001228002 | 1 | Master Cylinder Assembly (See CYLINDER SECTION for Breakdown) **(SN B300002777 through B300005764, Excluding B300005620)** | |
| 105 | 1683294 | NLA | Main Lift Cylinder Assembly (Use p/n 1001228004) (See CYLINDER SECTION for Breakdown) **(SN B300000100 through B300002477)** | |
| 105 | 1001228004 | 1 | Main Lift Cylinder Assembly (See CYLINDER SECTION for Breakdown) **(SN B300002478 through B300005764, Excluding B300005620)** | |
| 106 | 1684498 | NLA | Upright Level Cylinder Assembly (Use p/n 1001228042) (See CYLINDER SECTION for Breakdown) **(SN B300000100 through B300002477)** | |
| 106 | 1001228042 | 1 | Upright Level Cylinder Assembly (See CYLINDER SECTION for Breakdown) **(SN B300002478 through B300005764, Excluding B300005620)** | |
| 107 | 3020039 | AR | Lubricant | |
| 108 | | Ref | Pin Options: | |
| 108 | 3422566 | 1 | Pin **(SN B300000100 through B300000816)** | |
| 108 | 3422565 | 1 | Pin **(SN B300000817 through B300005764, Excluding** | |

| ITEM | PART NUMBER | QTY | DESCRIPTION | REV |
|---|---|---|---|---|
| | | | **B300005620)** | |
| 109 | 3422571 | 2 | Pin | |
| 110 | 3422572 | 1 | Pin | |
| 111 | 3422575 | 1 | Pin | |
| 112 | 3841143 | 1 | Keeper, Pin 3/8in OD | |
| 113 | 3841203 | 4 | Keeper, Pin 1/2in OD | |
| 114 | 3900239 | 2 | Setscrew | |
| 115 | 1001113778 | 1 | Upright Weldment | |
| 116 | 1001115553 | 1 | Tower Boom Assembly (See TOWER BOOM ASSEMBLY for Breakdown) | |
| 116A | 0961949 | 4 | Bushing | |
| | 1001115554 | Ref | **MAIN BOOM COMPONENTS** | H |
| 201 | 0060068 | 1 | Rotator Assembly (See ROTATOR ASSEMBLIES for Breakdown) **(SN B300000100 through B300001315)** | |
| 201 | 1001181055 | 1 | Rotator Assembly (See ROTATOR ASSEMBLIES for Breakdown) **(SN B300001316 through B300005764, Excluding B300005620)** | |
| 201A | 0961951 | 2 | Bushing | |
| 202 | 0100011 | AR | Compound, Locking | |
| 205 | 0641607 | 2 | Bolt 3/8in-16NC x 7/8in | |
| 209 | 0741606 | 2 | Screw, Countersunk 3/8in-16NC x 3/4in | |
| 212 | 0961948 | 2 | Bushing | |
| 214 | 1683415 | NLA | Level Cylinder Assembly Platform Slave (Use p/n 1001228008) (See CYLINDER SECTION for Breakdown) **(SN B300000100 through B300002696)** | |
| 214 | 1001228008 | 1 | Level Cylinder Assembly Platform Slave (See CYLINDER SECTION for Breakdown) **(SN B300002697 through B300005764, Excluding B300005620)** | |
| 215 | 3020039 | AR | Lubricant | |
| 219 | 3422578 | 1 | Pin | |
| 220 | 3422580 | 1 | Pin | |
| 221 | 3422582 | 1 | Pin | |
| 223 | 3841143 | 2 | Keeper, Pin 3/8in | |
| | 1001115217 | Ref | **POWER TRACK INSTALLATION** | C |
| 301 | 0100011 | AR | Compound, Locking | |
| 305 | 0641403 | 4 | Bolt 1/4in-20NC x 3/8in | |
| 306 | 0641532 | 2 | Bolt 5/16in-18NC x 4in | |
| 309 | 1320243 | 1 | Clamp, Block | |
| 310 | 3311505 | 2 | Locknut 5/16in-18NC | |
| 314 | 3539779 | 1 | Plate, Cover | |
| 315 | 3570374 | 1 | Plate | |
| 320 | 4751400 | 4 | Flatwasher 1/4in Regular | |
| 321 | 4751500 | 4 | Flatwasher 5/16in Regular | |
| | | Ref | **PLATFORM SUPPORT INSTALLATION** | |
| | 1001115098 | Ref | **Machines without LSS** | B |
| | See Note | Ref | **Machines with LSS (Note: See Separate Breakdown in this Section)** | |
| 401 | 0100011 | AR | Compound, Locking | |
| 402 | 0641812 | 8 | Bolt 1/2in-13NC x 1-1/2in | |
| 403 | 0642684 | 1 | Bolt 1in-8NC x 10-1/2in | |
| 404 | 0681608 | 8 | Bolt 3/8in-16NC x 1in | |
| 405 | 3272605 | NLA | Locknut 1in-8NC (Use p/n 3300243) | |
| 406 | 3311805 | 8 | Locknut 1/2in-13NC | |
| 407 | 4891600 | 8 | Flatwasher 3/8in Hardened | |

| ITEM | PART NUMBER | QTY | DESCRIPTION | REV |
|---|---|---|---|---|
| 408 | 4891800 | 8 | Flatwasher 1/2in Hardened | |
| 409 | 4892600 | 1 | Flatwasher 1in Hardened | |
| 410 | 1001113465 | 1 | Support Weldment | |

## FIGURE 3-4. CHINA BUILT MACHINES/BOOMS AND CYLINDERS INSTALLATION - 600AJ

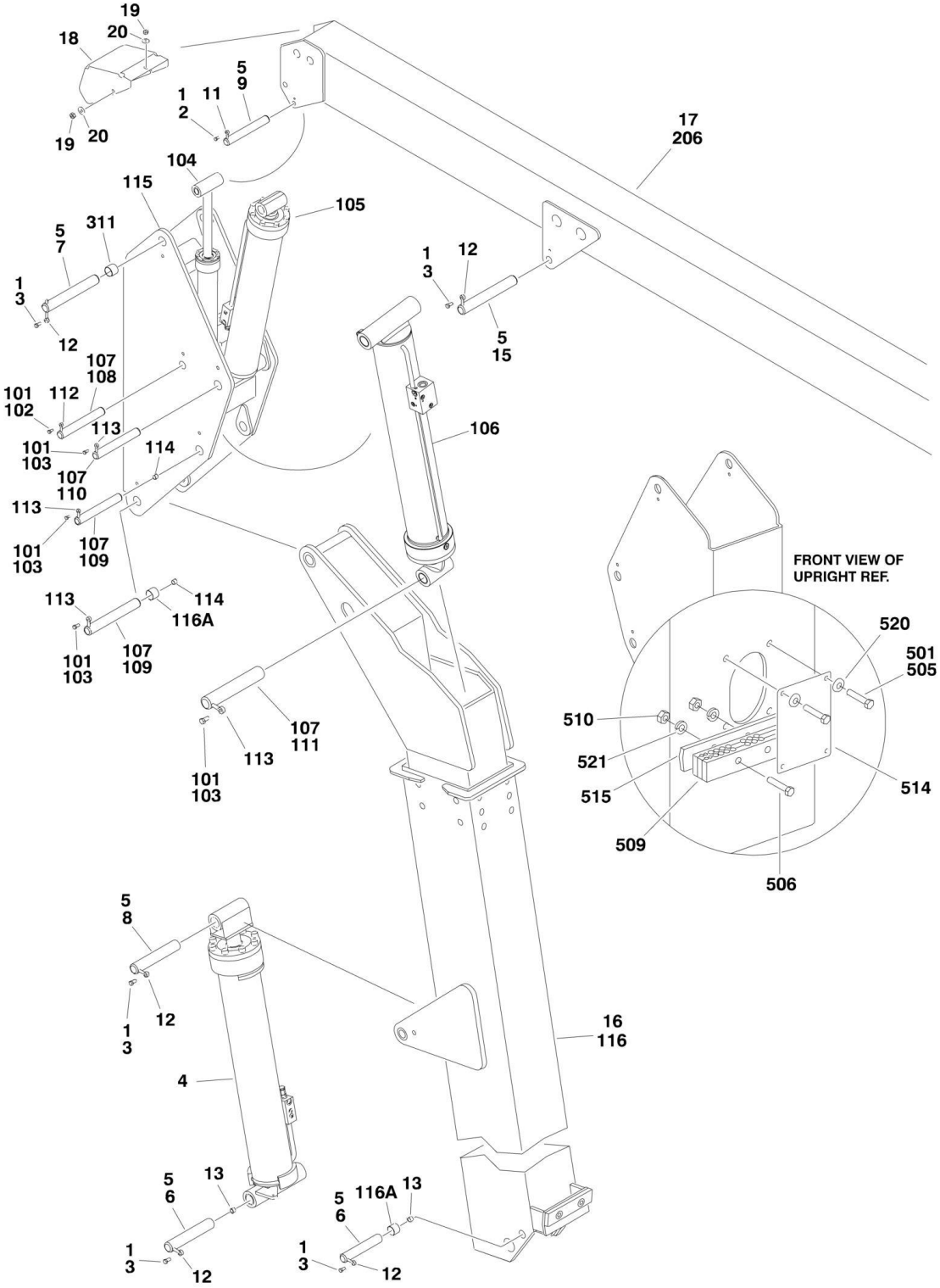

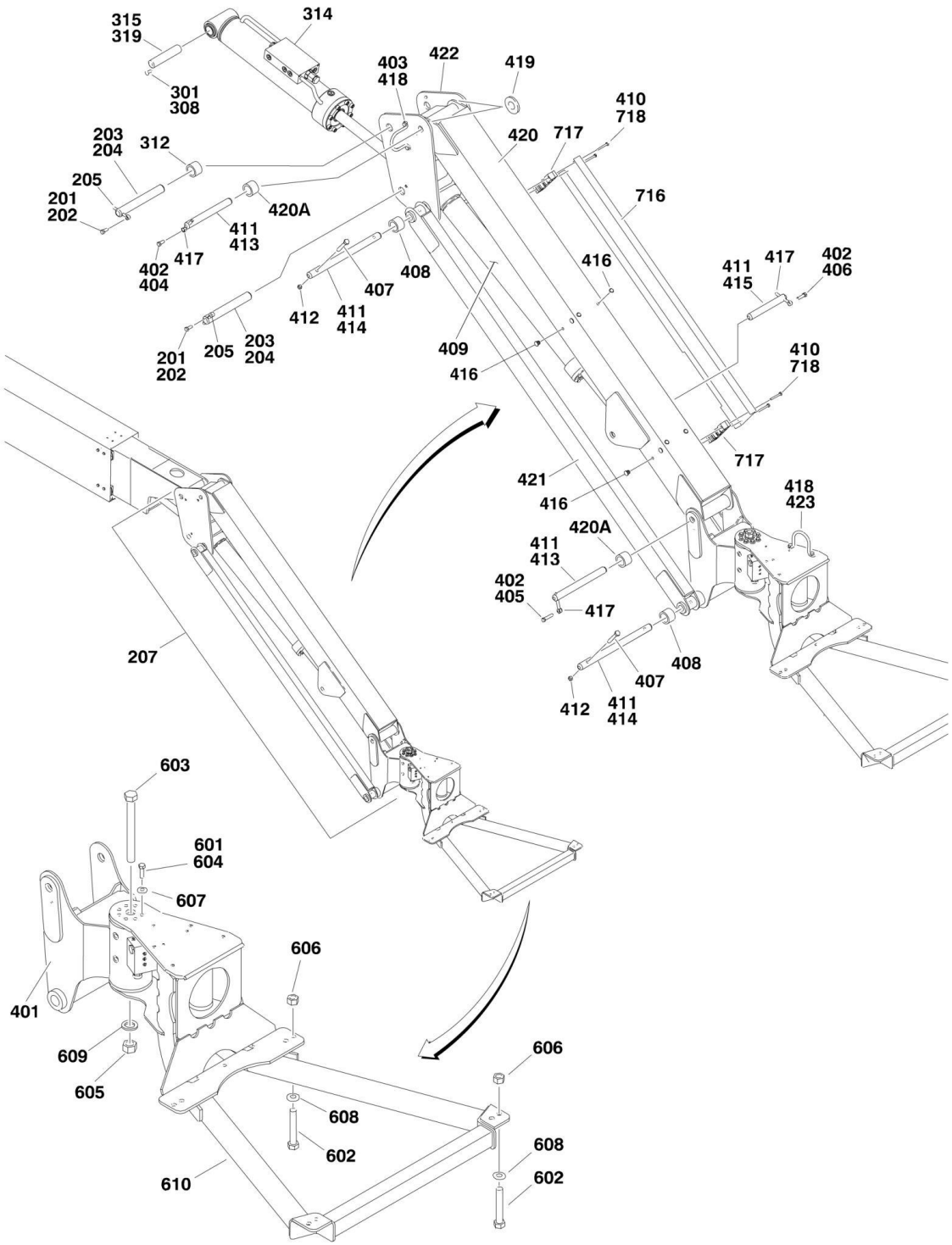
315
319
314
301
308
403
418
422
419
410
718
203
204
312
420
717
205
201
202
420A
716
411
413
417
402
404
408
407
412
411
414
416
411
415
417
402
406
201
202
205
203
204
409
416
410
718
717
421
416
418
423
420A
411
413
402
405
417
408
407
412
411
414
207
603
601
604
607
606
401
609
605
606
608
602
608
602
610

## FIGURE 3-4. CHINA BUILT MACHINES/BOOMS AND CYLINDERS INSTALLATION - 600AJ

| ITEM | PART NUMBER | QTY | DESCRIPTION | REV |
|---|---|---|---|---|
| | | Ref | **Note: USA Built Machines SNs start with "03" Prefix.** | |
| | | Ref | **Note: China Built Machines SNs start with "B3" Prefix.** | |
| | 1001115339 | Ref | **BOOMS AND CYLINDERS INSTALLATION (SN B300000100 through B300001066)** | B |
| | 1001158732 | Ref | **BOOMS AND CYLINDERS INSTALLATION** | D |
| 1 | 0100011 | AR | Compound, Locking | |
| 2 | 0641607 | 1 | Bolt 3/8in-16NC x 7/8in | |
| 3 | 0641810 | 5 | Bolt 1/2in-13NC x 1-1/4in | |
| 4 | 1683288 | NLA | Tower Lift Cylinder Assembly (Use PN 1001228003) (See CYLINDER SECTION for Breakdown) **(SN B300000100 through B300002804)** | |
| 4 | 1001228003 | 1 | Tower Lift Cylinder Assembly (See CYLINDER SECTION for Breakdown) **(SN B300002805 through B300005764, Excluding B300005620)** | |
| 5 | 3020039 | AR | Lubricant | |
| 6 | 3422571 | 2 | Pin | |
| 7 | 3422572 | 1 | Pin | |
| 8 | 3422573 | 1 | Pin | |
| 9 | 3422579 | 1 | Pin | |
| 10 | 3790012 | 1 | O-Ring (Not Shown - Located on Platform Console Box) | |
| 11 | 3841143 | 5 | Keeper, Pin 3/8in OD | |
| 12 | 3841203 | 2 | Keeper, Pin 1/2in OD | |
| 13 | 3900239 | 4 | Setscrew | |
| 14 | 4360328 | 1 | Switch, Toggle (Not Shown - Located on Platform Console Box) | |
| 15 | 1001097822 | 1 | Pin | |
| 16 | 1001115335 | 1 | Tower Boom Sub-Assembly (See Items 101-116 for Breakdown) | |
| 17 | 1001115336 | 1 | Main Boom Sub-Assembly (See Items 201-207 for Breakdown) **(SN B300000100 through B300001066)** | |
| 17 | 1001158731 | 1 | Main Boom Sub-Assembly (See Items 201-207 for Breakdown) **(SN B300001067 through B300005764, Excluding B300005620)** | |
| 18 | 1670768 | 1 | Cover, Boom End | |
| 19 | 3311401 | 3 | Nut 1/4in-20NC | |
| 20 | 4751400 | 4 | Flatwasher 1/4in Regular | |
| | 1001115335 | Ref | **TOWER BOOM SUB-ASSEMBLY** | E |
| 101 | 0100011 | AR | Compound, Locking | |
| 102 | 0641607 | 1 | Bolt 3/8in-16NC x 7/8in | |
| 103 | 0641810 | 4 | Bolt 1/2in-13NC x 1-1/4in | |
| 104 | 1683263 | NLA | Master Cylinder Assembly (Use p/n 1001228052) (See CYLINDER SECTION for Breakdown) **(SN B300000100 through B300002949)** | |
| 104 | 1001228052 | 1 | Master Cylinder Assembly (See CYLINDER SECTION for Breakdown) **(SN B300002949 through B300005764, Excluding B300005620)** | |
| 105 | 1683294 | NLA | Main Lift Cylinder Assembly (Use p/n 1001228004) (See CYLINDER SECTION for Breakdown) **(SN B300000100 through B300002477)** | |
| 105 | 1001228004 | 1 | Main Lift Cylinder Assembly (See CYLINDER SECTION for Breakdown) **(SN B300002478 through B300005764, Excluding B300005620)** | |
| 106 | 1684498 | NLA | Upright Level Cylinder Assembly (Use p/n 1001228042) (See CYLINDER SECTION for Breakdown) **(SN B300000100 through B300002477)** | |
| 106 | 1001228042 | 1 | Upright Level Cylinder Assembly (See CYLINDER SECTION for | |

| ITEM | PART NUMBER | QTY | DESCRIPTION | REV |
|---|---|---|---|---|
| | | | Breakdown) **(SN B300002478 through B300005764, Excluding B300005620)** | |
| 107 | 3020039 | AR | Lubricant | |
| 108 | 3422566 | 1 | Pin | |
| 109 | 3422571 | 2 | Pin | |
| 110 | 3422572 | 1 | Pin | |
| 111 | 3422575 | 1 | Pin | |
| 112 | 3841143 | 1 | Keeper, Pin 3/8in OD | |
| 113 | 3841203 | 4 | Keeper, Pin 1/2in OD | |
| 114 | 3900239 | 2 | Setscrew | |
| 115 | 1001114557 | 1 | Upright Weldment | |
| 116 | 1001115334 | 1 | Tower Boom Assembly (See TOWER BOOM ASSEMBLY for Breakdown) | |
| 116A | 0961949 | 4 | Bushing | |
| | 1001115336 | Ref | **MAIN BOOM SUB-ASSEMBLY (SN B300000100 through B300001066)** | B |
| | 1001158731 | Ref | **MAIN BOOM SUB-ASSEMBLY** | C |
| 201 | 0100011 | AR | Compound, Locking | |
| 202 | 0641607 | 2 | Bolt 3/8in-16NC x 7/8in | |
| 203 | 3020039 | AR | Lubricant | |
| 204 | 3422561 | 2 | Pin | |
| 205 | 3841143 | 2 | Keeper, Pin 3/8in OD | |
| 206 | 1001115337 | 1 | Main Boom Assembly (See Items 301-319 and MAIN BOOM ASSEMBLY for Breakdown) **(SN B300000100 through B300001066)** | |
| 206 | 1001158730 | 1 | Main Boom Assembly (See Items 301-319 and MAIN BOOM ASSEMBLY for Breakdown) **(SN B300001067 through B300005764, Excluding B300005620)** | |
| 207 | 1001115338 | 1 | Jib Assembly (See Items 401-423 for Breakdown) **(SN B300000100 through B300004299)** | |
| 207 | 1001247624 | 1 | Jib Assembly (See Items 401-423 for Breakdown) **(SN B300004300 through B300005764, Excluding B300005620)** | |
| | 1001115337 | Ref | **MAIN BOOM COMPONENTS (SN B300000100 through B300001066)** | G |
| | 1001158730 | Ref | **MAIN BOOM COMPONENTS** | E |
| 301 | 0100011 | AR | Compound, Locking | |
| 308 | 0741605 | 1 | Screw, Countersunk 3/8in-16NC x 5/8in | |
| 311 | 0961948 | 2 | Bushing | |
| 312 | 0961951 | 2 | Bushing | |
| 314 | 1683418 | NLA | Platform Slave Level Cylinder Assembly (Use p/n 1001223331) (See CYLINDER SECTION for Breakdown) **(SN B300000100 through B300002696)** | |
| 314 | 1001223331 | NLA | Platform Slave Level Cylinder Assembly (Use p/n 1001228051) (See CYLINDER SECTION for Breakdown) **(SN B300002697 through B300002948)** | |
| 314 | 1001228051 | 1 | Platform Slave Level Cylinder Assembly (See CYLINDER SECTION for Breakdown) **(SN B300002949 through B300005764, Excluding B300005620)** | |
| 315 | 3020039 | AR | Lubricant | |
| 319 | 3422583 | 1 | Pin | |
| | 1001115338 | Ref | **JIB ASSEMBLY (SN B300000100 through B300004299)** | I |
| | 1001247624 | Ref | **JIB ASSEMBLY** | A |
| 401 | 0060066 | NLA | Rotator Assembly (See ROTATOR ASSEMBLIES for Breakdown) (Use p/n 1001178269) **(SN B300000100 through B300001315)** | |
| 401 | 1001178269 | 1 | Rotator Assembly (See ROTATOR ASSEMBLIES for Breakdown) | |

| ITEM | PART NUMBER | QTY | DESCRIPTION | REV |
|---|---|---|---|---|
| | | | **(SN B300001316 through B300005764, Excluding B300005620)** | |
| 402 | 0100011 | AR | Compound, Locking | |
| 403 | 0641606 | 2 | Bolt 3/8in-16NC x 3/4in | |
| 404 | 0641607 | 1 | Bolt 3/8in-16NC x 7/8in | |
| 405 | 0641609 | 1 | Bolt 3/8in-16NC x 1-1/8in | |
| 406 | 0641611 | 1 | Bolt 3/8in-16NC x 1-3/8in | |
| 407 | 0641618 | 4 | Bolt 3/8in-16NC x 2-1/4in | |
| 408 | 0961947 | 6 | Bushing | |
| 409 | 1683609 | NLA | Jib Lift Cylinder Assembly (Use p/n 1001248012) (See CYLINDER SECTION for Breakdown) **(SN B300000100 through B300002658)** | |
| 409 | 1001230371 | 1 | Jib Lift Cylinder Assembly (See CYLINDER SECTION for Breakdown) **(SN B300002659 through B300005764, Excluding B300005620)** | |
| 410 | 2080044 | 4 | Rivnut | |
| 411 | 3020039 | AR | Lubricant | |
| 412 | 3311605 | 5 | Locknut 3/8in-16NC | |
| 413 | 3422860 | 2 | Pin | |
| 414 | 3422861 | 2 | Pin **(SN B300000100 through B300004299)** | |
| 414 | 1001182064 | 2 | Pin **(SN B300004300 through B300005764, Excluding B300005620)** | |
| 415 | 3422867 | 1 | Pin | |
| 416 | 3520034 | 4 | Plug **(SN B300000100 through B300002246)** | |
| 416 | 1001223899 | 8 | Fastener **(SN B300002247 through B300005764, Excluding B300005620)** | |
| 417 | 3841143 | 3 | Keeper, Pin 3/8in | |
| 418 | 3841340 | 2 | Loop, Hose | |
| 419 | 4740439 | 2 | Thrustwasher | |
| 420 | 1001113386 | 1 | Tube Weldment - Top | |
| 420A | 0962335 | 4 | Bushing | |
| 421 | 1001113407 | 2 | Tube Weldment - Bottom **(SN B300000100 through B300004299)** | |
| 421 | 1001181960 | 2 | Tube Weldment - Bottom **(SN B300004300 through B300005764, Excluding B300005620)** | |
| 422 | 1001113423 | 1 | Support, Jib | |
| 423 | 0641604 | 2 | Bolt 3/8in-16NC x 1/2in | |
| | 1001115217 | Ref | **POWER TRACK INSTALLATION** | C |
| 501 | 0100011 | AR | Compound, Locking | |
| 505 | 0641403 | 4 | Bolt 1/4in-20NC x 3/8in | |
| 506 | 0641532 | 2 | Bolt 5/16in-18NC x 4in | |
| 509 | 1320243 | 1 | Clamp, Block | |
| 510 | 3311505 | 2 | Locknut 5/16in-18NC | |
| 514 | 3539779 | 1 | Plate, Cover | |
| 515 | 3570374 | 1 | Plate | |
| 520 | 4751400 | 4 | Flatwasher 1/4in Regular | |
| 521 | 4751500 | 4 | Flatwasher 5/16in Regular | |
| | | Ref | **PLATFORM SUPPORT INSTALLATION** | |
| | 1001115098 | Ref | **Machines without LSS** | B |
| | See Note | Ref | **Machines with LSS (Note: See Separate Breakdown in this Section)** | |
| 601 | 0100011 | AR | Compound, Locking | |
| 602 | 0641812 | 8 | Bolt 1/2in-13NC x 1 1/2in | |
| 603 | 0642684 | 1 | Bolt 1in-8NC x 10 1/2in | |
| 604 | 0681608 | 8 | Bolt 3/8in-16NC x 1in | |

| ITEM | PART NUMBER | QTY | DESCRIPTION | REV |
|---|---|---|---|---|
| 605 | 3272605 | NLA | Locknut 1in-8NC (Use p/n 3300243) | |
| 606 | 3311805 | 8 | Locknut 1/2in-13NC | |
| 607 | 4891600 | 8 | Flatwasher 3/8in Hardened | |
| 608 | 4891800 | 8 | Flatwasher 1/2in Hardened | |
| 609 | 4892600 | 1 | Flatwasher 1in Hardened | |
| 610 | 1001113465 | 1 | Support Weldment | |
| | | Ref | **CABLE COVER INSTALLATION (600AJ ONLY)** | |
| | 0270820 | Ref | **ANSI, ANSI Export and Japanese Specs without 7500W** | 6 |
| | 0272625 | Ref | **ANSI, ANSI Export and Japanese Specs with 7500W Generator** | 2 |
| | 0275140 | Ref | **ANSI and ANSI Export Specs with Arctic Package without 7500W Generator** | 1 |
| | 1001093432 | Ref | **ANSI and ANSI Export Specs with Arctic Package with 7500W Generator** | 2 |
| | 0273428 | Ref | **Australian Specs without 7500W Generator** | 2 |
| | 0273430 | Ref | **Australian Specs with 7500W Generator** | 2 |
| 716 | 1670769 | 1 | Cover | |
| 717 | | Ref | Clamp, Block Options: | |
| 717 | 0561237 | 2 | All Installations except 1001093432 | |
| 717 | 1321700 | 2 | 1001093432 Installation Only | |
| 718 | 0641416 | 4 | Bolt 1/4in-20NC x 2in | |

## FIGURE 3-5. TOWER BOOM ASSEMBLY

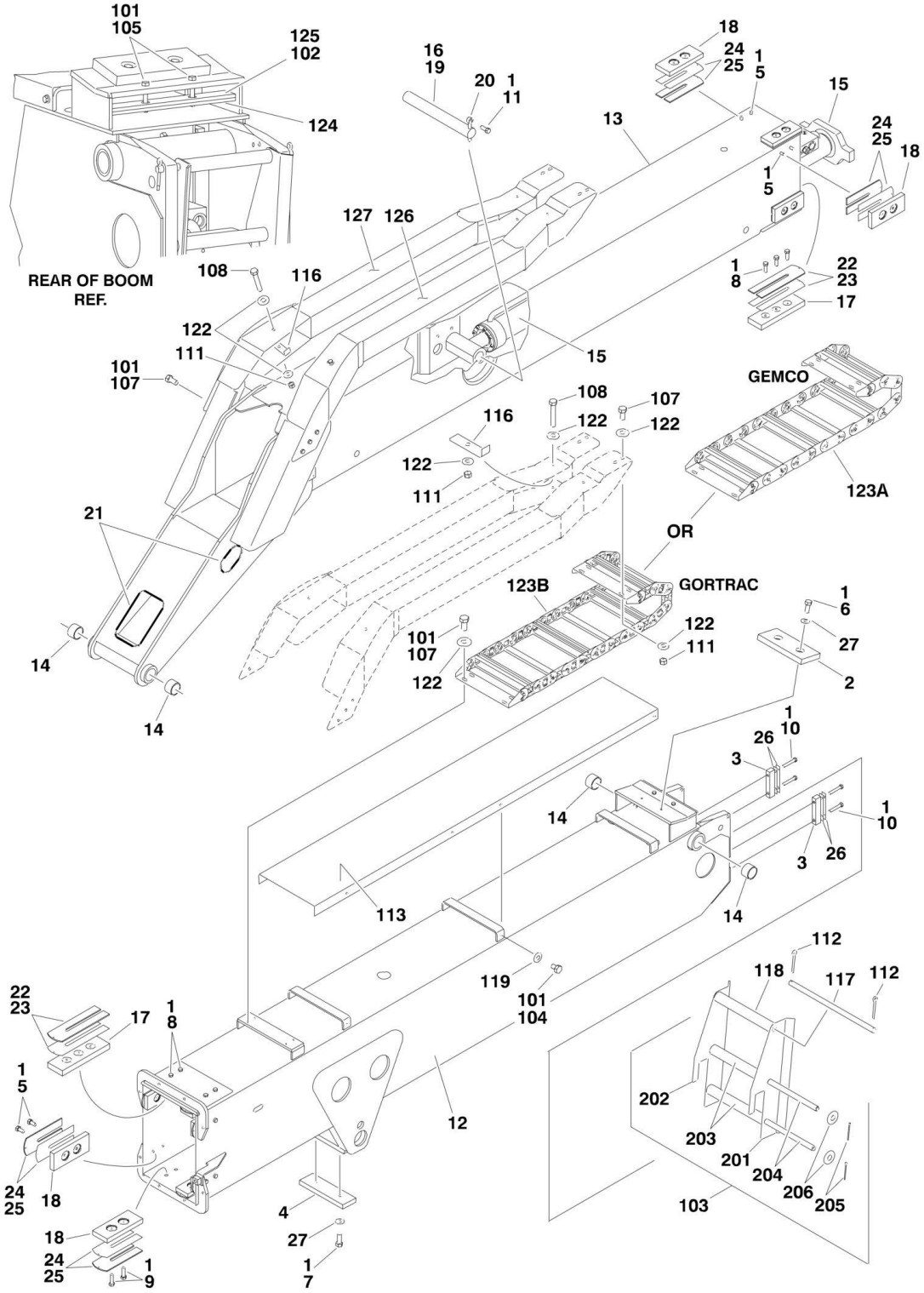

## FIGURE 3-5. TOWER BOOM ASSEMBLY

| ITEM | PART NUMBER | QTY | DESCRIPTION | REV |
|---|---|---|---|---|
| | | Ref | **TOWER BOOM ASSEMBLY** | |
| | 0801019 | Ref | **USA Built 600A** | 12-J |
| | 0801019 | Ref | **USA Built 600AJ** | 12-J |
| | 1001115553 | Ref | **China Built 600A** | D |
| | 1001115334 | Ref | **China Built 600AJ** | D |
| 1 | 0100011 | AR | Compound, Locking | |
| 2 | 0561076 | 1 | Block, Boom Rest | |
| 3 | 0561185 | 2 | Block, Attach | |
| 4 | 0561248 | 1 | Block, Boom Rest | |
| 5 | | Ref | Bolt 3/8in-16NC x 3/4in | |
| 5 | 0641606 | 26 | USA Built Machines (Standard Hex Head Grade 5) | |
| 5 | 0811606 | 26 | China Built Machines (Flange Head Grade 8) | |
| 6 | 0641607 | 1 | Bolt 3/8in-16NC x 7/8in | |
| 7 | 0641608 | 6 | Bolt 3/8in-16NC x 1in | |
| 8 | 0641609 | 12 | Bolt 3/8in-16NC x 1-1/8in | |
| 9 | | Ref | Bolt 3/8in-16NC x 1-1/4in | |
| 9 | 0641610 | 4 | USA Built Machines (Standard Hex Head Grade 5) | |
| 9 | 0811610 | 4 | China Built Machines (Flange Head Grade 8) | |
| 10 | 0641618 | 4 | Bolt 3/8in-16NC x 2-1/4in | |
| 11 | 0641810 | 1 | Bolt 3/8in-16NC x 1-1/4in | |
| 12 | | Ref | Base Options: | |
| 12 | 0801085 | NLA | USA Built Machines (Use p/n 0801622) **(SN 0300087000 through 0300106295)** | |
| 12 | 0801622 | 1 | USA Built Machines **(SN 0300106296 through 0300177361)** | |
| 12 | 1001126100 | NLA | China Built Machines (Use p/n 0801622) **(SN B300000100 through B300005764, Excluding B300005620)** | |
| 13 | | Ref | Fly Options: | |
| 13 | 0801021 | NLA | USA Built Machines (Use p/n 0801637) **(SN 0300087000 through 0300105941)** | |
| 13 | 0801637 | 1 | USA Built Machines **(SN 0300105942 through 0300177361)** | |
| 13 | 1001126102 | NLA | China Built Machines (Use p/n 0801637) **(SN B300000100 through B300005764, Excluding B300005620)** | |
| 14 | 0961949 | 4 | Bushing (Note: No longer part of Base/Fly Weldments - Must be purchased separately) | |
| 15 | 1683312 | 1 | Cylinder Assembly - Tower Telescope (See CYLINDER SECTION for Breakdown) **(SN 0300087000 through 0300177361, SN B300000100 through B300002477)** | |
| 15 | 1001228006 | 1 | Cylinder Assembly - Tower Telescope (See CYLINDER SECTION for Breakdown) **(SN B300002478 through B300005764, Excluding B300005620)** | |
| 16 | 3020039 | AR | Lubricant (China Built Machines Only) | |
| 17 | 3340871 | 4 | Pad, Wear | |
| 18 | 3340881 | 12 | Pad, Wear | |
| 19 | 3422575 | 1 | Pin | |
| 20 | 3841203 | 1 | Keeper, Pin | |
| 21 | 4060808 | AR | Flex-Trim | |
| 22 | 4070863 | AR | Shim .12 | |
| 23 | 4070864 | AR | Shim .05 | |
| 24 | 4070897 | AR | Shim .05 | |
| 25 | 4070898 | AR | Shim .12 | |
| 26 | 4070929 | AR | Shim | |
| 27 | 4711600 | 2 | Flatwasher 3/8in Thin | |

| ITEM | PART NUMBER | QTY | DESCRIPTION | REV |
|---|---|---|---|---|
| | | Ref | **POWER TRACK INSTALLATION** | |
| | 0255423 | Ref | **USA Built Machines** | N |
| | 1001115217 | Ref | **China Built Machines** | C |
| 101 | 0100011 | AR | Compound, Locking | |
| 102 | 0100081 | AR | Adhesive (Used with Item 125) | |
| 103 | 0257573 | 1 | Roller Hanger Assembly (Includes Items 201-206) | |
| 104 | 0641403 | 10 | Bolt 1/4in-20NC x 3/8in | |
| 105 | 0641516 | 2 | Bolt 5/16in-18NC x 2in | |
| 105 | 0641522 | 2 | Bolt 5/16in-18NC x 2-3/4in | |
| 107 | | Ref | Bolt 3/8in-16NC Options: | |
| 107 | 0641606 | 14 | Bolt 3/8in-16NC x 3/4in | |
| 107 | 0641607 | 14 | Bolt 3/8in-16NC x 7/8in | |
| 108 | 0641618 | 2 | Bolt 3/8in-16NC x 2-1/4in | |
| 111 | 3311605 | 8 | Locknut 3/8in-16NC | |
| 112 | 3450606 | 2 | Pin, Cotter | |
| 113 | 3539228 | 1 | Plate, Cover | |
| 116 | 3570375 | AR | Plate | |
| 117 | 3841295 | 1 | Rod | |
| 118 | 4567241 | 1 | Tube | |
| 119 | 4711400 | 6 | Flatwasher 1/4in Thin | |
| 122 | 4751600 | 14 | Flatwasher 3/8in Regular | |
| 123 | | Ref | Power Track Assembly Options: | |
| | | Ref | **Note: Various Power Tracks use on this model. Identify brand before ordering parts.** | |
| 123A | 1180339 | NLA | Gemco Brand Power Track (Use p/n 1001099835) | |
| 123A | 7016502 | AR | Repair Section (Includes 10 Link Pin, 4 Radius Links, 4 Carrier Links, 1 Carrier Weldment, 10 Slugs & 20 Bearing Plates) | |
| 123A | 7016510 | 2 Pair | Feet, Mounting | |
| 123A | 7006152 | AR | Pin Kit (Includes 1 pin, 1 Retaining Ring & 4 Washers) | |
| 123B | 1001099835 | 1 | Gortrac Brand Power Track | |
| 123B | 70002001 | AR | Repair Section | |
| 123B | 70002002 | 1 | Mounting Bracket Kit | |
| 124 | | Ref | Plate, Hose Clamp Options: | |
| 124 | 3539236 | 1 | USA Built Machines **(SN 0300087000 through 0300136936)** | |
| 124 | 1001110500 | 1 | USA Built Machines **(SN 0300136937 through 0300177361)** | |
| 124 | 1001110500 | 1 | China Built Machines **(SN B300000100 through B300001594)** | |
| 124 | 1001217403 | 1 | China Built Machines **(SN B300001595 through B300005764, Excluding B300005620)** | |
| 125 | | Ref | Clamp, Hose (Rubber) Options: | |
| 125 | Not Required | 0 | USA Built Machines **(SN 0300087000 through 0300136936)** | |
| 125 | 1001110501 | 1 | USA Built Machines **(SN 0300136937 through 0300177361)** | |
| 125 | 1001110501 | 1 | China Built Machines **(SN B300000100 through B300001594)** | |
| 125 | 1001217402 | 1 | China Built Machines **(SN B300001595 through B300005764, Excluding B300005620)** | |
| 126 | | Ref | Tube Weldment (Left Side) Options: | |
| 126 | 4844983 | NLA | USA Built Machines (Use p/n 1001151542) | |
| 126 | 1001115080 | 1 | China Built Machines | |
| 127 | | Ref | Tube Weldment (Right Side) Options; | |
| 127 | 4844984 | NLA | USA Built Machines (Use p/n 1001151586) | |
| 127 | 1001115081 | 1 | China Built Machines | |
| | 0257573 | Ref | **ROLLER HANGER ASSEMBLY** | 1-A |

| ITEM | PART NUMBER | QTY | DESCRIPTION | REV |
|---|---|---|---|---|
| 201 | 3570277 | 1 | Plate (Left Side) | |
| 202 | 3570270 | 1 | Plate (Right Side) | |
| 203 | 4567241 | 2 | Roller, Tube | |
| 204 | 3841347 | 2 | Rod | |
| 205 | 3450306 | 4 | Pin, Cotter | |
| 206 | 4751800 | 4 | Flatwasher 1/2in Regular | |

## FIGURE 3-6. MAIN BOOM ASSEMBLY

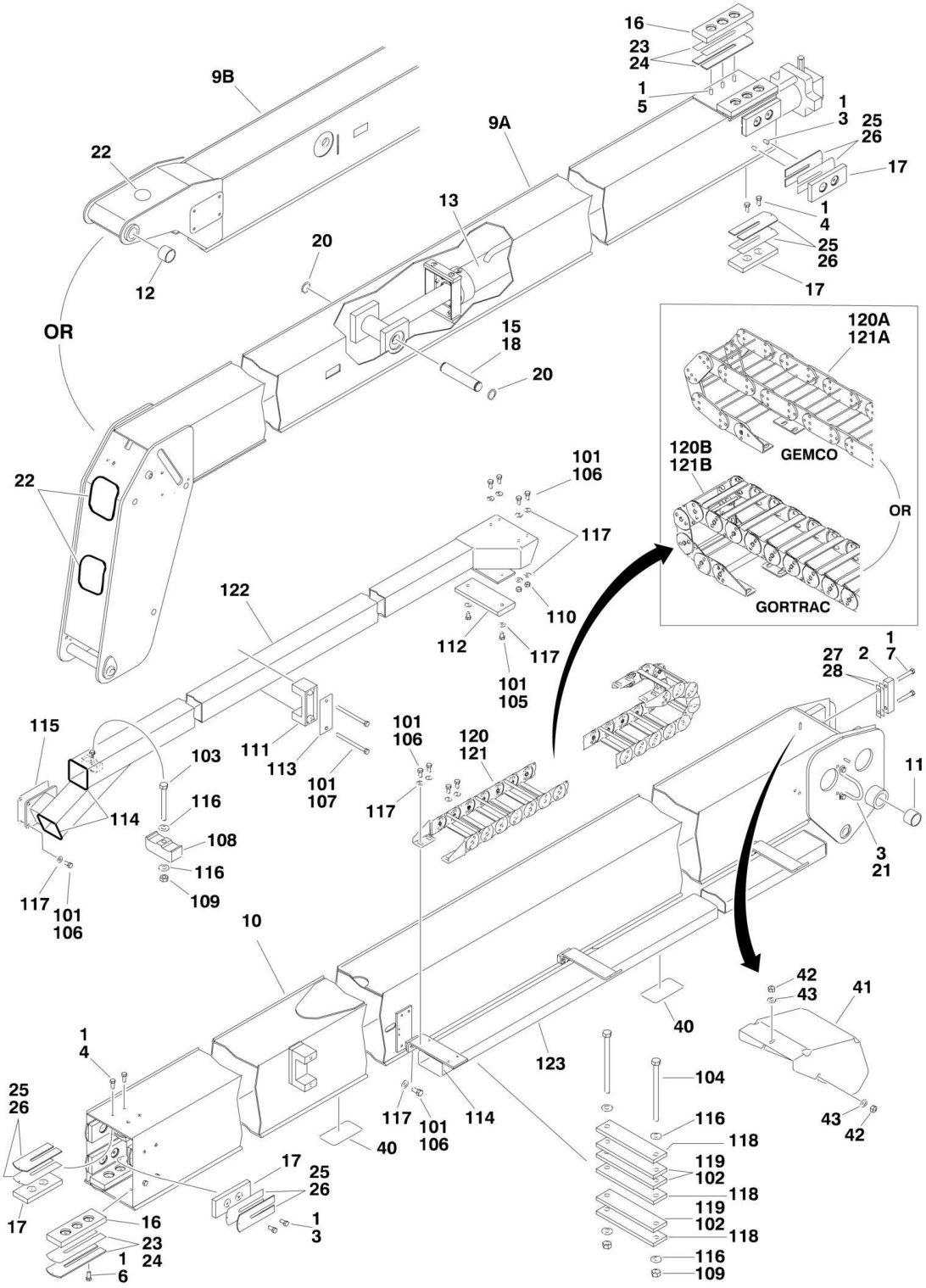

## FIGURE 3-6. MAIN BOOM ASSEMBLY

| ITEM | PART NUMBER | QTY | DESCRIPTION | REV |
|---|---|---|---|---|
| | | Ref | **BOOM ASSEMBLY** | |
| | 0801022 | Ref | **Boom Assembly 600A USA Built Machines** | K |
| | 1001115554 | Ref | **Boom Assembly 600A China Built Machines** | I |
| | 0801025 | Ref | **Boom Assembly 600AJ USA Built Machines** | I |
| | 1001115337 | Ref | **Boom Assembly 600AJ China Built Machines (SN B300000100 through B300001066)** | G |
| | 1001158730 | Ref | **Boom Assembly 600AJ China Built Machines** | E |
| 1 | 0100011 | AR | Compound, Locking | |
| 2 | 0561185 | 2 | Block | |
| 3 | | Ref | Bolt 3/8in-16NC x 3/4in Options: | |
| 3 | 0641606 | 18 | USA Built Machines (Standard Hex Head Grade 5) | |
| 3 | 0641606 | 2 | China Built Machines (Standard Hex Head Grade 5) (Note: Use with Item 21) | |
| 3 | 0811606 | 16 | China Built Machines (Flange Head Grade 8) (Note: Use with Boom Wear Pads) | |
| 4 | | Ref | Bolt 3/8in-16NC x 7/8in Options: | |
| 4 | 0641607 | 8 | USA Built Machines (Standard Hex Head Grade 5) | |
| 4 | 0811607 | 8 | China Built Machines (Flange Head Grade 8) | |
| 5 | | Ref | Bolt 3/8in-16NC x 1in Options: | |
| 5 | 0641608 | 6 | USA Built Machines (Standard Hex Head Grade 5) | |
| 5 | 0811608 | 6 | China Built Machines (Flange Head Grade 8) | |
| 6 | | Ref | Bolt 3/8in-16NC x 1-1/4in Options: | |
| 6 | 0641610 | 6 | USA Built Machines (Standard Hex Head Grade 5) | |
| 6 | 0811610 | 6 | China Built Machines (Flange Head Grade 8) | |
| 7 | 0641618 | 4 | Bolt 3/8in-16NC x 2-1/4in | |
| 9 | | Ref | Fly Weldment Options: | |
| 9A | 0801228 | 1 | Fly Weldment 600A USA Built Machines | |
| 9A | 1001126169 | NLA | Fly Weldment 600A China Built Machines (Use p/n 0801228) | |
| 9B | 0801027 | NLA | Fly Weldment 600AJ USA Built Machines (Use p/n 0801613) **(SN 0300087000 through 0300101240)** | |
| 9B | 0801613 | 1 | Fly Weldment 600AJ USA Built Machines **(SN 0300101241 through 0300177361)** | |
| 9B | 0801613 | 1 | Fly Weldment 600AJ China Built Machines **(SN B300000100 through B300001066)** | |
| 9B | 1001157533 | 1 | Fly Weldment 600AJ China Built Machines **(SN B300001067 through B300005764, Excluding B300005620)** | |
| 10 | | Ref | Base Weldment Options: | |
| 10 | 0801023 | NLA | Base Weldment 600A USA Built Machines (Use p/n 0801618) **(SN 0300087000 through 0300105941)** | |
| 10 | 0801618 | 1 | Base Weldment 600A USA Built Machines **(SN 0300105942 through 0300177361)** | |
| 10 | 1001125683 | NLA | Base Weldment 600A China Built Machines (Use p/n 0801618) **(SN B300000100 through B300005764, Excluding B300005620)** | |
| 10 | 0801026 | NLA | Base Weldment 600AJ USA Built Machines (Use p/n 0801621) **(SN 0300087000 through 0300105941)** | |
| 10 | 0801621 | 1 | Base Weldment 600AJ USA Built Machines **(SN 0300105942 through 0300177361)** | |
| 10 | 0801621 | 1 | Base Weldment 600AJ China Built Machines | |
| 11 | 0961948 | 2 | Bushing | |
| 12 | 0961951 | 2 | Bushing (600AJ Only) | |
| 13 | | Ref | Telescope Cylinder Assembly Options: (See CYLINDER SECTION for Breakdown) | |

| ITEM | PART NUMBER | QTY | DESCRIPTION | REV |
|---|---|---|---|---|
| 13 | 1683307 | NLA | Telescope Cylinder Assembly 600A (Use p/n 1001228005) **(SN 0300087000 through 0300177361, SN B300000100 through B300002835)** | |
| 13 | 1001228005 | 1 | Telescope Cylinder Assembly 600A **(SN B300002836 through B300005764, Excluding B300005620)** | |
| 13 | 1683317 | NLA | Telescope Cylinder Assembly 600AJ (Use p/n 1001228007) **(SN 0300087000 through 0300177361, SN B300000100 through B300002835)** | |
| 13 | 1001228007 | 1 | Telescope Cylinder Assembly 600AJ **(SN B300002836 through B300005764, Excluding B300005620)** | |
| 15 | 3020039 | AR | Lubricant | |
| 16 | 3340871 | 4 | Pad, Wear | |
| 17 | | Ref | Pad, Wear Options: | |
| 17 | 3340881 | 12 | USA Built Machines **(SN 0300087000 through 0300168827)** | |
| 17 | 1001148652 | 12 | USA Built Machines **(SN 0300168828 through 0300177361)** | |
| 17 | 3340881 | 1 | China Built Machines **(SN B300000100 through B300005764, Excluding B300005620)** | |
| 18 | 3422457 | 1 | Pin | |
| 20 | 3760133 | 2 | Ring, Retaining | |
| 21 | 3841340 | 1 | Clamp, Hose | |
| 22 | 4060805 | AR | Flex-Trim | |
| 23 | 4070863 | AR | Shim .12 | |
| 24 | 4070864 | AR | Shim .05 | |
| 25 | 4070897 | AR | Shim .05 | |
| 26 | 4070898 | AR | Shim .12 | |
| 27 | 4070929 | AR | Shim | |
| 28 | 4071007 | AR | Shim | |
| 40 | 1670836 | 6 | Cover, Boom (USA Built Machines) **(SN 0300087000 through 0300134296)** | |
| 41 | 1670768 | 1 | Cover, Boom | |
| 42 | 3311401 | 3 | Nut 1/4in-20NC | |
| 43 | 4751400 | 3 | Flatwasher 1/4in Regular | |
| | | Ref | **POWER TRACK INSTALLATION** | |
| | 0255281 | Ref | **Power Track Installation 600A USA Built Machines** | 9-F |
| | 1001115283 | Ref | **Power Track Installation 600A China Built Machines** | B |
| | 0255288 | Ref | **Power Track Installation 600AJ USA Built machines** | 8-E |
| | 1001115218 | Ref | **Power Track Installation 600AJ China Built Machines** | B |
| 101 | 0100011 | AR | Compound, Locking | |
| 102 | 0100081 | AR | Adhesive | |
| 103 | 0641522 | 1 | Bolt 5/16in-18NC x 2-3/4in | |
| 104 | | Ref | Bolt 5/16in-18NC Options: | |
| 104 | 0641536 | 2 | Bolt 5/16in-18NC x 4-1/2in | |
| 104 | 0641540 | 2 | Bolt 5/16in-18NC x 5in | |
| 105 | 0641605 | 2 | Bolt 3/8in-16NC x 5/8in | |
| 106 | 0641606 | 19 | Bolt 3/8in-16NC x 3/4in | |
| 107 | 0641640 | 2 | Bolt 3/8in-16NC x 5in | |
| 108 | 1320314 | 1 | Clamp, Hose/Cable | |
| 109 | 3311505 | 3 | Locknut 5/16in-18NC | |
| 110 | 3311605 | 4 | Locknut 3/8in-16NC | |
| 111 | 3340764 | 2 | Pad, Wear | |
| 112 | | Ref | Pad Options: | |
| 112 | 3340787 | 1 | Pad 600A | |
| 112 | 3340765 | 1 | Pad 600AJ | |

| ITEM | PART NUMBER | QTY | DESCRIPTION | REV |
|---|---|---|---|---|
| 113 | 3538758 | 1 | Plate, Cover Support | |
| 114 | 4060804 | NLA | Flex-Trim (Use p/n 4060803) | |
| 115 | 4070932 | AR | Shim | |
| 116 | 4711500 | 6 | Flatwasher 5/16in Thin | |
| 117 | 4711600 | 18 | Flatwasher 3/8in Thin | |
| 118 | | Ref | Plate Options: | |
| 118 | | Ref | Plate 600A: | |
| 118 | 3574171 | 3 | USA Built Machines (Gemco Power Track) **(SN 0300087000 through 0300135637)** | |
| 118 | 1001106758 | 3 | USA Built Machines (Gortrac Power Track) **(SN 0300135638 through 0300177361)** | |
| 118 | 1001106758 | 3 | China Built 600A Machines **(SN B300000100 through B300005764, Excluding B300005620)** | |
| 118 | 3574185 | 3 | Plate 600AJ | |
| 119 | | Ref | Shim Options: | |
| 119 | | Ref | Shim 600A: | |
| 119 | 4071061 | 3 | USA Built Machines (Gemco Power Track) **(SN 0300087000 through 0300135637)** | |
| 119 | 1001106759 | 3 | USA Built Machines (Gortrac Power Track) **(SN 0300135638 through 0300177361)** | |
| 119 | 1001106759 | 3 | China Built 600A Machines **(SN B300000100 through B300005764, Excluding B300005620)** | |
| 119 | 4071062 | 3 | Plate 600AJ | |
| 120 | 1180336 | NLA | Power Track Assembly 600A (USA Built Machines) (Use p/n 1001224892) **(SN 0300087000 through 0300135637)** | |
| 120 | 1001107153 | NLA | Power Track Assembly 600A (USA Built Machines) (Use p/n 1001224892) **(SN 0300135638 through 0300177361)** | |
| 120 | 1001107153 | NLA | Power Track Assembly 600A (China Built Machines) (Use p/n 1001224892) **(SN B300000100 through B300001866)** | |
| 120 | 1001224892 | 1 | Power Track Assembly 600A (China Built Machines) **(SN B300001867 through B300005764, Excluding B300005620)** | |
| 120 | | Ref | Note: Use Detail on Illustration to identify power track brand, before ordering replacement parts. | |
| 120A | | Ref | Gemco Replacement Parts (600A): | |
| 120A | 7006140 | AR | Repair Section (Includes 10 Link Pin, 4 Radius Links, 8 Carrier Links, 4 Rod Carrier, 8 Screws, 10 Slugs & 20 Bearing Plates) | |
| 120A | 7006151 | 2 Pair | Feet, Mounting | |
| 120A | 7006161 | AR | Rod | |
| 120A | 7006152 | AR | Pin Kit (Includes 1 pin, 1 Retaining Ring & 4 Washers) | |
| 120B | | Ref | Gortrac GT Replacement Parts (600A): | |
| 120B | 70002011 | AR | Repair Section | |
| 120B | 70002012 | 1 | Mounting Bracket Kit | |
| 120B | | Ref | Gortrac MA Replacement Parts (600A): | |
| 120B | 70006257 | 1 | Repair Section | |
| 120B | 70006273 | 1 | Mounting Bracket Kit | |
| 121 | 1180338 | NLA | Power Track Assembly 600AJ (USA Built Machines) (Use p/n 1001099836) **(SN 0300087000 through 0300135637)** | |
| 121 | 1001099836 | 1 | Power Track Assembly 600AJ (USA Built Machines) **(SN 0300135638 through 0300177361)** | |
| 121 | 1001099836 | 1 | Power Track Assembly 600AJ (China Built Machines) **(SN B300000100 through B300005764, Excluding B300005620)** | |
| 121 | | Ref | Note: Use Detail on Illustration to identify power track brand, before ordering replacement parts. | |
| 121A | | Ref | Gemco Replacement Parts (600AJ): | |

| ITEM | PART NUMBER | QTY | DESCRIPTION | REV |
|---|---|---|---|---|
| 121A | 7016519 | AR | Repair Section (Includes 10 Link Pin, 4 Radius Links, 8 Carrier Links, 4 Rod Carrier, 8 Screws, 10 Slugs & 20 Bearing Plates) | |
| 121A | 7006151 | 2 Pair | Feet, Mounting | |
| 121A | 7016521 | AR | Rod | |
| 121A | 7006158 | AR | Screw | |
| 121A | 7006152 | AR | Pin Kit (Includes 1 pin, 1 Retaining Ring & 4 Washers) | |
| 121B | | Ref | Gortrac Replacement Parts (600AJ): | |
| 121B | 70001999 | AR | Repair Section | |
| 121B | 70002000 | 1 | Mounting Bracket Kit | |
| 122 | | Ref | Tube Weldment Options: | |
| 122 | | Ref | Tube Weldment 600A: | |
| 122 | 4844969 | 1 | USA Built Machines | |
| 122 | 1001114875 | 1 | China Built Machines | |
| 122 | | Ref | Tube Weldment 600AJ: | |
| 122 | 4844978 | 1 | USA Built Machines | |
| 122 | 1001115054 | 1 | China Built Machines | |
| 123 | | Ref | Support, Power Track Options: | |
| 123 | | Ref | Support, Power Track 600A | |
| 123 | 4844972 | 1 | USA Built Machines | |
| 123 | 1001115253 | 1 | China Built Machines | |
| 123 | | Ref | Support, Power Track 600AJ | |
| 123 | 4844979 | 1 | USA Built Machines | |
| 123 | 1001115063 | 1 | China Built Machines | |

## FIGURE 3-7. ROTATOR ASSEMBLIES

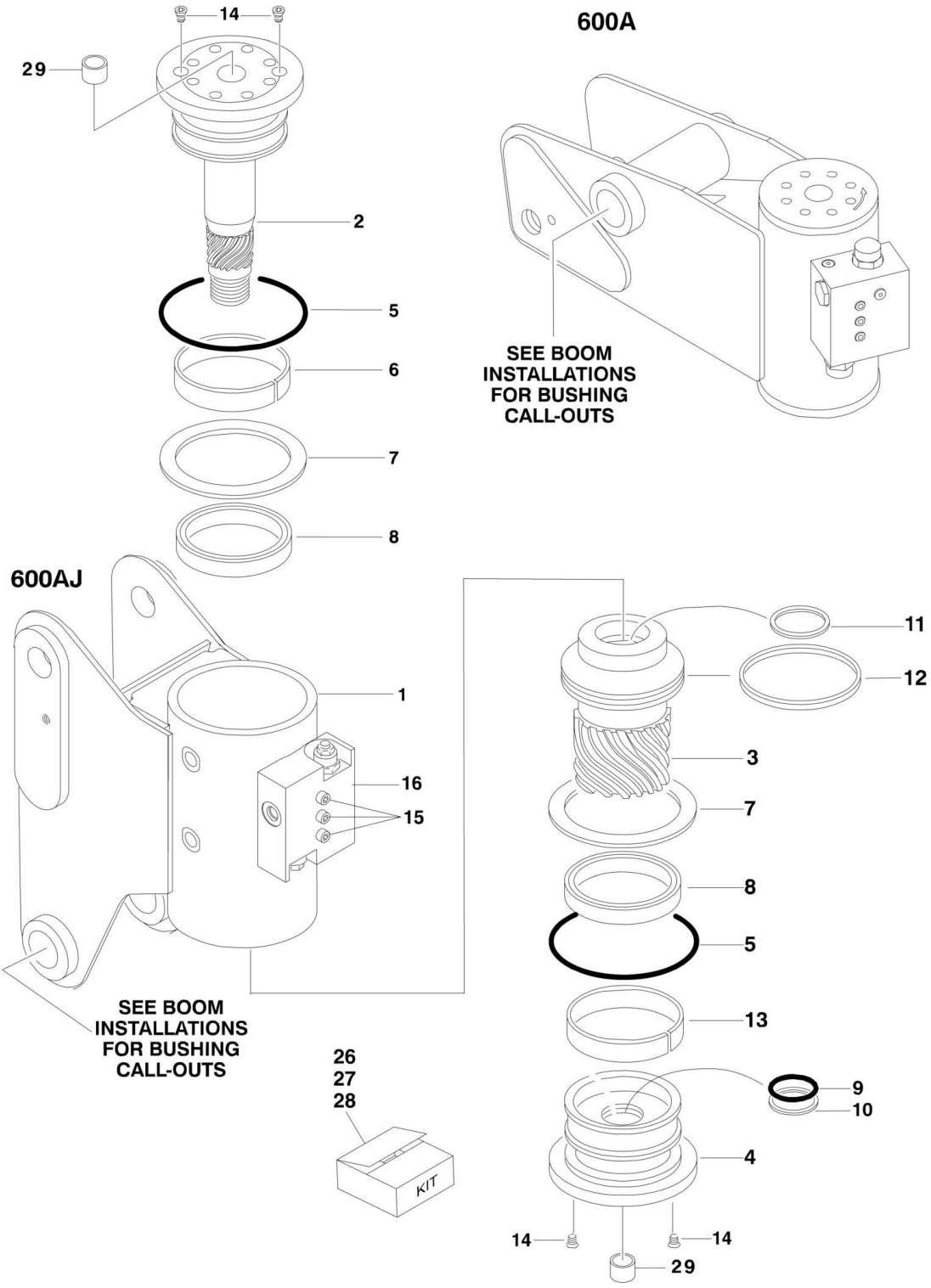

## FIGURE 3-7. ROTATOR ASSEMBLIES

| ITEM | PART NUMBER | QTY | DESCRIPTION | REV |
|---|---|---|---|---|
| | | Ref | **ROTATOR ASSEMBLIES** | |
| | 0060068 | Ref | **Rotor Assemblies 600A (SN 0300087000 through 0300177361, SN B300000100 through B300001315)** | B |
| | 1001181055 | Ref | **Rotor Assemblies 600A (SN B300001316 through B300005764, Excluding B300005620)** | A |
| | 0060066 | Ref | **Rotor Assemblies 600AJ (SN 0300087000 through 0300177361, SN B300000100 through B300002246)** | D |
| | 1001178269 | Ref | **Rotor Assemblies 600AJ (SN B300002247 through B300005764, Excluding B300005620)** | A |
| 1 | See Note | NSS | Housing/Ring Gear Assembly (Note: Not Available - Purchase Complete Assembly) | |
| 2 | 7017162 | 1 | Weldment, Shaft | |
| 3 | 7017163 | 1 | Piston/Sleeve Assembly | |
| 4 | 7017164 | 1 | Cap, End | |
| 5 | See Note | NSS | O-Ring (Note: Use Item 26) | |
| 6 | See Note | NSS | Bearing, Shaft (Note: Use Item 27) | |
| 7 | See Note | NSS | Thrustwasher (Note: Use Item 27) | |
| 8 | See Note | NSS | Packing, Bearing (Note: Use Item 26) | |
| 9 | See Note | NSS | Seal, Cap (Note: Use Item 26) | |
| 10 | See Note | NSS | Ring, Back-up Cap (Note: Use Item 26) | |
| 11 | See Note | NSS | Seal, Rod (Note: Use Item 26) | |
| 12 | See Note | NSS | Seal, Piston (Note: Use Item 26) | |
| 13 | See Note | NSS | Bearing, Cap (Note: Use Item 27) | |
| 14 | 70001697 | 6 | Capscrew 1/4in-20NC x 3/8in (Grade 8) | |
| 15 | See Note | NSS | Bolt 1/4 x 1-1/2 (Grade 8) (Note: Not Available for Purchase) | |
| 16 | 7017183 | 1 | Valve Assembly | |
| 16 | 7017193 | 2 | Cartridge, Valve | |
| 16 | See Note | NSS | Seal Kit - 7017193 Valve (Note: Not Available - Purchase Complete Assembly) | |
| 16 | See Note | NSS | Cartridge, Valve (Not Shown - Located on Side of Block) (Note: Not Available - Purchase Complete Assembly) | |
| 16 | See Note | NSS | Seal Kit - Valve Located on Side of Block (Note: Not Available - Purchase Complete Assembly) | |
| 26 | | Ref | Seal Kit Options (Includes Items 5, 8-12 & 28): | |
| 26 | 7017158 | 1 | Standard Seal Kit (Rotator p/n 0060066 & 0060068) | |
| 26 | 70000342 | 1 | Low Temperature Seal Kit (Rotator p/n 0060066, 0060068, 1001181055 & 1001178269) | |
| 27 | 7017159 | 1 | Bearing Kit (Includes Items 6, 7 & 13) | |
| 28 | 7017142 | 1 | Hardware Kit (Includes Qty 2 Plugs, Qty 2 Dowel Pins and Item 14) | |
| 29 | 7017195 | 2 | Bushing | |

## FIGURE 3-8. PLATFORM SUPPORT INSTALLATION - WITH LSS

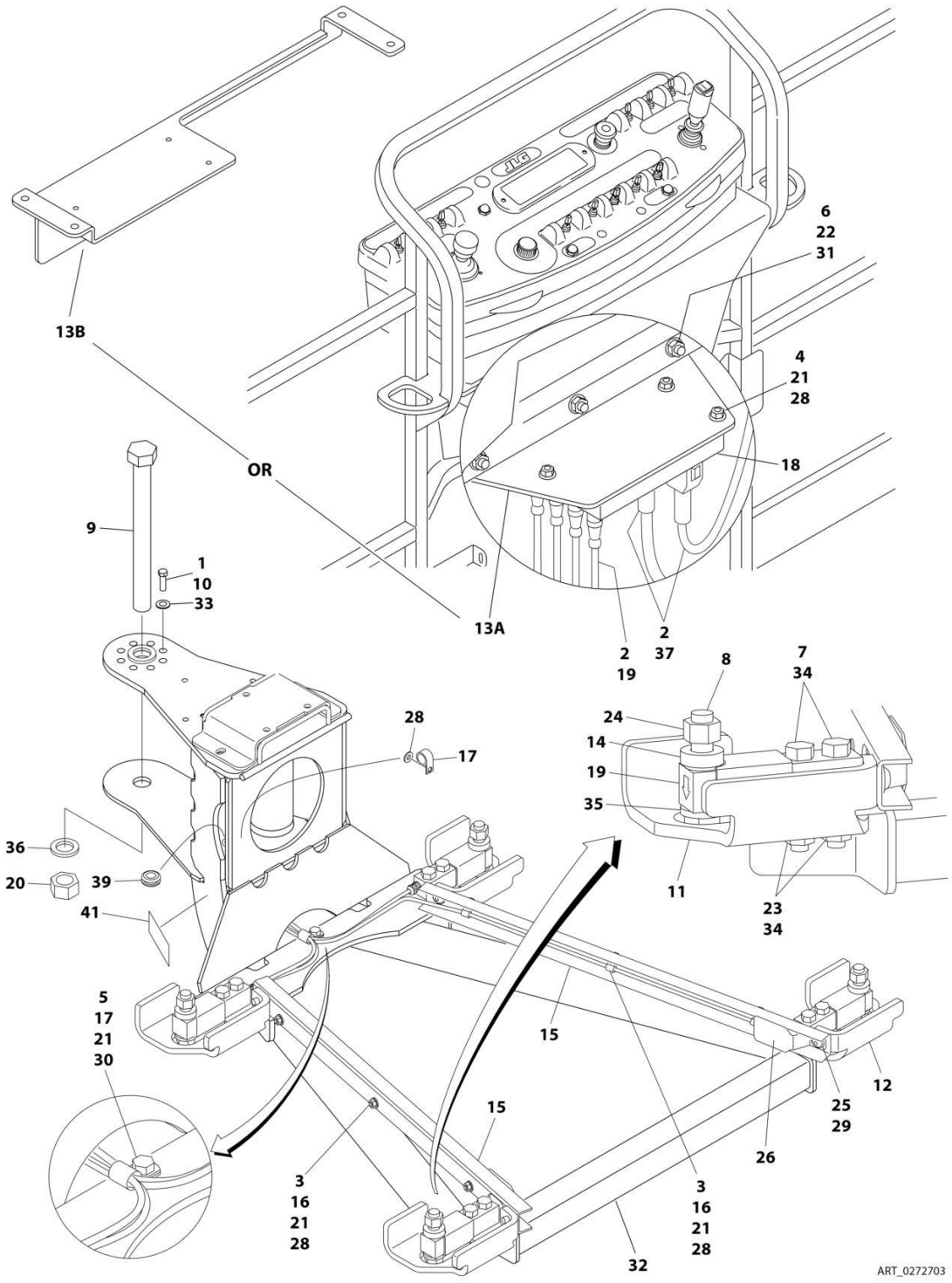

## FIGURE 3-8. PLATFORM SUPPORT INSTALLATION - WITH LSS

| ITEM | PART NUMBER | QTY | DESCRIPTION | REV |
|---|---|---|---|---|
| | 0272703 | Ref | **PLATFORM SUPPORT INSTALLATION - WITH LSS & WITHOUT SKYGLAZIER (USA BUILT MACHINES)** | Q |
| | 0272703 | Ref | **PLATFORM SUPPORT INSTALLATION - WITH LSS & WITH SKYGLAZIER (USA BUILT MACHINES) (NOTE: SEE SEPARATE BREAKDOWN IN PLATFORM SECTION FOR MACHINES BUILT BEFORE 2008)** | Q |
| | 1001115099 | Ref | **PLATFORM SUPPORT INSTALLATION - WITH LSS (CHINA BUILT MACHINES)** | C |
| 1 | 0100011 | AR | Compound, Locking | |
| 2 | 0100048 | AR | Grease, Dielectric | |
| 3 | 0641405 | 6 | Bolt 1/4 x 5/8 | |
| 4 | 0641416 | 3 | Bolt 1/4 x 2 | |
| 5 | 0641407 | 1 | Bolt 1/4 x 7/8 | |
| 6 | 0641516 | 3 | Bolt 5/16 x 2 | |
| 7 | 0641822 | 8 | Bolt 1/2 x 2-3/4 | |
| 8 | 0642024 | 4 | Bolt 5/8 x 3 | |
| 9 | 0642684 | 1 | Bolt 1 x 10-1/2 | |
| 10 | 0681608 | 8 | Bolt 3/8 x 1 Grade 8 | |
| 11 | 0902919 | 2 | Bracket, Cell Guard | |
| 12 | 0902920 | 2 | Bracket, Cell Guard | |
| 13 | | Ref | Bracket, Module Mount Options: | |
| 13A | 0902894 | 1 | Bracket (USA Built Machines) **(SN 0300171769 through 0300138470)** | |
| 13B | 1001113483 | 1 | Bracket (USA Built Machines) **(SN 0300138471 through 0300177360)** | |
| 13B | 1001113483 | 1 | Bracket (China Built Machines) | |
| 14 | 0962450 | 4 | Bushing, Spacer | |
| 15 | 1271538 | 2 | Channel | |
| 16 | 1320136 | 6 | Clamp | |
| 17 | 1320224 | 2 | Clamp | |
| 18 | 1600387 | 1 | Module, Control - LSS (Note: Recalibration Required When Replaced) | |
| 19 | 2420202 | 4 | Cell, Load (Includes Cable) | |
| 20 | 3272605 | 1 | Nut 1 Grade 8 | |
| 21 | 3311405 | 10 | Nut 1/4 | |
| 22 | 3311508 | 3 | Nut 5/16 | |
| 23 | 3311805 | 8 | Nut 1/2 | |
| 24 | 3312005 | 4 | Nut 5/8 | |
| 25 | 3900283 | 4 | Screw 3/8 x 3/4 | |
| 26 | 4061054 | 2 | Shield | |
| 27 | 4240033 | AR | Tie-Strap (Not Shown) | |
| 28 | 4711400 | 10 | Washer 1/4 | |
| 29 | 4711600 | 4 | Washer 3/8 | |
| 30 | 4751400 | 1 | Washer 1/4 | |
| 31 | 4751500 | 3 | Washer 5/16 | |
| 32 | 4846573 | 1 | Support, Platform | |
| 33 | 4891600 | 8 | Washer 3/8 | |
| 34 | 4891800 | 8 | Washer 1/2 | |
| 35 | 4892000 | 4 | Washer 5/8 | |
| 36 | 4892600 | 1 | Washer 1 | |
| 37 | 4922869 | 1 | LSS Harness | |

| ITEM | PART NUMBER | QTY | DESCRIPTION | REV |
|---|---|---|---|---|
| 37 | 4922705 | 1 | Analyzer Harness (Not Shown) | |
| 37 | 4460761 | 1 | Receptacle, Female - 4 Position (Not Shown) | |
| 37 | 4460226 | 2 | Socket, Female | |
| 37 | 4460836 | 1 | Connector - 12 Position (Black) (J2) | |
| 37 | 4460465 | 2 | Socket, Female | |
| 37 | 4460466 | 10 | Plug, Terminal | |
| 37 | 0840055 | 1 | Boot | |
| 37 | 4460933 | 1 | Connector - 12 Position (Grey) (J1) | |
| 37 | 4460465 | 3 | Socket, Female | |
| 37 | 4460466 | 9 | Plug, Terminal | |
| 37 | 0840055 | 1 | Boot | |
| 39 | 2540038 | 1 | Grommet | |
| 40 | 2920129 | 1 | Bulb, Light (Not Shown - Located on Ground Control Box) | |
| 41 | 1001216630 | 2 | Decal - Tie Down/No Lift (USA Built Machines Only) | |

## FIGURE 3-9. VALVES AND SWITCHES INSTALLATION (BOOM MOUNTED)

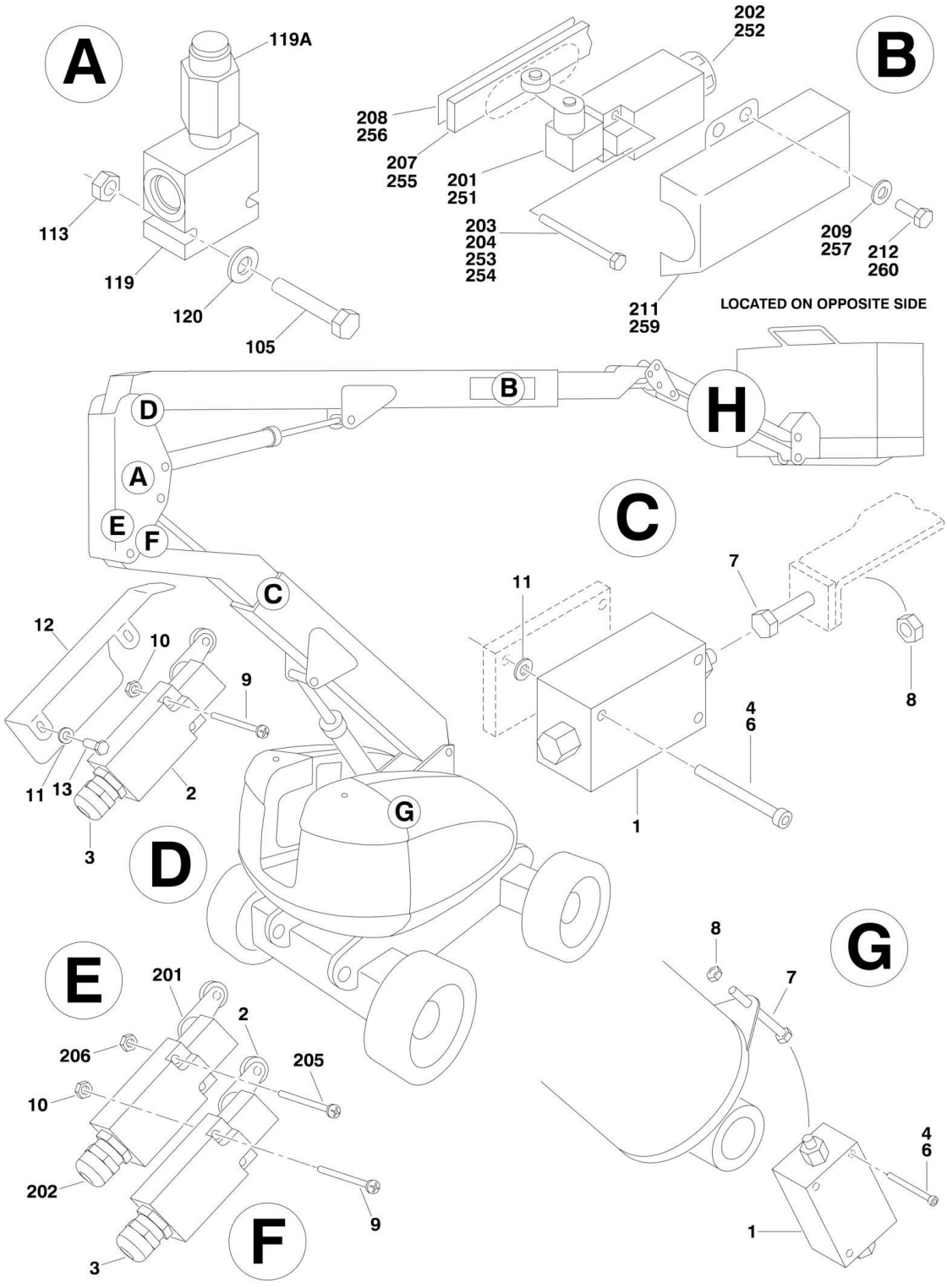

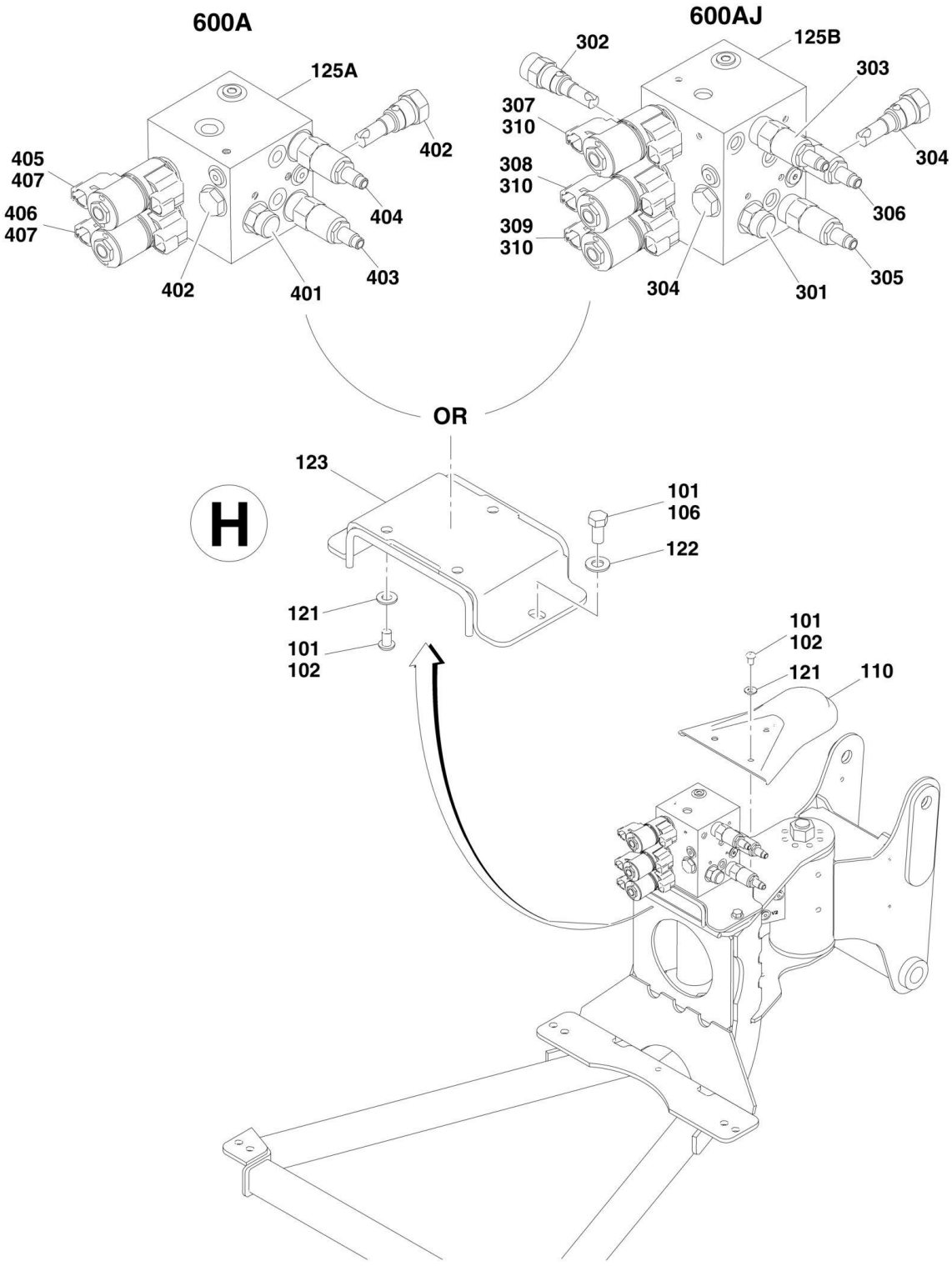
600A
125A
405
407
406
407
402
404
403
402
401
600AJ
125B
302
303
307
310
308
310
309
310
304
306
305
304
301
OR
H
123
101
106
122
121
101
102
101
102
121
110

## FIGURE 3-9. VALVES AND SWITCHES INSTALLATION (BOOM MOUNTED)

| ITEM | PART NUMBER | QTY | DESCRIPTION | REV |
|---|---|---|---|---|
| | 0255438 | Ref | **BOOM VALVES AND LIMIT SWITCHES INSTALLATION (ALL SPECS)** | 10-J |
| 1 | | Ref | Valve, Manual 2-Way Options: | |
| 1 | 4641139 | 2 | USA Built Machines **(SN 0300087000 through 0300091977)** | |
| 1 | 4641436 | 2 | USA Built Machines **(SN 0300091978 through 0300177361)** | |
| 1 | 4641436 | 2 | China Built Machines **(SN B300000100 through B300005764, Excluding B300005620)** | |
| 2 | 4360578 | 2 | Switch, Limit | |
| 3 | 4460968 | 2 | Connector, Strain Relief | |
| 4 | 3931430 | 6 | Bolt, Socket Head 1/4in-20NC x 1-7/8in | |
| 6 | 0100011 | AR | Compound, Locking | |
| 7 | 0630427 | 2 | Bolt, Special | |
| 8 | 3311801 | 3 | Nut 1/2in-13NC | |
| 9 | 3930824 | 4 | Bolt, Socket Head #8-32NC x 1-1/2in | |
| 10 | 3310801 | 4 | Nut #8-32NC | |
| 11 | 4751400 | 8 | Flatwasher 1/4in Regular | |
| 12 | 1670819 | 1 | Cover, Switch | |
| 13 | 3931408 | 2 | Bolt, Socket 1/4in-20NC x 1/2in | |
| | | Ref | **CONTROL VALVES INSTALLATIONS** | |
| | 0274309 | Ref | **Control Valves 600A 2WS (SN 0300087000 through 0300177361)** | 4 |
| | 0274309 | Ref | **Control Valves 600A 2WS (SN B300000100 through B300001392)** | 4 |
| | 1001160038 | Ref | **Control Valves 600A 2WS (SN B300001393 through B300001985)** | B |
| | 0274309 | Ref | **Control Valves 600A 2WS (SN B300001986 through B300005764, Excluding B300005620)** | 4 |
| | 0274311 | Ref | **Control Valves 600A 4WS (SN 0300087000 through 0300177361)** | 4 |
| | 0274311 | Ref | **Control Valves 600A 4WS (SN B300000100 through B300001392)** | 4 |
| | 1001160039 | Ref | **Control Valves 600A 4WS (SN B300001393 through B300001985)** | B |
| | 0274311 | Ref | **Control Valves 600A 4WS (SN B300001986 through B300005764, Excluding B300005620)** | 4 |
| | 0274310 | Ref | **Control Valves 600AJ 2WS (SN 0300087000 through 0300177361)** | 4 |
| | 0274310 | Ref | **Control Valves 600AJ 2WS (SN B300000100 through B300001392)** | 4 |
| | 1001160068 | Ref | **Control Valves 600AJ 2WS (SN B300001393 through B300001985)** | B |
| | 0274310 | Ref | **Control Valves 600AJ 2WS (SN B300001986 through B300005764, Excluding B300005620)** | 4 |
| | 0274312 | Ref | **Control Valves 600AJ 4WS (SN 0300087000 through 0300177361)** | 4 |
| | 0274312 | Ref | **Control Valves 600AJ 4WS (SN B300000100 through B300001392)** | 4 |
| | 1001160069 | Ref | **Control Valves 600AJ 4WS (SN B300001393 through B300001985)** | B |
| | 0274312 | Ref | **Control Valves 600AJ 4WS (SN B300001986 through B300005764, Excluding B300005620)** | 4 |
| 101 | 0100011 | AR | Compound, Locking **(SN B300001393 through B300005764, Excluding B300005620)** | |
| 102 | 0630467 | 6 | Screw 5/6-18 x 1/2 **(SN B300001393 through B300005764,** | |

| ITEM | PART NUMBER | QTY | DESCRIPTION | REV |
|---|---|---|---|---|
| | | | **Excluding B300005620)** | |
| 105 | 0641424 | 2 | Bolt 1/4-20 x 3 | |
| 106 | 0641606 | 2 | Bolt 3/8-16 x 3/4 **(SN B300001393 through B300005764, Excluding B300005620)** | |
| 110 | 1670964 | 1 | Cover **(SN 0300181175 through B300005764, Excluding B300005620)** | |
| 113 | 3311405 | 2 | Nut 1/4-20 | |
| 119 | 4640929 | 1 | Valve Assembly - Relief | |
| 119A | 7012970 | 1 | Cartridge Valve | |
| 119A | 7012953 | 1 | Seal Kit - 7012970 Valve | |
| 120 | 4711400 | 2 | Washer 1/4 | |
| 121 | 4711500 | 6 | Washer 5/16 **(SN B300001393 through B300005764, Excluding B300005620)** | |
| 122 | 4711600 | 2 | Washer 3/8 **(SN B300001393 through B300005764, Excluding B300005620)** | |
| 123 | 4846218 | 1 | Plate, Valve Mounting **(SN B300001393 through B300005764, Excluding B300005620)** | |
| 125A | 1001152564 | 1 | Control Valve Assembly - 600A (See Items 401-409 for Breakdown) **(SN B300001393 through B300005764, Excluding B300005620)** | |
| 125B | 1001152565 | 1 | Control Valve Assembly - 600AJ (See Items 301-312 for Breakdown) **(SN B300001393 through B300005764, Excluding B300005620)** | |
| | 0255699 | Ref | **LIMIT SWITCHES INSTALLATION - 600A DUAL CAPACITY (ALL SPEC EXCEPT CE AND LATIN AMERICA SPEC)** | D |
| 201 | 4360578 | 2 | Switch, Limit | |
| 202 | 4460968 | 2 | Connector, Strain Relief | |
| 203 | 0100035 | AR | Compound, Locking | |
| 204 | 3930816 | 2 | Bolt, Socket Head #8-32NC x 1in | |
| 205 | 3930824 | 2 | Bolt, Socket Head #8-32NC x 1-1/2in | |
| 206 | 3310805 | 2 | Locknut #8-32NC | |
| 207 | 0362529 | NLA | Bar, Fiberglass (Use p/n 1001106480) | |
| 208 | 4420060 | 9.8 ft/3m | Tape, Foam | |
| 209 | 4751400 | 4 | Flatwasher 1/4in Regular | |
| 211 | 1670824 | 1 | Cover, Switch | |
| 212 | 0641403 | 4 | Bolt 1/4in-20NC x 3/8in | |
| | | Ref | **TRANSPORT POSITION SWITCHES INSTALLATION (CE SPEC ONLY)** | |
| | 0256331 | Ref | **Transport Position Switches 600A** | B |
| | 0256336 | Ref | **Transport Position Switches 600AJ** | C |
| 251 | 4360578 | 1 | Switch, Limit | |
| 252 | 4460968 | 1 | Connector, Strain Relief | |
| 253 | 0100035 | AR | Compound, Locking | |
| 254 | 3930816 | 2 | Bolt, Socket Head #8-32NC x 1in | |
| 255 | | Ref | Bar, Fiberglass | |
| 255 | 0362611 | 1 | Bar, Fiberglass 600A | |
| 255 | 0362529 | NLA | Bar, Fiberglass 600AJ (Use p/n 1001106480) | |
| 256 | 4420060 | Ref | Tape, Foam | |
| 256 | 4420060 | 161 in/4m | Tape, Foam 600A | |
| 256 | 4420060 | 127 in /3.2m | Tape, Foam 600AJ | |
| 257 | 4751400 | 4 | Flatwasher 1/4in Regular | |
| 259 | 1670824 | 1 | Cover, Switch | |
| 260 | 0641403 | 4 | Bolt 3/8in-16NC x 3/8in | |

| ITEM | PART NUMBER | QTY | DESCRIPTION | REV |
|---|---|---|---|---|
| | 1001152565 | Ref | **CONTROL VALVE ASSEMBLY - 600AJ (SN B300001393 through B300005764, Excluding B300005620)** | C |
| 301 | 7012989 | 1 | Valve, Flow | |
| 301 | 7012953 | 1 | Seal Kit - 7012989 Valves | |
| 302 | 7012965 | 1 | Valve, Flow | |
| 302 | 7012953 | 1 | Seal Kit - 7012965 Valves | |
| 303 | 70003790 | 1 | Valve, Relief | |
| 303 | 7021653 | 1 | Seal Kit - 70003790 Valve | |
| 304 | 7012914 | 2 | Valve, Cartridge | |
| 304 | 7012918 | 2 | Seal Kit - 7012914 Valve | |
| 305 | 7023911 | 1 | Valve, Relief | |
| 305 | 7012967 | 1 | Seal Kit - 7023911 Valve | |
| 306 | 7023912 | 1 | Valve, Relief | |
| 306 | 7012967 | 1 | Seal Kit - 7023912 Valve | |
| 307 | 7017452 | 1 | Valve, Solenoid (Jib) | |
| 307 | 7017402 | 2 | Seal Kit - 7017452 Valve | |
| 308 | 7017452 | 1 | Valve, Solenoid (Platform Level) | |
| 308 | 7017402 | 1 | Seal Kit - 7017452 Valve | |
| 309 | 7017452 | 1 | Valve, Solenoid (Rotator) | |
| 309 | 7017402 | 2 | Seal Kit - 7017452 Valve | |
| 310 | 70002386 | 6 | Coil | |
| 311 | 70002064 | 2 | Plug, Orifice (Not Shown) | |
| 312 | 7017406 | 2 | Plug (Not Shown) | |
| | 1001152564 | Ref | **CONTROL VALVE ASSEMBLY - 600A (SN B300001393 through B300005764, Excluding B300005620)** | D |
| 401 | 7012965 | 1 | Valve, Flow | |
| 401 | 7012953 | 1 | Seal Kit - 7012965 Valves | |
| 402 | 7012914 | 2 | Valve, Cartridge | |
| 402 | 7012918 | 2 | Seal Kit - 7012914 Valve | |
| 403 | 7023911 | 1 | Valve, Relief | |
| 403 | 7012967 | 1 | Seal Kit - 7023911 Valve | |
| 404 | 7023912 | 1 | Valve, Relief | |
| 404 | 7012967 | 1 | Seal Kit - 7023912 Valve | |
| 405 | 7017452 | 1 | Valve, Solenoid (Platform Level) | |
| 405 | 7017402 | 1 | Seal Kit - 7017452 Valve | |
| 406 | 7017452 | 1 | Valve, Solenoid (Rotator) | |
| 406 | 7017402 | 2 | Seal Kit - 7017452 Valve | |
| 407 | 70002386 | 4 | Coil | |
| 408 | 70002064 | 2 | Plug, Orifice (Not Shown) | |
| 409 | 7017406 | 2 | Plug (Not Shown) | |

# SECTION 4 - PLATFORM

## FIGURE 4-1. PLATFORM ASSEMBLIES

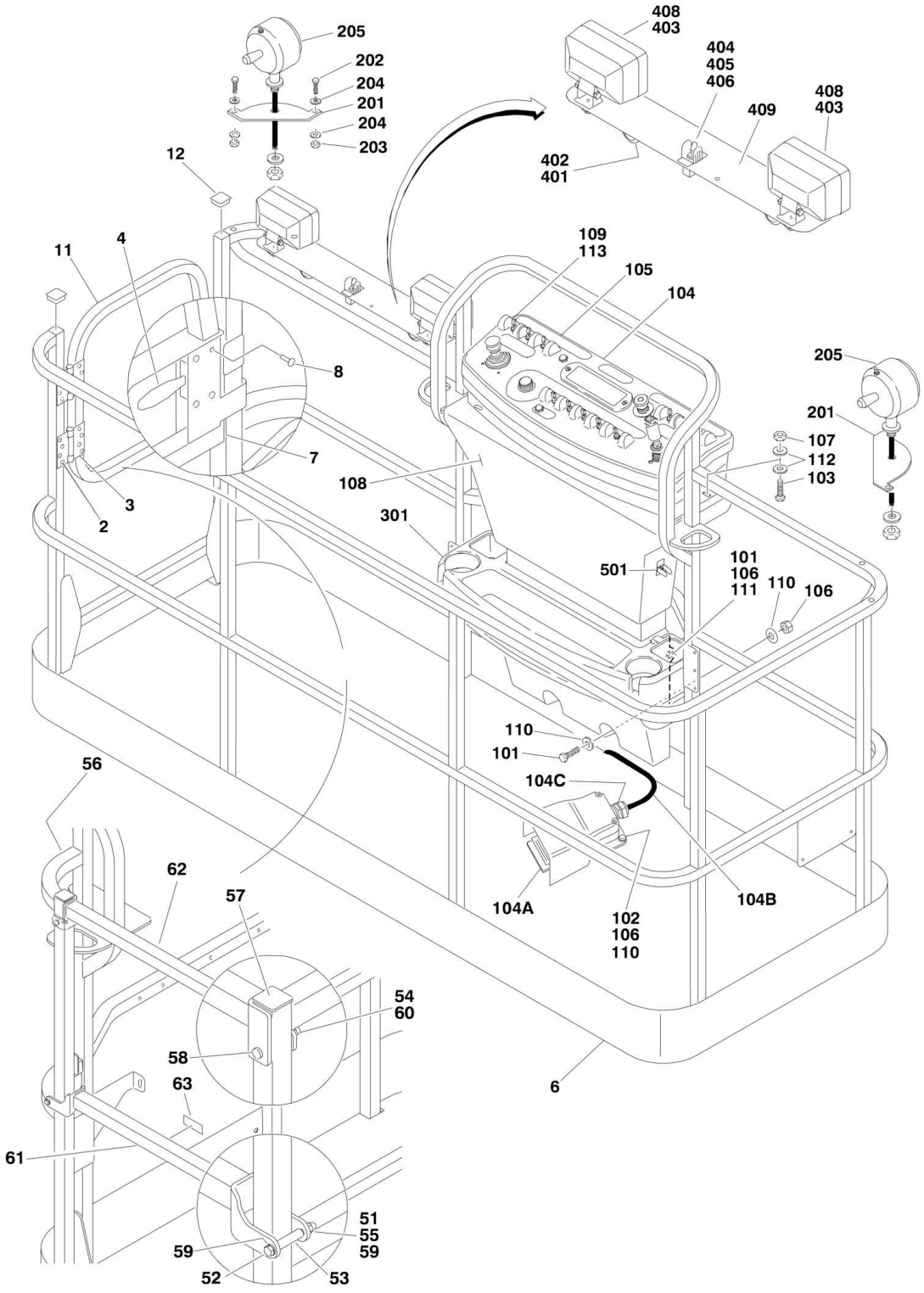

## FIGURE 4-1. PLATFORM ASSEMBLIES

| ITEM | PART NUMBER | QTY | DESCRIPTION | REV |
|---|---|---|---|---|
| | | Ref | **PLATFORM ASSEMBLY WITH GATE** | |
| | | Ref | **USA Built Machines:** | |
| | 3510830 | Ref | **2.6ft x 4ft (0.70m x 1.22m) with No Mesh (SN 0300087000 through 0300168248)** | M |
| | 1001144027 | Ref | **2.6ft x 4ft (0.70m x 1.22m) with No Mesh (SN 0300168249 through 0300177361)** | B |
| | 3510831 | Ref | **2.6ft x 5ft (0.70m x 1.52m) with No Mesh (SN 0300087000 through 0300168248)** | L |
| | 1001144026 | Ref | **2.6ft x 5ft (0.70m x 1.52m) with No Mesh (SN 0300168249 through 0300177361)** | B |
| | 3510833 | Ref | **3ft x 6ft (0.9m x 1.83m) with No Mesh (SN 0300087000 through 0300168248)** | I |
| | 1001144024 | Ref | **3ft x 6ft (0.9m x 1.83m) with No Mesh (SN 0300168249 through 0300177361)** | B |
| | 3510822 | Ref | **3ft x 8ft (0.9m x 2.44m) with No Mesh (SN 0300087000 through 0300168248)** | J |
| | 1001144023 | Ref | **3ft x 8ft (0.9m x 2.44m) with No Mesh (SN 0300168249 through 0300177361)** | B |
| | | Ref | **China Built Machines:** | |
| | 1001114335 | Ref | **3ft x 6ft (0.9m x 1.83m) with No Mesh (SN B300000100 through B300000901)** | D |
| | 1001146180 | Ref | **3ft x 6ft (0.9m x 1.83m) with No Mesh (SN B300000902 through B300001168)** | E |
| | 1001188305 | Ref | **3ft x 6ft (0.9m x 1.83m) with No Mesh (SN B300001169 through B300005764, Excluding B300005620)** | C |
| | 1001228376 | Ref | **3ft x 6ft (0.9m x 1.83m) with Tri-Entry (1 Gate/2 Drop Bars)** | A |
| | 1001114391 | Ref | **3ft x 8ft (0.9m x 2.44m) with No Mesh (SN B300000100 through B300000901)** | D |
| | 1001146179 | Ref | **3ft x 8ft (0.9m x 2.44m) with No Mesh (SN B300000902 through B300001168)** | E |
| | 1001188308 | Ref | **3ft x 8ft (0.9m x 2.44m) with No Mesh (SN B300001169 through B300005764, Excluding B300005620)** | C |
| | | Ref | **Note: Original Equipment platform may have been replaced with Service Replacement platform. Identify platform before ordering parts.** | |
| | | Ref | **Note: Platform and Mesh must be ordered separately for Platforms with Mesh. See SPECIAL OPTIONS SECTION for Mesh Installations.** | |
| | | Ref | **Note: Replacement Decals Must Be Purchased Separately - See DECALS SECTION.** | |
| | | Ref | **Note: When replacing 8ft/2.44m platform with Soft Touch option, new Soft Touch Rail p/n 4846673 must be purchased to accommodate limit switch locations.** | |
| | | Ref | **Note: When replacing platform on machines with SkyCutter option, new bracket p/n 1001145405 must be purchased to accommodate SkyCutter components.** | |
| 2 | 2080040 | 16 | Fastener, Huck | |
| 3 | 2600281 | 2 | Hinge, Self-Closing | |
| 4 | 2940074 | 1 | Latch | |
| 6 | See Note | NSS | Platform (Note: Purchase Platform Assembly) | |
| 7 | | Ref | Plug | |
| 7 | 3520072 | AR | USA Built Machines | |
| 7 | | Ref | China Built Machines | |
| 7 | 3520198 | AR | Platform p/ns 1001114335 & 1001114391 | |
| 7 | 1001144630 | AR | Platform p/ns 1001146179 & 1001146180 | |

| ITEM | PART NUMBER | QTY | DESCRIPTION | REV |
|---|---|---|---|---|
| 8 | 3820020 | 4 | Rivet | |
| 9 | 4751000 | 4 | Flatwasher #10 Regular | |
| 11 | | Ref | Gate Options: | |
| 11 | | Ref | USA Built Machines | |
| 11 | 4846452 | 1 | Platform p/ns 3510822, 3510830, 3510831, 3510833 | |
| 11 | 1001144629 | 1 | Platform p/ns 1001144023, 1001144024, 1001144026, 1001144027, 1001228376 | |
| 11 | | Ref | China Built Machines | |
| 11 | 1001114341 | 1 | Platform p/ns 1001114335 & 1001114391 | |
| 11 | 1001144629 | 1 | Platform p/ns 1001146179 & 1001146180 | |
| 12 | | Ref | Plug Options: | |
| 12 | 3520198 | 2 | USA Built Machines | |
| 12 | | Ref | China Built Machines | |
| 12 | 3520198 | 2 | Platform p/ns 1001114335 & 1001114391 | |
| 12 | 1001145781 | 2 | Platform p/ns 1001146179 & 1001146180 | |
| | | Ref | **PLATFORM ASSEMBLY WITH DROP-BAR** | |
| | | Ref | **USA Built Machines:** | |
| | 1001138431 | Ref | **4ft x 2.5ft (1.2m x .76m) (SN 0300087000 through 0300168248)** | B |
| | 1001144018 | Ref | **4ft x 2.5ft (1.2m x .76m) (SN 0300168249 through 0300177361)** | B |
| | 1001138432 | Ref | **5ft x 2.5ft (1.5m x .76m) (SN 0300087000 through 0300168248)** | B |
| | 1001144019 | Ref | **5ft x 2.5ft (1.5m x .76m) (SN 0300168249 through 0300177361)** | B |
| | 1001138434 | Ref | **6ft x 3ft (1.83m x .91m) (SN 0300087000 through 0300168248)** | B |
| | 1001144021 | Ref | **6ft x 3ft (1.83m x .91m) (SN 0300168249 through 0300177361)** | B |
| | 1001138430 | Ref | **8ft x 3ft (2.44m x .91m) (SN 0300087000 through 0300168248)** | B |
| | 1001144022 | Ref | **8ft x 3ft (2.44m x .91m) (SN 0300168249 through 0300177361)** | B |
| | | Ref | **China Built Machines:** | |
| | 1001228215 | Ref | **3ft x 2.5ft (1m x .76m)** | A |
| | 1001139373 | Ref | **6ft x 3ft (1.83m x .91m) (SN B300000100 through B300000901)** | B |
| | 1001146182 | Ref | **6ft x 3ft (1.83m x .91m) (SN B300000902 through B3000001168)** | E |
| | 1001188306 | Ref | **6ft x 3ft (1.83m x .91m) (SN B300001169 through B300005764, Excluding B300005620)** | B |
| | 1001228377 | Ref | **3ft x 6ft (0.9m x 1.83m) with Tri-Entry (3 Drop Bars)** | A |
| | 1001139374 | Ref | **8ft x 3ft (2.44m x .91m) (SN B300000100 through B300000901)** | B |
| | 1001146181 | Ref | **8ft x 3ft (2.44m x .91m) (SN B300000902 through B300001168)** | E |
| | 1001188309 | Ref | **8ft x 3ft (2.44m x .91m) (SN B300001169 through B300005764, Excluding B300005620)** | B |
| | | Ref | **Note: Replacement Decals Must Be Ordered Separately - See DECALS SECTION.** | |
| 51 | 0100011 | AR | Compound, Locking | |
| 52 | 0641418 | 2 | Bolt 1/4in-20NC x 2-1/4in | |
| 53 | 0961845 | 2 | Bushing | |
| 54 | 3290606 | 2 | Nut M6 | |
| 55 | 3300151 | 2 | Nut, Acorn | |
| 56 | See Note | NSS | Platform (Note: Purchase Platform Assembly) | |
| 57 | | Ref | Cap-Plug Options: | |
| 57 | 3520198 | 2 | USA Built Machines | |

| ITEM | PART NUMBER | QTY | DESCRIPTION | REV |
|---|---|---|---|---|
| 57 | | Ref | China Built Machines | |
| 57 | 3520198 | 2 | Platform p/ns 1001139373 & 1001139374 | |
| 57 | 1001145781 | 2 | Platform p/ns 1001146181 & 1001146182 | |
| 58 | 4010618 | 2 | Screw M6 x 50mm | |
| 59 | 4711400 | 4 | Flatwasher 1/4in | |
| 60 | 4811700 | 2 | Flatwasher M6 | |
| 61 | 1001138494 | 1 | Bar, Drop (All except 3ft x 2.5ft (1m x .76m) Platform) | |
| 61 | 1001226872 | 1 | Bar, Drop (3ft x 2.5ft (1m x .76m) Platform) | |
| 62 | 1001138514 | 1 | Rail (Top) | |
| 63 | 1001140429 | 1 | Decal - Drop-Bar | |
| | | Ref | **CONSOLE BOX INSTALLATION** | |
| | 0271941 | Ref | **USA Built Machines (SN 0300087000 through 0300138648)** | B |
| | 1001108736 | Ref | **USA Built Machines (SN 0300138649 through 0300139040)** | B |
| | 1001144446 | Ref | **USA Built Machines (SN 0300139041 through 0300167713)** | D |
| | 1001145835 | Ref | **USA Built Machines (SN 0300167714 through 0300177361)** | A |
| | 1001114446 | Ref | **China Built Machines (Without SkyGuard) (SN B300000100 through B300000864)** | D |
| | 1001145835 | Ref | **China Built Machines (Without SkyGuard) (SN B300000865 through B300001392)** | A |
| | 1001159096 | Ref | **China Built Machines (Without SkyGuard) (SN B300001393 through B300005764, Excluding B300005620)** | C |
| | 1001190118 | Ref | **China Built Machines (With SkyGuard) (SN B300000100 through B300001392)** | B |
| | 1001190113 | Ref | **China Built Machines (With SkyGuard) (SN B300001393 through B300005764, Excluding B300005620)** | B |
| | 0258945 | Ref | **China Built Machines 4WS Components** | A |
| 101 | 0641406 | 4 | Bolt 1/4in-20NC x 3/4in | |
| 102 | 0641408 | 3 | Bolt 1/4in-20NC x 1in | |
| 103 | 0641610 | 4 | Bolt 3/8in-16NC x 1-1/4in | |
| 104 | | Ref | Platform Console Box Assembly (See PLATFORM CONSOLE ASSEMBLY for Breakdown) | |
| 104 | 0861517 | 1 | USA Built Machines **(SN 0300087000 through 0300138648)** | |
| 104 | 1001108735 | 1 | USA Built Machines **(SN 0300138649 through 0300139040)** | |
| 104 | 1001114448 | 1 | USA Built Machines **(SN 0300139041 through 0300167713)** | |
| 104 | 1001145834 | 1 | USA Built Machines **(SN 0300167714 through 0300177361)** | |
| 104 | 1001114448 | 1 | China Built Machines (Without SkyGuard) **(SN B300000100 through B300000864)** | |
| 104 | 1001145834 | 1 | China Built Machines (Without SkyGuard) **(SN B300000865 through B300001392)** | |
| 104 | 1001166672 | 1 | China Built Machines (Without SkyGuard) **(SN B300001393 through B300001595)** | |
| 104 | 1001202577 | 1 | China Built Machines (Without SkyGuard) **(SN B300001596 through B300005764, Excluding B300005620)** | |
| 104 | 1001190094 | 1 | China Built Machines (With SkyGuard) **(SN B300000100 through B300001392)** | |
| 104 | 1001190089 | 1 | China Built Machines (With SkyGuard) **(SN B300001393 through B300001595)** | |
| 104 | 1001202573 | 1 | China Built Machines (With SkyGuard) **(SN B300001596 through B300005764, Excluding B300005620)** | |
| 104A | | Ref | Footswitch Assembly Options (Includes Footswitch and Items 104B & 104C): | |
| 104A | 0272970 | 1 | USA Built Machines **(SN 0300087000 through 0300167713)** | B |
| 104A | 1001117174 | 1 | USA Built Machines **(SN 0300167714 through 0300177361)** | B |
| 104A | 0272970 | 1 | China Built Machines **(SN B300000100 through B300000724)** | B |

| ITEM | PART NUMBER | QTY | DESCRIPTION | REV |
|---|---|---|---|---|
| 104A | 1001117174 | 1 | China Built Machines **(SN B300000725 through B300005764, Excluding B300005620)** | B |
| | | Ref | **Note: Assembly p/n 0272970 may use either p/n 4360031 or p/n 1001117320. If Original Equipment on machines SN 0300087000 to SN 0300143952 was replaced as an "assembly", p/n 1001117320 may have been used as part of the Service Replacement. Identify component before ordering parts.** | |
| 104A | | Ref | Footswitch Options: | |
| 104A | 4360031 | 1 | Footswitch - USA Built Machines **(SN 0300087000 through 0300143951)** | |
| 104A | 7000625 | 2 | Block for 4360031 Footswitch | |
| 104A | 1001117320 | 1 | Footswitch - USA Built Machines **(SN 0300143952 through 0300167713)** | |
| 104A | 1001117320 | 1 | Footswitch - China Built Machines **(SN B300000100 through B300000724)** | |
| 104A | 70003483 | 1 | Block for 1001117320 Footswitch | |
| 104A | 1001117172 | 1 | Footswitch - USA Built Machines **(SN 0300167714 through 0300177361)** | |
| 104A | 1001117172 | 1 | Footswitch - China Built Machines **(SN B300000725 through B300005764, Excluding B300005620)** | |
| 104A | 70002902 | 1 | Block, Contact for 1001117172 Footswitch | |
| 104A | 70002903 | 1 | Gasket for 1001117172 Footswitch | |
| 104A | 70002905 | 1 | Cover for 1001117172 Footswitch | |
| 104A | 70002904 | 1 | Bolt Replacement Kit for 1001117172 Footswitch | |
| 104B | 1060918 | 7 ft/2.14m | Cable, Electrical - 18/3 | |
| 104C | 4460071 | 1 | Connector, Strain Relief | |
| 105 | 1702676 | 1 | Decal - Horn | |
| 106 | 3311405 | 7 | Locknut 1/4in-20NC | |
| 107 | 3311605 | 4 | Locknut 3/8in-16NC | |
| 108 | 3380434 | 1 | Panel, Decal Mount | |
| 109 | 4360331 | 1 | Switch | |
| 110 | 4740362 | 7 | Washer, Fender 1/4in | |
| 111 | 4751400 | 4 | Flatwasher 1/4in Regular | |
| 112 | 4751600 | 8 | Flatwasher 3/8in Regular | |
| 113 | 3790012 | 1 | O-Ring | |
| | 0273492 | Ref | **WORKLIGHTS INSTALLATIONS (OPTIONAL)** | E |
| 201 | 3536089 | 2 | Plate, Mounting | |
| 202 | | Ref | Hardware Options: | |
| 202 | 0641414 | 4 | Bolt 1/4in-20NC x 1-3/4in (USA Built Machines) **(SN 0300087000 through 0300112399)** | |
| 202 | 2080040 | 4 | Blind Fastener, Huck (USA Built Machines) **(SN 0300112400 through 0300177361)** | |
| 203 | 3311405 | 4 | Locknut 1/4in-20NC (USA Built Machines Only) **(SN 0300087000 through 0300112399)** | |
| 204 | 4711400 | 8 | Flatwasher 1/4in Thin (USA Built Machines Only) **(SN 0300087000 through 0300112400)** | |
| 205 | 2920140 | NLA | Worklight (Use p/n 1001232838) **(SN B300000100 through B300003948)** | |
| 205 | 7016399 | 2 | Bulb, Replacement (1 Per Worklight) | |
| 205 | 1001232838 | 1 | Worklight w/Switch Kit **(SN B300003949 through B300005764, Excluding B300005620)** | |
| 205 | 1001232586 | 1 | Worklight w/Switch | |
| 205 | 1001232799 | 1 | Harness, Light | |
| 206 | 4240099 | 10 | Tie-Strap (Not Shown) | |

| ITEM | PART NUMBER | QTY | DESCRIPTION | REV |
|---|---|---|---|---|
| 207 | 2820035 | 9 | Loom, Vinyl (Not Shown) | |
| 209 | 4460426 | 1 | Connector, Strain Relief Options (Not Shown - Located at Console Box) | |
| | | Ref | **TRAY INSTALLATIONS (OPTIONAL)** | |
| 301 | 1580012 | 1 | Tray, Storage (Center) | |
| 302 | 1580013 | 1 | Tray, Storage (Rail Mounted - Not Shown) | |
| | 0274180 | Ref | **FLOODLIGHT INSTALLATION** | A |
| 401 | 0641518 | 2 | Bolt 5/16in-18NC x 2-1/4in | |
| 402 | 2560173 | 2 | Handle | |
| 403 | 2920157 | 2 | Lamp, Work Light | |
| 404 | 3250585 | 1 | Nameplate - Light On | |
| 405 | 4060802 | 1 | Guard, Switch | |
| 406 | 4360336 | 1 | Switch, Toggle | |
| 407 | 4420037 | 1 | Tape, Insulation (Not Shown) | |
| 408 | 4751800 | 2 | Flatwasher 1/2in Regular | |
| 409 | 4846561 | 1 | Mount, Light | |
| 410 | 4922892 | 1 | Harness 12/3 (Lower Boom) (Not Shown) | |
| 411 | 4922894 | 1 | Harness 12/3 (Upper Boom) (Not Shown) | |
| | | Ref | **2500W GENERATOR INSTALLATION (OPTIONAL)** | |
| 501 | 4360336 | 1 | Switch, Toggle | |
| 501 | 4740397 | 1 | Bushing | |
| 501 | 4060802 | 1 | Guard, Switch | |
| 501 | 3251102 | 1 | Decal - Generator ON/OFF | |

## FIGURE 4-2. PLATFORM COMPONENTS INSTALLATION (FALL ARREST PLATFORM)

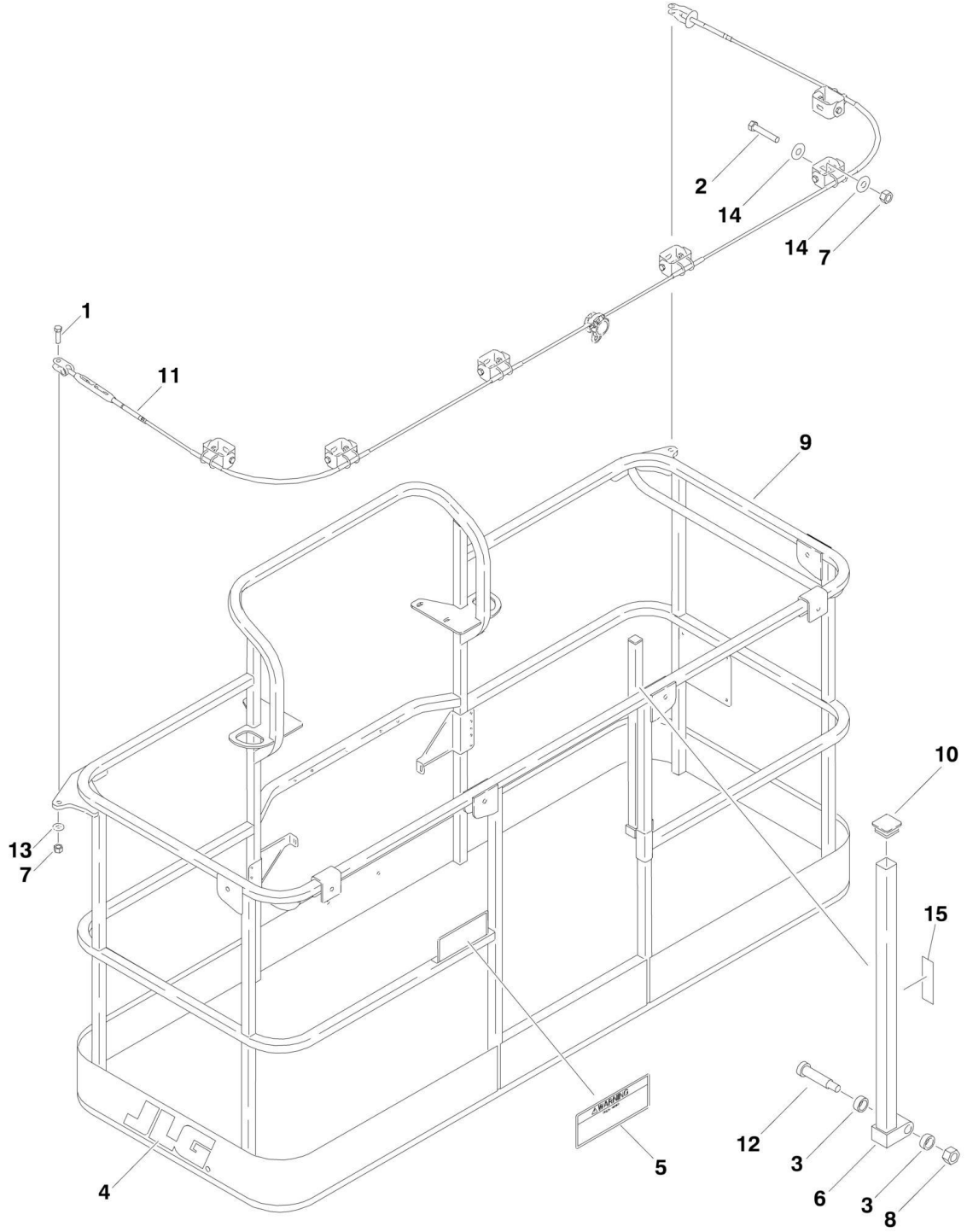

## FIGURE 4-2. PLATFORM COMPONENTS INSTALLATION (FALL ARREST PLATFORM)

| ITEM | PART NUMBER | QTY | DESCRIPTION | REV |
|---|---|---|---|---|
| | | Ref | **PLATFORM ASSEMBLY (FALL ARREST)** | |
| | | Ref | **Note: Not Available on CE Specs.** | |
| | 3510884 | Ref | **3ft x 6ft (0.9m x 1.83m) (SN 0300087000 through 0300177361)** | F |
| | 3510868 | Ref | **3ft x 8ft (0.9m x 2.44m) (SN 0300087000 through 0300177361)** | F |
| | 3510868 | Ref | **3ft x 8ft (0.9m x 2.44m) (SN B300000100 through B300001279)** | F |
| | 1001186334 | Ref | **3ft x 8ft (0.9m x 2.44m) (SN B300001280 through B300005764, Excluding B300005620)** | D |
| | | Ref | **Note: Replacement Decals Must Be Ordered Separately - See DECALS SECTION.** | |
| 1 | 0681814 | 2 | Bolt 1/2in-13NC x 1-3/4in | |
| 2 | 0681822 | AR | Bolt 1/2in-13NC x 2-3/4in | |
| 3 | 0962270 | 2 | Bearing | |
| 4 | 1702773 | 1 | Decal - JLG (3ft x 8ft (0.9m x 2.44m) Platform Only) | |
| 5 | 1705014 | 1 | Decal - Safety | |
| 6 | 2410014 | 1 | Gate Weldment | |
| 7 | 3271805 | AR | Locknut 1/2in-13NC | |
| 8 | 3311605 | 1 | Locknut 3/8in-16NC | |
| 9 | See Note | NSS | Platform Weldment (Note: Purchase Platform Assembly) | |
| 10 | 3520072 | 1 | Cap-Plug | |
| 11 | | Ref | Cable, Fall Arrest Options: | |
| 11 | 1060919 | NLA | Cable (3ft x 6ft (0.9m x 1.83m) Platform) (Use p/n 1001203655) | |
| 11 | 3890040 | NLA | Cable (3ft x 8ft (0.9m x 2.44m) Platform) (Use p/n 1001203656) | |
| 11 | 3890040 | NLA | Cable (3ft x 8ft (0.9m x 2.44m) Platform) (Use p/n 1001203656) **(SN B300000100 through B300001500)** | |
| 11 | 1001203656 | 1 | Cable (3ft x 8ft (0.9m x 2.44m) Platform) **(SN B300001501 through B300005764, Excluding B300005620)** | |
| 12 | 3900054 | 1 | Bolt 1/2in-13NC x 1 3/4in | |
| 13 | 4711800 | AR | Flatwasher 1/2in Thin | |
| 14 | 4751800 | AR | Flatwasher 1/2in Regular | |
| 15 | 1706385 | 1 | Decal - Drop Bar | |

**FIGURE 4-3. PLATFORM CONSOLE ASSEMBLY (SN 0300087000 through 0300177361, SN B300000100 through B300001392)**

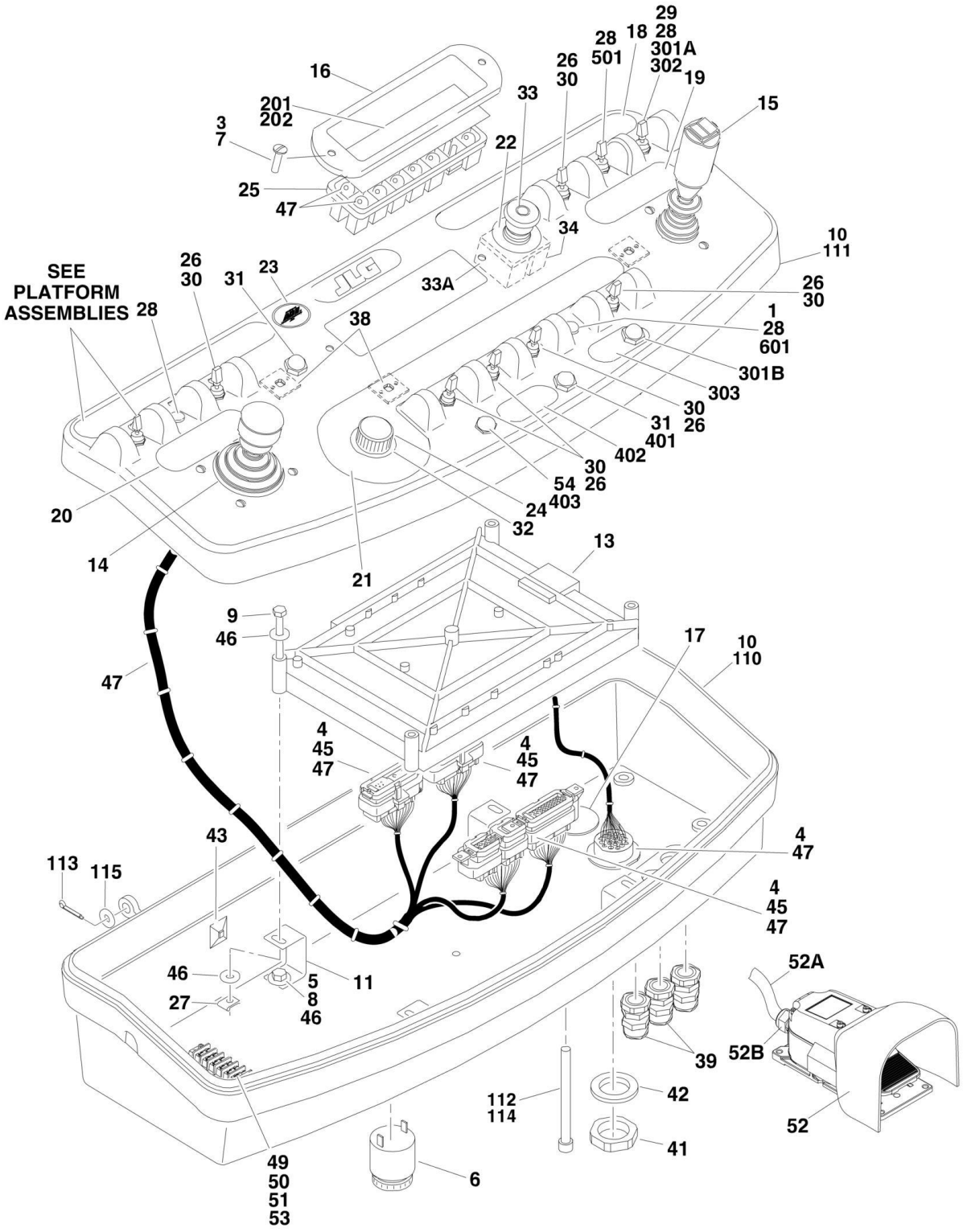

## FIGURE 4-3. PLATFORM CONSOLE ASSEMBLY (SN 0300087000 through 0300177361, SN B300000100 through B300001392)

| ITEM | PART NUMBER | QTY | DESCRIPTION | REV |
|---|---|---|---|---|
| | | Ref | **Note: Machines "Without UGM" are ALL USA Built Machines.** | |
| | | Ref | **Note: Platform Console Module is different based on the Ground Control Module (i.e. with UGM or without UGM). For Ground Module identification, See Revision Log Page A.** | |
| | | Ref | **CONSOLE BOX AND FOOTSWITCH ASSEMBLY (SN 0300087000 through 0300177361, SN B300000100 through B300001392)** | |
| | 0861517 | Ref | **USA Built Machines (Without UGM) (SN 0300087000 through 0300137204)** | K |
| | 1001108735 | Ref | **USA Built Machines (Without UGM) (SN 0300137205 through 0300177361)** | B |
| | 1001114448 | Ref | **USA Built Machines - With UGM (SN 0300087000 through 0300167713)** | F |
| | 1001145834 | Ref | **USA Built Machines - With UGM (SN 0300167714 through 0300177361)** | B |
| | 1001114448 | Ref | **China Built Machines (Without SkyGuard) (SN B300000100 through B300000864)** | F |
| | 1001145834 | Ref | **China Built Machines (Without SkyGuard) (SN B300000865 through B300001392)** | C |
| | 1001190094 | Ref | **China Built Machines (With SkyGuard) (SN B300000100 through B300001392)** | C |
| 1 | 0100009 | AR | Sealant | |
| 3 | 0100035 | AR | Compound, Locking | |
| 4 | 0100048 | AR | Grease, Dielectric | |
| 5 | 0100081 | AR | Adhesive | |
| 6 | 0140011 | 1 | Alarm | |
| 7 | 0630464 | 2 | Screw, Button Head #10-24NC x 1/2in | |
| 8 | 0641404 | 4 | Bolt 1/4in-20NC x 1/2in | |
| 9 | 0641414 | 4 | Bolt 1/4in-20NC x 1 3/4in | |
| 10 | 0861537 | 1 | Box, Console (Without SkyGuard) (See Items 110-115 for Breakdown) | |
| 10 | 1001189116 | 1 | Box, Console (With SkyGuard) (See Items 110-115 for Breakdown) | |
| 11 | 0902751 | 4 | Bracket, Card Support | |
| 13 | | Ref | Controller, Module Options | |
| | | Ref | Note: Re-calibration Required when Replaced. | |
| 13 | 1600375 | 1 | Without UGM | |
| 13 | 1001106355 | 1 | With UGM | |
| 14 | | Ref | Controller Assembly (Lift and Swing) Options (See CONTROLLER ASSEMBLY (LIFT AND SWING) for Breakdown): | |
| 14 | 1600317 | NLA | USA Built Machines (Use p/n 1001129555) **(SN 0300087000 through 0300146183)** | |
| 14 | 1001118417 | NLA | USA Built Machines (Use p/n 1001129555) **(SN 0300087000 through 0300146183)** | |
| 14 | 1001118417 | NLA | USA Built Machines (Use p/n 1001129555) **(SN 0300146184 through 0300177361)** | |
| 14 | 1600317 | NLA | China Built Machines (Use p/n 1001129555) **(SN B300000100 through B300000250)** | |
| 14 | 1001118417 | NLA | China Built Machines (Use p/n 1001129555) **(SN B300000100 through B300000250)** | |
| 14 | 1001118417 | NLA | China Built Machines (Use p/n 1001129555) **(SN B300000251 through B300001392)** | |
| 15 | | Ref | Controller Assembly (Drive and Steer) Options (See | |

| ITEM | PART NUMBER | QTY | DESCRIPTION | REV |
|---|---|---|---|---|
| | | | CONTROLLER ASSEMBLY (DRIVE AND STEER) for Breakdown): | |
| 15 | 1600318 | NLA | USA Built Machines (Use p/n 1001212415) **(SN 0300087000 through 0300146183)** | |
| 15 | 1001118416 | NLA | USA Built Machines (Use p/n 1001212415) **(SN 0300146184 through 0300177361)** | |
| 15 | 1600318 | NLA | China Built Machines (Use p/n 1001212415) **(SN B300000100 through B300000250)** | |
| 15 | 1001118416 | NLA | China Built Machines (Use p/n 1001212415) **(SN B300000251 through B300001392)** | |
| 16 | 1670829 | 1 | Bezel | |
| 17 | | Ref | Hardware Options: | |
| 17 | 1671037 | NLA | Cover (Use p/n 1001110434) | |
| 17 | 1001110434 | 1 | Plug | |
| 18 | | Ref | Decal (Stop) Options: | |
| 18 | 1704997 | 1 | Decal USA Built Machines **(SN 0300087000 through 0300136623)** | |
| 18 | 1001107527 | 1 | Decal USA Built Machines **(SN 0300136624 through 0300137205)** | |
| 18 | 1001107677 | NLA | Decal USA Built Machines (Use p/n 1001131168) **(SN 0300137206 through 0300150100)** | |
| 18 | 1001131168 | 1 | Decal USA Built Machines **(SN 0300150101 through 0300177361)** | |
| 18 | 1001107677 | NLA | Decal China Built Machines (Use p/n 1001131168) **(SN B300000100 through B300000284)** | |
| 18 | 1001131168 | 1 | Decal China Built Machines **(SN B300000285 through B300001392)** | |
| 19 | 1702565 | 1 | Decal - Drive and Steer | |
| 20 | 1702566 | 1 | Decal - Lift and Swing | |
| 21 | 1702567 | 1 | Decal - Function Speed | |
| 22 | 1704260 | 1 | Decal - EMS | |
| 23 | 1705132 | 1 | Decal - ADE | |
| 24 | 2560136 | 1 | Handle, Knob | |
| 25 | 2760105 | 1 | Housing, Display Light | |
| 26 | 3790012 | AR | O-Ring | |
| 27 | 3300353 | 4 | Nut, Tinnerman | |
| 28 | 3520054 | AR | Plug, Hole | |
| 29 | 4360330 | 1 | Switch, Toggle (USA Built Machines Only) **(SN 0300137205 through 0300177361)** | |
| 30 | 4360328 | 6 | Switch, Toggle | |
| 31 | 4360387 | AR | Switch, Pushbutton | |
| 32 | 4360407 | 1 | Controller, Speed | |
| 32 | See Note | 1 | Gasket "Top Hat" (Included with Switch) (Note: Not Available - Purchase Complete Controller) | |
| 32 | 70003784 | 1 | Seal | |
| 33 | 4360475 | 1 | Switch, Emergency Stop | |
| 33 | 7020175 | 1 | Cap, Red | |
| 33A | 7020176 | 1 | Contact Block | |
| 34 | 4360476 | 1 | Block, Contact | |
| 38 | 4460234 | 3 | Base, Mounting | |
| 39 | 4460428 | 2 | Connector, Strain Relief | |
| 41 | 4460470 | 1 | Nut, Terminal | |
| 42 | 4460471 | 1 | Lockwasher, Terminal | |
| 43 | 4460488 | 1 | Base, Mounting (USA Built Machines Only) **(SN 0300087000** | |

| ITEM | PART NUMBER | QTY | DESCRIPTION | REV |
|---|---|---|---|---|
| | | | **through 0300134338)** | |
| 44 | 4460708 | 2 | Connector, Female - 15 Position (Not Shown - See ELECTRICAL SECTION for Breakdown) | |
| 45 | 4460905 | 5 | Connector, Amp Seal Plug | |
| 46 | 4751400 | 8 | Flatwasher 1/4in Regular | |
| 47 | | Ref | Harness, Platform Box Options (See ELECTRICAL SECTION for Breakdown): | |
| 47 | 4922639 | 1 | Harness USA Built Machines **(SN 0300087000 through 0300136622)** | |
| 47 | 1001107753 | 1 | Harness USA Built Machines **(SN 0300136623 through 0300177361)** | |
| 47 | 1001107753 | 1 | Harness China Built Machines (Without SkyGuard) **(SN B300000100 through B300001392)** | |
| 47 | 1001185280 | 1 | Harness China Built Machines (With SkyGuard) **(SN B300000100 through B300001392)** | |
| 48 | 4922666 | 1 | Harness, Analyzer Cable (Not Shown - See ELECTRICAL SECTION for Breakdown) | |
| 49 | | Ref | Bolt Options: | |
| 49 | 0721008 | 1 | Bolt #10-24NC x 1in | |
| 49 | 0721006 | 2 | Bolt #10-24NC x 3/4in | |
| 50 | | Ref | Nut Options: | |
| 50 | 3311001 | 1 | Nut #10-24NC | |
| 50 | 3311005 | 2 | Locknut #10-24NC | |
| 51 | 4460007 | 1 | Bar, Buss | |
| 52 | | Ref | Footswitch Assembly Options (Includes Footswitch and Items 52A & 52B): | |
| 52 | 0272970 | 1 | USA Built Machines **(SN 0300087000 through 0300167713)** | B |
| 52 | 1001117174 | 1 | USA Built Machines **(SN 0300167714 through 0300177361)** | B |
| 52 | 0272970 | 1 | China Built Machines **(SN B300000100 through B300000724)** | B |
| 52 | 1001117174 | 1 | China Built Machines **(SN B300000725 through B300001392)** | B |
| | | Ref | **Note: Assembly p/n 0272970 may use either p/n 4360031 or p/n 1001117320. If Original Equipment on machines SN 0300087000 to SN 0300143952 was replaced as an "assembly", p/n 1001117320 may have been used as part of the Service Replacement. Identify component before ordering parts.** | |
| 52 | | Ref | Footswitch Options: | |
| 52 | 4360031 | 1 | Footswitch (USA Built Machines) **(SN 0300087000 through 0300143951)** | |
| 52 | 7000625 | 2 | Block for 4360031 Footswitch | |
| 52 | 1001117320 | 1 | Footswitch (USA Built Machines) **(SN 0300143952 through 0300167713)** | |
| 52 | 1001117320 | 1 | Footswitch (China Built Machines) **(SN B300000100 through B300000724)** | |
| 52 | 70003483 | 1 | Block for 1001117320 Footswitch | |
| 52 | 1001117172 | 1 | Footswitch (USA Built Machines) **(SN 0300167714 through 0300177361)** | |
| 52 | 1001117172 | 1 | Footswitch (China Built Machines) **(SN B300000725 through B300001392)** | |
| 52 | 70002902 | 1 | Block, Contact for 1001117172 Footswitch | |
| 52 | 70002903 | 1 | Gasket for 1001117172 Footswitch | |
| 52 | 70002905 | 1 | Cover for 1001117172 Footswitch | |
| 52 | 70002904 | 1 | Bolt Replacement Kit for 1001117172 Footswitch | |
| 52A | 1060918 | 8 ft/2.4m | Cable | |
| 52A | 4460042 | 3 | Terminal, Ring (Not Shown) **(SN 0300087000 through** | |

| ITEM | PART NUMBER | QTY | DESCRIPTION | REV |
|---|---|---|---|---|
| | | | **0300167713)** | |
| 52A | 1001098122 | 3 | Terminal, Ring (Not Shown) **(SN 0300167714 through 0300177361)** | |
| 52A | 4460042 | 3 | Terminal, Ring (Not Shown) **(SN B300000100 through B300000724)** | |
| 52A | 1001098122 | 3 | Terminal, Ring (Not Shown) **(SN B300000725 through B300001392)** | |
| 52A | 4460464 | 1 | Terminal, Deutsch | |
| 52A | 4460226 | 2 | Socket, Contact | |
| 52B | 4460071 | 1 | Connector, Strain Relief | |
| 52B | 0100020 | AR | Sealant | |
| 53 | 4751000 | AR | Flatwasher #10 Regular | |
| 54 | 2920028 | 1 | Light, Indicator (With SkyGuard) | |
| 54 | 2920029 | 1 | Bulb, Light (With SkyGuard) | |
| 110 | See Note | NSS | Console Bottom (Note: Not Available for Purchase) | |
| 111 | See Note | NSS | Console Top (Note: Not Available for Purchase) | |
| 112 | 3311601 | 1 | Nut 3/8in-16NC | |
| 113 | | Ref | Hairpin | |
| 113 | 3420156 | 2 | USA Built Machines **(SN 0300087000 through 0300088140)** | |
| 113 | 3470003 | 2 | USA Built Machines **(SN 0300088141 through 0300177361)** | |
| 113 | 3470003 | 2 | China Built Machines **(SN B300000100 through B300001392)** | |
| 114 | 0630568 | 1 | Screw 3/8in-16NC x 4-1/2in | |
| 115 | 4711500 | 2 | Flatwasher 5/16in Thin | |
| | | Ref | **LIGHT PANEL DECAL INSTALLATION (USA BUILT MACHINES)** | |
| | 0256631 | Ref | **ANSI and ANSI Export Specs (SN 0300087000 through 0300138648)** | 2 |
| | 1001108763 | Ref | **ANSI, ANSI Export, CSA, Latin American, Brazilian and Japanese Specs (SN 0300138649 through 0300177361)** | B |
| | 0256633 | Ref | **Australian, Latin American, Brazilian and Japanese Specs (SN 0300087000 through 0300138648)** | 2 |
| | 0256632 | Ref | **ANSI Export, Australian and CE Specs (SN 0300087000 through 0300138648)** | 2 |
| | 1001108764 | Ref | **ANSI Export, Australian and CE Specs (SN 0300138649 through 0300177361)** | A |
| 201 | | Ref | Decal - Display Options: | |
| 201 | | Ref | ANSI and ANSI Export Specs Options: | |
| 201 | 1702387 | 1 | Decal - Display **(SN 0300087000 through 0300138648)** | |
| 201 | 1001107927 | 1 | Decal - Display **(SN 0300138649 through 0300142594)** | |
| 201 | 1001121657 | 1 | Decal - Display **(SN 0300142595 through 0300177361)** | |
| 201 | 1703085 | 1 | Australian, Latin American, Brazilian and Japanese Specs | |
| 201 | | Ref | ANSI Export and CE Specs Options: | |
| 201 | 1703084 | 1 | Decal - Display **(SN 0300087000 through 0300138648)** | |
| 201 | 1001107926 | 1 | Decal - Display **(SN 0300138649 through 0300177361)** | |
| | | Ref | **LIGHT PANEL DECAL INSTALLATION (CHINA BUILT MACHINES)** | |
| | 1001108763 | Ref | **ANSI Export and Japanese Specs (SN B300000100 through B300001392)** | B |
| | 1001108764 | Ref | **ANSI Export and Australian Specs (SN B300000100 through B300001392)** | A |
| 202 | | Ref | Decal - Display Options: | |
| 202 | 1001121657 | 1 | ANSI Export and Japanese Specs | |
| 202 | 1001107926 | 1 | ANSI Export and Australian Specs | |
| | | Ref | **LIGHT SWITCH INSTALLATION** | |
| | 0271552 | Ref | **Head and Tail Lights Installation (Optional)** | D |

| ITEM | PART NUMBER | QTY | DESCRIPTION | REV |
|---|---|---|---|---|
| | 0274200 | Ref | **Chassis Illumination Light Installation (Optional)** | B |
| 301 | | Ref | Switch, Toggle Options: | |
| 301A | 4360336 | 1 | Switch, Toggle **(SN 0300087000 through 0300136622)** | |
| 301B | 4360522 | 1 | Switch, Push Button **(SN 0300136623 through 0300177361)** | |
| 302 | 3790012 | 1 | O-Ring **(SN 0300087000 through 0300136622)** | |
| 303 | 1705170 | 1 | Decal - Lights **(SN 0300136623 through B300001392)** | |
| | | Ref | **SOFT TOUCH SYSTEM INSTALLATIONS** | |
| | 0273824 | Ref | **6ft Platform** | D |
| | 0272427 | Ref | **8ft Platform** | G |
| | 1001108256 | Ref | **6ft/1.8m Platform with Fall Arrest** | C |
| | 0273706 | Ref | **8ft/2.4m Platform with Fall Arrest** | D |
| 401 | 4360387 | 1 | Switch, Pushbutton | |
| 402 | 1702938 | 1 | Decal - Soft Touch Override | |
| 403 | 2920028 | 1 | Lamp, Indicator | |
| 403 | 2920029 | 1 | Bulb, Light | |
| | | Ref | **DUAL FUEL SWITCH INSTALLATION (FORD AND GM POWERED MACHINES ONLY)** | |
| 501 | 4360336 | 1 | Switch, Toggle | |
| 501 | 3790012 | 1 | O-Ring | |
| | | Ref | **JIB SWITCH INSTALLATION (600AJ ONLY)** | |
| 601 | 4360328 | 1 | Switch, Toggle | |
| 601 | 3790012 | 1 | O-Ring | |

## FIGURE 4-4. PLATFORM CONSOLE ASSEMBLY (WITHOUT SKYGUARD) (SN B300001393 through B300005764, Excluding B300005620)

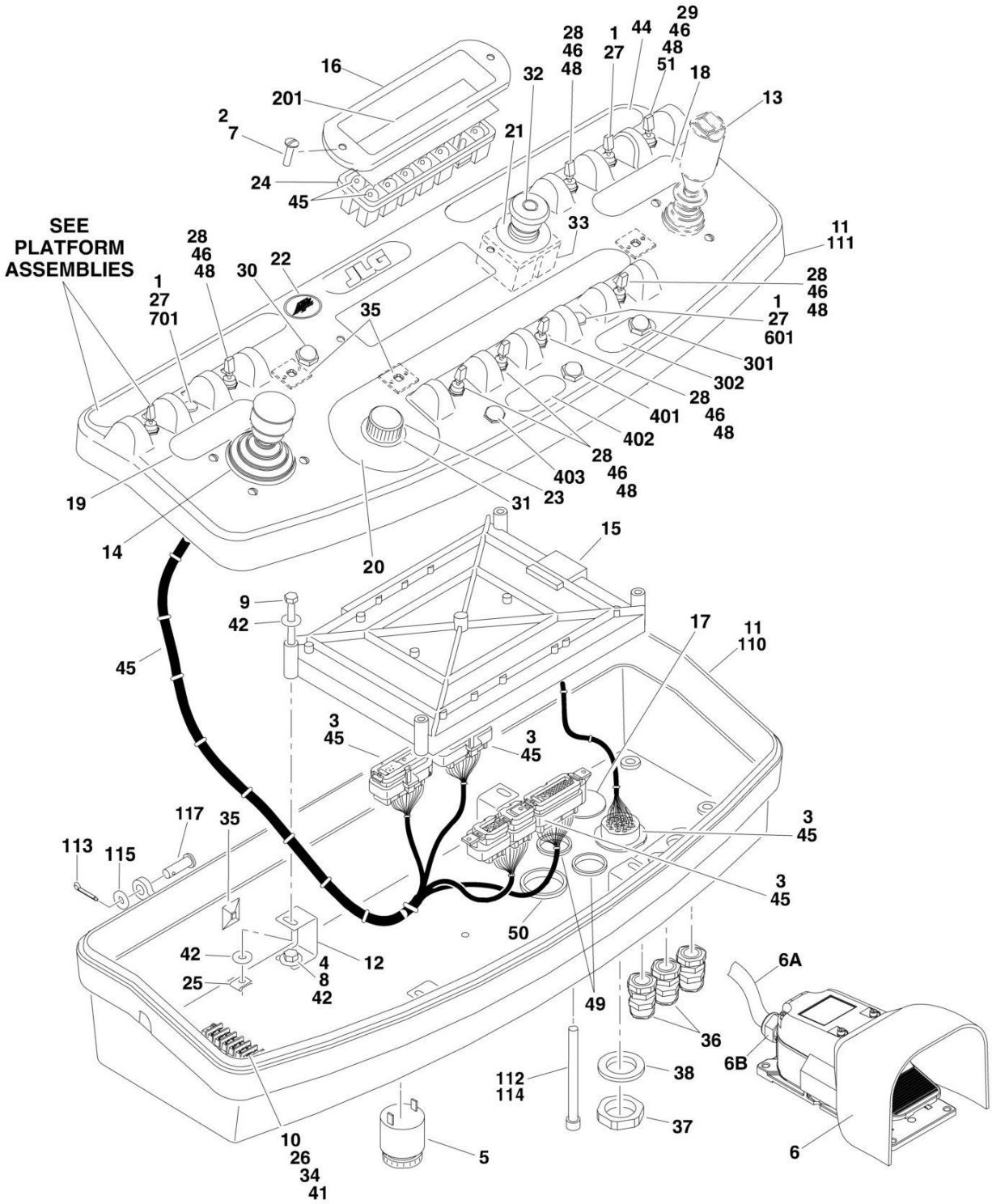

## FIGURE 4-4. PLATFORM CONSOLE ASSEMBLY (WITHOUT SKYGUARD) (SN B300001393 through B300005764, Excluding B300005620)

| ITEM | PART NUMBER | QTY | DESCRIPTION | REV |
|---|---|---|---|---|
| | 1001166672 | Ref | **CONSOLE BOX AND FOOTSWITCH ASSEMBLY (SN B300001393 through B300001595)** | C |
| | 1001202577 | Ref | **CONSOLE BOX AND FOOTSWITCH ASSEMBLY (SN B300001596 through B300005764, Excluding B300005620)** | C |
| 1 | 0100009 | AR | Sealant | |
| 2 | 0100035 | AR | Compound, Locking | |
| 3 | 0100048 | AR | Grease, Dielectric | |
| 4 | 0100081 | AR | Adhesive | |
| 5 | 0140011 | 1 | Alarm | |
| 6 | 1001117174 | 1 | Footswitch Assembly (Includes Footswitch and Items 6A & 6B) | |
| 6 | 1001117172 | 1 | Footswitch | |
| 6 | 70002902 | 1 | Block, Contact for 1001117172 Footswitch | |
| 6 | 70002903 | 1 | Gasket for 1001117172 Footswitch | |
| 6 | 70002905 | 1 | Cover for 1001117172 Footswitch | |
| 6 | 70002904 | 1 | Bolt Replacement Kit for 1001117172 Footswitch | |
| 6A | 1060918 | 7 ft/2.14m | Cable, Electrical - 18/3 | |
| 6A | 4460042 | 3 | Terminal, Ring (Not Shown) | |
| 6A | 4460464 | 1 | Pin, Male | |
| 6A | 4460226 | 2 | Socket, Female | |
| 6B | 4460071 | 1 | Connector, Strain Relief | |
| 6B | 0100020 | AR | Sealant | |
| 7 | 0630464 | 2 | Screw, Button Head #10-24NC x 1/2in | |
| 8 | 0641404 | 4 | Bolt 1/4in-20NC x 1/2in | |
| 9 | 0641414 | 4 | Bolt 1/4in-20NC x 1-3/4in | |
| 10 | 0721006 | 2 | Bolt #10-24NC x 3/4in | |
| 11 | | Ref | Box, Console Options (See Items 101-117 for Breakdown): | |
| 11 | 0861537 | 1 | Box, Console **(SN B300001393 through B300001595)** | |
| 11 | 1001201890 | 1 | Box, Console **(SN B300001596 through B300005764, Excluding B300005620)** | |
| 12 | 0902751 | 4 | Bracket, Card Support **(SN B300001393 through B300001595)** | |
| 12 | 1001172760 | 1 | Bracket, Card Support **(SN B300001596 through B300005764, Excluding B300005620)** | |
| 13 | 1001166538 | 1 | Controller Assembly (Drive and Steer) (Use p/n 1001212415) (See CONTROLLER ASSEMBLY (DRIVE AND STEER) for Breakdown) | |
| 14 | 1001166539 | NLA | Controller Assembly (Lift and Swing) (Use p/n 1001129555) (See CONTROLLER ASSEMBLY (LIFT AND SWING) for Breakdown) | |
| 15 | 1001106938 | 1 | Controller, Module (Note: Re-calibration Required when Replaced) | |
| 16 | 1670829 | 1 | Bezel | |
| 17 | 1001110434 | 1 | Plug | |
| 18 | 1702565 | 1 | Decal - Drive and Steer | |
| 19 | 1702566 | 1 | Decal - Lift and Swing | |
| 20 | 1702567 | 1 | Decal - Function Speed | |
| 21 | 1704260 | 1 | Decal - EMS | |
| 22 | 1705132 | 1 | Decal - ADE **(SN B300001393 through B300001595)** | |
| 23 | 2560136 | 1 | Handle, Knob | |
| 24 | 2760105 | 1 | Housing, Display Light | |
| 25 | 3300353 | 4 | Nut, Tinnerman | |
| 26 | 3311005 | 2 | Locknut #10-24NC | |
| 27 | 3520054 | 3 | Plug, Hole | |
| 28 | 1001155045 | 6 | Switch, Toggle | |

| ITEM | PART NUMBER | QTY | DESCRIPTION | REV |
|---|---|---|---|---|
| 29 | 1001159256 | 1 | Switch, Toggle | |
| 30 | 4360387 | 1 | Switch, Pushbutton | |
| 31 | 4360407 | 1 | Controller, Speed | |
| 31 | See Note | NSS | Gasket "Top Hat" (Included with Switch) (Note: Not Available - Purchase Complete Controller) | |
| 31 | 70003784 | 1 | Seal (Note: Must be purchased separately) | |
| 32 | 4360475 | 1 | Switch, Emergency Stop | |
| 32 | 7020175 | 1 | Cap, Red | |
| 32 | 7020176 | 1 | Contact Block | |
| 33 | 4360476 | 1 | Block, Contact | |
| 34 | 4460007 | 1 | Bar, Buss | |
| 35 | 4460234 | 3 | Base, Mounting | |
| 36 | 4460428 | 2 | Connector, Strain Relief | |
| 37 | 4460470 | 1 | Nut, Terminal | |
| 38 | 4460471 | 1 | Lockwasher, Terminal | |
| 39 | 4460708 | 2 | Connector, Female - 15 Position (Not Shown - See ELECTRICAL SECTION for Location) | |
| 41 | 4751000 | AR | Flatwasher #10 Regular | |
| 42 | 4751400 | 8 | Flatwasher 1/4in Regular | |
| 43 | 4922666 | 1 | Harness, Analyzer Cable (Not Shown - See ELECTRICAL SECTION for Breakdown) | |
| 44 | 1001131168 | 1 | Decal - Stop | |
| 45 | 1001107753 | 1 | Harness, Platform Box (See ELECTRICAL SECTION for Breakdown) | |
| 46 | 3790012 | 7 | O-Ring | |
| 47 | 1001139135 | 1 | Platform Valve Harness (Not Shown - See ELECTRICAL SECTION for Breakdown) | |
| 48 | 1001155044 | 7 | Nut | |
| 49 | 3520033 | 2 | Plug **(SN B300001596 through B300001624)** | |
| 49 | 1001220486 | 2 | Plug **(SN B300001625 through B300005764, Excluding B300005620)** | |
| 50 | 3520035 | 1 | Plug **(SN B300001596 through B300005764, Excluding B300005620)** | |
| 51 | 4740397 | 1 | Spacer **(SN B300001596 through B300005764, Excluding B300005620)** | |
| | 0861537 | Ref | **CONSOLE BOX ASSEMBLY (SN B300001393 through B300001595)** | I |
| | 1001201890 | Ref | **CONSOLE BOX ASSEMBLY (SN B300001596 through B300005764, Excluding B300005620)** | A |
| 110 | See Note | NSS | Console Bottom (Note: Not Available for Purchase) | |
| 111 | See Note | NSS | Console Top (Note: Not Available for Purchase) | |
| 112 | 3311601 | 1 | Nut 3/8in-16NC | |
| 113 | 3470003 | 2 | Hairpin | |
| 114 | 0630568 | 1 | Screw 3/8in-16NC x 4-1/2in | |
| 115 | 4711500 | AR | Washer 5/16 | |
| 115 | 4751600 | AR | Washer 3/8 | |
| 116 | 1001200575 | 2 | Bracket **(SN B300001531 through B300005764, Excluding B300005620)** | |
| 117 | 3430616 | 2 | Pin **(SN B300001531 through B300005764, Excluding B300005620)** | |
| | | Ref | **LIGHT PANEL DECAL INSTALLATION** | |
| | 1001108763 | Ref | **ANSI Export and Japanese Specs** | B |
| | 1001108764 | Ref | **ANSI Export and Australian Specs** | A |
| 201 | | Ref | Decal - Display Options: | |

| ITEM | PART NUMBER | QTY | DESCRIPTION | REV |
|---|---|---|---|---|
| 201 | 1001121657 | 1 | ANSI Export and Japanese Specs | |
| 201 | 1001107926 | 1 | ANSI Export and Australian Specs | |
| | | Ref | **LIGHT SWITCH INSTALLATION** | |
| | 1001176296 | Ref | **Head and Tail Lights Installation (Optional)** | |
| | 0274200 | Ref | **Chassis Illumination Light Installation (Optional)** | B |
| 301 | 4360522 | 1 | Switch, Push Button | |
| 302 | 1705170 | 1 | Decal - Lights **(SN 0300136623 through 0300177361)** | |
| | | Ref | **SOFT TOUCH SYSTEM INSTALLATIONS** | |
| | 0273824 | Ref | **6ft/1.8m Platform** | D |
| | 0272427 | Ref | **6ft/1.8m Platform** | G |
| | 1001108256 | Ref | **6ft/1.8m Platform with Fall Arrest** | C |
| | 0273706 | Ref | **8ft/2.4m Platform with Fall Arrest** | D |
| 401 | 4360387 | 1 | Switch, Push Button | |
| 402 | 1702938 | 1 | Decal - Soft Touch Override | |
| 403 | 2920028 | 1 | Lamp, Indicator | |
| 403 | 2920029 | 1 | Bulb, Light | |
| | | Ref | **JIB SWITCH INSTALLATION (600AJ ONLY)** | |
| 601 | 4360328 | 1 | Switch, Toggle | |
| 601 | 3790012 | 1 | O-Ring | |
| | | Ref | **CRAB STEER INSTALLATION (4WS ONLY)** | |
| 701 | 4360331 | 1 | Switch, Toggle | |
| 701 | 3790012 | 1 | O-Ring | |

## FIGURE 4-5. PLATFORM CONSOLE ASSEMBLY (WITH SKYGUARD) (SN B300001393 through B300005764, Excluding B300005620)

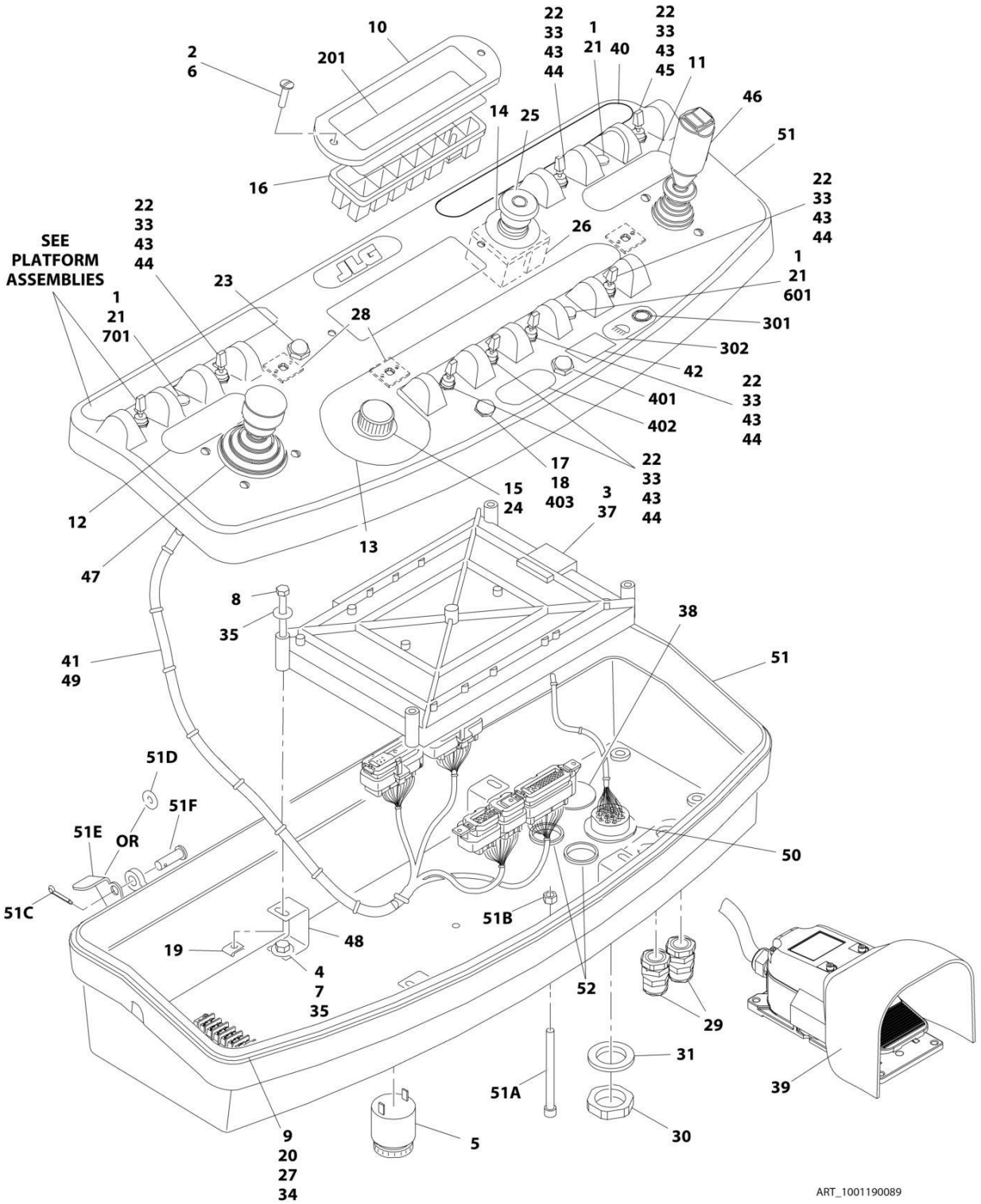

## FIGURE 4-5. PLATFORM CONSOLE ASSEMBLY (WITH SKYGUARD) (SN B300001393 through B300005764, Excluding B300005620)

| ITEM | PART NUMBER | QTY | DESCRIPTION | REV |
|---|---|---|---|---|
| | 1001190089 | Ref | **PLATFORM CONSOLE ASSEMBLY - WITH SKYGUARD (SN B300001393 through B300001595)** | B |
| | 1001202573 | Ref | **PLATFORM CONSOLE ASSEMBLY - WITH SKYGUARD (SN B300001596 through B300005764, Excluding B300005620)** | D |
| | | Ref | **Note: For Machines SN B300000100 through SN B300001392, refer to SPECIAL OPTIONS Section.** | |
| 1 | 0100009 | AR | Sealant | |
| 2 | 0100035 | AR | Compound, Locking | |
| 3 | 0100048 | AR | Grease, Dielectric | |
| 4 | 0100081 | AR | Adhesive **(SN B300001393 through B300002292)** | |
| 5 | 0140011 | 1 | Alarm | |
| 6 | 0630464 | 2 | Screw #10 x 1/2 | |
| 7 | 0641404 | 4 | Bolt 1/4 x 1/2 | |
| 8 | 0641414 | 4 | Bolt 1/4 x 1-3/4 | |
| 9 | 0721006 | 2 | Screw #10 x 3/4 | |
| 10 | 1670829 | 1 | Bezel | |
| 11 | 1702565 | 1 | Decal - Drive and Steer | |
| 12 | 1702566 | 1 | Decal - Lift and Swing | |
| 13 | 1702567 | 1 | Decal - Function Speed | |
| 14 | 1704260 | 1 | Decal - Emergency Stop | |
| 15 | 2560136 | 1 | Knob | |
| 16 | 2760105 | 1 | Fixture, Light | |
| 17 | 2920028 | 1 | Light, Indicator | |
| 18 | 2920029 | 1 | Lamp, Bulb | |
| 19 | 3300353 | 4 | Nut, Tinnerman | |
| 20 | 3311005 | 2 | Nut #10 | |
| 21 | 3520054 | 3 | Plug, Hole | |
| 22 | 3790012 | 7 | O-Ring | |
| 23 | 4360387 | 2 | Switch, Push Button | |
| 24 | 4360407 | 1 | Switch, Flow Control | |
| 24 | See Note | 1 | Gasket "Top Hat" (Included wtih Switch) (Note: Not Available for Purchase) | |
| 24 | 70003784 | 1 | Seal | |
| 25 | 4360475 | 1 | Switch, Emergency Stop | |
| 25 | 7020175 | 1 | Cap, Red | |
| 25 | 7020176 | 1 | Contact Block | |
| 26 | 4360476 | 1 | Switch, Contact | |
| 27 | 4460007 | 1 | Bussbar | |
| 28 | 4460234 | 3 | Mount Cable, Tie | |
| 29 | 4460428 | 2 | Connector, Strain Relief | |
| 30 | 4460470 | 1 | Terminal, Nut | |
| 31 | 4460471 | 1 | Terminal, Washer | |
| 32 | 4460708 | 2 | Connector - 15 Position | |
| 33 | 4740397 | 7 | Spacer, Washer | |
| 34 | 4751000 | 2 | Washer #10 | |
| 35 | 4751400 | 8 | Washer 1/4 | |
| 36 | 4922666 | 1 | Harness, Analyzer Cable (See ELECTRICAL SECTION for Breakdown) | |
| 37 | 1001106938 | 1 | Module, Control (Note: Re-calibration Required when Replaced) | |
| 38 | 1001110434 | 1 | Plug, Hole | |

| ITEM | PART NUMBER | QTY | DESCRIPTION | REV |
|---|---|---|---|---|
| 39 | 1001117174 | 1 | Footswitch Assembly | |
| 39 | 1001117172 | 1 | Footswitch | |
| 39 | 70002902 | 1 | Block, Contact for 1001117172 Footswitch | |
| 39 | 70002903 | 1 | Gasket for 1001117172 Footswitch | |
| 39 | 70002905 | 1 | Cover for 1001117172 Footswitch | |
| 39 | 70002904 | 1 | Bolt Replacement Kit for 1001117172 Footswitch | |
| 39 | 1060918 | 7 ft/2.14m | Cable, Electrical - 18/3 | |
| 39 | 4460042 | 3 | Terminal, Ring (Not Shown) | |
| 39 | 4460464 | 1 | Pin, Male | |
| 39 | 4460226 | 2 | Socket, Female | |
| 39 | 4460071 | 1 | Connector, Strain Relief | |
| 39 | 0100020 | AR | Sealant | |
| 40 | 1001131168 | 1 | Decal - Stop | |
| 41 | 1001139135 | 1 | Harness, Platform Valve (See ELECTRICAL SECTION for Breakdown) | |
| 42 | 1001144433 | 1 | Decal - No Weight SkyGuard | |
| 43 | 1001155044 | 7 | Nut 15/32 | |
| 44 | 1001155045 | 6 | Switch, Toggle | |
| 45 | 1001159256 | 1 | Switch, Toggle | |
| 46 | 1001166538 | 1 | Controller Assembly - Drive/Steer (Use p/n 1001212415) (See CONTROLLER ASSEMBLY (DRIVE AND STEER) for Breakdown) | |
| 47 | 1001166539 | NLA | Controller Assembly - Lift/Swing (Use p/n 1001129555) (See CONTROLLER ASSEMBLY (LIFT AND SWING) for Breakdown) | |
| 48 | 1001172760 | 4 | Bracket | |
| 49 | 1001185280 | 1 | Harness, Console Box (See ELECTRICAL SECTION for Breakdown) | |
| 50 | 1001185281 | 1 | Plug | |
| 51 | 1001189116 | 1 | Console Box Assembly **(SN B300001393 through B300001595)** | D |
| 51 | 1001201891 | 1 | Console Box Assembly **(SN B300001596 through B300005764, Excluding B300005620)** | A |
| 51A | 0630568 | 1 | Capscrew 3/8 x 4-1/2 | |
| 51B | 3311601 | 1 | Nut 3/8 | |
| 51C | 3470003 | 1 | Hairpin | |
| 51D | 4711500 | AR | Washer 5/16 | |
| 51D | 4751600 | AR | Washer 3/8 | |
| 51E | 1001200575 | 2 | Bracket **(SN B300001531 through B300005764, Excluding B300005620)** | |
| 51F | 3430616 | 2 | Pin **(SN B300001531 through B300005764, Excluding B300005620)** | |
| 52 | 3520033 | 2 | Plug **(SN B300001956 through B300001624)** | |
| 52 | 1001220486 | 2 | Plug **(SN B300001625 through B300005764, Excluding B300005620)** | |
| | | Ref | **LIGHT PANEL DECAL INSTALLATION** | |
| | 1001108763 | Ref | **ANSI Export and Japanese Specs** | B |
| | 1001108764 | Ref | **ANSI Export and Australian Specs** | A |
| 201 | | Ref | Decal - Display Options: | |
| 201 | 1001121657 | 1 | ANSI Export and Japanese Specs | |
| 201 | 1001107926 | 1 | ANSI Export and Australian Specs | |
| | | Ref | **LIGHT SWITCH INSTALLATION** | |
| | 0271552 | Ref | **Head and Tail Lights Installation (Optional) (SN 0300177361 through 0300201472)** | E |
| | 1001176296 | Ref | **Head and Tail Lights Installation (Optional) (SN 0300201473 through 0300177361)** | A |
| | 0274200 | Ref | **Chassis Illumination Light Installation (Optional)** | B |

| ITEM | PART NUMBER | QTY | DESCRIPTION | REV |
|---|---|---|---|---|
| 301 | 4360522 | 1 | Switch, Push Button | |
| 302 | 1705170 | 1 | Decal - Lights **(SN 0300136623 through 0300177361)** | |
| | | Ref | **SOFT TOUCH SYSTEM INSTALLATIONS** | |
| | 0273824 | Ref | **6ft Platform** | D |
| | 0272427 | Ref | **8ft Platform** | G |
| | 1001108256 | Ref | **6ft/1.8m Platform with Fall Arrest** | C |
| | 0273706 | Ref | **8ft/2.4m Platform with Fall Arrest** | D |
| 401 | 4360387 | 1 | Switch, Push Button | |
| 402 | 1702938 | 1 | Decal - Soft Touch Override | |
| 403 | 2920028 | 1 | Lamp, Indicator | |
| 403 | 2920029 | 1 | Bulb, Light | |
| | | Ref | **JIB SWITCH INSTALLATION (600AJ ONLY)** | |
| 601 | 4360328 | 1 | Switch, Toggle | |
| 601 | 3790012 | 1 | O-Ring | |
| | | Ref | **CRAB STEER INSTALLATION (4WS ONLY)** | |
| 701 | 4360331 | 1 | Switch, Toggle | |
| 701 | 3790012 | 1 | O-Ring | |

## FIGURE 4-6. CONTROLLER ASSEMBLY (LIFT AND SWING)

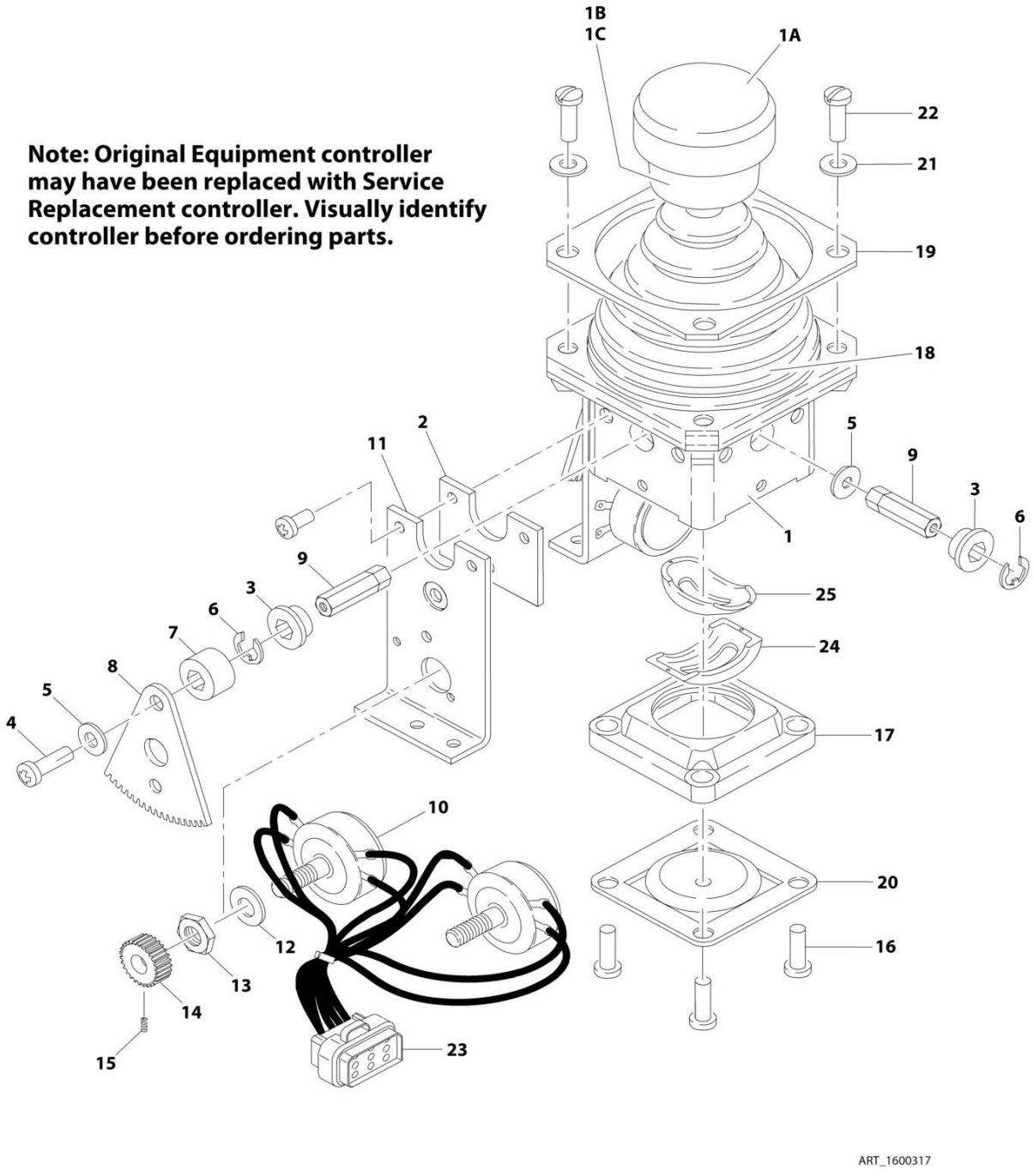

## FIGURE 4-6. CONTROLLER ASSEMBLY (LIFT AND SWING)

| ITEM | PART NUMBER | QTY | DESCRIPTION | REV |
|---|---|---|---|---|
| | | Ref | **Note: Original Equipment controller may have been replaced with Service Replacement controller. Visually identify controller before ordering parts.** | |
| | | Ref | **CONTROLLER ASSEMBLY** | |
| | 1600317 | Ref | **Controller Assembly (USA Built Machines) (SN 0300087000 through 0300146184)** | C |
| | 1600317 | Ref | **Controller Assembly (China Built Machines) (SN B300000100 through B300000251)** | C |
| | | Ref | **Note: Use p/n 1001129555 Kit as Replacement.** | |
| 1 | 7019141 | 1 | Mechanical Assembly (Includes Base, Handle Stem and Items 1A, 1B, 1C & 18) | |
| 1A | 7019197 | 1 | Handle Cap and Rod | |
| 1B | 7003928 | 1 | Spring | |
| 1C | 7022808 | 1 | Cap, Lift | |
| 2 | 7019171 | 2 | Plate | |
| 3 | 7019111 | 4 | Bearing, Gear | |
| 4 | 7019143 | 2 | Screw | |
| 5 | 7019144 | 2 | Spacer, Cam | |
| 6 | 7019145 | 4 | E-Clip | |
| 7 | 7019174 | 2 | Spacer | |
| 8 | 7003977 | 2 | Gear, Drive | |
| 9 | | Ref | Shaft Options: | |
| 9 | 7019147 | 2 | Shaft, Short | |
| 9 | 7019177 | 2 | Shaft, Long | |
| 10 | 7022818 | 2 | Potentiometer | |
| 11 | 7019142 | 2 | Plate | |
| 12 | 7003992 | 2 | Washer | |
| 13 | 7003993 | 2 | Nut | |
| 14 | 7003976 | 2 | Gear, Slave | |
| 15 | 7019149 | 2 | Setscrew | |
| 16 | 7022816 | 4 | Screw | |
| 17 | 7019150 | 1 | Gate | |
| 18 | 7022814 | 1 | Boot | |
| 19 | 7022815 | 1 | Bezel | |
| 20 | See Note | NSS | Center, Detent (Note: Not Available for Purchase) | |
| 21 | 7003953 | 4 | Washer | |
| 22 | 7022817 | 4 | Screw | |
| 23 | 7022819 | 1 | Plug, Male 8 Position (Natural) | |
| 23 | 4460871 | 8 | Socket, Female | |
| 24 | 7019122 | 1 | Gimble, Outer | |
| 25 | 7019123 | 1 | Gimble, Inner | |

## FIGURE 4-7. CONTROLLER ASSEMBLY (LIFT AND SWING)

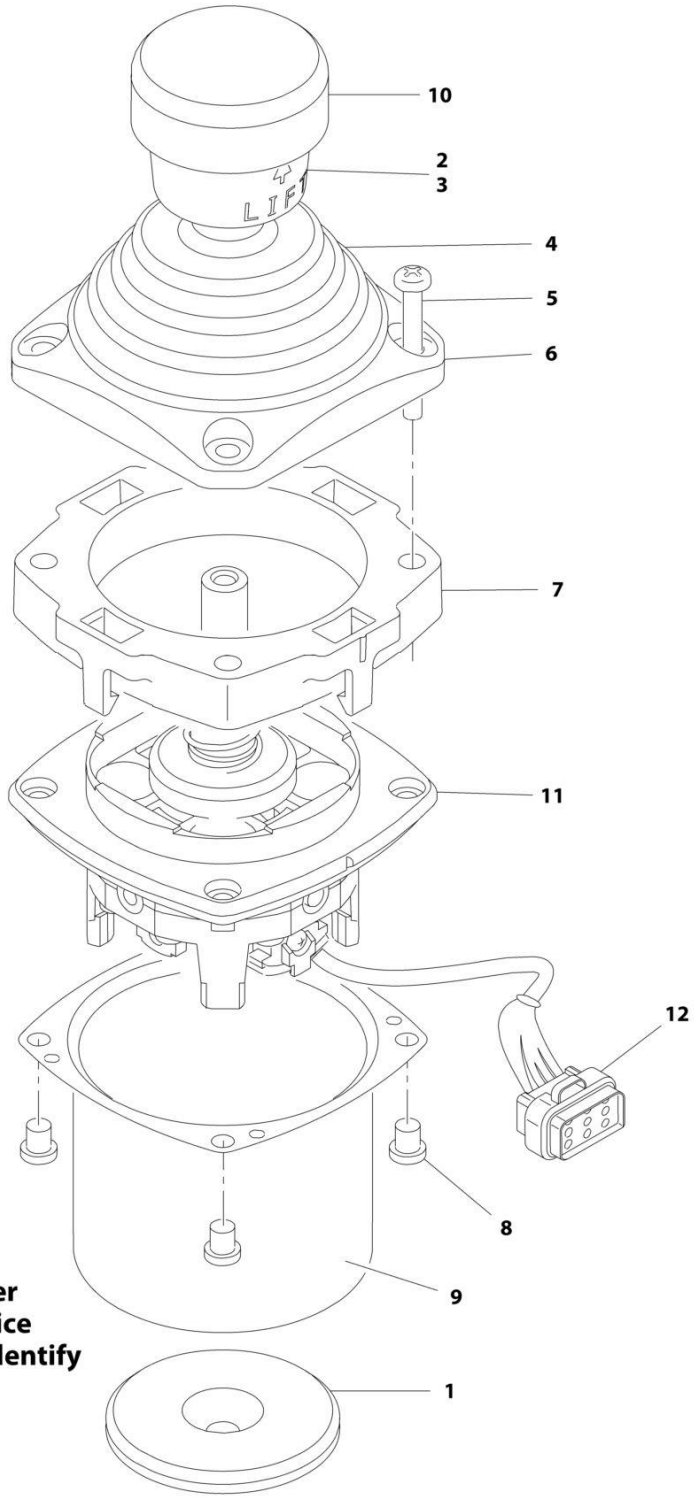


**Note: Original Equipment controller may have been replaced with Service Replacement controller. Visually identify controller before ordering parts.**

## FIGURE 4-7. CONTROLLER ASSEMBLY (LIFT AND SWING)

| ITEM | PART NUMBER | QTY | DESCRIPTION | REV |
|---|---|---|---|---|
| | | Ref | **Note: Original Equipment controller may have been replaced with Service Replacement controller. Visually identify controller before ordering parts.** | |
| | 1001118417 | Ref | **CONTROLLER ASSEMBLY (LIFT AND SWING) (SN 0300146184 through 0300177361)** | E |
| | 1001118417 | Ref | **CONTROLLER ASSEMBLY (LIFT AND SWING) (SN B300000251 through B300001392)** | E |
| | | Ref | **Note: Use p/n 1001129555 as Replacement.** | |
| 1 | 70002730 | 1 | Gasket | |
| 2 | 7003928 | 1 | Spring | |
| 3 | 7022808 | 1 | Cap, Lift | |
| 4 | 70002731 | 1 | Boot | |
| 5 | 70002732 | 4 | Screw | |
| 6 | 7022815 | 1 | Bezel | |
| 7 | 70002733 | 1 | Adapter | |
| 8 | 70002734 | 4 | Screw | |
| 9 | 70002735 | 1 | Can, Enclosure | |
| 10 | 70002906 | 1 | Cap | |
| 11 | See Note | NSS | Mechanical Assembly (Note: Use p/n 1001129555) | |
| 12 | 7022819 | 1 | Connector - 8 Position | |
| 12 | 4460871 | 6 | Socket, Female | |

## FIGURE 4-8. CONTROLLER ASSEMBLY (LIFT AND SWING)

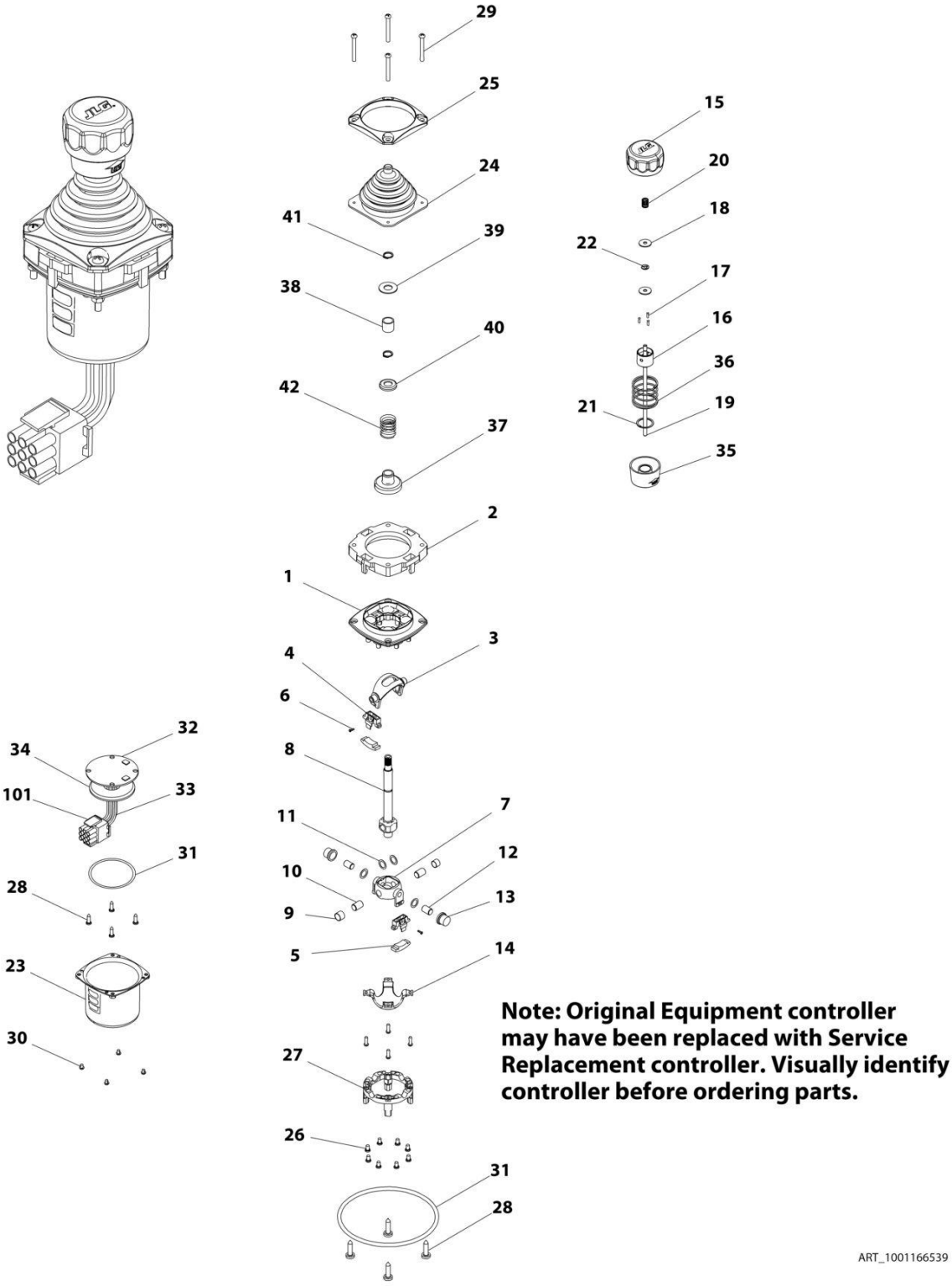

## FIGURE 4-8. CONTROLLER ASSEMBLY (LIFT AND SWING)

| ITEM | PART NUMBER | QTY | DESCRIPTION | REV |
|---|---|---|---|---|
| | | Ref | **Note: Original Equipment controller may have been replaced with Service Replacement controller. Visually identify controller before ordering parts.** | |
| | 1001166539 | Ref | **CONTROLLER ASSEMBLMY (LIFT AND SWING)** | D |
| | | Ref | **Note: Use p/n 1001129555 as Replacement.** | |
| 1 | See Note | NSS | Main Cast Body (Note: Available - Purchase Complete Assembly) | |
| 2 | 70004752 | 1 | Adapter | |
| 3 | See Note | NSS | Pivot Arm, Plastic (Note: Not Available - Purchase Complete Assembly) | |
| 4 | See Note | NSS | Holder, Magnet (Note: Not Available - Purchase Complete Assembly) | |
| 5 | See Note | NSS | Arc, Magnet (Note: Not Available - Purchase Complete Assembly) | |
| 6 | See Note | NSS | Screw (Note: Not Available for Purchase) | |
| 7 | See Note | NSS | Pivot Arm, Cast (Note: Not Available - Purchase Complete Assembly) | |
| 8 | See Note | NSS | Shaft, Main (Note: Not Available - Purchase Complete Assembly) | |
| 9 | See Note | NSS | Bearing (Note: Not Available - Purchase Complete Assembly) | |
| 10 | See Note | NSS | Pin (Note: Not Available - Purchase Complete Assembly) | |
| 11 | See Note | NSS | Shim (Note: Not Available - Purchase Complete Assembly) | |
| 12 | See Note | NSS | Pin (Note: Not Available - Purchase Complete Assembly) | |
| 13 | See Note | NSS | Bearing (Note: Not Available - Purchase Complete Assembly) | |
| 14 | See Note | NSS | Dome, Centering (Note: Not Available - Purchase Complete Assembly) | |
| 15 | 70004753 | 1 | Cap | |
| 16 | 70004754 | 1 | Insert, Cap | |
| 17 | 70004755 | 3 | Pin | |
| 18 | 70004756 | 2 | Washer | |
| 19 | 70004757 | 1 | Pin, Centering | |
| 20 | 70004758 | 1 | Spring | |
| 21 | 70004759 | 1 | Ring, Retaining | |
| 22 | 70004760 | 1 | E-Ring | |
| 23 | 70004761 | 1 | Can, Enclosure | |
| 24 | 70004762 | 1 | Boot | |
| 25 | 70004763 | 1 | Bezel | |
| 26 | See Note | NSS | Screw (Note: Not Available for Purchase) | |
| 27 | See Note | NSS | Base, Mounting (Note: Not Available - Purchase Complete Assembly) | |
| 28 | See Note | NSS | Screw (Note: Not Available for Purchase) | |
| 29 | 70004764 | 4 | Screw | |
| 30 | 70004765 | 4 | Screw | |
| 31 | 70004766 | 1 | O-Ring | |
| 32 | See Note | NSS | Plate (Note: Not Available - Purchase Complete Assembly) | |
| 33 | See Note | NSS | Harness (Note: Not Available - Purchase Complete Assembly) | |
| 34 | 70004767 | 1 | Grommet, Rubber | |
| 35 | 70004768 | 1 | Housing | |
| 36 | 70004769 | 1 | Spring | |
| 37 | 70004770 | 1 | Stopper | |
| 38 | 70004771 | 1 | Spacer | |
| 39 | 70004772 | 1 | Washer | |
| 40 | 70004773 | 1 | Disc | |
| 41 | 70004774 | 2 | Ring, Retaining | |

| ITEM | PART NUMBER | QTY | DESCRIPTION | REV |
|---|---|---|---|---|
| 42 | 70004775 | 1 | Spring | |
| 101 | 4460265 | 1 | Connector - 9 Position | |
| 101 | 4460226 | 6 | Socket, Female | |

## FIGURE 4-9. CONTROLLER ASSEMBLY (DRIVE AND STEER)

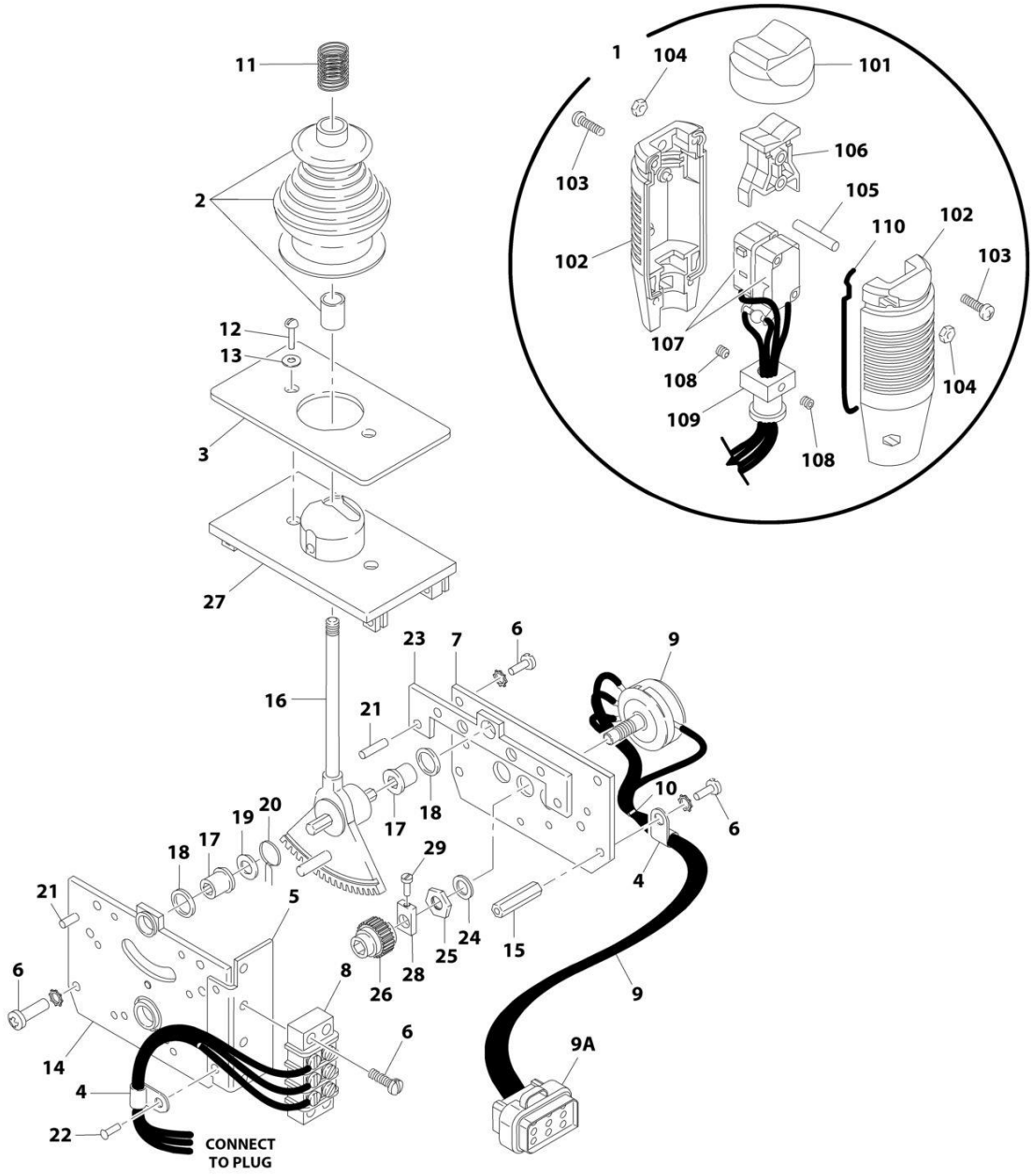


**Note: Original Equipment controller may have been replaced with Service Replacement controller. Visually identify controller before ordering parts.**

ART_1600318

## FIGURE 4-9. CONTROLLER ASSEMBLY (DRIVE AND STEER)

| ITEM | PART NUMBER | QTY | DESCRIPTION | REV |
|---|---|---|---|---|
| | | Ref | **Note: Original Equipment controller may have been replaced with Service Replacement controller. Visually identify controller before ordering parts.** | |
| | | Ref | **CONTROLLER ASSEMBLY** | |
| | 1600318 | Ref | **Controller Assembly (USA Built Machines) (SN 0300087000 through 0300146184)** | C |
| | 1600318 | Ref | **Controller Assembly (China Built Machines) (SN B300000100 through B300000251)** | C |
| | | Ref | **Note: Use p/n 1001212415 as Replacement.** | |
| 1 | 7022812 | 1 | Handle Assembly (See Items 101-110 for Breakdown) | |
| 2 | 7019161 | 1 | Boot and Sleeve | |
| 3 | 7003933 | 1 | Gasket | |
| 4 | 7019154 | 2 | Clamp, Wire | |
| 5 | 7022823 | 1 | Bracket, Mounting | |
| 6 | 7003994 | 1 | Screw | |
| 7 | 7022822 | 1 | Plate, Pot Mounting | |
| 8 | 7003986 | 1 | Strip, Terminal - 3 Position | |
| 9 | 7022824 | 1 | Electric Assembly | |
| 9A | 1001113961 | 1 | Plug, Male - 8 Position (Black) (was p/n 7022825) | |
| 9A | 4460871 | 7 | Socket, Female | |
| 10 | 7019151 | AR | Tie-Strap | |
| 11 | 7019162 | 1 | Spring | |
| 12 | 7003969 | 2 | Screw | |
| 13 | 7003941 | 2 | Washer | |
| 14 | See Note | NSS | Plate, Mounting (Left Side) (Note: Not Available for Purchase) | |
| 15 | 7019115 | 2 | Stand-Off | |
| 16 | 7019155 | 1 | Shaft 8mm | |
| 17 | 7019111 | 2 | Bearing | |
| 18 | 7019110 | 2 | Spacer, Head Gear | |
| 19 | 7019112 | 1 | Washer | |
| 20 | 7003946 | 1 | Spring, Return | |
| 21 | 7019103 | 4 | Pin | |
| 22 | See Note | NSS | Rivet (Note: Not Available - Purchase Locally) | |
| 23 | 7019168 | 1 | Plate, Mounting (Right Side) | |
| 24 | 7003992 | 1 | Washer | |
| 25 | 7003993 | 1 | Nut | |
| 26 | 7003935 | 1 | Gear, Slave | |
| 27 | 7019160 | 1 | Plate, Base | |
| 28 | 7019114 | 1 | Coupling, Potentiometer | |
| 29 | See Note | NSS | Cup Point Screw (Note: Not Available for Purchase) | |
| | 7022812 | Ref | **HANDLE ASSEMBLY** | |
| 101 | 7003972 | 1 | Boot, Switch | |
| 102 | 7003973 | 2 | Half, Handle | |
| 103 | 7003980 | 4 | Screw | |
| 104 | 7019167 | 4 | Nut | |
| 105 | 7019164 | 1 | Axle | |
| 106 | 7019165 | 1 | Rocker | |
| 107 | See Note | NSS | Wiring for Controller Assembly p/n 1600318 (Note: Use p/n 1001166538) | |
| 107 | 7019166 | 2 | Switch, Micro | |
| 108 | 7003983 | 2 | Setscrew | |

| ITEM | PART NUMBER | QTY | DESCRIPTION | REV |
|---|---|---|---|---|
| 109 | 7019194 | 1 | Coupling | |
| 110 | 7003989 | 2 | Gasket | |

## FIGURE 4-10. CONTROLLER ASSEMBLY (DRIVE AND STEER)

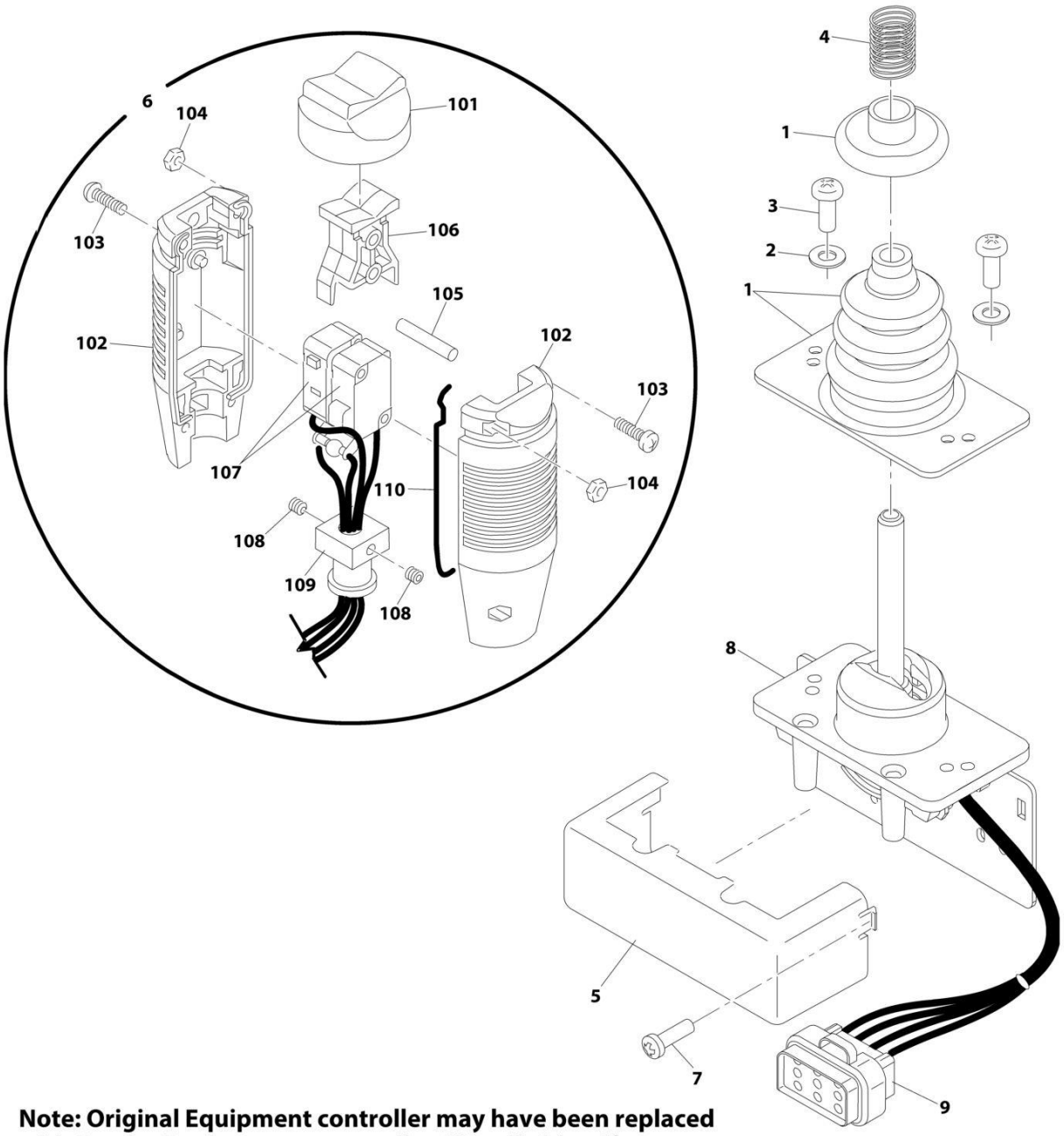


**Note: Original Equipment controller may have been replaced with Service Replacement controller. Visually identify controller before ordering parts.**

## FIGURE 4-10. CONTROLLER ASSEMBLY (DRIVE AND STEER)

| ITEM | PART NUMBER | QTY | DESCRIPTION | REV |
|---|---|---|---|---|
| | | Ref | **Note: Original Equipment controller may have been replaced with Service Replacement controller. Visually identify controller before ordering parts.** | |
| | 1001118416 | Ref | **CONTROLLER ASSEMBLY (DRIVE AND STEER) (SN 0300146184 through 0300177361)** | D |
| | 1001118416 | Ref | **CONTROLLER ASSEMBLY (DRIVE AND STEER) (SN B300000251 through B300001392)** | D |
| | | Ref | **Note: Use p/n 1001212415 as Replacement.** | |
| 1 | 70002724 | 1 | Boot and Control Lock Assembly | |
| 2 | 7003941 | 2 | Washer | |
| 3 | 70002725 | 2 | Screw | |
| 4 | 7019162 | 1 | Spring | |
| 5 | 70002726 | 1 | Enclosure | |
| 6 | 70002727 | 1 | Handle Assembly (See Items 101-110 for Breakdown) | |
| 7 | 70002728 | 1 | Screw | |
| 8 | See Note | NSS | Mechanical Assembly (Note: Use p/n 1001166538) | |
| 9 | 1001113961 | 1 | Plug, Male - 8 Position (Black) (was p/n 7022825) | |
| 9 | 4460871 | 7 | Socket, Female | |
| | 70002727 | Ref | **HANDLE ASSEMBLY** | |
| 101 | 7003972 | 1 | Boot, Switch | |
| 102 | 7003973 | 2 | Half, Handle | |
| 103 | 7003980 | 4 | Screw | |
| 104 | 7019167 | 4 | Nut | |
| 105 | 7019164 | 1 | Axle | |
| 106 | 7019165 | 1 | Rocker | |
| 107 | 70002729 | 1 | Wiring Assembly | |
| 107 | 7003982 | 2 | Switch, Micro | |
| 108 | 7003983 | 2 | Set Screw | |
| 109 | 7019194 | 1 | Coupling | |
| 110 | 7003989 | 2 | Gasket | |

## FIGURE 4-11. CONTROLLER ASSEMBLY (DRIVE AND STEER)

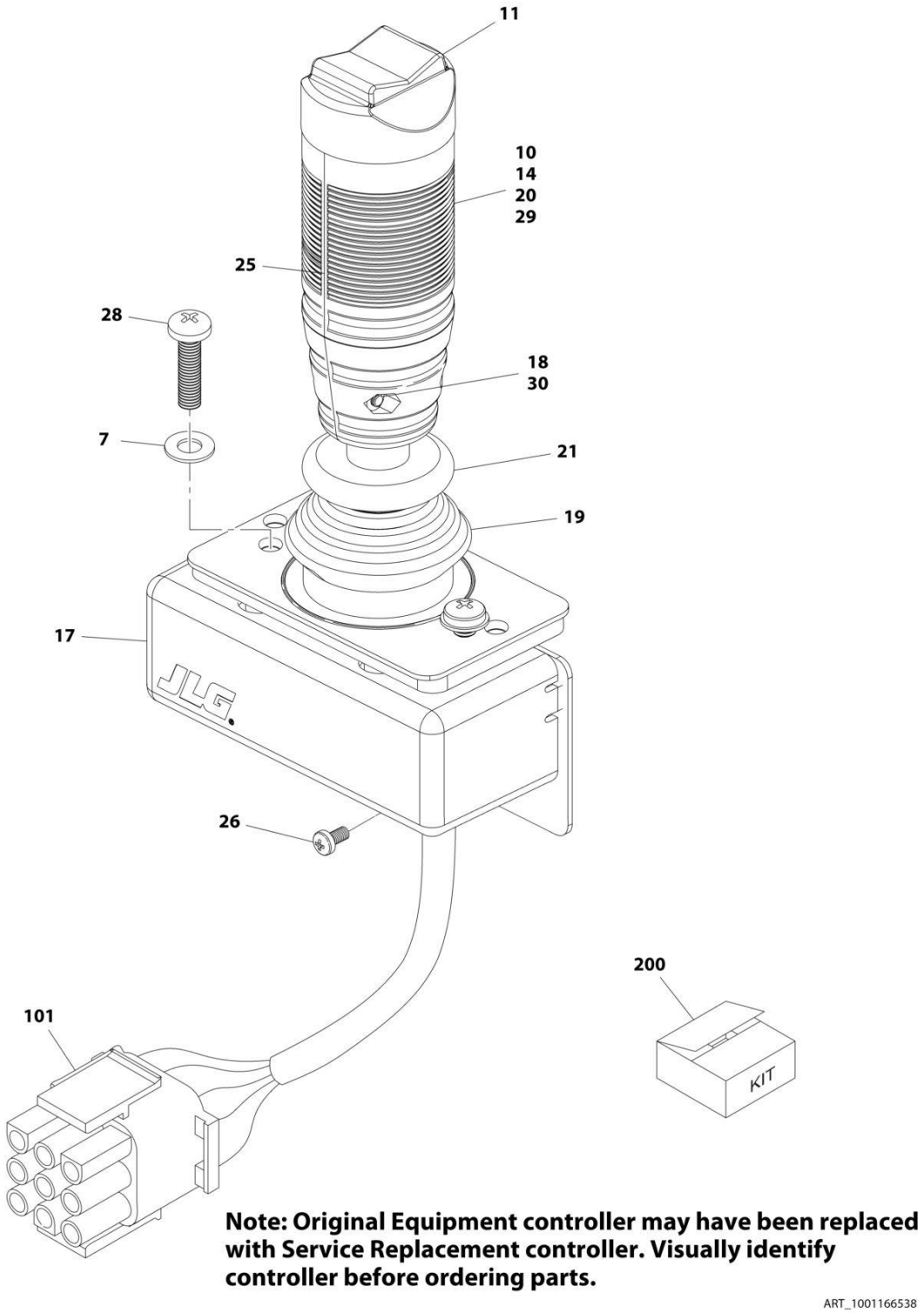

## FIGURE 4-11. CONTROLLER ASSEMBLY (DRIVE AND STEER)

| ITEM | PART NUMBER | QTY | DESCRIPTION | REV |
|---|---|---|---|---|
| | | Ref | **Note: Original Equipment controller may have been replaced with Service Replacement controller. Visually identify controller before ordering parts.** | |
| | 1001166538 | Ref | **CONTROLLER ASSEMBLY (DRIVE AND STEER)** | G |
| | | Ref | **Note: Use p/n 1001212415 as Replacement.** | |
| 7 | 70004738 | 2 | Washer | |
| 10 | 70004739 | 1 | Roller | |
| 11 | 70004740 | 1 | Boot, Switch | |
| 14 | 70004741 | 2 | Half, Handle | |
| 17 | 70004742 | 1 | Enclosure | |
| 18 | 70004743 | 4 | Nut | |
| 19 | 70004744 | NLA | Boot, Controller (Note: Use Item 200) | |
| 20 | 70004745 | NLA | Tube, Locking (Note: Use Item 200) | |
| 21 | 70004746 | NLA | Disc, Locking (Note: Use Item 200) | |
| 25 | 70004747 | 2 | Seal, Rope | |
| 26 | 70004748 | 1 | Screw, M3 x 6 | |
| 28 | 70004749 | 2 | Screw, M5 x 20 | |
| 29 | 70004750 | 1 | Pin, Dowel | |
| 30 | 70004751 | 4 | Screw, M3 x 16 | |
| 101 | 4460265 | 1 | Connector - 9 Position | |
| 101 | 4460226 | 7 | Socket, Female | |
| 200 | 70005230 | 1 | Boot Kit (Includes Items 19-21) | |

**FIGURE 4-12. SKYEYE INSTALLATION**

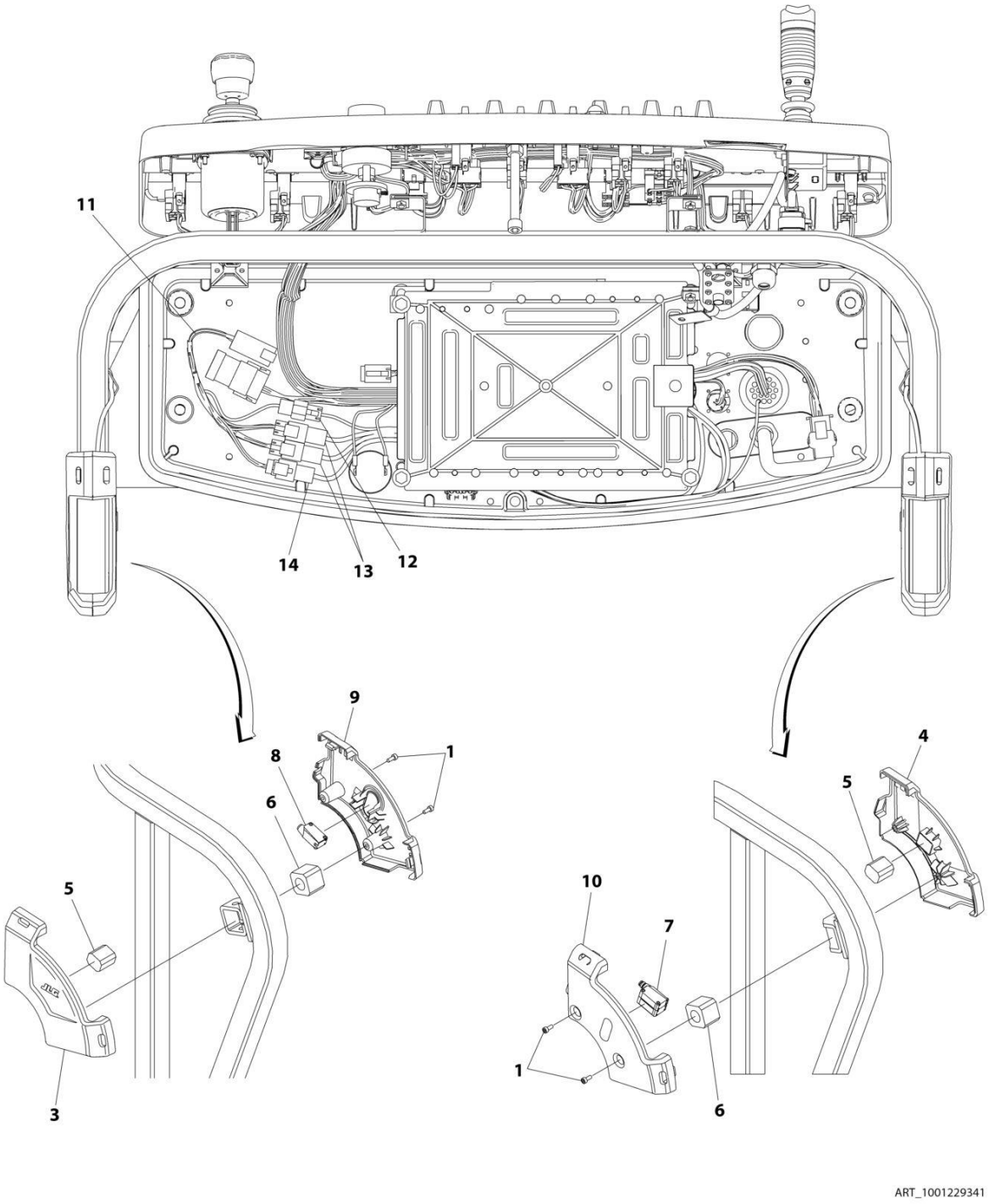

## FIGURE 4-12. SKYEYE INSTALLATION

| ITEM | PART NUMBER | QTY | DESCRIPTION | REV |
|---|---|---|---|---|
| | 1001229341 | Ref | SKYEYE INSTALLATION | B |
| 1 | 4031505 | 4 | Bolt M4 x 10 | |
| 2 | 4240033 | AR | Tie-Strap (Not Shown) | |
| 3 | 1001227633 | 1 | Housing, LH Outer | |
| 4 | 1001227634 | 1 | Housing, RH Outer | |
| 5 | 1001227985 | 2 | Shim | |
| 6 | 1001227987 | 2 | Shim | |
| 7 | 1001228224 | 2 | Sensor, Receiver | |
| 8 | 1001228225 | 1 | Sensor, Emitter | |
| 9 | 1001232164 | 1 | Housing, LH Inner | |
| 10 | 1001232165 | 1 | Housing, RH Inner | |
| 11 | 1001237865 | 1 | Harness, Skyeye Intermediate (See Separate Breakdown in ELECTRICAL Section) | |
| 12 | 1001238319 | NLA | Harness, Skyeye Drain Jumper | |
| 12 | 1001187674 | 1 | Plug, Male - 2 Position | |
| 12 | 4460942 | 1 | Terminal | |
| 12 | 4460466 | 1 | Plug, Terminal | |
| 12 | 4460508 | 1 | Pin, Male | |
| 13 | 1001237863 | 2 | Harness, Skyeye Receiver (See Separate Breakdown in ELECTRICAL Section) | |
| 14 | 1001237864 | 1 | Harness, Skyeye Emitter (See Separate Breakdown in ELECTRICAL Section) | |

## FIGURE 4-13. SKYGUARD SYSTEM INSTALLATION

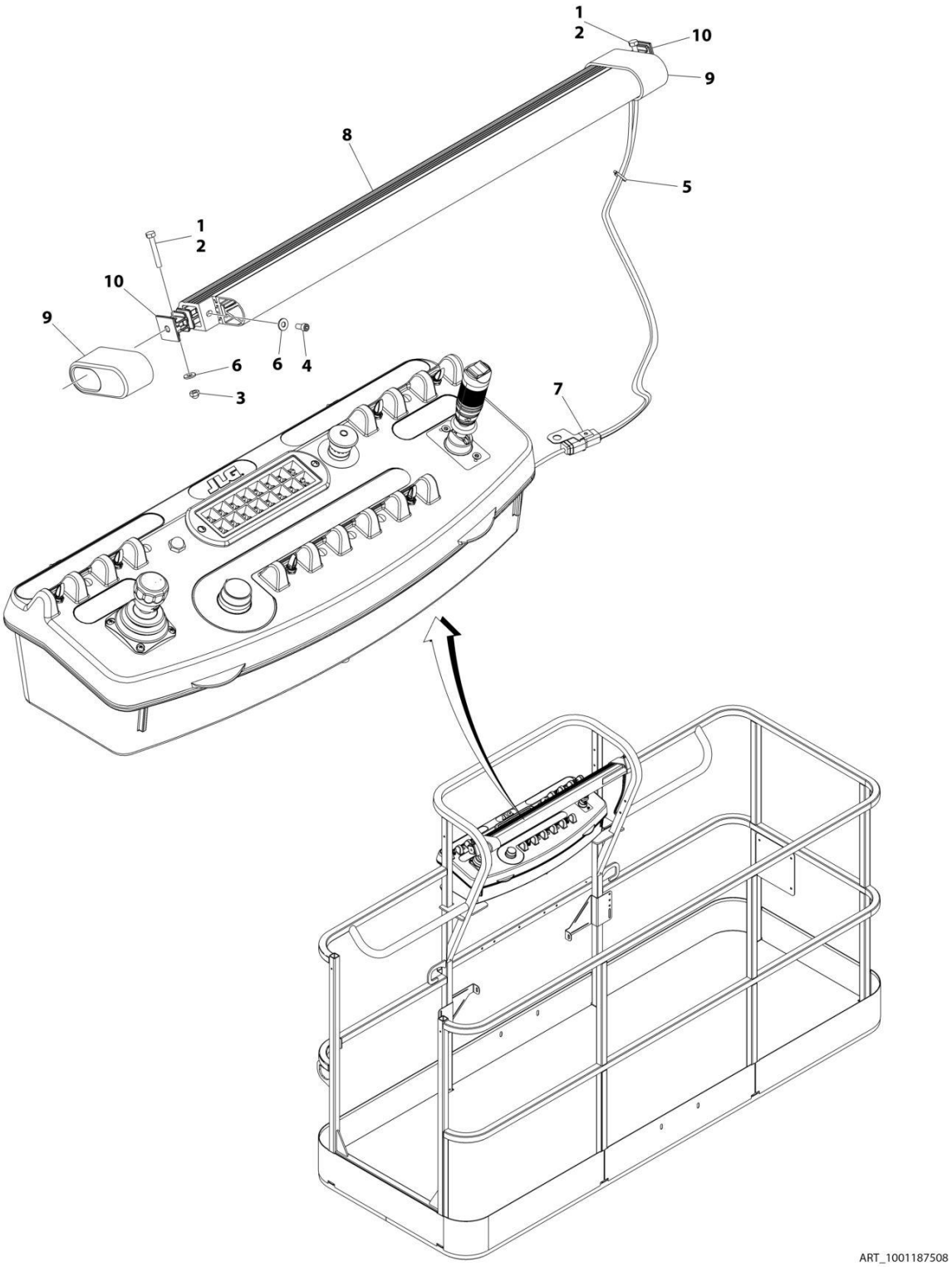

## FIGURE 4-13. SKYGUARD SYSTEM INSTALLATION

| ITEM | PART NUMBER | QTY | DESCRIPTION | REV |
|---|---|---|---|---|
| | 1001187508 | Ref | **SKYGUARD SYSTEM INSTALLATION** | C |
| | | Ref | **Note: For Machines SN 0300087000 through SN 0300177361 & SN B300000100 through SN B300001392, refer to SPECIAL OPTIONS Section.** | |
| 1 | 0100011 | AR | Compound, Locking | |
| 2 | 0641414 | 2 | Bolt, 1/4-20 x 1-3/4 | |
| 3 | 3300430 | 2 | Nut, Acorn 1/4-20 | |
| 4 | 3931424 | 2 | Capscrew, 1/4-20 x 1-1/2 | |
| 4 | 3931408 | 2 | Capscrew, 1/4-20 x 1/2 | |
| 5 | 4240033 | AR | Tie-Strap | |
| 6 | 4711400 | AR | Washer, 1/4 | |
| 7 | 1001120328 | 1 | Mount | |
| 8 | 1001137673 | 1 | Switch, SkyGuard Assembly | |
| 9 | 1001186517 | 2 | Cover, Platform Sensor | |
| 10 | 1001188889 | 2 | Support, Block **(SN B300001393 through B300004027)** | |
| 10 | 1001209664 | 2 | Support, Block **(SN B300004028 through B300005764, Excluding B300005620)** | |

## FIGURE 4-14. SKYLINE INSTALLATION

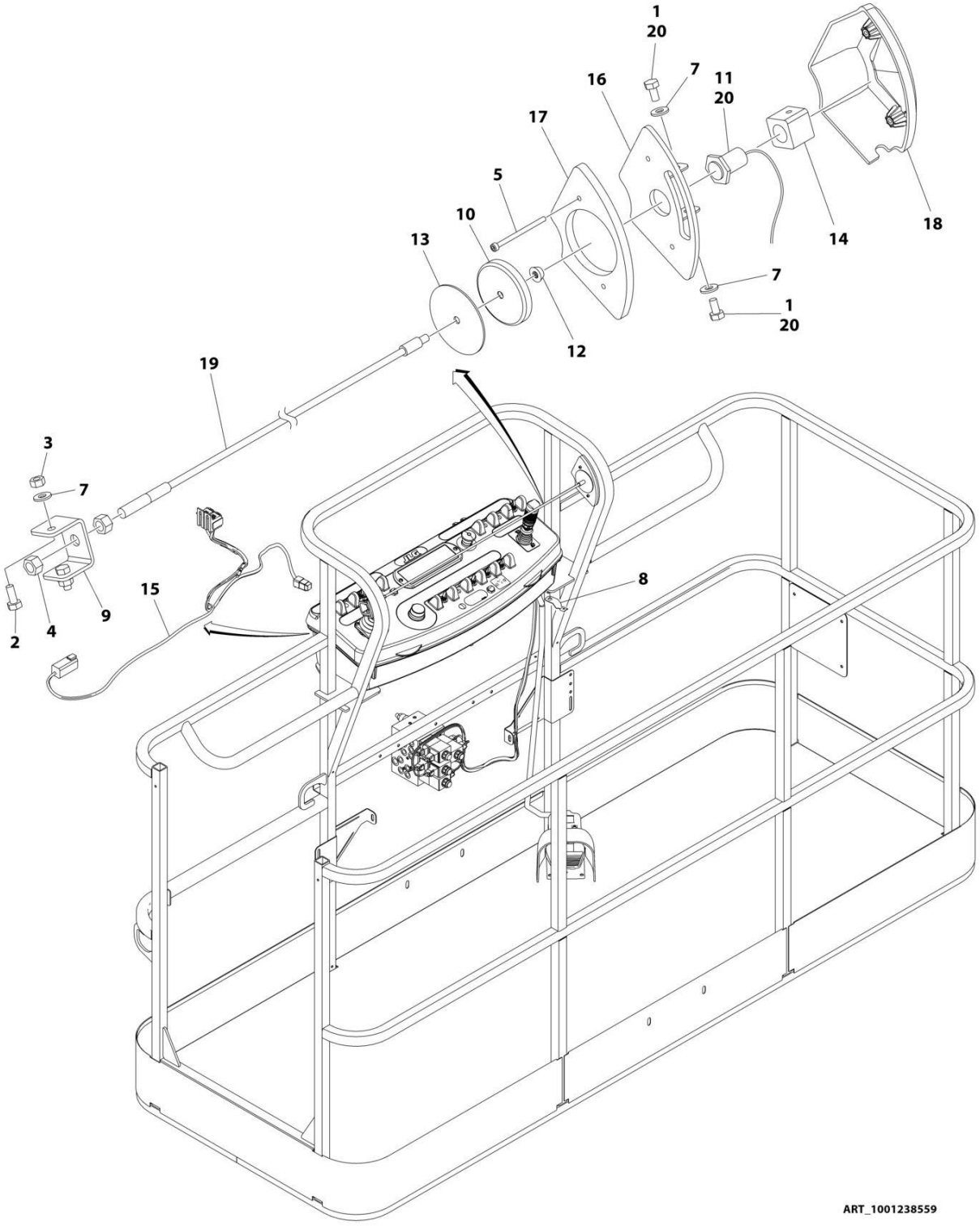

## FIGURE 4-14. SKYLINE INSTALLATION

| ITEM | PART NUMBER | QTY | DESCRIPTION | REV |
|---|---|---|---|---|
| | 1001238559 | Ref | SKYLINE INSTALLATION | B |
| 1 | 0641404 | 2 | Bolt 1/4 x 1/2 | |
| 2 | 0641405 | 2 | Bolt 1/4 x 5/8 | |
| 3 | 3311405 | 2 | Nut 1/4 | |
| 4 | 3311601 | 2 | Nut 3/8 | |
| 5 | 4031516 | 2 | Capscrew M4 x 60 | |
| 6 | 4240033 | AR | Tie-Strap (Not Shown) | |
| 7 | 4711400 | 4 | Washer 1/4 | |
| 8 | 1001120328 | 1 | Mount | |
| 9 | 1001232642 | 1 | Bracket | |
| 10 | 1001232650 | 1 | Magnet | |
| 11 | 1001232667 | 1 | Sensor, Proximity | |
| 12 | 1001235011 | 1 | Nut | |
| 13 | 1001235013 | 1 | Washer | |
| 14 | 1001236552 | 1 | Block | |
| 15 | 1001238418 | 1 | Harness, Skyline (See Separate Breakdown in ELECTRICAL Section) | |
| 16 | 1001238472 | 1 | Mount | |
| 17 | 1001238477 | 1 | Housing, LH | |
| 18 | 1001241965 | 1 | Housing, RH | |
| 19 | 1001238824 | 1 | Rope | |
| 20 | 0100011 | AR | Compound, Locking | |

**FIGURE 4-15. CROSS RAIL INSTALLATION**

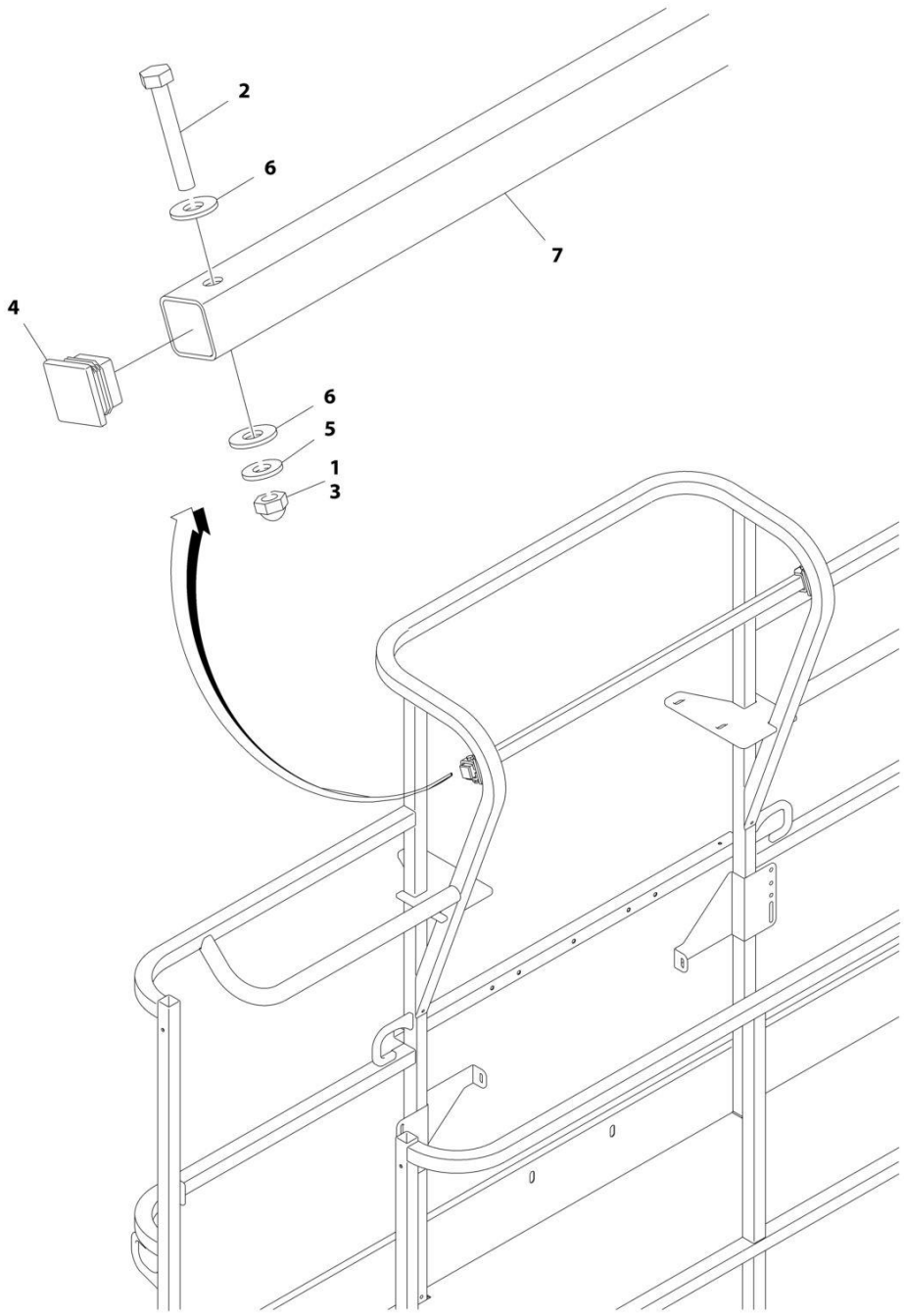

## FIGURE 4-15. CROSS RAIL INSTALLATION

| ITEM | PART NUMBER | QTY | DESCRIPTION | REV |
|---|---|---|---|---|
| | 1001182138 | Ref | **CROSS RAIL INSTALLATION** | A |
| 1 | 0100071 | AR | Compound, Locking | |
| 2 | 0641414 | 2 | Bolt 1/4 x 1-3/4 | |
| 3 | 3300430 | 2 | Nut 1/4 | |
| 4 | 3520182 | 2 | Plug | |
| 5 | 4711400 | 2 | Washer 1/4 | |
| 6 | 4751400 | 4 | Washer 1/4 | |
| 7 | 1001191708 | 1 | Bar | |

## FIGURE 4-16. PLATFORM PADDING INSTALLATION (30IN/76CM DEPTH PLATFORMS) (OPTIONAL)

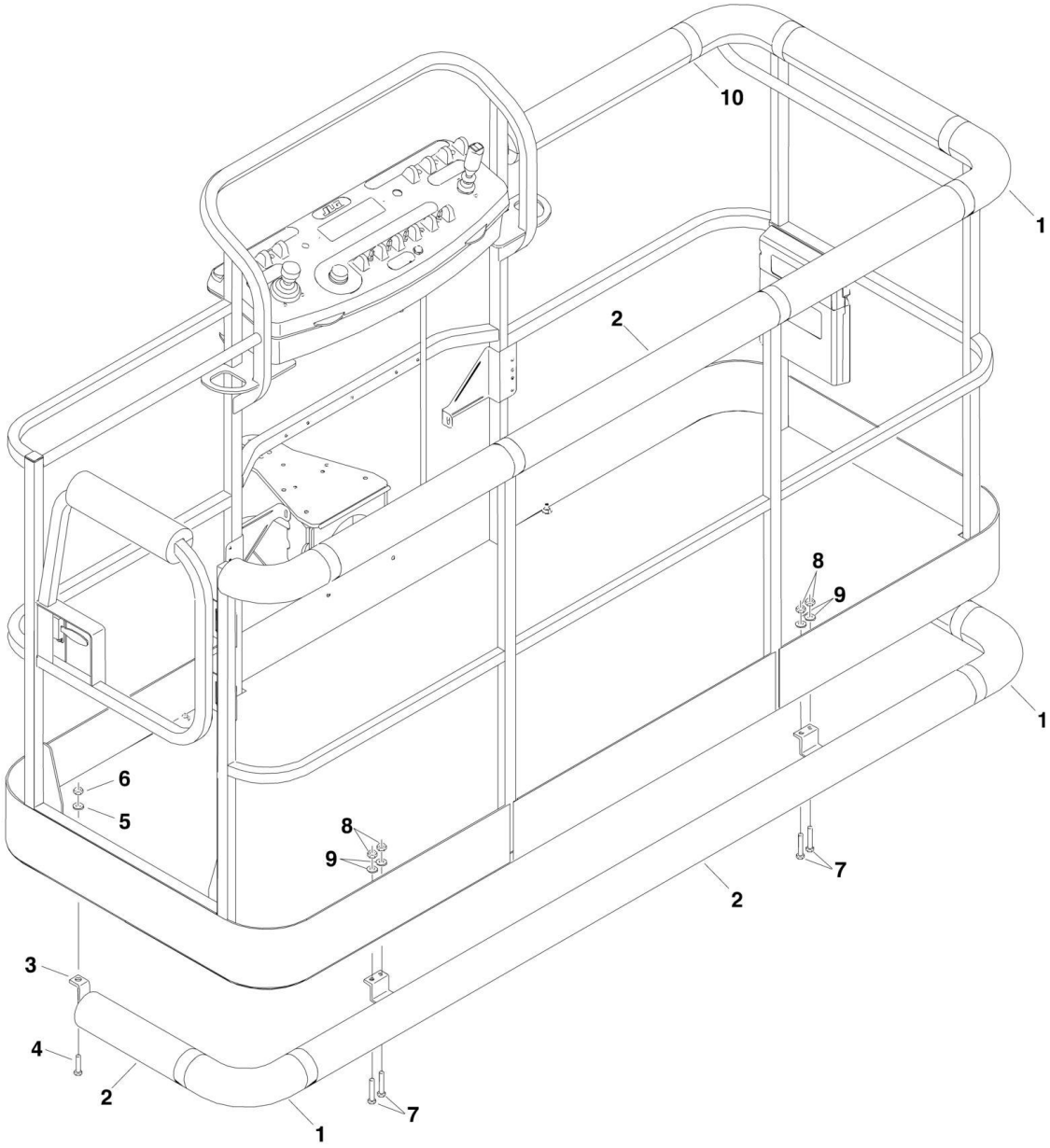

## FIGURE 4-16. PLATFORM PADDING INSTALLATION (30IN/76CM DEPTH PLATFORMS) (OPTIONAL)

| ITEM | PART NUMBER | QTY | DESCRIPTION | REV |
|---|---|---|---|---|
| | 0273542 | Ref | **PADDING INSTALLATION (30 X 48 SIDE ENTRY PLATFORM)** | |
| 1 | 0940092 | 4 | Bumper, Pad (Corner) | |
| 2 | 0940094 | 9 ft/2.7m | Bumper, Pad (Square Tubing) | |
| 3 | 0940131 | 1 | Bumper, Rail | |
| 4 | 0641516 | 2 | Bolt 5/16in-18NC x 2in | |
| 5 | 4751500 | 2 | Flatwasher 5/16in | |
| 6 | 3311505 | 2 | Locknut 5/16in-18NC | |
| 7 | 0641813 | 4 | Bolt 1/2in-13NC x 1 5/8in | |
| 8 | 3311805 | 4 | Locknut 1/2in-13NC | |
| 9 | 4891800 | 4 | Flatwasher 1/2in (Hardened) | |
| 10 | 4420068 | 30 ft/9.1m | Tape | |

## FIGURE 4-17. SOFT TOUCH SYSTEM INSTALLATION (36IN/91.5CM DEPTH PLATFORMS) (OPTIONAL)

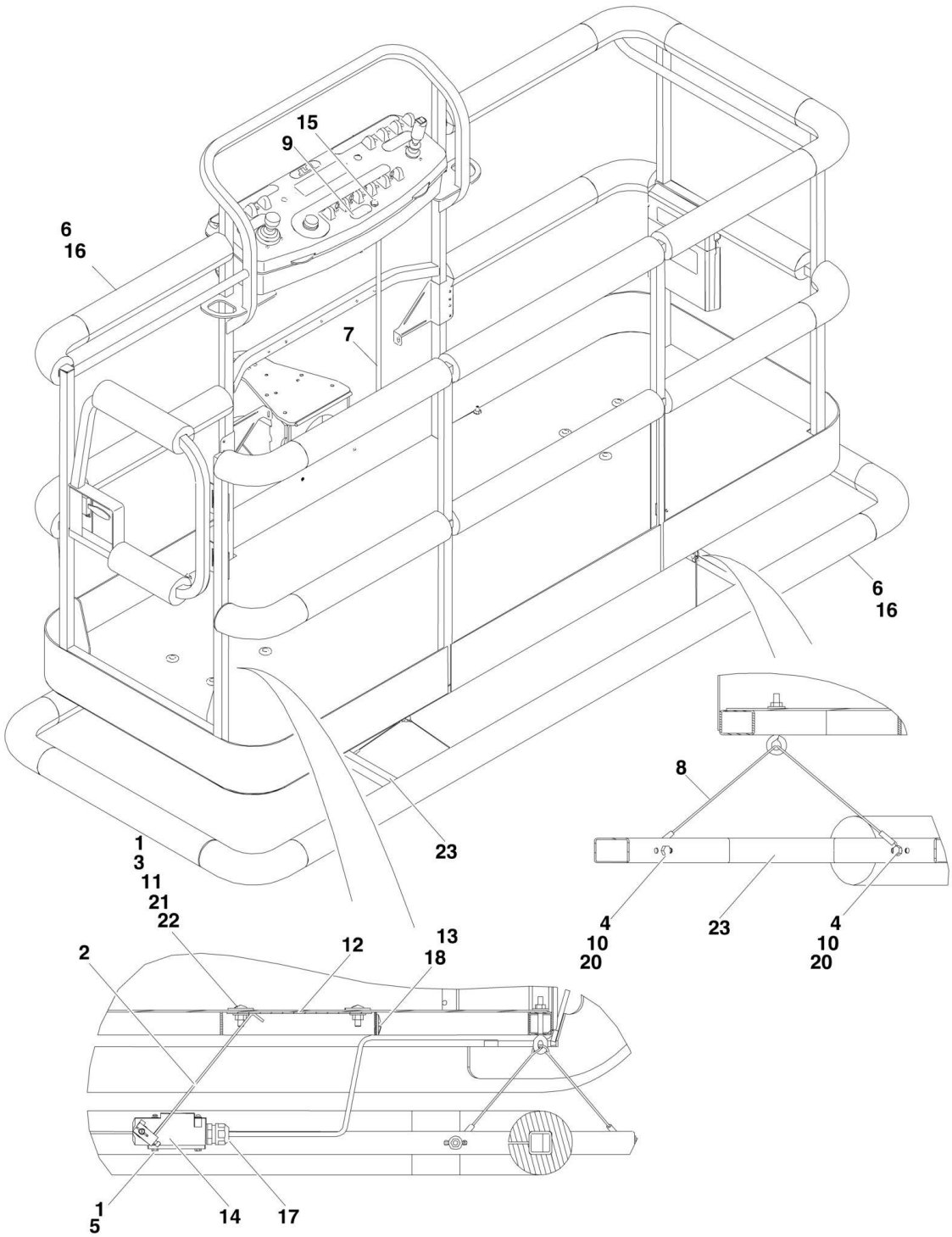

## FIGURE 4-17. SOFT TOUCH SYSTEM INSTALLATION (36IN/91.5CM DEPTH PLATFORMS) (OPTIONAL)

| ITEM | PART NUMBER | QTY | DESCRIPTION | REV |
|---|---|---|---|---|
| | | Ref | **SOFT TOUCH SYSTEM INSTALLATIONS** | |
| | 0273824 | Ref | **6ft Platform** | D |
| | 0272427 | Ref | **8ft Platform** | G |
| | 1001108256 | Ref | **6ft/1.8m Platform with Fall Arrest** | C |
| | 0273706 | Ref | **8ft/2.4m Platform with Fall Arrest** | D |
| 1 | 0100011 | AR | Compound, Locking | |
| 2 | 0200048 | 2 | Arm, Switch | |
| 3 | 0630462 | 8 | Bolt, Carriage | |
| 4 | 0641414 | 8 | Bolt 1/4in-20NC x 1-3/4in | |
| 5 | | Ref | Bolt Options: | |
| 5 | 0721005 | 4 | Bolt #10-24NC x 5/8in | |
| 5 | 0731005 | 4 | Bolt #10-32NF x 5/8in | |
| 6 | | Ref | Bumper Kits (Includes Corners and Enough Straight Material for One Platform) | |
| 6 | 0940134 | 1 | 6ft Platform | |
| 6 | 0940103 | 1 | 8ft Platform | |
| 6 | 0940177 | 1 | 6ft Platform with Fall Arrest | |
| 6 | 0940133 | 1 | 8ft Platform with Fall Arrest | |
| 6 | 0940092 | 1 | Bumper (Corner) Options: | |
| 6 | | Ref | 6ft/8ft Platform without Fall Arrest | |
| 6 | | Ref | 6ft/8ft Platform with Fall Arrest | |
| 6 | 0940094 | AR | Bumper (12ft Length) | |
| 7 | 1060341 | 23 ft/7m | Cable, Electrical - 16/2 | |
| 8 | 1060903 | 4 | Wire Rope and Eyebolt Assembly | |
| 9 | 1702938 | 1 | Decal - Soft Touch Override | |
| 10 | 3311401 | 8 | Nut 1/4in-20NC | |
| 11 | 3311501 | 8 | Nut 5/16in-18NC | |
| 12 | | Ref | Plate, Switch Strike Options: | |
| 12 | 3575359 | 2 | 6ft Platform | |
| 12 | 3574091 | 2 | 8ft Platform | |
| 13 | 4240099 | 7 | Tie-Strap | |
| 14 | 4360057 | 2 | Switch, Limit | |
| 15 | 4360387 | 1 | Switch, Push Button | |
| 16 | 4420068 | AR | Tape, Adhesive | |
| 16 | 1001197017 | AR | Tie-Strap (Not Shown) | |
| 17 | 4460049 | 2 | Connector, Strain Relief | |
| 18 | 4460234 | 7 | Tie-Strap | |
| 19 | 4460425 | 1 | Connector, Strain Relief | |
| 20 | 4751400 | 8 | Flatwasher 1/4in Regular | |
| 21 | 4751500 | AR | Flatwasher 5/16in Regular | |
| 22 | 4751800 | 8 | Flatwasher 1/2in Regular | |
| 23 | | Ref | Rail, Soft Touch Options: | |
| 23 | 3641569 | 1 | 6ft Platform | |
| 23 | 4846673 | 1 | 8ft Platform | |
| 24 | | Ref | Soft Touch Installation Kit Options (Not Shown) (Includes Items 2-23) | |
| | | Ref | **Note: May not be available for all machines depending on existing options. Contact JLG Parts Dept before ordering.** | |
| 24 | 1001121592 | 1 | Kit - 6ft Platform without Fall Arrest | |

# SECTION 4 - PLATFORM

| ITEM | PART NUMBER | QTY | DESCRIPTION | REV |
|---|---|---|---|---|
| 24 | 1001121593 | 1 | Kit - 8ft Platform without Fall Arrest | |

## FIGURE 4-18. SKYGLAZIER INSTALLATION (USA MACHINES BUILT YEARS 2005-2007)

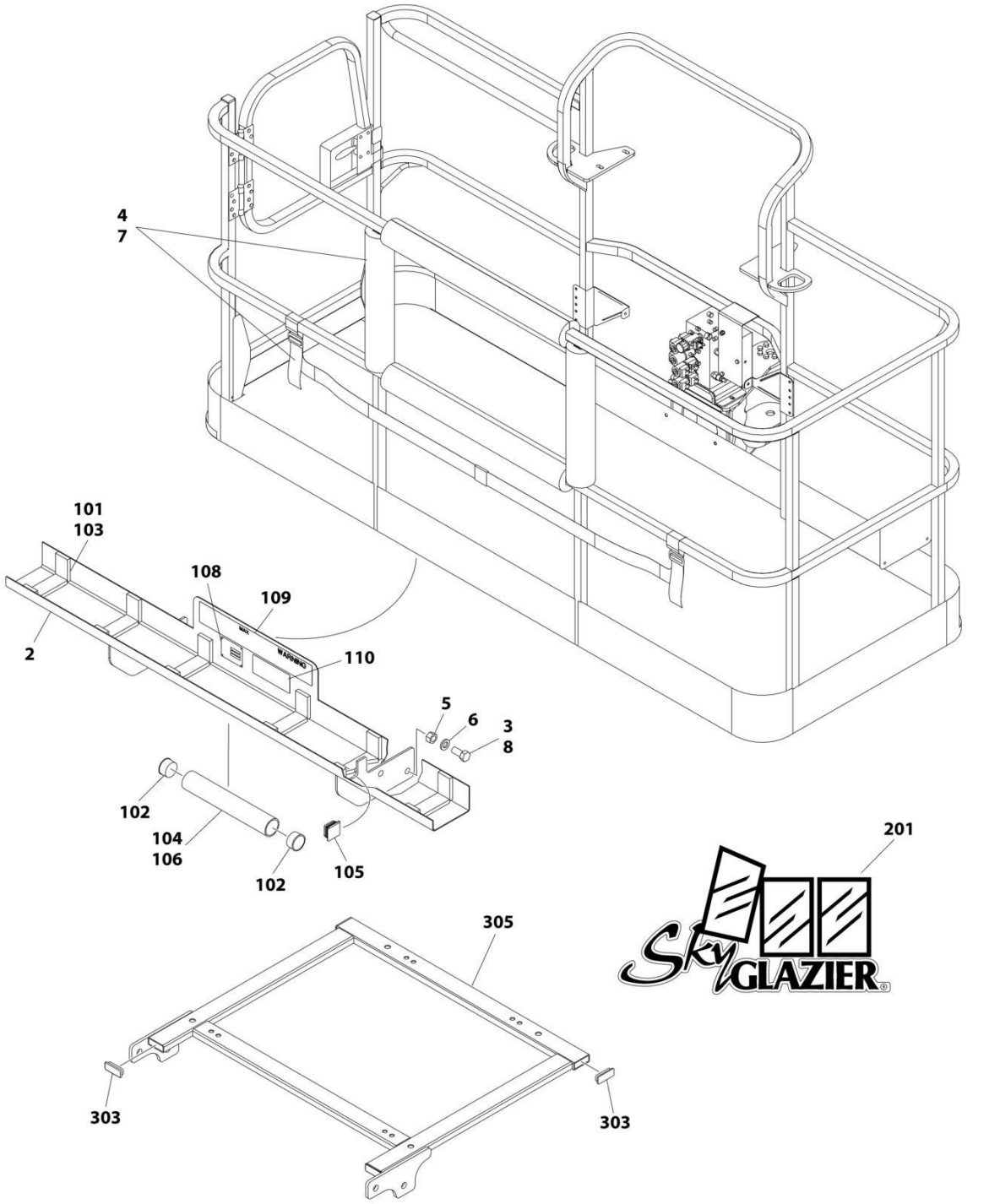

## FIGURE 4-18. SKYGLAZIER INSTALLATION (USA MACHINES BUILT YEARS 2005-2007)

| ITEM | PART NUMBER | QTY | DESCRIPTION | REV |
|---|---|---|---|---|
| | | Ref | **SKYGLAZIER INSTALLATION (USA MACHINES BUILT YEARS 2005-2007)** | |
| | | Ref | **Note: Available only on 600A ANSI, ANSI Export, Brazil, CSA & Latin American Specs.** | |
| | 0272395 | Ref | **SkyGlazier Installation (English Language)** | 3 |
| | 0272955 | Ref | **SkyGlazier Installation (Portuguese Language)** | 3 |
| | 0272387 | Ref | **SkyGlazier Installation (Spanish Language)** | 3 |
| 2 | | Ref | Tray Assembly Options (See Items 101-110 for Breakdown): | |
| 2 | 0272391 | 1 | Tray Assembly (English Language) | |
| 2 | 0272951 | 1 | Tray Assembly (Portuguese Language) | |
| 2 | 0272948 | 1 | Tray Assembly (Spanish Language) | |
| 3 | 0642214 | 4 | Bolt 3/4 x 1-3/4 | |
| 4 | 2902212 | 1 | Bumpers and Straps Kit | |
| 4 | 0940102 | 1 | Bumper Only | |
| 4 | 4240149 | 1 | Strap Only | |
| 5 | 3312201 | 4 | Nut 3/4 | |
| 6 | 4892200 | 4 | Washer 3/4 | |
| 7 | 4420014 | AR | Tape | |
| 8 | 0100011 | AR | Compound, Locking | |
| | | Ref | **SKYGLAZIER TRAY ASSEMBLY** | |
| | 0272391 | Ref | **Tray Assembly (English Language)** | 3 |
| | 0272951 | Ref | **Tray Assembly (Portuguese Language)** | 4 |
| | 0272948 | Ref | **Tray Assembly (Spanish Language)** | 4 |
| 101 | 0100081 | AR | Adhesive | |
| 102 | 1120555 | 2 | Cap, Tube | |
| 103 | 3340956 | 1 | Pad Kit | |
| 104 | 3460334 | 1 | Tube | |
| 105 | 3520071 | 2 | Plug | |
| 106 | 4420066 | AR | Tape, Double Sided | |
| 108 | See Note | NSS | Nameplate - Serial Number (Note: Not Available for Purchase) | |
| 109 | | Ref | Decal - Glazier Capacity Options: | |
| 109 | 1705312 | NLA | Decal - Glazier Capacity (English Language) (Use p/n 1001126742) | |
| 109 | 1705526 | NLA | Decal - Glazier Capacity (Portuguese Language) (Use p/n 1001126748) | |
| 109 | 1705519 | NLA | Decal - Glazier Capacity (Spanish Language) (Use p/n 1001126747) | |
| 110 | 1701509 | 1 | Decal - Manual | |
| | 0272418 | Ref | **SKYGLAZIER DECAL INSTALLATION** | 4 |
| 201 | 1705358 | 2 | Decal - SkyGlazier | |
| | 0272390 | Ref | **SKYGLAZIER SUPPORT INSTALLATION** | H |
| 303 | 3520190 | 4 | Plug | |
| 305 | 4846651 | 1 | Support, Glazier | |

## FIGURE 4-19. SKYGLAZIER INSTALLATION (USA MACHINES BUILT YEARS 2008-2013 AND CHINA BUILT MACHINES BUILT 2008-2019)

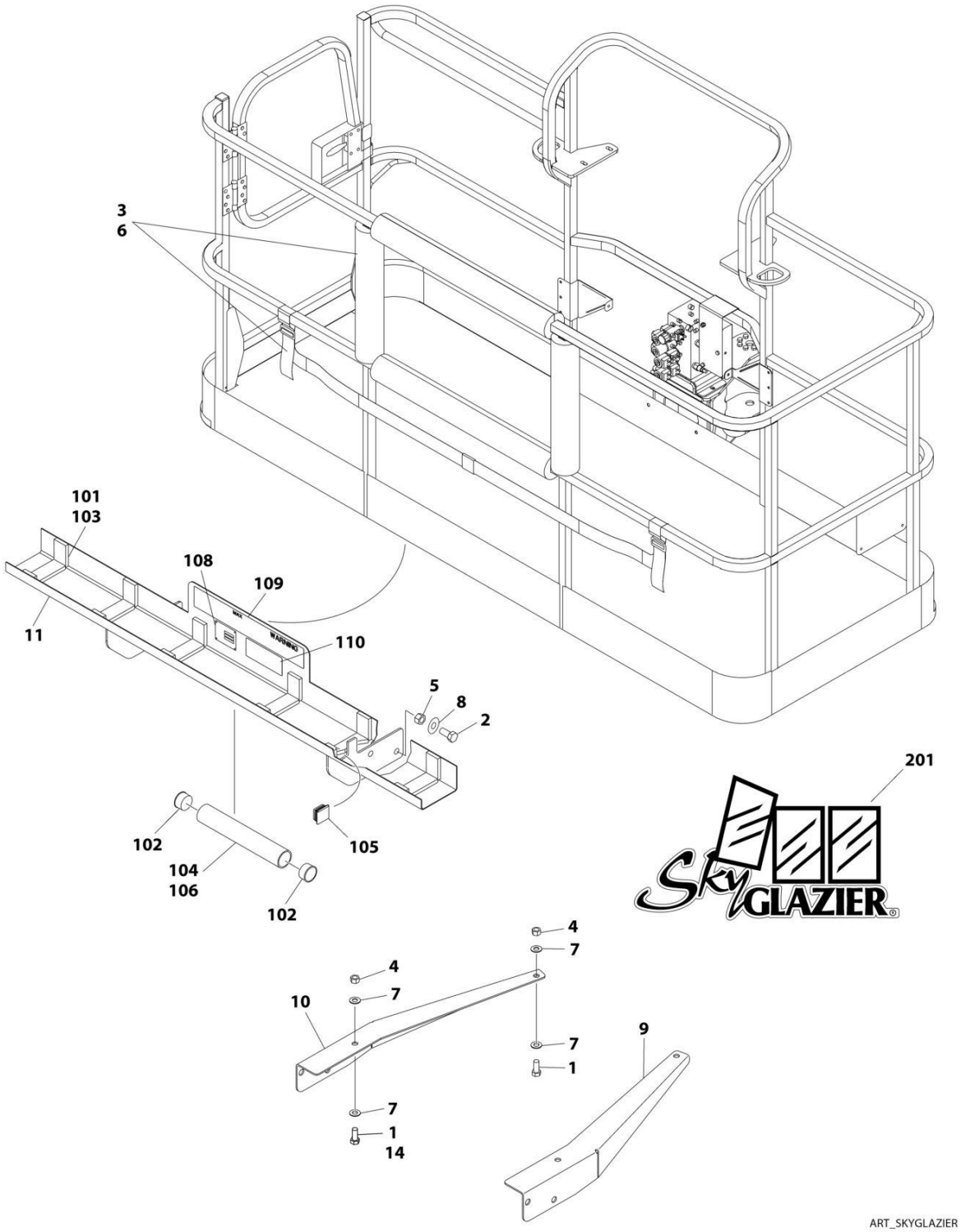

## FIGURE 4-19. SKYGLAZIER INSTALLATION (USA MACHINES BUILT YEARS 2008-2013 AND CHINA BUILT MACHINES BUILT 2008-2019)

| ITEM | PART NUMBER | QTY | DESCRIPTION | REV |
|---|---|---|---|---|
| | | Ref | **SKYGLAZIER INSTALLATION (USA MACHINES BUILT YEARS 2008-2013 AND CHINA MACHINES BUILT 2008-2019)** | |
| | | Ref | **Machines without LSS (Available only on 600A ANSI, Brazil, CSA & Latin American Specs and 600AJ ANSI & CSA Specs)** | |
| | 1001101422 | Ref | **SkyGlazier Installation (English Language)** | C |
| | 1001099422 | Ref | **SkyGlazier Installation (Portuguese Language)** | C |
| | 1001099421 | Ref | **SkyGlazier Installation (Spanish Language)** | C |
| | | Ref | **Machines with LSS (Available only on 600A & 600AJ Australian Specs)** | |
| | 1001102647 | Ref | **SkyGlazier Installation (English Language)** | C |
| 1 | 0642012 | AR | Bolt 5/8 x 1-1/2 ((Without LSS) | |
| 1 | 0642026 | AR | Bolt 5/8 x 3-1/4 | |
| 2 | 0642212 | 4 | Bolt 3/4 x 1-1/2 | |
| 3 | 2902212 | 1 | Bumpers and Strap Kit | |
| 3 | 0940102 | 1 | Bumper Only | |
| 3 | 4240149 | 1 | Strap Only | |
| 4 | 3312005 | 4 | Nut 5/8 | |
| 5 | 3312205 | 4 | Nut 3/4 | |
| 6 | 4420014 | AR | Tape | |
| 7 | 4712000 | AR | Washer 5/8 | |
| 8 | 4712200 | 8 | Washer 3/4 | |
| 9 | 1001099366 | 1 | Support | |
| 10 | 1001099367 | 1 | Support | |
| 11 | | Ref | Tray Assembly Options (See Items 101-110 for Breakdown): | |
| 11 | 1001101421 | 1 | Tray Assembly (English Language) | |
| 11 | 0272951 | 1 | Tray Assembly (Portuguese Language) | |
| 11 | 0272948 | 1 | Tray Assembly (Spanish Language) | |
| 14 | 8310230 | 2 | Bolt 5/8 x 4 (Wihtout LSS) | |
| 14 | 0642026 | 2 | Bolt 5/8 X 3-1/4 (With LSS) | |
| | | Ref | **SKYGLAZIER TRAY ASSEMBLY** | |
| | 1001101421 | Ref | **Tray Assembly (English Language)** | E |
| | 0272951 | Ref | **Tray Assembly (Portuguese Language)** | 4 |
| | 0272948 | Ref | **Tray Assembly (Spanish Language)** | 4 |
| 101 | 0100081 | AR | Adhesive | |
| 102 | 1120555 | 2 | Cap, Tube | |
| 103 | 3340956 | 1 | Pad Kit | |
| 104 | 3460334 | 1 | Tube | |
| 105 | 3520071 | 2 | Plug | |
| 106 | 4420066 | AR | Tape, Double Sided | |
| 108 | See Note | NSS | Nameplate - Serial Number (Note: Not Available for Purchase) | |
| 109 | | Ref | Decal - Glazier Capacity Options: | |
| 109 | 1001101420 | NLA | Decal - Glazier Capacity (English Language) (Use pn 1001163131) **(SN 0300123523 through 0300147380)** | |
| 109 | 1001126742 | NLA | Decal - Glazier Capacity (English Language) (Use pn 1001163131) **(SN 0300147381 through 0300177361)** | |
| 109 | 1001163131 | 1 | Decal - Glazier Capacity (English Language) **(SN B300000100 through B300005764, Excluding B300005620)** | |
| 109 | 1705526 | NLA | Decal - Glazier Capacity (Portuguese Language) (Use pn 1001163297) **(SN 0300123523 through 0300147380)** | |
| 109 | 1001126748 | NLA | Decal - Glazier Capacity (Portuguese Language) (Use pn | |

| ITEM | PART NUMBER | QTY | DESCRIPTION | REV |
|---|---|---|---|---|
| | | | 1001163297) **(SN 0300147381 through 0300177361)** | |
| 109 | 1705519 | NLA | Decal - Glazier Capacity (Spanish Language) (Use pn 1001163296) **(SN 0300123523 through 0300147380)** | |
| 109 | 1001126747 | NLA | Decal - Glazier Capacity (Spanish Language) (Use pn 1001163296) **(SN 0300147381 through 0300177361)** | |
| 110 | 1701509 | 2 | Decal - Manual | |
| | 0272418 | Ref | **SKYGLAZIER DECAL INSTALLATION** | 4 |
| 201 | 1705358 | 2 | Decal - SkyGlazier (Not Shown - Located on Hood) | |

## FIGURE 4-20. SKYWELDER/SKYCUTTER COMBO INSTALLATION (60HZ)

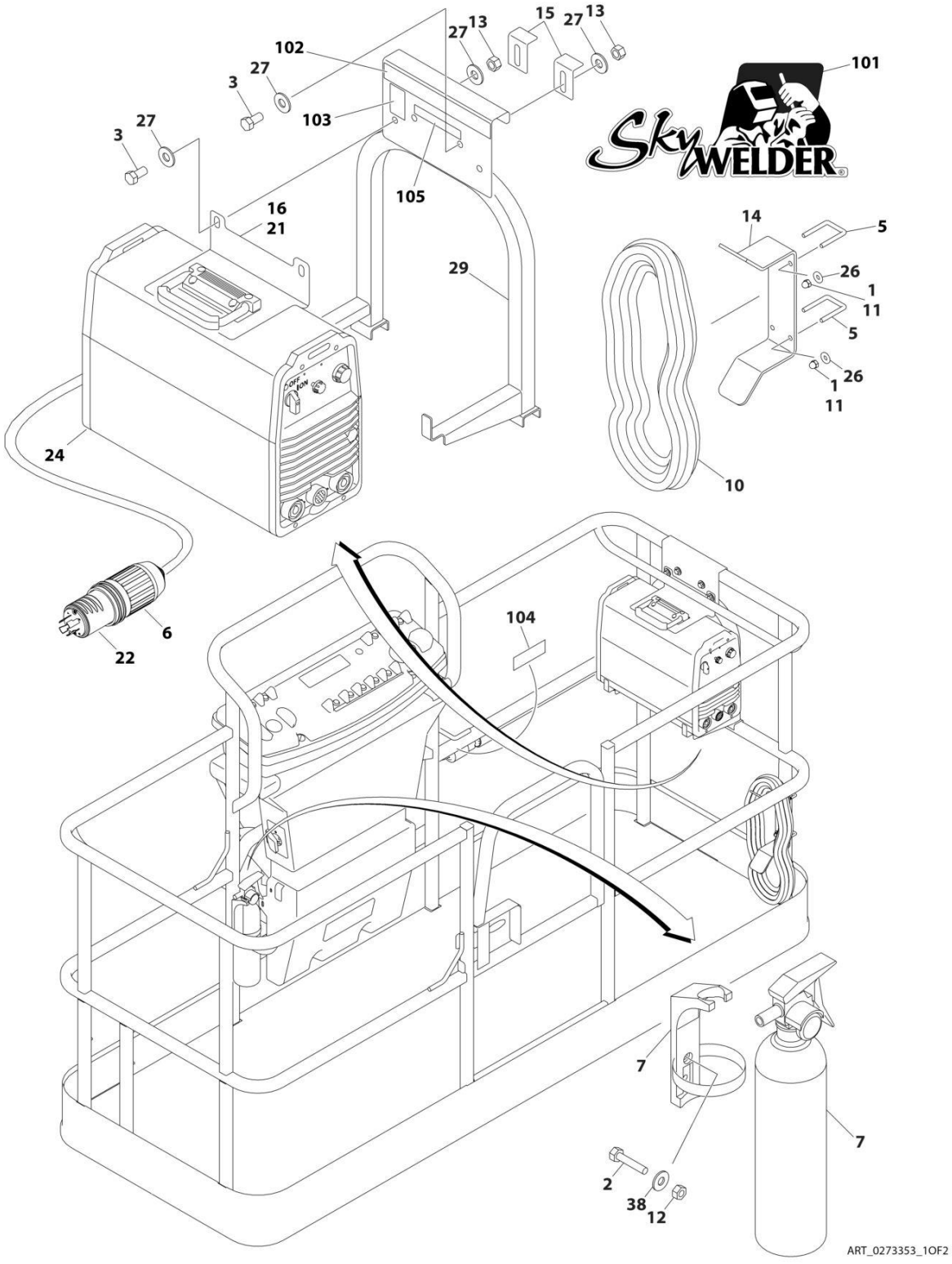

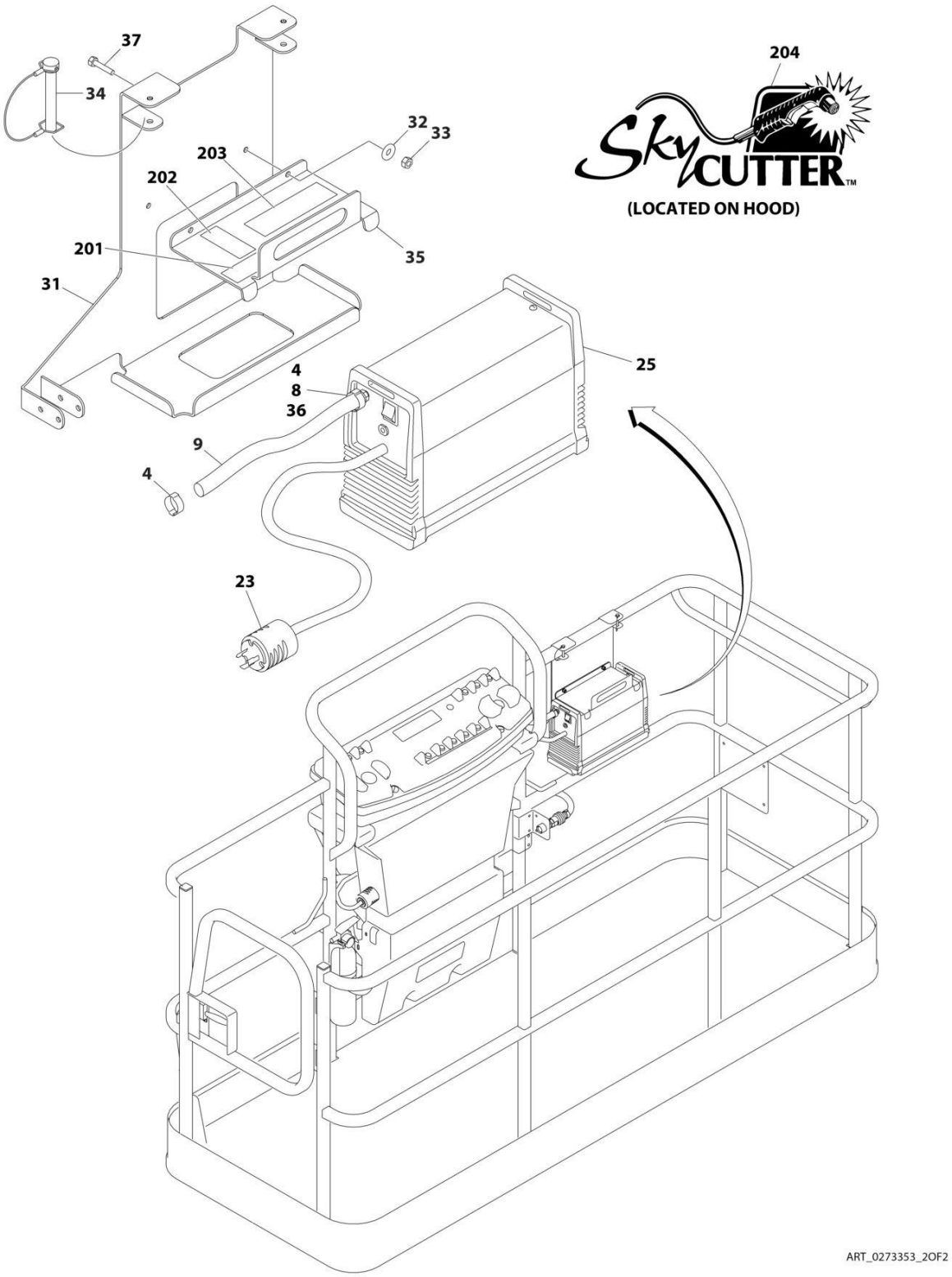
37
34
32
33
203
202
201
35
31
204
SkyCUTTER™
(LOCATED ON HOOD)
4
8
36
25
9
4
23
ART_0273353_2OF2

## FIGURE 4-20. SKYWELDER/SKYCUTTER COMBO INSTALLATION (60HZ)

| ITEM | PART NUMBER | QTY | DESCRIPTION | REV |
|---|---|---|---|---|
| | 0273353 | Ref | **SKYWELDER/SKYCUTTER COMBO INSTALLATION (60HZ)** | G |
| | | Ref | **Note: ANSI Export & Australian Spec Only.** | |
| 1 | 0100011 | AR | Compound, Locking | |
| 2 | 0630518 | 2 | Screw #10 x 3/4 | |
| 3 | 0641606 | 4 | Bolt 3/8 x 3/4 | |
| 4 | 1320177 | 2 | Clamp | |
| 5 | 1320302 | 2 | Clamp | |
| 6 | 1671093 | 1 | Cover, Plug | |
| 7 | 2030010 | 1 | Extinguisher, Fire | |
| 8 | 2180832 | 1 | Fitting, Barbed/NPT | |
| 9 | 2720160 | 4.5 ft/ 1.37m | Hose | |
| 10 | 2902217 | 1 | Weld Leads Kit | |
| 11 | 3300151 | 4 | Nut 1/4 | |
| 12 | 3311005 | 2 | Nut #10 | |
| 13 | 3311605 | 4 | Nut 3/8 | |
| 14 | 3573400 | 1 | Bracket | |
| 15 | 3577121 | 2 | Angle | |
| 16 | 3573642 | 1 | Plate | |
| 20 | 4240099 | AR | Tie-Strap (Not Shown) | |
| 21 | 4420037 | 2.36 ft/ .71m | Tape | |
| 22 | 4460962 | 1 | Plug, Twist Lock | |
| 23 | 4460971 | 1 | Plug, Twist Lock | |
| 24 | 4530028 | 1 | Welder Assembly (See WELDER ASSEMBLY for Breakdown) | |
| 25 | 1001098012 | 1 | Plasma Cutter Assembly (See PLASMA CUTTER ASSEMBLY for Breakdown) | |
| 26 | 4751400 | 4 | Washer 1/4 | |
| 27 | 4751600 | 8 | Washer 3/8 | |
| 29 | 4846627 | 1 | Support | |
| 31 | 1001145405 | 1 | Bracket | |
| 32 | 4811700 | 2 | Washer M6 | |
| 33 | 3290605 | 2 | Nut M6 | |
| 34 | 3421453 | 3 | Pin | |
| 35 | 3576799 | 1 | Plate, Hold-Down | |
| 36 | 0100020 | 1 | Sealant | |
| 37 | 4010608 | 2 | Screw M6 x 16 | |
| 38 | 4751000 | 2 | Washer #10 | |
| | 0272448 | Ref | **SKYWELDER DECAL INSTALLATION** | B |
| 101 | 1705355 | 2 | Decal - SkyWelder | |
| 102 | 1702868 | 1 | Decal - No Hands | |
| 103 | 1705305 | 1 | Decal - Weld Leads | |
| 104 | 1705375 | 1 | Decal - 240V - 3 Phase - 60 Hz | |
| 105 | 1705466 | NLA | Decal - Weight (Use p/n 1001228988) **(SN B300000100 through B300002005)** | |
| 105 | 1001228988 | 1 | Decal - Weight **(SN B300002006 through B300005764, Excluding B300005620)** | |
| | 0272599 | Ref | **SKYCUTTER DECAL INSTALLATION** | B |
| 201 | 1702868 | 1 | Decal - No Hands | |
| 202 | 1705305 | 1 | Decal - Weld Leads | |
| 203 | 1705466 | NLA | Decal - Weight (Use p/n 1001228988) **(SN B300000100 through** | |

| ITEM | PART NUMBER | QTY | DESCRIPTION | REV |
|---|---|---|---|---|
| | | | **B300002005)** | |
| 203 | 1001228988 | 1 | Decal - Weight **(SN B300002006 through B300005764, Excluding B300005620)** | |
| 204 | 1705490 | 2 | Decal - SkyCutter | |

## FIGURE 4-21. SKYWELDER INSTALLATION (50HZ)

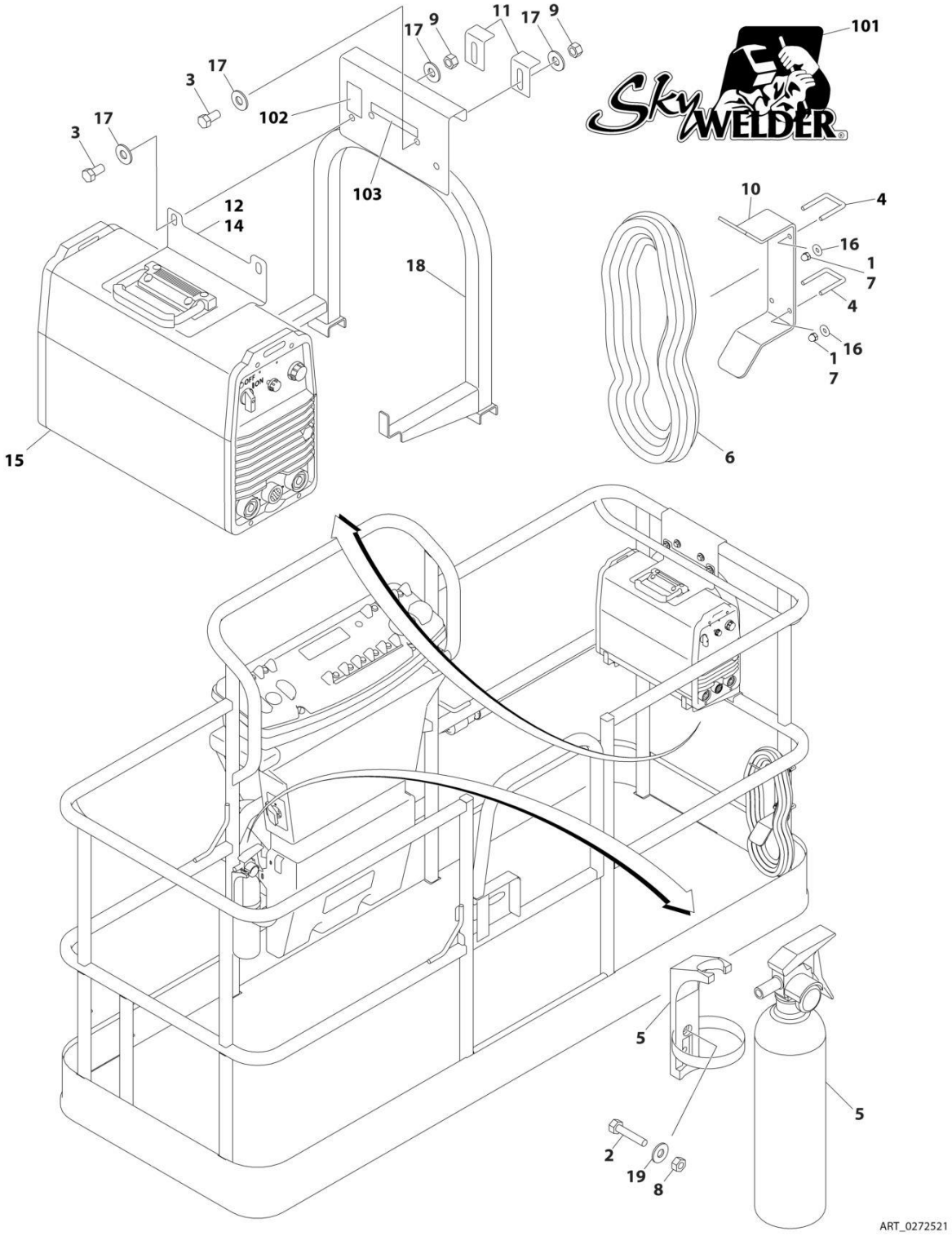

## FIGURE 4-21. SKYWELDER INSTALLATION (50HZ)

| ITEM | PART NUMBER | QTY | DESCRIPTION | REV |
|---|---|---|---|---|
| | 0272521 | Ref | **SKYWELDER INSTALLATION (50HZ)** | F |
| | | Ref | **Note: ANSI Export & Australian Specs Only.** | |
| 1 | 0100011 | AR | Compound, Locking | |
| 2 | 0630518 | 2 | Screw #10 x 3/4 | |
| 3 | 0641606 | 4 | Bolt 3/8 x 3/4 | |
| 4 | 1320302 | 2 | U-Clamp | |
| 5 | 2030010 | 1 | Extinguisher, Fire | |
| 6 | 2902217 | 1 | Weld Leads Kit | |
| 7 | 3300151 | 4 | Nut 1/4 | |
| 8 | 3311005 | 2 | Nut #10 | |
| 9 | 3311605 | 4 | Nut 3/8 | |
| 10 | 3573400 | 1 | Bracket | |
| 11 | 3577121 | 2 | Angle | |
| 12 | 3573642 | 1 | Plate | |
| 13 | 4240099 | AR | Tie-Strap (Not Shown) | |
| 14 | 4420037 | AR | Tape | |
| 15 | 4530028 | 1 | Welder Assembly (See WELDER ASSEMBLY for Breakdown) | |
| 16 | 4751400 | 4 | Washer 1/4 | |
| 17 | 4751600 | 8 | Washer 3/8 | |
| 18 | 4846627 | 1 | Support | |
| 19 | 4751000 | 2 | Washer #10 | |
| | 0272588 | Ref | **SKYWELDER DECAL INSTALLATION** | B |
| 101 | 1705355 | 2 | Decal - SkyWelder | |
| 102 | 1705305 | 1 | Decal - Weld Lead | |
| 103 | 1705466 | NLA | Decal - Weight (Use p/n 1001228988) **(SN B300000100 through B300002005)** | |
| 103 | 1001228988 | 1 | Decal - Weight **(SN B300002006 through B300005764, Excluding B300005620)** | |

## FIGURE 4-22. SKYWELDER INSTALLATION (60HZ)

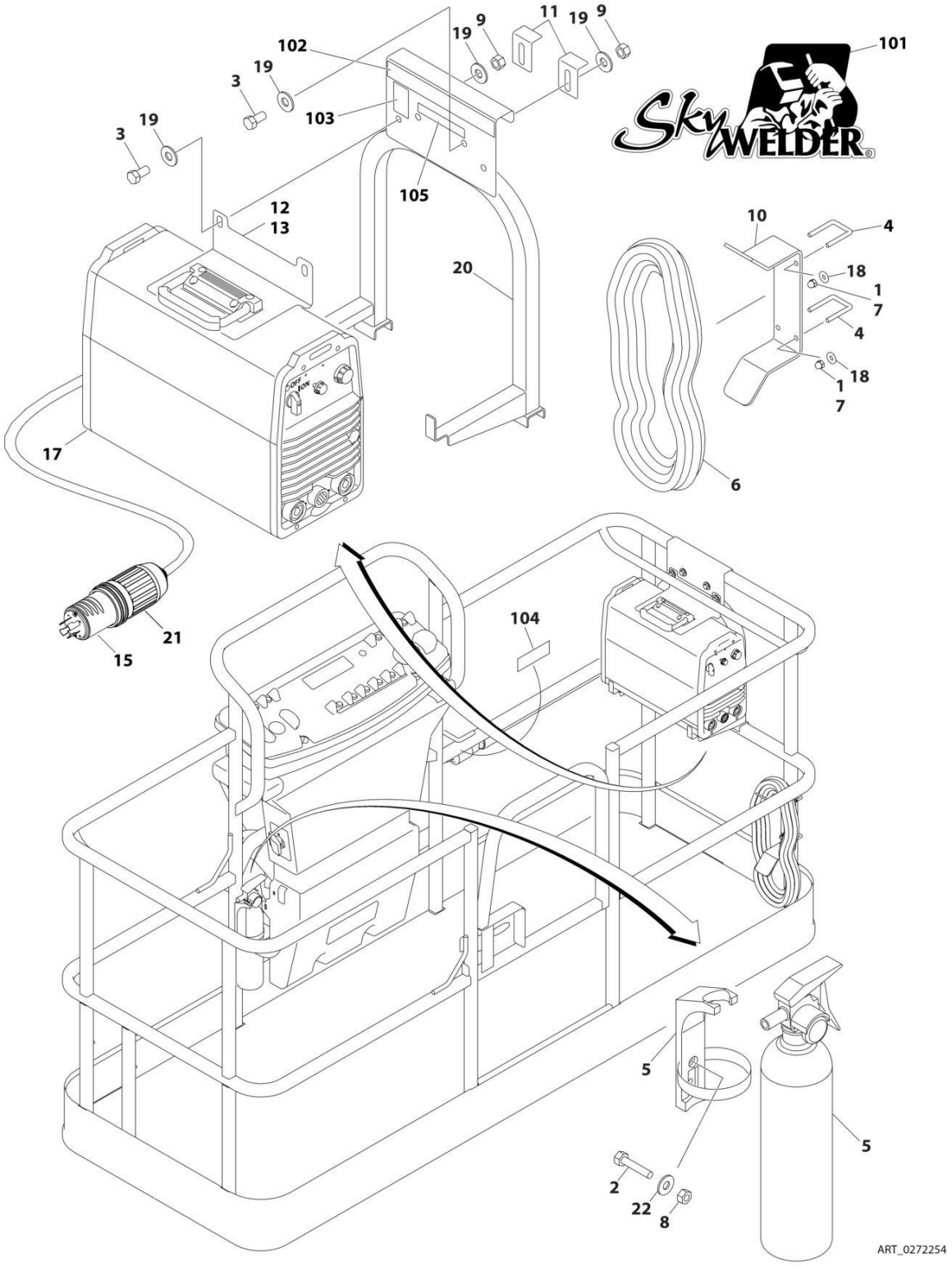

## FIGURE 4-22. SKYWELDER INSTALLATION (60HZ)

| ITEM | PART NUMBER | QTY | DESCRIPTION | REV |
|---|---|---|---|---|
| | 0272254 | Ref | **SKYWELDER INSTALLATION (60HZ)** | I |
| | | Ref | **Note: ANSI Export Specs Only.** | |
| 1 | 0100011 | AR | Compound, Locking | |
| 2 | 0630518 | 2 | Screw #10 x 3/4 | |
| 3 | 0641606 | 4 | Bolt 3/8 x 3/4 | |
| 4 | 1320302 | 2 | U-Clamp | |
| 5 | 2030010 | 1 | Extinguisher, Fire | |
| 6 | 2902217 | 1 | Weld Leads Kit | |
| 7 | 3300151 | 4 | Nut 1/4 | |
| 8 | 3311005 | 2 | Nut #10 | |
| 9 | 3311605 | 4 | Nut 3/8 | |
| 10 | 3573400 | 1 | Bracket | |
| 11 | 3577121 | 2 | Angle | |
| 12 | 3573642 | 1 | Plate | |
| 13 | 4420037 | AR | Tape | |
| 14 | 4240099 | AR | Tie-Strap (Not Shown) | |
| 15 | 4460962 | 1 | Plug, Male Twistlock | |
| 17 | 4530028 | 1 | Welder Assembly (See WELDER ASSEMBLY for Breakdown) | |
| 18 | 4751400 | 4 | Washer 1/4 | |
| 19 | 4751600 | 8 | Washer 3/8 | |
| 20 | 4846627 | 1 | Support | |
| 21 | 1671093 | 1 | Cover, Plug | |
| 22 | 4751000 | 2 | Washer #10 | |
| | 0272448 | Ref | **SKYWELDER DECAL INSTALLATION** | B |
| 101 | 1705355 | 2 | Decal - SkyWelder | |
| 102 | 1702868 | 1 | Decal - No Hands | |
| 103 | 1705305 | 1 | Decal - Weld Lead | |
| 104 | 1705375 | 1 | Decal - 240V - 3 Phase - 60Hz | |
| 105 | 1705466 | NLA | Decal - Weight (Use p/n 1001228988) **(SN B300000100 through B300002005)** | |
| 105 | 1001228988 | 1 | Decal - Weight **(SN B300002006 through B300005764, Excluding B300005620)** | |

## FIGURE 4-23. SKYWELDER PREP PACKAGE

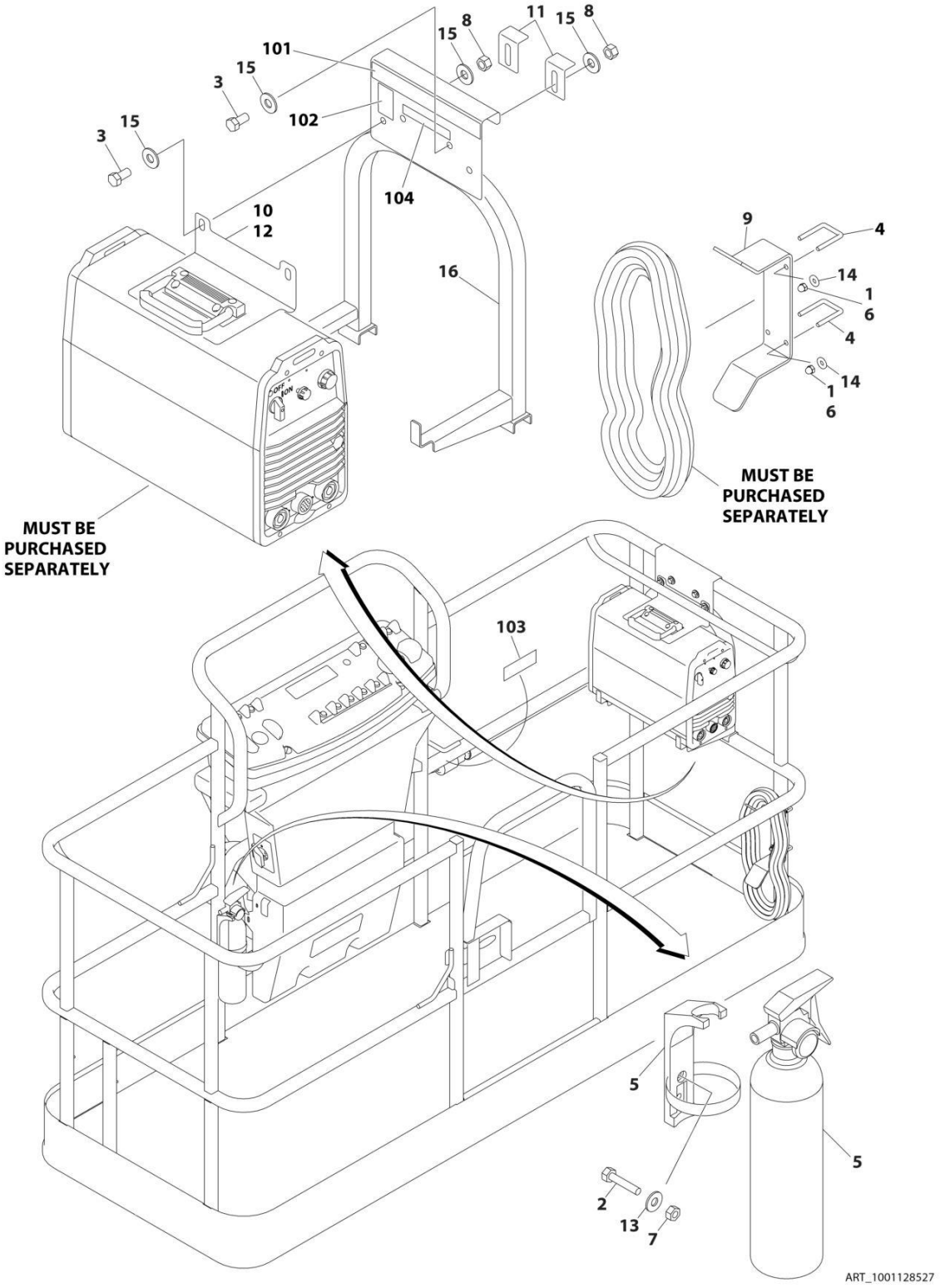

## FIGURE 4-23. SKYWELDER PREP PACKAGE

| ITEM | PART NUMBER | QTY | DESCRIPTION | REV |
|---|---|---|---|---|
| | 1001128527 | Ref | **SKYWELDER PREP PACKAGE (60HZ)** | |
| | | Ref | **Note: ANSI Export Specs Only.** | |
| 1 | 0100011 | AR | Compound, Locking | |
| 2 | 0630518 | 2 | Screw #10 x 3/4 | |
| 3 | 0641606 | 4 | Bolt 3/8 x 3/4 | |
| 4 | 1320302 | 2 | U-Clamp | |
| 5 | 2030010 | 1 | Extinguisher, Fire | |
| 6 | 3300151 | 4 | Nut 1/4 | |
| 7 | 3311005 | 2 | Nut #10 | |
| 8 | 3311605 | 4 | Nut 3/8 | |
| 9 | 3573400 | 1 | Bracket | |
| 10 | 3573642 | 1 | Plate | |
| 11 | 3577121 | 2 | Angle | |
| 12 | 4420037 | AR | Tape | |
| 13 | 4751000 | 2 | Washer #10 | |
| 14 | 4751400 | 4 | Washer 1/4 | |
| 15 | 4751600 | 8 | Washer 3/8 | |
| 16 | 4846627 | 1 | Support | |
| | 1001128556 | Ref | **SKYWELDER DECAL INSTALLATION** | B |
| 101 | 1702868 | 1 | Decal - No Hands | |
| 102 | 1705305 | 1 | Decal - Weld Lead | |
| 103 | 1705375 | 1 | Decal - 240V - 3 Phase - 60Hz | |
| 104 | 1705466 | NLA | Decal - Weight (Use p/n 1001228988) **(SN B300000100 through B300002005)** | |
| 104 | 1001228988 | 1 | Decal - Weight **(SN B300002006 through B300005764, Excluding B300005620)** | |

## FIGURE 4-24. WELDER ASSEMBLY

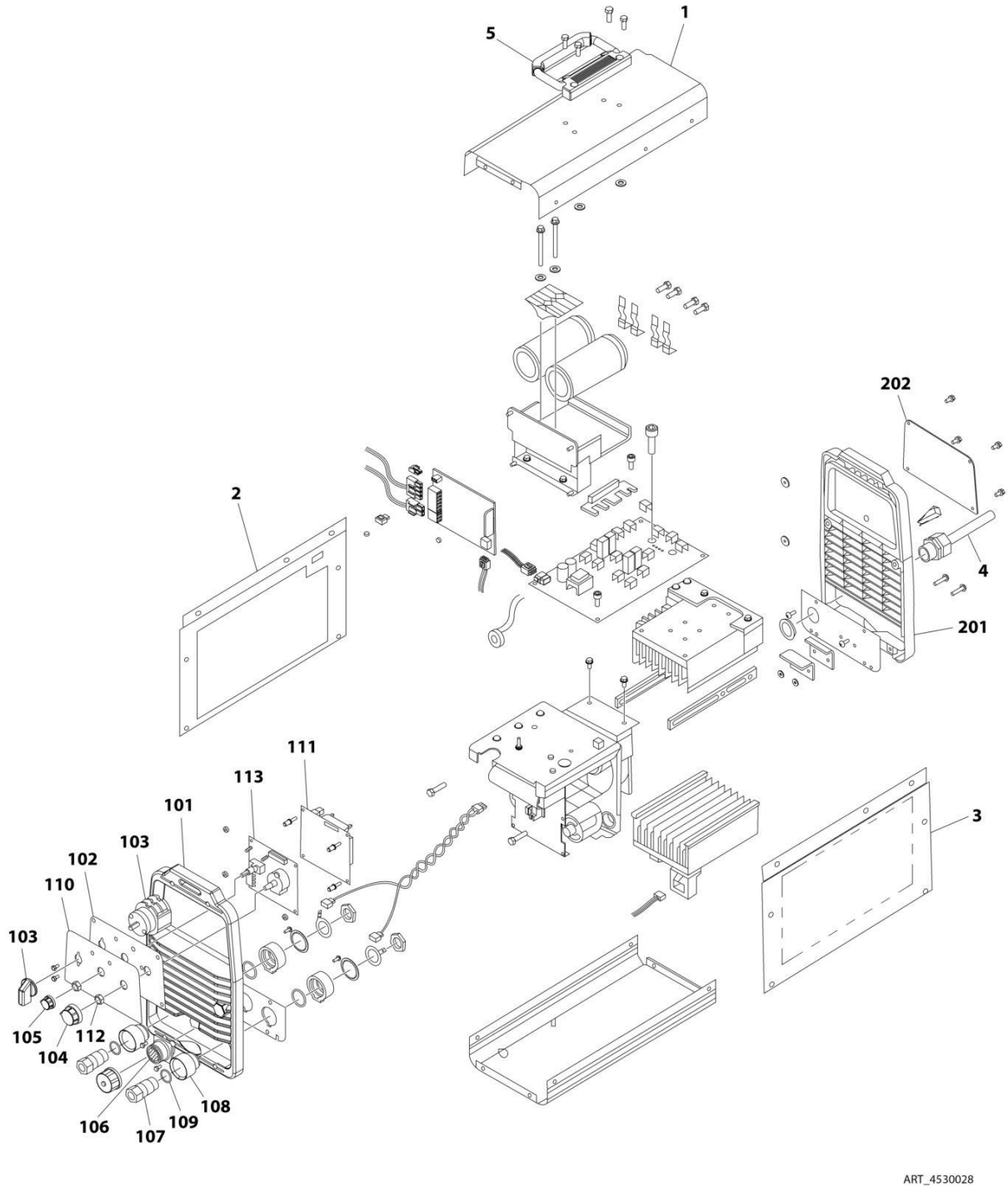

## FIGURE 4-24. WELDER ASSEMBLY

| ITEM | PART NUMBER | QTY | DESCRIPTION | REV |
|---|---|---|---|---|
| | 4530028 | Ref | **WELDER ASSEMBLY** | B |
| | | Ref | **Note: For Other Components, contact your Miller Welder Dealer.** | |
| 1 | 7027773 | 1 | Cover, Top | |
| 1 | 7027774 | 1 | Decal - Static Precautionary Warning | |
| 2 | See Note | NSS | Panel, LH Side (Note: Part of Item 1. Purchase Item 1) | |
| 3 | See Note | NSS | Panel, RH Side (Note: Part of Item 1. Purchase Item 1) | |
| 4 | 7024467 | 1 | Cable, Power | |
| 4 | 7027775 | 1 | Decal - Electrical Shock Warning (Not Shown) | |
| 5 | 7027776 | 1 | Handle, Carrying | |
| 101 | 7024462 | 1 | Panel, Front | |
| 102 | 7024463 | 1 | Panel, Console | |
| 103 | 7024469 | 1 | Switch with Lead | |
| 104 | 7024470 | 1 | Knob | |
| 105 | 7024471 | 1 | Knob | |
| 106 | 7024472 | 1 | Receptacle with Leads and Plugs | |
| 107 | 7024473 | 2 | Receptacle, Twistlock Female | |
| 108 | 7024474 | 2 | Insulator | |
| 109 | 7024475 | 2 | O-Ring | |
| 110 | 7027777 | 1 | Nameplate | |
| 111 | 7027779 | 1 | Circuit Card Assembly (Process Control) | |
| 112 | 7024478 | 2 | Nut | |
| 113 | 7027778 | 1 | Circuit Card Assembly (Operator Interface) | |
| 201 | 7024462 | 1 | Panel, Rear | |
| 202 | 7027780 | 1 | Panel, Cover | |

## FIGURE 4-25. SKYWELDER LOCKING BRACKET INSTALLATION

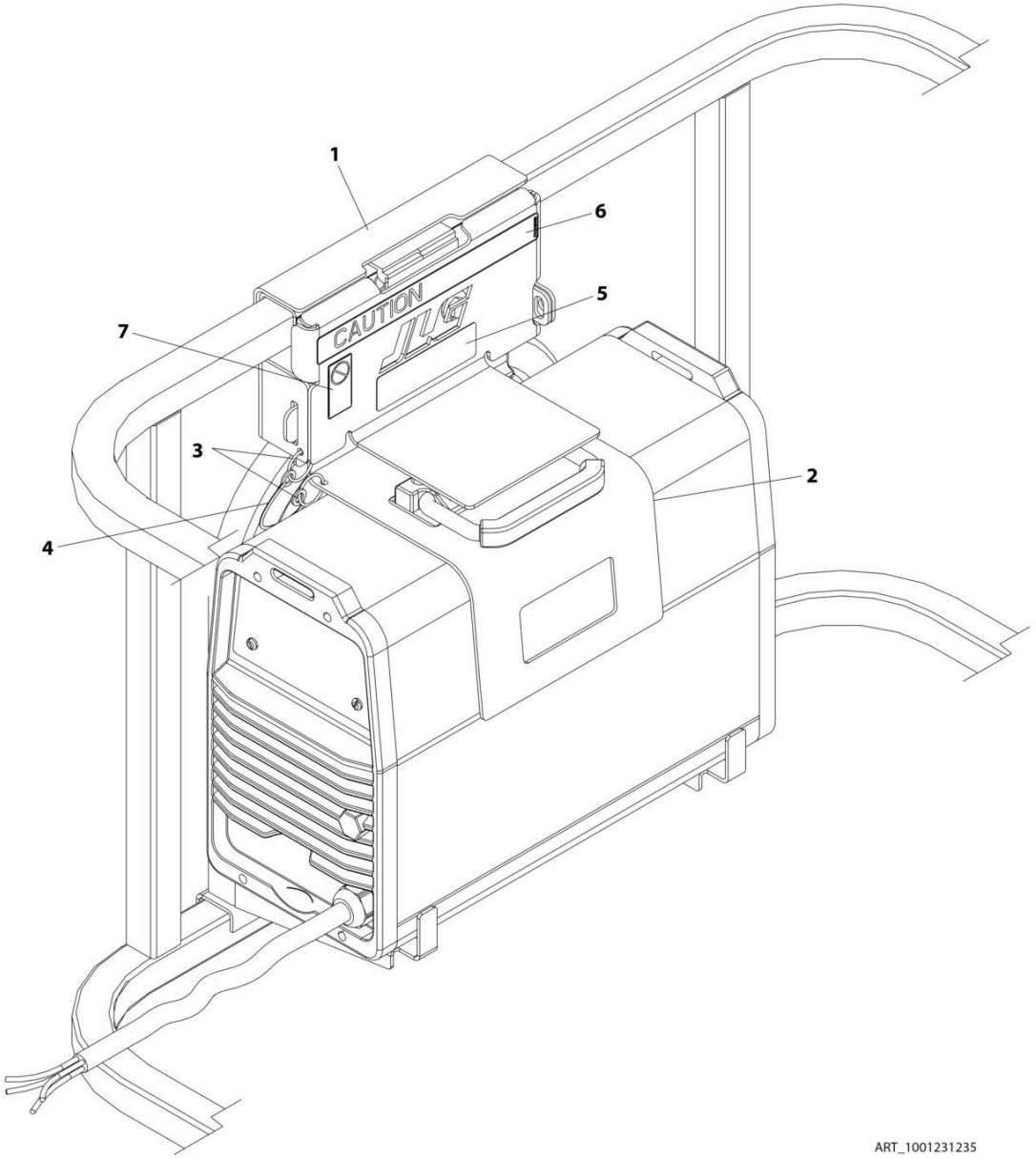

## FIGURE 4-25. SKYWELDER LOCKING BRACKET INSTALLATION

| ITEM | PART NUMBER | QTY | DESCRIPTION | REV |
|---|---|---|---|---|
| | 1001231235 | Ref | SKYWELDER LOCKING BRACKET INSTALLATION | A |
| 1 | 1001231180 | 1 | Bracket | |
| 2 | 1001231183 | 1 | Plate | |
| 3 | 3760170 | 2 | Ring | |
| 4 | 1060379 | 1 | Lanyard | |
| 5 | 1001228988 | 1 | Decal - Weight | |
| 6 | 1702868 | 1 | Decal - No Hands | |
| 7 | 1705305 | 1 | Decal - Weld Lead | |

## FIGURE 4-26. SKYCUTTER INSTALLATION

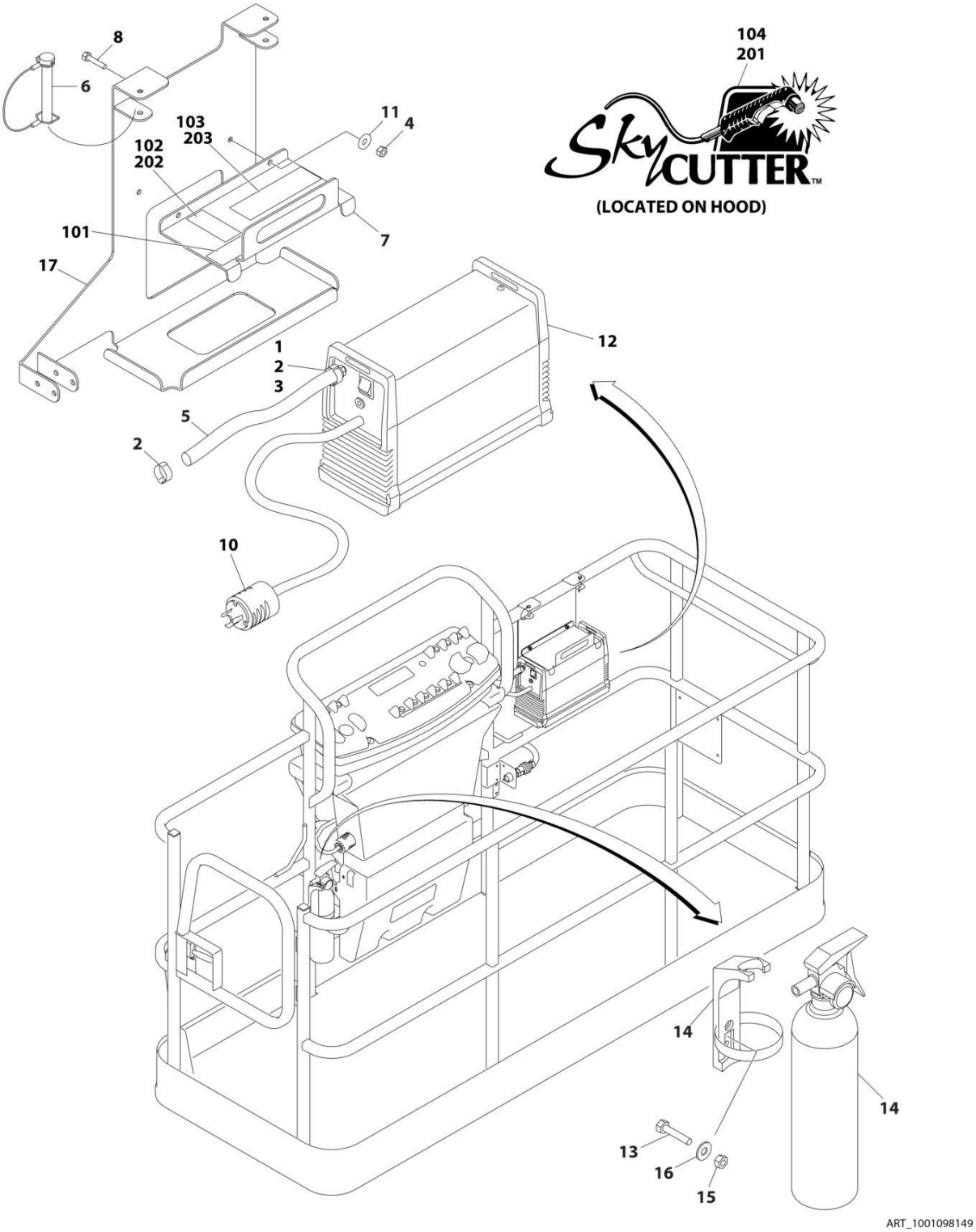

## FIGURE 4-26. SKYCUTTER INSTALLATION

| ITEM | PART NUMBER | QTY | DESCRIPTION | REV |
|---|---|---|---|---|
| | 1001098149 | Ref | **SKYCUTTER INSTALLATION** | D |
| | | Ref | **Note: ANSI Export Specs Only.** | |
| | | Ref | **Note: When replacing platform on machines with SkyCutter option, new bracket p/n 1001145405 must be purchased to accommodate SkyCutter components.** | |
| 1 | 0100020 | AR | Sealant | |
| 2 | 1320177 | 2 | Clamp, Hose | |
| 3 | 2180832 | 1 | Fitting, NPT/Barbed | |
| 4 | 3290605 | 2 | Nut M6 | |
| 5 | 2720160 | 3 ft/.9m | Hose | |
| 6 | 3421453 | 3 | Pin | |
| 7 | 3576799 | 1 | Plate, Hold-Down | |
| 8 | 4010608 | 2 | Screw M6 x 16 | |
| 10 | 4460971 | 1 | Plug, Twistlock | |
| 11 | 4811700 | 2 | Washer M6 | |
| 12 | 1001098012 | 1 | Plasma Cutter Assembly (See PLASMA CUTTER ASSEMBLY for Breakdown) | |
| 13 | 0630518 | 2 | Screw #10 x 3/4 | |
| 14 | 2030010 | 1 | Extinguisher, Fire | |
| 15 | 3311005 | 2 | Nut #10 | |
| 16 | 4751000 | 2 | Washer #10 | |
| 17 | 1001145405 | 1 | Support | |
| | 0272599 | Ref | **SKYCUTTER DECAL INSTALLATION (ANSI EXPORT SPECS)** | B |
| 101 | 1702868 | 1 | Decal - No Hands | |
| 102 | 1705305 | 1 | Decal - Weld Lead | |
| 103 | 1705466 | NLA | Decal - Weight (Use p/n 1001228988) **(SN B300000100 through B300002005)** | |
| 103 | 1001228988 | 1 | Decal - Weight **(SN B300002006 through B300005764, Excluding B300005620)** | |
| 104 | 1705490 | 2 | Decal - SkyCutter (Not Shown - Located on Hood) | |
| | 0272607 | Ref | **SKYCUTTER DECAL INSTALLATION (SPECS NOT DETERMINED)** | B |
| 201 | 1705490 | 2 | Decal - SkyCutter (Not Shown - Located on Hood) | |
| 202 | 1705305 | 1 | Decal - Weld Lead | |
| 203 | 1705466 | NLA | Decal - Weight (Use p/n 1001228988) **(SN B300000100 through B300002005)** | |
| 203 | 1001228988 | 1 | Decal - Weight **(SN B300002006 through B300005764, Excluding B300005620)** | |

## FIGURE 4-27. PLASMA CUTTER ASSEMBLY

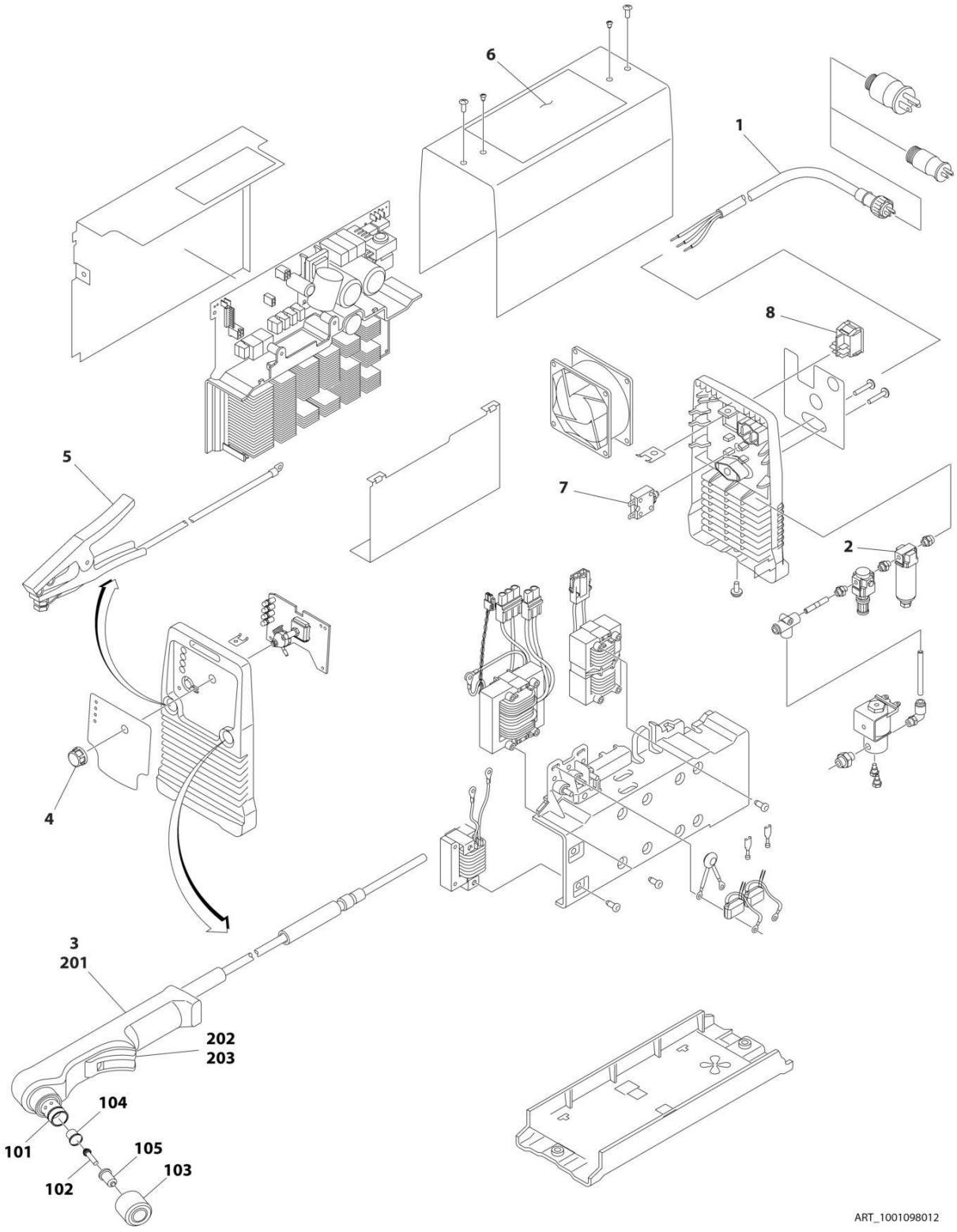

## FIGURE 4-27. PLASMA CUTTER ASSEMBLY

| ITEM | PART NUMBER | QTY | DESCRIPTION | REV |
|---|---|---|---|---|
| | 1001098012 | Ref | **PLASMA CUTTER ASSEMBLY** | A |
| | | Ref | **Note: For Other Components, contact your Miller Welder Dealer.** | |
| 1 | 70001424 | 1 | Cable, Power | |
| 1 | 70001425 | 1 | Decal - Voltage Warning | |
| 2 | 70001427 | 1 | Filter, Regulator | |
| 3 | 70001428 | 1 | Torch Assembly (See Items 101-203 for Breakdown) | |
| 4 | 7024471 | 1 | Knob | |
| 5 | 70001429 | 1 | Clamp with Cable | |
| 6 | 70001430 | 1 | Decal - Caution | |
| 7 | 70001431 | 1 | Breaker, Circuit | |
| 8 | 70001432 | 1 | Switch, Rocker | |
| | 70001428 | Ref | TORCH ASSEMBLY | |
| 101 | 7024530 | 1 | O-Ring | |
| 102 | 7024531 | 1 | Electrode | |
| 103 | 7024532 | 1 | Cup, Retaining | |
| 104 | 7024533 | 1 | Swirl Ring | |
| 105 | 7024534 | 1 | Tip | |
| 201 | 7024535 | 1 | Handle, Torch | |
| 202 | 7024536 | 1 | Switch | |
| 203 | 7024537 | 1 | Trigger | |

## FIGURE 4-28. PIPE RACKS INSTALLATION

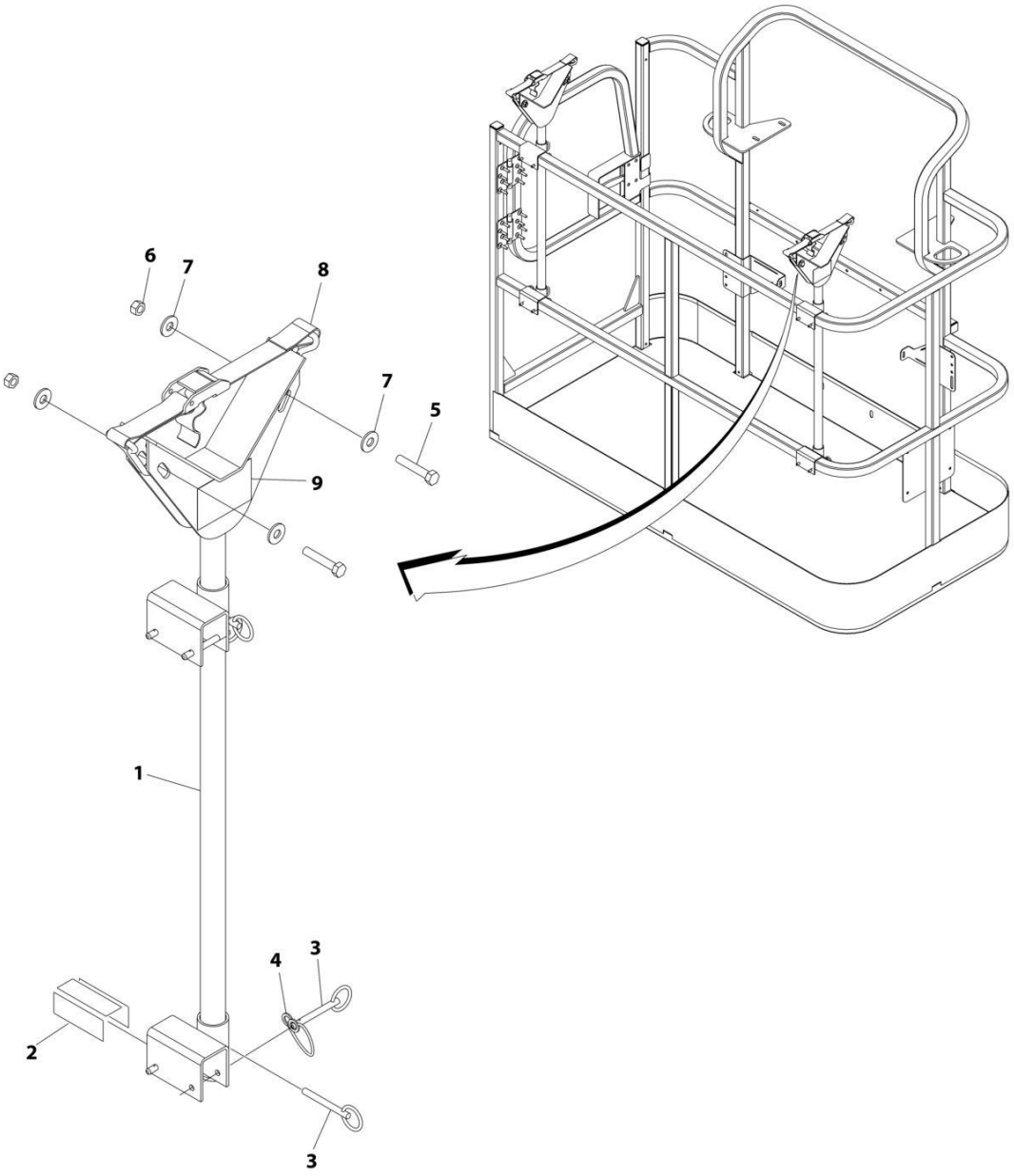

## FIGURE 4-28. PIPE RACKS INSTALLATION

| ITEM | PART NUMBER | QTY | DESCRIPTION | REV |
|---|---|---|---|---|
| | 0257728 | Ref | **PIPE RACK INSTALLATION (ANSI & CSA SPECS)** | 2/C |
| | 0274661 | Ref | **PIPE RACK INSTALLATION (AUSTRALIAN SPECS)** | 1/A |
| | | Ref | **Note: Available on ANSI, Australian & CSA Specs USA Built Machines Only** | |
| 1 | 4845582 | 2 | Rack, Pipe | |
| 2 | 4420062 | AR | Tape | |
| 3 | 3422661 | 10 | Pin | |
| 4 | 1060379 | 4 | Lanyard | |
| 5 | 0641514 | 4 | Bolt 5/16 x 1-3/4 | |
| 6 | 3311505 | 4 | Nut 5/16 | |
| 7 | 4751500 | 8 | Washer 5/16 | |
| 8 | 0480100 | 2 | Tie-Down | |
| 9 | 1703683 | 2 | Decal - Capacity (ANSI & CSA Specs) | |
| 9 | 1706510 | 1 | Decal - Capacity (Australian Specs) | |

# SECTION 5 - CYLINDER

## FIGURE 5-1. AXLE LOCKOUT CYLINDER ASSEMBLY

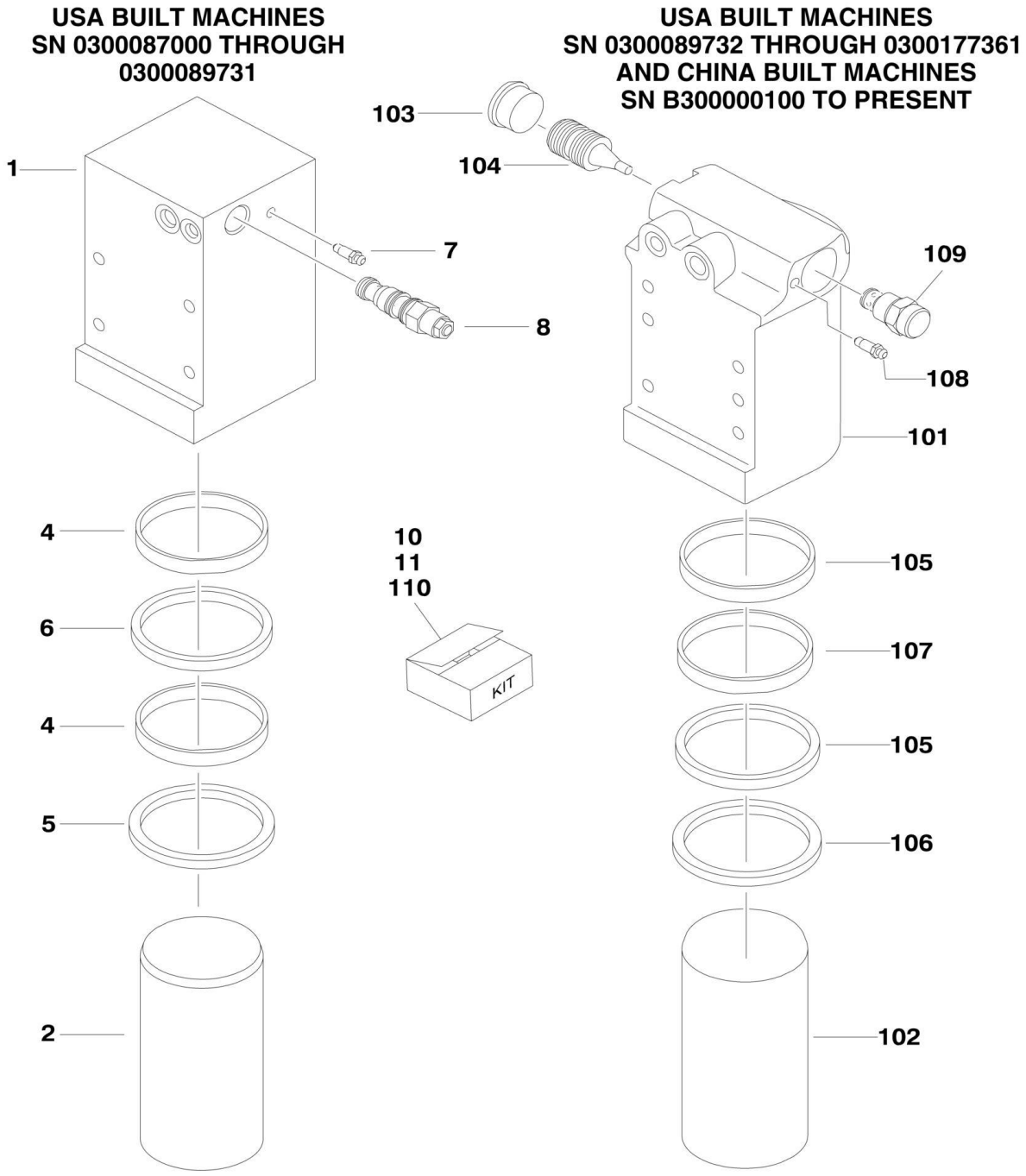

## FIGURE 5-1. AXLE LOCKOUT CYLINDER ASSEMBLY

| ITEM | PART NUMBER | QTY | DESCRIPTION | REV |
|---|---|---|---|---|
| | 1684280 | Ref | **AXLE LOCKOUT CYLINDER ASSEMBLY (USA BUILT MACHINES) (SN 0300087000 through 0300089731)** | G |
| | | Ref | **Note: Original Equipment components may have been replaced with Service Replacement components part. Identify p/n stamped on cylinder before ordering parts.** | |
| 1 | 1684289 | 1 | Barrel | |
| 2 | 1684290 | 1 | Rod | |
| 4 | See Note | NSS | Ring, Wear (Note: Use Item 10) | |
| 5 | See Note | NSS | Wiper (Note: Use Item 10) | |
| 6 | See Note | NSS | Seal, Rod (Note: Use Item 10) | |
| 7 | 4640858 | 1 | Bleeder | |
| 8 | 4641319 | 1 | Cartridge, Valve | |
| 8 | 7024879 | 1 | Seal Kit | |
| 10 | 2902266 | 1 | Seal Kit (Includes Items 4-6) | |
| 11 | 1001167359 | 1 | Cylinder Replacement Kit (Kit Replaces p/n 1684280 with p/n 1684465 Cylinder) | |
| | 1684465 | Ref | **AXLE LOCKOUT CYLINDER ASSEMBLY (USA BUILT MACHINES) (SN 0300089732 through 0300177361)** | J |
| | 1684465 | Ref | **AXLE LOCKOUT CYLINDER ASSEMBLY (CHINA BUILT MACHINES) (SN B300000100 through B300005764, Excluding B300005620)** | J |
| | | Ref | **Note: Original Equipment components may have been replaced with Service Replacement components part. Identify p/n stamped on cylinder before ordering parts.** | |
| 101 | 0370026 | 1 | Barrel | |
| 102 | 1684290 | 1 | Rod | |
| 103 | 2220890 | 1 | Plug | |
| 104 | 3480288 | 1 | Piston, Pilot | |
| 105 | See Note | NSS | Ring, Wear (Note: Use Item 110) | |
| 106 | See Note | NSS | Wiper (Note: Use Item 110) | |
| 107 | See Note | NSS | Seal, Rod (Note: Use Item 110) | |
| 108 | 4640858 | 1 | Bleeder | |
| 109 | 4641390 | 1 | Cartridge, Valve | |
| 109 | 7017496 | 1 | Seal Kit | |
| 110 | 2902266 | 1 | Seal Kit (Includes Items 4-6) | |

## FIGURE 5-2. LEVEL CYLINDER ASSEMBLY - PLATFORM SLAVE

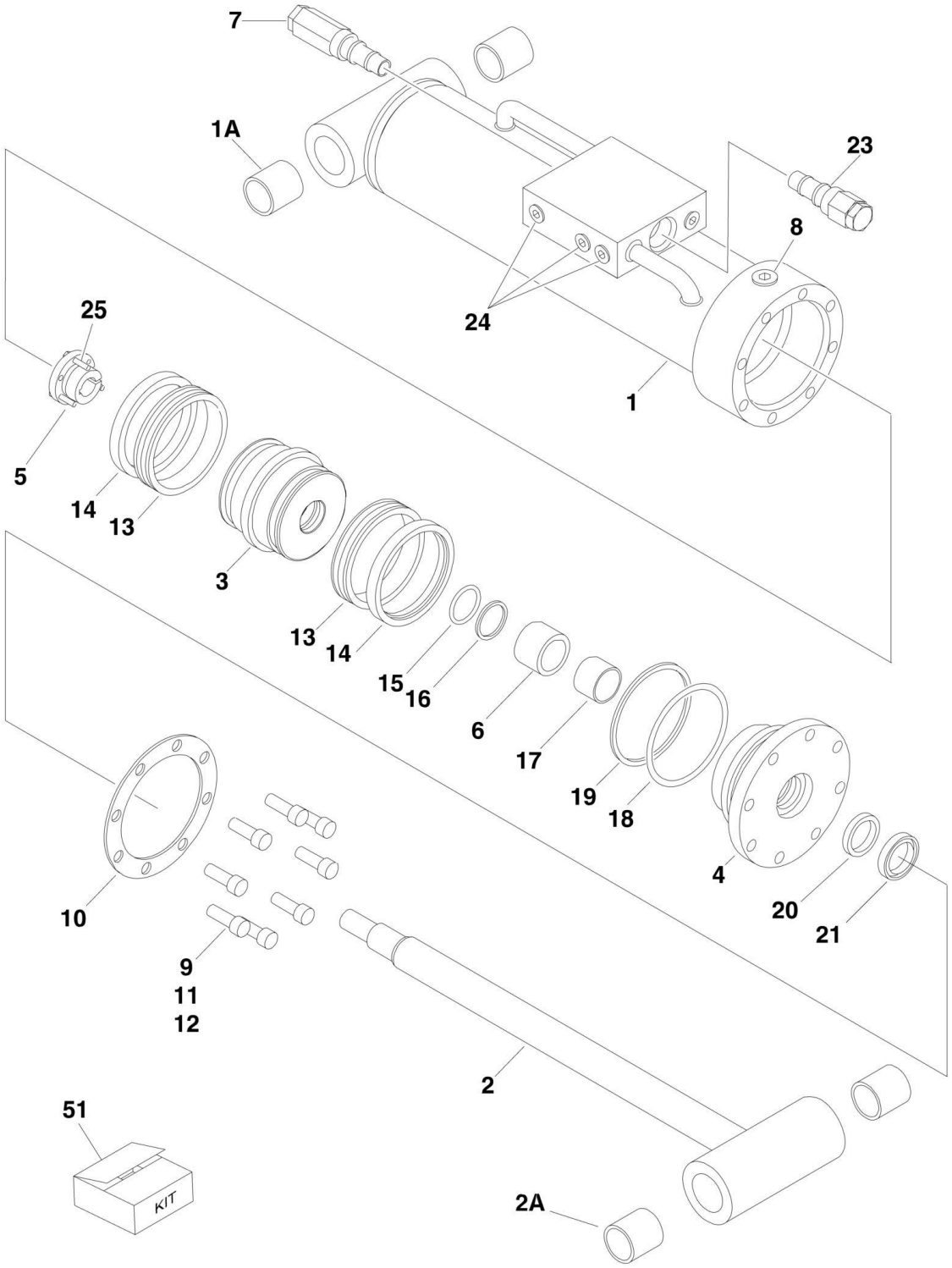

## FIGURE 5-2. LEVEL CYLINDER ASSEMBLY - PLATFORM SLAVE

| ITEM | PART NUMBER | QTY | DESCRIPTION | REV |
|---|---|---|---|---|
| | 1683415 | Ref | **PLATFORM LEVEL CYLINDER ASSEMBLY - 600A (SN 0300087000 through 0300177361)** | H |
| | 1683415 | Ref | **PLATFORM LEVEL CYLINDER ASSEMBLY - 600A (SN B300000100 through B300002696)** | H |
| | 1683418 | Ref | **PLATFORM LEVEL CYLINDER ASSEMBLY - 600AJ (WITHOUT ARCTIC PACKAGE) (SN 0300087000 through 0300177361)** | J |
| | 1683418 | Ref | **PLATFORM LEVEL CYLINDER ASSEMBLY - 600AJ (WITHOUT ARCTIC PACKAGE) (SN B300000100 through B300002696)** | J |
| | 1001138798 | Ref | **PLATFORM LEVEL CYLINDER ASSEMBLY - 600AJ (WITH ARCTIC PACKAGE) (SN 0300087000 through 0300177361)** | B |
| | | Ref | **Note: Original Equipment components may have been replaced with Service Replacement components part. Identify p/n stamped on cylinder before ordering parts.** | |
| 1 | 1683952 | 1 | Barrel Weldment (Note: Item 1A not included - Purchase Separately) | |
| 1A | | Ref | Bushing Options: | |
| 1A | 0961947 | 2 | Bushing 600A | |
| 1A | 0961951 | 2 | Bushing 600AJ | |
| 2 | | Ref | Rod Weldment Options: | |
| 2 | 1683976 | 1 | Bushing 600A (Note: Includes Item 2A) | |
| 2 | 1683963 | 1 | Bushing 600AJ (Note: Item 2A not included - Purchase Separately) | |
| 2A | | Ref | Bushing Options: | |
| 2A | 0961947 | 2 | Bushing 600A | |
| 2A | 0961951 | 2 | Bushing 600AJ | |
| 3 | | Ref | Piston Options: | |
| 3 | 3480210 | 1 | Piston 600A | |
| 3 | 3480188 | 1 | Piston 600AJ | |
| 4 | | Ref | Head Options: | |
| 4 | 1683053 | 1 | Head 600A | |
| 4 | 1683055 | 1 | Head 600AJ | |
| 5 | | Ref | Bushing, Tapered (Includes Item 25) Options: | |
| 5 | 0961893 | 1 | Bushing, Tapered 600A | |
| 5 | 0961894 | 1 | Bushing, Tapered 600AJ | |
| 6 | 4566468 | 1 | Spacer | |
| 7 | 4640509 | 1 | Cartridge, Valve | |
| 7 | 2900792 | 1 | Seal Kit - 4640509 Valve | |
| 8 | 2220885 | 1 | Plug, O-Ring | |
| 9 | | Ref | Capscrew, Socket Head Options: | |
| 9 | 3931516 | 8 | Capscrew 600A - Capscrew 5/16in-18NC x 1in | |
| 9 | 3931620 | 8 | Capscrew 600AJ - Capscrew 3/8in-16NC x 1-1/4in | |
| 10 | | Ref | Ring, Washer Options: | |
| 10 | 3760368 | 1 | Ring 600A | |
| 10 | 3760369 | 1 | Ring 600AJ | |
| 11 | 0100011 | AR | Compound, Locking | |
| 12 | 0100038 | AR | Primer, Locking | |
| 13 | See Note | NSS | Seal (Note: Use Item 51) | |
| 14 | See Note | NSS | Ring, Lock (Note: Use Item 51) | |
| 15 | See Note | NSS | O-Ring (Note: Use Item 51) | |
| 16 | See Note | NSS | Ring, Back-up (Note: Use Item 51) | |
| 17 | See Note | NSS | Ring, Wear (Note: Use Item 51) | |
| 18 | See Note | NSS | O-Ring (Note: Use Item 51) | |

# SECTION 5 - CYLINDER

| ITEM | PART NUMBER | QTY | DESCRIPTION | REV |
|---|---|---|---|---|
| 19 | See Note | NSS | Ring, Back-up (Note: Use Item 51) | |
| 20 | See Note | NSS | Seal, Rod (Note: Use Item 51) | |
| 21 | See Note | NSS | Wiper (Note: Use Item 51) | |
| 23 | 4640932 | 1 | Cartridge, Valve | |
| 23 | 7011112 | 1 | Seal Kit - 4640932 Valve | |
| 24 | 2220883 | 8 | Plug, O-Ring | |
| 25 | | Ref | Bolt Options: | |
| 25 | 0630534 | 3 | Bolt 600A - Bolt #10 - 24NC x 1in | |
| 25 | 0630535 | 3 | Bolt 600AJ - Bolt 1/4in - 20NC x 1-1/8in | |
| 51 | | Ref | Seal Kit Options (Includes Items 13-21): | |
| 51 | 2901303 | 1 | Seal Kit - 600A | |
| 51 | 2901301 | 1 | Seal Kit - 600AJ without Arctic Package | |
| 51 | 1001138796 | 1 | Seal Kit - 600AJ with Arctic Package | |

## FIGURE 5-3. LEVEL CYLINDER ASSEMBLY - PLATFORM SLAVE (600A) (SN B300002697 through B300005764)

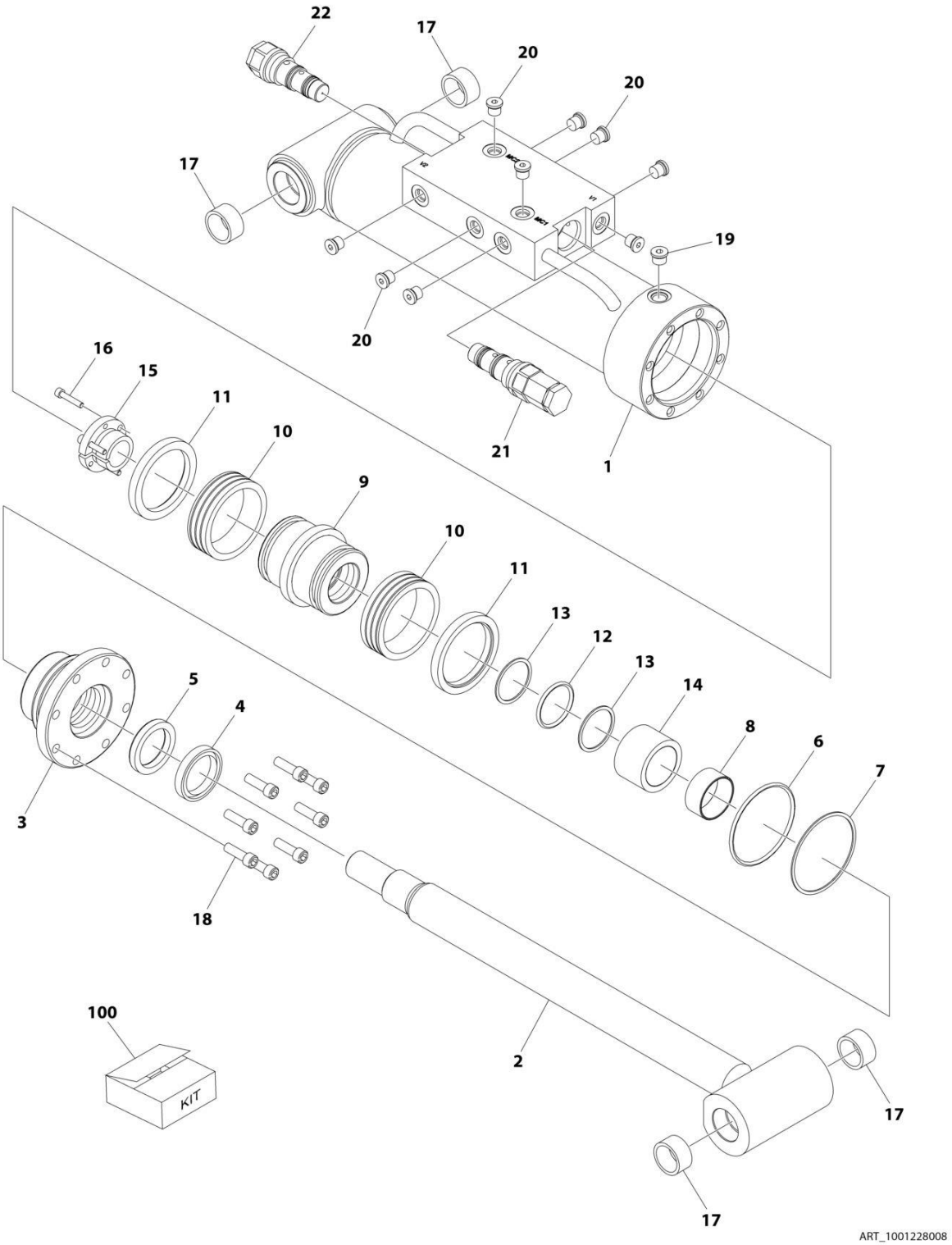

## FIGURE 5-3. LEVEL CYLINDER ASSEMBLY - PLATFORM SLAVE (600A) (SN B300002697 through B300005764)

| ITEM | PART NUMBER | QTY | DESCRIPTION | REV |
|---|---|---|---|---|
| | 1001228008 | Ref | LEVEL CYLINDER ASSEMBLY - PLATFORM SLAVE | C |
| | | Ref | Note: Original Cylinder may have been replaced with Service Replacement. Identify PN Stamped on Cylinder Before Ordering Parts. | |
| 1 | See Note | NSS | Barrel (Note: Use p/n 1001228008) | |
| 2 | 70006648 | 1 | Rod | |
| 3 | 70006649 | 1 | Head | |
| 4 | See Note | NSS | Wiper (Note: Use Item 100) | |
| 5 | See Note | NSS | Seal Rod (Note: Use Item 100) | |
| 6 | See Note | NSS | O-Ring (Note: Use Item 100) | |
| 7 | See Note | NSS | Ring, Back-up (Note: Use Item 100) | |
| 8 | See Note | NSS | Ring, Wear (Note: Use Item 100) | |
| 9 | 70006650 | 1 | Piston | |
| 10 | See Note | NSS | Seal (Note: Use Item 100) | |
| 11 | See Note | NSS | Ring, Lock (Note: Use Item 100) | |
| 12 | See Note | NSS | O-Ring (Note: Use Item 100) | |
| 13 | See Note | NSS | Ring, Back-up (Note: Use Item 100) | |
| 14 | 70006651 | 1 | Spacer | |
| 15 | 0961893 | 1 | Bushing, Tapered | |
| 16 | 0630534 | 3 | Bolt #10 x 1 | |
| 17 | 0961947 | 4 | Bushing | |
| 18 | 3931516 | 8 | Capscrew, Socket Head | |
| 19 | 2220885 | AR | Plug, O-Ring | |
| 20 | 2220883 | 10 | Plug, O-Ring | |
| 21 | 4640932 | 1 | Cartridge, Valve | |
| 21 | 7011112 | 1 | Seal Kit - 4640932 Valve | |
| 22 | 4640509 | 1 | Cartridge, Valve | |
| 22 | 2900792 | 1 | Seal Kit - 4640509 Valve | |
| 100 | 2901303 | 1 | Seal Kit - 1001228008 Cylinder (Includes Items 4-8 & 10-13) | |

## FIGURE 5-4. LEVEL CYLINDER ASSEMBLY - PLATFORM SLAVE (600A) (SERVICE REPLACEMENT)

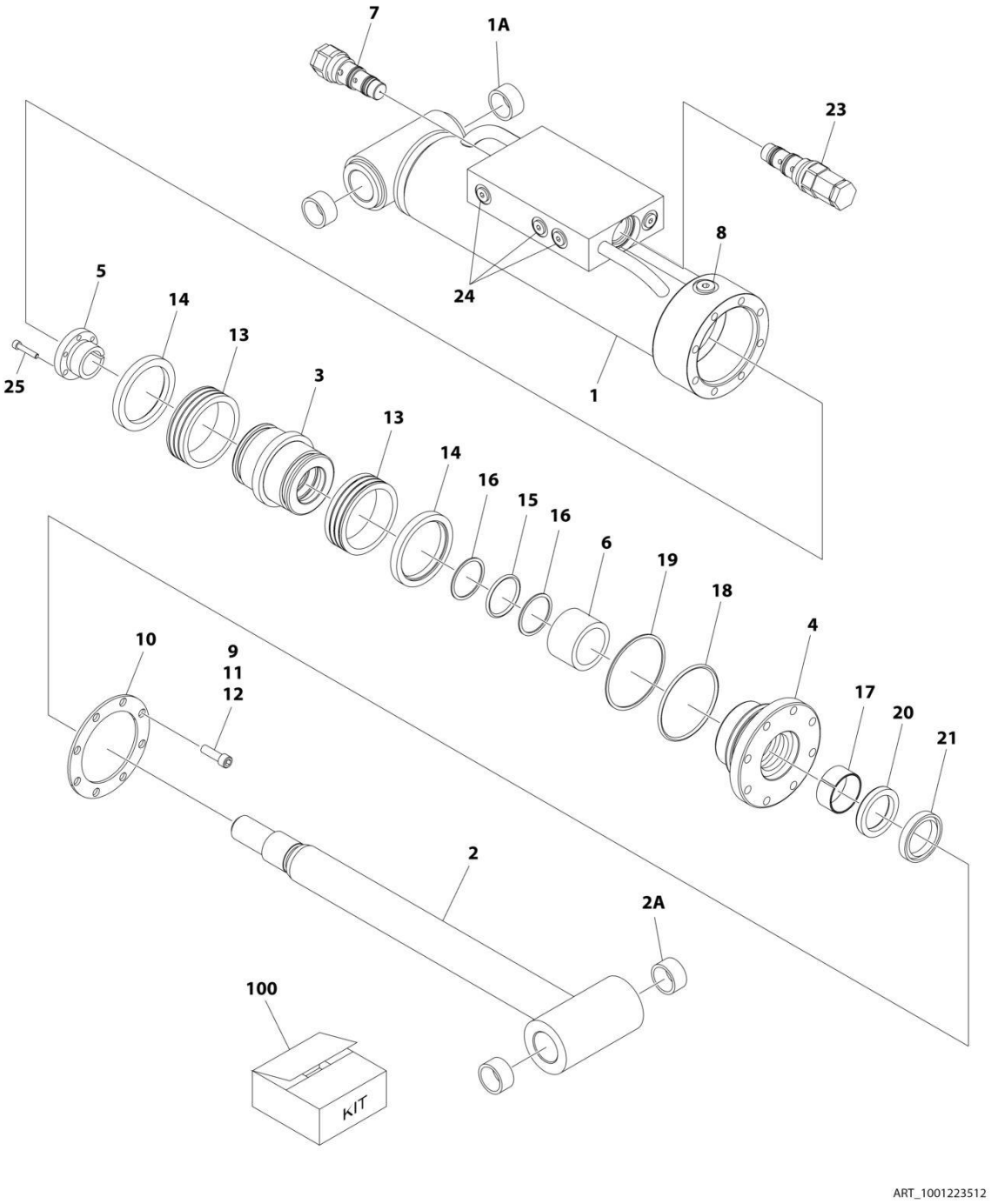

## FIGURE 5-4. LEVEL CYLINDER ASSEMBLY - PLATFORM SLAVE (600A) (SERVICE REPLACEMENT)

| ITEM | PART NUMBER | QTY | DESCRIPTION | REV |
|---|---|---|---|---|
| | 1001223512 | Ref | LEVEL CYLINDER ASSEMBLY | A |
| | | Ref | Note: Original Cylinder may have been replaced with Service Replacement. Identify PN Stamped on Cylinder Before Ordering Parts. | |
| 1 | 1001223511 | 1 | Barrel | |
| 1A | 0961947 | 2 | Bushing | |
| 2 | 1683976 | 1 | Rod | |
| 2A | 0961947 | 2 | Bushing | |
| 3 | 3480210 | 1 | Piston | |
| 4 | 1683053 | 1 | Head | |
| 5 | 0961893 | 1 | Bushing, Tapered | |
| 6 | 4566468 | 1 | Spacer | |
| 7 | 4640509 | 1 | Cartridge, Valve | |
| 7 | 2900792 | 1 | Seal Kit - 4640509 Valve | |
| 8 | 2220885 | 1 | Plug, O-Ring | |
| 9 | 3931516 | 8 | Capscrew, Socket Head | |
| 10 | 3760368 | 1 | Ring, Washer | |
| 11 | 0100011 | AR | Compound, Locking | |
| 12 | 0100038 | AR | Primer, Locking | |
| 13 | See Note | NSS | Seal (Note: Use Item 100) | |
| 14 | See Note | NSS | Ring, Lock (Note: Use Item 100) | |
| 15 | See Note | NSS | O-Ring (Note: Use Item 100) | |
| 16 | See Note | NSS | Ring, Back-up (Note: Use Item 100) | |
| 17 | See Note | NSS | Ring, Wear (Note: Use Item 100) | |
| 18 | See Note | NSS | O-Ring (Note: Use Item 100) | |
| 19 | See Note | NSS | Ring, Back-up (Note: Use Item 100) | |
| 20 | See Note | NSS | Seal, Rod (Note: Use Item 100) | |
| 21 | See Note | NSS | Wiper (Note: Use Item 100) | |
| 23 | 4640932 | 1 | Cartridge, Valve | |
| 23 | 7011112 | 1 | Seal Kit - 4640932 Valve | |
| 24 | 2220883 | 8 | Plug, O-Ring | |
| 25 | 0630534 | 3 | Bolt #10 x 1 | |
| 100 | 2901303 | 1 | Seal Kit (Includes Items 13-21) | |

## FIGURE 5-5. LEVEL CYLINDER ASSEMBLY - PLATFORM SLAVE (600AJ) (SN B300002697 through B300002948)

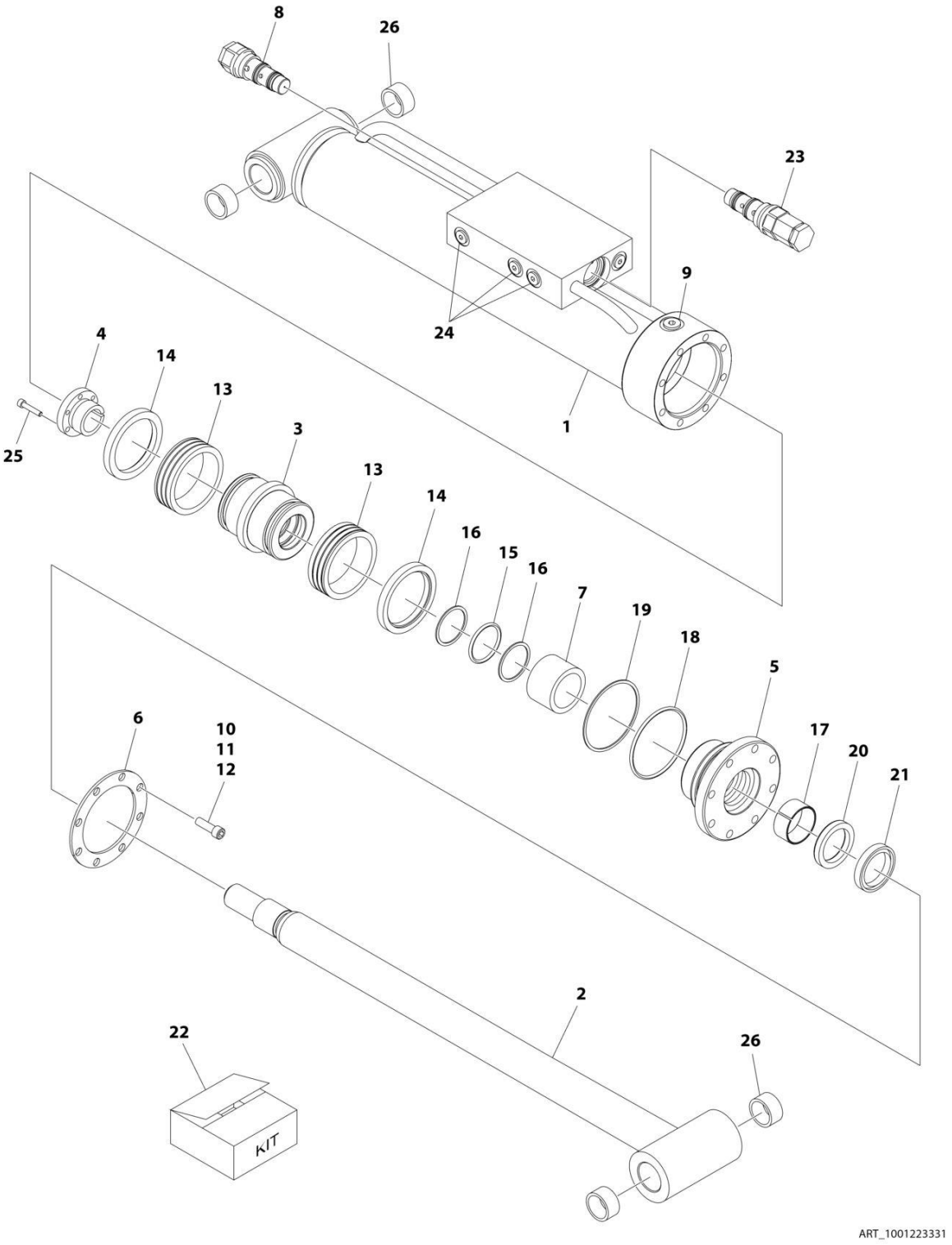

## FIGURE 5-5. LEVEL CYLINDER ASSEMBLY - PLATFORM SLAVE (600AJ) (SN B300002697 through B300002948)

| ITEM | PART NUMBER | QTY | DESCRIPTION | REV |
|---|---|---|---|---|
| | 1001223331 | Ref | LEVEL CYLINDER ASSEMBLY | B |
| | | Ref | Note: Original Cylinder may have been replaced with Service Replacement. Identify PN Stamped on Cylinder Before Ordering Parts. | |
| 1 | 1001223332 | 1 | Barrel | |
| 2 | 1683963 | 1 | Rod | |
| 3 | 3480188 | 1 | Head | |
| 4 | 0961894 | 1 | Bushing, Tapered | |
| 5 | 1683055 | 1 | Head | |
| 6 | 3760369 | 1 | Ring, Washer | |
| 7 | 4566468 | 1 | Spacer | |
| 8 | 4640509 | 1 | Cartridge, Valve | |
| 8 | 2900792 | 1 | Seal Kit - 4640509 Valve | |
| 9 | 2220885 | 1 | Plug | |
| 10 | 3931620 | 8 | Capscrew 3/8 x 1-1/4 | |
| 11 | 0100011 | AR | Compound, Locking | |
| 12 | 0100038 | AR | Primer, Locking | |
| 13 | See Note | NSS | Seal (Note: Use Item 22) | |
| 14 | See Note | NSS | Ring, Lock (Note: Use Item 22) | |
| 15 | See Note | NSS | O-Ring (Note: Use Item 22) | |
| 16 | See Note | NSS | Ring, Back-up (Note: Use Item 22) | |
| 17 | See Note | NSS | Ring, Wear (Note: Use Item 22) | |
| 18 | See Note | NSS | O-Ring (Note: Use Item 22) | |
| 19 | See Note | NSS | Ring, Back-up (Note: Use Item 22) | |
| 20 | See Note | NSS | Seal (Note: Use Item 22) | |
| 21 | See Note | NSS | Wiper (Note: Use Item 22) | |
| 22 | 2901301 | 1 | Seal Kit (Includes Items 13-21) | |
| 23 | 4640932 | 1 | Cartridge, Valve | |
| 23 | 7011112 | 1 | Seal Kit - 4640932 Valve | |
| 24 | 2220883 | 8 | Plug | |
| 25 | 0630535 | 3 | Bolt 1/4 x 1-1/8 | |
| 26 | 0961951 | 4 | Bushing | |

## FIGURE 5-6. LEVEL CYLINDER ASSEMBLY - PLATFORM SLAVE (600AJ) (SN B300002949 through B300005764)

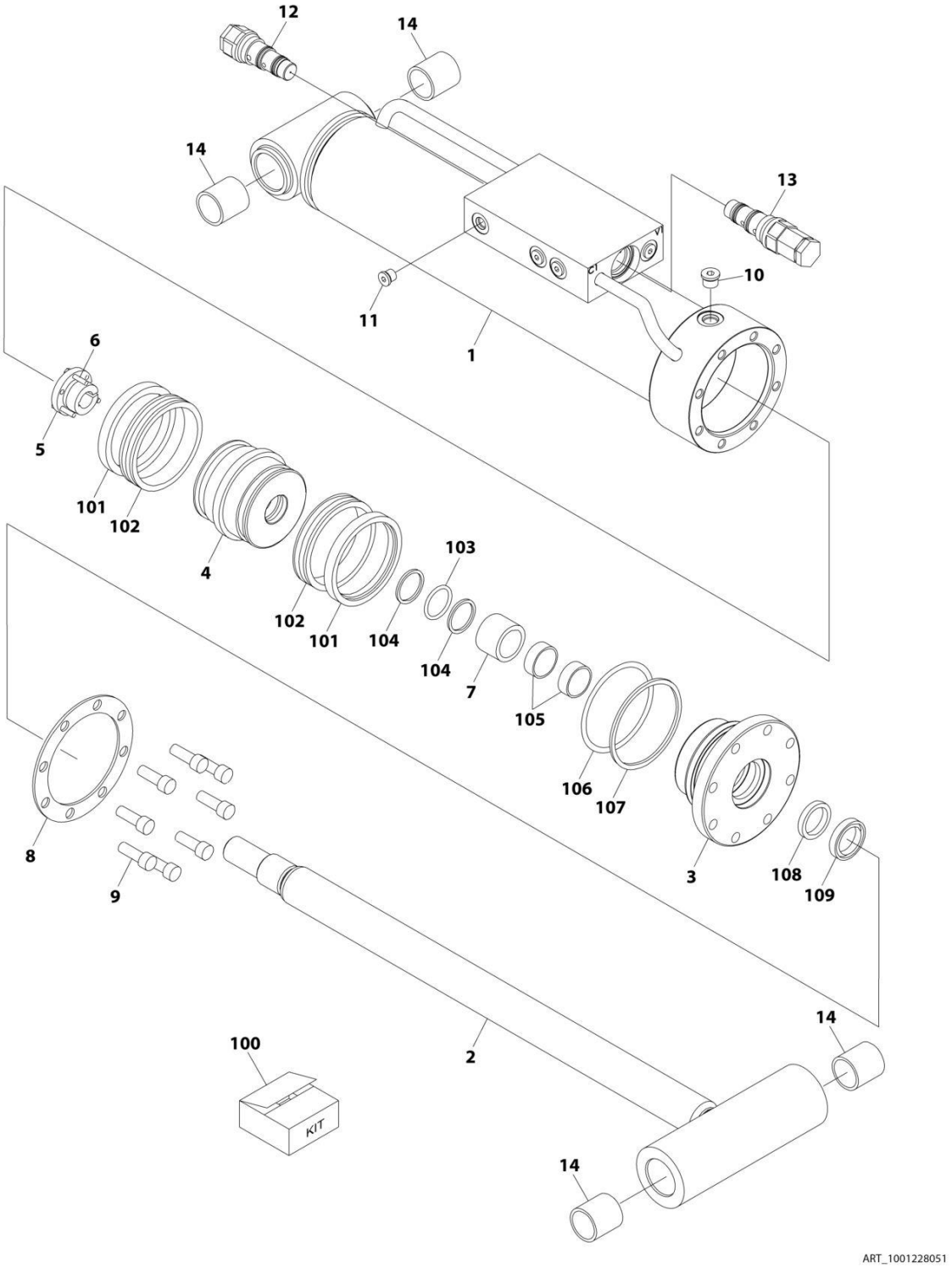

## FIGURE 5-6. LEVEL CYLINDER ASSEMBLY - PLATFORM SLAVE (600AJ) (SN B300002949 through B300005764)

| ITEM | PART NUMBER | QTY | DESCRIPTION | REV |
|---|---|---|---|---|
| | 1001228051 | Ref | LEVEL CYLINDER ASSEMBLY | A |
| | | Ref | Note: Original Cylinder May Have Been Replaced with Service Replacement. Identify PN Stamped on Cylinder Before Ordering Parts. | |
| 1 | See Note | NSS | Barrel (Note: Use p/n 1001228051) | |
| 2 | 70006823 | 1 | Rod | |
| 3 | 70006446 | 1 | Head | |
| 4 | 70006445 | 1 | Piston | |
| 5 | 70006444 | 1 | Bushing, Tapered | |
| 6 | 0630535 | 3 | Bolt 1/4 x 1-1/8 | |
| 7 | 70006443 | 1 | Spacer | |
| 8 | 70006822 | 1 | Ring, Washer | |
| 9 | 3931620 | 8 | Capscrew 3/8 x 1-1/4 | |
| 10 | 2220885 | 1 | Plug, O-Ring | |
| 11 | 2220883 | 8 | Plug, O-Ring | |
| 12 | 4640509 | 1 | Cartridge, Valve | |
| 12 | 2900792 | 1 | Seal Kit - 4640509 Valve | |
| 13 | 4640932 | 1 | Cartridge, Valve | |
| 13 | 7011112 | 1 | Seal Kit - 4640932 Valve | |
| 14 | 0961951 | 4 | Bushing | |
| 100 | 1001138796 | 1 | Seal Kit - 1001228051 Cylinder (Includes Items 101-109) | |
| 101 | See Note | NSS | Ring, Lock (Note: Use Item 100) | |
| 102 | See Note | NSS | Seal (Note: Use Item 100) | |
| 103 | See Note | NSS | O-Ring (Note: Use Item 100) | |
| 104 | See Note | NSS | Ring, Back-up (Note: Use Item 100) | |
| 105 | See Note | NSS | Ring, Wear (Note: Use Item 100) | |
| 106 | See Note | NSS | O-Ring (Note: Use Item 100) | |
| 107 | See Note | NSS | Ring, Back-up (Note: Use Item 100) | |
| 108 | See Note | NSS | Seal, Rod (Note: Use Item 100) | |
| 109 | See Note | NSS | Wiper (Note: Use Item 100) | |

## FIGURE 5-7. LEVEL CYLINDER ASSEMBLY - PLATFORM SLAVE (600AJ WITH ARCTIC PACKAGE) (SERVICE REPLACEMENT)

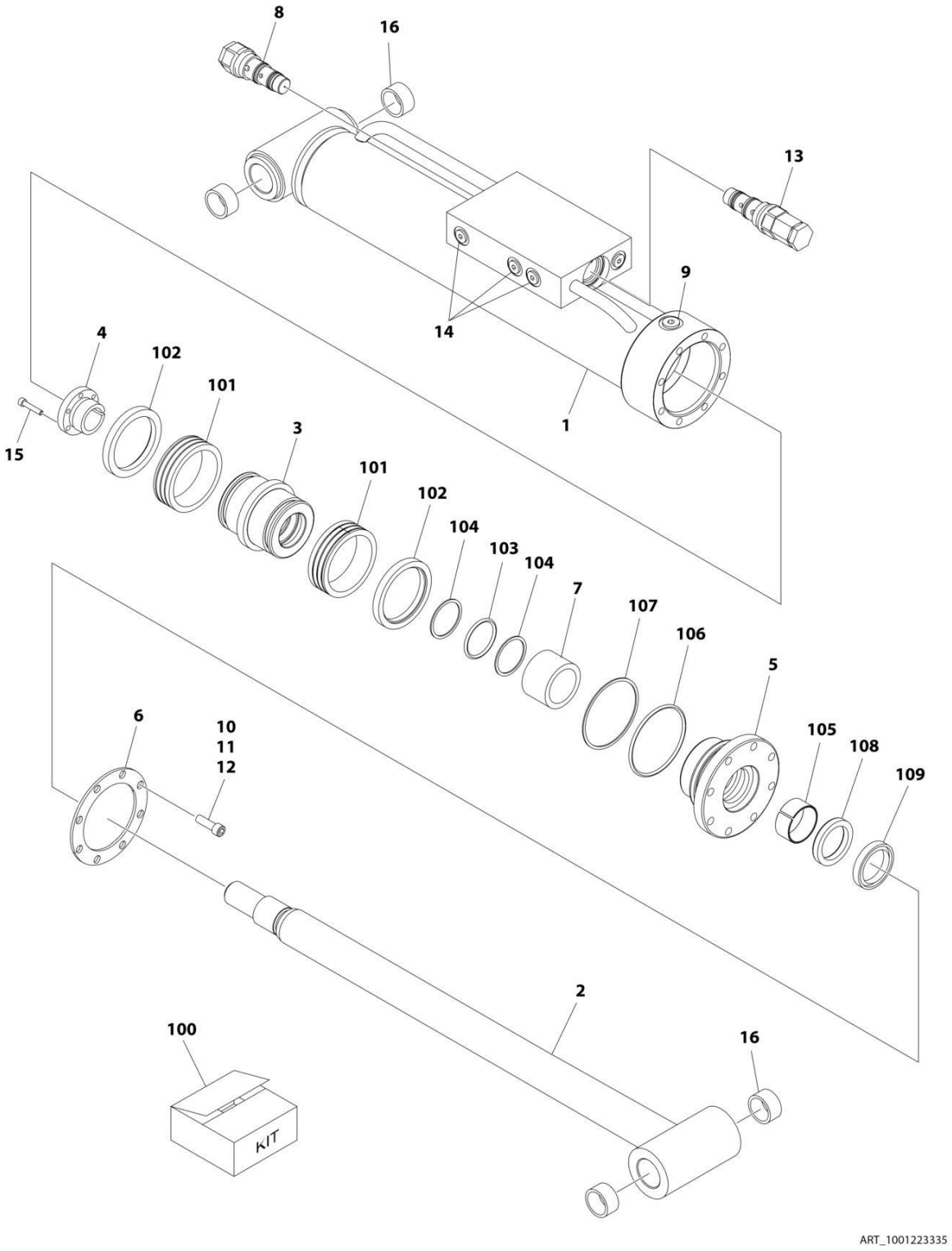

## FIGURE 5-7. LEVEL CYLINDER ASSEMBLY - PLATFORM SLAVE (600AJ WITH ARCTIC PACKAGE) (SERVICE REPLACEMENT)

| ITEM | PART NUMBER | QTY | DESCRIPTION | REV |
|---|---|---|---|---|
| | 1001223335 | Ref | LEVEL CYLINDER ASSEMBLY | A |
| | | Ref | Note: Original Cylinder may have been replaced with Service Replacement. Identify PN Stamped on Cylinder Before Ordering Parts. | |
| 1 | 1001223332 | 1 | Barrel | |
| 2 | 1683963 | 1 | Rod | |
| 3 | 3480188 | 1 | Head | |
| 4 | 0961894 | 1 | Bushing, Tapered | |
| 5 | 1683055 | 1 | Head | |
| 6 | 3760369 | 1 | Ring, Washer | |
| 7 | 4566468 | 1 | Spacer | |
| 8 | 4640509 | 1 | Cartridge, Valve | |
| 8 | 2900792 | 1 | Seal Kit - 4640509 Valve | |
| 9 | 2220885 | 1 | Plug | |
| 10 | 3931620 | 8 | Capscrew 3/8 x 1-1/4 | |
| 11 | 0100011 | AR | Compound, Locking | |
| 12 | 0100038 | AR | Primer, Locking | |
| 13 | 4640932 | 1 | Cartridge, Valve | |
| 13 | 7011112 | 1 | Seal Kit - 4640932 Valve | |
| 14 | 2220883 | 8 | Plug | |
| 15 | 0630535 | 3 | Bolt 1/4 x 1-1/8 | |
| 16 | 0961951 | 4 | Bushing | |
| 100 | 1001138796 | 1 | Seal Kit (Includes Items 101-109) | |
| 101 | See Note | NSS | Seal (Note: Use Item 100) | |
| 102 | See Note | NSS | Ring, Lock (Note: Use Item 100) | |
| 103 | See Note | NSS | O-Ring (Note: Use Item 100) | |
| 104 | See Note | NSS | Ring, Back-up (Note: Use Item 100) | |
| 105 | See Note | NSS | Ring, Wear (Note: Use Item 100) | |
| 106 | See Note | NSS | O-Ring (Note: Use Item 100) | |
| 107 | See Note | NSS | Ring, Back-up (Note: Use Item 100) | |
| 108 | See Note | NSS | Seal (Note: Use Item 100) | |
| 109 | See Note | NSS | Wiper (Note: Use Item 100) | |

**FIGURE 5-8. LEVEL CYLINDER ASSEMBLY - UPRIGHT (SN 0300087000 through 0300177361, SN B300000100 through B300002477)**

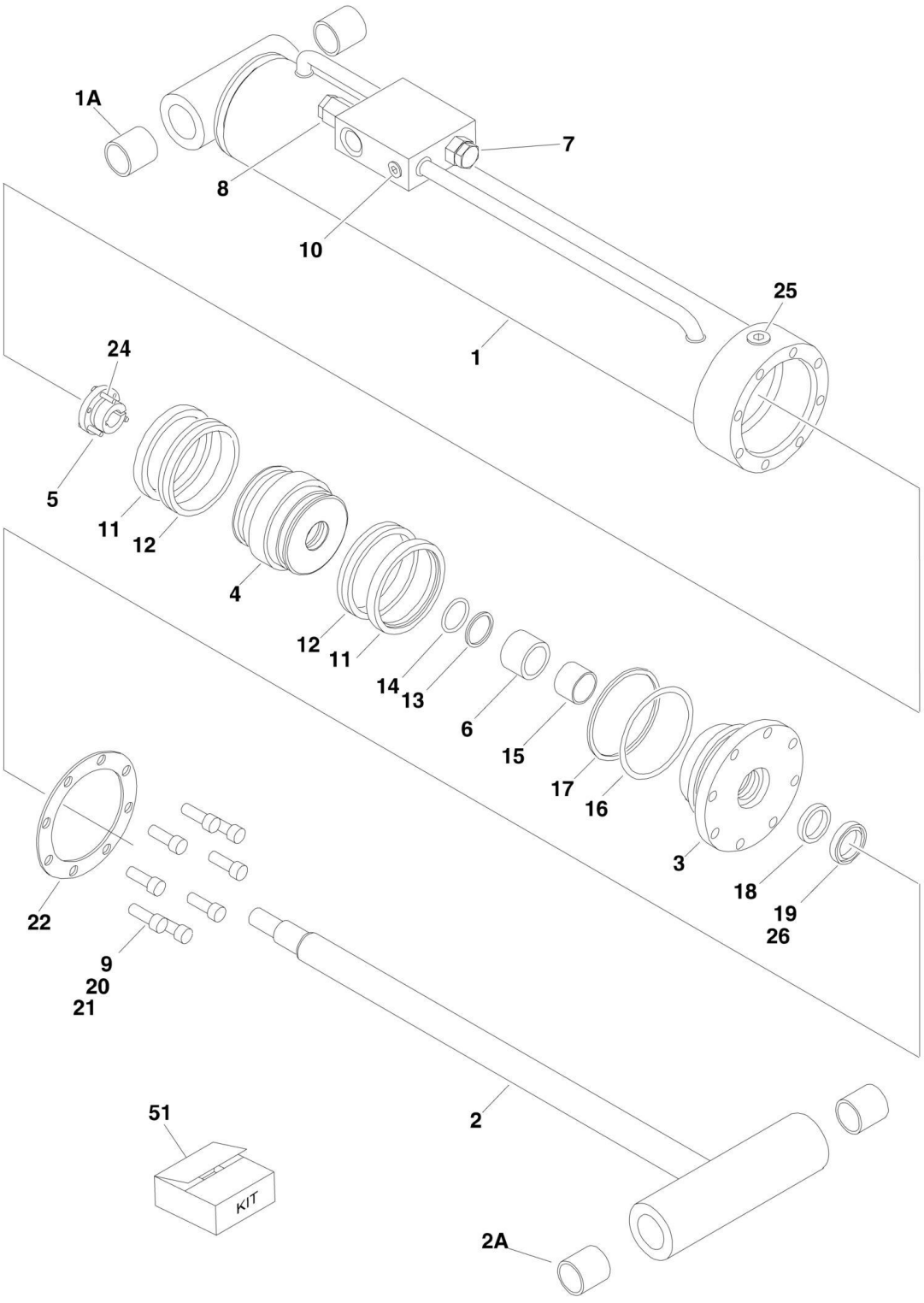

## FIGURE 5-8. LEVEL CYLINDER ASSEMBLY - UPRIGHT (SN 0300087000 through 0300177361, SN B300000100 through B300002477)

| ITEM | PART NUMBER | QTY | DESCRIPTION | REV |
|---|---|---|---|---|
| | | Ref | **UPRIGHT LEVEL CYLINDER ASSEMBLY** | |
| | 1683299 | Ref | **USA Built Machines (SN 0300087000 through 0300097637)** | H |
| | 1684498 | Ref | **USA Built Machines (SN 0300097638 through 0300177361)** | E |
| | 1684498 | Ref | **China Built Machines (SN B300000100 through B300002477)** | E |
| | | Ref | **Note: Original Equipment components may have been replaced with Service Replacement components part. Identify p/n stamped on cylinder before ordering parts.** | |
| 1 | | Ref | Barrel Weldment | |
| 1 | 1684014 | NLA | USA Built Machines (Use p/n 0370035) **(SN 0300087000 through 0300097637)** | |
| 1 | 0370035 | 1 | USA Built Machines **(SN 0300097638 through 0300177360)** | |
| 1 | 0370035 | 1 | China Built Machines **(SN B300000100 through B3000002477)** | |
| 1A | 0961949 | 2 | Bushing | |
| 2 | 1684015 | 1 | Rod Weldment | |
| 2A | 0961949 | 2 | Bushing | |
| 3 | 1683067 | 1 | Head | |
| 4 | 3480206 | 1 | Piston | |
| 5 | 0961898 | 1 | Bushing, Tapered (Use item #24 in place of supplied bolts) | |
| 6 | 4566501 | 1 | Spacer, Tube | |
| 7 | 4640509 | 1 | Cartridge, Valve | |
| 7 | 2900792 | 1 | Seal Kit - 4640509 Valve | |
| 8 | 4640605 | 1 | Cartridge, Valve | |
| 8 | 2900792 | 1 | Seal Kit - 4640605 Valve | |
| 9 | 3932032 | 8 | Bolt, Socket Head 5/16in-11NC x 2in | |
| 10 | 2220883 | 2 | Plug, O-Ring | |
| 11 | See Note | NSS | Ring, Lock (Note: Use Item 51) | |
| 12 | See Note | NSS | Seal, Hydrolock (Note: Use Item 51) | |
| 13 | See Note | NSS | O-Ring (Note: Use Item 51) | |
| 14 | See Note | NSS | Ring, Back-up (Note: Use Item 51) | |
| 15 | See Note | NSS | Ring, Wear (Note: Use Item 51) | |
| 16 | See Note | NSS | O-Ring (Note: Use Item 51) | |
| 17 | See Note | NSS | Ring, Back-up (Note: Use Item 51) | |
| 18 | See Note | NSS | Seal, Rod (Note: Use Item 51) | |
| 19 | See Note | NSS | Wiper (Note: Use Item 51) | |
| 20 | 0100011 | AR | Compound, Locking | |
| 21 | 0100038 | AR | Primer, Locking | |
| 22 | 3760372 | 1 | Washer, Ring | |
| 24 | 0630536 | 3 | Bolt 3/8in-16NC x 1-1/2in | |
| 25 | 2220886 | 1 | Plug, O-Ring | |
| 26 | 0100063 | AR | Adhesive | |
| 51 | 2901285 | 1 | Seal Kit (Includes Items 11-19) | |

## FIGURE 5-9. LEVEL CYLINDER ASSEMBLY- UPRIGHT (SN B300002478 through B300005764)

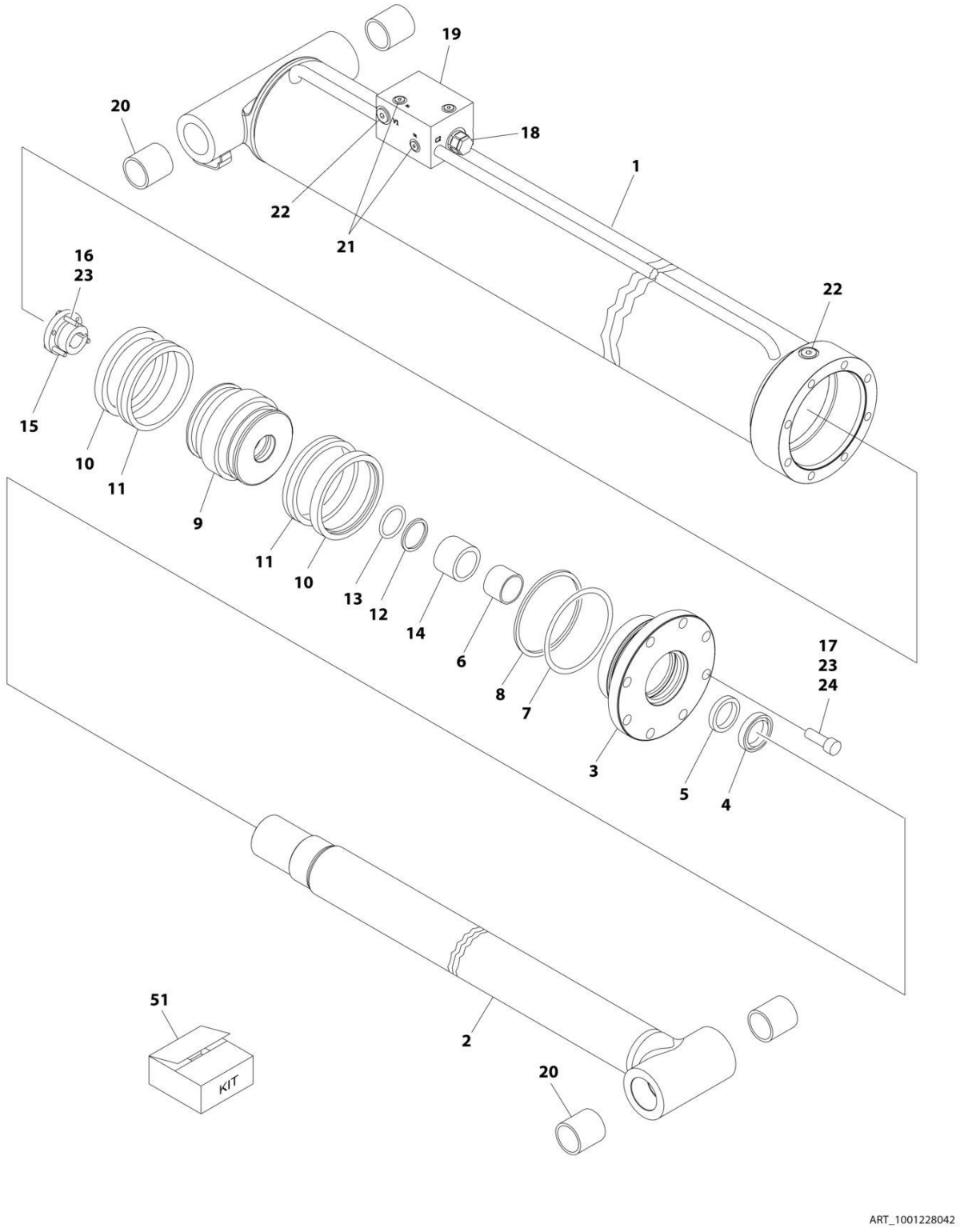

## FIGURE 5-9. LEVEL CYLINDER ASSEMBLY- UPRIGHT (SN B300002478 through B300005764)

| ITEM | PART NUMBER | QTY | DESCRIPTION | REV |
|---|---|---|---|---|
| | 1001228042 | Ref | UPRIGHT LEVEL CYLINDER ASSEMBLY | D |
| | | Ref | Note: Original Equipment components may have been replaced with Service Replacement components part. Identify p/n stamped on cylinder before ordering parts. | |
| 1 | See Note | NSS | Barrel (Note: Not Available for Purchase) | |
| 2 | 70006489 | 1 | Rod | |
| 3 | 70006488 | 1 | Head | |
| 4 | See Note | NSS | Wiper (Note: Use Item 51) | |
| 5 | See Note | NSS | Seal, Rod (Note: Use Item 51) | |
| 6 | See Note | NSS | Ring, Wear (Note: Use Item 51) | |
| 7 | See Note | NSS | O-Ring (Note: Use Item 51) | |
| 8 | See Note | NSS | Ring, Back-up (Note: Use Item 51) | |
| 9 | 70006487 | 1 | Piston | |
| 10 | See Note | NSS | Ring, Lock (Note: Use Item 51) | |
| 11 | See Note | NSS | Seal, Hydrolock (Note: Use Item 51) | |
| 12 | See Note | NSS | O-Ring (Note: Use Item 51) | |
| 13 | See Note | NSS | Ring, Back-up (Note: Use Item 51) | |
| 14 | 70006486 | 1 | Spacer, Tube | |
| 15 | 0961898 | 1 | Bushing, Tapered (Use Item #16 in place of supplied bolts) | |
| 16 | 0630536 | 3 | Bolt 3/8 x 1-1/2 | |
| 17 | 3932032 | 8 | Bolt, Socket Head 5/16 x 2 | |
| 18 | 4640509 | 1 | Cartridge, Valve | |
| 18 | 2900792 | 1 | Seal Kit - 4640509 Valve | |
| 19 | 4640605 | 1 | Cartridge, Valve | |
| 19 | 2900792 | 1 | Seal Kit - 4640605 Valve | |
| 20 | 0961949 | 4 | Bushing | |
| 21 | 2220883 | 5 | Plug, O-Ring | |
| 22 | 2220886 | AR | Plug, O-Ring | |
| 23 | 0100011 | AR | Compound, Locking | |
| 24 | 0100038 | AR | Primer, Locking | |
| 51 | 2901285 | 1 | Seal Kit (Includes Items 4-8 & 10-13) | |

## FIGURE 5-10. LIFT CYLINDER ASSEMBLY - ARTICULATING JIB - 600AJ (ORIGINAL EQUIPMENT) (SN 0300087000 through 0300177361, SN B300000100 through B300002658)

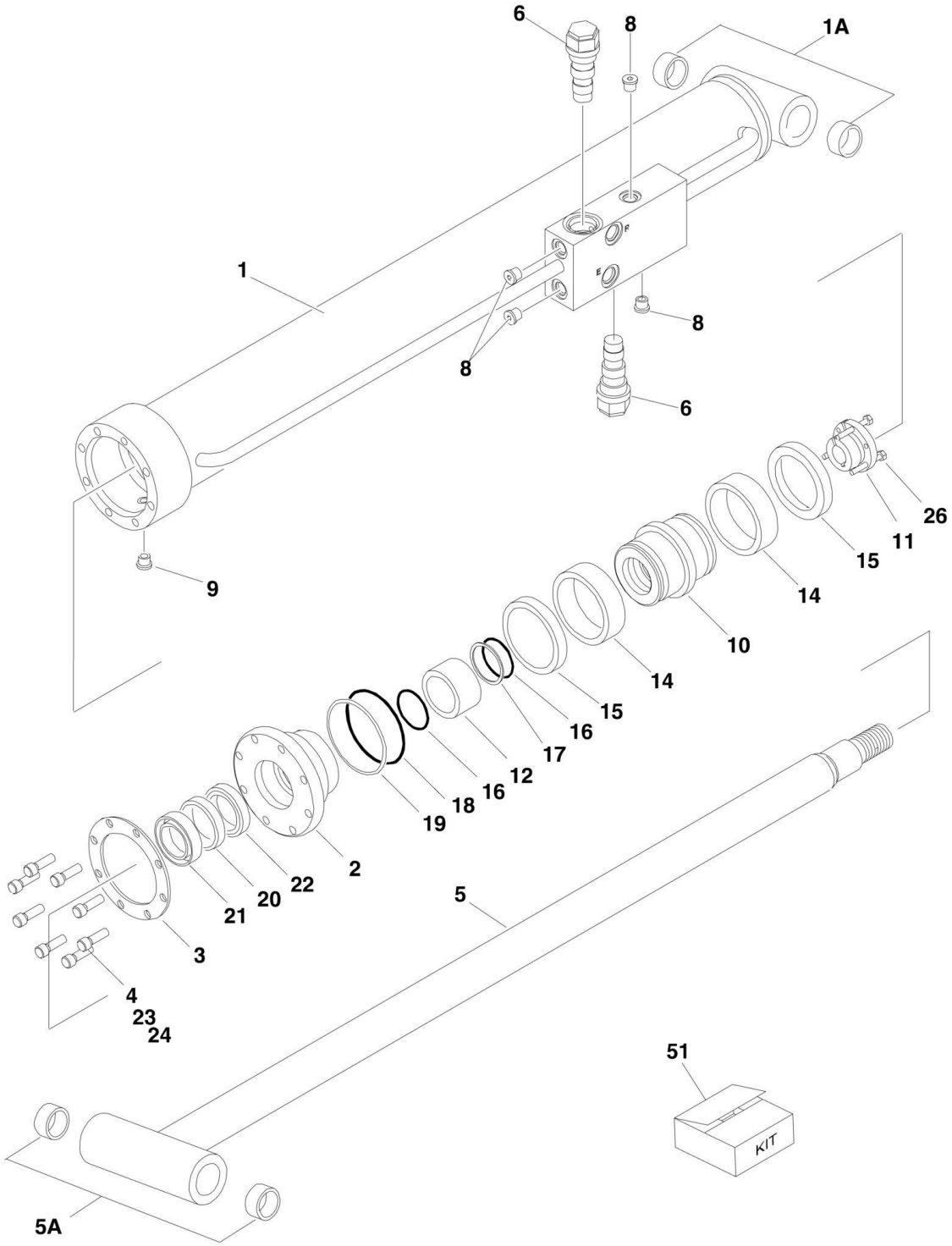

## FIGURE 5-10. LIFT CYLINDER ASSEMBLY - ARTICULATING JIB - 600AJ (ORIGINAL EQUIPMENT) (SN 0300087000 through 0300177361, SN B300000100 through B300002658)

| ITEM | PART NUMBER | QTY | DESCRIPTION | REV |
|---|---|---|---|---|
| | 1683609 | Ref | **LIFT CYLINDER ASSEMBLY - 600AJ (WITHOUT ARCTIC PACKAGE)** | I |
| | 1001138792 | Ref | **LIFT CYLINDER ASSEMBLY - 600AJ (WITH ARCTIC PACKAGE)** | A |
| | | Ref | **Note: Original Equipment components may have been replaced with Service Replacement components part. Identify p/n stamped on cylinder before ordering parts.** | |
| 1 | 1684089 | 1 | Barrel | |
| 1A | 0962336 | 2 | Bushing | |
| 2 | 1683053 | 1 | Head | |
| 3 | 3760368 | 1 | Ring, Washer | |
| 4 | 3931516 | 8 | Capscrew, Socket Head 5/16in-18NC x 1in | |
| 5 | 1684090 | 1 | Rod | |
| 5A | 0962336 | 2 | Bushing | |
| 6 | 4640509 | 2 | Cartridge, Valve | |
| 6 | 2900792 | 2 | Seal Kit - 4640509 Valve | |
| 8 | 2220883 | 2 | Plug, O-Ring #4 | |
| 9 | 2220885 | 1 | Plug, O-Ring #6 | |
| 10 | 3480210 | 1 | Piston | |
| 11 | 0961893 | 1 | Bushing, Tapered | |
| 12 | 4100100 | 1 | Spacer, Tube | |
| 14 | See Note | NSS | Seal (Note: Use Item 51) | |
| 15 | See Note | NSS | Ring, Lock (Note: Use Item 51) | |
| 16 | See Note | NSS | O-Ring (Note: Use Item 51) | |
| 17 | See Note | NSS | Ring, Back-up (Note: Use Item 51) | |
| 18 | See Note | NSS | O-Ring (Note: Use Item 51) | |
| 19 | See Note | NSS | Ring, Back-up (Note: Use Item 51) | |
| 20 | See Note | NSS | Seal, Rod (Note: Use Item 51) | |
| 21 | See Note | NSS | Wiper (Note: Use Item 51) | |
| 22 | See Note | NSS | Ring, Wear (Note: Use Item 51) | |
| 23 | 0100011 | AR | Compound, Locking | |
| 24 | 0100038 | AR | Primer, Locking | |
| 26 | 0630534 | 3 | Bolt #10 - 24NC x 1in | |
| 51 | | Ref | Seal Kit Options (Includes Items 14-22): | |
| 51 | 2901303 | 1 | Without Arctic Package | |
| 51 | 1001138795 | 1 | With Arctic Package | |

## FIGURE 5-11. LIFT CYLINDER ASSEMBLY - ARTICULATING JIB - 600AJ (ORIGINAL EQUIPMENT) (SN B300002659 through B300005764)

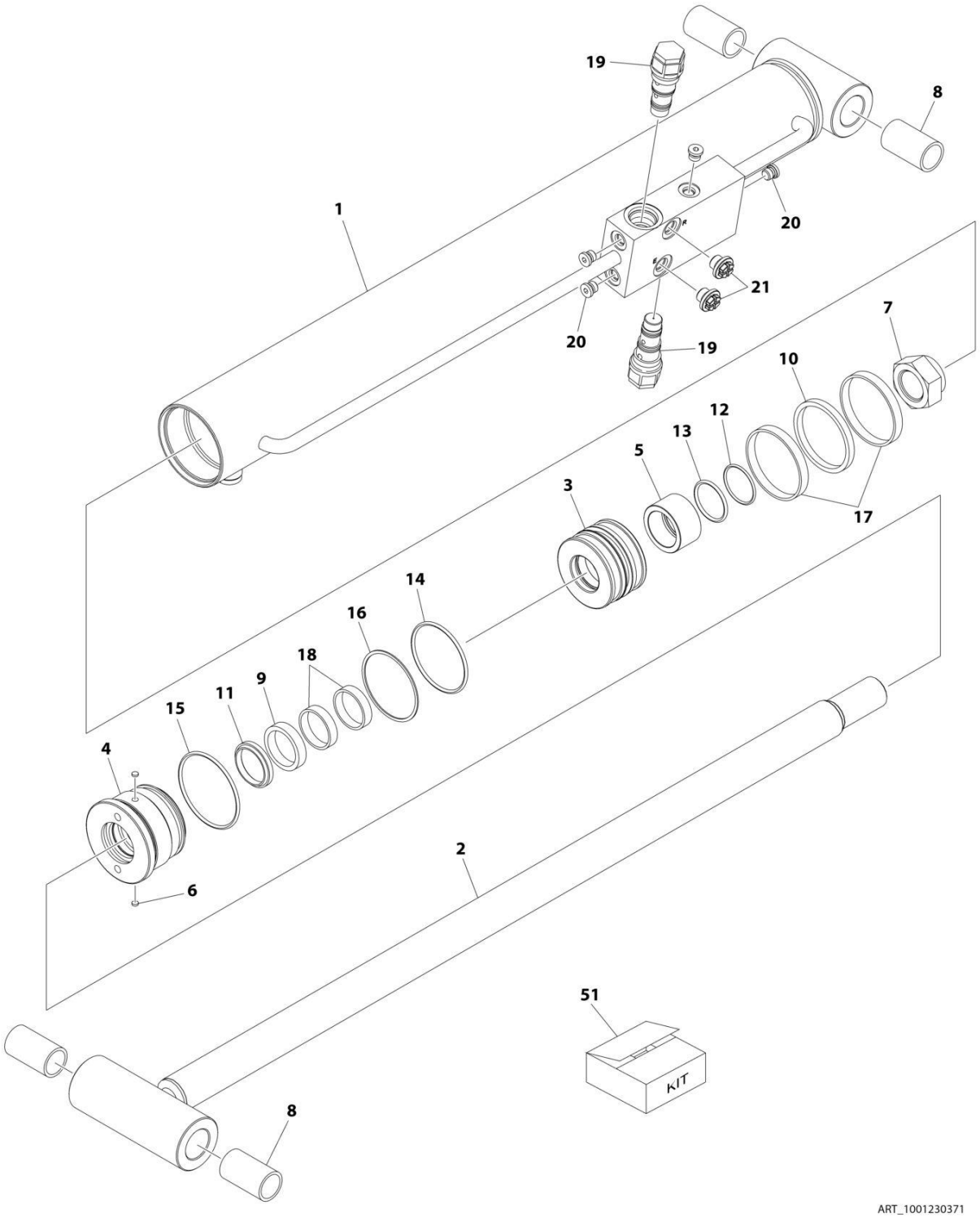

## FIGURE 5-11. LIFT CYLINDER ASSEMBLY - ARTICULATING JIB - 600AJ (ORIGINAL EQUIPMENT) (SN B300002659 through B300005764)

| ITEM | PART NUMBER | QTY | DESCRIPTION | REV |
|---|---|---|---|---|
| | 1001230371 | Ref | LIFT CYLINDER ASSEMBLY - JIB | A |
| | | Ref | Note: Original Cylinder may have been replaced with Service Replacement. Identify PN Stamped on Cylinder Before Ordering Parts. | |
| 1 | See Note | NSS | Barrel (Note : Purchase Complete Assembly) | |
| 2 | 70006930 | 1 | Rod | |
| 3 | 70006931 | 1 | Piston | |
| 4 | 70006932 | 1 | Head | |
| 5 | 70006933 | 1 | Spacer, Tube | |
| 6 | 70003636 | 1 | Lock, Insert | |
| 7 | 70006900 | 1 | Nut | |
| 8 | 0962336 | 4 | Bushing | |
| 9 | See Note | NSS | Seal, Rod (Note: Use Item 51) | |
| 10 | See Note | NSS | Seal, Piston (Note: Use Item 51) | |
| 11 | See Note | NSS | Wiper (Note: Use Item 51) | |
| 12 | See Note | NSS | O-Ring (Note: Use Item 51) | |
| 13 | See Note | NSS | O-Ring (Note: Use Item 51) | |
| 14 | See Note | NSS | O-Ring (Note: Use Item 51) | |
| 15 | See Note | NSS | O-Ring (Note: Use Item 51) | |
| 16 | See Note | NSS | Ring, Back-up (Note: Use Item 51) | |
| 17 | See Note | NSS | Ring, Wear (Note: Use Item 51) | |
| 18 | See Note | NSS | Ring, Wear (Note: Use Item 51) | |
| 19 | 4640509 | 1 | Catridge, Valve | |
| 19 | 2900792 | 1 | Seal Kit - 4640509 Valve | |
| 20 | 2220883 | 4 | Plug, O-Ring #4 | |
| 21 | 2220885 | 2 | Plug, O-Ring #6 | |
| 51 | 70006934 | 1 | Seal Kit (Includes Item 9-18) | |

## FIGURE 5-12. LIFT CYLINDER ASSEMBLY - ARTICULATING JIB - 600AJ (SERVICE REPLACEMENT) (SN 0300087000 through 0300177361)

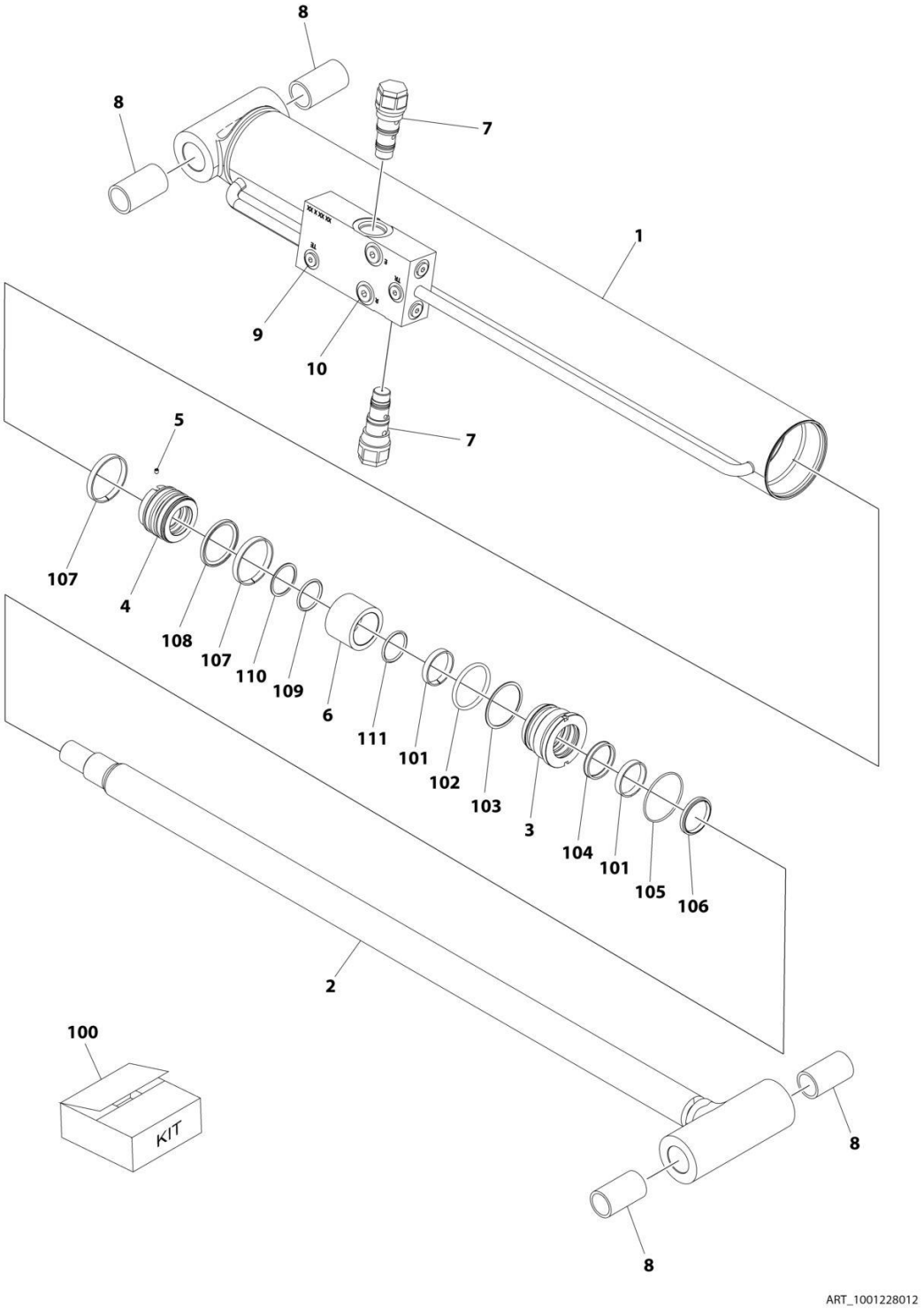

## FIGURE 5-12. LIFT CYLINDER ASSEMBLY - ARTICULATING JIB - 600AJ (SERVICE REPLACEMENT) (SN 0300087000 through 0300177361)

| ITEM | PART NUMBER | QTY | DESCRIPTION | REV |
|---|---|---|---|---|
| | 1001228012 | Ref | LIFT CYLINDER ASSEMBLY - JIB | C |
| | | Ref | Note: Original Cylinder May Have Been Replaced with Service Replacement. Identify PN Stamped on Cylinder Before Ordering Parts. | |
| 1 | See Note | NSS | Barrel (Note: Not Available for Purchase) | |
| 2 | 70006572 | 1 | Rod | |
| 3 | 70006571 | 1 | Head | |
| 4 | 70006570 | 1 | Piston | |
| 5 | 70023915 | 1 | Screw | |
| 6 | 70006569 | 1 | Spacer | |
| 7 | 4640509 | 2 | Cartridge, Valve | |
| 7 | 2900792 | 2 | Seal Kit - 4640509 Valve | |
| 8 | 0962336 | 4 | Bushing | |
| 9 | 2220883 | 6 | Plug, O-Ring | |
| 10 | 2220885 | 2 | Plug, O-Ring | |
| 100 | 70006568 | 1 | Seal Kit (Includes Items 101-111) | |
| 101 | See Note | NSS | Ring, Wear (Note: Use Item 100) | |
| 102 | See Note | NSS | O-Ring (Note: Use Item 100) | |
| 103 | See Note | NSS | Ring, Back-up (Note: Use Item 100) | |
| 104 | See Note | NSS | Seal, Rod (Note: Use Item 100) | |
| 105 | See Note | NSS | O-Ring (Note: Use Item 100) | |
| 106 | See Note | NSS | Wiper (Note: Use Item 100) | |
| 107 | See Note | NSS | Ring, Wear (Note: Use Item 100) | |
| 108 | See Note | NSS | Seal (Note: Use Item 100) | |
| 109 | See Note | NSS | O-Ring (Note: Use Item 100) | |
| 110 | See Note | NSS | Ring, Back-up (Note: Use Item 100) | |
| 111 | See Note | NSS | O-Ring (Note: Use Item 100) | |

## FIGURE 5-13. LIFT CYLINDER ASSEMBLY - ARTICULATING JIB - 600AJ (SERVICE REPLACEMENT) (SN 0300087000 through 0300177361)

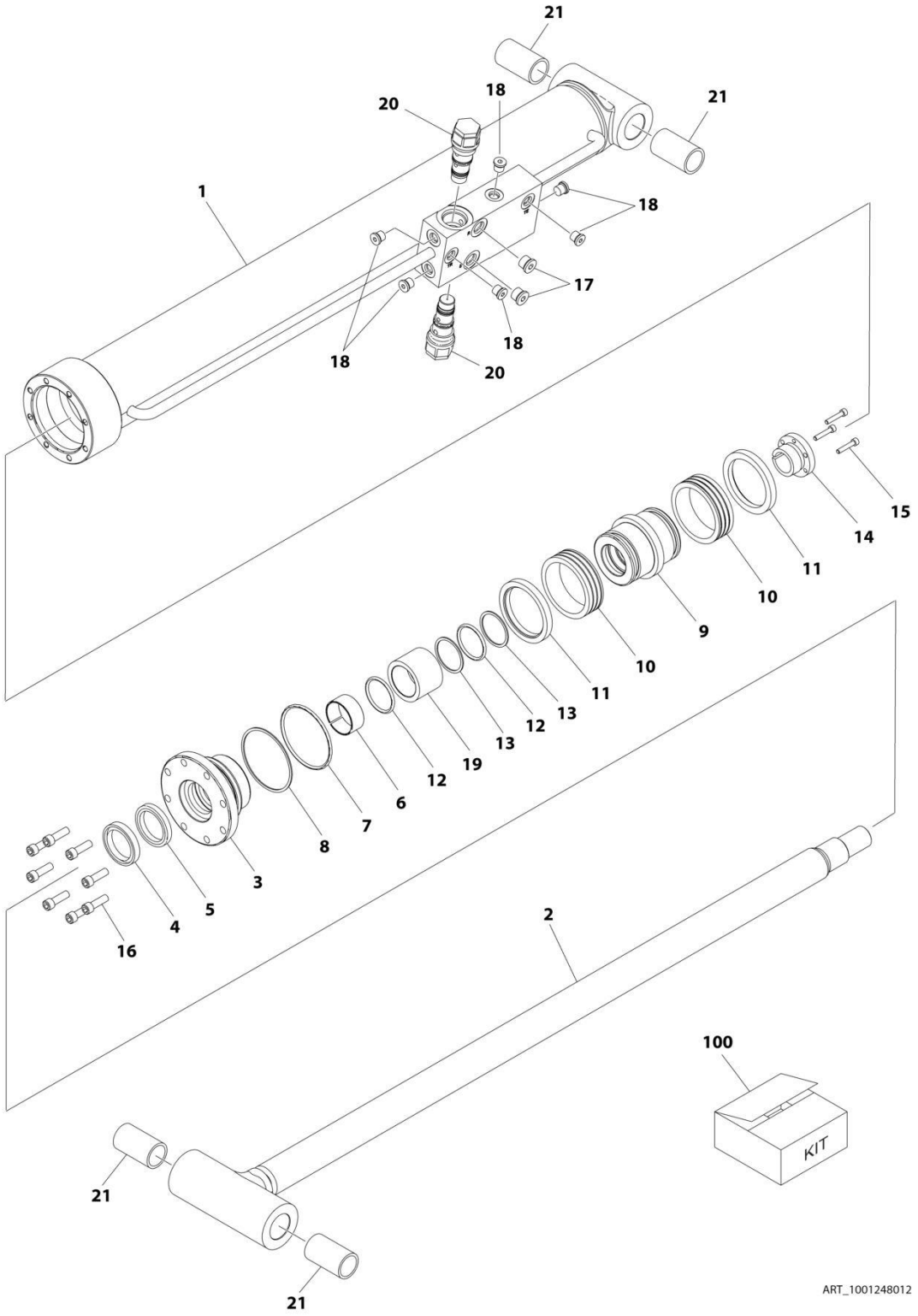

## FIGURE 5-13. LIFT CYLINDER ASSEMBLY - ARTICULATING JIB - 600AJ (SERVICE REPLACEMENT) (SN 0300087000 through 0300177361)

| ITEM | PART NUMBER | QTY | DESCRIPTION | REV |
|---|---|---|---|---|
| | 1001248012 | Ref | LIFT CYLINDER ASSEMBLY - JIB | B |
| | | Ref | Note: Original Cylinder May Have Been Replaced with Service Replacement. Identify PN Stamped on Cylinder Before Ordering Parts. | |
| 1 | See Note | NSS | Barrel (Note: Not Available for Purchase) | |
| 2 | 70006734 | 1 | Rod | |
| 3 | 70006649 | 1 | Head | |
| 4 | See Note | NSS | Wiper (Note: Use Item 100) | |
| 5 | See Note | NSS | Seal, Rod (Note: Use Item 100) | |
| 6 | See Note | NSS | Ring, Wear (Note: Use Item 100) | |
| 7 | See Note | NSS | O-Ring (Note: Use Item 100) | |
| 8 | See Note | NSS | Ring, Back-up (Note: Use Item 100) | |
| 9 | 70006650 | 1 | Piston | |
| 10 | See Note | NSS | Seal (Note: Use Item 100) | |
| 11 | See Note | NSS | Ring, Lock (Note: Use Item 100) | |
| 12 | See Note | NSS | O-Ring (Note: Use Item 100) | |
| 13 | See Note | NSS | Ring, Back-up (Note: Use Item 100) | |
| 14 | 0961893 | 1 | Bushing, Tapered | |
| 15 | 0630534 | 3 | Capscrew, Socket Head #10 x 1 | |
| 16 | 70006735 | 8 | Capscrew 5/16 | |
| 17 | 2220885 | 2 | Plug, O-Ring | |
| 18 | 2220883 | 6 | Plug, O-Ring | |
| 19 | 70006736 | 1 | Spacer | |
| 20 | 4640509 | 2 | Cartridge, Valve | |
| 20 | 2900792 | 2 | Seal Kit - 4640509 Valve | |
| 21 | 0962336 | 4 | Bushing | |
| 100 | 1001138795 | 1 | Seal Kit (Includes Items 4-8 & 10-13) | |

**FIGURE 5-14. LIFT CYLINDER ASSEMBLY - MAIN BOOM (SN 0300087000 through 0300177361, SN B300000100 through B300002477)**

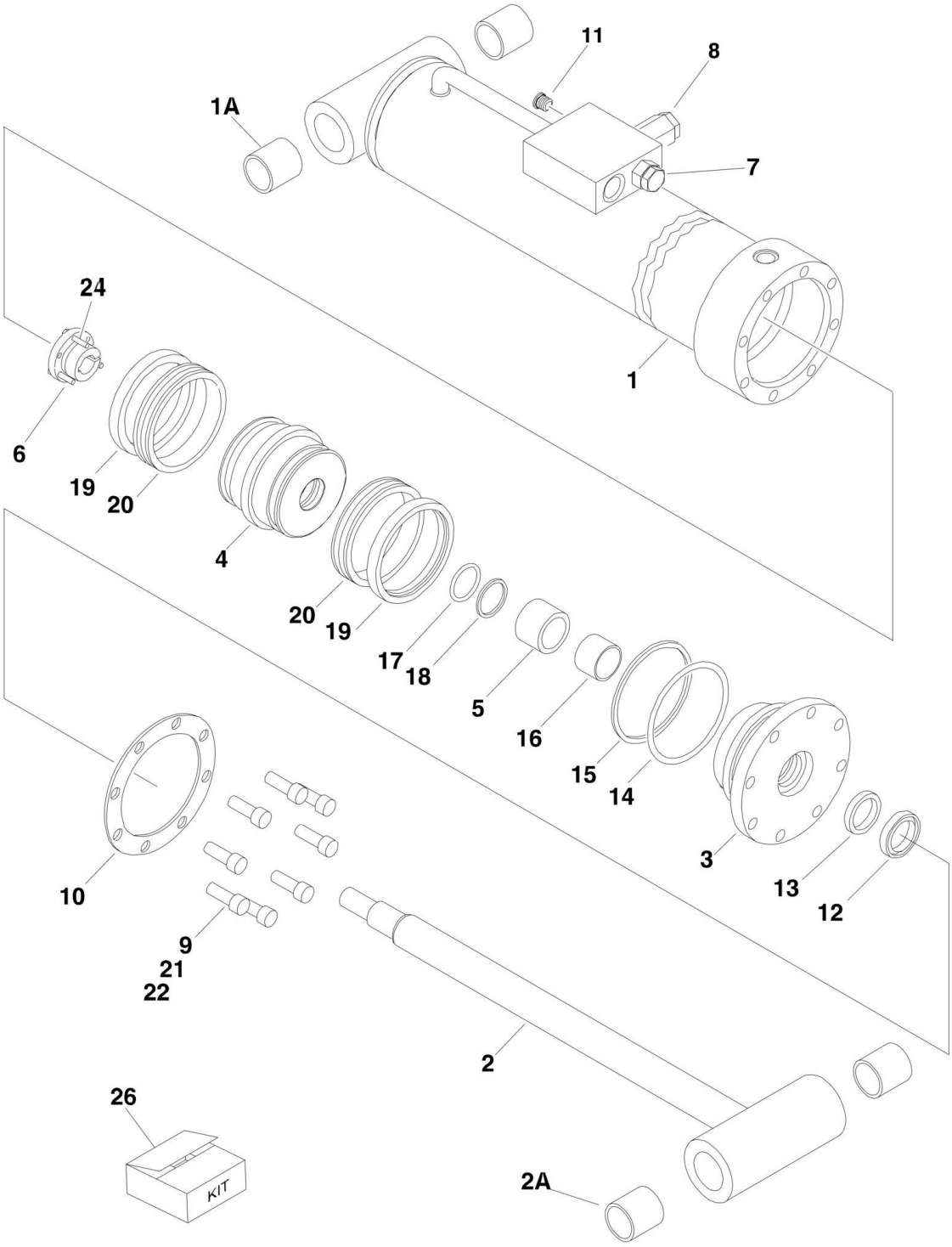

## FIGURE 5-14. LIFT CYLINDER ASSEMBLY - MAIN BOOM (SN 0300087000 through 0300177361, SN B300000100 through B300002477)

| ITEM | PART NUMBER | QTY | DESCRIPTION | REV |
|---|---|---|---|---|
| | 1683294 | Ref | **LIFT CYLINDER ASSEMBLY - MAIN BOOM** | J |
| | | Ref | **Note: Original Equipment components may have been replaced with Service Replacement components part. Identify p/n stamped on cylinder before ordering parts.** | |
| 1 | 1684001 | 1 | Barrel | |
| 1A | 0961948 | 2 | Bushing | |
| 2 | 1684005 | 1 | Rod | |
| 2A | 0961948 | 2 | Bushing | |
| 3 | 1683061 | 1 | Head | |
| 4 | 3480211 | 1 | Piston | |
| 5 | 4566408 | 1 | Spacer | |
| 6 | 0961897 | 1 | Bushing, Tapered | |
| 7 | 4640438 | 1 | Cartridge, Valve | |
| 7 | 2900770 | 1 | Seal Kit - 4640438 Valve | |
| 8 | 4640509 | 1 | Cartridge, Valve | |
| 8 | 2900792 | 1 | Seal Kit - 4640509 Valve | |
| 9 | 3931720 | 8 | Capscrew, Socket Head 7/16in-14NC x 1-1/4in | |
| 10 | 3760370 | 1 | Ring, Washer | |
| 11 | 2220883 | 1 | Plug, O-Ring #6 | |
| 12 | See Note | NSS | Wiper (Note: Use Item 26) | |
| 13 | See Note | NSS | Seal, Rod (Note: Use Item 26) | |
| 14 | See Note | NSS | O-Ring (Note: Use Item 26) | |
| 15 | See Note | NSS | Ring, Back-up (Note: Use Item 26) | |
| 16 | See Note | NSS | Ring, Wear (Note: Use Item 26) | |
| 17 | See Note | NSS | O-Ring (Note: Use Item 26) | |
| 18 | See Note | NSS | Ring, Back-up (Note: Use Item 26) | |
| 19 | See Note | NSS | Ring, Lock (Note: Use Item 26) | |
| 20 | See Note | NSS | Seal (Note: Use Item 26) | |
| 21 | 0100011 | AR | Compound, Locking | |
| 22 | 0100038 | AR | Primer, Locking | |
| 24 | 0630535 | 3 | Bolt 1/4in-20NC x 1-1/8in | |
| 26 | 2901273 | 1 | Seal Kit (Includes Items 12-20) | |

## FIGURE 5-15. LIFT CYLINDER ASSEMBLY - MAIN BOOM (SN B300002478 through B300005764)

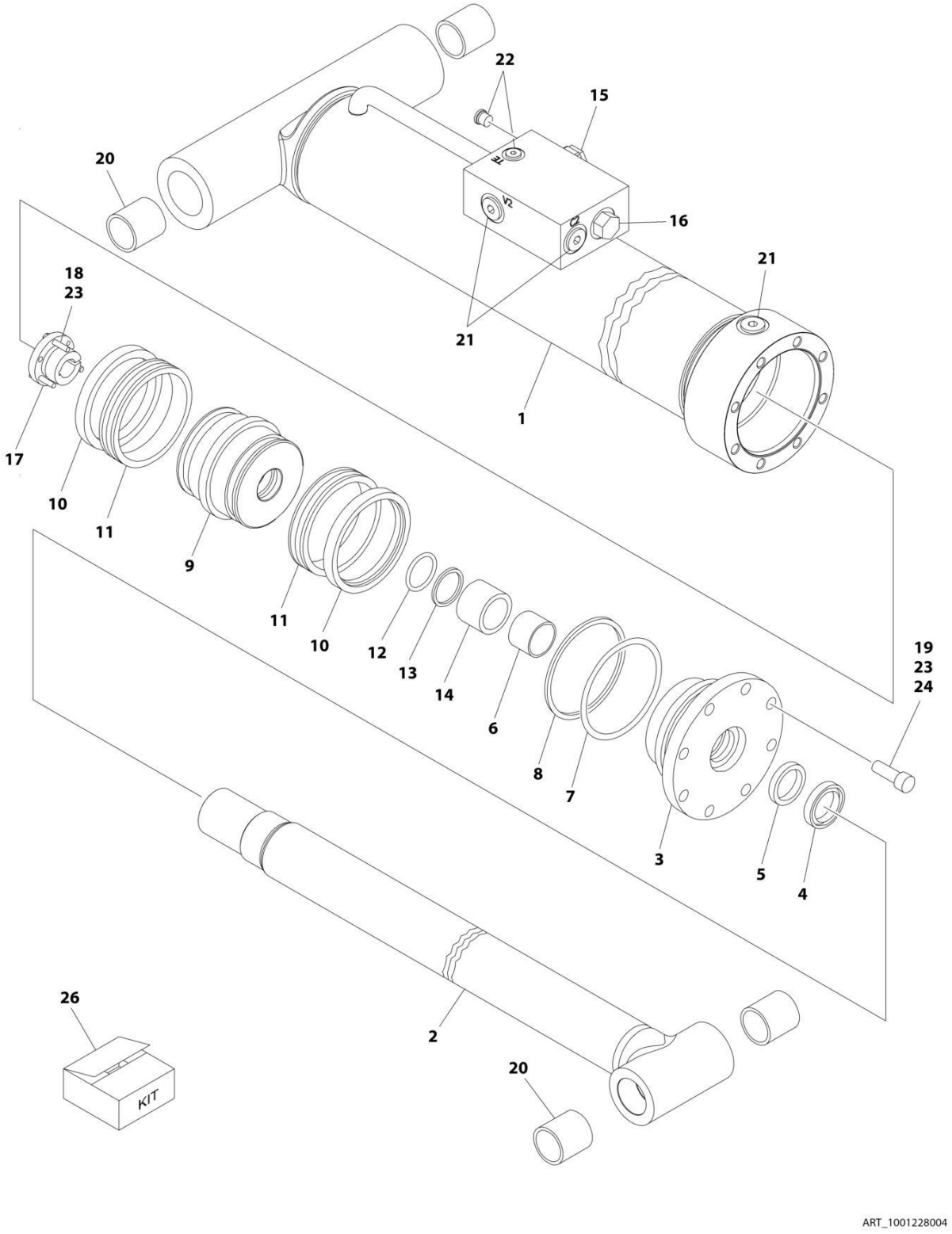

## FIGURE 5-15. LIFT CYLINDER ASSEMBLY - MAIN BOOM (SN B300002478 through B300005764)

| ITEM | PART NUMBER | QTY | DESCRIPTION | REV |
|---|---|---|---|---|
| | 1001228004 | Ref | LIFT CYLINDER ASSEMBLY - MAIN BOOM | B |
| | | Ref | Note: Original Equipment components may have been replaced with Service Replacement components part. Identify p/n stamped on cylinder before ordering parts. | |
| 1 | See Note | NSS | Barrel (Note: Not Available for Purchase) | |
| 2 | 70006481 | 1 | Rod | |
| 3 | 70006480 | 1 | Head | |
| 4 | See Note | NSS | Wiper (Note: Use Item 26) | |
| 5 | See Note | NSS | Seal, Rod (Note: Use Item 26) | |
| 6 | See Note | NSS | Ring, Wear (Note: Use Item 26) | |
| 7 | See Note | NSS | O-Ring (Note: Use Item 26) | |
| 8 | See Note | NSS | Ring, Back-up (Note: Use Item 26) | |
| 9 | 70006479 | 1 | Piston | |
| 10 | See Note | NSS | Ring, Lock (Note: Use Item 26) | |
| 11 | See Note | NSS | Seal (Note: Use Item 26) | |
| 12 | See Note | NSS | O-Ring (Note: Use Item 26) | |
| 13 | See Note | NSS | Ring, Back-up (Note: Use Item 26) | |
| 14 | 70006478 | 1 | Spacer | |
| 15 | 4640509 | 1 | Cartridge, Valve | |
| 15 | 2900792 | 1 | Seal Kit - 4640509 Valve | |
| 16 | 4640438 | 1 | Cartridge, Valve | |
| 16 | 2900770 | 1 | Seal Kit - 4640438 Valve | |
| 17 | 0961897 | 1 | Bushing, Tapered | |
| 18 | 0630535 | 3 | Bolt 1/4 x 1-1/8 | |
| 19 | 3931720 | 8 | Capscrew, Socket Head 7/16 x 1-1/4 | |
| 20 | 0961948 | 2 | Bushing | |
| 21 | 2220886 | 4 | Plug, O-Ring | |
| 22 | 2220883 | 3 | Plug, O-Ring | |
| 23 | 0100011 | AR | Compound, Locking | |
| 24 | 0100038 | AR | Primer, Locking | |
| 26 | 2901273 | 1 | Seal Kit (Includes Items 4-8 & 10-13) | |

**FIGURE 5-16. LIFT CYLINDER ASSEMBLY - TOWER BOOM (SN 0300087000 through 0300177361, SN B300000100 through B300002804)**

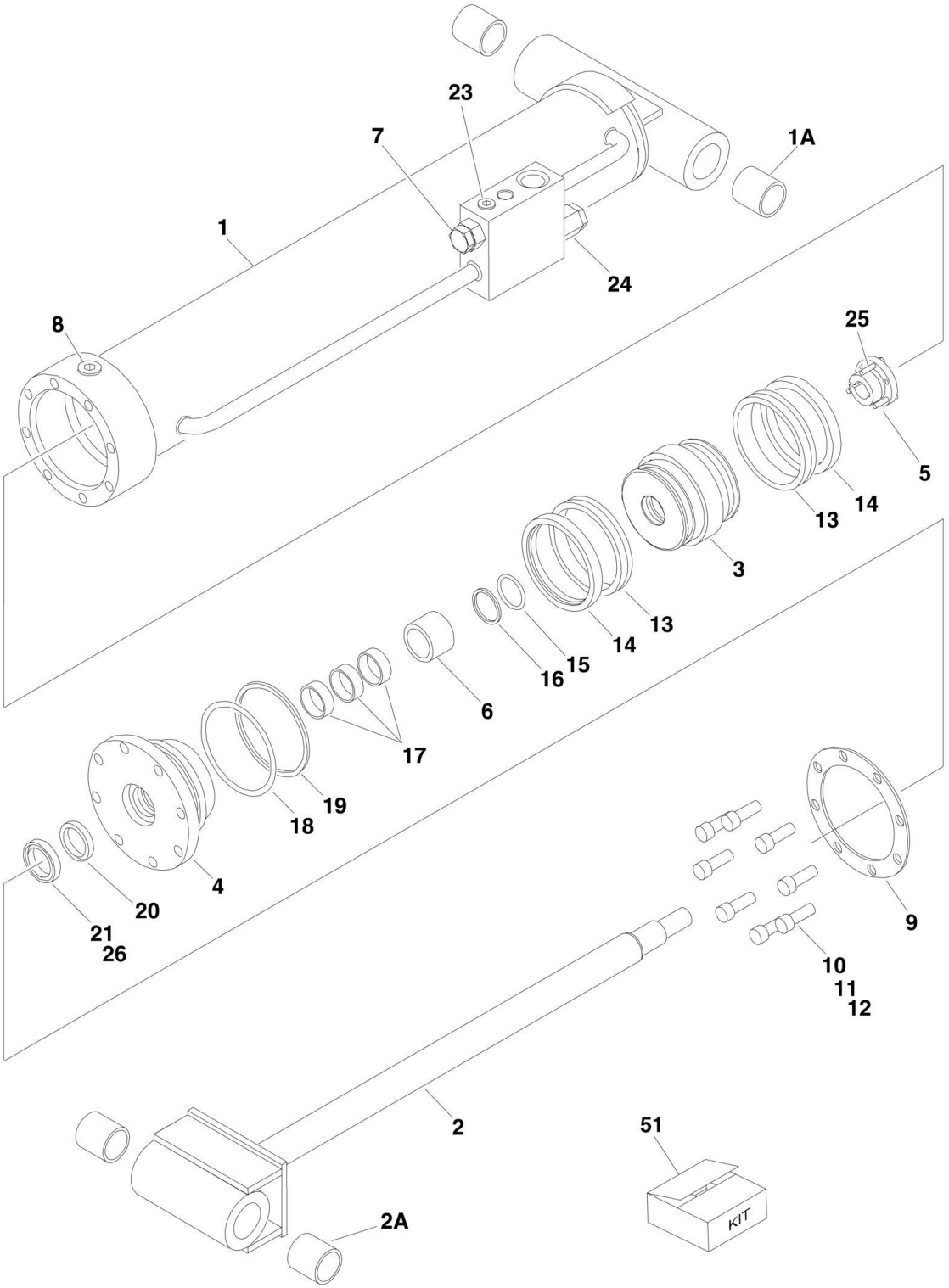

## FIGURE 5-16. LIFT CYLINDER ASSEMBLY - TOWER BOOM (SN 0300087000 through 0300177361, SN B300000100 through B300002804)

| ITEM | PART NUMBER | QTY | DESCRIPTION | REV |
|---|---|---|---|---|
| | 1683288 | Ref | **LIFT CYLINDER ASSEMBLY - TOWER BOOM** | N |
| | | Ref | **Note: Original Equipment components may have been replaced with Service Replacement components part. Identify p/n stamped on cylinder before ordering parts.** | |
| 1 | 1684017 | 1 | Barrel | |
| 1A | 0961949 | 2 | Bushing | |
| 2 | 1684019 | 1 | Rod | |
| 2A | 0961949 | 2 | Bushing | |
| 3 | 3480216 | 1 | Piston | |
| 4 | 1683069 | 1 | Head | |
| 5 | 0961899 | 1 | Bushing, Tapered | |
| 6 | 4566667 | 1 | Spacer | |
| 7 | 4640605 | 1 | Cartridge, Valve | |
| 7 | 2900792 | 1 | Seal Kit - 4640605 | |
| 8 | 2220888 | 1 | Plug, O-Ring #12 | |
| 9 | 3760384 | 1 | Ring, Washer | |
| 10 | 3932240 | 8 | Capscrew 3/4 x 2-1/2 | |
| 11 | 0100011 | AR | Compound, Locking | |
| 12 | 0100038 | AR | Primer, Locking | |
| 13 | See Note | NSS | Seal (Note: Use Item 51) | |
| 14 | See Note | NSS | Ring, Lock (Note: Use Item 51) | |
| 15 | See Note | NSS | O-Ring (Note: Use Item 51) | |
| 16 | See Note | NSS | Ring, Back-up (Note: Use Item 51) | |
| 17 | See Note | NSS | Ring, Wear (Note: Use Item 51) | |
| 18 | See Note | NSS | O-Ring (Note: Use Item 51) | |
| 19 | See Note | NSS | Ring, Back-up (Note: Use Item 51) | |
| 20 | See Note | NSS | Seal, Rod (Note: Use Item 51) | |
| 21 | See Note | NSS | Wiper (Note: Use Item 51) | |
| 23 | 2220883 | 2 | Plug, O-Ring #4 | |
| 24 | 4640509 | 1 | Cartridge, Valve | |
| 24 | 2900792 | 1 | Seal Kit - 4640509 | |
| 25 | 0630536 | 3 | Bolt 3/8in-16NC x 1-1/2in | |
| 26 | 0100063 | AR | Adhesive | |
| 51 | 2901322 | 1 | Seal Kit (Includes Items 13-21) | |

## FIGURE 5-17. LIFT CYLINDER ASSEMBLY - TOWER BOOM (SN B300002805 through B300005764)

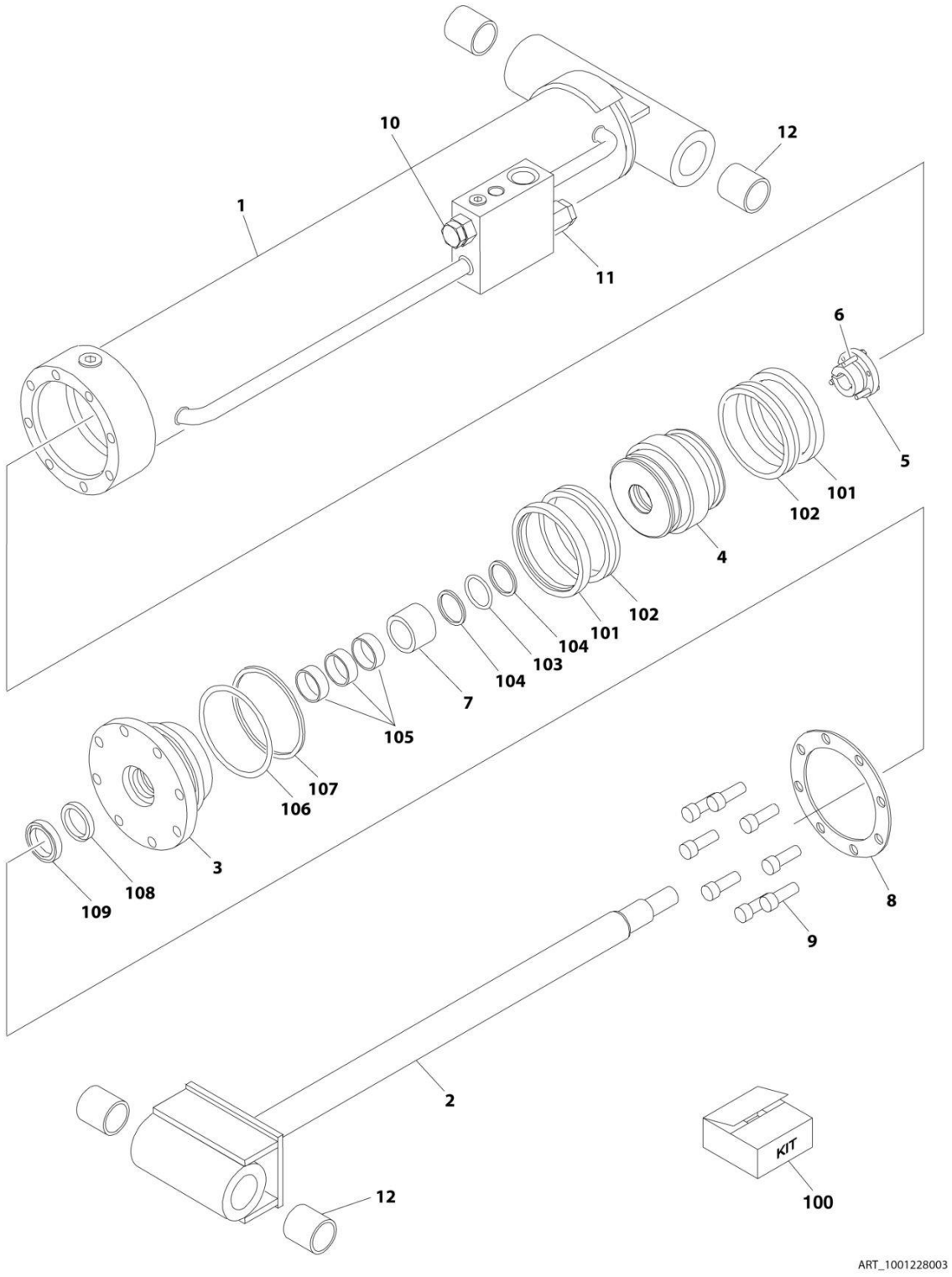

## FIGURE 5-17. LIFT CYLINDER ASSEMBLY - TOWER BOOM (SN B300002805 through B300005764)

| ITEM | PART NUMBER | QTY | DESCRIPTION | REV |
|---|---|---|---|---|
| | 1001228003 | Ref | LIFT CYLINDER ASSEMBLY | D |
| | | Ref | Note: Original Cylinder may have been replaced with Service Replacement. Identify PN Stamped on Cylinder Before Ordering Parts. | |
| 1 | See Note | NSS | Barrel (Note: Not Available For Purchase) | |
| 2 | 70006374 | 1 | Rod | |
| 3 | 70006373 | 1 | Head | |
| 4 | 70006372 | 1 | Piston | |
| 5 | 70006371 | 1 | Bushing, Tapered | |
| 6 | 0630536 | 3 | Bolt 3/8 x 1-1/2 | |
| 7 | 70006370 | 1 | Spacer | |
| 8 | 70006369 | 1 | Ring, Washer | |
| 9 | 3932240 | 8 | Capscrew 3/4 x 2-1/2 | |
| 10 | 4640605 | 1 | Cartridge, Valve | |
| 10 | 2900792 | 1 | Seal Kit - 4640605 Valve | |
| 11 | 4640509 | 1 | Cartridge, Valve | |
| 11 | 2900792 | 1 | Seal Kit - 4640509 Valve | |
| 12 | 0961949 | 4 | Bushing | |
| 100 | 2901322 | 1 | Seal Kit (Includes Items 101-109) | |
| 101 | See Note | NSS | Ring, Lock (Note: Use Item 100) | |
| 102 | See Note | NSS | Seal (Note: Use Item 100) | |
| 103 | See Note | NSS | O-Ring (Note: Use Item 100) | |
| 104 | See Note | NSS | Ring, Back-up (Note: Use Item 100) | |
| 105 | See Note | NSS | Ring, Wear (Note: Use Item 100) | |
| 106 | See Note | NSS | O-Ring (Note: Use Item 100) | |
| 107 | See Note | NSS | Ring, Back-up (Note: Use Item 100) | |
| 108 | See Note | NSS | Seal, Rod (Note: Use Item 100) | |
| 109 | See Note | NSS | Wiper (Note: Use Item 100) | |

## FIGURE 5-18. MASTER CYLINDER ASSEMBLY

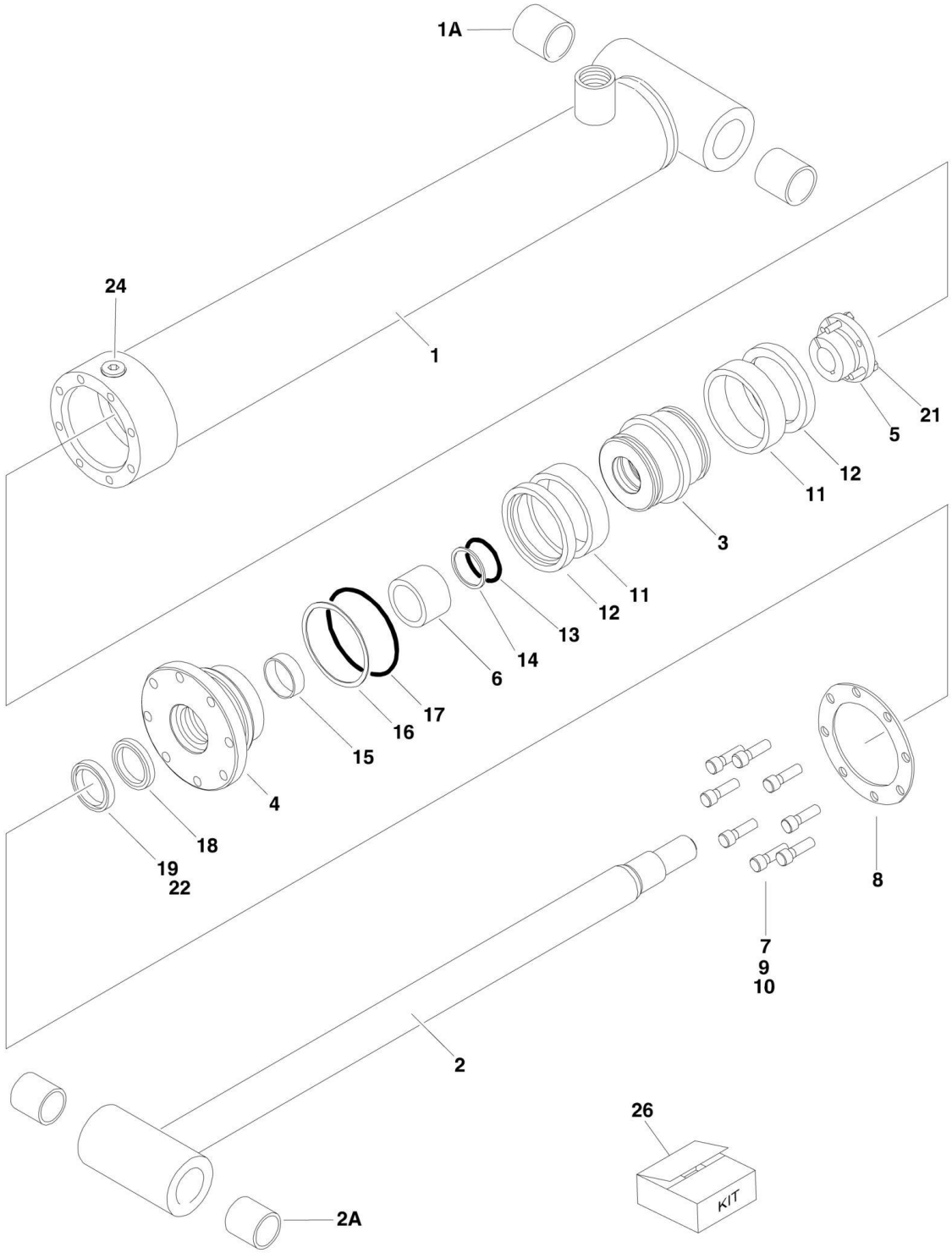

## FIGURE 5-18. MASTER CYLINDER ASSEMBLY

| ITEM | PART NUMBER | QTY | DESCRIPTION | REV |
|---|---|---|---|---|
| | 1683266 | Ref | **MASTER CYLINDER ASSEMBLY - 600A** | I |
| | 1683263 | Ref | **MASTER CYLINDER ASSEMBLY - 600AJ WITHOUT ARCTIC PACKAGE** | L |
| | 1001138799 | Ref | **MASTER CYLINDER ASSEMBLY - 600AJ WITH ARCTIC PACKAGE** | B |
| | | Ref | **Note: Original Equipment components may have been replaced with Service Replacement components part. Identify p/n stamped on cylinder before ordering parts.** | |
| 1 | | Ref | Barrel Options: | |
| 1 | 1683972 | 1 | Barrel 600A (Note: Includes Item 1A) | |
| 1 | 1683949 | 1 | Barrel 600AJ (Note: Item 1A not included - Purchase Separately) | |
| 1A | | Ref | Bushing Options: | |
| 1A | 0961947 | 2 | Bushing 600A - Bushing | |
| 1A | 0961951 | 2 | Bushing 600AJ - Bushing | |
| 2 | | Ref | Rod Options: | |
| 2 | 1683973 | 1 | Rod 600A (Note: Includes Item 2A) | |
| 2 | 1683962 | 1 | Rod 600AJ (Note: Item 2A not included - Purchase Separately) | |
| 2A | | Ref | Bushing Options: | |
| 2A | 0961947 | 2 | Bushing 600A - Bushing | |
| 2A | 0961951 | 2 | Bushing 600AJ - Bushing | |
| 3 | | Ref | Piston Options: | |
| 3 | 3480210 | 1 | Piston 600A | |
| 3 | 3480188 | 1 | Piston 600AJ | |
| 4 | | Ref | Head Options: | |
| 4 | 1683053 | 1 | Head 600A | |
| 4 | 1683055 | 1 | Head 600AJ | |
| 5 | | Ref | Bushing, Tapered Options (Use item 21 in place of supplied bolts): | |
| 5 | 0961893 | 1 | Bushing 600A | |
| 5 | 0961894 | 1 | Bushing 600AJ | |
| 6 | 4566468 | 1 | Spacer | |
| 7 | | Ref | Capscrew, Socket Head Options: | |
| 7 | 3931516 | 8 | Capscrew, Socket Head Options: 600A - Capscrew, Socket Head 5/16in-18NC x 1in | |
| 7 | 3931620 | 8 | Capscrew, Socket Head Options: 600AJ - Capscrew, Socket Head 3/8in-16NC x 1-1/4in | |
| 8 | | Ref | Ring, Washer Options: | |
| 8 | 3760368 | 1 | Ring 600A | |
| 8 | 3760369 | 1 | Ring 600AJ | |
| 9 | 0100011 | AR | Compound, Locking | |
| 10 | 0100038 | AR | Primer, Locking | |
| 11 | See Note | NSS | Seal (Note: Use Item 26) | |
| 12 | See Note | NSS | Ring, Lock (Note: Use Item 26) | |
| 13 | See Note | NSS | O-Ring (Note: Use Item 26) | |
| 14 | See Note | NSS | Ring, Back-up (Note: Use Item 26) | |
| 15 | See Note | NSS | Ring, Wear (Note: Use Item 26) | |
| 16 | See Note | NSS | O-Ring (Note: Use Item 26) | |
| 17 | See Note | NSS | Ring, Back-up (Note: Use Item 26) | |
| 18 | See Note | NSS | Seal, Rod (Note: Use Item 26) | |
| 19 | See Note | NSS | Wiper (Note: Use Item 26) | |

# SECTION 5 - CYLINDER

| ITEM | PART NUMBER | QTY | DESCRIPTION | REV |
|---|---|---|---|---|
| 21 | | Ref | Bolt Options: | |
| 21 | 0630534 | 3 | Bolt 600A - Bolt #10 - 24NC x 1in | |
| 21 | 0630535 | 3 | Bolt 600AJ - Bolt 1/4in-20NC x 1-1/8in | |
| 22 | 0100063 | AR | Adhesive | |
| 24 | 2220885 | 1 | Plug, O-Ring #6 (600AJ Only) | |
| 26 | | Ref | Seal Kit Options (Includes Items 11-19): | |
| 26 | 2901303 | 1 | Seal 600A | |
| 26 | 2901301 | 1 | Seal 600AJ without Arctic Package | |
| 26 | 1001138796 | 1 | Seal 600AJ with Arctic Package | |

## FIGURE 5-19. MASTER CYLINDER ASSEMBLY - 600A

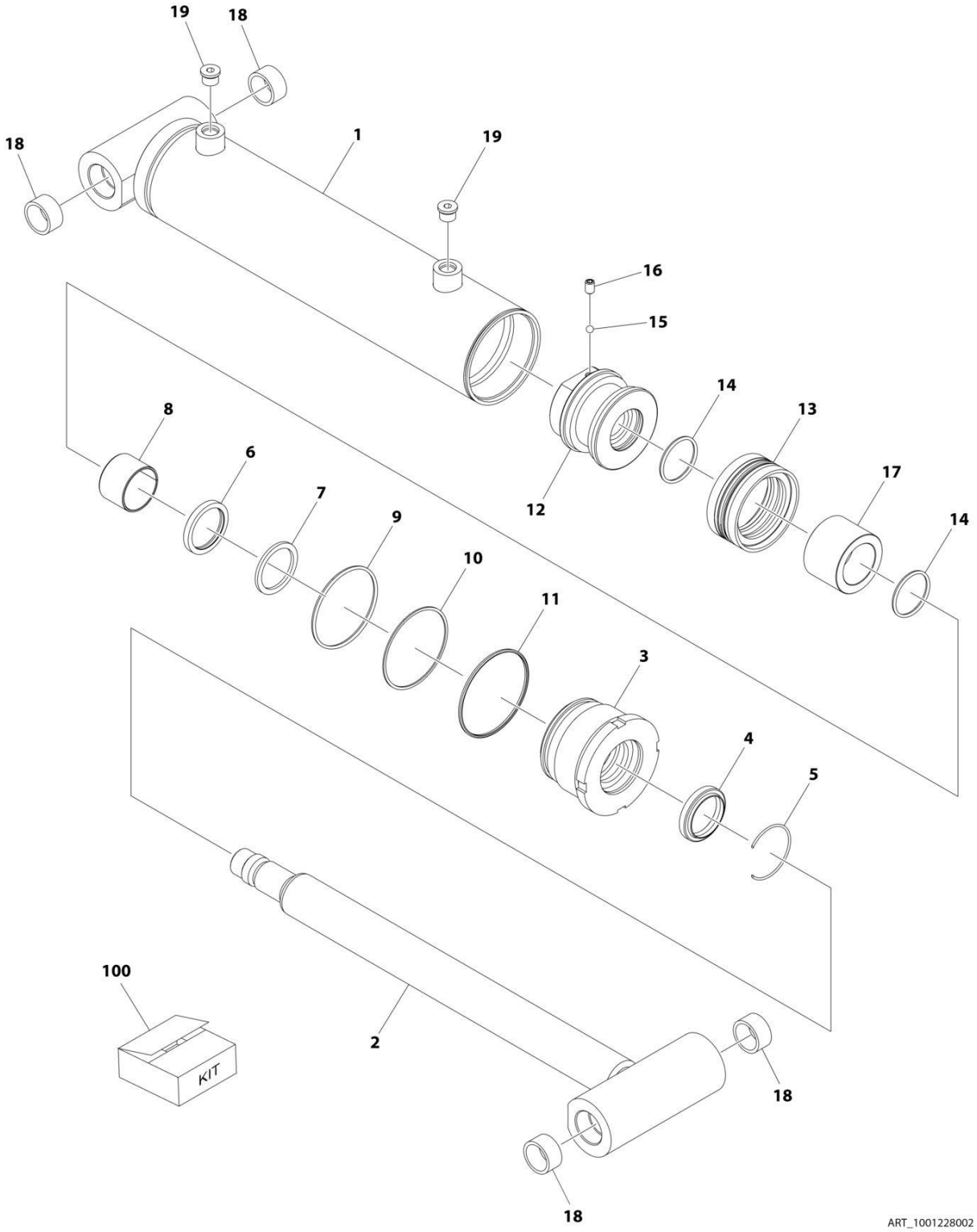

## FIGURE 5-19. MASTER CYLINDER ASSEMBLY - 600A

| ITEM | PART NUMBER | QTY | DESCRIPTION | REV |
|---|---|---|---|---|
| | 1001228002 | Ref | MASTER CYLINDER ASSEMBLY | B |
| | | Ref | Note: Original Cylinder May Have Been Replaced with Service Replacement. Identify PN Stamped on Cylinder Before Ordering Parts. | |
| 1 | See Note | NSS | Barrel (Note: Not Available for Purchase) | |
| 2 | 70006774 | 1 | Rod | |
| 3 | 70006599 | 1 | Head | |
| 4 | See Note | NSS | Wiper Rod (Note: Use Item 100) | |
| 5 | 70002373 | 1 | Ring, Retaining | |
| 6 | See Note | NSS | Seal, Rod (Note: Use Item 100) | |
| 7 | See Note | NSS | Ring, Back-up (Note: Use Item 100) | |
| 8 | See Note | NSS | Ring, Wear (Note: Use Item 100) | |
| 9 | See Note | NSS | O-Ring (Note: Use Item 100) | |
| 10 | See Note | NSS | Ring, Back-up (Note: Use Item 100) | |
| 11 | See Note | NSS | O-Ring (Note: Use Item 100) | |
| 12 | 70006597 | 1 | Piston | |
| 13 | See Note | NSS | Seal Piston (Note: Use Item 100) | |
| 14 | See Note | NSS | O-Ring (Note: Use Item 100) | |
| 15 | 70022564 | 1 | Ball | |
| 16 | 70006601 | 1 | Setscrew | |
| 17 | 70006775 | 1 | Spacer | |
| 18 | 0961947 | 4 | Bushing | |
| 19 | 70023371 | 2 | Plug, O-Ring | |
| 100 | 70006776 | 1 | Seal Kit (Includes Items 4, 6-11, 13 & 14) | |

## FIGURE 5-20. MASTER CYLINDER ASSEMBLY - 600AJ

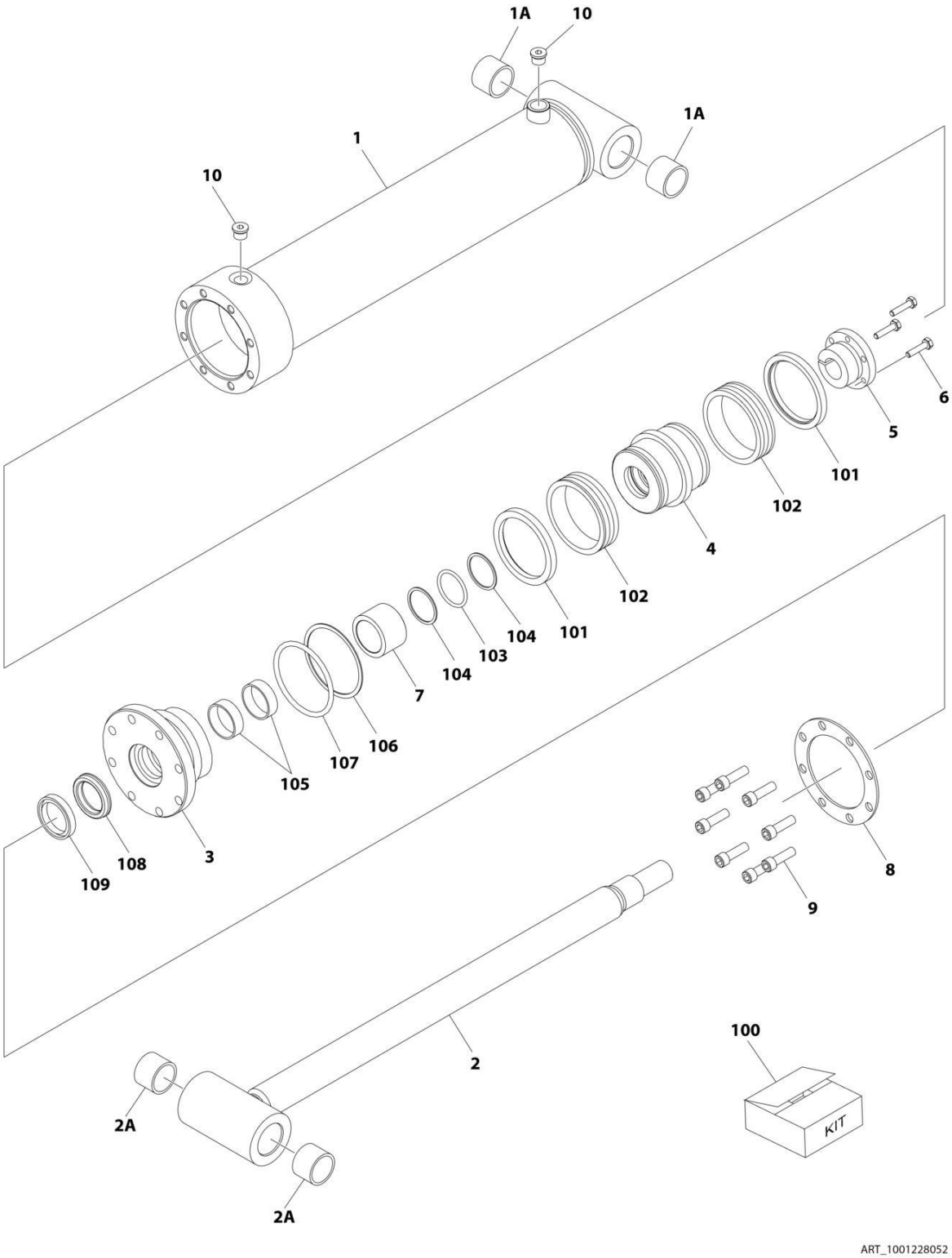

## FIGURE 5-20. MASTER CYLINDER ASSEMBLY - 600AJ

| ITEM | PART NUMBER | QTY | DESCRIPTION | REV |
|---|---|---|---|---|
| | 1001228052 | Ref | MASTER CYLINDER ASSEMBLY | B |
| | | Ref | Note: Original Cylinder May Have Been Replaced with Service Replacement. Identify PN Stamped on Cylinder Before Ordering Parts. | |
| 1 | See Note | NSS | Barrel (Note: Not Available for Purchase) | |
| 1A | 0961951 | 2 | Bushing | |
| 2 | 70006447 | 1 | Rod Weldment | |
| 2A | 0961951 | 2 | Bushing | |
| 3 | 70006446 | 1 | Head | |
| 4 | 70006445 | 1 | Piston | |
| 5 | 70006444 | 1 | Bushing, Tapered | |
| 6 | 0630535 | 3 | Capscrew 1/4 x 1-1/8 | |
| 7 | 70006443 | 1 | Spacer | |
| 8 | 70006442 | 1 | Ring, Washer | |
| 9 | 3931620 | 8 | Capscrew 3/8 x 1-1/4 | |
| 10 | 2220885 | 2 | Plug, O-Ring | |
| 100 | 1001138796 | 1 | Seal Kit (Includes Items 101-109) | |
| 101 | See Note | NSS | Ring, Wear (Note: Use Item 100) | |
| 102 | See Note | NSS | Seal, Piston (Note: Use Item 100) | |
| 103 | See Note | NSS | O-Ring (Note: Use Item 100) | |
| 104 | See Note | NSS | Ring, Back-up (Note: Use Item 100) | |
| 105 | See Note | NSS | Ring, Wear (Note: Use Item 100) | |
| 106 | See Note | NSS | O-Ring (Note: Use Item 100) | |
| 107 | See Note | NSS | Ring, Back-up (Note: Use Item 100) | |
| 108 | See Note | NSS | Seal, Rod (Note: Use Item 100) | |
| 109 | See Note | NSS | Wiper, Rod (Note: Use Item 100) | |

**FIGURE 5-21. STEER CYLINDER ASSEMBLY**

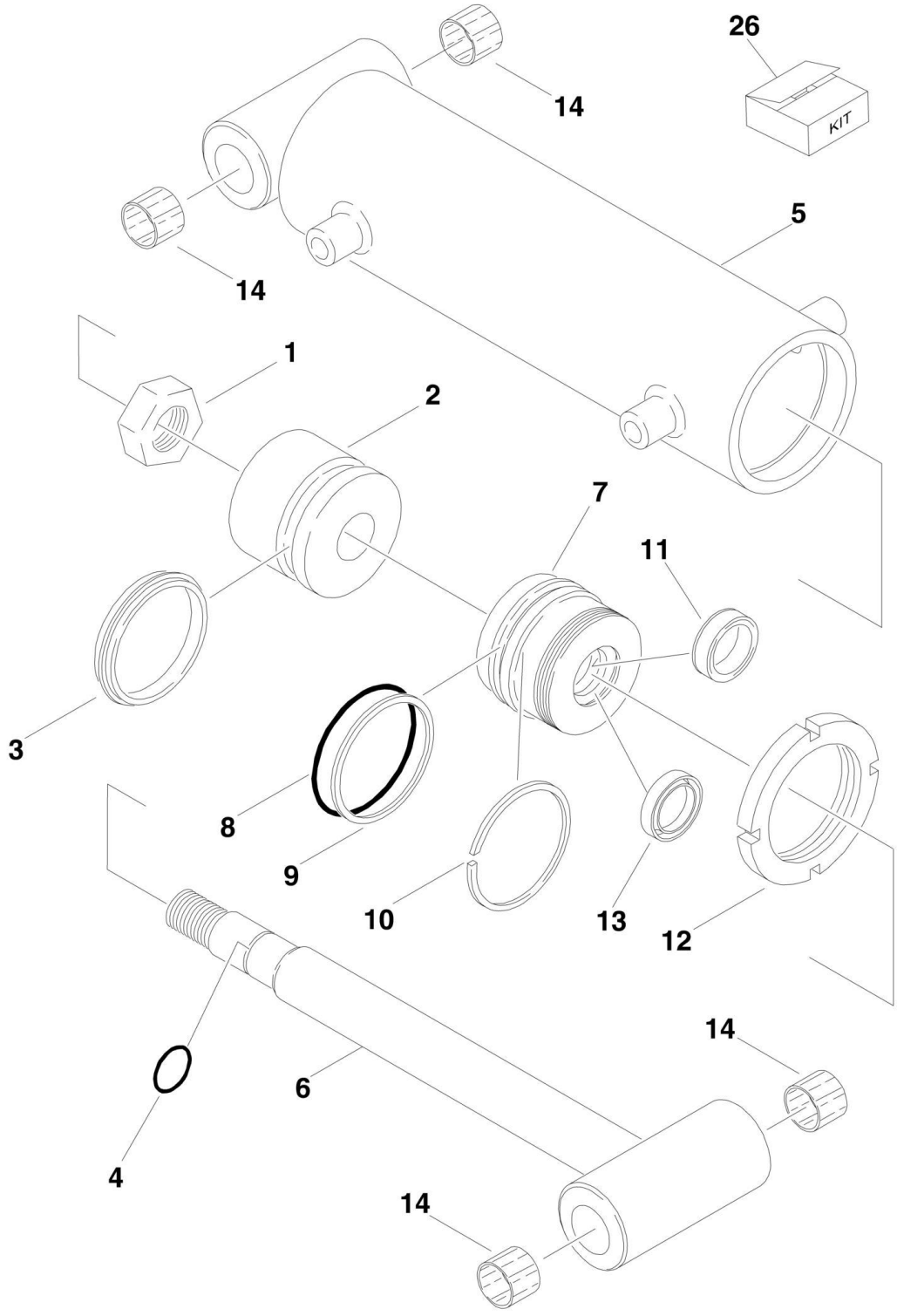

## FIGURE 5-21. STEER CYLINDER ASSEMBLY

| ITEM | PART NUMBER | QTY | DESCRIPTION | REV |
|---|---|---|---|---|
| | | Ref | **STEER CYLINDER ASSEMBLIES** | |
| | | Ref | **Note: Original Equipment components may have been replaced with Service Replacement components part. Identify p/n stamped on cylinder before ordering parts.** | |
| | | Ref | **8ft/2.4m Width Machines** | |
| | 1683208 | Ref | **USA Built Machines (SN 0300087000 through 0300142624)** | D |
| | | Ref | **USA Built Machines (See STEER CYLINDER ASSEMBLY for Breakdown) (SN 0300142625 through 0300177361)** | |
| | | Ref | **China Built Machines (See STEER CYLINDER ASSEMBLY for Breakdown) (SN B300000100 through B300005764, Excluding B300005620)** | |
| | 1684418 | Ref | **7ft/2.1m Width Machines** | A |
| 1 | 7001626 | 1 | Locknut | |
| 2 | 7001627 | 1 | Piston | |
| 3 | See Note | NSS | Seal (Note: Use Item 26) | |
| 4 | See Note | NSS | O-Ring (Note: Use Item 26) | |
| 5 | See Note | 1 | Barrel (Note: Not Available for Purchase) | |
| 6 | | Ref | Rod Options: | |
| 6 | 7001633 | 1 | 8ft/2.4m Width Machines | |
| 6 | 7023038 | 1 | 7ft/2.1m Width Machines | |
| 7 | 7001629 | 1 | Guide | |
| 8 | See Note | NSS | O-Ring (Note: Use Item 26) | |
| 9 | See Note | NSS | Ring, Back-up (Note: Use Item 26) | |
| 10 | See Note | NSS | Ring, Retaining (Note: Use Item 26) | |
| 11 | See Note | NSS | Seal, Lip (Note: Use Item 26) | |
| 12 | 7001630 | 1 | Nut, Spanner | |
| 13 | See Note | NSS | Ring, Wiper (Note: Use Item 26) | |
| 14 | | Ref | Bushing Options: | |
| 14 | 0961977 | 4 | 8ft/2.4m Width Machines | |
| 14 | 0961890 | 4 | 7ft/2.1m Width Machines | |
| 26 | 7001625 | 1 | Seal Kit (Includes Items 3, 4, 8-11 & 13) | |

## FIGURE 5-22. STEER CYLINDER ASSEMBLY

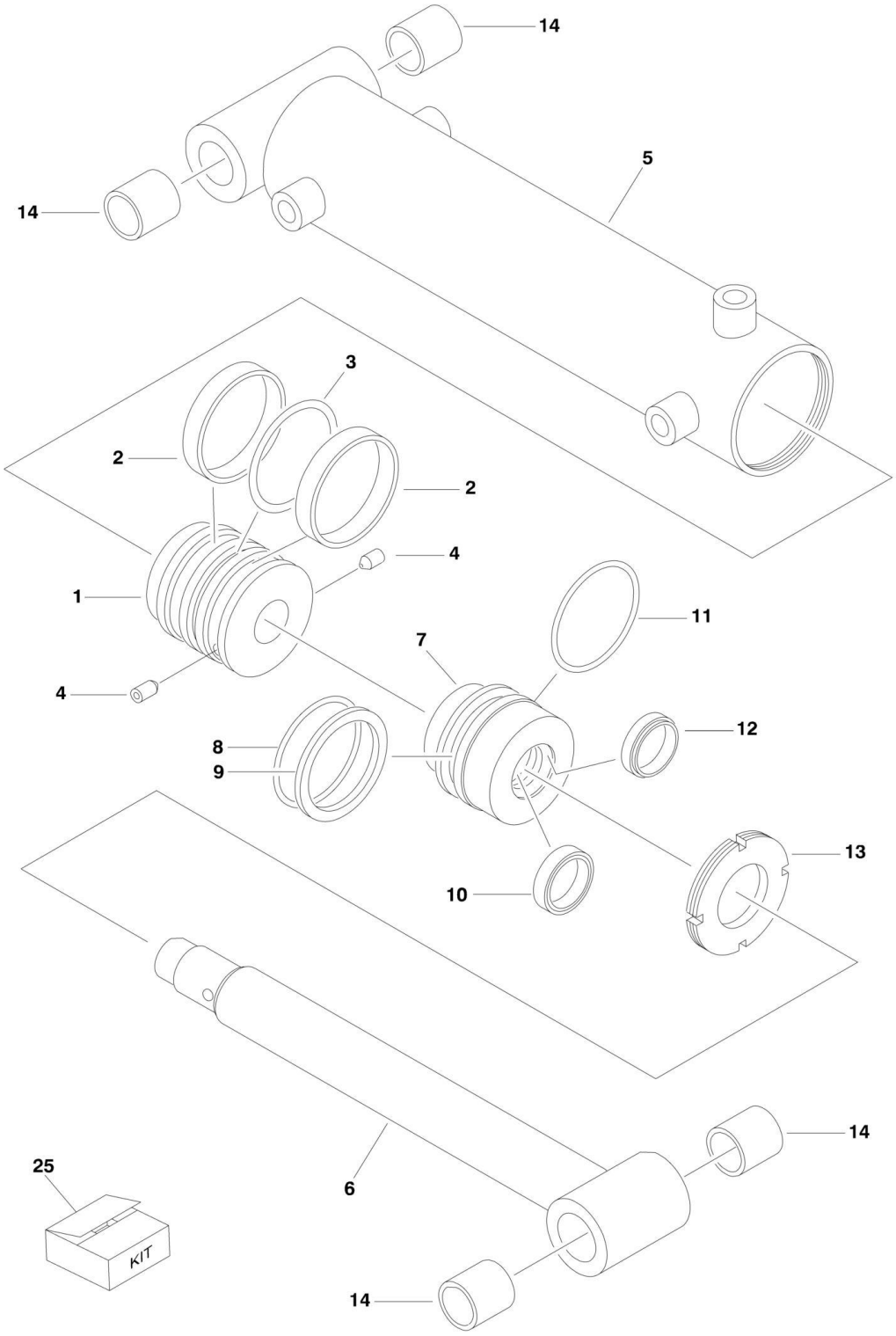

## FIGURE 5-22. STEER CYLINDER ASSEMBLY

| ITEM | PART NUMBER | QTY | DESCRIPTION | REV |
|---|---|---|---|---|
| | | Ref | **STEER CYLINDER ASSEMBLIES** | |
| | | Ref | **Note: Original Equipment components may have been replaced with Service Replacement components part. Identify p/n stamped on cylinder before ordering parts.** | |
| | | Ref | **8ft/2.4m Width Machines** | |
| | See Previous Figure | Ref | **USA Built Machines (SN 0300087000 through 0300142624)** | |
| | 1001097242 | Ref | **USA Built Machines (SN 0300142625 through 0300177361)** | A |
| | 1001097242 | Ref | **China Built Machines (SN B300000100 through B300005764, Excluding B300005620)** | A |
| | See Previous Figure | Ref | **7ft/2.1m Width Machines** | |
| 1 | 70002752 | 1 | Piston | |
| 1 | 0100011 | AR | Compound, Locking | |
| 1 | 0100038 | AR | Primer, Locking | |
| 2 | See Note | NSS | Seal (Note: Use Item 25) | |
| 3 | See Note | NSS | O-Ring (Note: Use Item 25) | |
| 4 | 70002745 | 2 | Setscrew | |
| 5 | 70002753 | 1 | Barrel | |
| 6 | 70002754 | 1 | Rod | |
| 7 | 70002755 | 1 | Head | |
| 8 | See Note | NSS | O-Ring (Note: Use Item 25) | |
| 9 | See Note | NSS | Ring Back-up (Note: Use Item 25) | |
| 10 | See Note | NSS | Seal (Note: Use Item 25) | |
| 11 | See Note | NSS | O-Ring (Note: Use Item 25) | |
| 12 | See Note | NSS | Wiper (Note: Use Item 25) | |
| 13 | 70002756 | 1 | Nut, Spanner | |
| 13 | 0100011 | AR | Compound, Locking | |
| 13 | 0100038 | AR | Primer, Locking | |
| 14 | 0962356 | 4 | Bushing | |
| 25 | 70002757 | 1 | Seal Kit (Includes Items 2, 3 & 8-12) | |

## FIGURE 5-23. TELESCOPE CYLINDER ASSEMBLY - MAIN BOOM (600A & 600AJ) (SN 0300087000 through 0300177361, SN B300000100 through B300002835)

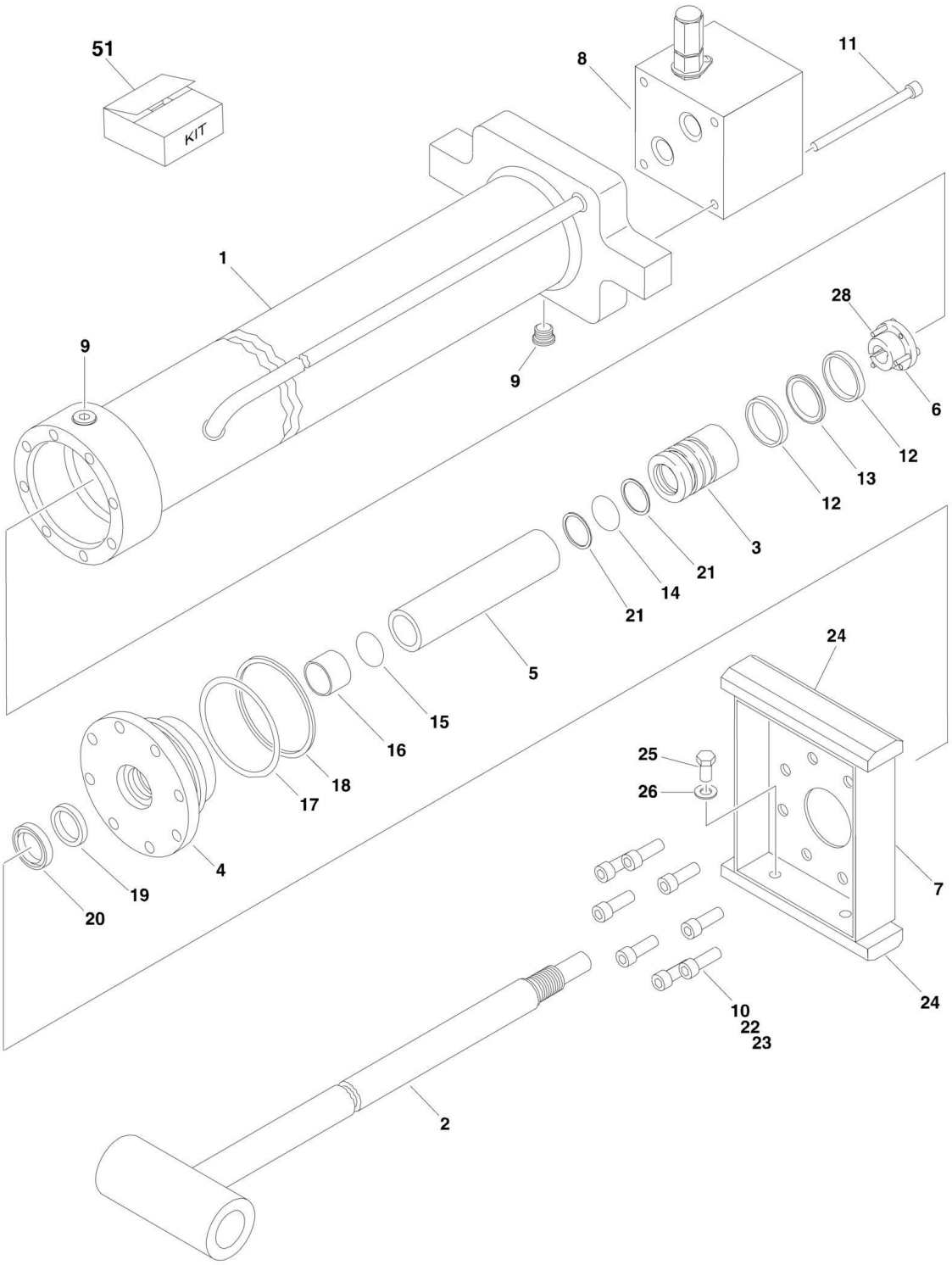

## FIGURE 5-23. TELESCOPE CYLINDER ASSEMBLY - MAIN BOOM (600A & 600AJ) (SN 0300087000 through 0300177361, SN B300000100 through B300002835)

| ITEM | PART NUMBER | QTY | DESCRIPTION | REV |
|---|---|---|---|---|
| | 1683307 | Ref | **TELESCOPE CYLINDER ASSEMBLY - 600A (SN 0300087000 through 0300177361, SN B300000100 through B300002835)** | H |
| | 1683317 | Ref | **TELESCOPE CYLINDER ASSEMBLY - 600AJ (SN 0300087000 through 0300177361, SN B300002836 through B300005764, Excluding B300005620)** | H |
| | | Ref | **Note: Original Equipment components may have been replaced with Service Replacement components part. Identify p/n stamped on cylinder before ordering parts.** | |
| 1 | | Ref | Barrel Options: | |
| 1 | 1683308 | 1 | Barrel 600A | |
| 1 | 1683318 | 1 | Barrel 600AJ | |
| 2 | | Ref | Rod Options: | |
| 2 | 1684308 | 1 | Rod 600A | |
| 2 | 1684310 | 1 | Rod 600AJ | |
| 3 | 3480212 | 1 | Piston | |
| 4 | 1683054 | 1 | Head | |
| 5 | 4566425 | 1 | Spacer | |
| 6 | 0961896 | 1 | Bushing, Tapered | |
| 7 | | Ref | Plate, Wear Pad Mounting Options: | |
| 7 | 3538771 | 1 | Plate 600A | |
| 7 | 3538247 | 1 | Plate 600AJ | |
| 8 | 4640862 | 1 | Valve Block Assembly (No Service Parts Available - Replace Complete Assembly) | |
| 9 | 2220885 | 2 | Plug, O-Ring | |
| 10 | 3931516 | 8 | Capscrew, Socket Head 5/16in-18NC x 1in | |
| 11 | 3931448 | 4 | Capscrew, Socket Head 1/4in-20NC x 3in | |
| 12 | See Note | NSS | Ring, Wear (Note: Use Item 51) | |
| 13 | See Note | NSS | Seal (Note: Use Item 51) | |
| 14 | See Note | NSS | O-Ring (Note: Use Item 51) | |
| 15 | See Note | NSS | O-Ring (Note: Use Item 51) | |
| 16 | See Note | NSS | Ring, Wear (Note: Use Item 51) | |
| 17 | See Note | NSS | O-Ring (Note: Use Item 51) | |
| 18 | See Note | NSS | Ring, Back-up (Note: Use Item 51) | |
| 19 | See Note | NSS | Seal, Rod (Note: Use Item 51) | |
| 20 | See Note | NSS | Wiper (Note: Use Item 51) | |
| 21 | See Note | NSS | Ring, Back-up (Note: Use Item 51) | |
| 22 | 0100038 | AR | Primer, Locking | |
| 23 | 0100011 | AR | Compound, Locking | |
| 24 | 3340608 | 2 | Pad, Wear | |
| 25 | 0641604 | 4 | Bolt 3/8in-16NC x 1/2in | |
| 26 | 4751600 | 4 | Flatwasher 3/8in Regular | |
| 28 | 0630535 | 3 | Bolt 1/4in-20NC x 1-1/8in | |
| 51 | 2901861 | 1 | Seal Kit (Includes Items 12-21) | |

## FIGURE 5-24. TELESCOPE CYLINDER ASSEMBLY - MAIN BOOM (600A & 600AJ) (SN B300002836 through B300005764)

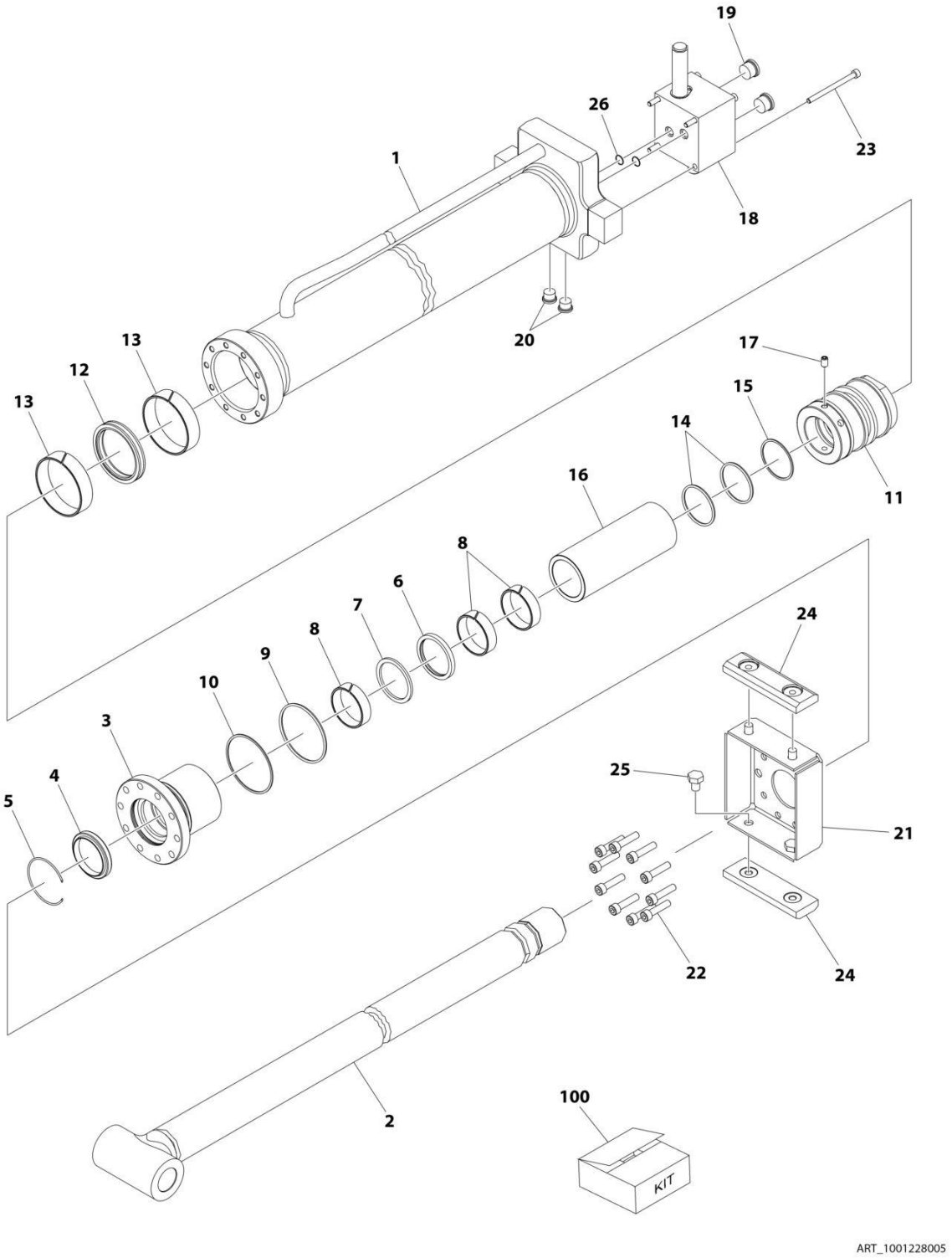

## FIGURE 5-24. TELESCOPE CYLINDER ASSEMBLY - MAIN BOOM (600A & 600AJ) (SN B300002836 through B300005764)

| ITEM | PART NUMBER | QTY | DESCRIPTION | REV |
|---|---|---|---|---|
| | 1001228005 | Ref | TELESCOPE CYLINDER ASSEMBLY - MAIN BOOM | C |
| | | Ref | Note: Original Cylinder may have been replaced with Service Replacement. Identify PN Stamped on Cylinder Before Ordering Parts. | |
| 1 | See Note | NSS | Barrel (Note: Use p/n 1001228005) | |
| 2 | 70006813 | 1 | Rod | |
| 3 | 70006814 | 1 | Head | |
| 4 | See Note | NSS | Wiper (Note: Use Item 100) | |
| 5 | 70002412 | 1 | Ring, Retaining | |
| 6 | See Note | NSS | Seal, Rod (Note: Use Item 100) | |
| 7 | See Note | NSS | Ring, Back-up (Note: Use Item 100) | |
| 8 | See Note | NSS | Ring, Wear (Note: Use Item 100) | |
| 9 | See Note | NSS | O-Ring (Note: Use Item 100) | |
| 10 | See Note | NSS | Ring, Back-up (Note: Use Item 100) | |
| 11 | 70006815 | 1 | Piston | |
| 12 | See Note | NSS | Seal (Note: Use Item 100) | |
| 13 | See Note | NSS | Ring, Wear (Note: Use Item 100) | |
| 14 | See Note | NSS | O-Ring (Note: Use Item 100) | |
| 15 | See Note | NSS | Ring, Back-up (Note: Use Item 100) | |
| 16 | 70006816 | 1 | Spacer | |
| 17 | 70006817 | 1 | Setscrew | |
| 18 | 4640862 | 1 | Valve Block Assembly (Note: No Service Parts Available - Replace Complete Assembly) | |
| 19 | 70023373 | 2 | Plug | |
| 20 | 70023371 | 2 | Plug | |
| 21 | 70006818 | 1 | Plate, Wear Pad | |
| 22 | 70006793 | 10 | Capscrew | |
| 23 | 70006819 | 4 | Capscrew | |
| 24 | 3340608 | 2 | Pad, Wear | |
| 25 | 70006820 | 3 | Bolt | |
| 26 | 3790110 | 2 | O-Ring (Located Between Barrel & Valve) | |
| 100 | 70006821 | 1 | Seal Kit (Includes Items 4, 6-10 & 12-15) | |

## FIGURE 5-25. TELESCOPE CYLINDER ASSEMBLY - MAIN BOOM (600AJ) (SN B300002836 through B300005764)

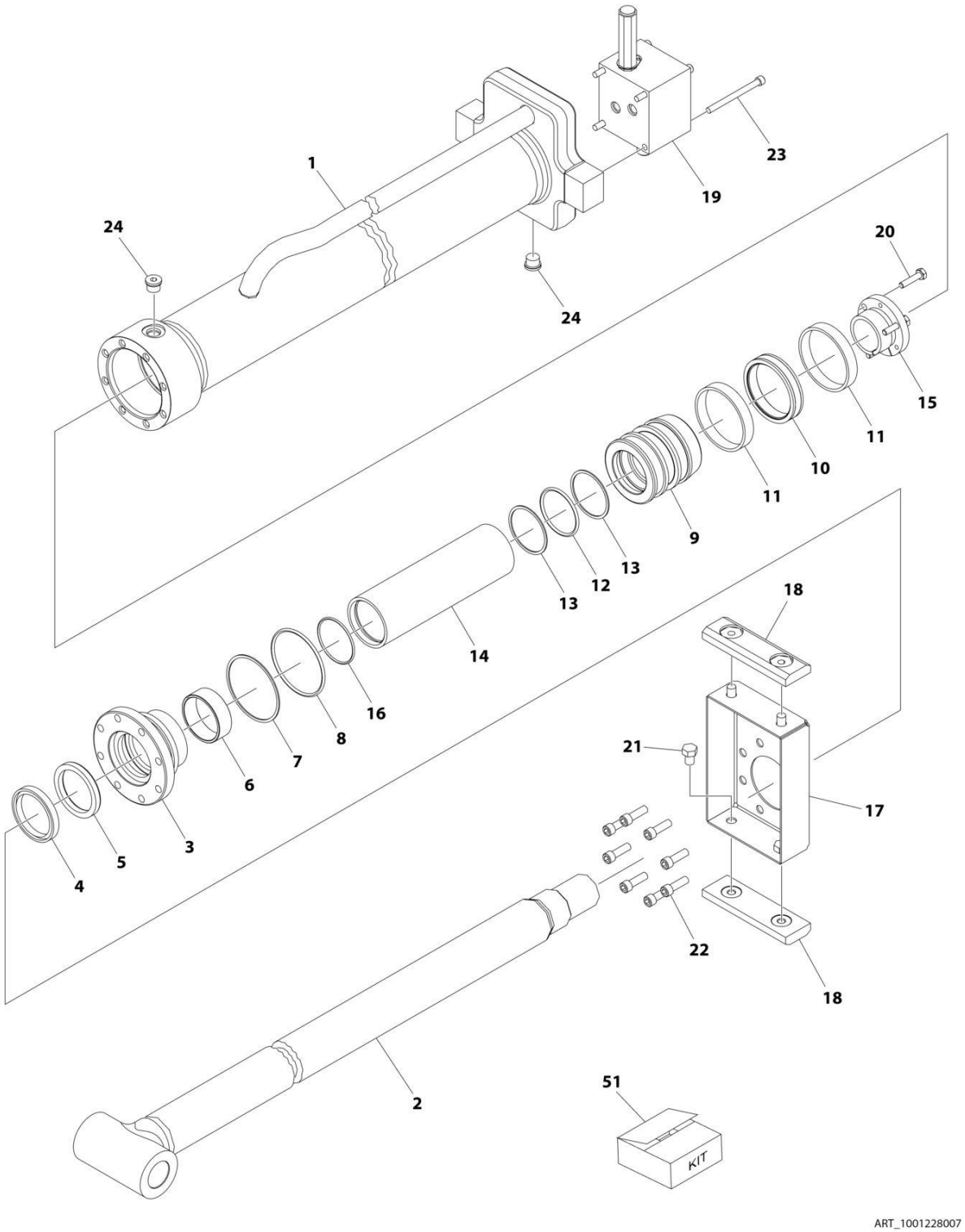

## FIGURE 5-25. TELESCOPE CYLINDER ASSEMBLY - MAIN BOOM (600AJ) (SN B300002836 through B300005764)

| ITEM | PART NUMBER | QTY | DESCRIPTION | REV |
|---|---|---|---|---|
| | 1001228007 | Ref | TELESCOPE CYLINDER ASSEMBLY | D |
| | | Ref | Note: Original Cylinder may have been replaced with Service Replacement. Identify PN Stamped on Cylinder Before Ordering Parts. | |
| 1 | See Note | NSS | Barrel (Note: Use p/n 1001228007) | |
| 2 | 70006654 | 1 | Rod | |
| 3 | 70006483 | 1 | Head | |
| 4 | See Note | NSS | Wiper (Note: Use Item 51) | |
| 5 | See Note | NSS | Seal, Rod (Note: Use Item 51) | |
| 6 | See Note | NSS | Ring, Wear (Note: Use Item 51) | |
| 7 | See Note | NSS | O-Ring (Note: Use Item 51) | |
| 8 | See Note | NSS | Ring, Back-up (Note: Use Item 51) | |
| 9 | 70006482 | 1 | Piston | |
| 10 | See Note | NSS | Seal (Note: Use Item 51) | |
| 11 | See Note | NSS | Ring, Wear (Note: Use Item 51) | |
| 12 | See Note | NSS | O-Ring (Note: Use Item 51) | |
| 13 | See Note | NSS | Ring, Back-up (Note: Use Item 51) | |
| 14 | 70006655 | 1 | Spacer | |
| 15 | 0961896 | 1 | Bushing, Tapered | |
| 16 | See Note | NSS | O-Ring (Note: Use Item 51) | |
| 17 | 3538247 | 1 | Plate, Wear Pad Mounting | |
| 18 | 3340608 | 2 | Pad, Wear | |
| 19 | 4640862 | 1 | Valve Block Assembly (Note: No Service Part Available - Replace Complete Assembly) | |
| 20 | 0630535 | 3 | Bolt 1/4 x 1-1/8 | |
| 21 | 0641604 | 4 | Bolt 3/8 x 1/2 | |
| 22 | 3931516 | 8 | Capscrew 5/16 x 1 | |
| 22 | 0100038 | AR | Primer, Locking | |
| 22 | 0100011 | AR | Compound, Locking | |
| 23 | 3931448 | 4 | Capscrew 1/4 x 3 | |
| 24 | 2220885 | AR | Plug, O-Ring | |
| 51 | 2901861 | 1 | Seal Kit - 1001228007 Cylinder (Includes Item 4-8, 10-13 & 16) | |

## FIGURE 5-26. TELESCOPE CYLINDER ASSEMBLY - TOWER BOOM (SN 0300087000 through 0300177361, SN B300000100 through B300002477)

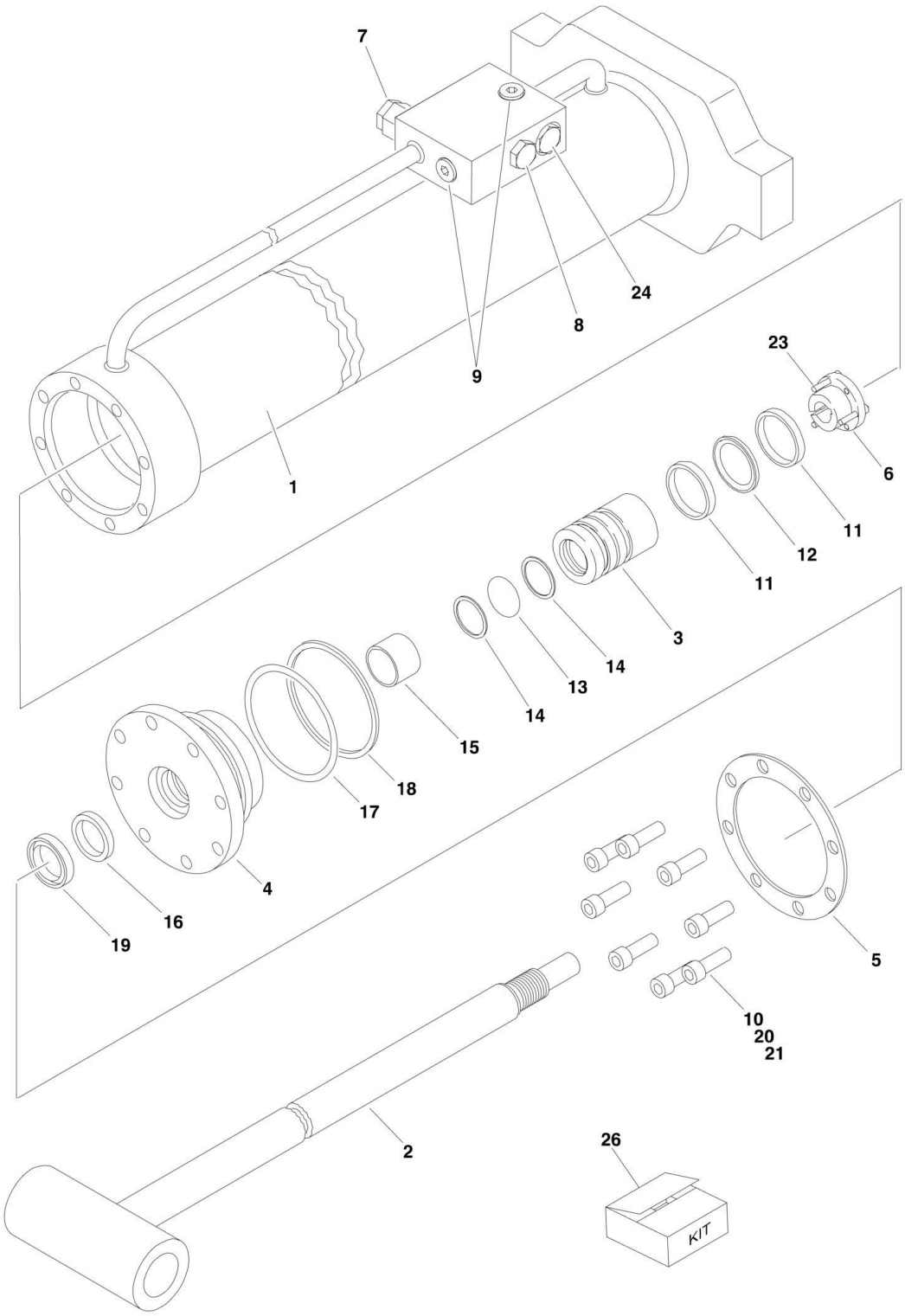

## FIGURE 5-26. TELESCOPE CYLINDER ASSEMBLY - TOWER BOOM (SN 0300087000 through 0300177361, SN B300000100 through B300002477)

| ITEM | PART NUMBER | QTY | DESCRIPTION | REV |
|---|---|---|---|---|
| | 1683312 | Ref | **TELESCOPE (TOWER BOOM) CYLINDER ASSEMBLY** | K |
| | | Ref | **Note: Original Equipment components may have been replaced with Service Replacement components part. Identify p/n stamped on cylinder before ordering parts.** | |
| 1 | 1683313 | 1 | Barrel | |
| 2 | 1683314 | 1 | Rod | |
| 3 | 3480212 | 1 | Piston | |
| 4 | 1683054 | 1 | Head | |
| 5 | 3760368 | 1 | Ring, Washer | |
| 5 | 1001228417 | 1 | Ring, Washer | |
| 6 | 0961896 | 1 | Bushing, Tapered | |
| 7 | 4640509 | 2 | Cartridge, Valve | |
| 7 | 2900792 | 2 | Seal Kit - 4640509 Valve | |
| 8 | 4640647 | 1 | Cartridge, Valve | |
| 8 | 2900770 | 1 | Seal Kit - 4640647 Valve | |
| 9 | 2220883 | Ref | Plug, O-Ring | |
| 9 | 2220883 | 1 | USA Built Machines **(SN 0300087000 through 0300138326)** | |
| 9 | 2220883 | 2 | USA Built Machines **(SN 0300138327 through 0300177361)** | |
| 9 | 2220883 | 2 | China Built Machines **(SN B300000100 through B3000002477)** | |
| 10 | 3931516 | 8 | Capscrew, Socket Head 5/16in-18NC x 1in | |
| 11 | See Note | NSS | Ring, Wear (Note: Use Item 26) | |
| 12 | See Note | NSS | T-Seal (Note: Use Item 26) | |
| 13 | See Note | NSS | O-Ring (Note: Use Item 26) | |
| 14 | See Note | NSS | Ring, Back-up (Note: Use Item 26) | |
| 15 | See Note | NSS | Ring, Wear (Note: Use Item 26) | |
| 16 | See Note | NSS | Seal, Rod (Note: Use Item 26) | |
| 17 | See Note | NSS | O-Ring (Note: Use Item 26) | |
| 18 | See Note | NSS | Ring, Back-up (Note: Use Item 26) | |
| 19 | See Note | NSS | Wiper (Note: Use Item 26) | |
| 20 | 0100038 | AR | Primer, Locking | |
| 21 | 0100011 | AR | Compound, Locking | |
| 23 | 0630535 | 3 | Bolt 1/4in-20NC x 1-1/8in | |
| 24 | 4640999 | 1 | Cartridge, Valve | |
| 24 | 7011185 | 1 | Seal Kit - 4640999 Valve | |
| 26 | 2901861 | 1 | Seal Kit - 1683312 Cylinder (Includes Items 11-19) | |

## FIGURE 5-27. TELESCOPE CYLINDER ASSEMBLY - TOWER BOOM (SN B300002478 through B300005764)

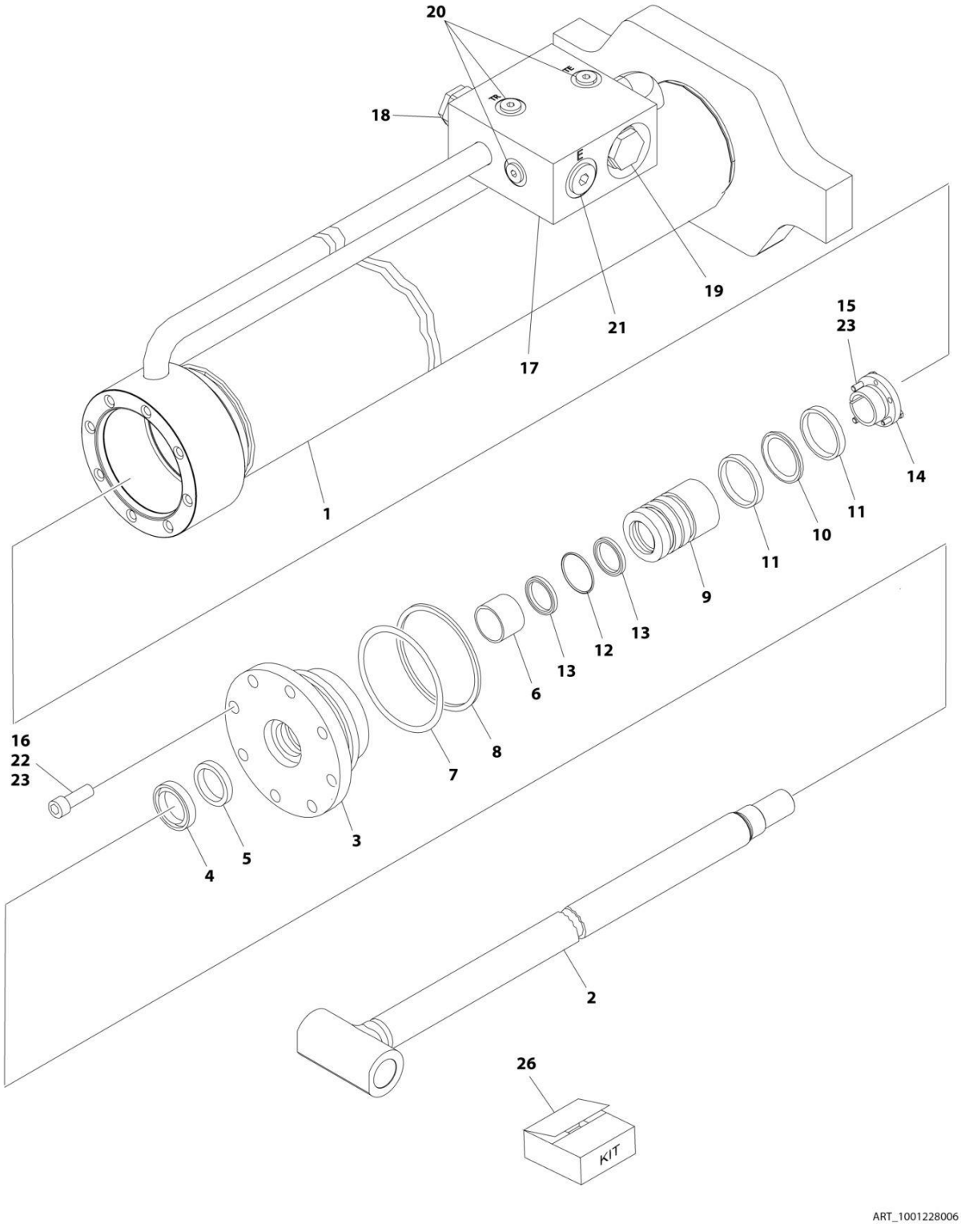

## FIGURE 5-27. TELESCOPE CYLINDER ASSEMBLY - TOWER BOOM (SN B300002478 through B300005764)

| ITEM | PART NUMBER | QTY | DESCRIPTION | REV |
|---|---|---|---|---|
| | 1001228006 | Ref | TELESCOPE CYLINDER ASSEMBLY - TOWER BOOM | C |
| | | Ref | Note: Original Equipment components may have been replaced with Service Replacement components part. Identify p/n stamped on cylinder before ordering parts. | |
| 1 | See Note | NSS | Barrel (Note: Not Available for Purchase) | |
| 2 | 70006484 | 1 | Rod | |
| 3 | 70006483 | 1 | Head | |
| 4 | See Note | NSS | Wiper (Note: Use Item 26) | |
| 5 | See Note | NSS | Seal, Rod (Note: Use Item 26) | |
| 6 | See Note | NSS | Ring, Wear (Note: Use Item 26) | |
| 7 | See Note | NSS | O-Ring (Note: Use Item 26) | |
| 8 | See Note | NSS | Ring, Back-Up (Note: Use Item 26) | |
| 9 | 70006482 | 1 | Piston | |
| 10 | See Note | NSS | T-Seal (Note: Use Item 26) | |
| 11 | See Note | NSS | Ring, Wear (Note: Use Item 26) | |
| 12 | See Note | NSS | O-Ring (Note: Use Item 26) | |
| 13 | See Note | NSS | Ring, Back-Up (Note: Use Item 26) | |
| 14 | 0961896 | 1 | Bushing, Tapered | |
| 15 | 0630535 | 3 | Bolt 1/4 x 1-1/8 | |
| 16 | 3931516 | 8 | Capscrew 5/16 x 1 | |
| 17 | 4640647 | 1 | Cartridge, Valve | |
| 17 | 2900770 | 1 | Seal Kit - 4640647 Valve | |
| 18 | 4640509 | 2 | Cartridge, Valve | |
| 18 | 2900792 | 2 | Seal Kit - 4640509 Valve | |
| 19 | 4640999 | 1 | Cartridge, Valve | |
| 19 | 2900792 | 1 | Seal Kit - 4640999 Valve | |
| 20 | 2220883 | 3 | Plug, O-Ring | |
| 21 | 2220886 | 2 | Plug, O-Ring | |
| 22 | 0100038 | AR | Primer, Locking | |
| 23 | 0100011 | AR | Compound, Locking | |
| 26 | 2901861 | 1 | Seal Kit - 1001228006 Cylinder (Includes Items 4-8 & 10-13) | |

# SECTION 6 - HYDRAULIC

## FIGURE 6-1. DRIVE HYDRAULIC DIAGRAM - 2WD/2WS

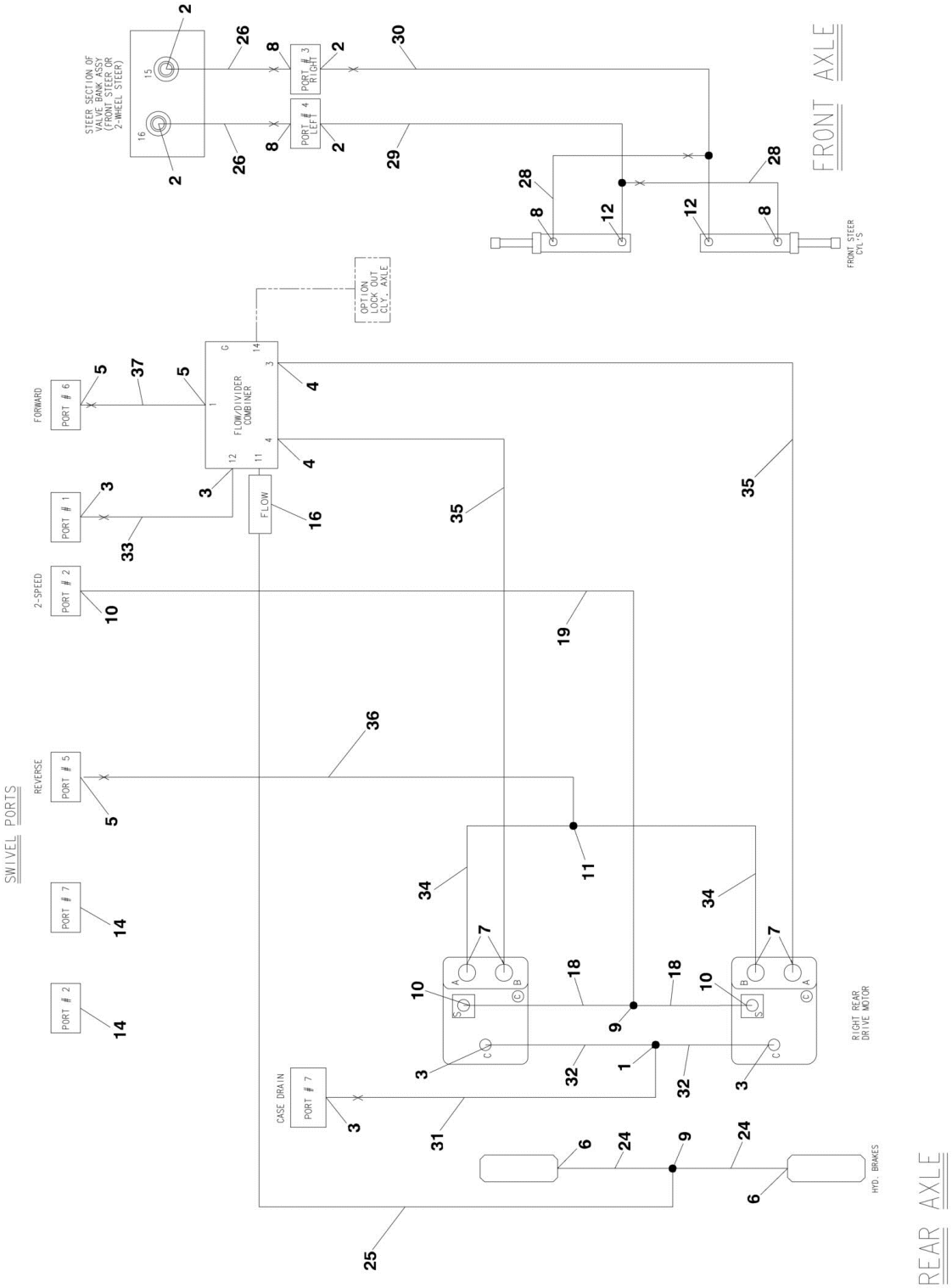

## FIGURE 6-1. DRIVE HYDRAULIC DIAGRAM - 2WD/2WS

| ITEM | PART NUMBER | QTY | DESCRIPTION | REV |
|---|---|---|---|---|
| | 2792692 | Ref | **DRIVE HYDRAULIC DIAGRAM - 2WD/2WS** | 3-R |
| 1 | 2220362 | 1 | Fitting, Tee | |
| 2 | 2220371 | 4 | Fitting, Straight | |
| 3 | 2220373 | 5 | Fitting, Straight | |
| 4 | 2220451 | 2 | Fitting, Straight | |
| 5 | 2220377 | 3 | Fitting, Straight | |
| 6 | 2220415 | 2 | Fitting, Straight | |
| 7 | 2220451 | 4 | Fitting, Straight | |
| 8 | 2220473 | 4 | Fitting, 90 | |
| 9 | 2220504 | 2 | Fitting, Tee | |
| 10 | 2220582 | 3 | Fitting, Straight | |
| 11 | 2221170 | 1 | Fitting, Tee | |
| 12 | 2220606 | 2 | Fitting, Tee | |
| 14 | 2220237 | 2 | Fitting, Plug | |
| 16 | 4641307 | 1 | Valve, Check | |
| 18 | 2753925 | 2 | Hose | |
| 19 | 2753924 | 1 | Hose | |
| 24 | 2752592 | 2 | Hose | |
| 25 | 2752910 | 1 | Hose | |
| 26 | 2752620 | 2 | Hose | |
| 28 | 2754235 | 2 | Hose | |
| 29 | 2752475 | 1 | Hose | |
| 30 | 2752611 | 1 | Hose | |
| 31 | 2752928 | 1 | Hose | |
| 32 | 2753929 | 2 | Hose | |
| 33 | 2752929 | 1 | Hose | |
| 34 | 2753969 | 2 | Hose | |
| 35 | 2753967 | 2 | Hose | |
| 36 | 2752341 | 1 | Hose | |
| 37 | 2753435 | 1 | Hose | |

## FIGURE 6-2. DRIVE HYDRAULIC DIAGRAM - 4WD/2WS

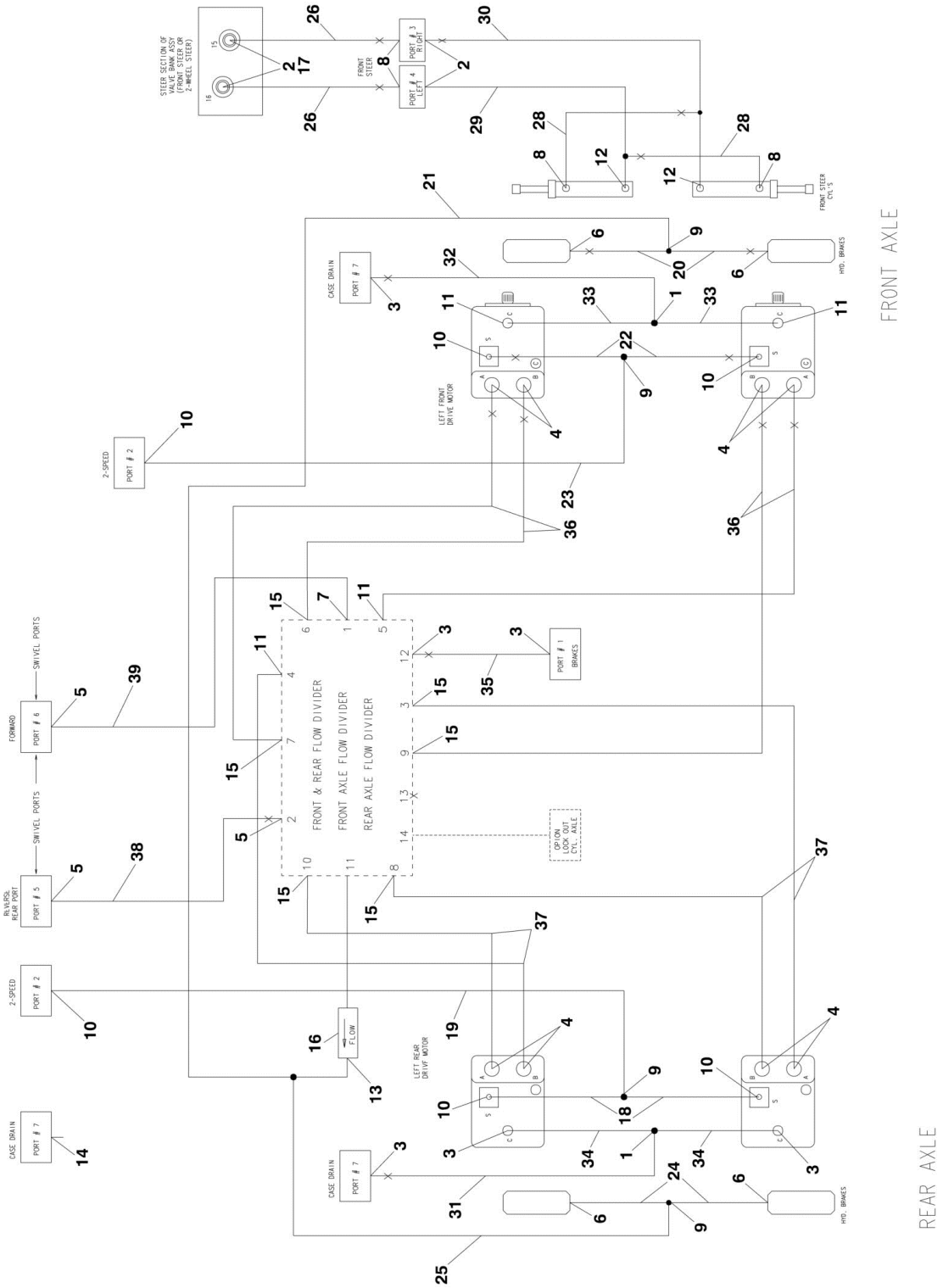

## FIGURE 6-2. DRIVE HYDRAULIC DIAGRAM - 4WD/2WS

| ITEM | PART NUMBER | QTY | DESCRIPTION | REV |
|---|---|---|---|---|
| | | Ref | **DRIVE HYDRAULIC DIAGRAM - 4WD/2WS** | |
| | 2792687 | Ref | **USA Built Machines without Arctic Package** | 4-R |
| | 2792730 | Ref | **USA Built Machines with Arctic Package** | 2-R |
| | 1001114078 | Ref | **China Built Machines without Arctic Package (SN B300000100 through B300000883)** | C-F |
| | 1001165439 | Ref | **China Built Machines without Arctic Package (SN B300000884 through B300005764, Excluding B300005620)** | A-F |
| | 2792730 | Ref | **China Built Machines with Arctic Package** | 2-R |
| 1 | 2220362 | 2 | Fitting, Tee | |
| 2 | 2220371 | 4 | Fitting, Straight | |
| 3 | 2220373 | 6 | Fitting, Straight | |
| 4 | 2220375 | 8 | Fitting, Straight | |
| 5 | 2220377 | 3 | Fitting, Straight | |
| 6 | 2220415 | 4 | Fitting, Straight | |
| 7 | 2220646 | 1 | Fitting, 90 | |
| 8 | 2220473 | 4 | Fitting, 90 | |
| 9 | 2220504 | 4 | Fitting, Tee | |
| 10 | 2220582 | 6 | Fitting, Straight | |
| 11 | 2220596 | 4 | Fitting, 90 | |
| 12 | 2220606 | 2 | Fitting, Tee | |
| 13 | 2220861 | 1 | Fitting, Tee | |
| 14 | 2220237 | 2 | Fitting, Plug | |
| 15 | | Ref | Fitting Options: | |
| 15 | 2220500 | 6 | Fitting, 45 | |
| 15 | 2220373 | 6 | Fitting, Straight | |
| 16 | 4641284 | 1 | Valve, Check | |
| 17 | 2220507 | 2 | Fitting, 90 (with p/n 2792730 Arctic Package Only) | |
| 18 | | Ref | Hose Options: | |
| 18 | 2753925 | 2 | USA Built Machines **(SN 0300087000 through 0300177361)** | |
| 18 | 1001113864 | 2 | China Built Machines without Arctic Package | |
| 18 | 2753925 | 2 | China Built Machines with Arctic Package | |
| 19 | | Ref | Hose Options: | |
| 19 | 2753924 | 1 | USA Built Machines **(SN 0300087000 through 0300177361)** | |
| 19 | 1001113862 | 1 | China Built Machines without Arctic Package | |
| 19 | 2753924 | 1 | China Built Machines with Arctic Package | |
| 20 | | Ref | Hose Options: | |
| 20 | 2753926 | 2 | USA Built Machines without Arctic Package | |
| 20 | 1001113866 | 2 | China Built Machines without Arctic Package | |
| 20 | 2754731 | 2 | With Arctic Package | |
| 21 | | Ref | Hose Options: | |
| 21 | 2753929 | 1 | USA Built Machines without Arctic Package **(SN 0300087000 through 0300177361)** | |
| 21 | 2754229 | 1 | USA Built Machines with Arctic Package **(SN 0300087000 through 0300177361)** | |
| 21 | 1001113881 | 1 | China Built Machines without Arctic Package | |
| 21 | 2754229 | 1 | China Built Machines with Arctic Package | |
| 22 | | Ref | Hose Options: | |
| 22 | 2752574 | 2 | USA Built Machines without Arctic Package | |
| 22 | 1001113805 | 2 | China Built Machines without Arctic Package | |
| 22 | 2754732 | 2 | With Arctic Package | |

| ITEM | PART NUMBER | QTY | DESCRIPTION | REV |
|---|---|---|---|---|
| 23 | | Ref | Hose Options: | |
| 23 | 2754230 | 1 | USA Built Machines without Arctic Package | |
| 23 | 1001113882 | 1 | China Built Machines without Arctic Package | |
| 23 | 2754230 | 1 | With Arctic Package | |
| 24 | | Ref | Hose Options: | |
| 24 | 2752592 | 2 | USA Built Machines **(SN 0300087000 through 0300177361)** | |
| 24 | 1001113809 | 2 | China Built Machines without Arctic Package | |
| 24 | 2752592 | 2 | China Built Machines with Arctic Package | |
| 25 | | Ref | Hose Options: | |
| 25 | 2752910 | 1 | USA Built Machines **(SN 0300087000 through 0300177361)** | |
| 25 | 1001113890 | 1 | China Built Machines without Arctic Package | |
| 25 | 2752910 | 1 | China Built Machines with Arctic Package | |
| 26 | | Ref | Hose Options: | |
| 26 | 2752620 | 2 | USA Built Machines **(SN 0300087000 through 0300177361)** | |
| 26 | 1001113820 | 2 | China Built Machines without Arctic Package | |
| 26 | 2752620 | 2 | China Built Machines with Arctic Package | |
| 28 | | Ref | Hose Options: | |
| 28 | 2754235 | 2 | USA Built Machines **(SN 0300087000 through 0300177361)** | |
| 28 | 1001113884 | 2 | China Built Machines without Arctic Package | |
| 28 | 2754235 | 2 | China Built Machines with Arctic Package | |
| 29 | | Ref | Hose Options: | |
| 29 | 2752475 | 1 | USA Built Machines **(SN 0300087000 through 0300177361)** | |
| 29 | 1001113793 | 1 | China Built Machines without Arctic Package | |
| 29 | 2752475 | 1 | China Built Machines with Arctic Package | |
| 30 | | Ref | Hose Options: | |
| 30 | 2752611 | 1 | USA Built Machines **(SN 0300087000 through 0300177361)** | |
| 30 | 1001113818 | 1 | China Built Machines without Arctic Package | |
| 30 | 2752611 | 1 | China Built Machines with Arctic Package | |
| 31 | | Ref | Hose Options: | |
| 31 | 2752928 | 1 | USA Built Machines without Arctic Package | |
| 31 | 1001113835 | 1 | China Built Machines without Arctic Package **(SN B300000100 through B300000883)** | |
| 31 | 2752928 | 1 | China Built Machines without Arctic Package **(SN B300000884 through B300005764, Excluding B300005620)** | |
| 31 | 2752928 | 1 | With Arctic Package | |
| 32 | | Ref | Hose Options: | |
| 32 | 2754231 | 1 | USA Built Machines without Arctic Package | |
| 32 | 1001113883 | 1 | China Built Machines without Arctic Package **(SN B300000100 through B300000883)** | |
| 32 | 2754231 | 1 | China Built Machines without Arctic Package **(SN B300000884 through B300005764, Excluding B300005620)** | |
| 32 | 2754231 | 1 | With Arctic Package | |
| 33 | | Ref | Hose Options: | |
| 33 | 2753928 | 2 | USA Built Machines without Arctic Package | |
| 33 | 1001113868 | 2 | China Built Machines without Arctic Package **(SN B300000100 through B300000883)** | |
| 33 | 2753928 | 2 | China Built Machines without Arctic Package **(SN B300000884 through B300005764, Excluding B300005620)** | |
| 33 | 2754733 | 2 | With Arctic Package | |
| 34 | | Ref | Hose Options: | |
| 34 | 2753929 | 2 | USA Built Machines **(SN 0300087000 through 0300177361)** | |
| 34 | 1001113878 | 2 | China Built Machines without Arctic Package | |
| 34 | 2753929 | 2 | China Built Machines with Arctic Package | |

| ITEM | PART NUMBER | QTY | DESCRIPTION | REV |
|---|---|---|---|---|
| 35 | | Ref | Hose Options: | |
| 35 | 2753929 | 1 | USA Built Machines **(SN 0300087000 through 0300177361)** | |
| 35 | 1001113836 | 1 | China Built Machines without Arctic Package | |
| 35 | 2753929 | 1 | China Built Machines with Arctic Package | |
| 36 | | Ref | Hose Options: | |
| 36 | 2754232 | 4 | USA Built Machines without Arctic Package | |
| 36 | 1001113897 | 4 | China Built Machines without Arctic Package **(SN B300000100 through B300000883)** | |
| 36 | 2754232 | 4 | China Built Machines without Arctic Package **(SN B300000884 through B300005764, Excluding B300005620)** | |
| 36 | 2754734 | 4 | With Arctic Package | |
| 37 | | Ref | Hose Options: | |
| 37 | 2753930 | 4 | USA Built Machines **(SN 0300087000 through 0300177361)** | |
| 37 | 1001113894 | 4 | China Built Machines without Arctic Package | |
| 37 | 2753930 | 4 | China Built Machines with Arctic Package | |
| 38 | | Ref | Hose Options: | |
| 38 | 2754227 | 1 | USA Built Machines **(SN 0300087000 through 0300177361)** | |
| 38 | 1001113903 | 1 | China Built Machines without Arctic Package | |
| 38 | 2754227 | 1 | China Built Machines with Arctic Package | |
| 39 | | Ref | Hose Options: | |
| 39 | 2754228 | 1 | USA Built Machines **(SN 0300087000 through 0300177361)** | |
| 39 | 1001113904 | 1 | China Built Machines without Arctic Package | |
| 39 | 2754228 | 1 | China Built Machines with Arctic Package | |

## FIGURE 6-3. HYDRAULIC DIAGRAM - OSCILLATING AXLE

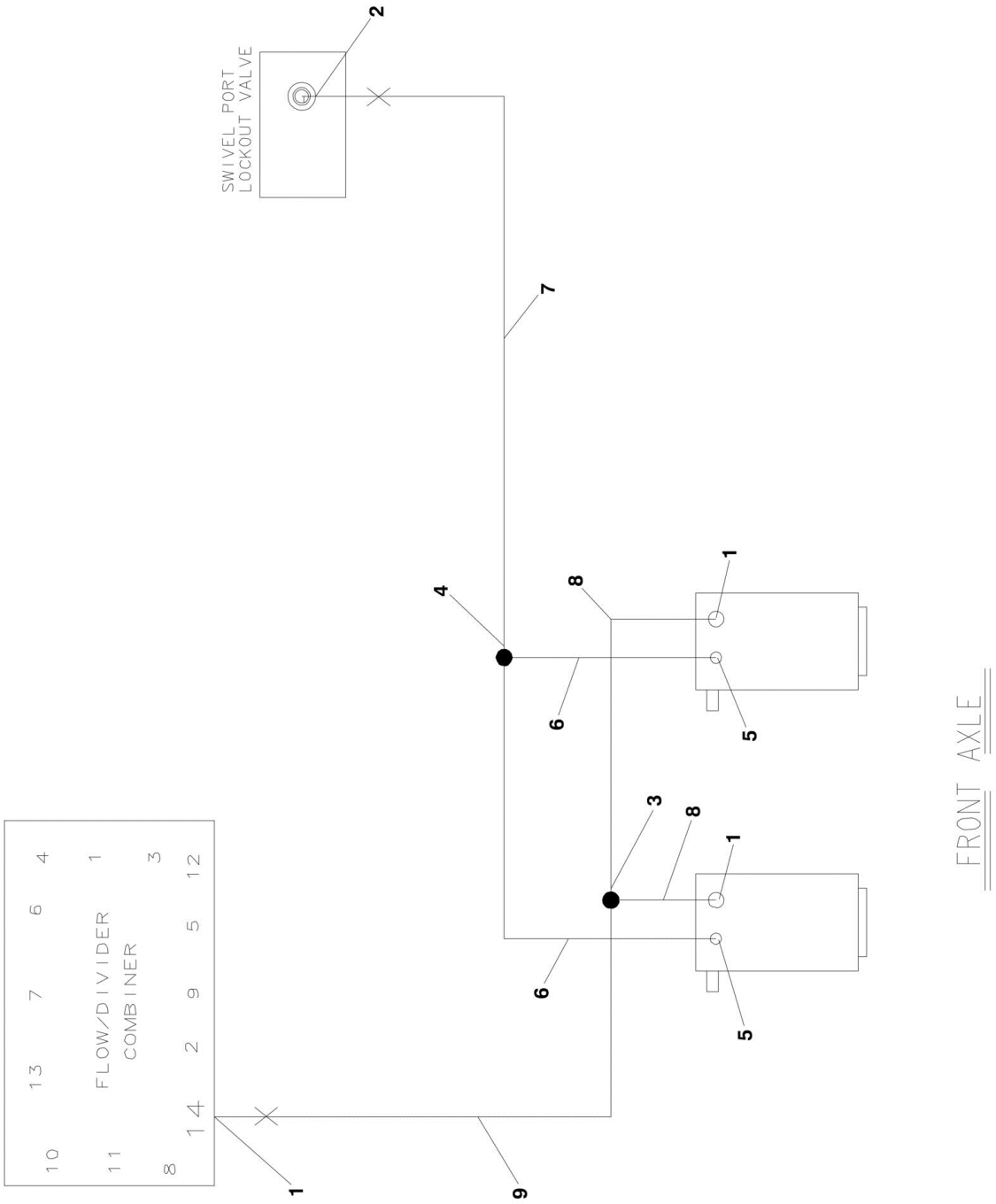

## FIGURE 6-3. HYDRAULIC DIAGRAM - OSCILLATING AXLE

| ITEM | PART NUMBER | QTY | DESCRIPTION | REV |
|---|---|---|---|---|
| | | Ref | **HYDRAULIC DIAGRAM - OSCILLATING AXLE** | |
| | 2792690 | Ref | **USA Built Machines** | 1-R |
| | 2792612 | Ref | **USA Built Machines with p/n 1001167359 Kit** | 1-Q |
| | 1001114079 | Ref | **China Built Machines (SN B300000100 through B300001357)** | C |
| | 1001190028 | Ref | **China Built Machines (SN B300001358 through B300001985)** | A |
| | 1001114079 | Ref | **China Built Machines (SN B300001986 through B300005764, Excluding B300005620)** | C |
| 1 | 2220371 | 3 | Fitting, Straight | |
| 2 | 2220468 | 1 | Fitting, Straight | |
| 3 | 2220490 | 1 | Fitting, Tee | |
| 4 | 2220504 | 1 | Fitting, Tee | |
| 5 | 2220415 | 2 | Fitting, Straight | |
| 6 | | Ref | Hose Options: | |
| 6 | 2751434 | 2 | USA Built Machines | |
| 6 | 1001113914 | 2 | China Built Machines | |
| 7 | | Ref | Hose Options: | |
| 7 | 2751410 | 1 | USA Built Machines | |
| 7 | 1001113913 | 1 | China Built Machines | |
| 8 | | Ref | Hose Options: | |
| 8 | 2753933 | 2 | USA Built Machines | |
| 8 | 1001113879 | 2 | China Built Machines | |
| 9 | | Ref | Hose Options: | |
| 9 | 2752462 | 1 | USA Built Machines | |
| 9 | 1001113789 | 1 | China Built Machines **(SN B300000100 through B300001357)** | |
| 9 | 2752462 | 1 | China Built Machines **(SN B300001358 through B300005764, Excluding B300005620)** | |

## FIGURE 6-4. HYDRAULIC DIAGRAM - STANDARD (SN 0300087000 through 0300137452)

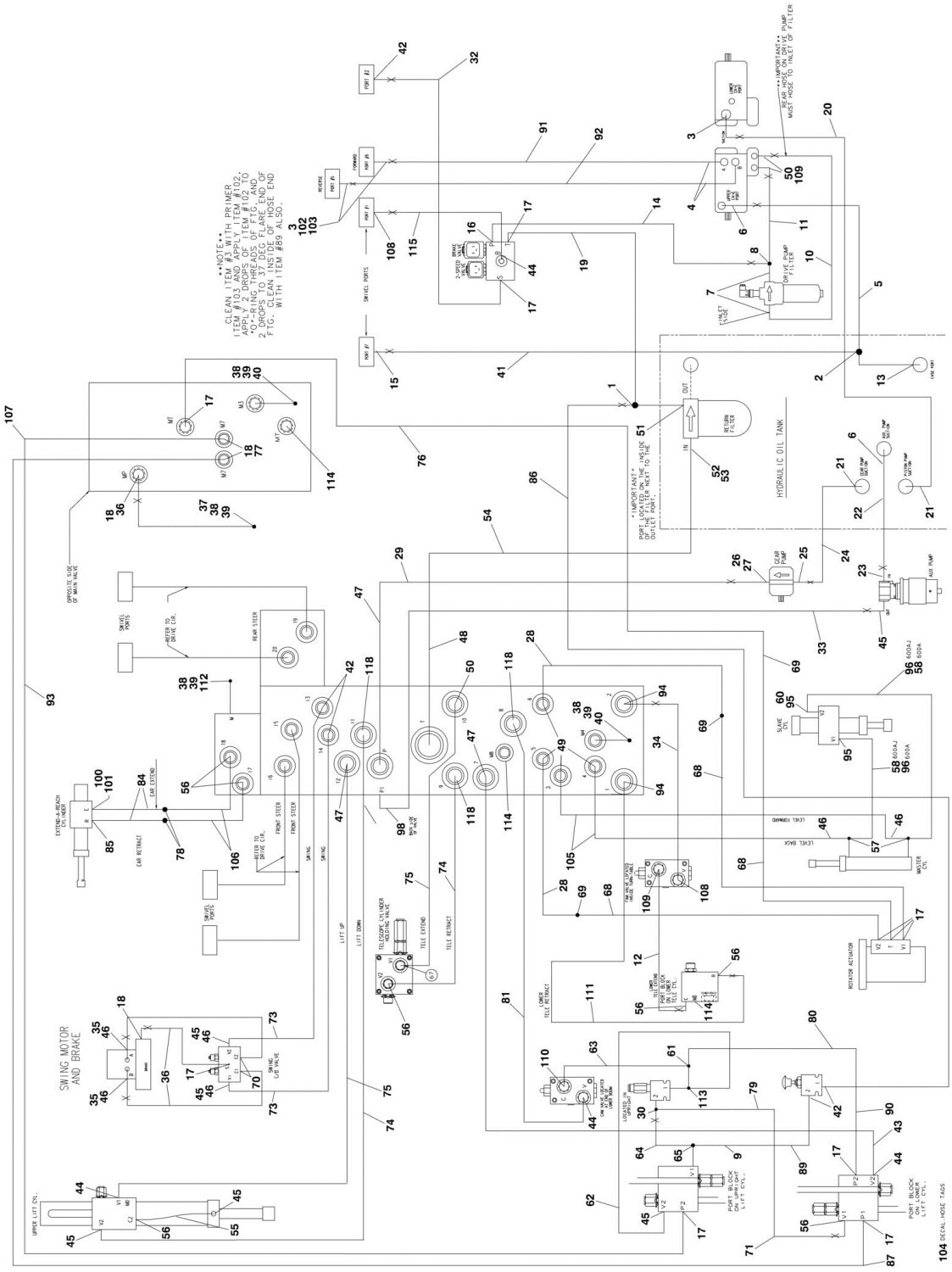

## FIGURE 6-4. HYDRAULIC DIAGRAM - STANDARD (SN 0300087000 through 0300137452)

| ITEM | PART NUMBER | QTY | DESCRIPTION | REV |
|---|---|---|---|---|
| | 2792688 | Ref | **HYDRAULIC DIAGRAM - STANDARD (600A)** | 10-M |
| | 2792689 | Ref | **HYDRAULIC DIAGRAM - STANDARD (600AJ)** | 8-M |
| 1 | 2220605 | 1 | Fitting, Tee | |
| 2 | 2220409 | 1 | Fitting, 45 | |
| 3 | 2220377 | 3 | Fitting, Straight (Qty 1 is Part of Pump Assembly) | |
| 4 | 2220646 | 2 | Fitting, 90 (Part of Pump Assembly) | |
| 5 | | Ref | Hose Options: | |
| 5 | 2752655 | 1 | Hose, 74in/1.9m Length | |
| 5 | 1001093549 | 1 | Hose, 82in/2m Length | |
| 6 | 2220578 | 2 | Fitting, 90 (Qty 1 is Part of Pump Assembly) | |
| 7 | 2221042 | 2 | Fitting, 90 | |
| 8 | 2220948 | 1 | Fitting, Tee | |
| 9 | 2220618 | 1 | Fitting, Reducer | |
| 10 | 2754329 | 1 | Hose | |
| 11 | 2754330 | 1 | Hose | |
| 12 | 2753132 | 1 | Hose | |
| 13 | 2220738 | 1 | Fitting, Tee | |
| 14 | 2754328 | 1 | Hose | |
| 15 | 2220375 | AR | Fitting, Straight (600A - Qty.1 /600AJ - Qty.2) | |
| 16 | 2220474 | 1 | Fitting, 90 | |
| 17 | 2220466 | AR | Fitting, 90 | |
| 18 | 2220415 | AR | Fitting, Straight | |
| 19 | 2753325 | 1 | Hose | |
| 20 | 2752723 | 1 | Hose | |
| 21 | 2220379 | 2 | Fitting, Straight | |
| 22 | 2752656 | 1 | Hose | |
| 23 | 2220567 | 1 | Fitting, 90 | |
| 24 | 2752724 | 1 | Hose | |
| 25 | 2220376 | 1 | Fitting, Straight (Part of Pump Assembly) | |
| 26 | 2220810 | 1 | Fitting, Reducer (Part of Pump Assembly) | |
| 27 | 4640744 | 1 | Valve, Check (Part of Pump Assembly) | |
| 28 | 2752604 | 2 | Hose (Note: Also Requires #69 & #68 for Complete Run Up Boom) | |
| 29 | 2752929 | 1 | Hose | |
| 30 | 2220602 | 1 | Fitting, Tee | |
| 32 | 2751396 | 1 | Hose | |
| 33 | 2752635 | 1 | Hose | |
| 34 | 2753133 | 1 | Hose | |
| 35 | 2220497 | 2 | Fitting, Straight | |
| 36 | 2752573 | AR | Hose | |
| 37 | 2220414 | 1 | Fitting, Straight | |
| 38 | 2220428 | 4 | Fitting, Quick Coupling | |
| 39 | 2220429 | 4 | Cap, Dust | |
| 40 | 2220873 | 3 | Fitting | |
| 41 | 2753968 | 1 | Hose | |
| 42 | 2220582 | AR | Fitting, Straight | |
| 43 | 2752506 | 1 | Hose (600A) | |
| 43 | 2752516 | 1 | Hose (600AJ) | |
| 44 | 2220596 | 4 | Fitting, 90 | |
| 45 | 2220628 | 6 | Fitting, 90 | |
| 46 | 2220609 | AR | Fitting, Reducer | |

| ITEM | PART NUMBER | QTY | DESCRIPTION | REV |
|---|---|---|---|---|
| 47 | 2220381 | 3 | Fitting, Long Straight | |
| 48 | 2220974 | 1 | Fitting, Long Straight | |
| 49 | 2220923 | 4 | Fitting, Long Straight | |
| 50 | 2220374 | 1 | Fitting | |
| 51 | 2220574 | 1 | Fitting, Straight | |
| 52 | 2220921 | 1 | Fitting, Reducer | |
| 53 | 2220498 | 1 | Fitting, 45 | |
| 54 | 2752783 | 1 | Hose | |
| 55 | 2752469 | 1 | Hose | |
| 56 | 2220372 | AR | Fitting, Straight (600A - Qty.5 / 600AJ - Qty.7) | |
| 57 | 2220899 | 2 | Fitting, Tee | |
| 58 | 2752636 | 1 | Hose (600A) | |
| 58 | 2752468 | 1 | Hose (600AJ) | |
| 60 | 2220657 | 1 | Fitting, 45 (600A Only) | |
| 61 | 2221065 | 1 | Fitting, Tee | |
| 62 | 2752462 | 1 | Hose | |
| 63 | 2753134 | 1 | Hose | |
| 64 | 2752497 | 1 | Hose | |
| 65 | 2220999 | 1 | Fitting, Tee | |
| 67 | 2220500 | 1 | Fitting, 45 | |
| 68 | 2752601 | 3 | Hose (Note: Also Requires #69 & #28 or #76 for Complete Run Up Boom) | |
| 69 | 2220510 | 3 | Fitting, Coupling | |
| 70 | 2220468 | 2 | Fitting, Straight | |
| 71 | 2753052 | 1 | Hose | |
| 73 | 2752603 | 2 | Hose | |
| 74 | 2753055 | 2 | Hose | |
| 75 | 2752939 | 2 | Hose | |
| 76 | 2752579 | 1 | Hose (Note: Also Requires #69 & #68 for Complete Run Up Boom) | |
| 77 | 2220654 | 2 | Fitting, 90 | |
| 78 | 2220511 | 1 | Fitting, Coupling (600AJ Only) | |
| 79 | 2753056 | 1 | Hose | |
| 80 | 2752991 | 1 | Hose | |
| 81 | 2753135 | 1 | Hose | |
| 84 | 2753047 | 2 | Hose (600AJ Only) (Note: Also Requires #78 & #106 for Complete Run Up Boom) | |
| 85 | 2220473 | 1 | Fitting, 90 (600AJ Only) | |
| 86 | 2752453 | 1 | Hose | |
| 87 | 2752593 | 1 | Hose | |
| 89 | 2752990 | 1 | Hose | |
| 90 | 2752985 | 1 | Hose | |
| 91 | 2752343 | 1 | Hose | |
| 92 | 2752341 | 1 | Hose | |
| 94 | 2220998 | 2 | Hose | |
| 95 | 2220603 | 2 | Fitting, Straight | |
| 96 | 2753046 | 1 | Hose (600A) | |
| 96 | 2752650 | 1 | Hose (600AJ) | |
| 98 | 2220473 | 1 | Fitting, 90 | |
| 100 | 2180724 | 1 | Fitting, Modified 90 (600AJ Only) | |
| 101 | 2180380 | 1 | Plug, Orifice.06 (600AJ Only) | |
| 102 | 0100011 | AR | Compound, Locking | |
| 103 | 0100038 | AR | Primer, Locking | |

| ITEM | PART NUMBER | QTY | DESCRIPTION | REV |
|---|---|---|---|---|
| 104 | 1703534 | 2 | Decal, Hose Tags (Not Shown) | |
| 105 | 2752989 | 2 | Hose | |
| 106 | 2752618 | 2 | Hose (600AJ Only) (Note: Also Requires #78 & #84 for Complete Run Up Boom) | |
| 107 | 2752987 | 1 | Hose | |
| 108 | 2220373 | 2 | Fitting, Straight | |
| 109 | 2220947 | 3 | Fitting, Straight (Qty 2 is Part of Pump Assembly) | |
| 110 | 2221036 | 1 | Fitting, O-Ring | |
| 111 | 2752484 | 1 | Hose | |
| 112 | 2220873 | 1 | Fitting, Nipple | |
| 113 | 2221053 | 1 | Fitting, Tee | |
| 114 | 2220235 | 3 | Plug | |
| 115 | 2752519 | 1 | Hose | |
| 118 | 1001104423 | 3 | Fitting, Adapter (One Piece Design) (Replaces Two Separate Fittings on USA Built Machines) **(SN 0300087000 through 0300134296)** | |

## FIGURE 6-5. HYDRAULIC DIAGRAM - STANDARD (SN 0300137453 through 0300177361, SN B300000100 through B300005764)

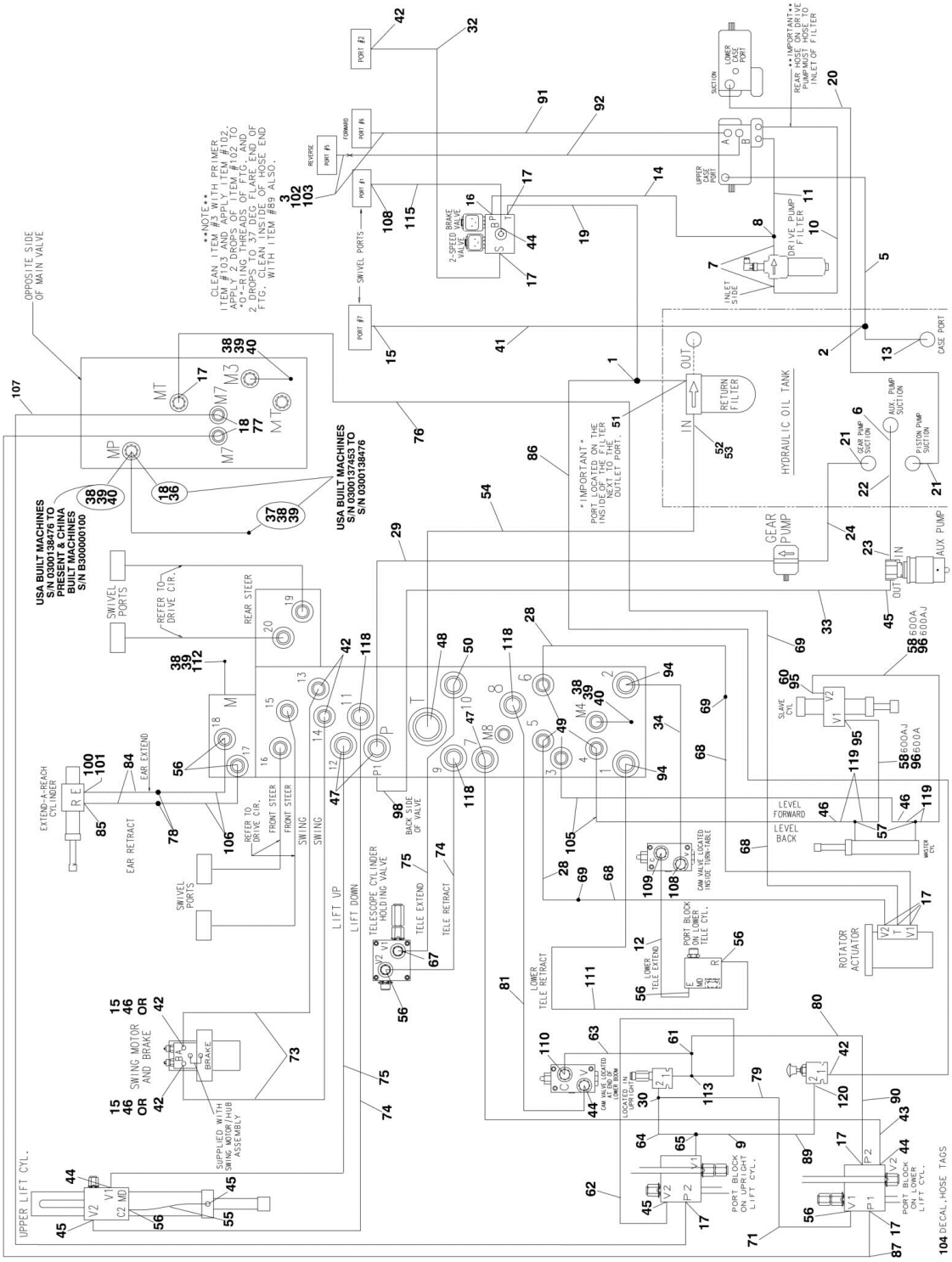

## FIGURE 6-5. HYDRAULIC DIAGRAM - STANDARD (SN 0300137453 through 0300177361, SN B300000100 through B300005764)

| ITEM | PART NUMBER | QTY | DESCRIPTION | REV |
|---|---|---|---|---|
| | | Ref | **HYDRAULIC DIAGRAM - STANDARD** | |
| | 2792688 | Ref | **Hydraulic Diagram 600A USA Built Machines** | C-4 |
| | 1001114076 | Ref | **Hydraulic Diagram 600A China Built Machines (SN B300000100 through B300000883)** | E-F |
| | 1001165403 | Ref | **Hydraulic Diagram 600A China Built Machines (SN B300000884 through B300005764, Excluding B300005620)** | A |
| | 2792689 | Ref | **Hydraulic Diagram 600AJ USA Built Machines** | B-S |
| | 1001114077 | Ref | **Hydraulic Diagram 600AJ China Built Machines (SN B300000100 through B300000883)** | E-F |
| | 1001165404 | Ref | **Hydraulic Diagram 600AJ China Built Machines (SN B300000884 through B300005764, Excluding B300005620)** | A |
| 1 | 2220605 | 1 | Fitting, Tee | |
| 2 | 2220409 | 1 | Fitting, 45 | |
| 3 | 2220377 | 2 | Fitting, Straight | |
| 5 | | Ref | Hose Options: | |
| 5 | 1001093549 | 1 | USA Built Machines | |
| 5 | 1001113889 | 1 | China Built Machines | |
| 6 | 2220578 | 1 | Fitting, 90 | |
| 7 | 2221042 | 2 | Fitting, 90 | |
| 8 | 2220948 | 1 | Fitting, Tee | |
| 9 | 2220618 | 1 | Fitting, Reducer | |
| 10 | | Ref | Hose Options: | |
| 10 | 2754329 | 1 | USA Built Machines | |
| 10 | 1001113886 | 1 | China Built Machines **(SN B300000100 through B300000883)** | |
| 10 | 2754329 | 1 | China Built Machines **(SN B300000884 through B300005764, Excluding B300005620)** | |
| 11 | | Ref | Hose Options: | |
| 11 | 2754330 | 1 | USA Built Machines | |
| 11 | 1001113887 | 1 | China Built Machines **(SN B300000100 through B300000883)** | |
| 11 | 2754330 | 1 | China Built Machines **(SN B300000884 through B300005764, Excluding B300005620)** | |
| 12 | | Ref | Hose Options: | |
| 12 | 2753132 | 1 | USA Built Machines | |
| 12 | 1001113850 | 1 | China Built Machines **(SN B300000100 through B300000883)** | |
| 12 | 2753132 | 1 | China Built Machines **(SN B300000884 through B300005764, Excluding B300005620)** | |
| 13 | 2220738 | 1 | Fitting, Tee | |
| 14 | | Ref | Hose Options: | |
| 14 | 2754328 | 1 | USA Built Machines | |
| 14 | 1001113885 | 1 | China Built Machines | |
| 15 | 2220375 | AR | Fitting, Straight | |
| 16 | 2220474 | 1 | Fitting, 90 | |
| 17 | 2220466 | 9 | Fitting, 90 | |
| 18 | 2220415 | AR | Fitting, Straight | |
| 19 | | Ref | Hose Options: | |
| 19 | 2753325 | 1 | USA Built Machines | |
| 19 | 1001113855 | 1 | China Built Machines | |
| 20 | | Ref | Hose Options: | |
| 20 | 2752723 | 1 | USA Built Machines | |
| 20 | 1001113909 | 1 | China Built Machines | |

| ITEM | PART NUMBER | QTY | DESCRIPTION | REV |
|---|---|---|---|---|
| 21 | 2220379 | 2 | Fitting, Straight | |
| 22 | | Ref | Hose Options: | |
| 22 | 2752656 | 1 | USA Built Machines | |
| 22 | 10011133908 | 1 | China Built Machines | |
| 23 | 2220567 | 1 | Fitting, 90 | |
| 24 | | Ref | Hose Options: | |
| 24 | 2752724 | 1 | USA Built Machines | |
| 24 | 1001113910 | 1 | China Built Machines **(SN B300000100 through B300000883)** | |
| 24 | 2752724 | 1 | China Built Machines **(SN B300000884 through B300005764, Excluding B300005620)** | |
| 28 | | Ref | Hose Options: (Note: Also Requires #69 & #68 for Complete Run Up Boom) | |
| 28 | 2752604 | 2 | USA Built Machines | |
| 28 | 1001113817 | 2 | China Built Machines **(SN B300000100 through B300000883)** | |
| 28 | 2752604 | 2 | China Built Machines **(SN B300000884 through B300005764, Excluding B300005620)** | |
| 29 | | Ref | Hose Options: | |
| 29 | 2752929 | 1 | USA Built Machines | |
| 29 | 1001113836 | 1 | China Built Machines | |
| 30 | 2220602 | 1 | Fitting, Tee | |
| 32 | | Ref | Hose Options: | |
| 32 | 2751396 | 1 | USA Built Machines | |
| 32 | 1001113912 | 1 | China Built Machines | |
| 33 | | Ref | Hose Options: | |
| 33 | 2752635 | 1 | USA Built Machines | |
| 33 | 1001113824 | 1 | China Built Machines | |
| 34 | | Ref | Hose Options: | |
| 34 | 2753133 | 1 | USA Built Machines | |
| 34 | 1001113851 | 1 | China Built Machines **(SN B300000100 through B300000883)** | |
| 34 | 2753133 | 1 | China Built Machines **(SN B300000884 through B300005764, Excluding B300005620)** | |
| 36 | 2752573 | AR | Hose (USA Built Machines) **(SN 0300137453 through 0300138476)** | |
| 37 | 2220414 | AR | Fitting, Straight | |
| 38 | 2220428 | AR | Fitting, Quick Coupling | |
| 39 | 2220429 | AR | Cap, Dust | |
| 40 | 2220873 | 3 | Fitting | |
| 41 | | Ref | Hose Options: | |
| 41 | 2753968 | 1 | USA Built Machines | |
| 41 | 1001113896 | 1 | China Built Machines | |
| 42 | 2220582 | AR | Fitting, Straight | |
| 43 | | Ref | Hose Options: | |
| 43 | 2752506 | 1 | Hose 600A USA Built Machines | |
| 43 | 1001113799 | 1 | Hose 600A China Built Machines **(SN B300000100 through B300000883)** | |
| 43 | 2752506 | 1 | Hose 600A China Built Machines **(SN B300000884 through B300005764, Excluding B300005620)** | |
| 43 | 2752516 | 1 | Hose 600AJ USA Built Machines | |
| 43 | 1001113802 | 1 | Hose 600AJ China Built Machines | |
| 44 | 2220596 | 4 | Fitting, 90 | |
| 45 | 2220628 | 4 | Fitting, 90 | |
| 46 | 2220609 | 2 | Fitting, Reducer (China Built Machines Only) | |
| 47 | 2220381 | 3 | Fitting, Long Straight | |

| ITEM | PART NUMBER | QTY | DESCRIPTION | REV |
|---|---|---|---|---|
| 48 | 2220974 | 1 | Fitting, Long Straight | |
| 49 | 2220923 | 4 | Fitting, Long Straight | |
| 50 | 2220374 | 1 | Fitting | |
| 51 | 2220574 | 1 | Fitting, Straight | |
| 52 | 2220921 | 1 | Fitting, Reducer | |
| 53 | 2220498 | 1 | Fitting, 45 | |
| 54 | | Ref | Hose Options: | |
| 54 | 2752783 | 1 | USA Built Machines | |
| 54 | 1001113911 | 1 | China Built Machines | |
| 55 | | Ref | Hose Options: | |
| 55 | 2752469 | 1 | USA Built Machines | |
| 55 | 1001113792 | 1 | China Built Machines | |
| 56 | 2220372 | AR | Fitting, Straight (600A - Qty.5 / 600AJ - Qty.7) | |
| 57 | 2220899 | 2 | Fitting, Tee | |
| 58 | | Ref | Hose Options: | |
| 58 | 2752636 | 1 | Hose 600A USA Built Machines | |
| 58 | 1001113825 | 1 | Hose 600A China Built Machines **(SN B300000100 through B300000883)** | |
| 58 | 2752636 | 1 | Hose 600A China Built Machines **(SN B300000884 through B300005764, Excluding B300005620)** | |
| 58 | 2752468 | 1 | Hose 600AJ USA Built Machines | |
| 58 | 1001113791 | 1 | Hose 600AJ China Built Machines **(SN B300000100 through B300000883)** | |
| 58 | 2752468 | 1 | Hose 600AJ China Built Machines **(SN B300000884 through B300005764, Excluding B300005620)** | |
| 60 | 2220657 | AR | Fitting, 45 | |
| 61 | 2221065 | 1 | Fitting, Tee | |
| 62 | | Ref | Hose Options: | |
| 62 | 2752462 | 1 | USA Built Machines | |
| 62 | 1001113789 | 1 | China Built Machines **(SN B300000100 through B300000883)** | |
| 62 | 2752462 | 1 | China Built Machines **(SN B300000884 through B300005764, Excluding B300005620)** | |
| 63 | | Ref | Hose Options: | |
| 63 | 2753134 | 1 | USA Built Machines | |
| 63 | 1001113852 | 1 | China Built Machines | |
| 64 | | Ref | Hose Options: | |
| 64 | 2752497 | 1 | Hose USA Built Machines | |
| 64 | 1001113796 | 1 | Hose China Built Machines | |
| 65 | 2220999 | 1 | Fitting, Tee | |
| 67 | 2220500 | 1 | Fitting, 45 | |
| 68 | | Ref | Hose Options: (Note: Also Requires #69 & #28 or #76 for Complete Run Up Boom) | |
| 68 | 2752601 | 3 | USA Built Machines | |
| 68 | 1001113815 | 3 | China Built Machines **(SN B300000100 through B300000883)** | |
| 68 | 2752601 | 3 | China Built Machines **(SN B300000884 through B300005764, Excluding B300005620)** | |
| 69 | 2220510 | 3 | Fitting, Coupling | |
| 71 | | Ref | Hose Options: | |
| 71 | 2753052 | 1 | USA Built Machines | |
| 71 | 1001113847 | 1 | China Built Machines | |
| 73 | | Ref | Hose Options: | |
| 73 | 2752600 | 2 | USA Built Machines | |
| 73 | 1001113816 | 2 | China Built Machines | |

| ITEM | PART NUMBER | QTY | DESCRIPTION | REV |
|---|---|---|---|---|
| 74 | | Ref | Hose Options: | |
| 74 | 2753055 | 2 | USA Built Machines | |
| 74 | 1001113848 | 2 | China Built Machines **(SN B300000100 through B300000883)** | |
| 74 | 2753055 | 2 | China Built Machines **(SN B300000884 through B300005764, Excluding B300005620)** | |
| 75 | | Ref | Hose Options: | |
| 75 | 2752939 | 2 | USA Built Machines | |
| 75 | 1001113837 | 2 | China Built Machines **(SN B300000100 through B300000883)** | |
| 75 | 2752939 | 2 | China Built Machines **(SN B300000884 through B300005764, Excluding B300005620)** | |
| 76 | | Ref | Hose Options: (Note: Also Requires #69 & #68 for Complete Run Up Boom) | |
| 76 | 2752579 | 1 | USA Built Machines | |
| 76 | 1001113806 | 1 | China Built Machines **(SN B300000100 through B300000883)** | |
| 76 | 2752579 | 1 | China Built Machines **(SN B300000884 through B300005764, Excluding B300005620)** | |
| 77 | 2220654 | 2 | Fitting, 90 | |
| 78 | 2220511 | 1 | Fitting, Coupling (600AJ Only) | |
| 79 | | Ref | Hose Options: | |
| 79 | 2753056 | 1 | USA Built Machines | |
| 79 | 1001113849 | 1 | China Built Machines **(SN B300000100 through B300000883)** | |
| 79 | 2753056 | 1 | China Built Machines **(SN B300000884 through B300005764, Excluding B300005620)** | |
| 80 | | Ref | Hose Options: | |
| 80 | 2752991 | 1 | USA Built Machines | |
| 80 | 1001113844 | 1 | China Built Machines **(SN B300000100 through B300000883)** | |
| 80 | 2752991 | 1 | China Built Machines **(SN B300000884 through B300005764, Excluding B300005620)** | |
| 81 | | Ref | Hose Options: | |
| 81 | 2753135 | 1 | USA Built Machines | |
| 81 | 1001113853 | 1 | China Built Machines **(SN B300000100 through B300000883)** | |
| 81 | 2753135 | 1 | China Built Machines **(SN B300000884 through B300005764, Excluding B300005620)** | |
| 84 | | Ref | Hose (600AJ Only): (Note: Also Requires #78 & #106 for Complete Run Up Boom) | |
| 84 | 2753047 | 2 | USA Built Machines | |
| 84 | 1001113846 | 2 | China Built Machines **(SN B300000100 through B300000883)** | |
| 84 | 2753047 | 2 | China Built Machines **(SN B300000884 through B300005764, Excluding B300005620)** | |
| 85 | 2220473 | 1 | Fitting, 90 (600AJ Only) | |
| 86 | | Ref | Hose Options: | |
| 86 | 2752453 | 1 | USA Built Machines | |
| 86 | 1001113786 | 1 | China Built Machines | |
| 87 | | Ref | Hose Options: | |
| 87 | 2752593 | 1 | USA Built Machines | |
| 87 | 1001113810 | 1 | China Built Machines | |
| 89 | | Ref | Hose Options: | |
| 89 | 2752990 | 1 | USA Built Machines | |
| 89 | 1001113843 | 1 | China Built Machines **(SN B300000100 through B300000883)** | |
| 89 | 2752990 | 1 | China Built Machines **(SN B300000884 through B300005764, Excluding B300005620)** | |
| 90 | | Ref | Hose Options: | |
| 90 | 2752985 | 1 | USA Built Machines | |
| 90 | 1001113840 | 1 | China Built Machines | |

| ITEM | PART NUMBER | QTY | DESCRIPTION | REV |
|---|---|---|---|---|
| 91 | | Ref | Hose Options: | |
| 91 | 2752343 | 1 | USA Built Machines (72in/1.83m Length) | |
| 91 | 2752341 | 1 | USA Built Machines (66in/1.68m Length) | |
| 91 | 1001113902 | 1 | China Built Machines (72in/1.83m Length) **(SN B300000100 through B300000883)** | |
| 91 | 1001113901 | 1 | China Built Machines (66in/1.68m Length) **(SN B300000100 through B300000883)** | |
| 91 | 2752343 | 1 | China Built Machines (66in/1.68m Length) **(SN B300000884 through B300005764, Excluding B300005620)** | |
| 92 | | Ref | Hose Options: | |
| 92 | 2752343 | 1 | USA Built Machines (72in/1.83m Length) | |
| 92 | 2752341 | 1 | USA Built Machines (66in/1.68m Length) | |
| 92 | 1001113902 | 1 | China Built Machines (72in/1.83m Length) **(SN B300000100 through B300000883)** | |
| 92 | 1001113901 | 1 | China Built Machines (66in/1.68m Length) **(SN B300000100 through B300000883)** | |
| 92 | 2752341 | 1 | China Built Machines (66in/1.68m Length) **(SN B300000884 through B300005764, Excluding B300005620)** | |
| 94 | 2220998 | 2 | Fitting, Straight | |
| 95 | 2220603 | 2 | Fitting, Straight | |
| 96 | | Ref | Hose Options: | |
| 96 | 2753046 | 1 | Hose 600A USA Built Machines | |
| 96 | 1001113845 | 1 | Hose 600A China Built Machines **(SN B300000100 through B300000883)** | |
| 96 | 2753046 | 1 | Hose 600A China Built Machines **(SN B300000884 through B300005764, Excluding B300005620)** | |
| 96 | 2752650 | 1 | Hose 600AJ USA Built Machines | |
| 96 | 1001113827 | 1 | Hose 600AJ China Built Machines **(SN B300000100 through B300000883)** | |
| 96 | 2752650 | 1 | Hose 600AJ China Built Machines **(SN B300000884 through B300005764, Excluding B300005620)** | |
| 98 | 2220473 | 1 | Fitting, 90 | |
| 100 | 2180724 | 1 | Fitting, Modified 90 (600AJ Only) | |
| 101 | 2180380 | 1 | Plug, Orifice.06 (600AJ Only) | |
| 102 | 0100011 | AR | Compound, Locking | |
| 103 | 0100038 | AR | Primer, Locking | |
| 104 | 1703534 | 2 | Decal, Hose Tags (Not Shown) | |
| 105 | | Ref | Hose Options: | |
| 105 | 2752989 | 2 | USA Built Machines | |
| 105 | 1001113842 | 2 | China Built Machines **(SN B300000100 through B300000883)** | |
| 105 | 2752989 | 2 | China Built Machines **(SN B300000884 through B300005764, Excluding B300005620)** | |
| 106 | | Ref | Hose Options (600AJ Only): (Note: Also Requires #78 & #84 for Complete Run Up Boom) | |
| 106 | 2752618 | 2 | USA Built Machines | |
| 106 | 1001113819 | 2 | China Built Machines **(SN B300000100 through B300000883)** | |
| 106 | 2752618 | 2 | China Built Machines **(SN B300000884 through B300005764, Excluding B300005620)** | |
| 107 | | Ref | Hose Options: | |
| 107 | 2752987 | 1 | USA Built Machines | |
| 107 | 1001113841 | 1 | China Built Machines **(SN B300000100 through B300000883)** | |
| 107 | 2752987 | 1 | China Built Machines **(SN B300000884 through B300005764, Excluding B300005620)** | |
| 108 | 2220373 | 2 | Fitting, Straight | |

| ITEM | PART NUMBER | QTY | DESCRIPTION | REV |
|---|---|---|---|---|
| 109 | 2220947 | 1 | Fitting, Straight | |
| 110 | 2221036 | 1 | Fitting, O-Ring | |
| 111 | | Ref | Hose Options: | |
| 111 | 2752484 | 1 | USA Built Machines | |
| 111 | 1001113795 | 1 | China Built Machines | |
| 112 | 2220873 | 1 | Fitting, Nipple (600AJ Only) | |
| 113 | 2221053 | 1 | Fitting, Tee | |
| 115 | | Ref | Hose Options: | |
| 115 | 2752519 | 1 | USA Built Machines | |
| 115 | 1001113803 | 1 | China Built Machines **(SN B300000100 through B300000883)** | |
| 115 | 2752519 | 1 | China Built Machines **(SN B300000884 through B300005764, Excluding B300005620)** | |
| 118 | 1001104423 | 3 | Fitting, Adapter | |
| 119 | 2220507 | 4 | Fitting, 90 Adapter | |
| 120 | | Ref | Fitting Options: | |
| 120 | 2220582 | 1 | Fitting, Straight (USA Built Machines) **(SN 0300087000 through 0300161244)** | |
| 120 | 2220582 | 1 | Fitting, Straight (China Built Machines) **(SN B300000100 through B300000628)** | |
| 120 | 2220472 | 1 | Fitting, 90 (USA Built Machines) **(SN 0300161245 through 0300177361)** | |
| 120 | 2220472 | 1 | Fitting, 90 (China Built Machines) **(SN B300000629 through B300005764, Excluding B300005620)** | |

## FIGURE 6-6. HYDRAULIC DIAGRAM LIST

| ITEM | PART NUMBER | QTY | DESCRIPTION | REV |
|---|---|---|---|---|
| | | Ref | **Note: Diagrams not shown in manual are available from JLG Service/Parts Department.** | |
| | | Ref | **DRIVE HYDRAULIC DIAGRAMS** | |
| | 1283429 | Ref | USA Built Machines with 8ft/2.4m Width Frame: | |
| | 2792692 | Ref | Drive Hydraulic Diagram - 2WD/2WS | |
| | 2792702 | Ref | Drive Hydraulic Diagram - 2WD/4WS | |
| | 2792687 | Ref | Drive Hydraulic Diagram - 4WD/2WS | |
| | 2792730 | Ref | Drive Hydraulic Diagram - 4WD/2WS (Arctic Package) | |
| | 2792697 | Ref | Drive Hydraulic Diagram - 4WD/4WS | |
| | 1001102165 | Ref | Drive Hydraulic Diagram - 4WD/4WS (Arctic Package) | |
| | 1283429 | Ref | USA Built Machines with 7ft/2.1m Width Frame: | |
| | 2792191 | Ref | Drive Hydraulic Diagram - 2WD/2WS | |
| | 2792192 | Ref | Drive Hydraulic Diagram - 2WD/2WS | |
| | 1001114071 AND 1283429 | Ref | China Built Machines | |
| | 2792692 | Ref | Drive Hydraulic Diagram - 2WD/2WS | |
| | 1001114078 | Ref | Drive Hydraulic Diagram - 4WD/2WS | |
| | 2792730 | Ref | Drive Hydraulic Diagram - 4WD/2WS (Arctic Package) | |
| | | Ref | Drive Hydraulic Diagram - 4WD/4WS Options: | |
| | 2792697 | Ref | Drive Hydraulic Diagram - 4WD/4WS **(SN B300000100 through B300000628)** | |
| | 1001138034 | Ref | Drive Hydraulic Diagram - 4WD/4WS **(SN B300000629 through B300005764, Excluding B300005620)** | |
| | 1001102165 | Ref | Drive Hydraulic Diagram - 4WD/4WS (Arctic Package) | |
| | | Ref | **FLUSHING LOOP HYDRAULIC DIAGRAMS** | |
| | 2792787 | Ref | **Flushing Loop Hydraulic Diagrams 2WD** | |
| | 1283429 | Ref | **Flushing Loop Hydraulic Diagrams 2WD** | |
| | 2792786 | Ref | **Flushing Loop Hydraulic Diagrams 4WD** | |
| | 1283429 | Ref | **Flushing Loop Hydraulic Diagrams 4WD** | |
| | | Ref | **OIL COOLER HYDRAULIC DIAGRAMS** | |
| | 0256765 | Ref | **Deutz Engine/USA Built Machines (SN 0300087000 through 0300137662)** | |
| | 1282665 | Ref | **Deutz Engine/USA Built Machines (SN 0300087000 through 0300137662)** | |
| | 1001108702 | Ref | **Deutz Engine/USA Machines Built (SN 0300137663 through 0300177361)** | |
| | 1001108702 | Ref | **Deutz Engine/China Built Machines (SN B300000100 through B300005764, Excluding B300005620)** | |
| | 0256778 | Ref | **Ford/GM Machines** | |
| | 1283309 | Ref | **Ford/GM Machines** | |
| | | Ref | **OSCILLATING AXLE HYDRAULIC DIAGRAMS** | |
| | 2792690 | Ref | **USA Built Machines** | |
| | 1283429 | Ref | **USA Built Machines** | |
| | 1001114079 | Ref | **China Built Machines (SN B300000100 through B300001357)** | |
| | 1001190028 | Ref | **China Built Machines (SN B300001358 through B300001985)** | A |
| | 1001114079 | Ref | **China Built Machines (SN B300001986 through B300005764, Excluding B300005620)** | C |
| | 1001114071 | Ref | **China Built Machines (Chart Drawing)** | |
| | | Ref | **STANDARD HYDRAULIC DIAGRAM** | |
| | 2792688 | Ref | **Standard Hydraulic Diagram 600A USA Built Machines** | |

| ITEM | PART NUMBER | QTY | DESCRIPTION | REV |
|---|---|---|---|---|
| | 1283429 | Ref | **Standard Hydraulic Diagram 600A USA Built Machines** | |
| | 1001114076 | Ref | **Standard Hydraulic Diagram 600A China Built Machines (SN B300000100 through B300000883)** | |
| | 1001165403 | Ref | **Standard Hydraulic Diagram 600A China Built Machines (SN B300000884 through B300005764, Excluding B300005620)** | |
| | 1001114071 | Ref | **Standard Hydraulic Diagram Chart 600A China Built Machines** | |
| | 2792689 | Ref | **Standard Hydraulic Diagram 600AJ USA Built Machines** | |
| | 1283429 | Ref | **Standard Hydraulic Diagram 600AJ USA Built Machines** | |
| | 1001114077 | Ref | **Standard Hydraulic Diagram 600AJ China Built Machines (SN B300000100 through B300000883)** | |
| | 1001165404 | Ref | **Standard Hydraulic Diagram 600AJ China Built Machines (Including B300000884)** | |
| | 1001114071 | Ref | **Standard Hydraulic Diagram Chart 600AJ China Built Machines** | |
| | | Ref | **STANDARD HYDRAULIC SCHEMATIC** | |
| | 2792691 | Ref | **Standard Hydraulic Schematic** | |
| | 2792405 | Ref | **TOOL CIRCUIT HYDRAULIC DIAGRAM** | |
| | 2792315 | Ref | **TOW HYDRAULIC DIAGRAM** | |

# SECTION 7 - ELECTRICAL

## FIGURE 7-1. ELECTRICAL DIAGRAM LIST

| ITEM | PART NUMBER | QTY | DESCRIPTION | REV |
|---|---|---|---|---|
| | | Ref | **Note: Diagrams not shown are available from the JLG Service Department. See Service and Maintenance Manual for Schematics.** | |
| | | Ref | **Note: For module identification, refer to Revision Log Page A.** | |
| | 4933312 | Ref | **CHASSIS ILLUMINATION ELECTRICAL DIAGRAM** | |
| | 1282571 | Ref | **COLD WEATHER START ELECTRICAL DIAGRAM (DEUTZ)** | |
| | | Ref | **DRIVE CUTOUT KIT ELECTRICAL DIAGRAMS** | |
| | 4932990 | Ref | **Drive Cutout Kit (Above Elevation Beyond Transport)** | |
| | 4932993 | Ref | **Drive Cutout Kit (Above Elevation Tilt) (ANSI, ANSI Export, Australian Brazilian and Japanese Specs Only)** | |
| | 4932986 | Ref | **ENGINE LOW OIL SHUTDOWN ELECTRICAL DIAGRAM** | |
| | 4933308 | Ref | **FLOOD LIGHTS ELECTRICAL DIAGRAM** | |
| | | Ref | **GENERATOR ELECTRICAL DIAGRAMS** | |
| | | Ref | **2500W Options:** | |
| | 4933300 | Ref | **Caterpillar and Deutz and Ford Engine 110V 50Hz/60Hz (All Specs USA Built Machines) (SN 0300087000 through 0300132839)** | |
| | 4933300 | Ref | **Caterpillar and Deutz and Ford Engine 110V/220V 60Hz (USA Built Machines) (SN 0300132840 through 0300139040)** | |
| | 1001112588 | Ref | **Caterpillar and Deutz Engine 110V/220V 60Hz (USA Built Machines) (SN 0300139041 through 0300177361)** | |
| | 1001112588 | Ref | **Caterpillar and Deutz Engine 110V/220V 60Hz (China Built Machines) (SN B300000100 through B300005764, Excluding B300005620)** | |
| | 1001100027 | Ref | **Caterpillar and Deutz and Ford Engine 110V/220V 50Hz (USA Built Machines) (SN 0300132840 through 0300139040)** | |
| | 1001112743 | Ref | **Caterpillar and Deutz Engine 110V/220V 50Hz (USA Built Machines) (SN 0300139041 through 0300177361)** | |
| | 4933350 | Ref | **GM Engine** | |
| | | Ref | **4000W Options:** | |
| | 1001153025 | Ref | **4000W/50Hz Generators (ANSI Export Spec) (SN B300000100 through B300001234)** | |
| | 1001194437 | Ref | **4000W/50Hz Generators (ANSI Export Spec) (SN B300001235 through B300005764, Excluding B300005620)** | |
| | 1001159648 | Ref | **4000W/50Hz Generators (Australian Spec)** | |
| | 1001132055 | Ref | **4000W/60Hz Generators (Australian Spec)** | |
| | | Ref | **7500W SkyPower Options:** | |
| | 4933264 | Ref | **Caterpillar/Deutz Engines (USA Built Machines) (SN 0300087000 through 0300139040)** | |
| | 1001112586 | Ref | **Caterpillar/Deutz Engines (USA Built Machines) (SN 0300139041 through 0300177361)** | |
| | 1001112586 | Ref | **Caterpillar/Deutz Engines (China Built Machines) (SN B300000100 through B300001392)** | |
| | 1001157769 | Ref | **Deutz Engines (China Built Machines) (SN B300001393 through B300005764, Excluding B300005620)** | |
| | 4933283 | Ref | **Ford Engine** | |
| | 4933349 | Ref | **GM Engine** | |
| | 4933219 | Ref | **HEADLIGHTS/TAILLIGHTS ELECTRICAL DIAGRAM** | |
| | 4933278 | Ref | **LSS PLATFORM MODULE ELECTRICAL DIAGRAM** | |
| | 4933218 | Ref | **PLATFORM SOFT TOUCH SYSTEM ELECTRICAL DIAGRAM** | |
| | 0273492 | Ref | **PLATFORM WORKLIGHTS ELECTRICAL DIAGRAM** | |
| | 4933263 | Ref | **POWER TOOL ELECTRICAL DIAGRAM** | |

| ITEM | PART NUMBER | QTY | DESCRIPTION | REV |
|---|---|---|---|---|
| | | Ref | **STANDARD ELECTRICAL DIAGRAMS** | |
| | | Ref | **USA Built Machines: (SN 0300087000 through 0300099060)** | |
| | 4933329 | Ref | **Caterpillar Engine (ANSI and ANSI Export Specs)** | |
| | 4933330 | Ref | **Caterpillar Engine (Australian and CE Specs)** | |
| | 4933319 | Ref | **Deutz Engine** | |
| | 4933331 | Ref | **Ford EFI Engine** | |
| | 4933354 | Ref | **GM Engine** | |
| | | Ref | **USA Built Machines: (SN 0300099061 through 0300139040)** | |
| | 4933363 | Ref | **Caterpillar Engine** | |
| | 4933362 | Ref | **Deutz Engine** | |
| | 4933361 | Ref | **GM Engine** | |
| | | Ref | **USA Built Machines: (SN 0300139041 through 0300177361)** | |
| | 1001110382 | Ref | **Caterpillar Engine** | |
| | 1001110381 | Ref | **Deutz Engine** | |
| | 1001110380 | Ref | **GM Engine** | |
| | | Ref | **China Built Machines: (SN B300000100 through B300001392)** | |
| | 1001110382 | Ref | **Caterpillar Engine** | |
| | 1001110381 | Ref | **Deutz Engine** | |
| | | Ref | **China Built Machines: (SN B300001393 through B300005764, Excluding B300005620)** | |
| | 1001188863 | Ref | **Caterpillar Engines** | |
| | 1001154396 | Ref | **Deutz Engines** | |
| | | Ref | **STANDARD ELECTRICAL SCHEMATIC** | |
| | | Ref | **USA Built Machines:** | |
| | 1870132 | Ref | **Caterpillar and Ford Engine Machines (Without UGM) (SN 0300087000 through 0300099060)** | |
| | 1870191 | Ref | **Deutz and GM Engine Machines (Without UGM) (SN 0300087000 through 0300099060)** | |
| | 1870215 | Ref | **Caterpillar, Deutz and GM Engine Machines (Without UGM) (SN 0300099061 through 0300139041)** | |
| | 1001110345 | Ref | **Caterpillar, Deutz and GM Engine Machines (With UGM)** | |
| | 1001131992 | Ref | **GM Engine Schematic (Engine Schematic Only. P/N 1001110345 is schematic for complete machine)** | |
| | | Ref | **CHINA BUILT MACHINES:** | |
| | 1001110345 | Ref | **Caterpillar, Deutz and GM Engine Machines (With UGM)** | |

## FIGURE 7-2. HARNESS COMPONENTS INSTALLATION (WITHOUT UGM)

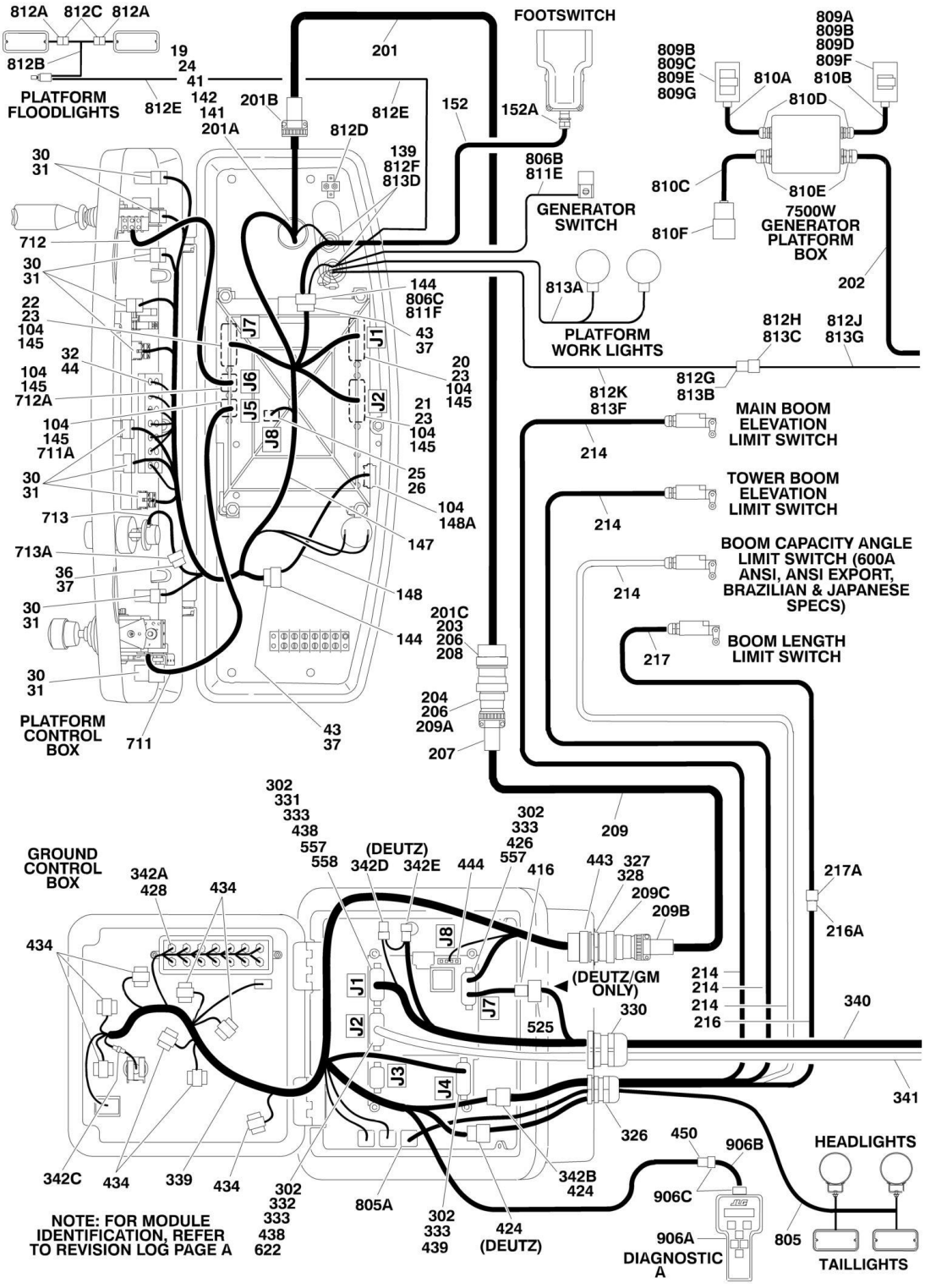

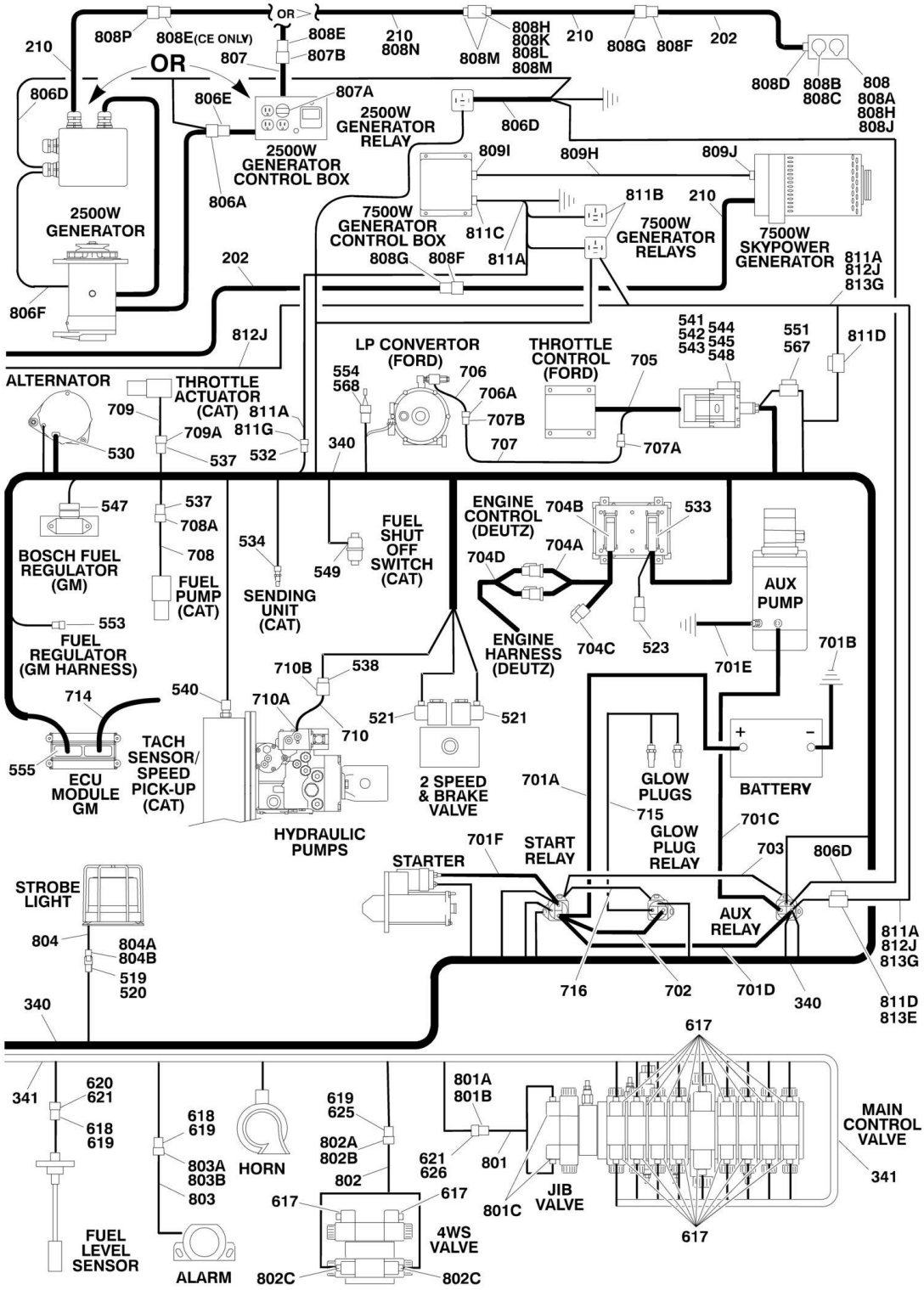
OR
808P
808E (CE ONLY)
808E
807B
807
210
808N
808M
808H
808K
808L
808M
210
808G
808F
202
808D
808B
808C
808
808A
808H
808J
210
OR
806D
806E
807A
2500W GENERATOR RELAY
2500W GENERATOR CONTROL BOX
806A
806D
809I
809H
809J
811B
210
7500W GENERATOR CONTROL BOX
811C
811A
808G
808F
7500W GENERATOR RELAYS
7500W SKYPOWER GENERATOR
811A
812J
813G
2500W GENERATOR
806F
202
812J
541
542
543
544
545
548
551
567
811D
LP CONVERTOR (FORD)
THROTTLE CONTROL (FORD)
705
554
568
706
706A
707B
707
707A
ALTERNATOR
THROTTLE ACTUATOR (CAT)
709
709A
811A
811G
530
537
532
340
547
537
708A
708
534
549
FUEL SHUT OFF SWITCH (CAT)
ENGINE CONTROL (DEUTZ)
704B
533
704A
704D
BOSCH FUEL REGULATOR (GM)
FUEL PUMP (CAT)
SENDING UNIT (CAT)
AUX PUMP
553
FUEL REGULATOR (GM HARNESS)
ENGINE HARNESS (DEUTZ)
704C
523
701E
701B
710B
538
714
540
710A
521
521
710
TACH SENSOR/ SPEED PICK-UP (CAT)
555
ECU MODULE GM
2 SPEED & BRAKE VALVE
701A
GLOW PLUGS
715
BATTERY
701C
HYDRAULIC PUMPS
701F
START RELAY
GLOW PLUG RELAY
703
806D
STARTER
STROBE LIGHT
AUX RELAY
804
804A
804B
519
520
811A
812J
813G
716
702
701D
340
811D
813E
340
617
341
620
621
618
619
618
619
619
625
801A
801B
MAIN CONTROL VALVE
803A
803B
HORN
802A
802B
621
626
801
802
617
617
801C
JIB VALVE
803
4WS VALVE
341
FUEL LEVEL SENSOR
ALARM
802C
802C
617

## FIGURE 7-2. HARNESS COMPONENTS INSTALLATION (WITHOUT UGM)

| ITEM | PART NUMBER | QTY | DESCRIPTION | REV |
|---|---|---|---|---|
| | | Ref | **Note: For Module Identification, Refer to Revision Log Page A.** | |
| | | Ref | **Note: Machines Built without UGM are All USA Built Machines.** | |
| | | Ref | **PLATFORM BOX HARNESS ASSEMBLY** | |
| | 4922639 | Ref | **Platform Box Harness (SN 0300087000 through 0300136622)** | 8-I |
| | 1001107753 | Ref | **Platform Box Harness (SN 0300136623 through 0300177361)** | C |
| 19 | 4460866 | 1 | Connector - 19 Position | |
| 20 | 4460874 | 1 | Connector - 35 Position (Natural) | |
| 21 | 4460875 | 1 | Connector - 35 Position (Gray) | |
| 22 | 4460873 | 1 | Connector - 35 Position (Black) | |
| 23 | 4460871 | 70 | Socket, Female | |
| 24 | 4460464 | 7 | Pin, Male (16 Gauge) | |
| 25 | 4460879 | 1 | Terminal, Housing 2 Position | |
| 26 | 4460887 | 2 | Terminal, (12 Gauge) | |
| 30 | 4460418 | 9 | Connector - 6 Position | |
| 31 | 4460419 | 27 | Terminal, Female | |
| 32 | 4120035 | 13 | Base, Light | |
| 36 | 4460225 | 1 | Connector, Male- 6 Position | |
| 37 | 4460227 | 6 | Pin, Male | |
| 41 | 4460508 | 3 | Pin, Male (12 Gauge) | |
| 43 | 4460434 | 2 | Connector - 15 Position | |
| 44 | 2920129 | 13 | Lamp, Indicator | |
| | | Ref | **PLATFORM BOX ASSEMBLY COMPONENTS** | |
| 104 | 0100048 | AR | Grease, Dielectric | |
| 139 | 4460428 | 2 | Connector, Strain Relief | |
| 141 | 4460470 | 1 | Nut, Terminal | |
| 142 | 4460471 | 1 | Lockwasher, Terminal | |
| 144 | 4460708 | 2 | Connector, Female - 15 Position | |
| 145 | 4460905 | 5 | Seal, Plug | |
| 147 | 4922639 | 1 | Harness, Platform Console Box (Includes Items 19-44) | |
| 148 | 4922666 | 1 | Harness, Analyzer Cable | 2-B |
| 148 | 4460226 | 4 | Socket, Female (Not Shown - Located at J2) | |
| 148A | 4460761 | 1 | Connector, Female - 4 Position | |
| 148A | 4460227 | 4 | Pin, Male | |
| 152 | See Note | 1 | Footswitch Harness (Note: Not Available for Purchase) | |
| 152 | 1060918 | 8 ft/2.4m | Cable, Electrical - 18/3 | |
| 152A | 4460071 | 1 | Connector, Strain Relief | |
| | | Ref | **BOOM CABLES INSTALLATION** | |
| | | Ref | **Boom Cables Installation 600A** | |
| | 0270818 | Ref | **ANSI, ANSI Export, Brazilian, Japanese Specs without 7500W Generator** | 6 |
| | 0272624 | Ref | **ANSI and ANSI Export Specs with 7500W Generator** | 2 |
| | 0275265 | Ref | **ANSI and ANSI Export Specs with Arctic Package without 7500W Generator** | 1 |
| | 1001093436 | Ref | **ANSI and ANSI Export Specs with Arctic Package without 7500W Generator** | 2-A |
| | 0273427 | Ref | **Australian Spec without 7500W Generator** | 1 |
| | 0273429 | Ref | **Australian Spec with 7500W Generator** | 1 |
| | 0270819 | Ref | **CE and Latin American Specs without 7500W Generator** | 6 |
| | 0272626 | Ref | **CE, Japanese and Latin American Specs with 7500W Generator** | 2 |

| ITEM | PART NUMBER | QTY | DESCRIPTION | REV |
|---|---|---|---|---|
| | | Ref | **Boom Cables Installation 600AJ** | |
| | 0270820 | Ref | **ANSI, ANSI Export, Brazilian, Japanese Specs without 7500W Generator** | 6 |
| | 0272625 | Ref | **ANSI and ANSI Export Specs with 7500W Generator** | 2 |
| | 0275140 | Ref | **ANSI and ANSI Export Specs with Arctic Package** | 1 |
| | 1001093432 | Ref | **ANSI and ANSI Export Specs with Arctic Package without 7500W Generator** | 2-A |
| | 0273428 | Ref | **Australian and Latin American Specs without 7500W Generator** | 1 |
| | 0273430 | Ref | **Australian and Latin American Specs with 7500W Generator** | 1 |
| | 0270821 | Ref | **CE Spec without 7500W Generator** | 7 |
| | 0272627 | Ref | **CE Spec with 7500W Generator** | 2 |
| 201 | | Ref | Harness, Main Boom Options: | |
| 201 | 4922493 | 1 | Without Arctic Package | 2-B |
| 201 | 4923472 | 1 | With Arctic Package | 1-A |
| 201 | | Ref | Cable Options: | |
| 201 | 1060896 | 45.5 ft /13.9m | Without Arctic Package | |
| 201 | 4923462 | 45.5 ft /13.9m | With Arctic Package | |
| 201A | 4460865 | 1 | Connector - 19 Position | |
| 201A | 4460465 | 11 | Socket, Female - #16 | |
| 201A | 4460509 | 4 | Socket, Female - #12 | |
| 201A | 4460466 | 4 | Seal, Plug | |
| 201B | 4460473 | 1 | Clamp, Cable | |
| 201C | 4460464 | 11 | Pin, Male (16-18 Gauge) | |
| 201C | 4460508 | 4 | Pin, Male (10-12 Gauge) | |
| 201C | 2820118 | AR | Shrink, Heat | |
| 202 | | Ref | Cable, Electrical (Main Boom) Options (Does not include plug ends): | |
| 202 | | Ref | Without SkyPower: | |
| 202 | 4922894 | 1 | ANSI, ANSI Export, Brazilian, Japanese Specs (12/3) | |
| 202 | 4923474 | 1 | ANSI, ANSI Export Specs with Arctic Package (12/3) | |
| 202 | 4922895 | 1 | Australian, CE and American Specs (12/3) | |
| 202 | | Ref | With SkyPower: | |
| 202 | 4922810 | 1 | Machines without Arctic Package (8/5) | |
| 202 | 1001093433 | NLA | Machines with Arctic Package (8/5) (Use p/n 4922810) **(SN 0300087000 through 0300121176)** | |
| 203 | 2820031 | AR | Shrink, Heat | |
| 204 | 4460865 | 1 | Connector - 19 Position | |
| 206 | 4460466 | 8 | Seal, Plug | |
| 207 | 4460473 | 1 | Clamp, Cable | |
| 208 | 4460866 | 1 | Connector (19 Pin) | |
| 209 | | Ref | Harness, Tower Boom Cable Options: | |
| 209 | 4922494 | 1 | Without Arctic Package | C |
| 209 | 4923473 | 1 | With Arctic Package | 1-A |
| 209 | | Ref | Cable Options: | |
| 209 | 1060896 | 35.5 ft /10.8m | Without Arctic Package | |
| 209 | 4923462 | 35.5 ft /10.8m | With Arctic Package | |
| 209A | 4460465 | 11 | Socket, Female - #16 | |
| 209A | 4460509 | 4 | Socket, Female - #12 | |

| ITEM | PART NUMBER | QTY | DESCRIPTION | REV |
|---|---|---|---|---|
| 209A | 2820118 | AR | Shrink, Heat | |
| 209B | 4460473 | 1 | Clamp, Cable | |
| 209C | 4460865 | 1 | Connector - 19 Position | |
| 209C | 4460465 | 11 | Socket, Female - #16 | |
| 209C | 4460509 | 4 | Socket, Female - #12 | |
| 209C | 4460466 | 4 | Seal, Plug | |
| 210 | | Ref | Cable, Electrical (Tower Boom) Options (Does not include plug ends): | |
| 210 | | Ref | Without SkyPower: | |
| 210 | 4922892 | 1 | ANSI, ANSI Export, Brazilian, Japanese Specs (12/3) | |
| 210 | 4923475 | 1 | ANSI, ANSI Export Specs with Arctic Package (12/3) | |
| 210 | 4922893 | 1 | Australian, CE and Latin American Specs (12/3) | |
| 210 | | Ref | With SkyPower: | |
| 210 | 4922811 | 1 | Machines without Arctic Package (8/5) | |
| 210 | 1001093448 | NLA | Machines with Arctic Package (8/5) (Use p/n 4922811) **(SN 0300087000 through 0300121176)** | |
| 214 | 1061033 | AR | Cable, Electrical - 18/2 Main Boom Limit Switch | |
| 214 | | Ref | Cable, Electrical 600A ANSI, ANSI Export, Brazilian and Japanese Specs | |
| 214 | | Ref | 600AJ ANSI, ANSI Export, Brazilian, Japanese Specs | |
| 214 | | Ref | Cable, Electrical 600A & 600AJ Australian, CE Cable, Electrical Latin American Specs | |
| 214 | 4923476 | 3 | Cable, Electrical 600A ANSI, ANSI Export Spec with Arctic Package | |
| 214 | 4923476 | 2 | Cable, Electrical 600AJ ANSI, ANSI Export Spec with Arctic Package | |
| 216 | | Ref | Cable, Electrical - 18/2 Main Boom Length Options: | |
| 216 | 4922891 | 1 | Cable, Electrical 600A All Specs except Australian and Latin American Specs | 1-A |
| 216 | Not Required | 0 | Cable, Electrical 600A Australian and Latin American Specs | |
| 216 | 4923500 | 1 | Cable, Electrical 600A ANSI, ANSI Export Spec with Arctic Package | 1-A |
| 216 | Not Required | 0 | Cable, Electrical 600AJ All Specs except CE Spec | |
| 216 | 4922891 | 1 | Cable, Electrical 600AJ CE Spec | 1-A |
| 216 | Not Required | 0 | Cable, Electrical 600AJ ANSI, ANSI Export Spec with Arctic Package | |
| 216A | 4460891 | 1 | Plug, Male - 2 Position | |
| 216A | 4460465 | 2 | Socket, Female | |
| 217 | | Ref | Cable, Electrical - 18/2 Main Boom Length Options: | |
| 217 | 4922890 | 1 | Cable, Electrical 600A All Specs except Australian and Latin American Specs | 1-A |
| 217 | Not Required | 0 | Cable, Electrical 600A Australian and Latin American Specs | |
| 217 | 4923501 | 1 | Cable, Electrical 600A ANSI, ANSI Export Spec with Arctic Package | 1-A |
| 217 | Not Required | 0 | Cable, Electrical 600AJ All Specs except CE Spec | |
| 217 | 4922896 | 1 | Cable, Electrical 600AJ CE Spec | 1-A |
| 217 | Not Required | 0 | Cable, Electrical 600AJ ANSI, ANSI Export Spec with Arctic Package | |
| 217A | 4460897 | 1 | Receptacle, Female - 2 Position | |
| 217A | 4460464 | 2 | Pin, Male | |
| | | Ref | **GROUND CONTROL BOX COMPONENTS** | |
| | | Ref | **Ground Control Box 600A:** | |
| | | Ref | **Ground Control Box : (SN 0300087000 through 0300099060)** | |
| | 0861700 | Ref | **Caterpillar Engine (ANSI and ANSI Export Specs)** | B |

| ITEM | PART NUMBER | QTY | DESCRIPTION | REV |
|---|---|---|---|---|
| | 0861702 | Ref | **Caterpillar Engine (Australian and CE Specs)** | B |
| | 0861689 | Ref | **Deutz Engine (ANSI and ANSI Export Specs)** | B |
| | 0861691 | Ref | **Deutz Engine (Australian and CE Specs)** | B |
| | 0861704 | Ref | **Ford Engine (ANSI and ANSI Export Specs)** | B |
| | 0861786 | Ref | **GM Engine (ANSI and ANSI Export Specs)** | B |
| | | Ref | **Ground Control Box : (SN 0300099061 through 0300177361)** | |
| | 1810061 | Ref | **Caterpillar Engine (ANSI and ANSI Export Specs)** | D |
| | 1810062 | Ref | **Caterpillar Engine (Australian and CE Specs)** | E |
| | 1810059 | Ref | **Deutz Engine (ANSI and ANSI Export Specs)** | C |
| | 1810060 | Ref | **Deutz Engine (Australian and CE Specs)** | C |
| | 1810058 | Ref | **GM Engine (ANSI and ANSI Export Specs)** | B |
| | | Ref | **Ground Control Box 600AJ:** | |
| | | Ref | **Ground Control Box: (SN 0300087000 through 0300099060)** | |
| | 0861701 | Ref | **Caterpillar Engine (ANSI and ANSI Export Specs)** | B |
| | 0861703 | Ref | **Caterpillar Engine (Australian and CE Specs)** | B |
| | 0861690 | Ref | **Deutz Engine (ANSI and ANSI Export Specs)** | B |
| | 0861692 | Ref | **Deutz Engine (ANSI and ANSI Export Specs)** | B |
| | 0861705 | Ref | **Ford Engine (ANSI and ANSI Export Specs)** | B |
| | 0861787 | Ref | **GM Engine (ANSI and ANSI Export Specs)** | B |
| | | Ref | **Ground Control Box: (SN 0300099061 through 0300177361)** | |
| | 1810066 | Ref | **Caterpillar Engine (ANSI and ANSI Export Specs)** | D |
| | 1810067 | Ref | **Caterpillar Engine (Australian and CE Specs)** | E |
| | 1810064 | Ref | **Deutz Engine (ANSI and ANSI Export Specs)** | C |
| | 1810065 | Ref | **Deutz Engine (Australian and CE Specs)** | C |
| | 1810063 | Ref | **GM Engine (ANSI and ANSI Export Specs)** | B |
| 302 | 0100048 | AR | Grease, Dielectric | |
| 326 | 4460426 | 1 | Terminal, Strain Relief | |
| 327 | 4460470 | 1 | Nut, Terminal | |
| 328 | 4460471 | 1 | Lockwasher, Terminal | |
| 330 | 4460526 | 1 | Connector, Strain Relief | |
| 331 | 4460874 | 1 | Connector, Natural | |
| 332 | 4460875 | 1 | Connector, Gray | |
| 333 | 4460905 | 4 | Connector, Amp Seal Plug | |
| 339 | | Ref | Ground Control Box Harness Assembly Options (See Items 416-450 for Breakdown) | |
| 339 | 4923231 | 1 | Caterpillar and Ford Engine **(SN 0300087000 through 0300099060)** | |
| 339 | 4923223 | 1 | Deutz and GM Engine **(SN 0300087000 through 0300099060)** | |
| 339 | 4923575 | 1 | Caterpillar, Deutz and GM Engine **(SN 0300099061 through 0300177361)** | |
| 340 | | Ref | Engine Harness Assembly (See Items 519-568 for Breakdown) | |
| 340 | 4923227 | 1 | Caterpillar Engine Machines **(SN 0300087000 through 0300099060)** | |
| 340 | 4923576 | 1 | Caterpillar Engine Machines **(SN 0300099061 through 0300177361)** | |
| 340 | 3990001 | 1 | Diode **(SN 0300090378 through 0300177361)** | |
| 340 | 4923212 | 1 | Deutz Engine Machines **(SN 0300087000 through 0300177361)** | |
| 340 | 4923226 | 1 | Ford Engine Machines | |
| 340 | 4923492 | 1 | GM Engine Machines | |
| 341 | 4923224 | 1 | Valve Harness Assembly (See Items 617-626 for Breakdown): | |

| ITEM | PART NUMBER | QTY | DESCRIPTION | REV |
|---|---|---|---|---|
| 342 | | Ref | Ground Control Box Wiring Diagram (Not Shown) | |
| 342 | | Ref | Ground Control Box Wiring: **(SN 0300087000 through 0300099060)** | |
| 342 | 4933329 | 1 | Caterpillar Engine (ANSI and ANSI Export Specs) | 3-D |
| 342 | 4933330 | 1 | Caterpillar Engine (Australian and CE Specs) | 3-C |
| 342 | 4933319 | 1 | Deutz Engine | F |
| 342 | 4933331 | 1 | Ford Engine | 2-B |
| 342 | 4933354 | 1 | GM Engine | C |
| 342 | | Ref | Ground Control Box Wiring: **(SN 0300099061 through 0300177361)** | |
| 342 | 4933363 | 1 | Caterpillar Engine (All Specs) | E |
| 342 | 4933362 | 1 | Deutz Engine | D |
| 342 | 4933361 | 1 | GM Engine | D |
| 342A | 2920129 | AR | Bulb, Light | |
| 342B | 4460708 | 1 | Connector, Female - 15 Position | |
| 342B | 4460226 | AR | Socket, Female | |
| 342B | 4922637 | 1 | Harness, Jumper (Not Shown) | |
| 342C | 2400065 | 1 | Fuse, 30Amp | |
| 342C | 2400066 | 1 | Fuse, Holder with Cover | |
| 342D | 4460894 | 1 | Plug, Male - 6 Position (Deutz all and Caterpillar) **(SN 0300099061 through 0300177361)** | |
| 342D | 4460892 | 1 | Connector, Female - 6 Position (Deutz all and Caterpillar) **(SN 0300099061 through 0300177361)** | |
| 342E | 4460539 | 1 | Plug, Male - 3 Position (Caterpillar Only) | |
| 342E | 2902443 | 1 | Receptacle Kit (Deutz Only) | |
| 342E | 4461071 | 8 | Socket, Female | |
| 342E | 4461072 | 1 | Receptacle | |
| 342E | 4461073 | 1 | Cap, Dust | |
| 342E | 4461074 | 1 | Shell, Black | |
| 342F | 4923591 | 1 | Harness, Jumper (Not Shown - Located on Module J7-6 to J7-17 Caterpillar Only) | |
| | | Ref | **GROUND CONTROL HARNESS ASSEMBLY** | |
| | 4923231 | Ref | **Caterpillar and Ford Engine (SN 0300087000 through 0300099060)** | 5-E |
| | 4923223 | Ref | **Deutz and GM Engine (SN 0300087000 through 0300099060)** | G |
| | 4923575 | Ref | **Caterpillar, Deutz and GM Engine (SN 0300099061 through 0300177361)** | C |
| 416 | 4460536 | 1 | Connector, Female 3- Position (Deutz and GM all and Caterpillar) **(SN 0300099061 through 0300177361)** | |
| 416 | 4460943 | 3 | Pin, Male (Deutz and GM all and Caterpillar) **(SN 0300099061 through 0300177361)** | |
| 421 | 3990010 | 2 | Diode - 6Amp (Not Shown) | |
| 424 | 4460434 | AR | Connector, Male 15 - Position | |
| 424 | 4460227 | AR | Pin | |
| 426 | 4460873 | 1 | Connector, Male - 35 Position (Black) | |
| 426 | 4460871 | AR | Socket, Female | |
| 426 | 4460905 | AR | Plug, Seal | |
| 428 | 4120035 | AR | Base, Light | |
| 428 | 4460634 | AR | Terminal (16 Gauge) | |
| 428 | 4460635 | AR | Terminal (12 Gauge) | |
| 434 | 4460418 | AR | Connector, Female - 6 Position | |
| 434 | 4460419 | AR | Socket, Female | |
| 438 | 4460871 | 11 | Socket, Female | |

| ITEM | PART NUMBER | QTY | DESCRIPTION | REV |
|---|---|---|---|---|
| 439 | 4460876 | 1 | Connector, Male - 35 Position (Blue) | |
| 439 | 4460871 | AR | Socket, Female | |
| 439 | 4460905 | AR | Plug, Seal | |
| 443 | 4460866 | 1 | Connector - 19 Position | |
| 443 | 4460464 | AR | Pin, Male (16 Gauge) | |
| 443 | 4460508 | 3 | Pin, Male (12 Gauge) | |
| 444 | 4460878 | 1 | Housing, Terminal - 4 Position | |
| 444 | 4460887 | 3 | Terminal (12 Gauge) | |
| 450 | 4460761 | 1 | Connector, Female 4 - Position | |
| 450 | 4460227 | 4 | Pin, Male | |
| | | Ref | **ENGINE HARNESS ASSEMBLIES** | |
| | 4923227 | Ref | **Caterpillar Engine Machines (SN 0300087000 through 0300099060)** | 3-C |
| | 4923576 | Ref | **Caterpillar Engine Machines (SN 0300099061 through 0300177361)** | D |
| | 4923212 | Ref | **Deutz Engine Machines (SN 0300087000 through 0300177361)** | F |
| | 4923226 | Ref | **Ford Engine Machines** | 2-B |
| | 4923492 | Ref | **GM Engine Machines** | D |
| 519 | 4460424 | 1 | Receptacle, Female - 2 Position | |
| 520 | 4460268 | 2 | Socket, Female | |
| 521 | 4460880 | 2 | DIN Connector without Diode | |
| 522 | 4460891 | 2 | Connector, Male - 2 Position (Caterpillar Engine Only) | |
| 522 | 4460465 | 7 | Socket, Female | |
| 523 | 4461070 | 1 | Receptacle, Female with Resistor (3 Position) (Deutz Engine Only) | |
| 523 | 4461095 | 1 | Plug, Male - 3 Position (Deutz Engine Only) | |
| 523 | 4460944 | 3 | Socket, Female (Deutz Engine Only) | |
| 525 | 4460539 | 1 | Connector, Male - 3 Position (Deutz Engine Only) | |
| 525 | 4460944 | 3 | Socket, Female (Deutz Engine Only) | |
| 530 | 4460582 | 3 | Terminal (Ford Engine Only) | |
| 530 | 4460580 | 1 | Lock, Terminal (Ford Engine Only) | |
| 530 | 4460579 | 1 | Housing - 3 Position (Ford Engine Only) | |
| 532 | 4461157 | 1 | Receptacle, Female - 2 Position (Deutz/GM Engine Only) | |
| 532 | 4460979 | 2 | Pin, Male (Deutz/GM Engine Only) | |
| 532 | 4460458 | 2 | Seal, Terminal (Deutz/GM Engine Only) | |
| 533 | 4461052 | 1 | Connector, Receptacle - 25 Position (Deutz Engine Only) | |
| 533 | 4461005 | 5 | Terminal (Gold) (Deutz Engine Only) | |
| 533 | 4461006 | 5 | Seal, Terminal (Deutz Engine Only) | |
| 533 | 4461060 | 2 | Terminal (Tin) (Deutz Engine Only) | |
| 533 | 4461054 | 2 | Seal, Terminal (Deutz Engine Only) | |
| 533 | 4461053 | 1 | Cover, Plug (Deutz Engine Only) | |
| 534 | 4460996 | 1 | Connector, Female - 3 Position (Caterpillar Engines Only) | |
| 534 | 4460995 | 2 | Terminal, Spade (Caterpillar Engines Only) | |
| 537 | 4460891 | 2 | Plug, Male - 2 Position (Caterpillar Engines Only) | |
| 537 | 4460465 | 4 | Socket, Female (Caterpillar Engines Only) | |
| 538 | 4460460 | 1 | Connector, Male - 4 Position | |
| 538 | 4460457 | AR | Terminal, Female | |
| 538 | 4460458 | AR | Seal, Terminal | |
| 540 | 4460539 | 1 | Plug, Male - 3 Position (Caterpillar Engines Only) | |
| 540 | 4460465 | 3 | Socket, Female (Caterpillar Engines Only) | |
| 541 | 4460713 | 1 | Connector, Housing 42 Position (Ford Engine Only) | |
| 542 | 4460725 | 1 | Connector Wedge Lock, Center (Ford Engine Only) | |

| ITEM | PART NUMBER | QTY | DESCRIPTION | REV |
|---|---|---|---|---|
| 543 | 4460726 | 2 | Connector Wedge Lock, Side (Ford Engine Only) | |
| 544 | 4460800 | 29 | Connector, Plug (Ford Engine Only) | |
| 545 | 4460799 | 7 | Pin, Male (Ford Engine Only) | |
| 547 | 4461121 | 1 | Plug, Male - 4 Position (GM Engine Only) | |
| 547 | 4461122 | 4 | Socket, Female (GM Engine Only) | |
| 547 | 4461123 | 4 | Seal, Terminal (GM Engine Only) | |
| 548 | 4460728 | 3 | Pin, Male (Ford Engine Only) | |
| 549 | 4460792 | 1 | Plug, Male - 1 Position (Caterpillar Engines Only) | |
| 549 | 4460339 | 3 | Terminal (Caterpillar Engines Only) | |
| 550 | 4460465 | 2 | Socket, Female (Deutz Engines Only) | |
| 553 | 4461124 | 1 | Receptacle, Female - 4 Position (GM Engine Only) | |
| 553 | 4460693 | 4 | Pin, Male (GM Engine Only) | |
| 553 | 4460608 | 4 | Seal, Terminal (GM Engine Only) | |
| 553 | 4461161 | 1 | Lock, Terminal (GM Engine Only) | |
| 554 | 4460742 | 1 | Plug, Male - 2 Position (Ford Engine Only) | |
| 554 | 4460457 | 2 | Terminal, Female (Ford Engine Only) | |
| 554 | 4460458 | 2 | Seal, Terminal (Ford Engine Only) | |
| 555 | 4461109 | 1 | Plug, Male - 16 Position (GM Engine Only) | |
| 555 | 4461111 | 7 | Pin, Male (GM Engine Only) | |
| 555 | 4461113 | 16 | Seal, Terminal (GM Engine Only) | |
| 557 | 4460871 | AR | Socket, Female | |
| 558 | 4460226 | 2 | Socket, Female **(SN 0300088141 through 0300177361)** | |
| 567 | 2400065 | 1 | Fuse, 30Amp (Ford Engine Only) | |
| 568 | 3730120 | 1 | Resistor Assembly (Ford Engine Only) | |
| 568 | 4460978 | 1 | Receptacle, Male - 2 Position | |
| 568 | 4460979 | 2 | Pin, Male | |
| 568 | 4460458 | 2 | Seal, Terminal | |
| 568 | 3730121 | 1 | Resistor | |
| | 4923224 | Ref | **VALVE HARNESS ASSEMBLY** | 4-D |
| 617 | 4460880 | 19 | DIN Connector | |
| 618 | 4460320 | 2 | Plug, Male - 2 Position | |
| 619 | 4460267 | 7 | Pin, Male | |
| 620 | 4460424 | 1 | Receptacle, Female - 2 Position | |
| 621 | 4460268 | 5 | Socket, Female | |
| 622 | 4460871 | 31 | Socket, Female | |
| 625 | 4460326 | 1 | Plug, Male - 3 Position | |
| 626 | 4460445 | 1 | Receptacle, Female - 3 Position | |
| | | Ref | **STANDARD HARNESS COMPONENTS** | |
| 701 | | Ref | Battery Cable Kit Options: | |
| 701 | 2902296 | 1 | Caterpillar and Deutz Engines Machines | C |
| 701 | 2902297 | 1 | Ford Engine Machines | |
| 701 | 2902531 | 1 | GM Engine Machines | A |
| 701A | | Ref | Cable, Battery (Red) Options: | |
| 701A | | Ref | Caterpillar and Deutz Engines Machines Options: | |
| 701A | 1001116241 | 1 | Machines with 2 Relays on Engine Tray (was p/n 7027000) | |
| 701A | 1001116240 | 1 | Machines with 3 Relays on Engine Tray (was p/n 7027000) | |
| 701A | 7027006 | 1 | Ford Engine Machines | |
| 701A | 7027015 | 1 | GM Engine Machines | |
| 701B | | Ref | Cable, Battery (Black) Options: | |
| 701B | 7027004 | 1 | Caterpillar and Deutz Engines Machines | |
| 701B | 7027005 | 1 | Ford Engine Machines | |

| ITEM | PART NUMBER | QTY | DESCRIPTION | REV |
|---|---|---|---|---|
| 701B | 7016822 | 1 | GM Engine Machines | |
| 701C | | Ref | Cable (Red) Options: | |
| 701C | 7027002 | 1 | Caterpillar, Deutz and Ford Engines Machines | |
| 701D | | Ref | Cable (Red) Options: | |
| 701D | 7027001 | 1 | Caterpillar and Deutz Engine Machines **(SN 0300087000 through 0300138089)** | |
| 701D | See Note | NSS | Caterpillar and Deutz Engine Machines (Note: Incorporated in Item 701A after SN 0300138090) **(SN 0300138090 through 0300177361)** | |
| 701D | Not Required | 0 | Ford Engines Machines | |
| 701D | 7027017 | 1 | GM Engines Machines | |
| 701E | 7027003 | 1 | Cable (Black) | |
| 701F | | Ref | Cable, Battery (Red) Options: | |
| 701F | | Ref | Caterpillar and Deutz Engines Machines | |
| 701F | 1001116241 | 1 | Machines with 2 Relays on Engine Tray (was p/n 7027000) | |
| 701F | 1001116240 | 1 | Machines with 3 Relays on Engine Tray (was p/n 7027000) | |
| 701F | 7027007 | 1 | Ford Engine Machines | |
| 701F | 7016822 | 1 | GM Engine Machines | |
| 702 | 1060904 | 1 | Cable, Battery (Caterpillar Engine Machines Only) | |
| 703 | 4922737 | 1 | Harness, Relay Ground (Caterpillar Engine Machines Only) | |
| 704 | | Ref | Deutz Engine Harness Components (Deutz Engine Machines Only) | |
| 704A | 7027796 | 1 | Deutz Engine Harness | |
| 704B | 4461052 | 1 | Receptacle, Female - 25 Position | |
| 704B | 4461053 | 1 | Cover, Receptacle | |
| 704B | 4461005 | 5 | Terminal | |
| 704B | 4461006 | 5 | Seal (Used with p/n 4461005) | |
| 704B | 4461060 | 2 | Terminal | |
| 704B | 4461054 | 2 | Seal (Used with p/n 4461060) | |
| 704B | 4461008 | 18 | Plug, Hole | |
| 704C | 7027793 | 1 | Plug-In, Connector | |
| 704D | See Note | NSS | Deutz Engine Harness Options (Note: For other replacement parts refer to Deutz engine dealer): | |
| 704D | 7027794 | 1 | Deutz Engine Harness **(SN 0300087000 through 0300126419)** | |
| 704D | 70001872 | 1 | Deutz Engine Harness **(SN 0300126420 through 0300177361)** | |
| 705 | 7023681 | 1 | Ford Engine Harness (For other replacement parts refer to Ford engine dealer) (was p/n 7027403) | |
| 706 | See Note | NSS | Dual Fuel Shut-Off Filter Harness (Note: Not Available for Purchase) | |
| 706A | 7023679 | 1 | Electrical Connector Kit (Includes [1] 2 Position Connector, 2 Pins and 2 Seals) | |
| 707 | 4922968 | 1 | Dual Fuel Shut-Off Filter Extension Harness (Not Shown) | |
| 707A | 4460742 | 1 | Connector, Male - 2 Position | |
| 707A | 4460458 | 2 | Seal, Terminal | |
| 707A | 4460743 | 2 | Socket, Female | |
| 707B | 4460978 | 1 | Receptacle, Male - 2 Position | |
| 707B | 4460979 | 2 | Pin, Male | |
| 707B | 4460458 | 2 | Seal, Terminal | |
| 708 | See Note | NSS | Fuel Pump Harness (Caterpillar Engines Only) (Note: Not Available for Purchase) | |
| 708 | 4460897 | 1 | Receptacle, Female -2 Position (Caterpillar Engines Only) | |
| 708 | 4460464 | 2 | Pin, Male (Caterpillar Engines Only) | |
| 709 | See Note | NSS | Throttle Actuator Harness (Caterpillar Engines Only) (Note: Not Available for Purchase) | |

| ITEM | PART NUMBER | QTY | DESCRIPTION | REV |
|---|---|---|---|---|
| 709 | 4460897 | 1 | Receptacle, Female -2 Position (Caterpillar Engines Only) | |
| 709 | 4460464 | 2 | Pin, Male (Caterpillar Engines Only) | |
| 710 | See Note | NSS | Pump Harness (Note: Not Available for Purchase) | |
| 710A | 7007497 | 1 | Plug (Pump End) | |
| 710B | 7007498 | 1 | Plug (Engine Harness End) | |
| 711 | See Note | NSS | Controller Harness Assembly (Lift and Swing) (Note: Not Available for Purchase) | |
| 711A | 7022819 | 1 | Plug, Male - 8 Position (Natural) | |
| 711A | 4460871 | 8 | Socket, Female | |
| 712 | See Note | NSS | Controller Harness/Circuit Board Assembly (Drive and Steer) (Note: Not Available for Purchase) | |
| 712A | 7022825 | 1 | Plug, Male - 8 Position (Black) | |
| 712A | 4460871 | 7 | Socket, Female | |
| 713 | See Note | NSS | Controller Harness (Speed Control) (Note: Not Available for Purchase) | |
| 713A | 4460224 | 1 | Receptacle, Female - 6 Position | |
| 713A | 4460226 | 6 | Socket, Female | |
| 714 | See Note | AR | GM Engine Harness (GM Engine Machines Only) (Note: Not Available for Purchase) | |
| 715 | 4923379 | 1 | Harness, Glow Plugs (Deutz Engine Machines Only) **(SN 0300092727 through 0300177361)** | |
| 716 | 1060904 | 1 | Cable, Jumper (Caterpillar and Deutz Engine Machines with Only) **(SN 0300087000 through 0300138090)** | |
| | | Ref | **OPTIONAL HARNESS COMPONENTS** | |
| 801 | 4921927 | 1 | Jib Valve Harness (600AJ Only) | 3-F |
| 801A | 4460326 | 1 | Plug, Male - 3 Position | |
| 801B | 4460267 | 3 | Pin, Male | |
| 801C | 4460499 | 2 | Connector, DIN with Diode | |
| 802 | 4921928 | 1 | 4WS Valve Harness | 3-E |
| 802A | 4460268 | 3 | Socket, Female | |
| 802B | 4460445 | 1 | Connector, Female - 3 Position | |
| 802C | 4460499 | 2 | Connector, DIN with Diode | |
| 803 | 0257887 | 1 | Alarm Harness (Includes Alarm) | |
| 803 | 0140032 | 1 | Alarm | |
| 803 | 2820035 | 6 in /15cm | Loom | |
| 803A | 4460424 | 1 | Plug, Male - 2 Position | |
| 803B | 4460268 | 2 | Socket, Female | |
| 804 | 0272507 | 1 | Strobe Light Harness Options (Includes Strobe Light): | |
| 804A | 4460320 | 1 | Connector, Female - 2 Position | |
| 804B | 4460267 | 2 | Pin, Male | |
| 805 | See Note | NSS | Headlight and Taillight/Chassis Illumination Harness (Note: Not Available for Purchase) | |
| 805 | 1060341 | AR | Cable, Electrical 16/2 Options: | |
| 805 | 1060341 | 37 ft /11.3m | Headlights and Taillights | |
| 805 | 1060341 | 40 ft /12.2m | Chassis Illumination Lights | |
| 805A | 3740049 | 1 | Relay | |
| 805A | 4460259 | 3 | Terminal | |
| 805A | 4460260 | 4 | Housing, Terminal | |
| 805A | 4460297 | 1 | Terminal | |
| 805A | 4922643 | 1 | Lights Harness for Ground Control Box | B |
| 805A | 4460226 | 2 | Socket, Female | |

| ITEM | PART NUMBER | QTY | DESCRIPTION | REV |
|---|---|---|---|---|
| 806 | | Ref | 2500W Generator Electrical Components Options: | |
| 806 | 4933300 | Ref | Caterpillar and Deutz and Ford Engines 110V 50Hz/60Hz (All Specs) **(SN 0300087000 through 0300132839)** | 2-B |
| 806 | 4933300 | Ref | Caterpillar and Deutz and Ford Engines 110V/220V with Generator Control Box **(SN 0300132840 through 0300177361)** | 2-B |
| 806 | 100110027 | Ref | Caterpillar and Deutz Engines 110V/220V without Generator Control Box **(SN 0300132840 through 0300177361)** | 4-D |
| | 4933350 | Ref | GM Engine | A |
| 806A | 4460321 | 1 | Connector, Male - 4 Position (Caterpillar, Deutz and Ford Engines Specs) **(SN 0300087000 through 0300126420)** | |
| 806A | 4460906 | 4 | Socket, Female | |
| 806B | 4922641 | 1 | Harness - On/Off Switch | |
| 806C | 4460226 | 2 | Socket, Female | |
| 806D | | Ref | Powermite Control Box to Relay Options: | |
| 806D | 4922970 | 1 | Caterpillar, Deutz and Ford Engines | |
| | 4923445 | 1 | GM Engines | |
| 806E | 4460961 | 1 | Connector, Female - 4 Position (Caterpillar, Deutz and Ford Engines Specs) **(SN 0300087000 through 0300126420)** | |
| 806E | 4460705 | 4 | Pin, Male | |
| 806F | 1001100305 | 1 | Harness, Ground For Generator (Caterpillar and Deutz Engines without Generator Control Box Only) **(SN 0300132840 through 0300137770)** | |
| 807 | | Ref | Generator to Rear of Boom Harness Options: | |
| | | Ref | **Note: Harness used to connect AC at platform harness to generator receptacle to power platform receptacle.** | |
| 807 | 4921829 | 1 | 110V (ANSI, ANSI Export and Japanese Specs) | 2 |
| 807 | 4921954 | 1 | 220V (ANSI and ANSI Export Specs) | 2 |
| 807 | 4921957 | 1 | 110V/220V (Australian, CE, Latin American and Brazilian Specs) **(SN 0300087000 through 0300132839)** | - |
| 807 | See Note | NSS | 110V/220V (Australian, CE, Latin American and Brazilian Specs) (Note: Not Available for Purchase) **(SN 0300132840 through 0300177361)** | |
| 807 | | Ref | Cable, Electrical - 12/3 Options: | |
| 807 | 1060494 | 6 ft/1.8m | 110V (ANSI, ANSI Export and Japanese Specs) | |
| 807 | 1060494 | 26 ft/8m | 220V (ANSI and ANSI Export Specs) | |
| 807 | 1060461 | 6 ft/1.8m | 110V/220V (Australian, CE, Latin American and Brazilian Specs) | |
| 807A | | Ref | Plug, Male Options: | |
| 807A | 4460205 | 1 | 110V (ANSI, ANSI Export and Japanese Specs) | |
| 807A | 4460233 | 1 | 220V (ANSI and ANSI Export Specs) | |
| 807A | Not Required | 0 | 110V/220V (Australian, CE, Latin American and Brazilian Specs) (Purchase Locally) | |
| 807A | 4460027 | 1 | Receptacle, Twist Lock (110V Only) | |
| 807B | | Ref | Receptacle, Female Options: | |
| 807B | 4460134 | 1 | 110V (ANSI, ANSI Export and Japanese Specs) | |
| 807B | 4460701 | 1 | 220V (ANSI and ANSI Export Specs) | |
| 807B | Not Required | 0 | 110V/220V (Australian, CE, Latin American and Brazilian Specs) (Purchase Locally) | |
| 808 | | Ref | AC to Platform Receptacle Components Options: | |
| 808 | 0255382 | Ref | 110V GFI Receptacle (ANSI, ANSI Export and Japanese Specs) | 6 |
| 808 | 0257176 | Ref | 220V Receptacle (ANSI, ANSI Export and Japanese Specs) | B |
| 808 | 0272433 | Ref | SkyPower Machines (All Specs) | B |
| 808 | 0274618 | Ref | Dual AC (ANSI Export Spec Option) | 2-B |
| 808 | 0256202 | Ref | 110V/220V (Australian, Latin American and Brazilian Specs) | 5 |

| ITEM | PART NUMBER | QTY | DESCRIPTION | REV |
|---|---|---|---|---|
| 808 | | Ref | 110V/220V (CE Spec Only): | |
| 808 | | Ref | **Without Powermite Generator:** | |
| 808 | 0256202 | Ref | 110V/220V (No Plug) | 5 |
| 808 | 0275653 | Ref | 220V with CEE 7 Post Ground Receptacle and Plug and Circuit Breaker (2x4 Box) | C |
| 808 | 0275654 | Ref | 220V with CEE 7 Side Ground Receptacle and Plug and Circuit Breaker (2x4 Box) | C |
| 808 | 0275660 | Ref | 220V with AFSINT 107 Keyed Ground Receptacle and Plug and Circuit Breaker (2x4 Box) | C |
| 808 | 0275656 | Ref | 110V with IEC Yellow Receptacle and Plug and Circuit Breaker | C |
| 808 | 0275652 | Ref | 220V with IEC Blue Receptacle and Plug and Circuit Breaker | C |
| 808 | 0275655 | Ref | 220V with CEE 7 Post Ground Receptacle and Plug and Circuit Breaker (70mm x 70mm Box) | C |
| 808 | 0275651 | Ref | 220V with CEE 7 Side Ground Receptacle and Plug and Circuit Breaker (70mm x 70mm Box) | C |
| 808 | | Ref | **With Powermite Generator:** | |
| 808 | 1001100397 | Ref | 220V with CEE 7 Post Ground Receptacle and Plug and Circuit Breaker (2 x 4 Box) | D |
| 808 | 1001100398 | Ref | 220V with CEE 7 Side Ground Receptacle and Plug and Circuit Breaker (2 x 4 Box) | D |
| 808 | 1001100399 | Ref | 220V with AFSINT 107 Keyed Ground Receptacle and Plug and Circuit Breaker (2 x 4 Box) | C |
| 808 | 1001100400 | Ref | 110V with IEC Yellow Receptacle and Plug and Circuit Breaker | C |
| 808 | 1001100401 | Ref | 220V with IEC Blue Receptacle and Plug and Circuit Breaker | C |
| 808 | 1001100402 | Ref | 220V with CEE 7 Post Ground Receptacle and Plug and Circuit Breaker (70mm x 70mm Box) | C |
| 808 | 1001100403 | Ref | 220V with CEE 7 Side Ground Receptacle and Plug and Circuit Breaker (70mm x 70mm Box) | C |
| 808A | | Ref | Box, Switch Options: | |
| 808A | 0860038 | 1 | 0255382, 0257176 & 0274618 Installations | |
| 808A | Not Required | 0 | 0256202 Installation (Purchase Locally) | |
| 808A | 0861731 | 1 | 0275253, 0275254, 0275660, 1001100345, 1001100397, 1001100398 & 1001100399 Installations | |
| 808A | 0861781 | 1 | 0275656, 0275652, 1001100400 & 1001100401 Installations | |
| 808A | See Note | NSS | 0275655, 0275651, 1001100402 & 1001100403 Installations (Note: Was p/n 0861782 which is no longer available. Use p/n 1001100344 CEE 7 Side Ground Service Kit or p/n 1001100343 CEE 7 Post Ground Service Kit. Kit include Box p/n 1001141967 & Items 808B, 808C, 808E & 808P) | |
| 808A | 1001141967 | 1 | 1001100343, 1001100344, 1001141970 & 1001141971 Kits | |
| 808B | | Ref | Receptacle Options: | |
| 808B | 4460346 | 1 | 0255382 & 0274618 Installations | |
| 808B | 4460125 | 1 | 0257176 Installation | |
| 808B | Not Required | 0 | 0256202 Installation (Purchase Locally) | |
| 808B | 4461244 | 1 | 0275253, 1001100345, & 1001100397 Installations | |
| 808B | 4461245 | 1 | 0275654 & 1001100398 Installations | |
| 808B | 4461246 | 1 | 0275660 & 1001100399 Installations | |
| 808B | 4461198 | 1 | 0275656 & 1001100400 Installations | |
| 808B | 4461201 | 1 | 0275652 & 1001100401 Installations | |
| 808B | 4461204 | NLA | 0275655 & 1001100402 Installations (Use p/n 1001100343) | |
| 808B | 4461207 | NLA | 0275651 & 1001100403 Installations (Use p/n 1001100344) | |
| 808B | 1001141968 | 1 | 1001100343 & 1001141971 Kits | |
| 808B | 1001141969 | 1 | 1001100344 & 1001141970 Kits | |

| ITEM | PART NUMBER | QTY | DESCRIPTION | REV |
|---|---|---|---|---|
| 808C | | Ref | Shield, Cover Options: | |
| 808C | 4060700 | 1 | 0255382 & 0274618 Installations (Side Hinged) **(SN 0300087000 through 0300138089)** | |
| 808C | 1001110873 | 1 | 0255382 & 0274618 Installations (Top Hinged) **(SN 0300138090 through 0300177361)** | |
| 808C | 4060092 | 1 | 0257176 Installation | |
| 808C | Not Required | 0 | 0256202 Installation (Purchase Locally) | |
| 808C | 4461244 | 1 | 0275253, 1001100345 & 1001100397 Installations | |
| 808C | 4461245 | 1 | 0275654 & 1001100398 Installations | |
| 808C | 4461246 | 1 | 0275660 & 1001100399 Installations | |
| 808C | 4461198 | 1 | 0275656 & 1001100400 Installations | |
| 808C | 4461201 | 1 | 0275652 & 1001100401 Installations | |
| 808C | 4461204 | NLA | 0275655 & 1001100402 Installations (Use p/n 1001100343) | |
| 808C | 4461207 | NLA | 0275651 & 1001100403 Installations (Use p/n 1001100344) | |
| 808C | 1001141968 | 1 | 1001100343 & 1001141971 Kits | |
| 808C | 1001141969 | 1 | 1001100344 & 1001141970 Kits | |
| 808D | | Ref | Connector, Strain Relief Options: | |
| 808D | 4460071 | 1 | 0255382, 0257176 & 0274618 Installations | |
| 808D | Not Required | 0 | 0256202 Installation (Purchase Locally) | |
| 808D | 4460968 | 1 | 0275653, 0275654, 0275660, 0275656, 0275652, 0275655, 0275651, 1001100397, 1001100398, 1001100399, 1001100400, 1001100401, 1001100402 & 1001100403 Installations | |
| 808E | | Ref | Plug, Male Options: | |
| 808E | 4460205 | 1 | 0255382 & 0274618 Installations | |
| 808E | 4460233 | 1 | 0257176 Installation | |
| 808E | Not Required | 0 | 0256202 Installation (Purchase Locally) | |
| 808E | 4461202 | NLA | 0275653 & 0275655, 1001100397 & 1001100402 Installations & 1001100343 & 1001141971 Kits (Use p/n 4461205) | |
| 808E | 4461199 | 1 | 0275652 & 1001100401 Installations | |
| 808E | 4461249 | 1 | 0275660 & 1001100399 Installations | |
| 808E | 4461196 | 1 | 0275656 & 1001100400 Installations | |
| 808E | 4461205 | 1 | 0275654, & 0275651,1001100345, 1001100398 & 1001100403 Installations & 1001100344 & 1001141970 Kits | |
| 808F | | Ref | Plug, Male Options: | |
| 808F | 4460205 | 1 | 0255382 & 0274618 Installations (Qty 4 Required for Dual AC) | |
| 808F | 4460233 | 1 | 0257176 Installation | |
| 808F | 4460709 | 1 | 0256202, 0275653, 0275654, 0275660, 0275656, 0275652, 0275655, 0275651, 1001100397, 1001100398, 1001100399, 1001100400, 1001100401, 1001100402 & 1001100403 Installations | |
| 808F | 4460960 | 1 | 0272433 Installation | |
| 808F | 4061043 | 1 | Cover - Side Hinged (0274618 Installation) **(SN 0300087000 through 0300137769)** | |
| 808F | 1001110872 | 1 | Cover - Top Hinged (0274618 Installation) **(SN 0300137770 through 0300177361)** | |
| 808F | 1671093 | 1 | Cover (Optional) | |
| 808G | | Ref | Connector, Female Options: | |
| 808G | 4460134 | 1 | 0255382 & 0274618 Installations (Qty 2 Required for Dual AC) | |
| 808G | 4460701 | 1 | 0257176 Installation | |
| 808G | 4460710 | 1 | 0256202, 0275653, 0275654, 0275660, 0275656, 0275652, 0275655, 0275651, 1001100397, 1001100398, 1001100399, 1001100400, 1001100401, 1001100402 & 1001100403 | |

| ITEM | PART NUMBER | QTY | DESCRIPTION | REV |
|---|---|---|---|---|
| | | | Installations | |
| 808G | 4460959 | 1 | 0272433 Installation | |
| 808G | 1671092 | 1 | Cover (Optional) | |
| 808H | | Ref | Hardware Options: | |
| 808H | 0641405 | AR | Bolt 1/4in - 20NC x 5/8in | |
| 808H | 0641407 | AR | Bolt 1/4in - 20NC x 7/8in | |
| 808H | 0641416 | AR | Bolt 1/4in - 20NC x 2in | |
| 808H | 0700408 | AR | Screw M4 x 16mm | |
| 808H | 3290405 | AR | Locknut M4 | |
| 808H | 3311405 | AR | Locknut 1/4in - 20NC | |
| 808H | 4711400 | AR | Flatwasher 1/4in Thin | |
| 808H | 4811400 | AR | Flatwasher M4 | |
| 808J | | Ref | Bracket, Receptacle Box Mounting Options: | |
| 808J | Not Required | 0 | 0255382, 0274618, 0257176 & 0256202 Installations | |
| 808J | 0903484 | 1 | 0275653, 0275654, 0275660, 0275656, 0275652, 0275655, 0275651, 1001100397, 1001100398, 1001100399, 1001100401, 1001100402 & 1001100403 Installations | |
| 808K | | Ref | Bracket, Circuit Breaker Mounting Options: | |
| 808K | Not Required | 0 | 0255382, 0274618, 0257176 & 0256202 Installations | |
| 808K | 0903612 | 1 | 0275653, 0275654, 0275660, 0275656, 0275652, 0275655, 0275651, 1001100397, 1001100398, 1001100399, 1001100400, 1001100401, 1001100402 & 1001100403 Installations | |
| 808L | | Ref | Breaker, Circuit Kit Options (Required on All CE Spec Installations except 0256202 Installation): | |
| 808L | 2902549 | NLA | Kit (Without Powermite Generator Control Box) (Use p/n 1001096070) | D |
| 808L | 1001109554 | AR | Kit (With Powermite Generator Control Box) | B |
| 808L | | Ref | Circuit Breaker Options: | |
| | | Ref | **Note: Kit p/n 2902549 Kit used a single large breaker p/n 2400093. Replace with 2 breakers. For machines with Powermite Generator Control Box, use both p/ns 1001109477 & 1001109482. For machines without Powermite Generator Control Box, use both p/ns 1001109475 & 1001109482.** | |
| 808L | 1001109477 | 1 | Breaker 10A | |
| 808L | 1001109475 | 1 | Breaker 16A | |
| 808L | 1001109482 | 1 | Breaker 30mA | |
| 808L | 0861880 | 1 | Breaker Box | |
| 808L | 4460957 | 1 | Terminal Block | |
| 808L | 4460956 | 1 | Barrier, Terminal Block End | |
| 808M | | Ref | Connector, Strain Relief Options (Required Only on CE Spec Installations except 0256202 Installation): | |
| 808M | 4460633 | 2 | Connector, Strain Relief **(SN 0300087000 through 0300117569)** | |
| 808M | 1001097150 | 2 | Connector, Strain Relief **(SN 0300117570 through 0300127222)** | |
| 808M | 1001101191 | 2 | Connector, Strain Relief **(SN 0300127223 through 0300177361)** | |
| 808N | 1060908 | 12 ft/3.7m | Cable, Extension (Required Only on CE Spec Installations except 0256202 Installation): | |
| 808P | | Ref | Connector, Female Options: | |
| 808P | Not Required | 0 | 0255382, 0274618, 0257176, 0275653, 0275654, 0275660, 0275656, 0275652, 0275655 & 0275651 Installations | |
| 808P | Not Required | 0 | 0256202 Installation (Purchase Locally) | |

| ITEM | PART NUMBER | QTY | DESCRIPTION | REV |
|---|---|---|---|---|
| 808P | 4461203 | 1 | 1001100402 & 1001100397 Installations & 1001100343 & 1001141971 Kits | |
| 808P | 4461200 | 1 | 1001100401 Installation | |
| 808P | 4461250 | 1 | 1001100399 Installation | |
| 808P | 4461197 | 1 | 1001100400 Installation | |
| 808P | 4461206 | 1 | 1001100403 & 1001100398 Installations & 1001100344 & 1001141970 Kits | |
| | | Ref | Kit, Plug and Socket Options: | |
| | | Ref | Without Generator: | |
| | 0275452 | 1 | Receptacle Box Kit (220V CEE 7 Post Ground) (Includes Items 808A, 808B, 808C & 808E) (0275653 Installation) | C |
| | 0275453 | 1 | Receptacle Box Kit (220V CEE 7 Side Ground) (Includes Items 808A, 808B, 808C & 808E) (0275654 Installation) | 1 |
| | 0275454 | 1 | Receptacle Box Kit (220V AFSINT 107 Keyed Ground) (Includes Items 808A, 808B, 808C & 808E) (0275660 Installation) | 1 |
| | 0275216 | 1 | Receptacle Box Kit (110V IEC Yellow) (Includes Items 808A, 808B, 808C & 808E) (0275656 Installation) | 1 |
| | 0275217 | 1 | Receptacle Box Kit (220V IEC Blue) (Includes Items 808A, 808B, 808C & 808E) (0275652 Installation) | 1 |
| | 0275218 | NLA | Receptacle Box Kit (220V CEE 7 Post Ground) (Includes Items 808A, 808B, 808C, 808E & 808P) (0275655 Installation) (Use p/n 1001100343) | C |
| | 0275219 | NLA | Receptacle Box Kit (220V CEE 7 Side Ground) (Includes Items 808A, 808B, 808C, 808E & 808P) (0275651 Installation) (Use p/n 1001100344) | B-B |
| | | Ref | With Generator: | |
| | 1001100345 | 1 | Receptacle Box Kit (220V CEE 7 Post Ground) (Includes Items 808A, 808B, 808C, 808E & 808P) (1001100397 Installation) | C |
| | 1001100347 | 1 | Receptacle Box Kit (220V CEE 7 Side Ground) (Includes Items 808A, 808B, 808C, 808E & 808P) (1001100398 Installation) | 3 |
| | 1001100346 | 1 | Receptacle Box Kit (220V AFSINT 107 Keyed Ground) (Includes Items 808A, 808B, 808C, 808E & 808P) (1001100399 Installation) | 2 |
| | 1001100341 | 1 | Receptacle Box Kit (110V IEC Yellow) (Includes Items 808A, 808B, 808C, 808E & 808P) (1001100400 Installation) | 2 |
| | 1001100342 | 1 | Receptacle Box Kit (220V IEC Blue) (Includes Items 808A, 808B, 808C, 808E & 808P) (1001100401 Installation) | 2 |
| | 1001100343 | 1 | Receptacle Box Kit (220V CEE 7 Post Ground) (Includes Items 808A, 808B, 808C, 808E & 808P) (1001100402 Installation) | C |
| | 1001100344 | 1 | Receptacle Box Kit (220V CEE 7 Side Ground) (Includes Items 808A, 808B, 808C, 808E & 808P) (1001100403 Installation) | B |
| 809 | | Ref | 7500W SKYPOWER GENERATOR INSTALLATION | |
| 809 | 0273576 | Ref | 60Hz and Caterpillar Engine | I |
| 809 | 0272618 | Ref | 60Hz and Deutz Engine | K |
| 809 | 0273577 | Ref | 50Hz Spec and Caterpillar Engine | G |
| 809 | 0272619 | Ref | 50Hz Spec and Deutz Engine | G |
| 809 | 0273109 | Ref | 60Hz Spec and Ford Engine | F |
| 809 | 0275257 | Ref | 60Hz Spec and GM Engine | E |
| | | Ref | **Note: SkyPower Generator is Standard On ANSI and CSA Specs. Optional on All Other Specs.** | |
| 809A | | Ref | Receptacle, Female Twist-Lock Options: | |
| 809A | 4460958 | 1 | 60Hz Spec | |

| ITEM | PART NUMBER | QTY | DESCRIPTION | REV |
|---|---|---|---|---|
| 809A | See Note | NSS | 50Hz Spec (Note: Not Available - Purchase Locally) | |
| 809B | | Ref | Gasket Options: | |
| 809B | 3960422 | 2 | 60Hz Spec | |
| 809B | See Note | NSS | 50Hz Spec (Note: Not Available - Purchase Locally) | |
| 809C | | Ref | Cover, Receptacle Options: | |
| 809C | 4060700 | 1 | 60Hz Spec **(SN 0300087000 through 0300138089)** | |
| 809C | 1001110873 | 1 | 60Hz Spec **(SN 0300138090 through 0300177361)** | |
| 809C | See Note | NSS | 50Hz Spec (Note: Not Available - Purchase Locally) | |
| 809D | | Ref | Cover, Receptacle Options: | |
| 809D | 4061043 | 1 | 60Hz Spec **(SN 0300087000 through 0300138089)** | |
| 809D | 1001110872 | 1 | 60Hz Spec **(SN 0300138090 through 0300177361)** | |
| 809D | See Note | NSS | 50Hz Spec (Note: Not Available - Purchase Locally) | |
| 809E | | Ref | Receptacle Options: | |
| 809E | 4460346 | 1 | 60Hz Spec | |
| 809E | See Note | NSS | 50Hz Spec (Note: Not Available - Purchase Locally) | |
| 809F | 4460051 | 1 | Connector, Strain Relief | |
| 809G | 4460071 | 1 | Connector, Strain Relief | |
| 809H | | Ref | Harness, Generator Options: | |
| 809H | 4922925 | 1 | Caterpillar and Deutz Engine | |
| 809H | 4922905 | 1 | Ford Engine | |
| 809H | 4922925 | 1 | GM Engine | |
| 809I | See Note | NSS | Plug, Male - 6 Position (Note: Not Available for Purchase) | |
| 809I | See Note | NSS | Socket, Female (Note: Not Available for Purchase) | |
| 809J | 4460225 | 1 | Plug, Male - 6 Position | |
| 809J | 4460226 | 6 | Socket, Female | |
| 810 | | Ref | 7500W SkyPower Generator Junction Box Components | |
| 810 | 0861542 | Ref | 60Hz Spec | C |
| 810 | 0861567 | Ref | 50Hz Specs | B |
| 810A | | Ref | Cable, Electrical 12/3 | |
| 810A | 1060494 | 2 ft/.6m | 60Hz Spec | |
| 810A | See Note | 2 ft/.6m | 50Hz Spec (Note: Not Available - Purchase Locally) | |
| 810B | | Ref | Cable, Electrical 10/3 | |
| 810B | 1060708 | 2.5 ft /.76m | 60Hz Spec | |
| 810B | See Note | 2.5 ft /.76m | 50Hz Spec (Note: Not Available - Purchase Locally) | |
| 810C | 1060343 | 1.5 ft /.46m | Cable, Electrical 10/4 (60Hz Spec Only) | |
| 810D | 4460425 | 2 | Connector, Strain Relief | |
| 810E | | Ref | Component Options: | |
| 810E | 4460426 | 2 | Connector, Strain Relief (60Hz Spec Only) | |
| 810E | 4460426 | 1 | Connector, Strain Relief (50Hz Spec Only) | |
| 810E | 3520189 | 1 | Plug (50Hz Spec Only) | |
| 810F | 1671092 | 1 | Cover (60Hz Spec Only) | |
| 810F | 4460963 | 1 | Connector (60Hz Spec Only) | |
| 811 | | Ref | 7500W Generator Electrical Diagram Components | |
| 811 | 4933264 | Ref | Caterpillar and Deutz Engine Machines | C |
| 811 | 4933283 | Ref | Ford Engine Machines | 2-B |
| 811 | 4933349 | Ref | GM Engine Machines | A |
| 811A | | Ref | Generator Harness Options: | |
| 811A | 4922757 | 1 | Caterpillar and Deutz Engine Machines | 3-C |
| 811A | 4922905 | 1 | Ford Engine Machines | 1-A |

| ITEM | PART NUMBER | QTY | DESCRIPTION | REV |
|---|---|---|---|---|
| 811A | 4923420 | 1 | GM Engine Machines | A |
| 811B | 4460374 | 2 | Plug, Sealed Relay | |
| 811B | 4460375 | 7 | Terminal | |
| 811C | 4460967 | 1 | Plug, Male - 3 Position | |
| 811C | 4460465 | 3 | Socket, Female | |
| 811D | 2400060 | AR | Fuseholder Options: | |
| 811D | | Ref | Caterpillar, Deutz and GM Engine Machines | |
| 811D | | Ref | Ford Engine Machines | |
| 811D | 2400064 | AR | Fuse - 5Amp Options: | |
| 811D | | Ref | Caterpillar, Deutz and GM Engine Machines | |
| 811D | | Ref | Ford Engine Machines | |
| 811E | 4922641 | 1 | Switch Harness | |
| 811F | 4460226 | 2 | Socket, Female | |
| 811G | 4460742 | 1 | Plug, Male - 2 Position (GM Engine Only) | |
| 811G | 4460743 | 2 | Socket, Female (GM Engine Only) | |
| 812 | 4933308 | 1 | Floodlights Harness Components | 1-A |
| 812A | 4460320 | 2 | Plug, Male - 2 Position | |
| 812A | 4460227 | 4 | Pin, Male | |
| 812B | 4922764 | 1 | Floodlight Harness (Lights to Switch) | 1-A |
| 812C | 4460424 | 2 | Connector, Female - 2 Position | |
| 812C | 4460226 | 4 | Socket, Female | |
| 812D | 4360232 | 1 | Circuit Breaker - 15Amp | |
| 812E | 1060977 | 1 | Cord, 2 Wire Coiled (Console Box Circuit Breaker to Switch) | |
| 812F | 4460425 | 1 | Connector, Strain Relief | |
| 812G | 4460459 | 1 | Plug, Male - 3 Position | |
| 812G | 4460790 | 3 | Socket, Female | |
| 812G | 4460789 | 3 | Seal | |
| 812H | 4460476 | 1 | Receptacle, Female | |
| 812H | 4460850 | 3 | Pin, Male | |
| 812H | 4460790 | 3 | Socket, Female | |
| 812J | 1060494 | 33 ft /10.1m | Electrical Cable 12/3 (Lower Boom to Aux Relay) | |
| 812K | 1060494 | 47 ft /14.3m | Electrical Cable 12/3 (Upper Boom to Console Box) | |
| 813 | | Ref | Platform Worklights Components | |
| 813A | 2920140 | NLA | Platform Worklights External Harness (Use p/n 1001222838) (Includes Light and Wire Only) | |
| 813B | 4460459 | 1 | Plug, Male - 3 Position | |
| 813B | 4460790 | 3 | Socket, Female | |
| 813B | 4460789 | 3 | Seal | |
| 813C | 4460476 | 1 | Receptacle, Female | |
| 813C | 4460850 | 3 | Pin, Male | |
| 813C | 4460790 | 3 | Socket, Female | |
| 813D | 4460426 | 1 | Connector, Strain Relief | |
| 813E | 2400070 | 1 | Fuse | |
| 813E | 2400066 | 1 | Holder, Fuse | |
| 813F | 4922894 | 1 | Worklights Harness (Upper Boom to Worklights) | |
| 813F | 1060494 | 47 ft /14.3m | Cable, Electrical - 12/3 | |
| 813G | 4922892 | 1 | Worklights Harness (Lower Boom to Aux Power Solenoid) | |
| 813G | 1060494 | 33 ft /10.1m | Cable, Electrical - 12/3 | |

| ITEM | PART NUMBER | QTY | DESCRIPTION | REV |
|---|---|---|---|---|
| | | Ref | **TOOLS** | |
| 901 | 7002821 | 1 | Crimper (For Wire to Pin/Socket Connections) (Not Shown) | |
| 902 | 7002823 | 1 | Extractor (For Removal of Pin/Socket from Connectors) (Not Shown) | |
| 903 | 4460467 | 1 | Extractor, Pin (Blue 16-18 Gauge) (For Removal of Pin/Socket from Connectors) (Not Shown) | |
| 904 | 4460510 | 1 | Extractor, Pin (Yellow 12-14 Gauge) (For Removal of Pin/Socket from Connectors) (Not Shown) | |
| 905 | 7002828 | 1 | Stripper, Wire (Not Shown) | |
| 906 | 2901443 | 1 | Analyzer Kit (Not Shown) | |
| 906A | 1600244 | 1 | Analyzer | |
| 906B | 1060633 | 1 | Cable, Analyzer | 1-A |
| 906C | 4460321 | 2 | Plug, Male | |
| 906C | 4460226 | 8 | Socket, Female | |
| 907 | 1001137005 | 1 | Software Cable Kit (Not Shown) | |

## FIGURE 7-3. HARNESS COMPONENTS INSTALLATION (WITH UGM) (SN 0300087000 through 0300177361, SN B300000100 through B300001392)

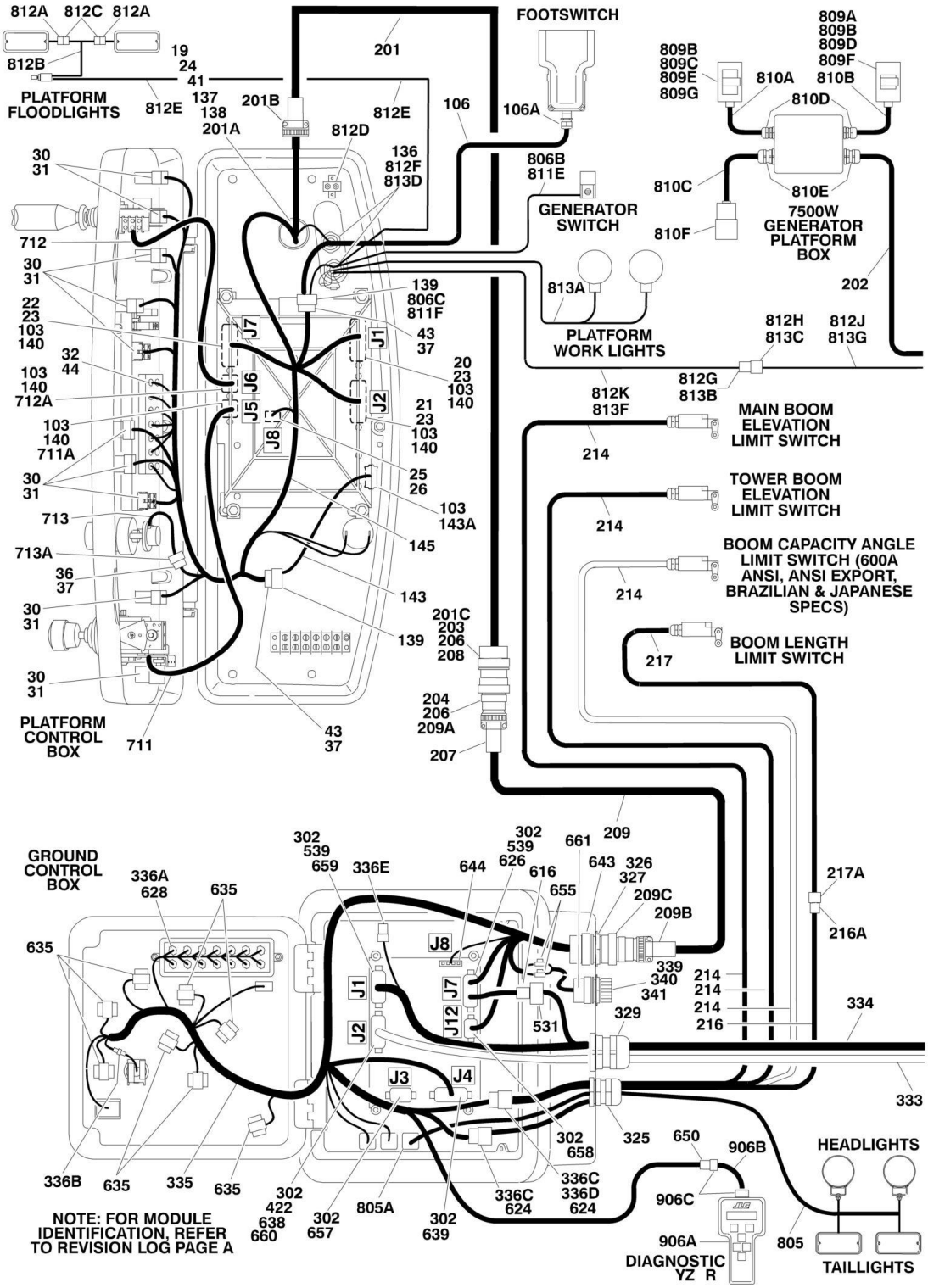

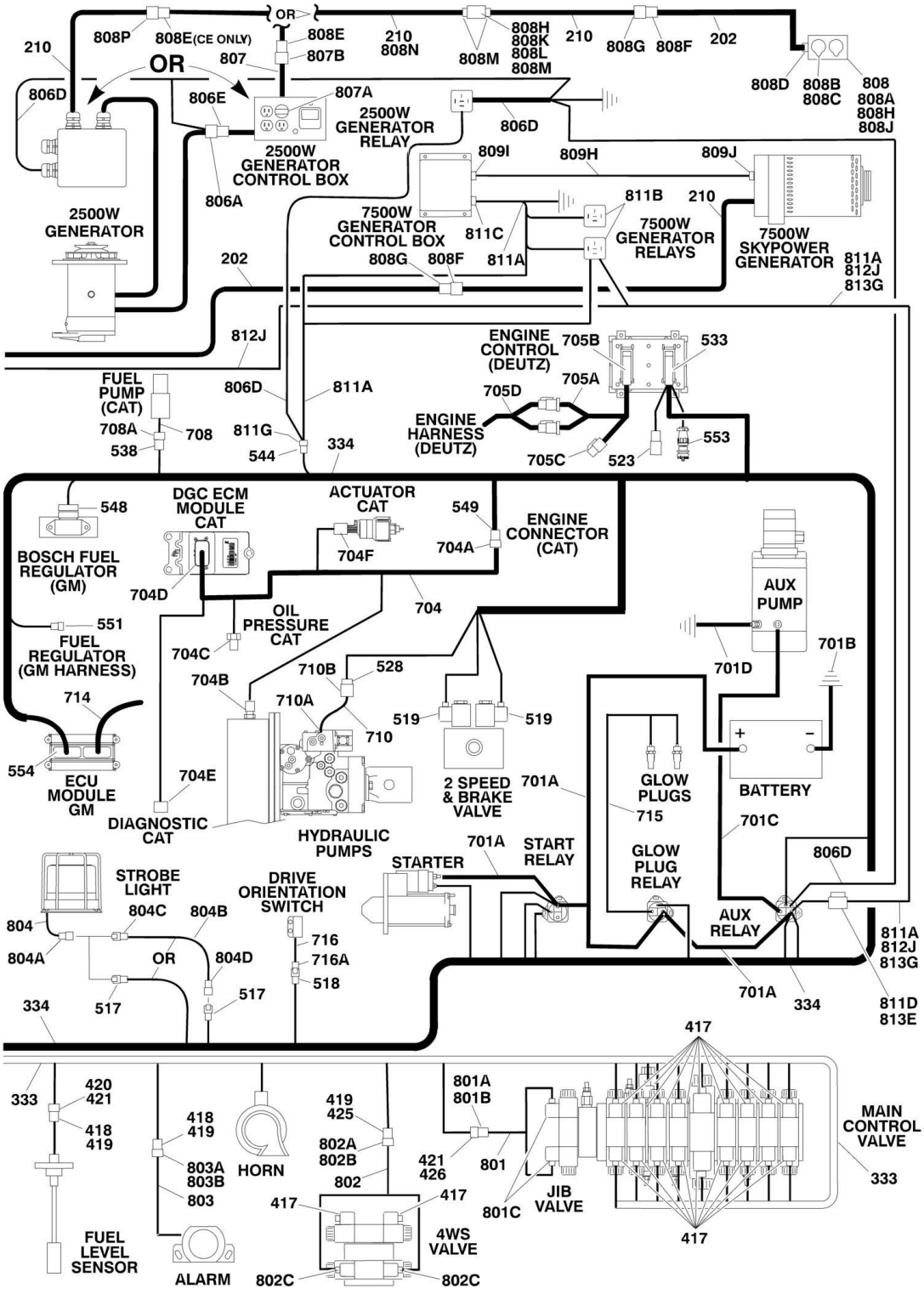
OR
808P
808E(CE ONLY)
808E
807B
807
210
808N
808M
808H
808K
808L
808M
210
808G
808F
202
808D
808B
808C
808
808A
808H
808J
210
OR
806D
806E
807A
2500W GENERATOR RELAY
806D
2500W GENERATOR CONTROL BOX
806A
2500W GENERATOR
809I
809H
809J
811B
210
7500W GENERATOR CONTROL BOX
811C
7500W GENERATOR RELAYS
7500W SKYPOWER GENERATOR
811A
812J
813G
202
808G
808F
811A
812J
ENGINE CONTROL (DEUTZ)
705B
533
705A
FUEL PUMP (CAT)
806D
811A
705D
ENGINE HARNESS (DEUTZ)
708A
708
811G
538
544
334
705C
523
553
548
DGC ECM MODULE CAT
ACTUATOR CAT
549
ENGINE CONNECTOR (CAT)
BOSCH FUEL REGULATOR (GM)
704F
704A
704D
704
AUX PUMP
551
OIL PRESSURE CAT
FUEL REGULATOR (GM HARNESS)
704C
701B
701D
704B
710B
528
714
710A
519
519
710
554
ECU MODULE GM
704E
2 SPEED & BRAKE VALVE
701A
GLOW PLUGS
BATTERY
DIAGNOSTIC CAT
HYDRAULIC PUMPS
715
701C
701A
START RELAY
STARTER
GLOW PLUG RELAY
806D
STROBE LIGHT
DRIVE ORIENTATION SWITCH
804C
804B
804
AUX RELAY
804A
OR
804D
716
716A
518
811A
812J
813G
517
517
334
701A
334
811D
813E
417
333
420
421
418
419
418
419
419
425
801A
801B
MAIN CONTROL VALVE
802A
802B
421
426
801
803A
803B
HORN
802
803
417
417
801C
JIB VALVE
333
FUEL LEVEL SENSOR
4WS VALVE
417
ALARM
802C
802C

## FIGURE 7-3. HARNESS COMPONENTS INSTALLATION (WITH UGM) (SN 0300087000 through 0300177361, SN B300000100 through B300001392)

| ITEM | PART NUMBER | QTY | DESCRIPTION | REV |
|---|---|---|---|---|
| | | Ref | **Note: For Module Identification, Refer to Revision Log Page A.** | |
| | 1001107753 | Ref | **PLATFORM BOX HARNESS ASSEMBLY (WITHOUT SKYGUARD)** | F |
| | 1001185280 | Ref | **PLATFORM BOX HARNESS ASSEMBLY (WITH SKYGUARD)** | B |
| 19 | 4460866 | 1 | Connector - 19 Position | |
| 20 | 4460874 | 1 | Connector - 35 Position (Natural) | |
| 21 | 4460875 | 1 | Connector - 35 Position (Gray) | |
| 22 | 4460873 | 1 | Connector - 35 Position (Black) | |
| 23 | 4460871 | 70 | Socket, Female | |
| 24 | 4460464 | 7 | Pin, Male (16 Gauge) | |
| 25 | 4460879 | 1 | Terminal, Housing 2 Position | |
| 26 | 4460887 | 2 | Terminal, (12 Gauge) | |
| 30 | 4460418 | 9 | Connector - 6 Position | |
| 31 | 4460419 | 27 | Terminal, Female | |
| 32 | 4120035 | 13 | Base, Light | |
| 36 | 4460225 | 1 | Plug, Male - 6 Position | |
| 37 | 4460227 | 30 | Pin, Male | |
| 41 | 4460508 | 3 | Pin, Male (12 Gauge) | |
| 43 | 4460434 | 2 | Connector - 15 Position | |
| 44 | 2920129 | 13 | Lamp, Indicator | |
| 50 | 4460884 | 1 | Connector - 4 Position (Not Shown - To Platform Sensor) (With SkyGuard) | |
| 50 | 4460944 | 4 | Socket (Not Shown - To Platform Sensor) (With SkyGuard) | |
| 50 | 4460932 | 1 | Receptacle - 4 Position (Not Shown - To Platform Sensor) (With SkyGuard) | |
| 54 | 4460536 | 1 | Receptacle - 3 Position (Not Shown) (With SkyGuard) | |
| 54 | 4460943 | 1 | Pin, Male (Not Shown) (With SkyGuard) | |
| 55 | 4460539 | 1 | Plug - 3 Position (Not Shown) (With SkyGuard) | |
| 55 | 4460944 | 1 | Socket, Female (Not Shown) (With SkyGuard) | |
| 57 | 4460708 | 1 | Connector - 15 Position (Not Shown - Mates with Item 43) (With SkyGuard) | |
| 57 | 4460226 | 3 | Socket (Not Shown) (With SkyGuard) | |
| | | Ref | **PLATFORM BOX ASSEMBLY COMPONENTS** | C |
| 103 | 0100048 | AR | Grease, Dielectric | |
| 106 | See Note | NSS | Footswitch Harness | |
| 106 | 1060918 | 8 ft/2.4m | Cable, Electrical - 18/3 | |
| 106A | 4460071 | 1 | Connector, Strain Relief | |
| 136 | 4460428 | 2 | Connector, Strain Relief | |
| 137 | 4460470 | 1 | Nut, Terminal | |
| 138 | 4460471 | 1 | Lockwasher, Terminal | |
| 139 | 4460708 | 2 | Connector, Female - 15 Position | |
| 140 | 4460905 | 5 | Seal, Plug | |
| 143 | 4922666 | 1 | Harness, Analyzer Cable | 2-B |
| 143 | 4460226 | 4 | Socket, Female (Not Shown - Located at J2) | |
| 143A | 4460761 | 1 | Connector, Female - 4 Position | |
| 143A | 4460227 | 4 | Pin, Male | |
| 145 | 1001107753 | 1 | Harness, Platform Console Box (Without SkyGuard) (Includes Items 19-44) | |
| 145 | 1001185280 | 1 | Harness, Platform Console Box (With SkyGuard) (Includes Items 19-57) | |

| ITEM | PART NUMBER | QTY | DESCRIPTION | REV |
|---|---|---|---|---|
| | | Ref | **BOOM CABLES INSTALLATION** | |
| | | Ref | **Boom Cables Installation 600A** | |
| | 0270818 | Ref | **ANSI, ANSI Export, Brazilian, Japanese Specs without 7500W Generator** | 6 |
| | 0270818 | Ref | **ANSI Export With 4000W/50Hz** | |
| | 0272624 | Ref | **ANSI and ANSI Export Specs with 7500W Generator** | 2 |
| | 0275265 | Ref | **ANSI and ANSI Export Specs with Arctic Package without 7500W Generator** | 1 |
| | 1001093436 | Ref | **ANSI and ANSI Export Specs with Arctic Package with 7500W Generator** | 2-A |
| | 1001153321 | Ref | **ANSI Export with 4000W/60Hz Generator** | |
| | 0273427 | Ref | **Australian Spec without 7500W Generator** | 1 |
| | 0273427 | Ref | **Australian Spec with 4000W/50Hz Generator** | |
| | 0273429 | Ref | **ANSI Export and Australian Spec with 7500W Generator** | 1 |
| | 0270819 | Ref | **CE and Latin American Specs without 7500W Generator** | 6 |
| | 0272626 | Ref | **ANSI Export, CE, Japanese and Latin American Specs with 7500W Generator** | 2 |
| | | Ref | **Boom Cables Installation 600AJ** | |
| | 0270820 | Ref | **ANSI, ANSI Export, Brazilian, Japanese Specs without 7500W Generator** | 6 |
| | 0270820 | Ref | **ANSI Export with 4000W/50Hz Generator** | |
| | 0272625 | Ref | **ANSI and ANSI Export Specs with 7500W Generator** | 2 |
| | 0275140 | Ref | **ANSI and ANSI Export Specs with Arctic Package** | 1 |
| | 1001093432 | Ref | **ANSI and ANSI Export Specs with Arctic Package and 7500W Generator** | 2-A |
| | 1001115974 | Ref | **ANSI and ANSI Export Specs (With David Clark Communication System) (Note: Not Shown - Contact your JLG Parts Representative)** | 1 |
| | 1001116515 | Ref | **ANSI and ANSI Export Specs (With David Clark Communication System and 7500W Generator) (SkyPower) (Note: Not Shown - Contact your JLG Parts Representative)** | 1 |
| | 1001153322 | Ref | **ANSI Export Spec with 4000W/60Hz Generator** | |
| | 0273428 | Ref | **Australian and Latin American Specs without 7500W Generator** | 1 |
| | 0273428 | Ref | **Australian Specs with 4000W/50Hz Generator** | |
| | 0273430 | Ref | **ANSI Export, Australian and Latin American Specs with 7500W Generator** | 1 |
| | 0270821 | Ref | **CE Spec without 7500W Generator** | 7 |
| | 0272627 | Ref | **CE Spec with 7500W Generator** | 2 |
| 201 | | Ref | Harness, Main Boom Options: | |
| 201 | 4922493 | 1 | Without Arctic Package | C |
| 201 | 4923472 | 1 | With Arctic Package | 1-A |
| 201 | | Ref | Cable Options: | |
| 201 | 1060896 | 45.5 ft/ 13.9m | Without Arctic Package | |
| 201 | 4923462 | 45.5 ft/ 13.9m | With Arctic Package | |
| 201A | 4460865 | 1 | Connector - 19 Position | |
| 201A | 4460465 | 11 | Socket, Female - #16 | |
| 201A | 4460509 | 4 | Socket, Female - #12 | |
| 201A | 4460466 | 4 | Seal, Plug | |
| 201B | 4460473 | 1 | Clamp, Cable | |
| 201C | 4460464 | 11 | Pin, Male (16-18 Gauge) | |
| 201C | 4460508 | 4 | Pin, Male (10-12 Gauge) | |

| ITEM | PART NUMBER | QTY | DESCRIPTION | REV |
|---|---|---|---|---|
| 201C | 2820118 | AR | Shrink, Heat | |
| 202 | | Ref | Cable, Electrical (Main Boom) Options (Does not include plug ends): | |
| 202 | | Ref | Without SkyPower: | |
| 202 | 4922894 | 1 | ANSI, ANSI Export, Brazilian, Japanese Specs (12/3) | |
| 202 | 4923474 | 1 | ANSI, ANSI Export Specs with Arctic Package (12/3) | |
| 202 | 4922895 | 1 | Australian, CE and Latin American Specs (12/3) | |
| 202 | 4922810 | 1 | With SkyPower | |
| 203 | 2820031 | AR | Shrink, Heat | |
| 204 | 4460865 | 1 | Connector - 19 Position | |
| 206 | 4460466 | 8 | Seal, Plug | |
| 207 | 4460473 | 1 | Clamp, Cable | |
| 208 | 4460866 | 1 | Connector (19 Pin) | |
| 209 | | Ref | Harness, Tower Boom Cable Options: | |
| 209 | 4922494 | 1 | Without Arctic Package | 2-B |
| 209 | 4923473 | 1 | With Arctic Package | 1-A |
| 209 | | Ref | Cable Options: | |
| 209 | 1060896 | 35.5 ft/ 10.8m | Without Arctic Package | |
| 209 | 4923462 | 35.5 ft/ 10.8m | With Arctic Package | |
| 209A | 4460465 | 11 | Socket, Female - #16 | |
| 209A | 4460509 | 4 | Socket, Female - #12 | |
| 209A | 2820118 | AR | Shrink, Heat | |
| 209B | 4460473 | 1 | Clamp, Cable | |
| 209C | 4460865 | 1 | Connector - 19 Position | |
| 209C | 4460465 | 11 | Socket, Female - #16 | |
| 209C | 4460509 | 4 | Socket, Female - #12 | |
| 209C | 4460466 | 4 | Seal, Plug | |
| 210 | | Ref | Cable, Electrical (Tower Boom) Options (Does not include plug ends): | |
| 210 | | Ref | Without SkyPower: | |
| 210 | 4922892 | 1 | ANSI, ANSI Export, Brazilian, Japanese Specs (12/3) | |
| 210 | 4923475 | 1 | ANSI, ANSI Export Specs with Arctic Package (12/3) | |
| 210 | 4922893 | 1 | Australian, CE and Latin American Specs (12/3) | |
| 210 | | Ref | With SkyPower: | |
| 210 | 4922811 | 1 | Machines without Arctic Package (8/5) | |
| 214 | 1061033 | AR | Cable, Electrical - 18/2 Main Boom Limit Switch | |
| 214 | | Ref | Cable, Electrical - 18/2 600A ANSI, ANSI Export, Brazilian and Japanese Specs | |
| 214 | | Ref | Cable, Electrical - 18/2 600AJ ANSI, ANSI Export, Brazilian, Japanese Specs | |
| 214 | | Ref | Cable, Electrical - 18/2 600A & 600AJ Australian, CE and Latin American Specs | |
| 214 | 4923476 | 3 | Cable, Electrical - 18/2 600A ANSI, ANSI Export Spec with Arctic Package | |
| 214 | 4923476 | 2 | Cable, Electrical - 18/2 600AJ ANSI, ANSI Export Spec with Arctic Package | |
| 216 | | Ref | Cable, Electrical - 18/2 Main Boom Length Options: | |
| 216 | 4922891 | 1 | Cable, Electrical - 18/2 600A All Specs except Australian and Latin American Specs | 1/A |
| 216 | Not Required | 0 | Cable, Electrical - 18/2 600A Australian and Latin American Specs | |
| 216 | 4923500 | 1 | Cable, Electrical - 18/2 600A ANSI, ANSI Export Spec with | 1-A |

| ITEM | PART NUMBER | QTY | DESCRIPTION | REV |
|---|---|---|---|---|
| | | | Arctic Package | |
| 216 | Not Required | 0 | Cable, Electrical - 18/2 600AJ All Specs except CE Spec | |
| 216 | 4922891 | 1 | Cable, Electrical - 18/2 600AJ CE Spec | 1-A |
| 216 | Not Required | 0 | Cable, Electrical - 18/2 600AJ ANSI, ANSI Export Spec with Arctic Package | |
| 216A | 4460891 | 1 | Plug, Male - 2 Position | |
| 216A | 4460465 | 2 | Socket, Female | |
| 217 | | Ref | Cable, Electrical - 18/2 Main Boom Length Options: | |
| 217 | 4922890 | 1 | Cable, Electrical - 18/2 600A All Specs except Australian and Latin American Specs | 1-A |
| 217 | Not Required | 0 | Cable, Electrical - 18/2 600A Australian and Latin American Specs | |
| 217 | 4923501 | 1 | Cable, Electrical - 18/2 600A ANSI, ANSI Export Spec with Arctic Package | 1-A |
| 217 | Not Required | 0 | Cable, Electrical - 18/2 600AJ All Specs except CE Spec | |
| 217 | 4922896 | 1 | Cable, Electrical - 18/2 600AJ CE Spec | 1-A |
| 217 | Not Required | 0 | Cable, Electrical - 18/2 600AJ ANSI, ANSI Export Spec with Arctic Package | |
| 217A | 4460897 | 1 | Receptacle, Female - 2 Position | |
| 217A | 4460464 | 2 | Pin, Male | |
| | | Ref | **GROUND CONTROL BOX COMPONENTS** | |
| | | Ref | **Ground Control Box Components 600A:** | |
| | 1001110373 | Ref | **Caterpillar Engine (ANSI and ANSI Export Specs)** | A |
| | 1001110375 | Ref | **Caterpillar Engine (Australian and CE Specs)** | A |
| | 1001110368 | Ref | **Deutz Engine (ANSI and ANSI Export Specs)** | A |
| | 1001110371 | Ref | **Deutz Engine (Australian and CE Specs)** | A |
| | 1001110367 | Ref | **GM Engine (ANSI and ANSI Export Specs)** | A |
| | | Ref | **Ground Control Box Components 600AJ:** | |
| | 1001110374 | Ref | **Caterpillar Engine (ANSI and ANSI Export Specs)** | A |
| | 1001110376 | Ref | **Caterpillar Engine (Australian and CE Specs)** | A |
| | 1001110370 | Ref | **Deutz Engine (ANSI and ANSI Export Specs)** | A |
| | 1001110372 | Ref | **Deutz Engine (ANSI and ANSI Export Specs)** | A |
| | 1001110369 | Ref | **GM Engine (ANSI and ANSI Export Specs)** | A |
| 302 | 0100048 | AR | Grease, Dielectric | |
| 325 | 4460426 | 1 | Terminal, Strain Relief | |
| 326 | 4460470 | 1 | Nut, Terminal | |
| 327 | 4460471 | 1 | Lockwasher, Terminal | |
| 329 | 4460526 | 1 | Connector, Strain Relief | |
| 333 | 4923224 | 1 | Valve Harness Assembly (See Items 417-426 for Breakdown) | |
| 334 | | Ref | Engine Harness Assembly (See Items 517-554 for Breakdown) | |
| 334 | 1001110362 | 1 | Caterpillar Engine Machines | |
| 334 | 1001110361 | 1 | Deutz Engine Machines | |
| 334 | 1001110359 | 1 | GM Engine Machines | |
| 335 | 1001110379 | 1 | Ground Control Box Harness Assembly (See Items 616-661 for Breakdown) | |
| 336 | | Ref | Ground Control Box Wiring Diagram (Not Shown) | |
| 336 | 1001110382 | 1 | Caterpillar Engine | F |
| 336 | 1001110381 | 1 | Deutz Engine | F |
| 336 | 1001110380 | 1 | GM Engine | E |
| 336A | 2920129 | AR | Bulb, Light | |
| 336B | 2400065 | 1 | Fuse, 30Amp | |
| 336B | 2400066 | 1 | Fuse, Holder with Cover | |
| 336B | 1001173590 | 1 | Fuse Holder with Fuse - 30AMP | |

| ITEM | PART NUMBER | QTY | DESCRIPTION | REV |
|---|---|---|---|---|
| 336C | 4460708 | 2 | Connector, Female - 15 Position | |
| 336C | 4460226 | AR | Socket, Female | |
| 336C | 4460905 | AR | Connector, Amp Seal Plug | |
| 336D | 4922637 | 1 | Harness, Jumper | |
| 336E | 4460894 | 1 | Plug, Male - 6 Position | |
| 336E | 4460892 | 1 | Connector, Female - 6 Position | |
| 339 | 4460496 | 1 | Lockwasher, Terminal | |
| 340 | 4460497 | 1 | Nut, Terminal | |
| 341 | 1001106736 | 1 | Cap, Dust | |
| | 4923224 | Ref | **VALVE HARNESS ASSEMBLY** | 4-F |
| 417 | 4460880 | 19 | DIN Connector | |
| 418 | 4460320 | 2 | Plug, Male - 2 Position | |
| 419 | 4460267 | 7 | Pin, Male | |
| 420 | 4460424 | 1 | Receptacle, Female - 2 Position | |
| 421 | 4460268 | 5 | Socket, Female | |
| 422 | 4460871 | 31 | Socket, Female | |
| 425 | 4460326 | 1 | Plug, Male - 3 Position | |
| 426 | 4460445 | 1 | Receptacle, Female - 3 Position | |
| | | Ref | **ENGINE HARNESS ASSEMBLIES** | |
| | 1001110362 | Ref | **Caterpillar Engine Machines** | B |
| | 1001110361 | Ref | **Deutz Engine Machines** | A |
| | 1001110359 | Ref | **GM Engine Machines** | B |
| 517 | 4460424 | 1 | Receptacle, Female - 2 Position | |
| 517 | 4460268 | 2 | Socket, Female | |
| 518 | 4460424 | 1 | Receptacle, Female - 2 Position | |
| 518 | 4460226 | 2 | Socket, Female | |
| 519 | 4460880 | 2 | DIN Connector without Diode | |
| 523 | 4461070 | 1 | Receptacle, Female With Resistor (3 Position) (Deutz Engine Only) | |
| 523 | 4461095 | 1 | Plug, Male - 3 Position (Deutz Engine Only) | |
| 523 | 4460944 | 3 | Socket, Female (Deutz Engine Only) | |
| 528 | 4460460 | 1 | Connector, Male - 4 Position | |
| 528 | 4460457 | AR | Terminal, Female | |
| 528 | 4460458 | AR | Seal, Terminal | |
| 531 | 4460539 | 1 | Connector, Male - 3 Position | |
| 531 | 4460944 | 3 | Socket, Female | |
| 533 | 4461052 | 1 | Connector, Receptacle - 25 Position (Deutz Engine Only) | |
| 533 | 4461005 | 5 | Terminal (Gold) (Deutz Engine Only) | |
| 533 | 4461006 | 5 | Seal, Terminal (Deutz Engine Only) | |
| 533 | 4461060 | 2 | Terminal (Tin) (Deutz Engine Only) | |
| 533 | 4461054 | 2 | Seal, Terminal (Deutz Engine Only) | |
| 533 | 4461053 | 1 | Cover, Plug (Deutz Engine Only) | |
| 533 | 4461008 | AR | Plug, Hole (Deutz Engine Only) | |
| 538 | 4460891 | 1 | Plug, Male - 2 Position (Caterpillar Engines Only) | |
| 538 | 4460465 | 2 | Socket, Female (Caterpillar Engines Only) | |
| 539 | 4460871 | AR | Socket, Female | |
| 544 | 4461157 | 1 | Receptacle, Female - 2 Position (Caterpillar/Deutz Engine Only) | |
| 544 | 4460979 | 2 | Pin, Male (Caterpillar/Deutz Engine Only) | |
| 544 | 4460458 | 2 | Seal, Terminal (Caterpillar/Deutz Engine Only) | |
| 548 | 4461121 | 1 | Plug, Male - 4 Position (GM Engine Only) | |
| 548 | 4461122 | NLA | Socket, Female (GM Engine Only) (use p/n 1001126484) | |
| 548 | 4461123 | NLA | Seal, Terminal (GM Engine Only) (use p/n 1001126485) | |

| ITEM | PART NUMBER | QTY | DESCRIPTION | REV |
|---|---|---|---|---|
| 549 | 4460899 | 1 | Connector - 6 Position (Caterpillar Engines Only) | |
| 549 | 4460464 | 5 | Pin, Male (Caterpillar Engines Only) | |
| 549 | 4460466 | 1 | Seal, Plug (Caterpillar Engines Only) | |
| 551 | 4461124 | 1 | Receptacle, Female - 4 Position (GM Engine Only) | |
| 551 | 4460693 | 4 | Pin, Male (GM Engine Only) | |
| 551 | 4460608 | 4 | Seal, Terminal (GM Engine Only) | |
| 551 | 4461161 | 1 | Lock, Terminal (GM Engine Only) | |
| 553 | 2902443 | 1 | Kit, Receptacle (Deutz Engine Only) | |
| 553 | 4461071 | 8 | Terminal, Female (Gold) (Deutz Engine Only) | |
| 553 | 4461072 | 1 | Connector, Flange Mount (Deutz Engine Only) | |
| 553 | 4461073 | 1 | Connector, Dust Cap (Deutz Engine Only) | |
| 553 | 4461074 | 1 | Connector, Shell (Deutz Engine Only) | |
| 554 | 4461109 | 1 | Plug, Male - 16 Position (GM Engine Only) | |
| 554 | 4461111 | 7 | Pin, Male (GM Engine Only) | |
| 554 | 4461113 | 7 | Seal, Terminal (GM Engine Only) | |
| 554 | 4461222 | 9 | Plug, Cavity (GM Engine Only) | |
| | 1001110379 | Ref | **GROUND CONTROL HARNESS ASSEMBLY** | C |
| 616 | 4460536 | 1 | Connector, Female 3- Position | |
| 616 | 4460943 | 3 | Pin, Male | |
| 621 | 3990010 | 2 | Diode - 6Amp (Not Shown) | |
| 624 | 4460434 | 2 | Connector, Male 15 - Position | |
| 624 | 4460227 | AR | Pin | |
| 626 | 4460873 | 1 | Connector, Male - 35 Position (Black) | |
| 626 | 4460871 | AR | Socket, Female | |
| 626 | 4460905 | AR | Plug, Seal | |
| 628 | 4120035 | 6 | Base, Light | |
| 628 | 4460634 | 7 | Terminal (16 Gauge) | |
| 628 | 4460635 | 5 | Terminal (12 Gauge) | |
| 635 | 4460418 | 9 | Connector, Female - 6 Position | |
| 635 | 4460419 | 24 | Socket, Female | |
| 638 | 4460871 | AR | Socket, Female | |
| 639 | 4460876 | 1 | Connector, Male - 35 Position (Blue) | |
| 639 | 4460871 | 28 | Socket, Female | |
| 639 | 4460905 | AR | Plug, Seal | |
| 643 | 4460866 | 1 | Connector - 19 Position | |
| 643 | 4460464 | 7 | Pin, Male (16 Gauge) | |
| 643 | 4460508 | 3 | Pin, Male (12 Gauge) | |
| 644 | 4460878 | 1 | Housing, Terminal - 4 Position | |
| 644 | 4460887 | 3 | Terminal (12 Gauge) | |
| 650 | 4460761 | 1 | Connector, Female 4 - Position | |
| 650 | 4460227 | 4 | Pin, Male | |
| 655 | 8229242 | 2 | Fuse 5A | |
| 655 | 2400060 | 2 | Holder, Fuse | |
| 657 | 1001106339 | 1 | Connector, Male - 14 Position | |
| 657 | 4460871 | 2 | Socket, Female | |
| 657 | 4460905 | AR | Plug, Seal | |
| 658 | 1001106340 | 1 | Connector, Male - 14 Position | |
| 658 | 4460871 | 5 | Socket, Female | |
| 659 | 4460874 | 1 | Connector, Natural | |
| 659 | 4460871 | 10 | Socket, Female | |
| 659 | 4460905 | AR | Plug, Seal | |

| ITEM | PART NUMBER | QTY | DESCRIPTION | REV |
|---|---|---|---|---|
| 660 | 4460875 | 1 | Connector, Gray | |
| 660 | 4460871 | 2 | Socket, Female | |
| 661 | 1001112612 | 1 | Connector - 9 Position | |
| 661 | 4460943 | 4 | Pin, Male | |
| | | Ref | **STANDARD HARNESS COMPONENTS** | |
| 701 | | Ref | Battery Cable Kit Options: | |
| 701 | 1001112763 | 1 | Caterpillar Engines Machines (2 Relays on Engine Tray) | A |
| 701 | 2902296 | 1 | Deutz Engines Machines (3 Relays on Engine Tray) | C |
| 701 | 2902531 | 1 | GM Engine Machines | A |
| 701A | | Ref | Cable, Battery (Red) Options: | |
| 701A | 7027028 | 1 | Caterpillar Engines Machines | |
| 701A | 1001116240 | 1 | Deutz Engines Machines | |
| 701A | 7027015 | 1 | GM Engine Machines | |
| 701B | | Ref | Cable, Battery (Black) Options: | |
| 701B | 7027029 | 1 | Caterpillar Engines Machines | |
| 701B | 7027004 | 1 | Deutz Engines Machines | |
| 701B | 7016822 | 1 | GM Engine Machines | |
| 701C | 7027002 | 1 | Cable (Red) | |
| 701D | | Ref | Cable (Black) Options: | |
| 701D | 7027033 | 1 | Caterpillar Engines Machines | |
| 701D | 7027003 | 1 | Deutz Engines Machines | |
| 704 | 1001112071 | 1 | Caterpillar Engine Harness Components (Caterpillar Engine Machines Only) | B |
| 704 | | Ref | Fuse Box Components (Not Shown) | |
| 704 | 70004317 | 2 | Relay 25Amp (Glow Plug/Shut Off) | |
| 704 | 70004316 | 1 | Relay (Starter) | |
| 704 | 70004318 | 1 | Fuse 5Amp | |
| 704 | 70004319 | 3 | Fuse 10Amp | |
| 704A | 4460894 | 1 | Plug, Male - 6 Position | |
| 704A | 4460465 | 5 | Socket, Female | |
| 704A | 4460466 | 1 | Seal, Plug | |
| 704B | 4460891 | 1 | Plug, Male - 2 Position | |
| 704B | 4460465 | 2 | Socket, Female | |
| 704C | 4460891 | 1 | Plug, Male - 2 Position | |
| 704C | 4460465 | 2 | Socket, Female | |
| 704D | 70020808 | 1 | Plug, Male - 23 Position | |
| 704D | 70020809 | 16 | Socket, Female | |
| 704E | See Note | NSS | Connector - 8 Position (Note: Not Available for Purchase) | |
| 704F | See Note | NSS | Connector - 5 Position (Note: Not Available for Purchase) | |
| 705 | | Ref | Deutz Engine Harness Components (Deutz Engine Machines Only) | |
| 705A | 7027796 | 1 | Deutz Engine Harness | |
| 705B | 4461052 | 1 | Receptacle, Female - 25 Position | |
| 705B | 4461053 | 1 | Cover, Receptacle | |
| 705B | 4461005 | 5 | Terminal | |
| 705B | 4461006 | 5 | Seal (Used with p/n 4461005) | |
| 705B | 4461060 | 2 | Terminal | |
| 705B | 4461054 | 2 | Seal (Used with p/n 4461060) | |
| 705B | 4461008 | 18 | Plug, Hole | |
| 705C | 7027793 | 1 | Plug-In, Connector | |
| 705D | 70001872 | 1 | Deutz Engine Harness (For other replacement parts refer to Deutz engine dealer) | |

| ITEM | PART NUMBER | QTY | DESCRIPTION | REV |
|---|---|---|---|---|
| 708 | See Note | NSS | Fuel Pump Harness (Caterpillar Engines Only) (Note: Not Available for Purchase) | |
| 708A | 4460897 | 1 | Receptacle, Female - 2 Position (Caterpillar Engines Only) | |
| 708A | 4460464 | 2 | Pin, Male (Caterpillar Engines Only) | |
| 710 | See Note | NSS | Pump Harness (Note: Not Available for purchase) | |
| 710A | 7007497 | 1 | Plug (Pump End) | |
| 710B | 7007498 | 1 | Plug (Engine Harness End) | |
| 711 | See Note | NSS | Controller Harness Assembly (Lift and Swing) (Note: Not Available for Purchase) | |
| 711A | 7022819 | 1 | Plug, Male - 8 Position (Natural) | |
| 711A | 4460871 | 8 | Socket, Female | |
| 712 | See Note | NSS | Controller Harness/Circuit Board Assembly (Drive and Steer) (Note: Not Available for Purchase) | |
| 712A | 7022825 | 1 | Plug, Male - 8 Position (Black) | |
| 712A | 4460871 | 7 | Socket, Female | |
| 713 | See Note | NSS | Controller Harness (Speed Control) (Note: Not Available for Purchase) | |
| 713A | 4460224 | 1 | Receptacle, Female - 6 Position | |
| 713A | 4460226 | 6 | Socket, Female | |
| 714 | | Ref | GM Engine Harness (GM Engine Machines Only) | |
| | 7027991 | 1 | Tier 1 Engines | |
| | 70000718 | 1 | Tier 2 Engines | |
| | 70002898 | 1 | Tier 3 & 4 Interim | |
| | 7027989 | 1 | Connector, Male - 10 Position (Not Shown) | |
| | See Note | NSS | Box, Fuse (Note: Parts of Harness - Not Available for Purchase) | |
| | 70002627 | 1 | Cover, Fuse Box | |
| | 70001950 | 2 | Relay (Power and Fuel Pump) | |
| | 70001951 | 1 | Relay (Starter) | |
| | 70001931 | 1 | Fuse - 60Amp (Alternator) | |
| | See Note | NSS | Fuse - 20Amp (Note: Not Available - Purchase Locally) | |
| | See Note | NSS | Fuse - 15Amp (Note: Not Available - Purchase Locally) | |
| | See Note | NSS | Fuse - 10Amp (Note: Not Available - Purchase Locally) | |
| | See Note | NSS | Fuse - 5Amp (Note: Not Available - Purchase Locally) | |
| 715 | 4923379 | 1 | Harness, Glow Plugs (Deutz Engine Machines Only) | |
| 716 | 4360517 | 1 | Switch, Proximity | |
| 716A | 4460320 | 1 | Connector - 2 Position | |
| 716A | 4460227 | 2 | Pin, Male | |
| | | Ref | **OPTIONAL HARNESS COMPONENTS** | |
| 801 | 4921927 | 1 | Jib Valve Harness (600AJ Only) | 3-F |
| 801A | 4460326 | 1 | Plug, Male - 3 Position | |
| 801B | 4460267 | 3 | Pin, Male | |
| 801C | 4460499 | 2 | Connector, DIN with Diode | |
| 802 | 4921928 | 1 | 4WS Valve Harness | 3-E |
| 802A | 4460268 | 3 | Socket, Female | |
| 802B | 4460445 | 1 | Connector, Female - 3 Position | |
| 802C | 4460499 | 2 | Connector, DIN with Diode | |
| 803 | 0257887 | 1 | Alarm Harness (Includes Alarm) | |
| 803 | 0140032 | 1 | Alarm | |
| 803 | 2820035 | 6 in/15cm | Loom | |
| 803A | 4460424 | 1 | Plug, Male - 2 Position | |
| 803B | 4460268 | 2 | Socket, Female (Amber) | |
| 804 | | Ref | Strobe Light (Amber) Harness Options (Includes Strobe Light): | B |

| ITEM | PART NUMBER | QTY | DESCRIPTION | REV |
|---|---|---|---|---|
| 804 | 0272507 | 1 | USA Built Machines **(SN 0300087000 through 0300171709)** | |
| 804 | 2920161 | 1 | USA Built Machines **(SN 0300171710 through 0300177361)** | |
| 804 | 0272507 | 1 | China Built Machines **(SN B300000100 through B300000924)** | |
| 804 | 2920161 | 1 | China Built Machines **(SN B300000925 through B300001392)** | |
| 804A | 4460320 | 1 | Connector, Female - 2 Position (0272507 Strobe Light) | |
| 804A | 4460267 | 2 | Pin, Male (0272507 Strobe Light) | |
| 804A | 4460891 | 1 | Plug, Male - 2 Position (2920161 Strobe Light) | |
| 804A | 4460465 | 2 | Socket, Female (2920161 Strobe Light) | |
| 804B | 1001149818 | 1 | Strobe Light Extension Harness (USA Built Machines) **(SN 0300171710 through 0300177361)** | B |
| 804B | 1001149818 | 1 | Strobe Light Extension Harness (China Built Machines) **(SN B300000925 through B300001392)** | B |
| 804C | 4460897 | 1 | Receptacle, Female -2 Position | |
| 804C | 4460464 | 2 | Pin, Male | |
| 804D | 4460320 | 2 | Plug, Male - 2 Position | |
| 804D | 4460267 | 4 | Pin, Male | |
| 804E | | Ref | Strobe Light (Blue) Harness Options (Not Shown): | |
| 804E | 1001142736 | 1 | Beacon Control Harness (Module to Light) | E |
| 804E | 1001150944 | 1 | Beacon Control Harness (Module to Ground Control Box) | |
| 805 | See Note | NSS | Headlight and Taillight/Chassis Illumination Harness (Note: Not Available for Purchase) | |
| 805 | 1060341 | AR | Cable, Electrical 16/2 Options: | |
| 805 | 1060341 | 37 ft/ 11.3m | Headlights and Taillights | |
| 805 | 1060341 | 40 ft/ 12.2m | Chassis Illumination Lights | |
| 805A | 3740049 | 1 | Relay | |
| 805A | 4460259 | 3 | Terminal | |
| 805A | 4460260 | 4 | Housing, Terminal | |
| 805A | 4460297 | 1 | Terminal | |
| 805A | 4922643 | 1 | Lights Harness for Ground Control Box | B |
| 805A | 4460226 | 2 | Socket, Female | |
| 806 | | Ref | 2500W Generator Electrical Components Options: | |
| 806 | 1001112588 | Ref | Caterpillar and Deutz Engines 110V/220V with Generator Control Box | A |
| 806 | 1001112743 | Ref | Caterpillar and Deutz Engines 110V/220V without Generator Control Box | B |
| 806 | 4933350 | Ref | GM Engine | B |
| 806A | 4460321 | 1 | Connector, Male - 4 Position (Caterpillar, Deutz and GM Engines Specs with Generator Control Box) | |
| 806A | 4460906 | 4 | Socket, Female | |
| 806B | 4922641 | 1 | Harness - On/Off Switch | |
| 806C | 4460226 | 2 | Socket, Female | |
| 806D | | Ref | Powermite Control Box to Relay Options: | |
| 806D | 1001112589 | 1 | Caterpillar and Deutz Engines | |
| 806D | 4923445 | 1 | GM Engines | |
| 806D | 4460374 | AR | Plug, Sealed Relay | |
| 806D | 4460375 | 3 | Terminal | |
| 806D | 4460742 | 1 | Plug, Male - 2 Position | |
| 806D | 4460743 | 1 | Socket, Female | |
| 806D | 4460458 | 1 | Seal, Terminal | |
| 806E | 4460961 | 1 | Connector, Female - 4 Position (Caterpillar, Deutz and GM Engines Specs with Generator Control Box) | |

| ITEM | PART NUMBER | QTY | DESCRIPTION | REV |
|---|---|---|---|---|
| 806E | 4460705 | 4 | Pin, Male | |
| 807 | | Ref | Generator to Rear of Boom Harness Options: | |
| | | Ref | **Note: Harness used to connect AC at platform harness to generator receptacle to power platform receptacle.** | |
| 807 | 4921829 | 1 | 110V (ANSI, ANSI Export and Japanese Specs) | 2 |
| 807 | 4921954 | 1 | 220V (ANSI and ANSI Export Specs) | 2 |
| 807 | See Note | Ref | 110V/220V (Australian, CE, Latin American and Brazilian Specs) (Note: Not Available for Purchase) | |
| 807 | | Ref | Cable, Electrical - 12/3 Options: | |
| 807 | 1060494 | 6 ft/1.8m | 110V (ANSI, ANSI Export and Japanese Specs) | |
| 807 | 1060494 | 26 ft/8m | 220V (ANSI and ANSI Export Specs) | |
| 807 | 1060461 | 6 ft/1.8m | 110V/220V (Australian, CE, Latin American and Brazilian Specs) | |
| 807A | | Ref | Plug, Male Options: | |
| 807A | 4460205 | 1 | 110V (ANSI, ANSI Export and Japanese Specs) | |
| 807A | 4460233 | 1 | 220V (ANSI and ANSI Export Specs) | |
| 807A | Not Required | 0 | 110V/220V (Australian, CE, Latin American and Brazilian Specs) (Purchase Locally) | |
| 807A | 4460027 | 1 | Receptacle, Twist Lock (110V Only) | |
| 807B | | Ref | Receptacle, Female Options: | |
| 807B | 4460134 | 1 | 110V (ANSI, ANSI Export and Japanese Specs) | |
| 807B | 4460701 | 1 | 220V (ANSI and ANSI Export Specs) | |
| 807B | Not Required | 0 | 110V/220V (Australian, CE, Latin American and Brazilian Specs) (Purchase Locally) | |
| 808 | | Ref | AC to Platform Receptacle Components Options: | |
| 808 | 0255382 | Ref | 110V GFI Receptacle (ANSI, ANSI Export and Japanese Specs) | B |
| 808 | 0257176 | Ref | 220V Receptacle (ANSI, ANSI Export and Japanese Specs) | B |
| 808 | 0272433 | Ref | SkyPower Machines (All Specs) | B |
| 808 | 0274618 | Ref | Dual AC (ANSI Export Spec Option) | 2-B |
| 808 | 0256202 | Ref | 110V/220V (Australian, Latin American and Brazilian Specs) | B |
| 808 | 1001194365 | Ref | 220V Receptacle (ANSI Export and Australian Specs) | A |
| 808 | 1001160272 | Ref | 110C AC Cable Used with 4000W/60Hz Generator | A |
| 808 | | Ref | 110V/220V (CE Spec Only): | |
| 808 | | Ref | **Without Powermite Generator:** | |
| 808 | 0256202 | Ref | 110V/220V (No Plug) | B |
| 808 | 0275653 | Ref | 220V with CEE 7 Post Ground Receptacle and Plug and Circuit Breaker (2 x 4 Box) | F |
| 808 | 0275654 | Ref | 220V with CEE 7 Side Ground Receptacle and Plug and Circuit Breaker (2 x 4 Box) | F |
| 808 | 0275660 | Ref | 220V with AFSINT 107 Keyed Ground Receptacle and Plug and Circuit Breaker (2 x 4 Box) | F |
| 808 | 0275656 | Ref | 110V with IEC Yellow Receptacle and Plug and Circuit Breaker | F |
| 808 | 0275652 | Ref | 220V with IEC Blue Receptacle and Plug and Circuit Breaker | F |
| 808 | 0275655 | Ref | 220V with CEE 7 Post Ground Receptacle and Plug and Circuit Breaker (70mm x 70mm Box) | F |
| 808 | 0275651 | Ref | 220V with CEE 7 Side Ground Receptacle and Plug and Circuit Breaker (70mm x 70mm Box) **(SN 0300087000 through 0300177361)** | D |
| 808 | 0275651 | Ref | 220V with CEE 7 Side Ground Receptacle and Plug and Circuit Breaker (70mm x 70mm Box) **(SN B300000100 through B300000868)** | D |
| 808 | 1001153638 | Ref | 220V with CEE 7 Side Ground Receptacle and Plug and Circuit Breaker (70mm x 70mm Box) **(SN B300000869 through B300005764, Excluding B300005620)** | D |

| ITEM | PART NUMBER | QTY | DESCRIPTION | REV |
|---|---|---|---|---|
| 808 | | Ref | **With Powermite Generator:** | |
| 808 | 1001100397 | Ref | 220V with CEE 7 Post Ground Receptacle and Plug and Circuit Breaker (2 x 4 Box) | G |
| 808 | 1001100398 | Ref | 220V with CEE 7 Side Ground Receptacle and Plug and Circuit Breaker (2 x 4 Box) | G |
| 808 | 1001100399 | Ref | 220V with AFSINT 107 Keyed Ground Receptacle and Plug and Circuit Breaker (2 x 4 Box) | F |
| 808 | 1001100400 | Ref | 110V with IEC Yellow Receptacle and Plug and Circuit Breaker | C |
| 808 | 1001100401 | Ref | 220V with IEC Blue Receptacle and Plug and Circuit Breaker | F |
| 808 | 1001100402 | Ref | 220V with CEE 7 Post Ground Receptacle and Plug and Circuit Breaker (70mm x 70mm Box) | F |
| 808 | 1001100403 | Ref | 220V with CEE 7 Side Ground Receptacle and Plug and Circuit Breaker (70mm x 70mm Box) | F |
| 808A | | Ref | Box, Switch Options: | |
| 808A | 0860038 | 1 | 0255382, 0257176 & 0274618 Installations | |
| 808A | Not Required | 0 | 0256202 Installation (Purchase Locally) | |
| 808A | 0861731 | 1 | 0275253, 0275254, 0275660, 1001100345, 1001100397, 1001100398, 1001100399 & 1001194365 Installations | |
| 808A | 0861781 | 1 | 0275656, 0275652, 1001100400 & 1001100401 Installations | |
| 808A | See Note | NSS | 0275655, 0275651, 1001100402 & 1001100403 Installations (Note: Was p/n 0861782 which is no longer available. Use p/n 1001100344 CEE 7 Side Ground Service Kit or p/n 1001100343 CEE 7 Post Ground Service Kit. Kit include Box p/n 1001141967 & Items 808B, 808C, 808E & 808P) | |
| 808A | 1001141967 | 1 | 1001100343, 1001100344, 1001141970 & 1001141971 Kits | |
| 808B | | Ref | Receptacle Options: | |
| 808B | 4460346 | 1 | 0255382 & 0274618 Installations | |
| 808B | 4460125 | 1 | 0257176 Installation | |
| 808B | Not Required | 0 | 0256202 Installation (Purchase Locally) | |
| 808B | 4461244 | 1 | 0275253, 1001100345 & 1001100397 Installations | |
| 808B | 4461245 | 1 | 0275654 & 1001100398 Installations | |
| 808B | 4461246 | 1 | 0275660 & 1001100399 Installations | |
| 808B | 4461198 | 1 | 0275656 & 1001100400 Installations | |
| 808B | 4461201 | 1 | 0275652 & 1001100401 Installations | |
| 808B | 4461204 | NLA | 0275655 & 1001100402 Installations (Use p/n 1001100343) | |
| 808B | 4461207 | NLA | 0275651 & 1001100403 Installations (Use p/n 1001100344) | |
| 808B | 1001141968 | 1 | 1001100343 & 1001141971 Kits | |
| 808B | 1001141969 | 1 | 1001100344 & 1001141970 Kits | |
| 808C | | Ref | Shield, Cover Options: | |
| 808C | 1001110873 | 1 | 0255382 & 0274618 Installations (Top Hinged) | |
| 808C | 4060092 | 1 | 0257176 Installation | |
| 808C | Not Required | 0 | 0256202 Installation (Purchase Locally) | |
| 808C | 4461244 | 1 | 0275253, 1001100345 & 1001100397 Installations | |
| 808C | 4461245 | 1 | 0275654 & 1001100398 Installations | |
| 808C | 4461246 | 1 | 0275660 & 1001100399 Installations | |
| 808C | 4461198 | 1 | 0275656 & 1001100400 Installations | |
| 808C | 4461201 | 1 | 0275652 & 1001100401 Installations | |
| 808C | 4461204 | NLA | 0275655 & 1001100402 Installations (Use p/n 1001100343) | |
| 808C | 4461207 | NLA | 0275651 & 1001100403 Installations (Use p/n 1001100344) | |
| 808C | 1001141968 | 1 | 1001100343 & 1001141971 Kits | |
| 808C | 1001141969 | 1 | 1001100344 & 1001141970 Kits | |
| 808D | | Ref | Connector, Strain Relief Options: | |
| 808D | 4460071 | 1 | 0255382, 0257176 & 0274618 Installations | |

| ITEM | PART NUMBER | QTY | DESCRIPTION | REV |
|---|---|---|---|---|
| 808D | Not Required | 0 | 0256202 Installation (Purchase Locally) | |
| 808D | 4460968 | 1 | 0275656, 0275652, 0275655, 0275651, 1001100400, 1001100401, 1001100402 & 1001100403 Installations | |
| 808D | 4460968 | 1 | 0275653, 0275654, 0275660, 0275656, 1001100397, 1001100398 & 1001100399 Installations | |
| 808D | 4460662 | 1 | 1001194365 Installation | |
| 808E | | Ref | Plug, Male Options: | |
| 808E | 4460205 | 1 | 0255382 & 0274618 Installations | |
| 808E | 4460233 | 1 | 0257176 Installation | |
| 808E | Not Required | 0 | 0256202 Installation (Purchase Locally) | |
| 808E | 4461202 | NLA | 0275653 & 0275655, 1001100397 & 1001100402 Installations & 1001100343 & 1001141971 Kits (Use p/n 4461205) | |
| 808E | 4461199 | 1 | 0275652 & 1001100401 Installations | |
| 808E | 4461249 | 1 | 0275660 & 1001100399 Installations | |
| 808E | 4461196 | 1 | 0275656 & 1001100400 Installations | |
| 808E | 4461205 | 1 | 0275654, & 0275651, 1001100345, 1001100398 & 1001100403 Installations & 1001100344 & 1001141970 Kits | |
| 808F | | Ref | Plug, Male Options: | |
| 808F | 4460205 | 1 | 0255382 & 0274618 Installations (Qty 4 Required for Dual AC) | |
| 808F | 4460233 | 1 | 0257176 Installation | |
| 808F | 4460709 | 1 | 0256202, 0275653, 0275654, 0275660, 0275656, 0275652, 0275655, 0275651, 1001100397, 1001100398, 1001100399, 1001100400, 1001100401, 1001100402 & 1001100403 Installations | |
| 808F | 4460960 | 1 | 0272433 Installation | |
| 808F | 4460962 | 1 | 1001160272 Installation | |
| 808F | | Ref | Cover (Optional) | |
| 808F | 1671093 | 1 | 0272433 & 1001160272 Installations | |
| 808F | 1671093 | 1 | 0272433 & 0256202 Installations **(SN 0300167714 through 0300175047)** | |
| 808F | 1001156352 | 1 | 0256202 Installation (USA Built Machines) **(SN 0300175048 through 0300177361)** | |
| 808F | 1001156352 | 1 | 0256202 Installation (China Built Machines) **(Including B300000809)** | |
| 808G | | Ref | Connector, Female Options: | |
| 808G | 4460134 | 1 | 0255382 & 0274618 Installations (Qty 2 Required for Dual AC) | |
| 808G | 4460701 | 1 | 0257176 Installation | |
| 808G | 4460710 | 1 | 0256202, 0275653, 0275654, 0275660, 0275656, 0275652, 0275655, 0275651, 1001100397, 1001100398, 1001100399, 1001100400, 1001100401, 1001100402 & 1001100403 Installations | |
| 808G | 4460959 | 1 | 0272433 Installation | |
| 808G | 4460963 | 1 | 1001160272 Installation | |
| 808G | | Ref | Cover (Optional) | |
| 808G | 1671092 | 1 | 0272433 & 1001160272 Installations | |
| 808G | 1671092 | 1 | 0256202 Installation (USA Built Machines) **(SN 0300167714 through 0300175047)** | |
| 808G | 1001156351 | 1 | 0256202 Installation (USA Built Machines) **(SN 0300175048 through 0300177361)** | |
| 808G | 1001156351 | 1 | 0256202 Installation (China Built Machines) | |
| 808H | | Ref | Hardware Options: | |
| 808H | 0641405 | AR | Bolt 1/4in - 20NC x 5/8in | |
| 808H | 0641407 | AR | Bolt 1/4in - 20NC x 7/8in | |

| ITEM | PART NUMBER | QTY | DESCRIPTION | REV |
|---|---|---|---|---|
| 808H | 0641416 | AR | Bolt 1/4in - 20NC x 2in | |
| 808H | 0700408 | AR | Screw M4 x 16mm | |
| 808H | 3290405 | AR | Locknut M4 | |
| 808H | 3311405 | AR | Locknut 1/4in - 20NC | |
| 808H | 4711400 | AR | Flatwasher 1/4in Thin | |
| 808H | 4811400 | AR | Flatwasher M4 | |
| 808J | | Ref | Bracket, Receptacle Box Mounting Options: | |
| 808J | Not Required | 0 | 0255382, 0274618, 0257176 & 0256202 Installations | |
| 808J | 0903484 | 1 | 0275653, 0275654, 0275660, 0275656, 0275652, 0275655, 0275651, 1001100397, 1001100398, 1001100399, 1001100400, 1001100401, 1001100402 & 100110010 3 Installations **(SN 0300087000 through 0300177361)** | |
| 808J | 0903484 | 1 | 0275653, 0275654, 0275660, 0275656, 0275652, 0275655, 0275651, 1001100397, 1001100398, 1001100399, 1001100400, 1001100401, 1001100402, 1001100103 & 1001153638 Installations **(SN B300000100 through B300001168)** | |
| 808J | 1001193018 | 1 | 0275653, 0275654, 0275660, 0275656, 0275652, 0275655, 0275651, 1001100397, 1001100398, 1001100399, 1001100400, 1001100401, 1001100402, 1001100103, 1001194365 & 1001153638 Installations **(SN B300001169 through B300005764, Excluding B300005620)** | |
| 808K | | Ref | Bracket, Circuit Breaker Mounting Options: | |
| 808K | Not Required | 0 | 0255382, 0274618, 0257176 & 0256202 Installations | |
| 808K | 0903612 | 1 | 0275653, 0275654, 0275660, 0275656, 0275652, 0275655, 0275651, 1001100397, 1001100398, 1001100399, 1001100400, 1001100401, 1001100402 & 1001100103 Installations **(SN 0300087000 through 0300177361)** | |
| 808K | 0903612 | 1 | 0275653, 0275654, 0275660, 0275656, 0275652, 0275655, 0275651, 1001100397, 1001100398, 1001100399, 1001100400, 1001100401, 1001100402, 1001100103 & 1001153638 Installations **(SN B300000100 through B300000782)** | |
| 808K | 1001170797 | 1 | 0275653, 0275654, 0275660, 0275656, 0275652, 0275655, 0275651, 1001100397, 1001100398, 1001100399, 1001100400, 1001100401, 1001100402, 1001100103 & 1001153638 Installations **(SN B300000782 through B300001048)** | |
| 808K | 1001153636 | 1 | 0275653, 0275654, 0275660, 0275656, 0275652, 0275655, 0275651, 1001100397, 1001100398, 1001100399, 1001100400, 1001100401, 1001100402, 1001100103 & 1001153638 Installations **(SN B300001049 through B300005764, Excluding B300005620)** | |
| 808L | | Ref | Breaker, Circuit Kit Options (Required on All CE Spec Installations except 0256202 Installation): | |
| 808L | 1001096070 | AR | Kit (Without Powermite Generator Control Box) | D |
| 808L | 1001109554 | AR | Kit (With Powermite Generator Control Box) | B |
| 808L | | Ref | Circuit Breaker Options: | |
| 808L | 1001109477 | NLA | Breaker 10A (Use p/n 1001181046) **(SN 0300087000 through 0300177361)** | |
| 808L | 1001109477 | NLA | Breaker 10A (Use p/n 1001181046) **(SN B300000100 through B300001234)** | |
| 808L | 1001109475 | NLA | Breaker 16A (Use p/n 1001181045) **(SN 0300087000 through 0300177361)** | |
| 808L | 1001109475 | NLA | Breaker 16A (Use p/n 1001181045) **(SN B300000100 through B300001234)** | |
| 808L | 1001109482 | NLA | Breaker 30mA (Use p/n 1001181045 for 30mA/16A Combination/Use 1001181046 for 30mA/10A Combination) | |

| ITEM | PART NUMBER | QTY | DESCRIPTION | REV |
|---|---|---|---|---|
| | | | **(SN 0300087000 through 0300177361)** | |
| 808L | 1001109482 | NLA | Breaker 30mA (Use p/n 1001181045 for 30mA/16A Combination/Use 1001181046 for 30mA/10A Combination) **(SN B300000100 through B300001234)** | |
| 808L | 1001181045 | 1 | Breaker, 16A/30mA Combination **(SN B300001235 through B300005764, Excluding B300005620)** | |
| 808L | 1001181046 | 1 | Breaker 10A/30mA Combination **(SN B300001235 through B300005764, Excluding B300005620)** | |
| 808L | 0861880 | 1 | Breaker Box | |
| 808L | 4460957 | 1 | Terminal Block | |
| 808L | 4460956 | 1 | Barrier, Terminal Block End | |
| 808M | 1001101191 | 2 | Connector, Strain Relief Options (Required Only on CE Spec Installations except 0256202 Installation): | |
| 808N | 1060908 | 12 ft/3.7m | Cable, Extension (Required Only on CE Spec Installations except 0256202 Installation): | |
| 808P | | Ref | Connector, Female Options: | |
| 808P | Not Required | 0 | 0255382, 0274618, 0257176, 0275653, 0275654, 0275660, 0275656, 0275652, 0275655 & 0275651 Installations | |
| 808P | Not Required | 0 | 0256202 Installation (Purchase Locally) | |
| 808P | 4461203 | 1 | 1001100402 & 1001100397 Installations & 1001100343, 1001100345 & 1001141971 Kits | |
| 808P | 4461200 | 1 | 1001100401 Installation | |
| 808P | 4461250 | 1 | 1001100399 Installation | |
| 808P | 4461197 | 1 | 1001100400 Installation | |
| 808P | 4461206 | 1 | 1001100403 & 1001100398 Installations & 1001100344 & 1001141970 Kits | |
| | | Ref | Kit, Plug and Socket Options: | |
| | | Ref | Without Generator: | |
| | 0275452 | 1 | Receptacle Box Kit (220V CEE 7 Post Ground) (Includes Items 808A, 808B, 808C & 808E) (0275653 Installation) | C |
| | 0275453 | 1 | Receptacle Box Kit (220V CEE 7 Side Ground) (Includes Items 808A, 808B, 808C & 808E) (0275654 Installation) | 1 |
| | 0275454 | 1 | Receptacle Box Kit (220V AFSINT 107 Keyed Ground) (Includes Items 808A, 808B, 808C & 808E) (0275660 Installation) | 1 |
| | 0275216 | 1 | Receptacle Box Kit (110V IEC Yellow) (Includes Items 808A, 808B, 808C & 808E) (0275656 Installation) | 1 |
| | 0275217 | 1 | Receptacle Box Kit (220V IEC Blue) (Includes Items 808A, 808B, 808C & 808E) (0275652 Installation) | 1 |
| | 0275218 | NLA | Receptacle Box Kit (220V CEE 7 Post Ground) (Includes Items 808A, 808B, 808C & 808E) (0275655 Installation) (Use p/n 1001100343) | C |
| | 0275219 | NLA | Receptacle Box Kit (220V CEE 7 Side Ground) (Includes Items 808A, 808B, 808C & 808E) (0275651 & 1001153638 Installations) (Use p/n 1001100344) | B |
| | | Ref | With Generator: | |
| | 1001100345 | 1 | Receptacle Box Kit (220V CEE 7 Post Ground) (Includes Items 808A, 808B, 808C, 808E & 808P) (1001100397 Installation) | 2 |
| | 1001100347 | 1 | Receptacle Box Kit (220V CEE 7 Side Ground) (Includes Items 808A, 808B, 808C, 808E & 808P) (1001100398 Installation) | 3 |
| | 1001100346 | 1 | Receptacle Box Kit (220V AFSINT 107 Keyed Ground) (Includes Items 808A, 808B, 808C, 808E & 808P) (1001100399 Installation) | 2 |
| | 1001100341 | 1 | Receptacle Box Kit (110V IEC Yellow) (Includes Items 808A, 808B, 808C, 808E & 808P) (1001100400 Installation) | 2 |

| ITEM | PART NUMBER | QTY | DESCRIPTION | REV |
|---|---|---|---|---|
| | 1001100342 | 1 | Receptacle Box Kit (220V IEC Blue) (Includes Items 808A, 808B, 808C, 808E & 808P) (1001100401 Installation) | 2 |
| | 1001100343 | 1 | Receptacle Box Kit (220V CEE 7 Post Ground) (Includes Items 808A, 808B, 808C, 808E & 808P) (1001100402 Installation) | C |
| | 1001100344 | 1 | Receptacle Box Kit (220V CEE 7 Side Ground) (Includes Items 808A, 808B, 808C, 808E & 808P) (1001100403 Installation) | B |
| 809 | | Ref | 7500W SkyPower Generator Installation | |
| 809 | 1001115401 | Ref | 60Hz and Caterpillar Engine | C |
| 809 | 1001115391 | Ref | 60Hz and Deutz Engine | D |
| 809 | 1001115402 | Ref | 50Hz Spec and Caterpillar Engine | C |
| 809 | 1001115392 | Ref | 50Hz Spec and Deutz Engine | C |
| 809 | 0275257 | Ref | 60Hz Spec and GM Engine | F |
| | | Ref | **Note: SkyPower Generator is Standard On ANSI and CSA Specs. Optional on All Other Specs.** | |
| 809A | | Ref | Receptacle, Female Twist-Lock Options: | |
| 809A | 4460958 | 1 | 60Hz Spec | |
| 809A | See Note | NSS | 50Hz Spec (Note: Not Available - Purchase Locally) | |
| 809B | | Ref | Gasket Options: | |
| 809B | 3960422 | 2 | 60Hz Spec | |
| 809B | See Note | NSS | 50Hz Spec (Note: Not Available - Purchase Locally) | |
| 809C | | Ref | Cover, Receptacle Options: | |
| 809C | 1001110873 | 1 | 60Hz Spec | |
| 809C | See Note | NSS | 50Hz Spec (Note: Not Available - Purchase Locally) | |
| 809D | | Ref | Cover, Receptacle Options: | |
| 809D | 1001110872 | 1 | 60Hz Spec | |
| 809D | See Note | NSS | 50Hz Spec (Note: Not Available - Purchase Locally) | |
| 809E | | Ref | Receptacle Options: | |
| 809E | 4460346 | 1 | 60Hz Spec | |
| 809E | See Note | NSS | 50Hz Spec (Note: Not Available - Purchase Locally) | |
| 809F | 4460051 | 1 | Connector, Strain Relief | |
| 809G | 4460071 | 1 | Connector, Strain Relief | |
| 809H | 4922925 | 1 | Harness, Generator | C |
| 809I | 77363233 | 1 | Plug, Male - 6 Position | |
| 809I | 4460465 | 6 | Socket, Female | |
| 809J | 4460225 | 1 | Plug, Male - 6 Position | |
| 809J | 4460226 | 6 | Socket, Female | |
| 810 | | Ref | 7500W SkyPower Generator Junction Box Components | |
| 810 | 0861542 | Ref | 60Hz Spec **(SN 0300087000 through 0300177360)** | E |
| 810 | 0861542 | Ref | 60Hz Spec **(SN B300000100 through B300000866)** | |
| 810 | 1001157592 | Ref | 60Hz Spec **(SN B300000867 through B300001392)** | |
| 810 | 0861567 | Ref | 50Hz Specs | B |
| 810A | | Ref | Cable, Electrical 12/3 | |
| 810A | 1060494 | 2 ft /.6m | 60Hz Spec **(SN 0300087000 through 0300177361, SN B300000100 through B300001242)** | |
| 810A | 1001179154 | 2 ft /.6m | 60Hz Spec **(SN B300001243 through B300001392)** | |
| 810A | See Note | 2 ft /.6m | 50Hz Spec (Note: Not Available - Purchase Locally) | |
| 810B | | Ref | Cable, Electrical 10/3 | |
| 810B | 1060708 | 2.5 ft/ .76m | 60Hz Spec | |
| 810B | See Note | 2.5 ft/ .76m | 50Hz Spec (Note: Not Available - Purchase Locally) | |

| ITEM | PART NUMBER | QTY | DESCRIPTION | REV |
|---|---|---|---|---|
| 810C | 1060343 | 1.5 ft/ .46m | Cable, Electrical 10/4 (60Hz Spec Only) | |
| 810D | 4460425 | 2 | Connector, Strain Relief | |
| 810E | | Ref | Component Options: | |
| 810E | 4460426 | 2 | Connector, Strain Relief (60Hz Spec Only) | |
| 810E | 4460426 | 1 | Connector, Strain Relief (50Hz Spec Only) | |
| 810E | 3520189 | 1 | Plug (50Hz Spec Only) | |
| 810F | 1671092 | 1 | Cover (60Hz Spec Only) | |
| 810F | 4460963 | 1 | Connector (60Hz Spec Only) | |
| 811 | | Ref | 7500W Generator Electrical Diagram Components | |
| 811 | 1001112586 | Ref | Caterpillar and Deutz Engine Machines | B |
| 811 | 4933349 | Ref | GM Engine Machines | B |
| 811A | | Ref | Generator Harness Options: | |
| 811A | 1001112587 | 1 | Caterpillar and Deutz Engine Machines **(SN 0300087000 through 0300177361, SN B300000100 through B300000865)** | B |
| 811A | 1001152429 | 1 | Caterpillar and Deutz Engine Machines **(SN B300000866 through B300001392)** | C |
| 811A | 4923420 | 1 | GM Engine Machines | A |
| 811A | 4460742 | 1 | Connector - 2 Position (1001152429 Harness) (Not Shown) | |
| 811A | 4460743 | 2 | Terminal (1001152429 Harness) (Not Shown) | |
| 811B | 4460374 | 2 | Plug, Sealed Relay (1001112587 Harness) | |
| 811B | 4460375 | 7 | Terminal (1001112587 Harness) | |
| 811C | 4460967 | 1 | Plug, Male - 3 Position | |
| 811C | 4460465 | 3 | Socket, Female | |
| 811D | 2400060 | 1 | Fuseholder | |
| 811D | 2400064 | 1 | Fuse - 5Amp | |
| 811E | 4922641 | 1 | Switch Harness | |
| 811F | 4460226 | 2 | Socket, Female | |
| 811G | 4460742 | 1 | Plug, Male - 2 Position | |
| 811G | 4460743 | 2 | Socket, Female | |
| 811G | 4460458 | 2 | Seal, Terminal | |
| 812 | 4933308 | 1 | Floodlights Harness Components | 1-A |
| 812A | 4460320 | 2 | Plug, Male - 2 Position | |
| 812A | 4460227 | 4 | Pin, Male | |
| 812B | 4922764 | 1 | Floodlight Harness (Lights to Switch) | 1-A |
| 812C | 4460424 | 2 | Connector, Female - 2 Position | |
| 812C | 4460226 | 4 | Socket, Female | |
| 812D | 4360232 | 1 | Circuit Breaker - 15Amp | |
| 812E | 1060977 | 1 | Cord, 2 Wire Coiled (Console Box Circuit Breaker to Switch) | |
| 812F | 4460425 | 1 | Connector, Strain Relief | |
| 812G | 4460459 | 1 | Plug, Male - 3 Position | |
| 812G | 4460790 | 3 | Socket, Female | |
| 812G | 4460789 | 3 | Seal | |
| 812H | 4460476 | 1 | Receptacle, Female | |
| 812H | 4460850 | 3 | Pin, Male | |
| 812H | 4460790 | 3 | Socket, Female | |
| 812J | 1060494 | 33 ft/ 10.1m | Electrical Cable 12/3 (Lower Boom to Aux Relay) | |
| 812K | 1060494 | 47 ft/ 14.3m | Electrical Cable 12/3 (Upper Boom to Console Box) | |
| 813 | | Ref | Platform Worklights Components | |
| 813A | 2920140 | NLA | Platform Worklights External Harness (Use p/n 1001222838) | |

| ITEM | PART NUMBER | QTY | DESCRIPTION | REV |
|---|---|---|---|---|
| | | | (Includes Light and Wire Only) | |
| 813B | 4460459 | 1 | Plug, Male - 3 Position | |
| 813B | 4460790 | 3 | Socket, Female | |
| 813B | 4460789 | 3 | Seal | |
| 813C | 4460476 | 1 | Receptacle, Female | |
| 813C | 4460850 | 3 | Pin, Male | |
| 813C | 4460790 | 3 | Socket, Female | |
| 813D | 4460426 | 1 | Connector, Strain Relief | |
| 813E | 2400070 | 1 | Fuse | |
| 813E | 2400066 | 1 | Holder, Fuse | |
| 813F | 4922894 | 1 | Worklights Harness (Upper Boom to Worklights) | |
| 813F | 1060494 | 47 ft/ 14.3mm | Cable, Electrical - 12/3 | |
| 813G | 4922892 | 1 | Worklights Harness (Lower Boom to Aux. Power Solenoid) | |
| 813G | 1060494 | 33 ft/ 10.1mm | Cable, Electrical - 12/3 | |
| | | Ref | **TOOLS** | |
| 901 | 7002821 | 1 | Crimper (For Wire to Pin/Socket Connections) (Not Shown) | |
| 902 | 7002823 | 1 | Extractor (For Removal of Pin/Socket from Connectors) (Not Shown) | |
| 903 | 4460467 | 1 | Extractor, Pin (Blue 16-18 Gauge) (For Removal of Pin/Socket from Connectors) (Not Shown) | |
| 904 | 4460510 | 1 | Extractor, Pin (Yellow 12-14 Gauge) (For Removal of Pin/Socket from Connectors) (Not Shown) | |
| 905 | 7002828 | 1 | Stripper, Wire (Not Shown) | |
| 906 | 2901443 | 1 | Analyzer Kit (Not Shown) | |
| 906A | 1600244 | 1 | Analyzer | |
| 906B | 1060633 | 1 | Cable, Analyzer | 1-A |
| 906C | 4460321 | 2 | Plug, Male | |
| 906C | 4460226 | 8 | Socket, Female | |
| 907 | 1001137005 | 1 | Software Cable Kit (Not Shown) | |

## FIGURE 7-4. HARNESS COMPONENTS INSTALLATION (WITH UGM) (SN B300001393 through B300005764)

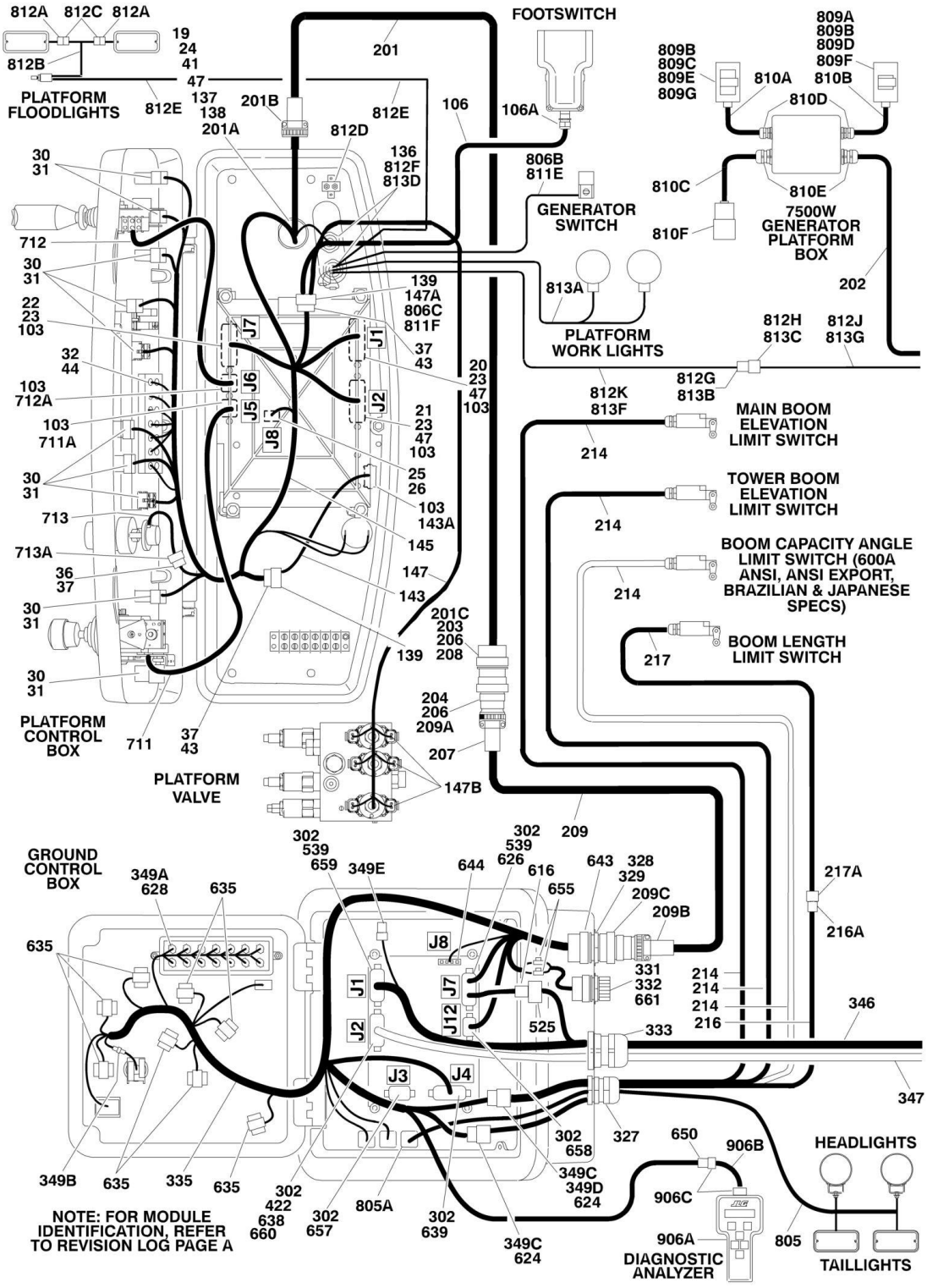

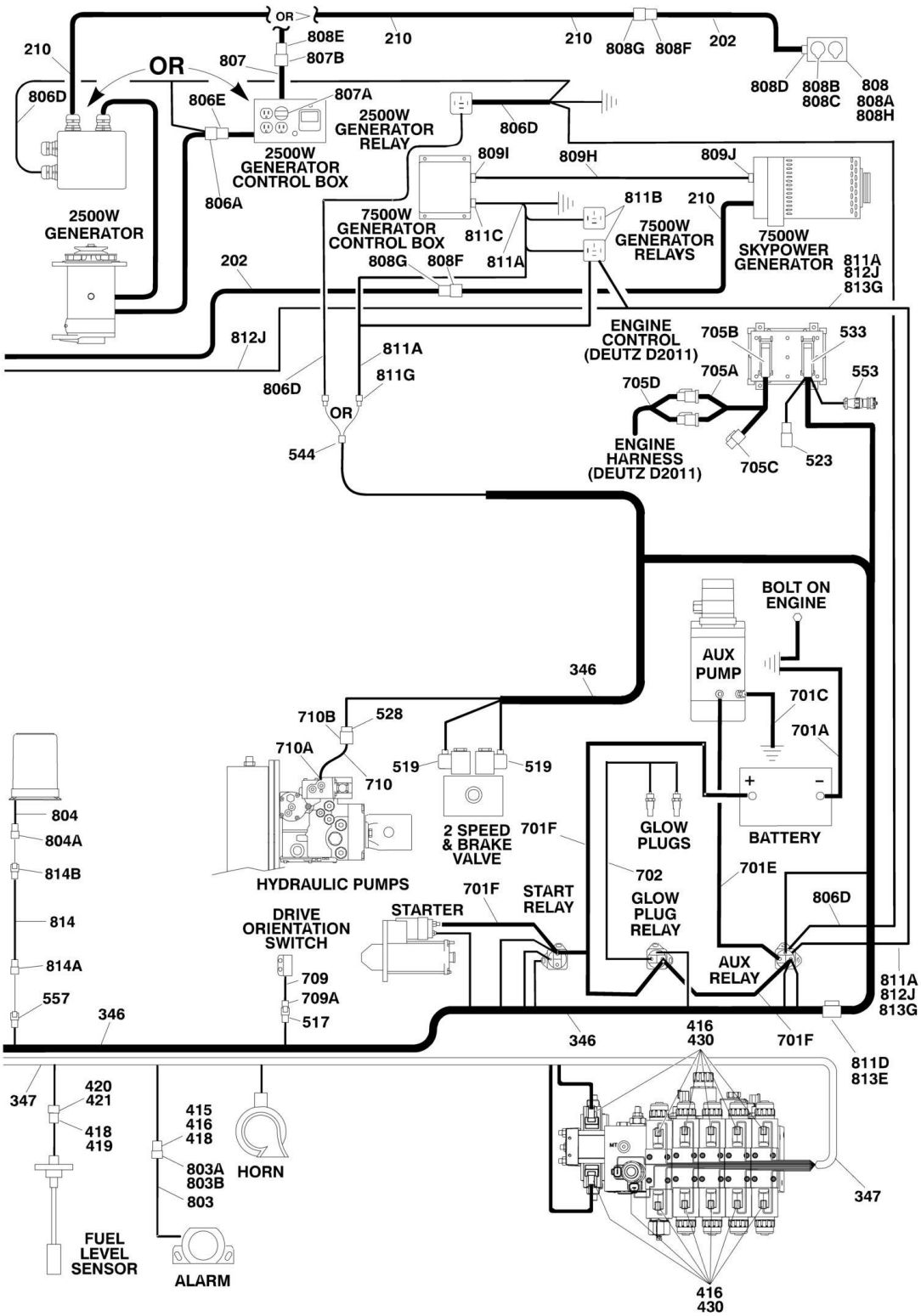
OR
808E
807B
807
210
210
210
808G
808F
202
808D
808B
808C
808
808A
808H
806D
OR
806E
807A
2500W GENERATOR RELAY
2500W GENERATOR CONTROL BOX
806A
806D
809I
809H
809J
811B
210
2500W GENERATOR
7500W GENERATOR CONTROL BOX
811C
811A
808G
808F
7500W GENERATOR RELAYS
7500W SKYPOWER GENERATOR
811A
812J
813G
202
812J
811A
811G
806D
OR
544
ENGINE CONTROL (DEUTZ D2011)
705B
533
705A
553
705D
ENGINE HARNESS (DEUTZ D2011)
705C
523
BOLT ON ENGINE
AUX PUMP
346
701C
701A
710B
528
710A
710
519
519
804
804A
814B
814
814A
557
346
HYDRAULIC PUMPS
2 SPEED & BRAKE VALVE
701F
GLOW PLUGS
BATTERY
702
701E
701F
START RELAY
STARTER
GLOW PLUG RELAY
806D
DRIVE ORIENTATION SWITCH
709
709A
517
AUX RELAY
811A
812J
813G
346
416
430
701F
811D
813E
347
420
421
418
419
415
416
418
803A
803B
803
HORN
347
FUEL LEVEL SENSOR
ALARM
416
430

## FIGURE 7-4. HARNESS COMPONENTS INSTALLATION (WITH UGM) (SN B300001393 through B300005764)

| ITEM | PART NUMBER | QTY | DESCRIPTION | REV |
|---|---|---|---|---|
| | 1001107753 | Ref | **PLATFORM BOX HARNESS ASSEMBLY (WITHOUT SKYGUARD)** | F |
| | 1001185280 | Ref | **PLATFORM BOX HARNESS ASSEMBLY (WITH SKYGUARD)** | B |
| 19 | 4460866 | 1 | Connector - 19 Position | |
| 20 | 4460874 | 1 | Connector - 35 Position (Natural) | |
| 21 | 4460875 | 1 | Connector - 35 Position (Gray) | |
| 22 | 4460873 | 1 | Connector - 35 Position (Black) | |
| 23 | 4460871 | 70 | Socket, Female | |
| 24 | 4460464 | 7 | Pin, Male (16 Gauge) | |
| 25 | 4460879 | 1 | Terminal, Housing - 2 Position | |
| 26 | 4460887 | 2 | Terminal (12 Gauge) | |
| 30 | 4460418 | 9 | Connector - 6 Position | |
| 31 | 4460419 | 27 | Terminal, Female | |
| 32 | 4120035 | 13 | Base, Light | |
| 36 | 4460225 | 1 | Plug, Male - 6 Position | |
| 37 | 4460227 | 30 | Pin, Male | |
| 41 | 4460508 | 3 | Pin, Male (12 Gauge) | |
| 43 | 4460434 | 2 | Connector - 15 Position | |
| 44 | 2920129 | 13 | Lamp, Indicator | |
| 47 | 4460905 | 26 | Seal, Plug | |
| 50 | 4460884 | 1 | Connector - 4 Position (Not Shown - To Platform Sensor) (With SkyGuard) | |
| 50 | 4460944 | 4 | Socket (Not Shown - To Platform Sensor) (With SkyGuard) | |
| 50 | 4460932 | 1 | Receptacle - 4 Position (Not Shown - To Platform Sensor) (With SkyGuard) | |
| 54 | 4460536 | 1 | Receptacle - 3 Position (Not Shown) (With SkyGuard) | |
| 54 | 4460943 | 1 | Pin, Male (Not Shown) (With SkyGuard) | |
| 55 | 4460539 | 1 | Plug - 3 Position (Not Shown) (With SkyGuard) | |
| 55 | 4460944 | 1 | Socket, Female (Not Shown) (With SkyGuard) | |
| 57 | 4460708 | 1 | Connector - 15 Position (Not Shown - Mates with Item 43) (With SkyGuard) | |
| 57 | 4460226 | 3 | Socket (Not Shown) (With SkyGuard) | |
| | | Ref | **PLATFORM BOX ASSEMBLY COMPONENTS** | |
| 103 | 0100048 | AR | Grease, Dielectric | |
| 106 | See Note | NSS | Footswitch Harness | |
| 106 | 1060918 | 8 ft/2.4m | Cable, Electrical - 18/3 | |
| 106A | 4460071 | 1 | Connector, Strain Relief | |
| 136 | 4460428 | 2 | Connector, Strain Relief | |
| 137 | 4460470 | 1 | Nut, Terminal | |
| 138 | 4460471 | 1 | Lockwasher, Terminal | |
| 139 | 4460708 | 2 | Connector, Female - 15 Position | |
| 143 | 4922666 | 1 | Harness, Analyzer Cable | C |
| 143 | 4460226 | 4 | Socket, Female (Not Shown - Located at J2) | |
| 143A | 4460761 | 1 | Connector, Female - 4 Position | |
| 143A | 4460227 | 1 | Pin, Male | |
| 145 | 1001107753 | 1 | Harness, Platform Console Box (Without SkyGuard) (Includes Items 19-47) | |
| 145 | 1001185280 | 1 | Harness, Platform Console Box (With SkyGuard) (Includes Items 19-57) | |
| 147 | 1001139135 | 1 | Platform Valve Harness Assembly | |

| ITEM | PART NUMBER | QTY | DESCRIPTION | REV |
|---|---|---|---|---|
| 147A | 4460226 | 7 | Socket, Female | |
| 147B | 4460891 | 6 | Plug, Male - 2 Position | |
| 147B | 1001116992 | 12 | Socket, Female | |
| | | Ref | **BOOM CABLES INSTALLATION** | |
| | | Ref | **Boom Cables Installation 600AJ** | |
| | 0270818 | Ref | **ANSI Export Specs with 4000W/50Hz Generator** | 6 |
| | 1001153321 | Ref | **ANSI Export Specs with 4000W/60Hz Generator** | A |
| | 0272624 | Ref | **ANSI Export Specs with 7500W/50Hz Generator** | 2 |
| | 0272626 | Ref | **ANSI Export Specs with 7500W/60Hz Generator** | 2 |
| | 0275265 | Ref | **ANSI Export Specs with Arctic Package without 7500W Generator** | 1 |
| | 1001093436 | Ref | **ANSI Export Specs with Arctic Package with 7500W/60Hz Generator** | 2-A |
| | 0273427 | Ref | **Australian Specs with 4000W Generator** | 1 |
| | 0273429 | Ref | **Australian Specs with 7500W Generator** | 1 |
| | | Ref | **Boom Cables Installation 600AJ** | |
| | 1001165366 | Ref | **ANSI Export Specs with 4000W/50Hz Generator (SN B300001393 through B300001985)** | A |
| | 0270820 | Ref | **ANSI Export with 4000W/50Hz Generator (SN B300001986 through B300005764, Excluding B300005764)** | 6 |
| | 1001190966 | Ref | **ANSI Export Specs with 4000W/60Hz Generator (SN B300001393 through B300001985)** | A |
| | 1001153322 | Ref | **ANSI Export Specs with 4000W/60Hz Generator (SN B300001986 through B300005764, Excluding B300005764)** | 1 |
| | 1001165552 | Ref | **ANSI Export Specs with 7500W/60Hz Generator (SN B300001393 through B300001985)** | A |
| | 0272625 | Ref | **ANSI Export Specs with 7500W/60Hz Generator (SN B300001986 through B300005764, Excluding B300005764)** | 2 |
| | 1001165556 | Ref | **ANSI Export Specs with Arctic Package without 4000W or 7500W Generator (SN B300001393 through B300001985)** | A |
| | 0275140 | Ref | **ANSI Export Specs with Arctic Package without 4000W or 7500W Generator (SN B300001986 through B300005764, Excluding B300005764)** | 1 |
| | 1001165557 | Ref | **ANSI Export Specs with Arctic Package with 7500W/60Hz Generator (SN B300001393 through B300001985)** | A |
| | 1001093432 | Ref | **ANSI Export Specs with Arctic Package with 7500W/60Hz Generator (SN B300001986 through B300005764, Excluding B300005764)** | 2 |
| | 1001165554 | Ref | **Australian Specs with 4000W/50Hz Generator (SN B300001393 through B300001985)** | A |
| | 0273428 | Ref | **Australian Specs with 4000W/50Hz Generator (SN B300001986 through B300005764, Excluding B300005764)** | 2 |
| | 1001165555 | Ref | **Australian Specs with 7500W/50Hz Generator (SN B300001393 through B300001985)** | A |
| | 0273430 | Ref | **Australian Specs with 7500W/50Hz Generator (SN B300001986 through B300005764, Excluding B300005764)** | 2 |
| 201 | | Ref | Harness, Main Boom Options: | |
| 201 | 4922493 | 1 | Harness, Main Boom without Arctic Package | D |
| 201 | 4923472 | 1 | Harness, Main Boom with Arctic Package | B |
| 201 | | Ref | Cable Options | |
| 201 | 1060896 | 45.5 ft/ 13.9m | Cable without Arctic Package | |
| 201 | 4923462 | 45.5 ft/ 13.9m | Cable with Arctic Package | |
| 201A | 4460865 | 1 | Connector - 19 Position | |
| 201A | 4460465 | 11 | Socket, Female - #16 | |

| ITEM | PART NUMBER | QTY | DESCRIPTION | REV |
|---|---|---|---|---|
| 201A | 4460509 | 4 | Socket, Female - #12 | |
| 201A | 4460466 | 4 | Seal, Plug | |
| 201B | 4460473 | 1 | Clamp, Cable | |
| 201C | 4460464 | 11 | Pin, Male (16-18 Gauge) | |
| 201C | 4460508 | 4 | Pin, Male (10-12 Gauge) | |
| 201C | 2820118 | AR | Heat Shrink | |
| 202 | | Ref | Cable, Electrical (Main Boom) Options (Does not include plug ends) | |
| 202 | | Ref | ANSI Export Specs without Generator | |
| 202 | 4923474 | 1 | Cable with Arctic Package | |
| 202 | | Ref | ANSI Export Specs with 4000W Generator | |
| 202 | 4922894 | 1 | Cable - 4000W/50Hz Generator | |
| 202 | 1001156489 | 1 | Cable - 4000W/60Hz Generator | |
| 202 | | Ref | ANSI Export Specs with 7500W Generator (SkyPower) | |
| 202 | 4922895 | 1 | Cable - 7500W Generator without Arctic Package | |
| 202 | 4922810 | 1 | Cable - 7500W Generator with Arctic Package | |
| 202 | | Ref | Australian Specs | |
| 202 | 4922894 | 1 | Cable - 4000W Generator | |
| 202 | 4922810 | 1 | Cable - 7500W Generator | |
| 203 | 2820031 | 1 | Heat Shrink | |
| 204 | 4460865 | 1 | Connector - 19 Position | |
| 206 | 4460466 | 8 | Seal, Plug | |
| 207 | 4460473 | 1 | Clamp, Cable | |
| 208 | 4460866 | 1 | Connector (19 Pin) | |
| 209 | | Ref | Harness, Tower Boom Cable Options: | |
| 209 | 4922494 | 1 | Harness, Tower Boom Cable without Arctic Package | C |
| 209 | 4923473 | 1 | Harness, Tower Boom Cable with Arctic Package | B |
| 209 | | Ref | Cable Options: | |
| 209 | 1060896 | 35.5 ft/ 10.8m | Cable without Arctic Package | |
| 209 | 4923462 | 35.5 ft/ 10.8m | Cable with Arctic Package | |
| 209A | 4460465 | 11 | Socket, Female - #16 | |
| 209A | 4460509 | 4 | Socket, Female - #12 | |
| 209A | 2820118 | AR | Heat Shrink | |
| 209B | 4460473 | 1 | Clamp, Cable | |
| 209C | 4460865 | 1 | Connector - 19 Position | |
| 209C | 4460465 | 11 | Connector (19 Pin) | |
| 209C | 4460509 | 4 | Socket, Female - #12 | |
| 209C | 4460466 | 4 | Seal, Plug | |
| 210 | | Ref | Cable, Electrical (Tower Boom) Options (Does not include plug ends) | |
| 210 | | Ref | ANSI Export Specs without Generator | |
| 210 | 4923475 | 1 | Cable with Arctic Package | |
| 210 | | Ref | ANSI Export Specs with 4000W Generator | |
| 210 | 4922892 | 1 | Cable - 4000W/50Hz Generator | |
| 210 | 1001156490 | 1 | Cable - 4000W/60Hz Generator | |
| 210 | | Ref | ANSI Export Specs with 7500W Generator (SkyPower) | |
| 210 | 4922895 | 1 | Cable - 7500W Generator without Arctic Package | |
| 210 | 4922811 | 1 | Cable - 7500W Generator with Arctic Package | |
| 210 | | Ref | Australian Specs | |
| 210 | 4922893 | 1 | Cable - 4000W Generator | |

| ITEM | PART NUMBER | QTY | DESCRIPTION | REV |
|---|---|---|---|---|
| 210 | 4922811 | 1 | Cable - 7500W Generator | |
| 214 | | Ref | Cable, Electrical - 18/2 Main Boom Limit Switch Options: | |
| 214 | 1061033 | 3 | 600A ANSI Export Specs | |
| 214 | 1061033 | 2 | 600AJ ANSI Export Specs | |
| 214 | 4923476 | 3 | 600A ANSI Export Spec with Arctic Package | |
| 214 | 4923476 | 2 | 600AJ ANSI Export Spec with Arctic Package | |
| 214 | 1061033 | 2 | 600A & 600AJ Australian Specs | |
| 216 | | Ref | Cable, Electrical - 18/2 Main Boom Length Options: | |
| 216 | 4922891 | 1 | 600A ANSI Export Specs | 1-A |
| 216 | Not Required | 0 | 600A Australian Specs | |
| 216 | 4923500 | 1 | 600A ANSI Export Spec with Arctic Package | 1-A |
| 216 | Not Required | 0 | 600AJ ANSI Export Spec with Arctic Package | |
| 216A | 4460891 | 1 | Plug, Male - 2 Position | |
| 216A | 4460465 | 2 | Socket, Female | |
| 217 | | Ref | Cable, Electrical - 18/2 Main Boom Length Options: | |
| 217 | 4922890 | 1 | 600A All Specs | 1-A |
| 217 | 4923501 | 1 | 600A ANSI Export Spec with Arctic Package | 1-A |
| 217 | Not Required | 0 | 600AJ All Specs | |
| 217A | 4460897 | 1 | Receptacle, Female - 2 Position | |
| 217A | 4460464 | 2 | Pin, Male | |
| | | Ref | **GROUND CONTROL BOX COMPONENTS** | |
| | | Ref | **Ground Control Box Components 600A:** | |
| | 1001154671 | Ref | **Deutz D2011 Engine** | C |
| | | Ref | **Ground Control Box Components 600AJ:** | |
| | 1001154673 | Ref | **Deutz D2011 Engine** | C |
| 302 | 0100048 | 1 | Grease, Dielectric | |
| 327 | 4460426 | 1 | Terminal, Strain Relief | |
| 328 | 4460470 | 1 | Nut, Terminal | |
| 329 | 4460471 | 1 | Lockwasher, Terminal | |
| 331 | 4460496 | 1 | Washer, Terminal | |
| 332 | 4460497 | 1 | Nut, Terminal | |
| 333 | 4460526 | 1 | Connector, Strain Relief | |
| 343 | 1001110379 | 1 | Ground Control Box Harness Assembly (See Items 616-666 for Breakdown) | |
| 346 | | Ref | Engine Harness Assembly (See Items 517-557 for Breakdown) | |
| 346 | 1001154390 | 1 | Deutz D2011 Engine Machines | |
| 347 | 1001154392 | 1 | Valve Harness Assembly (See Items 415-430 for Breakdown) | |
| 349 | | Ref | Ground Control Box Wiring Diagram (Not Shown) | |
| 349 | 1001154396 | 1 | Deutz D2011 Engine Machines | B |
| 349 | 1001164564 | 1 | Deutz TD2.9L4 Engine Machines | C |
| 349A | 2920129 | AR | Bulb, Light | |
| 349B | 1001173590 | AR | Fuse Assembly | A |
| 349B | 2400065 | 1 | Fuse, 30Amp | |
| 349B | 2400066 | 1 | Fuse, Holder with Cover | |
| 349C | 4460708 | 2 | Connector, Female - 15 Position | |
| 349C | 4460226 | AR | Socket, Female | |
| 349D | 4922637 | 1 | Harness, Jumper | |
| 349E | 4460894 | 1 | Plug, Male - 6 Position | |
| 349E | 4460892 | 1 | Connector, Female - 6 Position | |
| | 1001154392 | 1 | **VALVE HARNESS ASSEMBLY** | C |
| 415 | 4460539 | 1 | Plug, Male - 3 Position | |
| 416 | 1001116692 | 34 | Socket, Female | |

| ITEM | PART NUMBER | QTY | DESCRIPTION | REV |
|---|---|---|---|---|
| 418 | 4460466 | 1 | Plug, Sealing | |
| 419 | 4460267 | 5 | Pin, Male | |
| 420 | 4460424 | 1 | Receptacle, Female - 2 Position | |
| 421 | 4460268 | 5 | Socket, Female | |
| 422 | 4460871 | 26 | Socket, Female | |
| 430 | 4460891 | 16 | Plug, Male - 2 Position | |
| | | Ref | **ENGINE HARNESS ASSEMBLIES** | |
| | 1001154390 | 1 | **Deutz D2011 Engine Machines** | B |
| 517 | 4460424 | 1 | Receptacle, Female - 2 Position | |
| 517 | 4460226 | 2 | Socket, Female | |
| 519 | 4460880 | 2 | DIN Connector without Diode | |
| 523 | 4461070 | 1 | Receptacle, Female with Resistor (3 Position) | |
| 523 | 4461095 | 1 | Plug, Male - 3 Position | |
| 523 | 4460944 | 3 | Socket, Female | |
| 525 | 4460539 | 1 | Connector, Male - 3 Position | |
| 525 | 4460944 | 3 | Socket, Female | |
| 528 | 4460460 | 1 | Connector, Male - 4 Position | |
| 528 | 4460457 | AR | Terminal, Female | |
| 528 | 4460458 | AR | Seal, Terminal | |
| 533 | 4461052 | 1 | Connector, Receptacle - 25 Position | |
| 533 | 4461005 | 5 | Terminal (Gold) | |
| 533 | 4461006 | 5 | Seal, Terminal | |
| 533 | 4461060 | 2 | Terminal (Tin) | |
| 533 | 4461054 | 1 | Seal, Terminal | |
| 533 | 4461053 | AR | Cover, Plug | |
| 533 | 4461008 | AR | Plug, Hole | |
| 539 | 4460871 | AR | Socket, Female | |
| 544 | 4461157 | 1 | Receptacle, Female - 2 Position | |
| 544 | 4460979 | 2 | Pin, Male | |
| 544 | 4460458 | 2 | Seal, Terminal | |
| 553 | 2902443 | 1 | Kit, Receptacle | |
| 553 | 4461071 | 8 | Terminal, Female (Gold) | |
| 553 | 4461072 | 1 | Connector, Flange Mount | |
| 553 | 4461073 | 1 | Connector, Dust Cap | |
| 553 | 4461074 | 1 | Connector, Shell | |
| 557 | 4460897 | 1 | Receptacle, Female - 2 Position | |
| 557 | 4460464 | 2 | Socket, Female | |
| | 1001110379 | Ref | **GROUND CONTROL HARNESS ASSEMBLY** | F |
| 616 | 4460536 | 1 | Connector, Female - 3 Position | |
| 616 | 4460943 | 3 | Pin, Male | |
| 621 | 3990010 | 2 | Diode - 6Amp (Not Shown) | |
| 624 | 4460434 | 2 | Connector, Male - 15 Position | |
| 624 | 4460227 | AR | Pin | |
| 626 | 4460873 | 1 | Connector, Male - 35 Position (Black) | |
| 626 | 4460871 | AR | Socket, Female | |
| 626 | 4460905 | AR | Plug, Seal | |
| 628 | 4120035 | AR | Base, Light | |
| 628 | 4460634 | AR | Terminal (16 Gauge) | |
| 628 | 4460635 | AR | Terminal (12 Gauge) | |
| 635 | 4460618 | 9 | Connector, Female - 6 Position | |
| 635 | 4460419 | 24 | Socket, Female | |

| ITEM | PART NUMBER | QTY | DESCRIPTION | REV |
|---|---|---|---|---|
| 638 | 4460871 | AR | Socket, Female | |
| 638 | 4460876 | 1 | Connector, Male - 35 Position (Blue) | |
| 639 | 4460871 | 28 | Socket, Female | |
| 639 | 4460905 | AR | Plug, Seal | |
| 643 | 4460866 | 1 | Connector - 19 Position | |
| 643 | 4460464 | 7 | Pin, Male (16 Gauge) | |
| 643 | 4460508 | 3 | Pin, Male (12 Gauge) | |
| 644 | 4460878 | 1 | Housing, Terminal - 4 Position | |
| 644 | 4460887 | 3 | Terminal (12 Gauge) | |
| 650 | 4460761 | 1 | Connector, Female - 4 Position | |
| 650 | 4460227 | 4 | Pin, Male | |
| 655 | 8229242 | 2 | Fuse 5Amp | |
| 655 | 2400060 | 2 | Holder, Fuse | |
| 657 | 1001106339 | 1 | Connector, Male - 14 Position | |
| 657 | 4460871 | 2 | Socket, Female | |
| 657 | 4460905 | AR | Plug, Seal | |
| 658 | 1001106340 | 1 | Connector, Male - 14 Position | |
| 658 | 4460871 | 5 | Socket, Female | |
| 659 | 4460874 | 1 | Connector, Natural | |
| 659 | 4460871 | 10 | Socket, Female | |
| 659 | 4460905 | AR | Plug, Seal | |
| 660 | 4460875 | 1 | Connector, Gray | |
| 660 | 4460871 | 2 | Socket, Female | |
| 661 | 1001112612 | 1 | Connector - 9 Position | |
| 661 | 4460943 | 4 | Pin, Male | |
| 662 | 4460868 | 1 | Connector - 4 Position (Not Shown - MD1 Connection) | |
| 662 | 4460877 | 4 | Terminal (Not Shown - MD1 Connection) | |
| 666 | 4460884 | 1 | Connector - 4 Position (Not Shown - Telematics Connection) | |
| 666 | 4460465 | 4 | Socket, Female (Not Shown - Telematics Connection) | |
| 666 | 1001192401 | 1 | Cap, Dust (Not Shown - Telematics Connection) | |
| | | Ref | **STANDARD HARNESS COMPONENTS** | |
| 701 | | Ref | Battery Cable Kit Options: | |
| 701 | 1001112763 | 1 | Caterpillar Engines | D |
| 701 | 2902296 | 1 | Deutz D2011 Engines | F |
| 701A | | Ref | Cable, Battery (Black) (Battery - to Tray Pivot Grd) Options: | |
| 701A | 7027029 | 1 | Caterpillar Engines | |
| 701A | 7027004 | 1 | Deutz D2011 Engines | |
| 701C | | Ref | Cable, Battery (Black) (Battery - to Aux Pump and Relay Grds) | |
| 701C | 7027033 | 1 | Caterpillar Engines | |
| 701C | 7027003 | 1 | Deutz D2011 Engines | |
| 701C | See Note | NSS | Boot, Black (Note: Not Available for Purchase) | |
| 701E | 7027002 | 1 | Cable (Red) (Aux Relay to Aux Pump) | |
| 701E | See Note | NSS | Boot, Red (Note: Not Available for Purchase) | |
| 701F | | Ref | Cable (Red) (Battery + to Aux Relay/Power Module/Starter) | |
| 701F | 7027028 | 1 | Caterpillar Engines | |
| 701F | 1001116240 | 1 | Deutz D2011 Engines | |
| 701F | See Note | NSS | Boot, Red (Note: Not Available for Purchase) | |
| 702 | 4923379 | 1 | Harness, Glow Plugs (Deutz D2011 Engine Machines Only) | |
| 704 | 70004103 | 1 | Cable, Alternator (Deutz D2011 Engine Machines Only) | |
| 705 | | Ref | Deutz Engine Harness Components (Deutz D2011 Engine Machines Only) | |
| 705A | 7027796 | 1 | Deutz Engine Harness (Deutz D2011 Engines) | |

| ITEM | PART NUMBER | QTY | DESCRIPTION | REV |
|---|---|---|---|---|
| 705B | See Note | NSS | Receptacle, Female - 25 Position (Deutz D2011 Engines) (Note: Not Available - Purchase Complete Harness) | |
| 705B | See Note | NSS | Cover, Receptacle (Deutz D2011 Engines) (Note: Not Available - Purchase Complete Harness) | |
| 705B | See Note | NSS | Terminal (Deutz D2011 Engines) (Note: Not Available - Purchase Complete Harness) | |
| 705B | See Note | NSS | Seal (Deutz D2011 Engines) (Note: Not Available - Purchase Complete Harness) | |
| 705B | See Note | NSS | Terminal (Deutz D2011 Engines) (Note: Not Available - Purchase Complete Harness) | |
| 705B | See Note | NSS | Seal (Deutz D2011 Engines) (Note: Not Available - Purchase Complete Harness) | |
| 705B | See Note | NSS | Plug, Hole (Deutz D2011 Engines) (Note: Not Available - Purchase Complete Harness) | |
| 705C | 7027793 | 1 | Connector, Female (Deutz D2011 Engines) | |
| 705C | 70004060 | 1 | Plug, Male | |
| 705D | 70001872 | 1 | Deutz Engine Harness (Deutz D2011 Engines) (For other replacement parts refer to Deutz engine dealer) | |
| 705E | 70025231 | 1 | Glow Plug Harness (Deutz DT2.9L4 Engines) (Not Shown - Connects to 706L) | |
| 705F | 70025077 | 1 | Fuel Injector Harness (Deutz DT2.9L4 Engines) (Not Shown) | |
| 705G | 70004271 | 1 | Starter Harness (Deutz D2011 Engines) (Not Shown) | |
| 709 | 4360517 | 1 | Switch, Proximity | |
| 709A | 4460320 | 1 | Connector - 2 Position | |
| 709A | 4460227 | 2 | Pin, Male | |
| 710 | See Note | NSS | Pump Harness (Note: Not Available for Purchase) | |
| 710A | 7007497 | 1 | Plug (Pump End) | |
| 710B | 7007498 | 1 | Plug (Engine Harness End) | |
| 711 | See Note | NSS | Controller Harness Assembly (Lift and Swing) (Note: Purchase Complete Controller) | |
| 711A | 7022819 | 1 | Plug, Male - 8 Position (Natural) | |
| 711A | 4460871 | 8 | Socket, Female | |
| 712 | See Note | NSS | Controller Harness/Circuit Board Assembly (Drive and Steer) (Note: Purchase Complete Controller) | |
| 712A | 7022825 | 1 | Plug, Male - 8 Position (Black) | |
| 712A | 4460871 | 7 | Socket, Female | |
| 713 | See Note | NSS | Controller Harness (Speed Control) (Note: Purchase Complete Controller) | |
| 713A | 4460224 | 1 | Receptacle, Female - 6 Position | |
| 713A | 4460226 | 6 | Socket, Female | |
| | | Ref | **OPTIONAL HARNESS COMPONENTS** | |
| 803 | 0257887 | 1 | Alarm Harness (Includes Alarm) | |
| 803 | 0140044 | 1 | Alarm | |
| 803A | 4460536 | 1 | Receptacle, Female - 3 Position | |
| 803B | 1001116693 | 3 | Pin, Male | |
| 804 | 2920161 | 1 | Strobe Light (Amber) Harness (Includes Strobe Light) | B |
| 804A | 4460891 | 1 | Plug, Male - 2 Position | |
| 804A | 4460465 | 2 | Socket, Female | |
| 804B | | Ref | Strobe Light (Blue) Harness Options (Not Shown) | |
| 804B | 1001142736 | 1 | Beacon Control Harness (Module to Light) (Not Shown) | F |
| 804B | 1001150944 | 1 | Beacon Control Harness (Module to Ground Control Box) (Not Shown) **(SN B300000100 through B300001365)** | |
| 805 | See Note | NSS | Headlight and Taillight/Chassis Illumination Harness (Note: Not Available for Purchase) | |

| ITEM | PART NUMBER | QTY | DESCRIPTION | REV |
|---|---|---|---|---|
| 805 | 1060341 | AR | Cable, Electrical 16/2 Options: | |
| 805 | 1060341 | 37 ft/ 11.3m | Headlights and Taillights | |
| 805 | 1060341 | 40 ft/ 12.2m | Chassis Illumination Lights | |
| 805A | 3740049 | 1 | Relay | |
| 805A | 4460259 | 3 | Terminal | |
| 805A | 4460260 | 4 | Housing, Terminal | |
| 805A | 4460297 | 1 | Terminal | |
| 805A | 4922643 | 1 | Lights Harness for Ground Control Box | B |
| 805A | 4460226 | 2 | Socket, Female | |
| 806 | | Ref | 2500W Generator Electrical Components Options: | |
| 806 | 1001112588 | AR | Deutz D2011 Engines 110V/220V with Generator Control Box | B |
| 806 | 1001112743 | 1 | Deutz D2011 Engines 110V/220V without Generator Control Box | B |
| 806A | 4460321 | 1 | Connector, Male - 4 Position (Deutz Engines Specs with Generator Control Box) | |
| 806A | 4460906 | AR | Socket, Female | |
| 806A | 4460268 | AR | Socket, Female | |
| 806B | 4922641 | 1 | Harness - On/Off Switch | |
| 806C | 4460226 | 2 | Socket, Female | |
| 806D | 1001112589 | 1 | Powermite Control Box to Relay Harness (Deutz D2011 Engines) | |
| 806D | 4460374 | AR | Plug, Sealed Relay | |
| 806D | 4460375 | 3 | Terminal | |
| 806D | 4460742 | 1 | Plug, Male - 2 Position (Deutz D2011 Engines) | |
| 806D | 4460743 | 1 | Socket, Female (Deutz D2011 Engines | |
| 806D | 4460458 | 1 | Seal, Terminal (Deutz D2011 Engines | |
| 806E | 4460961 | 1 | Connector, Female - 4 Position (Deutz Engines Specs with Generator Control Box) | |
| 806E | 4460705 | 4 | Pin, Male | |
| 807 | | Ref | Generator to Rear of Boom Harness Options: | |
| | | Ref | **Note: Harness used to connect AC at platform harness to generator receptacle to power platform receptacle.** | |
| 807 | 4921829 | 1 | 110V (ANSI Export and Japanese Specs) | 2 |
| 807 | 4921954 | 1 | 220V (ANSI Export Specs) | 2 |
| 807 | See Note | NSS | 110V/220V (Australian Specs) (Note: Not Available for Purchase) | |
| 807 | | Ref | Cable, Electrical - 12/3 Options: | |
| 807 | 1060494 | 6 ft/1.8m | 110V (ANSI Export and Japanese Specs) | |
| 807 | 1060494 | 26 ft/8m | 220V (ANSI Export Specs) | |
| 807 | 1060461 | 6 ft/1.8m | 110V/220V (Australian Specs) | |
| 807A | | Ref | Plug, Male Options | |
| 807A | 4460205 | 1 | 110V (ANSI Export and Japanese Specs) | |
| 807A | 4460233 | 1 | 220V (ANSI Export Specs) | |
| 807A | Not Required | 0 | 110V/220V (Australian Specs) (Purchase Locally) | |
| 807A | 4460027 | 1 | Receptacle, Twist Lock (110V Only) | |
| 807B | | Ref | Receptacle, Female Options: | |
| 807B | 4460134 | 1 | 110V (ANSI Export and Japanese Specs) | |
| 807B | 4460701 | 1 | 220V (ANSI Export Specs) | |
| 807B | Not Required | 0 | 110V/220V (Australian Specs) (Purchase Locally) | |
| 808 | | Ref | AC to Platform Receptacle Components Options: | |
| 808 | 0255382 | Ref | 110V GFI Receptacle (ANSI Export and Japanese Specs) | C |
| 808 | 0257176 | Ref | 220V Receptacle (ANSI Export and Japanese Specs) | C |
| 808 | 0272433 | Ref | SkyPower Machines (All Specs) | D |

| ITEM | PART NUMBER | QTY | DESCRIPTION | REV |
|---|---|---|---|---|
| 808 | 0274618 | Ref | Dual AC (ANSI Export Spec Option) | 2-B |
| 808 | 0256202 | Ref | 110V/220V (ANSI Export and Australian Specs) | D |
| 808 | 1001160272 | Ref | 110V AC Cable used with 4000W/60Hz Generator | A |
| 808 | 1001194365 | Ref | 220V Receptacle used with 4000W Generator (ANSI Export, Australian and Japanese Spec) | A |
| 808 | 1001171131 | Ref | 240V Receptacle with GFCI used with 4000W Generator (Not Shown) | |
| 808 | 1001159121 | Ref | 240V Receptacle with GFCI used with 7500W Generator (Not Shown) | |
| 808A | 0860038 | 1 | Box, Switch | |
| 808B | | Ref | Receptacle Options | |
| 808B | 4460346 | 1 | 0255382 & 0274618 Installations | |
| 808B | 4460125 | 1 | 0257176 Installation | |
| 808B | Not Required | 0 | 0256202 Installation (Purchase Locally) | |
| 808C | | Ref | Shield, Cover Options | |
| 808C | 1001110873 | 1 | 0255382 & 0274618 Installations (Top Hinged) | |
| 808C | 4060092 | 1 | 0257176 Installation | |
| 808C | Not Required | 0 | 0256202 Installation (Purchase Locally) | |
| 808D | | Ref | Connector, Strain Relief Options | |
| 808D | 4460071 | 1 | 0255382, 0257176 & 0274618 Installations | |
| 808D | Not Required | 0 | 0256202 Installation (Purchase Locally) | |
| 808E | | Ref | Plug, Male Options: | |
| 808E | 4460205 | 1 | 0255382 & 0274618 Installations | |
| 808E | 4460233 | 1 | 0257176 Installation | |
| 808E | Not Required | 0 | 0256202 Installation (Purchase Locally) | |
| 808F | | Ref | Plug, Male Options: | |
| 808F | 4460205 | 1 | 0274618 Installation (Qty 4 Required for Dual AC) | |
| 808F | 4460205 | 1 | 0255382 Installation (Qty 4 Required for Dual AC) **(SN B300000100 through B300002247)** | |
| 808F | 1001227309 | 1 | 0255382 Installation (Qty 4 Required for Dual AC) **(SN B300002248 through B300005764, Excluding B300005764)** | |
| 808F | 4460233 | 1 | 0257176 Installation **(SN B300000100 through B300002247)** | |
| 808F | 1001227309 | 1 | 0257176 Installation **(SN B300002248 through B300005764, Excluding B300005764)** | |
| 808F | 4460709 | 1 | 0256202 Installation **(SN B300000100 through B300002247)** | |
| 808F | 1001213584 | 1 | 0256202 Installation **(SN B300002248 through B300005764, Excluding B300005764)** | |
| 808F | 4460960 | 1 | 0272433 Installation **(SN B300001393 through B300001846)** | |
| 808F | 1001218622 | 1 | 0272433 Installation **(SN B300001847 through B300005764, Excluding B300005764)** | |
| 808F | 4460962 | 1 | 1001160272 Installation | |
| 808F | | Ref | Cover (Optional) | |
| 808F | 1671093 | 1 | 0272433 Installation **(SN B300001393 through B300001846)** | |
| 808F | 1001156352 | 1 | 0256202 Installation **(SN B300000100 through B300002247)** | |
| 808F | 1671093 | 1 | 1001160272 Installation | |
| 808G | | Ref | Connector, Female Options | |
| 808G | 4460134 | 1 | 0274618 Installation (Qty 2 Required for Dual AC) | |
| 808G | 4460134 | 1 | 0255382 Installation (Qty 2 Required for Dual AC) **(SN B300000100 through B300002247)** | |
| 808G | 1001227310 | 1 | 0255382 Installation (Qty 2 Required for Dual AC) **(SN B300002248 through B300005764, Excluding B300005764)** | |
| 808G | 4460701 | 1 | 0257176 Installation **(SN B300000100 through B300002247)** | |
| 808G | 1001227310 | 1 | 0257176 Installation **(SN B300002248 through B300005764, Excluding B300005764)** | |

| ITEM | PART NUMBER | QTY | DESCRIPTION | REV |
|---|---|---|---|---|
| 808G | 4460710 | 1 | 0256202 Installation **(SN B300000100 through B300002247)** | |
| 808G | 1001213585 | 1 | 0256202 Installation **(SN B300002248 through B300005764, Excluding B300005764)** | |
| 808G | 4460959 | 1 | 0272433 Installation **(SN B300001393 through B300001846)** | |
| 808G | 1001218623 | 1 | 0272433 Installation **(SN B300001847 through B300005764, Excluding B300005764)** | |
| 808G | | Ref | Cover (Optional) | |
| 808G | 1671092 | 1 | 0272433 Installation **(SN B300001393 through B300001846)** | |
| 808G | 1001156351 | 1 | 0256202 Installation **(SN B300000100 through B300002247)** | |
| 808G | 1671093 | 1 | 1001160272 Installation | |
| 808H | | Ref | Hardware Options: | |
| 808H | 0641405 | AR | Bolt 1/4in-20NC x 5/8in | |
| 808H | 0641407 | AR | Bolt 1/4in-20NC x 7/8in | |
| 808H | 0641416 | AR | Bolt 1/4in-20NC x 2in | |
| 808H | 0700408 | AR | Screw M4 x 16mm | |
| 808H | 3290405 | AR | Locknut M4 | |
| 808H | 3311405 | AR | Locknut 1/4in-20NC | |
| 808H | 4711400 | AR | Flatwasher 1/4in Thin | |
| 808H | 4811400 | AR | Flatwasher M4 | |
| 809 | | Ref | 7500W SkyPower Generator Installation | |
| 809 | 1001115391 | Ref | 60Hz and Deutz D2011 Engine | D |
| 809 | 1001115401 | Ref | 60Hz and Caterpillar Engine | E |
| 809 | 1001115392 | Ref | 50Hz Spec and Deutz D2011 Engine | C |
| 809 | 1001115402 | Ref | 50Hz Spec and Caterpillar Engine | E |
| 809A | | Ref | Receptacle, Female Twist Lock Options | |
| 809A | 4460958 | 1 | 60Hz Spec | |
| 809A | See Note | NSS | 50Hz Spec (Note: Not Available - Purchase Locally) | |
| 809B | | Ref | Gasket Options: | |
| 809B | 3960422 | 2 | 60Hz Spec | |
| 809B | See Note | NSS | 50Hz Spec (Note: Not Available - Purchase Locally) | |
| 809C | | Ref | Cover, Receptacle Options: | |
| 809C | 1001110873 | 1 | 60Hz Spec | |
| 809C | See Note | NSS | 50Hz Spec (Note: Not Available - Purchase Locally) | |
| 809D | | Ref | Cover, Receptacle Options: | |
| 809D | 1001110872 | 1 | 60Hz Spec | |
| 809D | See Note | NSS | 50Hz Spec (Note: Not Available - Purchase Locally) | |
| 809E | | Ref | Receptacle Options: | |
| 809E | 4460346 | 1 | 60Hz Spec | |
| 809E | See Note | NSS | 50Hz Spec (Note: Not Available - Purchase Locally) | |
| 809F | 4460051 | 1 | Connector, Strain Relief | |
| 809G | 4460071 | 1 | Connector, Strain Relief | |
| 809H | 4922925 | 1 | Harness, Generator | C |
| 809I | 77363233 | 1 | Plug, Male - 6 Position | |
| 809I | 4460465 | 1 | Socket, Female | |
| 809J | 4460225 | 1 | Plug, Male - 6 Position | |
| 809J | 4460268 | 1 | Socket, Female | |
| 810 | | Ref | 7500W SkyPower Generator Junction Box Components | |
| 810 | 0861542 | Ref | 60Hz Spec (Caterpillar Engines) | E |
| 810 | 1001157592 | Ref | 60Hz Spec (Deutz Engines) | C |
| 810 | 0861567 | Ref | 50Hz Specs (Caterpillar Engines) | B |
| 810 | 1001157525 | Ref | 50Hz Specs (Deutz Engines) | B |
| 810A | | Ref | Cable, Electrical 12/3 | |

| ITEM | PART NUMBER | QTY | DESCRIPTION | REV |
|---|---|---|---|---|
| 810A | 1060494 | 2 ft/0.6m | 60Hz Spec (Caterpillar Engines) | |
| 810A | 1001179154 | 2 ft/0.6m | 60Hz Spec (Deutz Engines) | |
| 810A | See Note | 2 ft/0.6m | 50Hz Spec (Note: Not Available - Purchase Locally) | |
| 810B | | Ref | Cable, Electrical 10/3 | |
| 810B | 1060708 | 2.5 ft/ 0.76m | 60Hz Spec | |
| 810B | See Note | 2 ft/ 0.76m | 50Hz Spec (Note: Not Available - Purchase Locally) | |
| 810C | 1060343 | 1.5 ft/ 0.46m | Cable, Electrical 10/4 (60Hz Spec Only) | |
| 810D | 4460425 | 2 | Connector, Strain Relief | |
| 810D | 3520192 | 1 | Plug (50Hz Spec Only) | |
| 810E | | Ref | Component Options: | |
| 810E | 4460426 | 2 | Connector, Strain Relief (60Hz Spec Only) | |
| 810E | 4460426 | 1 | Connector, Strain Relief (50Hz Spec Only) | |
| 810E | 3520189 | 1 | Plug (50Hz Spec Only) | |
| 810F | 1671092 | 1 | Cover (60Hz Spec Only) | |
| 810F | 4460963 | 1 | Connector (60Hz Spec Only) | |
| | | Ref | 7500W Generator Electrical Diagram Components | |
| 811 | 1001112586 | Ref | Caterpillar Engines | B |
| 811 | 1001157769 | Ref | Deutz Engines | B |
| 811A | | Ref | Generator Harness Options: | |
| 811A | 1001112587 | 1 | Caterpillar Engine Machines | B |
| 811A | 1001152429 | 1 | Deutz Engine Machines | B |
| 811A | 4460742 | 1 | Connector - 2 Position (1001152429 Harness) (Not Shown) | |
| 811A | 4460743 | 2 | Terminal (1001152429 Harness) (Not Shown) | |
| 811B | 4460374 | 2 | Plug, Sealed Relay (1001112587 & 4983420 Harness) | |
| 811B | 4460375 | 7 | Terminal (1001112587 & 4983420 Harness) | |
| 811C | 4460967 | 1 | Plug, Male - 3 Position | |
| 811C | 4460465 | 3 | Socket, Female | |
| 811D | 2400060 | 1 | Fuseholder | |
| 811D | 2400064 | 1 | Fuse - 5Amp | |
| 811D | | Ref | Component Options: | |
| 811D | 2400060 | 1 | Fuseholder | |
| 811D | 2400064 | 1 | Fuse - 5Amp | |
| 811D | 1001117078 | 1 | Fuseholder (Includes Fuse and Cap) | |
| 811D | See Note | NSS | Fuse - 5Amp (Note: Use 1001117078 Assembly or Purchase Fuse Locally) | |
| 811D | 1001096134 | 1 | Cover, Fuseholder | |
| 811E | 4922641 | 1 | Switch Harness | |
| 811F | 4460226 | 2 | Socket, Female | |
| 811G | 4460742 | 1 | Plug, Male - 2 Position | |
| 811G | 4460743 | 2 | Socket, Female | |
| 811G | 4460458 | 2 | Seal, Terminal | |
| 812 | 4933308 | 1 | Floodlights Harness Components | 1-A |
| 812A | 4460320 | 2 | Plug, Male - 2 Position | |
| 812A | 4460227 | 4 | Pin, Male | |
| 812B | 4922764 | 1 | Floodlight Harness (Light to Switch) | 1-A |
| 812C | 4460424 | 1 | Connector, Female - 2 Position | |
| 812C | 4460226 | 4 | Socket, Female | |
| 812D | 4360232 | 1 | Circuit Breaker - 15Amp | |
| 812E | 1060977 | 1 | Cord, 2 Wire Coiled (Console Box Circuit Breaker to Switch) | |

| ITEM | PART NUMBER | QTY | DESCRIPTION | REV |
|---|---|---|---|---|
| 812F | 4460425 | 1 | Connector, Strain Relief | |
| 812G | 4460459 | 1 | Plug, Male - 3 Position | |
| 812G | 4460790 | 3 | Socket, Female | |
| 812G | 4460789 | 3 | Seal | |
| 812H | 4460476 | 1 | Receptacle, Female | |
| 812H | 4460850 | 3 | Pin, Male | |
| 812H | 4460790 | 3 | Socket, Female | |
| 812J | 1060494 | 33 ft/ 10.1m | Electrical Cable 12/3 (Lower Boom to Aux Relay) | |
| 812K | 1060494 | 47 ft/ 14.3m | Electrical Cable 12/3 (Upper Boom to Console Box) | |
| 813 | | Ref | Platform Worklights Components | |
| 813A | 2920140 | 2 | Platform Worklights External Harness (Use p/n 1001222838) (Includes Light and Wire Only) **(SN B300001393 through B300003948)** | |
| 813A | 1001232838 | 1 | Platform Worklight w/Switch Kit **(SN B300003949 through B300005764, Excluding B300005620)** | |
| 813B | 4460459 | 1 | Plug, Male - 3 Position | |
| 813B | 4460790 | 3 | Socket, Female | |
| 813B | 4460789 | 3 | Seal | |
| 813C | 4460476 | 1 | Receptacle, Female | |
| 813C | 4460850 | 3 | Pin, Male | |
| 813C | 4460790 | 3 | Socket, Female | |
| 813D | 4460426 | 1 | Connector, Strain Relief | |
| 813E | 2400070 | 1 | Fuse | |
| 813E | 2400066 | 1 | Fuseholder | |
| 813F | 4922894 | 1 | Worklights Harness (Upper Boom to Worklights) | |
| 813F | 1060494 | 47 ft/ 14.3mm | Cable, Electrical - 12/3 | |
| 813G | 4922892 | 1 | Worklights Harness (Lower Boom to Aux Power Solenoid) | |
| 813G | 1060494 | 33 ft/ 10.1mm | Cable, Electrical - 12/3 | |
| 814 | 1001149818 | 1 | Strobe Light Extension Harness (Amber Light) **(SN B300002266 through B300005764, Excluding B300005620)** | D |
| 814A | 4460320 | 1 | Connector, Female - 2 Position | |
| 814A | 4460267 | 2 | Pin, Male | |
| 814B | 4460897 | 1 | Connector, Female - 2 Position | |
| 814B | 4460464 | 2 | Pin, Male | |
| | | Ref | **TOOLS** | |
| 901 | 7002821 | 1 | Crimper (For Wire to Pin/Socket Connections) (Not Shown) | |
| 902 | 7002823 | 1 | Extractor (For Removal of Pin/Socket from Connectors) (Not Shown) | |
| 903 | 4460467 | 1 | Extractor, Pin (Blue 16-18 Gauge) (For Removal of Pin/Socket from Connectors) (Not Shown) | |
| 904 | 4460510 | 1 | Extractor, Pin (Yellow 12-14 Gauge) (For Removal of Pin/Socket from Connectors) (Not Shown) | |
| 905 | 7002828 | 1 | Stripper, Wire (Not Shown) | |
| 906 | 2901443 | 1 | Analyzer Kit (Not Shown) | |
| 906A | 1600244 | 1 | Analyze | |
| 906B | 1060633 | 1 | Cable, Analyzer | |
| 906C | 4460321 | 2 | Plug, Male | |
| 906C | 4460226 | 8 | Socket, Female | |
| 907 | 1001137005 | 1 | Software Cable Kit (Not Shown) | |

## FIGURE 7-5. SKYEYE INTERMEDIATE HARNESS

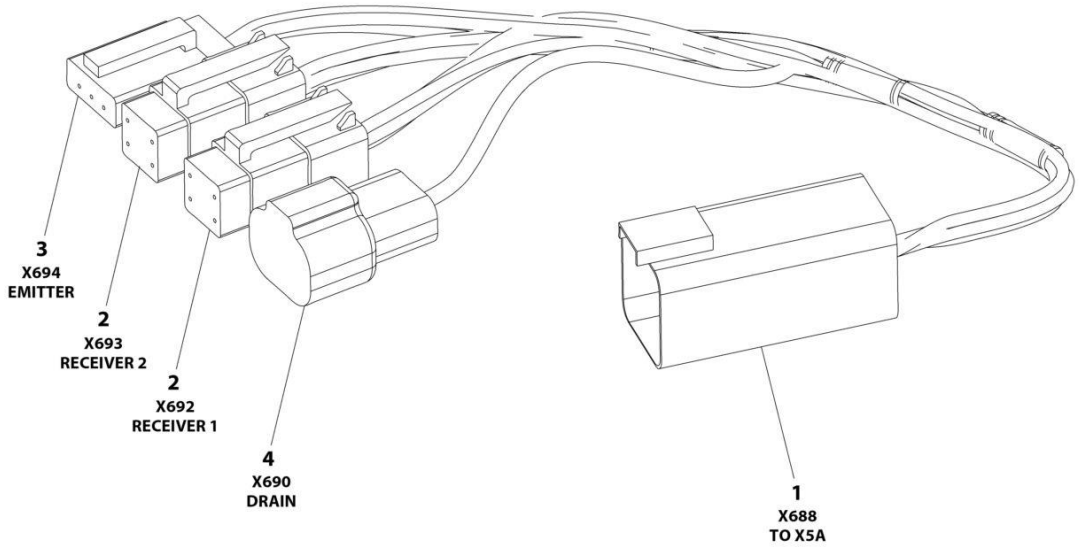


ART_1001237865

## FIGURE 7-5. SKYEYE INTERMEDIATE HARNESS

| ITEM | PART NUMBER | QTY | DESCRIPTION | REV |
|---|---|---|---|---|
| | 1001237865 | Ref | SKYEYE INTERMEDIATE HARNESS | A |
| 1 | 4460899 | 1 | Connector - 6 Position | |
| 1 | 4460943 | 4 | Pin, Male | |
| 1 | 4460466 | 2 | Plug, Terminal | |
| 2 | 4461077 | 2 | Connector - 4 Position | |
| 2 | 1001119619 | 8 | Socket, Female | |
| 3 | 4460911 | 1 | Connector - 3 Position | |
| 3 | 1001119619 | 3 | Socket, Female | |
| 4 | 1001187681 | 1 | Connector - 2 Position | |
| 4 | 4460941 | 1 | Pin, Male | |
| 4 | 4460466 | 1 | Plug, Terminal | |

## FIGURE 7-6. SKYEYE EMITTER HARNESS

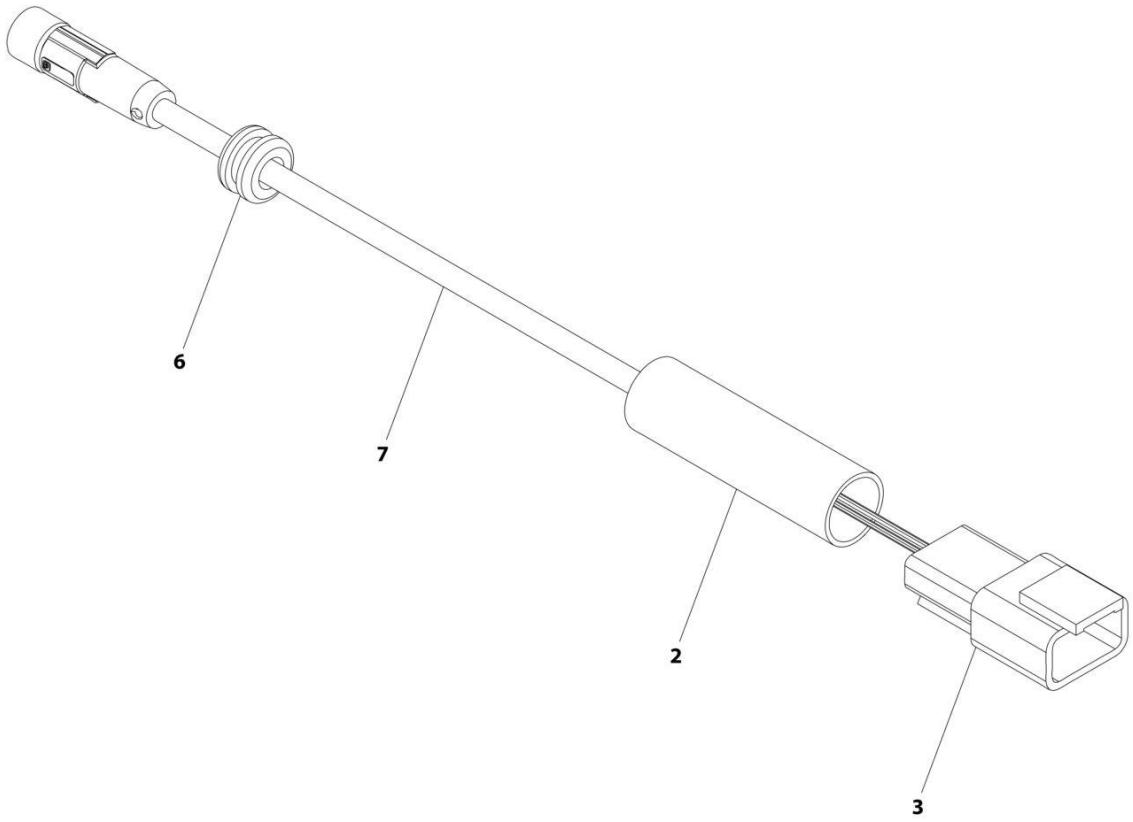

## FIGURE 7-6. SKYEYE EMITTER HARNESS

| ITEM | PART NUMBER | QTY | DESCRIPTION | REV |
|---|---|---|---|---|
| | 1001237864 | Ref | SKYEYE EMITTER HARNESS | A |
| 2 | 2820247 | AR | Tubing, Heat Shrink | |
| 3 | 4460910 | 1 | Connector - 3 Position | |
| 3 | 1001119620 | 3 | Pin, Male | |
| 6 | 1001227996 | 1 | Grommet | |
| 7 | 1001237862 | 1 | Cable, M8 Female Cordset | |

## FIGURE 7-7. SKYEYE RECEIVER HARNESS

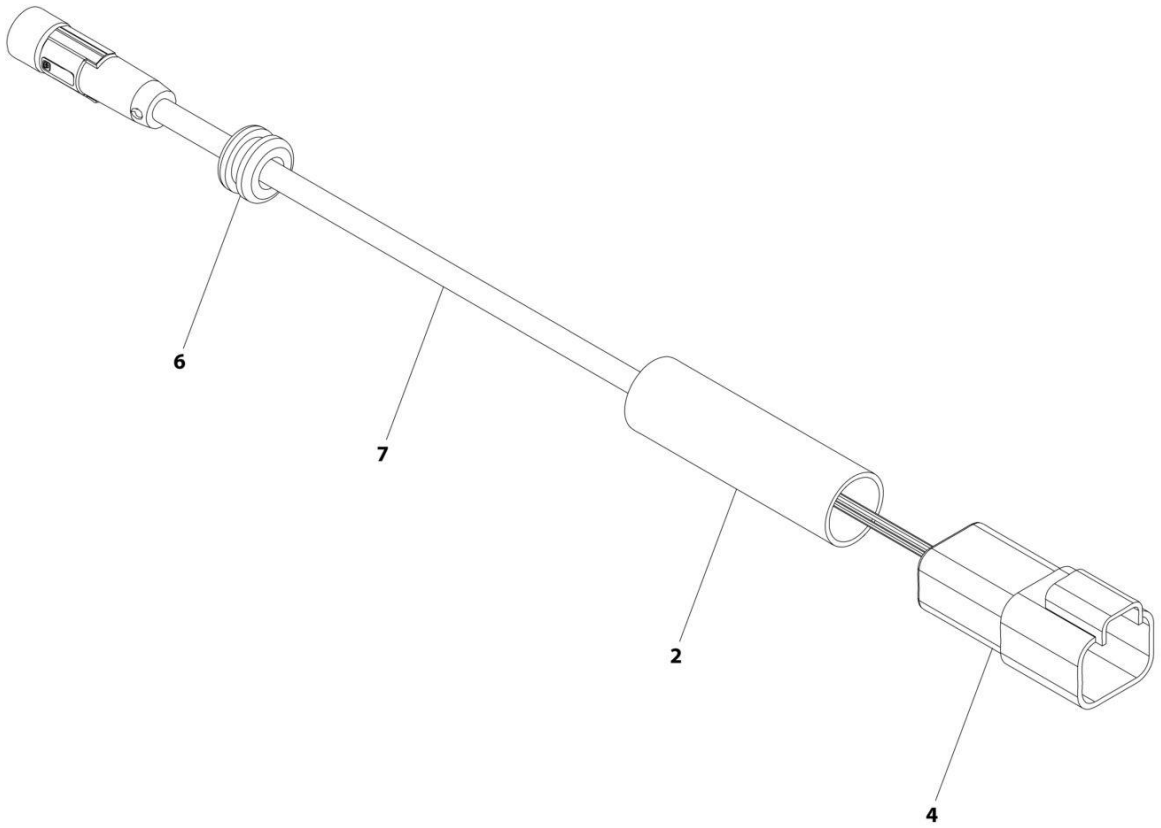

## FIGURE 7-7. SKYEYE RECEIVER HARNESS

| ITEM | PART NUMBER | QTY | DESCRIPTION | REV |
|---|---|---|---|---|
| | 1001237863 | Ref | SKYEYE RECEIVER HARNESS | A |
| 2 | 2820247 | AR | Tubing, Heat Shrink | |
| 4 | 1001097051 | 1 | Connector - 4 Position | |
| 4 | 1001119620 | 4 | Pin, Male | |
| 6 | 1001227996 | 1 | Grommet | |
| 7 | 1001237862 | 1 | Cable, M8 Female Cordset | |

## FIGURE 7-8. SKYLINE HARNESS

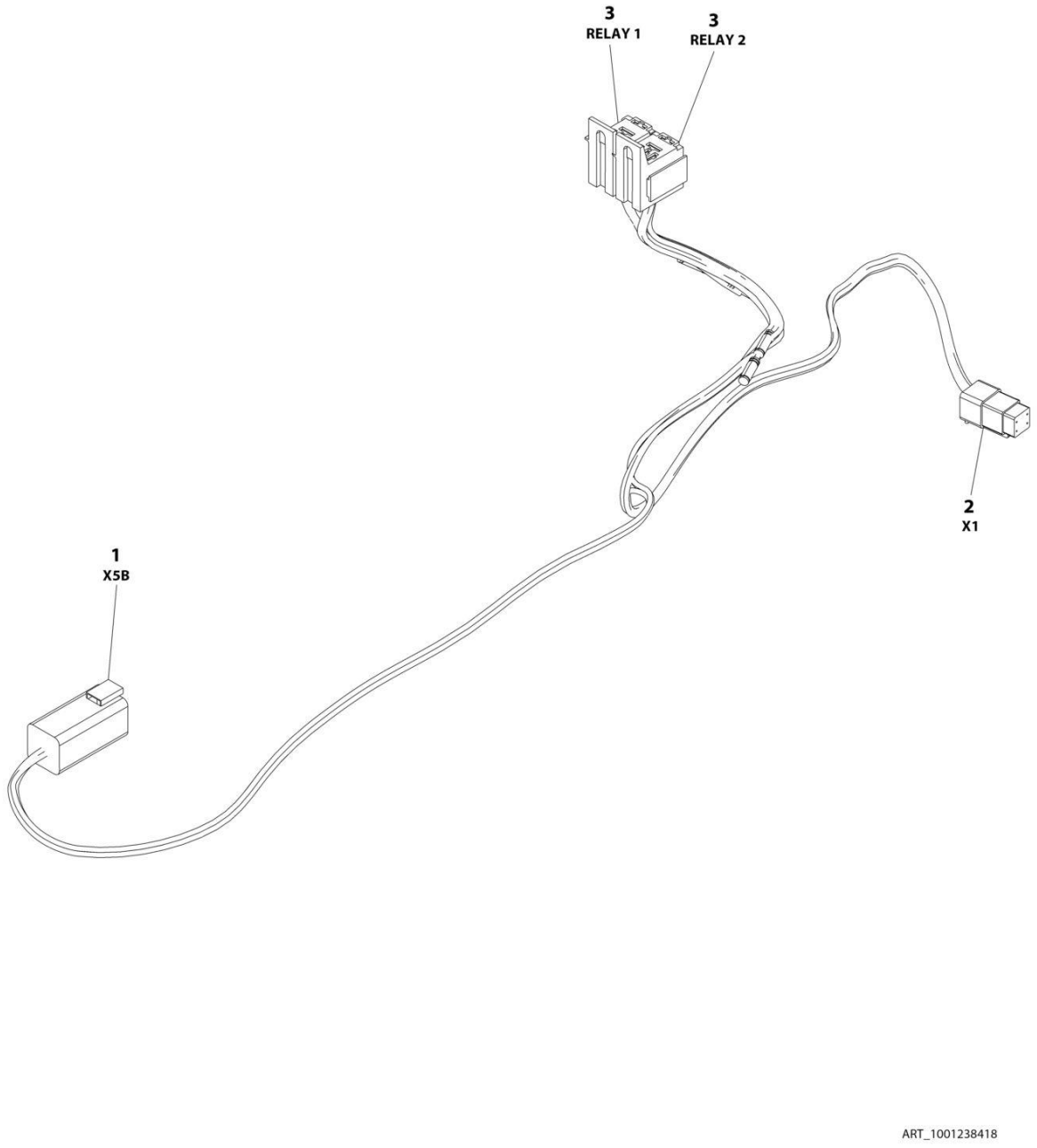

## FIGURE 7-8. SKYLINE HARNESS

| ITEM | PART NUMBER | QTY | DESCRIPTION | REV |
|---|---|---|---|---|
| | 1001238418 | Ref | SKYLINE HARNESS | B |
| 1 | 4460899 | 1 | Connector - 6 Position | |
| 1 | 4460464 | 4 | Pin, Male | |
| 1 | 4460466 | 2 | Plug, Terminal | |
| 2 | 4461077 | 1 | Connector - 4 Position | |
| 2 | 1001126009 | 4 | Socket, Female | |
| 3 | 1001186432 | 2 | Plug, Relay | |
| 3 | 1001118388 | 5 | Terminal | |
| 3 | 1001118384 | 3 | Terminal | |
| 3 | 3740086 | 2 | Relay | |

# SECTION 8 - DECALS

# SECTION 8 - DECALS

## FIGURE 8-1. DECAL INSTALLATION (ANSI SPEC)

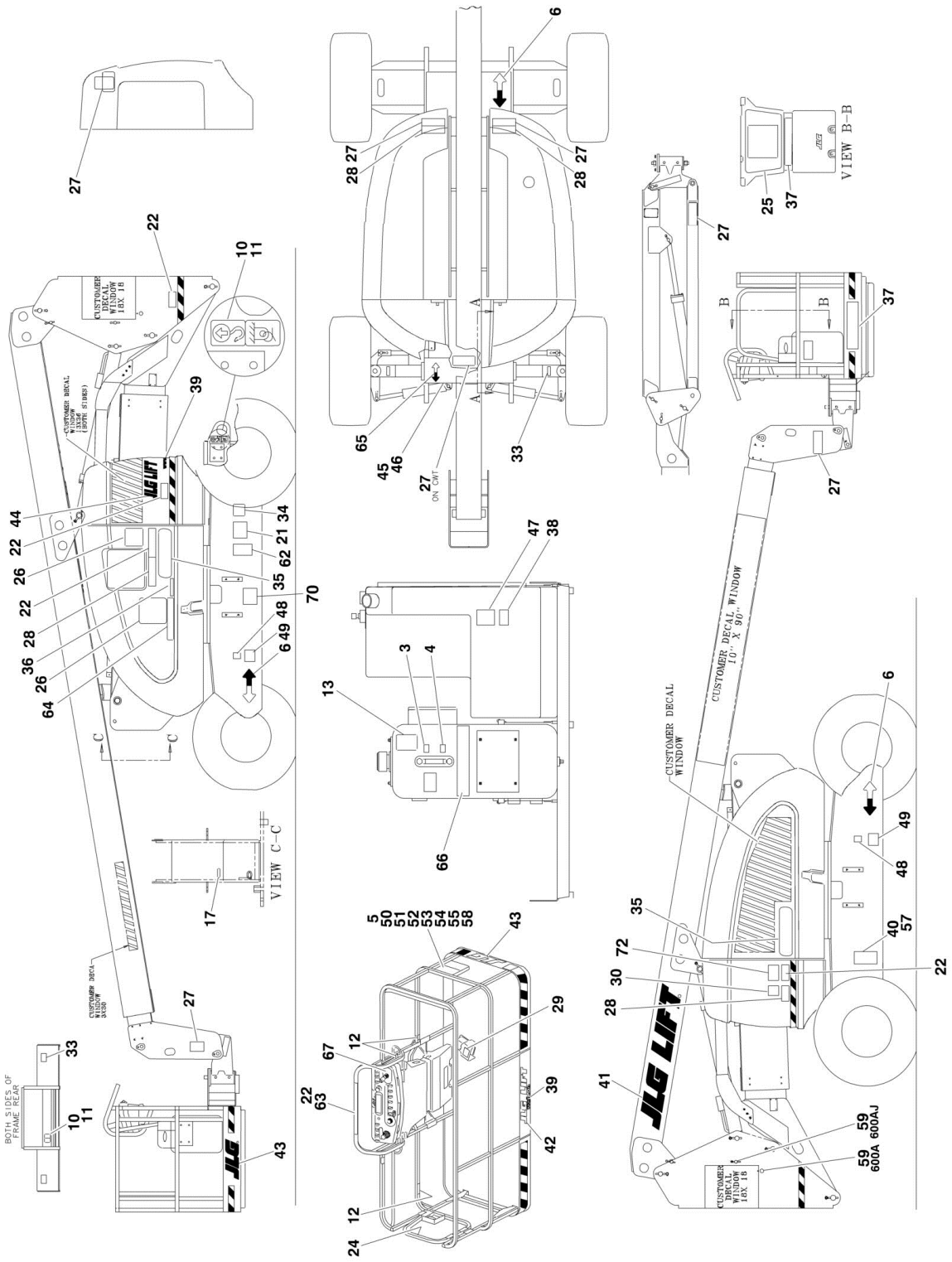

## FIGURE 8-1. DECAL INSTALLATION (ANSI SPEC)

| ITEM | PART NUMBER | QTY | DESCRIPTION | REV |
|---|---|---|---|---|
| | | Ref | **Decals Installations** | |
| | 0274094 | Ref | **Decals Installation - JLG Logo** | C |
| | 0273891 | Ref | **Decals Installation - 600A** | D |
| | 0273892 | Ref | **Decal Installation - 600AJ** | D |
| 3 | 1701502 | 1 | Decal - High Oil Level (USA Built Machines Only) **(SN 0300087000 through 0300134296)** | |
| 4 | 1701503 | 1 | Decal - Low Oil Level (USA Built Machines Only) **(SN 0300087000 through 0300134296)** | |
| 5 | 1701509 | 1 | Decal - Manual | |
| 6 | 1701529 | 6 | Decal - Arrow | |
| 10 | 1703811 | 4 | Decal - Tie Down/Lift | |
| 11 | 1703814 | 6 | Decal - Tie Down | |
| 12 | 1704277 | 4 | Decal - Attach Lanyard Here | |
| 13 | 1704412 | 1 | Decal - Hydraulic Oil Chart | |
| 17 | 3251243 | 1 | Nameplate - 120V-60Hz | |
| 21 | 1702153 | 1 | Decal - Inspection (USA Built Machines Only) **(SN 0300087000 through 0300134296)** | |
| 22 | 1703953 | 7 | Decal - Warning Crushing | |
| 23 | 1704972 | 1 | Decal - Warning Explosion/Fire Options (Not Shown - Located on fan shroud): | |
| 24 | 1702868 | 2 | Decal - No Hands | |
| 25 | 1703797 | 1 | Decal - Warning/Danger | |
| 26 | 1705336 | 1 | Decal - Warning Inspection (MTB) | |
| 27 | 1703804 | 6 | Decal - Warning Crushing | |
| 28 | 1703805 | 5 | Decal - Danger Electrocution | |
| 29 | 3252347 | 1 | Nameplate - Footswitch | |
| 30 | 3251813 | 1 | Decal - USA | |
| | | Ref | **Note: Not Used on China Built Machines.** | |
| 33 | 1703469 | 4 | Decal - Max Tire Load | |
| 34 | See Note | NSS | Decal - Bar Code (Note: Not Available for Purchase) | |
| 35 | | Ref | Decal Options: | |
| 35 | 1702818 | 2 | Decal - 600A | |
| 35 | 1702819 | 2 | Decal - 600AJ | |
| 36 | | Ref | Decal Capacity Options: | |
| 36 | | Ref | Decal Capacity Options: (600A) Decals Options: | |
| 36 | 1704104 | 1 | USA Built Machines **(SN 0300087000 through 0300100045)** | |
| 36 | 1707014 | 1 | USA Built Machines **(SN 0300100046 through 0300142594)** | |
| 36 | 1001121813 | 1 | USA Built Machines **(SN 0300142595 through 0300177361)** | |
| 36 | 1001121813 | 1 | China Built Machines **(SN B300000100 through B300005764, Excluding B300005764)** | |
| 36 | | Ref | Decal Capacity Options: (600AJ) Decals Options: | |
| 36 | 1702688 | 1 | USA Built Machines **(SN 0300087000 through 0300100045)** | |
| 36 | 1707013 | 1 | USA Built Machines **(SN 0300100046 through 0300142594)** | |
| 36 | 1001121814 | 1 | USA Built Machines **(SN 0300142595 through 0300177361)** | |
| 36 | 1001121814 | 1 | China Built Machines **(SN B300000100 through B300005764, Excluding B300005764)** | |
| 37 | | Ref | Decal Capacity Options: | |
| 37 | | Ref | Decal Capacity Options: (600A) Decals Options: | |
| 37 | 1704096 | 2 | USA Built Machines **(SN 0300087000 through 0300142594)** | |
| 37 | 1001121800 | 2 | USA Built Machines **(SN 0300142595 through 0300177361)** | |
| 37 | 1001121800 | 2 | China Built Machines **(SN B300000100 through** | |

| ITEM | PART NUMBER | QTY | DESCRIPTION | REV |
|---|---|---|---|---|
| | | | **B300005764, Excluding B300005764)** | |
| 37 | | Ref | Decal Capacity Options (600AJ) Decals Options:: | |
| 37 | 1701645 | 2 | USA Built Machines **(SN 0300087000 through 0300142594)** | |
| 37 | 1001121801 | 2 | USA Built Machines **(SN 0300142595 through 0300177361)** | |
| 37 | 1001121801 | 2 | China Built Machines **(SN B300000100 through B300005764, Excluding B300005764)** | |
| 38 | 1001108923 | 1 | Decal - EPA/Carb Fuel Spec (US Built Diesel Machines) **(SN 0300135240 through 0300177361)** | |
| 39 | 1704885 | AR | Decal - Website | |
| 40 | See Note | NSS | Nameplate, Manufacturer Serial Number (Note: Not Available for Purchase) | |
| 41 | 1702861 | 2 | Decal - JLG Lift (8in Height) | |
| 42 | 1702774 | 1 | Decal - JLG Lift (3-1/2in Height) | |
| 43 | 1702773 | 1 | Decal - JLG (5in Height) | |
| 44 | 1702860 | 1 | Decal - JLG Lift (5in Height) | |
| 45 | 3250872 | 1 | Nameplate - Steer/Tow Selector | |
| 46 | 1705090 | 1 | Decal - Towing Instructions | |
| 47 | | Ref | Decal - Fuel Options: | |
| 47 | 1701505 | 1 | Diesel | |
| 47 | 1701542 | 1 | Gas | |
| 48 | 1701543 | 1 | Decal - LP Gas (Ford and GM Engine Machines Only) | |
| 49 | 1700818 | 2 | Decal - LP Gas (Liquid) (Ford and GM Engine Machines Only) | |
| 50 | 0100011 | AR | Compound, Locking | |
| 51 | 0641406 | 4 | Bolt 1/4in-20NC x 3/4in | |
| 52 | 0641408 | AR | Bolt 1/4in-20NC x 1in | |
| 53 | 0860520 | 1 | Box, Manual Storage | |
| 54 | 1060279 | AR | Cable, Lanyard | |
| 55 | 3311405 | AR | Locknut 1/4in-20NC | |
| 57 | 3820001 | 4 | Rivet | |
| 58 | 4751400 | AR | Flatwasher 1/4in Regular | |
| 59 | 3250033 | 2 | Plug (US Built Machines) **(SN 0300087000 through 0300101241)** | |
| 62 | | Ref | Decal - Patent Options: | |
| 62 | 1700584 | 1 | USA Built Machines **(SN 0300087000 through 0300150370)** | |
| 62 | 1700584 | 1 | China Built Machines **(SN B300000100 through B300000298)** | |
| 62 | 1001131269 | 1 | USA Built Machines **(SN 0300150371 through 0300177361)** | |
| 62 | 1001131269 | 1 | China Built Machines **(SN B300000299 through B300005764, Excluding B300005764)** | |
| 63 | | Ref | Decal - Legend Options: | |
| 63 | 1702784 | 1 | USA Built Machines **(SN 0300087000 through 0300099060)** | |
| 63 | 1706931 | 1 | USA Built Machines **(SN 0300099061 through 0300138648)** | |
| 63 | 1001108493 | 1 | USA Built Machines **(SN 0300138649 through 0300177361)** | |
| 63 | 1001108493 | 1 | China Built Machines **(SN B300000100 through B300005764, Excluding B300005764)** | |
| 64 | | Ref | Decal - Legend (MTB) Options: | |
| 64 | 1703808 | 1 | USA Built Machines **(SN 0300087000 through 0300099060)** | |
| 64 | 1706941 | 1 | USA Built Machines **(SN 0300099061 through 0300177361)** | |
| 64 | 1706941 | 1 | China Built Machines **(SN B300000100 through B300005764, Excluding B300005764)** | |
| 65 | 1703687 | 1 | Decal - Direction Arrow (6-3/4in) | |
| 66 | 1702265 | 1 | Decal - Upright Level Over-Ride (USA Built Machines) **(SN 0300087746 through 0300177361)** | |
| 66 | 1702265 | 1 | Decal - Upright Level Over-Ride (China Built Machines) **(SN** | |

| ITEM | PART NUMBER | QTY | DESCRIPTION | REV |
|---|---|---|---|---|
| | | | **B300000100 through B300005764, Excluding B300005764)** | |
| 67 | 1705351 | 1 | Decal - Drive/Steer Instructions (USA Built Machines) **(SN 0300138649 through 0300177361)** | |
| | 1705351 | 1 | Decal - Drive/Steer Instructions (China Built Machines) **(SN B300000100 through B300005764, Excluding B300005764)** | |
| 70 | 1001223055 | 1 | Decal - Yearly Inspection **(SN B300002020 through B300005764, Excluding B300005764)** | |
| 72 | 1001229010 | 1 | Decal - Lift Diagram **(SN B300002344 through B300005764, Excluding B300005764)** | |

## FIGURE 8-2. DECAL INSTALLATION (ANSI EXPORT SPEC)

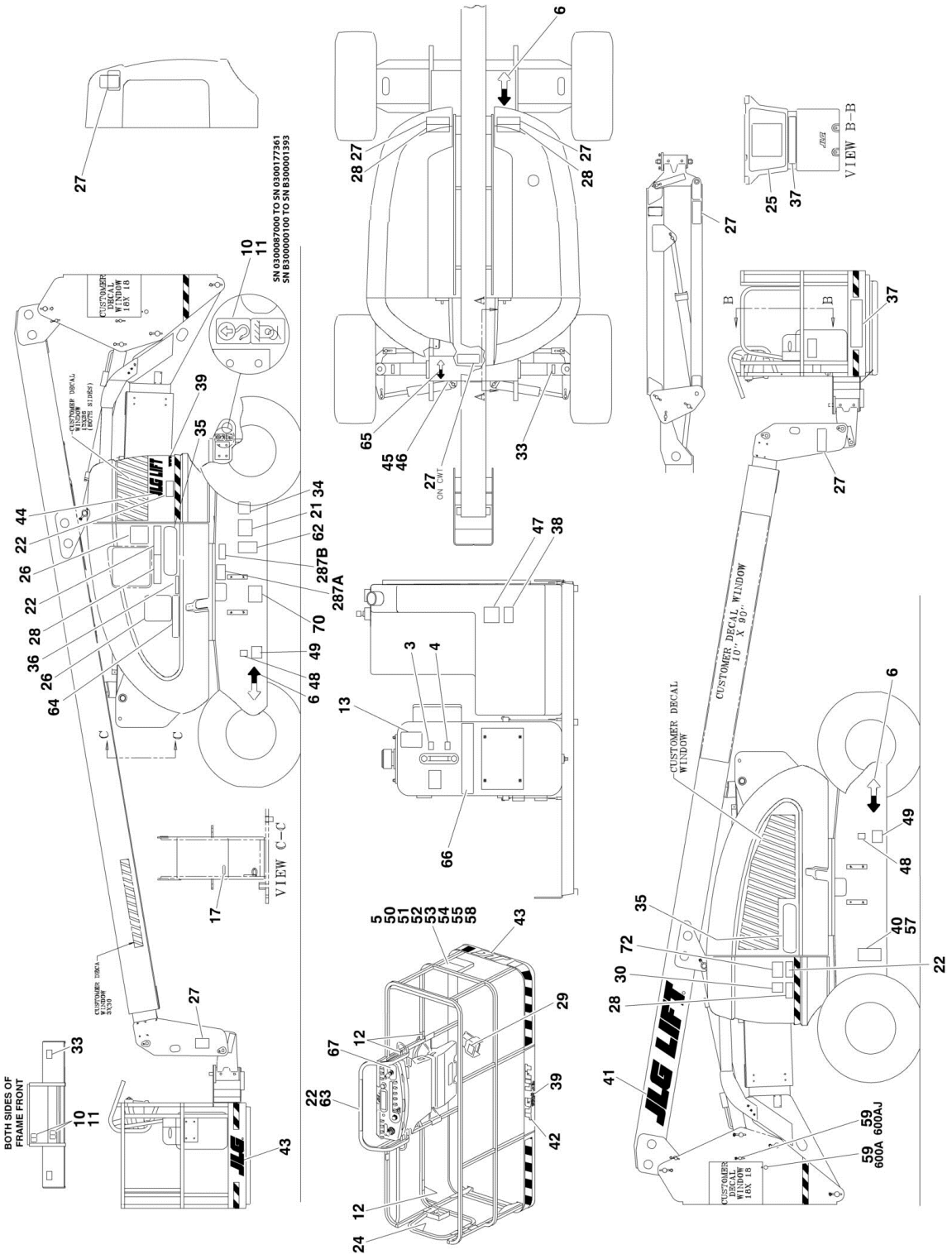

## FIGURE 8-2. DECAL INSTALLATION (ANSI EXPORT SPEC)

| ITEM | PART NUMBER | QTY | DESCRIPTION | REV |
|---|---|---|---|---|
| | | Ref | **DECAL INSTALLATIONS** | |
| | 0274094 | Ref | **Decals - JLG Logo** | C |
| | 0273891 | Ref | **Decals 600A ANSI Export Spec (English Language)** | D |
| | 0273901 | Ref | **Decals 600A Brazil Spec (Portuguese Languages)** | B |
| | 0273893 | Ref | **Decals 600A Canadian Spec (English/French Languages)** | 11 |
| | 1001116840 | Ref | **Decals 600A Chinese Spec (English/Simplified Chinese Languages)** | D |
| | 1001116841 | Ref | **Decals 600A Chinese Spec (English/Traditional Chinese Languages)** | D |
| | 0273903 | Ref | **Decals 600A Japanese Spec** | B |
| | 1001138757 | Ref | **Decals 600A Korean Spec** | B |
| | 0273899 | Ref | **Decals 600A Latin American Spec (English/Spanish Languages)** | B |
| | 0273892 | Ref | **Decals 600AJ ANSI Export Spec (English Language)** | D |
| | 0273902 | Ref | **Decals 600AJ Brazilian Spec (Portuguese Languages)** | B |
| | 0273894 | Ref | **Decals 600AJ Canadian Spec (English/French Languages)** | 11 |
| | 1001116842 | Ref | **Decals 600AJ Chinese Spec (English/Simplified Chinese Languages)** | D |
| | 1001116843 | Ref | **Decals 600AJ Chinese Spec (English/Traditional Chinese Languages)** | D |
| | 0273904 | Ref | **Decals 600AJ Japanese Spec** | B |
| | 1001138758 | Ref | **Decals 600AJ Korean Spec** | B |
| | 0273900 | Ref | **Decals 600AJ Latin American Spec (English/Spanish Languages)** | B |
| 3 | 1701502 | 1 | Decal - High Oil Level (USA Built Machines) **(SN 0300087000 through 0300134296)** | |
| 4 | 1701503 | 1 | Decal - Low Oil Level (USA Built Machines) **(SN 0300087000 through 0300134296)** | |
| 5 | 1701509 | 1 | Decal - Manual | |
| 6 | 1701529 | 6 | Decal - Arrow | |
| 10 | 1703811 | 4 | Decal - Tie Down/Lift | |
| 11 | 1703814 | 6 | Decal - Tie Down | |
| 12 | 1704277 | 4 | Decal - Attach Lanyard Here | |
| 13 | 1704412 | 1 | Decal - Hydraulic Oil Chart | |
| 17 | | Ref | Nameplate - 120V-60Hz Options: | |
| 17 | 3251243 | 1 | ANSI Export Spec | |
| 17 | Not Required | 0 | Brazil Specs | |
| 17 | 3251243 | 1 | Canadian Spec | |
| 17 | 3251243 | 1 | Chinese Spec | |
| 17 | 3251243 | 1 | Japanese Specs | |
| 17 | 3251243 | 1 | Korean Specs | |
| 17 | 3251243 | 1 | Latin American Spec | |
| 21 | | Ref | Decal - Inspection Options: | |
| 21 | Not Required | 0 | ANSI Export Spec | |
| 21 | 1705901 | 1 | Brazil Specs (USA Built Machines) **(SN 0300087000 through 0300151393)** | |
| 21 | 1705901 | 1 | Brazil Specs (China Built Machines) **(SN B300000100 through B300000357)** | |
| 21 | 1704006 | 1 | Canadian Spec (USA Built Machines) **(SN 0300087000 through 0300151393)** | |
| 21 | 1704006 | 1 | Canadian Spec (China Built Machines) **(SN B300000100 through B300000357)** | |

# SECTION 8 - DECALS

| ITEM | PART NUMBER | QTY | DESCRIPTION | REV |
|---|---|---|---|---|
| 21 | Not Required | 0 | Chinese Spec | |
| 21 | Not Required | 0 | Japanese Spec | |
| 21 | Not Required | 0 | Korean Spec | |
| 21 | 1704007 | 1 | Latin American Spec (USA Built Machines) **(SN 0300087000 through 0300151393)** | |
| 21 | 1704007 | 1 | Latin American Spec (China Built Machines) **(SN B300000100 through B300000357)** | |
| 22 | | Ref | Decal - Warning Crushing Options: | |
| 22 | 1703953 | 7 | ANSI Export Spec | |
| 22 | 1705903 | 7 | Brazil Specs | |
| 22 | 1703942 | 7 | Canadian Spec | |
| 22 | 1001116845 | 4 | Chinese (Simplified) Spec | |
| 22 | 1703943 | 4 | Chinese (Traditional) Spec | |
| 22 | 1703944 | 3 | Japanese Spec | |
| 22 | 1703945 | 3 | Korean Spec | |
| 22 | 1703941 | 7 | Latin American Spec | |
| 23 | | Ref | Decal - Warning Explosion/Fire Options (Not Shown - Located on fan shroud): | |
| 23 | 1704972 | 1 | ANSI Export Spec | |
| 23 | 1706059 | 1 | Brazil Specs | |
| 23 | 1706064 | 1 | Canadian Spec | |
| 23 | 1706060 | 1 | Chinese Spec | |
| 23 | 1706062 | 1 | Japanese Spec | |
| 23 | 1706061 | 3 | Korean Spec | |
| 23 | 1706063 | 1 | Latin American Spec | |
| 24 | | Ref | Decal - No Hands Options: | |
| 24 | 1702868 | 2 | ANSI Export Spec | |
| 24 | 1705967 | 2 | Brazil Specs | |
| 24 | 1704000 | 2 | Canadian Spec | |
| 24 | 1706968 | 2 | Chinese (Simplified) Spec | |
| 24 | 1001116846 | 2 | Chinese (Traditional) Spec | |
| 24 | Not Required | 0 | Japanese Spec | |
| 24 | 1705969 | 2 | Korean Spec | |
| 24 | 1704001 | 2 | Latin American Spec | |
| 25 | | Ref | Decal - Warning/Danger Options: | |
| 25 | 1703797 | 1 | ANSI Export Spec | |
| 25 | 1705895 | 1 | Brazil Specs | |
| 25 | 1703924 | 1 | Canadian Spec | |
| 25 | 1001116847 | 1 | Chinese (Simplified) Spec | |
| 25 | 1703925 | 1 | Chinese (Traditional) Spec | |
| 25 | 1703926 | 1 | Japanese Spec | |
| 25 | 1703927 | 2 | Korean Spec | |
| 25 | 1703923 | 1 | Latin American Spec | |
| 26 | | Ref | Decal - Warning Inspection (MTB) | |
| 26 | 1705336 | 1 | ANSI Export Spec | |
| 26 | 1705896 | 1 | Brazil Specs | |
| 26 | 1705347 | 1 | Canadian Spec | |
| 26 | 1001116848 | 1 | Chinese (Simplified) Spec | |
| 26 | 1001116849 | 1 | Chinese (Traditional) Spec | |
| 26 | 1705344 | 1 | Japanese Spec | |
| 26 | 1705345 | 2 | Korean Spec | |
| 26 | 1705917 | 1 | Latin American Spec | |

| ITEM | PART NUMBER | QTY | DESCRIPTION | REV |
|---|---|---|---|---|
| 27 | | Ref | Decal - Warning Crushing Options: | |
| 27 | 1703804 | 6 | ANSI Export Spec | |
| 27 | 1705898 | 5 | Brazil Specs | |
| 27 | 1703948 | 6 | Canadian Spec | |
| 27 | 1001116850 | 6 | Chinese (Simplified) Spec | |
| 27 | 1703949 | 6 | Chinese (Traditional) Spec | |
| 27 | 1703950 | 3 | Japanese Spec | |
| 27 | 1703951 | 2 | Korean Spec | |
| 27 | 1703947 | 3 | Latin American Spec | |
| 28 | | Ref | Decal - Danger Electrocution Options: | |
| 28 | 1703805 | 5 | ANSI Export Spec | |
| 28 | 1705897 | 5 | Brazil Specs | |
| 28 | 1703936 | 5 | Canadian Spec | |
| 28 | 1703937 | 5 | Chinese (Simplified) Spec | |
| 28 | 1001116851 | 5 | Chinese (Traditional) Spec | |
| 28 | 1703938 | 5 | Japanese Spec | |
| 28 | 1703939 | 2 | Korean Spec | |
| 28 | 1703935 | 5 | Latin American Spec | |
| 29 | | Ref | Decal - Foot Switch Options: | |
| 29 | 3252347 | 1 | ANSI Export Spec | |
| 29 | 1705902 | 1 | Brazil Specs | |
| 29 | 1703984 | 1 | Canadian Spec | |
| 29 | 1001116852 | 1 | Chinese (Simplified) Spec | |
| 29 | 1703982 | 1 | Chinese (Traditional) Spec | |
| 29 | 1703980 | 1 | Japanese Spec | |
| 29 | 1703981 | 2 | Korean Spec | |
| 29 | 1703983 | 1 | Latin American Spec | |
| 30 | | Ref | Decal - USA Options: | |
| | | Ref | **Note: Not Used on China Built Machines.** | |
| 30 | 3251813 | 1 | All Specs except Japanese Specs | |
| 30 | 3251813 | 1 | Japanese Specs (USA Built Machines) **(SN 0300087000 through 0300150370)** | |
| 30 | 3251813 | 1 | Japanese Specs (China Built Machines) **(SN B300000100 through B300000298)** | |
| 30 | Not Required | 0 | Japanese Specs (USA Built Machines) **(SN 0300150371 through 0300177361)** | |
| 30 | | Ref | Japanese Specs (China Built Machines) **(SN B300000299 through B300005764, Excluding B300005764)** | |
| 33 | 1703469 | 4 | Decal - Max Tire Load | |
| 34 | See Note | AR | Decal - Bar Code (USA Built Machines Only) (Note: Not Available for Purchase) **(SN 0300087000 through 0300150371)** | |
| 34 | See Note | NSS | Decal - Bar Code (China Built Machines Only) (Note: Not Available for Purchase) **(SN B300000100 through B300000299)** | |
| 35 | | Ref | Decal Options: | |
| 35 | 1702818 | 2 | Decal - 600A | |
| 35 | 1702819 | 2 | Decal - 600AJ | |
| 36 | | Ref | Decal Capacity Options: | |
| 36 | | Ref | **Decal Capacity 600A Options:** | |
| 36 | | Ref | USA Built Machines: **(SN 0300087000 through 0300100046)** | |
| 36 | 1706381 | Ref | Brazil Specs | |
| 36 | 1704107 | Ref | Canadian Spec | |
| 36 | 1704110 | Ref | Japanese Spec | |
| 36 | 1704106 | Ref | Latin American Spec | |

| ITEM | PART NUMBER | QTY | DESCRIPTION | REV |
|---|---|---|---|---|
| 36 | 1707051 | Ref | Brazil Specs | |
| 36 | 1707046 | Ref | Canadian Spec | |
| 36 | 1001116854 | Ref | Chinese (Simplified) Spec | |
| 36 | 1707045 | Ref | Chinese (Traditional) Spec | |
| 36 | 1707053 | Ref | Japanese Spec | |
| 36 | 1707048 | Ref | Latin American Spec | |
| 36 | | Ref | USA Built Machines: **(SN 0300142595 through 0300177361)** | |
| 36 | 1001121819 | Ref | Brazil Specs | |
| 36 | 1001121815 | Ref | Canadian Spec | |
| 36 | 1001121824 | Ref | Chinese (Simplified) Spec | |
| 36 | 1001121822 | Ref | Chinese (Traditional) Spec | |
| 36 | 1001121820 | Ref | Japanese Spec | |
| 36 | 1001122201 | Ref | Korean Spec | |
| 36 | 1001121817 | Ref | Latin American Spec | |
| 36 | | Ref | China Built Machines: **(SN B300000100 through B300005764, Excluding B300005764)** | |
| 36 | 1001121819 | Ref | Brazil Specs | |
| 36 | 1001121815 | Ref | Canadian Spec | |
| 36 | 1001121824 | Ref | Chinese (Simplified) Spec | |
| 36 | 1001121822 | Ref | Chinese (Traditional) Spec | |
| 36 | 1001121820 | Ref | Japanese Spec | |
| 36 | 1001121817 | Ref | Latin American Spec | |
| 36 | | Ref | **Decal Capacity 600AJ Options:** | |
| 36 | | Ref | USA Built Machines: **(SN 0300087000 through 0300100045)** | |
| 36 | 1704112 | Ref | Brazil Spec | |
| 36 | 1704112 | Ref | Brazil Spec | |
| 36 | 1704112 | Ref | Japanese Spec | |
| 36 | 1704112 | Ref | Latin American Spec | |
| 36 | | Ref | USA Built Machines: **(SN 0300100046 through 0300142594)** | |
| 36 | 1707052 | Ref | Brazil Spec | |
| 36 | 1707047 | Ref | Canadian Spec | |
| 36 | 1001116858 | Ref | Chinese (Simplified) Spec | |
| 36 | 1001116855 | Ref | Chinese (Traditional) Spec | |
| 36 | 1707054 | Ref | Japanese Spec | |
| 36 | 1707049 | Ref | Latin American Spec | |
| 36 | | Ref | USA Built Machines: **(SN 0300142595 through 0300177361)** | |
| 36 | 1001121655 | Ref | Brazil Spec | |
| 36 | 1001121816 | Ref | Canadian Spec | |
| 36 | 1001121825 | Ref | Chinese (Simplified) Spec | |
| 36 | 1001121823 | Ref | Chinese (Traditional) Spec | |
| 36 | 1001121821 | Ref | Japanese Spec | |
| 36 | 1001121921 | Ref | Korean Spec | |
| 36 | 1001121815 | Ref | Latin American Spec | |
| 36 | | Ref | China Built Machines: **(SN B300000100 through B300005764, Excluding B300005764)** | |
| 36 | 1001121655 | Ref | Brazil Spec | |
| 36 | 1001121816 | Ref | Canadian Spec | |
| 36 | 1001121825 | Ref | Chinese (Simplified) Spec | |
| 36 | 1001121823 | Ref | Chinese (Traditional) Spec | |
| 36 | 1001121821 | Ref | Japanese Spec | |
| 36 | 1001121818 | Ref | Latin American Spec | |
| 37 | | Ref | Decal Capacity Options: | |

| ITEM | PART NUMBER | QTY | DESCRIPTION | REV |
|---|---|---|---|---|
| 37 | | Ref | **Decal Capacity 600A Options:** | |
| 37 | | Ref | USA Built Machines: **(SN 0300087000 through 0300142594)** | |
| 37 | 1706380 | Ref | Brazil Specs | |
| 37 | 1704099 | Ref | Canadian Spec | |
| 37 | 1001116853 | Ref | Chinese (Simplified) Spec | |
| 37 | 1704101 | Ref | Chinese (Traditional) Spec | |
| 37 | 1704102 | Ref | Japanese Spec | |
| 37 | 1704098 | Ref | Latin American Spec | |
| 37 | | Ref | USA Built Machines: **(SN 0300142595 through 0300177361)** | |
| 37 | 1001121806 | Ref | Brazil Specs | |
| 37 | 1001121802 | Ref | Canadian Spec | |
| 37 | 1001121811 | Ref | Chinese (Simplified) Spec | |
| 37 | 1001121809 | Ref | Chinese (Traditional) Spec | |
| 37 | 1001121807 | Ref | Japanese Spec | |
| 37 | 1001122200 | Ref | Korean Spec | |
| 37 | 1001121804 | Ref | Latin American Spec | |
| 37 | | Ref | China Built Machines: **(SN B300000100 through B300005764, Excluding B300005764)** | |
| 37 | 1001121806 | Ref | Brazil Specs | |
| 37 | 1001121802 | Ref | Canadian Spec | |
| 37 | 1001121811 | Ref | Chinese (Simplified) Spec | |
| 37 | 1001121809 | Ref | Chinese (Traditional) Spec | |
| 37 | 1001121807 | Ref | Japanese Spec | |
| 37 | 1001121804 | Ref | Latin American Spec | |
| 37 | | Ref | **Decal Capacity 600AJ Options:** | |
| 37 | | Ref | USA Built Machines: **(SN 0300087000 through 0300100045)** | |
| 37 | 1703996 | Ref | Brazil Spec | |
| 37 | 1703996 | Ref | Canadian Spec | |
| 37 | 1703996 | Ref | Japanese Spec | |
| 37 | 1703996 | Ref | Latin American Spec | |
| 37 | | Ref | USA Built Machines: **(SN 0300100046 through 0300142594)** | |
| 37 | 1707057 | Ref | Brazil Spec | |
| 37 | 1707055 | Ref | Canadian Spec | |
| 37 | 1001116857 | Ref | Chinese (Simplified) Spec | |
| 37 | 1001116860 | Ref | Chinese (Traditional) Spec | |
| 37 | 1707059 | Ref | Japanese Spec | |
| 37 | 1707056 | Ref | Latin American Spec | |
| 37 | | Ref | USA Built Machines: **(SN 0300142595 through 0300177361)** | |
| 37 | 1001121656 | Ref | Brazil Specs | |
| 37 | 1001121803 | Ref | Canadian Spec | |
| 37 | 1001121812 | Ref | Chinese (Simplified) Spec | |
| 37 | 1001121810 | Ref | Chinese (Traditional) Spec | |
| 37 | 1001121808 | Ref | Japanese Spec | |
| 37 | 1001121918 | Ref | Korean Spec | |
| 37 | 1001121805 | Ref | Latin American Spec | |
| 37 | | Ref | China Built Machines: **(SN B300000100 through B300005764, Excluding B300005764)** | |
| 37 | 1001121656 | Ref | Brazil Specs | |
| 37 | 1001121803 | Ref | Canadian Spec | |
| 37 | 1001121812 | Ref | Chinese (Simplified) Spec | |
| 37 | 1001121810 | Ref | Chinese (Traditional) Spec | |
| 37 | 1001121808 | Ref | Japanese Spec | |

| ITEM | PART NUMBER | QTY | DESCRIPTION | REV |
|---|---|---|---|---|
| 37 | 1001121805 | Ref | Latin American Spec | |
| 38 | 1001108923 | 1 | Decal - EPA/Carb Fuel Spec (USA Built CSA Spec Diesel Machines) **(SN 0300135240 through 0300177361)** | |
| 39 | 1704885 | AR | Decal - Website | |
| 40 | See Note | NSS | Nameplate, Manufacturers Serial Number (Note: Not Available for Purchase) | |
| 41 | 1702861 | 2 | Decal - JLG Lift (8in Height) | |
| 42 | 1702774 | 1 | Decal - JLG Lift (3-1/2in Height) | |
| 43 | 1702773 | 1 | Decal - JLG (5in Height) | |
| 44 | 1702860 | 1 | Decal - JLG Lift (5in Height) | |
| 45 | 3250872 | 1 | Nameplate - Steer/Tow Selector | |
| 46 | 1705090 | 1 | Decal - Towing Instructions | |
| 47 | | Ref | Decal - Fuel | |
| 47 | 1701505 | 1 | Diesel | |
| 47 | 1701542 | 1 | Gas | |
| 48 | 1701543 | 1 | Decal - LP Gas | |
| 49 | | Ref | Decal - LP Gas (Liquid) Options: | |
| 49 | 1700818 | 2 | ANSI Export Specs | |
| 49 | Not Required | 0 | Brazil Specs | |
| 49 | 1704271 | 2 | Canadian Spec | |
| 49 | Not Required | 0 | Chinese Specs | |
| 49 | Not Required | 0 | Japanese Specs | |
| 49 | Not Required | 0 | Korean Specs | |
| 49 | 1702720 | 2 | Latin American Spec | |
| 50 | 0100011 | AR | Compound, Locking | |
| 51 | 0641406 | 4 | Bolt 1/4in-20NC x 3/4in | |
| 52 | 0641408 | AR | Bolt 1/4in-20NC x 1in | |
| 53 | 0860520 | 1 | Box, Manual Storage | |
| 54 | 1060279 | AR | Cable, Lanyard | |
| 55 | 3311405 | AR | Locknut 1/4in-20NC | |
| 57 | 3820001 | 4 | Rivet | |
| 58 | 4751400 | AR | Flatwasher 1/4in Regular | |
| 59 | 3250033 | 2 | Plug (USA Built Machines **(SN 0300087000 through 0300101241)** | |
| 62 | | Ref | Decal - Patent Options: | |
| 62 | 1700584 | 1 | All Specs except Brazil, Chinese and Latin American Specs USA Built Machines **(SN 0300087000 through 0300150370)** | |
| | 1700584 | 1 | All Specs except Brazil, Chinese and Latin American Specs China Built Machines **(SN B300000100 through B300000298)** | |
| 62 | 1001131269 | 1 | All Specs except Brazil, Chinese and Latin American Specs USA Built Machines **(SN 0300150371 through 0300177361)** | |
| 62 | 1001131269 | 1 | All Specs except Brazil, Chinese and Latin American Specs China Built Machines **(SN B300000299 through B300005764, Excluding B300005764)** | |
| 62 | 1700584 | 1 | Brazil Spec USA Built Machines **(SN 0300087000 through 0300151392)** | |
| 62 | 1700584 | 1 | Brazil Spec China Built Machines **(SN B300000100 through B300000356)** | |
| 62 | Not Required | 0 | Brazil Spec USA Built Machines **(SN 0300151393 through 0300177361)** | |
| 62 | Not Required | 0 | Brazil Spec China Built Machines **(SN B300000357 through B300005764, Excluding B300005764)** | |
| 62 | 1700584 | 1 | Chinese Spec USA Built Machines **(SN 0300087000 through 0300150370)** | |

| ITEM | PART NUMBER | QTY | DESCRIPTION | REV |
|---|---|---|---|---|
| 62 | 1700584 | 1 | Chinese Spec China Built Machines **(SN B300000100 through B300000298)** | |
| 62 | Not Required | 0 | Chinese Spec USA Built Machines **(SN 0300150371 through 0300177361)** | |
| 62 | Not Required | 0 | Chinese Spec China Built Machines **(SN B300000299 through B300005764, Excluding B300005764)** | |
| 62 | 1702573 | 1 | Latin American Spec USA Built Machines **(SN 0300087000 through 0300150370)** | |
| 62 | 1702573 | 1 | Latin American Spec China Built Machines **(SN B300000100 through B300000298)** | |
| 62 | Not Required | 0 | Latin American Spec USA Built Machines **(SN 0300150371 through 0300177361)** | |
| 62 | Not Required | 0 | Latin American Spec China Built Machines **(SN B300000299 through B300005764, Excluding B300005764)** | |
| 62 | 1001131269 | AR | Korean Specs (600A qty 0 / 600AJ qty1) | |
| 63 | | Ref | Decal - Legend Options: | |
| 63 | 1702784 | 1 | USA Built Machines **(SN 0300087000 through 0300099060)** | |
| 63 | 1706931 | 1 | USA Built Machines **(SN 0300099061 through 0300138648)** | |
| 63 | 1001108493 | 1 | USA Built Machines **(SN 0300138649 through 0300177361)** | |
| 63 | 1001108493 | 1 | China Built Machines **(SN B300000100 through B300005764, Excluding B300005764)** | |
| 64 | | Ref | Decal - Legend (MTB) Options: | |
| 64 | 1703808 | 1 | USA Built Machines **(SN 0300087000 through 0300099060)** | |
| 64 | 1706941 | 1 | USA Built Machines **(SN 0300099061 through 0300177361)** | |
| 64 | 1706941 | 1 | China Built Machines **(SN B300000100 through B300005764, Excluding B300005764)** | |
| 65 | 1703687 | 1 | Decal - Direction Arrow (6-3/4in) | |
| 66 | | Ref | Decal - Upright Level Over-Ride Options (USA Built Machines): **(SN 0300087746 through 0300177361)** | |
| 66 | | Ref | Decal - Upright Level Over-Ride Options (China Built Machines): **(SN B300000100 through B300005764, Excluding B300005764)** | |
| 66 | 1702265 | 1 | ANSI Export Specs | |
| 66 | 1703544 | 1 | Brazil Specs | |
| 66 | 1703990 | 1 | Canadian Spec | |
| 66 | 1001116861 | 1 | Chinese (Simplified) Spec | |
| 66 | 1001116862 | 1 | Chinese (Traditional) Spec | |
| 66 | 1702271 | 1 | Japanese Specs | |
| 66 | 17023987 | 1 | Japanese Specs | |
| 66 | 1702617 | 1 | Latin American Spec | |
| 67 | | Ref | Decal - Drive/Steer Instructions Options (USA Built Machines): **(SN 0300138649 through 0300177361)** | |
| 67 | | Ref | Decal - Drive/Steer Instructions Options (China Built Machines): **(SN B300000100 through B300005764, Excluding B300005764)** | |
| 67 | 1705351 | 1 | ANSI Export Specs | |
| 67 | 1705905 | 1 | Brazil Specs | |
| 67 | 1705429 | 1 | Canadian Spec | |
| 67 | 1705430 | 1 | Chinese (Simplified) Spec | |
| 67 | 1001116863 | 1 | Chinese (Traditional) Spec | |
| 67 | 1705426 | 1 | Japanese Specs | |
| 67 | 1705427 | 1 | Korean Specs | |
| 67 | 1705910 | 1 | Latin American Spec | |
| 70 | | Ref | Decal - Yearly Inspection: **(SN B300002020 through B300005764, Excluding B300005764)** | |

# SECTION 8 - DECALS

| ITEM | PART NUMBER | QTY | DESCRIPTION | REV |
|---|---|---|---|---|
| 70 | 1001223055 | 1 | ANSI Export Specs | |
| 70 | 1001224051 | 1 | Chinese (Simplified) Specs | |
| 70 | 1001224050 | 1 | Chinese (Traditional) Specs | |
| 72 | 1001229010 | 1 | Decal - Lift Diagram **(SN B300002344 through B300005764, Excluding B300005764)** | |
| 287 | 1001236436 | Ref | ECO Dceal Installation (China GB Specs Only) | A |
| 287A | See Note | 1 | Nameplate - ECO (Note: Not Available for Purchase) | |
| 287A | 3820001 | 4 | Rivet | |
| 287B | See Note | 1 | Nameplate - Mein Code (Note: Not Available for Purchase) | |
| 287B | 3820001 | 4 | Rivet | |

## FIGURE 8-3. DECAL INSTALLATION (AUSTRALIAN AND CE SPECS)

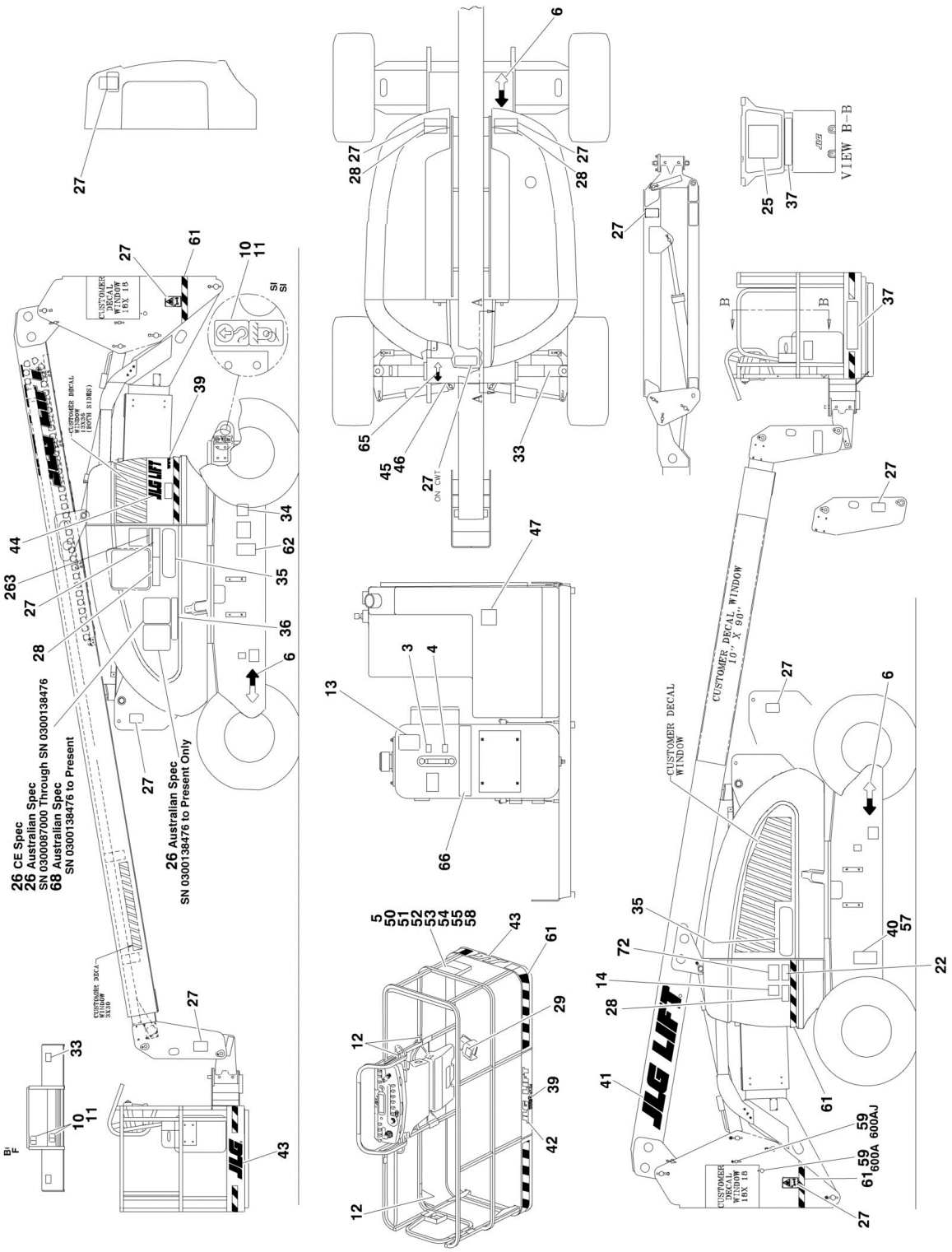

## FIGURE 8-3. DECAL INSTALLATION (AUSTRALIAN AND CE SPECS)

| ITEM | PART NUMBER | QTY | DESCRIPTION | REV |
|---|---|---|---|---|
| | | Ref | **DECAL INSTALLATION** | |
| | 0274094 | Ref | **Decals - JLG Logo** | C |
| | 0273895 | Ref | **Decals 600A Australian Spec (USA Built Machines) (SN 0300087000 through 0300138475)** | 7 |
| | 1001114388 | Ref | **Decals 600A Australian Spec (USA Built Machines) (SN 0300138476 through 0300177361)** | D |
| | 1001114388 | Ref | **Decals 600A Australian Spec (China Built Machines) (SN B300000100 through B300005764, Excluding B300005764)** | D |
| | 0273895 | Ref | **Decals 600A CE Spec** | 7 |
| | 0273896 | Ref | **Decals 600AJ Australian Spec (USA Built Machines) (SN 0300087000 through 0300138475)** | 7 |
| | 1001114389 | Ref | **Decals 600AJ Australian Spec (USA Built Machines) (SN 0300138476 through 0300177361)** | D |
| | 1001114389 | Ref | **Decals 600AJ Australian Spec (China Built Machine) (SN B300000100 through B300005764, Excluding B300005764)** | D |
| | 0273896 | Ref | **Decals 600AJ CE Spec** | 7 |
| 3 | 1701502 | 1 | Decal - High Oil Level (USA Built Machines) **(SN 0300087000 through 0300134296)** | |
| 4 | 1701503 | 1 | Decal - Low Oil Level (USA Built Machines) **(SN 0300087000 through 0300134296)** | |
| 5 | 1701509 | 1 | Decal - Manual | |
| 6 | 1701529 | 6 | Decal - Arrow | |
| 10 | 1703811 | 4 | Decal - Tie Down/Lift | |
| 11 | 1703814 | 6 | Decal - Tie Down | |
| 12 | 1704277 | 4 | Decal - Attach Lanyard Here | |
| 13 | 1704412 | 1 | Decal - Hydraulic Oil Chart | |
| 14 | 1705084 | 1 | Decal - Sound Power Level | |
| 22 | Not Required | 0 | Decal | |
| 23 | 1706098 | 1 | Decal - Tipping/Electrical Platform | |
| 24 | Not Required | 0 | Decal - No Hands | |
| 25 | 1705921 | 1 | Decal - Tipping/Electrical Platform | |
| 26 | 1705822 | 1 | Decal - Electrical/Safety Manual | |
| 27 | 1701518 | 10 | Decal - Warning Crushing | |
| 28 | 1705961 | 5 | Decal - Danger Electrocution | |
| 29 | 1705828 | 1 | Decal - Footswitch | |
| 30 | | Ref | Decal - USA Options: | |
| 30 | Not Required | 0 | Australian Spec | |
| 30 | Not Required | 0 | CE Spec USA Built Machines **(SN 0300087000 through 0300150370)** | |
| | Not Required | 1 | CE Spec China Built Machines **(SN B300000100 through B300000298)** | |
| 30 | 3251813 | 1 | CE Spec USA Built Machines **(SN 0300150371 through 0300177361)** | |
| | 3251813 | 1 | CE Spec China Built Machines **(SN B300000299 through B300005764, Excluding B300005764)** | |
| 33 | 1703469 | 4 | Decal - Max Tire Load | |
| 34 | See Note | 1 | Decal - Bar Code (Note: Not Available for Purchase) | |
| 35 | | Ref | Decal Options: | |
| 35 | 1702818 | 2 | Decal - 600A | |
| 35 | 1702819 | 2 | Decal - 600AJ | |
| 36 | 1705978 | 1 | Decal - 230kg Capacity | |
| 37 | 1705978 | 2 | Decal - 230kg Capacity | |

| ITEM | PART NUMBER | QTY | DESCRIPTION | REV |
|---|---|---|---|---|
| 39 | 1704885 | AR | Decal - Website | |
| 40 | See Note | NSS | Nameplate, Manufacturer Serial Number (Note: Not Available for Purchase) | |
| 41 | 1702861 | 2 | Decal - JLG Lift (8in Height) | |
| 42 | 1702774 | 1 | Decal - JLG Lift (3-1/2in Height) | |
| 43 | 1702773 | 1 | Decal - JLG (5in Height) | |
| 44 | 1702860 | 1 | Decal - JLG Lift (5in Height) | |
| 45 | 3250872 | 1 | Nameplate - Steer/Tow Selector | |
| 46 | 1705090 | 1 | Decal - Towing Instructions | |
| 47 | 1701505 | 1 | Decal - Fuel (Diesel) | |
| 50 | 0100011 | AR | Compound, Locking | |
| 51 | 0641406 | 4 | Bolt 1/4in-20NC x 3/4in | |
| 52 | 0641408 | 1 | Bolt 1/4in-20NC x 1in | |
| 53 | 0860520 | 1 | Box, Manual Storage | |
| 54 | 1060279 | AR | Cable, Lanyard | |
| 55 | 3311405 | AR | Locknut 1/4in-20NC | |
| 57 | 3820001 | 4 | Rivet | |
| 58 | 4751400 | AR | Flatwasher 1/4in Regular | |
| 59 | 3250033 | 2 | Plug (USA Built Machines) **(SN 0300087000 through 0300101241)** | |
| 61 | 4420051 | 22 ft/6.7m | Decal - Warning Stripe | |
| 62 | | Ref | Decal - Patent | |
| 62 | | Ref | Australian Spec | |
| 62 | 1700584 | 1 | Decal 600A & 600AJ - USA Built Machines **(SN 0300087000 through 0300150370)** | |
| | 1700584 | 1 | Decal 600A & 600AJ - China Built Machines **(SN B300000100 through B300000298)** | |
| 62 | 1001131269 | 1 | Decal 600A - USA Built Machines **(SN 0300150371 through 0300177361)** | |
| 62 | 1001131269 | 1 | Decal 600A - China Built Machines **(SN B300000299 through B300005764, Excluding B300005764)** | |
| 62 | Not Required | 0 | Decal 600AJ - USA Built Machines **(SN 0300150371 through 0300177361)** | |
| 62 | Not Required | 0 | Decal 600AJ - China Built Machines **(SN B300000299 through B300005764, Excluding B300005764)** | |
| 62 | | Ref | CE Spec | |
| 62 | 1700584 | 1 | Decal 600A & 600AJ - USA Built Machines **(SN 0300087000 through 0300150370)** | |
| 62 | 1700584 | 1 | Decal 600A & 600AJ - China Built Machines **(SN B300000100 through B300000298)** | |
| 62 | Not Required | 0 | Decal 600A & 600AJ - USA Built Machines **(SN 0300150371 through 0300177361)** | |
| 62 | Not Required | 0 | Decal 600A & 600AJ - China Built Machines **(SN B300000299 through B300005764, Excluding B300005764)** | |
| 65 | 1703687 | 1 | Decal - Direction Arrow (6-3/4in) | |
| 66 | 1705977 | 1 | Decal - Upright Level Over-Ride (USA Built Machines) **(SN 0300087746 through 0300177361)** | |
| 66 | 1705977 | 1 | Decal - Upright Level Over-Ride (China Built Machines) **(SN B300000100 through B300005764, Excluding B300005764)** | |
| 68 | 1001112551 | 1 | Decal - Emergency Controls (Australian Spec Only) (USA Built Machines) **(SN 0300138476 through 0300177361)** | |
| 68 | 1001112551 | 1 | Decal - Emergency Controls (Australian Spec Only) (China Built Machines) **(SN B300000100 through B300005764, Excluding B300005764)** | |
| 72 | 1001229010 | 1 | Decal - Lift Diagram **(SN B300002344 through B300005764,** | |

| ITEM | PART NUMBER | QTY | DESCRIPTION | REV |
|---|---|---|---|---|
| 263 | 1001197408 | 1 | **Excluding B300005764)**<br>Decal - MSSO (CE Spec) **(SN B300001169 through B300005764, Excluding B300005764)** | |

# SECTION 9 - RECOMMENDED SERVICE PARTS STOCK

# SECTION 9 - RECOMMENDED SERVICE PARTS STOCK

## FIGURE 9-1. MODEL 600A/600AJ STANDARD PARTS

| ITEM | PART NUMBER | QTY | DESCRIPTION | REV |
|---|---|---|---|---|
| | Note | Ref | **Note: The following list will service one machine (built to current production per date on the front cover) with emergency repair parts which can be installed in the field. Parts from the list should be replaced when inventory is depleted to keep service parts stock supplied. For further information, contact your JLG dealer or the JLG Industries Parts Department.** | |
| | | Ref | **STANDARD PARTS** | |
| | 7012944 | 1 | Coil | |
| | 7012943 | 1 | Coil | |
| | 2120210 | 12 | Element Filter | |
| | 2120149 | 12 | Element, Filter | |
| | 7012772 | 1 | Coil | |
| | 70000582 | 1 | Coil | |
| | 7012664 | 12 | Element, Air Cleaner | |
| | 3740067 | 1 | Relay | |
| | 7024444 | 1 | Breather | |
| | 4360517 | 1 | Switch, Proximity | |
| | 3740049 | 1 | Relay | |
| | 4360328 | 1 | Switch, Toggle | |
| | 2860030 | 1 | Key, Replacement | |
| | 4360475 | 1 | Switch, Mushroom | |
| | 4360476 | 1 | Contact, Switch Block | |
| | 2940074 | 1 | Latch | |
| | 4360331 | 1 | Switch, Toggle | |
| | 4360330 | 1 | Switch, Toggle | |
| | 4360387 | 1 | Switch, Push Button | |
| | 1001129555 | 1 | Lift/Swing Controller Kit | |
| | 1001212415 | 1 | Drive/Steer Controller Kit | |
| | 2400065 | 2 | Fuse, 30Amp | |

## FIGURE 9-2. MODEL 600A/600AJ VARIABLE PARTS

| ITEM | PART NUMBER | QTY | DESCRIPTION | REV |
|---|---|---|---|---|
| | Note | Ref | **Note: The following list will service one machine (built to current production per date on the front cover) with emergency repair parts which can be installed in the field. Parts from the list should be replaced when inventory is depleted to keep service parts stock supplied. For further information, contact your JLG dealer or the JLG Industries Parts Department.** | |
| | | Ref | **VARIABLE PARTS** | |
| | 7026830 | 12 | Filter, Fuel (Machines with Caterpillar Engine) | |
| | 7026811 | 12 | Filter, Oil (Machines with Caterpillar Engine) | |
| | 7016328 | 12 | Filter, Fuel (Machines with Deutz Engine) | |
| | 7016331 | 12 | Filter, Oil (Machines with Deutz Engine) | |
| | 7027795 | 1 | Deutz EMR2 Control Module (Machines with Deutz Engine) | |
| | 91083218 | 12 | Filter, Fuel (Machines with Ford Engine) | |
| | 7021868 | 12 | Filter, Oil (Machines with Ford Engine) | |
| | 1600374 | 1 | Ford Control Module (Machines with Ford Engine) | |
| | 7027972 | 12 | Filter, Fuel (Machines with GM Engine) | |
| | 7027965 | 12 | Filter, Oil (Machines with GM Engine) | |
| | 70002895 | 1 | GM Control Module (Machines with GM Engine) | |
| | 7024444 | 1 | Breather/Fill Cap (Helgensen Brand) | |
| | 70004862 | 1 | Breather/Fill Cap (Hydac Brand) | |
| | 1001103667 | 1 | Module, Ground Control (Machines with Caterpillar, Deutz and GM Engine) | |
| | 4360469 | 1 | Switch, Key (All Specs except CE Specs) | |
| | 4360470 | 1 | Switch, Key (CE Spec Only) | |
| | 4360336 | 1 | Switch, Toggle (Machine with Generator) | |
| | 4360542 | 1 | Breaker, Circuit - 110Volt (Machines with 2500W Generator) | |
| | 70000126 | 1 | Breaker, Circuit - 220Volt (Machines with 2500W Generator) | |
| | 4360070 | 1 | Breaker, Circuit (Machines with SkyPower 7500W Generator) | |
| | 2400064 | 1 | Fuse - 5Amp (Machines with SkyPower 7500W Generator) | |
| | 70002011 | 2 | Power Track Repair Section (600A) | |
| | 70001999 | 2 | Power Track Repair Section (600AJ) | |
| | 4360578 | 1 | Switch, Limit | |
| | 1001106355 | 1 | Platform Control Module | |
| | 4360522 | 1 | Switch, Push Button (Machine with Lights Option) | |
| | 4360336 | 1 | Switch, Toggle (Machine with Ford and GM Engines) | |
| | 4360057 | 1 | Switch, Limit (Machine with Soft Touch System Engines) | |
| | 4360232 | 1 | Breaker, Circuit (Machine with Floodlights Option) | |
| | 2400070 | 2 | Fuse (Machine with Worklights Engines) | |

# SECTION 10 - SPECIAL OPTIONS

# SECTION 10 - SPECIAL OPTIONS

## FIGURE 10-1. SPECIAL OPTIONS

| ITEM | PART NUMBER | QTY | DESCRIPTION | REV |
|---|---|---|---|---|
| | | Ref | **Note: This list is to accommodate machines ordered with special equipment. Options may not be applicable to all models. For more specific parts information contact JLG Parts Department.** | |
| | | Ref | **MISCELLANEOUS SPECIAL OPTIONS** | |
| | | Ref | **Airline to Platform Installation Options:** | |
| | 0256342 | Ref | 1/2in - 600A | |
| | 0271475 | Ref | 1/2in Airline and (1) Welding Cable - 600A | |
| | 0275295 | Ref | 1/2in - 600A with Arctic Package | |
| | 0258966 | Ref | 1/2in - 600AJ | |
| | 1001093438 | Ref | 1/2in - 600AJ with Arctic Package | |
| | 1001205011 | Ref | **Arctic Package Add-on Kit (600A without SkyPower)** | |
| | 1001205010 | Ref | **Arctic Package Add-on Kit (600A with SkyPower)** | |
| | 1001205013 | Ref | **Arctic Package Add-on Kit (600AJ without SkyPower)** | |
| | 1001205012 | Ref | **Arctic Package Add-on Kit (600AJ with SkyPower)** | |
| | | Ref | **Boom Cable Installation with Communication System (600AJ Only)** | |
| | 1001115974 | Ref | **Intercom System** | |
| | 1001116515 | Ref | **Intercom System and 7500W Generator** | |
| | 1001220153 | Ref | **Boom Cable Add-on Kit (4000W/60Hz Generator)** | |
| | | Ref | **Boom Wiper Installation** | |
| | 0256276 | Ref | **Boom Wiper Installation 600A** | |
| | 0256366 | Ref | **Boom Wiper Installation 600AJ** | |
| | 1001172045 | Ref | **Cable Carrier Installation** | |
| | | Ref | **ClearSky (Telematics) Installations (Dealer Installed)** | |
| | 1001242409 | Ref | **ClearSky (Telematics) Access Control Installation Kit (Dealer Installed) (ANSI, ANSI Export and CSA Specs)** | |
| | 1001243183 | Ref | **ClearSky (Telematics) Added-on Kit (Dealer Installed) (ANSI, ANSI Export and CSA Specs)** | |
| | 1001243184 | Ref | **ClearSky (Telematics) Added-on Kit (Dealer Installed) (CE Specs)** | |
| | | Ref | **ClearSky Telematics** | |
| | | Ref | **Note: Refer to Manual Supplement p/n 3128499 for available replacement parts.** | |
| | | Ref | **ADE Machines (Add-on Kit)** | |
| | 1001104982 | Ref | **ANSI Spec** | |
| | 1001104983 | Ref | **ANSI Export** | |
| | 1001139130 | Ref | **Australian Specs** | |
| | 1001104984 | Ref | **CSA Spec** | |
| | | Ref | **ADE/UGM Machines (Add-on Kit)** | |
| | 1001119942 | Ref | **ANSI Spec** | |
| | 1001121612 | Ref | **ANSI Export** | |
| | 1001139148 | Ref | **Australian Spec** | |
| | Not Available | Ref | **Brazil and New Zealand Specs** | |
| | 1001234099 | Ref | **CE Specs** | |
| | 1001119948 | Ref | **CSA Spec** | |
| | | Ref | **ADE/UGM Machines (Factory Installed)** | |
| | 1001112979 | Ref | **ANSI Spec** | |
| | 1001112980 | Ref | **ANSI Export** | |
| | 1001132728 | Ref | **Australian Spec** | |

| ITEM | PART NUMBER | QTY | DESCRIPTION | REV |
|---|---|---|---|---|
| | 1001127089 | Ref | **Brazil and New Zealand Specs** | |
| | 1001112981 | Ref | **CSA Spec** | |
| | 0273575 | Ref | **Cold Weather Package - Caterpillar Engine** | |
| | 0271912 | Ref | **Cold Weather Package with Glow Plugs - Deutz** | |
| | 0255386 | Ref | **Cold Weather Package - Ford** | |
| | 0275262 | Ref | **Cold Weather Package - GM** | |
| | 0274883 | Ref | **Cold Weather Package Transformer** | |
| | 1001115970 | Ref | **Communication System (David Clark) Installation (600AJ Only)** | |
| | | Ref | **Cylinder Bellows Installation (Boom)** | |
| | 0255927 | Ref | **Cylinder Bellows Installation (Boom) 600A** | |
| | 0255928 | Ref | **Cylinder Bellows Installation (Boom) 600AJ** | |
| | | Ref | **CYLINDER BELLOWS INSTALLATION (FRAME)** | |
| | 0255483 | Ref | **2WD/2WS & 4WD/2WS 8ft/2.4m Width Machines** | |
| | 0255487 | Ref | **2WD/4WS & 4WD/4WS 8ft/2.4m Width Machines** | |
| | 0255489 | Ref | **2WD/4WS 7ft/2.1m Width Machines** | |
| | 1001236211 | Ref | **Cylinder Valve Cover Kit - Level Cylinder** | |
| | | Ref | **Decal Installations Options:** | |
| | 1702788 | 1 | Decal - Biodegradable Hydraulic Fluid (English Language) | |
| | 1703479 | 1 | Decal - Biodegradable Hydraulic Fluid (German Language) | |
| | 1704174 | 1 | Decal - Biodegradable (Synthetic) Hydraulic Fluid (English Language) | |
| | 1704175 | 1 | Decal - Biodegradable (Synthetic) Hydraulic Fluid (German Language) | |
| | 1001116248 | Ref | Decal - ClearSky (ANSI Spec) **(SN 0300087000 through 0300144692)** | |
| | 1001116249 | Ref | Decal - ClearSky (CSA Spec) **(SN 0300087000 through 0300144692)** | |
| | 1001127095 | Ref | Decal - ClearSky (All Specs) **(SN 0300144693 through 0300177361)** | |
| | 0253550 | Ref | Decal - CSA (CSA Specs) | |
| | 3252221 | Ref | Decal - CSA | |
| | 1001214030 | Ref | Decal - EAC (CIS & Russian Specs) | |
| | 0273770 | Ref | Decal - Fall Arrest | |
| | 0257195 | Ref | Decal - Government Warranty | |
| | 0256957 | Ref | Decal - Lanyard Attach (GM K-1 Spec) | |
| | 1702720 | Ref | Decal - LP Gas Decal (Latin America) | |
| | 1702868 | Ref | Decal - No Hands - English Language (Platform with Mesh to Top Rail) | |
| | 1705968 | Ref | Decal - No Hands - English/Simplified Chinese Dual Language (Platform with Mesh to Top Rail) | |
| | 1001116846 | Ref | Decal - No Hands - English/Traditional Chinese Dual Language (Platform with Mesh to Top Rail) | |
| | 1704000 | Ref | Decal - No Hands - English/French Dual Language (Platform with Mesh to Top Rail) | |
| | 1705969 | Ref | Decal - No Hands - English/Korean Dual Language (Platform with Mesh to Top Rail) | |
| | 1705967 | Ref | Decal - No Hands - English/Portuguese Dual Language (Platform with Mesh to Top Rail) | |
| | 1704001 | Ref | Decal - No Hands - English/Spanish Dual Language (Platform with Mesh to Top Rail) | |
| | 0256487 | Ref | Decal - Prop 65 Warning (Diesel Machines) (California Spec) | |
| | 0256488 | Ref | Decal - Prop 65 Warning (Gasoline Machines) (California Spec) | |
| | 1001141300 | Ref | Decal - SkyGuard Override | |

# SECTION 10 - SPECIAL OPTIONS

| ITEM | PART NUMBER | QTY | DESCRIPTION | REV |
|---|---|---|---|---|
| | 1001141302 | Ref | Decal - SkyGuard Override (With Soft Touch) | |
| | 0272312 | Ref | Decal - Tire Sealant | |
| | | Ref | **Decal Kits Options:** | |
| | 2902307 | Ref | Decal Kit - Country Spec (ANSI and ANSI Export) | |
| | 2902329 | Ref | Decal Kit - Country Spec (Australian and CE) | |
| | 2902312 | Ref | Decal Kit - Country Spec (Brazil) | |
| | 2902322 | Ref | Decal Kit - Country Spec (CSA) | |
| | 1001116844 | Ref | Decal Kit - Country Spec (Chinese - Simplified) | |
| | 2902309 | Ref | Decal Kit - Country Spec (Chinese - Traditional) | |
| | 2902308 | Ref | Decal Kit - Country Spec (Japanese) | |
| | 2902310 | Ref | Decal Kit - Country Spec (Korean) | |
| | 2902311 | Ref | Decal Kit - Country Spec (Latin America) | |
| | 2902303 | Ref | Decal Kit - Master | |
| | 1001193631 | Ref | Decal Kit - Machine (ANSI Spec Only) | |
| | 1001108718 | Ref | Decal Kit - Platform (600A) | |
| | 1001238895 | Ref | Decal Kit - Platform (600AJ) | |
| | 1001119561 | Ref | Decal Kit - Platform Console Box | |
| | 2902350 | Ref | Decal Kit - Tire Load | |
| | 4932990 | Ref | **Drive Cutout Kit (Above Elevation Beyond Transport)** | |
| | 4932993 | Ref | **Drive Cutout Kit (Above Elevation Tilt) (ANSI, ANSI Export, Australian Brazilian and Japanese Specs Only)** | |
| | | Ref | **Electrical Connector Kits** | |
| | 1001148902 | Ref | Amp/Tyco Electrical Connector Kit | |
| | 1001148903 | Ref | Deutsch DT Electrical Connector Kit | |
| | 1001148904 | Ref | Deutsch HD Electrical Connector Kit | |
| | 1001148905 | Ref | Packard Electrical Connector Kit | |
| | 1001148906 | Ref | Various Electrical Connectors Kit | |
| | | Ref | **Engine Block Heater Installations:** | |
| | 2580055 | Ref | **Caterpillar Engine Machines** | |
| | 0258696 | Ref | **Ford Engine Machines** | |
| | 0275261 | Ref | **GM Engine Machines** | |
| | 1001246867 | Ref | **Enhanced Detection System (EDS) Level 1 (2-Bar) Installation Kit** | |
| | 1001246860 | Ref | **Enhanced Detection System (EDS) Level 2 (3-Bar) Installation Kit** | |
| | 1001237883 | Ref | **Fall Arrest (Bolt-on) Add-on Kit (6ft/1.82m Platform (ANSI, ANSI Export, CHINA, CSA & Japanese Specs Only) (Fits Platform p/ns 1001186384 & 1001144024) (SN 0300128330 through 0300177361)** | |
| | 1001237882 | Ref | **Fall Arrest (Bolt-on) Add-on Kit (8ft/2.4m Platform (ANSI, ANSI Export, CHINA, CSA & Japanese Specs Only) (Fits Platform p/ns 1001186383 & 1001144023) (SN 0300080181 through 0300177361)** | |
| | | Ref | **Fan Cover/Grille Options:** | |
| | 1001185078 | Ref | **Fan Cover Add-on Kit (Deutz D2011 Engines)** | |
| | 1001182599 | Ref | **Fan Cover Installation (Deutz D2011 Engines)** | |
| | 1001093389 | Ref | **Fan Grille Installation (Deutz D2011 Engines)** | |
| | 1001213223 | Ref | **Fan & Belt Grille Add-on Kit (Deutz D2011 Engines without Generator)** | |
| | 1001202122 | Ref | **Fan & Belt Grille Installation (Deutz D2011 Engines without Generator)** | |
| | 1001213222 | Ref | **Fan & Belt Grille Add-on Kit (Deutz D2011 with Generator)** | |
| | 1001202398 | Ref | **Fan & Belt Grille Installation (Deutz D2011 with Generator)** | |
| | | Ref | **Filter Kits:** | |

| ITEM | PART NUMBER | QTY | DESCRIPTION | REV |
|---|---|---|---|---|
| | | Ref | **Combined Filter Kit (Hydraulic/Air and Fuel/Engine Oil)** | |
| | 1001110991 | 1 | **Caterpillar Engine** | |
| | 1001110990 | 1 | **Deutz D2011 Engine** | |
| | 2910462 | 1 | **Ford LRG-425 with Carb Engine** | |
| | 1001114042 | 1 | **Ford LRG-425 with EFI Engine** | |
| | 1001114127 | 1 | **GM Engine** | |
| | | Ref | **Hydraulic/Air Filter** | |
| | 1001109684 | 1 | **Caterpillar/Deutz Engine** | |
| | | Ref | **Fuel/Engine Oil Filter** | |
| | 1001110137 | 1 | **Caterpillar Engine** | |
| | 1001110133 | 1 | **Deutz Engine** | |
| | 1001139099 | Ref | **Fire Extinguisher Installation** | |
| | | Ref | **Fluids** | |
| | | Ref | Coolant (Caterpillar, GM and Perkins Engines) | |
| | 2300004 | Ref | Machines without Arctic Package | |
| | 2300041 | Ref | Machines with Arctic Package | |
| | 3020017 | Ref | Lubricant (Spindle Assembly) | |
| | 2300040 | Ref | Diesel Fuel Conditioner | |
| | | Ref | Engine Oil | |
| | 3020016 | Ref | Motor Oil Mobil Delvac MX 15W-40 (Deutz Engine Machines without Arctic Package) | |
| | 3020044 | Ref | Motor Oil 0W-40 (Deutz Engine Machines with Arctic Package) | |
| | 1001115930 | Ref | Motor Oil 10W-30 (GM Tier III Engine Machines without Arctic Package) | |
| | 1001115931 | Ref | Motor Oil 5W-30 Synthetic (GM Tier III Engine Machines with Arctic Package) | |
| | | Ref | Hydraulic Fluids | |
| | 2300014 | Ref | Mobil 424 | |
| | 2300027 | Ref | Mobil 224H Bio | |
| | 2300029 | Ref | Mobil EAL ISO 46 Bio | |
| | 2300016 | Ref | Mobil DTE 10 EXCEL 32 (was DTE 13 ISO 32) | |
| | 2300019 | Ref | Quaker State Quintolubric 888-46 Fire Resistant | |
| | 2300039 | Ref | Exxon Univis HV126 (Arctic Package Only) | |
| | | Ref | **Flushing Loop Valve Installation (Requires Oil Cooler Installation)** | |
| | 0275946 | Ref | **Flushing Loop Valve Installation 2WD** | |
| | 0275941 | Ref | **Flushing Loop Valve Installation 4WD** | |
| | 4641329 | 1 | Valve, Flushing | |
| | 7024881 | 1 | Piston, Pilot | |
| | 7021639 | 2 | Cartridge, Check | |
| | 2900756 | 2 | Seal Kit - 7021639 Valve | |
| | | Ref | **Footswitch Panel Options:** | |
| | 3380652 | Ref | **USA Built Machines (SN 0300087000 through 0300167713)** | |
| | 1001117294 | Ref | **USA Built Machines (SN 0300167714 through 0300177361)** | |
| | 4060959 | Ref | **Footswitch Shield** | |
| | 1001202749 | Ref | **Fuel Cap Cover Installation (Black) (Note: Lock p/n 1001102157 Must be purchased separately)** | |
| | 1001191395 | Ref | **Fuel Cap Cover Installation (Green) (Note: Lock p/n 1001102157 Must be purchased separately)** | |
| | | Ref | **Generator Options:** | |
| | See Note | Ref | **Generator (2500W) Add-on Kit (Note: Contact JLG Parts Department)** | |
| | 1001175815 | Ref | **Generator (4000W/50Hz) Add-on Kit** | |

| ITEM | PART NUMBER | QTY | DESCRIPTION | REV |
|---|---|---|---|---|
| | 1001213606 | Ref | **Generator (4000W/60Hz) Add-on Kit** | |
| | See Note | Ref | **Generator (7500W) Add-on Kit (Note: Contact JLG Parts Department)** | |
| | 0271548 | Ref | **Glow Plug Installation (Deutz Engine Machines)** | |
| | 2910100 | Ref | **Hose/Cable Chafe Kit** | |
| | | Ref | **Hose Kits (Contact JLG Customer Service for contents of kits):** | |
| | 1001166791 | Ref | Hose Kit - Boom Lower | |
| | 1001212515 | Ref | Hose Kit - Boom Lower | |
| | 1001209350 | Ref | Hose Kit - Boom Lower (600AJ - Deutz D2011 Engine) | |
| | 1001193682 | Ref | Hose Kit - Boom Upper (600A - Ford/GM Engines) | |
| | 1001209347 | Ref | Hose Kit - Boom Upper (600A - Ford/GM Engines) | |
| | 1001166790 | Ref | Hose Kit - Boom Upper (600AJ - Deutz D2011 Engines) | |
| | 2902471 | Ref | Hose Kit - Power Track Lower (600A) | |
| | 1001204904 | Ref | Hose Kit - Power Track Lower (600AJ) | |
| | 2902470 | Ref | Hose Kit - Power Track Upper (600A) | |
| | 2902472 | Ref | Hose Kit - Power Track Upper (600AJ) | |
| | 1001241405 | Ref | **Hostile Environment Add-on Kit (600A - 7FT Chassis)** | |
| | 1001204923 | Ref | **Hostile Environment Add-on Kit (600A - 8FT Chassis)** | |
| | 1001241406 | Ref | **Hostile Environment Add-on Kit (600AJ - 7FT Chassis)** | |
| | 1001204924 | Ref | **Hostile Environment Add-on Kit (600AJ - 8FT Chassis)** | |
| | 1001094475 | Ref | **Hourmeter for Generator Installation** | |
| | 1001229940 | Ref | **Hydraulic Tank Locker Installation** | |
| | 1001148971 | Ref | **Lanyard (Bolt-on) Kit Installation** | |
| | 1001183407 | Ref | **Low Temperature Cut-out Switch Installation (Russian Specs)** | |
| | 1001236951 | Ref | **Low Temperature Cut-out Switch Installation (Russian Specs)** | |
| | | Ref | **Oil Cooler Installation (Requires Flushing Loop Options)** | |
| | 0256765 | Ref | **Deutz Engine Machines (SN 0300087000 through 0300136662)** | |
| | 1282665 | Ref | **Deutz Engine Machines (SN 0300087000 through 0300136662)** | |
| | 1001108702 | Ref | **Deutz Engine Machines (SN 0300136663 through 0300177361)** | |
| | 0256778 | Ref | **Ford Engine Machines** | |
| | 1283309 | Ref | **Ford Engine Machines** | |
| | 0272062 | Ref | **GM Engine Machines** | |
| | 1283309 | Ref | **GM Engine Machines** | |
| | | Ref | **Platform Console Cover Installations** | |
| | 0258703 | Ref | **Clear Polycarbonate Cover Installation (All Spec) (SN 0300087000 through 030017736, SN B300000100 through B300001234)** | |
| | 1001110974 | Ref | **Steel Cover Installation (ANSI, French, Spanish, Portuguese, Japanese Specs) (SN 0300087000 through 030017736, SN B300000100 through B300001234)** | |
| | 1001125229 | Ref | **Steel Cover Installation (Korean Spec) (SN 0300087000 through 030017736, SN B300000100 through B300001234)** | |
| | 1001125230 | Ref | **Steel Cover Installation (Chinese Spec) (SN 0300087000 through 030017736, SN B300000100 through B300001234)** | |
| | 1001195304 | Ref | **Cover Installation (SN B300001235 through B300005764, Excluding B300005764)** | |
| | 1001205175 | Ref | **Platform Console Cover Add-on Kit (Steel)** | |
| | 1001214984 | Ref | **Platform Control Box Film Installation** | |
| | | Ref | **Platform Entry Kit** | |
| | 1001142504 | Ref | **Platform Entry Kit (Replace Swing Gate with Drop Bar)** | |

| ITEM | PART NUMBER | QTY | DESCRIPTION | REV |
|---|---|---|---|---|
| | 1001142505 | Ref | **Platform Entry Kit (Replace Drop Bar with Swing Gate)** | |
| | | Ref | **Platform Mesh to Mid Rail Add-on Kits:** | |
| | 1001214478 | Ref | **30in x 4ft (76cm x 1.22m) with Gate** | |
| | 1001214515 | Ref | **30in x 5ft (76cm x 1.52m) with Gate** | |
| | 1001214540 | Ref | **36in x 6ft (91.5cm x 1.83m) with Gate** | |
| | 1001214548 | Ref | **36in x 8ft (91.5cm x 2.44m) with Gate** | |
| | | Ref | **Platform Mesh to Mid Rail Installation** | |
| | 1001140318 | Ref | **30in x 4ft (76cm x 1.22m)** | |
| | 1001140315 | Ref | **30in x 5ft (76cm x 1.52m)** | |
| | 1001138772 | Ref | **36in x 6ft (91.5cm x 1.83m)** | |
| | 1001138773 | Ref | **36in x 8ft (91.5cm x 2.44m)** | |
| | | Ref | **Platform Mesh to Top Rail Add-on Kits:** | |
| | 1001214552 | Ref | **30in x 4ft (76cm x 1.22m) with Gate** | |
| | 1001214559 | Ref | **30in x 5ft (76cm x 1.52m) with Gate** | |
| | 1001214561 | Ref | **36in x 6ft (91.5cm x 1.83m) with Gate** | |
| | 1001214562 | Ref | **36in x 8ft (91.5cm x 2.44m) with Gate** | |
| | | Ref | **Platform Mesh To Top Rail Installations** | |
| | 0273147 | Ref | **30in x 4ft (76cm x 1.22m)** | |
| | 0273146 | Ref | **30in x 5ft (76cm x 1.52m)** | |
| | 0273149 | Ref | **36in x 6ft (91.5cm x 1.83m)** | |
| | 0273145 | Ref | **36in x 8ft (91.5cm x 2.44m)** | |
| | 1001149730 | Ref | **Platform Mid Rail Repair Kit** | |
| | | Ref | **Platform, Top Rail Extension** | |
| | 0272733 | Ref | **3ft x 6ft Platforms** | |
| | 0272725 | Ref | **3ft x 8ft Platforms** | |
| | | Ref | **Platform Huck Fasteners Replacement Hardware** | |
| | 0641614 | AR | Bolt 1/4in-20NC x 2in | |
| | 3311405 | AR | Locknut 1/4in-20NC | |
| | 4711400 | AR | Flatwasher 1/4in | |
| | 3300151 | AR | Acorn Nut 1/4in-20NC | |
| | 1001209059 | Ref | **Platform Work Surface Installation** | |
| | 0274597 | Ref | **Rain Cap Installation** | |
| | 1001099572 | Ref | **Security Lock (Programmable) Installation** | |
| | 1001247073 | Ref | **SkyEye Retrofit Kit** | |
| | | Ref | **SkyGuard Component Options:** | |
| | 1001206478 | Ref | SkyGuard Complete Add-on Kit (Blue Beacon) (Non - UGM Machines) | |
| | 1001149560 | NLA | SkyGuard Complete Add-on Kit (Blue Beacon) (Non - UGM Machines) (Use p/n 1001206478) | |
| | 1001206477 | Ref | SkyGuard Complete Add-on Kit (Blue Beacon) (UGM Machines) | |
| | 1001143669 | NLA | SkyGuard Complete Add-on Kit (Blue Beacon) (UGM Machines) (Use p/n 1001206477) | |
| | 1001210026 | Ref | SkyGuard Complete Add-on Kit (Red Beacon) (UGM Machines) | |
| | 1001197016 | Ref | SkyGuard Platform Sensor Kit | |
| | 1001137672 | Ref | SkyGuard Platform Sensor Kit | |
| | 1001137440 | 1 | SkyGuard Platform Sensor Harness | |
| | 1001186431 | 2 | Relay | |
| | 1001206311 | Ref | SkyGuard Strobe Light Kit (Blue Beacon) | |
| | 1001143256 | NLA | SkyGuard Strobe Light Kit (Blue Beacon) (Use p/n 1001206311) | |
| | 1001210025 | Ref | SkyGuard Strobe Light Kit (Red Beacon) | |
| | 1001176372 | Ref | SkyGuard Removal Plug Kit | |
| | 1001232643 | Ref | **SkyLine Kit** | |

# SECTION 10 - SPECIAL OPTIONS

| ITEM | PART NUMBER | QTY | DESCRIPTION | REV |
|---|---|---|---|---|
| | | Ref | **Strobe Light Installations (Amber)** | |
| | 1001152965 | Ref | **Platform Mounted** | |
| | 1001154231 | Ref | **Platform/Ground Mounted** | |
| | 0272301 | Ref | **Tire Sealant Installation** | |
| | | Ref | **Tools for Service** | |
| | 2901443 | 1 | Analyzer Kit | |
| | 7002840 | 1 | Anti-Rotation Pin Removal Tool | |
| | 8896941 | 1 | Wire Stripper | |
| | 7002821 | 1 | Wire Crimper (To install wire ends to wires) | |
| | 7002823 | 1 | Pin/Socket Extractor - Universal (To Remove Pins/Sockets from Connectors) | |
| | 4460467 | 1 | Extractor - 16-18 Gauge (For Removal of Pin/Sockets from Deutsch Connectors) | |
| | 4460510 | 1 | Extractor - 12-14 Gauge (For Removal of Pin/Sockets from Deutsch Connectors) | |
| | 7002822 | 1 | Screwdriver, Potentiometer (To Adjust Drive Controllers) | |
| | 7016654 | 1 | Screwdriver, Magnetic | |
| | 7004275 | 1 | Seal Installation Tool - 1in | |
| | 7004276 | 1 | Seal Installation Tool - 1 1/2in | |
| | 7002826 | 1 | Seal Installation Tool - 2in | |
| | 7016655 | 1 | Wire Rope Sheave Gauge | |
| | 7016652 | 1 | Huck Bolt Fastener (For Small Huck Bolts Only) | |
| | 2900838 | 1 | U.S. Standards Fastener (Hardware) Kit | |
| | 7014676 | 1 | U.S. Standards Tool Kit | |
| | 1001137005 | 1 | Software Cable Kit | |
| | 0272350 | Ref | **Tool (Hydraulic) Circuit Installation** | |
| | 0273172 | NLA | **Transport Wheels Installation** | |
| | 0257728 | Ref | **Tube Rack Installation** | |
| | 1001238825 | Ref | **Turntable Bearing Kit** | |
| | 0258918 | Ref | **Utility Rack Installation** | |
| | 0256344 | Ref | **Weld Leads Installation - 600A** | |
| | 0272772 | Ref | **Weld Leads Installation - 600AJ (1 Cable)** | |

# PART NUMBER INDEX

0060066.....228, 239, 253
0060068.....223, 234, 253
0080163..... 102
0080181.....80, 88
0080201.....109, 116, 123
0080214..... 109
0080241..... 163
0080243.....80, 88
0100009.....155, 273, 279, 283
0100011.....15, 16, 17, 19, 20, 23, 25, 43, 49, 61, 80, 83, 88, 89, 90, 91, 96, 98, 99, 108, 109, 114, 115, 116, 122, 123, 136, 139, 143, 147, 151, 153, 155, 159, 163, 164, 165, 172, 173, 176, 178, 179, 182, 186, 189, 193, 197, 201, 209, 213, 219, 223, 224, 229, 230,233, 234, 238, 239, 240, 243, 244, 247, 248, 255, 260, 266, 305, 307, 313, 317, 324, 327, 329, 331, 347, 353, 355, 359, 361, 363, 365, 373, 375, 377, 381, 391, 393, 397, 399, 401, 414, 421, 496, 504, 510
0100019 62, 82, 189, 197, 203, 209, 213
0100020.....80, 83, 89, 91, 96, 99, 108, 109, 114, 116, 122, 125, 136, 137, 198, 276, 279, 284, 324, 337
0100035.....164, 261, 273, 279, 283
0100038.....19, 347, 353, 355, 359, 361, 363, 365, 373, 375, 377, 381, 391, 393, 397, 399, 401, 414, 421
0100048.....96, 108, 114, 122, 147, 151, 155, 159, 163, 219, 255, 273, 279, 283, 432, 435, 452, 455, 472, 475
0100062.....136, 204
0100063...17, 20, 23, 361, 377, 382
0100071..... 309
0100079..... 136
0100081.....244, 248, 273, 279, 283, 317, 319
0140001..... 49
0140011.....273, 279, 283
0140032.....163, 440, 459
0140044.....163, 478
0181727. 80, 96, 108, 114
0181949..... 137
0200048..... 313
0200742 .....186
0200819 .....182
0253550 .....519
0254798 .....62
0255281 .....248
0255288 .....248
0255382 ..... 441, 461, 479
0255386 .....519
0255409 .....135
0255410 .....62
0255423 ..... 223, 229, 244
0255438 .....260
0255444 .....62
0255483 .....519
0255487 .....519
0255489 .....519
0255524 .....136
0255699 .....261
0255880 .....169
0255927 .....519
0255928 .....519
0256202 .... 441, 442, 461, 480
0256276 .....518
0256331 .....261
0256336 .....261
0256342 .....518
0256344 .....524
0256366 .....518
0256487 .....519
0256488 .....519
0256631 .....276
0256632 .....276
0256633 .....276
0256690 .....99
0256765 .....424, 522
0256778 .....424, 522
0256821 .....172
0256822 .....173, 179
0256847 .....102
0256957 .....519
0257176 ..... 441, 461, 479
0257195 .....519
0257573 .....244
0257728 .....341, 524
0257887 .... 163, 440, 459, 478
0258696 .....520
0258703 .....522
0258918 .....524
0258945 .....267
0258966 .....518
0270329 .....61
0270395 .....135
0270528 .....43
0270805 .....163
0270818 ..... 432, 453, 473
0270819 .....432, 453
0270820 .... 229, 241, 433, 453, 473
0270821 ..... 229, 433, 453
0270833 .....163
0271475 .....518
0271548 .....522
0271552 ..... 164, 276, 284
0271912 .....519
0271941 ..... 267
0272062 ..... 522
0272070.....224, 230
0272135 ..... 228
0272254 ..... 329
0272301 ..... 524
0272312 ..... 520
0272326 ..... 223
0272350 ..... 524
0272387 ..... 317
0272390.....224, 230, 317
0272391 ..... 317
0272395 ..... 317
0272418.....317, 320
0272427.....277, 281, 285, 313
0272433.....441, 461, 479
0272435.....205, 211, 215
0272448.....324, 329
0272507.....163, 440, 460
0272521 ..... 327
0272588 ..... 327
0272589 ..... 205
0272599.....324, 337
0272607 ..... 337
0272618.....201, 445
0272619.....201, 445
0272624.....432, 453, 473
0272625.....229, 241, 433, 453, 473
0272626.....432, 453, 473
0272627.....229, 433, 453
0272703 ..... 255
0272725 ..... 523
0272733 ..... 523
0272772 ..... 524
0272948.....317, 319
0272951.....317, 319
0272955 ..... 317
0272970.....267, 275
0273048.....25, 39
0273049.....25, 39
0273052 ..... 139
0273109.....209, 445
0273145 ..... 523
0273146 ..... 523
0273147 ..... 523
0273149 ..... 523
0273161 ..... 139
0273172 ..... 524
0273353 ..... 324
0273366.....25, 39
0273427.....432, 453, 473
0273428.....229, 241, 433, 453, 473
0273429.....432, 453, 473
0273430.....229, 241, 433, 453, 473
0273492.....268, 428
0273507 ..... 189
0273511 ..... 189
0273542 ..... 311
0273575 ..... 519
0273576.....201, 445
0273577.....201, 445
0273706 .... 277, 281, 285, 313
0273770 .....519
0273824 .... 277, 281, 285, 313
0273891 .....495, 499
0273892 .....495, 499
0273893 .....499
0273894 .....499
0273895 .....509
0273896 .....509
0273899 .....499
0273900 .....499
0273901 .....499
0273902 .....499
0273903 .....499
0273904 .....499
0273940 .....19
0273954 .....15, 19
0273959 .....15, 19
0274047 .....15
0274054 .....15
0274062 .....17, 23
0274081 .....181
0274082 .....185
0274086 .....185
0274087 .....181
0274090 .....185
0274091 .....181
0274094 ..... 495, 499, 509
0274121 .....19, 23
0274132 .....16
0274180 .....269
0274200 .... 164, 277, 281, 284
0274204 .....172
0274220 .....19, 43
0274229 .....40
0274234 .....15, 19
0274235 .....43
0274256 .....15
0274257 .....16, 43
0274299 .....96
0274309 .....47, 260
0274310 .....47, 260
0274311 .....47, 260
0274312 .....47, 260
0274322 .....25
0274348 .....40
0274349 .....40
0274441 .....25, 39
0274491 .....80
0274521 .....108
0274525 .....82
0274533 .....25
0274597 .....523
0274618 ..... 441, 461, 480
0274620 .....176
0274661 .....341
0274687 .....43
0274801 .....16, 43
0274883 .....519
0274922 .....15
0275023 .....176
0275039 .....193

0275140 ....229, 241, 433, 453, 473
0275142 .....96
0275216 ..... 445, 465
0275217 ..... 445, 465
0275218 ..... 445, 465
0275219 ..... 445, 465
0275229 .....114
0275256 .....80
0275257 .....213, 445, 466
0275261 .....520
0275262 .....519
0275264 .....82
0275265 .....432, 453, 473
0275295 .....518
0275452 ..... 445, 465
0275453 ..... 445, 465
0275454 ..... 445, 465
0275651 ..... 442, 461
0275652 ..... 442, 461
0275653 ..... 442, 461
0275654 ..... 442, 461
0275655 ..... 442, 461
0275656 ..... 442, 461
0275660 ..... 442, 461
0275941 .....521
0275946 .....521
0280167 ..... 15, 19
0280171 .....15
0280183 ..... 15, 19
0280185 .....15
0280209 .....15
0340041 ..80, 88, 99, 109, 116, 123
0340046 .....80, 88, 109
0362519 .....137
0362529 .....261
0362611 .....261
0362910 .....43
0363012 .....39
0363082 .....189
0363097 ..... 189, 209
0363201 .....209
0363202 .....209
0370026 .....345
0370035 .....361
0400075 ..80, 88, 96, 108, 114, 122
0440018 .....17
0440019 .....17
0440161 .....17
0440170 .....16
0440171 .....16
0440207 .....62
0480100 .....341
0480120 .....182
0480121 ..... 182, 186
0480125 .....204
0480126 ..... 197, 204
0480129 ..... 197, 204
0480130 .....209
0480135 .....189
0480142 ..... 193, 213
0561076 .....223, 229, 243
0561185 ..... 243, 247
0561237 ..... 230, 241
0561248 .....243
0630427 .....260
0630462 .....313
0630464 ..... 273, 279, 283
0630467 .....260
0630490 .....16, 17
0630491 .....163
0630498 .80, 96, 108, 114
0630507 .....172, 176
0630518 .... 147, 151, 155, 159, 324, 327, 329, 331, 337
0630534 .... 348, 351, 353, 365, 371, 382
0630535 .... 348, 355, 357, 359, 373, 375, 382, 387, 393, 397, 399, 401
0630536 .... 361, 363, 377, 379
0630548 .... 147, 151, 155, 159
0630568 ..... 276, 280, 284
0641403 .... 203, 223, 229, 234, 240, 244, 261
0641404 ..... 17, 155, 172, 187, 197, 203, 273, 279, 283, 307
0641405 .... 172, 176, 189, 193, 203, 209, 213, 255, 307, 444, 463, 481
0641406 80, 88, 109, 116, 123, 153, 163, 197, 203, 219, 267, 496, 504, 510
0641407 .... 80, 83, 88, 90, 97, 99, 108, 115, 123, 153, 155, 160, 172, 176, 255, 444, 463, 481
0641408 .... 108, 109, 267, 496, 504, 510
0641409 .....97
0641410 .....108
0641414 ..... 49, 109, 268, 273, 279, 283, 305, 309, 313
0641415 .....198
0641416 ..... 49, 114, 122, 230, 241, 255, 444, 464, 481
0641418 .....266
0641424 .....261
0641504 .....108
0641505 .... 114, 122, 202, 209, 213
0641506 .... 114, 122, 147, 153, 159
0641507 .... 80, 83, 88, 89, 96, 109, 155
0641508 ..... 183, 186, 189
0641510 .....99, 193
0641514 ..... 48, 193, 341
0641516 ..... 43, 197, 201, 209, 213, 244, 255, 311
0641518 .....269
0641522 .....244, 248
0641532 ..... 39, 223, 229, 234, 240
0641536 .....248
0641540 ..... 248
0641552 ..... 39
0641604 .....229, 240, 393, 397
0641605 ..... 248
0641606 ...83, 88, 99, 110, 116, 123, 136, 137, 172, 173, 178, 179, 229, 240, 243, 244, 247, 248, 261, 324, 327, 329, 331
0641607 .....165, 223, 229, 233, 234, 238, 239, 240, 243, 244, 247
0641608 .....16, 17, 20, 23, 40, 43, 49, 80, 83, 88, 89, 91, 98, 108, 109, 114, 116, 122, 123, 172, 176, 209, 243, 247
0641609 80, 88, 101, 116, 124, 169, 240, 243
0641610 .....80, 83, 88, 89, 96, 99, 101, 109, 116, 124, 182, 186, 243, 247, 267
0641611 .....39, 189, 209, 229, 240
0641612 .....109, 116, 124, 139, 143, 173, 189, 209
0641613 ..... 48
0641614 .....136, 229, 523
0641616 ..... 198
0641618 .....39, 204, 229, 240, 243, 244, 247
0641640 ..... 248
0641708 ..... 209
0641710 ..... 193
0641718 ..... 189
0641772 .....182, 186
0641808 .....80, 83, 88, 89, 96, 108, 115, 122, 123, 197, 203, 204, 213
0641810 .....169, 189, 209, 223, 229, 233, 238, 243
0641811 .....139, 143
0641812 ...83, 90, 98, 108, 115, 123, 224, 230, 234, 240
0641813 ..... 311
0641814 .....15, 19
0641816 ..... 15
0641818 ....15, 19, 99, 136
0641820 . 80, 88, 139, 143
0641822 .....224, 230, 255
0641824 ..... 143
0641826 .....99, 116, 124
0641828 .....109, 116, 124
0642010 .....43, 82, 89, 96, 108, 114, 122
0642012 .....15, 16, 19, 20, 23, 319
0642018 ..... 61
0642024 ..... 255
0642026 ..... 319
0642212 ..... 319
0642214 ..... 317
0642612 .....164, 165
0642684 .... 224, 230, 234, 240, 255
0651406 .....49
0681608 ..... 17, 224, 230, 234, 240, 255
0681810 .....25
0681814 .....271
0681822 .....271
0681836 .....62
0682016 .....25, 62
0682020 .....16
0700408 ..... 444, 464, 481
0700615 .....165
0700616 .....91
0700617 .....165
0700620 .....91
0700808 ..... 80, 88, 91, 99
0700810 ..... 102, 116, 124
0700815 .....204
0700816 .....182
0700819 .....109
0700820 .....193, 213
0701010 ..... 80, 88, 91
0701012 ... 80, 88, 99, 109
0701014 .....101, 109
0701015 .. 80, 88, 99, 101, 189, 209
0701016 ..... 193, 209, 213
0701214 .....80
0701414 .....80, 88
0711025 .....101
0711214 ..... 80, 82, 88
0711414 .....99
0721003 .....16
0721004 .....43
0721005 .....313
0721006 ..... 82, 172, 176, 183, 186, 275, 279, 283
0721008 .....173, 275
0731005 .....313
0741605 .....229, 239
0741606 ..... 189, 209, 234
0741607 ..... 43, 197, 229
0741808 .....189, 209
0760606 .....91, 109
0760610 .....91
0761210 .....91, 182
0771212 .....82, 88
0771415 .....198, 204
0801019 ..... 223, 228, 243
0801021 .....243
0801022 .....223, 247
0801023 .....247
0801025 .....228, 247
0801026 .....247
0801027 .....247
0801085 .....243
0801228 .....247
0801613 .....247
0801618 .....247
0801621 .....247
0801622 .....243
0801637 .....243
0811606 .....243, 247
0811607 .....247
0811608 .....247
0811610 .....243, 247

0840055 ..... 256
0860038 .....197, 202, 209, 213, 442, 462, 480
0860520 .....496, 504, 510
0861407 ..... 147
0861517 .....267, 273
0861537 .....273, 279, 280
0861538 .....204, 209, 213
0861541 .....205, 210, 215
0861542 .....202, 204, 209, 210, 213, 215, 446, 466, 481
0861567 .....202, 205, 446, 466, 481
0861572 ..... 204
0861689 .....147, 435
0861690 .....147, 435
0861691 .....147, 435
0861692 .....147, 435
0861700 .....147, 434
0861701 .....147, 435
0861702 .....147, 435
0861703 .....147, 435
0861704 .....147, 435
0861705 .....147, 435
0861731 .....442, 462
0861781 .....442, 462
0861786 .....147, 435
0861787 .....147, 435
0861880 .....444, 465
0902206 ..... 164
0902219 .....172, 176
0902242 .....172, 176
0902335 .....173, 176
0902539 ..... 111
0902751 .....273, 279
0902888 .....197, 203, 210, 213
0902894 ..... 255
0902910 ..... 84
0902919 ..... 255
0902920 ..... 255
0902952 ..... 189
0903010 ..... 111
0903056 .....139, 143
0903079 ..... 109
0903119 ..... 164
0903220 ..... 84
0903484 .....444, 464
0903490 .....116, 124
0903612 .....444, 464
0920119 ..... 61
0940049 .....172, 176
0940070 ...80, 88, 99, 110, 116, 124
0940071 .....172, 176
0940088 ..... 177
0940092 .....311, 313
0940094 .....311, 313
0940102 .....317, 319
0940103 ..... 313
0940131 ..... 311
0940133 ..... 313
0940134 ..... 313
0940177 ..... 313
0961845 ..... 266
0961890 ..... 389
0961893 .... 347, 351, 353, 365, 371, 381
0961894 .... 347, 355, 359, 381
0961896 .... 393, 397, 399, 401
0961897 .....373, 375
0961898 .....361, 363
0961899 .....377
0961947 .... 229, 240, 347, 351, 353, 381, 385
0961948 .... 223, 229, 234, 239, 247, 373, 375
0961949 .... 223, 229, 234, 239, 243, 361, 363, 377, 379
0961950 .....15, 19
0961951 .... 223, 229, 234, 239, 247, 347, 355, 357, 359, 381, 387
0961977 .....389
0961986 .. 80, 88, 99, 109, 116, 124
0962005 ..... 16, 17, 20, 23
0962051 .....169
0962131 ..... 16, 20, 23
0962270 .....271
0962272 ..... 17
0962292 ..... 43
0962335 .....229, 240
0962336 .... 365, 367, 369, 371
0962348 ..... 43
0962356 .....391
0962449 .....183, 187
0962450 .....255
0962520 .... 198, 204, 209, 213
0962521 .....209, 213
0962563 .....183
1001091179 .....100
1001091561 .....135
1001091587 .....114, 122
1001091603 .....116
1001091604 .....114
1001091605 .....115
1001091768 .....116
1001091793 .....117, 124
1001091892 .....100, 117, 124
1001093248 .....117, 125
1001093382 .... 80, 89, 96, 114, 122
1001093389 .....520
1001093410 .....116, 123, 129
1001093432 .....229, 241, 433, 453, 473
1001093433 .....433
1001093436 .....432, 453, 473
1001093438 .....518
1001093448 .....434
1001093549 .....413, 417
1001093943 .....100
1001094102 ..... 99
1001094103 ..... 98
1001094321 ..... 101
1001094475 ..... 522
1001094521 ..... 101
1001094828 ..... 61
1001095359 ..... 62
1001096070 .....198, 464
1001096134 ..... 482
1001097051 ..... 489
1001097150 ..... 444
1001097242 ...16, 20, 391
1001097553 ..... 91
1001097554 ..... 83
1001097822 .....223, 228, 233, 238
1001097958 ..... 179
1001097959 ..... 179
1001098012 .....324, 337, 339
1001098122 ..... 276
1001098149 ..... 337
1001098211 .99, 100, 102
1001098266 ..... 96
1001098474 ..... 96
1001098475 ..... 98
1001098476 ..... 99
1001098503 ..... 39
1001098916 ..... 102
1001099366 ..... 319
1001099367 ..... 319
1001099391 ..... 48
1001099421 ..... 319
1001099422 ..... 319
1001099572 ..... 523
1001099835 ..... 244
1001099836 ..... 249
1001099868 ..... 185
1001099869 .....183, 187
1001100027 ..... 428
1001100120 ..... 39
1001100233 .....183, 187
1001100234 .....183, 187
100110027 ..... 441
1001100305 ..... 441
1001100308 ..... 185
1001100313 .....81, 83
1001100321 .....181, 185, 189, 193
1001100341 .....445, 465
1001100342 .....445, 466
1001100343 .....445, 466
1001100344 .....445, 466
1001100345 .....445, 465
1001100346 .....445, 465
1001100347 .....445, 465
1001100397 .....442, 462
1001100398 .....442, 462
1001100399 .....442, 462
1001100400 .....442, 462
1001100401 .....442, 462
1001100402 .....442, 462
1001100403 .....442, 462
1001101061 .....61, 72
1001101191 .....444, 465
1001101420 ..... 319
1001101421 ..... 319
1001101422 ..... 319
1001101820 ..... 114
1001101821 .....115
1001101822 .....116
1001101823 .....117
1001101945 .....178
1001101947 .....178
1001102165 .....424
1001102547 .....181
1001102548 .....181
1001102599 .....148, 152, 155, 159
1001102600 .....148, 152, 155, 159
1001102644 .....182
1001102647 .....319
1001102913 .....178
1001102914 .....178
1001103308 .....156
1001103667 .....151, 155, 159, 516
1001104308 .....101
1001104423 .....415, 422
1001104982 .....518
1001104983 .....518
1001104984 .....518
1001105833 .....81, 89
1001105872 .....117, 125
1001105993 .....80
1001106338 .....80
1001106339 .....457, 477
1001106340 .....457, 477
1001106355 .....273, 516
1001106736 .....153, 156, 160, 456
1001106758 .....249
1001106759 .....249
1001106938 .....279, 283
1001106974 .....143
1001106975 .....143
1001107116 .....88
1001107153 .....249
1001107238 .....82
1001107239 .....82
1001107498 .....143
1001107499 .....143
1001107527 .....274
1001107677 .....274
1001107705 .....81, 89
1001107753 .....275, 280, 432, 452, 472
1001107926 .....276, 281, 284
1001107927 .....276
1001108256 .....277, 281, 285, 313
1001108493 .....496, 505
1001108702 .....424, 522
1001108718 .....520
1001108735 .....267, 273
1001108736 .....267
1001108763 .....276, 280, 284
1001108764 .....276, 280, 284
1001108923 .....496, 504
1001109064 .....91, 92
1001109065 .....88
1001109066 .....90

1001109067 .....89
1001109475 ..... 444, 464
1001109477 ..... 444, 464
1001109482 ..... 444, 464, 465
1001109554 ..... 444, 464
1001109595 .....89
1001109684 .....521
1001110133 .....521
1001110137 .....521
1001110169 ..... 61, 69
1001110200 .....90
1001110208 .....89
1001110345 .....429
1001110359 ..... 152, 455, 456
1001110361 ..... 152, 159, 455, 456
1001110362 ..... 152, 160, 455, 456
1001110367 ..... 151, 455
1001110368 ..... 151, 159, 455
1001110369 ..... 151, 455
1001110370 ..... 151, 159, 455
1001110371 ..... 151, 455
1001110372 ..... 151, 455
1001110373 ..... 151, 159, 455
1001110374 ..... 151, 159, 455
1001110375 ..... 151, 455
1001110376 ..... 151, 455
1001110379 ..... 152, 156, 160, 455, 457, 475, 476
1001110380 ..... 429, 455
1001110381 ..... 160, 429, 455
1001110382 ..... 429, 455
1001110434 ..... 274, 279, 283
1001110500 .....244
1001110501 .....244
1001110872 ..... 202, 214, 443, 446, 466, 481
1001110873 ..... 197, 201, 214, 443, 446, 462, 466, 480, 481
1001110974 .....522
1001110990 .....521
1001110991 .....521
1001111021 ..... 151, 159
1001111514 .....135
1001112057 .....91
1001112059 .....91
1001112067 .....91
1001112068 .....91
1001112069 .....91
1001112070 .....91
1001112071 ..... 91, 458
1001112072 .....91
1001112073 .....91
1001112075 .....91
1001112077 ..... 89, 91
1001112551 .....510
1001112570 .....91
1001112586 .....205, 428, 467, 482
1001112587 .....206, 467, 482
1001112588 .....428, 460, 479
1001112589 .....460, 479
1001112592 .....92
1001112612 .....458, 477
1001112743 .....428, 460, 479
1001112763 . 90, 458, 477
1001112849 .....91
1001112979 .....518
1001112980 .....518
1001112981 .....519
1001113386 .....240
10011133908 .....418
1001113407 .....240
1001113423 .....240
1001113465 .....235, 241
1001113483 .....255
1001113537 .....19
1001113539 .....19
1001113654 .....19
1001113655 .....20
1001113656 .....20
1001113715 .....20
1001113778 .....234
1001113786 .....420
1001113789 .....411, 419
1001113791 .....419
1001113792 .....419
1001113793 .....408
1001113795 .....422
1001113796 .....419
1001113799 .....418
1001113802 .....418
1001113803 .....422
1001113805 .....407
1001113806 .....420
1001113809 .....408
1001113810 .....420
1001113815 .....419
1001113816 .....419
1001113817 .....418
1001113818 .....408
1001113819 .....421
1001113820 .....408
1001113824 .....418
1001113825 .....419
1001113827 .....421
1001113835 .....408
1001113836 .....409, 418
1001113837 .....420
1001113840 .....420
1001113841 .....421
1001113842 .....421
1001113843 .....420
1001113844 .....420
1001113845 .....421
1001113846 .....420
1001113847 .....419
1001113848 .....420
1001113849 .....420
1001113850 .....417
1001113851 .....418
1001113852 .....419
1001113853 .....420
1001113855 .....417
1001113862 .....407
1001113864 .....407
1001113866 .....407
1001113868 .....408
1001113878 .....408
1001113879 .....411
1001113881 .....407
1001113882 .....408
1001113883 .....408
1001113884 .....408
1001113885 .....417
1001113886 .....417
1001113887 .....417
1001113889 .....417
1001113890 .....408
1001113894 .....409
1001113896 .....418
1001113897 .....409
1001113901 .....421
1001113902 .....421
1001113903 .....409
1001113904 .....409
1001113909 .....417
1001113910 .....418
1001113911 .....419
1001113912 .....418
1001113913 .....411
1001113914 .....411
1001113961 ..... 295, 299
1001114042 .....521
1001114071 ..... 424, 425
1001114076 ..... 417, 425
1001114077 ..... 417, 425
1001114078 ..... 407, 424
1001114079 ..... 411, 424
1001114127 .....521
1001114335 .....265
1001114341 .....266
1001114388 .....509
1001114389 .....509
1001114391 .....265
1001114446 .....267
1001114448 ..... 267, 273
1001114557 .....239
1001114600 .....125
1001114601 .....123
1001114639 .....123
1001114640 .....122
1001114641 .....123
1001114642 .....122
1001114875 .....250
1001115054 .....250
1001115063 .....250
1001115080 .....244
1001115081 .....244
1001115098 ..... 234, 240
1001115099 .....255
1001115217 ..... 234, 240, 244
1001115218 .....248
1001115253 .....250
1001115283 .....248
1001115334 ..... 239, 243
1001115335 .....238
1001115336 .....238, 239
1001115337 .....239, 247
1001115338 .....239
1001115339 .....238
1001115391 .....201, 466, 481
1001115392 .....201, 466, 481
1001115401 .....201, 466, 481
1001115402 .....201, 466, 481
1001115404 .....181
1001115405 .....185
1001115406 .....185
1001115407 .....185
1001115409 .....185
1001115410 .....185
1001115413 .....181
1001115414 .....181
1001115552 .....233
1001115553 .....234, 243
1001115554 .....233, 234, 247
1001115555 .....233
1001115889 .....153
1001115915 .....153
1001115918 .....153
1001115930 .....123, 521
1001115931 .....123, 521
1001115967 .....153
1001115970 .....519
1001115974 .....453, 518
1001116131 .....125
1001116183 .....125
1001116200 .....125
1001116240 .. 82, 97, 438, 439, 458, 477
1001116241 .. 82, 97, 438, 439
1001116248 .....519
1001116249 .....519
1001116340 .....135
1001116515 .....453, 518
1001116595 .....92
1001116692 .....475
1001116693 .....478
1001116840 .....499
1001116841 .....499
1001116842 .....499
1001116843 .....499
1001116844 .....520
1001116845 .....500
1001116846 .....500, 519
1001116847 .....500
1001116848 .....500
1001116849 .....500
1001116850 .....501
1001116851 .....501
1001116852 .....501
1001116853 .....503
1001116854 .....502
1001116855 .....502
1001116857 .....503
1001116858 .....502
1001116860 .....503
1001116861 .....505

# SECTION 10 - SPECIAL OPTIONS


1001116862 ..... 505
1001116863 ..... 505
1001116992 ..... 473
1001117039 ..... 178
1001117044 .....176, 177
1001117078 ..... 482
1001117139 ..... 178
1001117140 ..... 179
1001117172 .....268, 275, 279, 284
1001117174 .....267, 268, 275, 279, 284
1001117294 ..... 521
1001117320 .....268, 275
1001117799 .....98, 129
1001118133 ..... 136
1001118384 ..... 491
1001118388 ..... 491
1001118416 .....274, 299
1001118417 .....273, 289
1001118599 ..... 203
1001119561 ..... 520
1001119619 ..... 485
1001119620 .....487, 489
1001119942 ..... 518
1001119948 ..... 518
1001120328 .....305, 307
1001121244 ..... 20
1001121340 .....205, 206, 215
1001121592 ..... 313
1001121593 ..... 314
1001121612 ..... 518
1001121655 ..... 502
1001121656 ..... 503
1001121657 .....276, 281, 284
1001121800 ..... 495
1001121801 ..... 496
1001121802 ..... 503
1001121803 ..... 503
1001121804 ..... 503
1001121805 .....503, 504
1001121806 ..... 503
1001121807 ..... 503
1001121808 ..... 503
1001121809 ..... 503
1001121810 ..... 503
1001121811 ..... 503
1001121812 ..... 503
1001121813 ..... 495
1001121814 ..... 495
1001121815 ..... 502
1001121816 ..... 502
1001121817 ..... 502
1001121818 ..... 502
1001121819 ..... 502
1001121820 ..... 502
1001121821 ..... 502
1001121822 ..... 502
1001121823 ..... 502
1001121824 ..... 502
1001121825 ..... 502
1001121918 ..... 503
1001121921 ..... 502
1001122200 ..... 503
1001122201 ..... 502
1001125229 .....522
1001125230 .....522
1001125492 ..... 61
1001125683 .....247
1001126009 .....491
1001126100 .....243
1001126102 .....243
1001126169 .....247
1001126742 .....319
1001126747 .....320
1001126748 .....319
1001127089 .....519
1001127095 .....519
1001128527 .....331
1001128556 .....331
1001129555 .....514
1001129858 .....197
1001131168 .....274, 280, 284
1001131269 .....496, 504, 505, 510
1001131992 .....429
1001132055 .....428
1001132728 .....518
1001137005 .....448, 468, 483, 524
1001137440 .....523
1001137672 .....523
1001137673 .....305
1001137748 .....100, 102
1001137749 ..... 99
1001137751 ..... 96
1001137752 ..... 99
1001137754 ..... 96
1001137814 ..... 98
1001137815 ..... 98
1001137876 .....176
1001138034 .....424
1001138430 .....266
1001138431 .....266
1001138432 .....266
1001138434 .....266
1001138494 .....267
1001138514 .....267
1001138565 .....197
1001138566 .....197
1001138757 .....499
1001138758 .....499
1001138772 .....523
1001138773 .....523
1001138792 .....229, 365
1001138795 .....365, 371
1001138796 .....348, 357, 359, 382, 387
1001138797 .....228
1001138798 .....228, 347
1001138799 .....228, 381
1001139099 .....521
1001139130 .....518
1001139135 .....280, 284, 472
1001139148 .....518
1001139357 .....198
1001139358 ..... 98
1001139359 ..... 98
1001139373 .....266
1001139374 .....266
1001139956 ..... 197
1001139957 ..... 197
1001140315 ..... 523
1001140318 ..... 523
1001140429 ..... 267
1001141300 ..... 519
1001141302 ..... 520
1001141967 .....442, 462
1001141968 .....442, 443, 462
1001141969 .....442, 443, 462
1001142504 ..... 522
1001142505 ..... 523
1001142683 ..... 165
1001142694 ..... 165
1001142722 ..... 165
1001142736 .....165, 460, 478
1001143256 ..... 523
1001143431 ..... 165
1001143669 ..... 523
1001144018 ..... 266
1001144019 ..... 266
1001144021 ..... 266
1001144022 ..... 266
1001144023 ..... 265
1001144024 ..... 265
1001144026 ..... 265
1001144027 ..... 265
1001144433 ..... 284
1001144446 ..... 267
1001144629 ..... 266
1001144630 ..... 265
1001145405 .....324, 337
1001145781 .....266, 267
1001145834 .....267, 273
1001145835 ..... 267
1001146179 ..... 265
1001146180 ..... 265
1001146181 ..... 266
1001146182 ..... 266
1001146368 .....100, 102
1001146827 ..... 27
1001146828 ..... 26
1001147019 ..... 27
1001147020 ..... 27
1001147067 ..... 26
1001147068 ..... 27
1001148652 ..... 248
1001148902 ..... 520
1001148903 ..... 520
1001148904 ..... 520
1001148905 ..... 520
1001148906 ..... 520
1001148971 ..... 522
1001149560 ..... 523
1001149639 ..... 102
1001149730 ..... 523
1001149818 .....164, 460, 483
1001149955 ..... 163
1001149994 .....164, 165
1001150406 ..... 163
1001150918 ..... 90
1001150944 .....165, 460, 478
1001150998 .....100
1001151268 .....135, 136
1001151389 .....135
1001151391 .....135
1001151393 .....152, 159
1001151646 ..... 62
1001151670 .....178, 179
1001152173 .....156
1001152175 .....156
1001152429 .....206, 467, 482
1001152435 .....176
1001152457 .....198
1001152525 .....207
1001152530 .....198
1001152532 .....198
1001152556 .....177
1001152557 .....177
1001152561 .....47, 55
1001152564 .....261, 262
1001152565 .....261, 262
1001152887 .....47, 55
1001152965 .....524
1001153025 .....428
1001153197 .....198
1001153260 .....198
1001153321 .....453, 473
1001153322 .....453, 473
1001153636 .....198, 464
1001153638 .....461
1001154231 .....524
1001154390 .....156, 475, 476
1001154392 .....156, 475
1001154396 .....429, 475
1001154671 .....155, 475
1001154673 .....155, 475
1001155043 .....156
1001155044 .....156, 280, 284
1001155045 .....156, 279, 284
1001155792 .....202
1001156351 .....463, 481
1001156352 .....463, 480
1001156489 .....474
1001156490 .....474
1001157520 .....207
1001157521 .....207
1001157525 .....202, 206, 481
1001157528 .....207
1001157533 .....247
1001157592 .....206, 466, 481
1001157769 .....205, 428, 482
1001158007 .....207
1001158008 .....207
1001158363 .....198
1001158730 .....239, 247
1001158731 .....238, 239
1001158732 .....238
1001159096 .....267
1001159121 .....480
1001159256 .....280, 284
1001159648 .....428

1001160003 ..... 176, 179
1001160034 ..... 176, 177
1001160038 ..... 47, 260
1001160039 ..... 47, 260
1001160068 ..... 47, 260
1001160069 ..... 47, 260
1001160074 .....163
1001160077 .....163
1001160272 ..... 461, 480
1001160598 .....177
1001160692 .....178
1001161025 .....178
1001161026 .....177
1001161027 .....177
1001163131 .....319
1001164091 .....198
1001164281 ..... 178, 179
1001164564 .....475
1001165366 .....473
1001165403 ..... 417, 425
1001165404 ..... 417, 425
1001165439 .....407
1001165552 .....473
1001165554 .....473
1001165555 .....473
1001165556 .....473
1001165557 .....473
1001166394 .....179
1001166538 ..... 279, 284, 301
1001166539 ..... 279, 284, 291
1001166672 ..... 267, 279
1001166790 .....522
1001166791 .....522
1001167359 .....345
1001169610 ..... 100, 179
1001170797 .....464
1001171131 .....480
1001172045 .....518
1001172760 ..... 279, 284
1001173590 ..... 455, 475
1001173896 .....135
1001175815 .....521
1001176296 ..... 281, 284
1001176372 .....523
1001178269 ..... 229, 239, 253
1001178789 .....143
1001179154 ..... 205, 207, 215, 466, 482
1001181045 .....465
1001181046 .....465
1001181055 ..... 234, 253
1001181960 .....240
1001182064 .....240
1001182138 .....309
1001182599 .....520
1001182806 .....219
1001182906 .....99
1001182997 .....135
1001183407 .....522
1001184881 .....26
1001185078 .....520
1001185280 ..... 275, 284, 452, 472
1001185281 .....284
1001186334 .....271
1001186431 .....523
1001186432 .....491
1001186517 .....305
1001187508 .....305
1001187674 .....303
1001187681 .....485
1001188305 .....265
1001188306 .....266
1001188308 .....265
1001188309 .....266
1001188857 .....165
1001188863 .....429
1001188874 .....156
1001188889 .....305
1001188972 .....90
1001189116 .....273, 284
1001190028 .....411, 424
1001190089 .....267, 283
1001190094 .....267, 273
1001190113 .....267
1001190118 .....267
1001190966 .....473
1001191395 .....521
1001191708 .....309
1001192401 .....477
1001193018 .....464
1001193631 .....520
1001193682 .....522
1001194365 .....461, 480
1001194437 .....428
1001195304 .....522
1001197016 .....523
1001197017 .....313
1001197067 .....165
1001197408 .....511
1001200575 .....280, 284
1001200910 .....165
1001201890 .....279, 280
1001201891 .....284
1001202122 .....520
1001202398 .....520
1001202573 .....267, 283
1001202577 .....267, 279
1001202749 .....521
1001203656 .....271
1001204904 .....522
1001204923 .....522
1001204924 .....522
1001205010 .....518
1001205011 .....518
1001205012 .....518
1001205013 .....518
1001205175 .....522
1001205499 .....165
1001206311 .....523
1001206477 .....523
1001206478 .....523
1001207004 .....165
1001207305 .....165
1001207345 .....27
1001207346 .....26
1001207792 .....177
1001209059 .....523
1001209347 .....522
1001209350 .....522
1001209664 .....305
1001209869 .....165
1001210025 .....523
1001210026 .....523
1001212415 .....514
1001212515 .....522
1001213222 .....520
1001213223 .....520
1001213584 .....480
1001213585 .....481
1001213606 .....522
1001214030 .....519
1001214478 .....523
1001214515 .....523
1001214540 .....523
1001214548 .....523
1001214552 .....523
1001214559 .....523
1001214561 .....523
1001214562 .....523
1001214747 ..... 27
1001214748 ..... 27
1001214984 .....522
1001216630 .....256
1001217402 .....244
1001217403 .....244
1001218622 .....480
1001218623 .....481
1001220153 .....518
1001220486 ..... 280, 284
1001223055 ..... 497, 506
1001223331 ..... 239, 355
1001223332 ..... 355, 359
1001223335 .....359
1001223511 .....353
1001223512 .....353
1001223899 .....240
1001224050 .....506
1001224051 .....506
1001224892 .....249
1001224965 .....101
1001226872 .....267
1001227309 .....480
1001227310 .....480
1001227633 .....303
1001227634 .....303
1001227985 .....303
1001227987 .....303
1001227996 ..... 487, 489
1001228002 ..... 233, 385
1001228003 ..... 233, 238, 379
1001228004 ..... 233, 238, 375
1001228005 ..... 248, 395
1001228006 ..... 243, 401
1001228007 ..... 248, 397
1001228008 ..... 234, 351
1001228012 .....369
1001228042 ..... 233, 238, 363
1001228051 ..... 239, 357
1001228052 ..... 238, 387
1001228215 .....266
1001228224 .....303
1001228225 .....303
1001228376 .....265
1001228377 .....266
1001228417 .....399
1001228988 ..... 324, 325, 327, 329, 331, 335, 337
1001229010 ..... 497, 506, 510
1001229341 .....303
1001229940 .....522
1001230371 ..... 240, 367
1001231180 .....335
1001231183 .....335
1001231235 .....335
1001231676 .....26
1001231677 .....26
1001231678 .....25
1001232164 .....303
1001232165 .....303
1001232586 .....268
1001232642 .....307
1001232643 .....523
1001232650 .....307
1001232667 .....307
1001232799 .....268
1001232838 ..... 268, 483
1001234099 .....518
1001235011 .....307
1001235013 .....307
1001235948 .....177
1001236211 .....519
1001236436 .....506
1001236552 .....307
1001236951 .....522
1001236973 .....62
1001237862 ..... 487, 489
1001237863 ..... 303, 489
1001237864 ..... 303, 487
1001237865 ..... 303, 485
1001237882 .....520
1001237883 .....520
1001238319 .....303
1001238418 ..... 307, 491
1001238472 .....307
1001238477 .....307
1001238559 .....307
1001238824 .....307
1001238825 .....524
1001238895 .....520
1001241405 .....522
1001241406 .....522
1001241965 .....307
1001242409 .....518
1001243183 .....518
1001243184 .....518
1001246860 .....520
1001246867 .....520
1001247073 .....523
1001247385 .....219
1001247624 .....239
1001248012 .....371
1001248468 .....61, 75
1060279 ..... 496, 504, 510
1060341 ..... 313, 440, 460, 479
1060343 ..... 205, 207, 211, 215, 446, 467, 482
1060379 .....335, 341
1060461 ..... 441, 461, 479

# SECTION 10 - SPECIAL OPTIONS


1060494.....205, 207, 210, 215, 441, 446, 447, 461, 466, 467, 468, 479, 482, 483
1060584.....44
1060625...83, 90, 97, 115, 122
1060626...82, 91, 97, 115, 123
1060633.....448, 468, 483
1060637...80, 88, 96, 108, 115, 123
1060708.....205, 210, 215, 446, 466, 482
1060896.....433, 453, 454, 473, 474
1060903.....313
1060904.....82, 101, 439, 440
1060908.....444, 465
1060918.....268, 275, 279, 284, 432, 452, 472
1060919.....271
1060977.....447, 467, 482
1061033.....434, 454, 475
10702077.....207
10702082.....207
1120304.....16
1120460.....17
1120484.....135
1120487.....135
1120552.....26
1120555.....317, 319
1120588.....109
1180336.....249
1180338.....249
1180339.....244
1260017.....62
1271538.....255
1282571.....428
1282665.....424, 522
1283309.....424, 522
1283429.....424, 425
1300019.....26
1320012.....109, 116, 124
1320016...80, 88, 99, 109, 116, 124
1320022.....83, 89, 96, 99, 108, 109, 114, 116, 122, 124
1320033.....109
1320127.....136
1320136.....255
1320176.....100
1320177.....324, 337
1320218.....137
1320219.....124
1320220.....136
1320223.....82, 83, 88, 90, 91, 98, 99, 110, 115, 116, 123, 124
1320224.....91, 255
1320243.....223, 229, 234, 240
1320263.....91
1320302.....324, 327, 329, 331
1320314.....248
1320323.....114, 122
1321138.....109
1321339.....108
1321384.....178
1321700.....230, 241
1340060..80, 88, 99, 109, 116, 124
1380147.....169
1580011 80, 88, 111, 116, 124
1580012.....269
1580013.....269
1600244.....448, 468, 483
1600317.....273, 287
1600318.....274, 295
1600361.....84
1600364.....147
1600374.....111, 516
1600375.....273
1600387.....255
1600411.....147
1660234.....102
1660239.....80, 88
1660250.....111
1660257.....139
1660258.....139
1660303.....139
1660304.....139
1670767.....172, 176
1670768.....233, 238, 248
1670769.....229, 241
1670819.....260
1670824.....261
1670829....147, 152, 155, 159, 274, 279, 283
1670836.....248
1670964.....261
1671037.....274
1671092....205, 207, 211, 215, 444, 446, 463, 467, 481, 482
1671093....324, 329, 443, 463, 480, 481
1671179.....172, 173
1671216.....176, 179
1671217.....176, 177
1671218.....176, 177
1671243.....179
1671244.....179
1671245.....177
1671246.....177
1671258.....177
1671311.....213
1683053....347, 353, 365, 381
1683054.....393, 399
1683055....347, 355, 359, 381
1683061.....373
1683067.....361
1683069.....377
1683208...16, 20, 23, 389
1683263.....228, 238, 381
1683266.....223, 233, 381
1683288....223, 228, 233, 238, 377
1683294.....223, 228, 233, 238, 373
1683299.....223, 228, 361
1683307.....248, 393
1683308.....393
1683312.....243, 399
1683313.....399
1683314.....399
1683317.....248, 393
1683318.....393
1683415.....223, 234, 347
1683418.....228, 239, 347
1683609.....229, 240, 365
1683949.....381
1683952.....347
1683962.....381
1683963.....347, 355, 359
1683972.....381
1683973.....381
1683976.....347, 353
1684001.....373
1684005.....373
1684014.....361
1684015.....361
1684017.....377
1684019.....377
1684089.....365
1684090.....365
1684280.....15, 19, 345
1684289.....345
1684290.....345
1684308.....393
1684310.....393
1684418.....17, 23, 389
1684465.....15, 19, 345
1684498.....223, 228, 233, 238, 361
1700584.....496, 504, 505, 510
1700818.....496, 504
1701502.....495, 499, 509
1701503.....495, 499, 509
1701505...83, 89, 96, 496, 504, 510
1701509.....317, 320, 495, 499, 509
1701518.....509
1701529.....495, 499, 509
1701542.....108, 114, 122, 496, 504
1701543.....108, 114, 122, 496, 504
1701645.....496
1702137.....26
1702153.....495
1702265.....496, 505
1702271.....505
1702387.....276
17023987.....505
1702565.....274, 279, 283
1702566.....274, 279, 283
1702567.....274, 279, 283
1702573.....505
1702590.....190, 194
1702617.....505
1702676.....268
1702688.....495
1702720.....504, 519
1702740.....26
1702773....271, 496, 504, 510
1702774.....496, 504, 510
1702784.....496, 505
1702788.....519
1702818.....495, 501, 509
1702819.....495, 501, 509
1702860.....496, 504, 510
1702861.....496, 504, 510
1702868....324, 329, 331, 335, 337, 495, 500, 519
1702938....277, 281, 285, 313
1702941.91, 98, 115, 123
1702942.91, 98, 115, 123
1702943.90, 98, 115, 123
1702944.91, 98, 115, 123
1703084.....276
1703085.....276
1703162..80, 88, 99, 109, 116, 124
1703467.....148
1703468.....148
1703469.....495, 501, 509
1703479.....519
1703534.....415, 421
1703544.....505
1703683.....341
1703687.....496, 505, 510
1703797.....495, 500
1703804.....495, 501
1703805.....495, 501
1703808.....496, 505
1703811.....495, 499, 509
1703814.....495, 499, 509
1703923.....500
1703924.....500
1703925.....500
1703926.....500
1703927.....500
1703935.....501
1703936.....501
1703937.....501
1703938.....501
1703939.....501
1703941.....500
1703942.....500
1703943.....500
1703944.....500
1703945.....500
1703947.....501
1703948.....501
1703949.....501
1703950.....501
1703951.....501
1703953.....495, 500
1703980.....501
1703981.....501
1703982.....501
1703983.....501
1703984.....501
1703990.....505
1703996.....503
1704000.....500, 519
1704001.....500, 519

1704006 .....499
1704007 .....500
1704096 .....495
1704098 .....503
1704099 .....503
1704101 .....503
1704102 .....503
1704104 .....495
1704106 .....501
1704107 .....501
1704110 .....501
1704112 .....502
1704174 .....519
1704175 .....519
1704260 .....274, 279, 283
1704271 .....504
1704272 .....43
1704277 .....495, 499, 509
1704412 .....495, 499, 509
1704578 .....43
1704885 .....496, 504, 510
1704972 .....97, 495, 500
1704997 .....274
1705014 .....271
1705084 .....509
1705090 .....43, 496, 504, 510
1705132 .....148, 274, 279
1705170 .....164, 165, 277, 281, 285
1705305 .....324, 327, 329, 331, 335, 337
1705312 .....317
1705325 .....183, 187
1705336 .....495, 500
1705344 .....500
1705345 .....500
1705347 .....500
1705351 .....497, 505
1705355 .....324, 327, 329
1705358 .....317, 320
1705364 .....26
1705374 .....198, 205, 211, 215
1705375 .....205, 211, 215, 324, 329, 331
1705376 .....205, 210, 215
1705387 .....198, 205, 211, 215
1705426 .....505
1705427 .....505
1705429 .....505
1705430 .....505
1705460 .....205, 211, 215
1705461 .....205
1705466 .....324, 327, 329, 331, 337
1705489 .....198, 205
1705490 .....325, 337
1705519 .....317, 320
1705526 .....317, 319
1705753 .....148
1705820 .....43
1705822 .....509
1705828 .....509
1705895 .....500
1705896 .....500
1705897 .....501
1705898 .....501
1705901 .....499
1705902 .....501
1705903 .....500
1705905 .....505
1705910 .....505
1705917 .....500
1705921 .....509
1705961 .....509
1705967 .....500, 519
1705968 .....519
1705969 .....500, 519
1705977 .....510
1705978 .....509
1706059 .....97, 500
1706060 .....97, 500
1706061 .....97, 500
1706062 .....97, 500
1706063 .....97, 500
1706064 .....97, 500
1706098 .....97, 509
1706380 .....503
1706381 .....501
1706385 .....271
1706510 .....341
1706593 .....43
1706712 .....148, 152, 155, 159
1706846 .....26
1706912 .....148
1706913 .....148
1706931 .....496, 505
1706941 .....496, 505
1706968 .....500
1707013 .....495
1707014 .....495
1707045 .....502
1707046 .....502
1707047 .....502
1707048 .....502
1707049 .....502
1707051 .....502
1707052 .....502
1707053 .....502
1707054 .....502
1707055 .....503
1707056 .....503
1707057 .....503
1707059 .....503
1810058 .....147, 435
1810059 .....147, 435
1810060 .....147, 435
1810061 .....147, 435
1810062 .....147, 435
1810063 .....147, 435
1810064 .....147, 435
1810065 .....147, 435
1810066 .....147, 435
1810067 .....147, 435
1870132 .....429
1870191 .....429
1870215 .....429
2000194 .....80, 83
2000272 .....109, 110
2000274 .....99, 102
2000279 .....99
2000280 .....98
2000299 .....109
2000300 .....108
2000339 .....99, 102
2000342 .....99
2000354 .....116
2000365 .....99
2000366 .....98
2000370 .....115
2000371 .....116
2000386 .....81, 83
2030010 .....324, 327, 329, 331, 337
2060025 81, 88, 100, 109, 117, 124
2080040 .....265, 268
2080044 .....229, 240
2080051 .....179
2120149 .....49, 514
2120164 .....49
2120209 .....48
2120210 .....48, 514
2160002 .....62
2180125 .....137
2180344 .....62
2180348 .....83, 90, 96
2180380 .....414, 421
2180387 .....137
2180388 .....137
2180389 .....137
2180418 .....111, 114, 122, 137
2180467 .....109
2180724 .....414, 421
2180832 .....324, 337
2180877 .....118, 124
2200222 .....136
2200233 .....136
2220001 .....62
2220005 .....111, 114, 122
2220063 .....62
2220064 .....111, 114, 122
2220235 .....415
2220237 .....17, 405, 407
2220250 .....83
2220261 .....137
2220273 .....83
2220313 .....83, 90, 96, 108, 114
2220362 .....405, 407
2220371 .....405, 407, 411
2220372 .....414, 419
2220373 .....405, 407, 415, 421
2220374 .....414, 419
2220375 .....407, 413, 417
2220376 .....133, 413
2220377 .....130, 405, 407, 413, 417
2220379 .....413, 418
2220381 .....414, 418
2220409 .....413, 417
2220414 .....413, 418
2220415 .....405, 407, 411, 413, 417
2220418 .....137
2220428 .....413, 418
2220429 .....413, 418
2220451 .....100, 405
2220459 .....83
2220466 .....413, 417
2220468 .....411, 414
2220472 .....422
2220473 .....405, 407, 414, 420, 421
2220474 .....413, 417
2220479 .....129, 130
2220490 .....411
2220497 .....413
2220498 .....414, 419
2220500 .....407, 414, 419
2220504 .....405, 407, 411
2220507 .....407, 422
2220510 .....414, 419
2220511 .....414, 420
2220567 .....413, 418
2220574 .....414, 419
2220578 .....130, 413, 417
2220582 .....405, 407, 413, 418, 422
2220596 .....407, 413, 418
2220602 .....413, 418
2220603 .....414, 421
2220605 .....413, 417
2220606 .....405, 407
2220609 .....413, 418
2220618 .....413, 417
2220628 .....413, 418
2220646 .....130, 407, 413
2220654 .....414, 420
2220657 .....414, 419
2220738 .....413, 417
2220767 .....84
2220794 .....83
2220810 .....133, 413
2220861 .....407
2220873 .....413, 415, 418, 422
2220883 .....37, 348, 351, 353, 355, 357, 359, 361, 363, 365, 367, 369, 371, 373, 375, 377, 399, 401
2220885 .....347, 351, 353, 355, 357, 359, 365, 367, 369, 371, 382, 387, 393, 397
2220886 37, 55, 361, 363, 375, 401
2220888 .....377
2220890 .....345
2220893 .....49
2220899 .....414, 419
2220921 .....414, 419
2220923 .....414, 419
2220947 .....130, 415, 422
2220948 .....413, 417
2220974 .....414, 419
2220998 .....414, 421
2220999 .....414, 419
2221018 .....137
2221024 .....137
2221036 .....415, 422
2221042 .....413, 417

2221053.....415, 422
2221065.....414, 419
2221170..... 405
2221176...83, 90, 96, 108, 114, 122
2221197..... 137
2300004.....90, 110, 115, 122, 521
2300014..... 521
2300016..... 521
2300019..... 521
2300027..... 521
2300029..... 521
2300039..... 521
2300040..... 521
2300041 82, 90, 115, 122, 521
2400060.....206, 211, 215, 447, 457, 467, 477, 482
2400064.....206, 211, 215, 447, 467, 482, 516
2400065.....436, 438, 455, 475, 514
2400066.....436, 447, 455, 468, 475, 483
2400070.....447, 468, 483, 516
2410014..... 271
2420172.....148, 152, 155, 159
2420187..... 110
2420202..... 255
2420203.....182, 186, 189, 193
2460048.....202, 209, 213
2460049.....181, 185
2460050..... 202
2460051.....189, 193
2460052.....189, 193
2460055.....181, 185
2460056.....181, 185
2460057.....181, 185
2540038..... 256
2560136.....274, 279, 283
2560173..... 269
2575716..... 43
2580024...82, 91, 98, 115, 123
2580050...83, 90, 98, 115, 123
2580055....82, 85, 91, 520
2580062..... 102
2580063.....115, 123
2600210.....173, 178, 179
2600281..... 265
2680433.....172, 176
2680434.....172, 176
2680440.....172, 173
2680441.....172, 173
2720058.....81, 83, 88, 90, 96, 108, 114, 117, 124
2720144..... 136
2720160.....324, 337
2720271.....118, 124
2720392.....111, 114, 122
2720398..... 100
2720434.....81, 88, 100
2720435..... 109
2720436..... 109
2720449..... 100
2720472..... 108
2720496.....114, 122
2720509.....81, 88
2720510..... 81
2720514.....109, 117
2720515.....82, 88
2720532..... 108
2720563.....117, 124
2720564.....117, 124
2720566.....114, 122
2720598.....114, 122
2750532 .. 83, 90, 97, 109, 114, 117
2751032..... 62
2751396.....413, 418
2751410..... 411
2751434..... 411
2752341..... 405, 414, 421
2752343.....414, 421
2752453.....414, 420
2752462..... 411, 414, 419
2752468.....414, 419
2752469.....414, 419
2752475.....405, 408
2752484.....415, 422
2752497.....414, 419
2752506.....413, 418
2752516.....413, 418
2752519.....415, 422
2752573.....413, 418
2752574..... 407
2752579.....414, 420
2752592.....405, 408
2752593.....414, 420
2752600..... 419
2752601.....414, 419
2752603..... 414
2752604.....413, 418
2752611.....405, 408
2752618.....415, 421
2752620.....405, 408
2752635.....413, 418
2752636.....414, 419
2752650.....414, 421
2752655..... 413
2752656.....413, 418
2752723.....413, 417
2752724.....413, 418
2752783.....414, 419
2752910.....405, 408
2752928.....405, 408
2752929..... 405, 413, 418
2752939.....414, 420
2752985.....414, 420
2752987.....415, 421
2752989.....415, 421
2752990.....414, 420
2752991.....414, 420
2753046.....414, 421
2753047.....414, 420
2753052.....414, 419
2753055.....414, 420
2753056.....414, 420
2753132.....413, 417
2753133.....413, 418
2753134.....414, 419
2753135.....414, 420
2753325.....413, 417
2753435..... 405
2753924.....405, 407
2753925.....405, 407
2753926..... 407
2753928..... 408
2753929.....405, 407, 408, 409
2753930..... 409
2753933..... 411
2753967..... 405
2753968.....413, 418
2753969..... 405
2754227..... 409
2754228..... 409
2754229..... 407
2754230..... 408
2754231..... 408
2754232..... 409
2754235.....405, 408
2754328.....413, 417
2754329.....413, 417
2754330.....413, 417
2754731..... 407
2754732..... 407
2754733..... 408
2754734..... 409
2760105.....148, 152, 155, 159, 274, 279, 283
2780205.....61, 65
2780269.....25, 29
2780271..... 16
2780276..... 17
2792191..... 424
2792192..... 424
2792315..... 425
2792405..... 425
2792612..... 411
2792687.....407, 424
2792688.....413, 417, 424
2792689.....413, 417, 425
2792690.....411, 424
2792691..... 425
2792692.....405, 424
2792697..... 424
2792702..... 424
2792730.....407, 424
2792786..... 424
2792787..... 424
2820031.....183, 186, 190, 193, 198, 204, 210, 214, 433, 454, 474
2820035.....163, 269, 440, 459
2820076..... 173
2820077.....173, 177
2820078.....173, 179
2820082.....173, 179
2820083.....173, 179
2820118.....433, 434, 454, 474
2820173..... 109
2820176..... 178
2820180.....109, 117
2820186..... 110
2820187..... 110
2820188..... 110
2820236..... 178
2820237..... 177
2820238..... 177
2820243.....117, 124
2820244.....117, 124
2820247.....487, 489
2840018..... 169
2860012..... 186
2860030.... 148, 152, 155, 159, 514
2890245..... 17
2900708..... 48
2900756.....521
2900770..... 48, 373, 375, 399, 401
2900792.... 347, 351, 353, 355, 357, 359, 361, 363, 365, 367, 369, 371, 373, 375, 377, 379, 399, 401
2900838.....524
2901273.....373, 375
2901285.....361, 363
2901301..... 348, 355, 382
2901303.... 348, 351, 353, 365, 382
2901322.....377, 379
2901443.... 448, 468, 483, 524
2901763..... 53
2901861.... 393, 397, 399, 401
2902065..... 102
2902085..... 187
2902212.....317, 319
2902217..... 324, 327, 329
2902266.....345
2902296 82, 97, 438, 458, 477
2902297.....108, 438
2902303.....520
2902307.....520
2902308.....520
2902309.....520
2902310.....520
2902311.....520
2902312.....520
2902322.....520
2902329.....520
2902350.....520
2902443..... 436, 457, 476
2902470.....522
2902471.....522
2902472.....522
2902531.... 115, 123, 438, 458
2902549.....444
2910100.....522
2910462.....521
2920028.... 276, 277, 281, 283, 285
2920029.... 276, 277, 281, 283, 285
2920110.....164

2920113 .....164
2920129 ....256, 432, 436, 452, 455, 472, 475
2920130 .....163
2920140 ....268, 447, 467, 483
2920157 ..... 164, 269
2920161 .....163, 460, 478
2920214 .....163
2920215 .....163
2940074 ..... 265, 514
2940088 .....173, 178, 179
2940188 ..... 173, 177
2980125 .....43
3010141 .....43
3020008 .....25
3020016 .90, 98, 101, 521
3020017 ..... 16, 521
3020021 .....102
3020039 ....233, 234, 238, 239, 240, 243, 248
3020044 .82, 90, 101, 521
3160273 ..... 61, 67
3160299 ..... 25, 33
3160300 ..... 25, 33
3160349 ..... 25, 37
3160350 ..... 25, 37
3200362 ....100, 109, 117, 124
3200406 .....81, 88, 100
3220103 .....100
3220104 .....100
3220113 ..... 81, 88
3220134 .....111
3220154 .....81
3250033 .....496, 504, 510
3250585 .....269
3250872 .....43, 496, 504, 510
3251102 ....183, 187, 190, 194, 197, 269
3251243 ....186, 190, 194, 198, 495, 499
3251813 .....495, 501, 509
3252221 .....519
3252347 ..... 495, 501
3252507 .....183, 186, 187
3252764 .....201, 210, 214
3255325 .....186
3271601 .....39
3271805 .....139, 143, 271
3272001 .....16
3272605 ....224, 230, 234, 241, 255
3290405 ....115, 122, 444, 464, 481
3290505 ....115, 122, 183, 187
3290507 .....91
3290605 ..... 324, 337
3290606 .....266
3290607 .....165
3290801 ..... 81, 88
3300106 ..... 17, 25
3300151 ....266, 324, 327, 329, 331, 523
3300205 .... 148, 152, 155, 159
3300353 .... 155, 274, 279, 283
3300396 .... 198, 205, 207, 211, 215
3300408 .... 148, 152, 155, 159
3300430 .....305, 309
3300454 .....198, 204
3310601 .... 169, 205, 211, 215
3310801 .....260
3310805 .....137, 261
3311001 .....207, 275
3311005 .... 164, 165, 172, 173, 176, 178, 179, 183, 186, 190, 194, 198, 204, 275, 279, 283, 324, 327, 329, 331, 337
3311401 .... 148, 153, 233, 238, 248, 313
3311405 .... 49, 81, 83, 88, 90, 97, 100, 108, 109, 115, 117, 123, 124, 155, 172, 176, 190, 194, 197, 203, 210, 214, 255, 261, 268, 307, 444, 464, 481, 496, 504, 510, 523
3311501 ..... 173, 176, 313
3311505 .... 39, 81, 82, 83, 88, 90, 97, 100, 110, 114, 115, 122, 172, 176, 194, 201, 210, 214, 224, 229, 234, 240, 248, 311, 341
3311508 .....197, 255
3311601 .... 136, 173, 176, 210, 214, 276, 280, 284, 307
3311605 .... 81, 89, 91, 97, 100, 108, 109, 114, 115, 117, 123, 124, 164, 169, 172, 176, 177, 183, 186, 229, 240, 244, 248, 268, 271, 324, 327, 329, 331
3311608 .....124
3311705 .....183, 186
3311801 .. 81, 89, 97, 108, 198, 204, 260
3311805 81, 89, 100, 109, 116, 117, 123, 124, 172, 176, 224, 230, 234, 241, 255, 311
3312005 .....255, 319
3312201 .....317
3312205 .....319
3312602 .....164, 165
3313403 .....17
3321501 .....177
3322201 .....139, 143
3323403 .....16, 17
3340608 ..... 393, 395, 397
3340764 .....248
3340765 ..... 248
3340787 ..... 248
3340871 .....243, 248
3340881 .....243, 248
3340911 ..... 39
3340956 .....317, 319
3340966 ..... 43
3380428 .....83, 90, 97
3380434 ..... 268
3380557 ..... 40
3380558 ..... 40
3380560 ..... 40
3380573 ..... 40
3380652 ..... 521
3420156 ..... 276
3420372 ..... 44
3420447 ..... 44
3421453 .....324, 337
3421565 .....44, 62
3422326 ..... 16
3422327 ..... 43
3422426 .....16, 17, 20, 23
3422427 .....17, 20
3422429 .....16, 17, 20, 23
3422430 .....16, 17, 20, 23
3422448 ...82, 90, 97, 108, 114, 122
3422457 ..... 248
3422532 .....98, 108
3422533 ...82, 90, 97, 116, 123
3422561 .....228, 239
3422565 .....223, 233
3422566 .....228, 233, 239
3422571 .....223, 228, 233, 234, 238, 239
3422572 .....223, 228, 233, 234, 238, 239
3422573 .....223, 228, 233, 238
3422575 .....223, 228, 234, 239, 243
3422576 .....223, 228
3422577 .....223, 233
3422578 .....223, 234
3422579 .....228, 238
3422580 .....223, 234
3422582 .....223, 234
3422583 .....228, 239
3422592 .....15, 19
3422661 ..... 341
3422813 ..... 43
3422841 ..... 44
3422847 ..... 44
3422848 ..... 43
3422860 .....228, 240
3422861 .....228, 240
3422867 .....228, 240
3422900 .....16, 20, 23
3423175 ..... 17
3430616 .....280, 284
3430816 ..... 169
3450306 ..... 245
3450404 ..... 169
3450606 ..... 244
3450810 ..... 17
3451010 .....16, 17
3460334 .....317, 319
3460420 .....172, 177
3470003 ..... 276, 280, 284
3480188 .... 347, 355, 359, 381
3480206 .....361
3480210 .... 347, 353, 365, 381
3480211 .....373
3480212 .....393, 399
3480216 .....377
3480288 .....345
3510822 .....265
3510830 .....265
3510831 .....265
3510833 .....265
3510868 .....271
3510884 .....271
3520028 .... 182, 183, 186, 189, 193
3520031 .....156
3520033 ..... 173, 280, 284
3520034 .....229, 240
3520035 ..... 148, 155, 280
3520054 .... 101, 274, 279, 283
3520071 .....317, 319
3520072 .....265, 271
3520182 .....309
3520189 .... 205, 207, 446, 467, 482
3520190 .....317
3520192 .....207, 482
3520198 ..... 265, 266, 267
3536089 .....268
3537318 .....61
3537416 .....100
3537445 .....169
3538247 .....393, 397
3538758 .....249
3538771 .....393
3539219 ..... 148, 152, 159
3539228 .....244
3539236 .....244
3539779 .... 223, 229, 234, 240
3539872 ..... 81, 100, 110, 117
3539877 .....15, 19
3539878 .....15, 19
3539923 .....172, 176
3539956 ..... 83, 90, 97
3539971 .....100
3539988 .....173, 179
3570270 .....245
3570277 .....245
3570374 .... 224, 229, 234, 240
3570375 .....244
3572009 .....44
3572010 .....44
3572011 .....44
3572012 .....44
3572280 ..... 110, 117, 124
3573400 .... 324, 327, 329, 331

357364 .....324, 327, 329, 331
357409 1 ..... 313
357416 2 ..... 110
357417 1 ..... 249
357418 5 ..... 249
357420 6 .....81, 89
357420 7 .....81, 89
357420 8 .....81, 89
357422 5 .....190, 210
357422 9 ..... 210
357426 2 ..... 210
357450 4 ..... 110
357468 4 ..... 182
357497 8 ..... 100
357535 9 ..... 313
357586 3 .....198, 204
357679 9 .....324, 337
357712 1 .....324, 327, 329, 331
358013 4 .....182, 186
358015 8 ..... 185
358027 6 .....182, 186
358031 2 .....190, 194, 210, 214
358031 3 .....190, 210
358031 4 .....210, 214
358031 7 .....198, 204
358031 8 .....198, 204
358031 9 .....198, 204
358032 0 .....198, 204
358032 1 ..... 204
358032 2 ..... 181
358032 4 .....190, 193
358032 5 .....190, 193
358034 8 .....194, 214
360024 2 ..... 133
360036 5 ..... 47
360038 1 ..... 128
360039 5 ...82, 90, 98, 109, 116, 123, 133
360039 6 82, 90, 109, 116, 129
362003 3 ..... 100
362004 0 .....110, 117, 124
362004 7 .....81, 89
364153 3 .....206, 211, 216
364156 9 ..... 313
373012 0 ..... 438
373012 1 ..... 438
374004 9 .....148, 152, 155, 159, 440, 460, 479, 514
374006 7 81, 89, 100, 101, 110, 117, 124, 514
374008 0 .....183, 186, 190, 194, 203, 210, 214
374008 6 ..... 491
376013 3 ..... 248
376017 0 .....44, 62, 335
376036 8 .....347, 353, 365, 381, 399
376036 9 .....347, 355, 359, 381
376037 0 ..... 373
376037 2 ..... 361
376038 4 ..... 377
379001 2 ..... 17, 108, 109, 114, 116, 122, 123, 164, 238, 268, 274, 277, 280, 281, 283, 285
379004 5 .....25
379011 0 .....395
379015 2 ..... 83, 90, 98
382000 1 .... 164, 496, 504, 506, 510
382002 0 .....266
384114 3 .... 16, 17, 20, 23, 43, 82, 90, 97, 108, 114, 122, 223, 228, 233, 234, 238, 239, 240
384120 3 .... 223, 228, 233, 234, 238, 239, 243
384125 8 .... 15, 16, 19, 20, 23
384126 3 .....17
384128 5 ..... 16, 20, 23
384129 5 .....244
384134 0 ..... 229, 240, 248
384134 7 .....245
384167 7 .....23
389004 0 .....271
390005 4 .....271
390008 5 .....164, 165
390016 6 .....223
390023 2 .....172, 177
390023 9 .... 223, 229, 233, 234, 238, 239
390026 8 .... 148, 152, 155, 159
390028 3 .....255
390032 2 .....190
391060 6 .... 197, 201, 210, 214
391060 8 .....169
391061 0 ..... 205, 211, 215
391080 4 .... 148, 152, 155, 159
391080 8 .....137
391101 2 .....165
391101 6 .....178, 179
391104 0 .....164
393081 6 .....261
393082 4 .....260, 261
393101 6 .....198, 202
393140 8 .....260, 305
393142 4 .....305
393143 0 .....260
393144 8 .....393, 397
393151 6 .... 347, 351, 353, 365, 381, 393, 397, 399, 401
393162 0 .. 83, 90, 98, 109, 116, 123, 347, 355, 357, 359, 381, 387
393163 2 .....204
393172 0 .....373, 375
393203 2 .....361, 363
393222 4 .....61
393224 0 .....377, 379
394060 4 .....43
396009 8 .....17
396034 3 .....16
396038 9 ...83, 90, 98, 109, 116, 123, 173, 177, 178, 179
396040 7 ..... 101
396041 8 .....172, 177
396042 2 .....197, 201, 210, 214, 446, 466, 481
396043 8 .....173, 179
396046 1 ..... 164
396046 2 .....173, 178, 179
396046 7 .....172, 176
396046 8 81, 89, 101, 110, 117, 124
396046 9 81, 89, 101, 110, 117, 124
396052 6 .....25
396059 1 ..... 110
398000 7 ...82, 91, 98, 115, 123
399000 1 ..... 435
399001 0 .....436, 457, 476
401060 8 .....324, 337
401061 8 ..... 267
403150 5 ..... 303
403151 6 ..... 307
403160 8 .....183, 187
403170 9 ..... 91
403191 1 .....81, 89
403201 5 .....198, 204
406009 2 .....443, 462, 480
406070 0 .....201, 210, 214, 443, 446
406080 2 .....183, 186, 190, 194, 197, 201, 210, 214, 269
406080 4 .....49, 249
406080 5 83, 89, 101, 110, 117, 124, 179, 248
406080 7 ..... 49
406080 8 ..... 243
406090 6 .....148, 152, 153, 155, 159
406090 7 ..... 163
406091 8 ..... 49
406095 9 ..... 521
406101 0 ..... 177
406104 3 .....202, 210, 214, 443, 446
406104 9 ..... 203
406105 4 ..... 255
407058 5 ..... 187
407086 3 .....243, 248
407086 4 .....243, 248
407089 7 .....243, 248
407089 8 .....243, 248
407092 9 .....243, 248
407093 2 ..... 249
407094 4 .....15, 19
407094 5 ..... 15
407098 7 .....148, 152
407099 1 ..... 155
407100 7 ..... 248
407100 9 ..... 61
407105 9 ..... 43
407106 1 ..... 249
407106 2 ..... 249
407110 1 .....15, 16, 19
410010 0 .....365
412003 5 .... 432, 436, 452, 457, 472, 476
413040 1 ..... 16, 20, 23
413040 2 ..... 16, 20, 23
413040 9 .....16
413041 0 .....16
413041 2 .....16, 20
413041 3 .....17
413041 4 .....17
413041 5 .....17
416014 3 .....172, 176
422016 2 .....164
422019 1 .....81, 89
424001 8 .... 183, 187, 190, 194, 197, 203
424003 2 .... 163, 164, 165, 166
424003 3 .... 255, 303, 305, 307
424008 4 .....39
424009 9 .... 268, 313, 324, 327, 329
424010 2 .....135
424014 9 .....317, 319
428029 5 .....136
430011 1 .....210, 214
430015 7 .....198, 204
434073 8 .....190, 210
434123 9 .....117, 124
434124 1 .....117, 124
436003 1 .....268, 275
436005 7 .....313, 516
436007 0 .... 198, 205, 207, 211, 215, 516
436023 2 .... 447, 467, 482, 516
436032 8 .... 148, 152, 159, 238, 274, 277, 281, 285, 514
436033 0 .....274, 514
436033 1 ..... 17, 268, 281, 285, 514
436033 6 .... 108, 115, 122, 153, 164, 165, 183, 186, 190, 194, 197, 201, 210, 214, 269, 277, 516
436038 7 .... 274, 277, 280, 281, 283, 285, 313, 514
436040 7 ..... 274, 280, 283
436043 6 .....135
436046 9 .... 148, 152, 155, 159, 516
436047 0 ..... 148, 152, 516
436047 5 .... 148, 152, 155, 159, 274, 280, 283, 514
436047 6 .... 148, 152, 155, 159, 274, 280, 283, 514
436051 7 .... 144, 459, 478, 514
436052 2 .... 164, 165, 277, 281, 285, 516
436054 2 .... 182, 186, 189, 193, 516
436057 8 ..... 260, 261, 516
440027 5 .....136

4400399 .....135
4400420 .....136
4400454 ..... 135, 136
4420014 ..... 317, 319
4420037 .... 269, 324, 327, 329, 331
4420038 .....136
4420051 ..... 43, 510
4420060 ..... 187, 261
4420062 .....341
4420066 ..... 317, 319
4420068 ..... 311, 313
4460007 ..... 275, 280, 283
4460027 .... 182, 186, 189, 193, 441, 461, 479
4460042 .... 275, 276, 279, 284
4460049 .....313
4460051 .... 203, 210, 214, 446, 466, 481
4460071 .... 197, 203, 210, 214, 268, 276, 279, 284, 432, 443, 446, 452, 462, 466, 472, 480, 481
4460125 ..... 442, 462, 480
4460134 .... 441, 443, 461, 463, 479, 480
4460190 .... 182, 186, 189, 193
4460205 .... 441, 443, 461, 463, 479, 480
4460224 ..... 440, 459, 478
4460225 .... 432, 446, 452, 466, 472, 481
4460226 .... 153, 256, 276, 279, 284, 292, 301, 432, 436, 438, 440, 441, 446, 447, 448, 452, 456, 459, 460, 466, 467, 468, 472, 473, 475, 476, 478, 479, 482, 483
4460227 .... 432, 436, 437, 447, 452, 457, 459, 467, 472, 476, 477, 478, 482
4460233 .... 441, 443, 461, 463, 479, 480
4460234 .... 163, 164, 165, 274, 280, 283, 313
4460259 ..... 440, 460, 479
4460260 ..... 440, 460, 479
4460265 ..... 292, 301
4460267 .... 438, 440, 456, 459, 460, 476, 483
4460268 .... 163, 437, 438, 440, 456, 459, 476, 479, 481
4460297 ..... 440, 460, 479
4460320 .... 438, 440, 447, 456, 459, 460, 467, 478, 482, 483
4460321 .... 441, 448, 460, 468, 479, 483
4460326 .... 438, 440, 456, 459
4460339 .....438
4460346 .... 197, 202, 210, 214, 442, 446, 462, 466, 480, 481
4460374 .... 206, 211, 215, 447, 460, 467, 479, 482
4460375 .... 206, 211, 215, 447, 460, 467, 479, 482
4460411 ..... 206, 211, 215
4460412 ..... 206, 211, 215
4460413 ..... 206, 211, 216
4460414 ..... 206, 211, 216
4460415 ..... 206, 211, 216
4460418 .... 432, 436, 452, 457, 472
4460419 .... 432, 436, 452, 457, 472, 476
4460424 .... 163, 437, 438, 440, 447, 456, 459, 467, 476, 482
4460425 .... 198, 205, 207, 211, 215, 313, 446, 447, 467, 482, 483
4460426 .... 148, 152, 155, 159, 198, 205, 207, 211, 215, 269, 435, 446, 447, 455, 467, 468, 475, 482, 483
4460428 .... 274, 280, 283, 432, 452, 472
4460434 .... 432, 436, 452, 457, 472, 476
4460445 .... 438, 440, 456, 459
4460457 .... 437, 438, 456, 476
4460458 .... 215, 437, 438, 439, 456, 460, 467, 476, 479, 482
4460459 .... 447, 467, 468, 483
4460460 ..... 437, 456, 476
4460464 .... 219, 276, 279, 284, 432, 433, 434, 437, 439, 440, 452, 453, 455, 457, 459, 460, 472, 474, 475, 476, 477, 483, 491
4460465 .... 206, 211, 215, 256, 433, 434, 437, 438, 447, 453, 454, 455, 456, 458, 460, 466, 467, 473, 474, 475, 477, 478, 481, 482
4460466 .... 256, 303, 433, 434, 453, 454, 457, 458, 474, 476, 485, 491
4460467 .... 448, 468, 483, 524
4460470 .... 148, 152, 155, 159, 274, 280, 283, 432, 435, 452, 455, 472, 475
4460471 .... 148, 152, 155, 159, 274, 280, 283, 432, 435, 452, 455, 472, 475
4460473 ..... 433, 434, 453, 454, 474
4460476 ..... 447, 467, 468, 483
4460488 ..... 148, 152, 155, 159, 166, 274
4460496 ..... 153, 155, 160, 456, 475
4460497 ..... 153, 155, 160, 456, 475
4460499 . 53, 59, 440, 459
4460508 ..... 303, 432, 433, 437, 452, 453, 457, 472, 474, 477
4460509 ..... 433, 434, 453, 454, 474
4460510 ..... 448, 468, 483, 524
4460526 ..... 148, 152, 155, 159, 435, 455, 475
4460536 ..... 436, 452, 457, 472, 476, 478
4460539 ..... 436, 437, 452, 456, 472, 475, 476
4460579 ..... 437
4460580 ..... 437
4460582 ..... 437
4460607 ..... 206, 211, 216
4460608 ..... 438, 457
4460618 ..... 476
4460633 ..... 444
4460634 ..... 436, 457, 476
4460635 ..... 436, 457, 476
4460662 ..... 463
4460693 ..... 438, 457
4460701 ..... 441, 443, 461, 463, 479, 480
4460705 ..... 441, 461, 479
4460708 ..... 275, 280, 283, 432, 436, 452, 456, 472, 475
4460709 ..... 443, 463, 480
4460710 ..... 443, 463, 481
4460713 ..... 437
4460725 ..... 437
4460726 ..... 438
4460728 ..... 438
4460742 ..... 206, 215, 438, 439, 447, 460, 467, 479, 482
4460743 ..... 206, 215, 439, 447, 460, 467, 479, 482
4460761 ..... 256, 432, 437, 452, 457, 472, 477
4460789 ..... 447, 467, 468, 483
4460790 ..... 447, 467, 468, 483
4460792 ..... 438
4460799 ..... 438
4460800 ..... 438
4460836 ..... 256
4460850 ..... 447, 467, 468, 483
4460865 ..... 433, 434, 453, 454, 473, 474
4460866 .... 432, 433, 437, 452, 454, 457, 472, 474, 477
4460868 .....477
4460871 .... 287, 289, 295, 299, 432, 436, 437, 438, 440, 452, 456, 457, 458, 459, 472, 476, 477, 478
4460873 .... 432, 436, 452, 457, 472, 476
4460874 .... 148, 432, 435, 452, 457, 472, 477
4460875 .... 148, 432, 435, 452, 458, 472, 477
4460876 ..... 437, 457, 477
4460877 .....477
4460878 ..... 437, 457, 477
4460879 ..... 432, 452, 472
4460880 .... 437, 438, 456, 476
4460884 ..... 452, 472, 477
4460887 .... 432, 437, 452, 457, 472, 477
4460891 .... 434, 437, 455, 456, 458, 460, 473, 475, 476, 478
4460892 ..... 436, 456, 475
4460894 .... 436, 456, 458, 475
4460897 .... 219, 434, 439, 440, 455, 459, 460, 475, 476, 483
4460899 ..... 457, 485, 491
4460905 .... 148, 275, 432, 435, 436, 437, 452, 456, 457, 472, 476, 477
4460906 .... 194, 441, 460, 479
4460910 .....487
4460911 .....485
4460932 .....452, 472
4460933 .....256
4460941 .....485
4460942 .....303
4460943 .... 436, 452, 457, 458, 472, 476, 477, 485
4460944 .... 437, 452, 456, 472, 476
4460956 .... 206, 211, 216, 444, 465
4460957 .... 206, 211, 216, 444, 465
4460958 .... 201, 210, 214, 445, 466, 481
4460959 ..... 444, 463, 481
4460960 ..... 443, 463, 480
4460961 ..... 441, 460, 479
4460962 .... 324, 329, 463, 480
4460963 .... 205, 207, 211, 215, 446, 463, 467, 482
4460967 .... 206, 211, 215, 447, 467, 482
4460968 .... 183, 187, 260, 261, 443, 463
4460971 .....324, 337

4460978 ..... 438, 439
4460979 ..... 437, 438, 439, 456, 476
4460995 ..... 437
4460996 ..... 437
4461001 ..... 206, 211, 216
4461005 ..... 437, 439, 456, 458, 476
4461006 ..... 437, 439, 456, 458, 476
4461008 ..... 439, 456, 458, 476
4461052 ..... 437, 439, 456, 458, 476
4461053 ..... 437, 439, 456, 458, 476
4461054 ..... 437, 439, 456, 458, 476
4461060 ..... 437, 439, 456, 458, 476
4461070 ..... 437, 456, 476
4461071 ..... 436, 457, 476
4461072 ..... 436, 457, 476
4461073 ..... 436, 457, 476
4461074 ..... 436, 457, 476
4461077 ..... 485, 491
4461095 ..... 437, 456, 476
4461109 ..... 438, 457
4461111 ..... 438, 457
4461113 ..... 438, 457
4461121 ..... 438, 456
4461122 ..... 438, 456
4461123 ..... 438, 456
4461124 ..... 438, 457
4461157 ..... 437, 456, 476
4461161 ..... 438, 457
4461196 ..... 443, 463
4461197 ..... 445, 465
4461198 ..... 442, 443, 462
4461199 ..... 443, 463
4461200 ..... 445, 465
4461201 ..... 442, 443, 462
4461202 ..... 443, 463
4461203 ..... 445, 465
4461204 ..... 442, 443, 462
4461205 ..... 443, 463
4461206 ..... 445, 465
4461207 ..... 442, 443, 462
4461222 ..... 457
4461244 ..... 442, 443, 462
4461245 ..... 442, 443, 462
4461246 ..... 442, 443, 462
4461249 ..... 443, 463
4461250 ..... 445, 465
4520283 ..... 26
4520284 ..... 26
4520287 ..... 26
4520288 ..... 26
4520289 ..... 26
4520290 ..... 26
4520328 ..... 25
4520341 ..... 26
4520344 ..... 26
4520345 ..... 26
4520346 ..... 25
4520355 ..... 26
4520356 ..... 26
4520357 ..... 26
4520427 ..... 26
4520428 ..... 26
4520601 ..... 26
4520602 ..... 26
4520604 ..... 26
4530028 ..... 324, 327, 329, 333
4566408 ..... 373
4566425 ..... 393
4566468 ..... 347, 353, 355, 359, 381
4566501 ..... 361
4566605 ..... 110
4566667 ..... 377
4567073 ..... 81, 89
4567241 ..... 244, 245
4568116 ..... 136
4568119 ..... 136
4568133 ..... 44
4568721 ..... 81, 89
4568734 ..... 190, 210
4568735 ..... 190, 194, 210, 214
4569083 ..... 110
4569092 ..... 110
4569171 ..... 101
4569173 ..... 110
4569177 ..... 84
4569203 ..... 110
4569342 ..... 117
4569371 ..... 84, 93
4569384 ..... 117
4569385 ..... 115, 122, 136
4640113 ..... 26
4640261 ..... 43
4640438 ..... 373, 375
4640509 ..... 347, 351, 353, 355, 357, 359, 361, 363, 365, 367, 369, 371, 373, 375, 377, 379, 399, 401
4640605 ..... 361, 363, 377, 379
4640647 ..... 399, 401
4640744 ..... 133, 413
4640858 ..... 345
4640862 ..... 393, 395, 397
4640866 ..... 48
4640908 ..... 48
4640921 ..... 48, 59
4640922 ..... 48, 59
4640929 ..... 261
4640932 ..... 348, 351, 353, 355, 357, 359
4640989 ..... 110, 117
4640999 ..... 399, 401
4641022 ..... 136
4641097 ..... 47, 51
4641108 ..... 48
4641122 ..... 26
4641139 ..... 260
4641284 ..... 407
4641307 ..... 405
4641319 ..... 345
4641329 ..... 521
4641390 ..... 345
4641409 ..... 39
4641410 ..... 39
4641436 ..... 260
4641452 ..... 47, 51
4711000 ..... 165, 207
4711400 ..... 49, 97, 108, 110, 115, 117, 122, 124, 156, 163, 190, 194, 197, 203, 210, 214, 219, 244, 255, 261, 267, 268, 305, 307, 309, 444, 464, 481, 523
4711500 ..... 39, 48, 81, 89, 108, 110, 115, 122, 201, 210, 214, 249, 261, 276, 280, 284
4711600 ..... 48, 62, 83, 89, 90, 98, 101, 110, 115, 117, 123, 124, 173, 198, 204, 210, 243, 249, 255, 261
4711700 ..... 101, 165, 190, 194
4711800 ..... 169, 197, 203, 210, 214, 271
4711900 ..... 101
4712000 ..... 319
4712200 ..... 319
4712600 ..... 165
4740016 ..... 17
4740036 ..... 44
4740076 ..... 172, 176
4740111 ..... 43
4740155 ..... 43
4740158 ..... 15, 19
4740171 ..... 172, 176
4740184 ..... 43
4740256 ..... 16, 20, 23
4740274 ..... 81, 89, 101, 110, 117, 124
4740283 ..... 16
4740362 ..... 164, 268
4740393 ..... 25
4740397 ..... 155, 183, 186, 190, 194, 269, 280, 283
4740439 ..... 228, 240
4740444 ..... 148, 152, 155, 159
4740463 ..... 16, 20, 23
4740500 ..... 177
4740518 ..... 155
4740543 ..... 16
4750600 ..... 205, 211, 215
4750800 ..... 137
4751000 ..... 44, 164, 165, 172, 173, 176, 178, 179, 183, 186, 190, 194, 198, 202, 266, 276, 280, 283, 324, 327, 329, 331, 337
4751400 ..... 81, 83, 89, 90, 97, 101, 109, 110, 116, 117, 123, 124, 148, 152, 153, 155, 159, 165, 172, 176, 203, 223, 229, 233, 234, 238, 240, 248, 255, 260, 261, 268, 275, 280, 283, 309, 313, 324, 327, 329, 331, 496, 504, 510
4751500 ..... 43, 82, 89, 97, 110, 115, 122, 172, 177, 183, 186, 194, 197, 202, 224, 229, 234, 240, 255, 311, 313, 341
4751600 ..... 39, 40, 81, 89, 91, 97, 101, 108, 110, 115, 117, 124, 136, 137, 139, 143, 165, 172, 173, 177, 179, 182, 186, 190, 214, 244, 268, 280, 284, 324, 327, 329, 331, 393
4751700 ..... 101
4751800 ..... 81, 82, 89, 97, 108, 116, 117, 123, 124, 136, 139, 143, 190, 245, 269, 271, 313
4752000 ..... 83, 90, 97, 108, 115, 122
4760600 ..... 205, 211, 215
4761000 ..... 16, 172
4761400 ..... 148, 152, 153, 155, 159, 204
4761500 ..... 210, 214
4761600 ..... 210, 214
4770600 ..... 169
4791400 ..... 89, 101, 117, 124, 197, 203, 210
4791600 ..... 39
4811400 ..... 444, 464, 481
4811600 ..... 91, 183, 187
4811700 ..... 91, 165, 267, 324, 337
4811900 ..... 81, 89, 91, 182, 194, 204, 214
4812000 ..... 91, 110
4812100 ..... 82, 89, 91, 183
4812200 ..... 101
4831900 ..... 102, 110, 117, 124
4832000 ..... 81, 89, 110
4844815 ..... 228
4844816 ..... 228
4844817 ..... 228
4844958 ..... 62
4844964 ..... 135
4844969 ..... 250
4844972 ..... 250
4844978 ..... 250
4844979 ..... 250
4844983 ..... 244
4844984 ..... 244
4845163 ..... 169
4845194 ..... 172, 177
4845203 ..... 172, 177
4845395 ..... 101
4845404 ..... 101, 110
4845414 ..... 172, 177
4845582 ..... 341
4846005 ..... 223
4846006 ..... 228

4846218 .....261
4846295 .....44
4846296 .....44
4846452 .....266
4846561 .....269
4846566 .....101
4846573 .....224, 230, 255
4846627 .....324, 327, 329, 331
4846651 .....317
4846673 .....313
4846790 ..... 81, 89
4846805 ..... 81, 89
4846806 .....110
4891500 ..... 156, 190
4891600 ..83, 90, 98, 101, 109, 116, 123, 169, 177, 190, 194, 210, 214, 224, 230, 234, 241, 255
4891700 .....210
4891800 .....15, 19, 25, 62, 169, 210, 224, 230, 235, 241, 255, 311
4892000 ..16, 61, 62, 190, 255
4892200 .....317
4892600 .....164, 224, 230, 235, 241, 255
4920385 .....110, 117, 124
4921829 .....441, 461, 479
4921927 .....48, 440, 459
4921928 .....48, 440, 459
4921954 .....441, 461, 479
4921957 .....441
4922493 .....433, 453, 473
4922494 .....433, 454, 474
4922637 .....436, 456, 475
4922639 ..... 275, 432
4922641 .....198, 206, 211, 215, 441, 447, 460, 467, 479, 482
4922643 .....440, 460, 479
4922666 .....275, 280, 283, 432, 452, 472
4922705 .....256
4922737 .....81, 82, 439
4922757 ..... 206, 446
4922764 .....447, 467, 482
4922810 .....433, 454, 474
4922811 .....434, 454, 474, 475
4922869 .....255
4922890 .....434, 455, 475
4922891 .....434, 454, 455, 475
4922892 .....269, 434, 447, 454, 468, 474, 483
4922893 .....434, 454, 474
4922894 .....269, 433, 447, 454, 468, 474, 483
4922895 .....433, 454, 474
4922896 ..... 434, 455
4922905 .....210, 211, 446
4922925 .....204, 215, 446, 466, 481
4922968 .....439
4922970 .....441
4923212 .....435, 437
4923223 .....435, 436
4923224 .....152, 159, 435, 438, 455, 456
4923226 .....435, 437
4923227 .....435, 437
4923231 .....435, 436
4923379 .....101, 440, 459, 477
4923420 .....215, 447, 467
4923445 .....441, 460
4923462 .....433, 453, 454, 473, 474
4923472 .....433, 453, 473
4923473 .....433, 454, 474
4923474 .....433, 454, 474
4923475 .....434, 454, 474
4923476 .....434, 454, 475
4923492 .....435, 437
4923500 .....434, 454, 475
4923501 .....434, 455, 475
4923575 .....435, 436
4923576 .....435, 437
4923591 .....436
4932986 .....428
4932990 .....428, 520
4932993 .....428, 520
4933218 .....428
4933219 .....428
4933263 .....428
4933264 .....205, 428, 446
4933278 .....428
4933283 .....211, 428, 446
4933300 .....428, 441
4933308 .....428, 447, 467, 482
4933312 .....428
4933319 .....429, 436
4933329 .....429, 436
4933330 .....429, 436
4933331 .....429, 436
4933349 .....215, 428, 446, 467
4933350 .....428, 441, 460
4933354 .....429, 436
4933361 .....429, 436
4933362 .....429, 436
4933363 .....429, 436
70000045 .....102
70000122 .....181, 185
70000123 ..181, 185, 189, 193
70000124 ..182, 186, 189, 193
70000125 ..182, 186, 189, 193
70000126 ..182, 186, 189, 193, 516
70000127 ..182, 186, 189, 193
70000164 .....117, 125
70000264 .....104
70000342 .....253
70000345 .....104
70000579 .....51
70000580 .....52
70000582 .....51, 514
70000583 ..... 51
70000619 .....204, 209, 213
70000718 ..... 459
70000781 ..... 39
70000782 .....29, 72
70000793 ..... 102
70000794 ..... 37
70000795 ..... 37
70000863 .....202, 209, 213
70000912 ..... 103
70000913 ..... 103
70000914 ..... 103
70000915 ..... 103
70000916 ..... 103
70000917 ..... 103
70000918 ..... 103
70000919 ..... 103
70000934 ..... 48
70001002 ..... 102
70001017 .....81, 88, 100
70001051 .....84, 92
70001100 .....202, 209, 213
70001103 ..... 135
70001119 ..... 29
70001120 .....84, 92
70001126 ..... 104
70001248 .....140, 143, 144
70001384 .....202, 210, 214
70001424 ..... 339
70001425 ..... 339
70001427 ..... 339
70001428 ..... 339
70001429 ..... 339
70001430 ..... 339
70001431 ..... 339
70001432 ..... 339
70001435 ..... 103
70001690 ..... 111
70001696 .....203, 209, 213
70001697 ..... 253
70001742 .....84, 92
70001847 ..... 104
70001850 ..... 102
70001866 ..... 103
70001868 ..... 103
70001870 ..... 104
70001871 ..... 103
70001872 ...104, 439, 458, 478
70001931 ..... 459
70001941 ..... 163
70001950 ..... 459
70001951 ..... 459
70001953 .....202, 210, 214
70001966 ...197, 202, 209, 210, 213, 214
70001969 ..... 202
70001973 .....203, 210, 214
70001974 .....203, 209, 213
70001976 .....51, 52, 59
70001999 .....250, 516
70002000 ..... 250
70002001 ..... 244
70002002 ..... 244
70002011 .....249, 516
70002012 ..... 249
70002063 .....40
70002064 .....40, 262
70002065 .....72
70002066 .....72, 75
70002067 .....72
70002068 .....72
70002069 .....72
70002070 .....72
70002071 .....72
70002072 .....72
70002073 .....72
70002074 .....73
70002075 .....72, 73
70002085 .....75
70002088 ... 202, 209, 213
7000209 .....65
7000213 .....73
7000214 .....65
7000216 .....29
7000217 ..... 65, 72, 75
70002200 .....104
70002208 .....69
70002209 .....48
70002212 ... 140, 143, 144
70002234 .....104
70002243 .....69
7000228 ..... 65, 72, 75
7000229 ..... 65, 72, 75
70002297 ... 202, 209, 213
7000230 ..... 65, 72, 75
70002307 .....111
70002373 .....385
70002386 .....262
70002412 .....395
7000242 .....65
7000246 ..... 65, 72, 75
70002460 ... 203, 209, 213
7000247 .....75
7000248 .....72, 75
7000253 ..... 65, 72, 75
7000255 ..... 65, 72, 75
7000256 .....65
70002567 .....111
7000257 ..... 65, 72, 75
7000258 .....65
70002627 .....459
7000263 ..... 65, 72, 75
7000269 .....65
7000270 .....65
70002705 .....81, 88
70002706 .....81, 88
70002715 .....135
70002716 .....135
70002724 .....299
70002725 .....299
70002726 .....299
70002727 .....299
70002728 .....299
70002729 .....299
70002730 .....289
70002731 .....289
70002732 .....289
70002733 .....289
70002734 .....289
70002735 .....289
70002745 .....391
70002752 .....391

70002753 ..... 391
70002754 ..... 391
70002755 ..... 391
70002756 ..... 391
70002757 ..... 391
70002758 ..... 56
70002759 ..... 56
70002761 ..... 85, 92
70002762 ..... 85, 92
70002763 ..... 85, 92
70002764 ..... 85, 92
70002765 ..... 85, 92
70002766 ..... 85
70002767 ..... 85
7000281 ..... 30, 72
70002818 ..... 206, 215
70002819 ..... 206, 215
70002820 ..... 206, 216
70002821 ..... 206, 216
70002822 ..... 206, 216
70002823 ..... 206, 216
70002824 ..... 206, 216
70002825 ..... 206, 216
70002826 ..... 206, 216
70002833 ..... 83, 92
70002834 ..... 83, 92
70002835 ..... 83, 92
70002841 ..... 85
70002843 ..... 84, 92
70002844 ..... 84, 92
70002845 ..... 85, 92
70002846 ..... 85, 92
70002847 ..... 84, 92
70002848 ..... 84, 92
70002849 ..... 84, 92
70002850 ..... 84, 92
70002851 ..... 84, 93
70002852 ..... 85, 93
70002863 ..... 85
70002895 ..... 125, 516
70002898 ..... 459
70002902 ... 268, 275, 279, 284
70002903 ... 268, 275, 279, 284
70002904 ... 268, 275, 279, 284
70002905 ... 268, 275, 279, 284
70002906 ..... 289
70003001 ..... 104
70003002 ..... 104
70003003 ..... 104
70003019 ..... 55
70003408 ..... 40
70003454 ..... 144
70003475 ..... 104
70003476 ..... 100
70003478 ..... 102
70003483 ..... 268, 275
70003525 ..... 55
70003623 ..... 104
70003631 .... 202, 209, 213
70003636 ..... 367
70003708 ... 197, 202, 210, 214
70003709 .. 197, 202, 210, 214
70003784 ... 274, 280, 283
70003790 ..... 262
70004037 ..... 75
70004039 ..... 75
70004040 ..... 75
70004041 ..... 75
70004042 ..... 75
70004043 ..... 75
70004044 ..... 75
70004045 ..... 75
70004047 ..... 76
70004048 ..... 76
70004052 ..... 55, 56
70004056 ..... 103
70004060 ..... 478
70004092 ..... 197
70004098 ..... 197
70004103 ..... 477
70004149 ..... 135
70004169 .. 203, 209, 210, 213, 214
70004170 ..... 203
70004171 .. 197, 202, 209, 213
70004182 ..... 81, 89
70004271 ..... 478
70004272 ..... 103
70004316 ..... 458
70004317 ..... 458
70004318 ..... 458
70004319 ..... 458
70004459 ..... 55
70004460 ..... 55
70004461 ..... 55
70004463 ..... 55
70004594 ..... 55
70004595 ..... 55
70004596 ..... 55
70004597 ..... 55
70004617 ..... 56
70004652 ..... 55
70004653 ..... 55
70004654 ..... 55
70004655 ..... 55
70004656 ..... 55
70004657 ..... 55
70004659 ..... 55
70004660 ..... 55
70004661 ..... 55
70004662 ..... 55
70004663 ..... 55
70004664 ..... 55
70004665 ..... 55
70004666 ..... 55
70004667 ..... 55
70004668 ..... 55
70004670 ..... 55
70004671 ..... 56
70004672 ..... 56
70004673 ..... 56
70004674 ..... 56
70004676 ..... 197
70004677 ..... 197
70004678 ..... 197
70004679 ..... 197
70004680 ..... 197
70004681 ..... 197
70004682 ..... 197
70004683 ..... 197
70004684 ..... 197
70004685 ..... 197
70004738 ..... 301
70004739 ..... 301
70004740 ..... 301
70004741 ..... 301
70004742 ..... 301
70004743 ..... 301
70004744 ..... 301
70004745 ..... 301
70004746 ..... 301
70004747 ..... 301
70004748 ..... 301
70004749 ..... 301
70004750 ..... 301
70004751 ..... 301
70004752 ..... 291
70004753 ..... 291
70004754 ..... 291
70004755 ..... 291
70004756 ..... 291
70004757 ..... 291
70004758 ..... 291
70004759 ..... 291
70004760 ..... 291
70004761 ..... 291
70004762 ..... 291
70004763 ..... 291
70004764 ..... 291
70004765 ..... 291
70004766 ..... 291
70004767 ..... 291
70004768 ..... 291
70004769 ..... 291
70004770 ..... 291
70004771 ..... 291
70004772 ..... 291
70004773 ..... 291
70004774 ..... 291
70004775 ..... 292
70004862 ..... 136, 516
70005201 ..... 55
70005202 ..... 56
70005203 ..... 75
70005230 ..... 301
70005232 ..... 56
7000625 ..... 268, 275
70006257 ..... 249
70006273 ..... 249
70006369 ..... 379
70006370 ..... 379
70006371 ..... 379
70006372 ..... 379
70006373 ..... 379
70006374 ..... 379
70006442 ..... 387
70006443 ..... 357, 387
70006444 ..... 357, 387
70006445 ..... 357, 387
70006446 ..... 357, 387
70006447 ..... 387
70006478 ..... 375
70006479 ..... 375
70006480 ..... 375
70006481 ..... 375
70006482 ..... 397, 401
70006483 ..... 397, 401
70006484 ..... 401
70006486 ..... 363
70006487 ..... 363
70006488 ..... 363
70006489 ..... 363
70006552 ..... 197
70006553 ..... 197
70006568 ..... 369
70006569 ..... 369
70006570 ..... 369
70006571 ..... 369
70006572 ..... 369
70006597 ..... 385
70006599 ..... 385
70006601 ..... 385
7000663 ..... 103
70006648 ..... 351
70006649 ..... 351, 371
70006650 ..... 351, 371
70006651 ..... 351
70006654 ..... 397
70006655 ..... 397
70006734 ..... 371
70006735 ..... 371
70006736 ..... 371
70006774 ..... 385
70006775 ..... 385
70006776 ..... 385
70006793 ..... 395
70006813 ..... 395
70006814 ..... 395
70006815 ..... 395
70006816 ..... 395
70006817 ..... 395
70006818 ..... 395
70006819 ..... 395
70006820 ..... 395
70006821 ..... 395
70006822 ..... 357
70006823 ..... 357
70006900 ..... 367
70006930 ..... 367
70006931 ..... 367
70006932 ..... 367
70006933 ..... 367
70006934 ..... 367
7000699 ..... 100
7001433 ..... 129
7001498 ..... 129
7001625 ..... 389
7001626 ..... 389
7001627 ..... 389
7001629 ..... 389
7001630 ..... 389
7001633 ..... 389
7001909 ..... 65, 72, 75
7001911 ..... 65, 72, 75
7001912 ..... 72, 75
7001913 ..... 29
7001928 ..... 65
7001931 ..... 65, 72, 75
7001985 ..... 65, 72, 75
7001987 ..... 65

7001988 .....65
70020808 .....458
70020809 .....458
70021202 .....55
70022564 .....385
70023371 ..... 385, 395
70023373 .....395
70023859 .....55
70023862 .....55
70023867 .....55
70023915 .....369
70024457 .....55
70025077 .....478
70025231 .....478
7002821 ....448, 468, 483, 524
7002822 .....524
7002823 ....448, 468, 483, 524
7002826 .....524
7002828 .....448, 468, 483
7002840 .....524
7003928 ..... 287, 289
7003933 .....295
7003935 .....295
7003941 ..... 295, 299
7003946 .....295
7003953 .....287
7003969 .....295
7003972 ..... 295, 299
7003973 ..... 295, 299
7003976 .....287
7003977 .....287
7003980 ..... 295, 299
7003982 .....299
7003983 ..... 295, 299
7003986 .....295
7003989 ..... 296, 299
7003992 ..... 287, 295
7003993 ..... 287, 295
7003994 .....295
7004035 ..... 69, 73
7004043 .....69, 73, 76
7004044 .....69, 73, 76
7004248 .....47
7004275 .....524
7004276 .....524
7004290 .....47
7005881 .....67
7005882 .....67
7005889 .....67
7005890 .....67
7005891 .....67
7005892 .....67
7005893 .....67
7006140 .....249
7006151 ..... 249, 250
7006152 .....244, 249, 250
7006158 .....250
7006161 .....249
7007207 .....128
7007208 .....128
7007412 .....129
7007413 .....128
7007414 .....128
7007417 .....128
7007418 .....128
7007419 .....128
7007423 .....128
7007425 .....128
7007435 .....33, 128
7007437 ..... 34, 37, 128
7007438 ..... 33, 37, 128
7007439 ..... 33, 37, 128
7007441 .....128
7007442 .....128
7007444 .....128
7007446 ..... 33, 37, 128
7007452 .....128
7007453 .....128
7007454 .....128
7007457 .....128
7007459 .....129
7007463 .....129
7007464 .....129
7007465 .....129
7007466 .....129
7007470 .....128
7007472 .....129
7007474 .....129
7007475 .....129
7007476 .....129
7007477 .....129
7007478 .....129
7007484 .....129
7007485 .....129
7007487 .....129
7007488 .....129
7007489 .....133
7007494 .....129
7007496 .....129
7007497 .... 129, 440, 459, 478
7007498 .... 129, 440, 459, 478
7007633 ..... 65, 72, 75
7010103 .....133
7010104 .....133
7010105 .....133
7010116 .....128, 129
7010121 .....129
7010474 ..... 65, 72, 75
7010488 .....65
7010492 ..... 65, 72, 75
7010494 .....65
7010542 .....52
7010543 .....48, 52
7011043 .....47
7011044 .....47
7011048 .....48
7011062 .....48
7011063 .....47
7011064 .....47
7011065 .....47
7011066 .....47
7011112 .... 348, 351, 353, 355, 357, 359
7011185 .....399
7011328 .....48
7012513 .... 181, 185, 189, 193
7012514 .... 181, 185, 189, 193
7012518 .....48, 51
7012558 .....181, 185, 189, 193
7012664 ...80, 88, 99, 109, 116, 124, 514
7012679 ..... 110
7012769 .....51, 52
7012772 ....51, 52, 59, 514
7012773 .....51, 52, 55, 59
7012774 .....52, 59
7012775 ..... 52
7012776 ..... 59
7012799 ..... 52
7012912 ..... 52
7012914 .....51, 53, 262
7012918 .....51, 53, 262
7012941 ..... 48
7012943 .....48, 514
7012944 .....48, 51, 514
7012953 . 51, 59, 261, 262
7012959 ..... 48
7012965 .....59, 262
7012967 .....51, 53, 262
7012969 ..... 53
7012970 ..... 261
7012987 ..... 133
7012988 ..... 133
7012989 .....51, 262
7012995 ..... 48
7012998 .....51, 52, 59
7013189 .....140, 143
7014676 ..... 524
7016206 ..... 26
7016314 ..... 135
7016319 .....163, 164
7016322 ..... 169
7016328 .....103, 516
7016331 .....102, 516
7016372 .....163, 164
7016374 ..... 169
7016380 ..... 163
7016399 ..... 268
7016422 ..... 67
7016423 ..... 67
7016424 ..... 67
7016425 ..... 67
7016426 ..... 67
7016427 ..... 67
7016502 ..... 244
7016510 ..... 244
7016519 ..... 250
7016521 ..... 250
7016652 ..... 524
7016654 ..... 524
7016655 ..... 524
7016822 .....115, 123, 439, 458
7017022 ..... 30
7017023 .....72, 75
7017027 ..... 29
7017028 ..... 73
7017070 .....72, 75
7017072 .....29, 72, 75
7017080 .....72, 75
7017082 .....73, 76
7017085 .....72, 76
7017089 ..... 65
7017093 ..... 29
7017095 ..... 29
7017142 .....253
7017158 .....253
7017159 .....253
7017162 .....253
7017163 .....253
7017164 .....253
7017183 .....253
7017193 .....253
7017195 .....253
7017402 .....262
7017406 .....262
7017410 .....51
7017411 .....51
7017418 .....51
7017420 .....52, 59
7017421 .....59
7017422 .....59
7017423 .....52
7017427 .....51
7017428 .....51, 52
7017452 .....262
7017464 .....51
7017496 .....345
7018612 .....61
7018912 ..... 51, 52, 59
7018941 .....51
7018942 .....56, 59
7018945 .....59
7018946 .....59
7018948 .....59
7018952 .....52
7019103 .....295
7019110 .....295
7019111 .....287, 295
7019112 .....295
7019114 .....295
7019115 .....295
7019122 .....287
7019123 .....287
7019141 .....287
7019142 .....287
7019143 .....287
7019144 .....287
7019145 .....287
7019147 .....287
7019149 .....287
7019150 .....287
7019151 .....295
7019154 .....295
7019155 .....295
7019160 .....295
7019161 .....295
7019162 .....295, 299
7019164 .....295, 299
7019165 .....295, 299
7019166 .....295
7019167 .....295, 299
7019168 .....295
7019171 .....287
7019174 .....287
7019177 .....287
7019194 .....296, 299
7019197 .....287
7019656 .....117, 124
7019658 .....97, 135

7019680.....181, 185, 186, 189, 193
7019925..... 111
7019976..... 111
7019977..... 110
7019993..... 111
7019994..... 111
7019996..... 110
7020020..... 48
7020021..... 49
7020108.....181, 185, 189, 193
7020109.....181, 185, 189, 193
7020110.....181, 185, 189, 193
7020111.....181, 185, 189, 193
7020135..... 26
7020175.....155, 159, 274, 280, 283
7020176.....155, 159, 274, 280, 283
7020190.....181, 185, 189, 193
7020192.....182, 186, 190, 193
7020246..... 147
7020403..... 102
7020408..... 103
7020411..... 103
7020447..... 103
7020449..... 103
7020459..... 104
7020460..... 104
7020464..... 103
7020465..... 102
7020468..... 102
7020471.....100, 103
7020479..... 103
7020487..... 102
7021200..... 128
7021201..... 129
7021202..... 128
7021203..... 128
7021206..... 129
7021207..... 128
7021212..... 129
7021214..... 129
7021217..... 129
7021218..... 129
7021219..... 129
7021220..... 129
7021221..... 129
7021222..... 129
7021223..... 128
7021232..... 129
7021249.....33, 37
7021256..... 128
7021275.....33, 37
7021310..... 53
7021375.....51, 52, 55
7021625.....39, 40
7021639..... 521
7021653..... 262
7021868.....110, 516
7022133..... 110
7022134..... 111
7022139..... 110
7022143..... 111
7022150..... 111
7022155..... 111
7022180..... 111
7022302.....33, 37
7022311.....33, 37
7022313.....37
7022314.....33, 37
7022318.....33
7022320.....33
7022321.....33
7022326.....34, 37
7022328.....34, 37
7022368.....33, 37
7022370.....33
7022371.....34, 37
7022372.....33, 37
7022397.....39
7022399.....39, 40
7022808.....287, 289
7022812..... 295
7022814..... 287
7022815.....287, 289
7022816..... 287
7022817..... 287
7022818..... 287
7022819.... 287, 289, 440, 459, 478
7022822..... 295
7022823..... 295
7022824..... 295
7022825..... 440, 459, 478
7023038..... 389
7023679..... 439
7023681.....110, 439
7023682..... 110
7023683..... 110
7023698..... 111
7023699..... 111
7023910.....33, 37
7023911..... 262
7023912..... 262
7023917.....40
7023933.....39
7023935.....39, 40
7023936.....39, 40
7023977..... 128
7023979..... 129
7024100..... 65, 73, 76
7024124.....29
7024125.....29
7024127.....29
7024129.....29
7024134.....30
7024379..... 69, 73, 76
7024380..... 69, 73, 76
7024381..... 69, 73, 76
7024389.....69, 76
7024390..... 69, 73, 76
7024395.....69
7024396.....73
7024398..... 100
7024404..... 140, 143, 144
7024439..... 136
7024440..... 136
7024441..... 136
7024442..... 136
7024443..... 136
7024444.....136, 514, 516
7024445..... 136
7024446..... 136
7024453.....69, 73, 76
7024454..... 73
7024455..... 73
7024456..... 73
7024458.....73, 76
7024462..... 333
7024463..... 333
7024467..... 333
7024469..... 333
7024470..... 333
7024471.....333, 339
7024472..... 333
7024473..... 333
7024474..... 333
7024475..... 333
7024478..... 333
7024485.....203, 209, 213
7024488.....204, 209, 213
7024489.....204, 209, 213
7024530..... 339
7024531..... 339
7024532..... 339
7024533..... 339
7024534..... 339
7024535..... 339
7024536..... 339
7024537..... 339
7024560..... 100
7024565..... 103
7024579..... 104
7024598..... 169
7024704.....72, 75
7024721..... 30
7024722..... 29
7024723..... 30
7024724..... 29
7024725..... 29
7024726..... 29
7024727..... 29
7024728..... 29
7024729..... 29
7024730..... 29
7024731..... 29
7024732..... 29
7024733..... 29
7024734..... 29
7024735..... 29
7024736..... 29
7024737..... 30
7024738..... 29
7024739..... 29
7024740..... 29
7024741..... 29
7024742..... 29
7024743.....29, 75
7024744.....29, 30
7024763.....72, 75
7024764..... 30
7024765..... 30
7024766..... 30
7024784.....72, 76
7024800..... 129
7024851..... 129
7024853.....33, 37
7024861.....33
7024862.....33, 37
7024863.....33
7024864.....33
7024865.....33, 37
7024866.....33
7024867.....33, 37
7024868.....33
7024869.....33
7024871.....33, 37
7024879..... 345
7024881..... 521
7024892.....39, 40
7026188..... 203, 209, 213
7026189..... 139
7026197.....140, 143
7026199.... 181, 185, 189, 193
7026503.....140, 143
7026504.....140, 143
7026505.....140, 143
7026506.....140, 144
7026507.....140, 144
7026508..... 140
7026509.....140, 144
7026510..... 140
7026511.....140, 143
7026512..... 140
7026597..... 203, 209, 213
7026608..... 103
7026626..... 203, 209, 213
7026631..... 102
7026800.....84, 92
7026801.....84, 92
7026802.....85, 92
7026803.....85, 92
7026804.....84, 92
7026805.....84, 92
7026806.....85, 92
7026807.....85, 92
7026808.....93
7026809.....85, 93
7026810.....85, 92
7026811..... 83, 92, 516
7026812.....84, 92
7026813.....84, 92
7026814.....85, 92
7026815.....85, 92
7026816.....85, 92
7026817.....85, 92
7026818.....85
7026819.....85, 92
7026820.....84, 92
7026821.....84, 92
7026822.....84, 92
7026823.....84
7026824.....84
7026825.....84
7026826.....85, 93
7026827.....85, 93
7026828.....85, 93
7026829.....85, 93
7026830..... 83, 92, 516
7026831.....83, 92

7026832 ..... 85, 93
7026833 ..... 84, 93
7026834 ..... 84
7026835 ..... 84
7026836 ..... 84
7026837 ..... 84
7026838 ..... 85
7026839 ..... 83, 84, 92
7026840 ..... 84
7026841 ..... 84
7026843 ..... 84
7026882 ..... 84
7026888 ..... 84
7027001 ..... 82, 97, 439
7027002 .. 82, 91, 97, 108, 439, 458, 477
7027003 82, 97, 108, 115, 123, 439, 458, 477
7027004 82, 97, 438, 458, 477
7027005 ..... 108, 438
7027006 ..... 108, 438
7027007 ..... 108, 439
7027015 .... 115, 123, 438, 458
7027016 ..... 115, 123
7027017 ..... 115, 123, 439
7027028 ..... 90, 458, 477
7027029 ..... 90, 458, 477
7027033 ..... 91, 458, 477
7027236 ..... 103
7027239 ..... 104
7027246 ..... 102
7027276 ..... 103
7027400 ..... 110
7027402 ..... 111
7027404 ..... 110
7027405 ..... 111
7027409 ..... 111
7027410 ..... 111
7027412 ..... 81, 89
7027413 ..... 111
7027419 ..... 33, 37
7027608 ..... 102
7027609 ..... 103
7027610 ..... 103
7027740 ..... 37
7027773 ..... 333
7027774 ..... 333
7027775 ..... 333
7027776 ..... 333
7027777 ..... 333
7027778 ..... 333
7027779 ..... 333
7027780 ..... 333
7027790 ..... 103
7027791 ..... 103
7027792 ..... 103
7027793 ..... 103, 439, 458, 478
7027794 ..... 104, 439
7027795 ..... 103, 516
7027796 ..... 104, 439, 458, 477
7027799 ..... 203, 209, 213
7027887 ..... 182, 186, 190, 193
7027965 ..... 117, 125, 516
7027972 ..... 117, 125, 516
7027989 ..... 459
7027991 ..... 459
7027994 ..... 117
77143013 ... 152, 155, 159
77363233 ..... 466, 481
80424002 ..... 72
80434249 ..... 55
80934561 ..... 140, 143
8229242 ..... 457, 477
8303541 ..... 91
8310230 ..... 319
83304150 ..... 69
8405009 ..... 80, 89
8405104 ..... 80, 89
8406009 ..... 91
8406105 ..... 91
8406109 ..... 92
85941017 ..... 97
8770157 ..... 130
88521205 ..... 82, 89, 115, 122
8896941 ..... 524
91083218 ..... 110, 516
91401281 80, 89, 96, 114, 122
91474405 ..... 56



3121206



An Oshkosh Corporation Company


***Corporate Office***
***JLG Industries, Inc.***
***1 JLG Drive***
***McConnellsburg, PA 17233-9533 USA***
***(717) 485-5161 (Corporate)***
***(877) 554-5438 (Customer Support)***
***(717) 485-6417***


***Visit our website for JLG Worldwide Locations.***
***www.jlg.com***