Illustrated Parts Manual

Models
600A
600AJ

SN 0300069000 to
SN 0300087000

P/N
3121855

January 31, 2019 - Rev AJ

CE

An Oshkosh Corporation Company

REVISION LOG

March 6, 2003 - A - Original Issue of Manual (Manual edited to 0010577 Revision 27)

June 16, 2003 - B - Revised Manual (Edited to 0010577 Revision 31)

September 12, 2003 - C - Revised Manual (Edited to 0010577 Revision 37)

January 12, 2004 - D - Revised Manual (Edited to 0010577 Revision 39)

May 5, 2004 - E - Revised Manual (Edited to 0010577 Revision 42)

September 9, 2004 - F - Revised Manual (Edited to 0010577 Revision 44)

December 6, 2004 - G - Revised Manual (Edited to 0010577 Revision 50 & 0010629 Rev 3)

April 12, 2005 - H - Revised Manual (Edited to 0010577 Revision 51 & 0010629 Rev 11)

June 1, 2005 - I - Revised Manual (Edited to 0010577 Revision 51 & 0010629 Rev 14)

August 26, 2005 - J - Revised Manual (Edited to 0010577 Revision 51 & 0010629 Rev 17)

November 15, 2005 - K - Revised Manual

April 18, 2006 - L - Revised Manual

July 19, 2006 - M - Revised Manual

December 12, 2006 - N - Revised Manual

May 1, 2007 - O - Revised Manual

August 16, 2007 - P - Revised Manual

December 4, 2007 - Q - Revised Manual

March 31, 2008 - R - Revised Manual

September 15, 2008 - S - Revised Manual

February 15, 2009 - T - Revised Manual

August 1, 2009 - U - Revised Manual

March 25, 2010 - V - Revised Manual

August 15, 2010 - W - Revised Manual

February 24, 2011 - X - Revised Manual

May 27, 2011 - Y - Revised Manual

August 29, 2011 - Z - Revised Manual

December 23, 2011 - AA - Revised Manual

April 27, 2012 - AB - Revised Manual

July 24, 2012 - AC - Revised Manual

November 2, 2012 - AD - Revised Manual

March 7, 2013 - AE - Revised Manual

June 6, 2013 - AF - Revised Manual

September 1, 2013 - AG - Revised Manual

June 1, 2015 - AH - Revised Manual

December 14, 2015 - AI - Revised Manual (Revision 4)

January 31, 2019 - AJ - Revised Manual

GENERAL INFORMATION

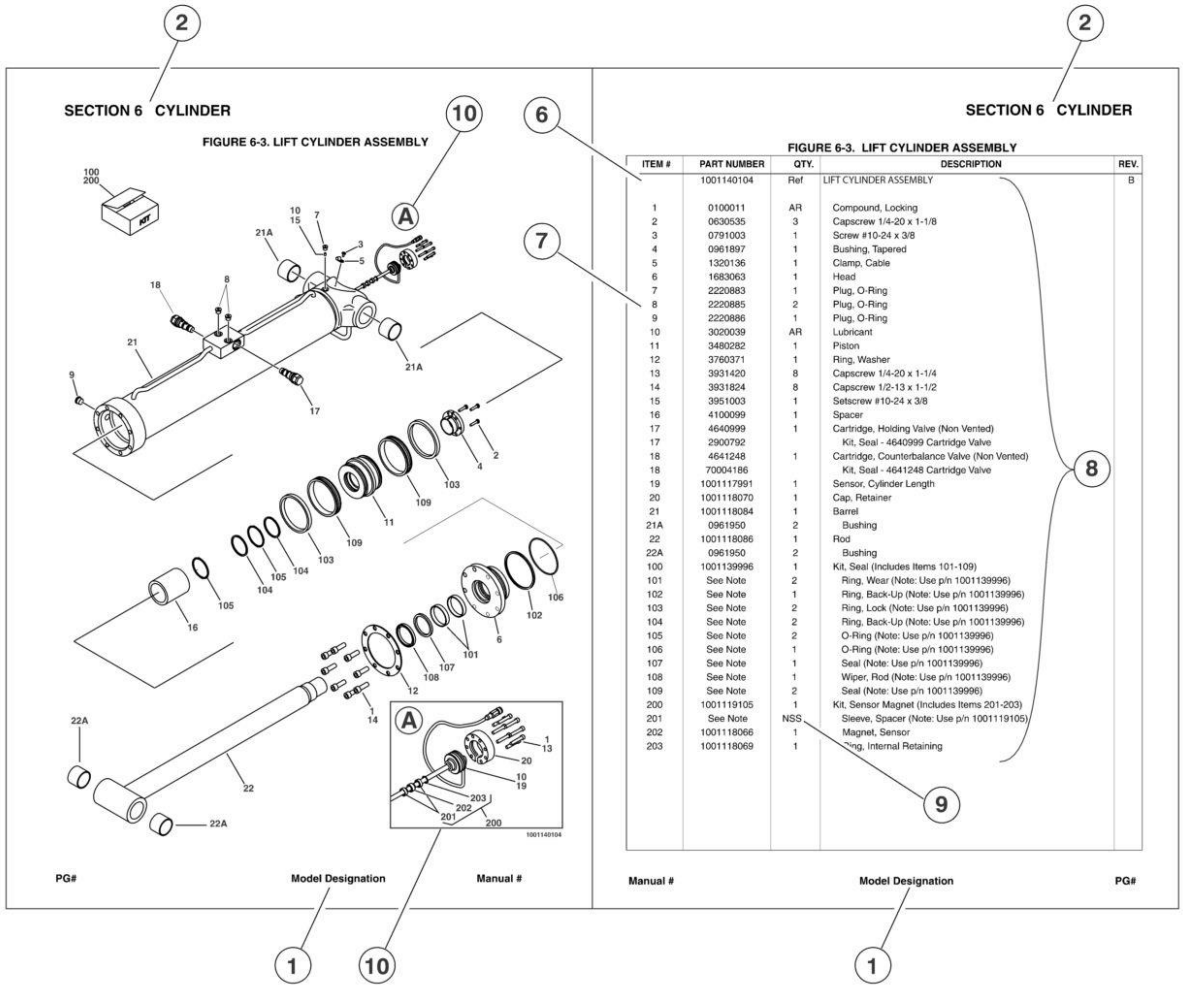

1) MACHINE IDENTIFICATION
Machines are identified by model and in some cases a combination of models, serial number (SN) or regional standard (i.e ANSI, CE,CSA). Components may also be identified by SN or manufacturer. common components that may be identified by these characteristics are engines and hydraulic components.

2) PARTS MANUAL ORGANIZATION
Product information in this manual is organized under section titles. Frame, Cylinder, Hydraulic and Electrical are a few examples. Each section is organized by figure and page number. The information within the Figure is then organized by item number, part number, description and corresponding illustration (s).

3) TABLE OF CONTENTS
A table of contents is found toward the beginning of the manual. Figure number, description and page number are provided for quick reference to the page containing the related information.

4) RECOMMENDED SPARE PARTS
The Recommended Spare Parts, located near the end of the manual, referance most frequently used maintenance parts.

5) PART NUMBER INDEX
A numerical index listing all part numbers and the corresponding page number(s) appears at the back of the manual.

GENERAL INFORMATION

6) NON-SERVICED PARTS
In some instances, it is necessary to display non-serviced parts, assemblies or installations. In the case of assemblies and installations ther ewill be a Ref in the Qty column. In case of parts that are not available for service within assemblies or components, there will be a NSS (Not Sold Separately) or NLA (No Longer Available) listed in the Qty. column of the manual.

7) PARTS LIST ITEM NUMBERS
Numbers shown in the item# column correspond to numbers used in the associated illustration (s). Item numbers which are misisng from the sequence in the parts list are not used on that page

8) INDENTED PARTS DESCRIPTION
An indented part description is included in the item under which it is indented.

9) ABB REVIATION AND SYMBOLS

AC ..... Alternating Current
ADE. ..... Advanced Design Electronics
ANSI ..... American National Standards Institute
AR.. ..... As Required
ASSY ..... Assembly
AUX... ..... Auxiliary
AWG ..... American Wire Gauge
B/M. ..... Bill of Material
CE.. ..... European Conformity
CCW ..... Counter Clockwise
cm. ..... Centimeter
CW ..... Clockwise
CSA. ..... Canadian Standards Association
CYL... ..... Cylinder
DIA. ..... Diameter
DC ..... Direct Current
EMS ..... Emergency Stop
ENG ..... Engine
FT(ft).. ..... Feet
GA(Ga).. ..... Gauge
HYD ..... Hydraulic
Hz.. ..... Hertz
ID. ..... Inside Diameter
in... ..... inches
ISO ..... International Organization for Standards
JIC ..... Joint Industry Council
KG ..... Kilogram
L.. ..... Liter
LB ..... Pounds
LCD ..... Liquid Crystal Display
LED ..... Light Emitting Diodes
LH... ..... Left Hand
LSS ..... Load Sensing System
M(m)... ..... Metric/Meter
MM (mm) ..... Milimeter
mA. ..... Miliamps
NLA..... No Longer Available
NPT ..... National Pipe Threads
NSS ..... Not Sold Separately
OD. ..... Outside Diameter
ORB ..... O-Ring Boss
ORFS ..... O-Ring Face Seal
OZ (oz). ..... Ounces
PG ..... Page
P/N. ..... Part Number
qt. ..... Quarts
QTY. ..... Quantity
REF ..... Reference
REV ..... Revision Level
RH... ..... Right Hand
SAE..... Society of Automotive Engineers
SN.. ..... Serial Number
SPEC(S)..... Specifications
T/T. ..... Turntable
UGM ..... Universal Ground Module
V. ..... Volts
W... ..... Watts
#... ..... Number

10) ILLUSTRATION REFERANCE LETTERS
When necessary, illustrations may contain referance letters that are intended to track information (i. e. hoses, harnesses) from one point to another or to track visual enlargement of components to show details that may be located in another area on the illustration.

Note: Due to continuous product improvements, JLG Industries, Inc. reserves the right to make specification changes without prior notification. Contact JLG Industries, Inc. for updated information.

TABLE OF CONTENTS

SECTION 1 - FRAME 9

FIGURE 1-1. 2WD FRONT AXLE AND STEERING INSTALLATIONS (SN 0300069000 through 0300081835) 10
FIGURE 1-2. 2WD FRONT AXLE AND STEERING INSTALLATIONS (SN 0300081836 through 0300087000) 14
FIGURE 1-3. 4WD FRONT AXLE AND STEERING INSTALLATIONS (SN 0300069000 through 0300081835) 18
FIGURE 1-4. 4WD FRONT AXLE AND STEERING INSTALLATIONS (SN 0300081836 through 0300087000) 22
FIGURE 1-5. 4WS REAR STEERING INSTALLATIONS (SN 0300069000 through 0300081835) 26
FIGURE 1-6. 4WS REAR STEERING INSTALLATIONS (SN 0300081836 through 0300087000) 28
FIGURE 1-7. TIRE AND WHEEL DRIVE INSTALLATIONS 30
FIGURE 1-8. DRIVE HUB ASSEMBLY (SN 0300069000 through 0300081835) 34
FIGURE 1-9. DRIVE HUB/BRAKE ASSEMBLY (SN 0300081836 through 0300087000) 36
FIGURE 1-10. DRIVE MOTOR ASSEMBLY (2WD MACHINES) (SN 0300069000 through 0300071019) 40
FIGURE 1-11. DRIVE MOTOR ASSEMBLY (2WD MACHINES) (SN 0300071020 through 0300081836) 42
FIGURE 1-12. DRIVE MOTOR ASSEMBLY (4WD MACHINES) (SN 0300069000 through 0300081835) 44
FIGURE 1-13. DRIVE MOTOR ASSEMBLY (2WD & 4WD MACHINES) (ORIGINAL EQUIPMENT) (SN 0300081836 through 0300087000) 46
FIGURE 1-14. DRIVE MOTOR ASSEMBLY (2WD & 4WD MACHINES) (SERVICE REPLACEMENT) 48
FIGURE 1-15. DRIVE VALVES AND SHIELDS INSTALLATION (FRAME MOUNTED) (SN 0300069000 through 0300081835) 50
FIGURE 1-16. DRIVE VALVES AND SHIELDS INSTALLATION (FRAME MOUNTED) (SN 0300081836 through 0300087000) 52
FIGURE 1-17. TOW PACKAGE INSTALLATION (OPTIONAL) (SN 0300069000 through 0300081835) 56
FIGURE 1-18. TOW PACKAGE INSTALLATION (OPTIONAL) (SN 0300081836 through 0300087000) 58

SECTION 2 - TURNTABLE 61

FIGURE 2-1. CONTROL VALVES INSTALLATIONS 62
FIGURE 2-2. MAIN VALVE BLOCK ASSEMBLY 68
FIGURE 2-3. ACCESSORY VALVE ASSEMBLIES 72
FIGURE 2-4. SWING DRIVE, TURNTABLE BEARING AND LOCK INSTALLATIONS 74
FIGURE 2-5. SWING HUB ASSEMBLY 76
FIGURE 2-6. SWING MOTOR ASSEMBLY 78
FIGURE 2-7. CATERPILLAR ENGINE INSTALLATION 80
FIGURE 2-8. GENERATOR INSTALLATION (CATERPILLAR ENGINE MACHINES) (OPTIONAL) 88
FIGURE 2-9. DEUTZ ENGINE INSTALLATION (SN 0300069000 through 0300077489) 92
FIGURE 2-10. DEUTZ ENGINE INSTALLATION (SN 0300077490 through 0300087000) 98
FIGURE 2-11. GENERATOR INSTALLATION (DEUTZ ENGINE MACHINES) (OPTIONAL) 106
FIGURE 2-12. PISTON PUMP ASSEMBLY (SN 0300069000 through 0300079887) 110
FIGURE 2-13. PISTON PUMP ASSEMBLY (SN 0300079888 through 0300087000) 116
FIGURE 2-14. GEAR PUMP ASSEMBLY 120
FIGURE 2-15. TANK INSTALLATIONS 122
FIGURE 2-16. ROTARY COUPLING INSTALLATIONS (SN 0300069000 through 0300081835) 124
FIGURE 2-17. ROTARY COUPLING INSTALLATIONS (SN 0300081836 through 0300087000) 126
FIGURE 2-18. GROUND CONTROL BOX ASSEMBLIES 130
FIGURE 2-19. ELECTRICAL OPTIONS INSTALLATIONS (TURNTABLE MOUNTED) 134
FIGURE 2-20. ENGINE TRAY JACK INSTALLATIONS (OPTIONAL) 138
FIGURE 2-21. HOODS INSTALLATIONS 140

SECTION 3 - BOOM 145

FIGURE 3-1. BOOMS AND CYLINDERS INSTALLATION - 600A 146
FIGURE 3-2. BOOMS AND CYLINDERS INSTALLATION - 600AJ 150
FIGURE 3-3. TOWER BOOM ASSEMBLIES 156
FIGURE 3-4. MAIN BOOM ASSEMBLIES 160
FIGURE 3-5. ROTATOR ASSEMBLIES (FRONT ENTRY PLATFORM) 164
FIGURE 3-6. ROTATOR ASSEMBLIES (SIDE ENTRY PLATFORM) 168
FIGURE 3-7. VALVES AND SWITCHES INSTALLATION (BOOM MOUNTED) 170

SECTION 4 - PLATFORM 175

FIGURE 4-1. PLATFORM ASSEMBLIES (FRONT ENTRY PLATFORM) 176
FIGURE 4-2. PLATFORM ASSEMBLIES - SIDE ENTRY 180
FIGURE 4-3. PLATFORM COMPONENTS INSTALLATION (FALL ARREST PLATFORM) 184
FIGURE 4-4. PLATFORM CONSOLE ASSEMBLY 186
FIGURE 4-5. CONTROLLER ASSEMBLY (LIFT AND SWING) 190
FIGURE 4-6. CONTROLLER ASSEMBLY (LIFT AND SWING) 192
FIGURE 4-7. CONTROLLER ASSEMBLY (LIFT AND SWING) 194
FIGURE 4-8. CONTROLLER ASSEMBLY (DRIVE AND STEER) 198

TABLE OF CONTENTS

FIGURE 4-9. CONTROLLER ASSEMBLY (DRIVE AND STEER) 200
FIGURE 4-10. CONTROLLER ASSEMBLY (DRIVE AND STEER) 202
FIGURE 4-11. SOFT TOUCH SYSTEM INSTALLATION (OPTIONAL) 204
FIGURE 4-12. PLATFORM PADDING INSTALLATION (SIDE ENTRY PLATFORM) (OPTIONAL) 206

SECTION 5 - CYLINDER 209

FIGURE 5-1. AXLE LOCKOUT CYLINDER ASSEMBLY (SN 0300069000 through 0300081835) 210
FIGURE 5-2. AXLE LOCKOUT CYLINDER ASSEMBLY (SN 0300081836 through 0300087000) 212
FIGURE 5-3. PLATFORM LEVEL CYLINDER ASSEMBLY (ORIGINAL EQUIPMENT) 214
FIGURE 5-4. LEVEL CYLINDER ASSEMBLY - PLATFORM SLAVE (600A) (SERVICE REPLACEMENT) 218
FIGURE 5-5. LEVEL CYLINDER ASSEMBLY - PLATFORM SLAVE (600AJ) (SERVICE REPLACEMENT) 220
FIGURE 5-6. LEVEL CYLINDER ASSEMBLY - UPRIGHT 222
FIGURE 5-7. LEVEL CYLINDER ASSEMBLY - UPRIGHT (SERVICE REPLACEMENT) 224
FIGURE 5-8. LIFT CYLINDER ASSEMBLY - ARTICULATING JIB (600AJ) 226
FIGURE 5-9. LIFT CYLINDER ASSEMBLY - ARTICULATING JIB (600AJ) (SERVICE REPLACEMENT) 228
FIGURE 5-10. LIFT CYLINDER ASSEMBLY - ARTICULATING JIB (600AJ) (SERVICE REPLACEMENT) 230
FIGURE 5-11. LIFT CYLINDER ASSEMBLY - MAIN BOOM (ORIGINAL EQUIPMENT) 232
FIGURE 5-12. LIFT CYLINDER ASSEMBLY - MAIN BOOM (SERVICE REPLACEMENT) 234
FIGURE 5-13. LIFT CYLINDER ASSEMBLY - TOWER BOOM (ORIGINAL EQUIPMENT) 236
FIGURE 5-14. LIFT CYLINDER ASSEMBLY - TOWER BOOM (SERVICE REPLACEMENT) 238
FIGURE 5-15. MASTER CYLINDER ASSEMBLY (ORIGINAL EQUIPMENT) 240
FIGURE 5-16. MASTER CYLINDER ASSEMBLY - 600A (SERVICE REPLACEMENT) 244
FIGURE 5-17. MASTER CYLINDER ASSEMBLY - 600AJ (SERVICE REPLACEMENT) 246
FIGURE 5-18. STEER CYLINDER ASSEMBLY 248
FIGURE 5-19. TELESCOPE CYLINDER ASSEMBLY - MAIN BOOM (ORIGINAL EQUIPMENT) 250
FIGURE 5-20. TELESCOPE CYLINDER ASSEMBLY - MAIN BOOM (600A) (SERVICE REPLACEMENT) 252
FIGURE 5-21. TELESCOPE CYLINDER ASSEMBLY - MAIN BOOM (600AJ) (SERVICE REPLACEMENT) 254
FIGURE 5-22. TELESCOPE CYLINDER ASSEMBLY - TOWER BOOM (ORIGINAL EQUIPMENT) 256
FIGURE 5-23. TELESCOPE CYLINDER ASSEMBLY - TOWER BOOM (SERVICE REPLACEMENT) 258
FIGURE 5-24. CYLINDER BELLOWS INSTALLATION (OPTIONAL) 260

SECTION 6 - HYDRAULIC 263

FIGURE 6-1. DRIVE HYDRAULIC DIAGRAM - 2WD/2WS (SN 0300069000 through 0300081835) 264
FIGURE 6-2. DRIVE HYDRAULIC DIAGRAM - 2WD/2WS (SN 0300081836 through 0300087000) 266
FIGURE 6-3. DRIVE HYDRAULIC DIAGRAM - 4WD/2WS (SN 0300069000 through 0300081835) 268
FIGURE 6-4. DRIVE HYDRAULIC DIAGRAM - 4WD/2WS (SN 0300081836 through 0300087000) 272
FIGURE 6-5. HYDRAULIC DIAGRAM - OSCILLATING AXLE (SN 0300069000 through 0300081835) 274
FIGURE 6-6. HYDRAULIC DIAGRAM - OSCILLATING AXLE (SN 0300081836 through 0300087000) 276
FIGURE 6-7. HYDRAULIC DIAGRAM - STANDARD (SN 0300069000 through 0300081835) 278
FIGURE 6-8. HYDRAULIC DIAGRAM - STANDARD (SN 0300081836 through 0300087000) 282
FIGURE 6-9. HYDRAULIC DIAGRAM LIST 286

SECTION 7 - ELECTRICAL 289

FIGURE 7-1. ELECTRICAL DIAGRAM LIST 290
FIGURE 7-2. ELECTRICAL SCHEMATIC (DEUTZ AND ALL CATERPILLAR) (SN 0300069000 through 0300084711) 292
FIGURE 7-3. ELECTRICAL SCHEMATIC - DEUTZ ENGINE (SN 0300084827 through 0300087000) 298
FIGURE 7-4. HARNESS COMPONENTS INSTALLATION 302

SECTION 8 - DECALS 313

FIGURE 8-1. DECAL INSTALLATION (SN 0300069000 through 0300086149) 314
FIGURE 8-2. DECAL INSTALLATION (SN 0300086150 through 0300087000) 318

SECTION 9 - RECOMMENDED SERVICE PARTS STOCK 321

FIGURE 9-1. MODEL 600A/600AJ STANDARD PARTS 322
FIGURE 9-2. MODEL 600A/600AJ VARIABLE PARTS 324

SECTION 10 - SPECIAL OPTIONS 325

FIGURE 10-1. SPECIAL OPTIONS 326

PART NUMBER INDEX 331

SECTION 1 - FRAME

FIGURE 1-1. 2WD FRONT AXLE AND STEERING INSTALLATIONS (SN 0300069000 through 0300081835)

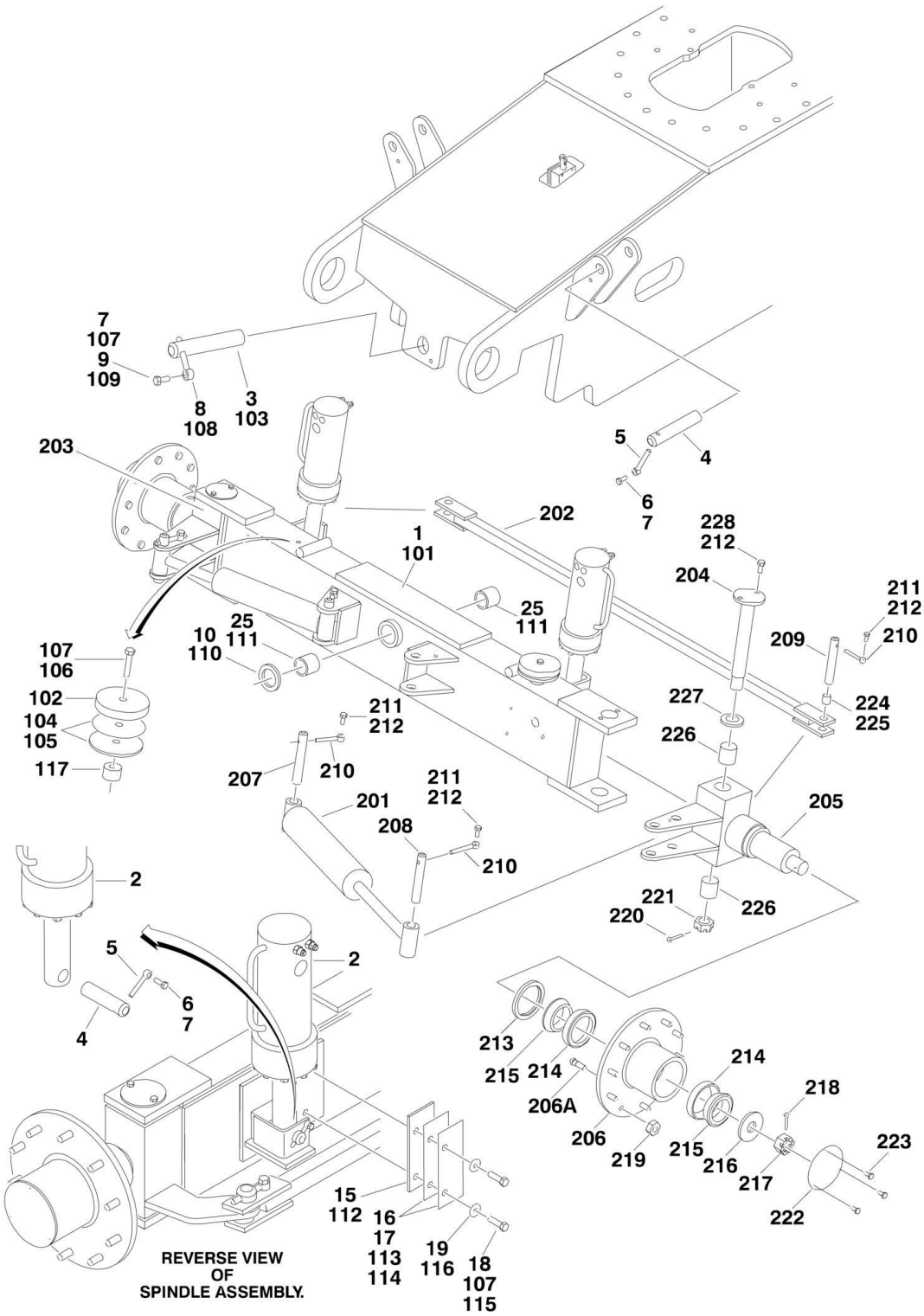

FIGURE 1-1. 2WD FRONT AXLE AND STEERING INSTALLATIONS (SN 0300069000 through 0300081835)

ITEM	PART NUMBER	QTY	DESCRIPTION	REV
		Ref	**AXLE INSTALLATIONS - OSCILLATING**	
	0256398	Ref	**8ft/2.4m Wide Machines**	3
	0256397	Ref	**7ft/2.1m Wide Machines**	4
1		Ref	Axle Weldment Options:	
1	4844929	1	8ft/2.4m Wide Machine	
1	4844960	1	7ft/2.1m Wide Machine	
2	1683280	2	Lockout Cylinder Assembly (See CYLINDER SECTION for Breakdown)	
3	3422592	1	Pin, Pivot	
4	3422426	4	Pin, Cylinder	
5	3841143	4	Keeper, Pin	
6	0641608	4	Bolt 3/8in-16NC x 1in	
7	0100011	AR	Compound, Locking	
8	3841258	1	Keeper, Pin	
9	0642012	1	Bolt 5/8in-11NC x 1-1/2in	
10	4740158	1	Thrustwasher	
15	3538047	2	Plate, Wear	
16	4070878	4	Shim, (.06)	
17	4070879	4	Shim, (.12)	
18	0641612	4	Bolt 3/8in-16NC x 1-1/2in	
19	4711600	4	Flatwasher 3/8in Thin	
25	0961950	2	Bushing	
		Ref	**AXLE INSTALLATIONS - FIXED**	
	0256623	Ref	**8ft/2.4m Wide Machines**	3
	0256624	Ref	**7ft/2.1m Wide Machines**	2
101		Ref	Axle Weldment Options:	
101	4844929	1	8ft/2.4m Wide Machines	
101	4844960	1	7ft/2.1m Wide Machines	
102	3539877	2	Plate, Stop	
103	3422592	1	Pin, Pivot	
104	4070944	AR	Shim (.06)	
105	4070945	AR	Shim (.25)	
106	0641826	4	Bolt 1/2in-13NC x 3-1/4in	
107	0100019	AR	Compound, Locking	
108	3841258	1	Keeper, Pin	
109	0642012	1	Bolt 5/8in-11NC x 1-1/2in	
110	4740158	1	Thrustwasher	
111	0961950	2	Bushing	
112	3538047	2	Plate, Wear	
113	4070878	AR	Shim (.06)	
114	4070879	AR	Shim (.12)	
115	0641612	4	Bolt 3/8in-16NC x 1-1/2in	
116	4711600	4	Flatwasher 3/8in Thin	
117	3539879	2	Plate, Stop	
		Ref	**STEERING INSTALLATIONS**	
	0256388	Ref	**8ft/2.4m Wide Machines**	4
	0256391	Ref	**7ft/2.1m Wide Machines**	4
201		Ref	Steer Cylinder Assembly Options (See CYLINDER SECTION for Breakdown):	

SECTION 1 - FRAME

ITEM	PART NUMBER	QTY	DESCRIPTION	REV
201	1683208	2	8ft/2.4m Wide Machines	
201	1683304	2	7ft/2.1m Wide Machines	
202		Ref	Tie-Rod Options:	
202	3841262	1	8ft/2.4m Wide Machines	
202	3841263	1	7ft/2.1m Wide Machines	
203	4130341	1	Spindle (Right Side)	
204	3422427	2	Kingpin	
205	4130340	1	Spindle (Left Side)	
206	2780212	2	Hub	
206A	0630490	16	Stud, Wheel (8 Per Hub)	
207	3422426	2	Pin	
208	3422429	2	Pin	
209	3422430	2	Pin	
210	3841143	6	Keeper	
211	0641608	6	Bolt 3/8in-16NC x 1in	
212	0100011	AR	Compound, Locking	
213	3960098	2	Seal	
214	0440019	4	Cone, Bearing	
215	0440018	4	Cup, Bearing	
216	4740016	2	Washer, Hardened	
217	3323403	2	Nut, Slotted 1-1/2in-12NF	
218	3450810	2	Pin, Cotter 1/4in x 2-1/2in	
219	3300106	16	Lugnut 5/8in	
220	3451012	2	Pin, Cotter 1/4in x 3in	
221	3313403	2	Nut, Slotted 1-1/2in-6NC	
222	1120460	2	Cap, Hub	
223	0641404	6	Bolt 1/4in-20NC x 1/2in	
224	0962005	2	Bushing	
225	0100063	AR	Loctite, #RC609	
226	0962272	4	Bushing	
227	0440161	2	Thrustwasher	
228	0681608	4	Bolt 3/8in-16NC x 1in (Grade 8)	
	2890245	1	Wheel Bearing Retention Washer Replacement Kit (Includes Items 216 & 218)	

FIGURE 1-2. 2WD FRONT AXLE AND STEERING INSTALLATIONS (SN 0300081836 through 0300087000)

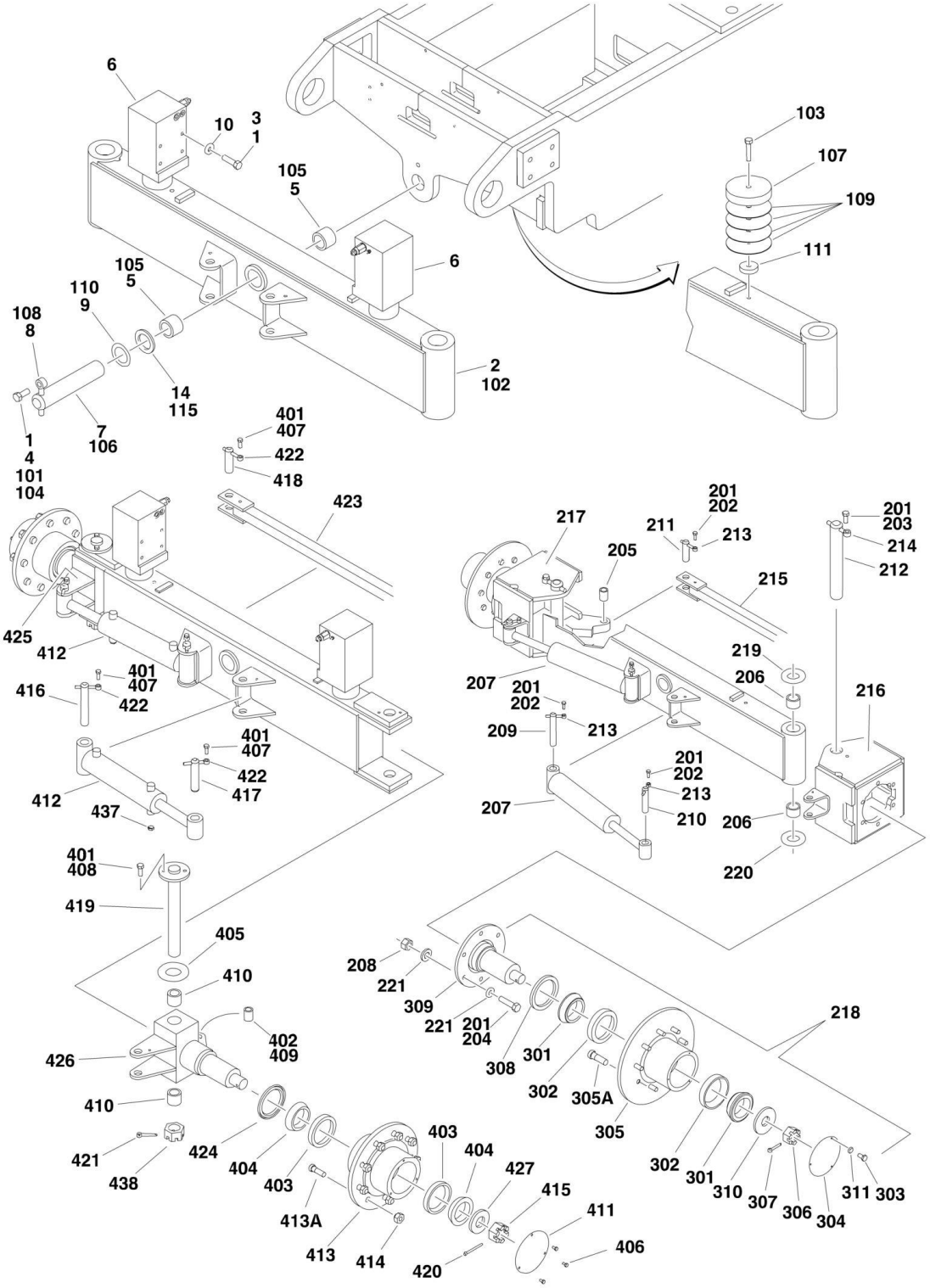

FIGURE 1-2. 2WD FRONT AXLE AND STEERING INSTALLATIONS (SN 0300081836 through 0300087000)

ITEM	PART NUMBER	QTY	DESCRIPTION	REV
		Ref	**AXLE INSTALLATIONS - OSCILLATING**	
	0273954	Ref	**8ft/2.4m Wide Machines without Tow Package**	D
	0274234	Ref	**8ft/2.4m Wide Machines with Tow Package**	A
	0274047	Ref	**7ft/2.1m Wide Machines without Tow Package**	A
	0274256	Ref	**7ft/2.1m Wide Machines with Tow Package**	A
1	0100011	AR	Compound, Locking	
2		Ref	Axle Weldment Options:	
2	0280167	1	8ft/2.4m Wide Machine without Tow Package	
2	0280183	1	8ft/2.4m Wide Machine with Tow Package	
2	0280171	1	7ft/2.1m Wide Machine without Tow Package	
2	0280185	1	7ft/2.1m Wide Machine with Tow Package	
3	0641814	8	Bolt 1/2in-13NC x 1-3/4in	
4	0642012	1	Bolt 5/8in-11NC x 1-1/2in	
5	0961950	2	Bushing	
6	1684280	NLA	Lockout Cylinder Assembly (Use p/n 1001167359) (See CYLINDER SECTION for Breakdown) (Original Equipment)	
6	1001167359	2	Lockout Cylinder Assembly (See CYLINDER SECTION for Breakdown) (Service Replacement)	
7	3422592	1	Pin, Pivot	
8	3841258	1	Keeper, Pin	
9	4740158	1	Thrustwasher	
10	4891800	8	Flatwasher 1/2in Hardened	
14	4071101	AR	Shim	
		Ref	**AXLE INSTALLATIONS - FIXED**	
	0273959	Ref	**8ft/2.4m Wide Machines**	D
	0274054	Ref	**7ft/2.1m Wide Machines**	B
101	0100011	AR	Compound, Locking	
102		Ref	Axle Weldment Options:	
102	0280167	1	8ft/2.4m Wide Machines	
102	0280171	1	7ft/2.1m Wide Machines	
103		Ref	Bolt 1/2in-13NC Options:	
103	0641818	2	8ft/2.4m Wide Machines (2-1/4in Length)	
103	0641816	2	7ft/2.1m Wide Machines (2in Length)	
104	0642012	1	Bolt 5/8in-11NC x 1-1/2in	
105	0961950	2	Bushing	
106	3422592	1	Pin, Pivot	
107	3539877	2	Plate, Stop	
108	3841258	1	Keeper, Pin	
109		Ref	Shim Options:	
109	4070944	12	Shim (.06) for 8ft/2.4m Wide Machines	
109	4070945	2	Shim (.25) for 7ft/2.1m Wide Machines	
110	4740158	1	Thrustwasher	
111		Ref	Spacer Options:	
111	4740542	2	8ft/2.4m Wide Machines **(SN 0300081836 through 0300084828)**	
111	4071101	2	8ft/2.4m Wide Machines **(SN 0300084829 through 0300087000)**	
111	4740543	2	7ft/2.1m Wide Machines	
115	4071101	AR	Shim	
	0274132	Ref	**STEERING INSTALLATION (8FT/2.4M WIDTH MACHINES)**	B

SECTION 1 - FRAME

ITEM	PART NUMBER	QTY	DESCRIPTION	REV
201	0100011	AR	Compound, Locking	
202	0641608	6	Bolt 3/8in-16NC x 1in	
203	0642012	2	Bolt 5/8in-11NC x 1-1/2in	
204	0682020	12	Bolt 5/8in-11NC x 2-1/2in (Grade 8)	
205	0962005	2	Bushing	
206	0962131	4	Bushing	
207	1683208	2	Steer Cylinder Assembly (See CYLINDER SECTION for Breakdown)	
208	3272001	12	Nut 5/8in-11NC (Grade 8)	
209	3422426	2	Pin	
210	3422429	2	Pin	
211	3422430	2	Pin	
212	3422900	2	Kingpin	
213	3841143	6	Keeper	
214	3841258	2	Keeper	
215	3841285	1	Tie-Rod	
216	4130401	1	Spindle (Left Side)	
217	4130402	1	Spindle (Right Side)	
218	4130410	2	Hub Assembly (See Items 301-311 for Breakdown)	
219	4740256	2	Thrustwasher	
220	4740463	2	Thrustwasher	
221	4892000	2	Flatwasher 5/8in Hardened	
	4130410	Ref	**HUB ASSEMBLY (8FT/2.4M WIDTH MACHINES)**	A
		Ref	**Note: Qty is Per Assembly**	
301	0440170	2	Cone, Bearing	
302	0440171	2	Cup, Bearing	
303	0721003	3	Screw #10-24NC x 3/8in	
304	1120304	2	Cap, Hub	
305	2780271	1	Hub	
305A	0630490	9	Stud, Wheel	
306	3323403	1	Nut, Slotted 1-1/2in-12NF	
307	3451010	1	Pin, Cotter 5/16in x 2-1/2in	
308	3960343	1	Seal	
309	4130409	1	Adapter, Spindle	
310	4740283	1	Flatwasher, Hardened	
311	4761000	3	Lockwasher #10	
		Ref	**STEERING INSTALLATION (7FT/2.1M WIDTH MACHINES)**	
	0274257	Ref	**2WS with 7ft/2.1m Wide Frame with Tow Package**	B
	0274062	Ref	**4WS with 7ft/2.1m Width Frame without Tow Package**	G
401	0100011	AR	Compound, Locking	
402	0100063	AR	Loctite # RC609	
403	0440018	4	Cup, Bearing	
404	0440019	4	Cone, Bearing	
405	0440161	2	Thrustwasher	
406	0641404	6	Bolt 1/4in-20NC x 1/2in	
407	0641608	4	Bolt 3/8in-16NC x 1in	
408	0681608	4	Bolt 3/8in-16NC x 1in (Grade 8)	
409	0962005	4	Bushing	
410	0962272	4	Bushing	
411	1120460	2	Cap, Hub	
412	1684418	2	Steer Cylinder Assembly (See CYLINDER SECTION for Breakdown)	

ITEM	PART NUMBER	QTY	DESCRIPTION	REV
413		Ref	Hub Options:	
413	2780276	2	Without Tow Package	
413	4130413	1	With Tow Package (Left Side)	
413	4130415	1	With Tow Package (Right Side)	
413A	0630490	18	Stud, Wheel (9 Per Hub)	
414	3300106	18	Nut, Wheel	
415	3323403	2	Nut, Slotted 1-1/2in-12NF	
416	3422426	2	Pin	
417		Ref	Pin Options:	
417	3422429	2	Without Tow Package	
417	3422429	1	With Tow Package	
417	3422427	1	With Tow Package	
418	3422430	2	Pin	
419	3423175	2	Kingpin	
420	3450810	2	Pin, Cotter 1/4in x 2-1/2in	
421	3451010	2	Pin, Cotter 5/16in x 2-1/2in	
422	3841143	6	Keeper	
423	3841263	1	Tie-Rod	
424	3960098	2	Seal	
425	4130413	1	Spindle (Right Side)	
426	4130414	1	Spindle (Left Side)	
427	4740016	2	Flatwasher, Hardened	
428	0642012	2	Bolt 5/8in-11NC x 1-1/2in	
437	2220237	2	Plug	
438	3313403	2	Nut, Slotted 1-1/2in-6NC	
	2890245	1	Wheel Bearing Retention Washer Replacement Kit (Includes Items 420 & 427)	

FIGURE 1-3. 4WD FRONT AXLE AND STEERING INSTALLATIONS (SN 0300069000 through 0300081835)

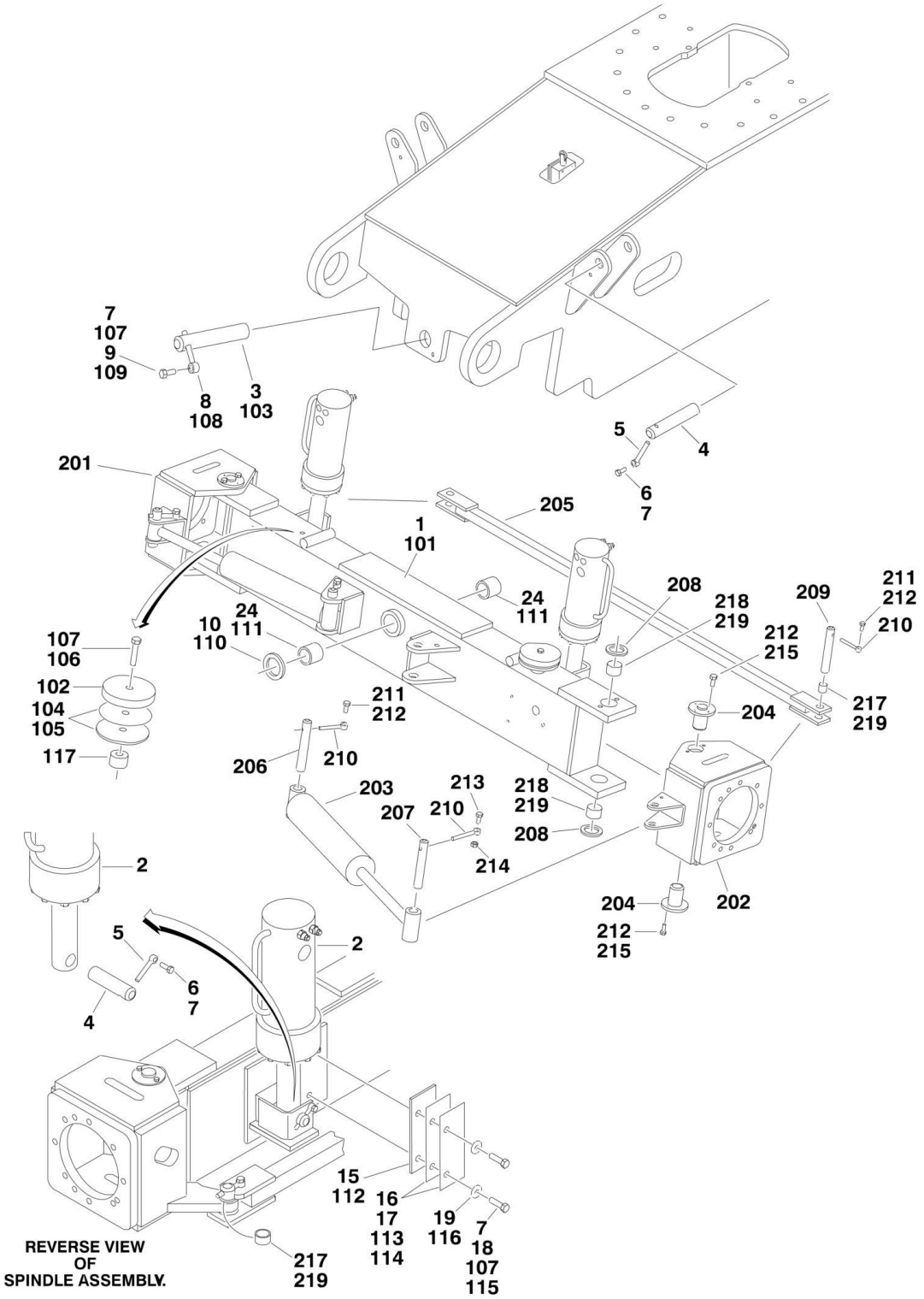

FIGURE 1-3. 4WD FRONT AXLE AND STEERING INSTALLATIONS (SN 0300069000 through 0300081835)

ITEM	PART NUMBER	QTY	DESCRIPTION	REV
	0256392	Ref	**AXLE INSTALLATIONS - OSCILLATING**	3
1	4845041	1	Axle Weldment	
2	1683280	2	Lockout Cylinder Assembly (See CYLINDER SECTION for Breakdown)	
3	3422592	1	Pin, Pivot	
4	3422426	4	Pin, Cylinder	
5	3841143	4	Keeper, Pin	
6	0641608	4	Bolt 3/8in-16NC x 1in	
7	0100011	AR	Compound, Locking	
8	3841258	1	Keeper	
9	0642012	1	Bolt 5/8in-11NC x 1-1/2in	
10	4740158	1	Thrustwasher	
15	3538047	2	Plate, Axle Wear	
16	4070878	AR	Shim (.06)	
17	4070879	AR	Shim (.12)	
18	0641608	4	Bolt 3/8in-16NC x 1in	
19	4711600	4	Flatwasher 3/8in Thin	
24	0961950	2	Bushing, Bronze	
	0256625	Ref	**AXLE INSTALLATIONS - FIXED**	3
101	4845041	1	Axle Weldment	
102	3539877	2	Plate, Stop	
103	3422592	1	Pin, Pivot	
104	4070944	AR	Shim (.06)	
105	4070945	AR	Shim (.25)	
106	0641820	2	Bolt 1/2in-13NC x 2-1/2in	
107	0100019	AR	Compound, Locking	
108	3841258	1	Keeper, Pin	
109	0642012	1	Bolt 5/8in-11NC x 1-1/2in	
110	4740158	1	Thrustwasher	
111	0961950	2	Bushing	
112	3538047	2	Plate, Wear	
113	4070878	AR	Shim (.06)	
114	4070879	AR	Shim (.12)	
115	0641612	4	Bolt 3/8in-16NC x 1-1/2in	
116	4711600	4	Flatwasher 3/8in Thin	
117	3539879	2	Plate, Stop	
	0256399	Ref	**STEERING INSTALLATION**	4
201	4130330	1	Spindle - Right Side	
202	4130331	1	Spindle - Left Side	
203	1683208	2	Steer Cylinder Assembly (See CYLINDER SECTION for Breakdown)	
204	3422802	1	Pin, Pivot	
205	3841285	1	Tie-Rod	
206	3422426	2	Pin, Steer Cylinder	
207	3422429	2	Pin, Steer Cylinder	
208	0440161	4	Thrustwasher	
209	3422430	2	Pin, Tie-Rod	
210	3841143	6	Keeper, Pin	
211	0641608	4	Bolt 3/8in-16NC x 1in	

SECTION 1 - FRAME

ITEM	PART NUMBER	QTY	DESCRIPTION	REV
212	0100011	AR	Compound, Locking	
213	0641610	2	Bolt 3/8in-16NC x 1-1/4in	
214	3311605	2	Locknut 3/8in-16NC	
215	0681608	8	Bolt 3/8in-16NC x 1in (Grade 8)	
217	0962005	2	Bushing, Bronze	
218	0962272	4	Bushing	
219	0100063	AR	Loctite-RC609	

FIGURE 1-4. 4WD FRONT AXLE AND STEERING INSTALLATIONS (SN 0300081836 through 0300087000)

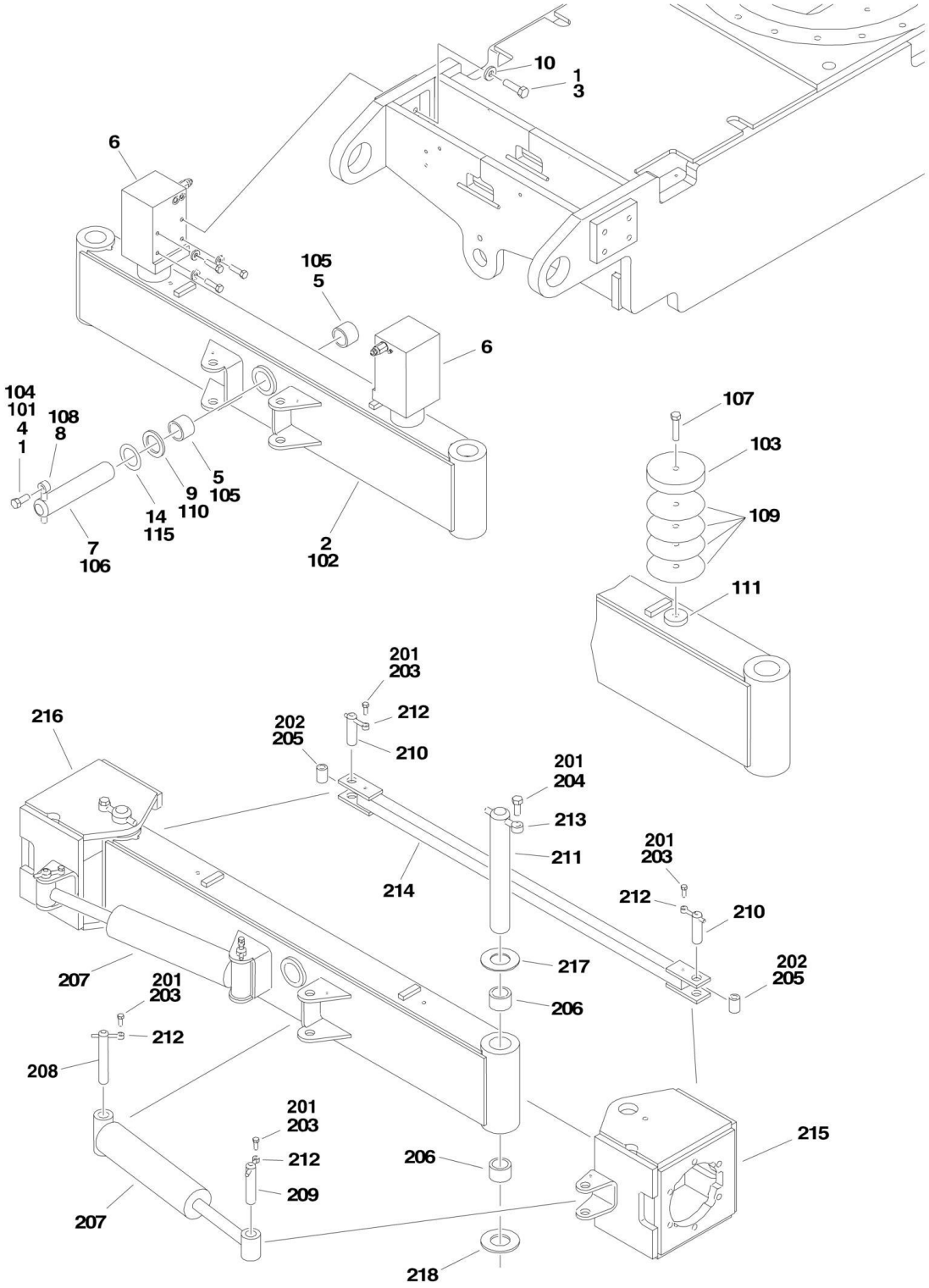

FIGURE 1-4. 4WD FRONT AXLE AND STEERING INSTALLATIONS (SN 0300081836 through 0300087000)

ITEM	PART NUMBER	QTY	DESCRIPTION	REV
		Ref	**AXLE INSTALLATIONS - OSCILLATING**	
	0273954	Ref	**8ft/2.4m Wide Machines without Tow Package**	D
	0274234	Ref	**8ft/2.4m Wide Machines with Tow Package**	A
1	0100011	AR	Compound, Locking	
2		Ref	Axle Weldment Options:	
2	0280167	1	8ft/2.4m Wide Machine without Tow Package	
2	0280183	1	8ft/2.4m Wide Machine with Tow Package	
3	0641814	8	Bolt 1/2in-13NC x 1-3/4in	
4	0642012	1	Bolt 5/8in-11NC x 1-1/2in	
5	0961950	2	Bushing	
6	1684280	NLA	Lockout Cylinder Assembly (Use p/n 1001167359) (See CYLINDER SECTION for Breakdown) (Original Equipment)	
6	1001167359	2	Lockout Cylinder Assembly (See CYLINDER SECTION for Breakdown) (Service Replacement)	
7	3422592	1	Pin, Pivot	
8	3841258	1	Keeper, Pin	
9	4740158	1	Thrustwasher	
10	4891800	8	Flatwasher 1/2in Hardened	
14	4071101	AR	Shim	
	0273959	Ref	**AXLE INSTALLATIONS - FIXED**	C
101	0100011	AR	Compound, Locking	
102	0280167	1	Axle Weldment	
103	0641818	2	Bolt 1/2in-13NC x 2-1/4in	
104	0642012	1	Bolt 5/8in-11NC x 1-1/2in	
105	0961950	2	Bushing	
106	3422592	1	Pin, Pivot	
107	3539877	2	Plate, Stop	
108	3841258	1	Keeper, Pin	
109	4070944	8	Shim (.06)	
110	4740158	1	Thrustwasher	
111	4740542	2	Spacer	
115	4071101	AR	Shim	
		Ref	**STEERING INSTALLATION**	
	0273940	Ref	**2WS without Tow Package**	B
	0274220	Ref	**2WS with Tow Package**	B
	0274121	Ref	**4WS without Tow Package**	B
	0274220	Ref	**4WS with Tow Package**	B
201	0100011	AR	Compound, Locking	
202	0100063	AR	Loctite # RC609	
203	0641608	6	Bolt 3/8in-16NC x 1in	
204	0642012	2	Bolt 5/8in-11NC x 1-1/2in	
205	0962005	2	Bushing	
206	0962131	4	Bushing	
207	1683208	2	Steer Cylinder Assembly (See CYLINDER SECTION for Breakdown)	
208	3422426	2	Pin	
209		Ref	Pin Options:	
209	3422429	2	Without Tow Package	
209	3422429	1	With Tow Package	

SECTION 1 - FRAME

ITEM	PART NUMBER	QTY	DESCRIPTION	REV
209	3422427	1	With Tow Package	
210	3422430	2	Pin	
211	3422900	2	Kingpin	
212	3841143	6	Keeper	
213	3841258	2	Keeper	
214	3841285	1	Tie-Rod	
215	4130401	1	Spindle (Left Side)	
216		Ref	Spindle (Right Side) Options:	
216	4130402	1	Without Tow Package	
216	4130412	1	With Tow Package	
217	4740256	2	Thrustwasher	
218	4740463	2	Thrustwasher	

FIGURE 1-5. 4WS REAR STEERING INSTALLATIONS (SN 0300069000 through 0300081835)

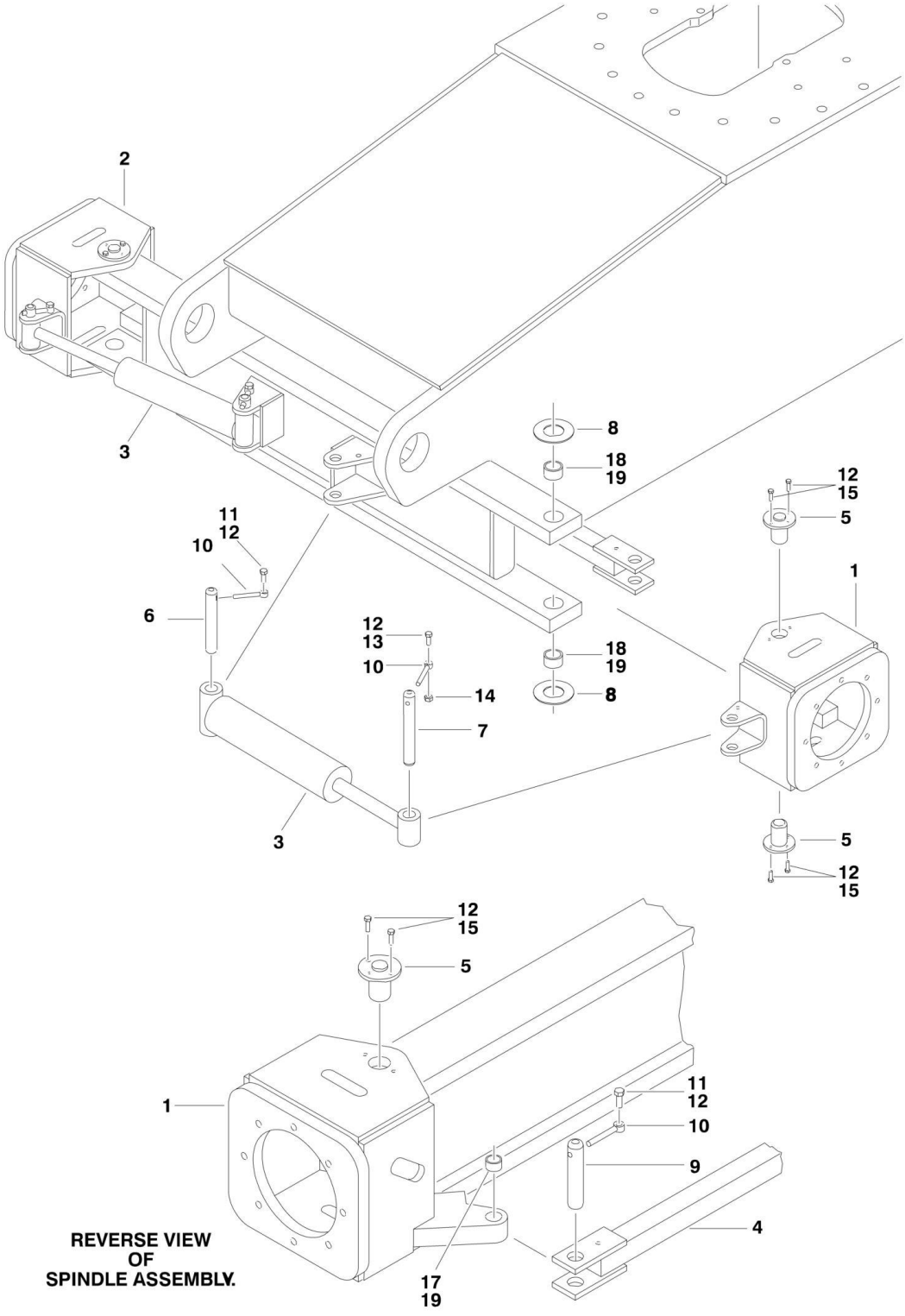

FIGURE 1-5. 4WS REAR STEERING INSTALLATIONS (SN 0300069000 through 0300081835)

ITEM	PART NUMBER	QTY	DESCRIPTION	REV
		Ref	**4WS REAR STEERING INSTALLATIONS OPTIONS:**	
	0256717	Ref	**2WD/4WS 8ft/2.4m Wide Machines**	2
	0256523	Ref	**2WD/4WS 7ft/2.1m Wide Machines**	2
	0256715	Ref	**4WD/4WS Machines**	2
		Ref	**REAR STEERING INSTALLATION**	
	0256399	Ref	**8ft/2.4m Width Frame**	4
	0256400	Ref	**7ft/2.1m Width Frame**	4
1	4130331	1	Spindle - Right Side	
2	4130330	1	Spindle - Left Side	
3		Ref	Steer Cylinder Assembly (See CYLINDER SECTION for Breakdown)	
3	1683208	2	8ft/2.4m Wide Machine	
3	1683304	2	7ft/2.1m Wide Machine	
4		Ref	Tie-Rod Options:	
4	3841285	1	8ft/2.4m Wide Machine	
4	3841291	1	7ft/2.1m Wide Machine	
5	3422802	4	Kingpin	
6	3422426	2	Pin, Steer Cylinder	
7	3422429	2	Pin, Steer Cylinder	
8	0440161	4	Thrustwasher	
9	3422430	2	Pin, Tie-Rod	
10	3841143	6	Keeper, Pin	
11	0641608	4	Bolt 3/8in-16NC x 1in	
12	0100011	AR	Compound, Locking	
13	0641610	2	Bolt 3/8in-16NC x 1-1/4in	
14	3311605	2	Locknut 3/8in-16NC	
15	0681608	8	Bolt 3/8in-16NC x 1in (Grade 8)	
17	0962005	2	Bushing, Bronze	
18	0962272	4	Bushing	
19	0100063	AR	Loctite, #RC609	

FIGURE 1-6. 4WS REAR STEERING INSTALLATIONS (SN 0300081836 through 0300087000)

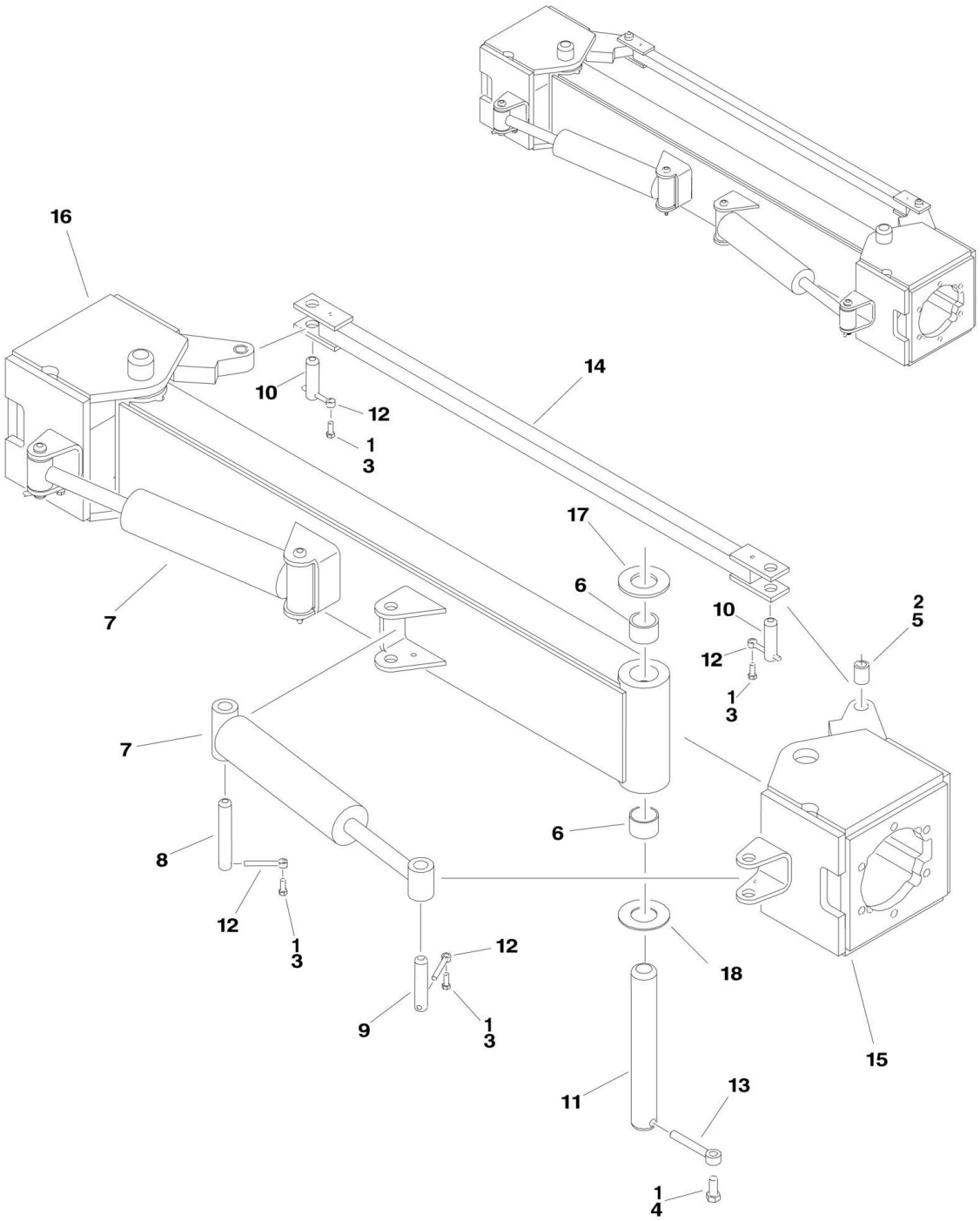

FIGURE 1-6. 4WS REAR STEERING INSTALLATIONS (SN 0300081836 through 0300087000)

ITEM	PART NUMBER	QTY	DESCRIPTION	REV
		Ref	**4WS REAR STEERING INSTALLATIONS OPTIONS:**	
	See Note	NLA	**2WD/4WS 8ft/2.4m Wide Machines (Note: No Longer Available)**	
	0274062	Ref	**2WD/4WS 7ft/2.1m Wide Machines**	G
	0274121	Ref	**4WD/4WS Machines**	2
1	0100011	AR	Compound, Locking	
2	0100063	AR	Loctite # RC609	
3	0641608	6	Bolt 3/8in-16NC x 1in	
4	0642012	2	Bolt 5/8in-11NC x 1-1/2in	
5	0962005	2	Bushing	
6	0962131	4	Bushing	
7		Ref	Steer Cylinder Assembly Option (See CYLINDER SECTION for Breakdown):	
7	1684418	2	7ft/2.1m Wide Machines	
7	1683208	2	8ft/2.4m Wide Machines	
8	3422426	2	Pin	
9	3422429	2	Pin	
10	3422430	2	Pin	
11	3422900	2	Kingpin	
12	3841143	6	Keeper	
13	3841258	2	Keeper	
14		Ref	Tie-Rod Options:	
14	3841677	1	7ft/2.1m Wide Machines	
14	3841285	1	8ft/2.4m Wide Machines	
15	4130401	1	Spindle (Left Side)	
16	4130402	1	Spindle (Right Side)	
17	4740256	2	Thrustwasher	
18	4740463	2	Thrustwasher	

FIGURE 1-7. TIRE AND WHEEL DRIVE INSTALLATIONS

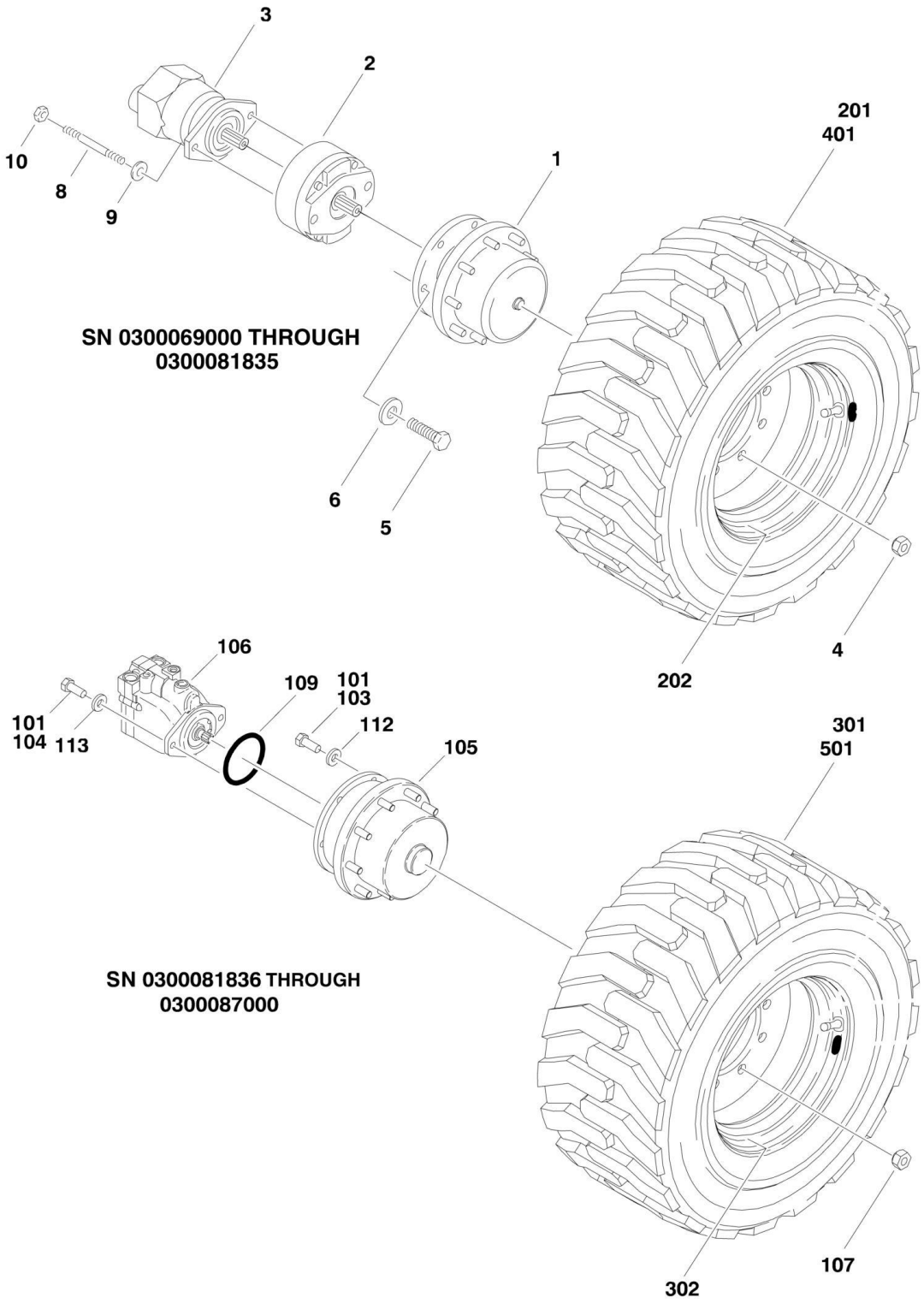

FIGURE 1-7. TIRE AND WHEEL DRIVE INSTALLATIONS

ITEM	PART NUMBER	QTY	DESCRIPTION	REV
		Ref	**WHEEL DRIVE INSTALLATIONS (SN 0300069000 through 0300081835)**	
	0270123	Ref	**Wheel Drive Installations 2WD**	3-B
	0270124	Ref	**Wheel Drive Installations 4WD**	3-E
1	2780213	AR	Drive Hub Assembly (1 Per Drive Wheel) (See DRIVE HUB ASSEMBLY for Breakdown)	
2	0920117	NLA	Drive Brake Assembly (1 Per Drive Wheel) (Use p/n 0920119)	
2	7018612	AR	Repair Kit - 0920117 & 0920119 Brakes (Includes Case Seal, Piston Inner and Outer O-Rings and Back-up Rings, Stator Disc, Rotor Disc, Return Plate, Springs, Oil Seal, Bearing, 2 Retaining Rings and 2 Mounting Face Gaskets) (1 Per Assy)	
2	7000731	AR	Gasket, Mounting Face	
		Ref	**Note: No Other Parts Available.**	
3		Ref	Drive Motor Assembly (1 Per Wheel Drive) Options:	
3	3160205	2	Drive Motor Assembly (1 Per Wheel Drive) 2WD (See DRIVE MOTOR ASSEMBLY for Breakdown) **(SN 0300069000 through 0300071019)**	
3	3160297	2	Drive Motor Assembly (1 Per Wheel Drive) 2WD (See DRIVE MOTOR ASSEMBLY for Breakdown) **(SN 0300071020 through 0300081836)**	
3	3160204	4	Drive Motor Assembly (1 Per Wheel Drive) 4WD (See DRIVE MOTOR ASSEMBLY for Breakdown)	
4	3300106	AR	Lugnut (8 Per Wheel)	
5	0682016	AR	Bolt 5/8in-11NC x 2in (8 Per Drive Wheel) (Grade 8)	
6	4895000	AR	Flatwasher 5/8in Hardened (8 Per Drive Wheel)	
8	4300097	AR	Stud 1/2in-13NC x 5-1/8in (2 Per Drive Wheel)	
9	4891800	AR	Flatwasher 1/2in Hardened (2 Per Drive Wheel)	
10	3311801	AR	Nut 1/2in-13NC (2 Per Wheel Drive)	
		Ref	**WHEEL DRIVE INSTALLATIONS (SN 0300081836 through 0300087000)**	
	0273049	Ref	**Wheel Drive Installations 2WD/2WS**	D
	0274441	Ref	**Wheel Drive Installations 2WD/4WS**	B
	0273048	Ref	**Wheel Drive Installations 4WD/2WS**	F
	0273366	Ref	**Wheel Drive Installations 4WD/4WS**	E
		Ref	**Note: 2WD Qty Shown. For 4WD, Double Qty Shown.**	
101	0100011	AR	Compound, Locking	
103	0681810	4	Bolt 1/2in-13NC x 1-1/4in (Grade 8)	
104	0682016	12	Bolt 5/8in-11NC x 2in (Grade 8)	
105	2780269	2	Drive Hub Assembly (See DRIVE HUB/BRAKE ASSEMBLY for Breakdown)	
106		Ref	Drive Motor Assembly Options (See DRIVE MOTOR ASSEMBLY for Breakdown):	
106	3160299	NLA	2WD (Use p/n 3160249)	
106	3160300	NLA	4WD (Use p/n 3160350)	
107	3300106	18	Nut, Wheel	
109	3790045	1	O-Ring	
112	4891800	4	Flatwasher 1/2in Hardened	
113	4740393	12	Flatwasher 5/8in Hardened	
		Ref	**FOAM-FILLED TIRE AND WHEEL INSTALLATIONS (8FT/2.4M WIDTH MACHINES)**	
		Ref	**Foam-Filled Tire and Wheel Installations (SN 0300069000 through 0300081835)**	
	0255421	Ref	**Tire and Wheel Installation - Foam Filled**	-

ITEM	PART NUMBER	QTY	DESCRIPTION	REV
	0271613	Ref	**Tire and Wheel Installation - Foam Filled**	1
		Ref	**Note: Assemblies may require ballast/foam filling to manufacturer's specifications prior to installing on a machine. Refer to Operation and Safety or Service and Maintenance Manuals.**	
		Ref	**Purchase individual tire and/or rim only if able to foam fill tire and wheel assembly, otherwise, purchase complete assembly.**	
	0255605	2	Tire and Wheel Assembly - Galaxy Foam-Filled (Right Side)	-/B
	0271611	2	Tire and Wheel Assembly - OTR Foam-Filled (Right Side)	A
	0255606	2	Tire and Wheel Assembly - Galaxy Foam-Filled (Left Side)	-/B
	0271610	2	Tire and Wheel Assembly - OTR Foam-Filled (Left Side)	A
201		Ref	Tire 14 x 17.5 Options:	
201	4520171	AR	Galaxy (1 Per Assembly)	
201	4520259	AR	OTR (1 Per Assembly)	
202	4860158	AR	Rim, Wheel (1 Per Assembly)	
		Ref	**FOAM-FILLED TIRE AND WHEEL INSTALLATIONS (8FT/2.4M WIDTH MACHINES)**	
		Ref	**Foam-Filled Tire and Wheel Installations (SN 0300081836 through 0300087000)**	
	4520346	Ref	**Tire and Wheel Installation - Foam Filled**	1
		Ref	**Note: Assemblies may require ballast/foam filling to manufacturer's specifications prior to installing on a machine. Refer to Operation and Safety or Service and Maintenance Manuals.**	
		Ref	**Purchase individual tire and/or rim only if able to foam fill tire and wheel assembly, otherwise, purchase complete assembly.**	
	4520344	2	Tire and Wheel Assembly - Foam-Filled (Left Side)	A
	4520345	2	Tire and Wheel Assembly - Foam-Filled (Right Side)	A
301	4520288	AR	Tire - IN355/55D625 (1 Per Assembly)	
302	4520287	AR	Rim, Wheel (1 Per Assembly)	
401		Ref	**SOLID AIRBOSS TIRE AND WHEEL INSTALLATIONS (8FT/2.4M & 7FT/2.1M WIDTH MACHINES)**	
401		Ref	**Solid Airboss Tire and Wheel Installations (SN 0300069000 through 0300081835)**	
401	0255422	Ref	**Tire and Wheel Installation - Air-Boss**	-
401	0258764	Ref	**Tire and Wheel Installation - Air-Boss (Non-Marking)**	2
401		Ref	Tire and Wheel Assembly - Right Side Options:	
401	4520172	2	Air-Boss	
401	4520210	2	Air-Boss (Non-Marking)	
401		Ref	Tire and Wheel Assembly - Left Side Options:	
401	4520173	2	Air-Boss	
401	4520211	2	Air-Boss (Non-Marking)	
401		Ref	Tire Repair Section (20 Per Assembly) Options:	
401	7016206	80	Air-Boss	
401	7020135	80	Air-Boss (Non-Marking)	
501		Ref	**AIRBOSS TIRE AND WHEEL INSTALLATIONS (8FT/2.4M & 7FT/2.1M WIDTH MACHINES)**	
501		Ref	**Airboss Tire and Wheel Installations (SN 0300081836 through 0300087000)**	
501	4520341	Ref	**Tire and Wheel Installation - Air-Boss**	A
501	4520284	2	Tire and Wheel Assembly - Right Side	
501	4520283	2	Tire and Wheel Assembly - Left Side	
501	7016206	80	Tire Repair Section (20 Per Assembly)	

ITEM	PART NUMBER	QTY	DESCRIPTION	REV
	0255397	Ref	**WHEEL COVER INSTALLATION (OPTIONAL) (NOT SHOWN)**	2-A
		Ref	**Note: Used on Machines SN 0300069000 to SN 0300081836 with Pneumatic or Foam-Filled Tires and Wheels only. Not Available for Machines SN 0300081836 to SN 0300087000.**	
601	1670777	4	Cover, Wheel	
602	0641542	16	Bolt 5/16in-18NC x 5-1/4in	
603	0100011	AR	Compound, Locking (Used on Item 602)	

FIGURE 1-8. DRIVE HUB ASSEMBLY (SN 0300069000 through 0300081835)

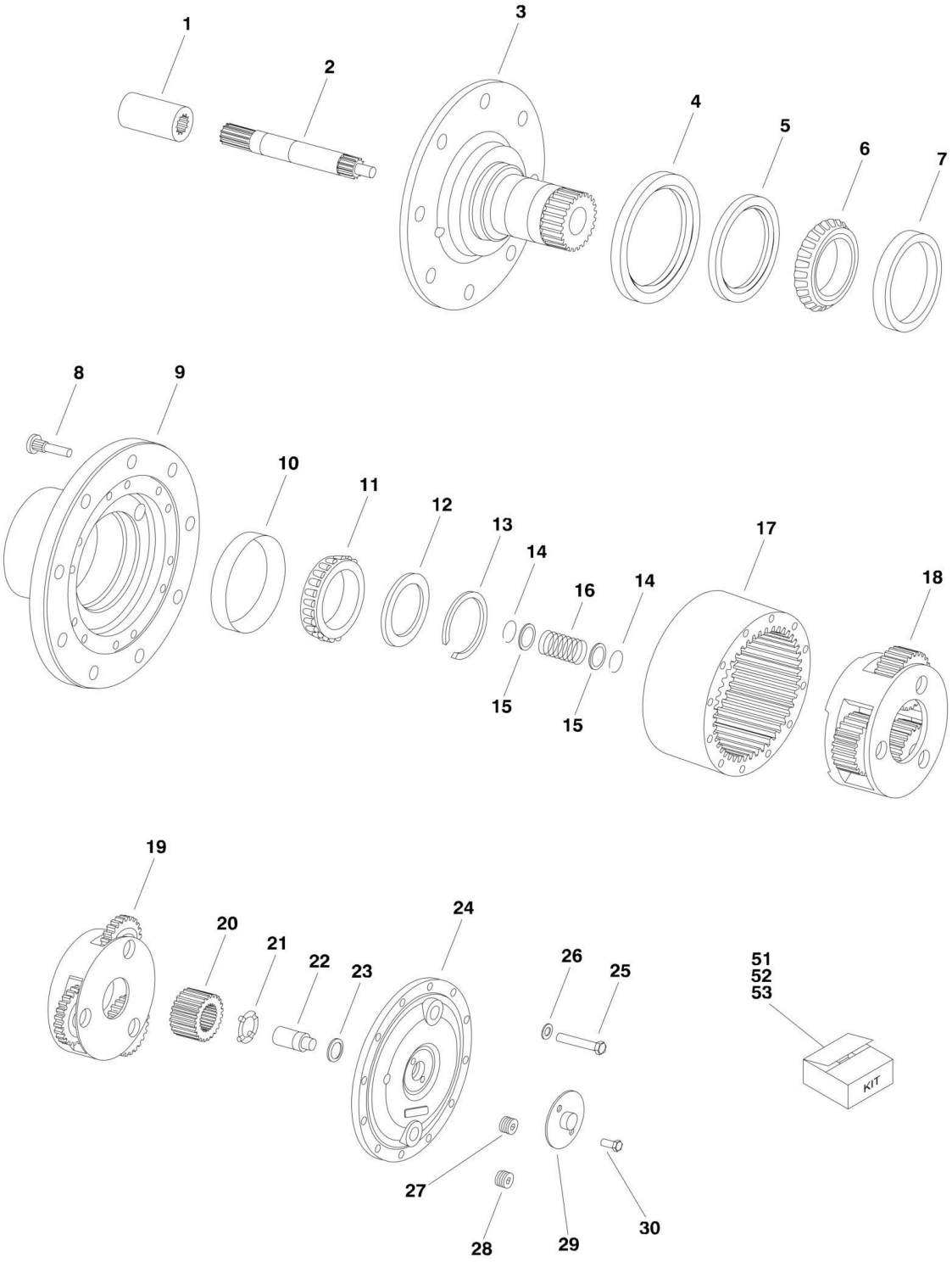

FIGURE 1-8. DRIVE HUB ASSEMBLY (SN 0300069000 through 0300081835)

ITEM	PART NUMBER	QTY	DESCRIPTION	REV
	2780213	Ref	**DRIVE HUB ASSEMBLY**	B
1	7014700	1	Coupling - 13 Teeth	
2	7014701	1	Shaft, Input - 13 Teeth	
3		Ref	Spindle Options:	
3	7014702	1	With Threaded Holes	
3	7014731	1	Without Threaded Holes	
4	7014728	1	Seal, Boot	
5	See Note	NSS	Seal, Oil (Note: Use Item 51 or 52)	
6	See Note	NSS	Cone, Bearing (Note: Use Item 52)	
7	See Note	NSS	Cup, Bearing (Note: Use Item 52)	
8	7014727	8	Bolt, Wheel 5/8in	
9	7014706	1	Hub	
10	See Note	NSS	Cup, Bearing (Note: Use Item 52)	
11	See Note	NSS	Cone, Bearing (Note: Use Item 52)	
12	7001711	1	Thrustwasher	
13	See Note	NSS	Retaining Ring Kit (Note: Use Item 51 or 52)	
14	7014711	2	Ring, Retaining	
15	7014712	2	Thrustwasher	
16	7014710	1	Spring	
17	7014713	1	Gear, Ring	
18	7014714	1	Secondary Carrier Assembly	
19	7014715	1	Primary Carrier Assembly	
20	7014716	1	Gear, Sun - 15 Teeth	
21	7014722	1	Thrustwasher	
22	7014717	1	Plunger, Disengage	
23	7014718	1	O-Ring	
24	7014719	1	Cover, Hub	
25	7014721	12	Bolt	
26	7014720	12	Flatwasher	
27	7014725	1	Plug, Magnetic	
28	7014726	1	Plug, Pipe	
29	7014723	1	Cover, Disengage	
30	7014724	2	Bolt	
51	7014730	1	Seal Kit (Includes Items 5 & 13)	
52	7014729	1	Bearing and Seal Kit (Includes Items 5, 6, 7, 10, 11 & 13)	
53	7014709	1	Retaining Ring Kit (Includes Qty 6 Retaining Rings)	

FIGURE 1-9. DRIVE HUB/BRAKE ASSEMBLY (SN 0300081836 through 0300087000)

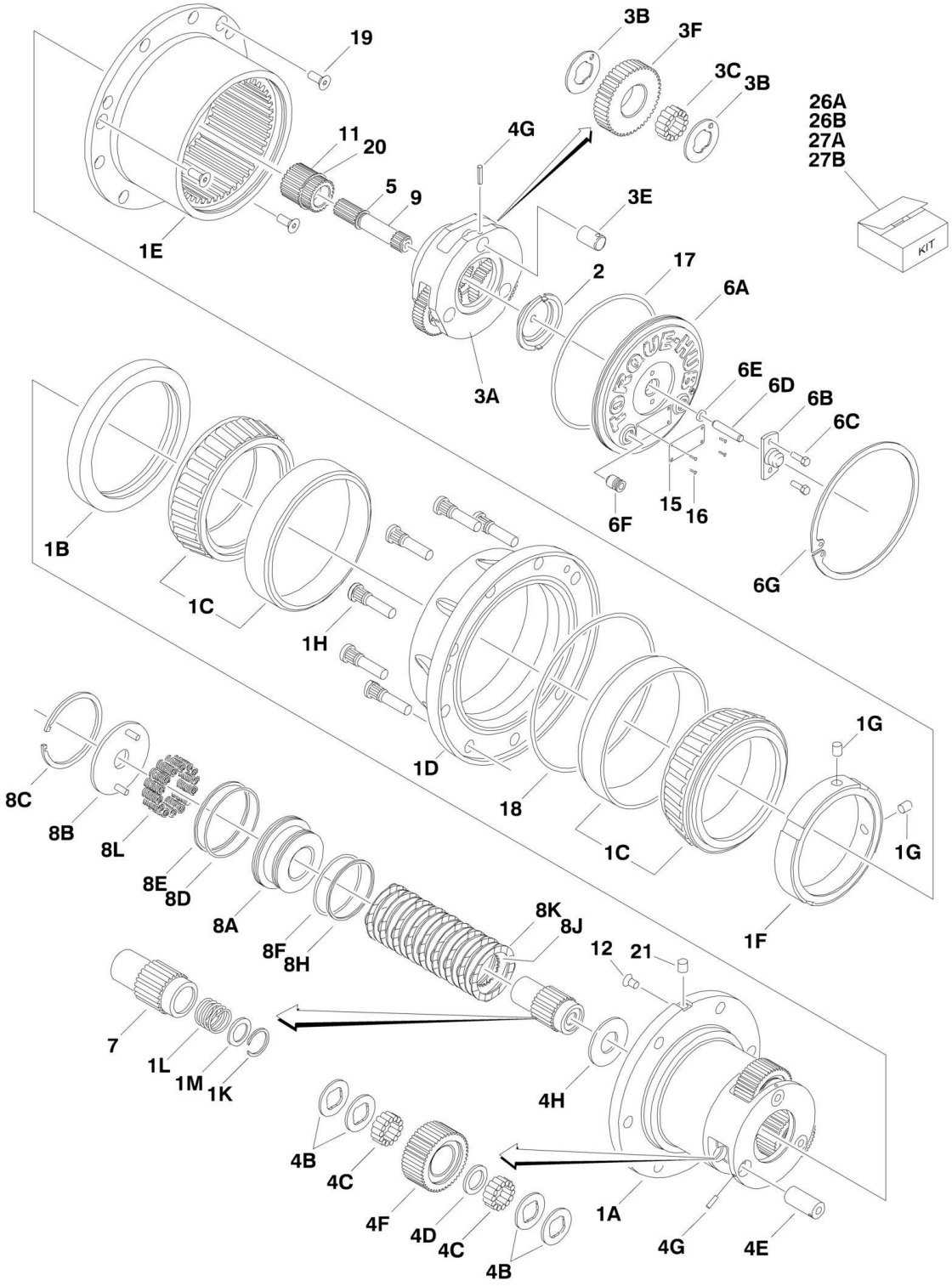

FIGURE 1-9. DRIVE HUB/BRAKE ASSEMBLY (SN 0300081836 through 0300087000)

ITEM	PART NUMBER	QTY	DESCRIPTION	REV
	2780269	Ref	**DRIVE HUB/BRAKE ASSEMBLY**	B
1	See Note	1	Spindle/Housing Assembly (Note: Not Available - Purchase Individual Components)	
1A	7024729	1	Spindle	
1B	70001119	1	Seal, Lip	
1C	7024735	2	Bearing (Includes Cup and Cone)	
1D	See Note	1	Housing (Note: Not Available - Purchase Complete Assembly)	
1E	7024730	1	Ring, Gear	
1F	See Note	NSS	Nut, Bearing (Note: Use Item 26A)	
1G	See Note	2	Setscrew 1/4in-28NF x 1/2in (Note: Use Items 26A, 26B, 27A or 27B)	
1H	7024732	9	Stud, Wheel	
1K	7024125	1	Ring, Retaining	
1L	7024124	1	Spring	
1M	7024129	1	Thrustwasher	
2	7024741	1	Thrustwasher	
3	See Note	1	Carrier Assembly (Note: Not Available - Purchase Individual Components)	
3A	7024725	1	Carrier	
3B	7024127	6	Thrustwasher	
3C	7024733	42	Bearing, Needle	
3E	7024724	3	Shaft, Planet	
3F	7024727	3	Gear, Planet	
4	See Note	1	Planet Gear Sub-Assembly (Note: Not Available - Purchase Individual Components)	
4B	7024740	12	Thrustwasher	
4C	7024734	84	Bearing, Needle	
4D	7024736	3	Spacer, Thrust	
4E	7024726	3	Shaft, Planet	
4F	7024728	3	Gear, Planet	
4G	7001913	6	Roll Pin	
4H	7024742	1	Thrustwasher	
5	7017027	1	Ring, Retaining	
6	See Note	1	Cover Assembly (Note: Not Available - Purchase Individual Components)	
6A	7024731	1	Plate, Cover	
6B	7017093	1	Cap, Disengage	
6C	7000216	2	Bolt 1/2in-20NC x 1/2in	
6D	7024739	1	Pin, Dowel	
6E	7017095	1	O-Ring	
6F	7017072	2	Plug, Pipe with O-Ring	
6G	7024738	1	Ring, Retaining	
7	7024722	1	Coupling	
8	See Note	1	Brake, Input (Note: Not Available - Purchase Individual Components)	
8A	70000782	1	Piston, Brake	
8B	7024743	1	Plate, Pressure	
8C	See Note	1	Ring, Retaining (Note: Use Items 26B, 27A or 27B)	
8D	See Note	1	O-Ring (Note: Use Item 26B or 27A)	
8E	See Note	1	Ring, Back-up (Note: Use Item 26B or 27A)	
8F	See Note	1	O-Ring (Note: Use Item 26B or 27A)	

SECTION 1 - FRAME

ITEM	PART NUMBER	QTY	DESCRIPTION	REV
8H	See Note	1	Ring, Back-up (Note: Use Item 26B or 27A)	
8J	See Note	8	Rotor, Brake (Note: Use Item 27A)	
8K	See Note	9	Stator, Brake (Note: Use Item 27A)	
8L	See Note	AR	Spring, Brake (Note: Use Item 27B)	
9	7024721	1	Shaft, Input	
11	7024723	1	Gear, Sun	
12	See Note	1	Plug (Note: Not Available for Purchase)	
15	See Note	1	Plate, ID (Not Shown) (Note: Not Available for Purchase)	
16	7000281	4	Screw, Drive	
17	7024134	1	O-Ring	
18	7024744	1	O-Ring	
19	7017022	3	Screw, Countersunk 3/8in-16NC	
20	7024737	1	Ring, Retaining	
21	See Note	1	Plug (Note: Not Available for Purchase)	
26		Ref	Seal Kit Options:	
26A	7024744	1	Hub Seal Kit (Includes Items 1B, 1F, 1G, 17, 18 & 19)	
26B	7024765	1	Brake Seal Kit (Includes Items 1G, 8C, 8D, 8E, 8F & 8H)	
27		Ref	Repair Kit Options:	
27A	7024764	1	Brake Lining Kit (Includes Items 1G, 8C, 8D, 8E, 8F, 8H, 8J & 8K)	
27B	7024766	1	Brake Spring Kit (Includes Items 1G, 8C & 8L)	

FIGURE 1-10. DRIVE MOTOR ASSEMBLY (2WD MACHINES) (SN 0300069000 through 0300071019)

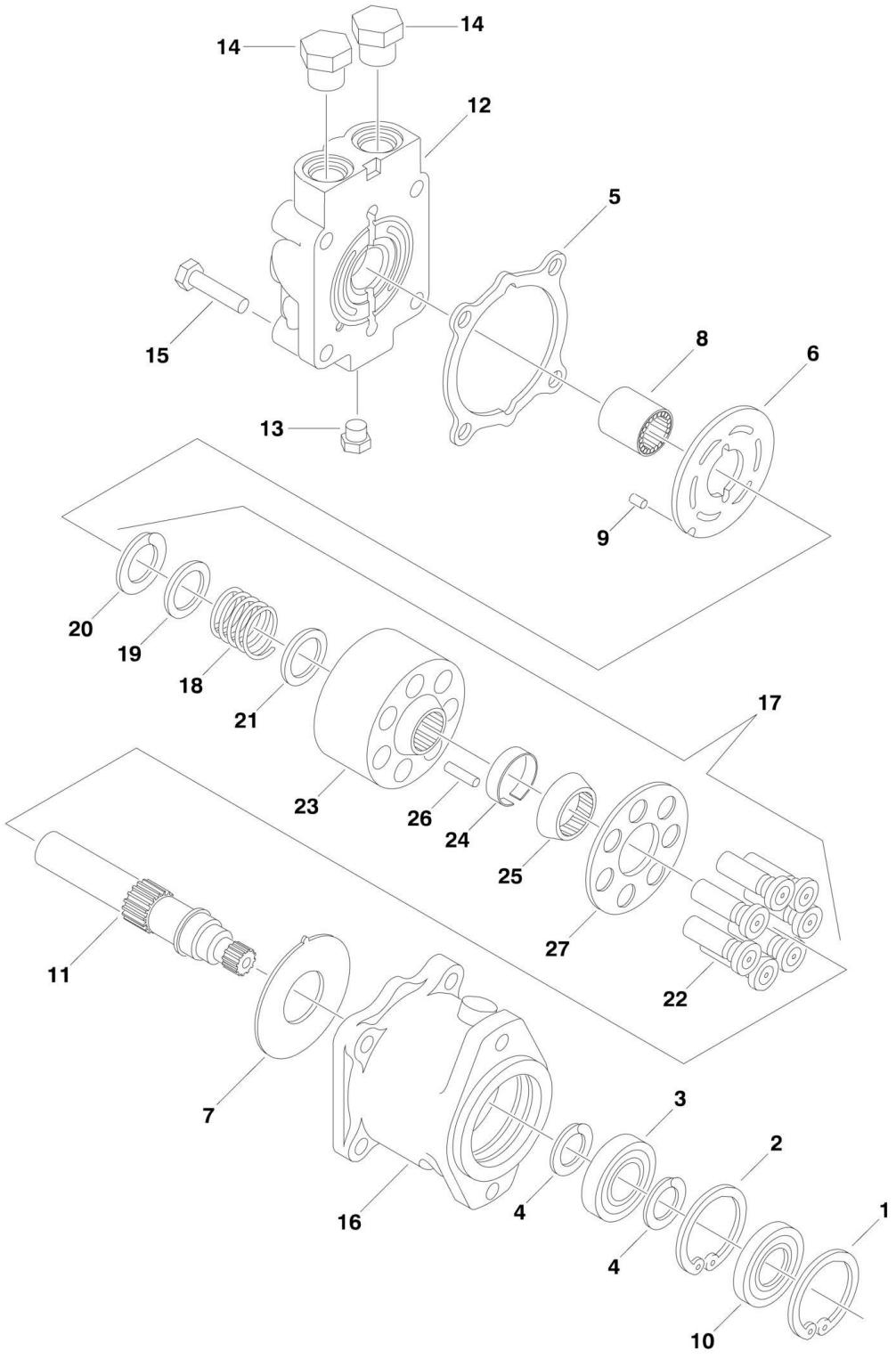

FIGURE 1-10. DRIVE MOTOR ASSEMBLY (2WD MACHINES) (SN 0300069000 through 0300071019)

ITEM	PART NUMBER	QTY	DESCRIPTION	REV
	3160205	Ref	**DRIVE MOTOR ASSEMBLY - SUNSTRAND (2WD)**	B
1	7007438	1	Ring, Retaining	
2	7007438	1	Ring, Retaining	
3	7007437	1	Bearing, Ball	
4	7007439	2	Ring, Retaining	
5	7010108	1	Gasket, End Cap	
6	7010109	1	Plate, Motor Valve	
7	7010110	1	Plate, Thrust	
8	7007425	1	Bearing, Needle	
9	7007446	1	Pin	
10	7007459	1	Seal, Lip	
11	7010111	1	Shaft	
12	7010112	1	Cap, End	
13	7010113	1	Plug	
14	7010114	2	Plug	
15	7010115	4	Screw	
16	3160205	1	Housing (Note: Not Available for Purchase)	
17	7010116	1	Cylinder Block Assembly (Includes Items 18-27)	
18	7007428	1	Spring	
19	7007427	1	Washer	
20	7007426	1	Ring, Retaining	
21	7007429	1	Washer	
22	7010117	7	Piston Assembly	
23	7010118	1	Block, Cylinder	
24	7007430	1	Retainer, Pin	
25	7007434	1	Guide, Slip Retainer	
26	7007431	3	Pin, Slip Retainer	
27	7010119	1	Retainer, Slip	

FIGURE 1-11. DRIVE MOTOR ASSEMBLY (2WD MACHINES) (SN 0300071020 through 0300081836)

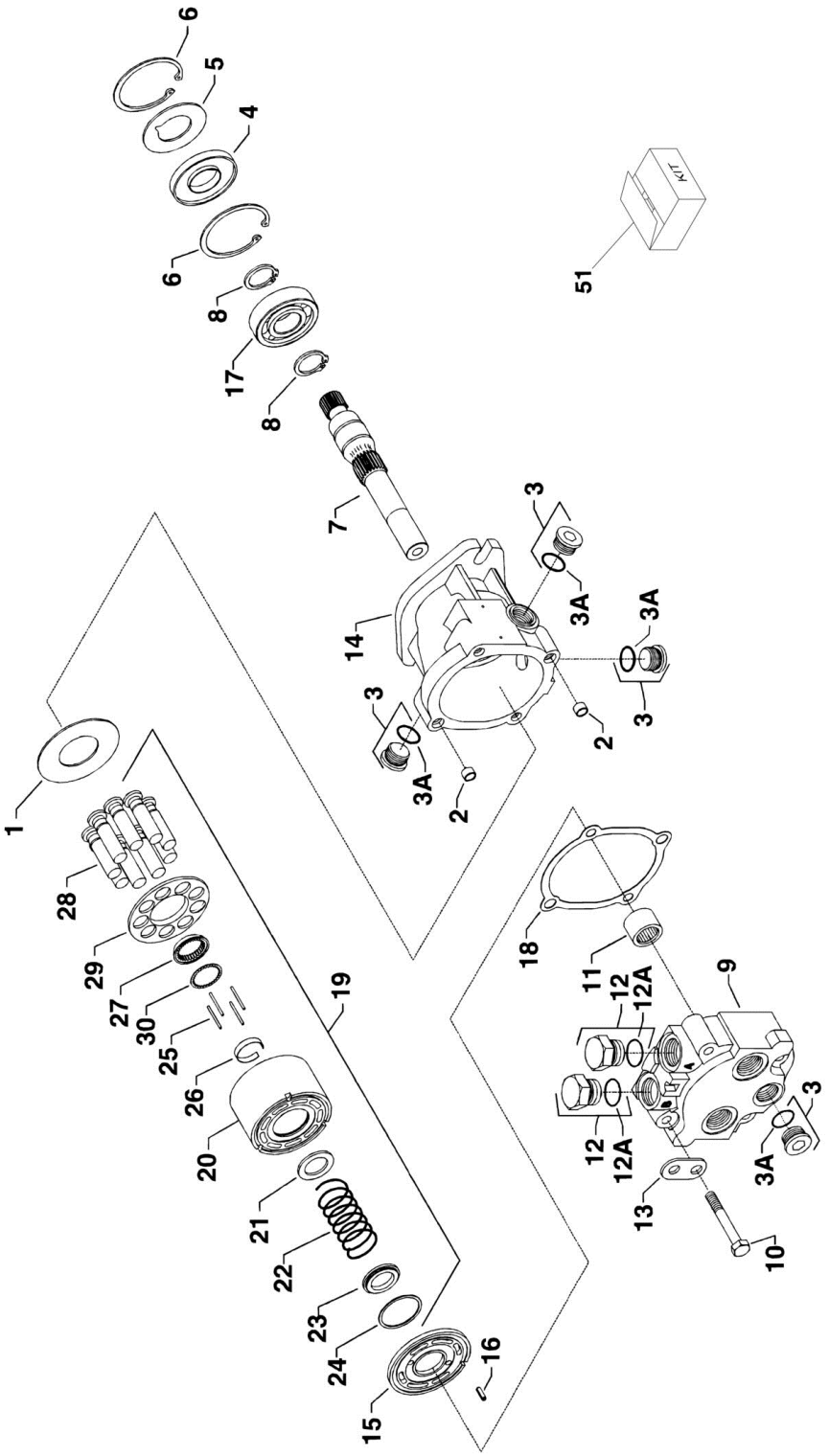

FIGURE 1-11. DRIVE MOTOR ASSEMBLY (2WD MACHINES) (SN 0300071020 through 0300081836)

ITEM	PART NUMBER	QTY	DESCRIPTION	REV
	3160297	Ref	**DRIVE MOTOR ASSEMBLY - SUNSTRAND (2WD)**	A
1	7024834	1	Plate, Thrust	
2	7007435	2	Pin, Spring	
3	7023964	4	Plug	
3A	7007415	4	O-Ring	
4	7007459	1	Seal, Lip	
5	7022371	1	Washer, Support	
6	7007438	2	Ring, Retaining	
7	7024835	1	Shaft	
8	7007439	2	Ring, Retaining	
9	7024836	1	Cap, End	
10	7024837	4	Screw	
11	7024838	1	Bearing, Needle	
12	7007419	2	Plug	
12A	7007418	2	O-Ring	
13	7024839	1	Bracket, Lifting	
14	3160297	1	Housing (Note: Not Available for Purchase)	
15	7024841	1	Plate, Motor Valve	
16	7024842	1	Pin, Slotted	
17	7007437	1	Bearing, Ball	
18	See Note	NSS	Gasket, End Cap (Note: Use Item 51)	
19	7024840	1	Cylinder Block Assembly (Includes Items 20-30)	
20	See Note	NSS	Block, Cylinder (Note: Use Item 19)	
21	See Note	NSS	Washer (Note: Use Item 19)	
22	See Note	NSS	Spring (Note: Use Item 19)	
23	7007427	1	Washer	
24	7007426	1	Ring, Retaining	
25	See Note	NSS	Pin, Slip Retainer (Note: Use Item 19)	
26	See Note	NSS	Retainer, Pin (Note: Use Item 19)	
27	See Note	NSS	Guide, Slip Retainer (Note: Use Item 19)	
28	See Note	NSS	Piston Assembly (Note: Use Item 19)	
29	See Note	NSS	Retainer, Slip (Note: Use Item 19)	
30	See Note	NSS	Thrustwasher (Note: Use Item 19)	
51	7024843	1	Seal Kit (Includes Items 3A, 4, 12A & 18)	

FIGURE 1-12. DRIVE MOTOR ASSEMBLY (4WD MACHINES) (SN 0300069000 through 0300081835)

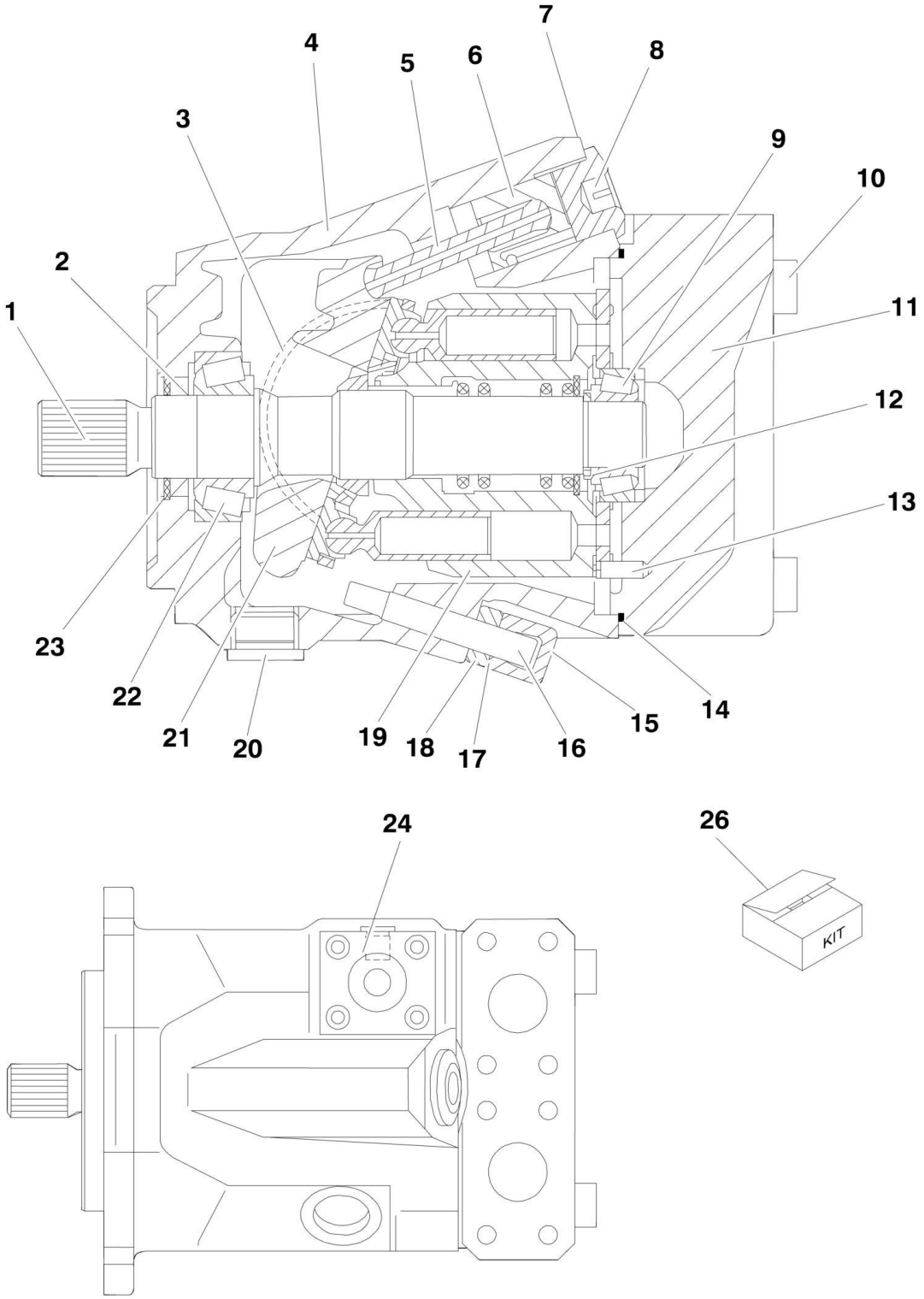

FIGURE 1-12. DRIVE MOTOR ASSEMBLY (4WD MACHINES) (SN 0300069000 through 0300081835)

ITEM	PART NUMBER	QTY	DESCRIPTION	REV
	3160204	Ref	**DRIVE MOTOR ASSEMBLY - REXROTH (4WD)**	A
1	7012701	1	Shaft - 13 Teeth	
2	See Note	NSS	Seal, Shaft (Note: Use Item 26)	
3	7012702	2	Bearing, Cradle	
4	3160204	1	Housing (Note: Not Available for Purchase)	
5	7012703	1	Rod, Piston	
6	7012704	1	Piston, Stroking	
7	See Note	NSS	O-Ring (Note: Use Item 26)	
8	7012705	1	Nut, Adaptor	
9	7012706	1	Bearing, Roller	
10	7012707	4	Bolt, Socket Head M12 x 65	
11	7012708	1	Block, Port	
12	7012709	1	Shim	
13	7012710	1	Pin, Dowel M6 x 18	
14	See Note	NSS	O-Ring (Note: Use Item 26)	
15	7012711	1	Nut, Cap M10 x 1	
16	7012712	1	Screw, Adjusting	
17	See Note	NSS	O-Ring (Note: Use Item 26)	
18	7012713	1	Nut, Jam M10 x 1	
19	7012716	1	Rotary Group Assembly	
20	See Note	1	Plug (Note: Not Available for Purchase)	
21	7024036	1	Plate, Swash	
22	7012714	1	Bearing, Roller	
23	7012715	1	V-Ring	
24	7012700	1	Control Plate Assembly **(SN 0300069000 through 0300029852)**	
26	2900788	1	Seal Kit (Includes Items 2, 7, 14, 17 and O-Rings under Item 24)	

FIGURE 1-13. DRIVE MOTOR ASSEMBLY (2WD & 4WD MACHINES) (ORIGINAL EQUIPMENT) (SN 0300081836 through 0300087000)

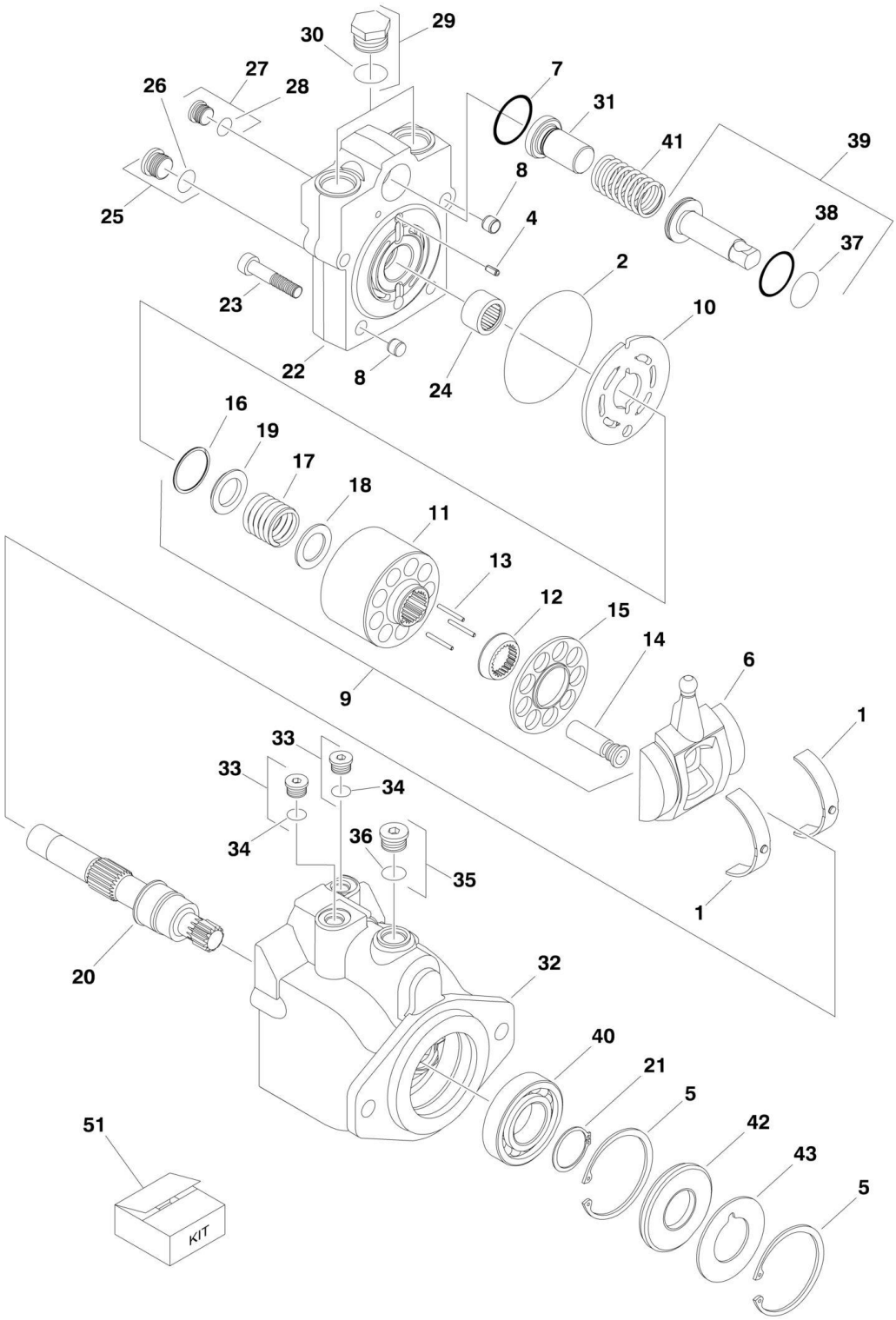

FIGURE 1-13. DRIVE MOTOR ASSEMBLY (2WD & 4WD MACHINES) (ORIGINAL EQUIPMENT) (SN 0300081836 through 0300087000)

ITEM	PART NUMBER	QTY	DESCRIPTION	REV
		Ref	**DRIVE MOTOR ASSEMBLY (ORIGINAL EQUIPMENT)**	
	3160299	Ref	**Drive Motor Assembly (Original Equipment) 2WD**	C
	3160300	Ref	**Drive Motor Assembly (Original Equipment) 4WD**	C
1	7022302	2	Bearing, Journal	
2	See Note	NSS	O-Ring (Note: Use Item 51)	
3	See Note	NSS	O-Ring (Note: Use Item 51)	
4	7007446	1	Pin	
5	7007438	2	Ring, Retaining	
6	7024861	1	Swash Plate	
7	See Note	NSS	O-Ring (Note: Use Item 51)	
8	7007435	2	Pin	
9	7022320	1	Cylinder Block Kit (Includes Items 11-19)	
10	7024862	1	Plate, Valve	
11	7024863	1	Block, Cylinder	
12	7024864	1	Guide, Slipper Retainer	
13	7021275	3	Pin, Slipper Hold Down	
14	7024865	9	Piston Assembly	
15	7024866	1	Retainer, Slipper	
16	7022311	1	Ring, Retaining	
17	7024867	1	Spring	
18	7024868	1	Washer	
19	7022314	1	Retainer, Spring	
20	7023910	1	Shaft	
21	7007439	1	Ring, Retaining	
22	7024869	1	Cap, End - Axial	
23	7022368	4	Screw	
24	7021249	1	Bearing, Needle	
25	7022321	1	Plug (Includes Item 26)	
26	See Note	NSS	O-Ring (Note: Use Item 25 or 51)	
27	7022318	1	Plug (Includes Item 28)	
28	See Note	NSS	O-Ring (Note: Use Item 27 or 51)	
29	7027419	2	Plug (Includes Item 30)	
30	See Note	NSS	O-Ring (Note: Use Item 29 or 51)	
31		Ref	Seat, Spring Options:	
31	7024853	1	Seat, Spring 2WD/2WS	
31	7022372	1	Seat, Spring 2WD/4WS, 4WD/2WS & 4WD/4WS	
32	7022370	1	Housing	
33	7022318	2	Plug (Includes Item 34)	
34	See Note	NSS	O-Ring (Note: Use Item 33 or 51)	
35	7022321	1	Plug (Includes Item 36)	
36	See Note	NSS	O-Ring (Note: Use Item 35 or 51)	
37	See Note	NSS	O-Ring (Note: Use Item 51)	
38	See Note	NSS	Ring, Seal (Note: Use Item 51)	
39	7024871	1	Piston, Servo	
40	7007437	1	Bearing	
41	7022326	1	Spring	
42	See Note	NSS	Seal, Lip (Note: Use Item 51)	
43	7022371	1	Washer, Support	
51	7022328	1	Seal Kit (Includes Items 2, 3, 7, 26, 28, 30, 34, 36, 37, 38 & 42)	

FIGURE 1-14. DRIVE MOTOR ASSEMBLY (2WD & 4WD MACHINES) (SERVICE REPLACEMENT)

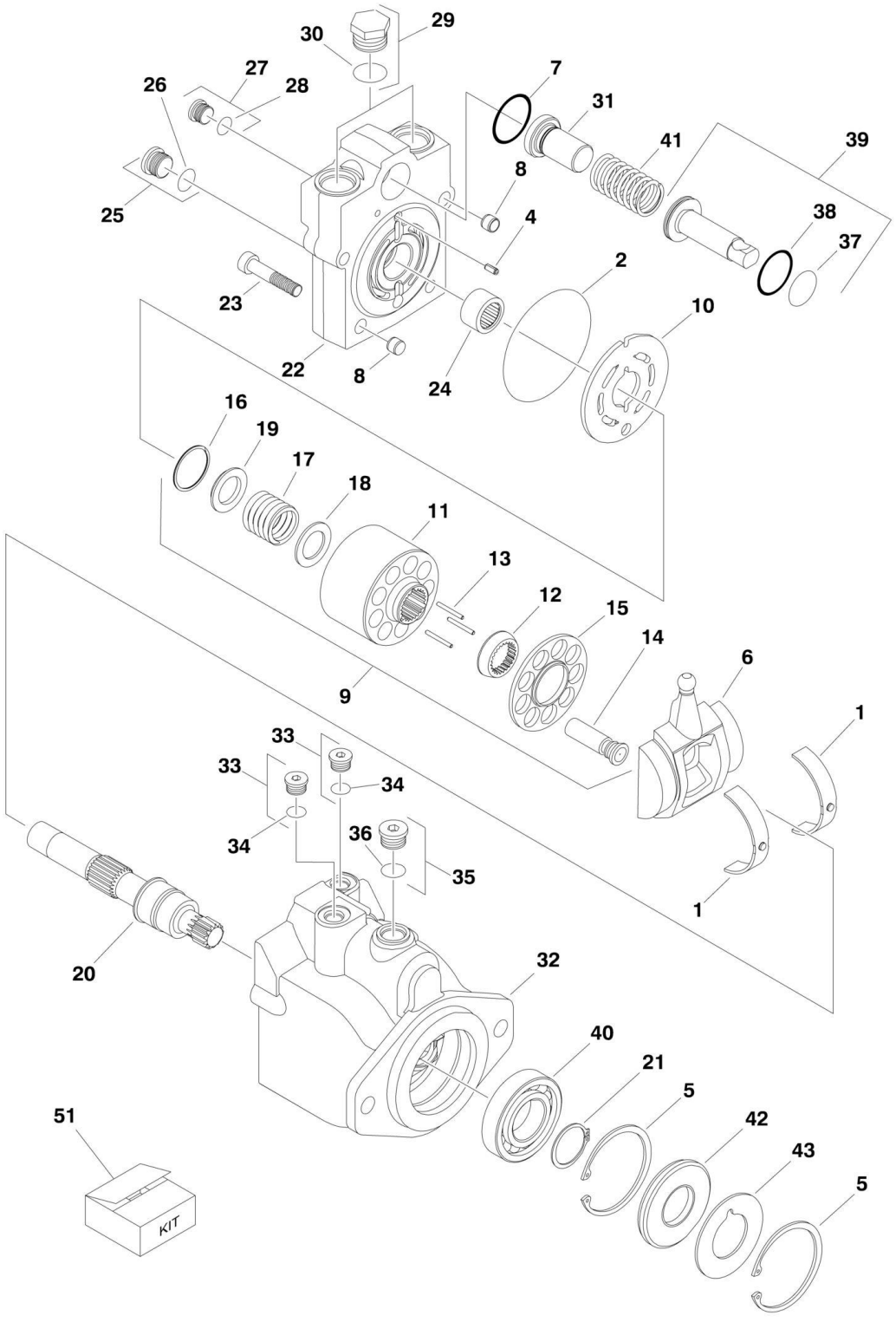

FIGURE 1-14. DRIVE MOTOR ASSEMBLY (2WD & 4WD MACHINES) (SERVICE REPLACEMENT)

ITEM	PART NUMBER	QTY	DESCRIPTION	REV
		Ref	**DRIVE MOTOR ASSEMBLY (SERVICE REPLACEMENT)**	
	3160349	Ref	**2WD (Service Replacement Motor for p/n 3160299)**	B
	3160350	Ref	**4WD (Service Replacement Motor for p/n 3160300)**	B
1	7022302	2	Bearing, Journal	
2	7007446	1	Pin	
3	7007438	2	Ring, Retaining	
4	70000794	1	Swash Plate	
5	See Note	2	Pin (Note: Not Available for Purchase)	
6	See Note	NSS	Gasket (Note: Use Item 51)	
7	7027740	1	Cylinder Block Kit (Includes Items 9-17)	
8	7024862	1	Plate, Valve	
9	7027740	1	Block, Cylinder	
10	7027740	1	Guide, Slipper Retainer	
11	7021275	3	Pin, Slipper Hold Down	
12	7024865	9	Piston Assembly	
13	7027740	1	Retainer, Slipper	
14	7022311	1	Ring, Retaining	
15	7024867	1	Spring	
16	7022313	1	Washer	
17	7022314	1	Retainer, Spring	
18	7023910	1	Shaft	
19	7007439	1	Ring, Retaining	
20	70000795	1	Cap, End - Axial	
21	7022368	5	Screw	
22	7021249	1	Bearing, Needle	
23	2220886	1	Plug (Includes Item 24)	
24	See Note	NSS	O-Ring (Note: Use Item 23 or 51)	
25	2220883	1	Plug (Includes Item 26)	
26	See Note	NSS	O-Ring (Note: Use Item 25 or 51)	
27	7027419	2	Plug (Includes Item 28)	
28	See Note	NSS	O-Ring (Note: Use Item 27 or 51)	
29		Ref	Seat, Spring Options:	
29	7024853	1	Seat, Spring 2WD/2WS	
29	7022372	1	Seat, Spring 2WD/4WS, 4WD/2WS & 4WD/4WS	
30	See Note	1	Housing (Note: Not Available - Purchase Complete Assy)	
31	2220883	2	Plug (Includes Item 32)	
32	See Note	NSS	O-Ring (Note: Use Item 31 or 51)	
33	2220886	1	Plug (Includes Item 34)	
34	See Note	NSS	O-Ring (Note: Use Item 33 or 51)	
35	See Note	NSS	O-Ring (Note: Use Item 51)	
36	See Note	NSS	Ring, Seal (Note: Use Item 51)	
37	7024871	1	Piston, Servo	
38	7007437	1	Bearing	
39	7022326	1	Spring	
40	See Note	NSS	Seal, Lip (Note: Use Item 51)	
41	7022371	1	Washer, Support	
51	7022328	1	Seal Kit (Includes Items 6, 24, 26, 28, 32, 34, 35, 36 & 40)	

FIGURE 1-15. DRIVE VALVES AND SHIELDS INSTALLATION (FRAME MOUNTED) (SN 0300069000 through 0300081835)

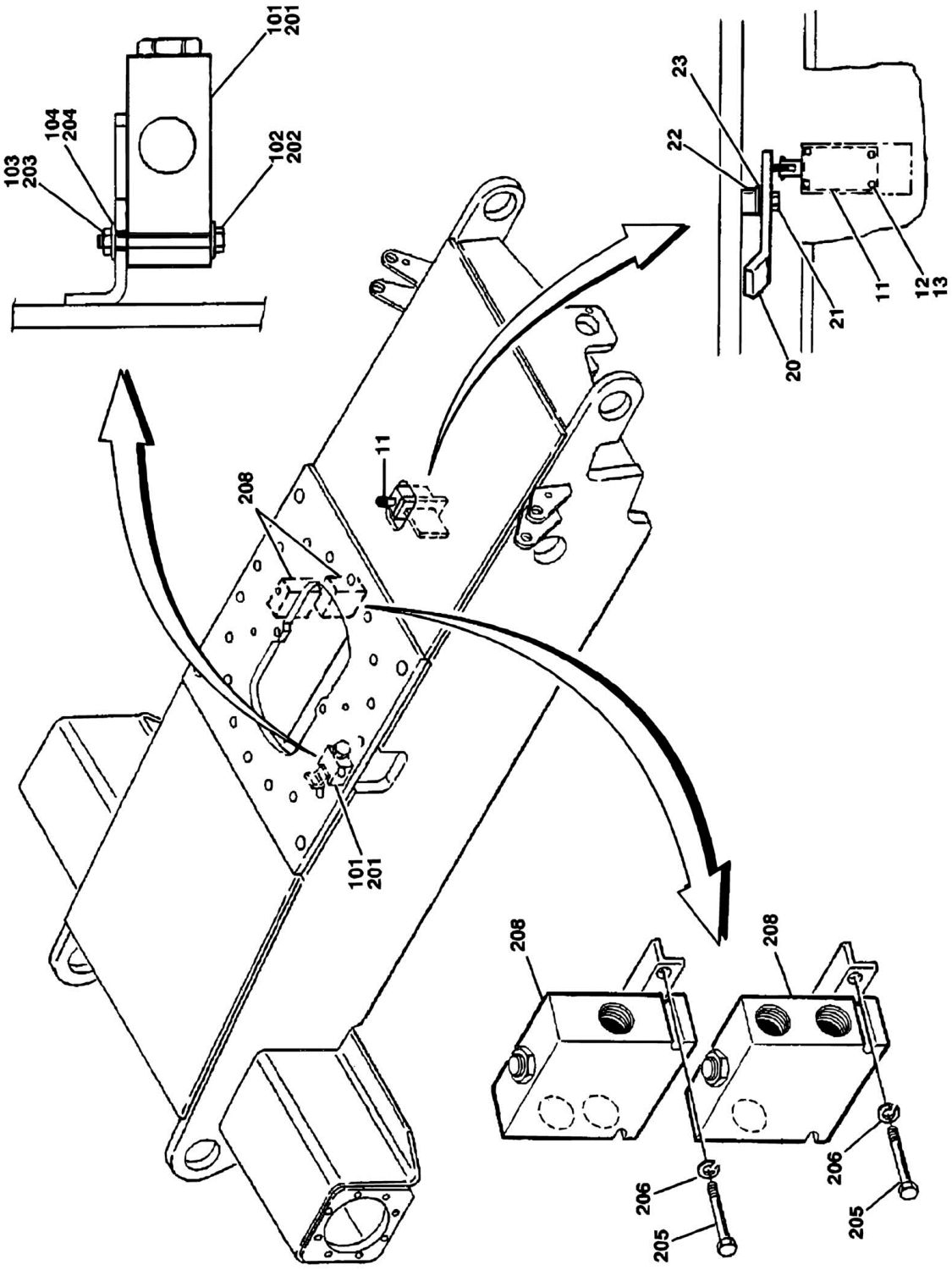

FIGURE 1-15. DRIVE VALVES AND SHIELDS INSTALLATION (FRAME MOUNTED) (SN 0300069000 through 0300081835)

ITEM	PART NUMBER	QTY	DESCRIPTION	REV
		Ref	**OSCILLATING AXLE LOCKOUT VALVE INSTALLATIONS**	
	0256398	Ref	**2WD with 8ft/2.4m Wide Frame**	3
	0256397	Ref	**2WD with 7ft/2.1m Wide Frame**	4
	0256392	Ref	**4WD**	3
11	4640871	1	Valve, Cam	
11	7012693	1	Seal Kit - 4640871 Valve	
11	7002840	1	Tool, Pin Removal	
12	0641414	4	Bolt 1/4in-20NC x 1-7/8in	
13	4711400	8	Flatwasher 1/4in Thin	
20	1100098	1	Cam, Lockout	
21	0641816	3	Bolt 1/2in-13NC x 2in	
22	4751800	9	Flatwasher 1/2in Regular	
23	4566832	3	Tube, Spacer	
	0270123	Ref	**FRAME VALVE INSTALLATIONS (2WD)**	3-B
101	4640923	1	Valve, Flow Divider	
101	7012442	1	Cartridge	
101	7012980	1	Seal Kit - 7012442 Cartridge	
101	7012993	1	Orifice	
102	0641522	2	Bolt 5/16in-18NC x 2-3/4in	
103	3311505	2	Locknut 5/16in-18NC	
104	4751500	4	Flatwasher 5/16in Regular	
105	4060808	3.5 ft/1.1m	Shield, Flex Trim (Not Shown)	
	0270124	Ref	**FRAME VALVE INSTALLATIONS (4WD)**	3-E
201	4640923	1	Valve, Flow Divider	
201	7012992	1	Cartridge	
201	7012980	1	Seal Kit - 7012992 Cartridge	
201	7012993	1	Orifice	
202	0641522	2	Bolt 5/16in-18NC x 2-3/4in	
203	3311505	2	Locknut 5/16in-18NC	
204	4751500	4	Flatwasher 5/16in Regular	
205	0641520	4	Bolt 5/16in-18NC x 2-1/2in	
206	4751500	4	Flatwasher 5/16in Regular	
208	4640937	2	Valve, Flow Divider	
208	7021657	1	Cartridge	
208	7012980	1	Seal Kit - 7021657 Cartridge	
208	7012994	1	Orifice	
209	4060808	3/5ft/1.1m	Shield, Flex Trim (Not Shown)	

FIGURE 1-16. DRIVE VALVES AND SHIELDS INSTALLATION (FRAME MOUNTED) (SN 0300081836 through 0300087000)

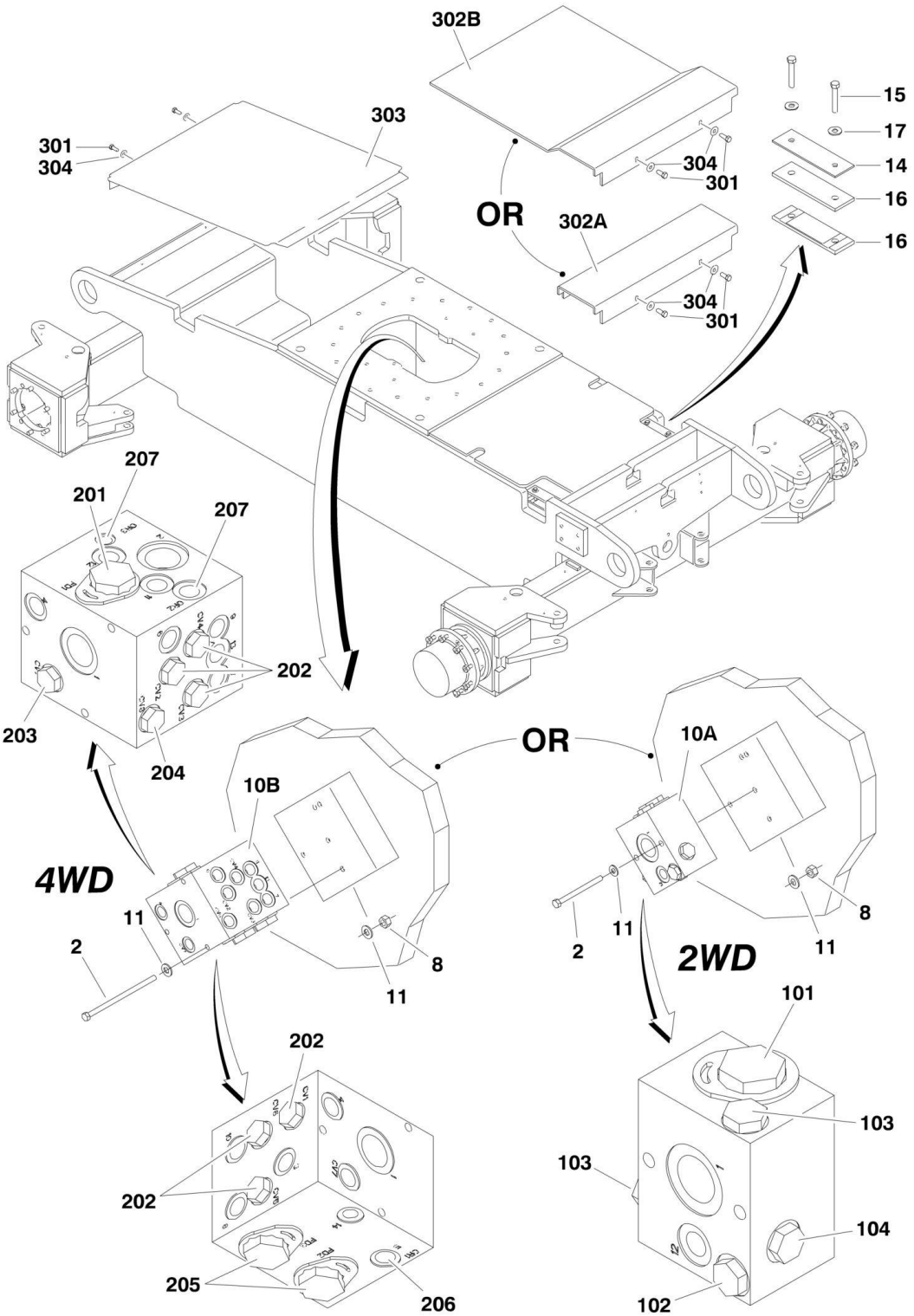

FIGURE 1-16. DRIVE VALVES AND SHIELDS INSTALLATION (FRAME MOUNTED) (SN 0300081836 through 0300087000)

ITEM	PART NUMBER	QTY	DESCRIPTION	REV
		Ref	**DRIVE VALVES INSTALLATION OPTIONS:**	
	0273049	Ref	**Drive Valves Installation 2WD/2WS**	D
	0274441	Ref	**Drive Valves Installation 2WD/4WS**	B
	0273048	Ref	**Drive Valves Installation 4WD/2WS**	F
	0273366	Ref	**Drive Valves Installation 4WD/4WS**	E
2		Ref	Bolt 5/16in-18NC Options:	
2	0641532	2	4in Length (2WD)	
2	0641552	3	6-1/2in Length (4WD)	
8	3311505	AR	Locknut 5/16in-18NC	
10		Ref	Flow Divider Valve Assembly Options:	
10A		Ref	Flow Divider Valve Assembly 2WD Options (See Items 101-104 for Breakdown):	
10A	4641287	NLA	Flow Divider Valve Assembly (Use p/n 1001100120) (Original Equipment) **(SN 0300081836 through 0300086893)**	
10A	4641409	NLA	Flow Divider Valve Assembly (Use p/n 1001100120) (Original Equipment) **(SN 0300081836 through 0300086893)**	
10A	4641409	NLA	Flow Divider Valve Assembly (Use p/n 1001100120) (Original Equipment) **(SN 0300086894 through 0300087000)**	
10A	1001100120	1	Service Replacement	
		Ref	**Note: Original Equipment Valve may have been replaced with Service Replacement Valve. Identify p/n stamped on valve before ordering parts.**	
10B		Ref	Flow Divider Valve Assembly 4WD Options (See Items 201-205 for Breakdown):	
10B	4641280	NLA	Flow Divider Valve Assembly (Use p/n 1001098503) (Original Equipment) **(SN 0300081836 through 0300086893)**	
10B	4641410	NLA	Flow Divider Valve Assembly (Use p/n 1001098503) (Original Equipment) **(SN 0300081836 through 0300086893)**	
10B	4641410	NLA	Flow Divider Valve Assembly (Use p/n 1001098503) (Original Equipment) **(SN 0300086894 through 0300087000)**	
10B	1001098503	1	Service Replacement	
		Ref	**Note: Original Equipment Valve may have been replaced with Service Replacement Valve. Identify p/n stamped on valve before ordering parts.**	
11	4711500	AR	Flatwasher 5/16in Thin	
14		Ref	Bar, Clamping	
14	Not Required	0	Bar, Clamping 2WD/2WS	
14	0363012	2	Bar, Clamping 2WD/2WS, 4WD/2WS & 4WD/4WS	
15	0641618	4	Bolt 3/8in-16NC x 2-1/4in	
16	3340911	4	Rubber, Clamp	
17	4751600	4	Flatwasher 3/8in Regular	
		Ref	**FLOW DIVIDER ASSEMBLY (2WD)**	
	4641287	Ref	**Flow Divider Assembly (Original Equipment) (SN 0300081836 through 0300086893)**	C
	4641409	Ref	**Flow Divider Assembly (Original Equipment) (SN 0300086894 through 0300087000)**	B
	1001100120	Ref	**Service Replacement**	A
101	7023933	1	Valve, Cartridge (Flow Divider)	
101	7021625	1	Seal Kit - Flow Divider Cartridge	
101	70000781	1	Locking Kit	
102		Ref	Valve, Cartridge (Check) Options:	
102	7024850	1	Valve, Cartridge (Check) (Used with p/n 4641287) **(SN**	

ITEM	PART NUMBER	QTY	DESCRIPTION	REV
			0300081836 through 0300086893)	
102	7024892	1	Valve, Cartridge (Check) (Used with p/n 4641409 & p/n 1001100120) **(SN 0300086894 through 0300087000)**	
102	7023936	1	Seal Kit - Check Cartridge	
103	7022397	2	Valve, Cartridge (Check)	
103	7022399	2	Seal Kit - Check Cartridge	
104	7023935	1	Valve, Cartridge (Check)	
104	7023936	1	Seal Kit - Check Cartridge	
		Ref	**FLOW DIVIDER ASSEMBLY (4WD)**	
	4641280	Ref	**Flow Divider Assembly (4WD) (Original Equipment) (SN 0300081836 through 0300086893)**	C
	4641410	Ref	**Flow Divider Assembly (4WD) (Original Equipment) (SN 0300086894 through 0300087000)**	B
	1001098503	Ref	**Service Replacement**	A
201	7023933	1	Valve, Cartridge (Flow Divider)	
201	7021625	1	Seal Kit - Flow Divider Cartridge	
202		Ref	Valve, Cartridge (Check) Options:	
202	7022397	6	Valve, Cartridge (p/n 4641280 & p/n 4641410)	
202	7022399	6	Seal Kit - Check Cartridge	
202	70003408	6	Valve, Cartridge (p/n 1001098503)	
202	7022399	6	Seal Kit - Check Cartridge	
203	7023935	1	Valve, Cartridge (Check)	
203	7023936	1	Seal Kit - Check Cartridge	
204		Ref	Valve, Cartridge (Check) Options:	
204	7024850	1	Valve, Cartridge (Check) (Used with p/n 4641280) **(SN 0300081836 through 0300086893)**	
204	7024892	1	Valve, Cartridge (Check) (Used with p/n 4641410 & p/n 1001098503) **(SN 0300086894 through 0300087000)**	
204	7023936	1	Seal Kit - Check Cartridge	
205	7023917	2	Valve, Cartridge (Flow Divider)	
205	7021625	2	Seal Kit - Flow Divider Cartridge	
206	70002063	1	Plug, Orifice	
207	70002064	2	Plug, Orifice	
		Ref	**FRAME SHIELDS INSTALLATION**	
	0274349	Ref	**Frame Shields Installation 2WD/2WS**	C
	0274229	Ref	**Frame Shields Installation 2WD/4WS (n600A/AJ Only)**	A
	0274349	Ref	**Frame Shields Installation 4WD/2WS**	E
	0274348	Ref	**Frame Shields Installation 4WD/4WS**	D
301	0641608	AR	Bolt, 3/8in-6NC x 7/8in	
302		Ref	Shield, Frame - Front Options:	
302A	3380557	1	Machines with 8ft/2.4m Wide Frames	
302B	3380560	1	Machines with 7ft/2.1m Wide Frames	
303		Ref	Shield, Frame - Rear Options:	
303	Not Required	0	2WS Machines with 8ft/2.4m Wide Frames	
303	3380573	1	4WS Machines with 8ft/2.4m Wide Frames	
303	3380558	1	Machines with 7ft/2.1m Wide Frames	
304	4751600	AR	Flatwasher, 3/8in Regular	

FIGURE 1-17. TOW PACKAGE INSTALLATION (OPTIONAL) (SN 0300069000 through 0300081835)

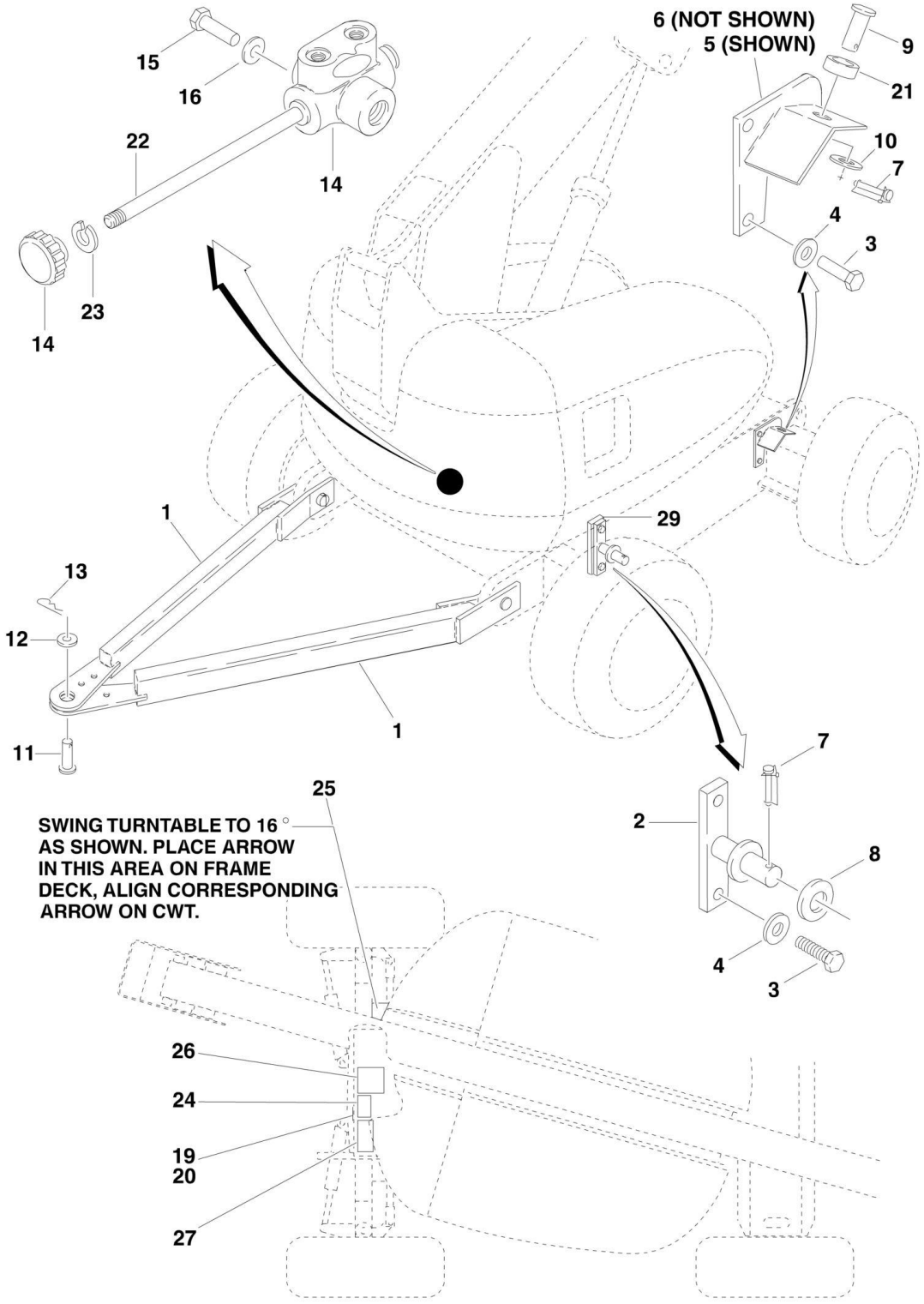

FIGURE 1-17. TOW PACKAGE INSTALLATION (OPTIONAL) (SN 0300069000 through 0300081835)

ITEM	PART NUMBER	QTY	DESCRIPTION	REV
		Ref	**TOW INSTALLATIONS**	
	0257436	Ref	**7ft/2.1m width machines**	3
	0257101	Ref	**8ft/2.4m width machines**	2
1	4845281	1	Tow Bar Weldment	
2		Ref	Bracket, Tow Bar Options:	
2	Not Required	0	7ft/2.1m Width Machines	
2	4845283	2	8ft/2.4m width machines	
3		Ref	Bolt 3/8in-16NC x 1in Options:	
3	Not Required	0	7ft/2.1m Width Machines	
3	0641608	8	8ft/2.4m width machines	
4		Ref	Flatwasher 3/8in Thin Options:	
4	Not Required	0	7ft/2.1m Width Machines	
4	4711600	8	8ft/2.4m width machines	
5		Ref	Bracket, Tow Bar Options:	
5	Not Required	0	7ft/2.1m Width Machines	
5	4845450	1	8ft/2.4m width machines	
6		Ref	Bracket, Tow Bar Options:	
6	Not Required	0	7ft/2.1m Width Machines	
6	4845451	1	8ft/2.4m width machines	
7	3421453	4	Pin, Snap	
8	4712600	AR	Flatwasher 1in Thin	
9	3422553	2	Pin, Tow Bar	
10	4713400	2	Flatwasher 1-1/2in Thin	
11	3422553	1	Pin, Tow Bar	
12	4713000	2	Flatwasher 1-1/4in Thin	
13	3420592	1	Hairpin	
14	4640261	1	Diversion Valve Assembly	
15	0641505	2	Bolt 5/16in-18NC x 5/8in	
16	4711500	2	Flatwasher 5/16in Thin	
19	3250872	1	Nameplate	
20	3820001	4	Rivet	
21	4567172	2	Tube, Spacer	
22	3841329	1	Rod Extension	
23	4761600	1	Lockwasher 3/8in	
24	1703403	1	Decal - Instruction	
25	1703404	2	Decal - Match Arrow	
26	1703444	1	Decal	
27	1703450	1	Decal	
28	3539662	1	Plate, Valve Mounting (Not Shown)	
29		Ref	Bar, Tow Clamp Options:	
29	Not Required	0	7ft/2.1m Width Machines	
29	0362519	4	8ft/2.4m width machines	

FIGURE 1-18. TOW PACKAGE INSTALLATION (OPTIONAL) (SN 0300081836 through 0300087000)

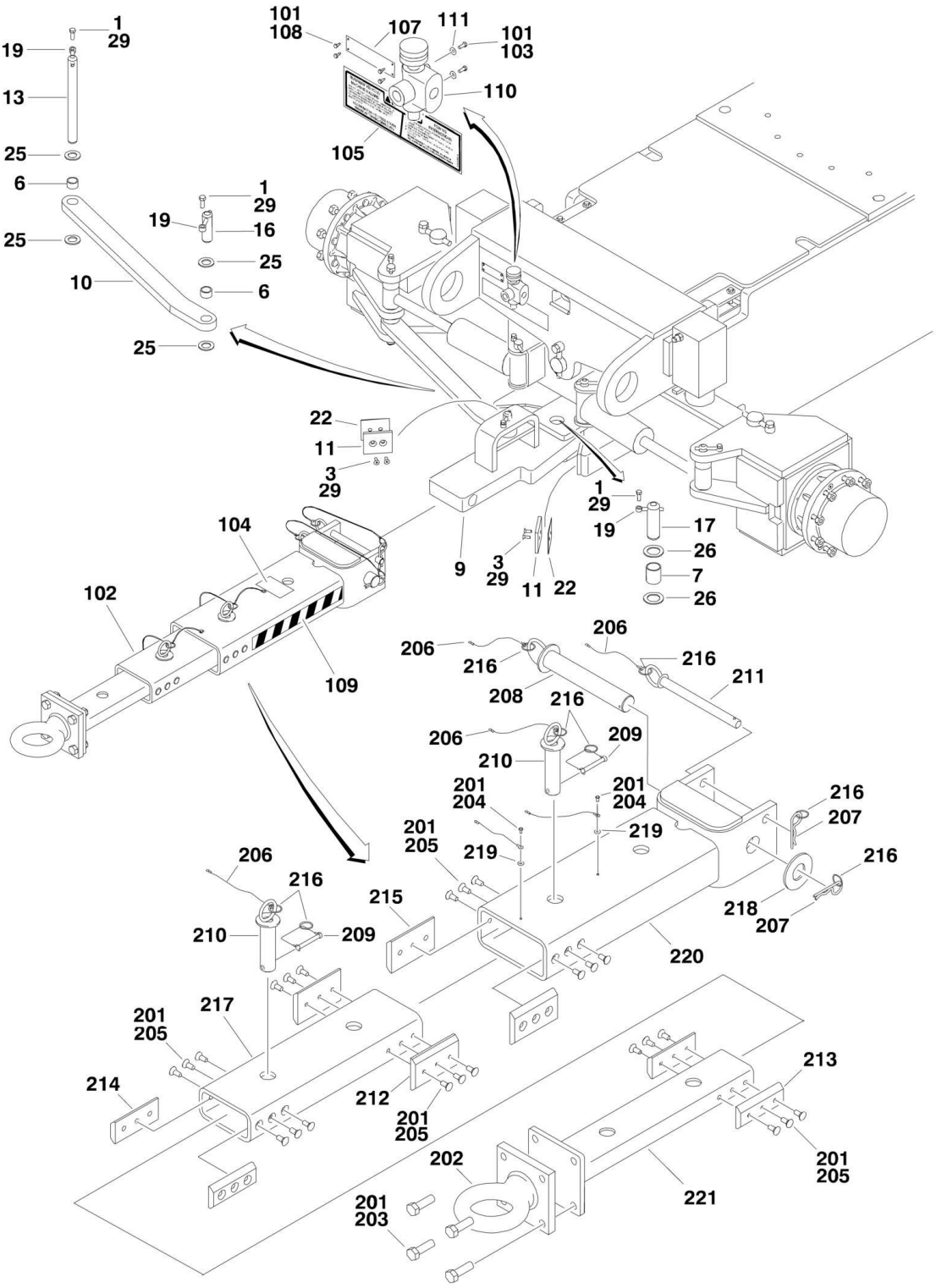

FIGURE 1-18. TOW PACKAGE INSTALLATION (OPTIONAL) (SN 0300081836 through 0300087000)

ITEM	PART NUMBER	QTY	DESCRIPTION	REV
		Ref	**TOW INSTALLATIONS**	
	0274257	Ref	**7ft/2.1m Width Machines**	A
	0274220	Ref	**8ft/2.4m Width Machines**	B
1	0641608	3	Bolt 3/8in-16NC x 1in	
3	0741607	8	Bolt 3/8in-16NC x 1in Options:	
6	0962292	2	Bushing	
7	0962348	1	Bushing	
9	2980125	1	Pivot	
10		Ref	Link, Tow Options:	
10	2575716	1	7ft/2.1m Width Machines	
10	3010141	1	8ft/2.4m Width Machines	
11	3340966	2	Pad, Stop	
13	3422327	1	Pin	
16	3422813	1	Pin	
17	3422848	1	Pin	
19	3841143	3	Keeper, Pin	
22	4071059	2	Shim	
25		Ref	Thrustwasher Options:	
25	4740184	1	7ft/2.1m Width Machines	
25	4740111	2	8ft/2.4m Width Machines	
26	4740155	2	Thrustwasher	
29	0100011	AR	Compound, Locking	
	0274235	Ref	**TOW BAR INSTALLATION**	B
101	0100011	AR	Compound, Locking	
102	0270528	1	Bar Assembly (See Items 201-221 for Breakdown)	
103	0641516	2	Bolt 5/16in-18NC x 2in	
104	1704578	2	Decal - Crushing	
105	1705090	1	Decal - Towing Instructions	
107	3250872	1	Nameplate, Steer/Tow Select Valve	
108	3940604	4	Screw, Self-Tapping #6-32NF x 1/2in	
109	4420051	AR	Tape, Safety	
110	4640261	1	Valve, Float Position	
111	4751500	2	Flatwasher 5/16in Regular	
	0270528	Ref	**TOW BAR ASSEMBLY**	A
201	0100011	AR	Compound, Locking	
202	0362910	1	Pintle, Draw Eye	
203	0642010	4	Bolt 5/8in-11NC x 1-1/4in	
204	0721004	2	Screw, Hex Machine	
205	0741607	24	Screw, Countersunk 3/8in-16NC x 7/8in	
206	1060584	6	Cable, Lanyard	
207	3420372	2	Pin, Cotter	
208	3420447	1	Pin, Towing	
209	3421565	2	Pin, Snap	
210	3422841	2	Pin	
211	3422847	1	Pin	
212	3572009	2	Plate, Slide Stop	
213	3572010	2	Plate, Slide Stop	
214	3572011	2	Plate, Slide Stop	
215	3572012	2	Plate, Slide Stop	
216	3760170	8	Ring, Split	

SECTION 1 - FRAME

ITEM	PART NUMBER	QTY	DESCRIPTION	REV
217	4568133	1	Tube, Tow Bar	
218	4740036	1	Flatwasher, Special	
219	4751000	2	Flatwasher #10 Regular	
220	4846295	1	Tow Bar Attach Weldment	
221	4846296	1	Pintle Attach Weldment	

SECTION 2 - TURNTABLE

FIGURE 2-1. CONTROL VALVES INSTALLATIONS

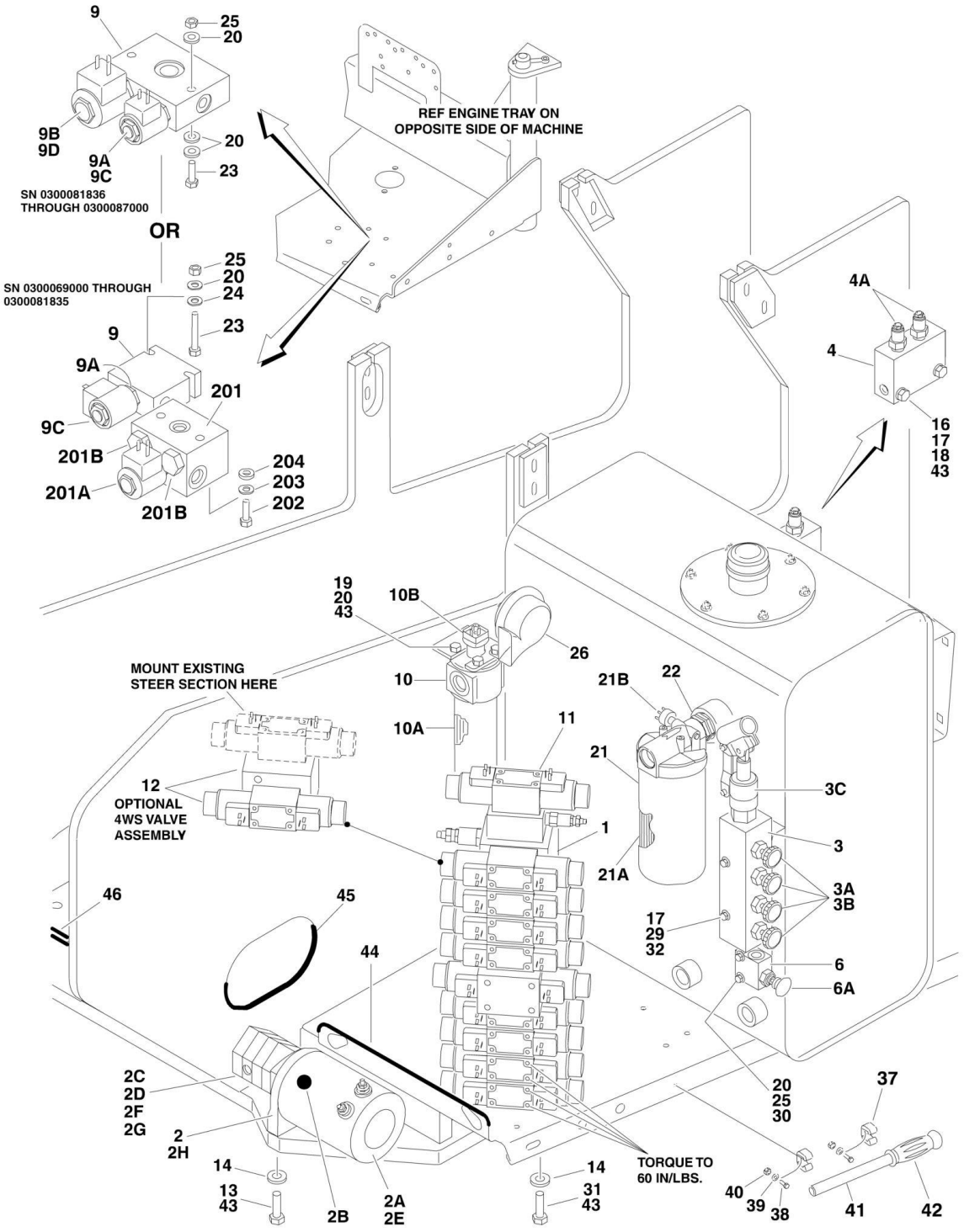

FIGURE 2-1. CONTROL VALVES INSTALLATIONS

ITEM	PART NUMBER	QTY	DESCRIPTION	REV
		Ref	**CONTROL VALVES INSTALLATIONS**	
	0255440	Ref	**Control Valves Installations 600A 2WS (SN 0300069000 through 0300081835)**	13
	0274276	Ref	**Control Valves Installations 600A 2WS (SN 0300081836 through 0300084828)**	1
	0274309	Ref	**Control Valves Installations 600A 2WS (SN 0300084829 through 0300087000)**	1
	0255442	Ref	**Control Valves Installations 600A 4WS (SN 0300069000 through 0300081835)**	12
	0274278	Ref	**Control Valves Installations 600A 4WS (SN 0300081836 through 0300084828)**	1
	0274311	Ref	**Control Valves Installations 600A 4WS (SN 0300084829 through 0300087000)**	1
	0255441	Ref	**Control Valves Installations 600AJ 2WS (SN 0300069000 through 0300081835)**	15
	0274277	Ref	**Control Valves Installations 600AJ 2WS (SN 0300081836 through 0300084828)**	1
	0274310	Ref	**Control Valves Installations 600AJ 2WS (SN 0300084829 through 0300087000)**	1
	0255443	Ref	**Control Valves Installations 600AJ 4WS (SN 0300069000 through 0300081835)**	12
	0274279	Ref	**Control Valves Installations 600AJ 4WS (SN 0300081836 through 0300084828)**	1
	0274312	Ref	**Control Valves Installations 600AJ 4WS (SN 0300084829 through 0300087000)**	1
1	4641097	1	Main Valve Block Assembly (See MAIN VALVE BLOCK ASSEMBLY for Breakdown)	
2		Ref	Auxiliary Pump Assembly Options:	
2	3600243	1	Auxiliary Pump Assembly **(SN 0300069000 through 0300070783)**	B
2	3600365	1	Auxiliary Pump Assembly **(SN 0300070784 through 0300087000)**	B
2A		Ref	Replacement Motor Options:	
2A	7013755	1	Replacement Motor for Pump p/n 3600243	
2A	7013799	1	Brush Kit - 7013755 Motor	
2A	7004290	1	Replacement Motor with Endhead Item 2H for Pump p/n 3600365 (was p/n 7011067)	
2A	7004248	1	Replacement Motor without Endhead Item 2H for Pump p/n 3600365	
2A	7011065	1	Brush Kit - 7011067 Motor	
2B		Ref	Coupling Options:	
2B	7013711	1	Coupling for Pump p/n 3600243	
2B	7011063	1	Coupling for Pump p/n 3600365	
2C		Ref	Replacement Pump Options:	
2C	7013796	1	Replacement Pump for Pump p/n 3600243	
2C	See Note	1	Seal Kit (Note: Not Available - Purchase Individual Components)	
2C	7016700	1	Seal, Oil	
2C	7016701	1	O-Ring	
2C	7016702	1	O-Ring	
2C	7011064	1	Replacement Pump for Pump p/n 3600365	
2C	7011066	1	Seal Kit	
2C	See Note	1	Relief Valve (Replace Complete Pump) (Note: Not Available for Purchase)	

ITEM	PART NUMBER	QTY	DESCRIPTION	REV
2D		Ref	Bolt (Pump to Bracket) Options:	
2D	7022203	4	Bolt for Pump p/n 3600243	
2D	7011043	4	Bolt for Pump p/n 3600365	
2E		Ref	Bolt (Motor to Bracket) Options:	
2E	7016744	2	Bolt for Pump p/n 3600243	
2E	See Note	2	Bolt for Pump p/n 3600365 (Note: Not Available for Purchase)	
2F		Ref	Gasket Options:	
2F	7016746	1	Gasket for Pump p/n 3600243	
2F	7011044	1	Gasket for Pump p/n 3600365	
2G		Ref	Lockwasher Options:	
2G	Not Required	0	Lockwasher for Pump p/n 3600243	
2G	7011048	4	Lockwasher for Pump p/n 3600365	
2H		Ref	Endhead, Motor Options:	
2H	7016747	4	Endhead for Pump p/n 3600243	
2H	7011062	4	Endhead for Pump p/n 3600365	
3	4640930	1	Manual Descent Valve Assembly **(SN 0300069000 through 0300070977)**	
3A	7012954	4	Cartridge, Needle	
3A	7012953	4	Seal, Kit - 7012954 Cartridge	
3B	7012961	4	Knob	
3C	7012694	1	Cartridge, Pump	
3C	7012699	1	Seal Kit - 7012694 Cartridge	
4	4640908	1	Counterbalance Valve Assembly	
4A	7011328	2	Cartridge, Counterbalance	
4A	2900770	2	Seal Kit - 7011328 Cartridge	
6	4640866	1	Manual Pull Valve Assembly	
6	2900708	1	Seal Kit - 4640866 Valve	
6A	7012959	1	Knob	
9		Ref	Brake Valve Assembly Options:	
9	4640907	1	Brake Valve Assembly **(SN 0300069000 through 0300081835)**	
9	4641108	NLA	Brake Valve Assembly (Use p/n 1001099391) **(SN 0300081836 through 0300086999)**	
9		Ref	Brake Valve Assembly **(SN 0300087000 through 03000137663)**	
9A	7012941	1	Cartridge without Coil Options:	
9A	7012907	1	Seal Kit - 7012941 Cartridge (Brake Valve p/n 4640907)	
9A	7010543	1	Seal Kit - 7012941 Cartridge (Brake Valve p/n 4641108 & 1001099391)	
9B		Ref	Cartridge without Coil Options:	
9B	Not Required	0	Brake Valve p/n 4640907	
9B	7012995	1	Brake Valve p/n 4641108 & 1001099391	
9B	7012518	1	Seal Kit - 7012995 Cartridge (Brake Valve p/n 4641108)	
9C	7012944	1	Coil	
9D		Ref	Coil Options:	
9D	Not Required	0	Brake Valve p/n 4640907	
9D	7012943	1	Brake Valve p/n 4641108 & 1001099391	
10		Ref	Hydraulic Pressure Filter Assembly Options:	
10	2120146	1	Hydraulic Pressure Filter Assembly **(SN 0300069000 through 0300084828)**	
10	2120209	1	Hydraulic Pressure Filter Assembly **(SN 0300084829 through 0300087000)**	
10A	2120150	1	Element, Filter - p/n 2120146	

ITEM	PART NUMBER	QTY	DESCRIPTION	REV
10A	2120210	1	Element, Filter - p/n 2120209	
10B	7016312	1	Switch, Clog Indicator - p/n 2120146	
10B	7020020	1	Manual Indicator - p/n 2120209	
10C	7023206	1	O-Ring, Filter Bowl - p/n 2120146 (Not Shown)	
10C	70000934	1	O-Ring, Filter Bowl - p/n 2120209 (Not Shown)	
11		Ref	Articulating Jib Valve Kit (See ACCESSORY VALVE ASSEMBLIES for Breakdown) Options:	
11	Not Required	0	Articulating Jib Valve Kit 600A - 2WS/600A - 4WS	
11	4640921	1	Articulating Jib Valve Kit 600AJ - 2WS/600AJ - 4WS	
11	4921927	1	Harness, Articulating Jib (Not Shown - See ELECTRICAL SECTION for Breakdown)	
12		Ref	4WS Valve Assembly Options (See ACCESSORY VALVE ASSEMBLIES for Breakdown):	
12	Not Required	0	4WS Valve Assembly 600A - 2WS/600AJ - 2WS	
12	4640922	1	4WS Valve Assembly 600A - 4WS/600AJ - 4WS	
12	4921928	1	Harness, 4WS (Not Shown - See ELECTRICAL SECTION for Breakdown)	
13	0641613	2	Bolt 3/8in-16NC x 1-5/8in	
14	4711600	2	Flatwasher 3/8in Thin	
16	4891800	2	Flatwasher 1/2in Hardened **(SN 0300069000 through 0300074392)**	
17	4711500	AR	Flatwasher 5/16in Thin	
18		Ref	Hardware Options:	
18	3311501	2	Hardware Nut 5/16in-18NC **(SN 0300069000 through 0300074391)**	
18	0641514	2	Hardware Bolt 5/16in-18NC x 1-3/4in **(SN 0300074392 through 0300087000)**	
19	0651406	4	Hardware Bolt 1/4in-28NF x 3/4in	
20	4711400	14	Flatwasher 1/4in Thin	
21		Ref	Return Filter Assembly Options:	
21	2120145	1	Return Filter Assembly **(SN 0300069000 through 0300084828)**	B
21	2120164	1	Return Filter Assembly **(SN 0300084829 through 0300087000)**	B
21A	2120149	1	Element, Filter	
21B	7016313	1	Switch, Clog Indicator - p/n 2120145	
21B	7020021	1	Manual Indicator - p/n 2120164	
22	2220893	1	Fitting, Adaptor	
23	0641416	2	Bolt 1/4in-20NC x 2in	
24	4891400	2	Flatwasher 1/4in Hardened	
25	3311405	6	Locknut 1/4in x 20NC	
26	0140001	1	Horn	
29	0641522	2	Bolt 5/16in-18NC x 2-3/4in **(SN 0300069000 through 0300070977)**	
30	0641414	2	Bolt 1/4in-20NC x 1-3/4in	
31	0641608	3	Bolt 3/8in-16NC x 1in	
32	3311505	2	Locknut 5/16in-18NC **(SN 0300069000 through 0300070977)**	
37	1380136	2	Clip, Gripper **(SN 0300069000 through 0300070977)**	
38	3910806	2	Screw #8 x 3/4in **(SN 0300069000 through 0300070977)**	
39	4750800	4	Flatwasher #8 Regular **(SN 0300069000 through 0300070977)**	
40	3310805	2	Locknut #8 **(SN 0300069000 through 0300070977)**	
41	2560122	1	Handle **(SN 0300069000 through 0300070977)**	
42	2560123	1	Grip, Handle **(SN 0300069000 through 0300070977)**	
43	0100011	AR	Compound, Locking	
44	4060804	16	Trim-Loc 3/16in	

SECTION 2 - TURNTABLE

ITEM	PART NUMBER	QTY	DESCRIPTION	REV
		in/40cm		
45	4060918	79 in/1.9m	Trim-Loc 5/8in	
46	4060807	18 in/46cm	Trim-Loc 3/8in	
	2792195	Ref	**4WD DRIVE HYDRAULIC DIAGRAM (SN 0300069000 through 0300081836)**	8
201	4640906	1	Valve, 2-Speed Motor Control	
201A	7012974	1	Cartridge without Coil	
201A	7012905	1	Seal Kit	
201A	7012944	1	Coil	
201B	See Note	2	Cartridge, Check Valve (Note: Not Available - Purchase Complete Valve)	
201B	7012972	2	Seal Kit	
202	0641508	2	Bolt 5/16in-18NC x 1in	
203	4891500	2	Flatwasher 5/16in Hardened	
204	4711500	2	Flatwasher 5/16in Thin	

FIGURE 2-2. MAIN VALVE BLOCK ASSEMBLY

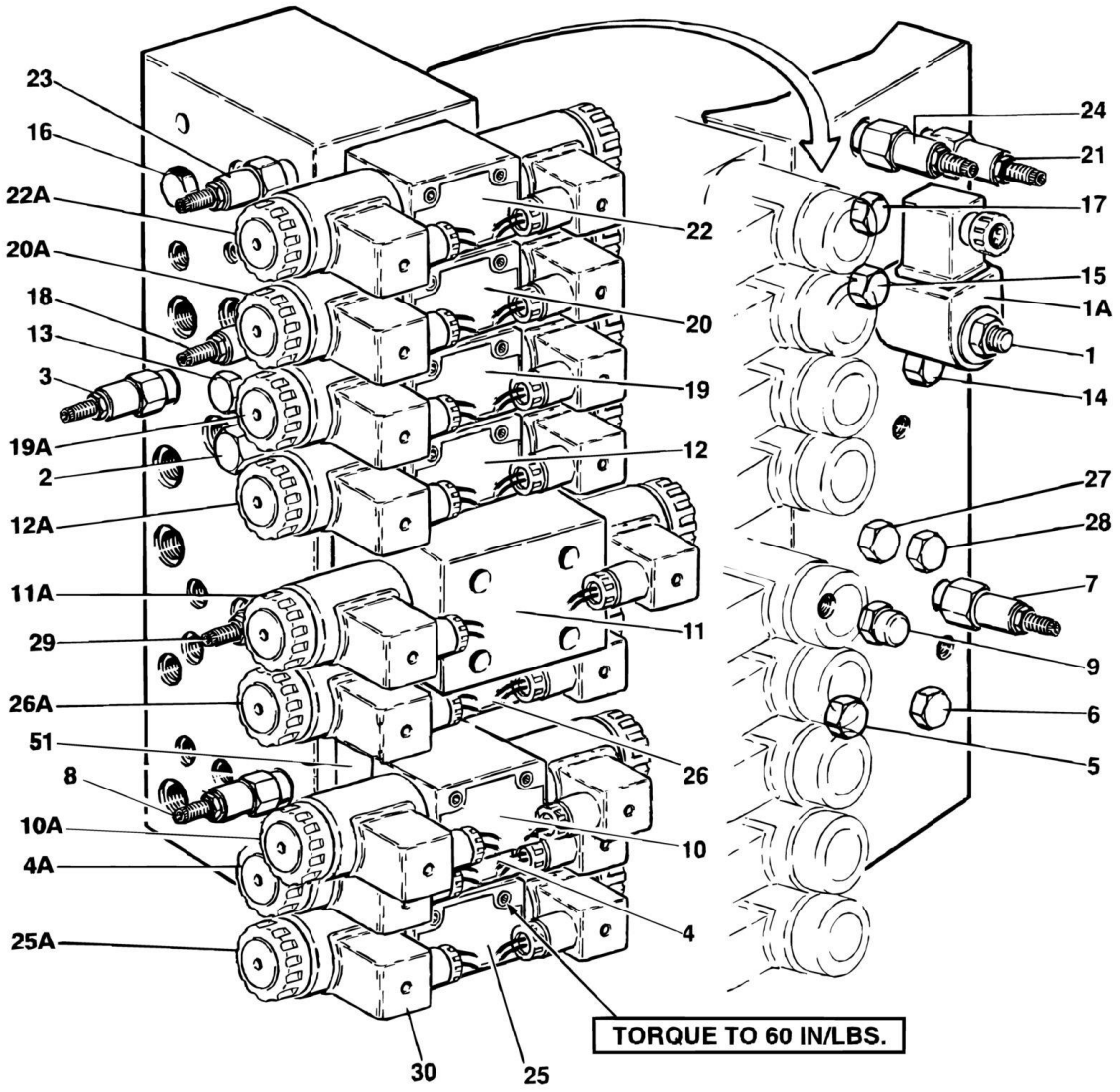

FIGURE 2-2. MAIN VALVE BLOCK ASSEMBLY

ITEM	PART NUMBER	QTY	DESCRIPTION	REV
	4641097	Ref	**MAIN VALVE BLOCK ASSEMBLY**	B
1	7017410	1	Cartridge, without Coil	
1	7012967	1	Seal Kit - 7017410 Cartridge	
1A	7012944	1	Coil	
2	7017411	1	Cartridge, Pressure Sensing	
2	7012518	1	Seal Kit	
3	7017418	1	Cartridge (Main Relief)	
3	7012998	1	Seal Kit	
4	70001976	1	Control Valve Assembly (Platform Level) (was p/n 7012770)	
4	7012773	1	Seal Kit	
4A	7012772	2	Coil	
4A	7018912	2	Nut	
5	7012914	1	Cartridge, Check Valve	
5	7012918	1	Seal Kit - 7012914 Cartridge	
6	7012914	1	Cartridge, Check Valve	
6	7012918	1	Seal Kit - 7012914 Cartridge	
7	7017428	1	Cartridge, Relief Valve (Platform Level Backward Relief)	
7	7012998	1	Seal Kit - 7017428 Cartridge	
8	7017427	1	Cartridge, Relief Valve (Platform Level Forward Relief)	
8	7012998	1	Seal Kit - 7012912 Cartridge	
9	7012989	1	Cartridge, Flow Control	
9	7012953	1	Seal Kit - 7012989 Cartridge	
10	70001976	1	Control Valve Assembly (Platform Rotate) (was p/n 7012770)	
10	7012773	1	Seal Kit	
10A	7012772	2	Coil	
10A	7018912	2	Nut	
11		Ref	Control Valve Assembly Options (Upper Tele):	
11	70000579	1	Control Valve Assembly (was p/n 7012766) **(SN 0300069000 through 0300092880)**	
11	70000579	1	Control Valve Assembly **(SN 0300092881 through 0300087000)**	
		Ref	**Note: Refer to Vendor P/N on Valve Nameplate before ordering Parts. 7012766 is RR00567495 or R900567495. 70000579 is R900930080.**	
11		Ref	Seal Kit Options:	
11	7012769	1	7012766 Valve	
11	70000583	1	70000579 Valve	
11A		Ref	Coil Options:	
11A	7012772	1	7012766 Valve (was p/n 7012768)	
11A	70000582	1	70000579 Valve	
11A		Ref	Nut, Coil Options:	
11A	7018912	1	7012766 Valve	
11A	70000580	1	70000579 Valve	
12	7012775	1	Control Valve Assembly (Flow Control)	
12	7012773	1	Seal Kit	
12A	7012772	2	Coil	
12A	7018912	2	Nut	
13	7010542	1	Cartridge, Shuttle	
13	7010543	1	Seal Kit - 7010542 Cartridge	
14	7010542	1	Cartridge, Shuttle	
14	7010543	1	Seal Kit - 7010542 Cartridge	

SECTION 2 - TURNTABLE

ITEM	PART NUMBER	QTY	DESCRIPTION	REV
15	7010542	1	Cartridge, Shuttle	
15	7010543	1	Seal Kit - 7010542 Cartridge	
16	7010542	1	Cartridge, Shuttle	
16	7010543	1	Seal Kit - 7010542 Cartridge	
17	7010542	1	Cartridge, Shuttle	
17	7010543	1	Seal Kit - 7010542 Cartridge	
18	7017420	1	Cartridge, Relief Valve	
18	7012998	1	Seal Kit - 7017420 Cartridge	
19	7012775	1	Control Valve Assembly (Upper Lift)	
19	7012773	1	Seal Kit	
19	7012799	1	Lanyard Assembly (Not Shown)	
19A	7012772	2	Coil	
19A	7018912	2	Nut	
20	7012775	1	Control Valve Assembly (Swing)	
20	7012773	1	Seal Kit	
20A	7012772	2	Coil	
20A	7018912	2	Nut	
21	7017423	1	Cartridge, Relief Valve (Swing Right/Left Relief)	
21	7012998	1	Seal Kit - 7017423 Cartridge	
22	7012774	1	Control Valve Assembly (Steer)	
22	7012773	1	Seal Kit	
22A	7012772	2	Coil	
22A	7018912	2	Nut	
23	7017428	1	Cartridge, Relief Valve (Steer Left Relief)	
23	7012998	1	Seal Kit - 7017428 Cartridge	
24	7017428	1	Cartridge, Relief Valve (Steer Right Relief)	
24	7012998	1	Seal Kit - 7017428 Cartridge	
25	70001976	1	Control Valve Assembly (Lower Tele) (was p/n 7012770)	
25	7012773	1	Seal Kit	
25A	7012772	2	Coil	
25A	7018912	2	Nut	
26	7018952	1	Control Valve Assembly (Lower Lift)	
26	7012769	1	Seal Kit	
26A	7012772	2	Coil	
26A	7018912	2	Nut	
26A	7012799	1	Lanyard Cable Assembly	
27	7012969	1	Cartridge, Check	
27	7012967	1	Seal Kit - 7012969 Cartridge	
28	7012914	1	Cartridge, Check	
28	7012918	1	Seal Kit - 7012914 Cartridge	
30	4460499	19	Connector, Din with Diode (Part of Valve Harness)	
	2901763	1	**ROTATE SANDWICH VALVE KIT**	A
51	7021310	1	Block, Valve	

FIGURE 2-3. ACCESSORY VALVE ASSEMBLIES

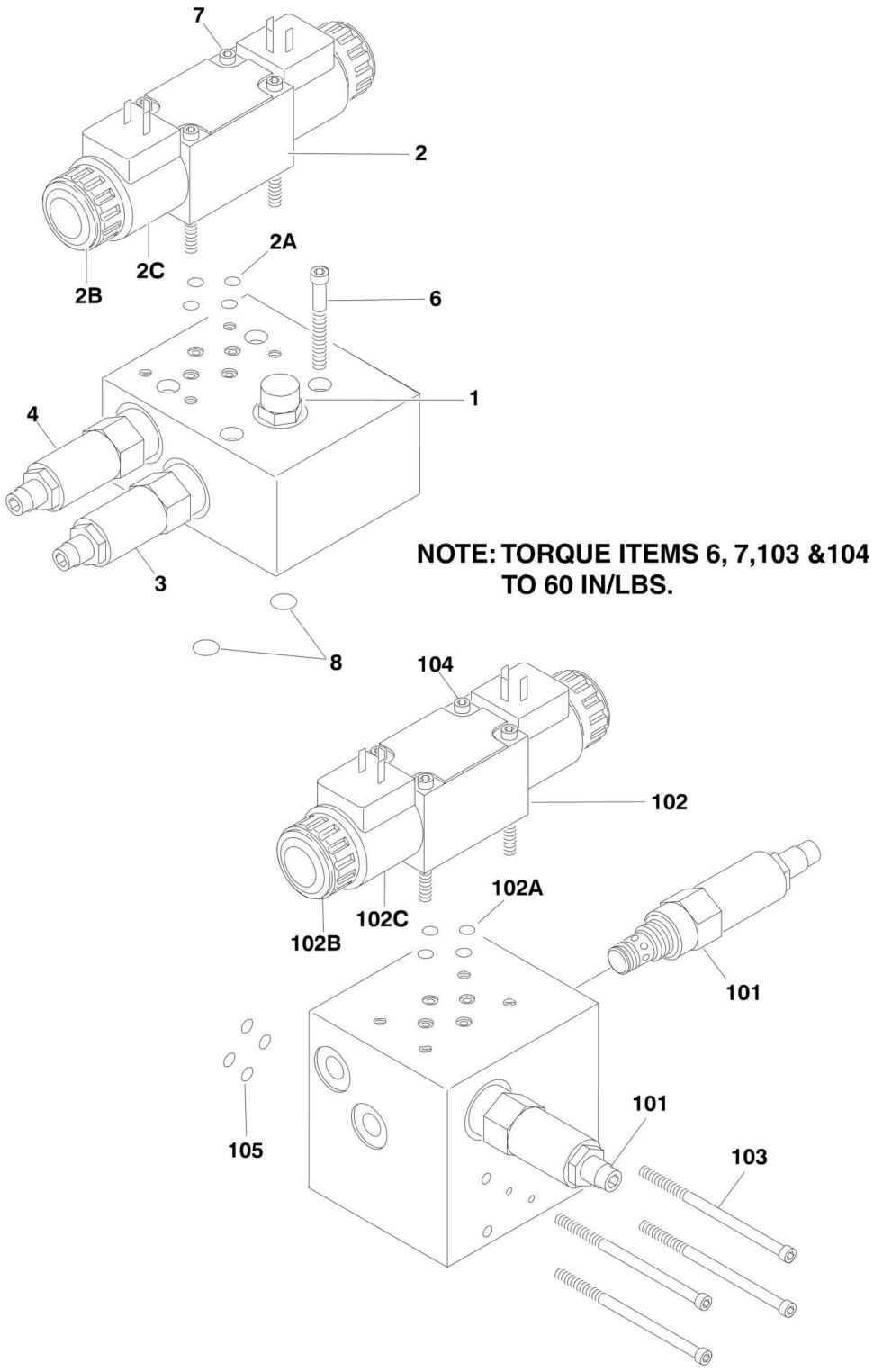

FIGURE 2-3. ACCESSORY VALVE ASSEMBLIES

ITEM	PART NUMBER	QTY	DESCRIPTION	REV
	4640921	Ref	**ARTICULATING JIB VALVE ASSEMBLY**	D
1	7012965	1	Cartridge, Flow Control	
1	7012953	1	Seal Kit - 7012965 Cartridge	
2	70001976	1	Directional Control Valve Assembly (was p/n 7012770)	
2	7012773	1	Seal Kit	
2A	7018945	4	O-Ring	
2B	7018912	2	Nut	
2C	7012772	2	Coil	
3	7017421	1	Cartridge, Relief	
3	7012998	1	Seal Kit - 7017421 Cartridge	
4	7017422	1	Cartridge, Relief	
4	7012998	1	Seal Kit - 7017422 Cartridge	
5	4460499	2	Connector, Din with Diode (Part of Valve Harness)	
6	7018946	4	Capscrew, Socket Head #10-24NC x 5in (Not Shown - Used to Mount Valve Assembly)	
7	7018942	4	Capscrew, Socket Head #10-24NC x 2in	
8	7012776	4	O-Ring (Used to Mount to Main Valve)	
	4640922	Ref	**4WS VALVE ASSEMBLY**	B
101	7017420	2	Cartridge, Flow Control	
101	7012998	2	Seal Kit - 7017420 Cartridge	
102	7012774	1	Directional Control Valve Assembly	
102	7012773	1	Seal Kit	
102A	7018945	4	O-Ring	
102B	7018912	2	Nut	
102C	7012772	2	Coil	
103	7018946	4	Capscrew, Socket Head #10-24NC x 5in (Used to Mount Valve Assembly)	
104	7018942	4	Capscrew, Socket Head #10-24NC x 2in	
105	7018948	4	O-Ring (Used to Mount to Main Valve)	

FIGURE 2-4. SWING DRIVE, TURNTABLE BEARING AND LOCK INSTALLATIONS

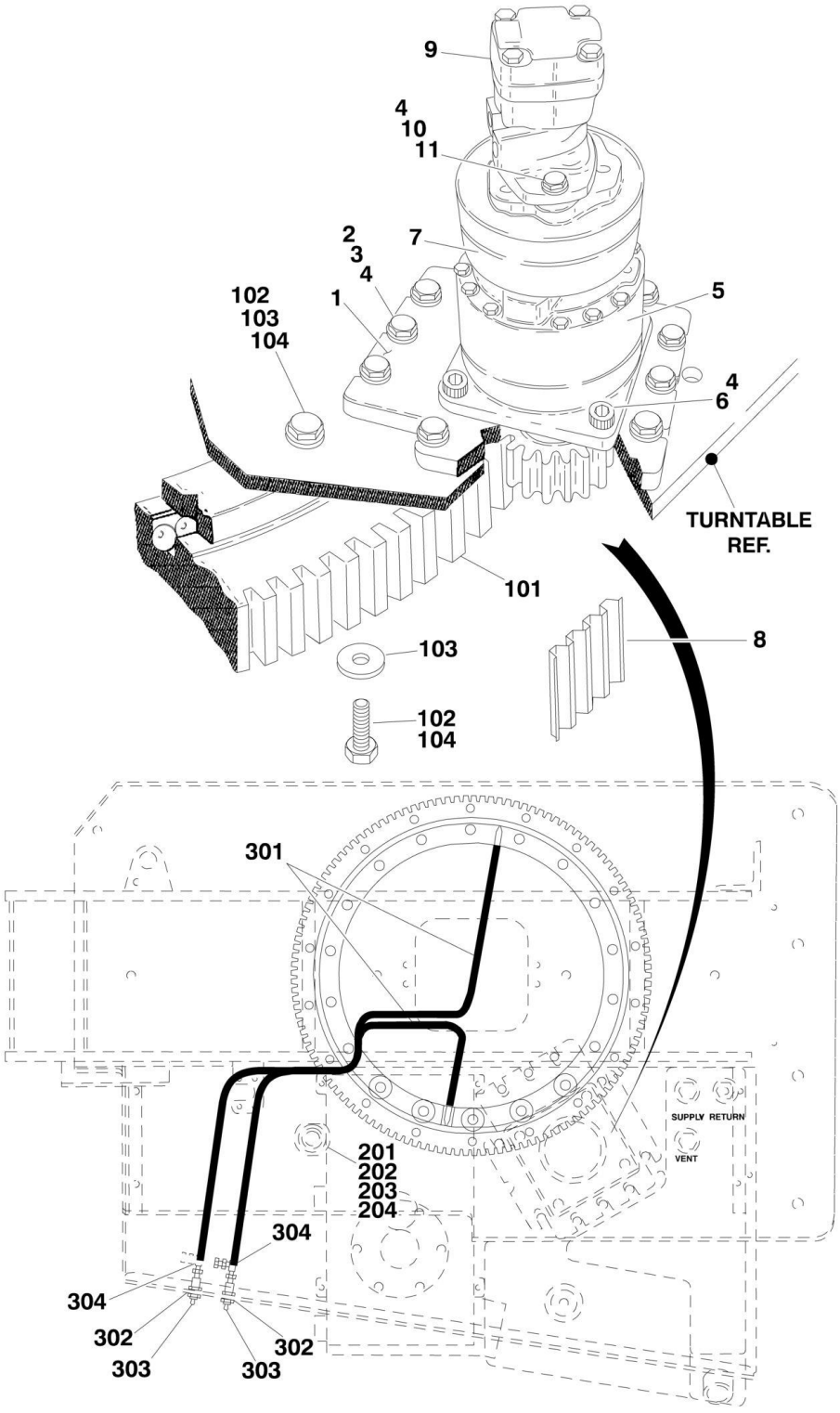

FIGURE 2-4. SWING DRIVE, TURNTABLE BEARING AND LOCK INSTALLATIONS

ITEM	PART NUMBER	QTY	DESCRIPTION	REV
	0270329	Ref	**SWING DRIVE INSTALLATIONS**	A
1	3537318	1	Plate, Swing Drive Mounting	
2	0642018	10	Bolt 5/8in - 11NC x 2-1/4in	
3	4892000	10	Flatwasher 5/8in Hardened	
4	0100011	AR	Compound, Locking	
5	2780205	1	Swing Hub Assembly (See SWING HUB ASSEMBLY for Breakdown)	
6	3932224	4	Bolt 1/2in - 13NC x 1-1/2in	
7	0920119	1	Swing Brake Assembly	
7	7018612	1	Repair Kit - 0920119 Brake (Note: Kit is only repair part available)	
9	3160273	1	Swing Motor Assembly (See SWING MOTOR ASSEMBLY for Breakdown)	
10	0681836	2	Bolt 1/2in - 13NC x 4-1/2in	
11	4891800	2	Flatwasher 1/2in Hardened	
	0254798	Ref	**TURNTABLE BEARING INSTALLATION**	1-A
101	0440207	NLA	Bearing Kit (Use p/n 2915087) (Kit Includes Bearing and Mounting Hardware)	
102	0682016	36	Bolt 5/8in - 11NC x 2in (Grade 8)	
103	4892000	36	Flatwasher 5/8in Hardened	
104	0100019	AR	Compound, Locking	
	0255410	Ref	**TURNTABLE LOCK INSTALLATION**	-
201	4844958	1	Pin	
202	3421565	1	Pin, Snap	
203	3760170	2	Ring, Quick Release	
204	1260017	9 in/23cm	Chain	
	0255444	Ref	**REMOTE BEARING LUBE INSTALLATION**	1-D
301	2751032	2	Hose, Grease	
302	2180344	2	Fitting, Bulkhead	
303	2160002	2	Fitting, Grease	
304	2220001	2	Fitting, Straight	

FIGURE 2-5. SWING HUB ASSEMBLY

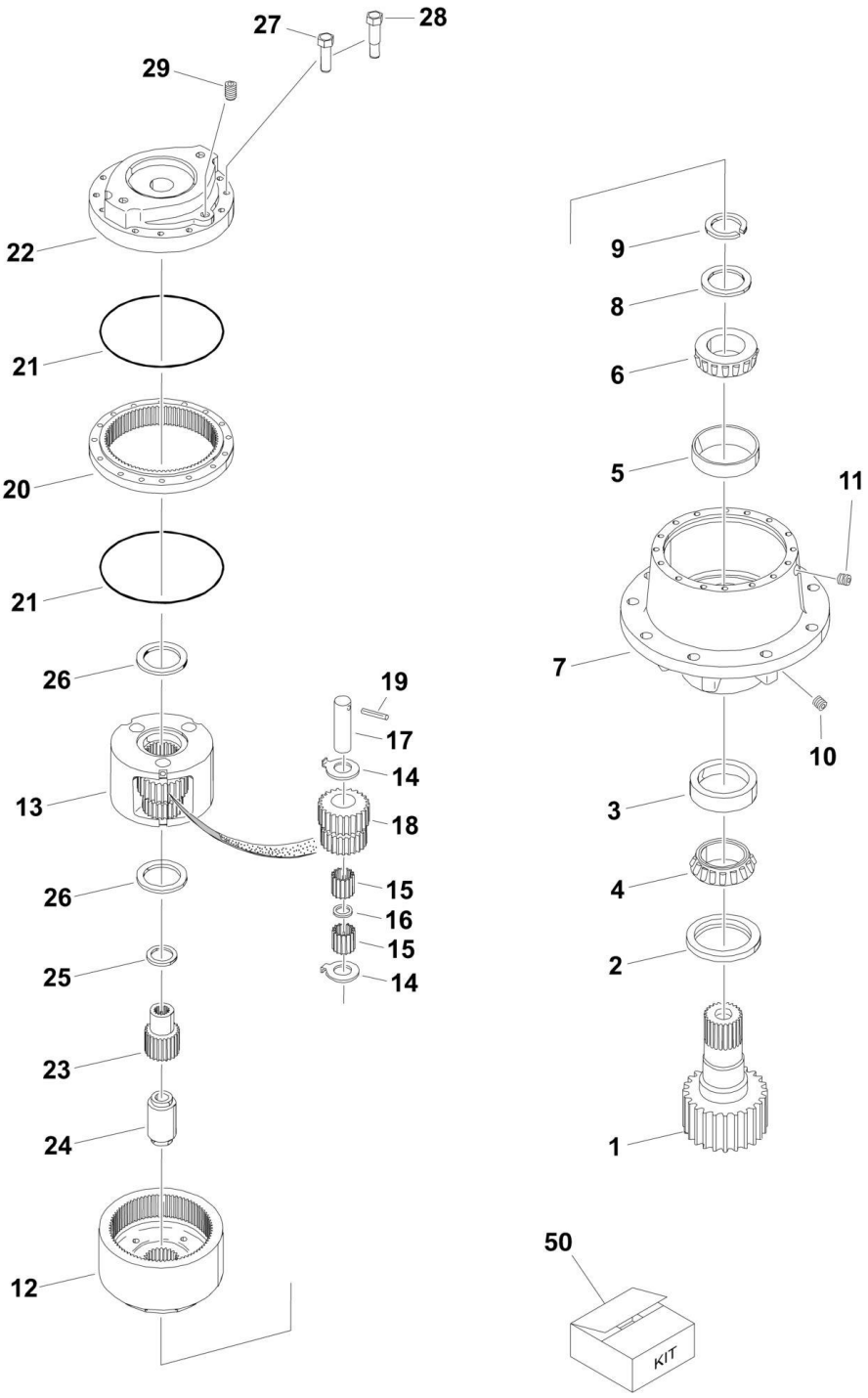

FIGURE 2-5. SWING HUB ASSEMBLY

ITEM	PART NUMBER	QTY	DESCRIPTION	REV
	2780205	Ref	**SWING HUB ASSEMBLY**	-
		Ref	**HOUSING ASSEMBLY**	
1	7010492	1	Shaft, Output	
2	7000228	1	Seal, Lip	
3	7000255	1	Cup, Bearing	
4	7000256	1	Cone, Bearing	
5	7000257	1	Cup, Bearing	
6	7000258	1	Cone, Bearing	
7	7017089	1	Housing	
8	7007633	1	Thrustwasher	
9	7000229	1	Ring, Retaining	
10	7010494	2	Pipe, Plug	
11	7001928	2	Pipe, Plug	
12	7000246	2	Gear, Internal	
13		Ref	**CARRIER ASSEMBLY**	
13	7001931	1	Carrier	
14	7001985	6	Thrustwasher, Tanged	
15	7001909	96	Bearing, Needle	
16	7000263	3	Spacer, Thrust	
17	7001911	3	Shaft, Planet	
18	7001987	3	Gear, Cluster	
19	7010474	3	Roll Pin	
20	7001988	1	Ring Gear	
21	7000230	2	O-Ring	
22	7000209	1	Cover, Input	
23	7010488	1	Gear, Sun	
24	7000269	1	Spacer, Input	
25	7000270	1	Thrustwasher	
26	7000253	2	Thrustwasher	
27	7000217	8	Bolt	
28	7000214	4	Bolt, Shoulder	
29	7000242	1	Pipe, Plug	
50	7024100	1	Seal Kit (Includes Items 2, 9, 21 & 26)	

FIGURE 2-6. SWING MOTOR ASSEMBLY

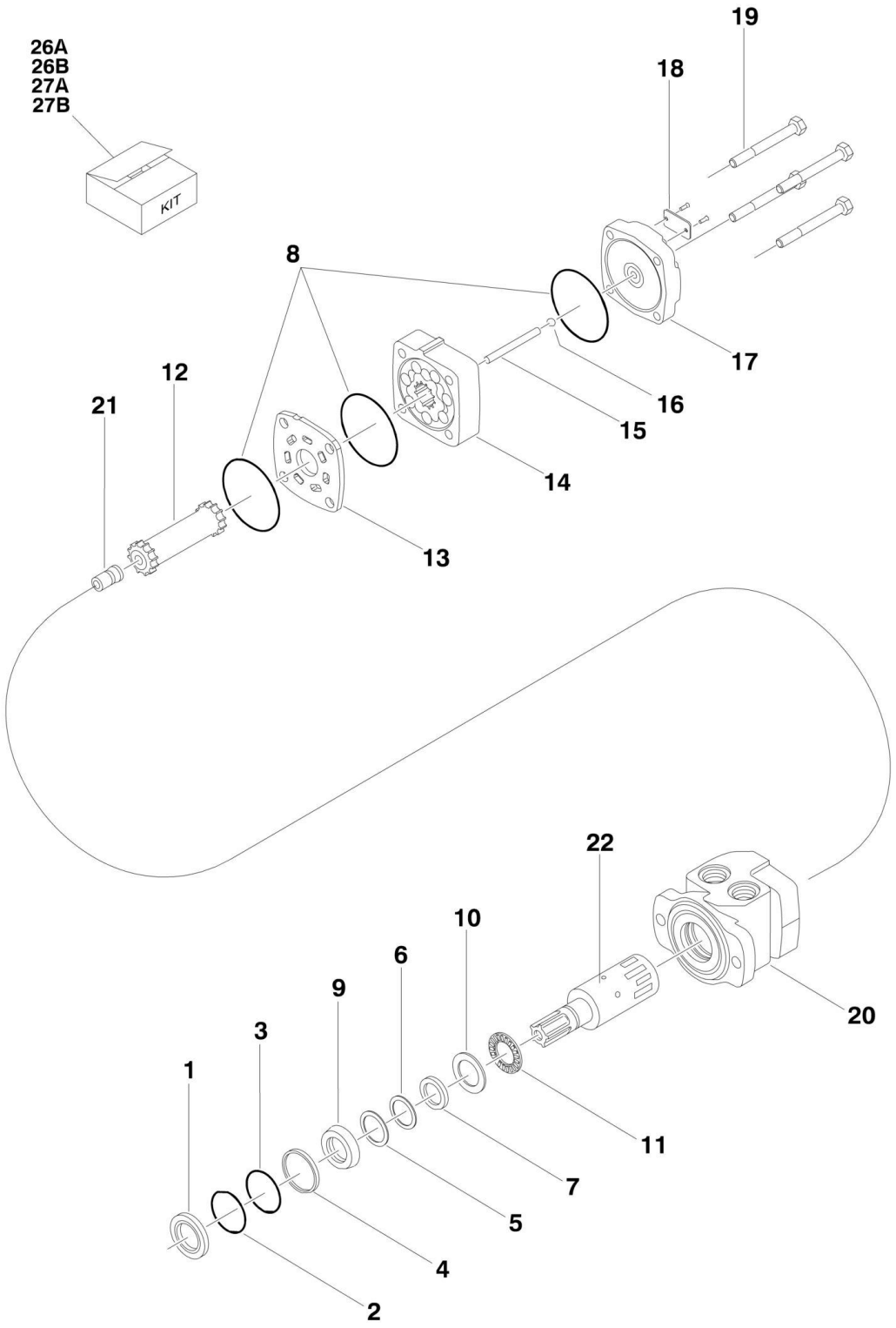

FIGURE 2-6. SWING MOTOR ASSEMBLY

ITEM	PART NUMBER	QTY	DESCRIPTION	REV
	3160273	Ref	**SWING MOTOR ASSEMBLY**	B
1	See Note	NSS	Seal, Dust (Note: Use Item 26A)	
2	See Note	NSS	Ring, Split Wire (Note: Use Item 26A)	
3	See Note	NSS	Shim, Metal Back-up (Note: Use Item 26A)	
4	See Note	NSS	Seal, High Pressure (Note: Use Item 26A)	
5	See Note	NSS	Shim, Metal Back-up (Note: Use Item 26A)	
6	See Note	NSS	Seal, Teflon Back-up (Note: Use Item 26A)	
7	See Note	NSS	Seal, Shaft (Note: Use Item 26A)	
8	See Note	NSS	Seal, Body (Note: Use Item 26A)	
9	See Note	NSS	Carrier, Seal (Note: Use Item 26B)	
10	See Note	NSS	Thrustwasher (Note: Use Item 26B)	
11	7016422	1	Bearing, Thrust	
12	7005889	1	Link, Drive	
13	7016423	1	Plate, Wear	
14	7005890	1	Rotor Assembly	
15	7005891	1	Pin, Drive Link	
16	See Note	NSS	Ball (Note: Use Item 27A)	
17	See Note	NSS	Cover, End (Note: Use Item 27A)	
18	See Note	1	Tag, I.D. (Note: Not Available for Purchase)	
19	7005892	4	Bolt	
20	7016425	1	Housing	
21	7005893	1	Plug, Cooling	
22	7016426	1	Shaft	
26		Ref	Seal Kit Options:	
26A	7005881	1	Seal Kit (Includes Items 1-8)	
26B	7005882	1	Seal Carrier Kit (Includes Items 9 & 10)	
27		Ref	Repair Kit Options:	
27A	7016424	1	End Cover Kit (Includes Items 16 & 17)	
27B	7016427	1	Housing/Shaft Kit (Includes Items 20-22)	

FIGURE 2-7. CATERPILLAR ENGINE INSTALLATION

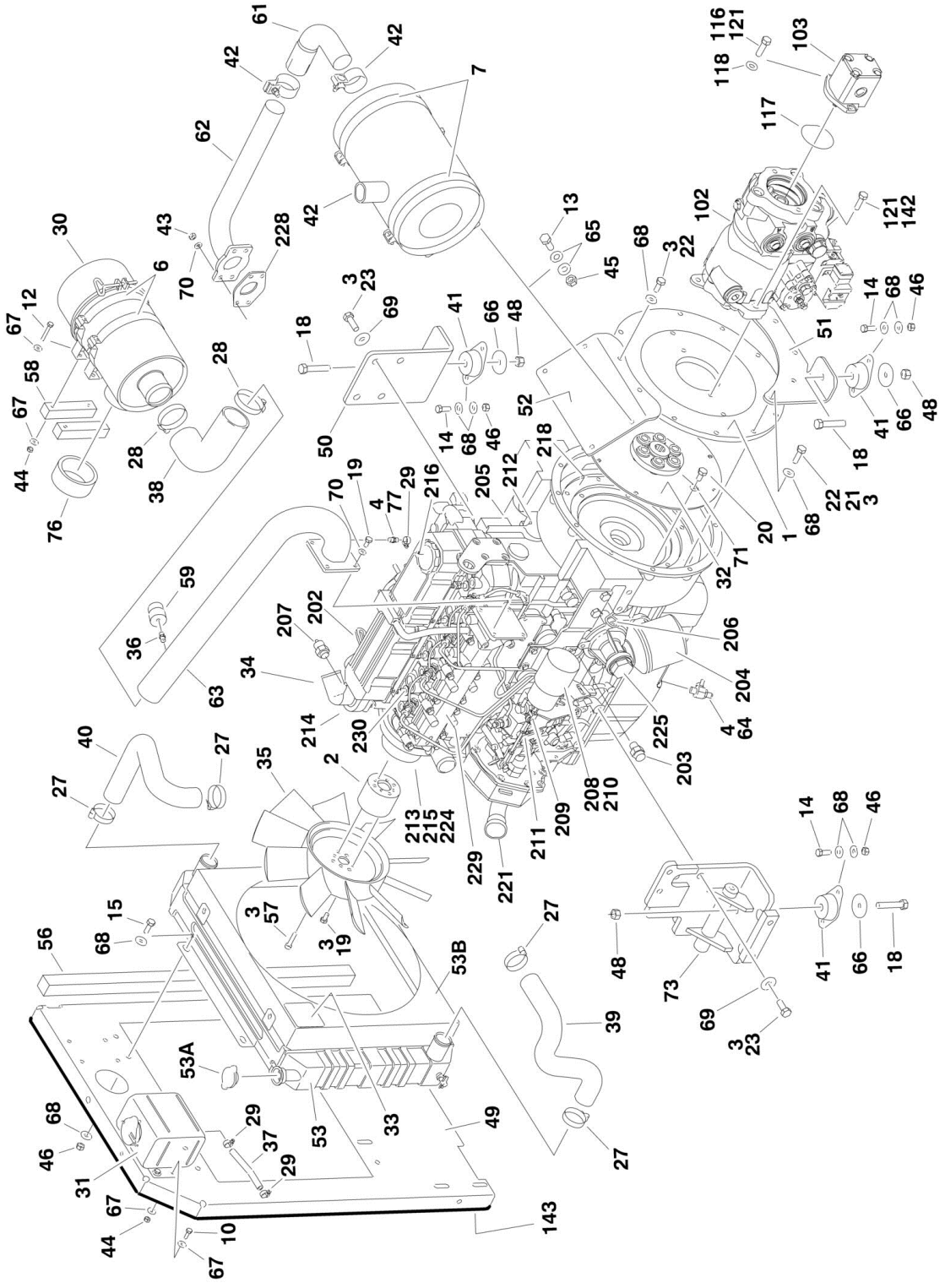

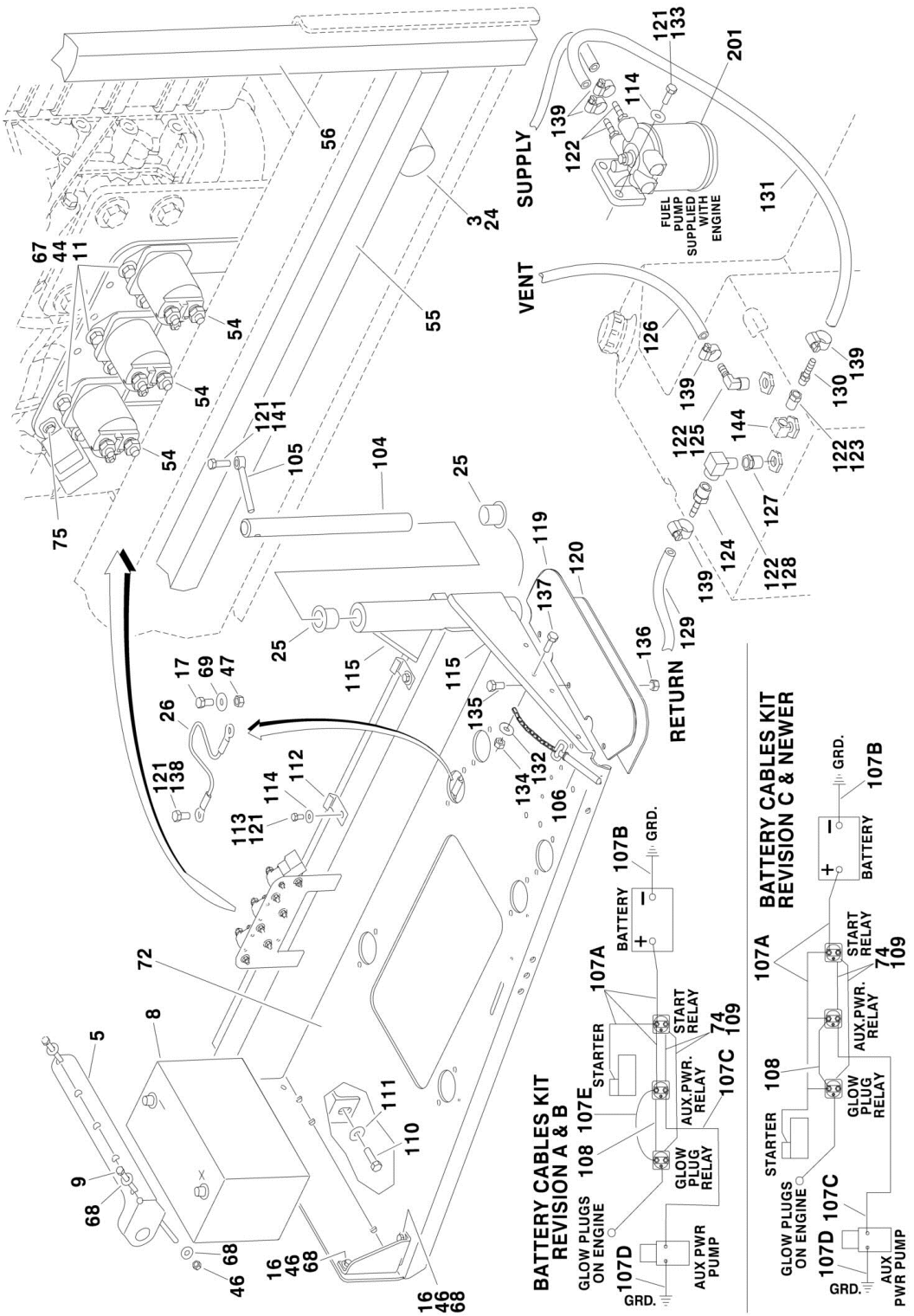
SUPPLY
VENT
RETURN
FUEL PUMP SUPPLIED WITH ENGINE
BATTERY CABLES KIT REVISION A & B
BATTERY CABLES KIT REVISION C & NEWER
GLOW PLUGS ON ENGINE
STARTER
START RELAY
AUX.PWR. RELAY
GLOW PLUG RELAY
AUX PWR PUMP
BATTERY
GRD.

FIGURE 2-7. CATERPILLAR ENGINE INSTALLATION

ITEM	PART NUMBER	QTY	DESCRIPTION	REV
		Ref	**CATERPILLAR ENGINE ASSEMBLY**	
	0272796	Ref	**Caterpillar Engine Assembly (SN 0300069000 through 0300084828)**	F
	0274491	Ref	**Caterpillar Engine Assembly (SN 0300084829 through 0300087000)**	B
1	0080181	1	Adaptor, Pump Mounting Plate	
2	0080243	1	Adaptor, Fan Spacer	
3	0100011	AR	Compound, Locking	
4	0100020	AR	Sealant, Thread	
5	0181727	1	Hold-Down, Battery	
6	0340041	2	Band, Mounting	
7	0340046	2	Band, Muffler	
8	0400075	1	Battery	
9	0630498	2	Rod, Hold-Down	
10	0641406	4	Bolt 1/4in-20NC x 3/4in	
11	0641407	6	Bolt 1/4in-20NC x 7/8in	
12	0701414	4	Bolt 1/4in-20NC x 3/4in	
13	0641507	4	Bolt 5/16in-18NC x 7/8in	
14	0641608	8	Bolt 3/8-16NC x 1in	
15	0641609	4	Bolt 3/8-16NC x 1-1/8in	
16	0641610	4	Bolt 3/8-16NC x 1-1/4in	
17	0641808	1	Bolt 1/2in-13NC x 1in	
18	0641828	4	Bolt 1/2in-13NC x 2-1/2in	
19	0700808	8	Bolt M8 x 16mm	
20	0701010	8	Bolt M10 x 20mm	
21	0701012	4	Bolt M10 x 25mm	
22	0701015	8	Bolt M10 x 35mm	
23	0701214	8	Bolt M12 x 30mm	
24	0940070	1	Bumper, Rubber	
25	0961986	2	Bearing, Flange	
26	1060637	1	Lanyard	
27		Ref	Clamp, Hose Options:	
27	1320012	4	Clamp, Hose **(SN 0300069000 through 0300084828)**	
27	8405104	4	Clamp, Hose **(SN 0300084829 through 0300087000)**	
28	1320016	2	Clamp, Hose	
29		Ref	Clamp, Hose Options:	
29	1320022	3	Clamp, Hose **(SN 0300069000 through 0300084828)**	
29	8405009	2	Clamp, Hose **(SN 0300084829 through 0300087000)**	
30	1340060	1	Air Cleaner Assembly	
30	7012664	1	Element, Air Cleaner	
31	1580011	1	Container, Coolant Overflow	
32	1660239	1	Coupling, Pump	
33	1703162	2	Decal - Fan Blade	
34	2000194	1	Caterpillar Engine Assembly	
35	2060025	1	Fan	
36	2180798	1	Fitting **(SN 0300069000 through 0300084828)**	
37	2720058	0.33 ft	Hose	
38	2720434	1	Elbow, Rubber	
39	2720509	1	Hose, Radiator (Bottom)	
40	2720510	1	Hose, Radiator (Top)	

ITEM	PART NUMBER	QTY	DESCRIPTION	REV
41	3200406	4	Mount, Engine	
42	3220113	1	Muffler, Spark Arresting	
42	70001017	1	Clamp	
43	3290801	4	Nut M8 x 1.25	
44	3311405	14	Locknut 1/4in-20NC	
45	3311505	4	Locknut 5/16in-18NC	
46	3311605	18	Locknut 3/8in-16NC	
47	3311801	1	Nut 1/2in-13NC	
48	3311805	4	Locknut 1/2in-13NC	
49	3539872	1	Plate, Radiator Mounting	
50	3574206	1	Plate, Motor Mount	
51	3574207	1	Plate, Engine Mount (Rear)	
52	3574208	1	Bracket, Muffler	
53	3620047	1	Radiator	
53A	7027412	1	Cap	
53B	70004182	1	Shroud, Fan	
54	3740067	3	Relay, Solenoid Assembly	
55	3960468	1	Seal, Foam Gasket	
56	3960469	1	Seal, Foam Gasket	
57	4031911	4	Bolt M8 x 35mm	
58	4220191	2	Block, Spacer	
59	4360392	1	Switch, Restrictor Indicator **(SN 0300069000 through 0300084828)**	
61	4567073	1	Tube, Exhaust	
62	4568721	1	Exhaust Tube Weldment	
63		Ref	Tube, Air Intake Weldment Options:	
63	4568788	1	Tube, Air Intake Weldment **(SN 0300069000 through 0300084828)**	
63	4569177	1	Tube, Air Intake Weldment **(SN 0300084829 through 0300087000)**	
64	4640750	1	Valve, Oil Drain	
65	4711500	8	Flatwasher 5/16in Thin	
66	4740274	4	Washer, Snubbing	
67	4751400	28	Flatwasher 1/4in Regular	
68	4751600	48	Flatwasher 3/8in Regular	
69	4751800	8	Flatwasher 1/2in Regular	
70	4811900	8	Flatwasher M8	
71	4832000	8	Lockwasher M10	
72	4846790	1	Tray Engine	
73	4846805	1	Mount, Engine/Generator - Left	
74	4922737	1	Harness, Relay Ground	
75	0721006	1	Bolt #10-24NC x 3/4in	
76	2720515	1	Seal, Air Cleaner	
77	2220767	1	Fitting **(SN 0300075603 through 0300087000)**	
		Ref	**CATERPILLAR ENGINE INSTALLATIONS**	
	0273520	Ref	**Caterpillar Engine Installations (SN 0300069000 through 0300081835)**	3
	0273972	Ref	**Caterpillar Engine Installations (SN 0300081836 through 0300084828)**	1
	0274525	Ref	**Caterpillar Engine Installations (SN 0300084829 through 0300087000)**	1-A
102		Ref	Piston Pump Assembly Options:	
102	3600260	1	Piston Pump Assembly (See PISTON PUMP ASSEMBLY for	

ITEM	PART NUMBER	QTY	DESCRIPTION	REV
			Breakdown) **(SN 0300069000 through 0300081835)**	
102	3600381	1	Piston Pump Assembly (See GEAR PUMP ASSEMBLY for Breakdown) **(SN 0300081836 through 0300087000)**	
103	3600242	1	Gear Pump Assembly (See TANK INSTALLATIONS for Breakdown)	
104	3422448	1	Pin, Pivot	
105	3841143	1	Keeper, Pin	
106	3422553	1	Pin, Hitch	
107	2902296	1	Battery Cable Kit	
		Ref	**Note: 2902296 Rev A version is no longer available. Verify whether machine is equipped with 2 or 3 relays on the engine tray. If there are 3 relays, purchase latest revision of 2902296 kit. If there are 2 relays, purchase individual items as replacement.**	
107A		Ref	Cable, Battery (Red)	
107A	1001116241	1	Machines with 2 Relays on Engine Tray (was p/n 7027000)	
107A	1001116240	1	Machines with 3 Relays on Engine Tray (was p/n 7027000)	
107B	7027004	1	Cable, Battery (Black)	
107C	7027002	1	Cable (Red)	
107D	7027003	1	Cable (Black)	
107E	7027001	1	Cable (Red) (No Longer Part of 2902296 Kit.)	
108	1060904	1	Cable, Battery	
109	4922737	1	Harness, Relay Ground	
110	0642010	1	Bolt 5/8in-11NC x 1-1/4in	
111	4752000	1	Flatwasher 5/8in Regular	
112	1320223	2	J-Clip 1/2in	
113	0641606	2	Bolt 3/8in-16NC x 3/4in	
114	4711600	4	Flatwasher 3/8in Thin	
115	4060805	2 ft/0.7mm	Flex-Trim 1/4in	
116	3931620	2	Bolt 3/8in-16NC x 1-1/4in	
117	3790152	1	O-Ring	
118	4891600	2	Flatwasher 3/8in Hardened	
119	3380428	1	Panel, Rubber	
120	3539956	1	Plate, Support	
121	0100011	AR	Compound, Locking	
122	0100020	AR	Sealant, Thread	
123	2220273	1	Fitting, Reducer	
124		Ref	Fitting, Straight Options:	
124	2180536	1	Fitting, Straight **(SN 0300069000 through 0300075350)**	
124	2220794	1	Fitting, Straight **(SN 0300075351 through 0300087000)**	
125	2220313	1	Fitting, 90	
126	2750532	6 ft/1.8m	Hose 3/8in	
127	2220250	1	Fitting, Reducer	
128	2220459	1	Fitting, 90	
129		Ref	Hose Options:	
129	2720271	15 ft/4.6m	Hose **(SN 0300069000 through 0300075350)**	
129	2720058	15 ft/4.6m	Hose **(SN 0300075351 through 0300087000)**	
130	2220794	1	Fitting, Barbed	
131	2720058	30 ft/9.1m	Hose	
132	4751400	4	Flatwasher 1/4in Regular	
133	0641608	2	Bolt 3/8in-16NC x 1in	
134	3311405	2	Locknut 1/4in-20NC	

ITEM	PART NUMBER	QTY	DESCRIPTION	REV
135	0641507	3	Bolt 5/16in-18NC x 1-1/4in	
136	3311505	3	Locknut 5/16in-18NC	
137	0641407	1	Bolt 1/4in-20NC x 7/8in	
138	0641808	1	Bolt 1/2in-13NC x 1in	
139	1320022	7	Clamp, Hose	
140	1701505	1	Decal - Diesel (Not Shown - Located on Hood)	
141	0641610	1	Bolt 3/8in-16NC x 1-1/4in	
142	0641812	2	Bolt 1/2in-18NC x 1-3/4in	
143	3960389	5 ft/1.5m	Seal, Hood	
144	7019658	1	90 Fitting W/Pick-Up Tube	
	2000194	Ref	**ENGINE COMPONENTS**	C
201	7026830	1	Filter, Fuel	
202	7026831	1	Alternator	
203	7026814	1	Relief Valve, Oil Pressure	
203	7026815		Gasket, Relief Valve	
203	1001097554		Sensor, Oil Pressure (Not Shown)	
204	7026811	1	Filter, Oil	
205	7026833	1	Starter	
206	7026834	1	Dipstick Oil Level	
207	7026840	1	Sensor, Water Temperature	
207	7026882	1	Seal, Sensor	
208	1600361	1	Actuator, Throttle (was p/n 7026842)	
208	7026835	1	Connector, Actuator	
209	7026843	1	Actuator, Linkage Kit	
210	0902910	NLA	Mounting Bracket, Actuator (Use p/n 7026887)	
211	7026839	1	Pump, Fuel Supply	
212	7026841	1	Sensor, Tach	
212	7026836	1	Connector, Speed Sensor	
213		Ref	Pump, Water Options:	
213	7026823	1	Caterpillar Engine SNs (Not Machine SN) Prior to SN 3440833	
213	70001120	1	Caterpillar Engine SNs (Not Machine SN) SN 344083 to Present	
213	7026824	1	Gasket, Water Pump Cover	
213	7026825	1	Gasket, Water Pump	
214	7026822	1	Thermostat	
214	7026820	1	Gasket, Thermostat Housing	
214	7026821	1	Gasket, Coolant	
215	70001742	1	Pulley, Water Pump	
216	7026800	1	Cap, Filler	
217	7026801	1	Gasket, Valve Cover (Not Shown)	
218	7026802	1	Flywheel Assy (W/Gear)	
218	7026803	1	Gear, Flywheel	
219	7026804	1	Gasket (Not Shown - Located Between Engine Block and Bellhousing)	
220	7026805	1	Seal, Rear Main (Not Shown - Located on Rear of Engine Block)	
221	7026806	1	Cap, Filler	
222	7026807	1	Seal, Front Main (Not Shown - Located on Front of Engine Block)	
223	7026809	1	Gasket, Oil Pan (Not Shown)	
224	7026810	1	Belt	
225	7026813	1	Seal, Oil Filter Head (Between Oil Filter Head and Engine Block)	
225	7026812	1	Seal, Oil Filter Head Bolt	
226	7026819	1	Cooler, Oil (Not Shown)	
226	7026816	2	O-Ring (Not Shown - Located Between Oil Cooler and Cover)	

ITEM	PART NUMBER	QTY	DESCRIPTION	REV
226	7026817	4	O-Ring (Not Shown - Located Between Oil Cooler and Cover)	
226	7026818	1	Gasket (Not Shown - Located Between Oil Cooler Cover and Engine Block)	
227	7026826	1	Gasket, Exhaust Manifold to Engine Block (Not Shown)	
228	7026827	1	Gasket, Exhaust Manifold to Exhaust Pipe	
229	7026829	1	Gasket, Intake Manifold to Engine Block	
229	7026828	1	Gasket, Intake Manifold to Air Intake Tube	
230	7026832	4	Plug, Glow	
231	7026845	1	Block Heater Kit (Not Shown)	
231	7026838	1	Gasket, Block Heater (Not Shown)	

FIGURE 2-8. GENERATOR INSTALLATION (CATERPILLAR ENGINE MACHINES) (OPTIONAL)

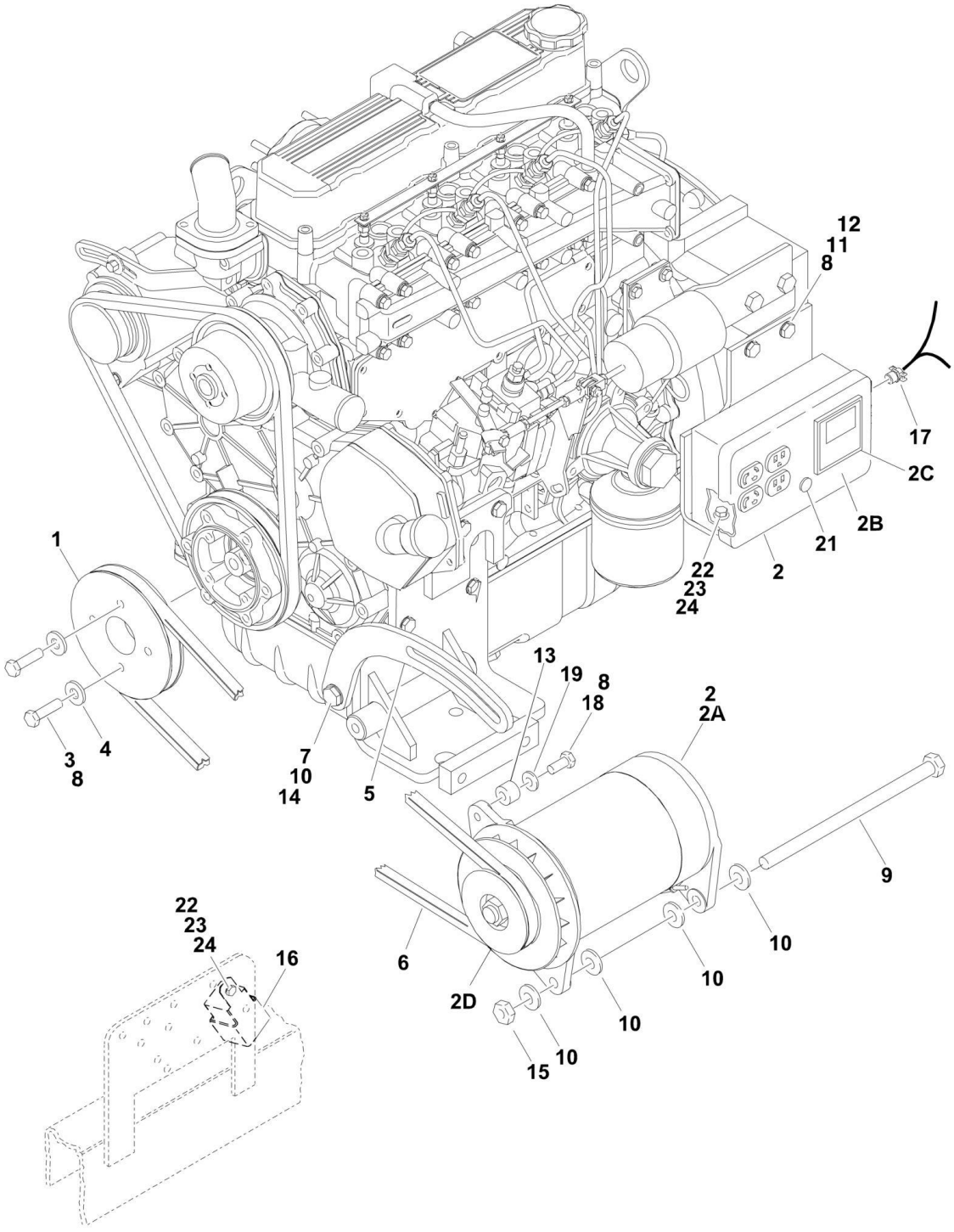

FIGURE 2-8. GENERATOR INSTALLATION (CATERPILLAR ENGINE MACHINES) (OPTIONAL)

ITEM	PART NUMBER	QTY	DESCRIPTION	REV
		Ref	**GENERATOR INSTALLATION OPTIONS:**	
	0273538	Ref	**Generator Installation Options 110V/50Hz (SN 0300069000 through 0300081835)**	2-B
	0274091	Ref	**Generator Installation Options 110V/50Hz (SN 0300081836 through 0300087000)**	1-A
	0273539	Ref	**Generator Installation Options 220V/50Hz (SN 0300069000 through 0300081835)**	2-B
	0274087	Ref	**Generator Installation Options 220V/50Hz (SN 0300081836 through 0300087000)**	1-A
1	3580322	1	Pulley	
2		Ref	Generator and Control Box Assembly Options:	
2	2460039	1	Generator and Control Box Assembly 110V/50Hz **(SN 0300069000 through 0300081835)**	
2	2460057	1	Generator and Control Box Assembly 110V/50Hz **(SN 0300081836 through 0300087000)**	
2	2460013	1	Generator and Control Box Assembly 220V/50Hz **(SN 0300069000 through 0300081835)**	
2	2460056	1	Generator and Control Box Assembly 220V/50Hz **(SN 0300081836 through 0300087000)**	
2A	2460049	1	Generator Only - 110V	
2A	1001100321	1	Generator Only - 220V	
2A		Ref	Armature with Slip Rings Options:	
2A	70000122	1	Armature with Slip Rings - 110V/50Hz	
2A	70000123	1	Armature with Slip Rings - 220V/50Hz	
2A	7012513	4	Cap, Brush Holder	
2A	7020108	4	Brush	
2A	7020109	4	Holder, Brush	
2A	7012514	1	Fan	
2A	7020110	1	Bell, Front	
2A	7020111	1	Bell, Rear	
2A	7020190	2	Bearing	
2B	70002239	1	Box, Control - 110V **(SN 0300069000 through 0300081835)**	
2B	7019680	1	Box, Control - 110V **(SN 0300081836 through 0300087000)**	
2B	70002235	1	Box, Control - 220V **(SN 0300069000 through 0300081835)**	
2B	70002235	1	Box, Control - 220V **(SN 0300081836 through 0300087000)**	
2B		Ref	Receptacle Options:	
2B	4460190	1	Receptacle, Standard (110V Only)	
2B	4460027	1	Receptacle, Twistlock (110V Only)	
2B	70000124	1	Receptacle, Double (220V Only)	
2B	70000125	1	Receptacle, Single (220V Only)	
2B		Ref	Breaker, Circuit Options:	
2B	70002240	1	Breaker, Circuit - 110V **(SN 0300069000 through 0300081835)**	
2B	4360542	1	Breaker, Circuit - 110V **(SN 0300081836 through 0300087000)**	
2B	70000126	1	Breaker - 220V	
2B	3520028	1	Plug, Hole	
2C		Ref	Voltmeter Options:	
2C	2420203	1	Voltmeter - 110V	
2C	7020192	1	Voltmeter - 220V	
2D	3580134	1	Pulley	
2D	7027887	1	Key, Woodruff	

SECTION 2 - TURNTABLE

ITEM	PART NUMBER	QTY	DESCRIPTION	REV
3	0700816	4	Bolt M8 x 40mm	
4	4811900	4	Flatwasher M8	
5		Ref	Arm, Adjusting Options:	
5	0200742	1	Arm, Adjusting **(SN 0300069000 through 0300074394)**	
5	0200819	1	Arm, Adjusting **(SN 0300074395 through 0300087000)**	
6	1480120	1	V-Belt	
7	0641610	1	Bolt 3/8in-16NC x 1-1/4in	
8	0100011	AR	Compound, Locking	
9	0641772	1	Bolt 7/16in-14NC x 9in	
10	4751600	6	Flatwasher 3/8in Regular	
11	3574684	1	Plate, Powermite Box Mounting	
12	0701210	2	Bolt M12 x 20mm	
13		Ref	Bushing, Spacer Options:	
13	0962653	1	Bushing, Spacer **(SN 0300069000 through 0300074394)**	
13	0962563	1	Bushing, Spacer **(SN 0300074395 through 0300087000)**	
14	3311605	1	Locknut 3/8in-16NC	
15	3311705	1	Locknut 7/16in-14NC	
16	3740080	1	Relay	
17	4460023	1	Connector, Strain Relief **(SN 0300069000 through 0300081835)**	
18	0641508	1	Bolt 5/16in-18NC x 1in	
19	4751500	1	Flatwasher 5/16in Regular	
21	3520028	1	Plug, Hole	
22	0721006	3	Bolt #10-24NC x 3/4in	
23	3311005	3	Locknut #10-24NC	
24	4751000	6	Flatwasher #10 Regular	
25	4360336	1	Switch, Toggle (Not Shown - Located at Platform)	
26	4740397	1	Bushing (Not Shown - Located at Platform) **(SN 0300069000 through 0300074394)**	
27	4060802	1	Guard, Switch (Not Shown - Located at Platform)	
28	1705325	1	Decal - 120V-50Hz (Not Shown - Located at Turntable) (110V, 50Hz Generator Only)	
28	3252507	1	Decal - 220V-50/60Hz (Not Shown - Located at Turntable) (220V, 50Hz Generator Only)	
29	2820031	4 in/10cm	Heat Shrink (Not Shown - Located at Platform)	
30	3251102	1	Decal (Not Shown - Located at Platform)	

FIGURE 2-9. DEUTZ ENGINE INSTALLATION (SN 0300069000 through 0300077489)

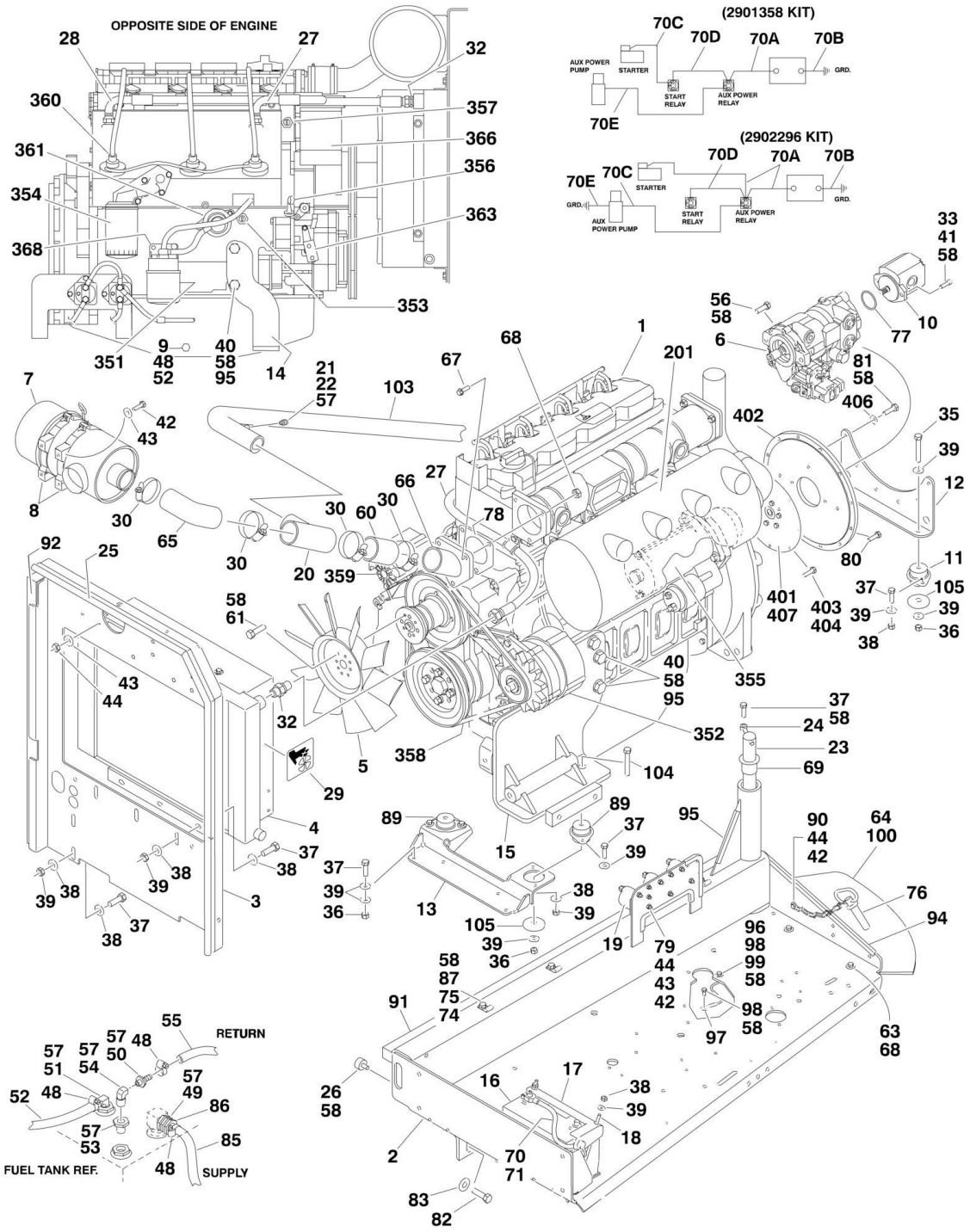

FIGURE 2-9. DEUTZ ENGINE INSTALLATION (SN 0300069000 through 0300077489)

ITEM	PART NUMBER	QTY	DESCRIPTION	REV
	0270850	Ref	**ENGINE ASSEMBLY AND INSTALLATIONS**	11-J
1	2000189	1	Engine - Deutz F4M1011F Diesel	
2	4845404	1	Tray Engine	
3	3539872	1	Plate, Radiator Mounting	
4	3620033	1	Cooler, Oil	
5	2060025	1	Fan	
6	3600260	1	Piston Pump Assembly (See PISTON PUMP ASSEMBLY for Breakdown)	
7	1340060	1	Air Cleaner Assembly	
7A	7012664	1	Element	
8	0340041	2	Band, Mounting	
9	4640751	1	Valve, Oil Drain	
10	3600242	1	Gear Pump Assembly (See PISTON PUMP ASSEMBLY for Breakdown)	
11	3200378	2	Mount, Rubber Engine (Rear)	
12	3537420	1	Bracket, Engine Mounting - Rear	
13	3539971	1	Bracket, Engine Mounting - Front	
14	3537416	1	Support, Engine - Right	
15	4846566	1	Support, Engine - Left	
16	0400075	1	Battery	
17	0181727	1	Hold-Down, Battery	
18	0630498	2	Rod, Hold-Down	
19	3740067	2	Relay	
21	4360392	1	Switch, Restrictor Indicator	
22	2180798	1	Fitting	
23	3422448	1	Pin, Pivot	
24	3841143	1	Keeper, Pin	
25	3960389	5 ft/1.5m	Seal	
26	0940070	1	Bumper, Rubber	
27	2720398	1	Hose, Oil Cooler - Left	
28	2720398	1	Hose, Oil Cooler - Right	
29	1703162	2	Nameplate - Fan Caution	
30	1320016	4	Clamp, Hose	
32	2220451	2	Fitting, Straight	
33	3931620	2	Capscrew, Socket Head 3/8in-16NC x 1-1/4in	
35	0641818	2	Bolt 1/2in-13NC x 2-1/4in	
36	3311805	4	Locknut 1/2in-13NC	
37	0641610	AR	Bolt 3/8in-16NC x 1-1/4in	
38	3311605	AR	Locknut 3/8in-16NC	
39	4751600	AR	Flatwasher 3/8in Regular	
40	0701414	AR	Bolt 1/4in-20NC x 3/4in	
41	4891600	2	Flatwasher 3/8in Hardened	
42	0641407	AR	Bolt 1/4in-20NC x 7/8in	
43	4751400	AR	Flatwasher 1/4in Regular	
44	3311405	AR	Locknut 1/4in-20NC	
48	1320022	6	Clamp, Hose	
49	2220273	2	Fitting, Reducer	
50	2180536	1	Fitting, Straight	
51	2220313	1	Fitting, 90	
52	2750532	6 ft/1.83m	Hose 3/8in	

ITEM	PART NUMBER	QTY	DESCRIPTION	REV
53	2220250	1	Fitting, Reducer	
54	2220459	1	Fitting, 90	
55	2720271	15 ft/4.6m	Hose 3/16in	
56	0641812	4	Bolt 1/2in-13NC x 1-1/2in	
57	0100020	AR	Sealant, Thread	
58	0100011	AR	Compound, Locking	
60	2720449	AR	Coupling, Rubber Intake	
61	0700808	4	Bolt, Metric M8 x 16mm	
63	0641507	AR	Bolt 5/16in-18NC x 7/8in	
64	3380428	1	Panel, Rubber	
65	2720434	1	Elbow, Rubber	
66	4845395	1	Air Intake Adapter Weldment	
67	0641510	3	Bolt 5/16in-18NC x 1-1/4in	
68	3311505	7	Locknut 5/16in-18NC	
69	0961986	2	Bushing, Flanged	
70	2901358	1	Battery Cable Kit **(SN 0300069000 through 0300074732)**	
70	2902296	1	Battery Cable Kit **(SN 0300074733 through 0300077490)**	
		Ref	**Note: 2902296 Rev A version is no longer available. Verify whether machine is equipped with 2 or 3 relays on the engine tray.**	
		Ref	**If there are 3 relays, purchase latest revision of 2902296 kit. If there are 2 relays, purchase individual items as replacement.**	
70A	7016800	1	Cable, Battery (Red) (p/n kit 2901358)	
70A	1001116241	1	Cable, Battery (Red) (Machines with 2 Relays on Engine Tray) (was p/n 7027000) (p/n kit 2902296)	
70A	1001116240	1	Cable, Battery (Red) (Machines with 3 Relays on Engine Tray) (was p/n 7027000) (p/n kit 2902296)	
70B	7016812	1	Cable, Battery (Black) (p/n kit 2901358)	
70B	7027004	1	Cable, Battery (Black) (p/n kit 2902296)	
70C	7016802	1	Cable (Red) (p/n kit 2901358)	
70C	7027002	1	Cable (Red) (p/n kit 2902296)	
70D	7016803	1	Cable (Red) (p/n kit 2901358)	
70D	7027001	NLA	Cable (Red) (No Longer Part of 2902296 Kit.)	
70E	7016824	1	Cable (Red) (p/n kit 2901358)	
70E	7027003	1	Cable (Black) (p/n kit 2902296)	
70F	Not Required	0	Cable (p/n kit 2901358/p/n kit 2902296)	
71	4460611	1	Terminal, Battery Jumper Post **(SN 0300069000 through 0300074732)**	
72	4360294	1	Breaker, Circuit 30A Self Resetting	
73	1320222	1	J-Clip 3/8in	
74	1320223	4	J-Clip 1/2in	
75	0641606	3	Bolt 3/8in-16NC x 3/4in	
76	3422532	1	Pin, Hitch	
77	3790152	1	O-Ring	
78	3960407	1	Gasket	
79	4791400	4	Starwasher 1/4in	
80	0701012	4	Bolt, Metric M10 x 25mm	
81	0701015	4	Bolt, Metric M10 x 35mm	
82	0642010	1	Bolt 5/8in-11NC x 1-1/4in	
83	4752000	1	Flatwasher 5/8in Regular	
84	1701505	1	Decal - Diesel (Not Shown - Located on Hood)	
85	2720058	16 ft/4.9m	Hose	

ITEM	PART NUMBER	QTY	DESCRIPTION	REV
86	2220794	1	Fitting, Barbed	
87	4711600	3	Flatwasher 3/8in Thin	
89	3200362	2	Mount, Rubber Engine (Front)	
90	4711400	1	Flatwasher 1/4in Thin	
91	3960468	1	Seal, Foam Gasket	
92	3960469	1	Seal, Foam Gasket	
94	4060805	2.9 ft/0.88m	Flex-Trim 1/4in	
96	4751800	2	Flatwasher 1/2in Regular	
97	1060637	1	Lanyard	
98	0641808	2	Bolt 1/2in-13NC x 1in	
99	3311801	1	Nut 1/2in-13NC	
100	3539956	1	Plate, Support	
103	4567815	1	Tuning Tube Weldment	
104	0641826	2	Bolt 1/2in-13NC x 3-1/4in	
105	4740274	4	Washer, Snubbing	
106	7019658	1	90 Fitting W/Pick-Up Tube	
		Ref	**MUFFLER INSTALLATIONS (NON UL MACHINES)**	
	0256689	Ref	**Standard Equipment (Spark Arresting)**	-
	0256690	Ref	**Optional Equipment (Catalytic)**	-
201		Ref	Muffler Options:	
201	3220103	1	Spark Arresting	
201	3220104	1	Catalytic	
201		Ref	Clamp Options:	
201	1320176	1	Muffler p/n 3220103	
201	70001017	1	Muffler p/n 3220104	
201	7024398	1	Tube, Exhaust	
201	7024560	1	Plug, Brass	
	2000189	Ref	**ENGINE COMPONENTS**	
351	7016328	1	Filter, Fuel	
352	7000663	1	Alternator (was p/n 7020410)	
352	7020464	1	Regulator	
352	70003556	1	Pulley, Alternator	
352	70002234	1	Bracket, Adjustable	
353	7020461	1	Switch, Oil Pressure	
354	7016331	1	Filter, Oil	
355	7020479	1	Starter	
355	See Note	1	Relay (Note: Not Available for Purchase)	
355	7026608	2	Bolt, Starter Mounting	
355	70001498	1	Shield, Starter Heat (Not Shown)	
356	7026631	1	Dipstick Oil Level	
356	7020487	1	Seal, Dipstick (Not Shown)	
356	70001002		Tube, Dipstick	
357	7020168	1	Switch, Engine Temperature	
357	7020480	1	Seal, Temp Switch	
358	7020408	1	V-Belt	
359	7020458	1	Fuel, Solenoid	
360	7020462	4	Fuel Injection Pump	
360	7026522	4	Injector, Fuel (Includes Nozzle Element) (Not Shown)	
361	7024413	1	Fuel Pump Supply	
361	7020411	1	Seal, Pump to Block (Not Shown)	
362	7020465	2	Cap, Oil Fill (Not Shown - Located on Top and Left Sides)	

SECTION 2 - TURNTABLE

ITEM	PART NUMBER	QTY	DESCRIPTION	REV
363	7020474	1	Pump, Oil Lube	
363	7020468	1	Ring, Pump Sealing	
364	7020449	4	Gasket, Intake Manifold to Engine Block (Not Shown)	
365	7024565	1	Sensor, Tach (Not Shown - Located on Flywheel Housing) (was p/n 7020481)	
366	7020458	1	Actuator	
366	7026607	1	Spring, Actuator (was p/n 7027276)	
367	7020471	4	Gasket, Exhaust Manifold to Engine Block (Not Shown)	
368	70001423	1	Head, Fuel Filter	
369		Ref	Gasket, Head Options (Not Shown):	
369	70001681	1	1 Notch Gasket	
369	70002411	1	2 Notch Gasket	
369	70002530	1	3 Notches	
370	See Note	1	Flywheel (Not Shown) (Note: Not Available for Purchase)	
370	7024579		Ring Gear (Not Shown)	
	0256847	Ref	**PUMP COUPLING INSTALLATION**	-
401	1660234	1	Coupling, Hayes	
402	0080163	1	Plate, Pump Adapter	
403	0700810	6	Bolt M8 x 20mm	
404	4831900	6	Lockwasher M8	
406	4832000	8	Lockwasher M10	
407	3020021	AR	Grease, Coupling	

FIGURE 2-10. DEUTZ ENGINE INSTALLATION (SN 0300077490 through 0300087000)

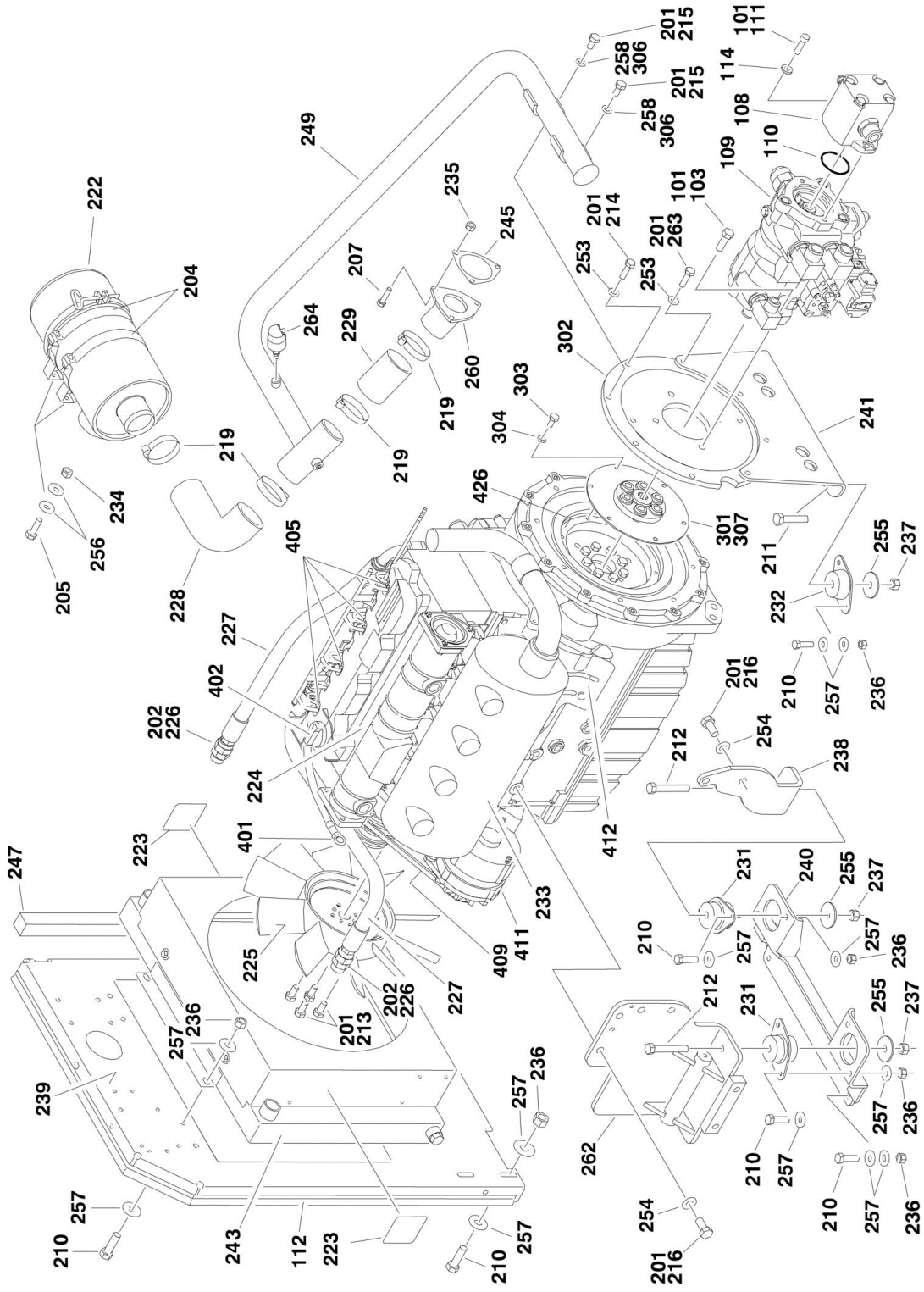

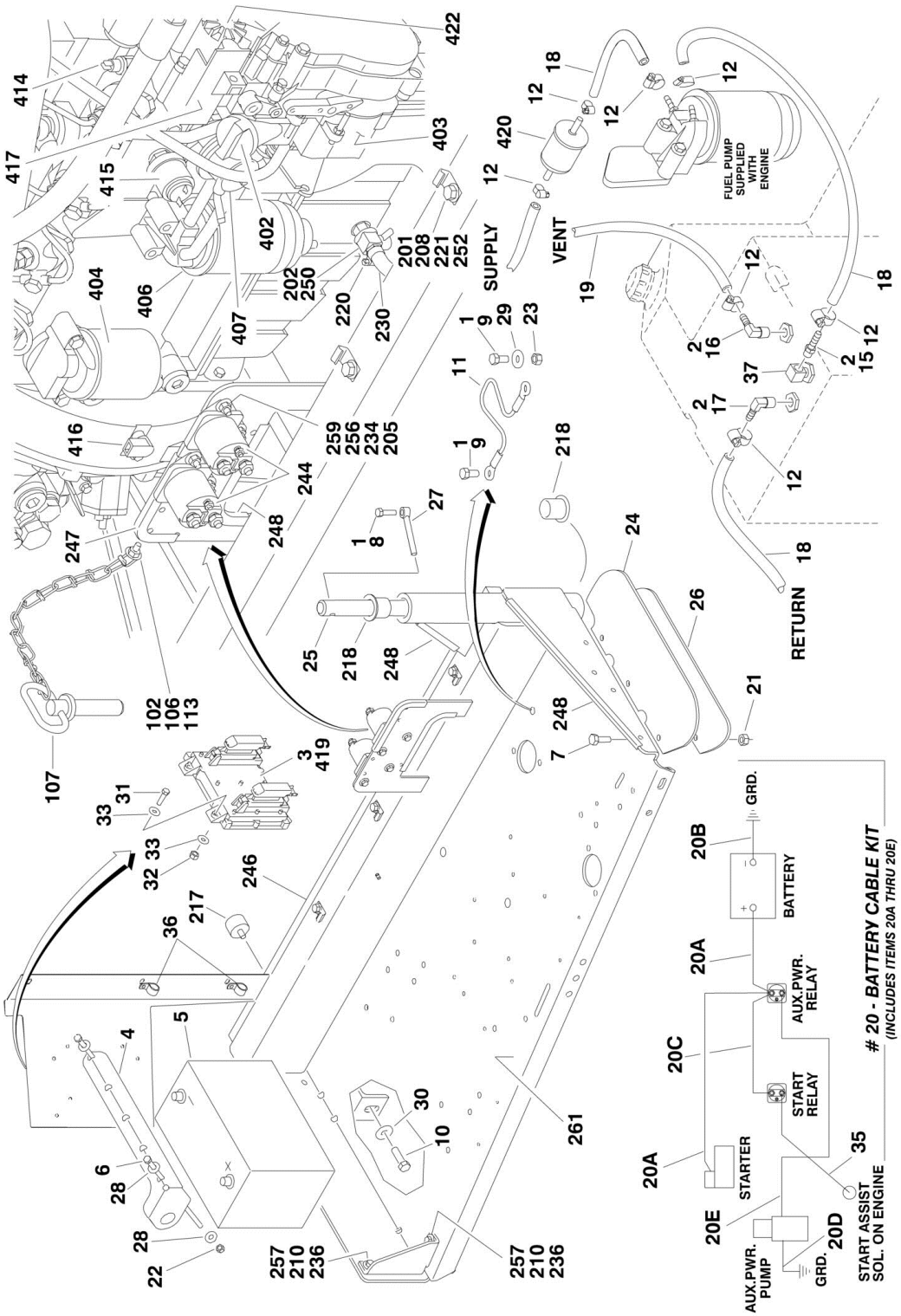
FUEL PUMP SUPPLIED WITH ENGINE
SUPPLY
VENT
RETURN
20 - BATTERY CABLE KIT
(INCLUDES ITEMS 20A THRU 20E)
BATTERY
AUX.PWR. RELAY
START RELAY
STARTER
AUX.PWR. PUMP
START ASSIST SOL. ON ENGINE
GRD.

FIGURE 2-10. DEUTZ ENGINE INSTALLATION (SN 0300077490 through 0300087000)

ITEM	PART NUMBER	QTY	DESCRIPTION	REV
		Ref	**DEUTZ ENGINE INSTALLATIONS**	
	0273685	Ref	**Deutz Engine Installations (SN 0300077490 through 0300081835)**	3-A
	0273970	Ref	**Deutz Engine Installations (SN 0300081836 through 0300087000)**	3-B
	0274299	Ref	**Deutz Engine Installations (SN 0300081836 through 0300087000)**	C
1	0100011	AR	Compound, Locking	
2	0100020	AR	Sealant, Pipe	
3	0100048	AR	Grease, Dielectric	
4	0181727	1	Hold-Down, Battery	
5	0400075	1	Battery	
6	0630498	2	Bolt, Battery Hold-Down	
7	0641507	3	Bolt 5/16in-18NC x 7/8in	
8	0641610	1	Bolt 3/8in-16NC x 1-1/4in	
9	0641808	2	Bolt 1/2in-13NC x 1in	
10	0642010	1	Bolt 5/8in-11NC x 1-1/4in	
11	1060637	1	Cable, Lanyard	
12	1320022	AR	Clamp, Hose	
13	1701505	1	Decal - Diesel (Not Shown - Located on Hood)	
15	2180348	1	Fitting, Straight Barbed	
16	2220313	1	Fitting, 90	
17	2221176	1	Fitting, Straight Barbed	
18	2720058	30 ft/9.2m	Hose	
19	2750532	6 ft/1.8m	Hose	
20	2902296	1	Battery Cable Kit	B
		Ref	**Note: 2902296 Rev A version is no longer available. Verify whether machine is equipped with 2 or 3 relays on the engine tray.**	
		Ref	**If there are 3 relays, purchase latest revision of 2902296 kit. If there are 2 relays, purchase individual items as replacement.**	
20A	1001116241	1	Cable, Battery (Red) (Machines with 2 Relays on Engine Tray) (was p/n 7027000)	
20A	1001116240	1	Cable, Battery (Red) (Machines with 3 Relays on Engine Tray) (was p/n 7027000)	
20B	7027004	1	Cable, Battery (Black)	
20C	7027001	1	Cable (Red) (No Longer Part of 2902296 Kit.)	
20D	7027003	1	Cable (Black)	
20E	7027002	1	Cable (Red)	
21	3311505	10	Locknut 5/16in-18NC	
22	3311605	2	Locknut 3/8in-16NC	
23	3311801	1	Nut 1/2in-13NC	
24	3380428	1	Panel, Rubber	
25	3422448	1	Pin, Pivot	
26	3539956	1	Plate, Support	
27	3841143	1	Pin, Keeper	
28	4751600	4	Flatwasher 3/8in Regular	
29	4751800	1	Flatwasher 1/2in Regular	
30	4752000	1	Flatwasher 5/8in Regular	
32	0641409	4	Bolt 1/4in-20NC x 1-1/8in **(SN 0300084829 through 0300087000)**	

ITEM	PART NUMBER	QTY	DESCRIPTION	REV
33	3311405	4	Locknut 1/4in-20NC **(SN 0300084829 through 0300087000)**	
34	4711400	8	Flatwasher 1/4in Thin **(SN 0300084829 through 0300087000)**	
35	4922978	1	Harness, Start Assist Solenoid (See ELECTRICAL SECTION for Breakdown) **(SN 0300077490 through 0300084828)**	
36	85941017	2	Clamp (Not Shown - Located on Turntable) **(SN 0300084829 through 0300087000)**	
37	7019658	1	90 Fitting W/Pick-Up Tube	
		Ref	**ENGINE AND PUMP ASSEMBLIES:**	
	2000224	Ref	**Engine and Pump Assemblies (SN 0300077490 through 0300081835)**	C
	2000221	Ref	**Engine and Pump Assemblies (SN 0300081836 through 0300084828)**	D
	2000280	Ref	**Engine and Pump Assemblies (SN 0300084829 through 0300087000)**	B
101	0100011	AR	Compound, Locking	
102	0641407	1	Bolt 1/4in-20NC x 7/8in	
103	0641812	2	Bolt 1/2in-13NC x 1-1/2in	
105	3020016	3.75 gal	Oil, Motor (Not Shown)	
106	3311405	1	Locknut 1/4in-20NC	
107	3422532	1	Pin, Hitch	
108	3600395	1	Gear Pump Assembly with Fittings (See TANK INSTALLATIONS for Breakdown)	
109		Ref	Piston Pump Assembly with Fittings Options:	
109	3600397	1	Piston Pump Assembly (See PISTON PUMP ASSEMBLY for Breakdown) **(SN 0300077490 through 0300081835)**	
109	3600396	1	Piston Pump Assembly (See GEAR PUMP ASSEMBLY for Breakdown) **(SN 0300081836 through 0300087000)**	
110	3790152	1	O-Ring	
111	3931620	2	Capscrew 3/8in-16NC x 1-1/4in	
112	3960389	5 ft/1.5m	Seal	
113	4751400	1	Flatwasher 1/4in Regular	
114	4891600	2	Flatwasher 3/8in Hardened	
		Ref	**ENGINE AND PUMP ASSEMBLIES OPTIONS:**	
	2000219	Ref	**Engine and Pump Assemblies (SN 0300077490 through 0300084828)**	F
	2000279	Ref	**Engine and Pump Assemblies (SN 0300084829 through 0300087000)**	C
	0256689	Ref	**MUFFLER INSTALLATION - SPARK ARRESTING (STANDARD)**	-
	0256690	Ref	**MUFFLER INSTALLATION - CATALYTIC (OPTIONAL)**	-
201	0100011	AR	Compound, Locking	
202	0100020	AR	Sealant, Pipe	
204	0340041	2	Band, Air Cleaner	
205	0641407	8	Bolt 1/4in-20NC x 7/8in	
207	0641510	3	Bolt 5/16in-18NC x 1-1/4in	
208	0641606	3	Bolt 3/8in-16NC x 3/4in	
210	0641610	20	Bolt 3/8in-16NC x 1-1/4in	
211	0641818	2	Bolt 1/2in-13NC x 2-1/4in	
212	0641826	2	Bolt 1/2in-13NC x 3-1/4in	
213	0700808	4	Bolt M8 x 16mm	
214	0701012	2	Bolt M10 x 25mm	
215	0701015	2	Bolt M10 x 35mm	
216	0701414	6	Bolt M14 x 130mm	
217	0940070	1	Bumper	
218	0961986	2	Bushing, Flanged	

ITEM	PART NUMBER	QTY	DESCRIPTION	REV
219	1320016	4	Clamp	
220	1320022	1	Clamp, Hose	
221	1320223	3	J-Clip	
222	1340060	1	Air Cleaner Assembly Filter Element	
222	7012664	1	Element, Filter (Not Shown)	
223	1703162	2	Decal - Caution Fan Blade	
224		Ref	Engine, Deutz - F4M2011 Tier II Options:	
224	2000216	1	Engine Components **(SN 0300077490 through 0300084828)**	
224	2000274	1	Engine Components **(SN 0300084829 through 0300087000)**	
225	2060025	1	Fan	
226	2220451	2	Fitting, Straight	
227	2720398	2	Hose, Oil Cooler	
228	2720434	1	Elbow, Rubber	
229	2720449	1	Hose, Air Cleaner	
230	2750532	1 ft/30cm	Hose, Oil Drain	
231	3200362	2	Mount, Motor	
232	3200406	2	Mount, Motor	
233		Ref	Muffler Options:	
233	3220103	1	Spark Arresting (Standard)	
233	3220104	1	Catalytic (Optional)	
233		Ref	Clamp Options:	
233	1320176	1	Muffler p/n 3220103	
233	70001017	1	Muffler p/n 3220104	
233	7024398	1	Tube, Exhaust	
233	7024560	1	Plug, Brass	
234	3311405	8	Locknut 1/4in-20NC	
235	3311505	3	Locknut 5/16in-18NC	
236	3311605	AR	Locknut 3/8in-16NC	
237	3311805	4	Locknut 1/2in-13NC	
238	3537416	1	Plate, Engine Mounting (Front Right Side)	
239	3539872	1	Plate, Radiator Mounting	
240	3539971	1	Plate, Engine Mounting (Front Bottom)	
241	3534978	1	Plate, Engine Mounting (Rear)	
243	3620033	1	Radiator	
244	3740067	2	Relay	
245	3960407	1	Gasket, Air Intake	
246	3960468	1	Seal	
247	3960369	1	Seal	
248	4060805	37 in/1m	Flex-Trim	
249		Ref	Tube, Tuning Options:	
249	4567815	1	Tube, Tuning **(SN 0300077490 through 0300084828)**	
249	4569171	1	Tube, Tuning **(SN 0300084829 through 0300087000)**	
250	4640751	1	Valve, Oil Drain	
252	4711600	3	Flatwasher 3/8in Thin	
253	4711700	6	Flatwasher 7/16in Thin **(SN 0300084829 through 0300087000)**	
254	4711900	6	Flatwasher 9/16in Thin	
255	4740274	4	Washer, Snubbing	
256	4751400	AR	Flatwasher 1/4in Regular	
257	4751600	40	Flatwasher 3/8in Regular	
258	4751700	2	Flatwasher 7/16in Regular **(SN 0300084829 through 0300087000)**	
259	4791400	4	Starwasher 1/4in	

ITEM	PART NUMBER	QTY	DESCRIPTION	REV
260	4845395	1	Adapter, Air Intake	
261	4845404	1	Tray, Engine	
262	4846566	1	Plate, Engine Mounting (Front Left Side)	
263	0701014	4	Bolt M10 x 30mm **(SN 0300084829 through 0300087000)**	
264	4360392	1	Indicator, Restriction **(SN 0300077490 through 0300084829)**	
264	2180798	1	Fitting	
	0256847	Ref	**PUMP COUPLING INSTALLATION**	2
301	1660234	1	Coupling, Hayes	
302	0080163	1	Plate, Pump Adapter	
303	0700810	63	Bolt Metric M8 x 20mm	
304	4831900	6	Lockwasher M8	
306	4832000	8	Lockwasher M10 **(SN 0300077490 through 0300084829)**	
307	3020021	AR	Grease, Coupling	
		Ref	**ENGINE COMPONENTS**	
401	7026631	1	Dipstick	
401	7020487	1	O-Ring, Dipstick	
402	7020465	1	Cap, Filler	
403	70001850	1	Pump, Oil Lube (was p/ns 7020484 & 70000045)	
403	7020468	1	Seal Between Oil Pump and Engine Block (Not Shown)	
404	7016331	1	Filter, Oil (was p/n 7016641)	
405		Ref	Pump, Injector Options:	
405	7027246	4	Series A Injector	
405	7027608	4	Series B Injector	
405	7027609	4	Series C Injector	
405	7027610	4	Series D Injector	
405	7020447	4	Gasket (1 per Injector)	
406	7016328	1	Filter, Fuel	
407	70000916	1	Pump, Fuel Supply (was p/n 7027238)	
407	7020411	1	O-Seal Between Fuel Pump and Engine Block (Not Shown)	
408	7020449	4	Gasket, Intake Manifold (Not Shown)	
409	7020408	1	V-Belt	
410	7020471	4	Gasket, Exhaust Manifold to Engine Block (Not Shown)	
410	See Note	1	Gasket, Exhaust Manifold to Exhaust Pipe (Not Shown) (Note: Not Available for Purchase)	
410	70002200	8	Stud, Muffler Attaching	
411	7000663	1	Alternator (was p/n 7020410)	
411	7020464		Regulator, Voltage (Not Shown)	
411	70002234	1	Bracket, Adjusting (Not Shown):	
412	7020479	1	Starter	
412	7026608	1	Solenoid	
412	70001498	1	Shield, Starter Heat	
413	See Note	2	Plug- In Connector (Not Shown) (Note: Not Available for Purchase)	
414	7027241	1	Transmitter, Temperature (Used on p/n 2000216)	
414	7027791	1	Transmitter, Temperature (Used on p/n 2000274)	
414	See Note	1	Ring, Sealing (Note: Not Available for Purchase)	
415	7020461	1	Sensor, Oil Pressure (Used on p/n 2000216)	
415	7027790	1	Sensor, Oil Pressure (Used on p/n 2000274)	
416	7024565	1	Sensor, Speed	
417	7020458	1	Actuator, Throttle (Used on p/n 2000216)	
417	7027792	1	Actuator, Throttle (Used on p/n 2000274)	
417	7026607	2	Spring, Actuator (was p/n 7027276)	

ITEM	PART NUMBER	QTY	DESCRIPTION	REV
418	7027236	1	Sensor, Temperature (Not Shown)	
419	7027795	1	Deutz EMR2 Controller, Module **(SN 0300084829 through 0300087000)**	
419	7027796	1	Harness. EMR2 Module **(SN 0300084829 through 0300087000)**	
420	7027245	1	Filter, Fuel In-line	
421	70000800	1	Timing Belt/Idler Kit Options (Used on p/n 2000216) (Not Shown)	
422	7027239	1	Solenoid, Throttle	
423	See Note	1	Gasket, Valve Cover (Not Shown) (Note: Not Available for Purchase)	
424	See Note	1	2000216 Engines (Note: Not Available for Purchase)	
424		Ref	200274 Engines:	
424	70003001	1	1 Notch	
424	70003002	1	2 Notches	
424	70003003	1	3 Notches	
425		Ref	Harness, Engine Options (Not Shown):	
425	See Note	1	Harness, Engine (Note: Not Available for Purchase) **(SN 0300077490 through 0300084828)**	
425	7027794	1	Harness. Engine **(SN 0300084829 through 0300087000)**	
425	7027793	1	Plug, Connector	
426	70000264	1	Flywheel	
426	7024579	1	Ring Gear	
427	7020459	1	Thermostat (Located at rear of engine block - Not Shown)	
427	7020460	1	Spring, Compression (Not Shown)	

FIGURE 2-11. GENERATOR INSTALLATION (DEUTZ ENGINE MACHINES) (OPTIONAL)

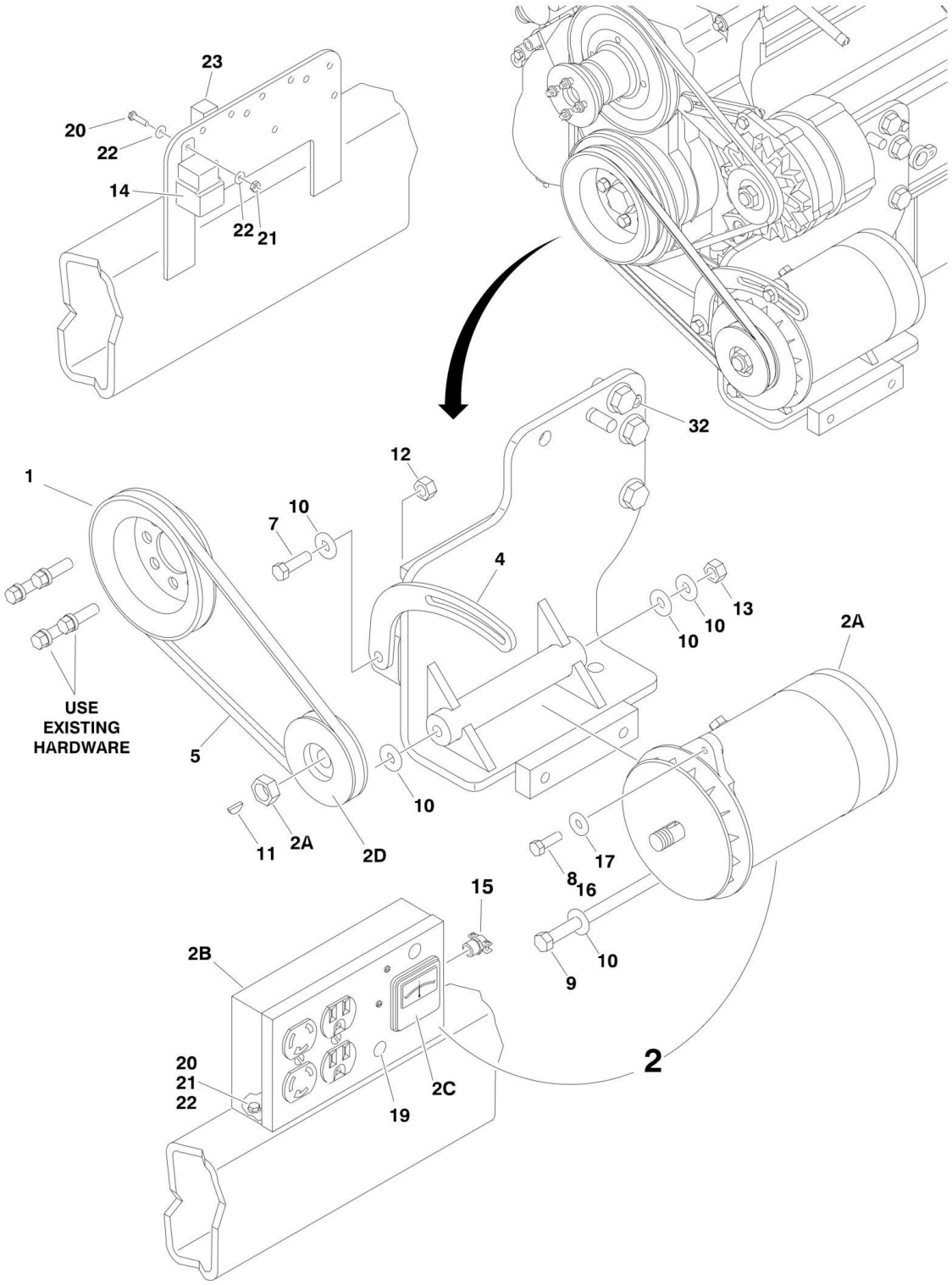

FIGURE 2-11. GENERATOR INSTALLATION (DEUTZ ENGINE MACHINES) (OPTIONAL)

ITEM	PART NUMBER	QTY	DESCRIPTION	REV
		Ref	**GENERATOR INSTALLATION OPTIONS:**	
	0272482	Ref	**110V Generator (SN 0300069000 through 0300081835)**	2
	0274090	Ref	**110V Generator (SN 0300081836 through 0300087000)**	1
	0272481	Ref	**220V Generator (SN 0300069000 through 0300081835)**	2
	0274086	Ref	**220V Generator (Note: Refer to SkyPower Accessories Manual p/n 3124242) (SN 0300081836 through 0300087000)**	1
1	3580158	1	Pulley	
2		Ref	Generator and Control Box Assembly Options:	
2	2460039	1	110Volt Assembly **(SN 0300069000 through 0300081835)**	B
2	2460057	1	110Volt Assembly **(SN 0300081836 through 0300087000)**	A
2	2460013	1	220Volt Assembly **(SN 0300069000 through 0300081835)**	B
2	2460056	1	220Volt Assembly **(SN 0300081836 through 0300087000)**	A
2A	2460049	1	Generator Only - 110V	
2A	1001100321	1	Generator Only - 220V	
2A		Ref	Armature with Slip Rings Options:	
2A	70000122	1	Armature with Slip Rings - 110V/50Hz	
2A	70000123	1	Armature with Slip Rings - 220V/50Hz	
2A	7012513	4	Cap, Brush Holder	
2A	7020108	4	Brush	
2A	7020109	4	Holder, Brush	
2A	7012514	1	Fan	
2A	7020110	1	Bell, Front	
2A	7020111	1	Bell, Rear	
2A	7020190	2	Bearing	
2B	70002239	1	Box, Control - 110V **(SN 0300069000 through 0300081835)**	
2B	7019680	1	Box, Control - 110V **(SN 0300081836 through 0300087000)**	
2B	70002235	1	Box, Control - 220V **(SN 0300069000 through 0300081835)**	
2B	70000127	1	Box, Control - 220V **(SN 0300081836 through 0300087000)**	
2B		Ref	Receptacle Options:	
2B	4460190	1	Receptacle, Standard (110V Only)	
2B	4460027	1	Receptacle, Twistlock (110V Only)	
2B	70000124	1	Receptacle, Double (220V Only)	
2B	70000125	1	Receptacle, Single (220V Only)	
2B		Ref	Breaker, Circuit Options:	
2B	70002240	1	Breaker, Circuit - 110V **(SN 0300069000 through 0300081835)**	
2B	4360542	1	Breaker, Circuit- 110V **(SN 0300081836 through 0300087000)**	
2B	70000126	1	Breaker - 220V	
2B	3520028	1	Plug, Hole	
2C		Ref	Voltmeter Options:	
2C	2420203	1	Voltmeter - 110V	
2C	7020192	1	Voltmeter - 220V	
2D	3580134	1	Pulley	
2D	7027887	1	Key, Woodruff	
4	0200742	1	Arm, Adjusting	
5	0480121	1	V-Belt	
7	0641610	1	Bolt 3/8in-16NC x 1-1/4in	
8	0100011	AR	Compound, Locking	
9	0641772	1	Bolt 7/16in-14NC x 9in	

SECTION 2 - TURNTABLE

ITEM	PART NUMBER	QTY	DESCRIPTION	REV
10	4751600	6	Flatwasher 3/8in Regular	
11	2860012	1	Key, Woodruff	
12	3311605	1	Locknut 3/8in-16NC	
13	3311705	1	Locknut 7/16in-14NC	
14	3740080	1	Relay	
15	4460023	1	Connector, Strain Relief	
16	0641508	1	Bolt 5/16in-18NC x 1in	
17	4751500	AR	Flatwasher 5/16in Regular	
19	3520028	1	Plug, Hole **(SN 0300069000 through 0300081835)**	
20	0721006	4	Bolt #10-24NC x 3/4in	
21	3311005	4	Locknut #10-24NC	
22	4751000	9	Flatwasher #10 Regular	
23	4360294	1	Breaker, Circuit - 30 Amp **(SN 0300069000 through 0300081835)**	
25	4360336	1	Switch, Toggle (Not Shown - Located at Platform)	
26	4740397	1	Bushing (Not Shown - Located at Platform)	
27	4060802	1	Guard, Switch (Not Shown - Located at Platform)	
28	3252507	1	Decal - 220V - 50/60Hz (Not Shown - Located on Turntable)	
29	2820031	4 in/10cm	Heat Shrink (Not Shown - Located at Platform)	
30	3251102	1	Decal (Not Shown - Located at Platform)	
	2902085	1	Kit, Powermite Generator	

FIGURE 2-12. PISTON PUMP ASSEMBLY (SN 0300069000 through 0300079887)

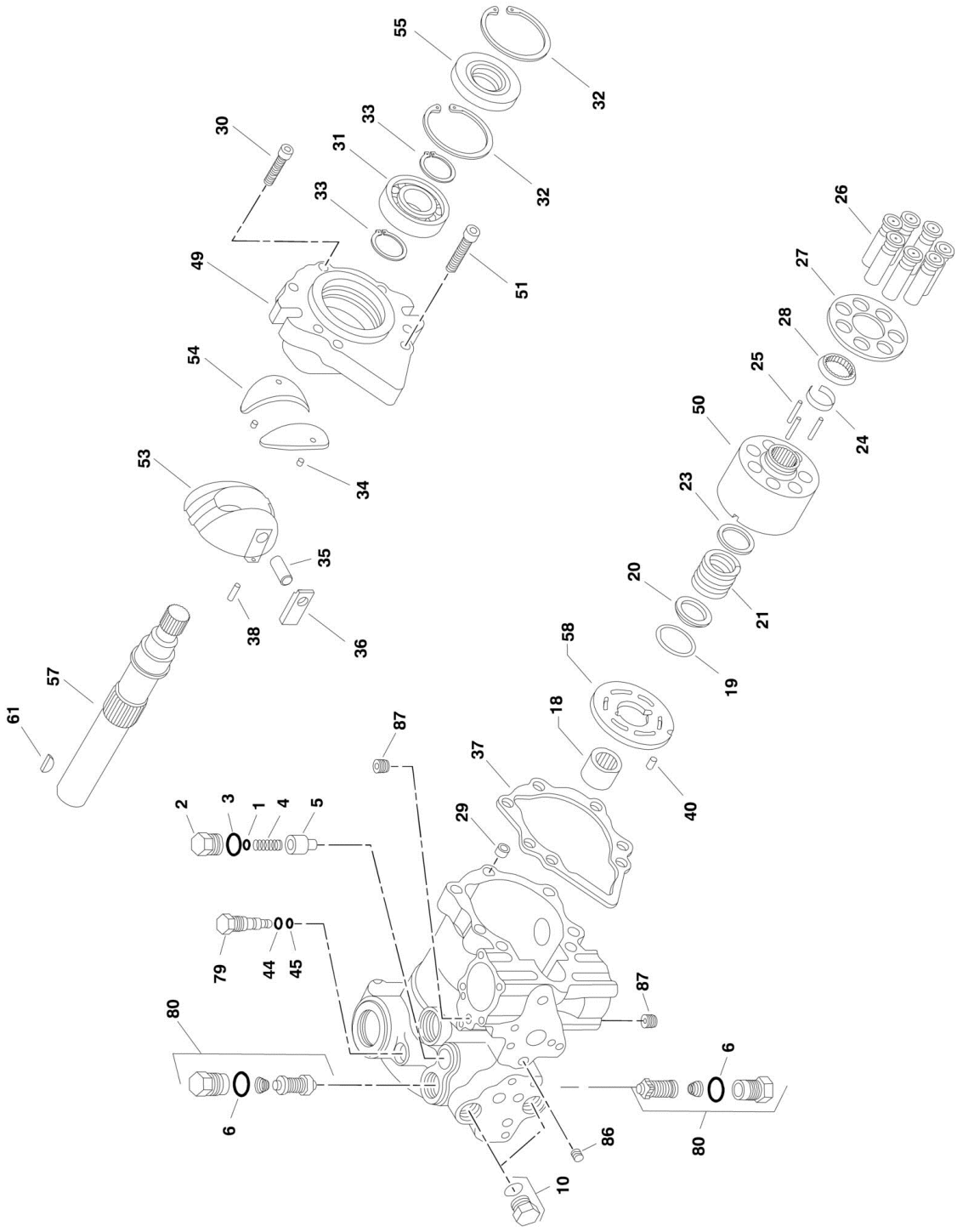

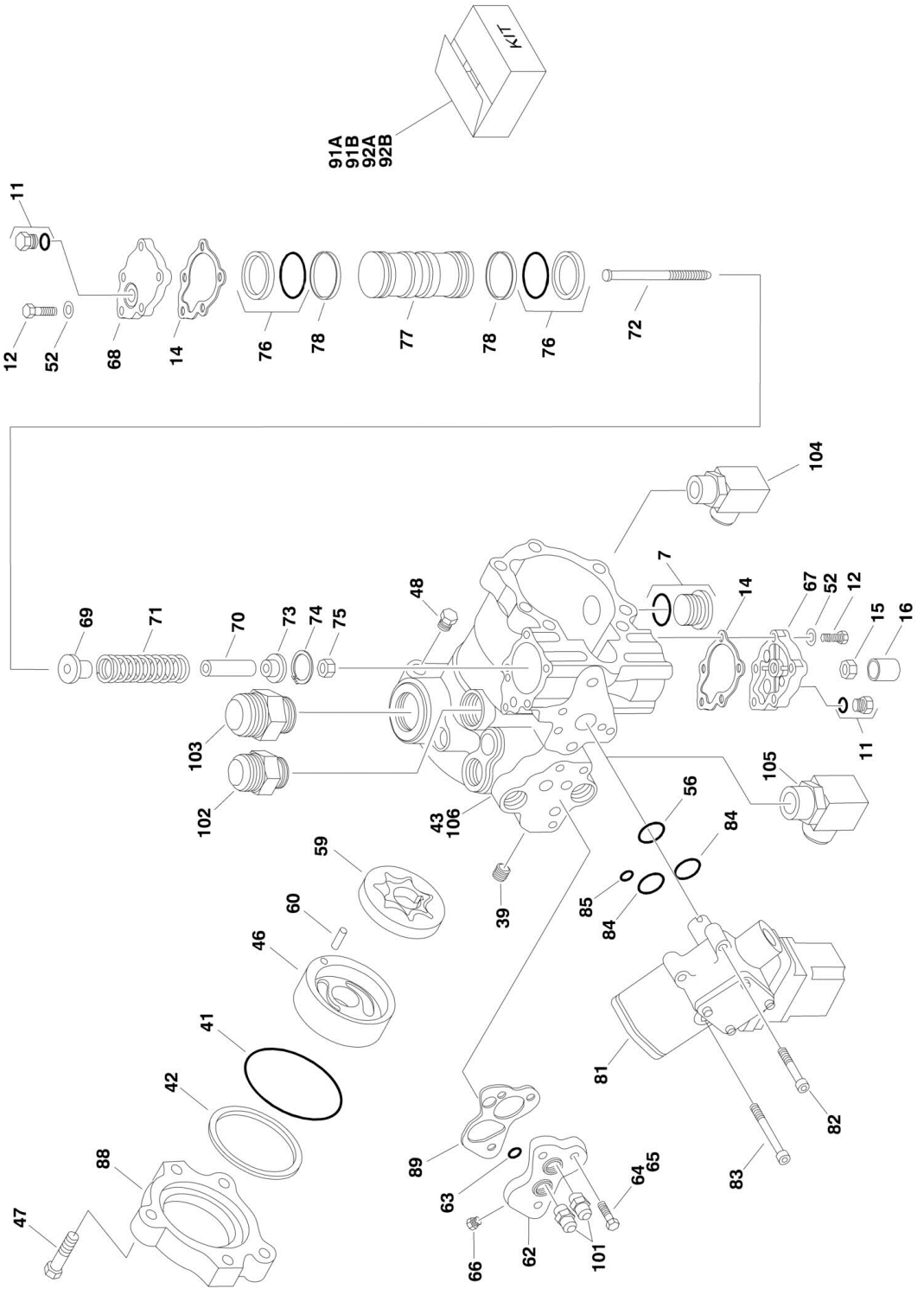
KIT
91A
91B
92A
92B
11
12
52
68
14
76
78
77
78
76
72
104
7
48
14
67
52
12
15
16
69
71
70
73
74
75
103
102
43
106
105
11
56
84
59
39
85
84
60
46
41
42
88
47
89
63
66
62
101
64
65
81
82
83

FIGURE 2-12. PISTON PUMP ASSEMBLY (SN 0300069000 through 0300079887)

ITEM	PART NUMBER	QTY	DESCRIPTION	REV
	3600260	Ref	**PISTON PUMP ASSEMBLY**	B
1	7007413	1	Shim Kit	
2	7007414	1	Plug	
3	See Note	NSS	O-Ring (Note: Use Item 91A)	
4	7007416	1	Spring, Relief Valve	
5	7007417	1	Valve, Relief	
6	See Note	NSS	O-Ring (Note: Use Item 91A)	
7	7007419	2	Plug	
10	7007420	2	Plug	
11	7007208	2	Plug	
12	7007421	10	Screw	
14	See Note	NSS	Gasket, Servo Cover (Note: Use Item 91A)	
15	7007423	1	Nut, Special	
16	7007424	1	Cover, Adjustment	
18	7007425	1	Bearing, Needle	
19	See Note	NSS	Ring, Retaining (Note: Use Item 92B)	
20	See Note	NSS	Washer (Note: Use Item 92B)	
21	See Note	NSS	Spring (Note: Use Item 92B)	
23	See Note	NSS	Washer (Note: Use Item 92B)	
24	See Note	NSS	Retainer (Note: Use Item 92B)	
25	See Note	NSS	Pin, Slipper Holddown (Note: Use Item 92B)	
26	See Note	NSS	Piston Assembly (Note: Use Item 92B)	
27	See Note	NSS	Retainer, Slipper (Note: Use Item 92B)	
28	See Note	NSS	Guide, Retainer (Note: Use Item 92B)	
29	7007435	1	Pin, Spring	
30	7007436	1	Screw, 12 Point Head	
31	7007437	1	Bearing, Ball	
32	7007438	2	Ring, Retainer	
33	7007439	2	Ring	
34	7007440	2	Pin, Spring	
35	7007441	1	Handle, Pin	
36	7007442	1	Sleeve, Bearing	
37	See Note	NSS	Gasket, Front Cover (Note: Use Item 91A)	
38	7007444	1	Pin	
39	7007445	1	Plug, Expansion	
40	See Note	NSS	Pin (Note: Use Item 92B)	
41	See Note	NSS	O-Ring (Note: Use Item 91A or 92A)	
42	See Note	NSS	Ring, Load Temper (Note: Use Item 91A or 92A)	
43	7007449	1	Housing, Pump	
44	See Note	NSS	Ring, Back-up (Note: Use Item 91A)	
45	See Note	NSS	O-Ring (Note: Use Item 91A)	
46	See Note	NSS	Cover, Gerotor (Note: Use Item 92A)	
47	7007453	3	Bolt, Hex	
48	7007208	1	Plug	
49	7007454	1	Cover, Front	
50	See Note	NSS	Block, Cylinder (Note: Use Item 92B)	
51	7007456	6	Screw	
52	7001438	10	Washer	
53	See Note	NSS	Swash Plate (Note: Use Item 92B)	
54	7007458	1	Journal, Bearing	

ITEM	PART NUMBER	QTY	DESCRIPTION	REV
55	7007459	1	Seal, Lip	
56	See Note	NSS	O-Ring (Note: Use Item 91A)	
57	7010121	1	Shaft, Main Pump	
58	7021214	1	Plate, Valve	
59	7007463	1	Gerotor Assembly	
60	See Note	NSS	Pin (Note: Use Item 92A)	
61	See Note	NSS	Key, Woodruff (Note: Use Item 92A)	
62	7007466	1	Adaptor, Remote Filtration (Without By-Pass)	
63	See Note	NSS	O-Ring (Note: Use Item 91A)	
64	7007468	2	Screw	
65	7007469	2	Screw	
66	7007470	1	Plug	
67	7007471	1	Cover, Servo (With Adjuster)	
67	7007490	2	Stop, Servo (Not Shown)	
67	7007491	2	Nut, Special (Not Shown)	
67	7007492	2	Ring, External (Not Shown)	
68	7007482	1	Cover, Servo (Without Adjuster)	
69	7007483	1	Guide, Spring	
70	7007484	1	Stop, Servo	
71	7007485	1	Spring	
72	7007486	1	Screw	
73	7007487	1	Guide, Spring	
74	7007488	1	Ring, Retaining	
75	7007499	1	Locknut	
76	See Note	NSS	Ring, Piston (Note: Use Item 91A or 91B)	
77	7007494	1	Piston, Servo	
78	See Note	NSS	O-Ring (Note: Use Item 91A or 91B)	
79	7007472	1	Valve, Bypass	
80	7010122	2	Valve, Pressure Relief (Includes Item 6) (was p/n 7007473)	
81	7007474	1	Control, Dual Oil-Filled	
81	7007496	1	Coil Assembly (Pilot)	
81	7007497	1	Plug (Pump)	
81	7007498	1	Plug (Valve Harness)	
82	7007478	2	Screw	
83	7001498	2	Screw	
84	See Note	NSS	O-Ring (Note: Use Item 91A)	
85	See Note	NSS	O-Ring (Note: Use Item 91A)	
86	7007475	1	Plug, Orifice/Screen (.156)	
87	7007477	2	Plug, Orifice (.37)	
88	7007476	1	Adapter, Auxiliary Pump	
89	7010120	1	Spacer/Gasket	
91		Ref	Seal Kit Options:	
91A	2900752	1	Seal Kit - Complete (Includes Items 3, 6, 14, 37, 41, 42, 44, 45, 55, 56, 63, 76, 78, 84 & 85)	
91B	7007412	1	Seal Kit - Servo Piston (Includes Items 76 & 78)	
92		Ref	Repair Kit Options:	
92A	2900826	1	Charge Pump Kit (Includes Items 41, 42, 46, 59, 60 & 61)	
92B	2900827	1	Cylinder Block Kit (Includes Items 19-28, 40, 50, 53 & 58)	
	3600397	Ref	**PISTON PUMP AND FITTING ASSEMBLY**	A
101	2220374	2	Fitting, Straight	
102	2220375	1	Fitting, Straight	
103	2220377	1	Fitting, Straight	

SECTION 2 - TURNTABLE

ITEM	PART NUMBER	QTY	DESCRIPTION	REV
104	2220578	1	Fitting, 90	
105	2220646	2	Fitting, 90	
106	3600260	1	Pump, Piston (Includes Items 1-89)	

FIGURE 2-13. PISTON PUMP ASSEMBLY (SN 0300079888 through 0300087000)

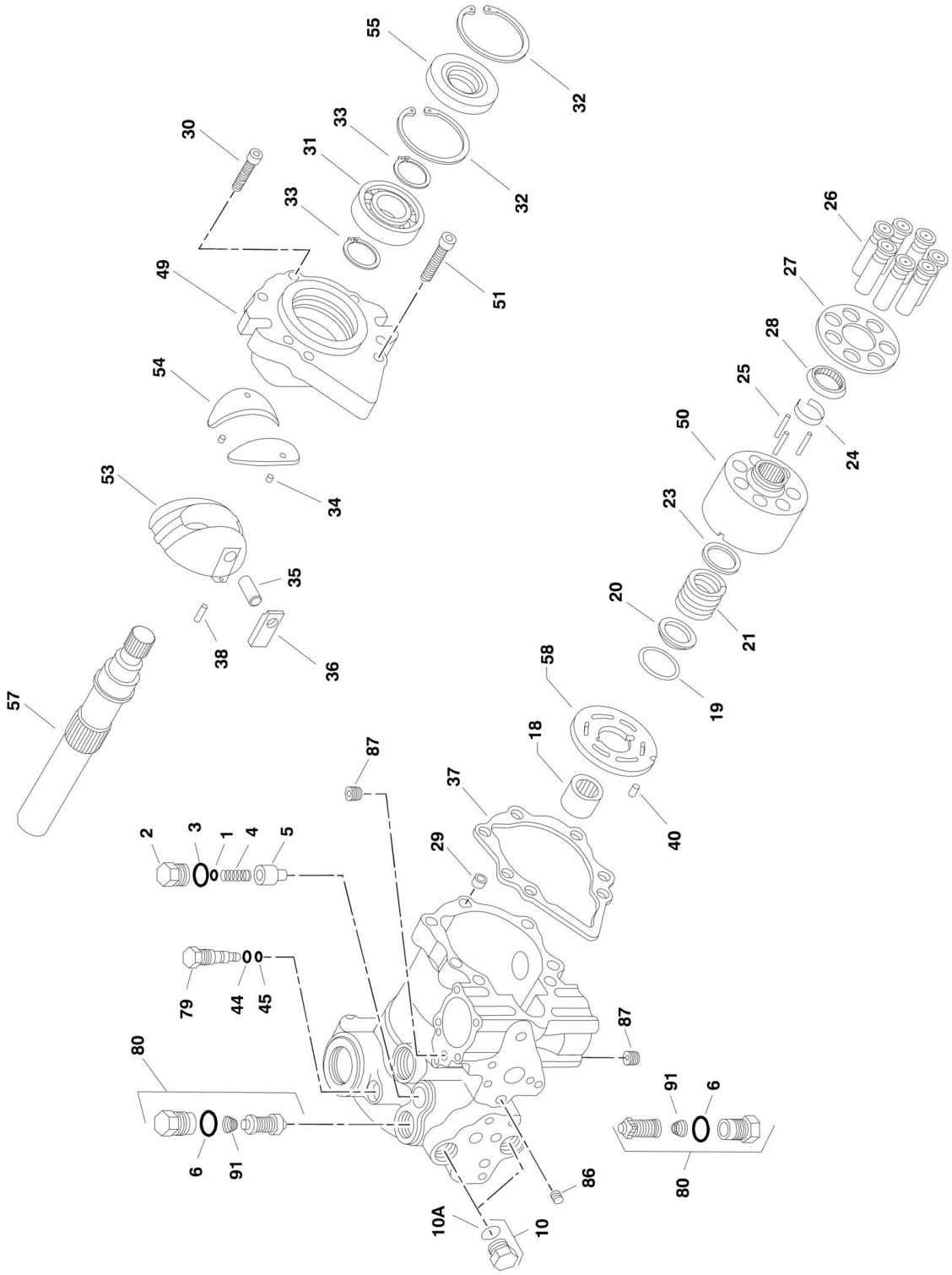

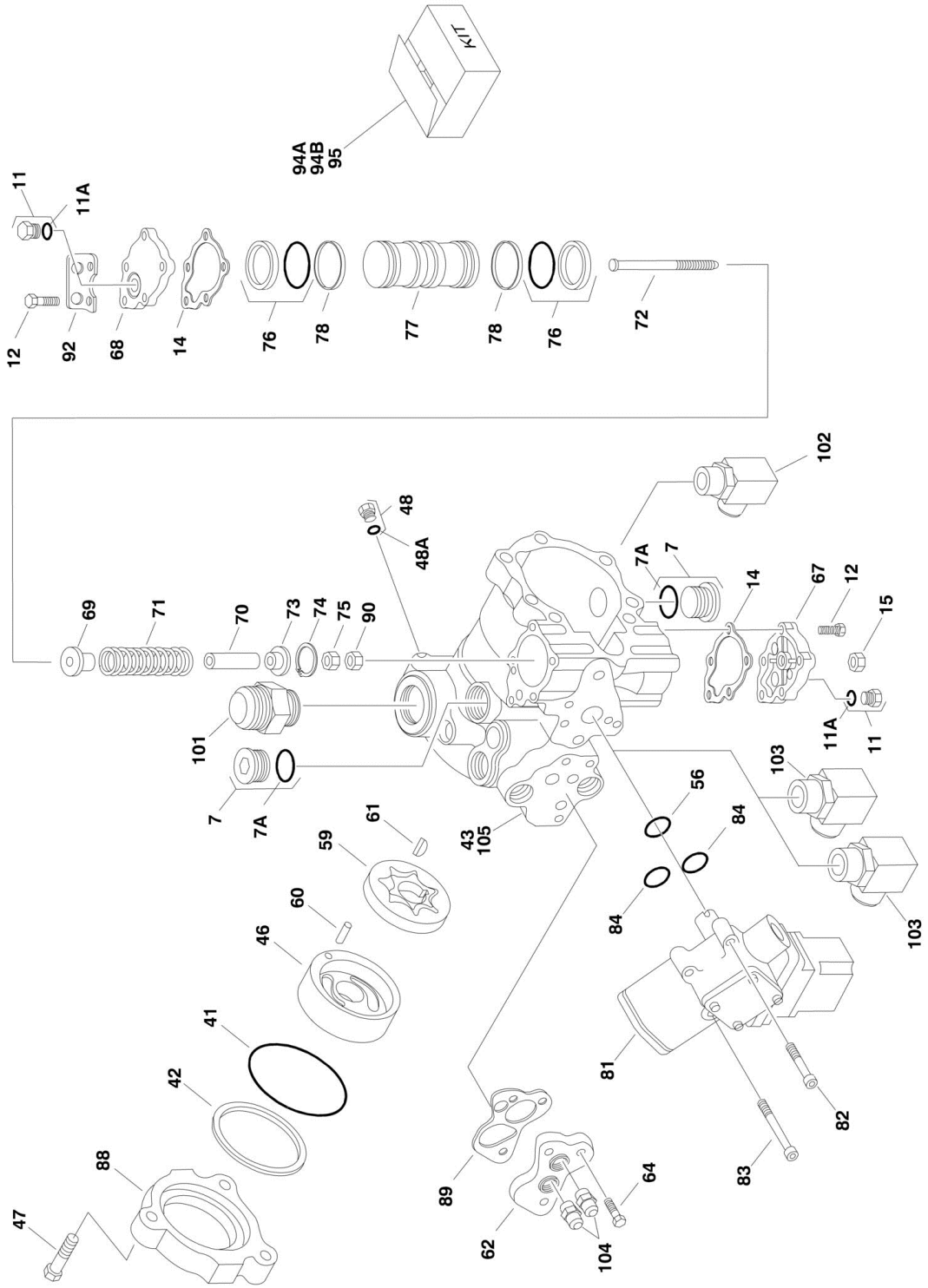
KIT
94A
94B
95
11
11A
12
92
68
14
76
78
77
78
76
72
102
48
48A
7A
7
14
67
12
15
69
71
70
73
74
75
90
101
7
7A
11A
11
103
56
84
84
103
43
105
61
59
60
46
41
42
88
47
89
62
104
64
81
82
83

FIGURE 2-13. PISTON PUMP ASSEMBLY (SN 0300079888 through 0300087000)

ITEM	PART NUMBER	QTY	DESCRIPTION	REV
	3600381	Ref	**PISTON PUMP ASSEMBLY**	A
1	7007413	1	Shim Kit	
2	7007414	1	Plug	
3	See Note	NSS	O-Ring (Note: Use Item 94A)	
4	7021200	1	Spring, Relief Valve	
5	7007417	1	Valve, Relief	
6	See Note	NSS	O-Ring (Note: Use Item 94A)	
7	7007419	2	Plug	
7A	7007418	2	O-Ring	
10	7007470	2	Plug	
10A	7021256	2	O-Ring	
11	7007470	2	Plug	
11A	7021256	2	O-Ring	
12	7021223	10	Screw	
14	See Note	NSS	Gasket, Servo Cover (Note: Use Item 94A)	
15	7007423	1	Nut, Special	
18	7007425	1	Bearing, Needle	
19	See Note	NSS	Ring, Retaining (Note: Use Item 95)	
20	See Note	NSS	Washer (Note: Use Item 95)	
21	See Note	NSS	Spring (Note: Use Item 95)	
23	See Note	NSS	Washer (Note: Use Item 95)	
24	See Note	NSS	Retainer (Note: Use Item 95)	
25	See Note	NSS	Pin, Slipper Holddown (Note: Use Item 95)	
26	See Note	NSS	Piston Assembly (Note: Use Item 95)	
27	See Note	NSS	Retainer, Slipper (Note: Use Item 95)	
28	See Note	NSS	Guide, Retainer (Note: Use Item 95)	
29	7007435	1	Pin, Spring	
30	7021202	1	Screw	
31	7007437	1	Bearing, Ball	
32	7007438	2	Ring, Retainer	
33	7007439	2	Ring	
34	7021203	2	Pin, Spring	
35	7007441	1	Handle, Pin	
36	7007442	1	Sleeve, Bearing	
37	See Note	NSS	Gasket, Front Cover (Note: Use Item 94A)	
38	7007444	1	Pin	
40	7007446	1	Pin	
41	See Note	NSS	O-Ring (Note: Use Item 94A)	
42	See Note	NSS	Ring, Load Temper (Note: Use Item 94A)	
43	7023977	1	Housing, Pump	
44	See Note	NSS	Ring, Back-up (Note: Use Item 94A)	
45	See Note	NSS	O-Ring (Note: Use Item 94A)	
46	7007452	1	Cover, Gerotor	
47	7007453	3	Bolt, Hex	
48	7007208	1	Plug	
48A	7007207	1	O-Ring	
49	7007454	1	Cover, Front	
50	See Note	NSS	Block, Cylinder (Note: Use Item 95)	
51	7021207	6	Screw	
53	7007457	1	Swash Plate	

ITEM	PART NUMBER	QTY	DESCRIPTION	REV
54	7021212	1	Journal, Bearing	
55	7007459	1	Seal, Lip	
56	See Note	NSS	O-Ring (Note: Use Item 94A)	
57	7010121	1	Shaft, Main Pump	
58	7021214	1	Plate, Valve	
59	7007463	1	Gerotor Assembly	
60	7007464	1	Pin	
61	7007465	1	Key, Woodruff	
62	7007466	1	Adaptor, Remote Filtration (Without By-Pass)	
64	7021218	3	Screw	
67	7021220	1	Cover, Servo (Without Adjuster)	
68	7021219	1	Cover, Servo (Without Adjuster)	
69	7023979	1	Guide, Spring	
70	7007484	1	Stop, Servo	
71	7007485	1	Spring	
72	7021221	1	Screw	
73	7007487	1	Guide, Spring	
74	7007488	1	Ring, Retaining	
75	7021222	1	Locknut	
76	See Note	NSS	Ring, Piston (Note: Use Item 94A or 94B)	
77	7007494	1	Piston, Servo	
78	See Note	NSS	O-Ring (Note: Use Item 94A or 94B)	
79	7007472	1	Valve, Bypass	
80	7024851	2	Valve, Pressure Relief (Includes Item 6)	
81	7007474	1	Control, Dual Oil-Filled	
81	7007496	1	Coil Assembly (Pilot)	
81	7007497	1	Plug (Pump)	
81	7007498	1	Plug (Valve Harness)	
82	7001498	2	Screw	
83	7007478	2	Screw	
84	7001433	2	O-Ring	
86	7007475	1	Plug, Orifice/Screen (.156)	
87	7007477	2	Plug, Orifice (.37)	
88	7007476	1	Adapter, Auxiliary Pump	
89	7021217	1	Spacer/Gasket	
90	7021206	1	Nut	
91	7024800	2	Spring	
92	7021201	1	Bracket, Lifting	
94		Ref	Seal Kit Options:	
94A	7021232	1	Seal Kit - Complete (Includes Items 3, 6, 14, 37, 41, 42, 44, 45, 55, 56, 76, 78 & 89)	
94B	7007412	1	Seal Kit - Servo Piston (Includes Items 76 & 78)	
95	7010116	1	Cylinder Block Kit (Includes Items 19-28 & 50)	
	3600396	Ref	**PISTON PUMP AND FITTING ASSEMBLY**	A
101	2220479	1	Fitting, Straight	
102	2220578	1	Fitting, 90	
103	2220646	2	Fitting, 90	
104	2220947	2	Fitting, Straight	
105	3600381	1	Pump Options (Includes Items 1-92)	

FIGURE 2-14. GEAR PUMP ASSEMBLY

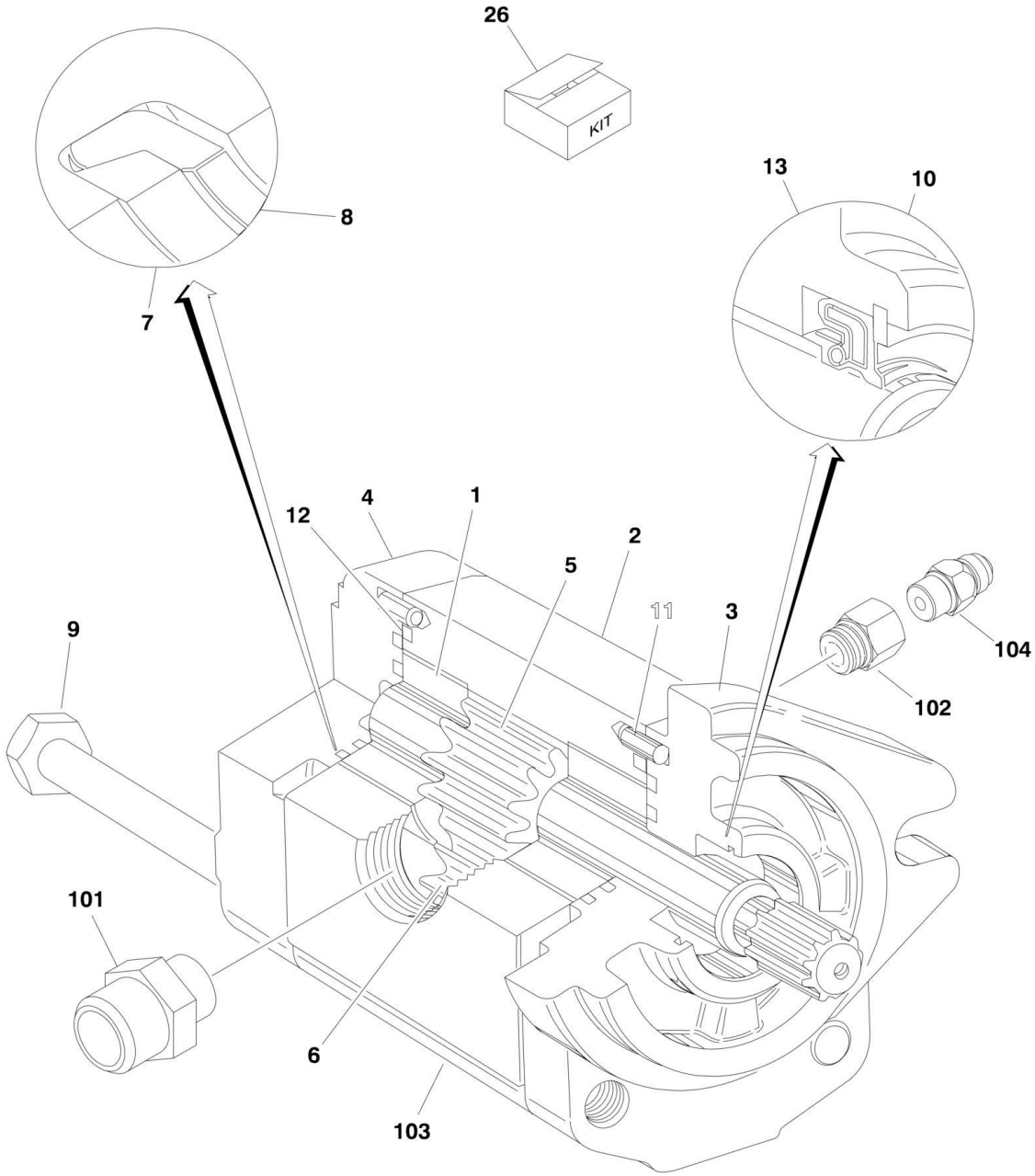

FIGURE 2-14. GEAR PUMP ASSEMBLY

ITEM	PART NUMBER	QTY	DESCRIPTION	REV
	3600242	Ref	**GEAR PUMP ASSEMBLY**	
1	7010105	2	Bearing/Bushing	
2	See Note	NSS	Housing (Note: Use p/n 3600242)	
3	See Note	NSS	Flange (Note: Use p/n 3600242)	
4	7010103	1	Cover	
5	7012987	1	Gear, Drive	
6	7012988	1	Gear, Idler	
7	See Note	NSS	Ring, Anti-Extrusion (Note: Use Item 26)	
8	See Note	NSS	Seal (Note: Use Item 26)	
9	See Note	4	Bolt (Note: Not Available for Purchase)	
10	7010104	1	Ring, Retaining	
11	See Note	4	Pin, Dowel (Note: Not Available for Purchase)	
12	See Note	NSS	Seal, O-Ring (Note: Use Item 26)	
13	See Note	NSS	Seal, Shaft (Note: Use Item 26)	
26	7007489	1	Seal Kit (Includes Items 7, 8, 12 & 13)	
	3600395	Ref	**GEAR PUMP AND FITTING ASSEMBLY**	A
101	2220376	1	Fitting, Straight	
102	2220810	1	Fitting, Reducer	
103	3600242	1	Pump (Includes Items 1-13)	
104	4640744	1	Fitting, Check Valve	

FIGURE 2-15. TANK INSTALLATIONS

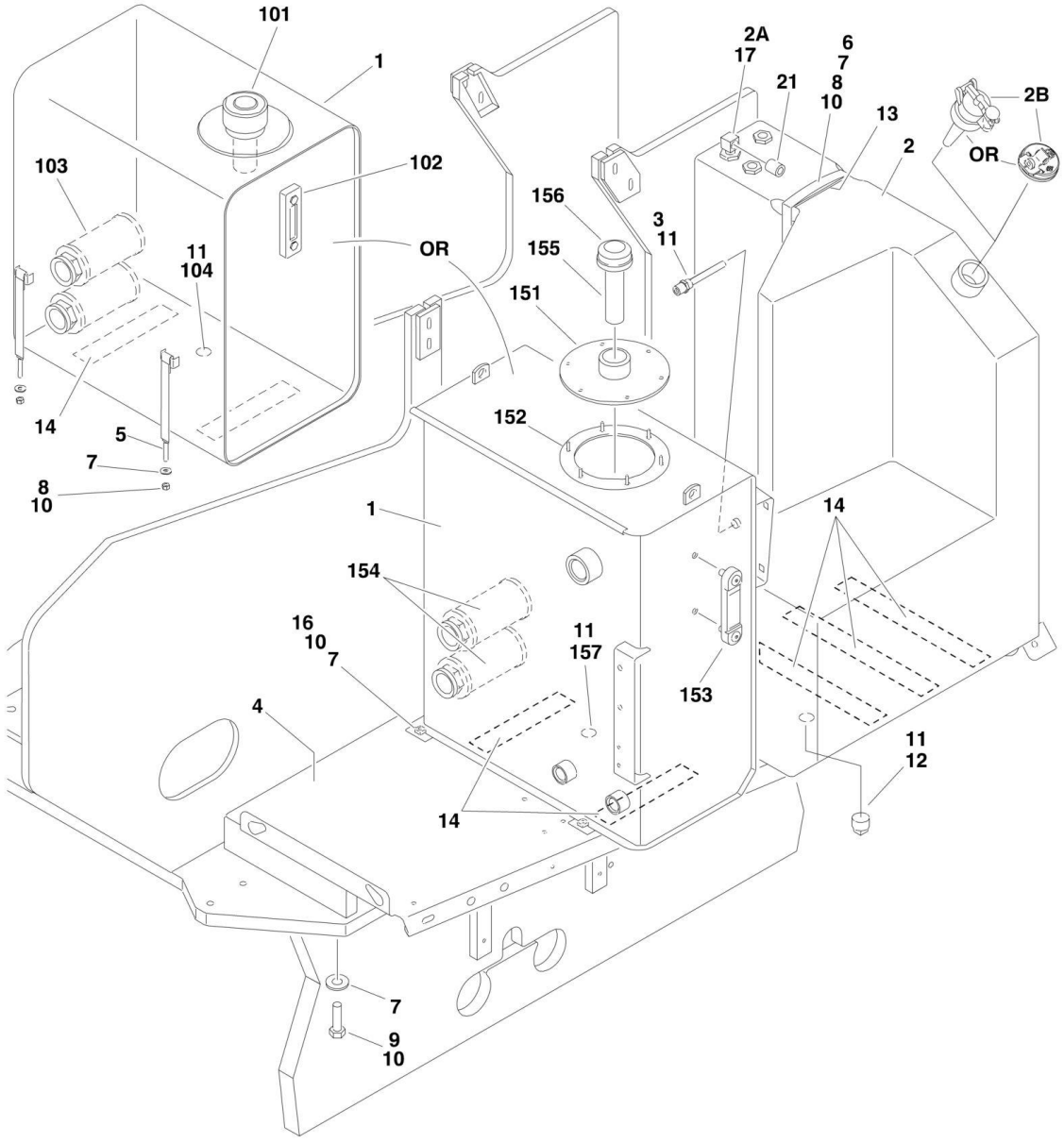

FIGURE 2-15. TANK INSTALLATIONS

ITEM	PART NUMBER	QTY	DESCRIPTION	REV
		Ref	**TANKS INSTALLATION**	
	0255409	Ref	**Machines without Locking Cap**	7
	0257482	Ref	**Machines with Locking Cap**	1
1		Ref	Hydraulic Tank Assembly Options:	
1	4400372	1	**SN 0300069000 through 0300072294** (See Items 101-104 for Breakdown)	
1	4400454	1	**SN 0300072295 through 0300087000** (See Items 151-157 for Breakdown)	
2	4400399	1	Tank, Fuel	
2A	7019658	1	90 Fitting W/Pick-Up Tube	
2B		Ref	Cap, Fuel Tank Options:	
2B	7016314	1	Standard Non-Locking Cap (Part of Item 2)	
2B	1120487	1	Blue Lockable Cap - Diesel Machines (Not Included with Tank - Purchase Separately) (Lock Not Included)	
3	4360436	1	Switch, Fuel Level	
4	4844964	1	Hydraulic Tray Weldment	
5	4240112	4	Strap, Tank	
6	4240102	1	Strap, Tank	
7	4751600	AR	Flatwasher 3/8in Regular	
8	3311601	6	Nut 3/8in-16NC	
9	0641614	6	Bolt 3/8in-16NC x 1-3/4in	
10	0100011	AR	Compound, Locking	
11	0100079	AR	Sealant, Pipe	
12	2200222	1	Plug	
13	4280295	25 in/44cm	Strip, Protective	
14	4420038	AR	Tape, Rubber	
16	0641606	4	Bolt 3/8in-16NC x 3/4in **(SN 0300072295 through 0300087000)**	
	4400372	Ref	**HYDRAULIC OIL TANK ASSEMBLY (SN 0300069000 through 0300072294)**	J
101	7014810	1	Filler/Breather Assembly	
101	7014811	1	Cap, Breather	
102	7014802	1	Gauge, Sight	
103	7014801	2	Strainer	
104	7014800	1	Plug, Magnetic	
	4400454	Ref	**HYDRAULIC OIL TANK ASSEMBLY (SN 0300072295 through 0300087000)**	C
151	7024439	1	Cover	
152	7024440	1	Gasket	
153	7024441	1	Gauge, Sight	
154	7024442	1	Strainer 1-1/4in NPT	
155	7024443	1	Neck, Fill (Helgesen Brand)	
155	See Note	NSS	Neck, Fill (Hydac Brand) (Note: Use p/n 70004862)	
155	7024445	1	Screen (Helgesen Brand)	
155	See Note	NSS	Screen (Hydac Brand) (Note: Use p/n 70004862)	
156	7024444	1	Breather/Fill Cap (Helgesen Brand)	
156	70004862	1	Breather/Fill Cap/Strainer Kit (Hydac Brand)	
157	7024446	1	Plug, Magnetic (Not Shown - Located on Bottom of Tank)	

FIGURE 2-16. ROTARY COUPLING INSTALLATIONS (SN 0300069000 through 0300081835)

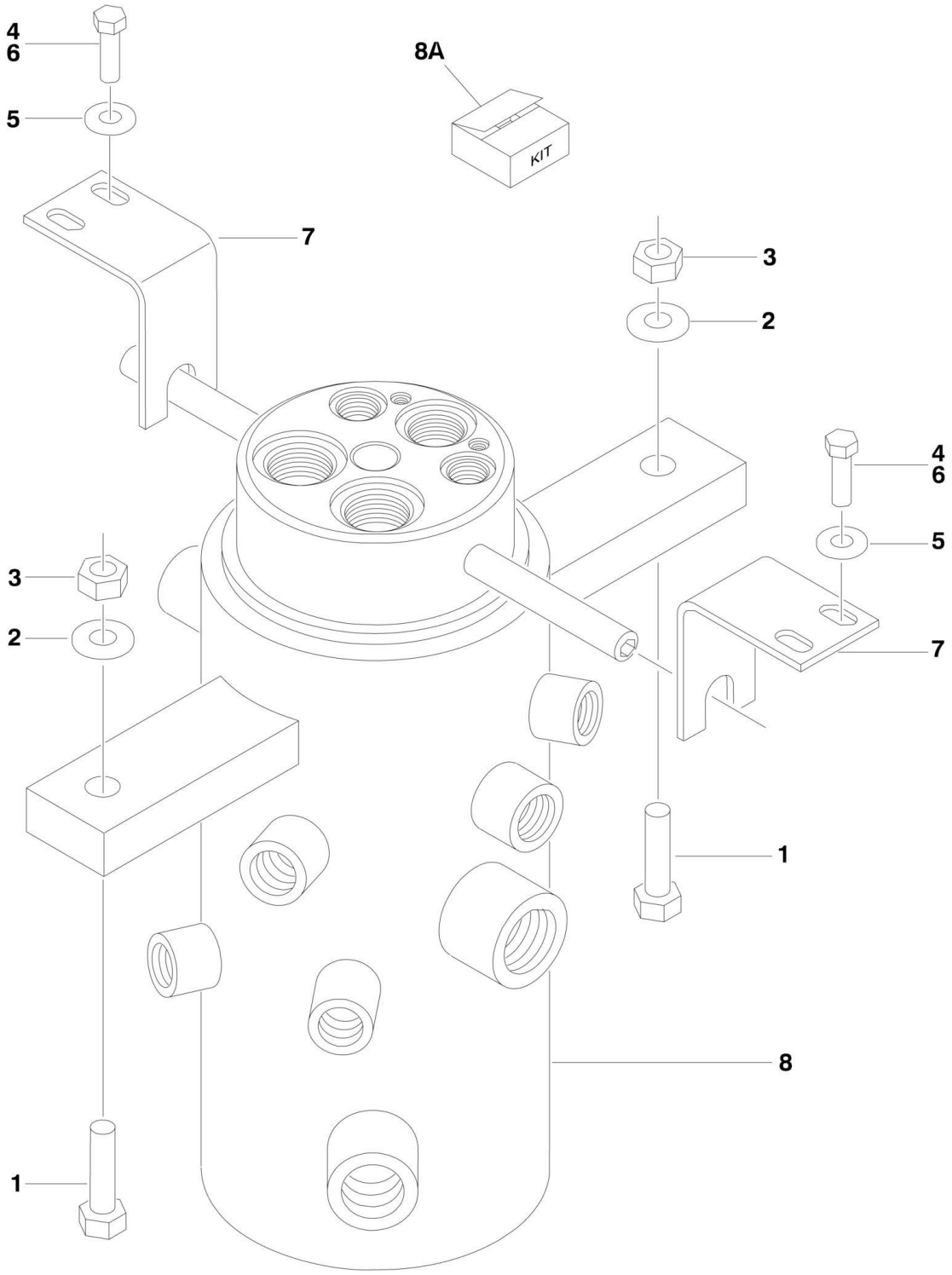

FIGURE 2-16. ROTARY COUPLING INSTALLATIONS (SN 0300069000 through 0300081835)

ITEM	PART NUMBER	QTY	DESCRIPTION	REV
		Ref	**ROTARY COUPLING INSTALLATIONS**	
	0255262	Ref	**2WS**	5
	0255294	Ref	**4WS**	2
1	0641820	2	Bolt 1/2in-13NC x 2-1/2in	
2	4751800	4	Flatwasher 1/2in Regular	
3	3311805	2	Locknut 1/2in-13NC	
4	0641611	4	Bolt 3/8in-16NC x 1-3/8in	
5	4751600	4	Flatwasher 3/8in Regular	
6	0100011	AR	Compound, Locking	
7	0902520	2	Bracket	
8		Ref	Coupling, Rotary Options:	
8	1660219	1	2WS	
8	1660223	1	4WS	
8A		Ref	Seal Kit Options:	
8A	7013187	1	2WS	
8A	7016342	1	4WS	
8A		Ref	Rebuilt Coupling Options:	
8A	1660219RR	1	2WS	
8A	1660223RR	1	4WS	

FIGURE 2-17. ROTARY COUPLING INSTALLATIONS (SN 0300081836 through 0300087000)

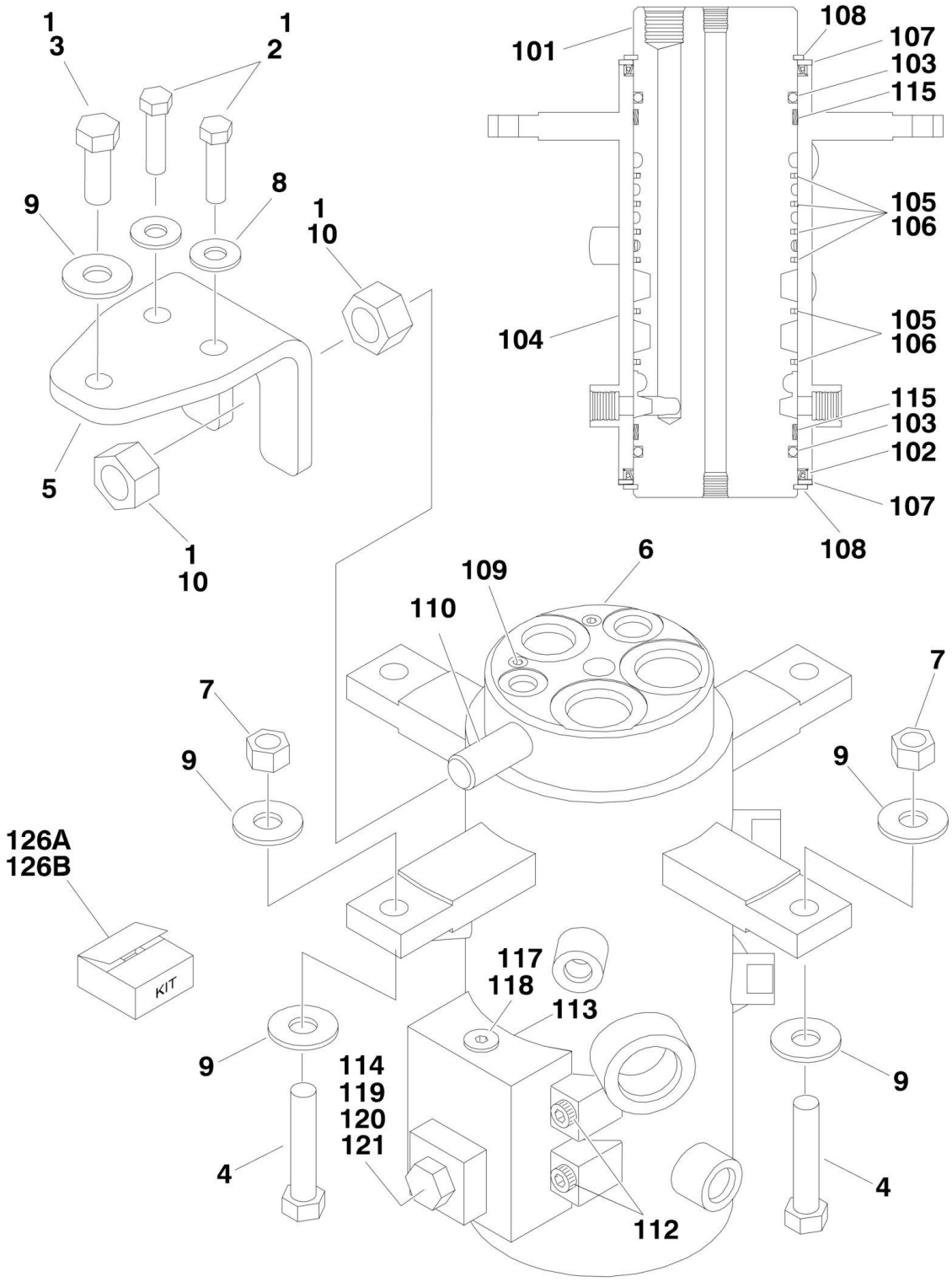

FIGURE 2-17. ROTARY COUPLING INSTALLATIONS (SN 0300081836 through 0300087000)

ITEM	PART NUMBER	QTY	DESCRIPTION	REV
		Ref	**ROTARY COUPLING INSTALLATIONS**	
	0273052	Ref	**2WS**	D
	0273161	Ref	**4WS**	D
1	0100011	AR	Compound, Locking	
2	0641612	2	Bolt 3/8in-16NC x 1-1/2in	
3	0641811	1	Bolt 1/2in-13NC x 1-3/8in	
4	0641820	2	Bolt 1/2in-13NC x 2-1/2in	
5	0903056	1	Bracket	
6		Ref	Coupling, Rotary Options (See Items 101-121 for Breakdown):	
6		Ref	2WS	
6	1660257	NLA	Original Equipment (Use p/n 1660303)	
6	1660303	1	Service Replacement	
		Ref	**Note: Original Equipment Rotary may have been replaced with Service Replacement Rotary. Identify p/n stamped on rotary before ordering parts.**	
6		Ref	4WS	
6	1660258	NLA	Original Equipment (Use p/n 1660304)	
6	1660304	1	Service Replacement	
		Ref	**Note: Original Equipment Rotary may have been replaced with Service Replacement Rotary. Identify p/n stamped on rotary before ordering parts.**	
7	3271805	2	Locknut 1/2in-13NC	
8	4751600	2	Flatwasher 3/8in Regular	
9	4751800	5	Flatwasher 1/2in Regular	
10	3322201	2	Nut 3/4in-16NC	
		Ref	**ROTARY COUPLING ASSEMBLIES**	
		Ref	**2WS**	
	1660257	Ref	**Original Equipment**	D
	1660303	Ref	**Service Replacement**	B
		Ref	**4WS**	
	1660258	Ref	**Original Equipment**	D
	1660304	Ref	**Service Replacement**	A
101	See Note	1	Body (Note: Not Available - Purchase Complete Assy)	
102		Ref	Seal Options:	
102		Ref	2WS	
102	7026189	2	Original Equipment (p/n 1660257)	
102	See Note	2	Service Replacement (p/n 1660303) (Note: Use Item 126A)	
102	See Note	2	4WS (Note: Use Item 126B)	
103	See Note	2	O-Ring (Note: Use Items 126A or 126B)	
104	See Note	1	Housing (Note: Not Available - Purchase Complete Assy)	
105	See Note	AR	Seal, Cap (Note: Use Item 126A or 126B)	
105		Ref	2WS	
105		Ref	4WS	
106	See Note	AR	O-Ring (Note: Use Item 126A or 126B)	
106		Ref	2WS	
106		Ref	4WS	
107		Ref	Ring Options:	
107	7026503	2	2WS	
107	7026511	2	4WS	
108		Ref	Ring, Retaining Options:	

SECTION 2 - TURNTABLE

ITEM	PART NUMBER	QTY	DESCRIPTION	REV
108	7026504	2	2WS	
108	7013189	2	4WS	
109		Ref	Plug Options:	
109		Ref	2WS	
109	See Note	2	Original Equipment (Note: Not Available for Purchase)	
109	80934561	2	Service Replacement	
109		Ref	4WS	
109	See Note	4	Original Equipment (Note: Not Available for Purchase)	
109	80934561	4	Service Replacement	
110	See Note	1	Lug, Torque (Note: Not Available for Purchase)	
112	7026197	4	Bolt 5/16in-18NC x 1-1/4in	
113	See Note	3	O-Ring (Note: Use Item 126A or 126B)	
114	See Note	1	O-Ring (Note: Use Item 126A or 126B)	
115	See Note	2	Bearing (Note: Use Item 126A or 126B)	
116	7024404	1	Block Valve Assembly	
117	7026505	1	Plug	
118	7026506	1	Valve, Check	
119	7026507	1	Plug	
120		Ref	Plunger, Valve Options:	
120	7026508	1	Original Equipment	
120	7024404	1	Service Replacement	
121	7026509	1	Spring, Compression	
122	See Note	AR	Protective Netting (Not Shown) (Original Equipment Only) (Note: Not Available for Purchase)	
		Ref	Seal Kit Options:	
126A		Ref	2WS	
126A	7026510	1	Original Equipment (Includes Items 103, 105, 106, 113, 114 & 115)	
126A	70001248	1	Service Replacement (Includes Items 102, 103, 105, 106, 113, 114 & 115)	
126B		Ref	4WS	
126B	7026512	1	Original Equipment (Includes Items 102, 103, 105, 106, 113, 114 & 115)	
126B	70002212	1	Service Replacement (Includes Items 102, 103, 105, 106, 113, 114 & 115) (was p/n 70001249)	

FIGURE 2-18. GROUND CONTROL BOX ASSEMBLIES

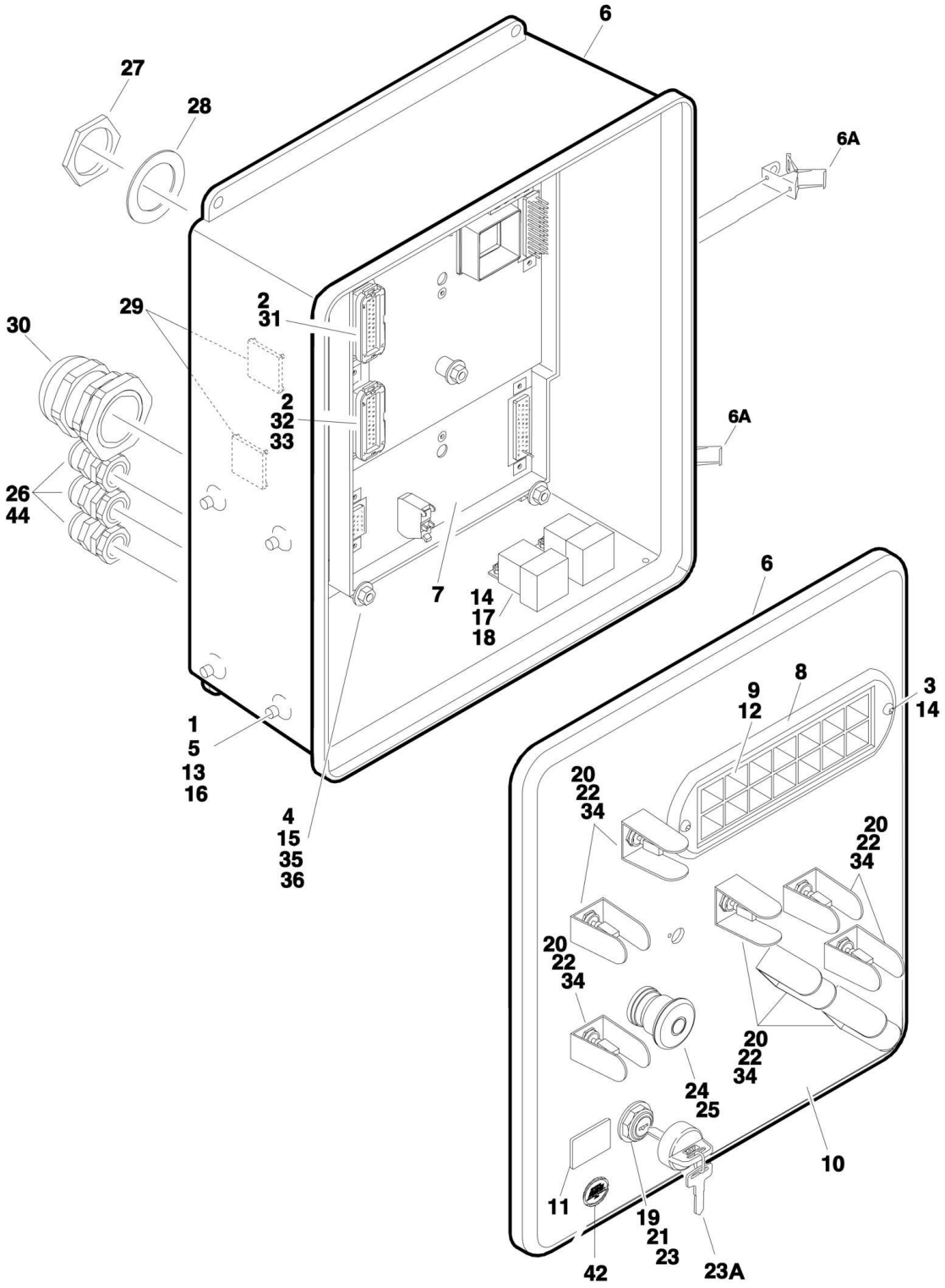

FIGURE 2-18. GROUND CONTROL BOX ASSEMBLIES

ITEM	PART NUMBER	QTY	DESCRIPTION	REV
		Ref	**GROUND CONTROL BOX ASSEMBLIES**	
		Ref	**Caterpillar Engine Machines**	
	0861610	Ref	**Assembly, Ground Control (600A SN 0300069000 through 0300084828)**	C
	0861702	Ref	**Assembly, Ground Control (600A SN 0300084829 through 0300087000)**	A
	0861611	Ref	**Assembly, Ground Control (600AJ SN 0300069000 through 0300084828)**	C
	0861703	Ref	**Assembly, Ground Control (600AJ SN 0300084829 through 0300087000)**	A
		Ref	**Deutz Engine Machines**	
	0861472	Ref	**Assembly, Ground Control (600A SN 0300069000 through 0300084828)**	H
	0861691	Ref	**Assembly, Ground Control (600A SN 0300084829 through 0300087000)**	A
	0861473	Ref	**Assembly, Ground Control (600AJ SN 0300069000 through 0300084828)**	G
	0861692	Ref	**Assembly, Ground Control (600AJ SN 0300084829 through 0300087000)**	A
1	0100011	AR	Compound, Locking	
2	0100048	AR	Grease, Dielectric	
3	0630518	2	Capscrew, Button Head	
4	0630548	5	Tap, Bolt 2-1/2in	
5	0641506	4	Bolt 5/16in-18NC x 3/4in	
6	0861407	1	Box, Fiberglass	
6A	7020246	2	Latch	
7		Ref	Module, Ground Control (Re-calibration Required when Replaced) Options:	
7	1600327	NLA	Caterpillar/Deutz Engine (Use p/n 2915014) **(SN 0300069000 through 0300077489)**	
7	1600364	1	Caterpillar Engine **(SN 0300077490 through 0300087000)**	
7	1600364	1	Deutz Engine **(SN 0300077490 through 0300084829)**	
7	1600411	1	Deutz Engine **(SN 0300084829 through 0300087000)**	
8	1670829	1	Bezel	
9		Ref	Decal - Ground Control Display Options:	
9	1702610	1	Decal, Light Panel **(SN 0300069000 through 0300072229)**	
9	1705752	1	Decal, Light Panel **(SN 0300072230 through 0300084829)**	
9	1705753	1	Decal, Light Panel **(SN 0300084829 through 0300087000)**	
10		Ref	Decal - Faceplate Options:	
10	1703467	1	600A	
10	1703468	1	600AJ	
11	2420172	1	Gauge, Hourmeter	
12	2760105	1	Housing, Display Light	
13	3300205	4	Nut, Retainer	
14	3300408	4	Locknut, Plastic Insert	
15	3311401	10	Nut 1/4in-20NC	
16	3539219	1	Plate, Reinforcement	
17	3740049	2	Relay	
18	3900268	2	Screw, Flange #10 x 1/2in	
19	3910804	6	Screw #8-32NC x 1/4in	
20	4060906	8	Shield, Toggle Switch	
21	4070987	1	Shim (.125in)	

ITEM	PART NUMBER	QTY	DESCRIPTION	REV
22	4360328	8	Switch, Toggle	
23	4360470	1	Switch, Key	
23A	2860030	1	Key Replacement	
24	4360475	1	Switch, Emergency Stop	
25	4360476	1	Switch, Contact Block	
26	4460426	AR	Connector, Strain Relief	
27	4460470	1	Nut, Terminal	
28	4460471	1	Lockwasher, Terminal	
29	4460488	7	Mounting Base, Terminal	
30	4460526	1	Connector, Strain Relief	
31	4460874	1	Connector, Natural	
32	4460875	1	Connector, Gray	
33	4460905	4	Connector, Amp Seal Plug	
34	4740444	8	Washer, Special	
35	4751400	20	Flatwasher 1/4in Regular	
36	4761400	10	Lockwasher 1/4in	
40	4922666	1	Harness, Analyzer Cable (Not Shown) **(SN 0300069000 through 0300084829)**	
42	1705132	1	Decal - Control ADE	
43	3520035	1	Plug, Cap	

FIGURE 2-19. ELECTRICAL OPTIONS INSTALLATIONS (TURNTABLE MOUNTED)

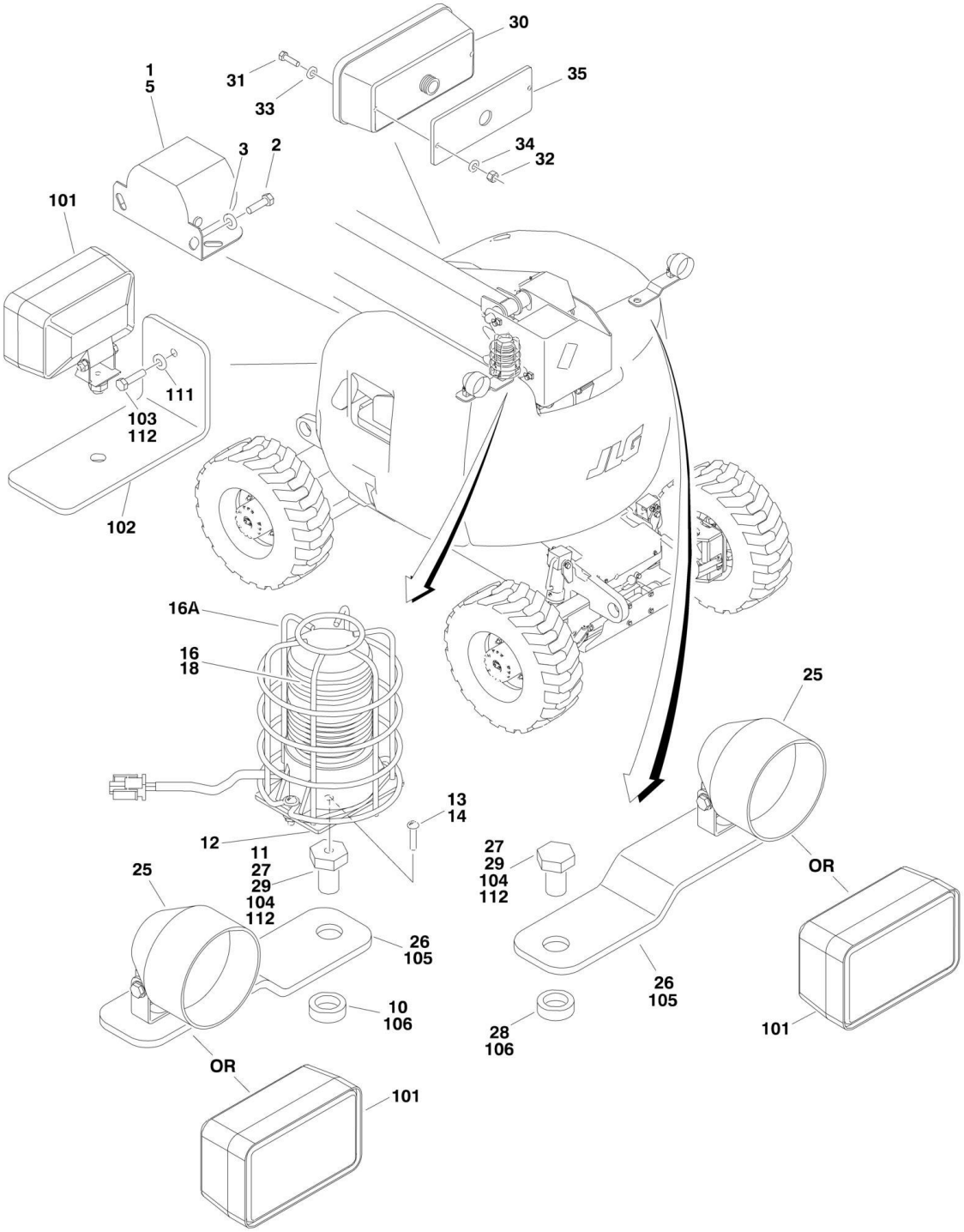

FIGURE 2-19. ELECTRICAL OPTIONS INSTALLATIONS (TURNTABLE MOUNTED)

ITEM	PART NUMBER	QTY	DESCRIPTION	REV
	0270833	Ref	**ALARMS INSTALLATIONS**	
1	0257887	1	Alarm/Harness Assembly	
1	0140032	1	Alarm	
1	2820035	6 in/15cm	Loom	
1	4460424	1	Plug	
1	4460268	2	Socket	
2	0641406	2	Bolt 1/4in-20NC x 3/4in	
3	4711400	2	Flatwasher 1/4in Thin	
5	0100048	AR	Sealant, Silicone	
	0270805	Ref	**STROBE LIGHT INSTALLATIONS (AMBER) (OPTIONAL)**	2
10	4220162	1	Spacer, Stop (Used with ECCO Model 6640 Only)	
11		Ref	Adapter Options:	
11	0630491	1	Adapter used with ECCO Model 6640	
11	0080241	1	Adapter used with ECCO Model 6650	
12	3539281	1	Plate, Mounting (Used with ECCO Model 6640 Only)	
13	0741606	1	Screw, Flathead Countersunk 3/8in-16NC x 3/4in (Used with ECCO Model 6640 Only)	
14	0100011	AR	Compound, Locking	
15	4240032	1	Wire-Tie (Not Shown)	
16	0255917	NLA	Strobe Light/Guard/Harness Assembly (Use p/n 0272507) (Includes Item 11 also)	
16	2920130	NLA	Strobe Light/Guard/Harness Assembly (Use p/n 0272507) (Includes Item 11 also)	
16	2920214	NLA	Strobe Light/Guard/Harness Assembly (Use p/n 0272507) (Includes Item 11 also)	
16		Ref	Bulb, Replacement Options:	
16	7016380	1	Bulb, Replacement used with ECCO Model 6640	
16	70001941	1	Bulb, Replacement used with ECCO Model 6650	
16A		Ref	Guard Options:	
16A	4060907	1	Guard used with ECCO Model 6640	
16A	2920215	1	Guard used with ECCO Model 6650	
17	4460234	1	Clamp (Not Shown)	
18	0100048	AR	Sealant, Silicone	
	0271552	Ref	**LIGHTS INSTALLATIONS (OPTIONAL)**	2
25	2920110	2	Headlight	
26	0902206	2	Bracket, Mounting	
27	0642612	1	Bolt 1in-8NC x 1-1/2in (Note: Use Item 11 if Strobe Light uses the same mount)	
28	4220162	2	Spacer	
29	0100011	AR	Compound, Locking	
30	2920113	2	Taillight	
31	3911040	4	Screw, Machine #10-24NC x 2 1/2	
32	3311005	4	Nut #10-24NC	
33	4751000	4	Flatwasher #10 Regular	
34	4740362	4	Washer, Fender	
35	3960461	2	Gasket	
37	4240032	21	Tie-Strap (Not Shown)	
38	4460234	21	Mount, Tie-Strap (Not Shown)	
39	4360336	1	Switch, Toggle (Not Shown - Located on Console)	
40	3790012	1	O- Ring (Not Shown - Located on Console)	
41	3820001	11	Pop Rivet (Not Shown)	

ITEM	PART NUMBER	QTY	DESCRIPTION	REV
	0274200	Ref	**CHASSIS ILLUMINATION LIGHT INSTALLATION**	1-A
101	2920157	4	Lamp, Worklight	
102	0903119	2	Bracket, Light Mounting	
103	0642612	4	Bolt 1/4in-20NC x 7/8in	
104	0642612	2	Bolt 1in-8NC x 1-1/2in (Note: Use Item 11 if Strobe Light uses the same mount)	
105	0902206	2	Bracket, Light Mounting	
106	4220162	2	Spacer	
108	3790012	1	O-Ring (Not Shown - Located at Platform Console Box)	
109	4360336	1	Switch, Toggle (Not Shown - Located at Platform Console Box)	
110	4460234	10	Mount, Cable (Not Shown)	
111	4751400	2	Flatwasher 1/4in Regular	
112	0100011	AR	Compound, Locking	
113	4240032	21	Strap, Tie (Not Shown)	
114	1705170	1	Decal, Lights (Not Shown - Located at Platform Console Box)	

FIGURE 2-20. ENGINE TRAY JACK INSTALLATIONS (OPTIONAL)

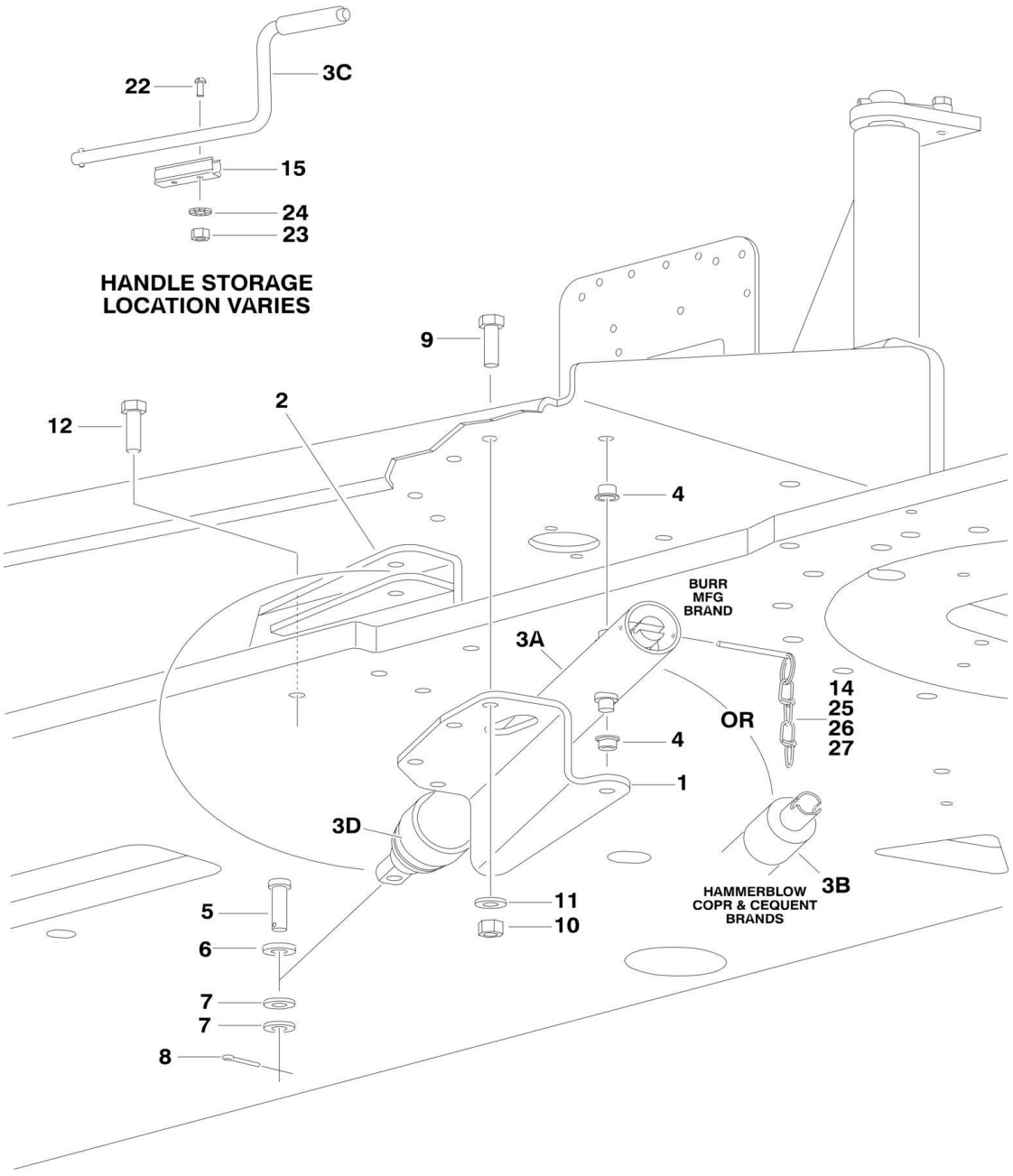

FIGURE 2-20. ENGINE TRAY JACK INSTALLATIONS (OPTIONAL)

ITEM	PART NUMBER	QTY	DESCRIPTION	REV
	0255880	Ref	**ENGINE TRAY JACK INSTALLATION**	6-H
1	3537445	1	Bracket	
2	4845163	1	Bracket	
3	2840018	1	Hydraulic Jack Assembly	
3A		Ref	Burr Manufacturing Brand	
3B		Ref	Hammerblow Corp and Cequent Brands	
3C		Ref	Handle Options:	
3C	7016374	1	Burr Manufacturing Brand	
3C	7024598	1	Hammerblow Corp and Cequent Brands	
3D	7016322	1	Wiper (Burr Manufacturing Brand Only)	
4	0962051	2	Bushing, Flanged	
5	3430816	1	Pin, Clevis	
6	4891800	1	Flatwasher 1/2in Hardened	
7	4711800	AR	Flatwasher 1/2in Thin	
8	3450404	1	Pin, Cotter 1/8in x 1in	
9	0641609	4	Bolt 3/8in-16NC x 1-1/8in	
10	3311605	4	Locknut 3/8in-16NC	
11	4891600	4	Flatwasher 3/8in Hardened	
12	0641810	4	Bolt 1/2in-13NC x 1-1/4in	
14	3422530	1	Pins and Chain **(SN 0300069000 through 0300070917)**	
15	1380147	1	Clip, Spring	
22	3910608	2	Screw #6-32NC x 1in	
23	3310601	2	Nut #6-32NC	
24	4770600	2	Starwasher #6	
25	0641406	1	Bolt 1/4in-20NC x 3/4in **(SN 0300069000 through 0300070917)**	
26	4751400	2	Flatwasher 1/4in Regular **(SN 0300069000 through 0300070917)**	
27	3311405	1	Locknut 1/4in-20NC **(SN 0300069000 through 0300070917)**	

FIGURE 2-21. HOODS INSTALLATIONS

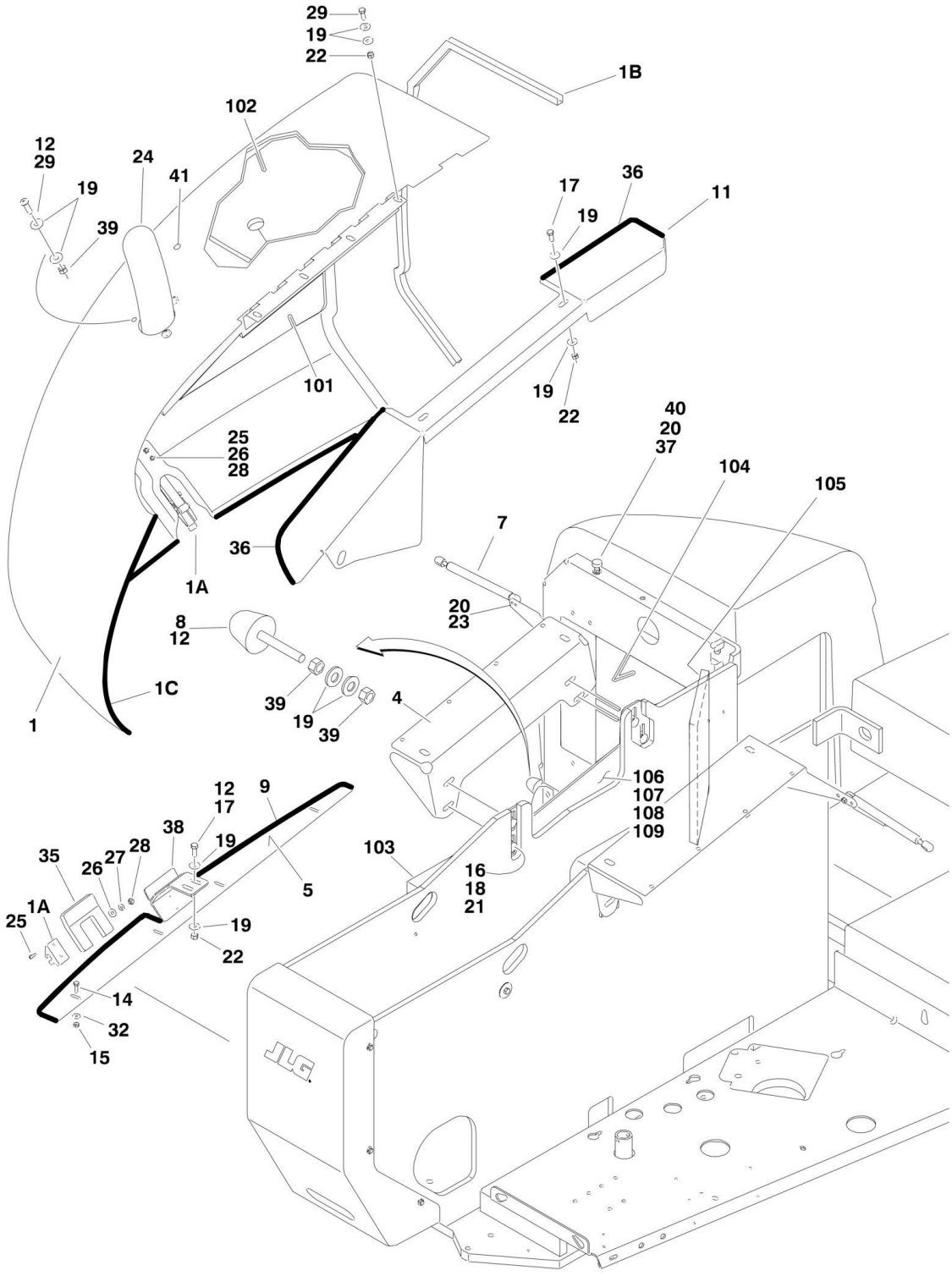

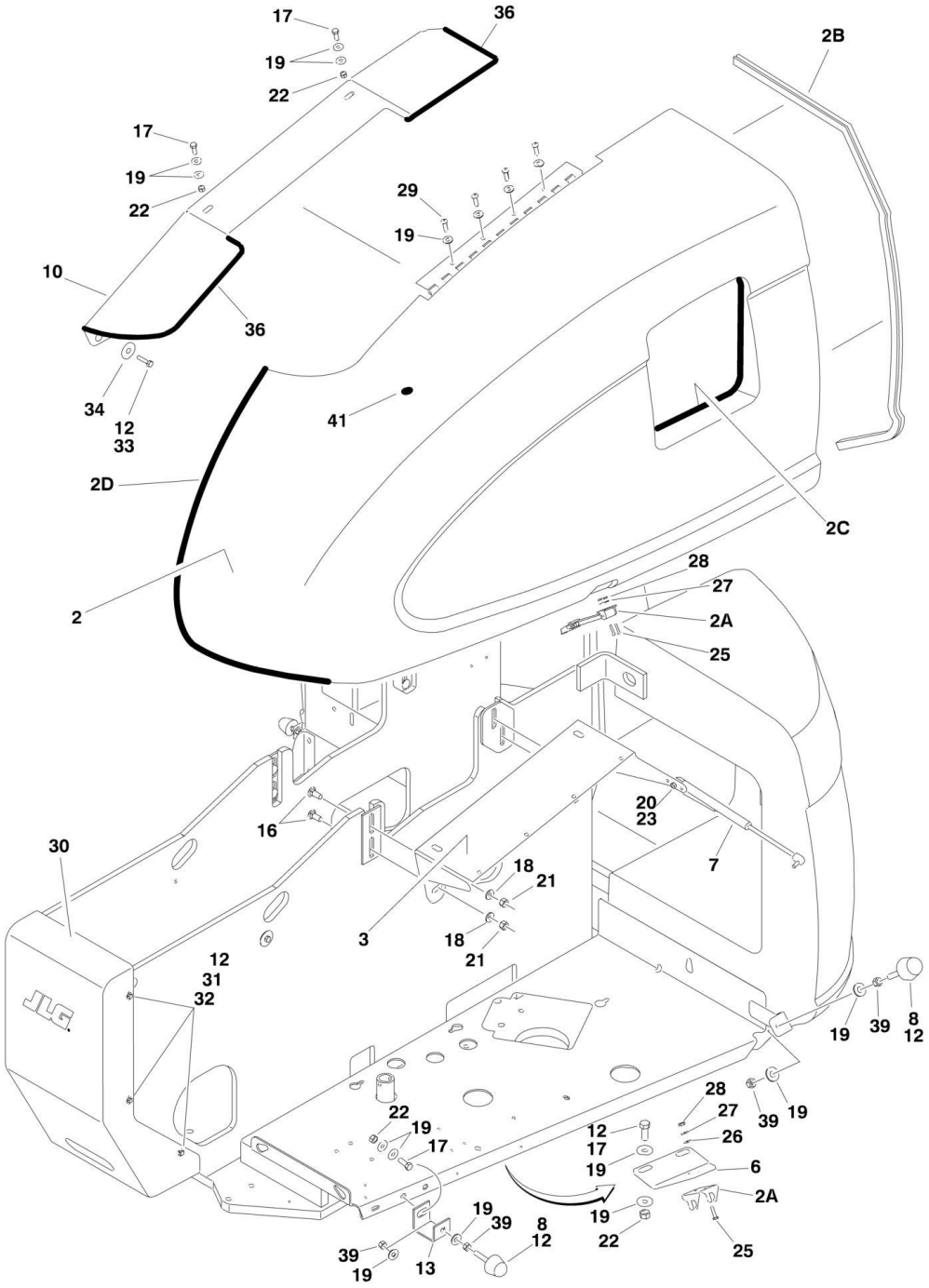
17
36
19
22
2B
17
19
22
29
19
10
36
34
12
33
41
2D
2C
28
27
2A
25
2
20
23
16
30
18
21
7
3
18
21
12
31
32
19
39
8
12
28
27
39
19
22
19
17
12
17
26
19
6
2A
19
19
39
8
12
22
25
39
19
13

FIGURE 2-21. HOODS INSTALLATIONS

ITEM	PART NUMBER	QTY	DESCRIPTION	REV
	0256821	Ref	**HOODS INSTALLATIONS**	4
1	2680440	1	Hood - Engine Side	
1A	2940088	1	Latch, Hood	
1B	3960462	AR	Trim	
1C	3960389	AR	Seal	
2	2680441	NLA	Hood - Tank Side (Use p/n 1671216)	
2A	2940088	1	Latch, Hood	
2B	3960462	AR	Trim	
2C	3960438	AR	Trim	
2D	3960389	AR	Seal	
3	4845203	1	Mount - Tank Side	
4	4845414	1	Mount - Engine Side	
5	3539923	1	Plate, Seal	
6	0902242	1	Bracket, Latch - Tank Side	
7	4160143	2	Spring, Gas	
8	0940071	4	Bumper	
10	2680434	1	Spacer, Hood (Tank Side)	
11	2680433	1	Spacer, Hood (Engine Side)	
12	0100011	AR	Compound, Locking	
13	0902219	1	Bracket, Bumper	
14	0641407	4	Bolt 1/4in-20NC x 7/8in	
15	3311405	4	Locknut 1/4in-20NC	
16	0630507	8	Bolt, Carriage 1/2in-13NC x 1-1/4in	
17	0641608	11	Bolt 3/8in-16NC x 1in	
18	4740171	8	Flatwasher 1/2in Hardened	
19	4751600	40	Flatwasher 3/16in Regular	
20	4751500	4	Flatwasher 5/16in Regular	
21	3311805	8	Locknut 1/2in-13NC	
22	3311605	23	Locknut 3/8in-16NC	
23	3311505	2	Locknut 5/16in-18NC	
24	4845194	1	Outlet, Exhaust	
25	0721006	4	Bolt #10-24NC x 3/4in	
26	4751000	4	Flatwasher #10 Regular	
27	4761000	4	Lockwasher #10	
28	3311001	4	Bolt #10-24NC	
28	3311005	4	Locknut #10-24NC	
29	3900232	11	Bolt, Button Head 3/8in-16NC x 1in	
30	1670767	1	Cover, Turntable	
31	0641404	6	Bolt 1/4in-20NC x 1/2in	
32	4751400	6	Flatwasher 1/4in Regular	
34	4740076	2	Washer, Fender	
35	3960467	1	Seal, Foam	
36	3960418	7 ft/2.1m	Seal	
37	0940049	1	Bumper	
38	0902335	1	Bracket, Latch - Engine Side	
39	3311601	11	Nut 3/8in-16NC	
40	3311501	2	Nut 5/16in-18NC	
41	3520033	2	Plug	
	0256822	Ref	**NOISE REDUCTION INSTALLATION**	-
101	2820076	1	Foam, Acoustical	

ITEM	PART NUMBER	QTY	DESCRIPTION	REV
102	2820077	1	Foam, Acoustical	
103	2820078	1	Foam, Acoustical	
104	2820082	1	Foam, Acoustical	
105	2820083	1	Foam, Acoustical	
106	3539988	1	Plate, Baffle	
107	0641606	5	Bolt 3/8in-16NC x 3/4in	
108	4751600	5	Flatwasher 3/8in Regular	
109	0100011	AR	Compound, Locking	

SECTION 3 - BOOM

FIGURE 3-1. BOOMS AND CYLINDERS INSTALLATION - 600A

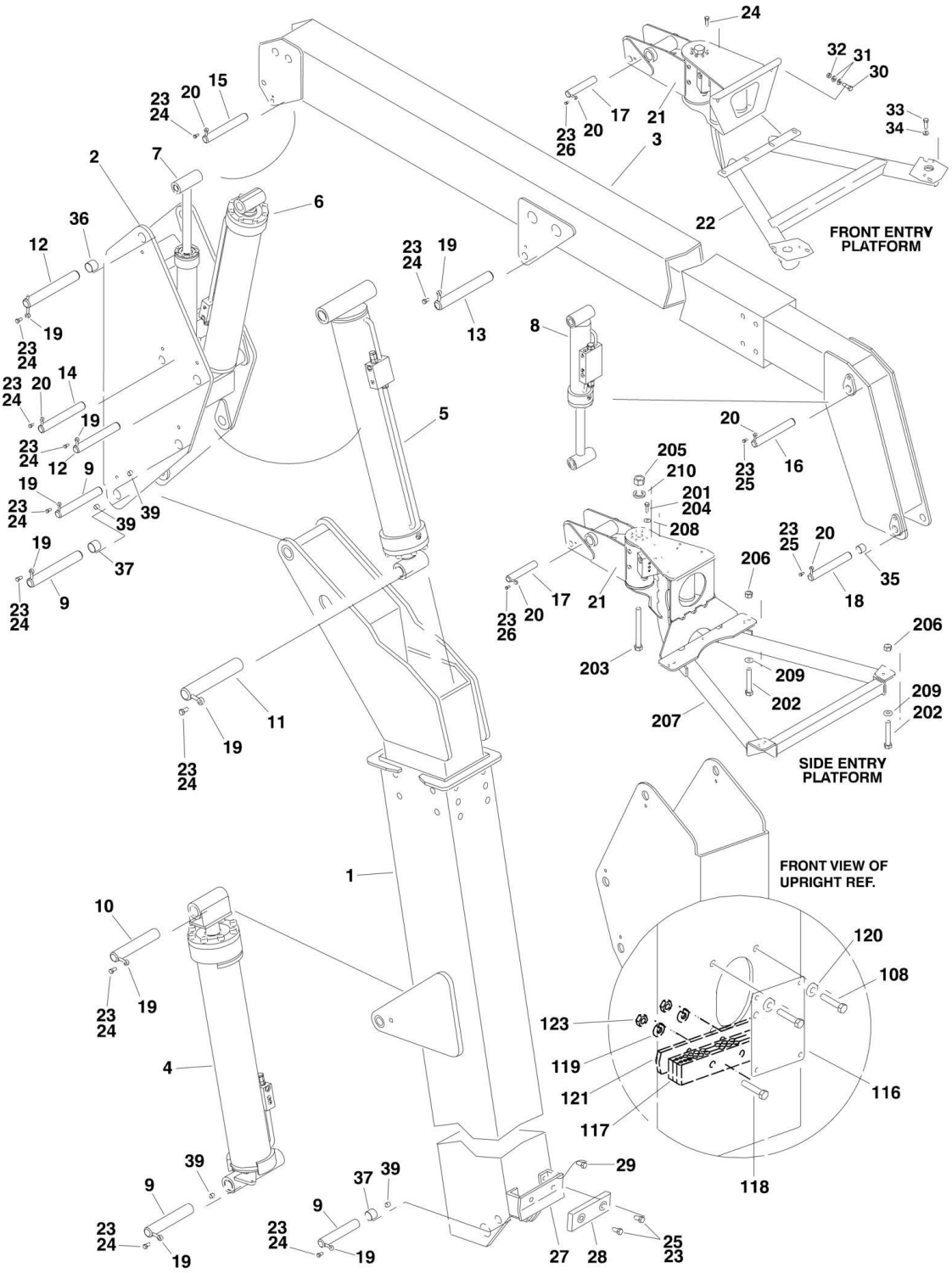

FIGURE 3-1. BOOMS AND CYLINDERS INSTALLATION - 600A

ITEM	PART NUMBER	QTY	DESCRIPTION	REV
		Ref	**BOOMS AND CYLINDERS INSTALLATION - 600A**	
	0258694	Ref	**CE Spec Machines with Front Entry Platform**	8
	0256321	Ref	**Australian Spec Machines with Front Entry Platform**	5
	0272326	Ref	**CE/Australian Spec Machines with Side Entry Platform**	1
1	0801019	1	Tower Boom Assembly - Tower (See TOWER BOOM ASSEMBLIES for Breakdown)	
2	4846005	1	Upright Weldment	
3	0801022	1	Main Boom Assembly (See MAIN BOOM ASSEMBLIES for Breakdown)	
4	1683288	NLA	Tower Lift Cylinder Assembly (Use p/n 1001228003) (See CYLINDER SECTION for Breakdown) (Original Equipment)	
4	1001228003	1	Tower Lift Cylinder Assembly (See CYLINDER SECTION for Breakdown) (Service Replacement)	
5	1683299	NLA	Upright Level Cylinder Assembly (Use p/n 1001228042) (See CYLINDER SECTION for Breakdown) (Original Equipment)	
5	1684498	NLA	Upright Level Cylinder Assembly (Use p/n 1001228042) (See CYLINDER SECTION for Breakdown) (Service Replacement)	
5	1001228042	1	Upright Level Cylinder Assembly (See CYLINDER SECTION for Breakdown) (Service Replacement)	
6	1683294	NLA	Main Lift Cylinder Assembly (Use p/n 1001228004) (See CYLINDER SECTION for Breakdown) (Original Equipment)	
6	1001228004	1	Main Lift Cylinder Assembly (See CYLINDER SECTION for Breakdown) (Service Replacement)	
7	1683266	NLA	Master Cylinder Assembly (Use p/n 1001228002) (See CYLINDER SECTION for Breakdown) (Original Equipment)	
7	1001228002	1	Master Cylinder Assembly (See CYLINDER SECTION for Breakdown) (Service Replacement)	
8	1683415	NLA	Platform Level Cylinder Assembly (Use p/n 1001223512) (See CYLINDER SECTION for Breakdown) (Original Equipment)	
8	1001223512	1	Platform Level Cylinder Assembly (See CYLINDER SECTION for Breakdown) (Service Replacement)	
9	3422571	4	Pin	
10	3422573	1	Pin	
11	3422575	1	Pin	
12	3422572	2	Pin	
13	3422576	1	Pin	
14	3422565	1	Pin	
15	3422577	1	Pin	
16	3422578	1	Pin	
17	3422580	1	Pin	
19	3841203	9	Keeper, Pin - 1/2in	
20	3841143	5	Keeper, Pin - 3/8in	
21		Ref	Rotator Assembly Options:	
21	0060076	1	Front Entry Platform (p/n was 0060035) (See ROTATOR ASSEMBLIES (FRONT ENTRY PLATFORM) for Breakdown)	
21	0060068	1	Side Entry Platform (See ROTATOR ASSEMBLIES (SIDE ENTRY PLATFORM) for Breakdown)	
22		Ref	Platform Support Weldment Options:	
22	4844790	1	CE Spec Machines with Front Entry Platform	
22	4846081	1	Australian Spec Machines with Front Entry Platform	
22	See Note	1	Side Entry Platform Machines (Note: See Items 201-210)	
23	0100011	AR	Compound, Locking	
24	0641810	15	Bolt 1/2in-13NC x 1-1/4in	

ITEM	PART NUMBER	QTY	DESCRIPTION	REV
25	0641607	AR	Bolt 3/8in-16NC x 7/8in	
26	3900166	1	Screw, Socket Head Countersunk - 3/8in-16NC x 7/8in	
27	4845127	1	Boom Rest Weldment (Front Entry Platform)	
28	0561076	1	Block, Boom Rest	
29	0641605	4	Bolt 3/8in-16NC x 5/8in	
30	0641820	4	Bolt 1/2in-13NC x 2-1/2in (Front Entry Platform)	
31	4711800	8	Flatwasher 1/2in Thin (Front Entry Platform)	
32	3311805	4	Locknut 1/2in-13NC (Front Entry Platform)	
33	0681610	4	Bolt 3/8in-16NC x 1-1/4in (Grade 8) (Front Entry Platform)	
34	4711600	4	Flatwasher 3/8in Thin (Front Entry Platform)	
35	0961951	2	Bushing	
36	0961948	2	Bushing	
37	0961949	4	Bushing	
38	3422582	1	Pin	
39	3900239	4	Setscrew	
	0255423	Ref	**POWER TRACK INSTALLATION**	12-K
108	0641403	4	Bolt 1/4in-20NC x 3/8in	
116	3539779	1	Plate, Cover	
117	1320243	1	Clamp, Block	
118	0641532	2	Bolt 5/16in-18NC x 4in	
119	4751600	2	Flatwasher 3/8in Regular **(SN 0300069000 through 0300084623)**	
120	4751400	4	Flatwasher 1/4in Regular	
121	3570374	1	Plate	
123	3311505	2	Nut 5/16in-18NC	
125	4751500	2	Flatwasher 5/16in Regular **(SN 0300084624 through 0300087000)**	
	0272070	Ref	**PLATFORM SUPPORT INSTALLATIONS (SIDE ENTRY PLATFORM MACHINES)**	C
	See Note	Ref	**CE Spec Machines (Note: For Replacement Parts, Contact JLG Customer Service and Request Manual p/n 3124287.)**	
201	0100011	AR	Compound, Locking	
202	0641812	8	Bolt 1/2in-13NC x 1-1/2in	
203	0642684	1	Bolt 1in-8NC x 10-1/2in	
204	0681608	8	Bolt 3/8in-16NC x 1in	
205	3272605	1	Locknut 1in-8NC	
206	3311805	8	Locknut 1/2in-13NC	
207	4846573	1	Support Weldment	
208	4891600	8	Flatwasher 3/8in Hardened	
209	4891800	8	Flatwasher 1/2in Hardened	
210	4892600	1	Flatwasher 1in Hardened	

FIGURE 3-2. BOOMS AND CYLINDERS INSTALLATION - 600AJ

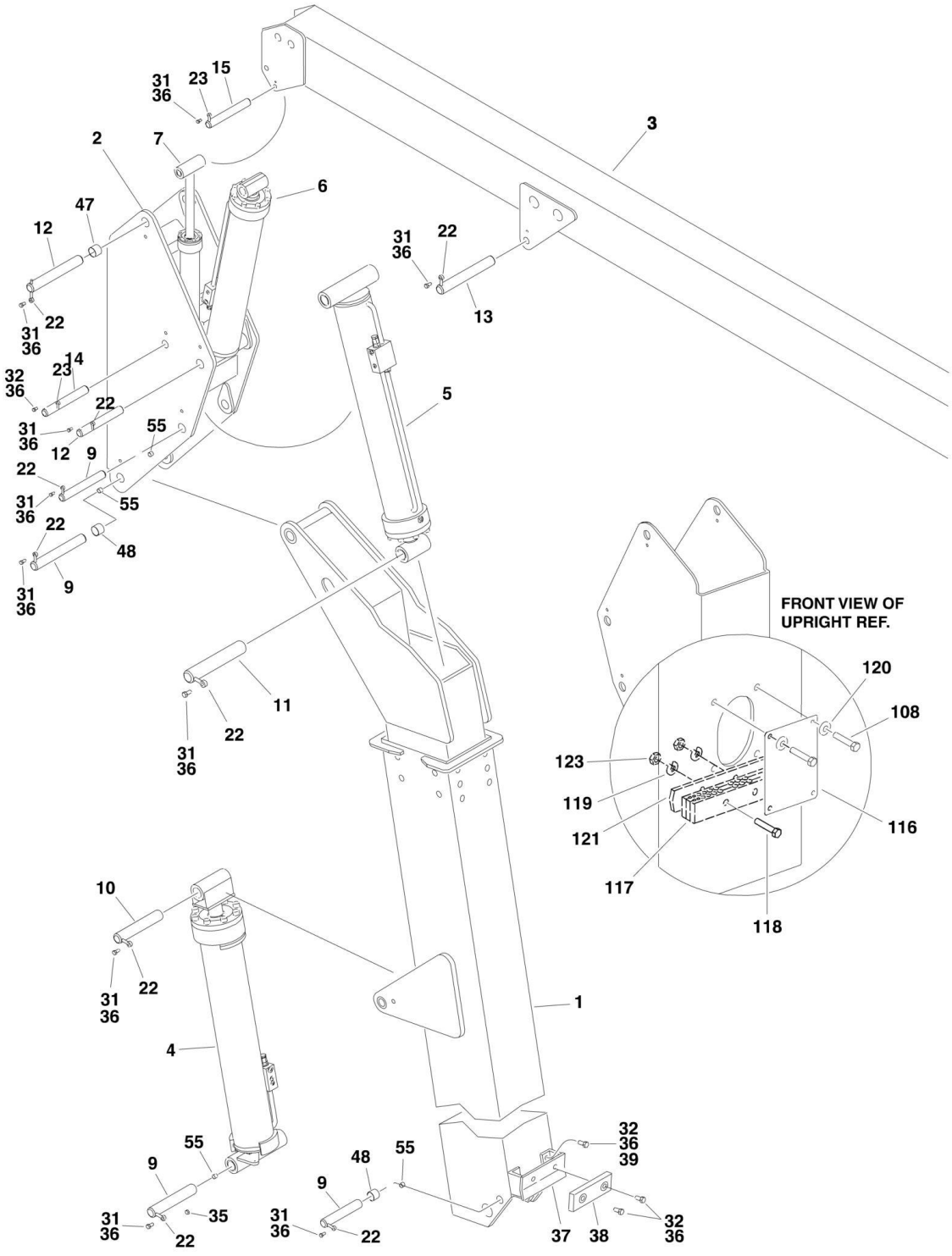

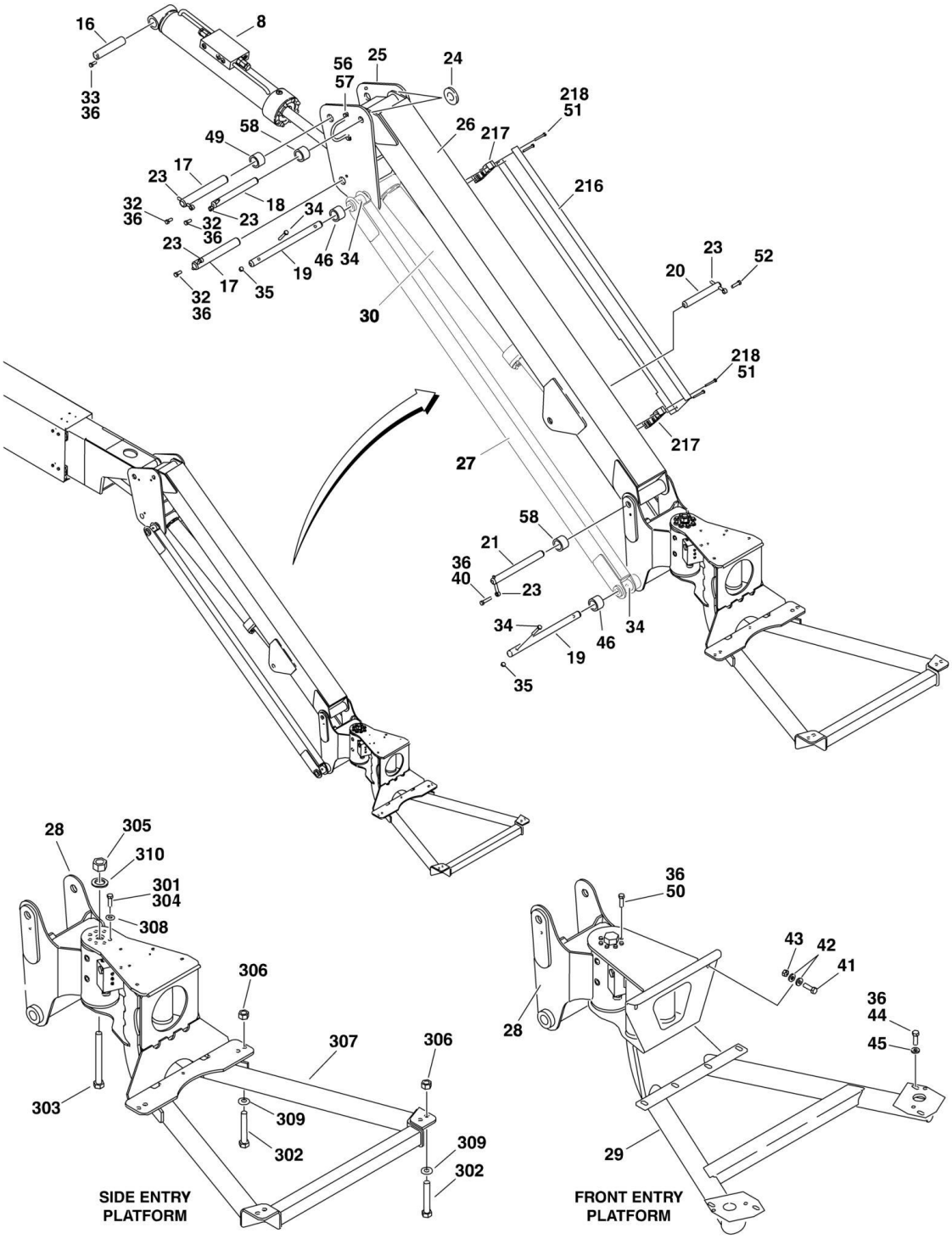
16
8
33
36
56
57
25
24
218
51
58
49
26
217
17
23
216
18
32
36
23
34
32
36
23
46
34
19
17
35
32
36
30
23
52
20
218
51
217
27
58
21
36
40
23
34
46
34
19
35
28
305
310
301
304
308
306
307
306
303
309
302
309
302
SIDE ENTRY
PLATFORM
36
50
43
42
41
36
44
45
28
29
FRONT ENTRY
PLATFORM

FIGURE 3-2. BOOMS AND CYLINDERS INSTALLATION - 600AJ

ITEM	PART NUMBER	QTY	DESCRIPTION	REV
		Ref	**BOOMS AND CYLINDERS INSTALLATION - 600AJ**	
	0271339	Ref	**Front Entry Platform Machines**	5
	0272135	Ref	**Side Entry Platform Machines**	3
1	0801019	1	Tower Boom Assembly - Tower (See TOWER BOOM ASSEMBLIES SECTION for Breakdown)	
2	4846006	1	Upright Weldment	
3	0801025	1	Main Boom Assembly (See MAIN BOOM ASSEMBLIES SECTION for Breakdown)	
4	1683288	NLA	Tower Lift Cylinder Assembly (Use p/n 1001228003) (See CYLINDER SECTION for Breakdown) (Original Equipment)	
4	1001228003	1	Tower Lift Cylinder Assembly (See CYLINDER SECTION for Breakdown) (Service Replacement)	
5	1683299	NLA	Upright Level Cylinder Assembly (Use p/n 1001228042) (See CYLINDER SECTION for Breakdown) (Original Equipment)	
5	1684498	NLA	Upright Level Cylinder Assembly (Use p/n 1001228042) (See CYLINDER SECTION for Breakdown) (Service Replacement)	
5	1001228042	1	Upright Level Cylinder Assembly (See CYLINDER SECTION for Breakdown) (Service Replacement)	
6	1683294	NLA	Main Lift Cylinder Assembly (Use p/n 1001228004) (See CYLINDER SECTION for Breakdown) (Original Equipment)	
6	1001228004	1	Main Lift Cylinder Assembly (See CYLINDER SECTION for Breakdown) (Service Replacement)	
7	1683263	NLA	Master Cylinder Assembly (Use p/n 1001228052) (See CYLINDER SECTION for Breakdown) (Original Equipment)	
7	1001228052	1	Master Cylinder Assembly (See CYLINDER SECTION for Breakdown) (Service Replacement)	
8	1683418	NLA	Platform Level Cylinder Assembly (Use p/n 1001223331) (See CYLINDER SECTION for Breakdown) (Original Equipment)	
8	1001223331	1	Platform Level Cylinder Assembly (See CYLINDER SECTION for Breakdown) (Service Replacement)	
9	3422571	4	Pin	
10	3422573	1	Pin	
11	3422575	1	Pin	
12	3422572	2	Pin	
13	3422576	1	Pin	
14	3422566	1	Pin	
15	3422579	1	Pin	
16	3422583	1	Pin	
17	3422561	2	Pin	
18	3422860	1	Pin	
19	3422861	2	Pin	
20	3422867	1	Pin	
21	3422563	1	Pin (Front Entry Platform)	
21	3422860	1	Pin (Side Entry Platform)	
22	3841203	9	Keeper, Pin - 1/2in	
23	3841143	7	Keeper, Pin - 3/8in	
24	4740439	2	Thrustwasher	
25	4844815	1	Pivot Weldment	
26	4844816	1	Tube Weldment - Top	
27	4844817	2	Tube Weldment - Bottom	
28		Ref	Rotator Assembly Options:	
28	0060031	NLA	Front Entry Platform (Use p/n 0060074) (See ROTATOR ASSEMBLIES SECTION for Breakdown)	

ITEM	PART NUMBER	QTY	DESCRIPTION	REV
28	0060066	1	Side Entry Platform (See ROTATOR ASSEMBLIES SECTION for Breakdown)	
29		Ref	Support Weldment Options:	
29	4844790	1	CE Spec Machines with Front Entry Platform	
29	4846081	1	Australian Spec Machines with Front Entry Platform	
29	See Note	1	All Machines with Side Entry Platform (Note: See Items 301-310)	
30		Ref	Extend-A-Reach Lift Cylinder Assembly Options (See CYLINDER SECTION for Breakdown):	
30	1683258	1	Extend-A-Reach Lift Cylinder Assembly **(SN 0300069000 through 0300070976)**	
30	1683609	NLA	Extend-A-Reach Lift Cylinder Assembly (Use p/n 1001248012) (Original Equipment) **(SN 0300070977 through 0300087000)**	
30	1001228012	NLA	Extend-A-Reach Lift Cylinder Assembly (Use p/n 1001248012) (Service Replacement)	
30	1001248012	1	Extend-A-Reach Lift Cylinder Assembly (Service Replacement)	
31	0641810	9	Bolt 1/2in-13NC x 1-1/4in	
32	0641607	AR	Bolt 3/8in-16NC x 7/8in	
33	0741607	1	Screw, Countersunk 3/8in-16NC x 7/8in	
34	0641618	4	Bolt 3/8in-16NC x 2-1/4in	
35	3311605	5	Locknut 3/8in-16NC	
36	0100011	AR	Compound, Locking	
37	4845127	1	Boom Rest Weldment (Front Entry Platform) **(SN 0300069000 through 0300070976)**	
38	0561076	1	Block, Boom Rest	
39	0641605	4	Bolt 3/8in-16NC x 5/8in	
40	0461614	1	Bolt 3/8in-16NC x 1-3/4in	
41	0641820	4	Bolt 1/2in-13NC x 2-1/2in (Front Entry Platform)	
42	4711800	8	Flatwasher 1/2in Thin (Front Entry Platform)	
43	3311805	4	Locknut 1/2in-13NC (Front Entry Platform)	
44	0681610	4	Bolt 3/8in-16NC x 1-1/4in (Grade 8) (Front Entry Platform)	
45	4711600	4	Flatwasher 3/8in Thin (Front Entry Platform)	
46	0961947	6	Bushing	
47	0961948	2	Bushing	
48	0961949	4	Bushing	
49	0961951	2	Bushing	
50	0641810	6	Bolt 1/2in-13NC x 1in	
51	2080044	4	Rivnut	
52	0641611	1	Bolt 3/8in-16NC x 1-3/8in	
55	3900239	4	Setscrew	
56	3841340	1	Loop, Hose	
57	0641606	2	Bolt 3/8in-16NC x 3/4in	
58	0962335	4	Bushing	
	0255423	Ref	**POWER TRACK INSTALLATION**	12-K
108	0641403	4	Bolt 1/4in-20NC x 3/8in	
116	3539779	1	Plate, Cover	
117	1320243	1	Clamp, Block	
118	0641532	2	Bolt 5/16in-18NC x 4in	
119	4751600	2	Flatwasher 3/8in Regular **(SN 0300069000 through 0300084623)**	
120	4751400	4	Flatwasher 1/4in Regular	
121	3570374	1	Plate	
123	3311505	2	Nut 5/16in-18NC	
125	4751500	2	Flatwasher 5/16 Regular **(SN 0300084624 through 0300087000)**	

ITEM	PART NUMBER	QTY	DESCRIPTION	REV
	0270821	Ref	**CABLE INSTALLATION**	7-F
216	1670769	1	Cover	
217	0561237	2	Clamp, Block	
218	0641416	4	Bolt 1/4in-20NC x 2in	
	0272070	Ref	**PLATFORM SUPPORT INSTALLATIONS (SIDE ENTRY PLATFORM) (AUSTRALIAN SPEC)**	C
	See Note	Ref	**CE Spec Machines (Note: For Replacement Parts, Contact JLG Customer Service and Request Manual p/n 3124287.)**	
301	0100011	AR	Compound, Locking	
302	0641812	8	Bolt 1/2in-13NC x 1-1/2in	
303	0642684	1	Bolt 1in-8NC x 10-1/2in	
304	0681608	8	Bolt 3/8in-16NC x 1in	
305	3272605	1	Locknut 1in-8NC	
306	3311805	8	Locknut 1/2in-13NC	
307	4846573	1	Support Weldment	
308	4891600	8	Flatwasher 3/8in Hardened	
309	4891800	8	Flatwasher 1/2in Hardened	
310	4892600	1	Flatwasher 1in Hardened	

FIGURE 3-3. TOWER BOOM ASSEMBLIES

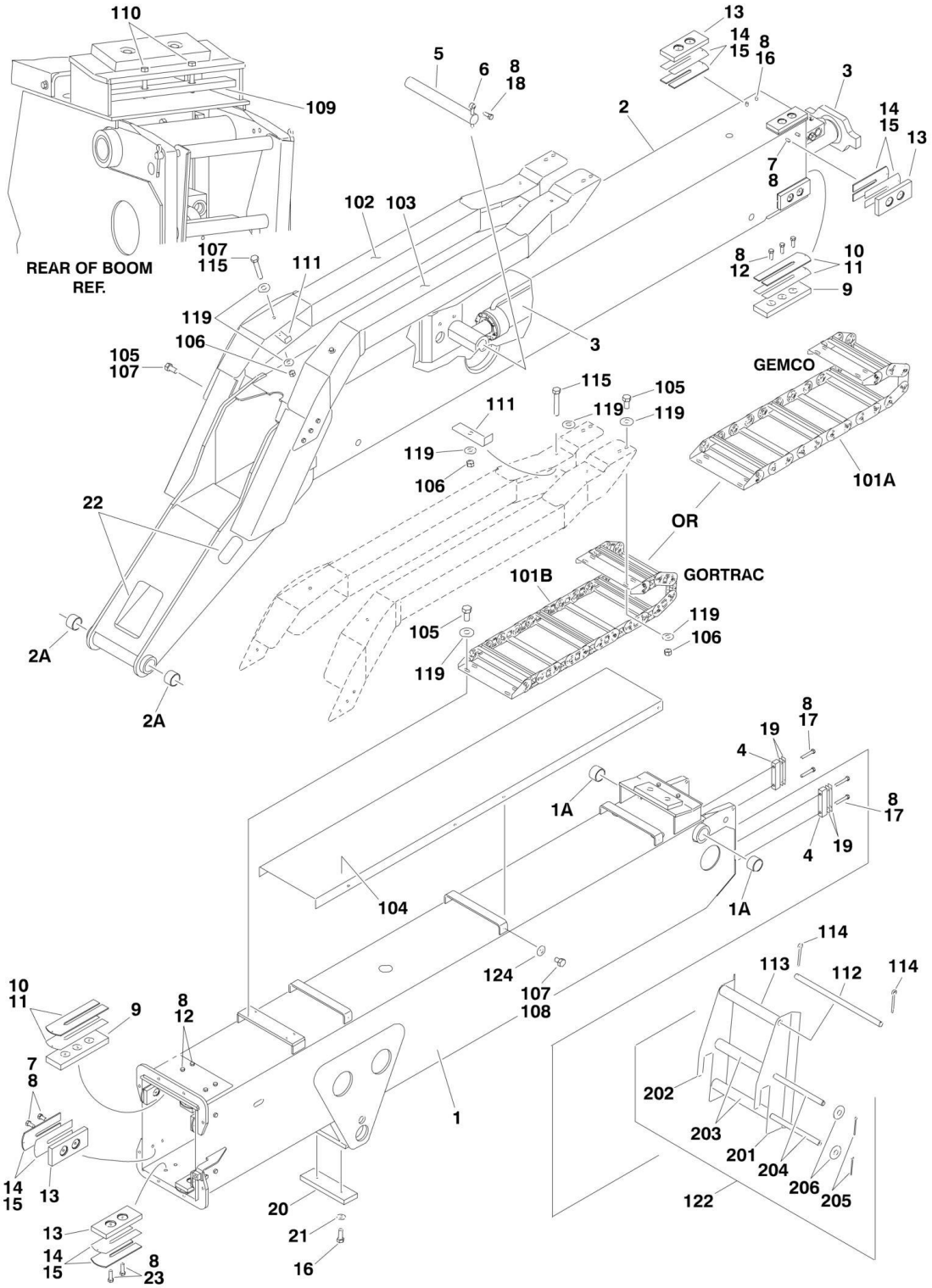

FIGURE 3-3. TOWER BOOM ASSEMBLIES

ITEM	PART NUMBER	QTY	DESCRIPTION	REV
	0801019	Ref	**TOWER BOOM ASSEMBLY**	8-I
1	0801085	1	Base Weldment	
1A	0961949	2	Bushing	
2	0801021	1	Fly Weldment	
2A	0961949	2	Bushing	
3	1683312	NLA	Cylinder Assembly - Tower Telescope (Use p/n 1001228006) (See CYLINDER SECTION for Breakdown) (Original Equipment)	
3	1001228006	1	Cylinder Assembly - Tower Telescope (See CYLINDER SECTION for Breakdown) (Service Replacement)	
4	0561185	2	Block, Attach	
5	3422575	1	Pin	
6	3841203	1	Keeper, Pin	
7	0641606	26	Bolt 3/8in-16NC x 3/4in	
8	0100011	AR	Compound, Locking	
9	3340871	4	Pad, Wear	
10	4070863	AR	Shim .12	
11	4070864	AR	Shim .05	
12	0641612	12	Bolt 3/8in-16NC x 1-1/2in	
13	3340881	12	Pad, Wear	
14	4070897	AR	Shim .05	
15	4070898	AR	Shim .12	
16	0641608	6	Bolt 3/8in-16NC x 1in	
17	0641618	4	Bolt 3/8in-16NC x 2-1/4in	
18	0641809	1	Bolt 3/8in-16NC x 1-1/8in	
19	4070929	AR	Shim	
20	0561248	1	Block, Boom Rest	
21	4711600	2	Flatwasher 3/8in Thin	
22	4060808	54 in/137cm	Flex-Trim	
23	0641610	4	Bolt 3/8in-16NC x 1-1/4in	
	0255423	Ref	**POWER TRACK INSTALLATION**	12-K
101		Ref	Power Track Assembly Options:	
		Ref	**Note: Various Power Tracks use on this model. Identify brand before ordering parts.**	
101A	1180339	NLA	Gemco Brand Power Track (Use p/n 1001099835)	
101A		Ref	Replacement Parts:	
101A	7016502	AR	Repair Section (Includes 10 Link Pin, 4 Radius Links, 4 Carrier Links, 1 Carrier Weldment, 10 Slugs and 20 Bearing Plates)	
101A	7016510	2 Pair	Feet, Mounting	
101A	7006152	AR	Pin Kit (Includes 1 pin, 1 Retaining Ring and 4 Washers)	
101B	1180339	NLA	Gortrac Brand Power Track (Use p/n 1001099835)	
101B		Ref	Replacement Parts:	
101B	70002001	AR	Repair Section	
101B	70002002	1	Mounting Bracket Kit	
102	4844984	NLA	Tube Weldment (Right Side) (Use p/n 1001151542)	
103	4844983	NLA	Tube Weldment (Left Side) (Use p/n 1001151586)	
104	3539228	1	Plate, Cover	
105	0641607	14	Bolt 3/8in-16NC x 7/8in	
106	3311605	6	Locknut 3/8in-16NC	
107	0100011	AR	Compound, Locking	

ITEM	PART NUMBER	QTY	DESCRIPTION	REV
108	0641403	10	Bolt 1/4in-20NC x 3/8in	
109	3539236	1	Plate, Hose Clamp	
110	0641516	2	Bolt 5/16in-18NC x 2in	
111	3570375	2	Plate	
112	3841295	1	Rod	
113	4567241	1	Tube	
114	3450606	2	Pin, Cotter	
115	0641618	2	Bolt 3/8in-16NC x 2-1/4in	
119	4751600	14	Flatwasher 3/8in Regular **(SN 0300084624 through 0300087000)**	
122	0257573	1	Roller Hanger Assembly (Includes Items 201-205)	
124	4711400	6	Flatwasher 1/4in Thin **(SN 0300082634 through 0300087000)**	
	0257573	Ref	**ROLLER HANGER ASSEMBLY**	1-A
201	3570277	1	Plate (Left Side)	
202	3570270	1	Plate (Right Side)	
203	4567241	2	Roller, Tube	
204	3841347	2	Rod	
205	3450306	4	Pin, Cotter	
206	4751800	4	Flatwasher 1/2in Regular	

FIGURE 3-4. MAIN BOOM ASSEMBLIES

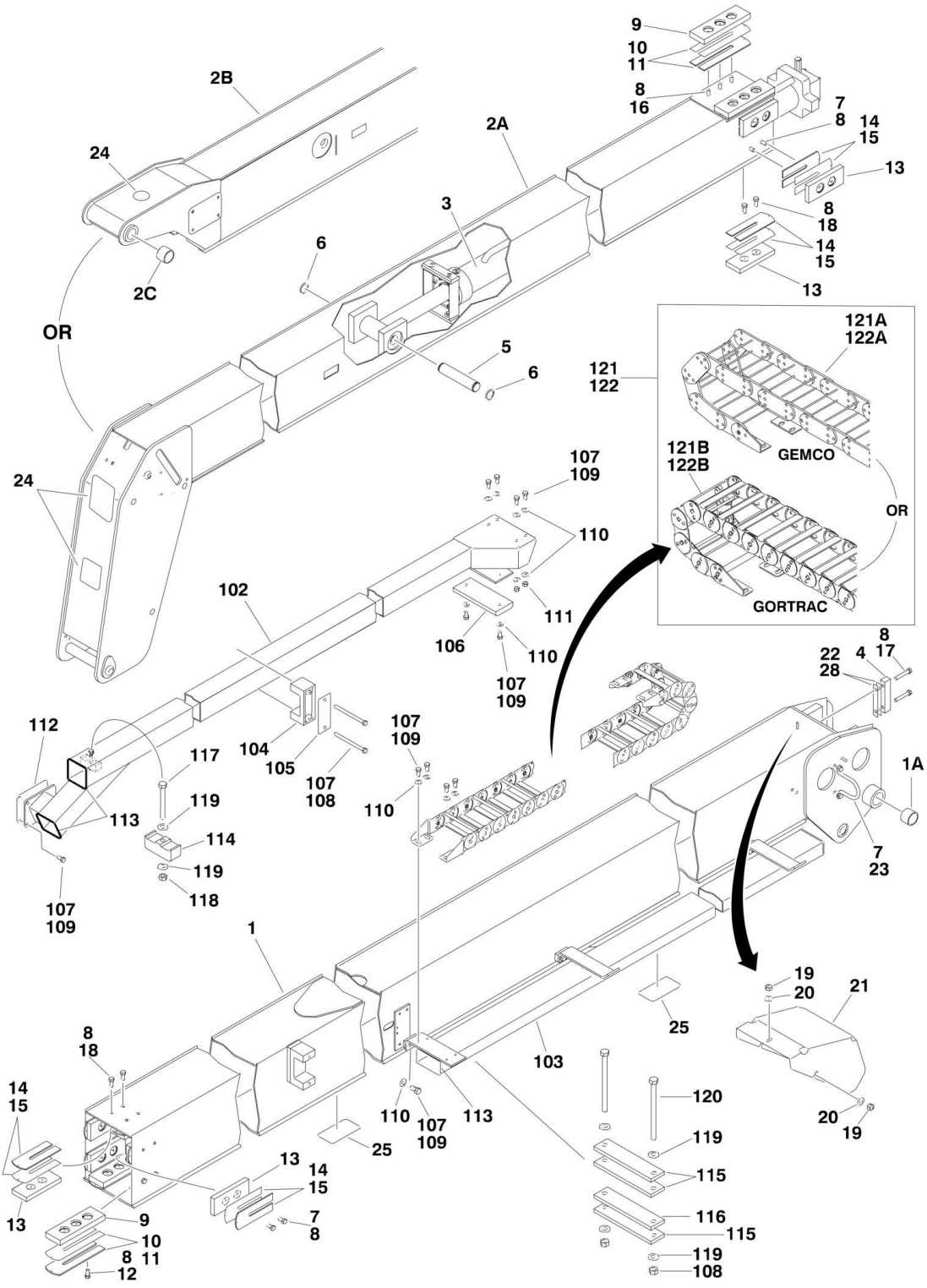

FIGURE 3-4. MAIN BOOM ASSEMBLIES

ITEM	PART NUMBER	QTY	DESCRIPTION	REV
	0801022	Ref	**BOOM ASSEMBLY - 600A**	13-G
	0801025	Ref	**BOOM ASSEMBLY - 600AJ**	8-E
1		Ref	Base Weldment Options:	
1	0801023	1	Base Weldment 600A	
1	0801026	1	Base Weldment 600AJ	
1A	0961948	2	Bushing (Note: Must be Purchased Separately)	
2		Ref	Fly Weldment Options:	
2A	0801228	1	Fly Weldment 600A	
2B	0801027	1	Fly Weldment 600AJ	
2C		Ref	Bushing Options (Note: Must be Purchased Separately):	
2C	Not Required	0	Bushing 600A	
2C	0961951	2	Bushing 600AJ	
3		Ref	Telescope Cylinder Assembly Options: (See CYLINDER SECTION for Breakdown)	
3	1683307	NLA	Telescope Cylinder Assembly 600A (Use p/n 1001228005) (Original Equipment)	
3	1001228005	1	Telescope Cylinder Assembly 600A (Service Replacement)	
3	1683317	NLA	Telescope Cylinder Assembly 600AJ (Use p/n 1001228007) (Original Equipment)	
3	1001228007	1	Telescope Cylinder Assembly 600AJ (Service Replacement)	
4	0561185	2	Block	
5	3422457	1	Pin	
6	3760133	2	Ring, Retaining	
7	0641606	18	Bolt 3/8in-16NC 3/4in	
8	0100011	AR	Compound, Locking	
9	3340871	4	Pad, Wear	
10	4070863	AR	Shim .12	
11	4070864	AR	Shim .05	
12	0641610	6	Bolt 3/8in-16NC x 1-1/4in	
13	3340881	12	Pad, Wear	
14	4070897	AR	Shim .05	
15	4070898	AR	Shim .12	
16	0641608	6	Bolt 3/8in-16NC x 1in	
17	0641618	4	Bolt 3/8in-16NC x 2-1/4in	
18	0641607	8	Bolt 3/8in-16NC x 7/8in	
19	3311401	3	Nut 1/4in-20NC	
20	4751400	3	Flatwasher 1/4in Regular	
21	1670768	1	Cover, Boom	
22	4070929	AR	Shim	
23	3841340	1	Clamp, Hose	
24	4060805	AR	Flex-Trim	
25	1670836	6	Cover, Boom	
26	See Note	AR	Tape, Two Sided Foam (Note: See Valves and Switches Installation for Usage).	
27	See Note	AR	Bar, Fiberglass (Note: See Valves and Switches Installation for Usage.)	
28	4071007	AR	Shim	
	0255281	Ref	**POWER TRACK INSTALLATION - 600A**	7-F
	0255288	Ref	**POWER TRACK INSTALLATION - 600AJ**	6-E
102		Ref	Tube Weldment Options:	
102	4844969	1	Tube Weldment 600A	

ITEM	PART NUMBER	QTY	DESCRIPTION	REV
102	4844978	1	Tube Weldment 600AJ	
103		Ref	Support, Power Track Options:	
103	4844972	1	Support, Power Track 600A	
103	4844979	1	Support, Power Track 600AJ	
104	3340764	2	Pad, Wear	
105	3538758	1	Plate, Cover Support	
106	Not Required	Ref	Pad Options:	
106	3340787	1	Pad 600A	
106	3340765	1	Pad 600AJ	
107	0100011	AR	Compound, Locking	
108	0641640	2	Bolt 3/8in-16NC x 5in	
109	0641606	22	Bolt 3/8in-16NC x 3/4in	
110	4711600	18	Flatwasher 3/8in Thin	
111	3311605	4	Locknut 3/8in-16NC	
112	4070932	AR	Shim	
113	4060804	AR	Flex-Trim	
114	1320314	1	Clamp, Hose/Cable **(SN 0300070977 through 0300087000)**	
115		Ref	Plate Options: **(SN 0300070977 through 0300087000)**	
115	3574171	3	Plate 600A	
115	3574185	3	Plate 600AJ	
116		Ref	Shim Options: **(SN 0300070977 through 0300087000)**	
116	4071061	3	Shim 600A	
116	4071062	3	Shim 600AJ	
117	0641522	1	Bolt 5/16in-18NC x 2-3/4in **(SN 0300070977 through 0300087000)**	
118	3311505	3	Locknut 5/16in-18NC **(SN 0300070977 through 0300087000)**	
119	4711500	6	Flatwasher 5/16in Thin	
120	0641536	2	Bolt 5/16in-18NC x 4-1/2in **(SN 0300070977 through 0300087000)**	
121		Ref	600A Power Track Assembly Options:	
		Ref	**Note: Various Power Tracks use on this model. Identify brand before ordering parts.**	
121A	1180336	NLA	Gemco Brand Power Track (Use p/n 1001107153) (600A)	
121A	7006140	AR	Repair Section (Includes 10 Link Pin, 4 Radius Links, 8 Carrier Links, 4 Rod Carrier, 8 Screws, 10 Slugs and 20 Bearing Plates) (600A)	
121A	7006151	2 Pair	Feet, Mounting (600A)	
121A	7006161	AR	Rod (600A)	
121A	7006152	AR	Pin Kit (Includes 1 pin, 1 Retaining Ring and 4 Washers) (600A)	
121B	1001107153	1	Gortrac Brand Power Track (600A)	
121B	70002011	AR	Repair Section (600A)	
121B	70002012	1	Mounting Bracket Kit (600A)	
122		Ref	600AJ Power Track Assembly Options:	
		Ref	**Note: Various Power Tracks use on this model. Identify brand before ordering parts.**	
122	1180338	NLA	Gemco Brand Power Track (Use p/n 1001099836) (600AJ)	
122A	7016519	AR	Repair Section (Includes 10 Link Pin, 4 Radius Links, 8 Carrier Links, 4 Rod Carrier, 8 Screws, 10 Slugs and 20 Bearing Plates) (600AJ)	
122A	7006151	2 Pair	Feet, Mounting (600AJ)	
122A	7016521	AR	Rod (600AJ)	
122A	7006158	AR	Screw (600AJ)	

ITEM	PART NUMBER	QTY	DESCRIPTION	REV
122A	7006152	AR	Pin Kit (Includes 1 pin, 1 Retaining Ring and 4 Washers) (600AJ)	
122B	1001099836		Gortrac Brand Power Track (600AJ)	
122B	70001999	AR	Repair Section (600AJ)	
122B	70002000	1	Mounting Bracket Kit (600AJ)	

FIGURE 3-5. ROTATOR ASSEMBLIES (FRONT ENTRY PLATFORM)

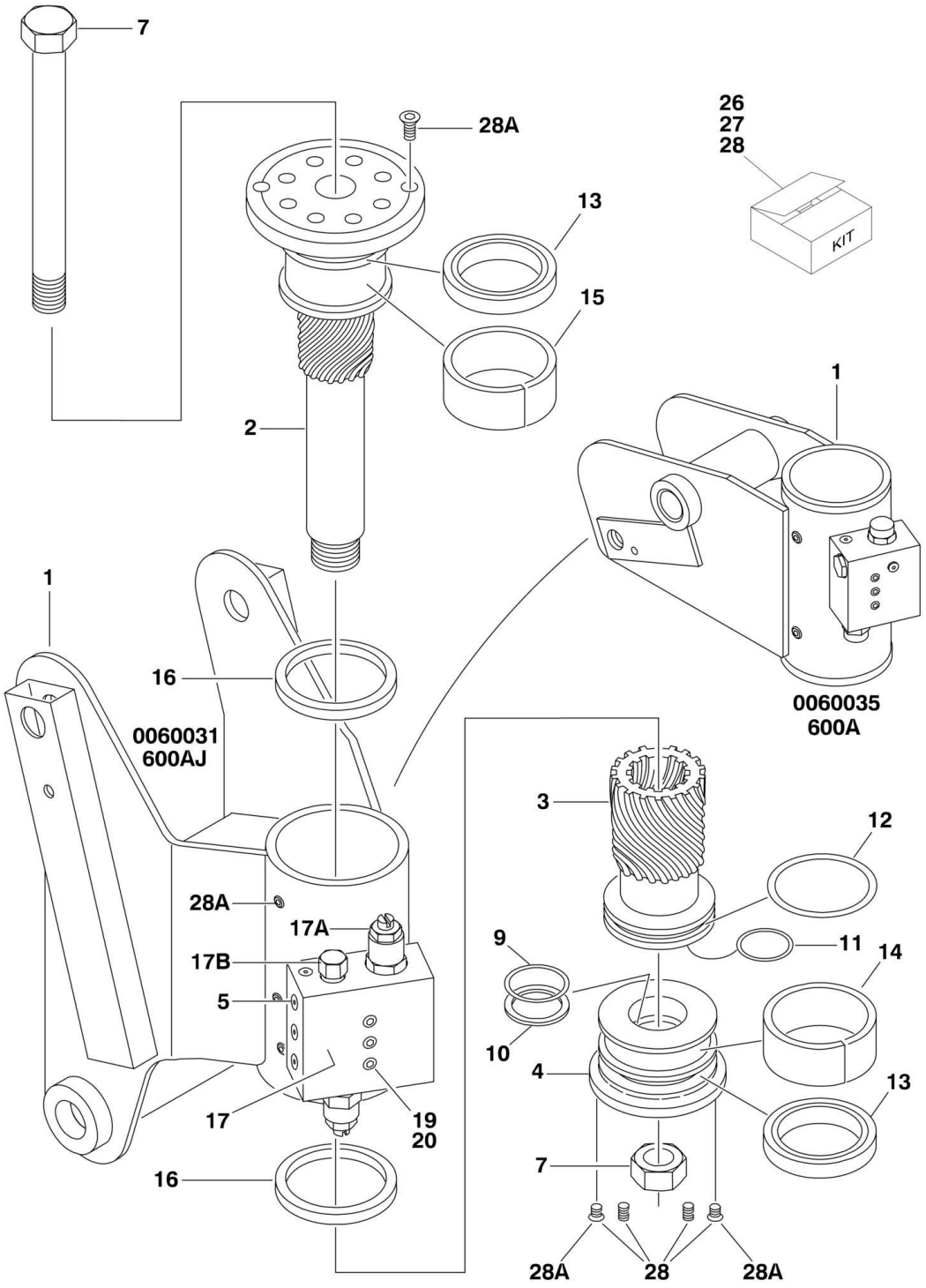

FIGURE 3-5. ROTATOR ASSEMBLIES (FRONT ENTRY PLATFORM)

ITEM	PART NUMBER	QTY	DESCRIPTION	REV
		Ref	**ROTATOR ASSEMBLIES**	
	0060035	Ref	**Rotator Assemblies 600A (Original Equipment)**	G
	0060076	Ref	**Rotator Assemblies 600A (Service Replacement)**	B
	0060031	Ref	**Rotator Assemblies 600AJ (Original Equipment)**	H
	0060074	Ref	**Rotator Assemblies 600AJ (Service Replacement)**	B
		Ref	**Note: Before ordering parts, identify whether original equipment rotator has been replaced with service replacement. Service replacement rotator uses spacer plate bolted on the top with 8 capscrews (Not shown - located at item 2). Original equipment rotator does not use spacer plate.**	
1	See Note	1	Housing/Ring Gear Assembly (Note: Not Available - Purchase Complete Assembly)	
2		Ref	Shaft Options:	
2	7017177	1	Shaft 0060035 Rotators	
2	7017117	1	Shaft 0060031 Rotators	
2	7017162	1	Shaft 0060076 & 0060074 Rotators	
2	See Note	1	Plate, Spacer (Not Shown) (0060076 & 0060074 Rotators Only) (Note: Not Available for Purchase)	
3		Ref	Piston/Sleeve Options:	
3	7017115	1	Piston/Sleeve 0060035 & 0060031 Rotators	
3	7017163	1	Piston/Sleeve 0060076 & 0060074 Rotators	
4		Ref	Cap, End Options:	
4	7017174	1	Cap, End 0060035 Rotators	
4	7017116	1	Cap, End 0060031 Rotators	
4	7017164	1	Cap, End 0060076 & 0060074 Rotators	
5	See Note	6	Plug, Port (Note: Not Available for Purchase)	
6	7017142	2	Plug	
7	7017119	1	Bolt 1in-8NC x 11in	
7	3272605	AR	Locknut 1in-8NC	
9	See Note	1	Seal, Cap (Note: Use Item 26)	
10	See Note	1	Ring, Back-up (Cap) (Note: Use Item 26)	
11	See Note	1	Seal, Rod (Note: Use Item 26)	
12	See Note	1	Seal, Piston (Note: Use Item 26)	
13	See Note	2	Packing, Bearing (Note: Use Item 26)	
14	See Note	1	Bearing, Cap (Note: Use Item 27)	
15	See Note	1	Bearing, Shaft (Note: Use Item 27)	
16	See Note	2	Thrustwasher (Note: Use Item 27)	
17		Ref	Valve Assembly Options:	
17	7017101	1	Valve Assembly 0060035 & 0060031 Rotators	
17	7017183	1	Valve Assembly 0060076 & 0060074 Rotators	
17A		Ref	Cartridge, Valve Options:	
17A	7011331	2	Cartridge for Helac p/n 24736	
17A	7017193	2	Cartridge for Helac p/n 27600	
17A	2900770	2	Seal Kit - 7011331 Valve	
17A	See Note	2	Seal Kit - 7017193 Valve (Note: Not Available for Purchase)	
17B		Ref	Cartridge, Valve Options:	
17B	7011332	AR	Cartridge for Helac p/n 24736	
17B	See Note	1	Cartridge for Helac p/n 27600 (Not Shown - Located on Side of Valve Block) (Note: Not Available for Purchase)	
17B	7011346	2	Seal Kit - 7011332 Valve	

ITEM	PART NUMBER	QTY	DESCRIPTION	REV
17B	See Note	1	Seal Kit - Valve Located on Side of Block (Note: Not Available for Purchase)	
18	7017118	2	Setscrew (0060035 & 0060031 Rotators Only)	
19	See Note	3	Bolt 1/4 x 1-1/2 (Grade 8) (Note: Not Available for Purchase)	
20	3790110	3	O-Ring (Not Shown - Located between Valve and Actuator Housing)	
26		Ref	Seal Kit Options (Includes Items 9-13):	
26	7017157	1	Seal Kit 0060035 & 0060031 Rotators	
26	7017158	1	Seal Kit 0060076 & 0060074 Rotators (Includes Hardware Kit)	
27		Ref	Bearing Kit Options (Includes Items 14-16):	
27	7017106	1	Bearing Kit 0060035 Rotators (600A Actual Production)	
27	7017156	1	Bearing Kit 0060031 Rotators (600AJ Actual Production)	
27	7017159	1	Bearing Kit 0060076 & 0060074 Rotators (Recommended Replacement)	
28	7017142	1	Hardware Kit for 0060035 & 0060031 Rotators (Includes End Cap Dowel Pins and Items 6 & 28A)	
28	See Note	1	Hardware Kit for 0060075 & 0060076 Rotators (Note: Use p/n 7017158)	
28A	70001697	6	Screw, Countersunk 1/4in-20NC x 3/8in Grade 8	

FIGURE 3-6. ROTATOR ASSEMBLIES (SIDE ENTRY PLATFORM)

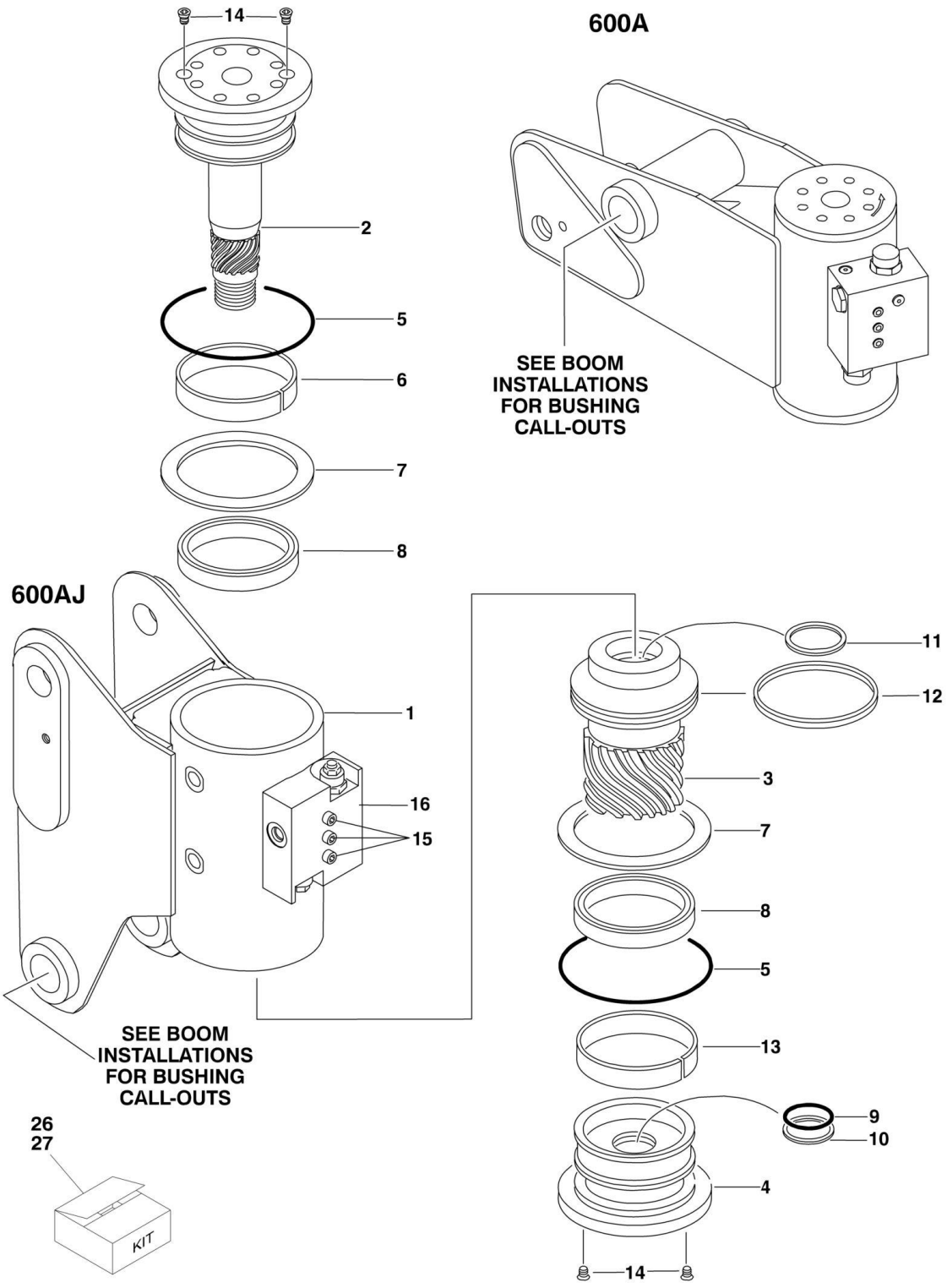

FIGURE 3-6. ROTATOR ASSEMBLIES (SIDE ENTRY PLATFORM)

ITEM	PART NUMBER	QTY	DESCRIPTION	REV
		Ref	**ROTATOR ASSEMBLIES**	
	0060068	Ref	**Rotator Assemblies 600A**	A
	0060066	Ref	**Rotator Assemblies 600AJ**	C
1	See Note	1	Housing/Ring Gear Assembly (Note: Not Available - Purchase Complete Assembly)	
2	7017162	1	Weldment, Shaft	
3	7017163	1	Piston/Sleeve Assembly	
4	7017164	1	Cap, End	
5	See Note	NSS	O-Ring (Note: Use Item 26)	
6	See Note	NSS	Bearing, Shaft (Note: Use Item 27)	
7	See Note	NSS	Thrustwasher (Note: Use Item 27)	
8	See Note	NSS	Packing, Bearing (Note: Use Item 26)	
9	See Note	NSS	Seal, Cap (Note: Use Item 26)	
10	See Note	NSS	Ring, Back-up Cap (Note: Use Item 26)	
11	See Note	NSS	Seal, Rod (Note: Use Item 26)	
12	See Note	NSS	Seal, Piston (Note: Use Item 26)	
13	See Note	NSS	Bearing, Cap (Note: Use Item 27)	
14	70001697	6	Capscrew 1/4in-20NC x 3/8in (Grade 8)	
15	See Note	3	Bolt 1/4 x 1-1/2 (Grade 8) (Note: Not Available for Purchase)	
16	7017183	1	Valve Assembly	
16	7017193	2	Cartridge, Valve	
16	See Note	2	Seal Kit - 7017193 Valve (Note: Not Available - Purchase Complete Assembly)	
16	See Note	1	Cartridge, Valve (Not Shown - Located on Side of Block) (Note: Not Available - Purchase Complete Assembly)	
16	See Note	1	Seal Kit - Valve Located on Side of Block (Note: Not Available - Purchase Complete Assembly)	
26	7017158	1	Seal Kit (Includes Items 5, 8-12 and Hardware Kit)	
27	7017159	1	Bearing Kit (Includes Items 6, 7 & 13)	

FIGURE 3-7. VALVES AND SWITCHES INSTALLATION (BOOM MOUNTED)

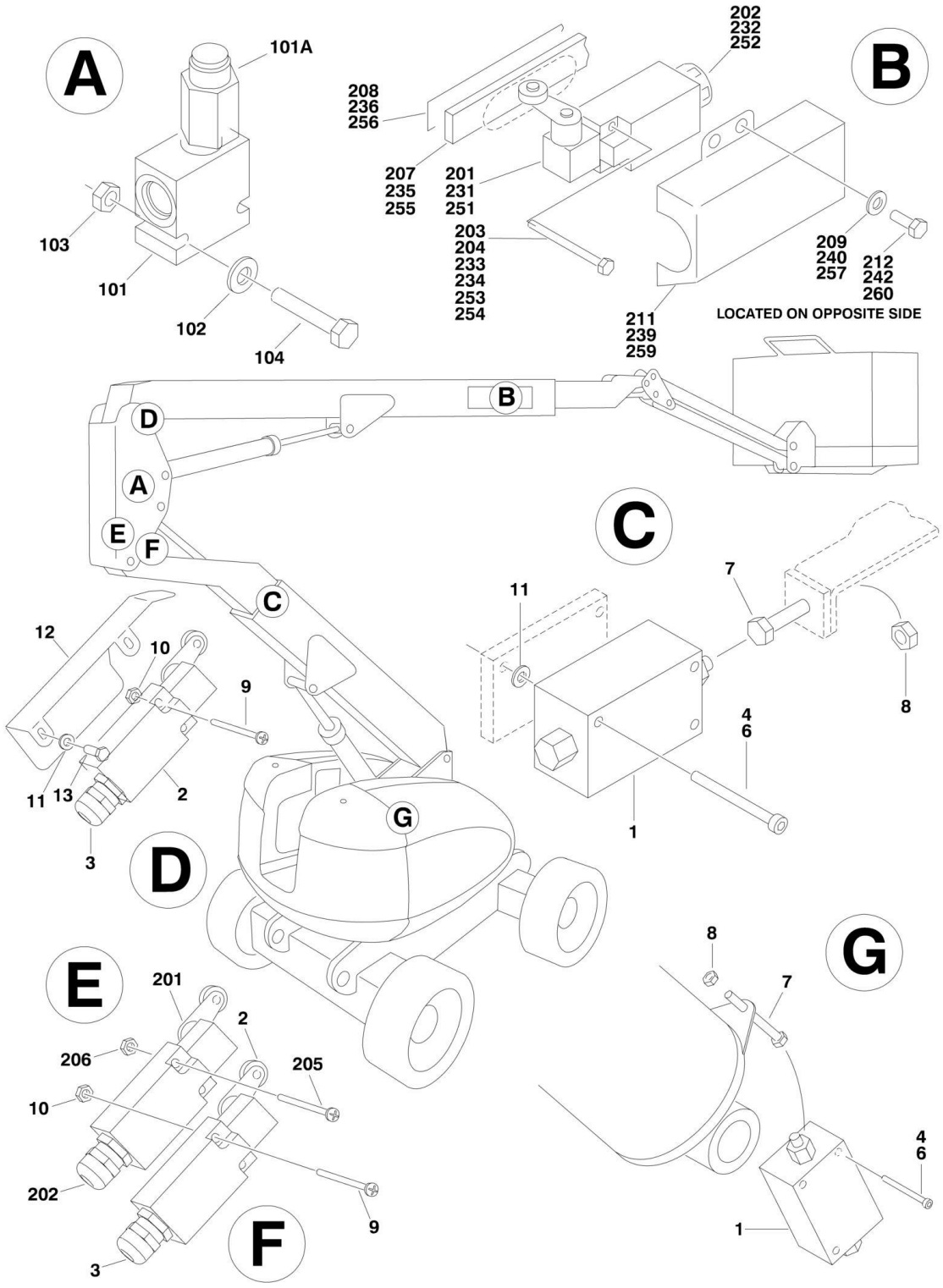

FIGURE 3-7. VALVES AND SWITCHES INSTALLATION (BOOM MOUNTED)

ITEM	PART NUMBER	QTY	DESCRIPTION	REV
	0255438	Ref	**BOOM VALVES AND LIMIT SWITCHES INSTALLATION (STANDARD)**	9-I
1	4641139	2	Valve, Manual 2-Way	
2		Ref	Switch, Limit Options: (Note: P/N 4360578 does not include #3 Connector - Purchase Separately)	
2	4360322	NLA	Switch, Limit (Use p/n 4360578) **(SN 0300069000 through 0300074444)**	
2	4360549	NLA	Switch, Limit (Use p/n 4360578) **(SN 0300074445 through 0300080874)**	
2	4360578	2	Switch, Limit **(SN 0300080875 through 0300087000)**	
3		Ref	Connector, Strain Relief Options:	
3	4460428	2	Use with p/n 4360322 Switch	
3	4460968	2	Use with p/n 4360549 & 4360578 Switches	
4	3931430	6	Bolt, Socket Head 1/4in-20NC x 1-7/8in	
6	0100011	AR	Compound, Locking	
7	0630427	2	Bolt, Special	
8	3311801	3	Nut 1/2in-13NC	
9	3930824	4	Bolt, Socket Head #8-32NC x 1-1/2in	
10	3310801	4	Nut #8-32NC	
11	4751400	8	Flatwasher 1/4in Regular	
12	1670819	1	Cover, Switch	
13	3931408	2	Bolt, Socket 1/4in-20NC x 1/2in	
		Ref	**VALVES INSTALLATION**	
	0255440	Ref	**Valves Installation 600A 2WS (SN 0300069000 through 0300081835)**	13
	0274276	Ref	**Valves Installation 600A 2WS (SN 0300081836 through 0300084828)**	1
	0274309	Ref	**Valves Installation 600A 2WS (SN 0300084829 through 0300087000)**	1
	0255442	Ref	**Valves Installation 600A 4WS (SN 0300069000 through 0300081835)**	12
	0274278	Ref	**Valves Installation 600A 4WS (SN 0300081836 through 0300084828)**	1
	0274311	Ref	**Valves Installation 600A 4WS (SN 0300084829 through 0300087000)**	1
	0255441	Ref	**Valves Installation 600AJ 2WS (SN 0300069000 through 0300081835)**	15
	0274277	Ref	**Valves Installation 600AJ 2WS (SN 0300081836 through 0300084828)**	1
	0274310	Ref	**Valves Installation 600AJ 2WS (SN 0300084829 through 0300087000)**	1
	0255443	Ref	**Valves Installation 600AJ 4WS (SN 0300069000 through 0300081835)**	12
	0274279	Ref	**Valves Installation 600AJ 4WS (SN 0300081836 through 0300084828)**	1
	0274312	Ref	**Valves Installation 600AJ 4WS (SN 0300084829 through 0300087000)**	1
101	4640929	1	Valve Assembly (Relief)	
101A	7012970	1	Cartridge	
101A	7012953	1	Seal Kit - 7012970 Cartridge	
102	4711400	2	Flatwasher 1/4in Thin	
103	3311405	2	Locknut 1/4in-20NC	
104	0641424	2	Bolt 1/4in-20NC x 3in	

ITEM	PART NUMBER	QTY	DESCRIPTION	REV
	0255699	Ref	**LIMIT SWITCHES INSTALLATION - 600A DUAL CAPACITY**	5-C
201		Ref	Switch, Limit Options: (Note: P/N 4360578 does not include #3 Connector - Purchase Separately)	
201	4360322	NLA	Switch, Limit (Use p/n 4360578) **(SN 0300069000 through 0300074444)**	
201	4360549	NLA	Switch, Limit (Use p/n 4360578) **(SN 0300074445 through 0300080874)**	
201	4360578	2	Switch, Limit **(SN 0300080875 through 0300087000)**	
202		Ref	Connector, Strain Relief Options:	
202	4460428	2	Use with p/n 4360322 Switch	
202	4460968	2	Use with p/n 4360549 & 4360578 Switches	
203	0100035	AR	Compound, Locking	
204	3930816	2	Bolt, Socket Head #8-32NC x 1in	
205	3930824	2	Bolt, Socket Head #8-32NC x 1-1/2in	
206	3310805	2	Locknut #8-32NC	
207	0362529	1	Bar, Fiberglass	
208	4420060	9.8 ft/3m	Tape, Foam	
209	4751400	4	Flatwasher 1/4in Regular	
211	1670824	1	Cover, Switch	
212	0641403	4	Bolt 1/4in-20NC x 3/8in	
	0257894	Ref	**8 METER SWITCH INSTALLATIONS**	4
231		Ref	Switch, Limit Options:	
231	4360322	NLA	Switch, Limit (Use p/n 4360578) **(SN 0300069000 through 0300074444)**	
231	4360549	NLA	Switch, Limit (Use p/n 4360578) **(SN 0300074445 through 0300080874)**	
231	4360578	2	Switch, Limit **(SN 0300080875 through 0300087000)**	
232	4460428	1	Connector, Strain Relief	
233	0100035	AR	Compound, Locking	
234	3930816	2	Bolt, Socket Head #8-32NC x 1in	
235	0362612	1	Bar, Fiberglass	
236	4420060	7.1 in/2.2m	Tape, Foam	
237	1060016	18 ft/5.5m	Cable, Electrical - 16/3	
239	1670820	1	Cover, Switch	
240	4751400	4	Flatwasher 1/4in Regular	
242	0641403	4	Bolt 3/8in-16NC x 3/8in	
243	3539055	1	Plate (Welded on part) (Not Shown)	
		Ref	**TRANSPORT POSITION SWITCHES INSTALLATION (CE SPEC ONLY)**	
	0256331	Ref	**Transport Position Switches Installation 600A**	4-A
	0256336	Ref	**Transport Position Switches Installation 600AJ**	4-A
251		Ref	Switch, Limit Options: (Note: P/N 4360578 does not include #3 Connector - Purchase Separately)	
251	4360322	NLA	Switch, Limit (Use p/n 4360578) **(SN 0300069000 through 0300074444)**	
251	4360549	NLA	Switch, Limit (Use p/n 4360578) **(SN 0300074445 through 0300080874)**	
251	4360578	2	Switch, Limit **(SN 0300080875 through 0300087000)**	
252		Ref	Connector, Strain Relief Options:	
252	4460428	2	Use with p/n 4360322 Switch	
252	4460968	2	Use with p/n 4360549 & 4360578 Switches	
253	0100035	AR	Compound, Locking	
254	3930816	2	Bolt, Socket Head #8-32NC x 1in	

ITEM	PART NUMBER	QTY	DESCRIPTION	REV
255		Ref	Bar, Fiberglass Options:	
255	0362611	1	Bar, Fiberglass 600A	
255	0362529	1	Bar, Fiberglass 600AJ	
256	4420060	AR	Tape, Foam	
256	4420060	161 in/4m	Tape, Foam 600A	
256	4420060	127 in/3.2m	Tape, Foam 600AJ	
257	4751400	4	Flatwasher 1/4in Regular	
259	1670824	1	Cover, Switch	
260	0641403	4	Bolt 3/8in-16NC x 3/8in	

SECTION 4 - PLATFORM

FIGURE 4-1. PLATFORM ASSEMBLIES (FRONT ENTRY PLATFORM)

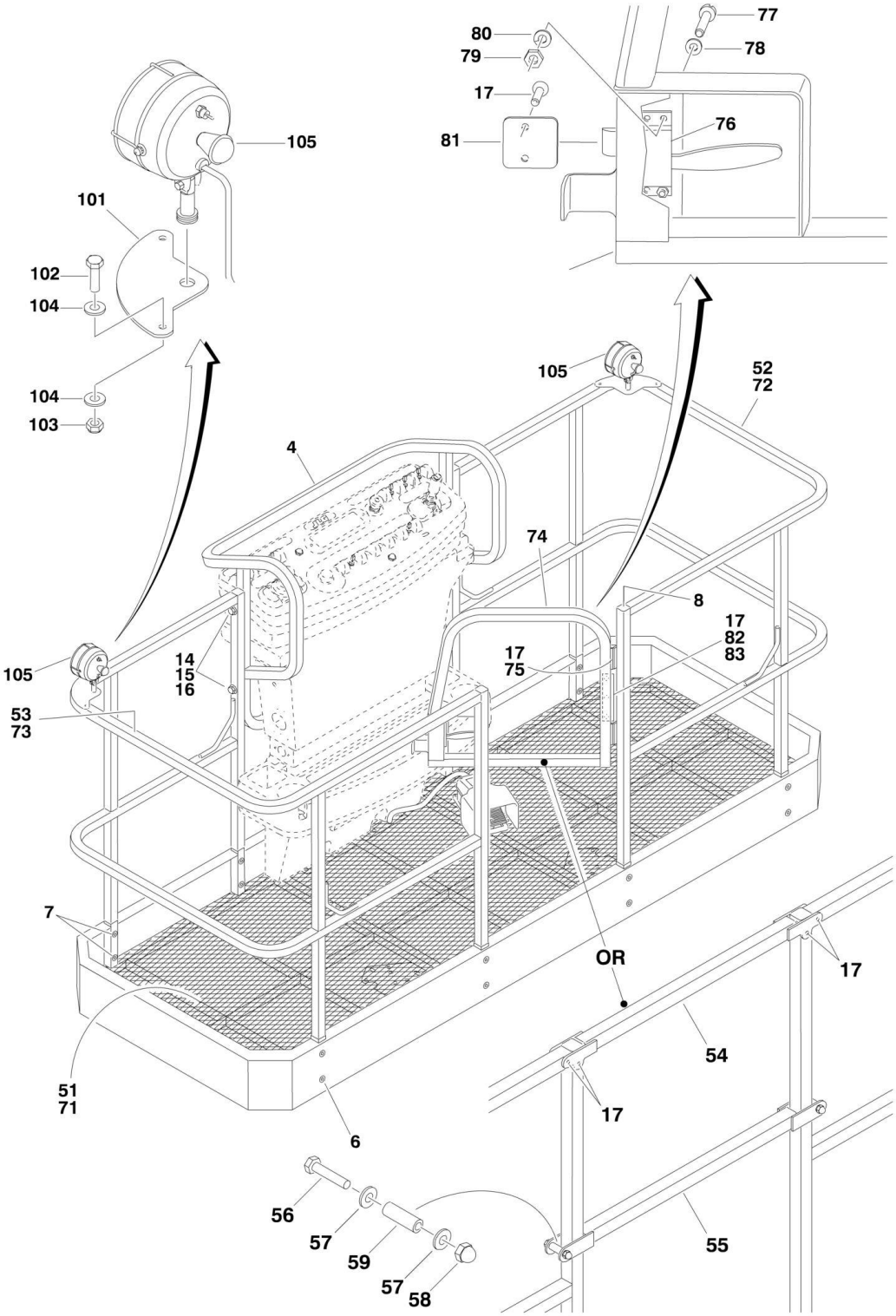

FIGURE 4-1. PLATFORM ASSEMBLIES (FRONT ENTRY PLATFORM)

ITEM	PART NUMBER	QTY	DESCRIPTION	REV
		Ref	**PLATFORM OPTIONS:**	
	3510751	Ref	**5ft/1.52m - With Self-Closing Gate (CE Specs)**	2
	3510728	Ref	**5ft/1.52m - With Self-Closing Gate (Australian Spec)**	3
	3510499	Ref	**6ft/1.83m - With Drop Bar (CE Specs)**	3-A
	3510763	Ref	**6ft/1.83m - With Drop Bar (Mesh to Mid Rail) (CE Specs)**	1-A
	3510537	Ref	**6ft/1.83m - With Self-Closing Gate (CE Spec)**	2
	3510542	Ref	**6ft/1.83m - (Australian Spec)**	3
	3510500	Ref	**8ft/2.44m - With Drop Bar (CE Specs)**	2-A
	3510764	Ref	**8ft/2.44m - With Drop Bar (Mesh to Mid Rail) (CE Specs)**	1-A
	3510538	Ref	**8ft/2.44m - With Self-Closing Gate (CE Spec)**	2
	3510543	Ref	**8ft/2.44m - (Australian Spec)**	3
		Ref	**PLATFORM ASSEMBLY (STANDARD PARTS)**	
4	4845328	1	Rail Weldment - Back	
6	3900207	AR	Fastener	
		Ref	**Note: P/N 3900207 Fastener may be replaced with p/n 0641416 bolt, p/n 4751400 flatwasher, p/n 3311405 locknut and p/n 3300151 acorn type nut. Acorn type nut required to meet industry safety requirements.**	
7	3300393	AR	Collar	
8	3520072	4	Plug, Cap	
14	0641524	4	Bolt 5/16in-18NC x 3in	
15	3311505	4	Locknut 5/16in-18NC	
16	4751500	4	Flatwasher 5/16in Regular	
17	2080040	AR	Fastener	
17	7016652	1	Fastener Tool (Small Fasteners Only)	
		Ref	**PLATFORM ASSEMBLIES - WITH DROP BAR (VARIABLE PARTS)**	
51		Ref	Floor Weldment Options:	
51	4846184	1	5ft/1.52m Platforms	
51	4845290	1	6ft/1.83m Platforms	
51	4845289	1	8ft/2.44m Platforms	
52		Ref	Rail Weldment - Right Side Options:	
52	4846194	1	5ft/152m Platforms	
52	4844955	1	6ft/1.83m Platforms	
52	4846228	1	6ft/1.83m Platforms (Mesh to Mid Rail)	
52	4844924	1	8ft/2.44m Platforms	
52	4846240	1	8ft/2.44m Platforms (Mesh to Mid Rail)	
53		Ref	Rail Weldment - Left Side Options:	
53	4846195	1	5ft/1.52m Platforms	
53	4844956	1	6ft/1.83m Platforms	
53	4846229	1	6ft/1.83m Platforms (Mesh to Mid Rail)	
53	4844925	1	8ft/2.44m Platforms	
53	4846241	1	8ft/2.44m Platforms (Mesh to Mid Rail)	
54	4845287	1	Rail Weldment - Top	
55	4845288	1	Bar, Drop	
56	0641418	2	Bolt 1/4in-20NC x 2-1/4in	
57	4740411	4	Washer, Nylon	
58	3300151	2	Nut, Acorn 1/4in-20NC	
59	0961845	2	Bushing	
60	4420055	7 in/18cm	Tape	

SECTION 4 - PLATFORM

ITEM	PART NUMBER	QTY	DESCRIPTION	REV
		Ref	**PLATFORM ASSEMBLIES WITH SELF-CLOSING GATE (VARIABLE PARTS)**	
71		Ref	Floor Weldment Options:	
71	4846101	1	5ft/1.52m Platforms (Australian Spec)	
71	4845290	1	6ft/1.83m Platforms (CE Specs)	
71	4844954	1	6ft/1.83m Platforms (Australian Spec)	
71	4845289	1	8ft/2.44m Platforms (CE Spec)	
71	4844928	1	8ft/2.44m Platforms (Australian Spec)	
72		Ref	Rail Weldment - Right Side Options:	
72	4846194	1	5ft/152m Platforms	
72	4844955	1	6ft/1.83m Platforms	
72	4844924	1	8ft/2.44m Platforms	
73		Ref	Rail Weldment - Left Side Options:	
73	4846195	1	5ft/1.52m Platforms	
73	4844956	1	6ft/1.83m Platforms	
73	4844925	1	8ft/2.44m Platforms	
74	4845426	1	Gate Weldment	
75	2600287	2	Hinge	
76	2940074	1	Latch	
77	3911016	4	Screw, Machine #10-24NC x 2in	
78	4751000	4	Flatwasher #10 Regular	
79	3311005	4	Locknut #10-24NC	
80	Not Required	0	Lockwasher	
81	3539685	1	Plate, Catch	
82		Ref	Stop, Gate Options:	
82	4220168	1	CE Spec	
82	4220165	1	Australian Spec	
83	4060803	6 ft/1.8m	Trimlock	
		Ref	**WORKLIGHTS INSTALLATIONS (OPTIONAL)**	
	0270814	Ref	**Worklights Installation (SN 0300069000 through 0300074444)**	3-E
	0273492	Ref	**Worklights Installation (SN 0300074445 through 0300087000)**	C
101	3536089	2	Plate, Mounting	
102	0641414	4	Bolt 1/4in-20NC x 1-3/4in	
103	3311405	4	Locknut 1/4in-20NC	
104	4711400	8	Flatwasher 1/4in Thin	
105	2920140	2	Worklight	
105	7016399	2	Bulb, Replacement (1 Per Worklight)	
106	4240099	10	Tie-Strap	
107	2820035	9 ft/2.8m	Loom, Vinyl (Not Shown)	
108	4460042	2	End, Terminal (Not Shown)	
109		Ref	Connector, Strain Relief Options (Not Shown):	
109	4460598	1	Connector, Strain Relief **(SN 0300069000 through 0300074444)**	
109	4460426	1	Connector, Strain Relief **(SN 0300074445 through 0300087000)**	

FIGURE 4-2. PLATFORM ASSEMBLIES - SIDE ENTRY

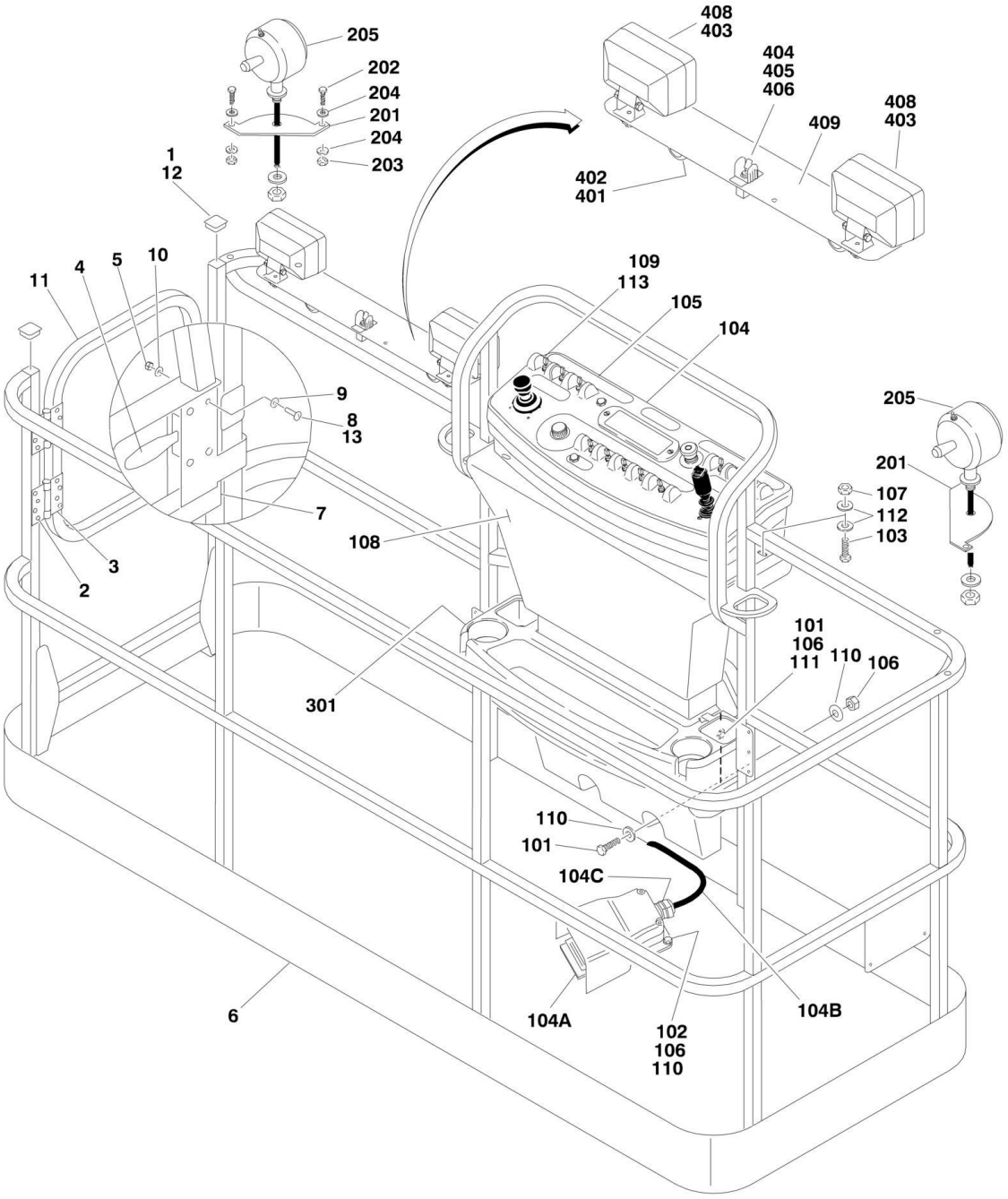

FIGURE 4-2. PLATFORM ASSEMBLIES - SIDE ENTRY

ITEM	PART NUMBER	QTY	DESCRIPTION	REV
		Ref	**PLATFORM ASSEMBLIES:**	
	3510830	NLA	**2.6ft x 4ft (0.70m x 1.22m) with No Mesh (Use p/n 1001144027)**	B-E
	3510831	NLA	**2.6ft x 5ft (0.70m x 1.52m) with No Mesh (Use p/n 1001144026)**	B-E
	3510832	Ref	**2.6ft x 6ft (0.70m x 1.83m) with No Mesh) (SN 0300069000 through 0300077490)**	E
	3510833	NLA	**3ft x 6ft (0.9m x 1.83m) with No Mesh (Use p/n 1001144024)**	B-E
	3510822	NLA	**3ft x 8ft (0.9m x 2.44m) with No Mesh (Use p/n 1001144023)**	B-E
		Ref	**Note: Original Equipment platform may have been replaced with Service Replacement platform. Identify platform before ordering parts.**	
		Ref	**Note: Platform and Mesh must be ordered separately for Platforms with Mesh. See SPECIAL OPTIONS SECTION for Mesh Installations.**	
		Ref	**Note: When replacing 8ft/2.44m platform with Soft Touch option, new Soft Touch Rail p/n 4846673 must be purchased to accommodate limit switch locations.**	
		Ref	**Note: When replacing platform on machines with SkyCutter option, new bracket p/n 1001145405 must be purchased to accommodate SkyCutter components.**	
1	0100040	AR	Sealant, Adhesive **(SN 0300069000 through 0300073445)**	
2	2080040	16	Fastener, Huck	
3	2600281	2	Hinge, Self-Closing	
4	2940074	1	Latch	
5	3311001	4	Nut #10-24NC **(SN 0300069000 through 0300077334)**	
6	See Note	1	Platform Weldment (Note: Purchase Platform Assembly)	
7	3520072	AR	Cap-Plug	
8		Ref	Hardware Options:	
8	3911008	4	Screw #10-24NC x 1in **(SN 0300069000 through 0300077334)**	
8	3820020	4	Pop Rivet **(SN 0300077335 through 0300087000)**	
9	4751000	4	Flatwasher #10 Regular	
10	4761000	4	Lockwasher #10 **(SN 0300069000 through 0300077334)**	
11		Ref	Gate Weldment Options:	
11	4846452	1	Gate for Original Equipment Platform p/n 3510822, 3510830, 3510831, 3510833	
11	1001144629	1	Gate for Service Replacement Platform p/ns 1001144023, 1001144024, 1001144026, 1001144027	
12	3520198	2	Square-Plug **(SN 0300073445 through 0300087000)**	
13	0100011	AR	Compound, Locking **(SN 0300069000 through 0300077334)**	
		Ref	**CONSOLE BOX INSTALLATIONS**	
	0271945	Ref	**Console Box Installations 2WD**	A
	0271941	Ref	**Console Box Installations 4WD**	A
101	0641406	4	Bolt 1/4in-20NC x 3/4in	
102	0641408	3	Bolt 1/4in-20NC x 1in	
103	0641610	4	Bolt 3/8in-16NC x 1-1/4in	
104	0861517	1	Platform Console Box Assembly (See PLATFORM CONSOLE ASSEMBLY for Breakdown)	
104A	0272970	1	Footswitch Assembly (Includes Footswitch and Items 104B & 104C)	B
		Ref	**Note: Assembly p/n 0272970 may use either p/n 4360031 or p/n 1001117320. If Original Equipment was replaced as an "assembly," p/n 1001117320 may have been used as part of the Service Replacement. Identify component before ordering parts.**	

ITEM	PART NUMBER	QTY	DESCRIPTION	REV
104A		Ref	Footswitch Less Cable Options:	
104A	4360031	1	Original Equipment	
104A	1001117320	1	Service Replacement	
104A		Ref	Block, Contact Options (See Note Above):	
104A	7000625	2	Contact Block for 4360031 Footswitch	
104A	70003483	1	Contact Block for 1001117320 Footswitch	
104B	1060918	7 ft/2.14m	Cable, Electrical - 18/3	
104C	4460071	1	Connector, Strain Relief	
105		Ref	Decal - Horn Options:	
105	1702563	1	Decal - Horn 2WD	
105	1702676	1	Decal - Horn 4WD	
106	3311405	7	Locknut 1/4in-20NC	
107	3311605	4	Locknut 3/8in-16NC	
108	3380434	1	Panel, Decal Mount	
109	4360331	1	Switch (4WD)	
110	4740362	7	Washer, Fender 1/4in	
111	4751400	4	Flatwasher 1/4in Regular	
112	4751600	8	Flatwasher 3/8in Regular	
113	3790012	1	O-Ring	
		Ref	**WORKLIGHTS INSTALLATIONS (optional)**	
	0270814	Ref	**Worklights Installations (SN 0300069000 through 0300074444)**	3-E
	0273492	Ref	**Worklights Installations (SN 0300074445 through 0300087000)**	B
201	3536089	2	Plate, Mounting	
202	0641414	4	Bolt 1/4in-20NC x 1-3/4in	
203	3311405	4	Locknut 1/4in-20NC	
204	4711400	8	Flatwasher 1/4in Thin	
205	2920140	2	Worklight	
205	7016399	2	Bulb, Replacement (1 Per Worklight)	
206	4240099	10	Tie-Strap (Not Shown)	
207	2820035	9	Loom, Vinyl (Not Shown)	
209		Ref	Connector, Strain Relief Options (Not Shown - Located at Console Box):	
209	4460598	1	Relief, Strain **(SN 0300069000 through 0300074444)**	
209	4460426	1	Connector, Strain Relief **(SN 0300074445 through 0300087000)**	
		Ref	**TRAY INSTALLATIONS (OPTIONAL)**	
301	1580012	1	Tray, Storage (Center)	
302	1580013	1	Tray, Storage (Rail Mounted - Not Shown)	
	0274180	Ref	**FLOODLIGHT INSTALLATION**	A
401	0641518	2	Bolt 5/16in-18NC x 2-1/4in	
402	2560173	2	Handle	
403	2920157	2	Lamp, Work Light	
404	3250585	1	Nameplate - Light On	
405	4060802	1	Guard, Switch	
406	4360336	1	Switch, Toggle	
407	4420037	1	Tape, Insulation (Not Shown)	
408	4751800	2	Flatwasher 1/2in Regular	
409	4846561	1	Mount, Light	
410	4922892	1	Harness 12/3 (Lower Boom) (Not Shown)	
411	4922894	1	Harness 12/3 (Upper Boom) (Not Shown)	

FIGURE 4-3. PLATFORM COMPONENTS INSTALLATION (FALL ARREST PLATFORM)

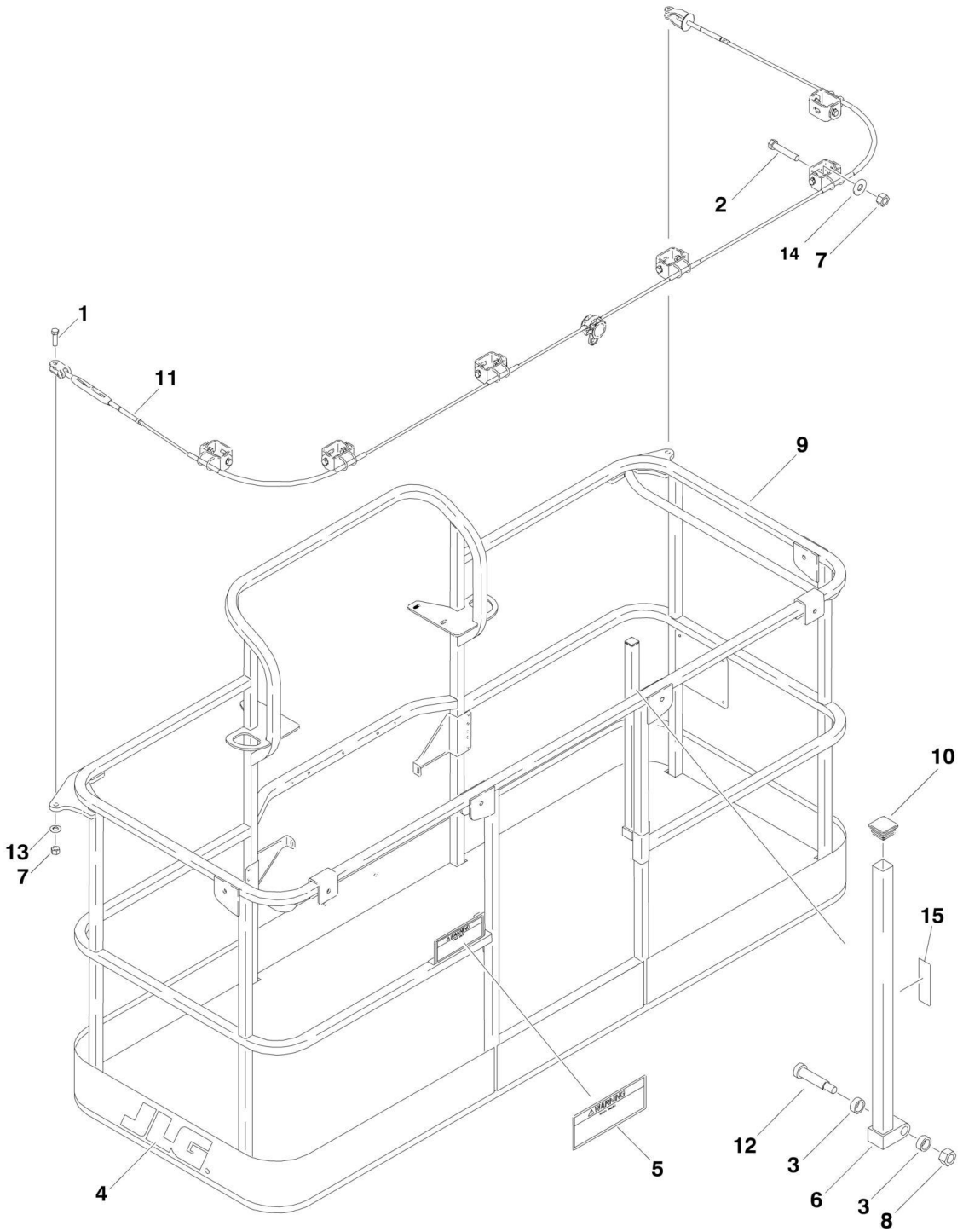

FIGURE 4-3. PLATFORM COMPONENTS INSTALLATION (FALL ARREST PLATFORM)

ITEM	PART NUMBER	QTY	DESCRIPTION	REV
	3510868	Ref	**PLATFORM ASSEMBLY (FALL ARREST)**	B
1	0681814	2	Bolt 1/2in-13NC x 1-3/4in (Grade 8)	
2	0681822	6	Bolt 1/2in-13NC x 2-3/4in (Grade 8)	
3	0962270	2	Bearing, Oilite	
4	1702773	1	Decal - JLG	
5	1705014	1	Decal - Safety	
6	2410014	1	Gate Weldment	
7	3271805	8	Locknut 1/2in-13NC (Grade 8)	
8	3311605	1	Locknut 3/8in-16NC	
9	See Note	1	Platform Weldment (Note: Purchase Platform Assembly)	
10	3520072	1	Cap-Plug	
11	3890040	1	Cable, Fall Arrest	
12	3900054	1	Bolt 1/2in-13NC x 1-3/4in	
13	4711800	2	Flatwasher 1/2in Thin	
14	4751800	6	Flatwasher 1/2in Regular	
15	1706385	1	Decal - Drop Bar **(SN 0300085921 through 0300087000)**	

FIGURE 4-4. PLATFORM CONSOLE ASSEMBLY

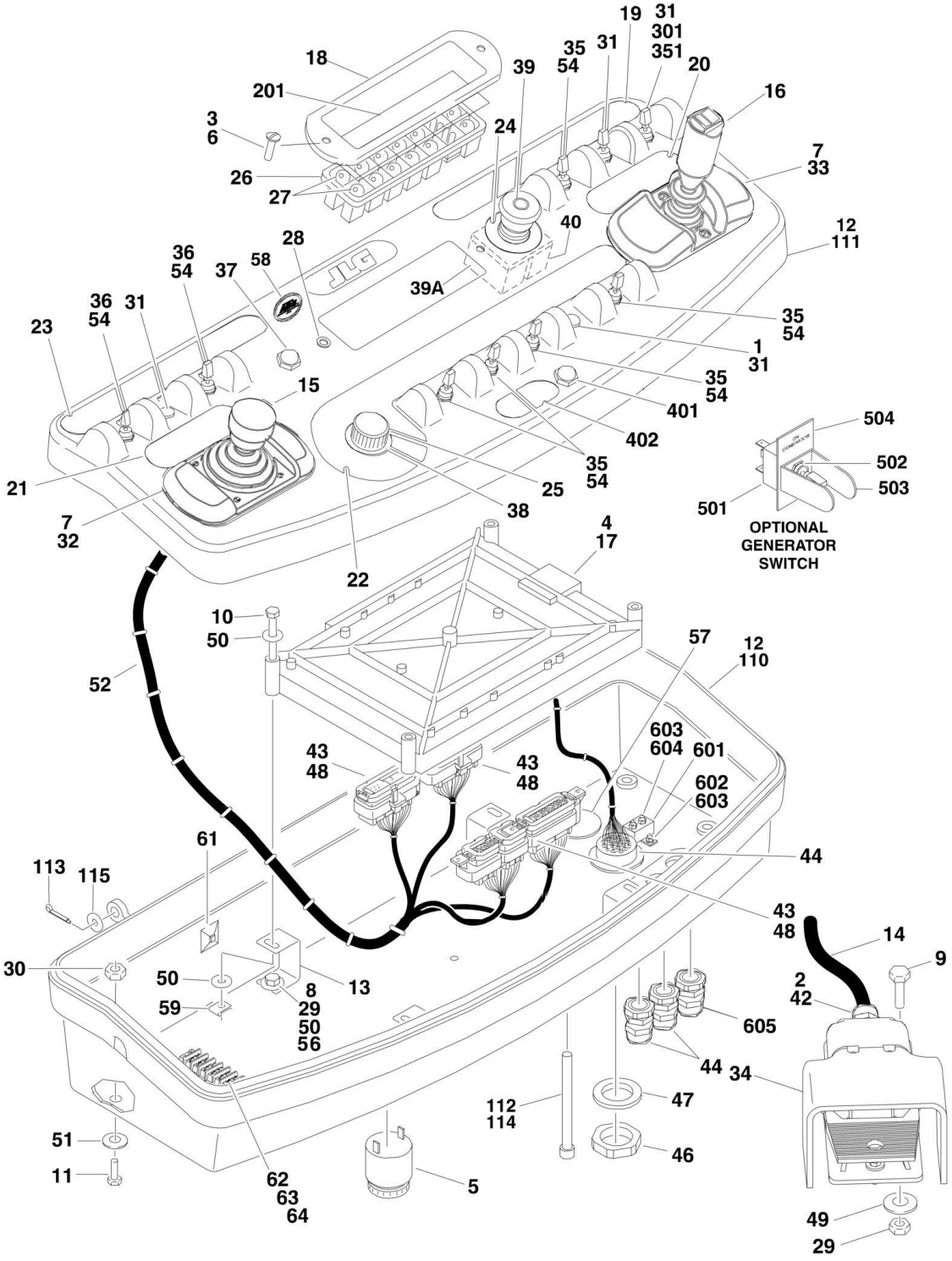

FIGURE 4-4. PLATFORM CONSOLE ASSEMBLY

ITEM	PART NUMBER	QTY	DESCRIPTION	REV
	0861517	Ref	**CONSOLE BOX AND FOOTSWITCH ASSEMBLIES**	G
1	0100009	AR	Sealant	
2	0100020	AR	Sealant	
3	0100035	AR	Compound, Locking	
4	0100048	AR	Grease, Dielectric	
5	0140011	1	Alarm	
6	0630464	2	Screw, Button Head #10-24NC x 1/2in	
7	0641404	8	Bolt 1/4in-20NC x 1/2in	
8	0641406	4	Bolt 1/4in-20NC x 3/4in	
9	0641408	3	Bolt 1/4in-20NC x 1in	
10	0641414	4	Bolt 1/4in-20NC x 1-3/4in	
11	0641610	4	Bolt 3/8in-16NC x 1-1/4in	
12	0861537	1	Box, Console (See Items 101-115 for Breakdown)	
13	0902751	4	Bracket, Card Support	
14	1060918	8 ft/2.4m	Cable	
15	1600317	NLA	Controller Assembly (Lift and Swing) (See CONTROLLER ASSEMBLY (LIFT AND SWING) for Breakdown) (Use p/n 1001129555)	
15	1001118417	NLA	Controller Assembly (Lift and Swing) (See CONTROLLER ASSEMBLY (LIFT AND SWING) for Breakdown) (Use p/n 1001129555)	
16	1600318	NLA	Controller Assembly (Drive and Steer) (See CONTROLLER ASSEMBLY (DRIVE AND STEER) for Breakdown) (Use p/n 1001212415)	
17		Ref	Controller, Module (Re-calibration Required when Replaced) Options:	
17	1600313	NLA	Controller, Module (Use p/n 1600375) **(SN 0300069000 through 0300077489)**	
17	1600375	1	Controller, Module **(SN 0300077490 through 0300087000)**	
18	1670829	1	Bezel	
19		Ref	Decal (Stop) Options:	
19	1702564	1	Decal (Stop) **(SN 0300069000 through 0300073027)**	
19	1704997	1	Decal (Stop) **(SN 0300073028 through 0300087000)**	
20	1702565	1	Decal (Drive and Steer)	
21	1702566	1	Decal (Lift and Swing)	
22	1702567	1	Decal (Function Speed)	
23	1702676	1	Decal (Horn)	
24	1704260	1	Decal - EMS	
25	2560136	1	Handle, Knob	
26	2760105	1	Housing, Display Light	
27	2920129	12	Bulb, Light	
28	3300408	2	Locknut, Nylon Insert	
29	3311405	11	Locknut 1/4in-20NC	
30	3311605	4	Locknut 3/8in-16NC	
31	3520054	4	Plug, Hole	
32	4340678	1	Support, Hand	
33	4340684	1	Support, Hand	
34	4360031	1	Footswitch	
34	7000625	2	Block, Contact	
35	4360328	6	Switch, Toggle	
36	4360331	1	Switch, Toggle	

ITEM	PART NUMBER	QTY	DESCRIPTION	REV
37	4360387	1	Switch, Pushbutton	
38	4360407	1	Controller, Speed	
38	See Note	1	Gasket "Top Hat" (Included with Switch) (Note: Not Available - Purchase Complete Controller)	
		Ref	**(Note: Not Available - Purchase Complete Controller.)**	
38	70003784	1	Seal	
39	4360475	1	Switch, Emergency Stop	
39	7020175	1	Cap, Red	
39A	7020176	1	Contact Block	
40	4360476	1	Block, Contact	
41	4460042	3	Terminal, Ring (Not Shown)	
42	4460071	1	Connector, Strain Relief	
43	4460226	2	Socket, Contact	
44	4460428	2	Connector, Strain Relief	
45	4460464	1	Terminal, Deutsch	
46	4460470	1	Nut, Terminal	
47	4460471	1	Lockwasher, Terminal	
48	4460905	5	Connector, Amp Seal Plug	
49	4740362	3	Washer 1/4in (Fender)	
50	4751400	16	Flatwasher 1/4in Regular	
51	4751600	4	Flatwasher 3/8in Regular	
52	4922639	1	Harness, Platform Box	
53	4922666	1	Harness, Analyzer Cable (Not Shown)	
53	4460871	4	Terminal, Socket	
53	4460761	1	Housing - 4 Position	
53	4460227	4	Pin	
54	3790012	7	O-Ring	
55	4460708	2	Connector, Female - 15 Position (Not Shown -See ELECTRICAL SECTION for Location)	
56	0100081	AR	Adhesive	
57	1671037	1	Cover	
58	1705132	1	Decal - ADE	
59	3300353	4	Nut, Tinnerman	
60	4460226	3	Wire, Tie (Not Shown)	
61	4460488	1	Base, Mounting	
62	0721008	1	Bolt #10-24NC x 1 **(SN 0300071584 through 0300087000)**	
63	3311001	1	Nut #10-24NC **(SN 0300071584 through 0300087000)**	
64	4460007	1	Bar, Buss **(SN 0300071584 through 0300087000)**	
	0272970	1	Preassembled Footswitch Kit (Includes Items 2, 14, 34, 41, 42, 43 & 45)	
	0861537	Ref	**CONSOLE BOX ASSEMBLY**	C
110	0861537	1	Console Bottom (Note: Not Available for Purchase)	
111	0861537	1	Console Top (Note: Not Available for Purchase)	
112	3311601	1	Nut 3/8in-16NC	
113		Ref	Pin Options:	
113	3450304	2	Pin, Cotter **(SN 0300069000 through 0300073731)**	
113	3420156	2	Hair Pin, Cotter **(SN 0300073731 through 0300087000)**	
114	0630568	1	Screw 3/8in-16NC x 4-1/2in	
115	4711500	2	Flatwasher 5/16in Thin	
		Ref	**LIGHT PANEL DECAL INSTALLATION**	
	0256632	Ref	**Euro Spec**	-
	0256633	Ref	**Australian Spec**	-

ITEM	PART NUMBER	QTY	DESCRIPTION	REV
201		Ref	Decal - Display Options:	
201	1703084	1	Euro Spec	
201	1703085	1	Australian Spec	
	0271552	Ref	**HEAD AND TAIL LIGHTS INSTALLATION (OPTIONAL)**	2
301	4360336	1	Switch, Toggle	
301	3790012	1	O-Ring	
	0274200	Ref	**CHASSIS ILLUMINATION LIGHT INSTALLATION**	1-A
351	4360336	1	Switch, Toggle	
351	3790012	1	O-Ring	
		Ref	**SOFT TOUCH SYSTEM INSTALLATION (OPTIONAL)**	
	0273824	Ref	**Soft Touch - 36 x 72**	A
	0272427	Ref	**Soft Touch - 36 x 96**	C
401	4360387	1	Switch, Pushbutton	
402	1702938	1	Decal - Soft Touch Override	
		Ref	**GENERATOR INSTALLATION (OPTIONAL)**	
	0273538	Ref	**110V/50Hz - Caterpillar**	1-A
	0273539	Ref	**220V/50Hz - Caterpillar**	1-A
	0272482	Ref	**100V/50Hz - Deutz**	2
	0272481	Ref	**220V/50Hz - Deutz**	2
501	4360336	1	Switch, Toggle	
502	4740397	1	Bushing	
503	4060802	1	Guard, Switch	
504	3251102	1	Decal - Generator ON/OFF	
		Ref	**PLATFORM WORKLIGHT INSTALLATION (OPTIONAL)**	
	0270814	Ref	**Worklights Installation (SN 0300069000 through 0300074444)**	3-E
	0273492	Ref	**Worklights Installation (SN 0300074445 through 0300087000)**	B
601	4360232	1	Breaker, Circuit - 15Amp **(SN 0300069000 through 0300074445)**	
602	0721003	2	Bolt #10-24NC x 3/8in **(SN 0300069000 through 0300074445)**	
603	4761000	4	Lockwasher #10 **(SN 0300069000 through 0300074445)**	
604	3311001	2	Nut #10-24NC **(SN 0300069000 through 0300074445)**	
605		Ref	Connector, Strain Relief Options:	
605	4460598	1	Connector, Strain Relief **(SN 0300069000 through 0300074424)**	
605	4460426	1	Connector, Strain Relief **(SN 0300074425 through 0300087000)**	

FIGURE 4-5. CONTROLLER ASSEMBLY (LIFT AND SWING)

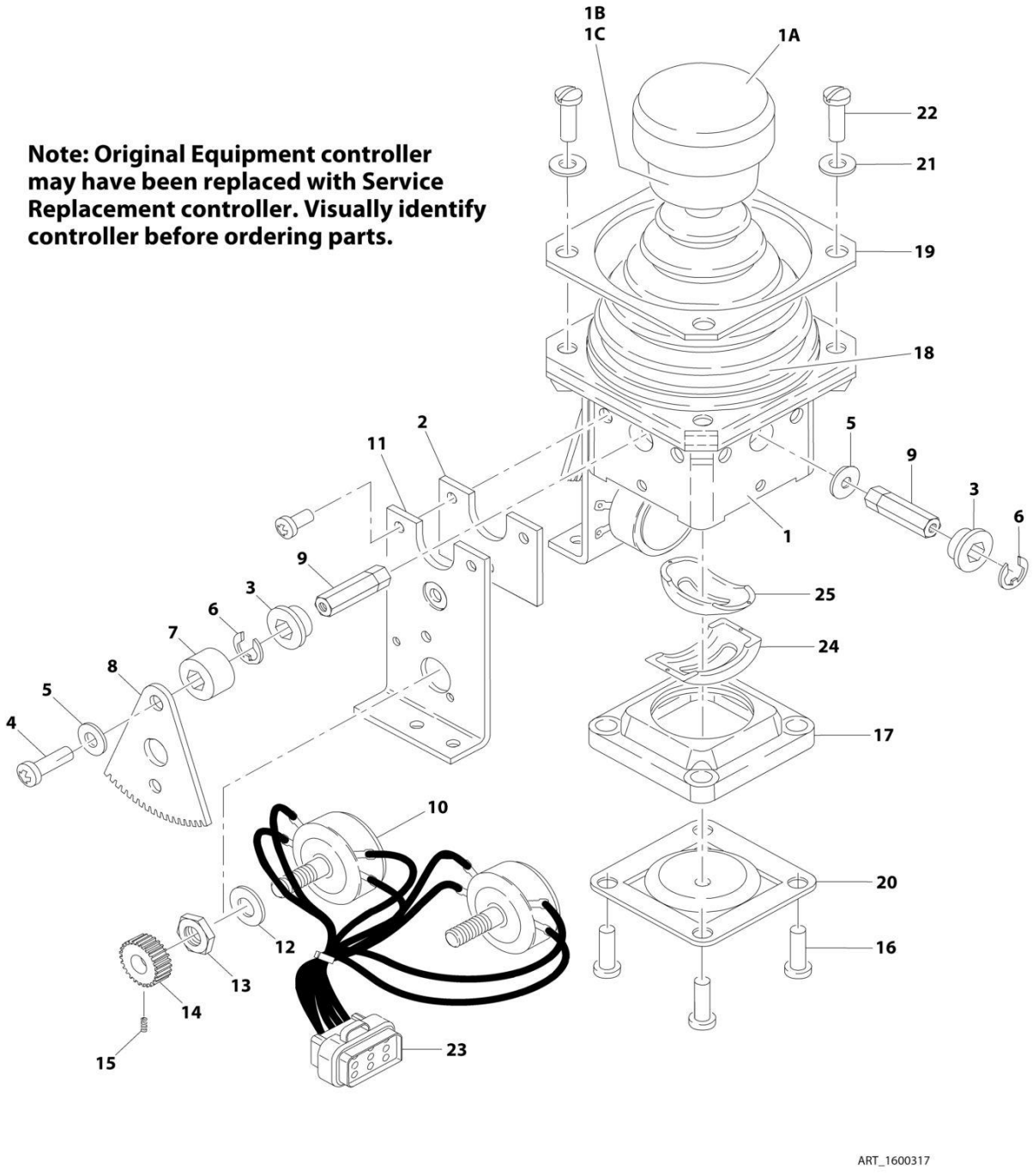

FIGURE 4-5. CONTROLLER ASSEMBLY (LIFT AND SWING)

ITEM	PART NUMBER	QTY	DESCRIPTION	REV
		Ref	**Note: Original Equipment controller may have been replaced with Service Replacement controller. Visually identify controller before ordering parts.**	
	1600317	Ref	**CONTROLLER ASSEMBLY**	C
		Ref	**Note: Use p/n 1001129555 Kit as Replacement.**	
1	7019141	1	Mechanical Assembly (Includes Base, Handle Stem and Items 1A, 1B, 1C & 18)	
1A	7019197	1	Handle Cap and Rod	
1B	7003928	1	Spring	
1C	7022808	1	Cap, Lift	
2	7019171	2	Plate	
3	7019111	4	Bearing, Gear	
4	7019143	2	Screw	
5	7019144	2	Spacer, Cam	
6	7019145	4	E-Clip	
7	7019174	2	Spacer	
8	7003977	2	Gear, Drive	
9		Ref	Shaft Options:	
9	7019147	2	Shaft, Short	
9	7019177	2	Shaft, Long	
10	7022818	2	Potentiometer	
11	7019142	2	Plate	
12	7003992	2	Washer	
13	7003993	2	Nut	
14	7003976	2	Gear, Slave	
15	7019149	2	Setscrew	
16	7022816	4	Screw	
17	7019150	1	Gate	
18	7022814	1	Boot	
19	7022815	1	Bezel	
20	See Note	NSS	Center, Detent (Note: Use p/n 1001129555)	
21	7003953	4	Washer	
22	7022817	4	Screw	
23	7022819	1	Plug, Male - 8 Position (Natural)	
23	4460871	8	Socket, Female	
24	7019122	1	Gimble, Outer	
25	7019123	1	Gimble, Inner	

FIGURE 4-6. CONTROLLER ASSEMBLY (LIFT AND SWING)

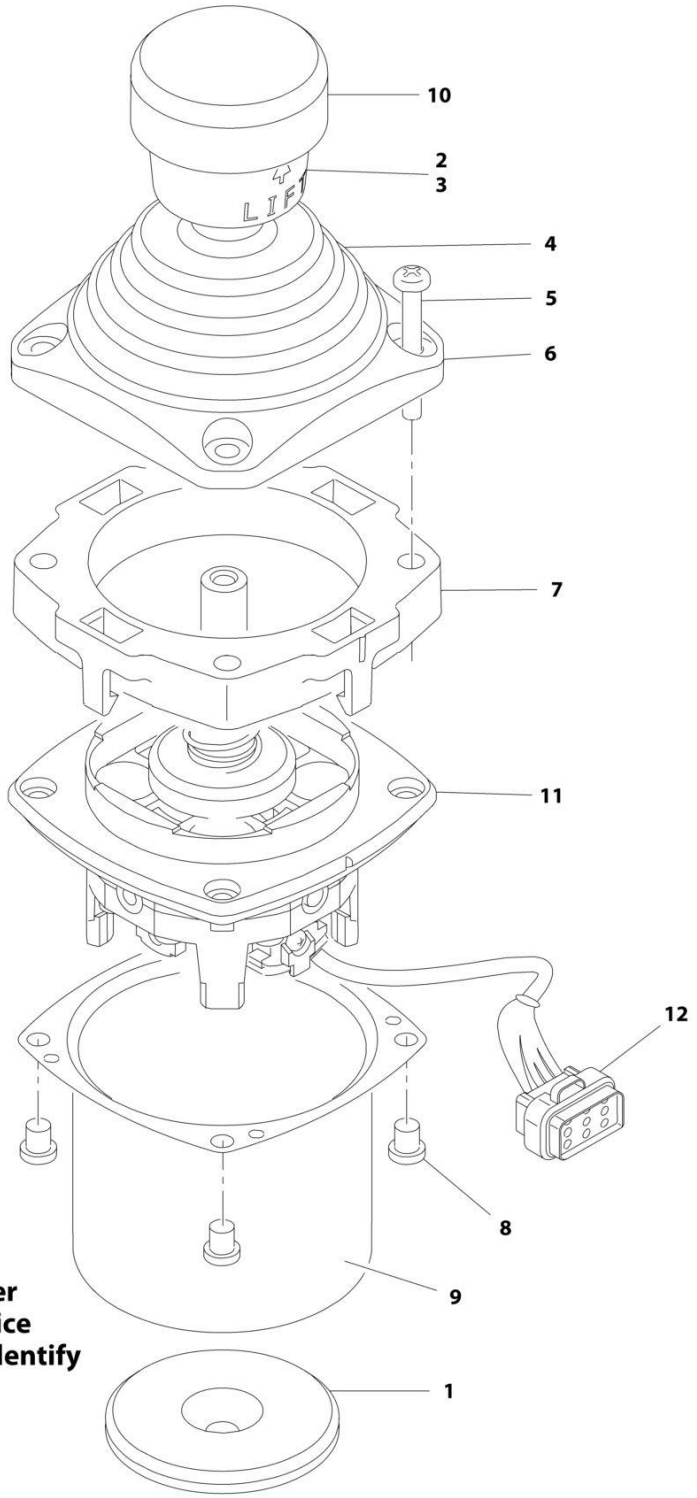

Note: Original Equipment controller may have been replaced with Service Replacement controller. Visually identify controller before ordering parts.

FIGURE 4-6. CONTROLLER ASSEMBLY (LIFT AND SWING)

ITEM	PART NUMBER	QTY	DESCRIPTION	REV
		Ref	**Note: Original Equipment controller may have been replaced with Service Replacement controller. Visually identify controller before ordering parts.**	
	1001118417	Ref	**CONTROLLER ASSEMBLY**	E
		Ref	**Note: Use p/n 1001129555 as Replacement.**	
1	70002730	1	Gasket	
2	7003928	1	Spring	
3	7022808	1	Cap, Lift	
4	70002731	1	Boot	
5	70002732	4	Screw	
6	7022815	1	Bezel	
7	70002733	1	Adapter	
8	70002734	4	Screw	
9	70002735	1	Can, Enclosure	
10	70002906	1	Cap	
11	See Note	NSS	Mechanical Assembly (Note: Use p/n 1001129555)	
12	7022819	1	Connector - 8 Position	
12	4460871	6	Socket, Female	

FIGURE 4-7. CONTROLLER ASSEMBLY (LIFT AND SWING)

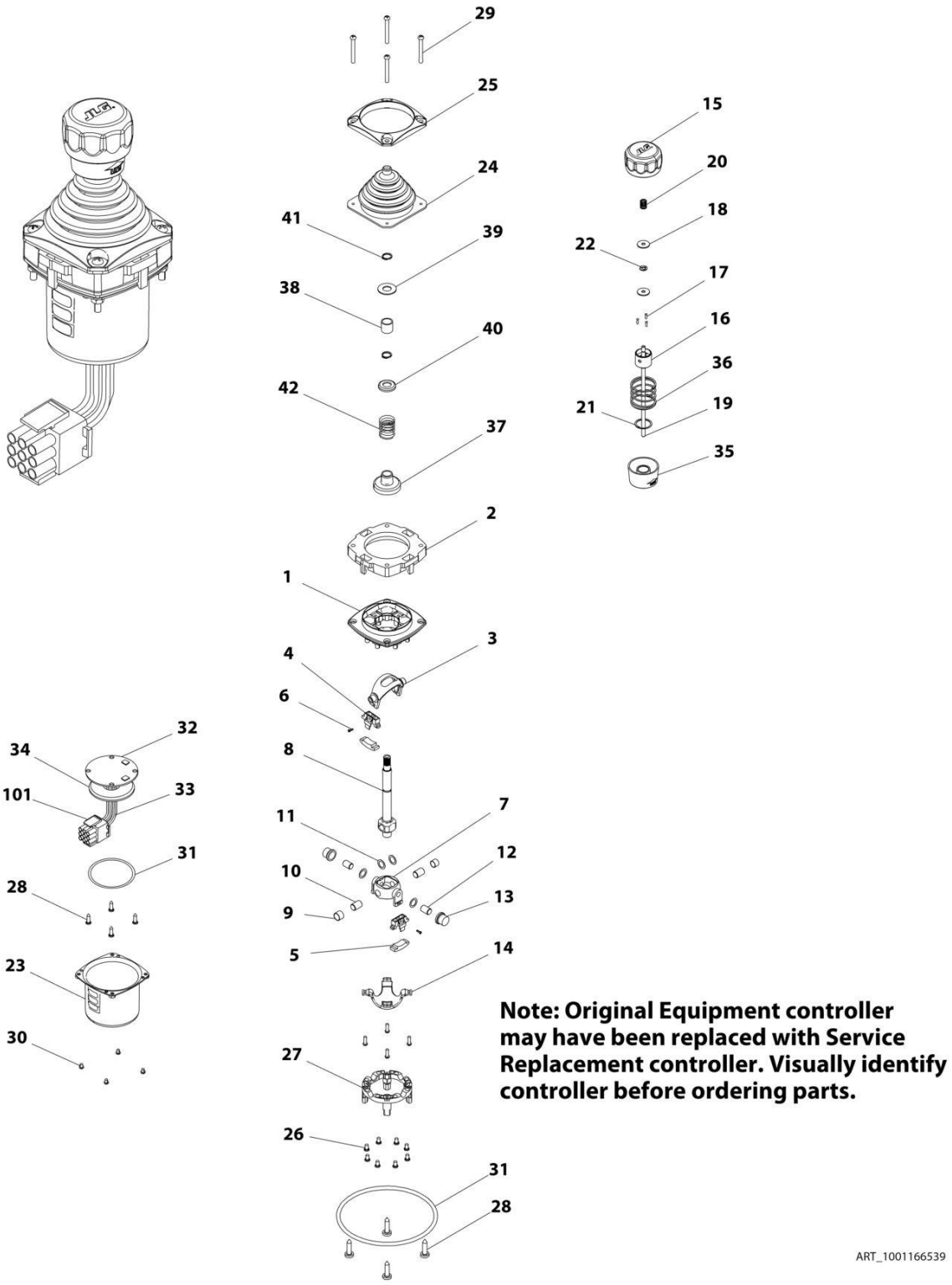

FIGURE 4-7. CONTROLLER ASSEMBLY (LIFT AND SWING)

ITEM	PART NUMBER	QTY	DESCRIPTION	REV
		Ref	**Note: Original Equipment controller may have been replaced with Service Replacement controller. Visually identify controller before ordering parts.**	
	1001166539	Ref	**CONTROLLER ASSEMBLY**	D
		Ref	**Note: Use p/n 1001129555 as Replacement.**	
1	See Note	NSS	Main Cast Body (Note: Not Available - Purchase Complete Assembly)	
2	70004752	1	Adapter	
3	See Note	NSS	Pivot Arm, Plastic (Note: Not Available - Purchase Complete Assembly)	
4	See Note	NSS	Holder, Magnet (Note: Not Available - Purchase Complete Assembly)	
5	See Note	NSS	Arc, Magnet (Note: Not Available - Purchase Complete Assembly)	
6	See Note	NSS	Screw (Note: Not Available for Purchase)	
7	See Note	NSS	Pivot Arm, Cast (Note: Not Available - Purchase Complete Assembly)	
8	See Note	NSS	Shaft, Main (Note: Not Available - Purchase Complete Assembly)	
9	See Note	NSS	Bearing (Note: Not Available - Purchase Complete Assembly)	
10	See Note	NSS	Pin (Note: Not Available - Purchase Complete Assembly)	
11	See Note	NSS	Shim (Note: Not Available - Purchase Complete Assembly)	
12	See Note	NSS	Pin (Note: Not Available - Purchase Complete Assembly)	
13	See Note	NSS	Bearing (Note: Not Available - Purchase Complete Assembly)	
14	See Note	NSS	Dome, Centering (Note: Not Available - Purchase Complete Assembly)	
15	70004753	1	Cap	
16	70004754	1	Insert, Cap	
17	70004755	3	Pin	
18	70004756	2	Washer	
19	70004757	1	Pin, Centering	
20	70004758	1	Spring	
21	70004759	1	Ring, Retaining	
22	70004760	1	E-Ring	
23	70004761	1	Can, Enclosure	
24	70004762	1	Boot	
25	70004763	1	Bezel	
26	See Note	NSS	Screw (Note: Not Available for Purchase)	
27	See Note	NSS	Base, Mounting (Note: Not Available - Purchase Complete Assembly)	
28	See Note	NSS	Screw (Note: Not Available for Purchase)	
29	70004764	4	Screw	
30	70004765	4	Screw	
31	70004766	1	O-Ring	
32	See Note	NSS	Plate (Note: Not Available - Purchase Complete Assembly)	
33	See Note	NSS	Harness (Note: Not Available - Purchase Complete Assembly)	
34	70004767	1	Grommet, Rubber	
35	70004768	1	Housing	
36	70004769	1	Spring	
37	70004770	1	Stopper	
38	70004771	1	Spacer	
39	70004772	1	Washer	
40	70004773	1	Disc	

SECTION 4 - PLATFORM

ITEM	PART NUMBER	QTY	DESCRIPTION	REV
41	70004774	2	Ring, Retaining	
42	70004775	1	Spring	
101	4460265	1	Connector - 9 Position	
101	4460226	6	Socket, Female	

FIGURE 4-8. CONTROLLER ASSEMBLY (DRIVE AND STEER)

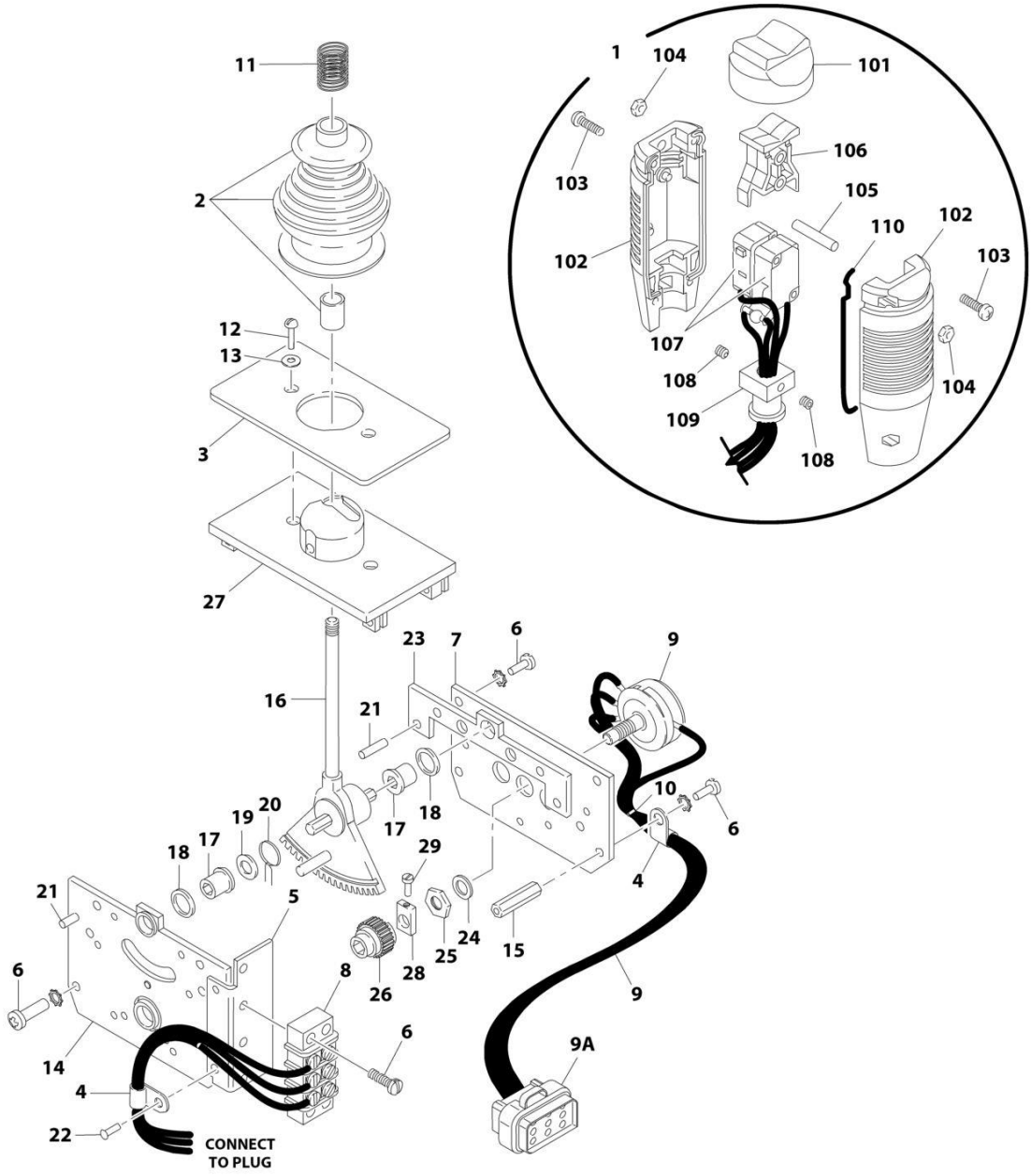

Note: Original Equipment controller may have been replaced with Service Replacement controller. Visually identify controller before ordering parts.

ART_1600318

FIGURE 4-8. CONTROLLER ASSEMBLY (DRIVE AND STEER)

ITEM	PART NUMBER	QTY	DESCRIPTION	REV
		Ref	**Note: Original Equipment controller may have been replaced with Service Replacement controller. Visually identify controller before ordering parts.**	
	1600318	Ref	**CONTROLLER ASSEMBLY**	C
		Ref	**Note: Use p/n 1001212415 as Replacement.**	
1	7022812	1	Handle Assembly (See Items 101-110 for Breakdown)	
2	7019161	1	Boot and Sleeve	
3	7003933	1	Gasket	
4	7019154	2	Clamp, Wire	
5	7022823	1	Bracket, Mounting	
6	7003994	1	Screw	
7	7022822	1	Plate, Pot Mounting	
8	7003986	1	Strip, Terminal - 3 Position	
9	7022824	1	Electric Assembly	
9A	1001113961	1	Plug, Male - 8 Position (Black) (was p/n 7022825)	
9A	4460871	7	Socket, Female	
10	7019151	AR	Tie-Strap	
11	7019162	1	Spring	
12	7003969	2	Screw	
13	7003941	2	Washer	
14	See Note	NSS	Plate, Mounting (Left Side) (Note: Not Available for Purchase)	
15	7019115	2	Stand-Off	
16	7019155	1	Shaft 8mm	
17	7019111	2	Bearing	
18	7019110	2	Spacer, Head Gear	
19	7019112	1	Washer	
20	7003946	1	Spring, Return	
21	7019103	4	Pin	
22	See Note	NSS	Rivet (Note: Not Available - Purchase Locally)	
23	7019168	1	Plate, Mounting (Right Side)	
24	7003992	1	Washer	
25	7003993	1	Nut	
26	7003935	1	Gear, Slave	
27	7019160	1	Plate, Base	
28	7019114	1	Coupling, Potentiometer	
29	See Note	NSS	Cup Point Screw (Note: Not Available for Purchase)	
	7022812	Ref	**HANDLE ASSEMBLY**	
101	7003972	1	Boot, Switch	
102	7003973	2	Half, Handle	
103	7003980	4	Screw	
104	7019167	4	Nut	
105	7019164	1	Axle	
106	7019165	1	Rocker	
107	See Note	NSS	Wiring for Controller Assembly p/n 1600318 (Note: Use p/n 1001166538)	
107	7019166	2	Switch, Micro	
108	7003983	2	Setscrew	
109	7019194	1	Coupling	
110	7003989	2	Gasket	

FIGURE 4-9. CONTROLLER ASSEMBLY (DRIVE AND STEER)

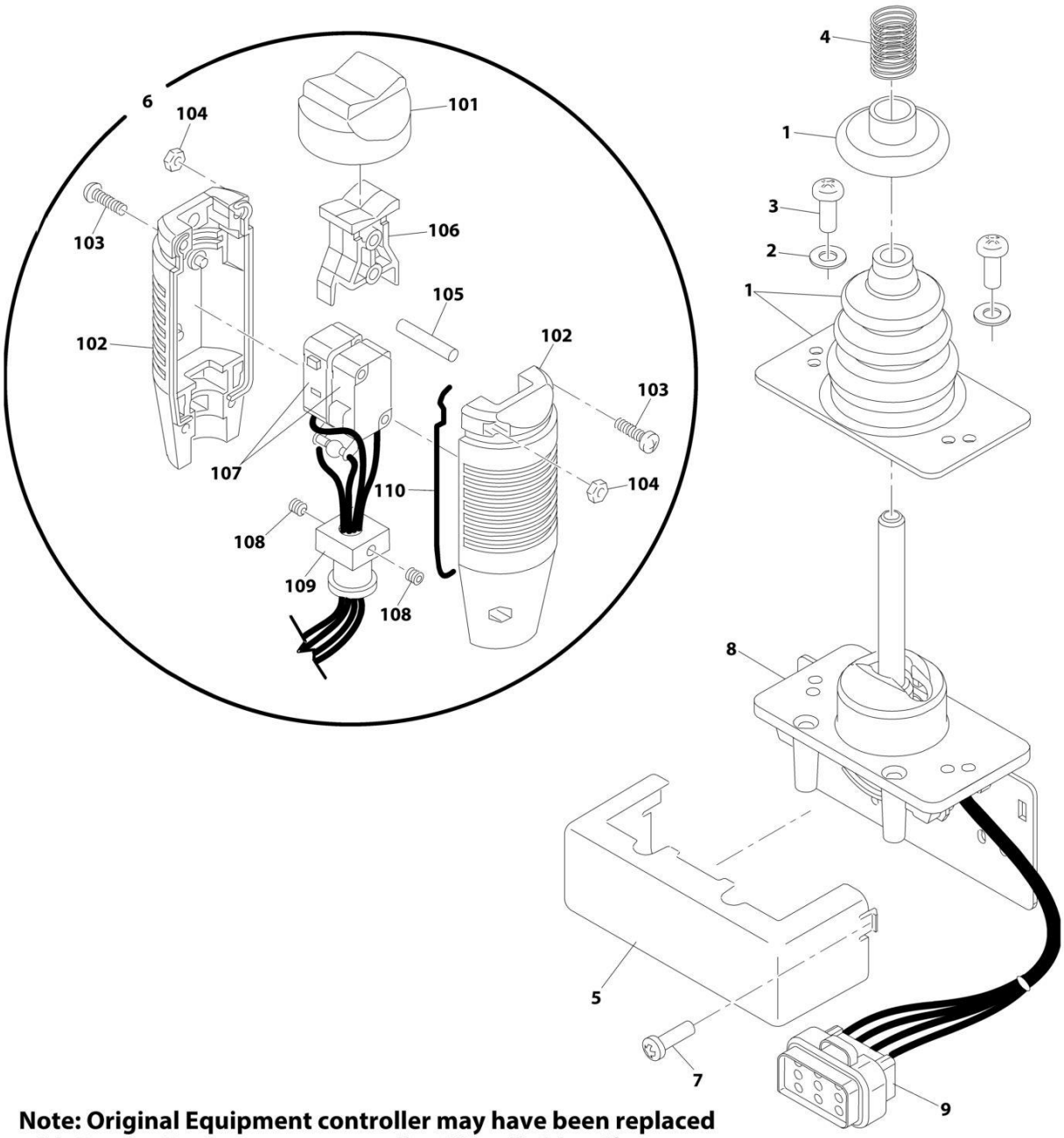

Note: Original Equipment controller may have been replaced with Service Replacement controller. Visually identify controller before ordering parts.

FIGURE 4-9. CONTROLLER ASSEMBLY (DRIVE AND STEER)

ITEM	PART NUMBER	QTY	DESCRIPTION	REV
		Ref	**Note: Original Equipment controller may have been replaced with Service Replacement controller. Visually identify controller before ordering parts.**	
	1001118416	Ref	**CONTROLLER ASSEMBLY**	D
		Ref	**Note: Use p/n 1001212415 as Replacement.**	
1	70002724	1	Boot and Control Lock Assembly	
2	7003941	2	Washer	
3	70002725	2	Screw	
4	7019162	1	Spring	
5	70002726	1	Enclosure	
6	70002727	1	Handle Assembly (See Items 101-110 for Breakdown)	
7	70002728	1	Screw	
8	See Note	NSS	Mechanical Assembly (Note: Use p/n 1001166538)	
9	1001113961	1	Plug, Male - 8 Position (Black) (was p/n 7022825)	
9	4460871	7	Socket, Female	
	70002727	Ref	**HANDLE ASSEMBLY**	
101	7003972	1	Boot, Switch	
102	7003973	2	Half, Handle	
103	7003980	4	Screw	
104	7019167	4	Nut	
105	7019164	1	Axle	
106	7019165	1	Rocker	
107	70002729	1	Wiring Assembly	
107	7003982	2	Switch, Micro	
108	7003983	2	Set Screw	
109	7019194	1	Coupling	
110	7003989	2	Gasket	

FIGURE 4-10. CONTROLLER ASSEMBLY (DRIVE AND STEER)

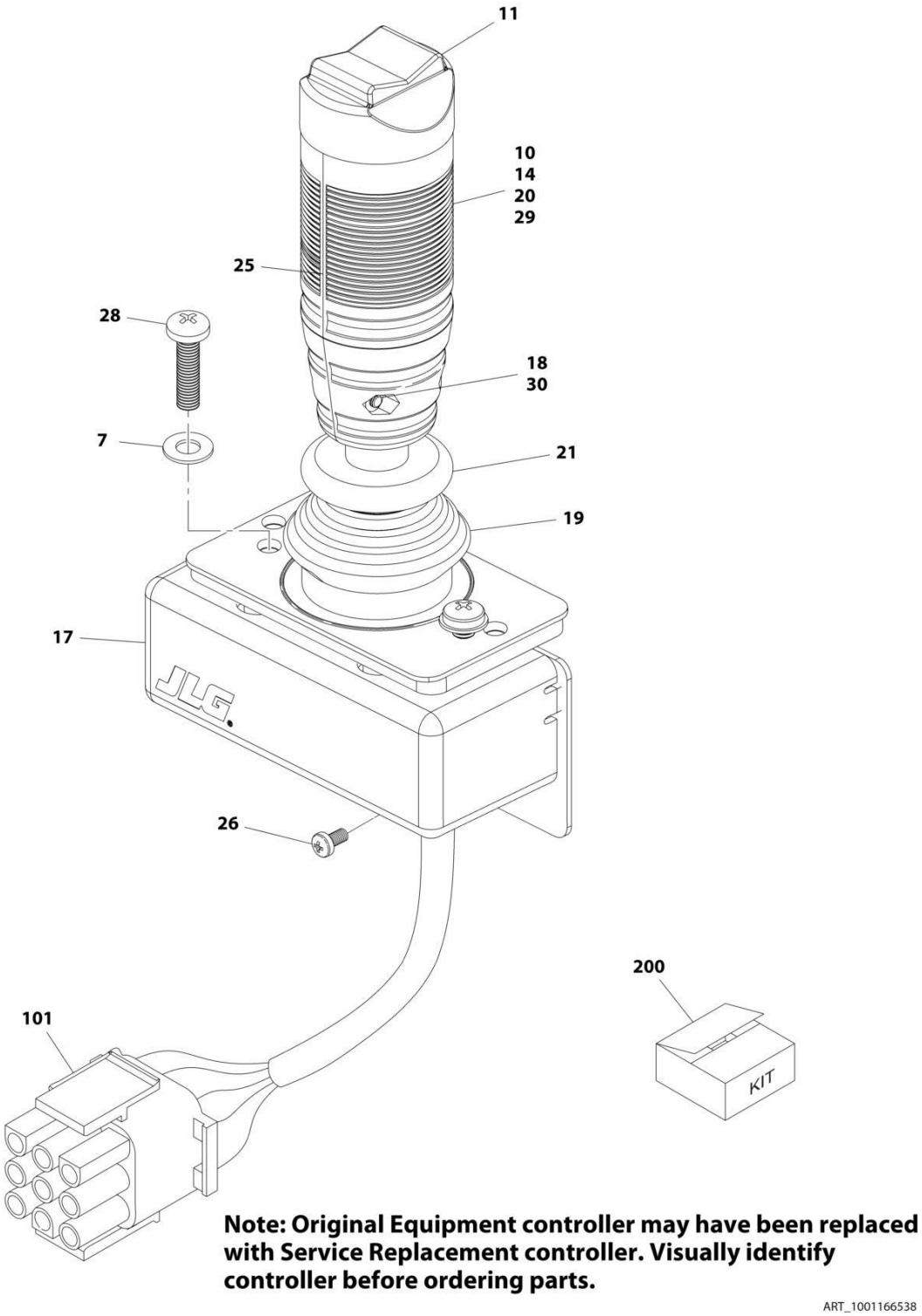

FIGURE 4-10. CONTROLLER ASSEMBLY (DRIVE AND STEER)

ITEM	PART NUMBER	QTY	DESCRIPTION	REV
		Ref	**Note: Original Equipment controller may have been replaced with Service Replacement controller. Visually identify controller before ordering parts.**	
	1001166538	Ref	**CONTROLLER ASSEMBLY**	E
		Ref	**Note: Use p/n 1001212415 as Replacement.**	
7	70004738	2	Washer	
10	70004739	1	Roller	
11	70004740	1	Boot, Switch	
14	70004741	2	Half, Handle	
17	70004742	1	Enclosure	
18	70004743	4	Nut	
19	70004744	NLA	Boot, Controller (Note: Use Item 200)	
20	70004745	NLA	Tube, Locking (Note: Use Item 200)	
21	70004746	NLA	Disc, Locking (Note: Use Item 200)	
25	70004747	2	Seal, Rope	
26	70004748	1	Screw, M3 x 6	
28	70004749	2	Screw, M5 x 20	
29	70004750	1	Pin, Dowel	
30	70004751	4	Screw, M3 x 16	
101	4460265	1	Connector - 9 Position	
101	4460226	7	Socket, Female	
200	70005230	1	Boot Kit (Includes Items 19-21)	

FIGURE 4-11. SOFT TOUCH SYSTEM INSTALLATION (OPTIONAL)

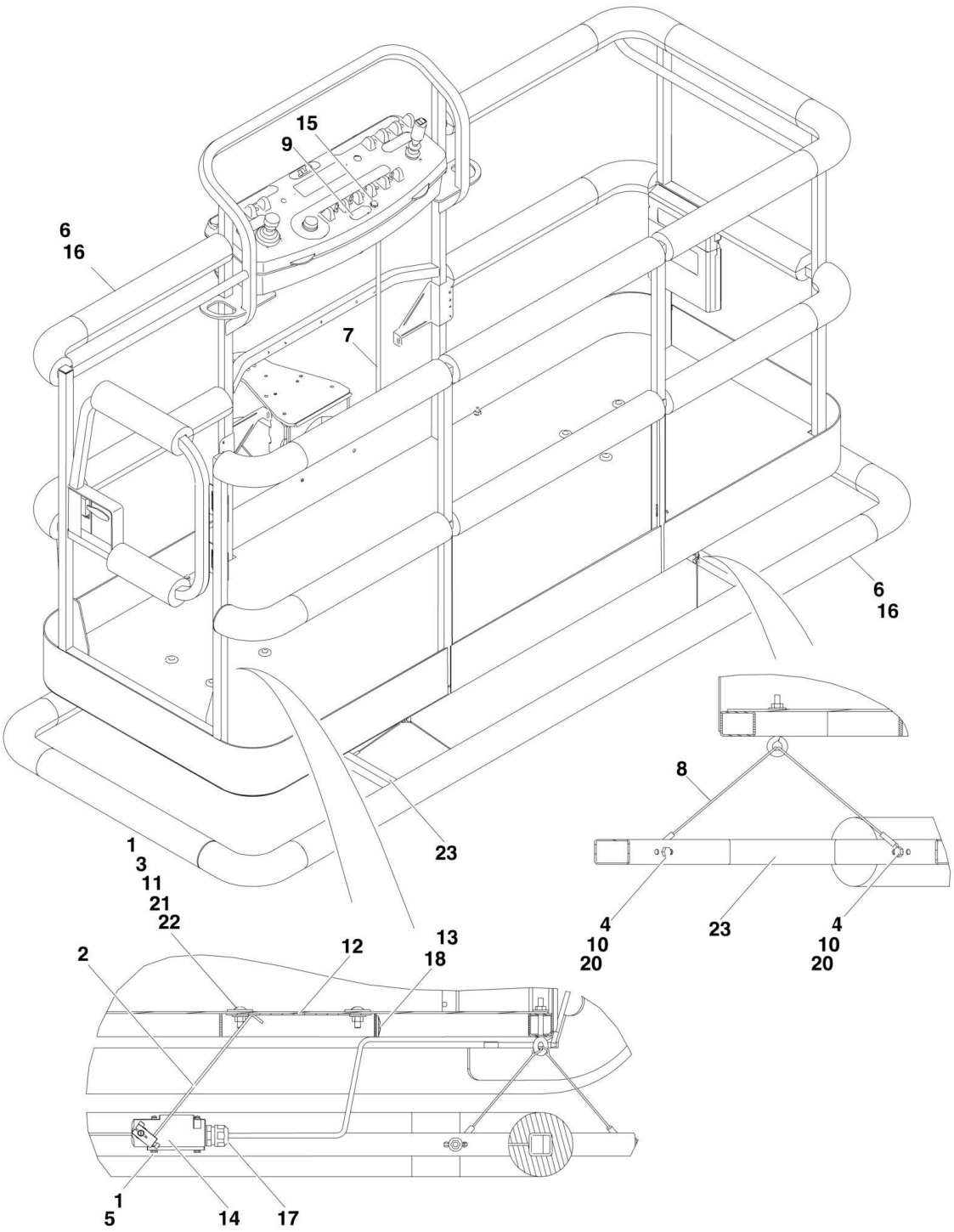

FIGURE 4-11. SOFT TOUCH SYSTEM INSTALLATION (OPTIONAL)

ITEM	PART NUMBER	QTY	DESCRIPTION	REV
		Ref	**SOFT TOUCH SYSTEM INSTALLATIONS**	
	0273824	Ref	**Soft Touch System - 36 x 72**	A
	0272427	Ref	**Soft Touch System - 36 x 96**	C
	0273706	Ref	**8ft/2.4m Platforms with Fall Arrest**	A
1	0100011	AR	Compound, Locking	
2	0200048	2	Arm, Switch	
3	0630462	8	Bolt, Carriage	
4	0641414	8	Bolt 1/4in-20NC x 1 3/4in	
5	0721005	4	Bolt #10-24NC x 5/8in	
6		Ref	Bumper Kits (Includes Corners and Enough Straight Material for One Platform)	
6	0940134	1	6ft Platform	
6	0940103	1	8ft Platform	
6	0940133	1	8ft/2.4m Platforms with Fall Arrest	
6	0940092	Ref	Bumper (Corner) Options:	
6	0940092	12	Bumper, 6ft/8ft Platform	
6	0940092	8	Bumper, 8ft/2.4m Platforms with Fall Arrest	
6	0940094	AR	Bumper (12ft Length)	
7	1060341	Ref	Cable, Electrical - 16/2 Options:	
7	1060341	22 ft/6.7m	Cable, Electrical - 16/2 , 6ft Platform	
7	1060341	23 ft/7m	Cable, Electrical - 16/2 , 8ft Platform	
8	1060903	4	Wire Rope and Eyebolt Assembly	
9	1702938	1	Decal - Soft Touch Override	
10	3311401	8	Nut 1/4in-20NC	
11	3311501	8	Nut 5/16in-18NC	
12		Ref	Plate, Switch Strike Options:	
12	3575359	2	6ft Platform	
12	3574091	2	8ft Platform	
13	4240099	7	Tie-Strap	
14	4360057	2	Switch, Limit	
15	4360387	1	Switch, Push Button	
16	4420068	1	Tape, Adhesive	
17	4460049	2	Connector, Strain Relief	
18	4460234	7	Tie-Strap	
19	4460425	1	Connector, Strain Relief	
20	4751400	8	Flatwasher 1/4in	
21	4751500	12	Flatwasher 5/16in	
22	4751800	8	Flatwasher 1/2in	
23		Ref	Rail, Soft Touch Options:	
23	3641569	1	6ft Platform	
23	4846673	1	8ft Platform	
24		Ref	Soft-Touch Installation Kit Options (Not Shown) (Includes Items 2-23):	
		Ref	**Note: May not be available for all machines depending on existing options. Contact JLG Parts Dept before ordering.**	
24	1001121592	1	Kit - 6ft Platform without Fall Arrest	
24	1001121593	1	Kit - 8ft Platform without Fall Arrest	

FIGURE 4-12. PLATFORM PADDING INSTALLATION (SIDE ENTRY PLATFORM) (OPTIONAL)

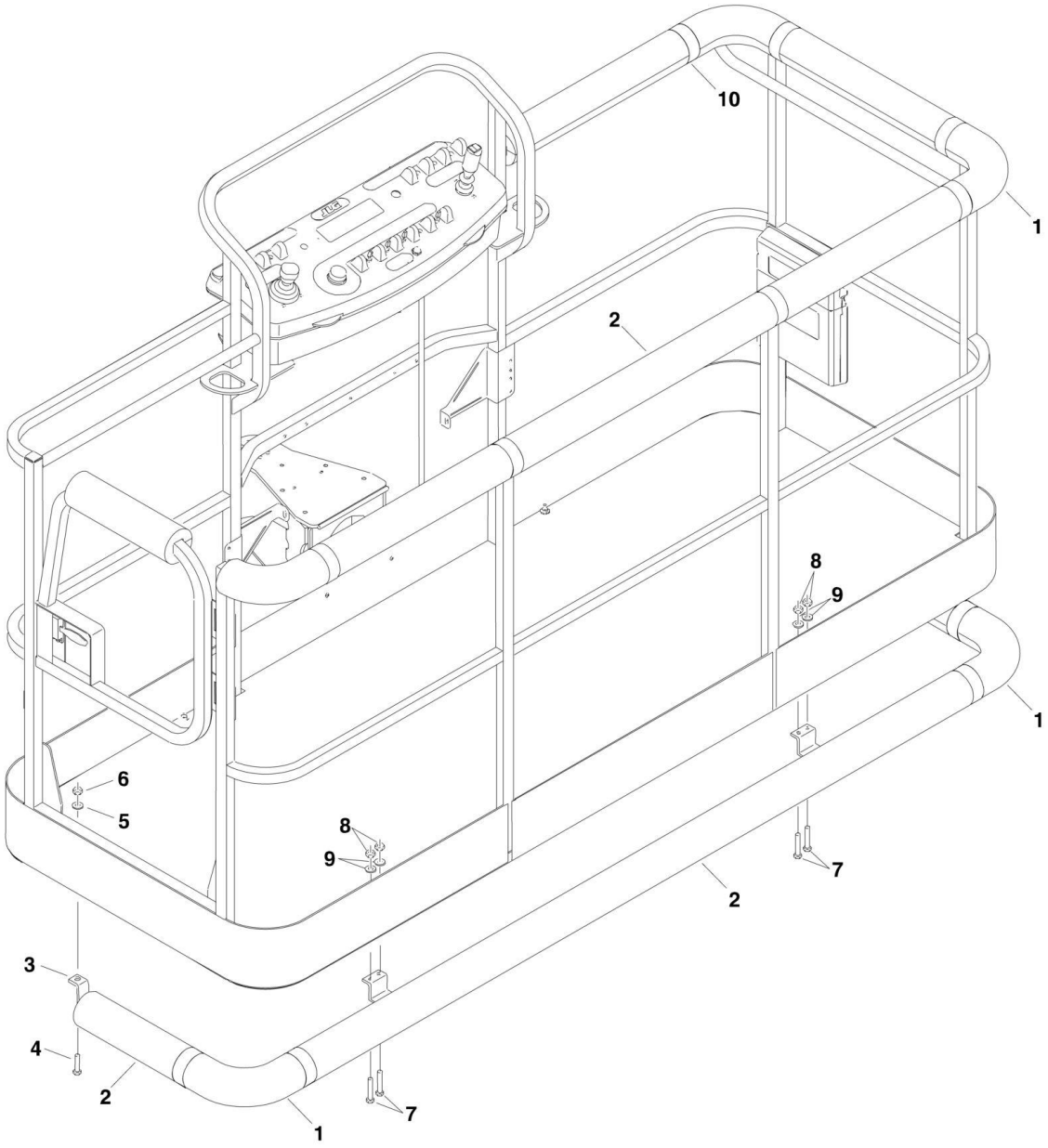

FIGURE 4-12. PLATFORM PADDING INSTALLATION (SIDE ENTRY PLATFORM) (OPTIONAL)

ITEM	PART NUMBER	QTY	DESCRIPTION	REV
	0273542	Ref	**PADDING INSTALLATION (30 X 48 SIDE ENTRY PLATFORM)**	A
1	0940092	4	Bumper, Pad (Corner)	
2	0940094	9 ft/2.7m	Bumper, Pad (Square Tubing)	
3	0940131	1	Bumper, Rail	
4	0641516	2	Bolt 5/16in-18NC x 2in	
5	4751500	2	Flatwasher 5/16in	
6	3311505	2	Locknut 5/16in-18NC	
7	0641813	4	Bolt 1/2in-13NC x 1 5/8in	
8	3311805	4	Locknut 1/2in-13NC	
9	4891800	4	Flatwasher 1/2in (Hardened)	
10	4420068	30 ft/9.1m	Tape	

SECTION 5 - CYLINDER

SECTION 5 - CYLINDER

FIGURE 5-1. AXLE LOCKOUT CYLINDER ASSEMBLY (SN 0300069000 through 0300081835)

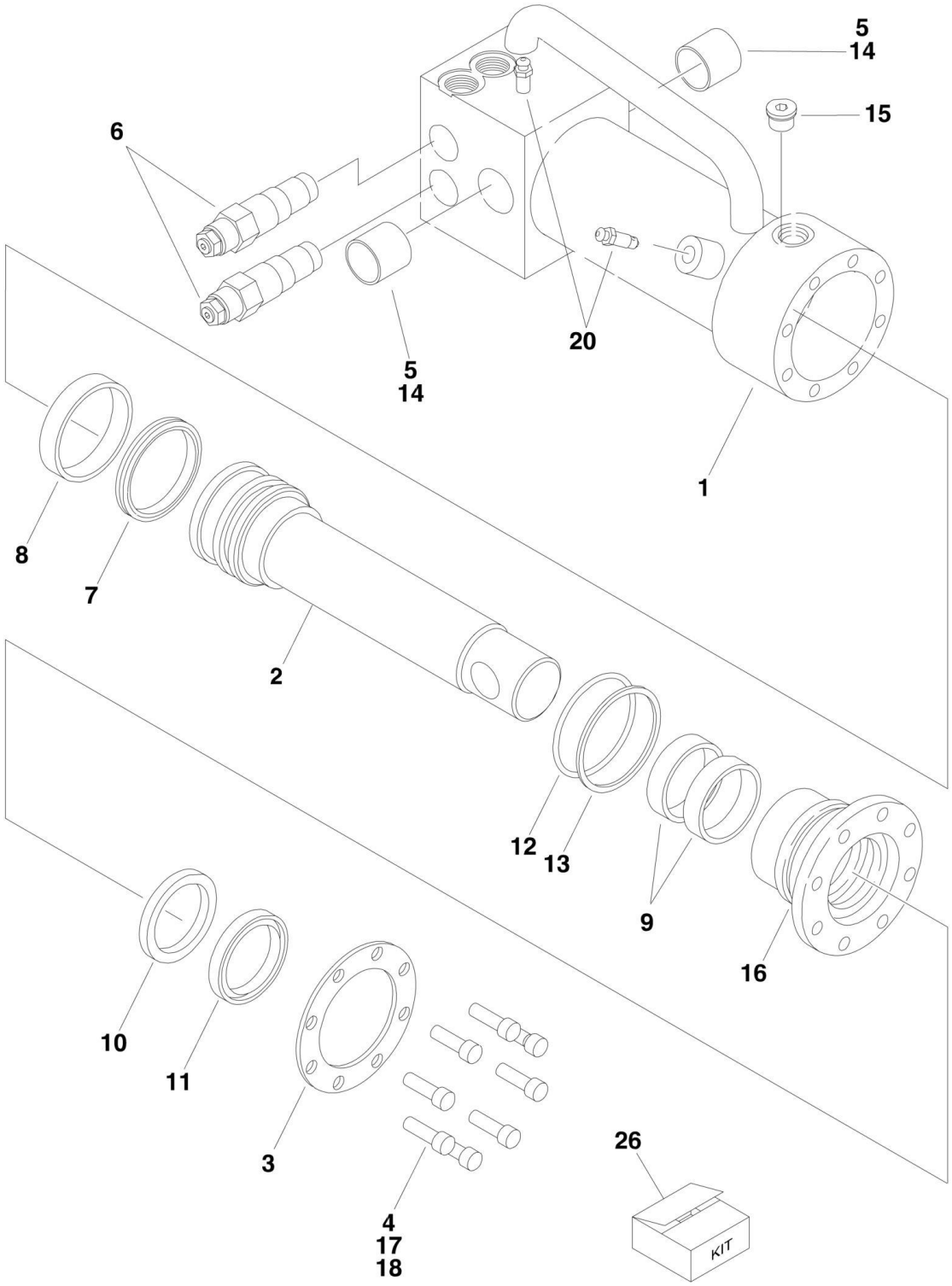

FIGURE 5-1. AXLE LOCKOUT CYLINDER ASSEMBLY (SN 0300069000 through 0300081835)

ITEM	PART NUMBER	QTY	DESCRIPTION	REV
	1683280	Ref	**AXLE LOCKOUT CYLINDER ASSEMBLY**	6-D
1	1683281	1	Barrel Weldment	
2	1683283	1	Rod Weldment	
3	3760369	1	Ring, Washer	
4	0681610	8	Bolt 3/8in-16NC x 1-1/4in (Grade 8)	
5	0962474	4	Bushing	
6	4641162	2	Valve, Cartridge	
6	2900770	2	Seal Kit - 4640525 Valve	
7	See Note	NSS	Seal (Note: Use Item 26)	
8	See Note	NSS	Ring, Wear (Note: Use Item 26)	
9	See Note	NSS	Ring, Wear (Note: Use Item 26)	
10	See Note	NSS	Seal, Rod (Note: Use Item 26)	
11	See Note	NSS	Wiper, Rod (Note: Use Item 26)	
12	See Note	NSS	O-Ring (Note: Use Item 26)	
13	See Note	NSS	Ring, Back-up (Note: Use Item 26)	
14	0100063	AR	Adhesive	
15	2220885	1	Plug, O-Ring	
16	1683057	1	Head	
17	0100011	AR	Compound, Locking	
18	0100038	AR	Primer, Locking	
20	4640858	2	Valve, Bleeder	
26	2901321	1	Seal Kit (Includes Items 7-13)	

FIGURE 5-2. AXLE LOCKOUT CYLINDER ASSEMBLY (SN 0300081836 through 0300087000)

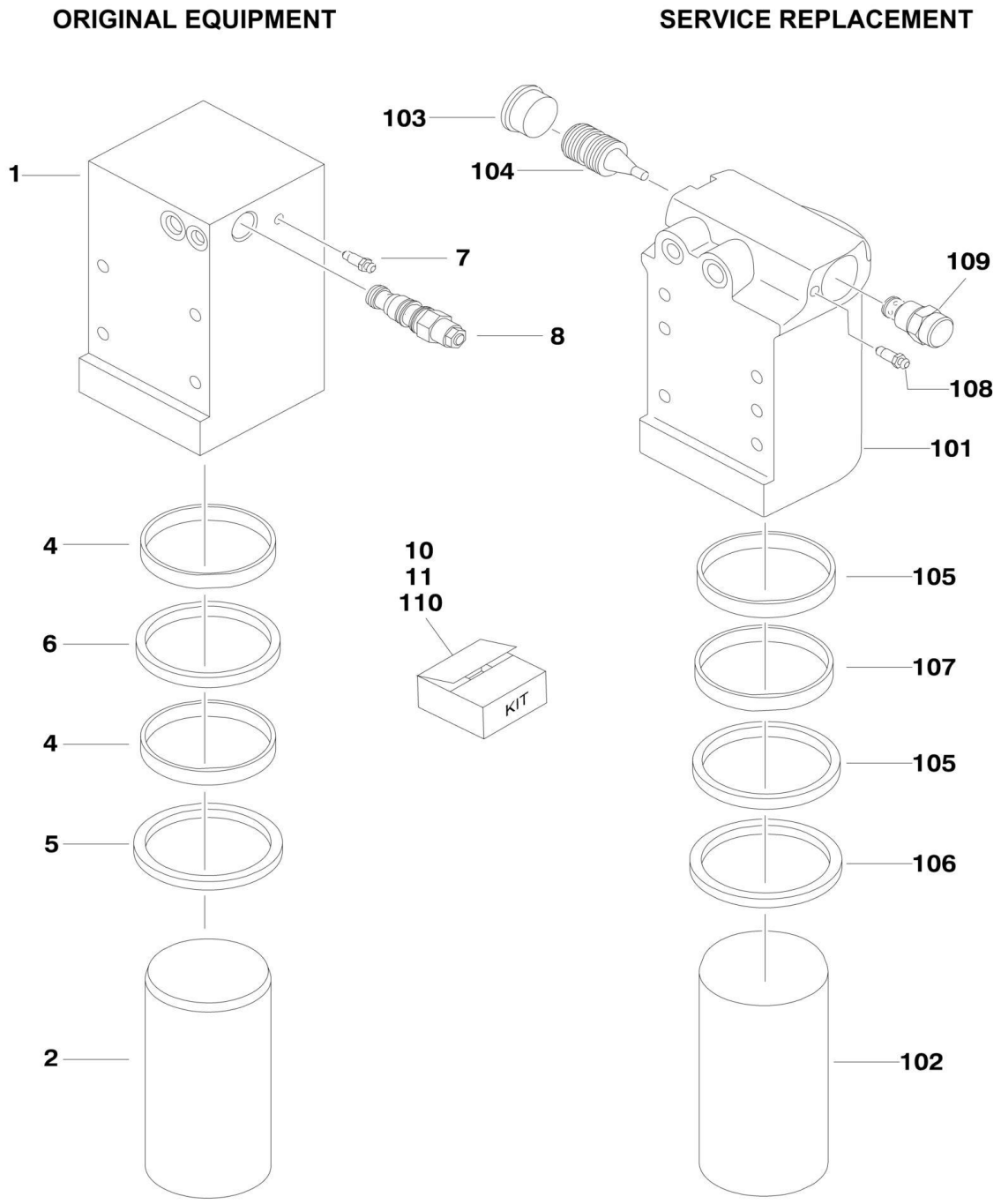

FIGURE 5-2. AXLE LOCKOUT CYLINDER ASSEMBLY (SN 0300081836 through 0300087000)

ITEM	PART NUMBER	QTY	DESCRIPTION	REV
	1684280	Ref	**AXLE LOCKOUT CYLINDER ASSEMBLY (ORIGINAL EQUIPMENT)**	E
		Ref	**Note: Original Equipment components may have been replaced with Service Replacement components part. Identify p/n stamped on cylinder before ordering parts.**	
1	1684289	1	Barrel	
2	1684290	1	Rod	
4	See Note	NSS	Ring, Wear (Note: Use Item 16)	
5	See Note	NSS	Wiper (Note: Use Item 16)	
6	See Note	NSS	Seal, Rod (Note: Use Item 16)	
7	4640858	1	Bleeder	
8	4641319	1	Cartridge, Valve	
8	7024879	1	Seal Kit	
16	2902266	1	Seal Kit (Includes Items 4-6)	
20	1001167359	1	Cylinder Replacement Kit (Kit Replaces p/n 1684280 with p/n 1684465 Cylinder)	
	1684465	Ref	**AXLE LOCKOUT CYLINDER ASSEMBLY (SERVICE REPLACEMENT)**	J
		Ref	**Note: Original Equipment components may have been replaced with Service Replacement components part. Identify p/n stamped on cylinder before ordering parts.**	
101	0370026	1	Barrel	
102	1684290	1	Rod	
103	2220890	1	Plug	
104	3480288	1	Piston, Pilot	
105	See Note	NSS	Ring, Wear (Note: Use Item 110)	
106	See Note	NSS	Wiper (Note: Use Item 110)	
107	See Note	NSS	Seal, Rod (Note: Use Item 110)	
108	4640858	1	Bleeder	
109	4641390	1	Cartridge, Valve	
109	7017496	1	Seal Kit	
110	2902266	1	Seal Kit (Includes Items 104-106)	

FIGURE 5-3. PLATFORM LEVEL CYLINDER ASSEMBLY (ORIGINAL EQUIPMENT)

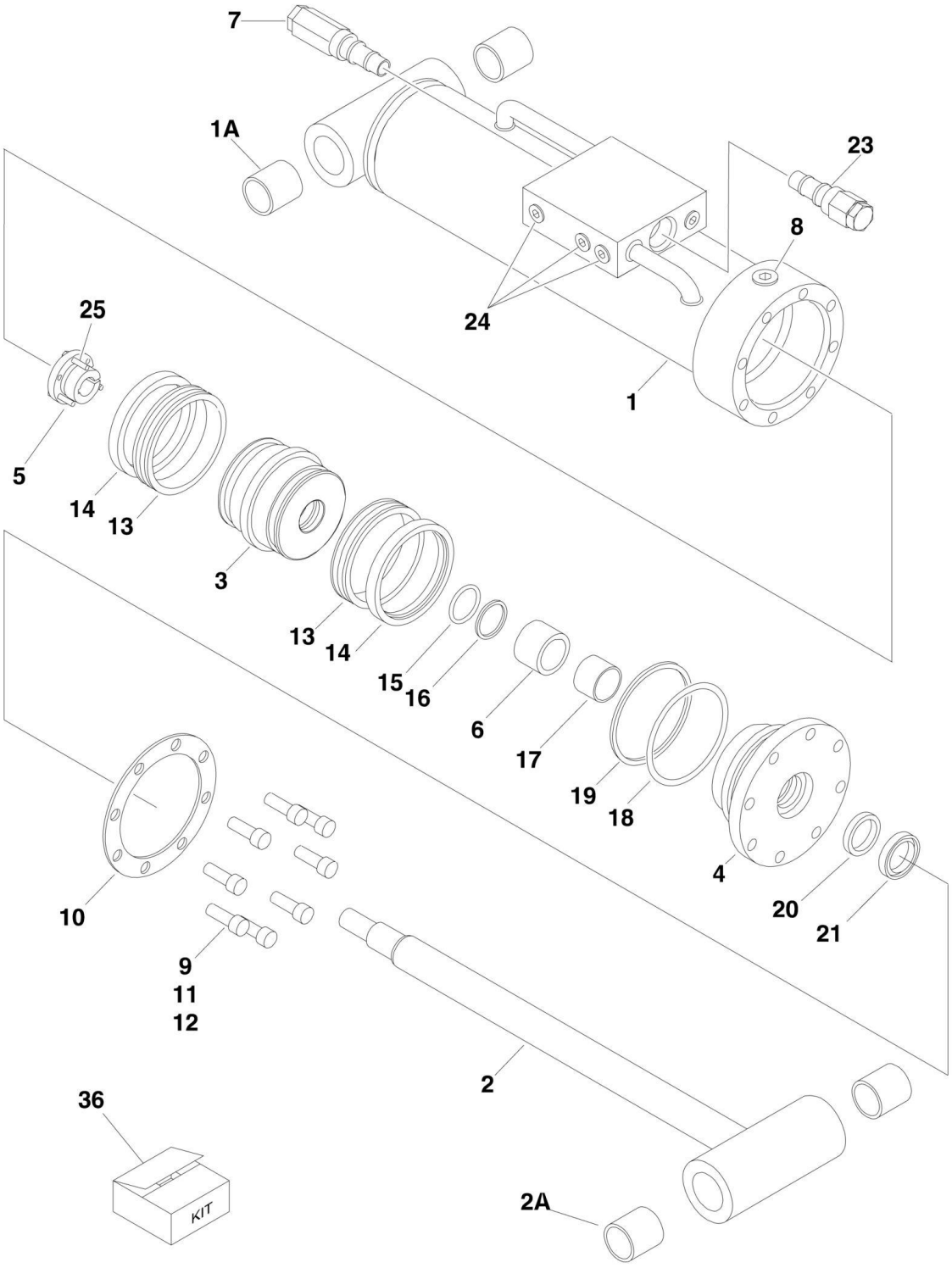

FIGURE 5-3. PLATFORM LEVEL CYLINDER ASSEMBLY (ORIGINAL EQUIPMENT)

ITEM	PART NUMBER	QTY	DESCRIPTION	REV
	1683415	Ref	**PLATFORM LEVEL CYLINDER ASSEMBLY - 600A**	C
	1683418	Ref	**PLATFORM LEVEL CYLINDER ASSEMBLY - 600AJ**	D
		Ref	**Note: Original Cylinder may have been replaced with Service Replacement. Identify PN Stamped on Cylinder Before Ordering Parts.**	
1		Ref	Barrel Weldment Options:	
1	1683977	1	Barrel Weldment 600A (Note: Includes Item 1A)	
1	1683952	1	Barrel Weldment 600AJ (Note: Item 1A not included. Purchase Separately)	
1A		Ref	Bushing Options:	
1A	0961947	2	Bushing 600A	
1A	0961951	2	Bushing 600AJ	
2		Ref	Rod Weldment Options:	
2	1683976	1	Rod Weldment 600A (Note: Includes Item 2A)	
2	1683963	1	Rod Weldment 600AJ (Note: Item 2A not included. Purchase Separately)	
2A		Ref	Bushing Options:	
2A	0961947	2	Bushing 600A	
2A	0961951	2	Bushing 600AJ	
3		Ref	Piston Options:	
3	3480210	1	Piston 600A	
3	3480188	1	Piston 600AJ	
4		Ref	Head Options:	
4	1683053	1	Head 600A	
4	1683055	1	Head 600AJ	
5		Ref	Bushing, Tapered (Includes Item 25) Options:	
5	0961893	1	Bushing, Tapered 600A	
5	0961894	1	Bushing, Tapered 600AJ	
6	4566468	1	Spacer	
7	4640509	1	Cartridge, Valve	
7	2900792	1	Seal Kit - 4640509 Valve	
8	2220885	1	Plug, O-Ring	
9		Ref	Capscrew, Socket Head Options:	
9	3931516	8	Capscrew, Socket Head 600A - Capscrew 5/16in-18NC x 1in	
9	3931620	8	Capscrew, Socket Head 600AJ - Capscrew 3/8in-16NC x 1-1/4in	
10		Ref	Ring, Washer Options:	
10	3760368	1	Ring, Washer 600A	
10	3760369	1	Ring, Washer 600AJ	
11	0100011	AR	Compound, Locking	
12	0100038	AR	Primer, Locking	
13	See Note	2	Seal (Note: Use Item 36)	
14	See Note	2	Ring, Lock (Note: Use Item 36)	
15	See Note	1	O-Ring (Note: Use Item 36)	
16	See Note	1	Ring, Back-up (Note: Use Item 36)	
17	See Note	1	Ring, Wear (Note: Use Item 36)	
18	See Note	1	O-Ring (Note: Use Item 36)	
19	See Note	1	Ring, Back-up (Note: Use Item 36)	
20	See Note	1	Seal, Rod (Note: Use Item 36)	
21	See Note	1	Wiper (Note: Use Item 36)	
23	4640932	1	Cartridge, Valve	

SECTION 5 - CYLINDER

ITEM	PART NUMBER	QTY	DESCRIPTION	REV
23	7011112	1	Seal Kit - 4640932 Valve	
24	2220883	8	Plug, O-Ring	
25		Ref	Bolt Options:	
25	0630534	3	Bolt 600A - Bolt #10 - 24NC x 1in	
25	0630535	3	Bolt 600AJ - Bolt 1/4in - 20NC x 1-1/8in	
36		Ref	Seal Kit Options (Includes Items 13-21):	
36	2901303	1	Seal Kit 600A	
36	2901301	1	Seal Kit 600AJ	

FIGURE 5-4. LEVEL CYLINDER ASSEMBLY - PLATFORM SLAVE (600A) (SERVICE REPLACEMENT)

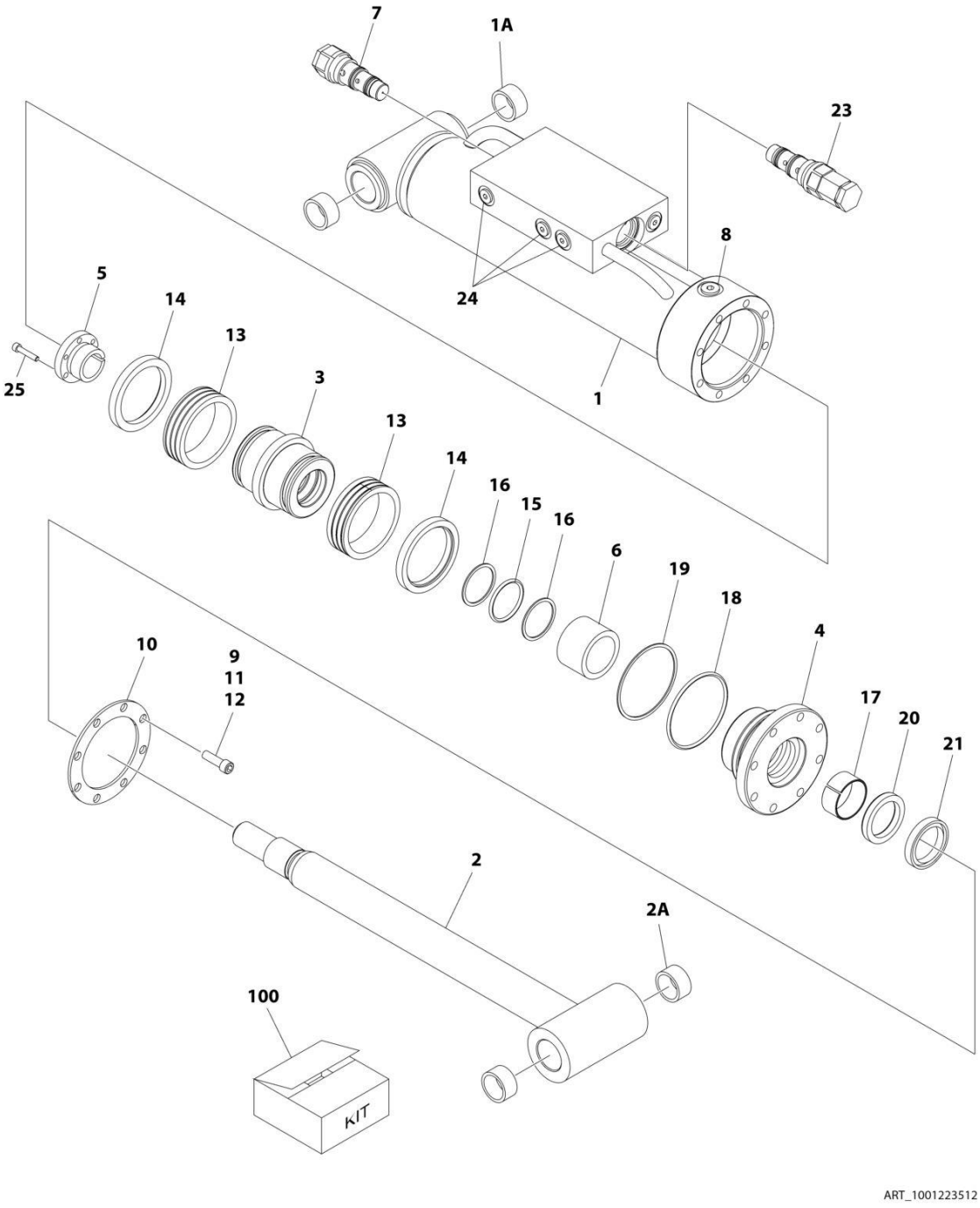

FIGURE 5-4. LEVEL CYLINDER ASSEMBLY - PLATFORM SLAVE (600A) (SERVICE REPLACEMENT)

ITEM	PART NUMBER	QTY	DESCRIPTION	REV
	1001223512	Ref	LEVEL CYLINDER ASSEMBLY	A
		Ref	Note: Original Cylinder may have been replaced with Service Replacement. Identify PN Stamped on Cylinder Before Ordering Parts.	
1	1001223511	1	Barrel	
1A	0961947	2	Bushing	
2	1683976	1	Rod	
2A	0961947	2	Bushing	
3	3480210	1	Piston	
4	1683053	1	Head	
5	0961893	1	Bushing, Tapered	
6	4566468	1	Spacer	
7	4640509	1	Cartridge, Valve	
7	2900792	1	Seal Kit - 4640509 Valve	
8	2220885	1	Plug, O-Ring	
9	3931516	8	Capscrew, Socket Head	
10	3760368	1	Ring, Washer	
11	0100011	AR	Compound, Locking	
12	0100038	AR	Primer, Locking	
13	See Note	NSS	Seal (Note: Use Item 100)	
14	See Note	NSS	Ring, Lock (Note: Use Item 100)	
15	See Note	NSS	O-Ring (Note: Use Item 100)	
16	See Note	NSS	Ring, Back-up (Note: Use Item 100)	
17	See Note	NSS	Ring, Wear (Note: Use Item 100)	
18	See Note	NSS	O-Ring (Note: Use Item 100)	
19	See Note	NSS	Ring, Back-up (Note: Use Item 100)	
20	See Note	NSS	Seal, Rod (Note: Use Item 100)	
21	See Note	NSS	Wiper (Note: Use Item 100)	
23	4640932	1	Cartridge, Valve	
23	7011112	1	Seal Kit - 4640932 Valve	
24	2220883	8	Plug, O-Ring	
25	0630534	3	Bolt #10 x 1	
100	2901303	1	Seal Kit (Includes Items 13-21)	

SECTION 5 - CYLINDER

FIGURE 5-5. LEVEL CYLINDER ASSEMBLY - PLATFORM SLAVE (600AJ) (SERVICE REPLACEMENT)

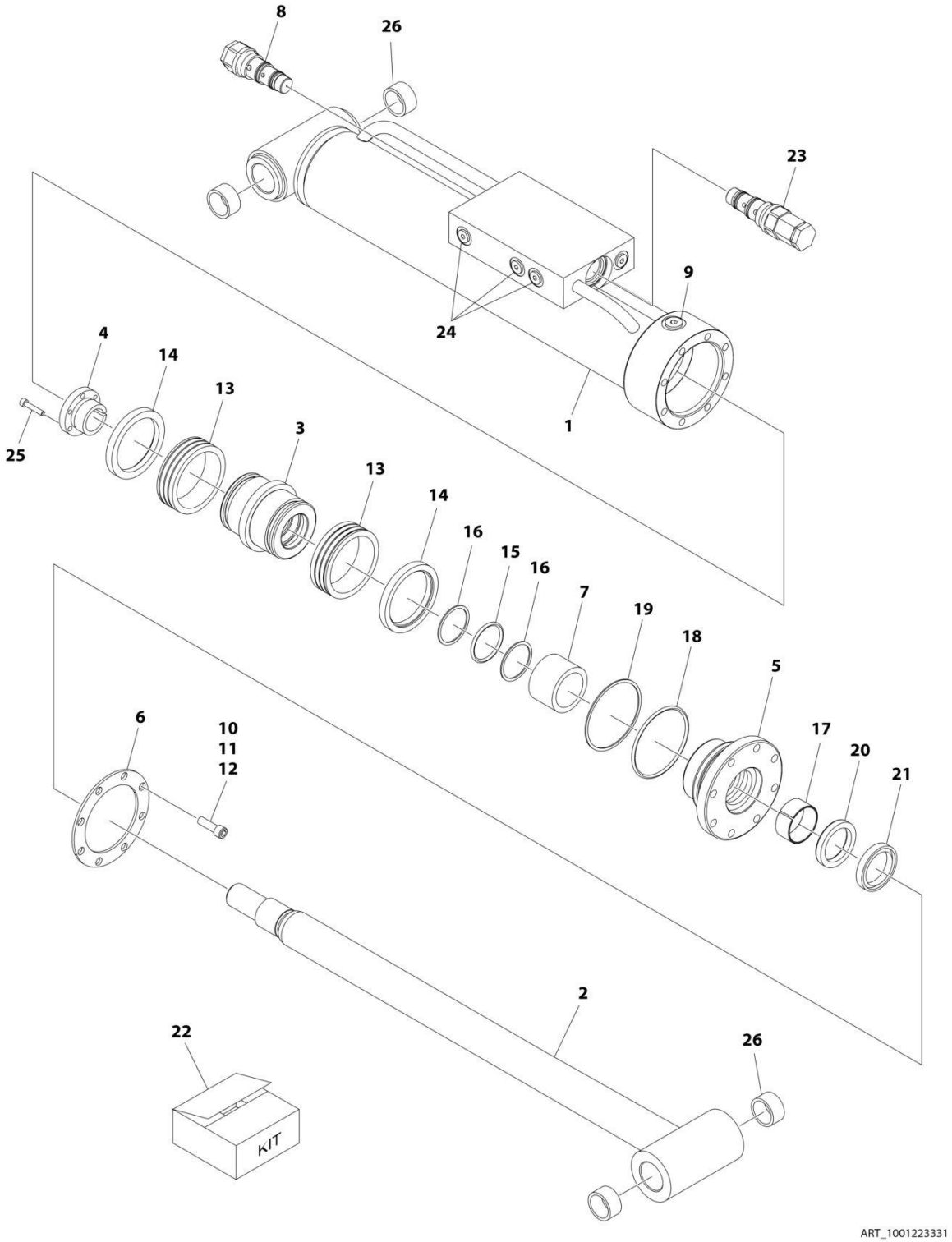

FIGURE 5-5. LEVEL CYLINDER ASSEMBLY - PLATFORM SLAVE (600AJ) (SERVICE REPLACEMENT)

ITEM	PART NUMBER	QTY	DESCRIPTION	REV
	1001223331	Ref	LEVEL CYLINDER ASSEMBLY	B
		Ref	Note: Original Cylinder may have been replaced with Service Replacement. Identify PN Stamped on Cylinder Before Ordering Parts.	
1	1001223332	1	Barrel	
2	1683963	1	Rod	
3	3480188	1	Head	
4	0961894	1	Bushing, Tapered	
5	1683055	1	Head	
6	3760369	1	Ring, Washer	
7	4566468	1	Spacer	
8	4640509	1	Cartridge, Valve	
8	2900792	1	Seal Kit - 4640509 Valve	
9	2220885	1	Plug	
10	3931620	8	Capscrew 3/8 x 1-1/4	
11	0100011	AR	Compound, Locking	
12	0100038	AR	Primer, Locking	
13	See Note	NSS	Seal (Note: Use Item 22)	
14	See Note	NSS	Ring, Lock (Note: Use Item 22)	
15	See Note	NSS	O-Ring (Note: Use Item 22)	
16	See Note	NSS	Ring, Back-up (Note: Use Item 22)	
17	See Note	NSS	Ring, Wear (Note: Use Item 22)	
18	See Note	NSS	O-Ring (Note: Use Item 22)	
19	See Note	NSS	Ring, Back-up (Note: Use Item 22)	
20	See Note	NSS	Seal (Note: Use Item 22)	
21	See Note	NSS	Wiper (Note: Use Item 22)	
22	2901301	1	Seal Kit (Includes Items 13-21)	
23	4640932	1	Cartridge, Valve	
23	7011112	1	Seal Kit - 4640932 Valve	
24	2220883	8	Plug	
25	0630535	3	Bolt 1/4 x 1-1/8	
26	0961951	4	Bushing	

FIGURE 5-6. LEVEL CYLINDER ASSEMBLY - UPRIGHT

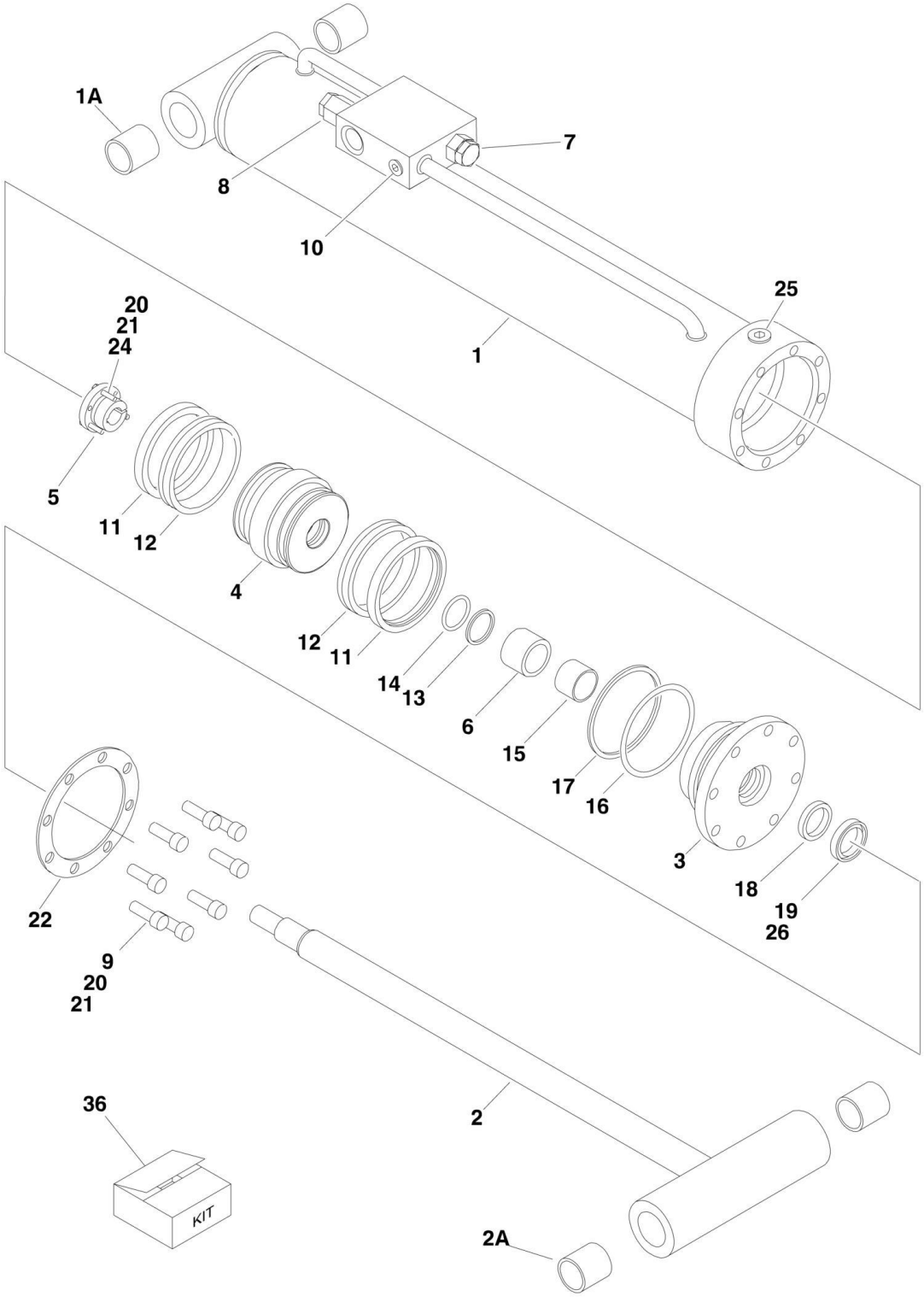

FIGURE 5-6. LEVEL CYLINDER ASSEMBLY - UPRIGHT

ITEM	PART NUMBER	QTY	DESCRIPTION	REV
		Ref	**LEVEL CYLINDER ASSEMBLY - UPRIGHT OPTIONS:**	
	1683299	Ref	**Original Equipment**	F
	1684498	Ref	**Service Replacement**	C
		Ref	**Note: Original Equipment components may have been replaced with Service Replacement components part. Identify p/n stamped on cylinder before ordering parts.**	
1		Ref	Barrel Weldment	
1	1684014	NLA	Original Equipment (Use p/n 0370035)	
1	0370035	1	Service Replacement	
1A	0961949	2	Bushing	
2	1684015	1	Rod Weldment	
2A	0961949	2	Bushing	
3	1683067	1	Head	
4	3480206	1	Piston	
5	0961898	1	Bushing, Tapered (Use Item #24 in place of supplied bolts)	
6	4566501	1	Spacer, Tube	
7	4640509	1	Cartridge, Valve	
7	2900792	1	Seal Kit - 4640509 Valve	
8	4640605	1	Cartridge, Valve	
8	2900792	1	Seal Kit - 4640605 Valve	
9	3932032	8	Bolt, Socket Head 5/16in-11NC x 2in	
10	2220883	2	Plug, O-Ring	
11	See Note	NSS	Ring, Lock (Note: Use Item 36)	
12	See Note	NSS	Seal, Hydrolock (Note: Use Item 36)	
13	See Note	NSS	O-Ring (Note: Use Item 36)	
14	See Note	NSS	Ring, Back-up (Note: Use Item 36)	
15	See Note	NSS	Ring, Wear (Note: Use Item 36)	
16	See Note	NSS	O-Ring (Note: Use Item 36)	
17	See Note	NSS	Ring, Back-up (Note: Use Item 36)	
18	See Note	NSS	Seal, Rod (Note: Use Item 36)	
19	See Note	NSS	Wiper (Note: Use Item 36)	
20	0100011	AR	Compound, Locking	
21	0100038	AR	Primer, Locking	
22	3760372	1	Washer, Ring	
24	0630536	3	Bolt 3/8in-16NC x 1-1/2in	
25	2220886	1	Plug, O-Ring	
26	0100063	AR	Adhesive	
36	2901285	1	Seal Kit (Includes Items 11-19)	

FIGURE 5-7. LEVEL CYLINDER ASSEMBLY - UPRIGHT (SERVICE REPLACEMENT)

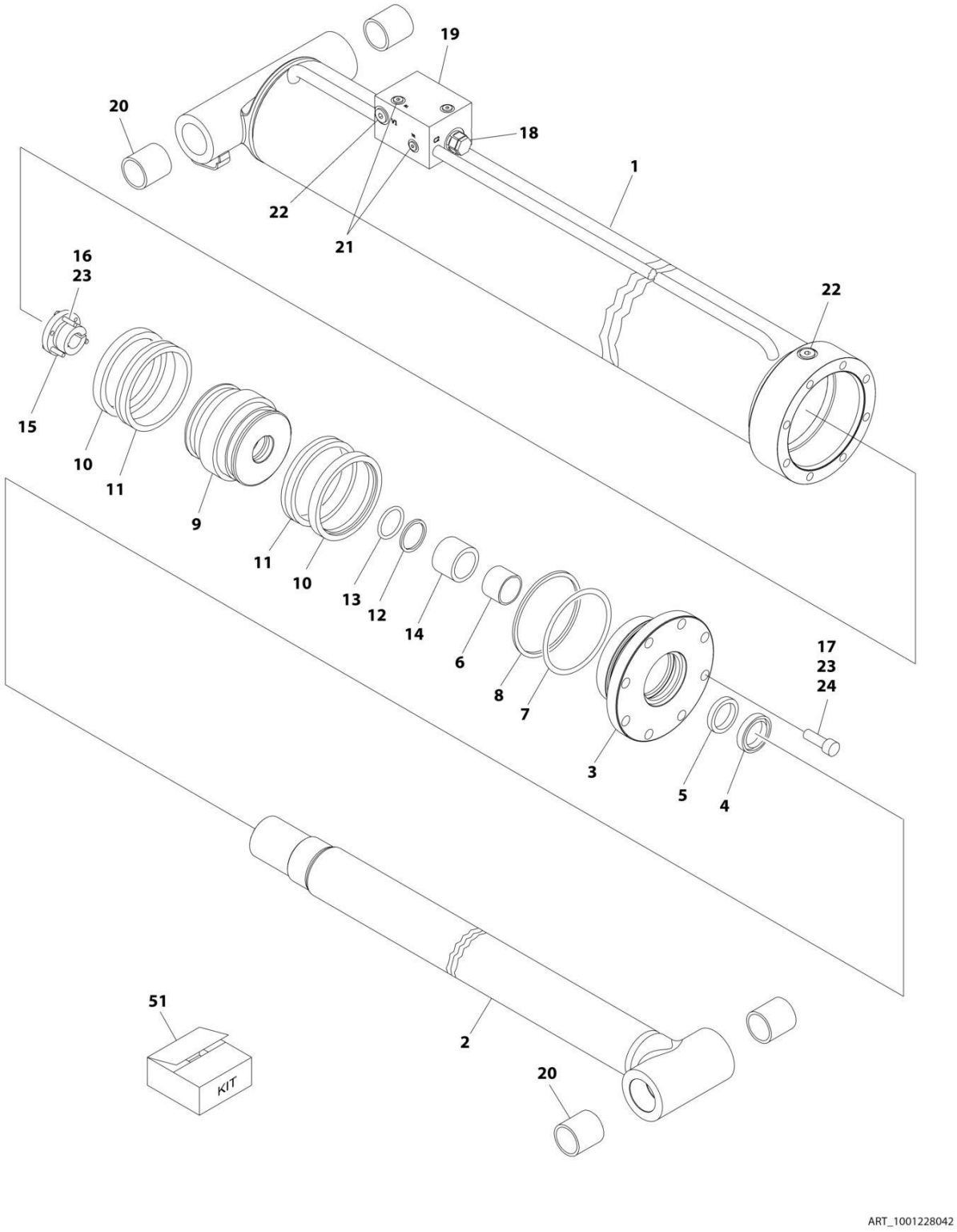

FIGURE 5-7. LEVEL CYLINDER ASSEMBLY - UPRIGHT (SERVICE REPLACEMENT)

ITEM	PART NUMBER	QTY	DESCRIPTION	REV
	1001228042	Ref	UPRIGHT LEVEL CYLINDER ASSEMBLY	D
		Ref	Note: Original Equipment components may have been replaced with Service Replacement components part. Identify p/n stamped on cylinder before ordering parts.	
1	See Note	NSS	Barrel (Note: Not Available for Purchase)	
2	70006489	1	Rod	
3	70006488	1	Head	
4	See Note	NSS	Wiper (Note: Use Item 51)	
5	See Note	NSS	Seal, Rod (Note: Use Item 51)	
6	See Note	NSS	Ring, Wear (Note: Use Item 51)	
7	See Note	NSS	O-Ring (Note: Use Item 51)	
8	See Note	NSS	Ring, Back-up (Note: Use Item 51)	
9	70006487	1	Piston	
10	See Note	NSS	Ring, Lock (Note: Use Item 51)	
11	See Note	NSS	Seal, Hydrolock (Note: Use Item 51)	
12	See Note	NSS	O-Ring (Note: Use Item 51)	
13	See Note	NSS	Ring, Back-up (Note: Use Item 51)	
14	70006486	1	Spacer, Tube	
15	0961898	1	Bushing, Tapered (Use Item #16 in place of supplied bolts)	
16	0630536	3	Bolt 3/8 x 1-1/2	
17	3932032	8	Bolt, Socket Head 5/16 x 2	
18	4640509	1	Cartridge, Valve	
18	2900792	1	Seal Kit - 4640509 Valve	
19	4640605	1	Cartridge, Valve	
19	2900792	1	Seal Kit - 4640605 Valve	
20	0961949	4	Bushing	
21	2220883	5	Plug, O-Ring	
22	2220886	AR	Plug, O-Ring	
23	0100011	AR	Compound, Locking	
24	0100038	AR	Primer, Locking	
51	2901285	1	Seal Kit (Includes Items 4-8 & 10-13)	

FIGURE 5-8. LIFT CYLINDER ASSEMBLY - ARTICULATING JIB (600AJ)

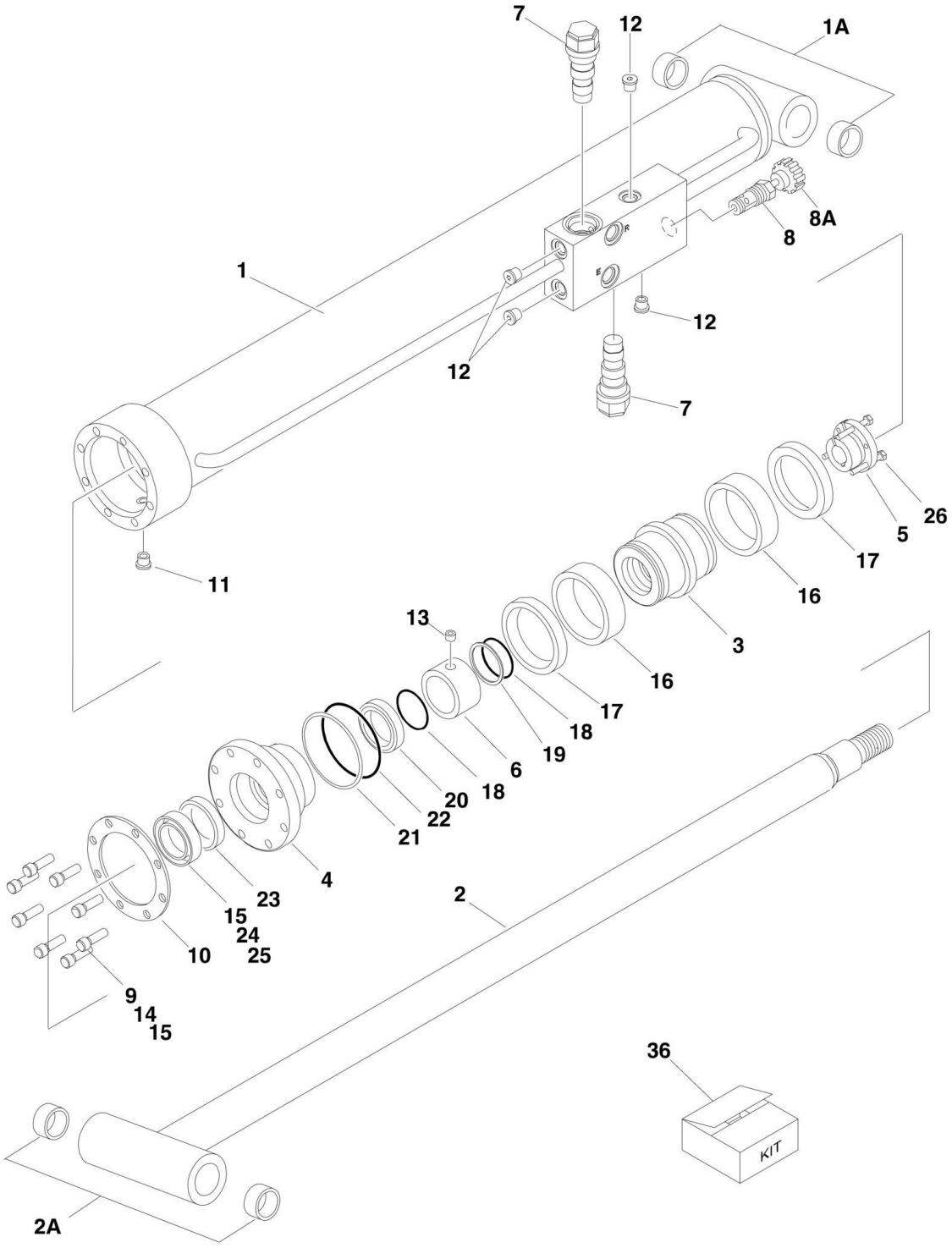

FIGURE 5-8. LIFT CYLINDER ASSEMBLY - ARTICULATING JIB (600AJ)

ITEM	PART NUMBER	QTY	DESCRIPTION	REV
		Ref	**LIFT CYLINDER ASSEMBLY - 600AJ OPTIONS:**	
	1683258	Ref	**Lift Cylinder Assembly (SN 0300069000 through 0300070976)**	E
	1683609	Ref	**Lift Cylinder Assembly (SN 0300070977 through 0300087000)**	H
		Ref	**Note: Original Equipment components may have been replaced with Service Replacement components part. Identify p/n stamped on cylinder before ordering parts.**	
1		Ref	Barrel Options:	
1	1684092	1	Barrel **(SN 0300069000 through 0300070976)**	
1	1684089	1	Barrel **(SN 0300070977 through 0300087000)**	
1A	0962336	2	Bushing	
2	1684090	1	Rod	
2A	0962336	2	Bushing	
3	3480210	1	Piston	
4	1683053	1	Head	
5	0961893	1	Bushing, Tapered	
6		Ref	Spacer, Tube Options:	
6	4566471	NLA	Spacer, Tube (Use p/n 4100100) **(SN 0300069000 through 0300079598)**	
6	4100100	1	Spacer, Tube **(SN 0300079599 through 0300087000)**	
7	4640509	2	Cartridge, Valve	
7	2900792	2	Seal Kit - 4640509 Valve	
8	4640902	1	Cartridge, Valve Only **(SN 0300069000 through 0300070977)**	
8	7012953	1	Seal Kit - 4640902 Valve	
8A	7012961	1	Knob	
9	3931516	8	Capscrew, Socket Head 5/16in-18NC x 1in	
10	3760368	1	Ring, Washer	
11	2220885	1	Plug, O-Ring #6	
12	2220883	4	Plug, O-Ring #4	
13	3900141	1	Setscrew 1/4in-20NC x 3/8in **(SN 0300069000 through 0300079601)**	
14	0100011	AR	Compound, Locking	
15	0100038	AR	Primer, Locking	
16	See Note	NSS	Seal (Note: Use Item 36)	
17	See Note	NSS	Ring, Lock (Note: Use Item 36)	
18	See Note	NSS	O-Ring (Note: Use Item 36)	
19	See Note	NSS	Ring, Back-up (Note: Use Item 36)	
20	See Note	NSS	Ring, Wear (Note: Use Item 36)	
21	See Note	NSS	O-Ring (Note: Use Item 36)	
22	See Note	NSS	Ring, Back-up (Note: Use Item 36)	
23	See Note	NSS	Seal, Rod (Note: Use Item 36)	
24	See Note	NSS	Wiper (Note: Use Item 36)	
25	0100063	AR	Adhesive	
26	0630534	3	Bolt #10 - 24NC x 1in	
36	2901303	1	Seal Kit (Includes Items 16-24)	

FIGURE 5-9. LIFT CYLINDER ASSEMBLY - ARTICULATING JIB (600AJ) (SERVICE REPLACEMENT)

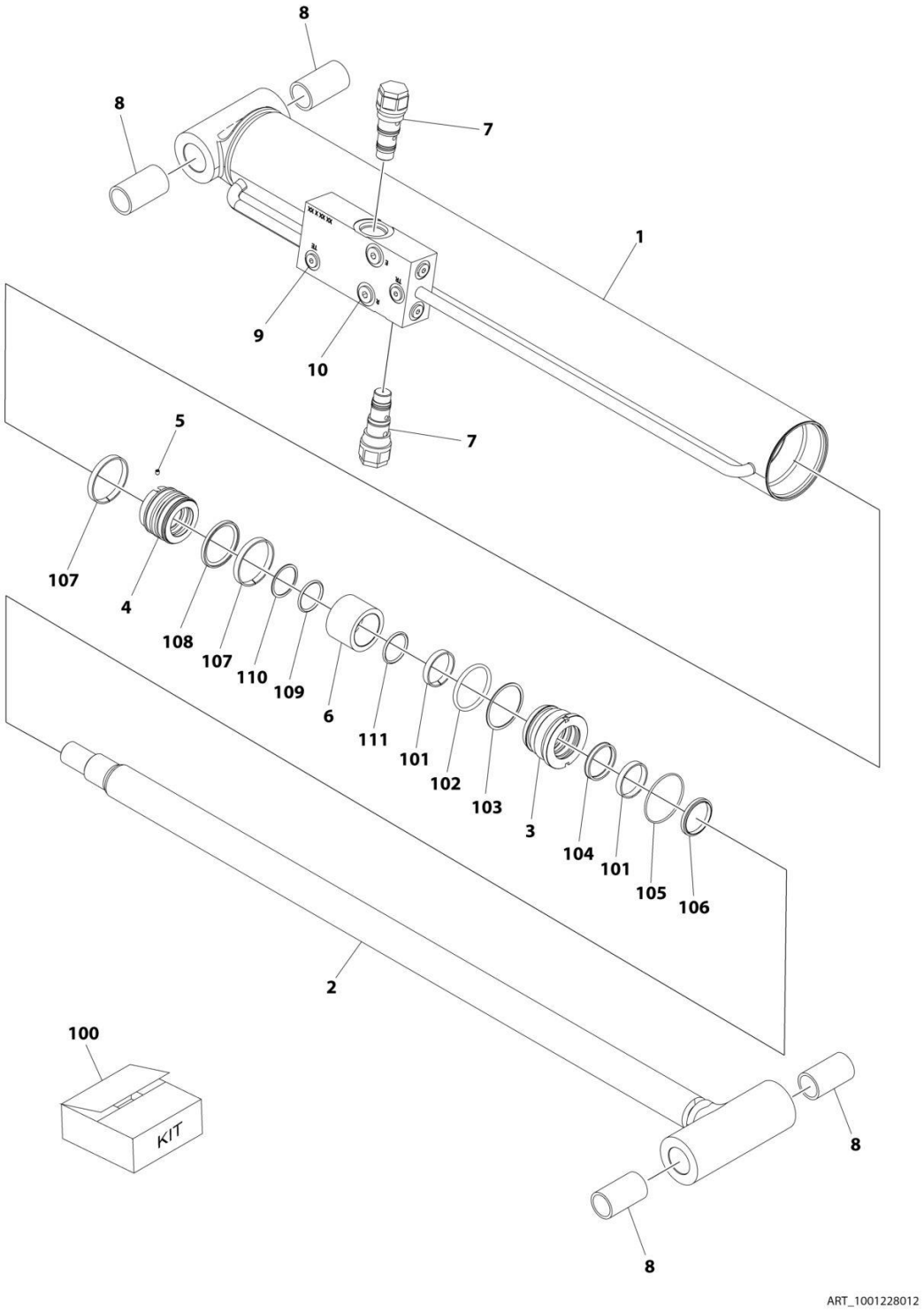

FIGURE 5-9. LIFT CYLINDER ASSEMBLY - ARTICULATING JIB (600AJ) (SERVICE REPLACEMENT)

ITEM	PART NUMBER	QTY	DESCRIPTION	REV
	1001228012	Ref	LIFT CYLINDER ASSEMBLY - JIB	C
		Ref	Note: Original Cylinder May Have Been Replaced with Service Replacement. Identify PN Stamped on Cylinder Before Ordering Parts.	
1	See Note	NSS	Barrel (Note: Not Available for Purchase)	
2	70006572	1	Rod	
3	70006571	1	Head	
4	70006570	1	Piston	
5	70023915	1	Screw	
6	70006569	1	Spacer	
7	4640509	2	Cartridge, Valve	
7	2900792	2	Seal Kit - 4640509 Valve	
8	0962336	4	Bushing	
9	2220883	6	Plug, O-Ring	
10	2220885	2	Plug, O-Ring	
100	70006568	1	Seal Kit (Includes Items 101-111)	
101	See Note	NSS	Ring, Wear (Note: Use Item 100)	
102	See Note	NSS	O-Ring (Note: Use Item 100)	
103	See Note	NSS	Ring, Back-up (Note: Use Item 100)	
104	See Note	NSS	Seal, Rod (Note: Use Item 100)	
105	See Note	NSS	O-Ring (Note: Use Item 100)	
106	See Note	NSS	Wiper (Note: Use Item 100)	
107	See Note	NSS	Ring, Wear (Note: Use Item 100)	
108	See Note	NSS	Seal (Note: Use Item 100)	
109	See Note	NSS	O-Ring (Note: Use Item 100)	
110	See Note	NSS	Ring, Back-up (Note: Use Item 100)	
111	See Note	NSS	O-Ring (Note: Use Item 100)	

FIGURE 5-10. LIFT CYLINDER ASSEMBLY - ARTICULATING JIB (600AJ) (SERVICE REPLACEMENT)

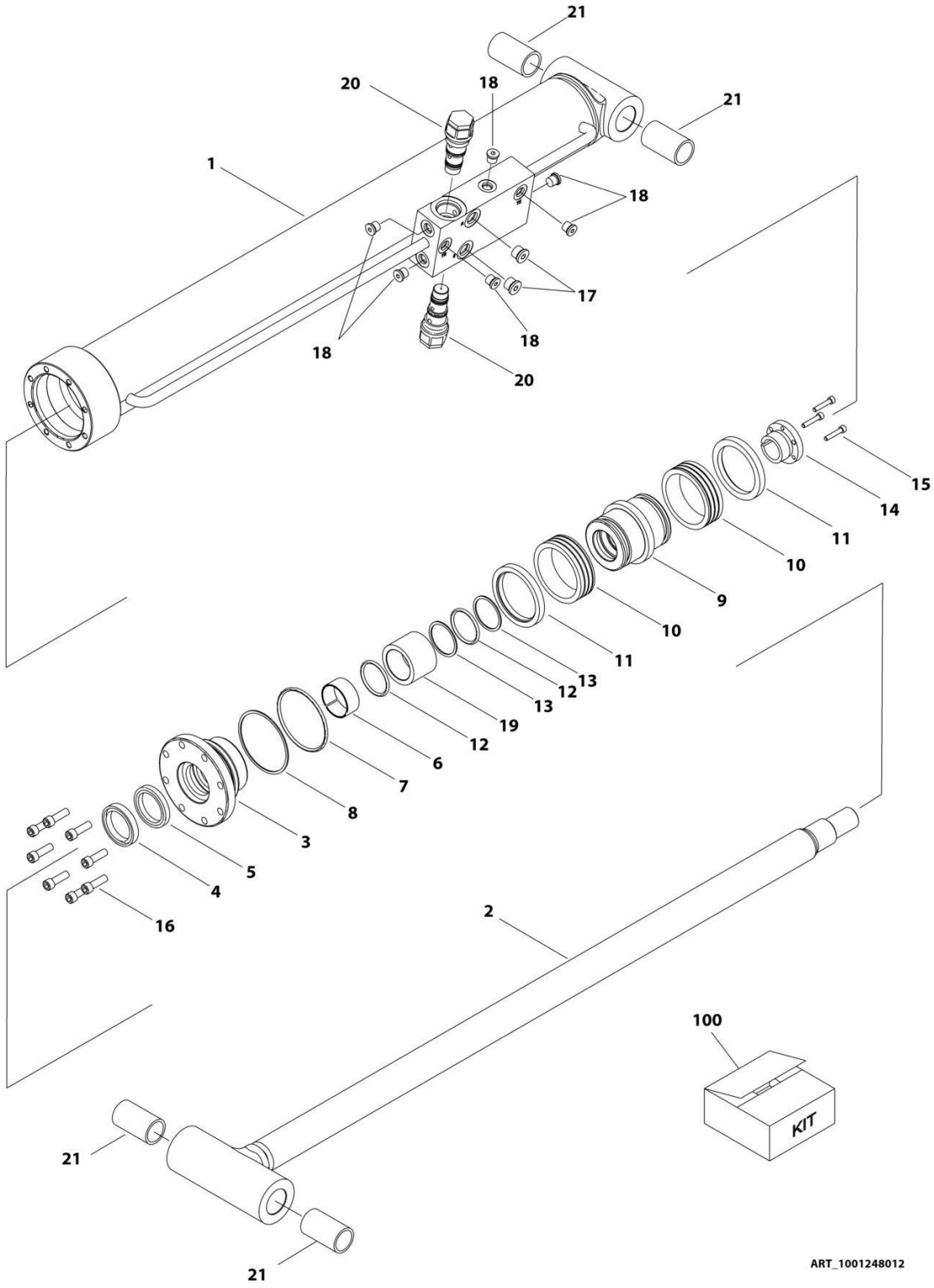

FIGURE 5-10. LIFT CYLINDER ASSEMBLY - ARTICULATING JIB (600AJ) (SERVICE REPLACEMENT)

ITEM	PART NUMBER	QTY	DESCRIPTION	REV
	1001248012	Ref	LIFT CYLINDER ASSEMBLY - JIB	B
		Ref	Note: Original Cylinder May Have Been Replaced with Service Replacement. Identify PN Stamped on Cylinder Before Ordering Parts.	
1	See Note	NSS	Barrel (Note: Not Available for Purchase)	
2	70006734	1	Rod	
3	70006649	1	Head	
4	See Note	NSS	Wiper (Note: Use Item 100)	
5	See Note	NSS	Seal, Rod (Note: Use Item 100)	
6	See Note	NSS	Ring, Wear (Note: Use Item 100)	
7	See Note	NSS	O-Ring (Note: Use Item 100)	
8	See Note	NSS	Ring, Back-up (Note: Use Item 100)	
9	70006650	1	Piston	
10	See Note	NSS	Seal (Note: Use Item 100)	
11	See Note	NSS	Ring, Lock (Note: Use Item 100)	
12	See Note	NSS	O-Ring (Note: Use Item 100)	
13	See Note	NSS	Ring, Back-up (Note: Use Item 100)	
14	0961893	1	Bushing, Tapered	
15	0630534	3	Capscrew, Socket Head #10 x 1	
16	70006735	8	Capscrew 5/16	
17	2220885	2	Plug, O-Ring	
18	2220883	6	Plug, O-Ring	
19	70006736	1	Spacer	
20	4640509	2	Cartridge, Valve	
20	2900792	2	Seal Kit - 4640509 Valve	
21	0962336	4	Bushing	
100	1001138795	1	Seal Kit (Includes Items 4-8 & 10-13)	

FIGURE 5-11. LIFT CYLINDER ASSEMBLY - MAIN BOOM (ORIGINAL EQUIPMENT)

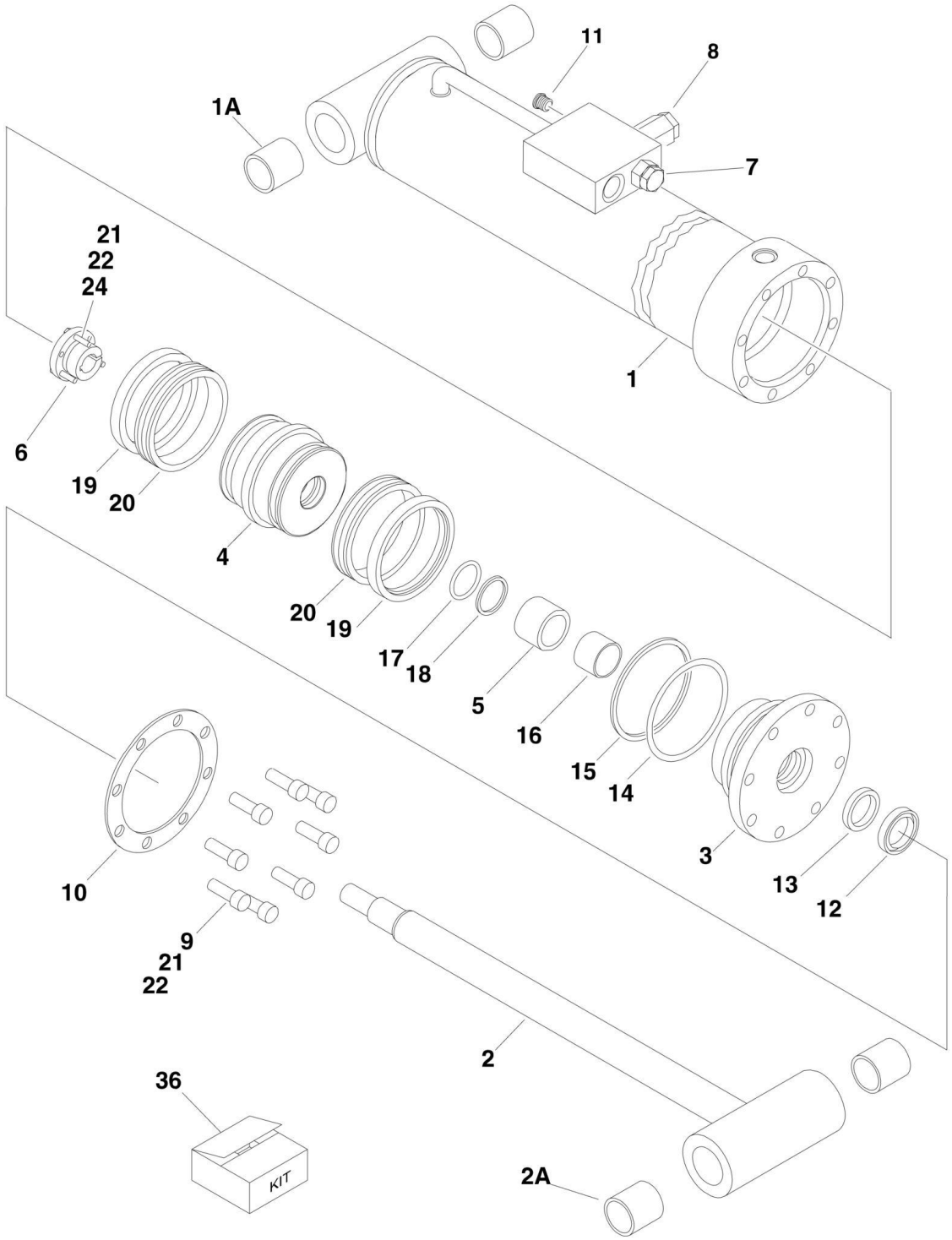

FIGURE 5-11. LIFT CYLINDER ASSEMBLY - MAIN BOOM (ORIGINAL EQUIPMENT)

ITEM	PART NUMBER	QTY	DESCRIPTION	REV
	1683294	Ref	**LIFT CYLINDER ASSEMBLY - MAIN BOOM**	G
		Ref	**Note: Original Equipment components may have been replaced with Service Replacement components part. Identify p/n stamped on cylinder before ordering parts.**	
1	1684001	1	Barrel	
1A	0961948	2	Bushing	
2	1684005	1	Rod	
2A	0961948	2	Bushing	
3	1683061	1	Head	
4	3480211	1	Piston	
5	4566408	1	Spacer	
6	0961897	1	Bushing, Tapered	
7	4640438	1	Cartridge, Valve	
7	2900770	1	Seal Kit - 4640438 Valve	
8	4640509	1	Cartridge, Valve	
8	2900792	1	Seal Kit - 4640509 Valve	
9	3931720	8	Capscrew, Socket Head 7/16in-14NC x 1-1/4in	
10	3760370	1	Ring, Washer	
11	2220883	1	Plug, O-Ring #6	
12	See Note	NSS	Wiper (Note: Use Item 36)	
13	See Note	NSS	Seal, Rod (Note: Use Item 36)	
14	See Note	NSS	O-Ring (Note: Use Item 36)	
15	See Note	NSS	Ring, Back-up (Note: Use Item 36)	
16	See Note	NSS	Ring, Wear (Note: Use Item 36)	
17	See Note	NSS	O-Ring (Note: Use Item 36)	
18	See Note	NSS	Ring, Back-up (Note: Use Item 36)	
19	See Note	NSS	Ring, Lock (Note: Use Item 36)	
20	See Note	NSS	Seal (Note: Use Item 36)	
21	0100011	AR	Compound, Locking	
22	0100038	AR	Primer, Locking	
24	0630535	3	Bolt 1/4in-20NC x 1-1/8in	
36	2901273	1	Seal Kit (Includes Items 12-20)	

FIGURE 5-12. LIFT CYLINDER ASSEMBLY - MAIN BOOM (SERVICE REPLACEMENT)

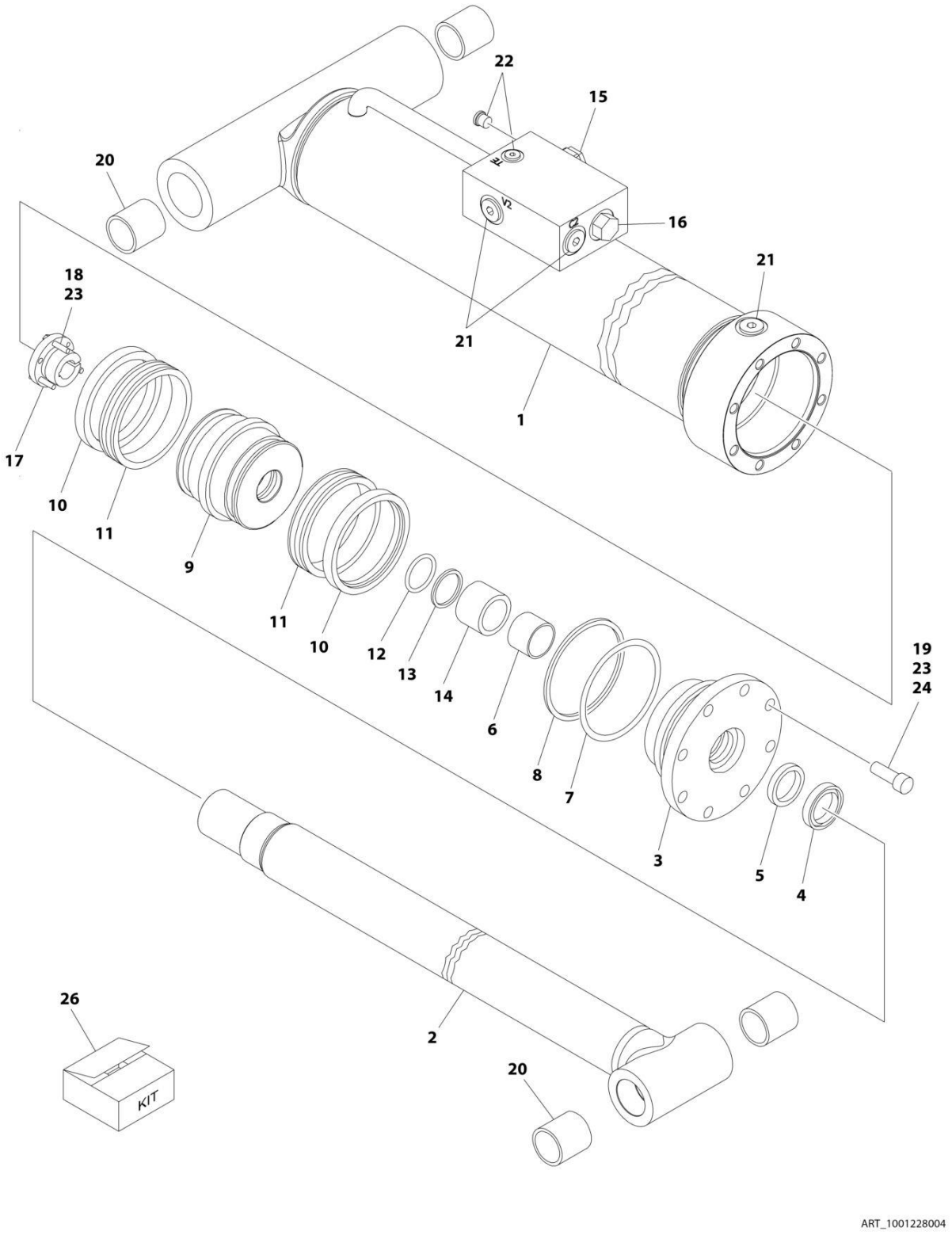

FIGURE 5-12. LIFT CYLINDER ASSEMBLY - MAIN BOOM (SERVICE REPLACEMENT)

ITEM	PART NUMBER	QTY	DESCRIPTION	REV
	1001228004	Ref	LIFT CYLINDER ASSEMBLY - MAIN BOOM	B
		Ref	Note: Original Equipment components may have been replaced with Service Replacement components part. Identify p/n stamped on cylinder before ordering parts.	
1	See Note	NSS	Barrel (Note: Not Available for Purchase)	
2	70006481	1	Rod	
3	70006480	1	Head	
4	See Note	NSS	Wiper (Note: Use Item 26)	
5	See Note	NSS	Seal, Rod (Note: Use Item 26)	
6	See Note	NSS	Ring, Wear (Note: Use Item 26)	
7	See Note	NSS	O-Ring (Note: Use Item 26)	
8	See Note	NSS	Ring, Back-up (Note: Use Item 26)	
9	70006479	1	Piston	
10	See Note	NSS	Ring, Lock (Note: Use Item 26)	
11	See Note	NSS	Seal (Note: Use Item 26)	
12	See Note	NSS	O-Ring (Note: Use Item 26)	
13	See Note	NSS	Ring, Back-up (Note: Use Item 26)	
14	70006478	1	Spacer	
15	4640509	1	Cartridge, Valve	
15	2900792	1	Seal Kit - 4640509 Valve	
16	4640438	1	Cartridge, Valve	
16	2900770	1	Seal Kit - 4640438 Valve	
17	0961897	1	Bushing, Tapered	
18	0630535	3	Bolt 1/4 x 1-1/8	
19	3931720	8	Capscrew, Socket Head 7/16 x 1-1/4	
20	0961948	2	Bushing	
21	2220886	4	Plug, O-Ring	
22	2220883	3	Plug, O-Ring	
23	0100011	AR	Compound, Locking	
24	0100038	AR	Primer, Locking	
26	2901273	1	Seal Kit (Includes Items 4-8 & 10-13)	

FIGURE 5-13. LIFT CYLINDER ASSEMBLY - TOWER BOOM (ORIGINAL EQUIPMENT)

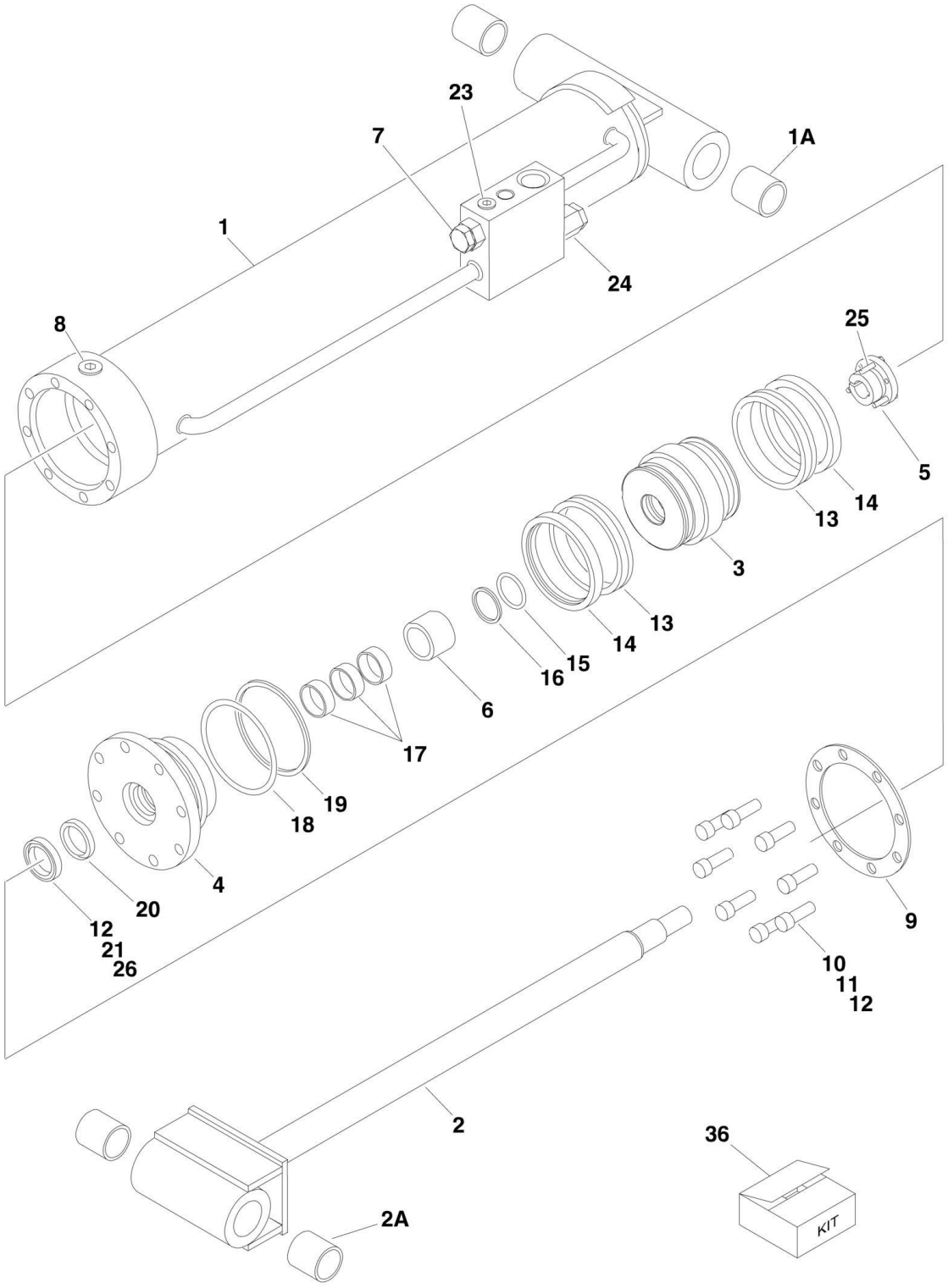

FIGURE 5-13. LIFT CYLINDER ASSEMBLY - TOWER BOOM (ORIGINAL EQUIPMENT)

ITEM	PART NUMBER	QTY	DESCRIPTION	REV
	1683288	Ref	**LIFT CYLINDER ASSEMBLY - TOWER BOOM**	L
		Ref	**Note: Original Equipment components may have been replaced with Service Replacement components part. Identify p/n stamped on cylinder before ordering parts.**	
1	1684017	1	Barrel	
1A	0961949	2	Bushing	
2	1684019	1	Rod	
2A	0961949	2	Bushing	
3	3480216	1	Piston	
4	1683069	1	Head	
5	0961899	1	Bushing, Tapered	
6	4566667	1	Spacer	
7	4640605	1	Cartridge, Valve	
7	2900792	1	Seal Kit - 4640605	
8	2220888	1	Plug, O-Ring #12	
9	3760384	1	Ring, Washer	
10	3932240	8	Capscrew, Socket Head 3/4in-10NC x 2-1/2in	
11	0100011	AR	Compound, Locking	
12	0100038	AR	Primer, Locking	
13	See Note	NSS	Seal (Note: Use Item 36)	
14	See Note	NSS	Ring, Lock (Note: Use Item 36)	
15	See Note	NSS	O-Ring (Note: Use Item 36)	
16	See Note	NSS	Ring, Back-up (Note: Use Item 36)	
17	See Note	NSS	Ring, Wear (Note: Use Item 36)	
18	See Note	NSS	O-Ring (Note: Use Item 36)	
19	See Note	NSS	Ring, Back-up (Note: Use Item 36)	
20	See Note	NSS	Seal, Rod (Note: Use Item 36)	
21	See Note	NSS	Wiper (Note: Use Item 36)	
23	2220883	2	Plug, O-Ring #4	
24	4640509	1	Counterbalance	
24	2900792	1	Seal Kit - 4640509	
25	0630536	3	Bolt 3/8in-16NC x 1-1/2in	
26	0100063	AR	Adhesive	
36	2901322	1	Seal Kit (Includes Items 13-21)	

FIGURE 5-14. LIFT CYLINDER ASSEMBLY - TOWER BOOM (SERVICE REPLACEMENT)

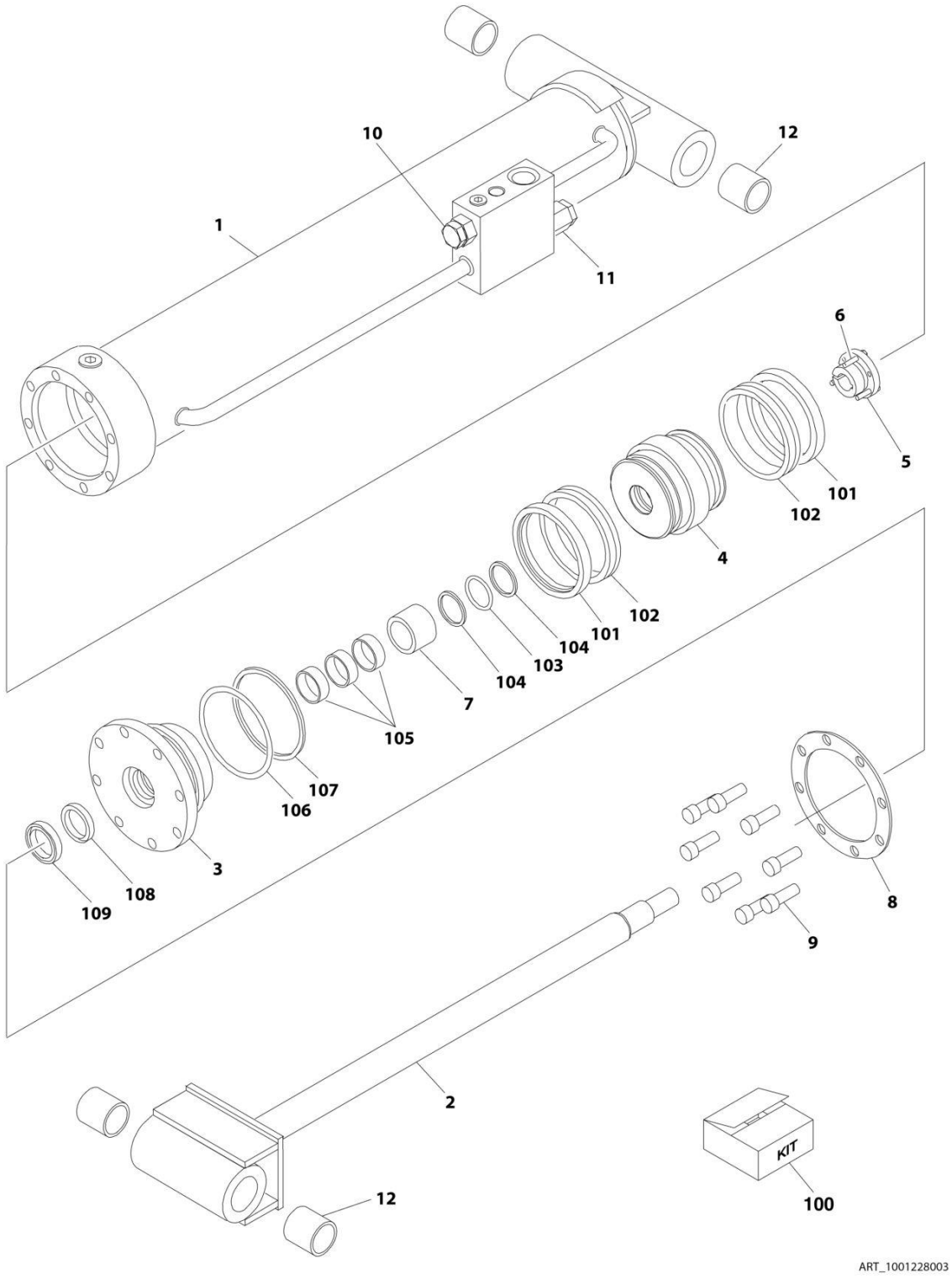

FIGURE 5-14. LIFT CYLINDER ASSEMBLY - TOWER BOOM (SERVICE REPLACEMENT)

ITEM	PART NUMBER	QTY	DESCRIPTION	REV
	1001228003	Ref	LIFT CYLINDER ASSEMBLY	D
		Ref	Note: Original Cylinder may have been replaced with Service Replacement. Identify PN Stamped on Cylinder Before Ordering Parts.	
1	See Note	NSS	Barrel (Note: Not Available For Purchase)	
2	70006374	1	Rod	
3	70006373	1	Head	
4	70006372	1	Piston	
5	70006371	1	Bushing, Tapered	
6	0630536	3	Bolt 3/8 x 1-1/2	
7	70006370	1	Spacer	
8	70006369	1	Ring, Washer	
9	3932240	8	Capscrew 3/4 x 2-1/2	
10	4640605	1	Cartridge, Valve	
10	2900792	1	Seal Kit - 4640605 Valve	
11	4640509	1	Cartridge, Valve	
11	2900792	1	Seal Kit - 4640509 Valve	
12	0961949	4	Bushing	
100	2901322	1	Seal Kit (Includes Items 101-109)	
101	See Note	NSS	Ring, Lock (Note: Use Item 100)	
102	See Note	NSS	Seal (Note: Use Item 100)	
103	See Note	NSS	O-Ring (Note: Use Item 100)	
104	See Note	NSS	Ring, Back-up (Note: Use Item 100)	
105	See Note	NSS	Ring, Wear (Note: Use Item 100)	
106	See Note	NSS	O-Ring (Note: Use Item 100)	
107	See Note	NSS	Ring, Back-up (Note: Use Item 100)	
108	See Note	NSS	Seal, Rod (Note: Use Item 100)	
109	See Note	NSS	Wiper (Note: Use Item 100)	

FIGURE 5-15. MASTER CYLINDER ASSEMBLY (ORIGINAL EQUIPMENT)

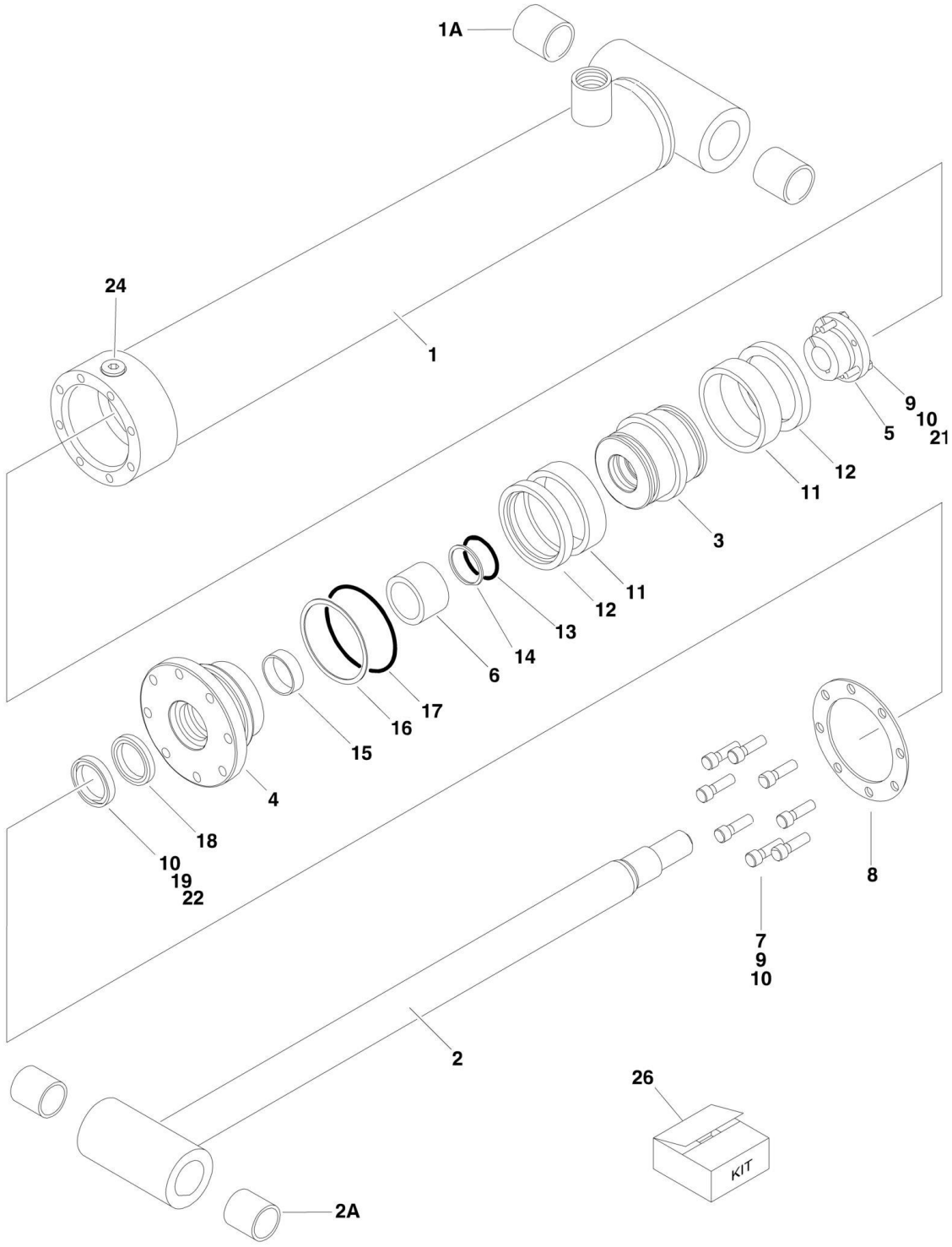

FIGURE 5-15. MASTER CYLINDER ASSEMBLY (ORIGINAL EQUIPMENT)

ITEM	PART NUMBER	QTY	DESCRIPTION	REV
	1683266	Ref	**MASTER CYLINDER ASSEMBLY - 600A**	C
	1683263	Ref	**MASTER CYLINDER ASSEMBLY - 600AJ**	E
		Ref	**Note: Original Cylinder May Have Been Replaced with Service Replacement. Identify PN Stamped on Cylinder Before Ordering Parts.**	
1		Ref	Barrel Options:	
1	1683972	1	Barrel 600A (Note: Includes Item 1A)	
1	1683949	1	Barrel 600AJ (Note: Item 1A not included. Purchase Separately)	
1A		Ref	Bushing Options:	
1A	0961947	2	Bushing 600A	
1A	0961951	2	Bushing 600AJ	
2		Ref	Rod Options:	
2	1683973	1	Rod 600A (Note: Includes Item 2A)	
2	1683962	1	Rod 600AJ (Note: Item 2A not included. Purchase Separately)	
2A		Ref	Bushing Options:	
2A	0961947	2	Bushing 600A	
2A	0961951	2	Bushing 600AJ	
3		Ref	Piston Options:	
3	3480210	1	Piston 600A	
3	3480188	1	Piston 600AJ	
4		Ref	Head Options:	
4	1683053	1	Head 600A	
4	1683055	1	Head 600AJ	
5		Ref	Bushing, Tapered Options (Use item 21 in place of supplied bolts):	
5	0961893	1	Bushing, Tapered Options 600A	
5	0961894	1	Bushing, Tapered Options 600AJ	
6	4566468	1	Spacer	
7		Ref	Capscrew, Socket Head Options:	
7	3931516	8	Capscrew, Socket Head 5/16in-18NC x 1in / 600A	
7	3931620	8	Capscrew, Socket Head 3/8in-16NC x 1-1/4in / 600AJ	
8		Ref	Ring, Washer Options:	
8	3760368	1	Ring, Washer 600A	
8	3760369	1	Ring, Washer 600AJ	
9	0100011	AR	Compound, Locking	
10	0100038	AR	Primer, Locking	
11	See Note	2	Seal (Note: Use Item 26)	
12	See Note	2	Ring, Lock (Note: Use Item 26)	
13	See Note	1	O-Ring (Note: Use Item 26)	
14	See Note	1	Ring, Back-up (Note: Use Item 26)	
15	See Note	1	Ring, Wear (Note: Use Item 26)	
16	See Note	1	O-Ring (Note: Use Item 26)	
17	See Note	1	Ring, Back-up (Note: Use Item 26)	
18	See Note	1	Seal, Rod (Note: Use Item 26)	
19	See Note	1	Wiper (Note: Use Item 26)	
21		Ref	Bolt Options:	
21	0630534	3	Bolt #10 - 24NC x 1in / 600A	
21	0630535	3	Bolt 1/4in-20NC x 1-1/8in / 600AJ	
22	0100063	AR	Adhesive	

SECTION 5 - CYLINDER

ITEM	PART NUMBER	QTY	DESCRIPTION	REV
24	2220885	1	Plug, O-Ring #6 (600AJ Only)	
26		Ref	Seal Kit Options (Includes Items 11-19):	
26	2901303	1	Seal Kit 600A	
26	2901301	1	Seal Kit 600AJ	

FIGURE 5-16. MASTER CYLINDER ASSEMBLY - 600A (SERVICE REPLACEMENT)

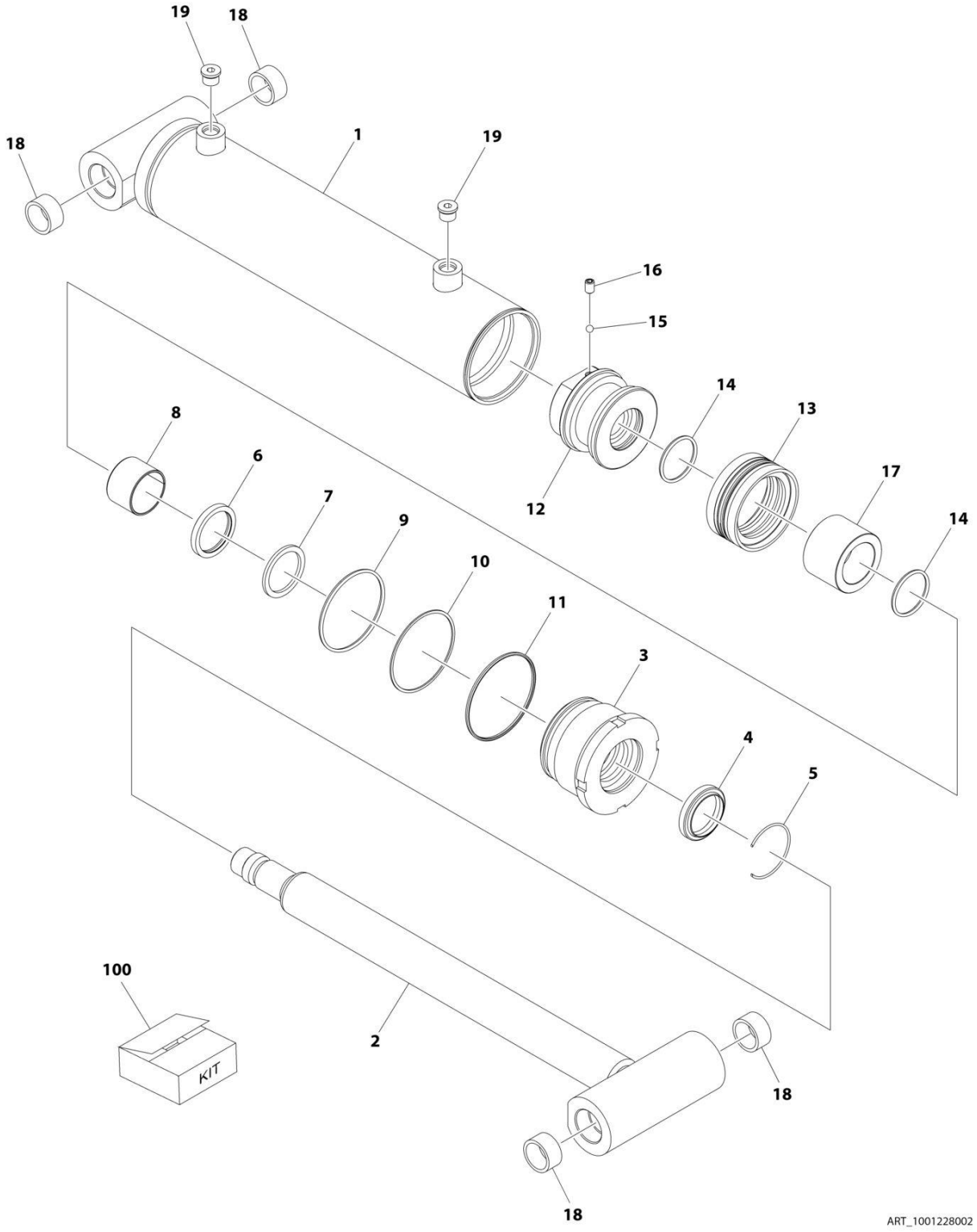

FIGURE 5-16. MASTER CYLINDER ASSEMBLY - 600A (SERVICE REPLACEMENT)

ITEM	PART NUMBER	QTY	DESCRIPTION	REV
	1001228002	Ref	MASTER CYLINDER ASSEMBLY	B
		Ref	Note: Original Cylinder May Have Been Replaced with Service Replacement. Identify PN Stamped on Cylinder Before Ordering Parts.	
1	See Note	NSS	Barrel (Note: Not Available for Purchase)	
2	70006774	1	Rod	
3	70006599	1	Head	
4	See Note	NSS	Wiper Rod (Note: Use Item 100)	
5	70002373	1	Ring, Retaining	
6	See Note	NSS	Seal, Rod (Note: Use Item 100)	
7	See Note	NSS	Ring, Back-up (Note: Use Item 100)	
8	See Note	NSS	Ring, Wear (Note: Use Item 100)	
9	See Note	NSS	O-Ring (Note: Use Item 100)	
10	See Note	NSS	Ring, Back-up (Note: Use Item 100)	
11	See Note	NSS	O-Ring (Note: Use Item 100)	
12	70006597	1	Piston	
13	See Note	NSS	Seal Piston (Note: Use Item 100)	
14	See Note	NSS	O-Ring (Note: Use Item 100)	
15	70022564	1	Ball	
16	70006601	1	Setscrew	
17	70006775	1	Spacer	
18	0961947	4	Bushing	
19	70023371	2	Plug, O-Ring	
100	70006776	1	Seal Kit (Includes Items 4, 6-11, 13 & 14)	

FIGURE 5-17. MASTER CYLINDER ASSEMBLY - 600AJ (SERVICE REPLACEMENT)

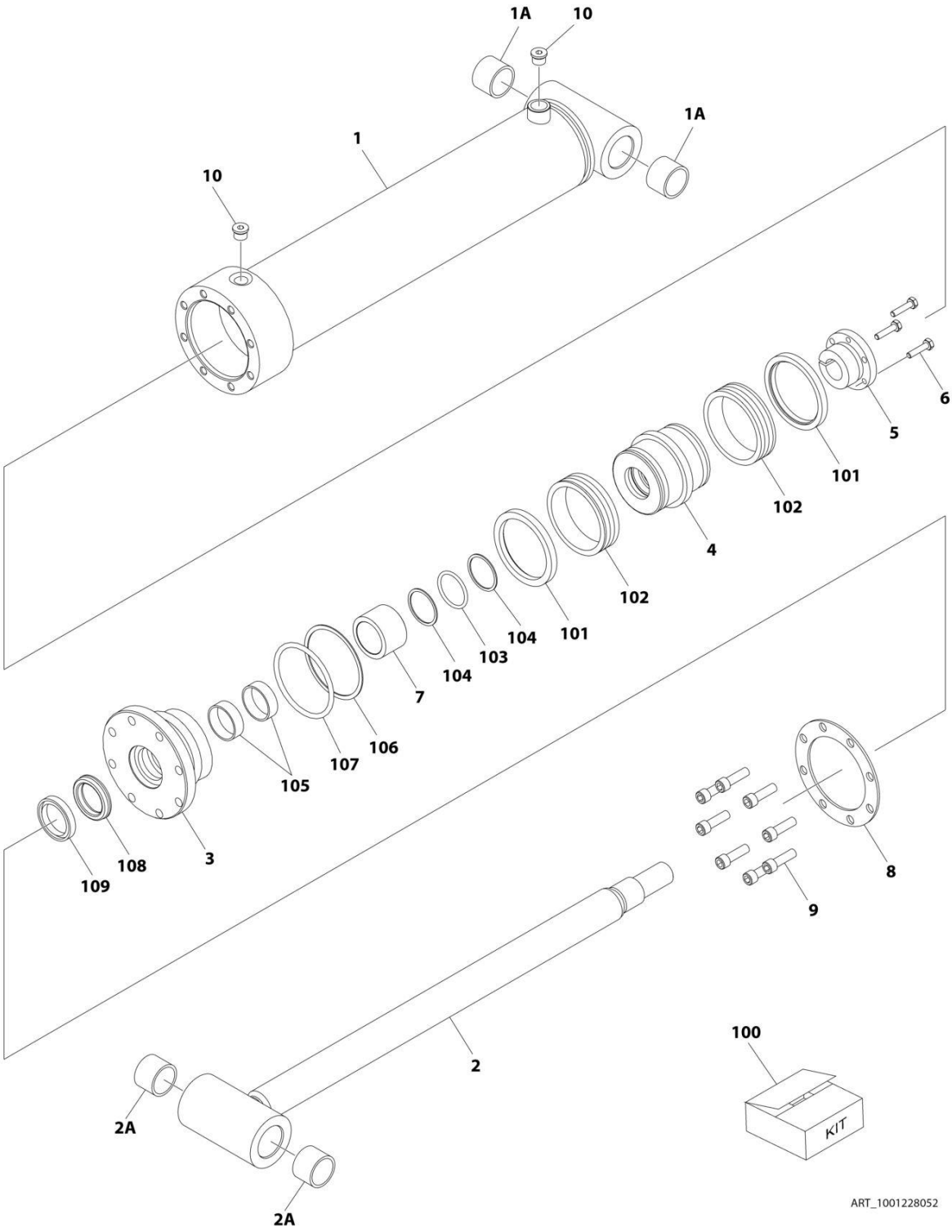

FIGURE 5-17. MASTER CYLINDER ASSEMBLY - 600AJ (SERVICE REPLACEMENT)

ITEM	PART NUMBER	QTY	DESCRIPTION	REV
	1001228052	Ref	MASTER CYLINDER ASSEMBLY	B
		Ref	Note: Original Cylinder May Have Been Replaced with Service Replacement. Identify PN Stamped on Cylinder Before Ordering Parts.	
1	See Note	NSS	Barrel (Note: Not Available for Purchase)	
1A	0961951	2	Bushing	
2	70006447	1	Rod Weldment	
2A	0961951	2	Bushing	
3	70006446	1	Head	
4	70006445	1	Piston	
5	70006444	1	Bushing, Tapered	
6	0630535	3	Capscrew 1/4 x 1-1/8	
7	70006443	1	Spacer	
8	70006442	1	Ring, Washer	
9	3931620	8	Capscrew 3/8 x 1-1/4	
10	2220885	2	Plug, O-Ring	
100	1001138796	1	Seal Kit (Includes Items 101-109)	
101	See Note	NSS	Ring, Wear (Note: Use Item 100)	
102	See Note	NSS	Seal, Piston (Note: Use Item 100)	
103	See Note	NSS	O-Ring (Note: Use Item 100)	
104	See Note	NSS	Ring, Back-up (Note: Use Item 100)	
105	See Note	NSS	Ring, Wear (Note: Use Item 100)	
106	See Note	NSS	O-Ring (Note: Use Item 100)	
107	See Note	NSS	Ring, Back-up (Note: Use Item 100)	
108	See Note	NSS	Seal, Rod (Note: Use Item 100)	
109	See Note	NSS	Wiper, Rod (Note: Use Item 100)	

FIGURE 5-18. STEER CYLINDER ASSEMBLY

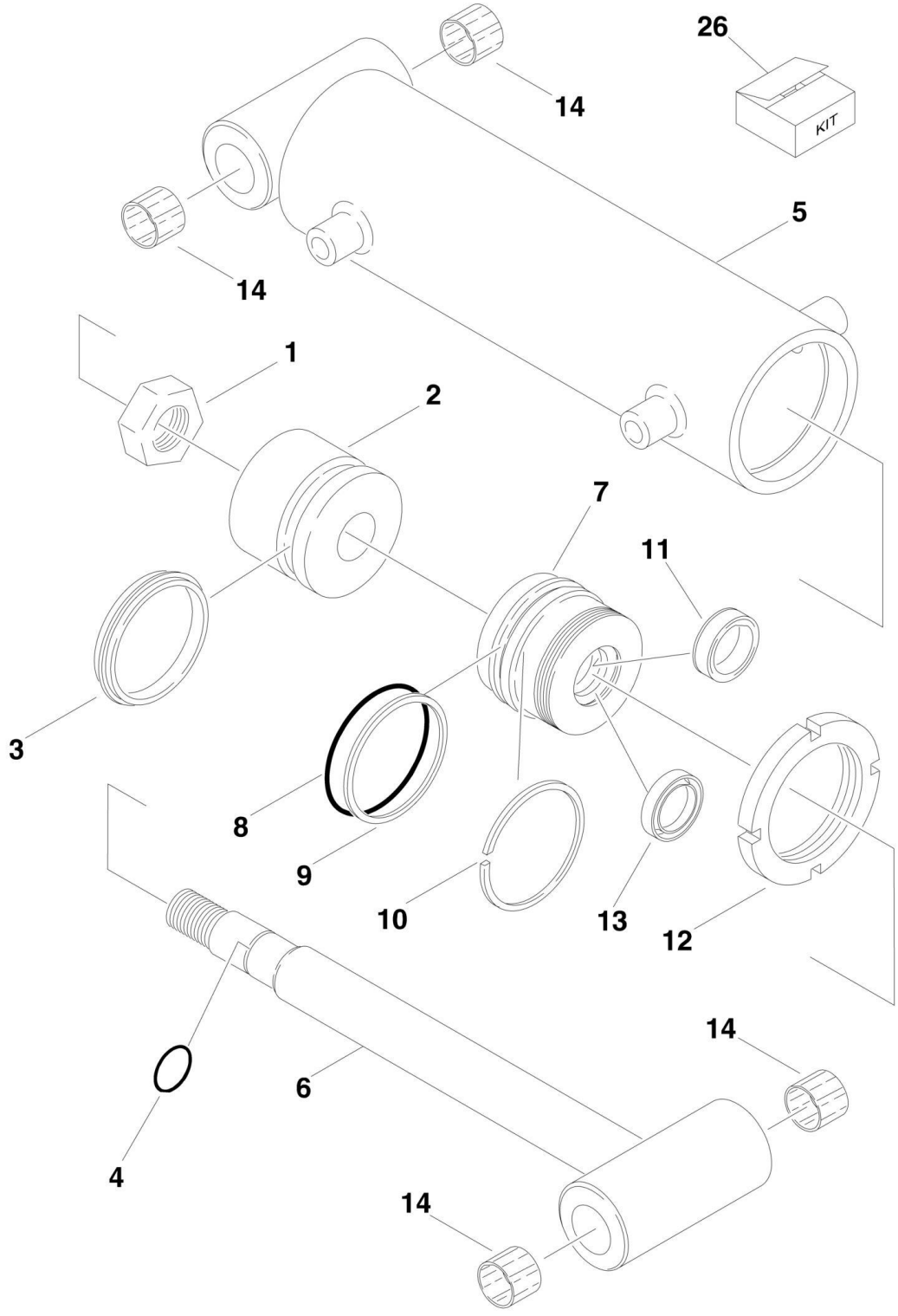

FIGURE 5-18. STEER CYLINDER ASSEMBLY

ITEM	PART NUMBER	QTY	DESCRIPTION	REV
		Ref	**STEER CYLINDER ASSEMBLIES**	
	1683208	Ref	**Steer Cylinder Assemblies 8ft/2.4m Width Machines**	C
	1683304	Ref	**Steer Cylinder Assemblies 7ft/2.1m Width Machines (SN 0300069000 through 0300081835)**	A
	1684418	Ref	**Steer Cylinder Assemblies 7ft/2.1m Width Machines (SN 0300081836 through 0300087000)**	A
1	7001626	1	Locknut	
2	7001627	1	Piston	
3	See Note	1	Seal (Note: Use Item 26)	
4	See Note	1	O-Ring (Note: Use Item 26)	
5	See Note	1	Barrel (Note: Not Available for Purchase)	
6		Ref	Rod Options:	
6	7001633	1	Rod 8ft/2.4m Width Machines	
6	7001628	1	Rod 7ft/2.1m Width Machines **(SN 0300069000 through 0300081835)**	
6	7023038	1	Rod 7ft/2.1m Width Machines **(SN 0300081836 through 0300087000)**	
7	7001629	1	Guide	
8	See Note	NSS	O-Ring (Note: Use Item 26)	
9	See Note	NSS	Ring, Back-up (Note: Use Item 26)	
10	See Note	NSS	Ring, Retaining (Note: Use Item 26)	
11	See Note	NSS	Seal, Lip (Note: Use Item 26)	
12	7001630	1	Nut, Spanner	
13	See Note	NSS	Ring, Wiper (Note: Use Item 26)	
14		Ref	Bushing Options:	
14	0961977	4	Bushing 8ft/2.4m Width Machines	
14	0961890	4	Bushing 7ft/2.1m Width Machines	
26	7001625	1	Seal Kit (Includes Items 3, 4, 8-11 & 13)	

FIGURE 5-19. TELESCOPE CYLINDER ASSEMBLY - MAIN BOOM (ORIGINAL EQUIPMENT)

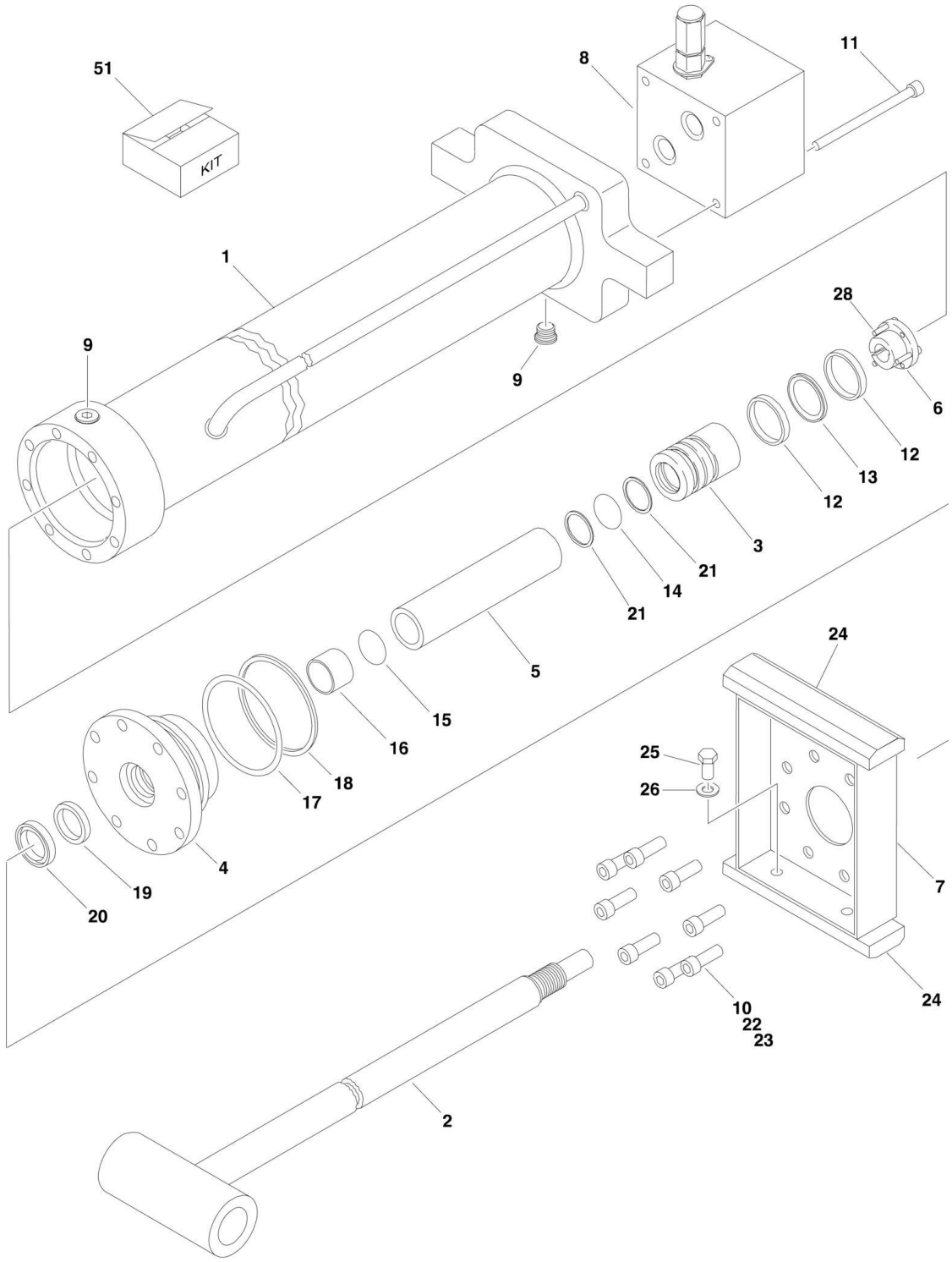

FIGURE 5-19. TELESCOPE CYLINDER ASSEMBLY - MAIN BOOM (ORIGINAL EQUIPMENT)

ITEM	PART NUMBER	QTY	DESCRIPTION	REV
	1683307	Ref	**TELESCOPE CYLINDER ASSEMBLY - 600A**	6-F
	1683317	Ref	**TELESCOPE CYLINDER ASSEMBLY - 600AJ**	6-F
		Ref	**Note: Original Cylinder may have been replaced with Service Replacement. Identify PN Stamped on Cylinder Before Ordering Parts.**	
1		Ref	Barrel Options:	
1	1683308	1	Barrel 600A	
1	1683318	1	Barrel 600AJ	
2		Ref	Rod Options:	
2	1683310	NLA	Rod 600A (Use p/n 1684308) **(SN 0300069000 through 0300073901)**	
2	1684308	1	Rod 600A **(SN 0300073902 through 0300087000)**	
2	1683320	NLA	Rod 600AJ (Use p/n 1684310) **(SN 0300069000 through 0300073901)**	
2	1684310	1	Rod 600AJ **(SN 0300073902 through 0300087000)**	
3	3480212	1	Piston	
4	1683054	1	Head	
5	4566425	1	Spacer	
6	0961896	1	Bushing, Tapered	
7		Ref	Plate, Wear Pad Mounting Options:	
7	3538771	1	Plate, Wear Pad Mounting 600A	
7	3538247	1	Plate, Wear Pad Mounting 600AJ	
8	4640862	1	Valve Block Assembly (No Service Parts Available -Replace Complete Assembly)	
9	2220885	2	Plug, O-Ring	
10	3931516	8	Capscrew, Socket Head 5/16in-18NC x 1in	
11	3931448	4	Capscrew, Socket Head 1/4in-20NC x 3in	
12	See Note	2	Ring, Wear (Note: Use Item 51)	
13	See Note	1	Seal (Note: Use Item 51)	
14	See Note	1	O-Ring (Note: Use Item 51)	
15	See Note	1	O-Ring (Note: Use Item 51)	
16	See Note	1	Ring, Wear (Note: Use Item 51)	
17	See Note	1	O-Ring (Note: Use Item 51)	
18	See Note	1	Ring, Back-up (Note: Use Item 51)	
19	See Note	1	Seal, Rod (Note: Use Item 51)	
20	See Note	1	Wiper (Note: Use Item 51)	
21	See Note	2	Ring, Back-up (Note: Use Item 51)	
22	0100038	AR	Primer, Locking	
23	0100011	AR	Compound, Locking	
24	3340608	2	Pad, Wear	
25	0641604	4	Bolt 3/8in-16NC x 1/2in	
26	4751600	4	Flatwasher 3/8in Regular	
28	0630535	3	Bolt 1/4in-20NC x 1-1/8in	
51		Ref	Seal Kit Options (Includes Items 12-21):	
51	2901278	1	Seal Kit **(SN 0300069000 through 0300070401)**	
51	2901861	1	Seal Kit **(SN 0300070402 through 0300087000)**	

FIGURE 5-20. TELESCOPE CYLINDER ASSEMBLY - MAIN BOOM (600A) (SERVICE REPLACEMENT)

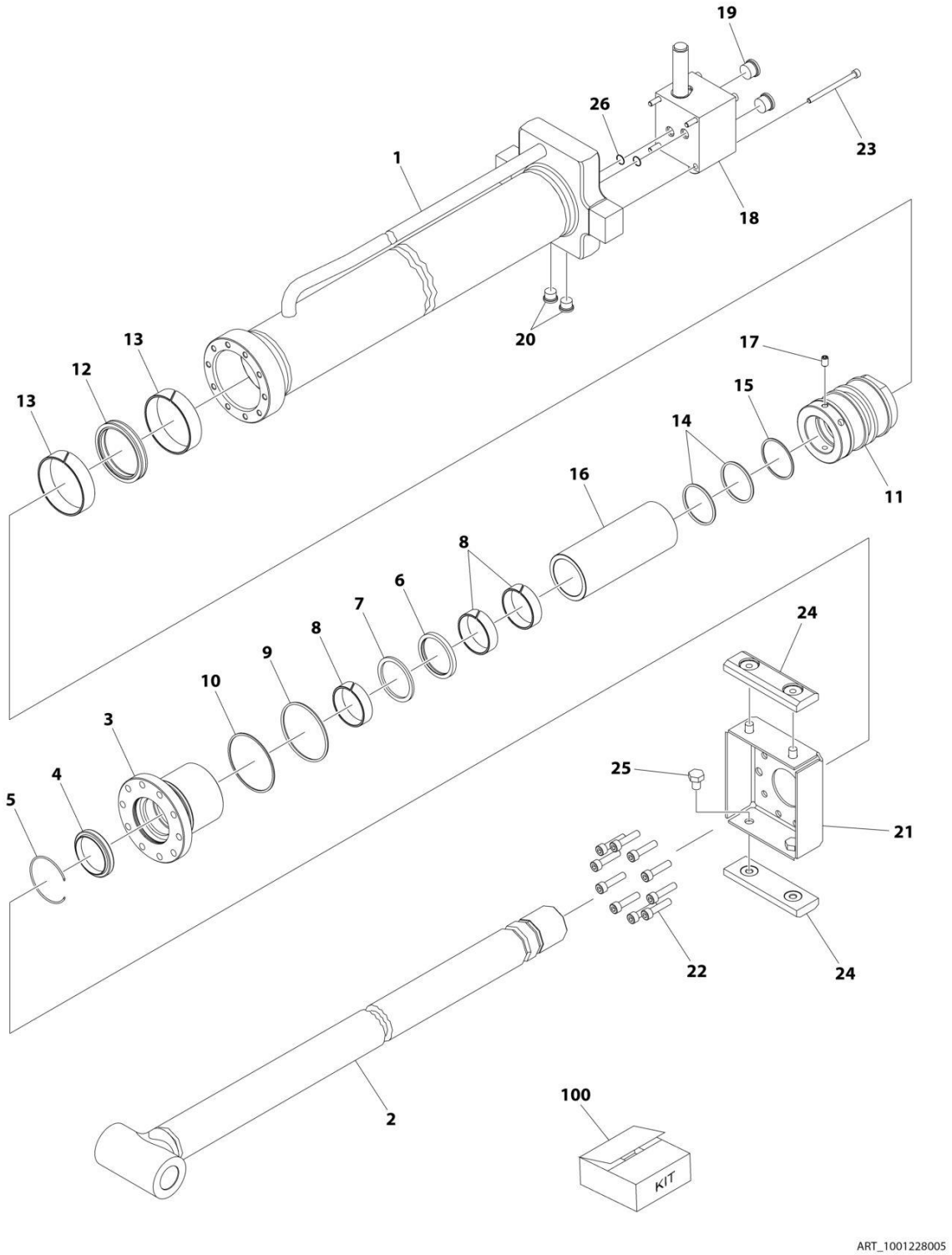

FIGURE 5-20. TELESCOPE CYLINDER ASSEMBLY - MAIN BOOM (600A) (SERVICE REPLACEMENT)

ITEM	PART NUMBER	QTY	DESCRIPTION	REV
	1001228005	Ref	TELESCOPE CYLINDER ASSEMBLY - MAIN BOOM	C
		Ref	Note: Original Cylinder may have been replaced with Service Replacement. Identify PN Stamped on Cylinder Before Ordering Parts.	
1	See Note	NSS	Barrel (Note: Use p/n 1001228005)	
2	70006813	1	Rod	
3	70006814	1	Head	
4	See Note	NSS	Wiper (Note: Use Item 100)	
5	70002412	1	Ring, Retaining	
6	See Note	NSS	Seal, Rod (Note: Use Item 100)	
7	See Note	NSS	Ring, Back-up (Note: Use Item 100)	
8	See Note	NSS	Ring, Wear (Note: Use Item 100)	
9	See Note	NSS	O-Ring (Note: Use Item 100)	
10	See Note	NSS	Ring, Back-up (Note: Use Item 100)	
11	70006815	1	Piston	
12	See Note	NSS	Seal (Note: Use Item 100)	
13	See Note	NSS	Ring, Wear (Note: Use Item 100)	
14	See Note	NSS	O-Ring (Note: Use Item 100)	
15	See Note	NSS	Ring, Back-up (Note: Use Item 100)	
16	70006816	1	Spacer	
17	70006817	1	Setscrew	
18	4640862	1	Valve Block Assembly (Note: No Service Parts Available - Replace Complete Assembly)	
19	70023373	2	Plug	
20	70023371	2	Plug	
21	70006818	1	Plate, Wear Pad	
22	70006793	10	Capscrew	
23	70006819	4	Capscrew	
24	3340608	2	Pad, Wear	
25	70006820	3	Bolt	
26	3790110	2	O-Ring (Located Between Barrel & Valve)	
100	70006821	1	Seal Kit (Includes Items 4, 6-10 & 12-15)	

FIGURE 5-21. TELESCOPE CYLINDER ASSEMBLY - MAIN BOOM (600AJ) (SERVICE REPLACEMENT)

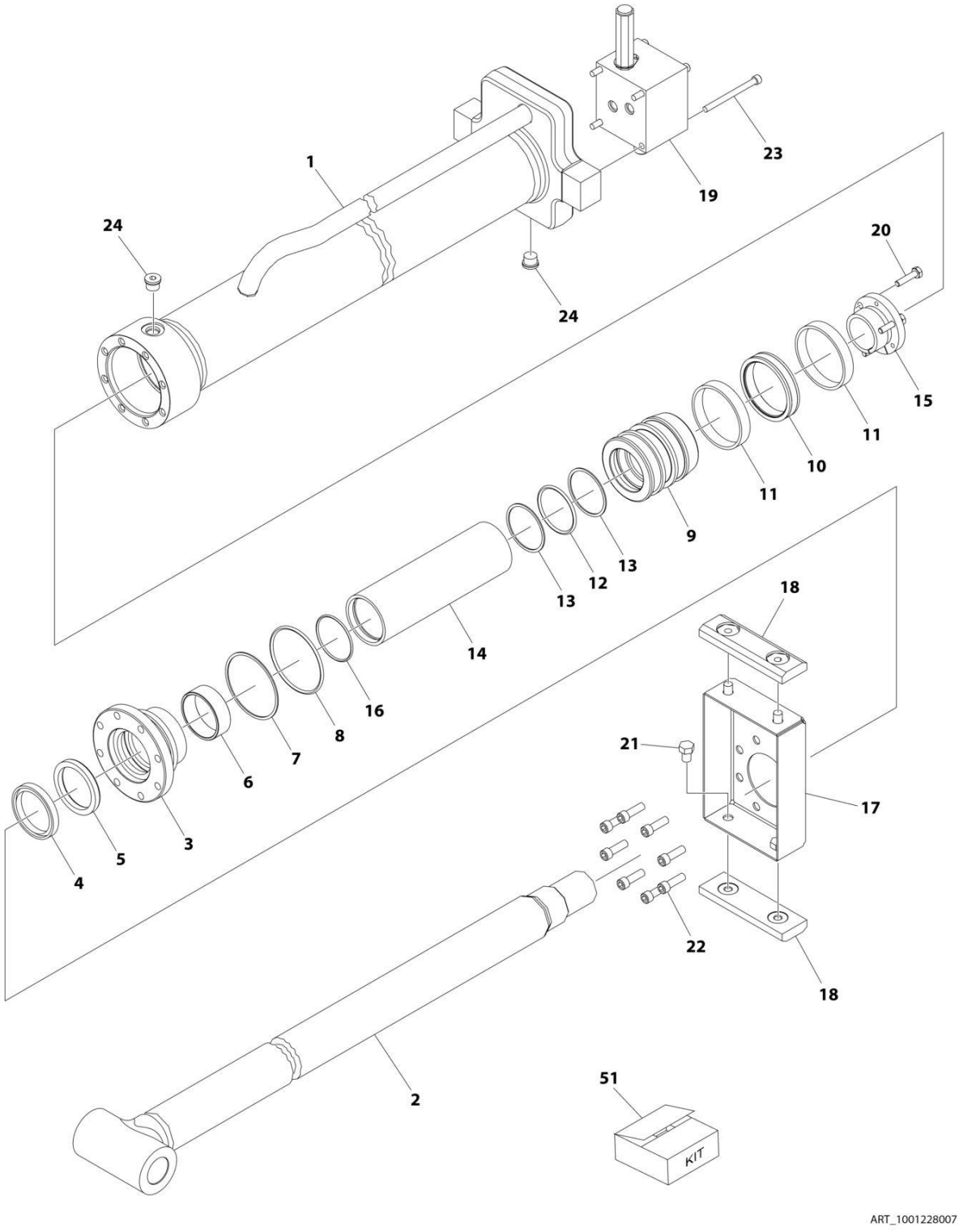

FIGURE 5-21. TELESCOPE CYLINDER ASSEMBLY - MAIN BOOM (600AJ) (SERVICE REPLACEMENT)

ITEM	PART NUMBER	QTY	DESCRIPTION	REV
	1001228007	Ref	TELESCOPE CYLINDER ASSEMBLY	D
		Ref	Note: Original Cylinder may have been replaced with Service Replacement. Identify PN Stamped on Cylinder Before Ordering Parts.	
1	See Note	NSS	Barrel (Note: Use p/n 1001228007)	
2	70006654	1	Rod	
3	70006483	1	Head	
4	See Note	NSS	Wiper (Note: Use Item 51)	
5	See Note	NSS	Seal, Rod (Note: Use Item 51)	
6	See Note	NSS	Ring, Wear (Note: Use Item 51)	
7	See Note	NSS	O-Ring (Note: Use Item 51)	
8	See Note	NSS	Ring, Back-up (Note: Use Item 51)	
9	70006482	1	Piston	
10	See Note	NSS	Seal (Note: Use Item 51)	
11	See Note	NSS	Ring, Wear (Note: Use Item 51)	
12	See Note	NSS	O-Ring (Note: Use Item 51)	
13	See Note	NSS	Ring, Back-up (Note: Use Item 51)	
14	70006655	1	Spacer	
15	0961896	1	Bushing, Tapered	
16	See Note	NSS	O-Ring (Note: Use Item 51)	
17	3538247	1	Plate, Wear Pad Mounting	
18	3340608	2	Pad, Wear	
19	4640862	1	Valve Block Assembly (Note: No Service Part Available - Replace Complete Assembly)	
20	0630535	3	Bolt 1/4 x 1-1/8	
21	0641604	4	Bolt 3/8 x 1/2	
22	3931516	8	Capscrew 5/16 x 1	
22	0100038	AR	Primer, Locking	
22	0100011	AR	Compound, Locking	
23	3931448	4	Capscrew 1/4 x 3	
24	2220885	AR	Plug, O-Ring	
51	2901861	1	Seal Kit - 1001228007 Cylinder (Includes Item 4-8, 10-13 & 16)	

FIGURE 5-22. TELESCOPE CYLINDER ASSEMBLY - TOWER BOOM (ORIGINAL EQUIPMENT)

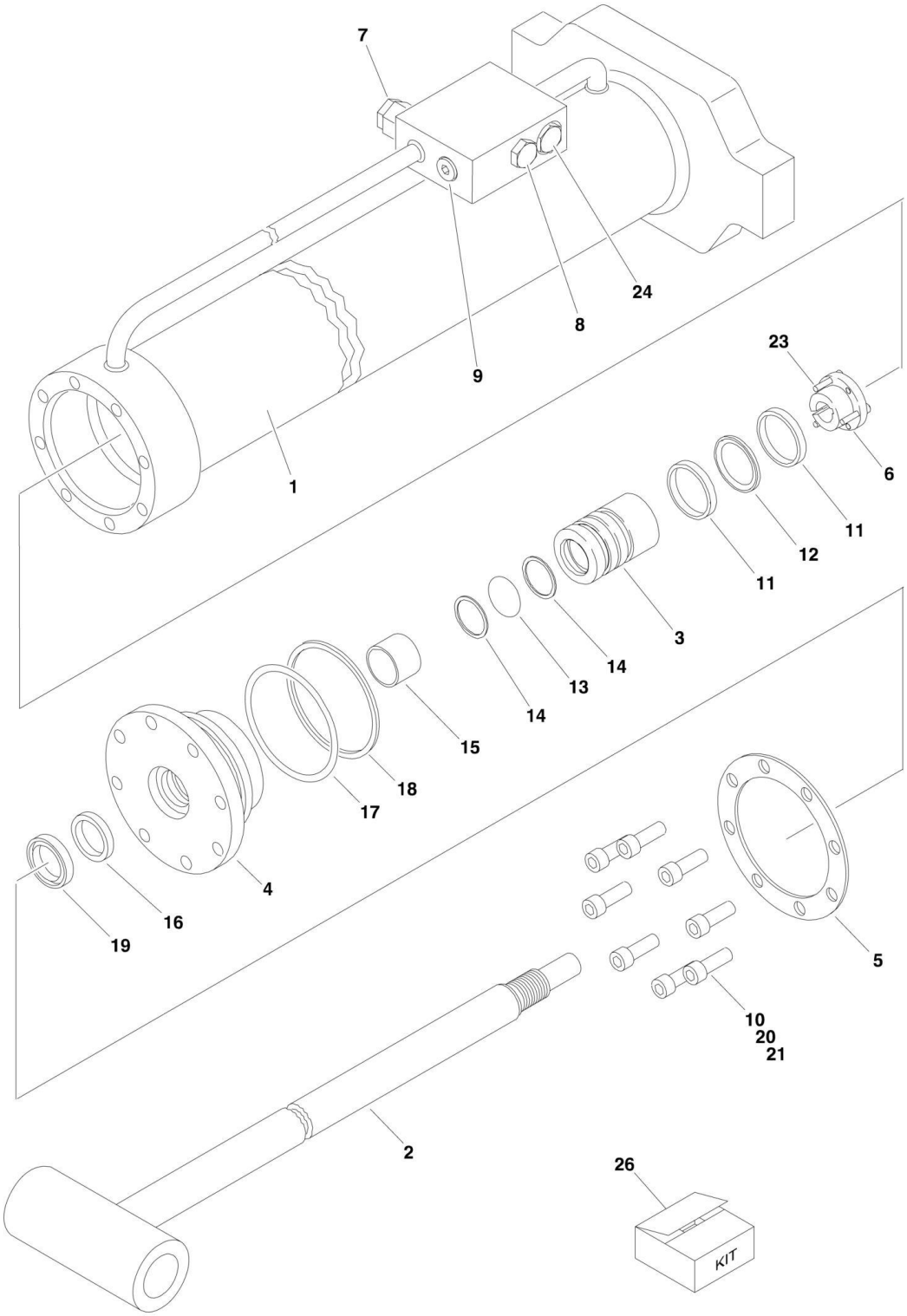

FIGURE 5-22. TELESCOPE CYLINDER ASSEMBLY - TOWER BOOM (ORIGINAL EQUIPMENT)

ITEM	PART NUMBER	QTY	DESCRIPTION	REV
	1683312	Ref	**TELESCOPE (TOWER BOOM) CYLINDER ASSEMBLY**	5-E
		Ref	**Note: Original Equipment components may have been replaced with Service Replacement components part. Identify p/n stamped on cylinder before ordering parts.**	
1	1683313	1	Barrel	
2	1683314	1	Rod	
3	3480212	1	Piston	
4	1683054	1	Head	
5	3760368	1	Ring, Washer	
6	0961896	1	Bushing, Tapered	
7	4640509	2	Cartridge, Valve	
7	2900792	2	Seal Kit - 4640509 Valve	
8	4640647	1	Cartridge, Valve	
8	2900770	1	Seal Kit - 4640647 Valve	
9	2220883	1	Plug, O-Ring	
10	3931516	8	Capscrew, Socket Head 5/16in-18NC x 1in	
11	See Note	2	Ring, Wear (Note: Use Item 26)	
12	See Note	1	T-Seal (Note: Use Item 26)	
13	See Note	1	O-Ring (Note: Use Item 26)	
14	See Note	2	Ring, Back-up (Note: Use Item 26)	
15	See Note	1	Ring, Wear (Note: Use Item 26)	
16	See Note	1	Seal, Rod (Note: Use Item 26)	
17	See Note	1	O-Ring (Note: Use Item 26)	
18	See Note	1	Ring, Back-up (Note: Use Item 26)	
19	See Note	1	Wiper (Note: Use Item 26)	
20	0100038	AR	Primer, Locking	
21	0100011	AR	Compound, Locking	
23	0630535	3	Bolt 1/4in-20NC x 1-1/8in	
24	4640999	1	Cartridge, Valve	
24	7011185	1	Seal Kit - 4640999 Valve	
26		Ref	Seal Kit Options (Includes Items 11-19):	
26	2901278	1	Seal Kit **(SN 0300069000 through 0300070401)**	
26	2901861	1	Seal Kit **(SN 0300070402 through 0300087000)**	

FIGURE 5-23. TELESCOPE CYLINDER ASSEMBLY - TOWER BOOM (SERVICE REPLACEMENT)

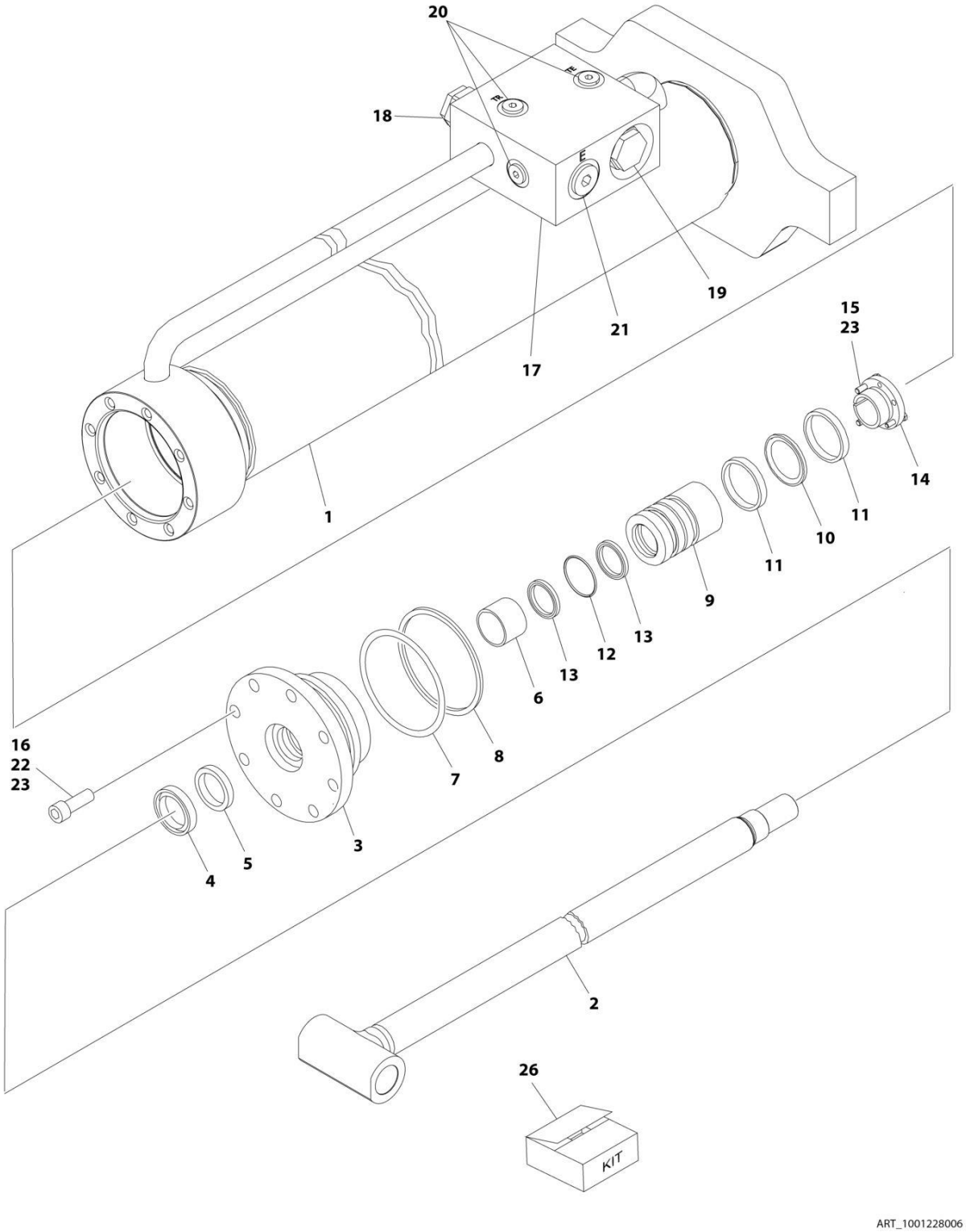

FIGURE 5-23. TELESCOPE CYLINDER ASSEMBLY - TOWER BOOM (SERVICE REPLACEMENT)

ITEM	PART NUMBER	QTY	DESCRIPTION	REV
	1001228006	Ref	TELESCOPE CYLINDER ASSEMBLY - TOWER BOOM	B
		Ref	Note: Original Equipment components may have been replaced with Service Replacement components part. Identify p/n stamped on cylinder before ordering parts.	
1	See Note	NSS	Barrel (Note: Not Available for Purchase)	
2	70006484	1	Rod	
3	70006483	1	Head	
4	See Note	NSS	Wiper (Note: Use Item 26)	
5	See Note	NSS	Seal, Rod (Note: Use Item 26)	
6	See Note	NSS	Ring, Wear (Note: Use Item 26)	
7	See Note	NSS	O-Ring (Note: Use Item 26)	
8	See Note	NSS	Ring, Back-Up (Note: Use Item 26)	
9	70006482	1	Piston	
10	See Note	NSS	T-Seal (Note: Use Item 26)	
11	See Note	NSS	Ring, Wear (Note: Use Item 26)	
12	See Note	NSS	O-Ring (Note: Use Item 26)	
13	See Note	NSS	Ring, Back-Up (Note: Use Item 26)	
14	0961896	1	Bushing, Tapered	
15	0630535	3	Bolt 1/4 x 1-1/8	
16	3931516	8	Capscrew 5/16 x 1	
17	4640647	1	Cartridge, Valve	
17	2900770	1	Seal Kit - 4640647 Valve	
18	4640509	2	Cartridge, Valve	
18	2900792	2	Seal Kit - 4640509 Valve	
19	4640999	1	Cartridge, Valve	
19	2900792	1	Seal Kit - 4640999 Valve	
20	2220883	3	Plug, O-Ring	
21	2220886	2	Plug, O-Ring	
22	0100038	AR	Primer, Locking	
23	0100011	AR	Compound, Locking	
26	2901861	1	Seal Kit - 1001228006 Cylinder (Includes Items 4-8 & 10-13)	

FIGURE 5-24. CYLINDER BELLOWS INSTALLATION (OPTIONAL)

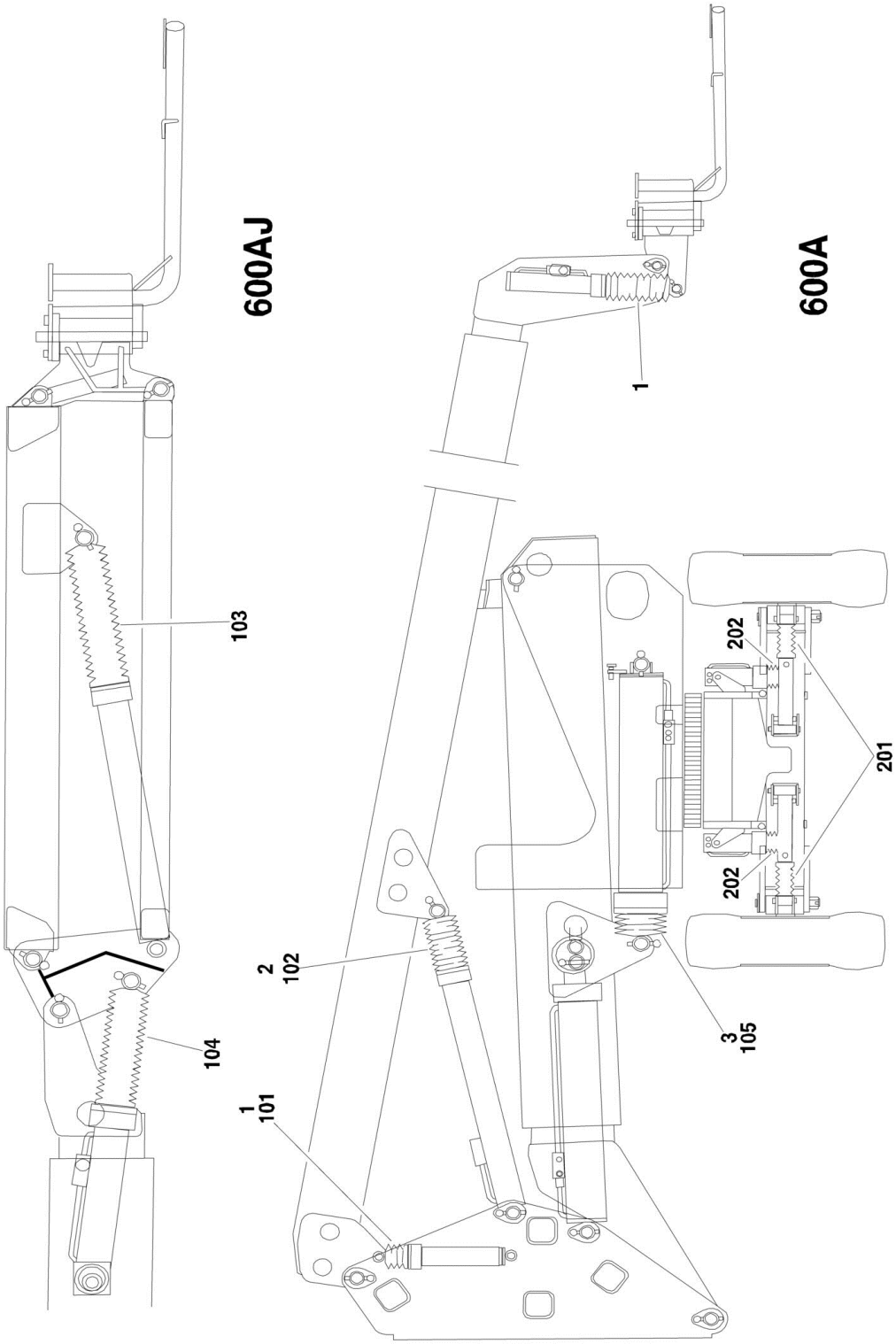

FIGURE 5-24. CYLINDER BELLOWS INSTALLATION (OPTIONAL)

ITEM	PART NUMBER	QTY	DESCRIPTION	REV
	0255927	Ref	**CYLINDER BELLOWS INSTALLATION (600A)**	1
1	0460152	2	Bellows, Cylinder (Master and Platform Level Cylinders)	
2	0460155	1	Bellows, Cylinder (Main Lift Cylinder)	
3	0460154	1	Bellows, Cylinder (Tower Lift Cylinder)	
	0255928	Ref	**CYLINDER BELLOWS INSTALLATION (600AJ)**	2
101	0460151	1	Bellows, Cylinder (Master and Platform Level Cylinders)	
102	0460155	1	Bellows, Cylinder (Main Lift Cylinder)	
103	0460161	1	Bellows, Cylinder (Articulating Jib Lift Cylinder)	
104	0460160	1	Bellows, Cylinder (Articulating Jib Level Cylinder)	
105	0460154	1	Bellows, Cylinder (Tower Lift Cylinder)	
		Ref	**CYLINDER BELLOWS INSTALLATION (FRAME)**	
	0255482	Ref	**2WD/2WS & 4WD/2WS 8ft/2.4m Width Machines with Oscillating Axle**	-
	0255483	Ref	**2WD/2WS & 4WD/2WS 8ft/2.4m Width Machines with Fixed Axle**	-
	0255486	Ref	**2WD/4WS & 4WD/2WS 8ft/2.4m Width Machines with Oscillating Axle**	-
	0255487	Ref	**2WD/4WS & 4WD/4WS 8ft/2.4m Width Machines with Fixed Axle**	-
	0255484	Ref	**2WD/2WS 7ft/2.1m Width Machines with Oscillating Axle**	-
	0255485	Ref	**2WD/2WS 7ft/2.1m Width Machines with Fixed Axle**	-
	0255488	Ref	**2WD/4WS 7ft/2.1m Width Machines with Oscillating Axle**	-
	0255489	Ref	**2WD/4WS 7ft/2.1m Width Machines with Fixed Axle**	-
201		Ref	Bellows, Cylinder (Steer Cylinder)	
201	0460150	AR	8ft/2.4m Width Machines	
201	0460157	AR	7ft/2.1m Width Machines	
202		Ref	Bellows, Cylinder (Oscillating Axle Cylinders)	
202	0460159	AR	With Oscillating Axle	
202	Not Required	0	Without Oscillating Axle	

SECTION 6 - HYDRAULIC

FIGURE 6-1. DRIVE HYDRAULIC DIAGRAM - 2WD/2WS (SN 0300069000 through 0300081835)

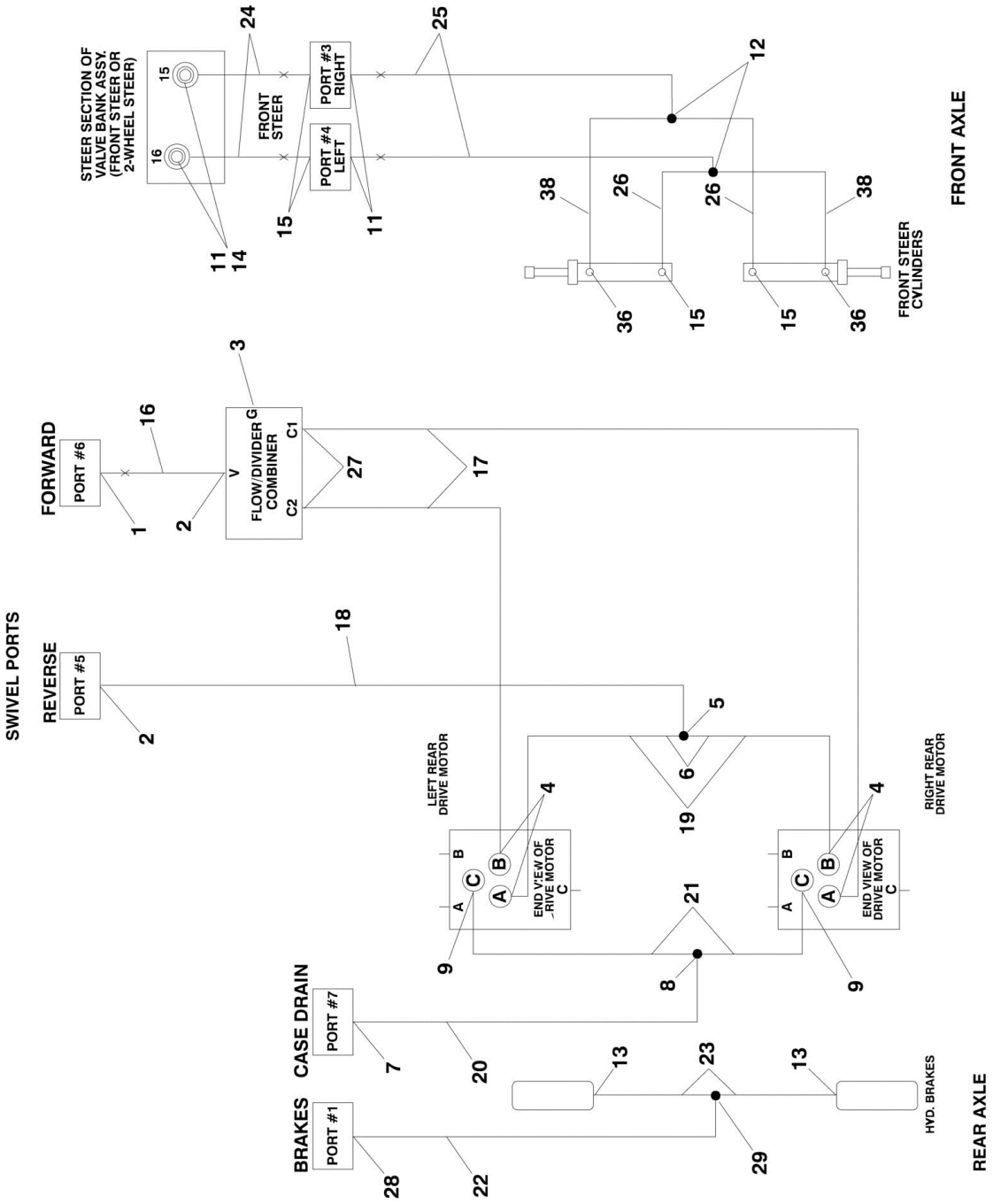

FIGURE 6-1. DRIVE HYDRAULIC DIAGRAM - 2WD/2WS (SN 0300069000 through 0300081835)

ITEM	PART NUMBER	QTY	DESCRIPTION	REV
	2792193	Ref	**DRIVE HYDRAULIC DIAGRAM - 2WD/2WS**	5
1	2220377	1	Fitting, Straight	
2	2220365	2	Fitting, 45	
3	2220235	1	Fitting, Plug	
4	2220451	4	Fitting, Straight	
5	2220363	1	Fitting, Tee	
6	2220710	2	Fitting, Reducer	
7	2220375	1	Fitting, Straight	
8	2220362	1	Fitting, Tee	
9	2220373	2	Fitting, Straight	
11	2220371	4	Fitting, Straight	
12	2220490	2	Fitting, Tee	
13	2220466	2	Fitting, 90	
14	2220507	2	Fitting, 90	
15	2220473	4	Fitting, 90	
16	2752354	1	Hose	
17	2752258	2	Hose	
18	2752324	1	Hose	
19	2752245	2	Hose	
20	2752813	1	Hose	
21	2752814	2	Hose	
22	2752602	1	Hose	
23	2752459	2	Hose	
24	2752620	2	Hose	
25	2752473	2	Hose	
26	2752966	2	Hose	
27	2220435	2	Fitting, Straight	
28	2220582	1	Fitting, Straight	
29	2220504	1	Fitting, Straight	
36	2220501	2	Fitting, 45	
38	2752970	2	Hose	

FIGURE 6-2. DRIVE HYDRAULIC DIAGRAM - 2WD/2WS (SN 0300081836 through 0300087000)

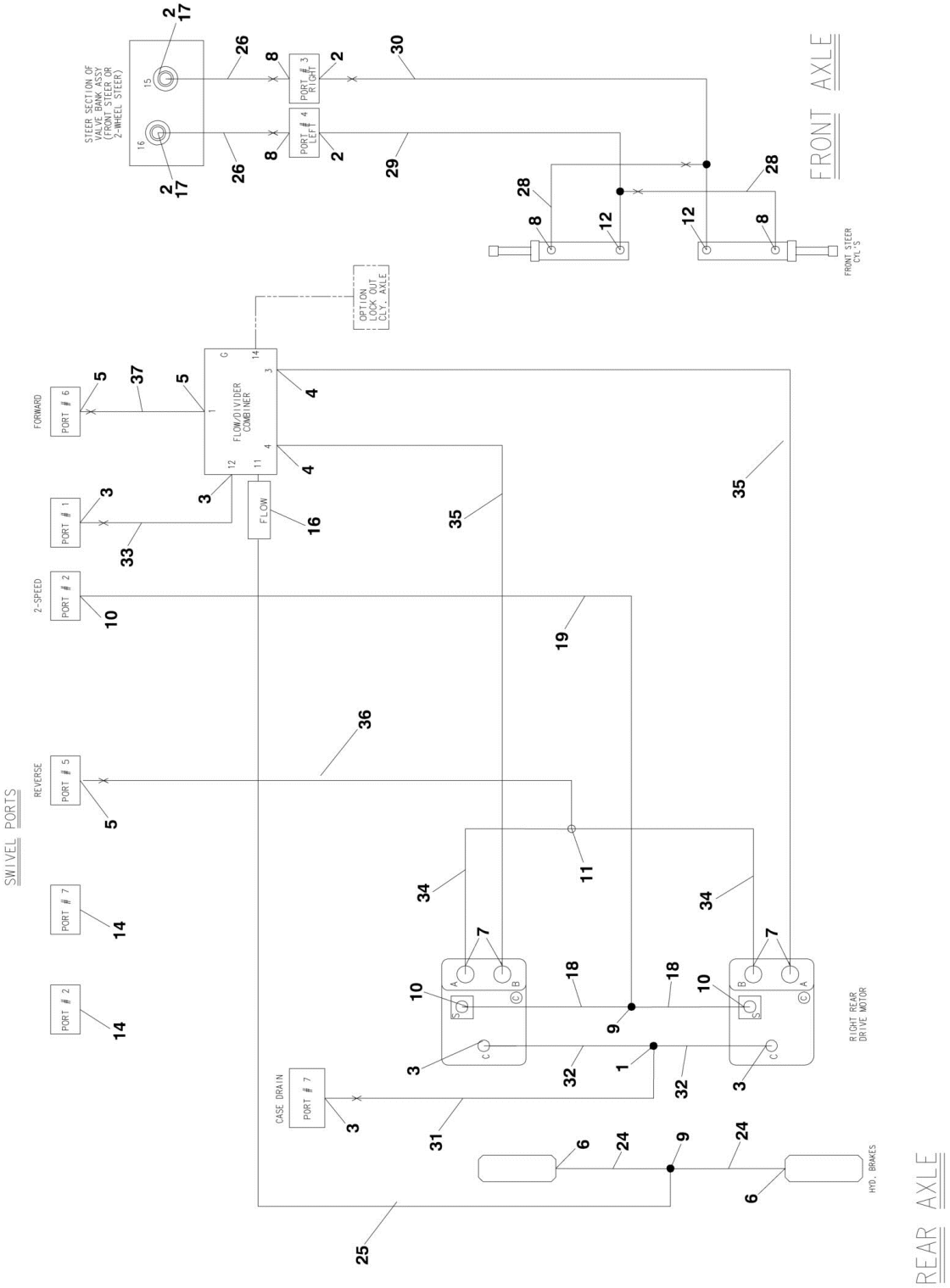

FIGURE 6-2. DRIVE HYDRAULIC DIAGRAM - 2WD/2WS (SN 0300081836 through 0300087000)

ITEM	PART NUMBER	QTY	DESCRIPTION	REV
	2792692	Ref	**DRIVE HYDRAULIC DIAGRAM - 2WD/2WS**	2
1	2220362	1	Fitting, Tee	
2	2220371	4	Fitting, Straight	
3	2220373	5	Fitting, Straight	
4	2220498	2	Fitting, 45 **(SN 0300081851 through 0300087000)**	
5	2220377	3	Fitting, Straight	
6	2220415	2	Fitting, Straight	
7	2220451	4	Fitting, Straight	
8	2220473	4	Fitting, 90	
9	2220504	2	Fitting, Tee	
10	2220582	3	Fitting, Straight	
11	2221170	1	Fitting, Tee	
12	2220606	2	Fitting, Tee	
14	2220237	2	Fitting, Plug	
16	4641307	1	Valve, Check	
17	2220507	2	Fitting, 90	
18	2753925	2	Hose	
19	2753924	1	Hose	
24	2752592	2	Hose	
25	2752910	1	Hose	
26	2752620	2	Hose	
28		Ref	Hose Options:	
28	2753397	2	Hose **(SN 0300081836 through 0300081850)**	
28	2754235	2	Hose **(SN 0300081851 through 0300087000)**	
29	2752475	1	Hose	
30	2752611	1	Hose	
31	2752928	1	Hose	
32	2753929	2	Hose	
33	2752929	1	Hose	
34	2753969	2	Hose	
35	2753967	2	Hose	
36	2752341	1	Hose	
37	2753435	1	Hose	

FIGURE 6-3. DRIVE HYDRAULIC DIAGRAM - 4WD/2WS (SN 0300069000 through 0300081835)

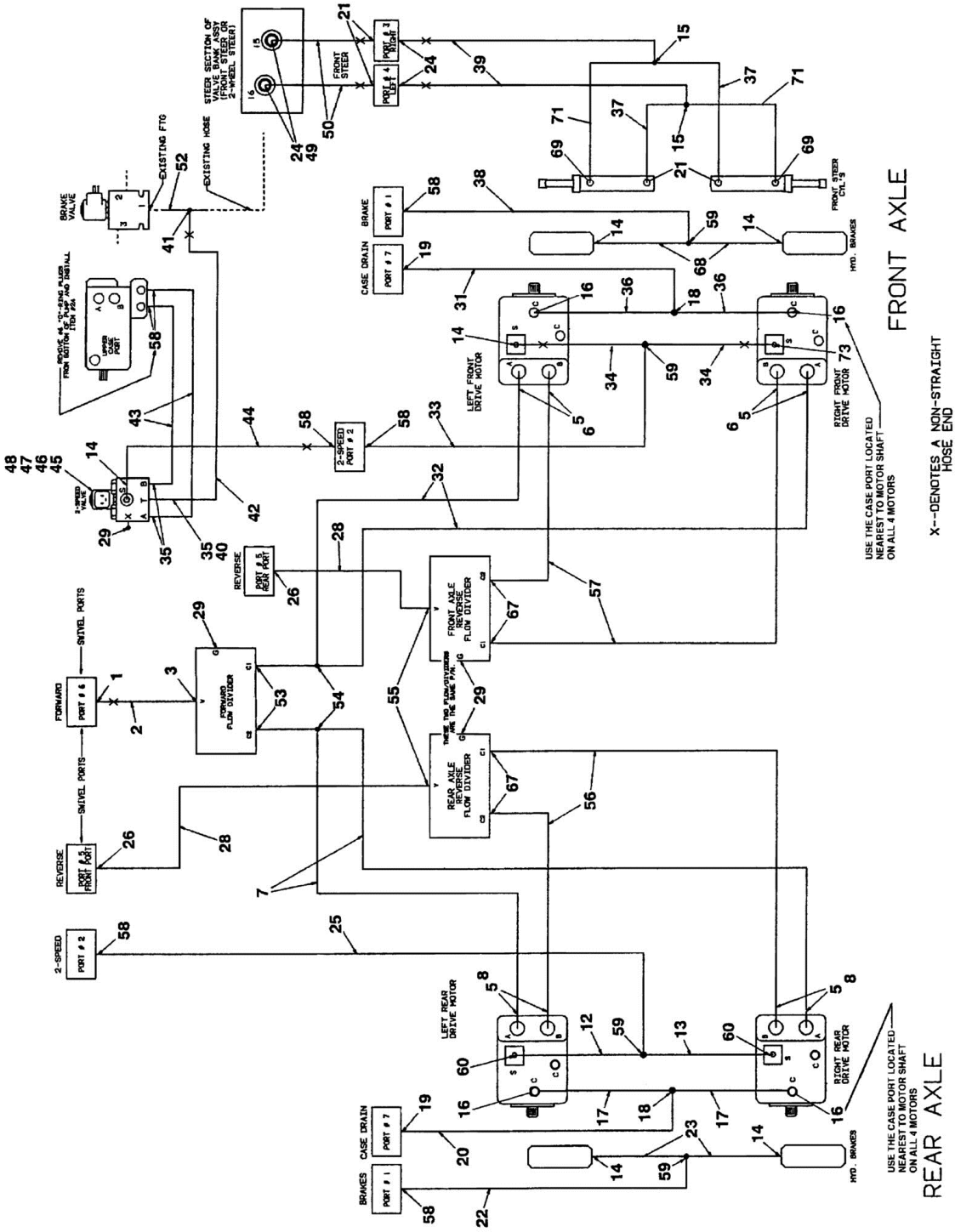

FIGURE 6-3. DRIVE HYDRAULIC DIAGRAM - 4WD/2WS (SN 0300069000 through 0300081835)

ITEM	PART NUMBER	QTY	DESCRIPTION	REV
	2792195	Ref	**DRIVE HYDRAULIC DIAGRAM - 4WD/2WS**	8
1	2220377	1	Fitting, Straight	
2	2752349	1	Hose	
3	2220365	1	Fitting, 45	
5	2220833	8	Fitting, Reducer	
6	2220500	4	Fitting, 45	
7	2752398	2	Hose	
8	2220596	4	Fitting, 90	
12	2751013	1	Hose	
13	2751013	1	Hose	
14	2220466	6	Fitting, 90	
15	2220490	2	Fitting, Tee	
16	2220671	4	Fitting, 90	
17	2752807	2	Hose	
18	2220362	2	Fitting, Tee	
19	2220375	2	Fitting, Straight	
20	2752813	1	Hose	
21	2220473	6	Fitting, 90	
22	2752602	1	Hose	
23	2752592	2	Hose	
24	2220371	4	Fitting, Straight	
25	2750756	1	Hose	
26	2220568	2	Fitting, 45	
28	2752249	2	Hose	
29	2220235	4	Fitting, Plug	
31	2752807	1	Hose	
32	2752890	2	Hose	
33	2750790	1	Hose	
34	2752919	2	Hose	
35	2220415	3	Fitting, Straight	
36	2752899	2	Hose	
37	2752966	2	Hose	
38	2752593	1	Hose	
39	2752473	2	Hose	
40	2220909	1	Fitting, Office (.015)	
41	2220605	1	Fitting, Tee	
42	2752573	1	Hose	
43	2751427	2	Hose	
44	2751396	1	Hose	
45	4640906	1	Valve, 2-Speed Motor Control	
45	7012974	1	Cartridge without Coil	
45	7012905	1	Seal Kit	
45	7012944	1	Coil	
45	4640906	2	Cartridge, Check Valve (Note: Not Available for Purchase)	
45	7012972	2	Seal Kit	
46	0641508	2	Bolt 5/16in-18NC x 1in	
47	4891500	2	Flatwasher 5/16in Hardened	
48	4711500	2	Flatwasher 5/16in Thin	
49	2220507	2	Fitting, 90	
50	2752620	2	Hose	

ITEM	PART NUMBER	QTY	DESCRIPTION	REV
52	2220914	1	Orifice (.043)	
53	2220833	2	Fitting, Reducer	
54	2220602	2	Fitting, Tee	
55	2220435	2	Fitting, Straight	
56	2752398	2	Hose	
57	2752889	2	Hose	
58	2220582	5	Fitting, Straight	
59	2220504	4	Fitting, Tee	
60	2220466	2	Fitting, Straight	
67	2220800	4	Fitting, Straight	
68	2752912	2	Hose	
69	2220501	2	Fitting, 45	
71	2752970	2	Hose	
73	2220502	1	Fitting, 45	

FIGURE 6-4. DRIVE HYDRAULIC DIAGRAM - 4WD/2WS (SN 0300081836 through 0300087000)

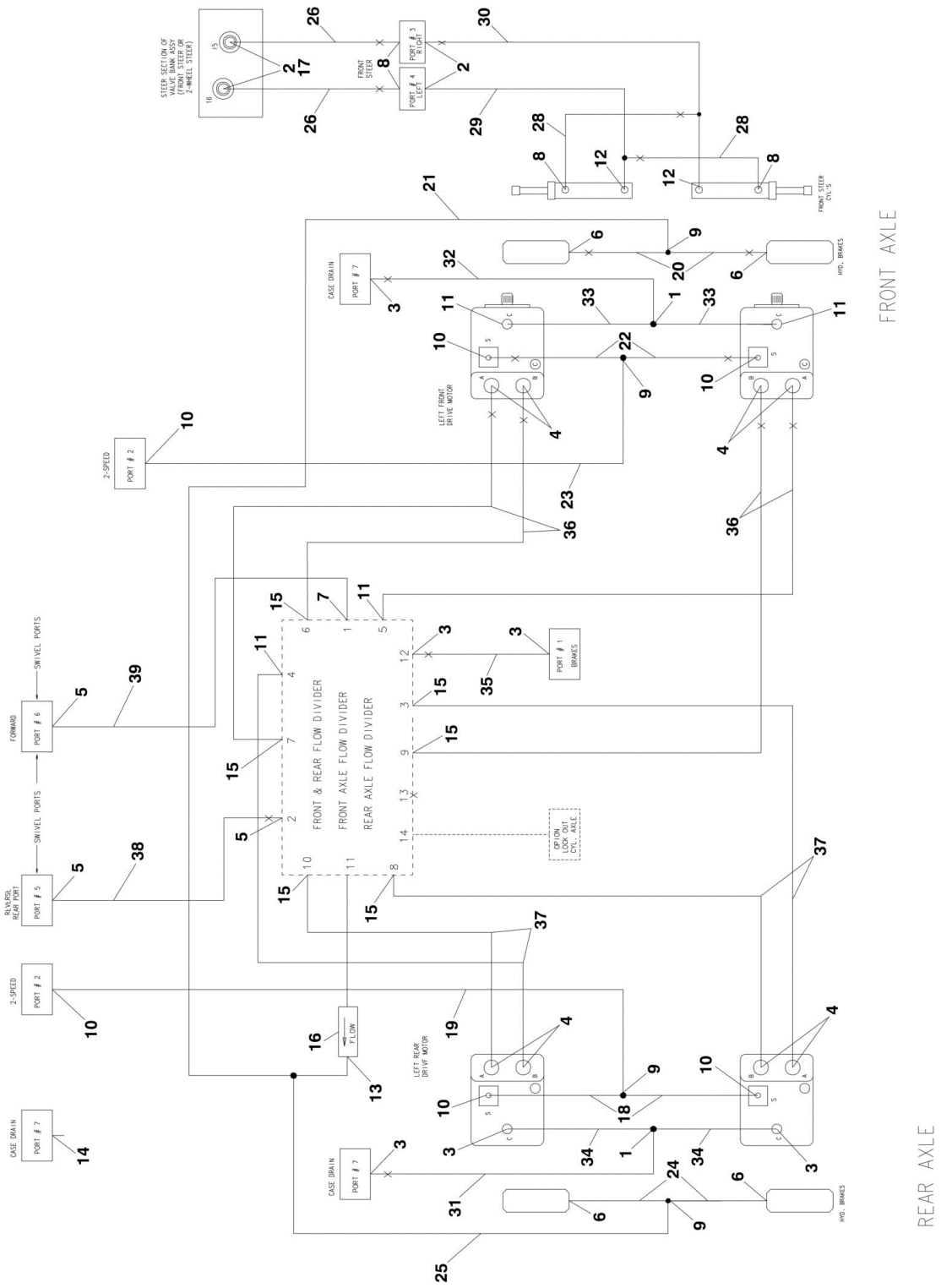

FIGURE 6-4. DRIVE HYDRAULIC DIAGRAM - 4WD/2WS (SN 0300081836 through 0300087000)

ITEM	PART NUMBER	QTY	DESCRIPTION	REV
	2792687	Ref	**DRIVE HYDRAULIC DIAGRAM - 4WD/2WS**	1
1	2220362	2	Fitting, Tee	
2	2220371	4	Fitting, Straight	
3	2220373	6	Fitting, Straight	
4	2220375	8	Fitting, Straight	
5	2220377	3	Fitting, Straight	
6	2220415	4	Fitting, Straight	
7	2220646	1	Fitting, 90	
8	2220473	4	Fitting, 90	
9	2220504	4	Fitting, Tee	
10	2220582	6	Fitting, Straight	
11	2220596	4	Fitting, 90	
12	2220606	2	Fitting, Tee	
13	2220861	1	Fitting, Tee	
14	2220237	1	Fitting, Plug	
15	2220500	6	Fitting, 45	
16	4641284	1	Valve, Check	
17	2220507	2	Fitting, 90	
18	2753925	2	Hose	
19	2753924	1	Hose	
20	2753926	2	Hose	
21	2754229	1	Hose	
22	2752574	2	Hose	
23	2754230	1	Hose	
24	2752592	2	Hose	
25	2752910	1	Hose	
26	2752620	2	Hose	
28	2754235	2	Hose	
29	2754234	1	Hose	
30	2754233	1	Hose	
31	2752928	1	Hose	
32	2754231	1	Hose	
33	2753928	2	Hose	
34	2753929	2	Hose	
35	2752929	1	Hose	
36	2754232	4	Hose	
37	2753930	4	Hose	
38	2754227	1	Hose	
39	2754228	1	Hose	

FIGURE 6-5. HYDRAULIC DIAGRAM - OSCILLATING AXLE (SN 0300069000 through 0300081835)

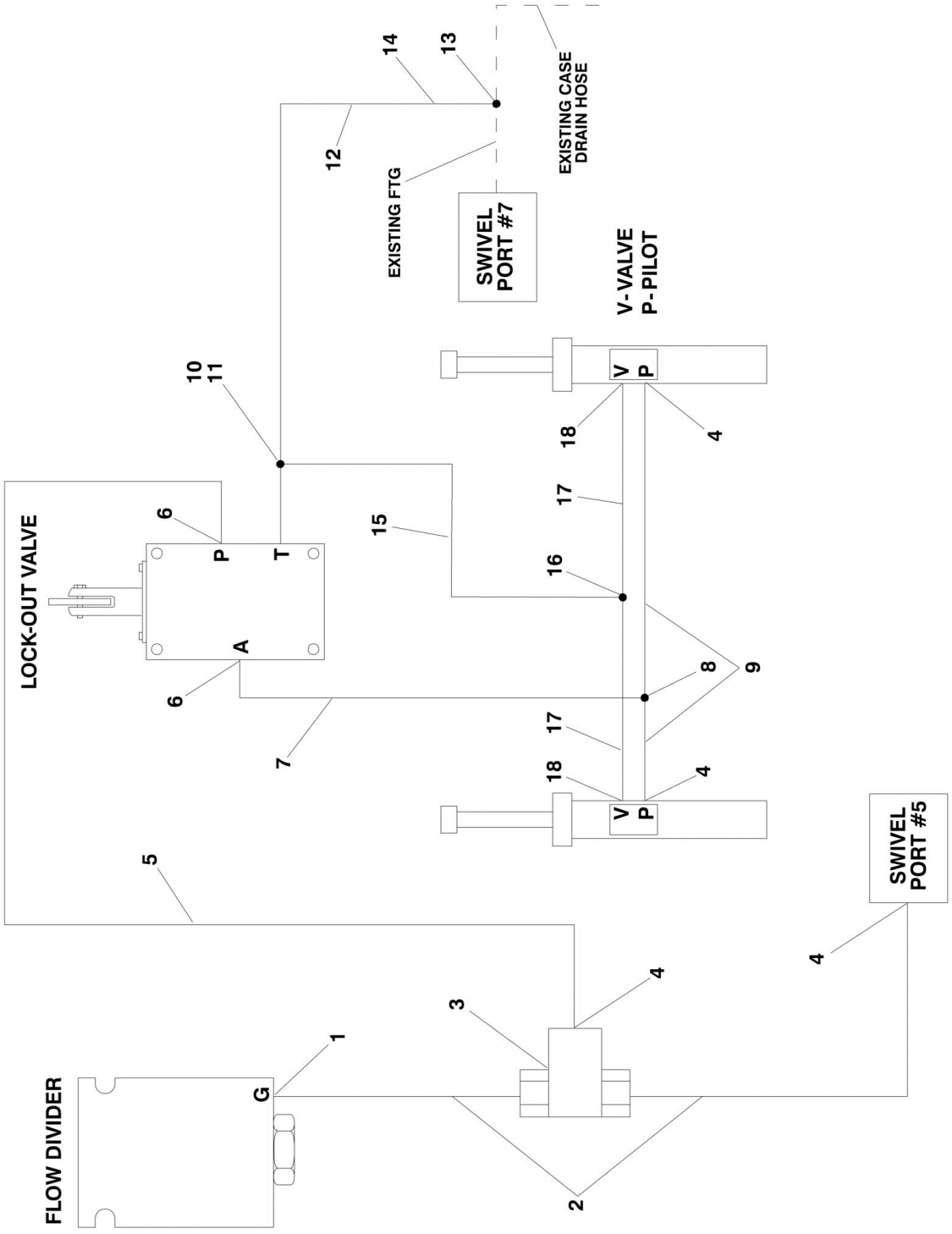

FIGURE 6-5. HYDRAULIC DIAGRAM - OSCILLATING AXLE (SN 0300069000 through 0300081835)

ITEM	PART NUMBER	QTY	DESCRIPTION	REV
	2792230	Ref	**HYDRAULIC DIAGRAM - OSCILLATING AXLE**	-
1	2220466	1	Fitting, 90	
2	2751020	2	Hose	
3	4640939	1	Valve, Shuttle	
4	2220582	6	Fitting, Straight	
5	2751013	1	Hose	
6	2220415	2	Fitting, Straight	
7	2750900	1	Hose	
8	2220504	1	Fitting, Tee	
9	2752920	2	Hose	
10	2220603	1	Fitting, Straight	
11	2220635	1	Fitting, Tee	
12	2752824	1	Hose	
13	2220385	1	Fitting, Tee	
14	2220619	1	Fitting, Reducer	
15	2752823	1	Hose	
16	2220490	1	Fitting, Tee	
17	2752962	2	Hose	
18	2220371	2	Fitting, Straight	

FIGURE 6-6. HYDRAULIC DIAGRAM - OSCILLATING AXLE (SN 0300081836 through 0300087000)

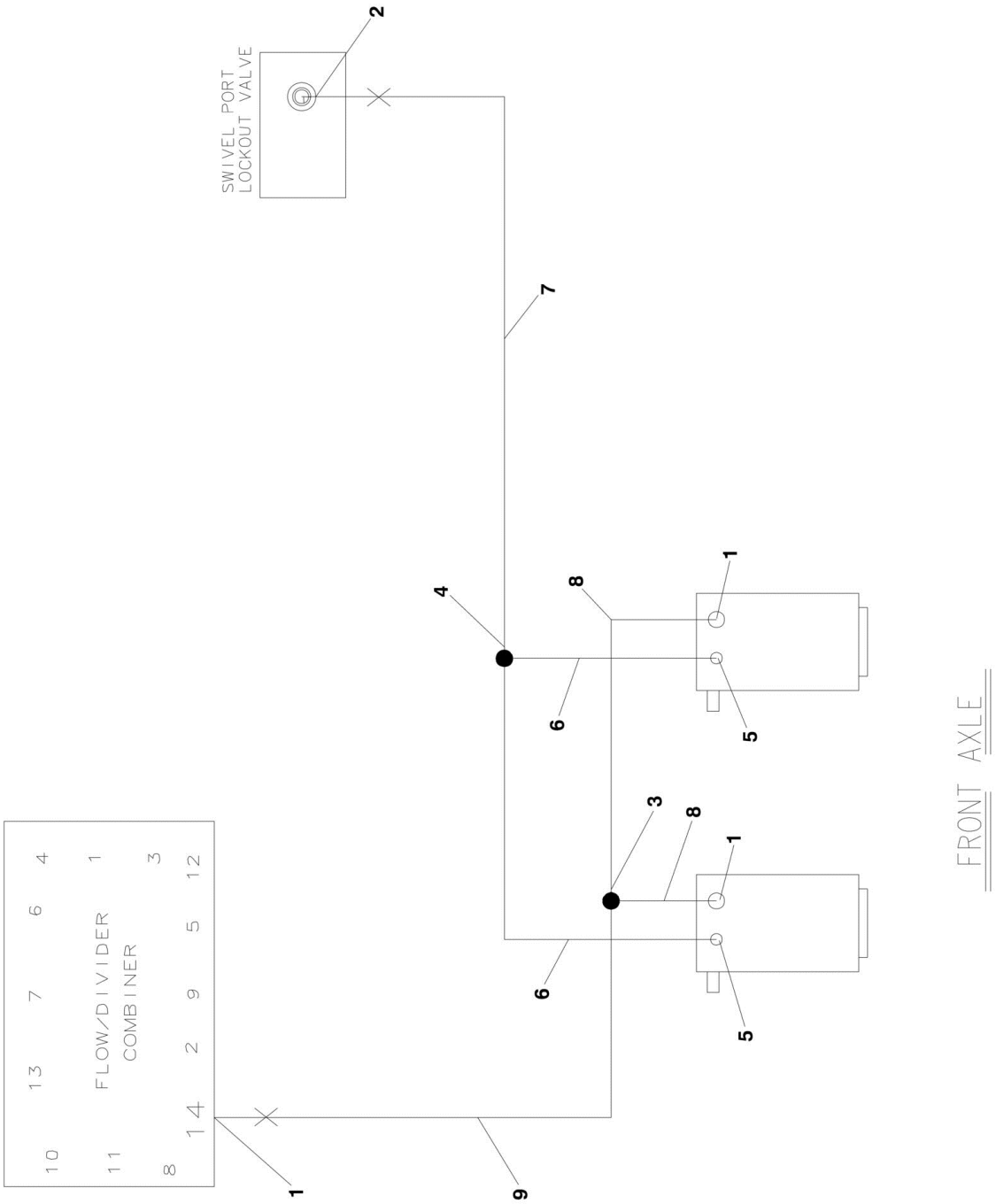

FIGURE 6-6. HYDRAULIC DIAGRAM - OSCILLATING AXLE (SN 0300081836 through 0300087000)

ITEM	PART NUMBER	QTY	DESCRIPTION	REV
	2792690	Ref	**HYDRAULIC DIAGRAM - OSCILLATING AXLE**	1
1	2220371	3	Fitting, Straight	
2	2220468	1	Fitting, Straight	
3	2220490	1	Fitting, Tee	
4	2220504	1	Fitting, Tee	
5	2220415	2	Fitting, Straight	
6	2751434	2	Hose	
7	2751410	1	Hose	
8	2753933	2	Hose	
9	2752462	1	Hose	

FIGURE 6-7. HYDRAULIC DIAGRAM - STANDARD (SN 0300069000 through 0300081835)

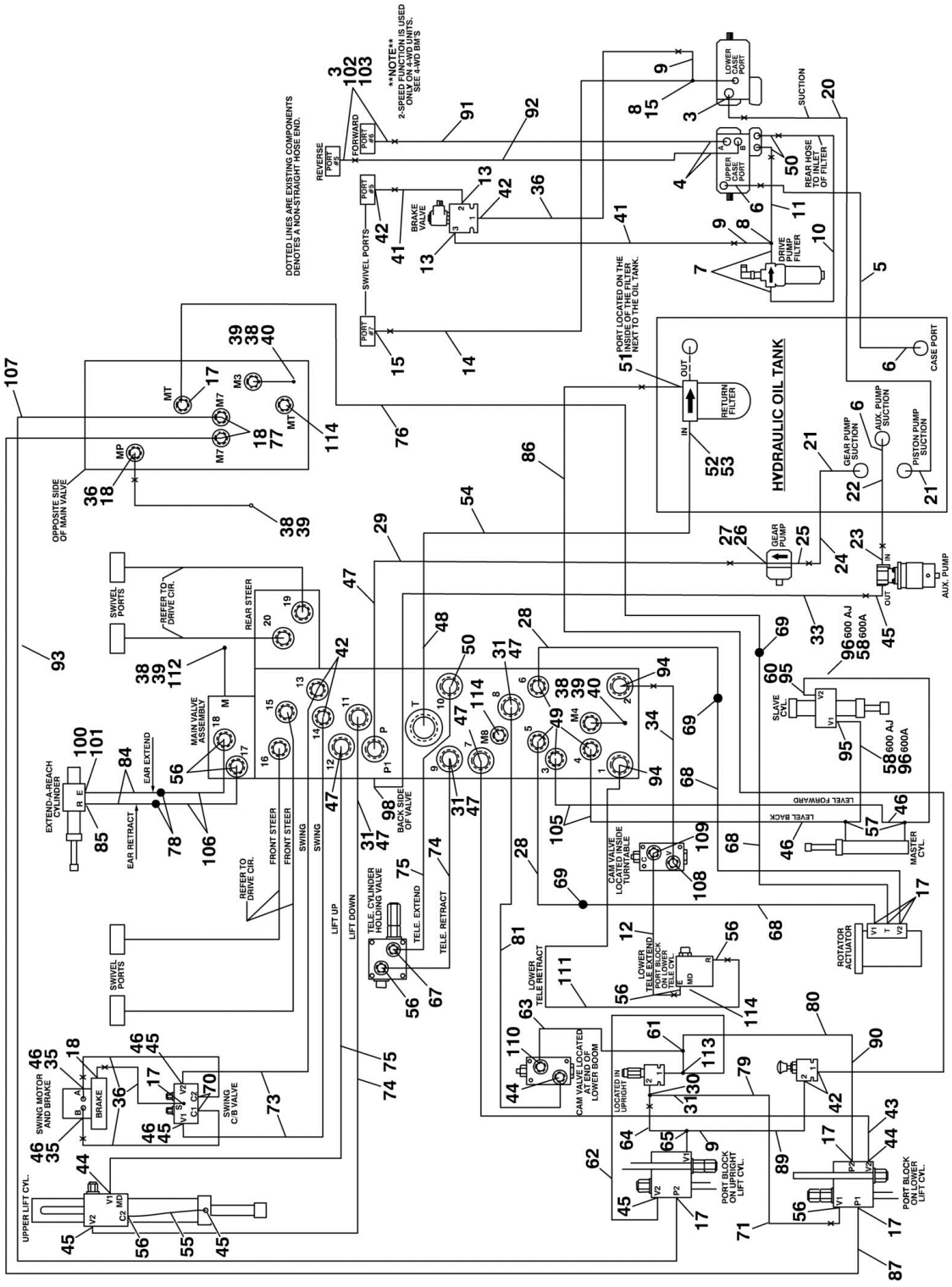

FIGURE 6-7. HYDRAULIC DIAGRAM - STANDARD (SN 0300069000 through 0300081835)

ITEM	PART NUMBER	QTY	DESCRIPTION	REV
	2792188	Ref	**HYDRAULIC DIAGRAM - STANDARD (600A)**	21
	2792189	Ref	**HYDRAULIC DIAGRAM - STANDARD (600AJ)**	22
3	2220377	3	Fitting, Straight	
4	2220646	2	Fitting, 90	
5	2752655	1	Hose	
6	2220578	3	Fitting, 90	
7	2220366	2	Fitting, 90	
8	2220385	2	Fitting, Tee	
9	2220618	3	Fitting, Reducer	
10	2752500	1	Hose	
11	2752519	1	Hose	
12	2753132	1	Hose	
13	2220472	2	Fitting, 90	
14	2752928	1	Hose	
15	2220375	2	Fitting, Straight	
16	2752591	1	Hose **(SN 0300069000 through 0300070977)**	
17	2220466	8	Fitting, 90	
18	2220415	5	Fitting, Straight	
20	2752723	1	Hose	
21	2220379	2	Fitting, Straight	
22	2752656	1	Hose	
23	2220567	1	Fitting, 90	
24	2752724	1	Hose	
25	2220376	1	Fitting, Straight	
26	2220810	1	Fitting, Reducer	
27	4640744	1	Valve, Check	
28	2752604	2	Hose (Note: Also Requires #69 & #68 for Complete Run Up Boom)	
29	2752929	1	Hose	
30	2220602	2	Fitting, Tee	
31	2220619	6	Fitting, Reducer	
32	2220416	1	Fitting, 90 **(SN 0300069000 through 0300070977)**	
33	2752635	1	Hose	
34	2753133	1	Hose	
35	2220497	2	Fitting, Straight	
36	2752573	5	Hose	
38	2220428	AR	Fitting, Quick Coupling (600A - Qty.3 /600AJ - Qty.4)	
39	2220429	AR	Cap, Dust (600A - Qty.3 /600AJ - Qty.4)	
40	2220873	2	Fitting	
41	2752600	2	Hose	
42	2220582	6	Fitting, Straight	
43	2752506	1	Hose (600A)	
43	2752516	1	Hose (600AJ)	
44	2220596	3	Fitting, 90	
45	2220628	6	Fitting, 90	
46	2220609	AR	Fitting, Reducer	
47	2220381	AR	Fitting, Long Straight (600A - Qty.5 /600AJ - Qty.6)	
48	2220974	1	Fitting, Long Straight	
49	2220923	4	Fitting, Long Straight	
50	2220374	3	Fitting	
51	2220574	1	Fitting, Straight	

ITEM	PART NUMBER	QTY	DESCRIPTION	REV
52	2220921	1	Fitting, Reducer	
53	2220498	1	Fitting, 45	
54	2752783	1	Hose	
55	2752469	1	Hose	
56	2220372	AR	Fitting, Straight (600A - Qty.5 /600AJ - Qty.7)	
57	2220899	2	Fitting, Tee	
58	2752636	1	Hose (600A)	
58	2752468	1	Hose (600AJ)	
60	2220657	1	Fitting, 45 (600A Only)	
61	2221065	1	Fitting, Tee	
62	2752462	1	Hose	
63	2753134	1	Hose	
63	2753134	1	Hose	
64	2752497	1	Hose	
65	2220999	1	Fitting, Tee	
67	2220500	1	Fitting, 45	
68	2752601	3	Hose (Note: Also Requires #69 & #28 or #76 for Complete Run Up Boom)	
69	2220510	3	Fitting, Coupling	
70	2220468	2	Fitting, Straight	
71	2753052	1	Hose	
72	2220502	4	Fitting, 45 **(SN 0300069000 through 0300070977)**	
73	2752603	2	Hose	
74	2753055	1	Hose	
75	2752939	2	Hose	
76	2752579	1	Hose (Note: Also Requires #69 & #68 for Complete Run Up Boom	
77	2220654	2	Fitting, 90	
78	2220511	1	Fitting, Coupling (600AJ Only)	
79	2753056	1	Hose	
80	2752991	1	Hose	
81	2753135	1	Hose	
82	2752434	1	Hose **(SN 0300069000 through 0300070977)**	
84	2753047	2	Hose (600AJ Only) (Note: Also Requires #78 & #106 for Complete Run Up Boom)	
85	2220473	1	Fitting, 90 (600AJ Only)	
86	2752453	1	Hose	
87	2752593	1	Hose	
88	2752988	1	Hose **(SN 0300069000 through 0300070977)**	
89	2752990	1	Hose	
90	2752985	1	Hose	
91	2752343	1	Hose	
92	2752341	1	Hose	
93	2752592	1	Hose **(SN 0300069000 through 0300070977)**	
94	2220998	2	Fitting, Straight	
95	2220603	2	Fitting, Straight	
96	2753046	1	Hose (600A)	
96	2752650	1	Hose (600AJ)	
98	2220473	1	Fitting, 90	
100	2180724	1	Fitting, Modified 90 (600AJ Only)	
101	2180380	1	Plug, Orifice.06 (600AJ Only)	
102	0100011	AR	Compound, Locking	
103	0100038	AR	Primer, Locking	

ITEM	PART NUMBER	QTY	DESCRIPTION	REV
104	1703534	2	Decal, Hose Tags (Not Shown)	
105	2752989	2	Hose	
106	2752618	2	Hose (600AJ Only) (Note: Also Requires #78 & #84 for Complete Run Up Boom)	
107	2752987	1	Hose	
108	2220373	1	Fitting, Straight	
109	2220947	1	Fitting, Straight	
110	2221036	1	Fitting, O-Ring	
111	2752484	1	Hose	
112	2220873	1	Fitting, Nipple	
113	2221053	1	Fitting, Tee	
114	2220235	3	Plug **(SN 0300070977 through 0300081836)**	

FIGURE 6-8. HYDRAULIC DIAGRAM - STANDARD (SN 0300081836 through 0300087000)

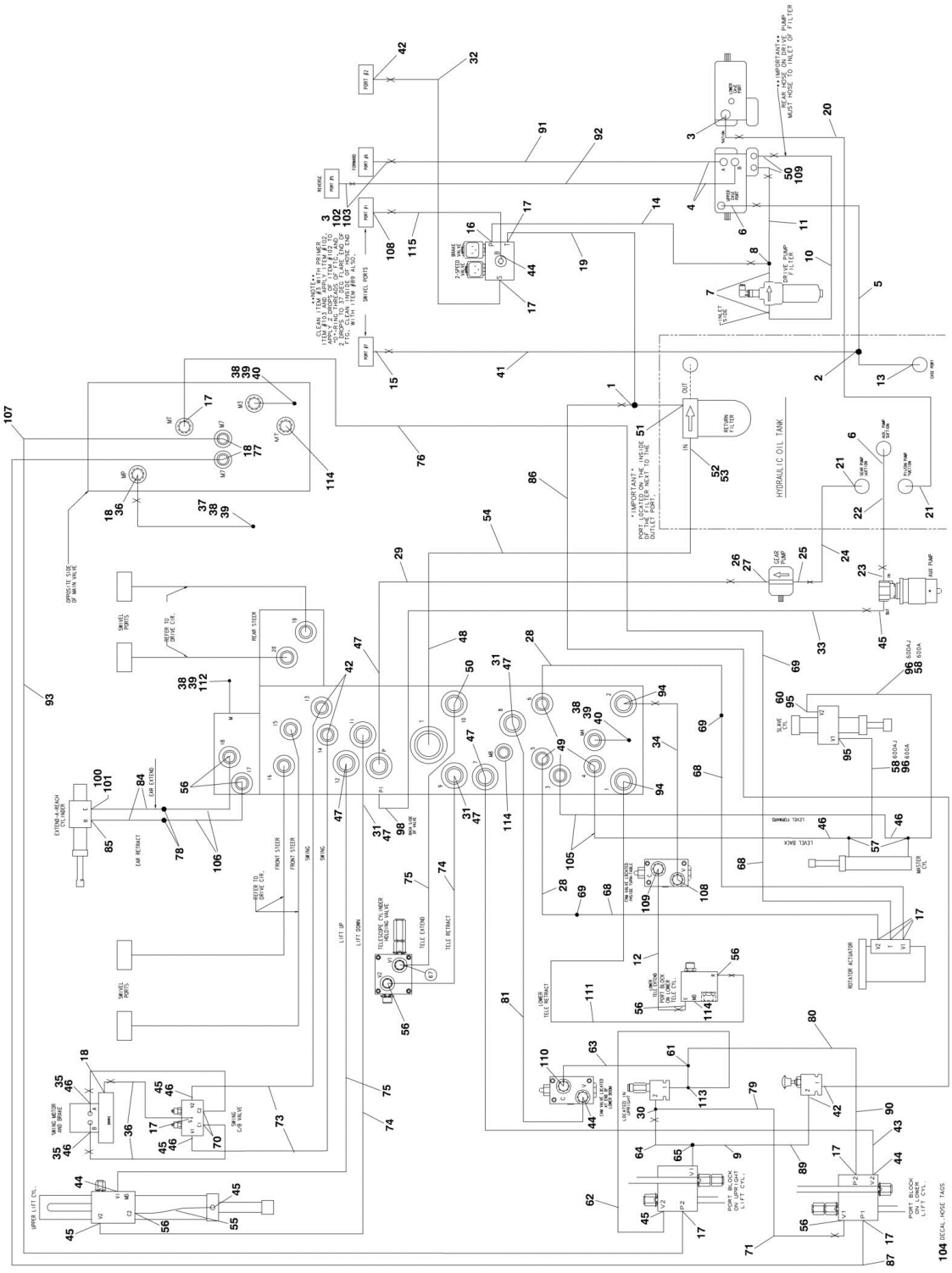

FIGURE 6-8. HYDRAULIC DIAGRAM - STANDARD (SN 0300081836 through 0300087000)

ITEM	PART NUMBER	QTY	DESCRIPTION	REV
	2792688	Ref	**HYDRAULIC DIAGRAM - STANDARD (600A)**	5
	2792689	Ref	**HYDRAULIC DIAGRAM - STANDARD (600AJ)**	3
1	2220605	1	Fitting, Tee	
2	2220409	1	Fitting, 45	
3	2220377	3	Fitting, Straight	
4	2220646	2	Fitting, 90	
5	2752655	1	Hose	
6	2220578	2	Fitting, 90	
7		Ref	Fitting, 90 Options:	
7	2220366	2	Fitting, 90 **(SN 0300081836 through 0300084828)**	
7	2221042	2	Fitting, 90 **(SN 0300084829 through 0300087000)**	
8		Ref	Fitting, Tee Options:	
8	2220385	1	Fitting, Tee **(SN 0300081836 through 0300084828)**	
8	2220948	1	Fitting, Tee **(SN 0300084829 through 0300087000)**	
9	2220618	1	Fitting, Reducer	
10		Ref	Hose Options:	
10	2752500	1	Hose **(SN 0300081836 through 0300084828)**	
10	2754329	1	Hose **(SN 0300084829 through 0300087000)**	
11		Ref	Hose	
11	2752519	1	Hose **(SN 0300081836 through 0300084828)**	
11	2754330	1	Hose **(SN 0300084829 through 0300087000)**	
12	2753132	1	Hose	
13	2220738	1	Fitting, Tee	
14		Ref	Hose Options:	
14	2752928	1	Hose **(SN 0300081836 through 0300084828)**	
14	2754328	1	Hose **(SN 0300084829 through 0300087000)**	
15	2220375	AR	Fitting, Straight (600A - Qty.1 /600AJ - Qty.2)	
16	2220474	1	Fitting, 90	
17	2220466	10	Fitting, 90	
18	2220415	4	Fitting, Straight	
19	2753325	1	Hose	
20	2752723	1	Hose	
21	2220379	2	Fitting, Straight	
22	2752656	1	Hose	
23	2220567	1	Fitting, 90	
24	2752724	1	Hose	
25	2220376	1	Fitting, Straight	
26	2220810	1	Fitting, Reducer	
27	4640744	1	Valve, Check	
28	2752604	2	Hose (Note: Also Requires #69 & #68 for Complete Run Up Boom)	
29	2752929	1	Hose	
30	2220602	1	Fitting, Tee	
31	2220619	3	Fitting, Reducer	
32	2751396	1	Hose	
33	2752635	1	Hose	
34	2753133	1	Hose	
35	2220497	2	Fitting, Straight	
36	2752573	AR	Hose (600A - Qty.4 /600AJ - Qty.3)	
37	2220414	1	Fitting, Straight	
38	2220428	AR	Fitting, Quick Coupling (600A - Qty.3 /600AJ - Qty.4)	

ITEM	PART NUMBER	QTY	DESCRIPTION	REV
39	2220429	AR	Cap, Dust (600A - Qty.3 /600AJ - Qty.4)	
40	2220873	2	Fitting	
41	2752600	1	Hose (600A) **(SN 0300081836 through 0300084828)**	
41	2753968	1	Hose (600A) **(SN 0300084829 through 0300087000)**	
41	2753968	1	Hose (600AJ)	
42	2220582	6	Fitting, Straight	
43	2752506	1	Hose (600A)	
43	2752516	1	Hose (600AJ)	
44	2220596	4	Fitting, 90	
45	2220628	6	Fitting, 90	
46	2220609	6	Fitting, Reducer	
47	2220381	6	Fitting, Long Straight	
48	2220974	1	Fitting, Long Straight	
49	2220923	4	Fitting, Long Straight	
50	2220374	AR	Fitting Options:	
50		Ref	Fitting **(SN 0300081836 through 0300084828)**	
50		Ref	Fitting **(SN 0300084829 through 0300087000)**	
51	2220574	1	Fitting, Straight	
52	2220921	1	Fitting, Reducer	
53	2220498	1	Fitting, 45	
54	2752783	1	Hose	
55	2752469	1	Hose	
56	2220372	AR	Fitting, Straight (600A - Qty.5 /600AJ - Qty.7)	
57	2220899	2	Fitting, Tee	
58	2752636	1	Hose (600A)	
58	2752468	1	Hose (600AJ)	
60	2220657	1	Fitting, 45 (600A Only)	
61	2221065	1	Fitting, Tee	
62	2752462	1	Hose	
63	2753134	1	Hose	
64	2752497	1	Hose	
65	2220999	1	Fitting, Tee	
67	2220500	1	Fitting, 45	
68	2752601	3	Hose (Note: Also Requires #69 & #28 or #76 for Complete Run Up Boom)	
69	2220510	3	Fitting, Coupling	
70	2220468	2	Fitting, Straight	
71	2753052	1	Hose	
73	2752603	2	Hose	
74	2753055	2	Hose	
75	2752939	2	Hose	
76	2752579	1	Hose (Note: Also Requires #69 & #68 for Complete Run Up Boom)	
77	2220654	2	Fitting, 90	
78	2220511	1	Fitting, Coupling (600AJ Only)	
79	2753056	1	Hose	
80	2752991	1	Hose	
81	2753135	1	Hose	
84	2753047	2	Hose (600AJ Only) (Note: Also Requires #78 & #106 for Complete Run Up Boom)	
85	2220473	1	Fitting, 90 (600AJ Only)	
86	2752453	1	Hose	
87	2752593	1	Hose	

ITEM	PART NUMBER	QTY	DESCRIPTION	REV
89	2752990	1	Hose	
90	2752985	1	Hose	
91		Ref	Hose Options:	
91	2752343	1	72in/1.83m Length	
91	2752341	1	66in/1.68m Length	
92		Ref	Hose Options:	
92	2752343	1	72in/1.83m Length	
92	2752341	1	66in/1.68m Length	
94	2220998	2	Fitting, Straight	
95	2220603	2	Fitting, Straight	
96	2753046	1	Hose (600A)	
96	2752650	1	Hose (600AJ)	
98	2220473	1	Fitting, 90	
100	2180724	1	Fitting, Modified 90 (600AJ Only)	
101	2180380	1	Plug, Orifice.06 (600AJ Only)	
102	0100011	AR	Compound, Locking	
103	0100038	AR	Primer, Locking	
104	1703534	2	Decal, Hose Tags (Not Shown)	
105	2752989	2	Hose	
106	2752618	2	Hose (600AJ Only) (Note: Also Requires #78 & #84 for Complete Run Up Boom)	
107	2752987	1	Hose	
108	2220373	AR	Fitting, Straight (600A - Qty.1 /600AJ - Qty.2)	
109	2220947		Fitting, Straight Options:	
109		Ref	Fitting, Straight **(SN 0300081836 through 0300084828)**	
109		Ref	Fitting, Straight **(SN 0300084829 through 0300087000)**	
110	2221036	1	Fitting, O-Ring	
111	2752484	1	Hose	
112	2220873	1	Fitting, Nipple	
113	2221053	1	Fitting, Tee	
114	2220235	3	Plug	
115	2752519	1	Hose	

FIGURE 6-9. HYDRAULIC DIAGRAM LIST

ITEM	PART NUMBER	QTY	DESCRIPTION	REV
		Ref	**Note: Diagrams not shown in manual are available from JLG Service/Parts Department.**	
	1282396	Ref	**Drive Hydraulic Diagrams**	
		Ref	Drive Hydraulic Diagrams 600A & 600AJ with 8ft/2.4m Width Frame:	
	2792193	Ref	Drive Hydraulic 2WD/2WS **(SN 0300069000 through 0300081835)**	
	2792692	Ref	Drive Hydraulic 2WD/2WS **(SN 0300081836 through 0300087000)**	
	2792194	Ref	Drive Hydraulic 2WD/4WS **(SN 0300069000 through 0300081835)**	
	2792702	Ref	Drive Hydraulic 2WD/4WS **(SN 0300081836 through 0300087000)**	
	2792195	Ref	Drive Hydraulic 4WD/2WS **(SN 0300069000 through 0300081835)**	
	2792687	Ref	Drive Hydraulic 4WD/2WS **(SN 0300081836 through 0300087000)**	
	2792196	Ref	Drive Hydraulic 4WD/4WS **(SN 0300069000 through 0300081835)**	
	2792697	Ref	Drive Hydraulic 4WD/4WS **(SN 0300081836 through 0300087000)**	
		Ref	Drive Hydraulic Diagrams 600A & 600AJ with 7ft/2.1m Width Frame:	
	2792191	Ref	Drive Hydraulic 2WD/2WS	
	2792192	Ref	Drive Hydraulic 2WD/2WS	
		Ref	**OSCILLATING AXLE HYDRAULIC DIAGRAMS**	
	2792230	Ref	**Hydraulic Diagram - Oscillating Axle (SN 0300069000 through 0300081835)**	
	2792690	Ref	**Hydraulic Diagram - Oscillating Axle (SN 0300081836 through 0300087000)**	
		Ref	**STANDARD HYDRAULIC DIAGRAM - 600A**	
	2792188	Ref	**Standard Hydraulic Diagram (SN 0300069000 through 0300081835)**	
	1282396	Ref	**Standard Hydraulic Diagram (SN 0300069000 through 0300081835)**	
	2792688	Ref	**Standard Hydraulic Diagram (SN 0300081836 through 0300087000)**	
	1283429	Ref	**Standard Hydraulic Diagram (SN 0300081836 through 0300087000)**	
		Ref	**STANDARD HYDRAULIC DIAGRAM - 600AJ**	
	2792189	Ref	**Standard Hydraulic Diagram (SN 0300069000 through 0300081835)**	
	1282396	Ref	**Standard Hydraulic Diagram (SN 0300069000 through 0300081835)**	
	2792689	Ref	**Standard Hydraulic Diagram (SN 0300081836 through 0300087000)**	
	1283429	Ref	**Standard Hydraulic Diagram (SN 0300081836 through 0300087000)**	
		Ref	**Standard Hydraulic Schematic**	
	2792177	Ref	**Standard Hydraulic Diagram (SN 0300069000 through 0300081835)**	
	2792691	Ref	**Standard Hydraulic Diagram (SN 0300081836 through 0300087000)**	

ITEM	PART NUMBER	QTY	DESCRIPTION	REV
	2792405	Ref	**Tool Circuit Hydraulic Diagram**	
	2792315	Ref	**Tow Hydraulic Diagram**	

SECTION 7 - ELECTRICAL

FIGURE 7-1. ELECTRICAL DIAGRAM LIST

ITEM	PART NUMBER	QTY	DESCRIPTION	REV
		Ref	**Note: Diagrams not shown in manual are available from JLG Service/Parts Department.**	
		Ref	**ALARM ELECTRICAL DIAGRAMS**	
	4933025	Ref	**Motion**	1
	1282937	Ref	**Motion**	A
	4933026	Ref	**Travel**	1
	1282937	Ref	**Travel**	A
	1282571	Ref	**COLD WEATHER START ELECTRICAL DIAGRAM (DEUTZ)**	J
		Ref	**DRIVE CUT-OUT ELECTRICAL DIAGRAM**	
	4932990	Ref	**Above Elevation Tilt or Beyond Transport**	2
	1282828	Ref	**Above Elevation Tilt or Beyond Transport**	B
	4932993	Ref	**Above Elevation Tilt**	2
	1282828	Ref	**Above Elevation Tilt**	B
	4932992	Ref	**8 Meter - 600A**	2
	1282828	Ref	**8 Meter - 600A**	B
	4932992	Ref	**8 Meter - 600AJ**	2
	1282828	Ref	**8 Meter - 600AJ**	B
	3640493	1	Rail, Mounting	
	4460607	2	Stop, Terminal	
	4120013	1	Socket, Relay	
	3740058	1	Relay 4PDT	
	2740063	1	Spring, Relay	
	4933307	Ref	**DRIVE/STEER CUT-OUT ELECTRICAL DIAGRAMS**	A
	4932986	Ref	**ENGINE LOW OIL SHUTDOWN ELECTRICAL DIAGRAM**	2-B
	4933308	Ref	**FLOOD LIGHTS ELECTRICAL DIAGRAM**	1-A
		Ref	**GENERATOR ELECTRICAL DIAGRAMS**	
	4933215	Ref	**110V (SN 0300069000 through 0300081835)**	1-B
	4933216	Ref	**220V (SN 0300069000 through 0300081835)**	1-B
	4933300		**110V/220V (SN 0300081836 through 0300087000)**	1-A
	4933219	Ref	**HEADLIGHTS/TAILLIGHTS ELECTRICAL DIAGRAM**	1-B
	4933312	Ref	**CHASSIS ILLUMINATION ELECTRICAL DIAGRAM**	1-A
	4922484	1	Harness (Located in Ground Console Box)	
	3740049	1	Relay	
		Ref	**OIL COOLER ELECTRICAL DIAGRAMS**	
	0256765	Ref	**Deutz Machines**	5
	1282665	Ref	**Deutz Machines**	E
	0270723	Ref	**PLATFORM BEACON ELECTRICAL DIAGRAM**	1-A
	4922639	Ref	**PLATFORM ELECTRICAL DIAGRAMS**	F
	4933218	Ref	**PLATFORM SOFT TOUCH SYSTEM ELECTRICAL DIAGRAM**	1-B
	3740057	1	Relay (Located in Platform Console Box)	
	4120012	1	Socket, Relay (Located in Platform Console Box)	
	3740066	1	Spring, Relay (Located in Platform Console Box)	
	3740049	1	Relay (Located in Platform Console Box)	
	4460600	1	Block, Terminal (Located in Platform Console Box)	
		Ref	**Note: Diagrams not shown in manual are available from JLG Service/Parts Department.**	
		Ref	**PLATFORM WORKLIGHTS ELECTRICAL DIAGRAM**	
	0270814	Ref	Worklights Installation (Optional) **(SN 0300069000 through 0300074444)**	3-E

ITEM	PART NUMBER	QTY	DESCRIPTION	REV
	0273492	Ref	Worklights Installation (Optional) **(SN 0300074445 through 0300087000)**	B
	4933263	Ref	**POWER TOOL ELECTRICAL DIAGRAM**	1-B
		Ref	**STANDARD ELECTRICAL DIAGRAMS**	
	4933290	Ref	**Caterpillar Engine (SN 0300069000 through 0300084828)**	2-B
	4933330	Ref	**Caterpillar Engine (SN 0300084829 through 0300087000)**	1-A
	4933214	Ref	**Deutz Engine (SN 0300069000 through 0300084828)**	3-C
	4933319	Ref	**Deutz Engine (SN 0300084829 through 0300087000)**	D
		Ref	**STANDARD ELECTRICAL SCHEMATIC**	
	1870132	Ref	**Caterpillar and Ford Engine Machines**	H
	1870132	Ref	**Deutz Engine Machines (SN 0300069000 through 0300084828)**	H
	1870191	Ref	**Deutz Engine Machines (SN 0300084829 through 0300087000)**	A

FIGURE 7-2. ELECTRICAL SCHEMATIC (DEUTZ AND ALL CATERPILLAR) (SN 0300069000 through 0300084711)

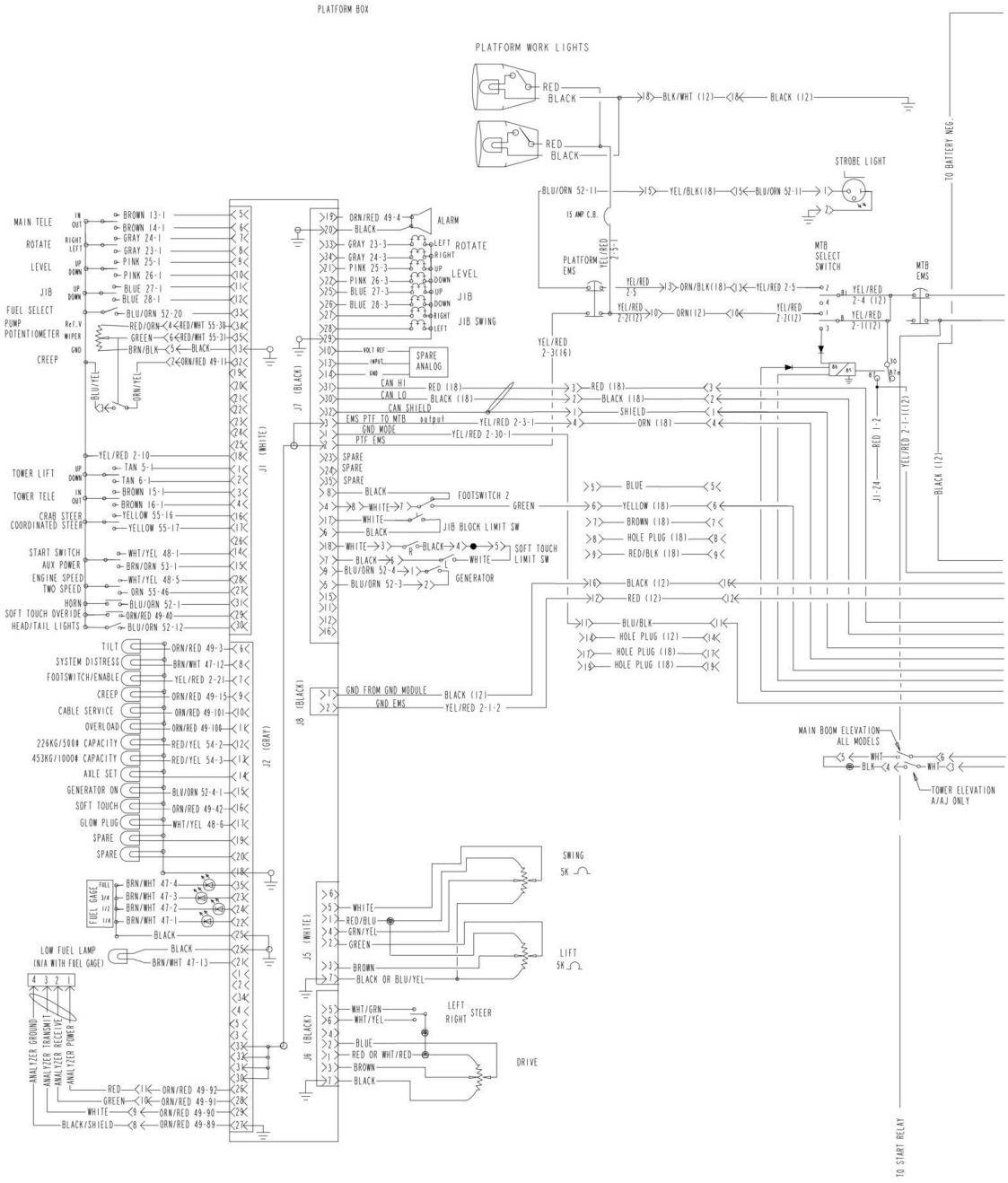

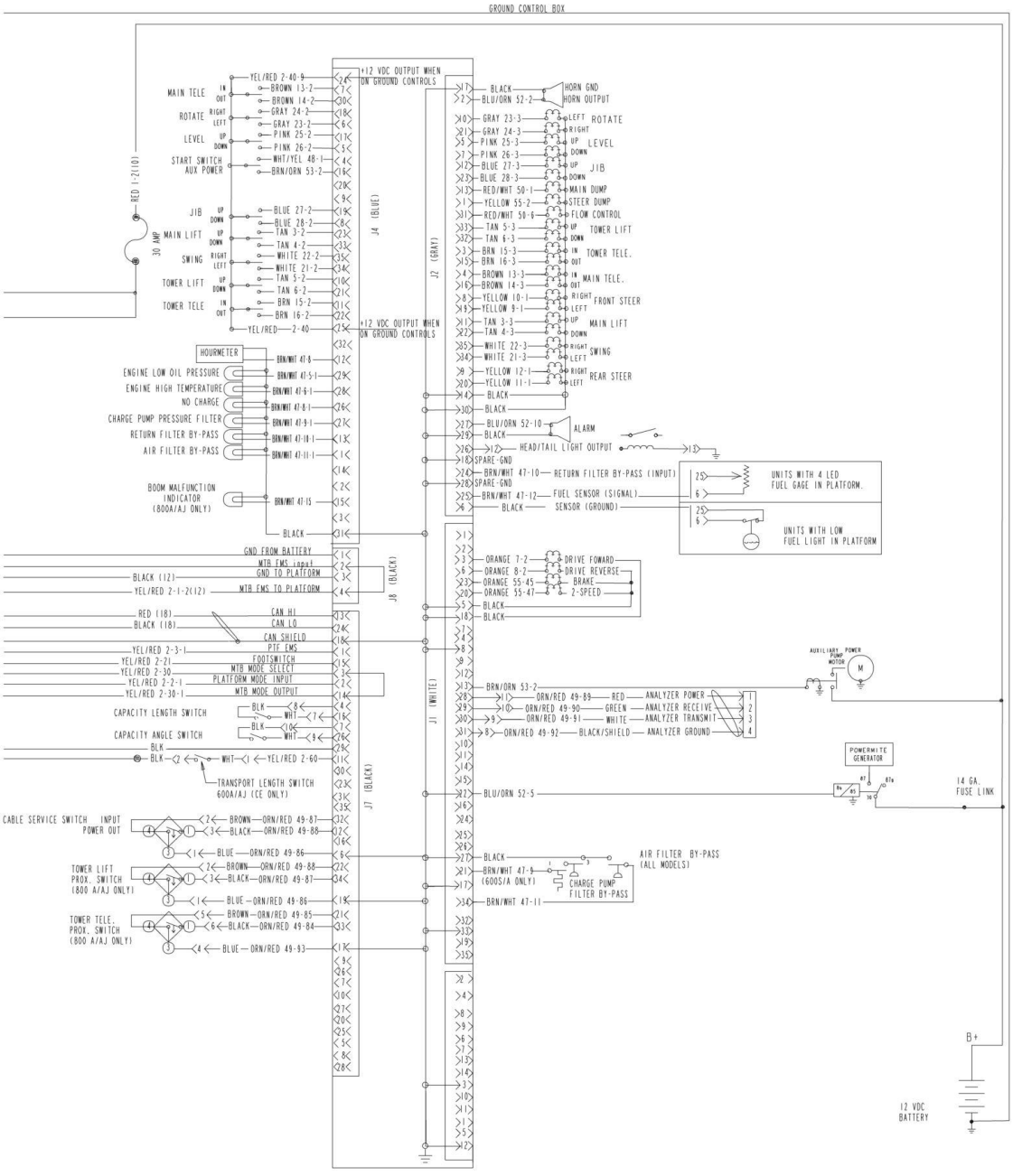
GROUND CONTROL BOX
+12 VDC OUTPUT WHEN ON GROUND CONTROLS
MAIN TELE
ROTATE
LEVEL
START SWITCH AUX POWER
JIB
MAIN LIFT
SWING
TOWER LIFT
TOWER TELE
30 AMP
RED 1-2(10)
J4 (BLUE)
J2 (GRAY)
J8 (BLACK)
J1 (WHITE)
J7 (BLACK)
HOURMETER
ENGINE LOW OIL PRESSURE
ENGINE HIGH TEMPERATURE
NO CHARGE
CHARGE PUMP PRESSURE FILTER
RETURN FILTER BY-PASS
AIR FILTER BY-PASS
BOOM MALFUNCTION INDICATOR (600A/AJ ONLY)
GND FROM BATTERY
MTB EMS Input
GND TO PLATFORM
MTB EMS TO PLATFORM
CAN HI
CAN LO
CAN SHIELD
PTF EMS
FOOTSWITCH
MTB MODE SELECT
PLATFORM MODE INPUT
MTB MODE OUTPUT
CAPACITY LENGTH SWITCH
CAPACITY ANGLE SWITCH
TRANSPORT LENGTH SWITCH 600A/AJ (CE ONLY)
CABLE SERVICE SWITCH INPUT POWER OUT
TOWER LIFT PROX. SWITCH (800 A/AJ ONLY)
TOWER TELE. PROX. SWITCH (800 A/AJ ONLY)
HORN GND
HORN OUTPUT
ROTATE
LEVEL
JIB
MAIN DUMP
STEER DUMP
FLOW CONTROL
TOWER LIFT
TOWER TELE.
MAIN TELE.
FRONT STEER
MAIN LIFT
SWING
REAR STEER
ALARM
HEAD/TAIL LIGHT OUTPUT
SPARE-GND
RETURN FILTER BY-PASS (INPUT)
FUEL SENSOR (SIGNAL)
SENSOR (GROUND)
UNITS WITH 4 LED FUEL GAGE IN PLATFORM.
UNITS WITH LOW FUEL LIGHT IN PLATFORM
DRIVE FOWARD
DRIVE REVERSE
BRAKE
2-SPEED
AUXILIARY POWER PUMP MOTOR
ANALYZER POWER
ANALYZER RECEIVE
ANALYZER TRANSMIT
ANALYZER GROUND
POWERWITE GENERATOR
14 GA. FUSE LINK
AIR FILTER BY-PASS (ALL MODELS)
CHARGE PUMP FILTER BY-PASS
B+
12 VDC BATTERY

1870132 - H

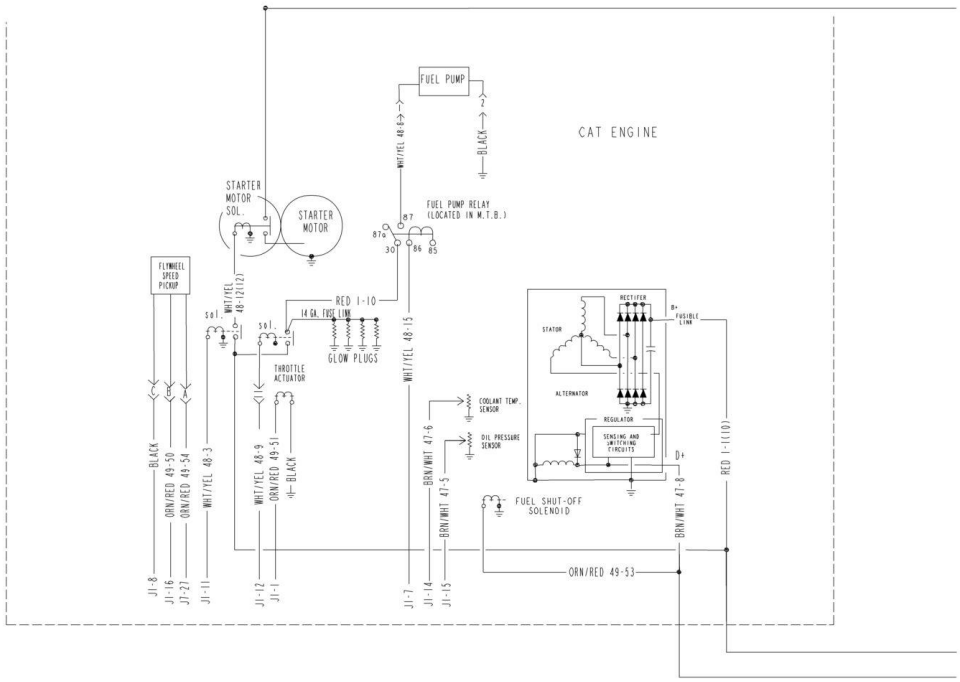
CAT ENGINE
FUEL PUMP
STARTER MOTOR SOL.
STARTER MOTOR
FUEL PUMP RELAY (LOCATED IN M.T.B.)
FLYWHEEL SPEED PICKUP
RED 1-10
14 GA. FUSE LINK
GLOW PLUGS
THROTTLE ACTUATOR
COOLANT TEMP. SENSOR
OIL PRESSURE SENSOR
FUEL SHUT-OFF SOLENOID
RECTIFIER
STATOR
ALTERNATOR
REGULATOR
SENSING AND SWITCHING CIRCUITS
FUSIBLE LINK
ORN/RED 49-53

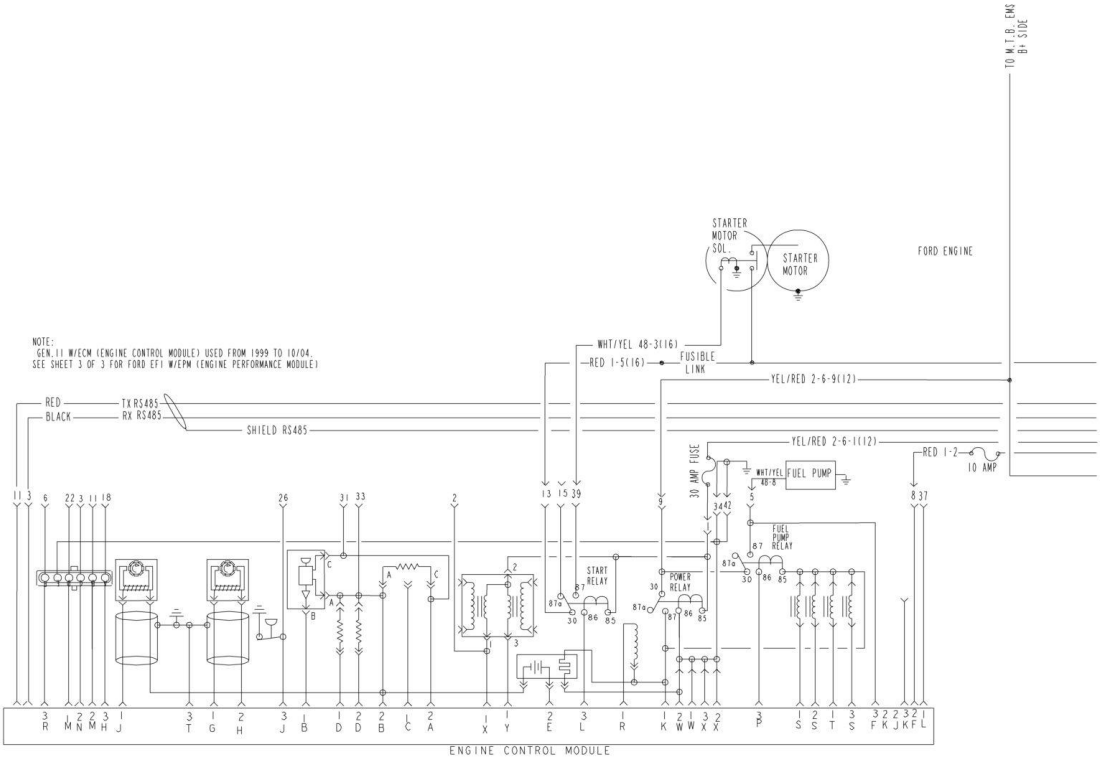
TO M.T.B. EMS B+ SIDE
FORD ENGINE
STARTER MOTOR SOL.
STARTER MOTOR
NOTE:
GEN. II W/ECM (ENGINE CONTROL MODULE) USED FROM 1999 TO 10/04.
SEE SHEET 3 OF 3 FOR FORD EFI W/EPM (ENGINE PERFORMANCE MODULE)
WHT/YEL 48-3(16)
RED 1-5(16)
FUSIBLE LINK
YEL/RED 2-6-9(12)
RED
BLACK
TX RS485
RX RS485
SHIELD RS485
YEL/RED 2-6-11(12)
RED 1-2
10 AMP
30 AMP FUSE
WHT/YEL 48-8
FUEL PUMP
FUEL PUMP RELAY
START RELAY
POWER RELAY
ENGINE CONTROL MODULE

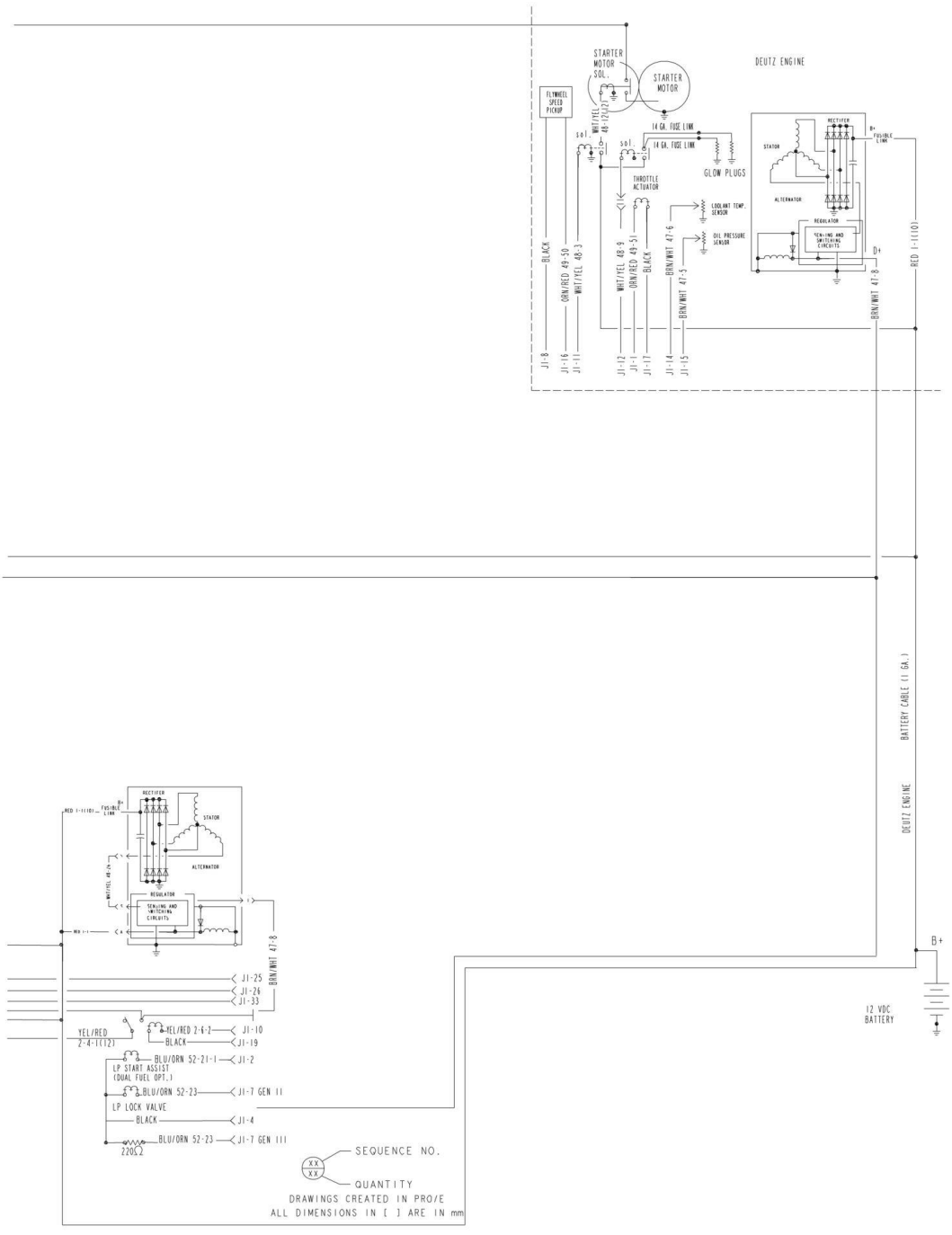
DEUTZ ENGINE
STARTER MOTOR SOL.
STARTER MOTOR
FLYWHEEL SPEED PICKUP
14 GA. FUSE LINK
GLOW PLUGS
THROTTLE ACTUATOR
COOLANT TEMP. SENSOR
OIL PRESSURE SENSOR
RECTIFIER
STATOR
ALTERNATOR
REGULATOR
SENSING AND SWITCHING CIRCUITS
BLACK
ORN/RED 49-50
WHT/YEL 48-3
WHT/YEL 48-9
ORN/RED 49-51
BRN/WHT 47-6
BRN/WHT 47-5
BRN/WHT 47-8
RED 1-11(0)
J1-8
J1-16
J1-11
J1-12
J1-1
J1-17
J1-14
J1-15
BATTERY CABLE (1 GA.)
B+
12 VDC BATTERY
J1-25
J1-26
J1-33
YEL/RED 2-4-1(12)
YEL/RED 2-6-2
BLACK
J1-10
J1-19
BLU/ORN 52-21-1
J1-2
LP START ASSIST (DUAL FUEL OPT.)
BLU/ORN 52-23
J1-7 GEN II
LP LOCK VALVE
BLACK
J1-4
BLU/ORN 52-23
J1-7 GEN III
220Ω 2
SEQUENCE NO.
XX
XX
QUANTITY
DRAWINGS CREATED IN PRO/E
ALL DIMENSIONS IN [ ] ARE IN mm

1870132 - H

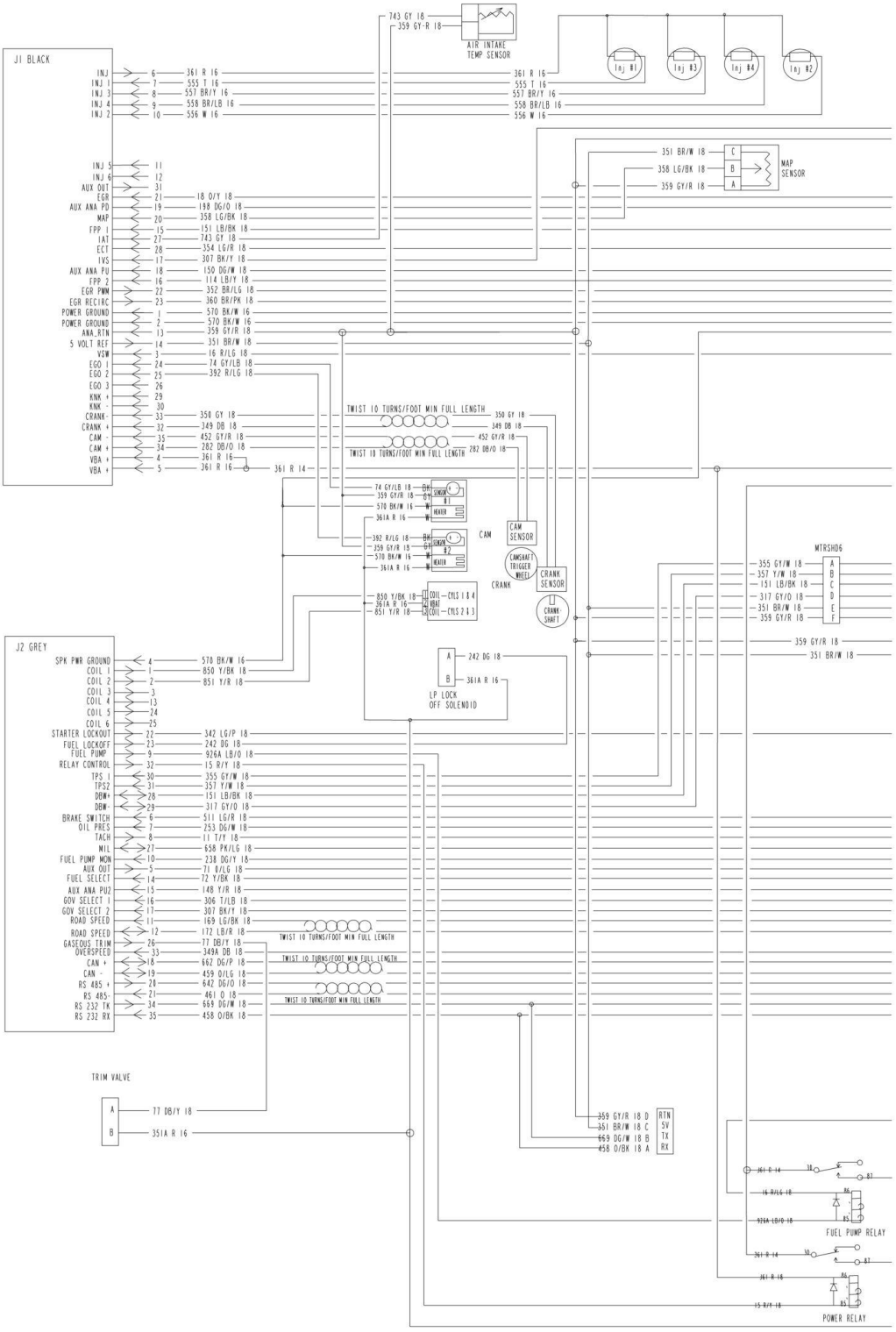
J1 BLACK
INJ 1
INJ 3
INJ 4
INJ 2
INJ 5
INJ 6
AUX OUT
EGR
AUX ANA PD
MAP
FPP 1
IAT
ECT
IVS
AUX ANA PU
FPP 2
EGR PWM
EGR RECIRC
POWER GROUND
POWER GROUND
ANA_RTN
5 VOLT REF
VSW
EGO 1
EGO 2
EGO 3
KNK +
KNK -
CRANK -
CRANK +
CAM -
CAM +
VBA +
VBA +
743 GY 18
359 GY-R 18
AIR INTAKE TEMP SENSOR
Inj #1
Inj #3
Inj #4
Inj #2
361 R 16
555 T 16
557 BR/Y 16
558 BR/LB 16
556 W 16
351 BR/W 18
358 LG/BK 18
359 GY/R 18
MAP SENSOR
C
B
A
18 O/Y 18
198 DG/O 18
358 LG/BK 18
151 LB/BK 18
743 GY 18
354 LG/R 18
307 BK/Y 18
150 DG/W 18
114 LB/Y 18
352 BR/LG 18
360 BR/PK 18
570 BK/W 16
570 BK/W 16
359 GY/R 18
351 BR/W 18
16 R/LG 18
74 GY/LB 18
392 R/LG 18
350 GY 18
349 DB 18
452 GY/R 18
282 DB/O 18
361 R 16
361 R 14
TWIST 10 TURNS/FOOT MIN FULL LENGTH
350 GY 18
349 DB 18
452 GY/R 18
282 DB/O 18
74 GY/LB 18
359 GY/R 18
570 BK/W 16
361A R 16
SENSOR #1
HEATER
392 R/LG 18
359 GY/R 18
570 BK/W 16
361A R 16
SENSOR #2
HEATER
CAM
CAM SENSOR
CAMSHAFT TRIGGER WHEEL
CRANK
CRANK SENSOR
CRANK-SHAFT
850 Y/BK 18
361A R 16
851 Y/R 18
COIL
HEAT
COIL
CYLS 1 & 4
CYLS 2 & 3
WTRSHD6
355 GY/W 18
357 Y/W 18
151 LB/BK 18
317 GY/O 18
351 BR/W 18
359 GY/R 18
A
B
C
D
E
F
J2 GREY
SPK PWR GROUND
COIL 1
COIL 2
COIL 3
COIL 4
COIL 5
COIL 6
STARTER LOCKOUT
FUEL LOCKOFF
FUEL PUMP
RELAY CONTROL
TPS 1
TPS2
DBW+
DBW-
BRAKE SWITCH
OIL PRES
TACH
MIL
FUEL PUMP MON
AUX OUT
FUEL SELECT
AUX ANA PU2
GOV SELECT 1
GOV SELECT 2
ROAD SPEED
ROAD SPEED
GASEOUS TRIM
OVERSPEED
CAN +
CAN -
RS 485 +
RS 485-
RS 232 TX
RS 232 RX
570 BK/W 16
850 Y/BK 18
851 Y/R 18
342 LG/P 18
242 DG 18
926A LB/O 18
15 R/Y 18
355 GY/W 18
357 Y/W 18
151 LB/BK 18
317 GY/O 18
511 LG/R 18
253 DG/W 18
11 T/Y 18
658 PK/LG 18
238 DG/Y 18
71 B/LG 18
72 Y/BK 18
148 Y/R 18
306 T/LB 18
307 BK/Y 18
169 LG/BK 18
172 LB/R 18
77 DB/Y 18
349A DB 18
662 DG/P 18
459 O/LG 18
642 DG/O 18
461 O 18
669 DG/W 18
458 O/BK 18
TWIST 10 TURNS/FOOT MIN FULL LENGTH
TWIST 10 TURNS/FOOT MIN FULL LENGTH
TWIST 10 TURNS/FOOT MIN FULL LENGTH
242 DG 18
361A R 16
LP LOCK OFF SOLENOID
TRIM VALVE
77 DB/Y 18
351A R 16
359 GY/R 18 D
351 BR/W 18 C
669 DG/W 18 B
458 O/BK 18 A
RTN
5V
TX
RX
361 R 14
16 R/LG 18
926A LB/O 18
FUEL PUMP RELAY
361 R 14
361 R 18
15 R/Y 18
POWER RELAY

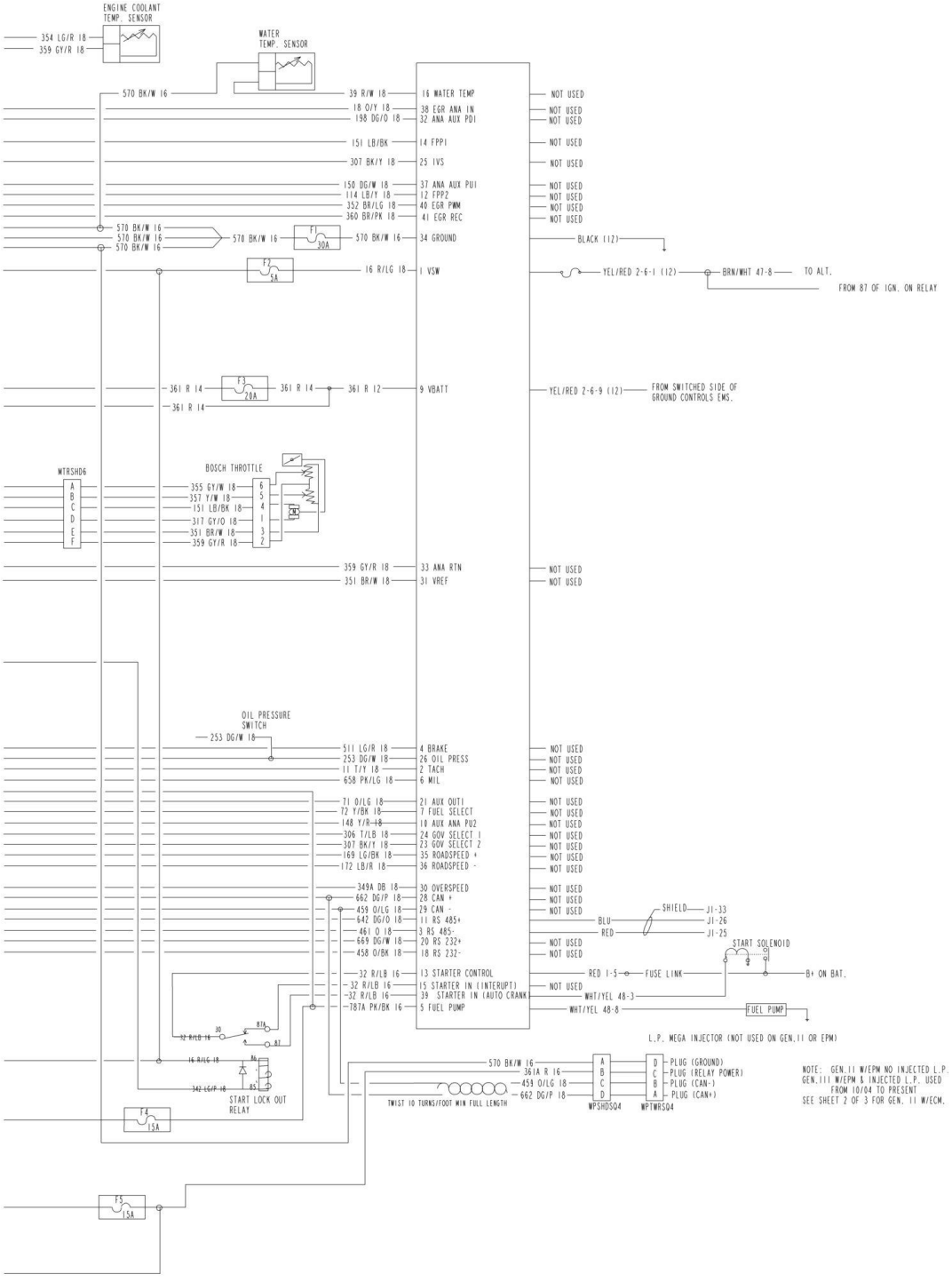
ENGINE COOLANT TEMP. SENSOR
WATER TEMP. SENSOR
354 LG/R 18
359 GY/R 18
570 BK/W 16
39 R/W 18
16 WATER TEMP
NOT USED
18 O/Y 18
38 EGR ANA IN
198 DG/O 18
32 ANA AUX PDI
151 LB/BK
14 FPPI
307 BK/Y 18
25 IVS
150 DG/W 18
37 ANA AUX PUI
114 LB/Y 18
12 FPP2
352 BR/LG 18
40 EGR PWM
360 BR/PK 18
41 EGR REC
F1 30A
34 GROUND
BLACK (12)
F2 5A
16 R/LG 18
1 VSW
YEL/RED 2-6-1 (12)
BRN/WHT 47-8
TO ALT.
FROM 87 OF IGN. ON RELAY
F3 20A
361 R 14
361 R 12
9 VBATT
YEL/RED 2-6-9 (12)
FROM SWITCHED SIDE OF GROUND CONTROLS EMS.
MTRSHD6
BOSCH THROTTLE
355 GY/W 18
357 Y/W 18
151 LB/BK 18
317 GY/O 18
351 BR/W 18
359 GY/R 18
359 GY/R 18
33 ANA RTN
351 BR/W 18
31 VREF
OIL PRESSURE SWITCH
253 DG/W 18
511 LG/R 18
4 BRAKE
253 DG/W 18
26 OIL PRESS
11 T/Y 18
2 TACH
658 PK/LG 18
6 MIL
71 O/LG 18
21 AUX OUT1
72 Y/BK 18
7 FUEL SELECT
148 Y/R 18
10 AUX ANA PU2
306 T/LB 18
24 GOV SELECT 1
307 BK/Y 18
23 GOV SELECT 2
169 LG/BK 18
35 ROADSPEED +
172 LB/R 18
36 ROADSPEED -
349A DB 18
30 OVERSPEED
662 DG/P 18
28 CAN +
459 O/LG 18
29 CAN -
642 DG/O 18
11 RS 485+
461 O 18
3 RS 485-
669 DG/W 18
20 RS 232+
458 O/BK 18
18 RS 232-
SHIELD
J1-33
BLU
J1-26
RED
J1-25
START SOLENOID
32 R/LB 16
13 STARTER CONTROL
RED 1-5
FUSE LINK
B+ ON BAT.
32 R/LB 16
15 STARTER IN (INTERUPT)
32 R/LB 16
39 STARTER IN (AUTO CRANK)
WHT/YEL 48-3
787A PK/BK 16
5 FUEL PUMP
WHT/YEL 48-8
FUEL PUMP
L.P. MEGA INJECTOR (NOT USED ON GEN.II OR EPM)
J6
87A
87
16 R/LG 18
342 LG/P 18
85
START LOCK OUT RELAY
F4 15A
F5 15A
570 BK/W 16
361A R 16
453 O/LG 18
662 DG/P 18
TWIST 10 TURNS/FOOT MIN FULL LENGTH
WPSHDSQ4
WPTWRSQ4
PLUG (GROUND)
PLUG (RELAY POWER)
PLUG (CAN-)
PLUG (CAN+)
NOTE: GEN.II W/EPM NO INJECTED L.P.
GEN.III W/EPM & INJECTED L.P. USED FROM 10/04 TO PRESENT.
SEE SHEET 2 OF 3 FOR GEN. II W/ECM.

FIGURE 7-3. ELECTRICAL SCHEMATIC - DEUTZ ENGINE (SN 0300084827 through 0300087000)

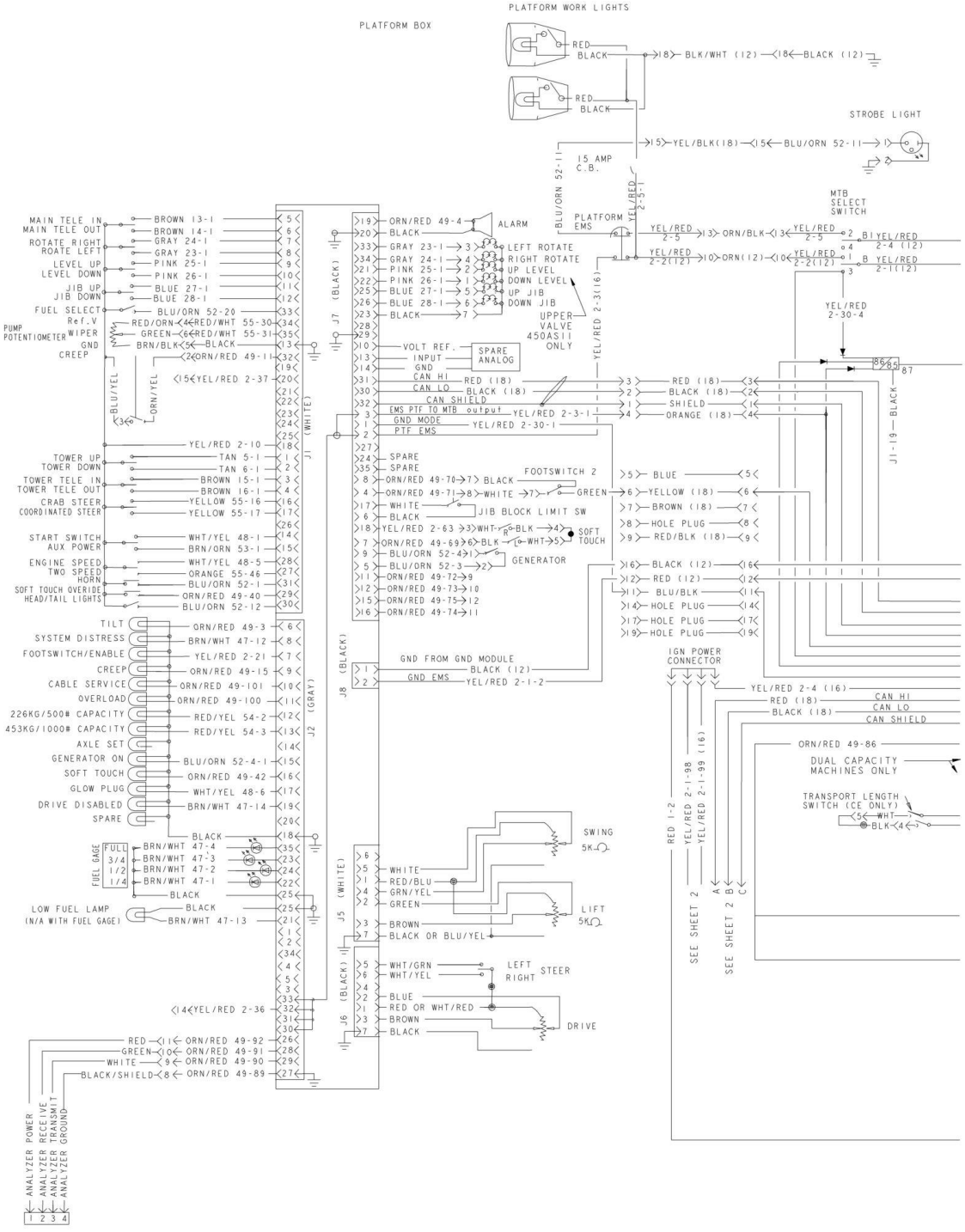

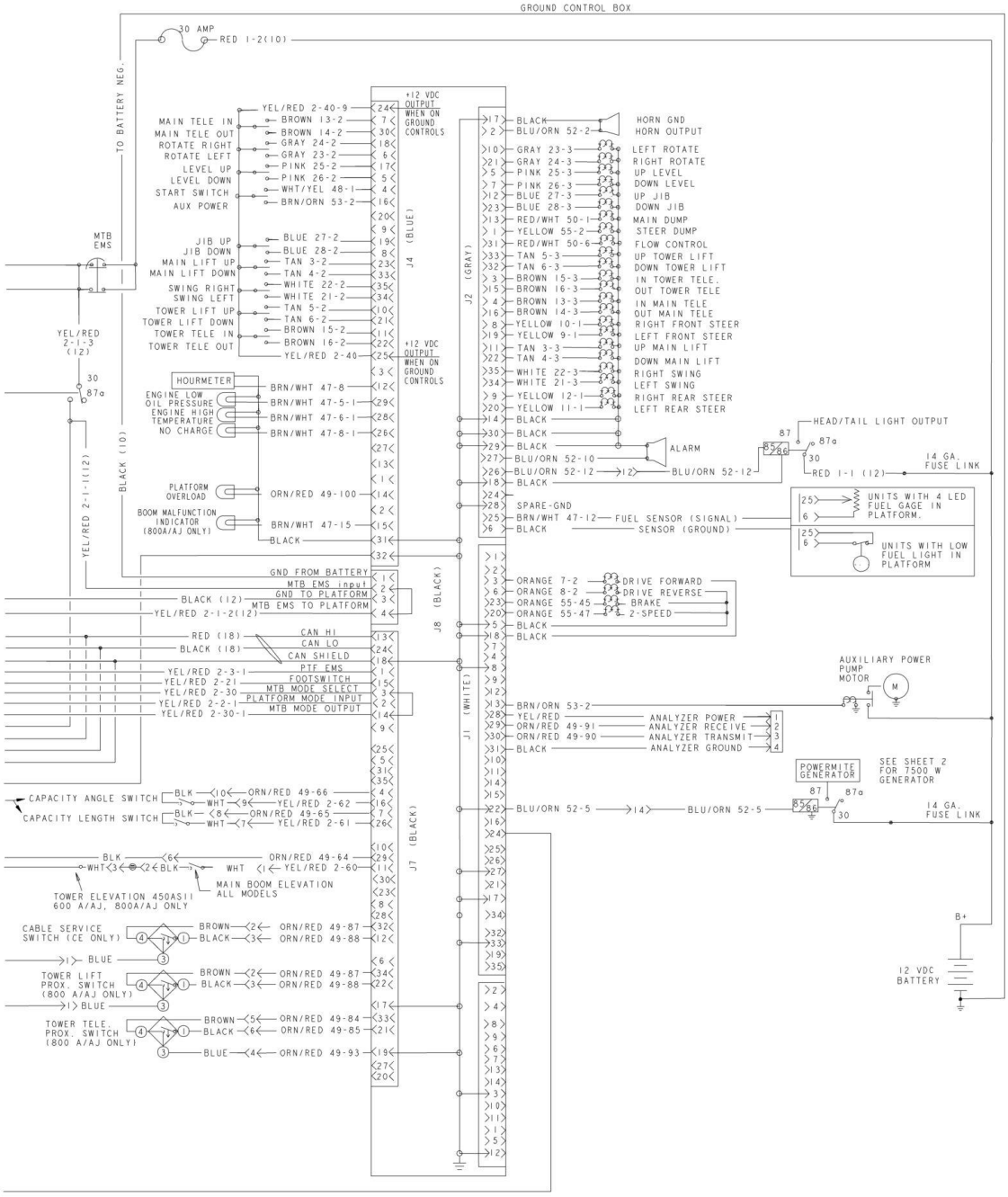
GROUND CONTROL BOX
30 AMP
RED 1-2(10)
TO BATTERY NEG.
BLACK (10)
YEL/RED 2-1-11(12)
MTB EMS
YEL/RED 2-1-3 (12)
30
87a
HOURMETER
ENGINE LOW OIL PRESSURE
ENGINE HIGH TEMPERATURE
NO CHARGE
PLATFORM OVERLOAD
BOOM MALFUNCTION INDICATOR (800A/AJ ONLY)
MAIN TELE IN
MAIN TELE OUT
ROTATE RIGHT
ROTATE LEFT
LEVEL UP
LEVEL DOWN
START SWITCH
AUX POWER
JIB UP
JIB DOWN
MAIN LIFT UP
MAIN LIFT DOWN
SWING RIGHT
SWING LEFT
TOWER LIFT UP
TOWER LIFT DOWN
TOWER TELE IN
TOWER TELE OUT
+12 VDC OUTPUT WHEN ON GROUND CONTROLS
J4 (BLUE)
J2 (GRAY)
J8 (BLACK)
J1 (WHITE)
J7 (BLACK)
HORN GND
HORN OUTPUT
LEFT ROTATE
RIGHT ROTATE
UP LEVEL
DOWN LEVEL
UP JIB
DOWN JIB
MAIN DUMP
STEER DUMP
FLOW CONTROL
UP TOWER LIFT
DOWN TOWER LIFT
IN TOWER TELE.
OUT TOWER TELE
IN MAIN TELE
OUT MAIN TELE
RIGHT FRONT STEER
LEFT FRONT STEER
UP MAIN LIFT
DOWN MAIN LIFT
RIGHT SWING
LEFT SWING
RIGHT REAR STEER
LEFT REAR STEER
ALARM
HEAD/TAIL LIGHT OUTPUT
14 GA. FUSE LINK
SPARE-GND
FUEL SENSOR (SIGNAL)
SENSOR (GROUND)
UNITS WITH 4 LED FUEL GAGE IN PLATFORM.
UNITS WITH LOW FUEL LIGHT IN PLATFORM
GND FROM BATTERY
MTB EMS input
GND TO PLATFORM
MTB EMS TO PLATFORM
CAN HI
CAN LO
CAN SHIELD
PTF EMS
FOOTSWITCH
MTB MODE SELECT
PLATFORM MODE INPUT
MTB MODE OUTPUT
DRIVE FORWARD
DRIVE REVERSE
BRAKE
2-SPEED
AUXILIARY POWER PUMP MOTOR
ANALYZER POWER
ANALYZER RECEIVE
ANALYZER TRANSMIT
ANALYZER GROUND
POWERMITE GENERATOR
SEE SHEET 2 FOR 7500 W GENERATOR
CAPACITY ANGLE SWITCH
CAPACITY LENGTH SWITCH
TOWER ELEVATION 450ASII 600 A/AJ, 800A/AJ ONLY
MAIN BOOM ELEVATION ALL MODELS
CABLE SERVICE SWITCH (CE ONLY)
TOWER LIFT PROX. SWITCH (800 A/AJ ONLY)
TOWER TELE. PROX. SWITCH (800 A/AJ ONLY)
B+
12 VDC BATTERY

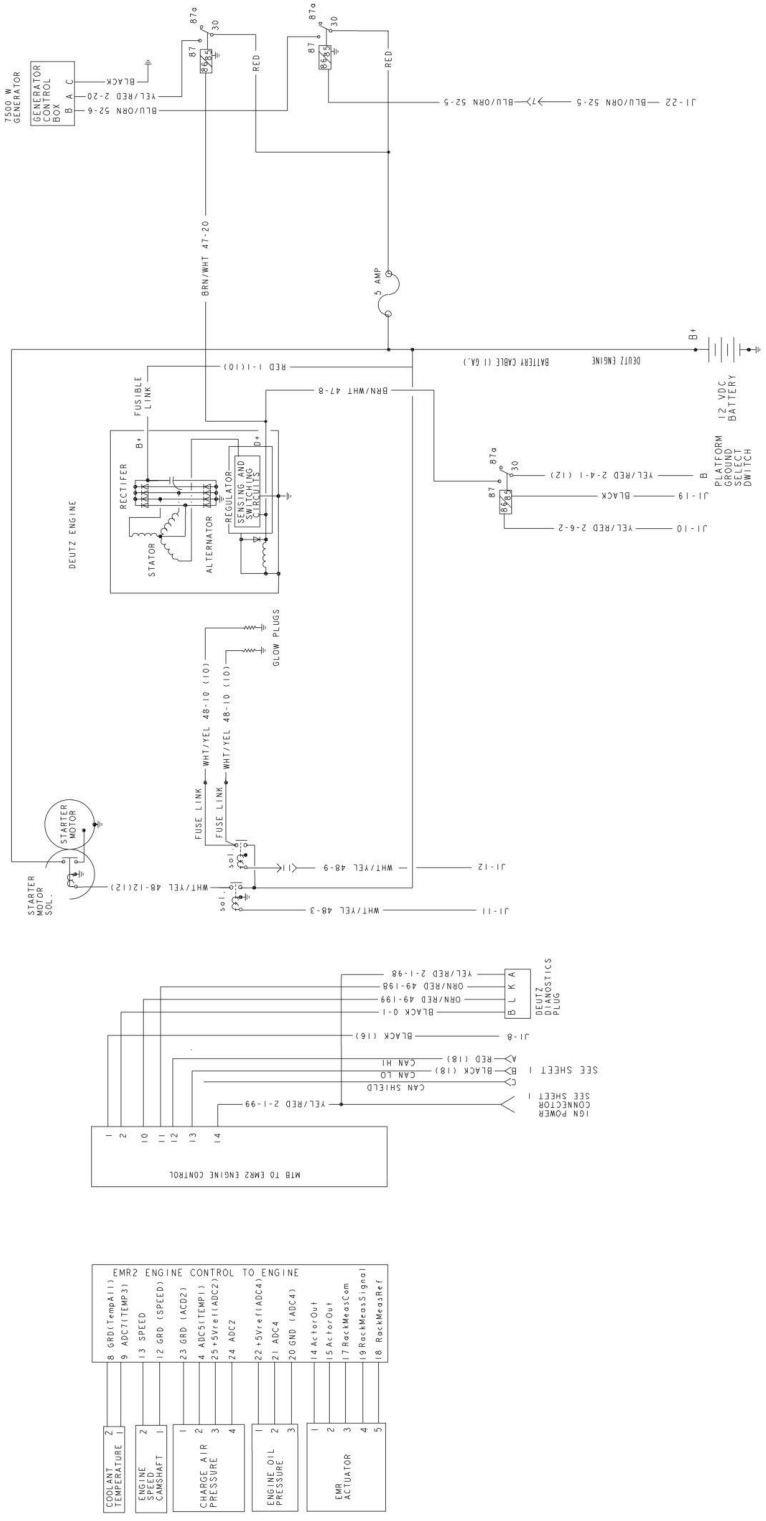
7500 W GENERATOR
GENERATOR CONTROL BOX
BLACK
YEL/RED 2-20
BLU/ORN 52-6
BLU/ORN 52-5
J1-22
RED
BRN/WHT 47-20
5 AMP
B+
DEUTZ ENGINE
BATTERY CABLE (1 GA.)
RED 1-1(10)
BRN/WHT 47-8
FUSIBLE LINK
RECTIFER
STATOR
ALTERNATOR
REGULATOR
SENSING AND CONTROLS
12 VDC BATTERY
PLATFORM GROUND SELECT SWITCH
YEL/RED 2-4-1 (12)
BLACK
YEL/RED 2-6-2
J1-19
J1-10
GLOW PLUGS
WHT/YEL 48-10 (10)
FUSE LINK
STARTER MOTOR
STARTER MOTOR SOL
WHT/YEL 48-12(12)
WHT/YEL 48-9
WHT/YEL 48-3
J1-12
J1-11
DEUTZ DIAGNOSTICS PLUG
YEL/RED 2-1-98
ORN/RED 49-198
ORN/RED 49-199
BLACK 0-1
BLACK (16)
J1-8
RED (18)
BLACK (18)
CAN HI
CAN LO
CAN SHIELD
SEE SHEET 1
IGN POWER CONNECTOR SEE SHEET 1
YEL/RED 2-1-99
MTB TO EMR2 ENGINE CONTROL
EMR2 ENGINE CONTROL TO ENGINE
8 GRD(TempAir)
9 ADC7(TEMP3)
13 SPEED
12 GRD (SPEED)
23 GRD (ADC2)
4 ADC5(TEMP1)
25 +5Vref(ADC2)
24 ADC2
22 +5Vref(ADC4)
21 ADC4
20 GND (ADC4)
14 ActorOut
15 ActorOut
17 RackMeasCom
19 RackMeasSignal
18 RackMeasRef
COOLANT TEMPERATURE
ENGINE SPEED CAMSHAFT
CHARGE AIR PRESSURE
ENGINE OIL PRESSURE
EMR ACTUATOR

FIGURE 7-4. HARNESS COMPONENTS INSTALLATION

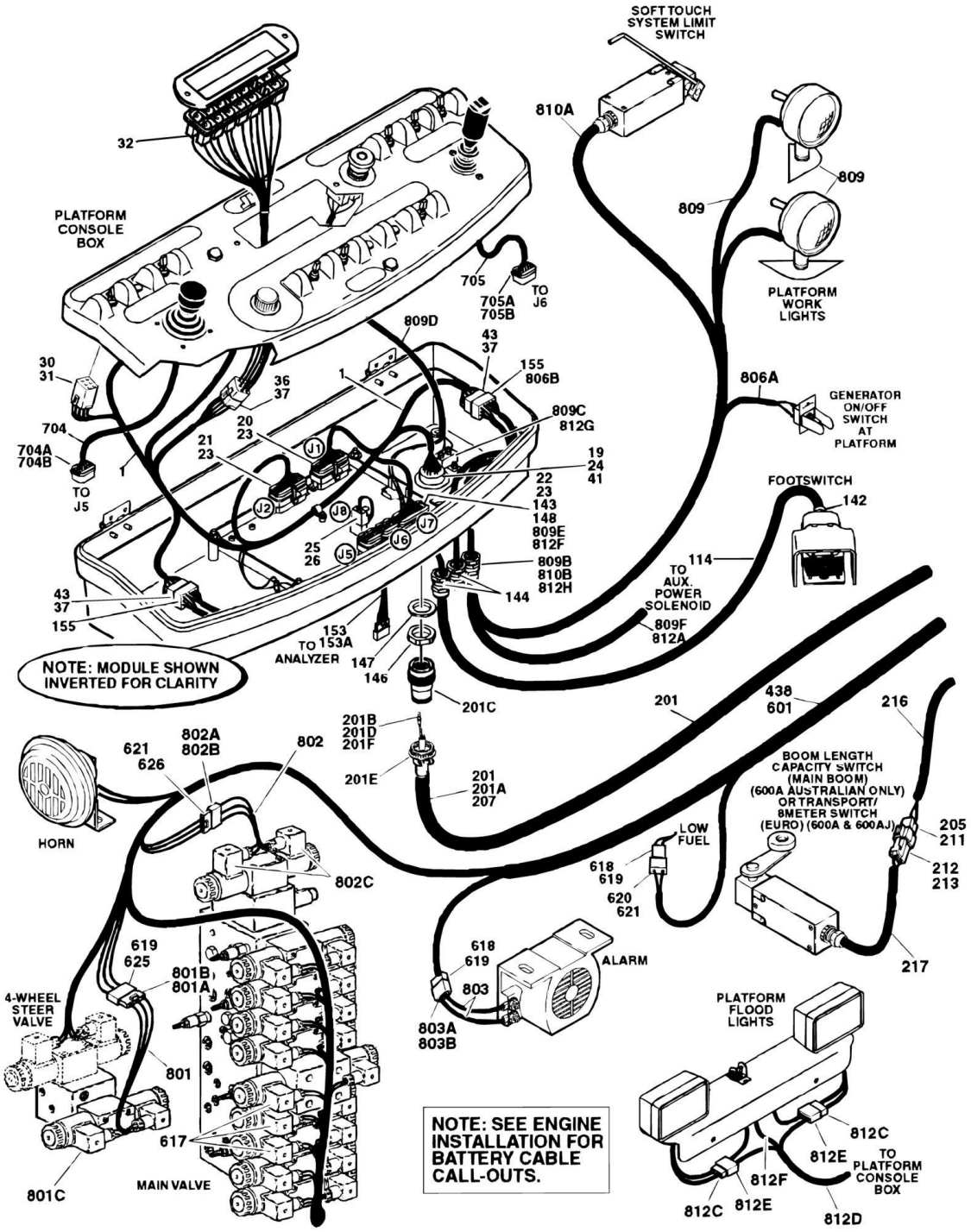

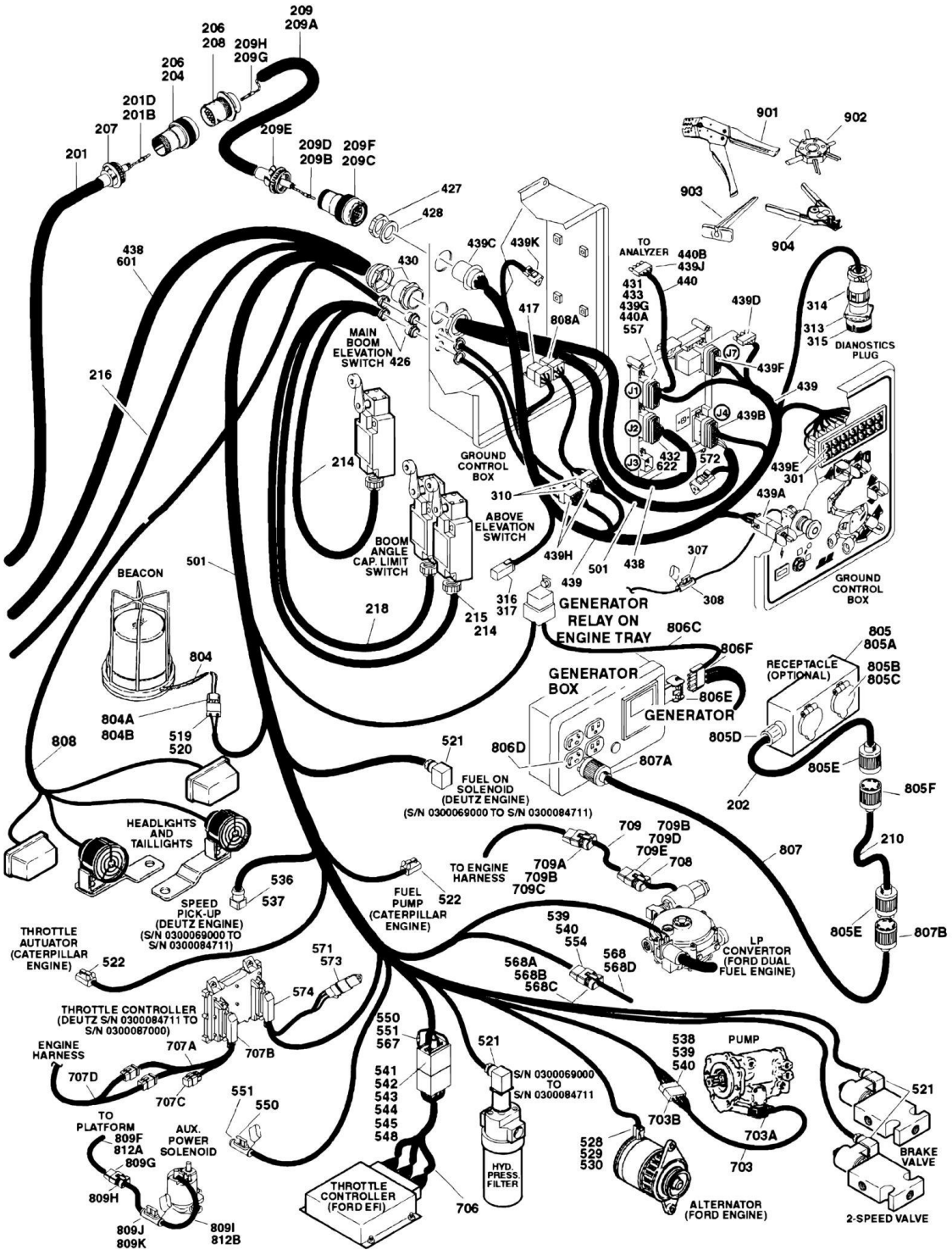

209
209A
206
208
209H
209G
206
204
201D
201B
207
201
209E
209D
209B
209F
209C
427
428
438
601
430
439C
439K
TO ANALYZER
440B
439J
440
431
433
439G
440A
557
439D
901
902
903
904
314
313
315
DIANOSTICS PLUG
417
808A
MAIN BOOM ELEVATION SWITCH
426
216
J7
439F
439
J1
J4
439B
J2
J3
432
622
572
439E
301
439A
214
GROUND CONTROL BOX
310
ABOVE ELEVATION SWITCH
BOOM ANGLE CAP. LIMIT SWITCH
439H
501
438
307
439
308
GROUND CONTROL BOX
501
BEACON
316
317
GENERATOR RELAY ON ENGINE TRAY
218
215
214
806C
806F
805
805A
804
RECEPTACLE (OPTIONAL)
805B
805C
GENERATOR BOX
806E
GENERATOR
804A
804B
519
520
808
521
806D
805D
807A
805E
FUEL ON SOLENOID (DEUTZ ENGINE) (S/N 0300069000 TO S/N 0300084711)
202
805F
HEADLIGHTS AND TAILLIGHTS
709
709B
709D
709E
708
807
210
TO ENGINE HARNESS
709A
709B
709C
536
537
SPEED PICK-UP (DEUTZ ENGINE) (S/N 0300069000 TO S/N 0300084711)
FUEL PUMP (CATERPILLAR ENGINE)
522
539
540
554
805E
807B
THROTTLE AUTUATOR (CATERPILLAR ENGINE)
522
571
573
568A
568B
568C
568
568D
LP CONVERTOR (FORD DUAL FUEL ENGINE)
574
THROTTLE CONTROLLER (DEUTZ S/N 0300084711 TO S/N 0300087000)
550
551
567
521
538
539
540
PUMP
ENGINE HARNESS
707A
707B
707D
707C
541
542
543
544
545
548
S/N 0300069000 TO S/N 0300084711
551
550
TO PLATFORM
809F
812A
809G
AUX. POWER SOLENOID
703B
703A
703
521
BRAKE VALVE
528
529
530
809H
THROTTLE CONTROLLER (FORD EFI)
706
HYD. PRESS. FILTER
ALTERNATOR (FORD ENGINE)
2-SPEED VALVE
809J
809K
809I
812B

FIGURE 7-4. HARNESS COMPONENTS INSTALLATION

ITEM	PART NUMBER	QTY	DESCRIPTION	REV
	4922639	Ref	**PLATFORM BOX HARNESS ASSEMBLY**	5
1	4922639	1	Harness, Console Box	
19	4460866	1	Connector - 19 Position	
20	4460874	1	Connector - 35 Position (Natural)	
21	4460875	1	Connector - 35 Position (Gray)	
22	4460873	1	Connector - 35 Position (Black)	
23	4460871	70	Socket, Female	
24	4460464	7	Pin, Male (16 Gauge)	
25	4460879	1	Terminal, Housing 2 Position	
26	4460887	2	Terminal, (12 Gauge)	
30	4460418	8	Connector - 6 Position	
31	4460419	24	Terminal, Female	
32	4120035	12	Base, Light	
36	4460225	1	Connector - 6 Position	
37	4460227	28	Pin, Male	
41	4460508	3	Pin, Male (12 Gauge)	
43	4460434	2	Connector - 15 Position	
44	2920129	12	Lamp, Indicator	
		Ref	**PLATFORM BOX ASSEMBLY COMPONENTS**	
104	0100048	AR	Grease, Dielectric (Used at Module Connections)	
114	1060918	8 ft/2.4m	Cable, Electrical - 18/3	
142	4460071	1	Connector, Strain Relief	
143	4460226	2	Socket, Female	
144	4460428	2	Connector, Strain Relief	
146	4460470	1	Nut, Terminal	
147	4460471	1	Lockwasher, Terminal	
148	4460905	5	Seal, Plug	
153	4922666	1	Harness, Analyzer Cable	2-B
153	4460226	4	Socket, Female (Not Shown - Located at J2)	
153A	4460761	1	Connector, Female - 4 Position	
153A	4460227	4	Pin, Male	
155	4460708	2	Terminal, 15 Pin Mate-N-Loc	
		Ref	**BOOM CABLES INSTALLATION**	
	0273427	Ref	**Boom Cables Installation 600A (Australian Spec)**	1
	0270819	Ref	**Boom Cables Installation 600A (CE Spec)**	6
	0273428	Ref	**Boom Cables Installation 600AJ (Australian Spec)**	1
	0270821	Ref	**Boom Cables Installation 600AJ (CE Spec)**	7
	0273429	Ref	**Boom Cables Installation 600A (With 7500W Generator) (SkyPower) (Australian Spec)**	1
	0272626	Ref	**Boom Cables Installation 600A (With 7500W Generator) (SkyPower) (CE Spec)**	2
	0273430	Ref	**Boom Cables Installation 600AJ (With 7500W Generator) (SkyPower) (Australian Spec)**	1
	0272627	Ref	**Boom Cables Installation 600AJ (With 7500W Generator) (SkyPower) (CE Spec)**	2
201	4922493	1	Harness, Main Boom	
201A	1060896	45.5 ft/13.9m	Cable	
201B	4460465	22	Socket, Female - #16	
201C	4460865	1	Connector - 19 Position	
201D	4460509	8	Socket, Female - #12	

ITEM	PART NUMBER	QTY	DESCRIPTION	REV
201E	4460473	1	Clamp, Cable	
201F	4460466	4	Seal, Plug	
202		Ref	Cable, Electrical - 12/3 Options (Does not include plug ends):	
202	1060461	46 ft/14m	Cable, Electrical **(SN 0300069000 through 0300071457)**	
202	4922895	1	Cable, Electrical **(SN 0300071458 through 0300087000)**	
202	4922810	1	Harness, Electrical - 8/5 (Does not include plug ends) (With SkyPower 7500W Generator)	
202	1060945	47 ft/14.3m	Cable, Electrical - 8/5 (With 7500W Generator)	
204	4460865	1	Connector - 19 Position	
205	4460465	2	Socket, Female - #18 **(SN 0300069000 through 0300071457)**	
206	4460466	8	Seal, Plug	
207	4460473	1	Clamp, Cable	
208	4460866	1	Connector - 19 Position	
209	4922494	1	Harness, Lower Boom Cable	
209A	1060896	35.5 ft/10.8m	Cable	
209B	4460465	22	Socket, Female - #16	
209C	4460865	1	Connector - 19 Position	
209D	4460509	8	Socket, Female - #12	
209E	4460473	1	Clamp, Cable	
209F	4460466	4	Seal, Plug	
209G	4460464	11	Pin, Male (16 Gauge)	
209H	4460508	4	Pin, Male (12 Gauge)	
210		Ref	Cable, Electrical - 12/3 Options (Does not include plug ends):	
210	1060461	33 ft/10m	Cable, Electrical **(SN 0300069000 through 0300071457)**	
210	4922893	1	Cable, Electrical **(SN 0300071458 through 0300087000)**	
210	4922811	1	Harness, Electrical - 8/5 (Does not include plug ends) (With SkyPower 7500W Generator)	
210	1060945	36 ft/10.9m	Cable, Electrical - 8/5 (With 7500W Generator)	
211	4460891	1	Connector, Terminal (600A Only) **(SN 0300069000 through 0300071457)**	
212	4460897	1	Plug, Terminal (600A Only) **(SN 0300069000 through 0300071457)**	
213	4460464	3	Pin, Male (16 Gauge) **(SN 0300069000 through 0300071457)**	
214		Ref	Cable, Electrical - 18/2 Main Boom Limit Switch	
214	1060902	37 ft/11.3m	Cable, Electrical **(SN 0300069000 through 0300071457)**	
214	1061033	AR	Cable, Electrical (600A - Qty.3 /600AJ - Qty.2) **(SN 0300071458 through 0300087000)**	
215	1060902	AR	Cable, Electrical - 18/2 Tower Boom Limit Switch	
215	1060902	37 ft/11.3m	Cable, Electrical - 18/2 Tower Boom Limit Switch 600A **(SN 0300069000 through 0300071458)**	
215	1060902	18 ft/5.5m	Cable, Electrical - 18/2 Tower Boom Limit Switch 600AJ **(SN 0300069000 through 0300071458)**	
216		Ref	Cable, Electrical - 18/2 Main Boom Length Options (600A Only):	
216	1060902	37 ft/11.3m	Cable, Electrical **(SN 0300069000 through 0300071457)**	
216	4922891	1	Cable, Electrical **(SN 0300071458 through 0300087000)**	
216	Not Required	0	Australian Spec	
217		Ref	Cable, Electrical - 18/2 Main Boom Length Options:	
217	1060902	19 ft/5.8m	Cable,18/2 Control **(600A SN 0300069000 through 0300071457)**	

ITEM	PART NUMBER	QTY	DESCRIPTION	REV
217	4922890	1	Harness, Limit SW Upper **(600A SN 0300071458 through 0300087000)**	
217	1060902	16.5 ft/5.0m	Cable,18/2 Control **(600AJ SN 0300069000 through 0300071458)**	
217	4922896	1	Harness, Limit SW Upper **(600AJ SN 0300071458 through 0300087000)**	
217	Not Required	0	Australian Spec	
		Ref	**GROUND CONTROL BOX DIAGRAMS**	
	4933290	Ref	**Caterpillar Engine (SN 0300069000 through 0300084828)**	2-B
	4933330	Ref	**Caterpillar Engine (SN 0300084829 through 0300087000)**	1-A
	4933214	Ref	**Deutz Engine (SN 0300069000 through 0300084828)**	3-C
	4933319	Ref	**Deutz Engine (SN 0300084829 through 0300087000)**	D
301	2920129	AR	Bulb, Light	
307	2400065	1	Fuse, 30Amp	
308	2400066	1	Fuse, Holder W/Cover	
310	4460708	AR	Receptacle, Female - 15 Position	
310	4460226	AR	Socket, Female	
310	4922637	1	Harness, Jumper (Not Shown)	
		Ref	**Note: Items 313-318 is used on Deutz Engine (S/N 0300084829 to S/N 0300087000).**	
313	4461072	1	Connector, Flange Mount Receptacle (Part of 2902443 Kit)	
314	4461074	1	Connector, Backshell (Part of 2902443 Kit)	
314	4461071	4	Socket, Female (Part of 2902443 Kit)	
315	4461073	1	Cap, Dust (Part of 2902443 Kit)	
316	4460894	1	Plug, Connector (6 Pin)	
317	4460892	1	Junction, Connector (6 Pin)	
	2902443	1	Connector Kit (Includes Items 313-315)	
		Ref	**GROUND CONTROL HARNESS ASSEMBLY**	
417	3740049	2	Relay	
426	4460426	AR	Connector, Strain Relief	
427	4460470	1	Nut, Terminal	
428	4460471	1	Lockwasher, Terminal	
430	4460526	1	Connector, Strain Relief	
431	4460874	1	Connector (Natural)	
432	4460875	1	Connector (Gray)	
433	4460905	4	Connector, Amp Seal Plug	
437		Ref	Engine Harness Assembly (Not Shown - See Items 501-566 for Breakdown)	
437	4922921	1	Caterpillar Engine Machines **(SN 0300069000 through 0300084828)**	
437	4923227	1	Caterpillar Engine Machines **(SN 0300084829 through 0300087000)**	
437	4922515	1	Deutz Engine Machines **(SN 0300069000 through 0300084828)**	
437	4923212	1	Deutz Engine Machines **(SN 0300084829 through 0300087000)**	
438	4922508	1	Valve Harness Assembly (See Items 601-628 for Breakdown)	
439		Ref	Ground Control Box Harness Assembly Options	
439	4922638	1	Caterpillar/Deutz Engine **(SN 0300069000 through 0300084828)**	5-F
439	4923231	1	Caterpillar Engine **(SN 0300084829 through 0300087000)**	2-B
439	4923223	1	Deutz Engine **(SN 0300084829 through 0300087000)**	D
439A	4460418	AR	Connector, Female - 6 Position	
439A	4460419	AR	Socket, Female	
439B	4460876	1	Connector, 35 - Position	
439B	4460871	AR	Socket, Female	

ITEM	PART NUMBER	QTY	DESCRIPTION	REV
439B	4460905	2	Seal, Plug	
439C	4460866	1	Connector - 19 Position	
439C	4460464	AR	Pin, Male Deutsch (16 Gauge)	
439D	4460878	1	Housing, Terminal - 4 Position	
439D	4460887	3	Terminal (12 Gauge)	
439E	4120035	AR	Base, Light	
439E	4460634	AR	Terminal (16 Gauge)	
439F	4460873	1	Connector, 35 - Position (Black)	
439F	4460871	AR	Socket, Female	
439F	4460635	5	Terminal (12 Gauge)	
439G	4460871	AR	Socket, Female	
439H	4460434	2	Plug, Male 15 - Position	
439H	4460227	AR	Pin	
439I	3990010	2	Diode - 6 Amp (Not Shown)	
439J	4460761	1	Connector, Female 4 - Position **(SN 0300084829 through 0300087000)**	
439J	4460227	4	Pin, Male **(SN 0300084829 through 0300087000)**	
439K	4460536	1	Connector, Female 3 - Position (Deutz Engine Only) **(SN 0300084829 through 0300087000)**	
439K	4460943	3	Pin, Male (Deutz Engine Only) **(SN 0300084829 through 0300087000)**	
440	4922666	1	Cable, Analyzer **(SN 0300069000 through 0300084828)**	2-B
440A	4460226	4	Socket, Female	
440B	4460761	1	Connector, Female 4 - Position	
440B	4460227	4	Pin, Male	
441		Ref	Ground Control Box Wiring Diagram (Not Shown - See Items 301-310 for Breakdown)	
441	4933290	1	Caterpillar Engine **(SN 0300069000 through 0300084828)**	
441	4933330	1	Caterpillar Engine **(SN 0300084829 through 0300087000)**	
441	4933214	1	Deutz Engine **(SN 0300069000 through 0300084828)**	
441	4933319	1	Deutz Engine **(SN 0300084829 through 0300087000)**	
		Ref	**ENGINE HARNESS ASSEMBLIES**	
	4922921	Ref	**CATERPILLAR ENGINE (SN 0300069000 through 0300084828)**	3-C
	4923227	Ref	**CATERPILLAR ENGINE (SN 0300084829 through 0300087000)**	1-A
	4922515	Ref	**DEUTZ ENGINE (SN 0300069000 through 0300084828)**	5-E
	4923212	Ref	**DEUTZ ENGINE (SN 0300084829 through 0300087000)**	C
501		Ref	Harness, Assembly Options:	
501	4922921	1	Caterpillar Engine **(SN 0300069000 through 0300084828)**	
501	4923227	1	Caterpillar Engine **(SN 0300084829 through 0300087000)**	
501	4922515	1	Deutz Engine **(SN 0300069000 through 0300084828)**	
501	4923212	1	Deutz Engine **(SN 0300084829 through 0300087000)**	
519	4460424	1	Plug, Male - 2 Position	
520	4460268	AR	Socket, Female	
521	4460880	AR	DIN Connector without Diode	
522	4460891	2	Connector, Male - 2 Position (Caterpillar Engine Only)	
522	4460465	7	Socket, Female	
536	4460890	1	Housing - 2 Position	
537	4460889	2	Terminal	
538	4460460	1	Connector, Male - 4 Position	
539	4460457	AR	Terminal, Female	
540	4460458	AR	Seal, Terminal	
557	4460871	AR	Socket, Female	

ITEM	PART NUMBER	QTY	DESCRIPTION	REV
		Ref	**Note: Items 571-575 is used on Deutz Engine (S/N 0300084829 to S/N 0300087000).**	
571	4461070	1	Connector, Receptacle W/Resistor (3 Position)	
572	4460539	1	Connector, Male - 3 Position	
572	4460944	3	Socket, Female	
573	4461095	1	Connector, Male - 3 Position	
573	4460944	3	Socket, Female	
574	4461052	1	Connector, Receptacle - 25 Position	
574	4461005	5	Terminal (Gold)	
574	4461006	5	Seal, Terminal	
574	4461060	2	Terminal (Tin)	
574	4461054	2	Seal, Terminal	
574	4461053	1	Cover, Plug	
574	4461008	18	Plug, Hole	
		Ref	**VALVE HARNESS ASSEMBLIES**	
	4922508	Ref	**Harness, Valve (SN 0300069000 through 0300084828)**	5-E
	4923224	Ref	**Harness, Valve (SN 0300084829 through 0300087000)**	4-D
601	4922508	1	Harness, Assembly **(SN 0300069000 through 0300084828)**	
601	4923224	1	Harness, Assembly **(SN 0300084829 through 0300087000)**	
617	4460880	AR	DIN Connector	
618	4460320	AR	Connector, Female - 2 Position	
619	4460267	AR	Pin, Male	
620	4460424	1	Connector, Male - 2 Position	
621	4460268	5	Socket, Female	
622	4460871	AR	Socket, Female	
625	4460326	1	Connector, Male - 3 Position	
626	4460445	1	Connector, Female - 3 Position	
		Ref	**STANDARD HARNESS COMPONENTS**	
703	See Note	1	Pump Harness (Note: Not Available for Purchase)	
703A	7007497	1	Plug (Pump End)	
703B	7007498	1	Plug (Engine Harness End)	
704	See Note	1	Controller Harness Assembly (Lift and Swing) (Note: Not Available for Purchase)	
704A	7022819	1	Plug, Male - 8 Position (Natural)	
704B	4460871	8	Socket, Female	
705	See Note	1	Controller Harness/Circuit Board Assembly (Drive and Steer) (Note: Not Available for Purchase)	
705A	7022825	1	Plug, Male - 8 Position (Black)	
705B	4460871	7	Socket, Female	
706	Not Required	0	Not Required	
707		Ref	Deutz Engine Harness Components (For replacement parts refer to Deutz engine dealer) **(SN 0300084829 through 0300087000)**	
707A	7027796	1	Deutz Engine Harness (Not Shown) (For replacement parts refer to Deutz engine dealer) **(SN 0300084829 through 0300087000)**	
707B	4461052	1	Connector, Receptacle - 25 Position **(SN 0300084829 through 0300087000)**	
707B	4461053	1	Cover, Plug **(SN 0300084829 through 0300087000)**	
707B	4461005	5	Terminal (Gold) **(SN 0300084829 through 0300087000)**	
707B	4461006	5	Seal, Terminal **(SN 0300084829 through 0300087000)**	
707B	4461060	2	Terminal (Tin) **(SN 0300084829 through 0300087000)**	
707B	4461054	2	Seal, Terminal **(SN 0300084829 through 0300087000)**	
707B	4461008	18	Plug, Hole **(SN 0300084829 through 0300087000)**	
707C	7027793	1	Connector **(SN 0300084829 through 0300087000)**	

ITEM	PART NUMBER	QTY	DESCRIPTION	REV
707D	7027794	1	Deutz Engine Harness **(SN 0300084829 through 0300087000)**	
708 to 709	Not Required	0	Not Required	
		Ref	**OPTIONAL HARNESS COMPONENTS**	
801	4921928	1	4WS Valve Harness	
801A	4460268	3	Socket, Female	
801B	4460445	1	Connector, Female - 3 Position	
801C	4460499	2	Connector, DIN with Diode	
802	4921927	1	Jib Valve Harness (600AJ Only)	
802A	4460326	1	Plug, Male - 3 Position	
802B	4460267	3	Pin, Male	
802C	4460499	2	Connector, DIN with Diode	
803	0257887	1	Alarm Harness (Includes Alarm)	
803	0140032	1	Alarm	
803	2820035	6 in/15cm	Loom	
803	4460424	1	Plug	
803	4460268	2	Socket	
803A	4460424	1	Plug, Male - 2 Position	
803B	4460268	2	Socket, Female	
804		Ref	Strobe Light Harness Options (Includes Strobe Light):	
804	0255917	1	Strobe Light Harness **(SN 0300069000 through 0300069717)**	
804	0272507	1	Strobe Light Harness **(SN 0300069718 through 0300087000)**	
804A	4460320	1	Connector, Female - 2 Position	
804B	4460267	2	Pin, Male	
805	0256202	Ref	AC to Platform Receptacle Components	5
805	0272433	Ref	7500W Generator (SkyPower) Connectors Installation	1
805A	0860038	1	Box, Switch	
805B	Not Required	0	Receptacle	
805C	Not Required	0	Shield, Cover	
805D	Not Required	0	Connector, Strain Relief	
805E		Ref	Plug, Male Options:	
805E	4460709	2	Without SkyPower	
805E	4460959	1	With SkyPower	
805E	1671092	1	Cover (Optional on SkyPower)	
805F		Ref	Connector, Female Options:	
805F	4460710	1	Without SkyPower	
805F	4460960	1	With SkyPower	
805F	1671093	1	Cover (Optional on SkyPower)	
806		Ref	Generator Electrical Components	
806	4933215	AR	110V **(SN 0300069000 through 0300077490)**	1-B
806	4933216	AR	220V **(SN 0300069000 through 0300077490)**	1-B
806	4933300	AR	110V/220V **(SN 0300077490 through 0300087000)**	1-A
806	3990010	1	Diode - 6 Amp (Not Shown)	
806A	4922641	1	Harness - On/Off Switch	
806B	4460226	2	Socket, Female	
806C		Ref	Powermite Control Box to Relay Options:	
806C	4922482	1	Powermite Control Box to Relay **(SN 0300069000 through 0300079611)**	
806C	4922970	1	Powermite Control Box to Relay **(SN 0300079612 through 0300087000)**	
806D	4460027	1	Receptacle, Twist Lock (110V Only)	
806E	4460961	1	Connector, Female - 4 Position **(SN 0300077490 through 0300087000)**	

ITEM	PART NUMBER	QTY	DESCRIPTION	REV
806E	4460705	4	Pin, Male	
806F	4460321	1	Connector, Male - 4 Position **(SN 0300077490 through 0300087000)**	
806F	4460906	4	Socket, Female	
807	4921957	1	Generator to Rear of Boom Harness (110V/220V)	
		Ref	**Note: Harness used to connect AC at platform harness to generator receptacle to power platform receptacle.**	
807	1060461	6 ft/1.8m	Cable, Electrical - 12/3	
807A	Not Required	0	Plug, Male	
807B	Not Required	0	Receptacle, Female	
807B	4460960	1	With 7500W Generator (SkyPower)	
808	See Note	1	Lights Harness Options (Note: Not Available for Purchase):	
808		Ref	Headlights Harness	
808	1060341	37 ft/11.3m	Cable, Electrical - 16/3	
808		Ref	Chassis Illumination Lights Harness	
808	1060341	40 ft/12.2m	Cable, Electrical - 16/3	
808A	3740049	1	Relay	
808B	4922643	1	Harness, Bag (Located at Ground Control Box) (Not Shown)	
809		Ref	Platform Worklights Components	
809A	2920140	2	Platform Worklights External Harness (Includes Light and Wire Only)	
809B	4460598	1	Connector, Strain Relief	
809C	4360232	1	Circuit Breaker, 15Amp **(SN 0300069000 through 0300074444)**	
809D	4922498	1	Platform Worklights Internal Harness **(SN 0300069000 through 0300074444)**	
809E	4460871	3	Socket, Female **(SN 0300069000 through 0300074444)**	
		Ref	**Note: Items 807F-807K SN 0300074445 to SN 0300087000.**	
809F	4922894	1	Platform Worklights Harness	
809F	1060494	47 ft/14.3mm	Cable, Electrical - 12/3	
809G	4460459	1	Connector, Female - 3 Position	
809G	4460789	3	Terminal, Seal	
809G	4460790	3	Socket, Female	
809H	4460476	1	Connector, Male - 3 Position	
809H	4460789	3	Terminal, Seal	
809H	4460850	3	Pin, Male	
809I	4922892	1	Worklights Harness to Aux. Power Solenoid	
809I	1060494	33 ft/10.1mm	Cable, Electrical - 12/3	
809J	2400070	1	Fuse	
809K	2400066	1	Holder, Fuse	
810	See Note	1	Soft-Touch System Harness (Note: Not Available for Purchase)	
810A	1060341	23 ft/7m	Cable, Electrical - 16/3	
810B	4460425	1	Connector, Strain Relief	
812	4933308	1	Floodlights Harness Components	
812A	1060494	33 ft/10.1m	Electrical Cable 12/3 (Lower to Aux Relay)	
812B	1060494	47 ft/14.3m	Electrical Cable 12/3 (Upper to Console Box)	
812C	4460320	2	Plug, Male - 2 Position	
812C	4460227	4	Pin, Male	
812D	4922764	1	Floodlight Harness (Lights to Switch)	

ITEM	PART NUMBER	QTY	DESCRIPTION	REV
812E	4460424	2	Connector, Female - 2 Position	
812E	4460226	4	Socket, Female	
812F	1060977	1	Cord, 2 Wire Coiled (Console Box Circuit Breaker to Switch)	
812G	4360232	1	Circuit Breaker - 15 Amp	
812H	4460425	1	Strain, Relief	
		Ref	**TOOLS**	
901	7002821	1	Crimper (For Wire to Pin/Socket Connections)	
902	7002823	1	Extractor (For Removal of Pin/Socket from Connectors)	
903	4460467	1	Extractor, Pin (Blue 16-18 Gauge) (For Removal of Pin/Socket from Connectors)	
903	4460510	1	Extractor, Pin (Yellow 12-14 Gauge) (For Removal of Pin/Socket from Connectors)	
904	7002828	1	Stripper, Wire	
905	2901443	1	Analyzer Kit (Not Shown)	
906	1001137005	1	Software Cable Kit (Not Shown)	

SECTION 8 - DECALS

SECTION 8 - DECALS

FIGURE 8-1. DECAL INSTALLATION (SN 0300069000 through 0300086149)

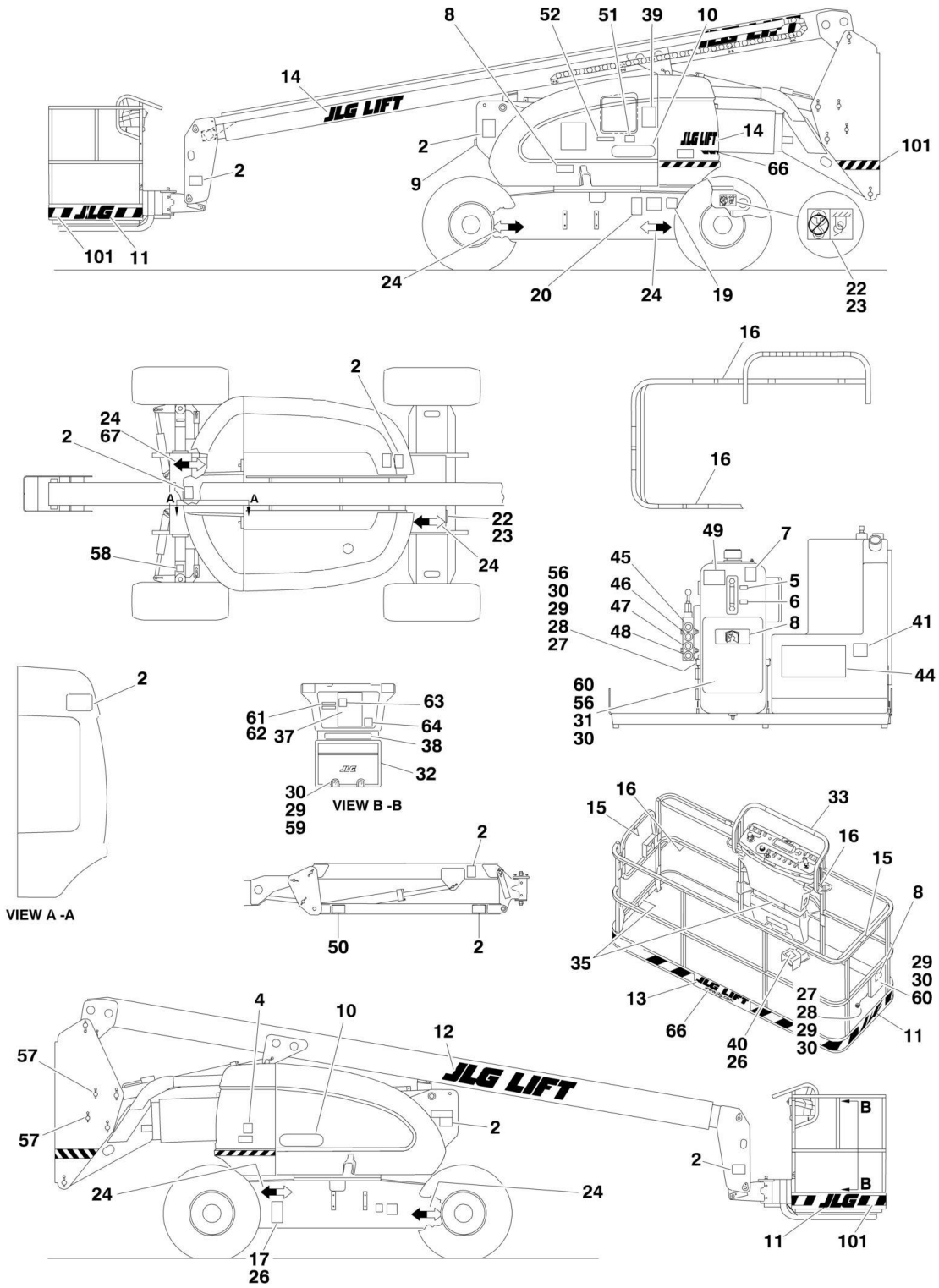

FIGURE 8-1. DECAL INSTALLATION (SN 0300069000 through 0300086149)

ITEM	PART NUMBER	QTY	DESCRIPTION	REV
		Ref	**DECAL INSTALLATIONS**	
	0271010	Ref	**Decals - JLG LOGO**	3
	0255453	Ref	**Decal Installations 600A Common Decals**	15
	0256626	Ref	**Decal Installations 600A Australian Spec**	8
	0256282	Ref	**Decal Installations 600A Dutch Spec**	5
	0256279	Ref	**Decal Installations 600A French Spec**	6
	0256280	Ref	**Decal Installations 600A German Spec**	5
	0256281	Ref	**Decal Installations 600A Italian Spec**	5
	0273188	Ref	**Decal Installations 600A Norwegian Spec**	2
	0256283	Ref	**Decal Installations 600A Spanish Spec**	5
	0256278	Ref	**Decal Installations 600A UK English Spec**	7
	0255457	Ref	**Decal Installations 600AJ Common Decals**	15
	0256627	Ref	**Decal Installations 600AJ Australian Spec**	8
	0256289	Ref	**Decal Installations 600AJ Dutch Spec**	5
	0256286	Ref	**Decal Installations 600AJ French Spec**	6
	0256287	Ref	**Decal Installations 600AJ German Spec**	5
	0273188	Ref	**Decal Installations 600AJ Norwegian Spec**	2
	0256288	Ref	**Decal Installations 600AJ Italian Spec**	5
	0256290	Ref	**Decal Installations 600AJ Spanish Spec**	5
	0256285	Ref	**Decal Installations 600AJ UK English Spec**	7
2	1701518	6	Decal - Crushing	
4		Ref	Decal Options:	
4	Not Required	0	Australian Specs	
4	1705084	1	Decal - Sound Power Level - Dutch/ French/ German/ Italian/ Norwegian/ Spanish/ UK Spec	
5	1701502	1	Decal - High Oil Level	
6	1701503	1	Decal - Low Oil Level	
7	1701504	1	Decal - Hydraulic Oil	
8	1701509	1	Decal - Manual	
9		Ref	Nameplate - Voltage Options:	
9	Not Required	0	Dutch/ French/ German/ Italian/ Norwegian/ Spanish/ UK Spec	
9	3251242	1	Australian Spec (240V-50Hz)	
10		Ref	Decal - Model Designation Options:	
10	1702818	2	Decal - Model Designation 600A	
10	1702819	2	Decal - Model Designation 600AJ	
11	1702773	AR	Decal - JLG (5in Height)	
12	1702861	2	Decal - JLG Lift (8in Height)	
13	1702774	1	Decal - JLG (3-1/2in Height)	
14	1702860	2	Decal - JLG Lift (5in Height)	
16		Ref	Decal - Attach Lanyard Here Options:	
16	Not Required	0	Dutch/ French/ German/ Italian/ Norwegian/ Spanish/ UK Spec	
16	1704277	4	Australian Spec	
17	See Note	1	Nameplate - Serial Number (Note: Not Available for Purchase)	
19	See Note	1	Decal - Bar Code (Note: Not Available for Purchase)	
20	1700584	1	Decal - Patent	
22	1702300	4	Decal - Tie Down/Lift	
23	1701500	4	Decal - Tie Down/Lift	
24	1701529	AR	Decal - Arrow	
26		Ref	Rivet Options:	
26	Not Required	0	UK/Norwegian Specs	

SECTION 8 - DECALS

ITEM	PART NUMBER	QTY	DESCRIPTION	REV
26	3820001	4	Australian/ Dutch/ French/ German/ Italian/ Spanish Specs	
27	0641408	1	Bolt 1/4in-20NC x 1in	
28	1060279	1	Cable, Lanyard	
29	3311401	AR	Nut 1/4in-20NC	
30	4751400	AR	Flatwasher 1/4in Regular	
31	0860520	1	Box, Manual Storage	
32	3380434	1	Panel, Pedestal	
37		Ref	Decal - Capacity Options:	
37	1690697	1	Australian/ French/ German/ Italian/ Norwegian/ Spanish/ UK Spec	
37	1701596	1	Dutch Spec	
38		Ref	Decal - Caution Options:	
38	1703183	1	Australian and UK Spec	
38	1703186	1	Dutch Spec	
38	1703184	1	French Spec	
38	1703190	1	German Spec	
38	1703185	1	Italian Spec	
38	1705250	1	Norwegian Spec	
38	1703187	1	Spanish Spec	
39		Ref	Decal - Caution Options:	
39	1691483	1	Australian and UK Spec	
39	1701596	1	Dutch Spec	
39	1693289	1	French Spec	
39	1693291	1	German Spec	
39	1701602	1	Italian Spec	
39	1705232	1	Norwegian Spec	
39	1701798	1	Spanish Spec	
40		Ref	Decal - Footswitch Options:	
40	3252347	1	Australian and UK Spec	
40	1703518	1	Dutch Spec	
40	1693292	1	French Spec	
40	1693294	1	German Spec	
40	1701600	1	Italian Spec	
40	1705275	1	Norwegian Spec **(SN 0300073028 through 0300086149)**	
40	1701791	1	Spanish Spec	
41	1701505	1	Decal - Fuel (Diesel)	
44		Ref	Decal - Instructions Options:	
44	1702926	1	Australian and UK Spec **(SN 0300069000 through 0300070977)**	
44	1702999	1	Dutch Spec **(SN 0300069000 through 0300070977)**	
44	1702987	1	French Spec **(SN 0300069000 through 0300070977)**	
44	1702991	1	German Spec **(SN 0300069000 through 0300070977)**	
44	1702995	1	Italian Spec **(SN 0300069000 through 0300070977)**	
44	Not Required	0	Norwegian Spec	
44	1703003	1	Spanish Spec **(SN 0300069000 through 0300070977)**	
45	1702903	1	Decal - #1 **(SN 0300069000 through 0300070977)**	
46	1702927	1	Decal - #2 **(SN 0300069000 through 0300070977)**	
47	1702924	1	Decal - #3 **(SN 0300069000 through 0300070977)**	
48	1702925	1	Decal - #4 **(SN 0300069000 through 0300070977)**	
49		Ref	Decal Options:	
49	1702265	1	Australian and UK Spec	
49	1702268	1	Dutch Spec	

ITEM	PART NUMBER	QTY	DESCRIPTION	REV
49	1702270	1	French Spec	
49	1702267	1	German Spec	
49	1702269	1	Italian Spec	
49	1705240	1	Norwegian Spec	
49	1702266	1	Spanish Spec	
50		Ref	Decal - Manual Descent Options:	
50	1702908	2	Decal - Manual Descent 600AJ Australian and UK Spec **(SN 0300069000 through 0300070977)**	
50	1702998	2	Decal - Manual Descent 600AJ Dutch Spec **(SN 0300069000 through 0300070977)**	
50	1702986	2	Decal - Manual Descent 600AJ French Spec **(SN 0300069000 through 0300070977)**	
50	1702990	2	Decal - Manual Descent 600AJ German Spec **(SN 0300069000 through 0300070977)**	
50	1702994	2	Decal - Manual Descent 600AJ Italian Spec **(SN 0300069000 through 0300070977)**	
50	Not Required	0	Norwegian Spec	
50	1703002	2	Decal - Manual Descent 600AJ Spanish Spec **(SN 0300069000 through 0300070977)**	
51		Ref	Decal - Manual Descent Options:	
51	1702901	1	Australian and UK Spec **(SN 0300069000 through 0300070977)**	
51	1702996	1	Dutch Spec **(SN 0300069000 through 0300070977)**	
51	1702984	1	French Spec **(SN 0300069000 through 0300070977)**	
51	1702988	1	German Spec **(SN 0300069000 through 0300070977)**	
51	1702992	1	Italian Spec **(SN 0300069000 through 0300070977)**	
51	Not Required	0	Norwegian Spec	
51	1703000	1	Spanish Spec **(SN 0300069000 through 0300070977)**	
56	0100011	AR	Compound, Locking	
57		Ref	Plug Options:	
57	3520032	2	Plug 600A	
57	3520033	2	Plug 600AJ	
58	1703469	4	Decal - Maximum Tire Load	
59	0641414	2	Bolt 1/4in-20NC x 1-3/4in	
60	0641406	4	Bolt 1/4in-20NC x 3/4in	
61		Ref	Decal - Maintenance Options:	
61	1703663	1	Australian Spec	
61	Not Required	0	Dutch/ French/ German/ Italian/ Norwegian/ Spanish/ UK Spec	
62		Ref	Decal - Caution Options:	
62	1703664	1	Australian Spec	
62	Not Required	0	Dutch/ French/ German/ Italian/ Norwegian/ Spanish/ UK Spec	
63		Ref	Decal - Platform Capacity Options:	
63	1703675	1	Australian Spec	
63	Not Required	0	Dutch/ French/ German/ Italian/ Norwegian/ Spanish/ UK Spec	
64		Ref	Decal - Danger Options:	
64	1703665	1	Australian Spec	
64	Not Required	0	Dutch/ French/ German/ Italian/ Norwegian/ Spanish/ UK Spec	
66	1704885	2	Decal - Website	
67	1703687	1	Decal - Arrow **(SN 0300081836 through 0300086149)**	
	0257734	Ref	**SAFETY STRIPES INSTALLATION**	1
101	4420051	20 ft/6.1m	Decal - Corner Warning Stripe	

FIGURE 8-2. DECAL INSTALLATION (SN 0300086150 through 0300087000)

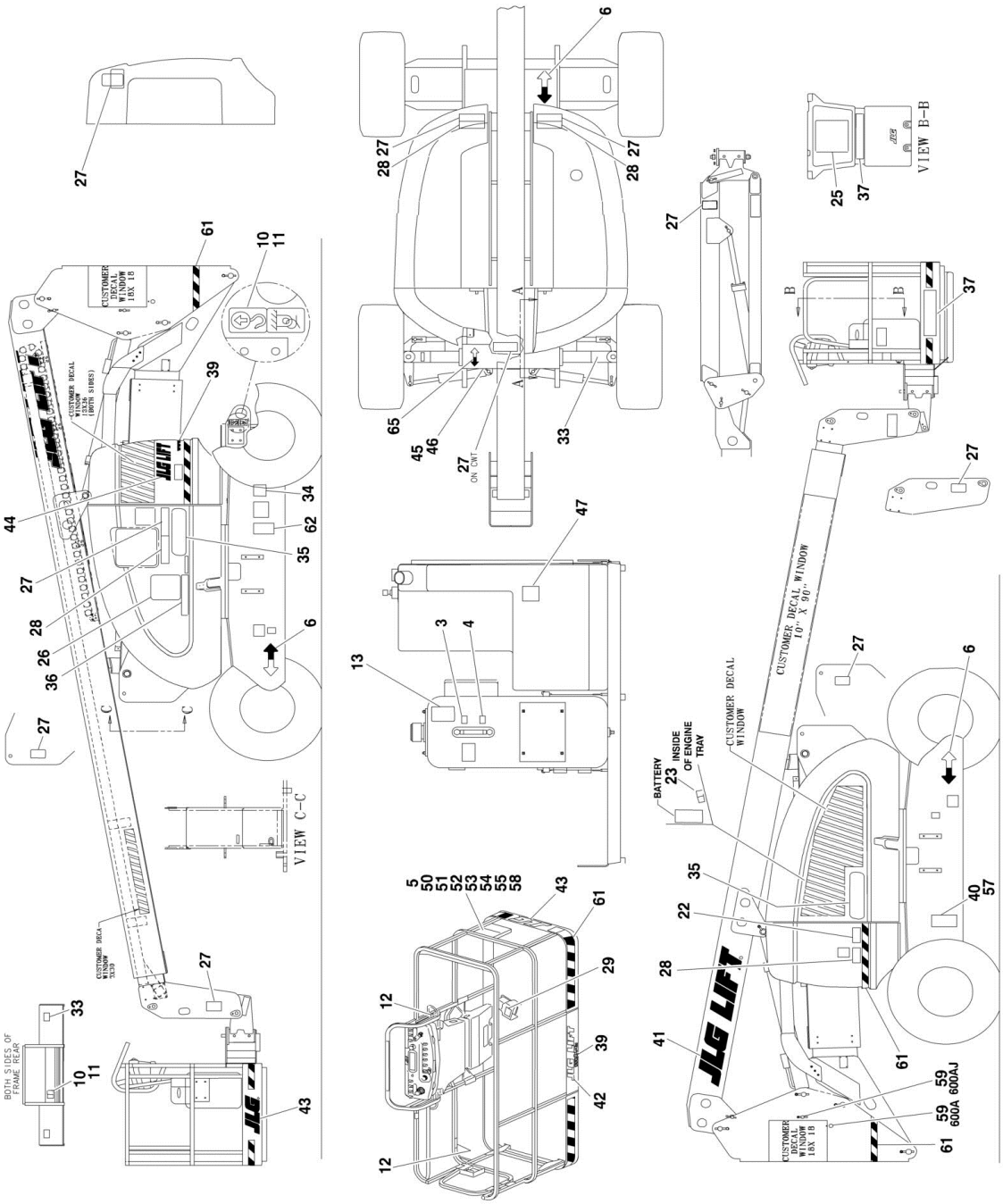

FIGURE 8-2. DECAL INSTALLATION (SN 0300086150 through 0300087000)

ITEM	PART NUMBER	QTY	DESCRIPTION	REV
		Ref	**DECAL INSTALLATION**	
	0274094	Ref	**Decal Installations - JLG LOGO**	1
	0273895	Ref	**Decal Installations 600A CE/Australian Spec**	1
	0273896	Ref	**Decal Installations 600AJ CE/Australian Spec**	1
3	1701502	1	Decal - High Oil Level	
4	1701503	1	Decal - Low Oil Level	
5	1701509	1	Decal - Manual	
6	1701529	6	Decal - Arrow	
10	1703811	4	Decal - Tie Down/Lift	
11	1703814	6	Decal - Tie Down	
12	1704277	4	Decal - Attach Lanyard Here	
13	1704412	1	Decal - Hydraulic Oil Chart	
14 to 22	Not Required	0	Not Required	
23	1706098	1	Decal - Warning Explosion/Fire	
24	Not Required	0	Decal - No Hands	
25	1705921	1	Decal - Tipping/Electrical Platform	
26	1705822	1	Decal - Electrical/Safety Manual	
27	1701518	10	Decal - Warning Crushing	
28	1705961	4	Decal - Danger Electrocution	
29	1705828	1	Decal - Footswitch	
33	1703469	4	Decal - Max Tire Load	
34	See Note	1	Decal - Bar Code (Note: Not Available for Purchase)	
35		Ref	Decal Options:	
35	1702818	2	Decal - 600A	
35	1702819	2	Decal - 600AJ	
36	1705978	1	Decal - 230kg Capacity	
37	1705978	2	Decal - 230kg Capacity	
39	1704885	2	Decal - Website	
40	See Note	1	Nameplate, Manufacturers (Note: Not Available for Purchase)	
41	1702861	2	Decal - JLG Lift (8in Height)	
42	1702774	1	Decal - JLG Lift (3-1/2in Height)	
43	1702773	2	Decal - JLG (5in Height)	
44	1702860	1	Decal - JLG Lift (5in Height)	
45	3250872	1	Nameplate - Steer/Tow Selector	
46	1705090	1	Decal - Towing Instructions	
47	1701505	1	Decal - Fuel (Diesel)	
50	0100011	AR	Compound, Locking	
51	0641406	4	Bolt 1/4in-20NC x 3/4in	
52	0641408	1	Bolt 1/4in-20NC x 1in	
53	0860520	1	Box, Manual Storage	
54	1060279	1	Cable, Lanyard	
55	3311405	5	Locknut 1/4in-20NC	
57	3820001	4	Rivet	
58	4751400	10	Flatwasher 1/4in Regular	
59	3250033	2	Plug	
61	4420051	22 ft/6.7m	Decal - Warning Stripe	
62	1700584	1	Decal - Patent	
65	1703687	1	Decal - Direction Arrow (6-3/4in)	
	2902303	1	Master Decal Kit (Includes Items 5-17)	

SECTION 9 - RECOMMENDED SERVICE PARTS STOCK

SECTION 9 - RECOMMENDED SERVICE PARTS STOCK

FIGURE 9-1. MODEL 600A/600AJ STANDARD PARTS

ITEM	PART NUMBER	QTY	DESCRIPTION	REV
	Note	Ref	**Note: The following list will service one machine (built to current production per date on the front cover) with emergency repair parts which can be installed in the field. Parts from the list should be replaced when inventory is depleted to keep service parts stock supplied. For further information, contact your JLG dealer or the JLG Industries Parts Department.**	
		Ref	**STANDARD PARTS**	
	7012944	1	Coil	
	2120150	12	Element Filter	
	7016312	1	Switch, Indicator	
	2120149	1	Element, Filter	
	7016313	1	Switch, Indicator	
	7012772	1	Coil	
	7012768	1	Coil	
	7012664	1 Dozen	Element, Air Cleaner	
	3740067	1	Relay	
	4360392	1	Switch, Indicator	
	7014810	3	Breather	
	4360475	1	Switch, Mushroom	
	4360470	1	Switch, Key	
	2860030	1	Key, Replacement	
	4360328	1	Switch, Toggle	
	4360476	1	Contact, Switch Block	
	3740049	1	Relay	
	7016502	2	Power Track Repair Section	
	7006140	2	Power Track Repair Section	
	7006152	24	Power Track Pin Kit	
	2940074	1	Latch	
	4360331	1	Switch, Toggle	
	4360336	1	Switch, Toggle	
	7022818	1	Potentiometer	
	7022824	1	Electric Assembly	
	7019166	1	Switch, Micro	
	2400065	2	Fuse, 30Amp	
	3990010	2	Diode	

FIGURE 9-2. MODEL 600A/600AJ VARIABLE PARTS

ITEM	PART NUMBER	QTY	DESCRIPTION	REV
	Note	Ref	**Note: The following list will service one machine (built to current production per date on the front cover) with emergency repair parts which can be installed in the field. Parts from the list should be replaced when inventory is depleted to keep service parts stock supplied. For further information, contact your JLG dealer or the JLG Industries Parts Department.**	
		Ref	**VARIABLE PARTS**	
	7026830	12	Filter, Fuel (Machines with Caterpillar Engine)	
	7026811	12	Filter, Oil (Machines with Caterpillar Engine)	
	3740080	1	Relay, Bosch (Machines with Generator)	
	7016328	12	Filter, Fuel (Machines with Deutz Engine)	
	7016331	12	Filter, Oil (Machines with Deutz Engine)	
	7027795	1	Deutz EMR2 Controller, Module	
	1600364	1	Module, Ground Control	
	4360578	1	Switch, Limit	
	4360387	1	Switch, Push Button (Machines with Soft-Touch Platform)	
	1600375	1	Controller, Module	
	4360057	1	Switch, Limit	
	4360232	1	Breaker, Circuit - 15 Amp (Machines with Platform Floodlights)	

SECTION 10 - SPECIAL OPTIONS

SECTION 10 - SPECIAL OPTIONS

FIGURE 10-1. SPECIAL OPTIONS

ITEM	PART NUMBER	QTY	DESCRIPTION	REV
		Ref	**Note: This list is to accommodate machines ordered with special equipment. Options may not be applicable to all models. For more specific parts information contact JLG Parts Department.**	
		Ref	**MISCELLANEOUS SPECIAL OPTIONS**	
		Ref	**Airline to Platform Installation Options:**	
	0256342	Ref	1/2in - 600A	
	0271475	Ref	1/2in Airline and (1) Welding Cable - 600A	
	0258966	Ref	1/2in - 600AJ	
		Ref	**Biodegradable Hydraulic Fluid Decals Options:**	
	1702788	1	Decal - Biodegradable Hydraulic Fluid (All except German Spec)	
	1704174	1	Decal - Synthetic Biodegradable Hydraulic Fluid (All except German Spec)	
	1703479	1	Decal - Biodegradable Hydraulic Fluid (German Spec Only)	
	1704175	1	Decal - Synthetic Biodegradable Hydraulic Fluid (German Spec Only)	
	0256276	Ref	**Boom Wiper Installation - 600A**	
	0256366	Ref	**Boom Wiper Installation - 600AJ**	
	2910477	Ref	**Cam Valve Replacement Kit**	
	0256789	Ref	**Camera Mount Assembly**	
		Ref	**ClearSky (Telematics) Installations (Dealer Installed)**	
	1001242409	Ref	**ClearSky (Telematics) Access Control Installation Kit (Dealer**	
	1001243183	Ref	**ClearSky (Telematics) Added-on Kit (Dealer Installed) (ANSI, ANSI Export and CSA Specs)**	
	1001243184	Ref	**ClearSky (Telematics) Added-on Kit (Dealer Installed) (CE Specs)**	
	1282518	Ref	**Capacity Rating Decal Installations**	
	0256760	Ref	**Capacity Rating Decal Installations 600A**	
	0256761	Ref	**Capacity Rating Decal Installations 600A**	
	0256769	Ref	**Capacity Rating Decal Installations 600AJ**	
	0256772	Ref	**Capacity Rating Decal Installations 600AJ**	
		Ref	**ClearSky (Telematics) Kits**	
	1001139130	Ref	**Australian Spec**	
	1001104983	Ref	**CE Spec**	
		Ref	**Note: Refer to ClearSky (Telematics) Manual p/n 3128499 for Serviceable Parts.**	
	0273575	Ref	**Cold Weather Package - Caterpillar Engine**	
	0256060	Ref	**Cold Weather Package - Deutz**	
	0258927	Ref	**Cold Weather Package with Glow Plugs - Deutz**	
	0271912	Ref	**Cold Weather Package with Glow Plugs - Deutz**	
	0257157	Ref	**Cold Weather Package with Ether Start - Deutz**	
		Ref	**Container - Tray Storage Options:**	
	1580012	1	Center	
	1580013	1	Rail	
		Ref	**Decal Kits**	
	2902307	Ref	Decal Kit - Australian/CE Spec (600A/600AJ) **(SN 0300086150 through 030008700)**	
	2900975	Ref	Decal Kit - Master **(SN 0300069000 through 0300086149)**	
	2902303	Ref	Decal Kit - Master **(SN 0300086150 through 0300087000)**	
	1001108725	Ref	Decal Kit - Platform	

ITEM	PART NUMBER	QTY	DESCRIPTION	REV
	1001119561	Ref	Decal Kit - Platform Box	
	2902350	Ref	Decal Kit - Tire Load **(SN 0300086150 through 030008700)**	
	2902395	Ref	**Drive/Steer Cutout Kit**	
	2580055	Ref	**Engine Block Heater Installation (Caterpillar Engine Machines)**	
		Ref	**Filter Kits:**	
		Ref	**Combined Filter Kit (Hydraulic/Air and Fuel/Engine Oil)**	
		Ref	**Caterpillar Engine**	
	2915137	NLA	**Combined Filter Kit (Use p/n 1001110994) (SN 0300069000 through 0300084828)**	
	1001114031	NLA	**Combined Filter Kit (Use p/n 1001110994) (SN 0300069000 through 0300084828)**	
	1001114123	NLA	**Combined Filter Kit (Use p/n 1001110991) (SN 0300084829 through 0300087000)**	
	1001114124	NLA	**Combined Filter Kit (Use p/n 1001110991) (SN 0300084829 through 0300087000)**	
		Ref	**Deutz Engine**	
	2910463	NLA	**Combined Filter Kit (Use p/n 1001110993) (SN 0300069000 through 0300084828)**	
	1001110990	1	**Kit(Service),Combined Filter B-C8 (SN 0300084829 through 0300087000)**	
		Ref	**Hydraulic/Air Filter**	
	2910924	NLA	**Caterpillar Engine (Use p/n 1001109692) (SN 0300069000 through 0300086999)**	
	1001109684	1	**Caterpillar Engines (SN 0300087000 through 0300089000)**	
	2910924	NLA	**Deutz Engines (Use p/n 1001109692) (SN 0300069000 through 0300084828)**	
	1001109684	1	**Deutz Engines (SN 0300084828 through 0300089000)**	
		Ref	**Fuel/Engine Oil Filter**	
	1001110137	1	**Caterpillar Engine**	
	1001110133	1	**Deutz Engine**	
	4060959	Ref	**Footswitch Shield**	
	0271548	Ref	**Glow Plug Installation (Deutz Engine Machines)**	
	2910100	Ref	**Hose/Cable Chafe Kit**	
	2902471	Ref	**Hose Kit - Lower Boom (600A)**	
	1001204904	Ref	**Hose Kit - Lower Boom (600AJ)**	
	2902470	Ref	**Hose Kit - Upper Boom (600A)**	
	2902472	Ref	**Hose Kit - Upper Boom (600AJ)**	
	1001204923	Ref	**Hostile Environment Package (600A) (SN 0300087000 through 0300089000)**	
	1001204924	Ref	**Hostile Environment Package (600AJ) (SN 0300087000 through 0300089000)**	
		Ref	**Hydraulic Fluids**	
	2300014	Ref	**Mobil 424**	
	2300027	Ref	**Mobil 224H Bio**	
	2300029	Ref	**Mobil EAL ISO 46 Bio**	
	2300016	Ref	**Mobil Delvac 15W-40**	
	2300019	Ref	**Quaker State Quintolubric 888-46 Fire Resistant**	
		Ref	**Light Installation at Control Panels**	
	0256632	Ref	**CE Spec**	
	0256633	Ref	**Australian Spec**	
	0271543	Ref	**Load Sensing System Installation**	
	0256765	Ref	**Oil Cooler Installation - Deutz**	
	1282665	Ref	**Oil Cooler Installation - Deutz**	
	0256343	Ref	**Oxy-Acetylene Lines to Platform Installation**	

SECTION 10 - SPECIAL OPTIONS

ITEM	PART NUMBER	QTY	DESCRIPTION	REV
	0270723	Ref	**Platform Beacon Installation**	
	0258703	Ref	**Platform Console Cover Installation**	
	1001205175	Ref	**Platform Console Cover Add-on Kit**	
		Ref	**Platform Entry Kit**	
	1001142504	Ref	**Kit, Replace Swing Gate with Drop Bar**	
	1001142505	Ref	**Kit, Replace Drop Bar with Swing Gate**	
	3510868	Ref	**Platform (36in x 96in) W/Fall Arrest (Front Entry Platform)**	
		Ref	**Platform Mesh Installations**	
	0273145	Ref	**36in x 8ft (91.5cm x 2.44m)**	
	0273148	Ref	**30in x 6ft (76cm x 1.83m)**	
	0273149	Ref	**36in x 6ft (91.5cm x 1.83m)**	
	0273146	Ref	**30in x 5ft (76cm x 1.52m)**	
	0273147	Ref	**30in x 4ft (76cm x 1.22m)**	
	0256829	Ref	**Platform Self-Closing Gate Installation (GM Spec)**	
		Ref	**Platform, Top Rail Extension (W/Front Entry)**	
	0270511	Ref	**3ft x 6ft Platforms**	
	0271771	Ref	**3ft x 8ft Platforms**	
		Ref	**Platform, Top Rail Extension (W/Side Entry)**	
	0272733	Ref	**3ft x 6ft Platforms**	
	0272725	Ref	**3ft x 8ft Platforms**	
	0274597	Ref	**Rain Cap Installation**	
	0256202	Ref	**Receptacle at Platform Installation**	
		Ref	**Platform Huck Fasteners Replacement Hardware**	
	0641614	AR	Bolt 1/4in-20NC x 2in	
	3311405	AR	Locknut 1/4in-20NC	
	4711400	AR	Flatwasher 1/4in	
	3300151	AR	Acorn Nut 1/4in-20NC	
		Ref	**Sky Accessory:**	
		Ref	**Note: For Breakdown of Sky Accessories Refer to Accessory Manual p/n 3124242**	
	0272606	Ref	Plasma Cutter (SkyCutter)	
	0272607	Ref	Decal - SkyCutter	
	0272619	Ref	SkyPower - 7500W 50Hz	
	0272589	Ref	Decal - SkyPower	
	0272521	Ref	Welder - Stick, 250A	
	0272588	Ref	Decal - SkyWelder	
	0273353	Ref	SkyCutter/SkyWelder Combo	
		Ref	**SkyGuard Component Options:**	
	1001149560	Ref	SkyGuard Complete Add-On Kit (Non-UGM Machines)	
	1001137672	Ref	SkyGuard Platform Sensor Kit	
	1001143256	Ref	SkyGuard Blue Beacon Kit	
	1001227120	Ref	**SkyPower Generator Service Kit (Caterpillar Engines)**	
	1001227121	Ref	**SkyPower Generator Service Kit (Deutz Engines)**	
	0273706	Ref	**Soft Touch System W/Fall Arrest Platform (Front Entry Platform)**	
		Ref	**Tools for Service**	
	2901443	1	Analyzer Kit	
	7002840	1	Antirotation Pin Removal Tool	
	8896941	1	Wire Stripper	
	7002821	1	Wire Crimper (To install wire ends to wires)	
	7002823	1	Pin/Socket Extractor - Universal (To Remove Pins/Sockets from Connectors)	

ITEM	PART NUMBER	QTY	DESCRIPTION	REV
	4460467	1	Extractor - 16-18 Gauge (For Removal of Pin/Sockets from Deutsch Connectors)	
	4460510	1	Extractor - 12-14 Gauge (For Removal of Pin/Sockets from Deutsch Connectors)	
	7002822	1	Screwdriver, Potentiometer (To Adjust Drive Controllers)	
	7016654	1	Screwdriver, Magnetic	
	7004275	1	Seal Installation Tool - 1in	
	7004276	1	Seal Installation Tool - 1-1/2in	
	7002826	1	Seal Installation Tool - 2in	
	7016655	1	Wire Rope Sheave Gauge	
	7016652	1	Huck Bolt Faster (For Small Huck Bolts Only)	
	4921850	1	Throttle Service Harness	
	2900838	1	U.S. Standards Fastener (Hardware) Kit	
	7014676	1	U.S. Standards Tool Kit	
	1001137005	1	Software Cable Kit	
	7002840	1	Pin Removal Tool (Oscillating Axle Cam Valve)	
	0272350	Ref	**Tool (Hydraulic) Circuit Installation**	
	0257728	Ref	**Tube Rack Installation**	
	0258918	Ref	**Utility Rack Installation**	
	0256344	Ref	**Weld Leads Installation - 600A**	
	0272772	Ref	**Weld Leads Installation - 600AJ (1 Cable)**	

PART NUMBER INDEX

PART NUMBER INDEX

0060031.....152, 165
0060035.....165
0060066.....153, 169
0060068.....147, 169
0060074.....165
0060076.....147, 165
0080163.....96, 103
0080181.....82
0080241.....135
0080243.....82
0100009.....187
0100011....11, 12, 15, 16, 19, 20, 23, 27, 29, 31, 33, 59, 65, 75, 82, 84, 90, 94, 100, 101, 107, 123, 125, 127, 131, 135, 136, 142, 143, 147, 148, 153, 154, 157, 161, 162, 171, 181, 205, 211, 215, 219, 221, 223, 225, 227, 233, 235, 237, 241, 251, 255, 257, 259, 280, 285, 317, 319
0100019.....11, 19, 75
0100020..82, 84, 94, 100, 101, 187
0100035.....172, 187
0100038....211, 215, 219, 221, 223, 225, 227, 233, 235, 237, 241, 251, 255, 257, 259, 280, 285
0100040.....181
0100048....100, 131, 135, 187, 304
0100063....12, 16, 20, 23, 27, 29, 211, 223, 227, 237, 241
0100079.....123
0100081.....188
0140001.....65
0140011.....187
0140032.....135, 309
0181727.....82, 93, 100
0200048.....205
0200742.....90, 107
0200819.....90
0254798.....75
0255262.....125
0255281.....161
0255288.....161
0255294.....125
0255397.....33
0255409.....123
0255410.....75
0255421.....31
0255422.....32
0255423.....148, 153, 157
0255438.....171
0255440.....63, 171
0255441.....63, 171
0255442.....63, 171
0255443.....63, 171
0255444.....75
0255453.....315
0255457..... 315
0255482..... 261
0255483..... 261
0255484..... 261
0255485..... 261
0255486..... 261
0255487..... 261
0255488..... 261
0255489..... 261
0255605..... 32
0255606..... 32
0255699..... 172
0255880..... 139
0255917..... 135, 309
0255927..... 261
0255928..... 261
0256060..... 326
0256202..... 309, 328
0256276..... 326
0256278..... 315
0256279..... 315
0256280..... 315
0256281..... 315
0256282..... 315
0256283..... 315
0256285..... 315
0256286..... 315
0256287..... 315
0256288..... 315
0256289..... 315
0256290..... 315
0256321..... 147
0256331..... 172
0256336..... 172
0256342..... 326
0256343..... 327
0256344..... 329
0256366..... 326
0256388..... 11
0256391..... 11
0256392..... 19, 51
0256397..... 11, 51
0256398..... 11, 51
0256399..... 19, 27
0256400..... 27
0256523..... 27
0256623..... 11
0256624..... 11
0256625..... 19
0256626..... 315
0256627..... 315
0256632..... 188, 327
0256633..... 188, 327
0256689..... 95, 101
0256690..... 95, 101
0256715..... 27
0256717..... 27
0256760..... 326
0256761..... 326
0256765..... 290, 327
0256769..... 326
0256772..... 326
0256789..... 326
0256821..... 142
0256822..... 142
0256829..... 328
0256847..... 96, 103
0257101..... 57
0257157..... 326
0257436..... 57
0257482..... 123
0257573..... 158
0257728..... 329
0257734..... 317
0257887..... 135, 309
0257894..... 172
0258694..... 147
0258703..... 328
0258764..... 32
0258918..... 329
0258927..... 326
0258966..... 326
0270123..... 31, 51
0270124..... 31, 51
0270329..... 75
0270511..... 328
0270528..... 59
0270723..... 290, 328
0270805..... 135
0270814... 178, 182, 189, 290
0270819..... 304
0270821..... 154, 304
0270833..... 135
0270850..... 93
0271010..... 315
0271339..... 152
0271475..... 326
0271543..... 327
0271548..... 327
0271552..... 135, 189
0271610..... 32
0271611..... 32
0271613..... 32
0271771..... 328
0271912..... 326
0271941..... 181
0271945..... 181
0272070..... 148, 154
0272135..... 152
0272326..... 147
0272350..... 329
0272427..... 189, 205
0272433..... 309
0272481..... 107, 189
0272482..... 107, 189
0272507..... 309
0272521..... 328
0272588..... 328
0272589..... 328
0272606..... 328
0272607..... 328
0272619..... 328
0272626..... 304
0272627..... 304
0272725..... 328
0272733..... 328
0272772..... 329
0272796..... 82
0272970..... 181, 188
0273048..... 31, 53
0273049..... 31, 53
0273052.....127
0273145.....328
0273146.....328
0273147.....328
0273148.....328
0273149.....328
0273161.....127
0273188.....315
0273353.....328
0273366.....31, 53
0273427.....304
0273428.....304
0273429.....304
0273430.....304
0273492....178, 182, 189, 291
0273520.....83
0273538.....89, 189
0273539.....89, 189
0273542.....207
0273575.....326
0273685.....100
0273706.....205, 328
0273824.....189, 205
0273895.....319
0273896.....319
0273940.....23
0273954.....15, 23
0273959.....15, 23
0273970.....100
0273972.....83
0274047.....15
0274054.....15
0274062.....16, 29
0274086.....107
0274087.....89
0274090.....107
0274091.....89
0274094.....319
0274121.....23, 29
0274132.....15
0274180.....182
0274200.....136, 189
0274220.....23, 59
0274229.....54
0274234.....15, 23
0274235.....59
0274256.....15
0274257.....16, 59
0274276.....63, 171
0274277.....63, 171
0274278.....63, 171
0274279.....63, 171
0274299.....100
0274309.....63, 171
0274310.....63, 171
0274311.....63, 171
0274312.....63, 171
0274348.....54
0274349.....54
0274441.....31, 53
0274491.....82
0274525.....83
0274597.....328
0280167.....15, 23
0280171.....15

0280183 ..... 15, 23
0280185 15
0340041 ..... 82, 93, 101
0340046 82
0362519 57
0362529 ..... 172, 173
0362611 173
0362612 172
0362910 59
0363012 53
0370026 213
0370035 223
0400075 ..... 82, 93, 100
0440018 ..... 12, 16
0440019 ..... 12, 16
0440161 .... 12, 16, 19, 27
0440170 16
0440171 16
0440207 75
0460150 261
0460151 261
0460152 261
0460154 261
0460155 261
0460157 261
0460159 261
0460160 261
0460161 261
0461614 153
0480121 107
0561076 ..... 148, 153
0561185 ..... 157, 161
0561237 154
0561248 157
0630427 171
0630462 205
0630464 187
0630490 ..... 12, 16, 17
0630491 135
0630498 ..... 82, 93, 100
0630507 142
0630518 131
0630534 ... 216, 219, 227, 231, 241
0630535 ... 216, 221, 233, 235, 241, 247, 251, 255, 257, 259
0630536 ... 223, 225, 237, 239
0630548 131
0630568 188
0641403 ... 148, 153, 158, 172, 173
0641404 12, 16, 142, 187
0641406 ..... 82, 135, 139, 181, 187, 317, 319
0641407 . 82, 85, 93, 101, 142
0641408 ... 181, 187, 316, 319
0641409 100
0641414 51, 65, 178, 182, 187, 205, 317
0641416 ..... 65, 154
0641418 177
0641424 171
0641505 57
0641506 131
0641507 .. 82, 85, 94, 100
0641508 66, 90, 108, 269
0641510 ..... 94, 101
0641514 65
0641516 ..... 59, 158, 207
0641518 182
0641520 51
0641522 ..... 51, 65, 162
0641524 177
0641532 ..... 53, 148, 153
0641536 162
0641542 33
0641552 53
0641604 ..... 251, 255
0641605 ..... 148, 153
0641606 84, 94, 101, 123, 143, 153, 157, 161, 162
0641607 ... 148, 153, 157, 161
0641608 ... 11, 12, 16, 19, 23, 27, 29, 54, 57, 59, 65, 82, 84, 142, 157, 161
0641609 ..... 82, 139
0641610 ... 20, 27, 82, 85, 90, 93, 100, 101, 107, 157, 161, 181, 187
0641611 ..... 125, 153
0641612 11, 19, 127, 157
0641613 65
0641614 ..... 123, 328
0641618 ..... 53, 153, 157, 158, 161
0641640 162
0641772 ..... 90, 107
0641808 .. 82, 85, 95, 100
0641809 157
0641810 .... 139, 147, 153
0641811 127
0641812 85, 94, 101, 148, 154
0641813 207
0641814 ..... 15, 23
0641816 ..... 15, 51
0641818 .. 15, 23, 93, 101
0641820 ..... 19, 125, 127, 148, 153
0641826 ..... 11, 95, 101
0641828 82
0642010 .. 59, 84, 94, 100
0642012 ... 11, 15, 16, 17, 19, 23, 29
0642018 75
0642612 ..... 135, 136
0642684 ..... 148, 154
0651406 65
0681608 ... 12, 16, 20, 27, 148, 154
0681610 .... 148, 153, 211
0681810 31
0681814 185
0681822 185
0681836 75
0682016 ..... 31, 75
0682020 16
0700808 ..... 82, 94, 101
0700810 ..... 96, 103
0700816 90
0701010 82
0701012 ..... 82, 94, 101
0701014 103
0701015 ..... 82, 94, 101
0701210 90
0701214 82
0701414 ..... 82, 93, 101
0721003 ..... 16, 189
0721004 59
0721005 205
0721006 . 83, 90, 108, 142
0721008 188
0741606 135
0741607 ..... 59, 153
0801019 ..... 147, 152, 157
0801021 157
0801022 ..... 147, 161
0801023 161
0801025 ..... 152, 161
0801026 161
0801027 161
0801085 157
0801228 161
0860038 309
0860520 ..... 316, 319
0861407 131
0861472 131
0861473 131
0861517 ..... 181, 187
0861537 ..... 187, 188
0861610 131
0861611 131
0861691 131
0861692 131
0861702 131
0861703 131
0902206 ..... 135, 136
0902219 142
0902242 142
0902335 142
0902520 125
0902751 187
0902910 85
0903056 127
0903119 136
0920117 31
0920119 75
0940049 142
0940070 ..... 82, 93, 101
0940071 142
0940092 ..... 205, 207
0940094 ..... 205, 207
0940103 205
0940131 207
0940133 205
0940134 205
0961845 177
0961890 249
0961893 .... 215, 219, 227, 231, 241
0961894 ..... 215, 221, 241
0961896 .... 251, 255, 257, 259
0961897 ..... 233, 235
0961898 ..... 223, 225
0961899 237
0961947 ... 153, 215, 219, 241, 245
0961948 ... 148, 153, 161, 233, 235
0961949 ... 148, 153, 157, 223, 225, 237, 239
0961950 .... 11, 15, 19, 23
0961951 ... 148, 153, 161, 215, 221, 241, 247
0961977 249
0961986 ..... 82, 94, 101
0962005 ... 12, 16, 20, 23, 27, 29
0962051 139
0962131 ..... 16, 23, 29
0962270 185
0962272 .... 12, 16, 20, 27
0962292 59
0962335 153
0962336 .... 227, 229, 231
0962348 59
0962474 211
0962563 90
0962653 90
1001097554 85
1001098503 ..... 53, 54
1001099836 163
1001100120 53
1001100321 ..... 89, 107
1001104983 326
1001107153 162
1001108725 326
1001109684 327
1001110133 327
1001110137 327
1001110990 327
1001113961 ..... 199, 201
1001114031 327
1001114123 327
1001114124 327
1001116240 .. 84, 94, 100
1001116241 .. 84, 94, 100
1001117320 182
1001118416 201
1001118417 ..... 187, 193
1001119561 327
1001121592 205
1001121593 205
1001137005 ..... 311, 329
1001137672 328
1001138795 231
1001138796 247
1001139130 326
1001142504 328
1001142505 328
1001143256 328
1001144629 181
1001149560 328
1001166538 203
1001166539 195
1001167359 .. 15, 23, 213
1001204904 327
1001204923 327
1001204924 327
1001205175 328
1001223331 ..... 152, 221

PART NUMBER INDEX

1001223332.....221
1001223511.....219
1001223512.....147, 219
1001227120.....328
1001227121.....328
1001228002.....147, 245
1001228003.....147, 152, 239
1001228004.....147, 152, 235
1001228005.....161, 253
1001228006.....157, 259
1001228007.....161, 255
1001228012.....153, 229
1001228042.....147, 152, 225
1001228052.....152, 247
1001242409.....326
1001243183.....326
1001243184.....326
1001248012.....153, 231
1060016.....172
1060279.....316, 319
1060341.....205, 310
1060461.....305, 310
1060494.....310
1060584.....59
1060637.....82, 95, 100
1060896.....304, 305
1060902.....305, 306
1060903.....205
1060904.....84
1060918.....182, 187, 304
1060945.....305
1060977.....311
1061033.....305
1100098.....51
1120304.....16
1120460.....12, 16
1120487.....123
1180336.....162
1180338.....162
1180339.....157
1260017.....75
1282396.....286
1282518.....326
1282571.....290
1282665.....290, 327
1282828.....290
1282937.....290
1283429.....286
1320012.....82
1320016.....82, 93, 102
1320022..82, 85, 93, 100, 102
1320176.....95, 102
1320222.....94
1320223.....84, 94, 102
1320243.....148, 153
1320314.....162
1340060.....82, 93, 102
1380136.....65
1380147.....139
1480120.....90
1580011.....82
1580012.....182, 326
1580013.....182, 326
1600313..... 187
1600317..... 187, 191
1600318..... 187, 199
1600327..... 131
1600361..... 85
1600364..... 131, 324
1600375..... 187, 324
1600411..... 131
1660219..... 125
1660219RR..... 125
1660223..... 125
1660223RR..... 125
1660234..... 96, 103
1660239..... 82
1660257..... 127
1660258..... 127
1660303..... 127
1660304..... 127
1670767..... 142
1670768..... 161
1670769..... 154
1670777..... 33
1670819..... 171
1670820..... 172
1670824..... 172, 173
1670829..... 131, 187
1670836..... 161
1671037..... 188
1671092..... 309
1671093..... 309
1683053... 215, 219, 227, 241
1683054..... 251, 257
1683055.... 215, 221, 241
1683057..... 211
1683061..... 233
1683067..... 223
1683069..... 237
1683208... 12, 16, 19, 23, 27, 29, 249
1683258..... 153, 227
1683263..... 152, 241
1683266..... 147, 241
1683280..... 11, 19, 211
1683281..... 211
1683283..... 211
1683288.... 147, 152, 237
1683294.... 147, 152, 233
1683299.... 147, 152, 223
1683304..... 12, 27, 249
1683307..... 161, 251
1683308..... 251
1683310..... 251
1683312..... 157, 257
1683313..... 257
1683314..... 257
1683317..... 161, 251
1683318..... 251
1683320..... 251
1683415..... 147, 215
1683418..... 152, 215
1683609..... 153, 227
1683949..... 241
1683952..... 215
1683962..... 241
1683963..... 215, 221
1683972..... 241
1683973..... 241
1683976..... 215, 219
1683977..... 215
1684001..... 233
1684005..... 233
1684014..... 223
1684015..... 223
1684017..... 237
1684019..... 237
1684089..... 227
1684090..... 227
1684092..... 227
1684280..... 15, 23, 213
1684289..... 213
1684290..... 213
1684308..... 251
1684310..... 251
1684418..... 16, 29, 249
1684465..... 213
1684498.... 147, 152, 223
1690697..... 316
1691483..... 316
1693289..... 316
1693291..... 316
1693292..... 316
1693294..... 316
1700584..... 315, 319
1701500..... 315
1701502..... 315, 319
1701503..... 315, 319
1701504..... 315
1701505 85, 94, 100, 316, 319
1701509..... 315, 319
1701518..... 315, 319
1701529..... 315, 319
1701596..... 316
1701600..... 316
1701602..... 316
1701791..... 316
1701798..... 316
1702265..... 316
1702266..... 317
1702267..... 317
1702268..... 316
1702269..... 317
1702270..... 317
1702300..... 315
1702563..... 182
1702564..... 187
1702565..... 187
1702566..... 187
1702567..... 187
1702610..... 131
1702676..... 182, 187
1702773.... 185, 315, 319
1702774..... 315, 319
1702788..... 326
1702818..... 315, 319
1702819..... 315, 319
1702860..... 315, 319
1702861..... 315, 319
1702901..... 317
1702903..... 316
1702908..... 317
1702924..... 316
1702925..... 316
1702926.....316
1702927.....316
1702938.....189, 205
1702984.....317
1702986.....317
1702987.....316
1702988.....317
1702990.....317
1702991.....316
1702992.....317
1702994.....317
1702995.....316
1702996.....317
1702998.....317
1702999.....316
1703000.....317
1703002.....317
1703003.....316
1703084.....189
1703085.....189
1703162.....82, 93, 102
1703183.....316
1703184.....316
1703185.....316
1703186.....316
1703187.....316
1703190.....316
1703403.....57
1703404.....57
1703444.....57
1703450.....57
1703467.....131
1703468.....131
1703469.....317, 319
1703479.....326
1703518.....316
1703534.....281, 285
1703663.....317
1703664.....317
1703665.....317
1703675.....317
1703687.....317, 319
1703811.....319
1703814.....319
1704174.....326
1704175.....326
1704260.....187
1704277.....315, 319
1704412.....319
1704578.....59
1704885.....317, 319
1704997.....187
1705014.....185
1705084.....315
1705090.....59, 319
1705132.....132, 188
1705170.....136
1705232.....316
1705240.....317
1705250.....316
1705275.....316
1705325.....90
1705752.....131
1705753.....131
1705822.....319
1705828.....319
1705921.....319

1705961 319
1705978 319
1706098 319
1706385 185
1870132 291
1870191 291
2000189 ..... 93, 95
2000194 ..... 82, 85
2000216 102
2000219 101
2000221 101
2000224 101
2000274 102
2000279 101
2000280 101
2060025 ..... 82, 93, 102
2080040 ..... 177, 181
2080044 153
2120145 65
2120146 64
2120149 ..... 65, 322
2120150 ..... 64, 322
2120164 65
2120209 64
2120210 65
2160002 75
2180344 75
2180348 100
2180380 ..... 280, 285
2180536 ..... 84, 93
2180724 ..... 280, 285
2180798 ..... 82, 93, 103
2200222 123
2220001 75
2220235 ... 265, 269, 281, 285
2220237 ..... 17, 267, 273
2220250 ..... 84, 94
2220273 ..... 84, 93
2220313 ..... 84, 93, 100
2220362 ... 265, 267, 269, 273
2220363 265
2220365 ..... 265, 269
2220366 ..... 279, 283
2220371 ... 265, 267, 269, 273, 275, 277
2220372 ..... 280, 284
2220373 ... 265, 267, 273, 281, 285
2220374 .... 113, 279, 284
2220375 ... 113, 265, 269, 273, 279, 283
2220376 .... 121, 279, 283
2220377 ... 113, 265, 267, 269, 273, 279, 283
2220379 ..... 279, 283
2220381 ..... 279, 284
2220385 .... 275, 279, 283
2220409 283
2220414 283
2220415 ... 267, 269, 273, 275, 277, 279, 283
2220416 279
2220428 ..... 279, 283
2220429 ..... 279, 284
2220435 ..... 265, 270
2220451 ..... 93, 102, 265, 267
2220459 ..... 84, 94
2220466 ... 265, 269, 270, 275, 279, 283
2220468 .... 277, 280, 284
2220472 279
2220473 ... 265, 267, 269, 273, 280, 284, 285
2220474 283
2220479 119
2220490 ... 265, 269, 275, 277
2220497 ..... 279, 283
2220498 .... 267, 280, 284
2220500 ... 269, 273, 280, 284
2220501 ..... 265, 270
2220502 ..... 270, 280
2220504 ... 265, 267, 270, 273, 275, 277
2220507 ... 265, 267, 269, 273
2220510 ..... 280, 284
2220511 ..... 280, 284
2220567 ..... 279, 283
2220568 269
2220574 ..... 279, 284
2220578 ... 114, 119, 279, 283
2220582 ... 265, 267, 270, 273, 275, 279, 284
2220596 ... 269, 273, 279, 284
2220602 .... 270, 279, 283
2220603 .... 275, 280, 285
2220605 ..... 269, 283
2220606 ..... 267, 273
2220609 ..... 279, 284
2220618 ..... 279, 283
2220619 .... 275, 279, 283
2220628 ..... 279, 284
2220635 275
2220646 ... 114, 119, 273, 279, 283
2220654 ..... 280, 284
2220657 ..... 280, 284
2220671 269
2220710 265
2220738 283
2220767 83
2220794 ..... 84, 95
2220800 270
2220810 .... 121, 279, 283
2220833 ..... 269, 270
2220861 273
2220873 ... 279, 281, 284, 285
2220883 ..... 49, 216, 219, 221, 223, 225, 227, 229, 231, 233, 235, 237, 257, 259
2220885 ... 211, 215, 219, 221, 227, 229, 231, 242, 247, 251, 255
2220886 ..... 49, 223, 225, 235, 259
2220888 237
2220890 213
2220893 65
2220899 ..... 280, 284
2220909 269
2220914 270
2220921 ..... 280, 284
2220923 ..... 279, 284
2220947 ..... 119, 281, 285
2220948 283
2220974 ..... 279, 284
2220998 ..... 280, 285
2220999 ..... 280, 284
2221036 ..... 281, 285
2221042 283
2221053 ..... 281, 285
2221065 ..... 280, 284
2221170 267
2221176 100
2300014 327
2300016 327
2300019 327
2300027 327
2300029 327
2400065 ..... 306, 322
2400066 ..... 306, 310
2400070 310
2410014 185
2420172 131
2420203 ..... 89, 107
2460013 ..... 89, 107
2460039 ..... 89, 107
2460049 ..... 89, 107
2460056 ..... 89, 107
2460057 ..... 89, 107
2560122 65
2560123 65
2560136 187
2560173 182
2575716 59
2580055 327
2600281 181
2600287 178
2680433 142
2680434 142
2680440 142
2680441 142
2720058 ... 82, 84, 94, 100
2720271 ..... 84, 94
2720398 ..... 93, 102
2720434 ..... 82, 94, 102
2720449 ..... 94, 102
2720509 82
2720510 82
2720515 83
2740063 290
2750532 . 84, 93, 100, 102
2750756 269
2750790 269
2750900 275
2751013 ..... 269, 275
2751020 275
2751032 75
2751396 ..... 269, 283
2751410 277
2751427 269
2751434 277
2752245 265
2752249 269
2752258 265
2752324 265
2752341 .... 267, 280, 285
2752343 ..... 280, 285
2752349 269
2752354 265
2752398 ..... 269, 270
2752434 280
2752453 ..... 280, 284
2752459 265
2752462 .... 277, 280, 284
2752468 ..... 280, 284
2752469 ..... 280, 284
2752473 ..... 265, 269
2752475 267
2752484 ..... 281, 285
2752497 ..... 280, 284
2752500 ..... 279, 283
2752506 ..... 279, 284
2752516 ..... 279, 284
2752519 .... 279, 283, 285
2752573 .... 269, 279, 283
2752574 273
2752579 ..... 280, 284
2752591 279
2752592 ... 267, 269, 273, 280
2752593 .... 269, 280, 284
2752600 ..... 279, 284
2752601 ..... 280, 284
2752602 ..... 265, 269
2752603 ..... 280, 284
2752604 ..... 279, 283
2752611 267
2752618 ..... 281, 285
2752620 ... 265, 267, 269, 273
2752635 ..... 279, 283
2752636 ..... 280, 284
2752650 ..... 280, 285
2752655 ..... 279, 283
2752656 ..... 279, 283
2752723 ..... 279, 283
2752724 ..... 279, 283
2752783 ..... 280, 284
2752807 269
2752813 ..... 265, 269
2752814 265
2752823 275
2752824 275
2752889 270
2752890 269
2752899 269
2752910 ..... 267, 273
2752912 270
2752919 269
2752920 275
2752928 ... 267, 273, 279, 283
2752929 ... 267, 273, 279, 283
2752939 ..... 280, 284
2752962 275
2752966 ..... 265, 269
2752970 ..... 265, 270

PART NUMBER INDEX

2752985.....280, 285
2752987.....281, 285
2752988.....280
2752989.....281, 285
2752990.....280, 285
2752991.....280, 284
2753046.....280, 285
2753047.....280, 284
2753052.....280, 284
2753055.....280, 284
2753056.....280, 284
2753132.....279, 283
2753133.....279, 283
2753134.....280, 284
2753135.....280, 284
2753325.....283
2753397.....267
2753435.....267
2753924.....267, 273
2753925.....267, 273
2753926.....273
2753928.....273
2753929.....267, 273
2753930.....273
2753933.....277
2753967.....267
2753968.....284
2753969.....267
2754227.....273
2754228.....273
2754229.....273
2754230.....273
2754231.....273
2754232.....273
2754233.....273
2754234.....273
2754235.....267, 273
2754328.....283
2754329.....283
2754330.....283
2760105.....131, 187
2780205.....75, 77
2780212.....12
2780213.....31, 35
2780269.....31, 37
2780271.....16
2780276.....17
2792177.....286
2792188.....279, 286
2792189.....279, 286
2792191.....286
2792192.....286
2792193.....265, 286
2792194.....286
2792195.....66, 269, 286
2792196.....286
2792230.....275, 286
2792315.....287
2792405.....287
2792687.....273, 286
2792688.....283, 286
2792689.....283, 286
2792690.....277, 286
2792691.....286
2792692.....267, 286
2792697.....286
2792702.....286
2820031..... 90, 108
2820035... 135, 178, 182, 309
2820076..... 142
2820077..... 143
2820078..... 143
2820082..... 143
2820083..... 143
2840018..... 139
2860012..... 108
2860030..... 132, 322
2890245..... 12, 17
2900708..... 64
2900752..... 113
2900770..... 64, 165, 211, 233, 235, 257, 259
2900788..... 45
2900792... 215, 219, 221, 223, 225, 227, 229, 231, 233, 235, 237, 239, 257, 259
2900826..... 113
2900827..... 113
2900838..... 329
2900975..... 326
2901273..... 233, 235
2901278..... 251, 257
2901285..... 223, 225
2901301.... 216, 221, 242
2901303... 216, 219, 227, 242
2901321..... 211
2901322..... 237, 239
2901358..... 94
2901443..... 311, 328
2901763..... 70
2901861... 251, 255, 257, 259
2902085..... 108
2902266..... 213
2902296..... 84, 94, 100
2902303..... 319, 326
2902307..... 326
2902350..... 327
2902395..... 327
2902443..... 306
2902470..... 327
2902471..... 327
2902472..... 327
2910100..... 327
2910463..... 327
2910477..... 326
2910924..... 327
2915137..... 327
2920110..... 135
2920113..... 135
2920129.... 187, 304, 306
2920130..... 135
2920140.... 178, 182, 310
2920157..... 136, 182
2920214..... 135
2920215..... 135
2940074.... 178, 181, 322
2940088..... 142
2980125..... 59
3010141..... 59
3020016..... 101
3020021..... 96, 103
3160204..... 31, 45
3160205..... 31, 41
3160273..... 75, 79
3160297..... 31, 43
3160299..... 31, 47
3160300..... 31, 47
3160349..... 49
3160350..... 49
3200362..... 95, 102
3200378..... 93
3200406..... 83, 102
3220103..... 95, 102
3220104..... 95, 102
3220113..... 83
3250033..... 319
3250585..... 182
3250872..... 57, 59, 319
3251102..... 90, 108, 189
3251242..... 315
3252347..... 316
3252507..... 90, 108
3271805..... 127, 185
3272001..... 16
3272605.... 148, 154, 165
3290801..... 83
3300106..... 12, 17, 31
3300151..... 177, 328
3300205..... 131
3300353..... 188
3300393..... 177
3300408..... 131, 187
3310601..... 139
3310801..... 171
3310805..... 65, 172
3311001... 142, 181, 188, 189
3311005..... 90, 108, 135, 142, 178
3311401... 131, 161, 205, 316
3311405... 65, 83, 84, 93, 101, 102, 139, 142, 171, 178, 182, 187, 319, 328
3311501..... 65, 142, 205
3311505... 51, 53, 65, 83, 85, 94, 100, 102, 142, 148, 153, 162, 177, 207
3311601.... 123, 142, 188
3311605... 20, 27, 83, 90, 93, 100, 102, 108, 139, 142, 153, 157, 162, 182, 185, 187
3311705..... 90, 108
3311801 . 31, 83, 95, 100, 171
3311805 83, 93, 102, 125, 142, 148, 153, 154, 207
3313403..... 12, 17
3322201..... 127
3323403..... 12, 16, 17
3340608.... 251, 253, 255
3340764..... 162
3340765..... 162
3340787..... 162
3340871..... 157, 161
3340881.....157, 161
3340911.....53
3340966.....59
3380428.....84, 94, 100
3380434.....182, 316
3380557.....54
3380558.....54
3380560.....54
3380573.....54
3420156.....188
3420372.....59
3420447.....59
3420592.....57
3421453.....57
3421565.....59, 75
3422327.....59
3422426....11, 12, 16, 17, 19, 23, 27, 29
3422427.....12, 17, 24
3422429....12, 16, 17, 19, 23, 27, 29
3422430....12, 16, 17, 19, 24, 27, 29
3422448.....84, 93, 100
3422457.....161
3422530.....139
3422532.....94, 101
3422553.....57, 84
3422561.....152
3422563.....152
3422565.....147
3422566.....152
3422571.....147, 152
3422572.....147, 152
3422573.....147, 152
3422575.....147, 152, 157
3422576.....147, 152
3422577.....147
3422578.....147
3422579.....152
3422580.....147
3422582.....148
3422583.....152
3422592.....11, 15, 19, 23
3422802.....19, 27
3422813.....59
3422841.....59
3422847.....59
3422848.....59
3422860.....152
3422861.....152
3422867.....152
3422900.....16, 24, 29
3423175.....17
3430816.....139
3450304.....188
3450306.....158
3450404.....139
3450606.....158
3450810.....12, 17
3451010.....16, 17
3451012.....12
3480188.....215, 221, 241
3480206.....223
3480210....215, 219, 227, 241
3480211.....233

3480212 ..... 251, 257
3480216 237
3480288 213
3510499 177
3510500 177
3510537 177
3510538 177
3510542 177
3510543 177
3510728 177
3510751 177
3510763 177
3510764 177
3510822 181
3510830 181
3510831 181
3510832 181
3510833 181
3510868 ..... 185, 328
3520028 89, 90, 107, 108
3520032 317
3520033 ..... 142, 317
3520035 132
3520054 187
3520072 .... 177, 181, 185
3520198 181
3534978 102
3536089 ..... 178, 182
3537318 75
3537416 ..... 93, 102
3537420 93
3537445 139
3538047 ..... 11, 19
3538247 ..... 251, 255
3538758 162
3538771 251
3539055 172
3539219 131
3539228 157
3539236 158
3539281 135
3539662 57
3539685 178
3539779 ..... 148, 153
3539872 ..... 83, 93, 102
3539877 .... 11, 15, 19, 23
3539879 ..... 11, 19
3539923 142
3539956 ..... 84, 95, 100
3539971 ..... 93, 102
3539988 143
3570270 158
3570277 158
3570374 ..... 148, 153
3570375 158
3572009 59
3572010 59
3572011 59
3572012 59
3574091 205
3574171 162
3574185 162
3574206 83
3574207 83
3574208 83
3574684 90
3575359 205
3580134 ..... 89, 107
3580158 107
3580322 89
3600242 ..... 84, 93, 121
3600243 63
3600260 83, 93, 112, 114
3600365 63
3600381 ..... 84, 118, 119
3600395 ..... 101, 121
3600396 ..... 101, 119
3600397 ..... 101, 113
3620033 ..... 93, 102
3620047 83
3640493 290
3641569 205
3740049 ... 131, 290, 306, 310, 322
3740057 290
3740058 290
3740066 290
3740067 83, 93, 102, 322
3740080 ..... 90, 108, 324
3760133 161
3760170 ..... 59, 75
3760368 ... 215, 219, 227, 241, 257
3760369 ... 211, 215, 221, 241
3760370 233
3760372 223
3760384 237
3790012 ... 135, 136, 182, 188, 189
3790045 31
3790110 ..... 166, 253
3790152 ..... 84, 94, 101
3820001 ..... 57, 135, 316, 319
3820020 181
3841143 ... 11, 12, 16, 17, 19, 24, 27, 29, 59, 84, 93, 100, 147, 152
3841203 .... 147, 152, 157
3841258 ... 11, 15, 16, 19, 23, 24, 29
3841262 12
3841263 ..... 12, 17
3841285 ... 16, 19, 24, 27, 29
3841291 27
3841295 158
3841329 57
3841340 ..... 153, 161
3841347 158
3841677 29
3890040 185
3900054 185
3900141 227
3900166 148
3900207 177
3900232 142
3900239 ..... 148, 153
3900268 131
3910608 139
3910804 131
3910806 65
3911008 181
3911016 178
3911040 135
3930816 172
3930824 ..... 171, 172
3931408 171
3931430 171
3931448 ..... 251, 255
3931516 .... 215, 219, 227, 241, 251, 255, 257, 259
3931620 84, 93, 101, 215, 221, 241, 247
3931720 ..... 233, 235
3932032 ..... 223, 225
3932224 75
3932240 ..... 237, 239
3940604 59
3960098 ..... 12, 17
3960343 16
3960369 102
3960389 .85, 93, 101, 142
3960407 ..... 94, 102
3960418 142
3960438 142
3960461 135
3960462 142
3960467 142
3960468 ..... 83, 95, 102
3960469 ..... 83, 95
3990010 ..... 307, 309, 322
4031911 83
4060802 ..... 90, 108, 182, 189
4060803 178
4060804 ..... 65, 162
4060805 .84, 95, 102, 161
4060807 66
4060808 ..... 51, 157
4060906 131
4060907 135
4060918 66
4060959 327
4070863 ..... 157, 161
4070864 ..... 157, 161
4070878 ..... 11, 19
4070879 ..... 11, 19
4070897 ..... 157, 161
4070898 ..... 157, 161
4070929 ..... 157, 161
4070932 162
4070944 ..... 11, 15, 19, 23
4070945 ..... 11, 15, 19
4070987 131
4071007 161
4071059 59
4071061 162
4071062 162
4071101 ..... 15, 23
4100100 227
4120012 290
4120013 290
4120035 ..... 304, 307
4130330 ..... 19, 27
4130331 ..... 19, 27
4130340 12
4130341 12
4130401 ..... 16, 24, 29
4130402 ..... 16, 24, 29
4130409 16
4130410 16
4130412 24
4130413 17
4130414 17
4130415 17
4160143 142
4220162 ..... 135, 136
4220165 178
4220168 178
4220191 83
4240032 ..... 135, 136
4240099 .... 178, 182, 205
4240102 123
4240112 123
4280295 123
4300097 31
4340678 187
4340684 187
4360031 ..... 182, 187
4360057 ..... 205, 324
4360232 ... 189, 310, 311, 324
4360294 ..... 94, 108
4360322 ..... 171, 172
4360328 .... 132, 187, 322
4360331 .... 182, 187, 322
4360336 ..... 90, 108, 135, 136, 182, 189, 322
4360387 ... 188, 189, 205, 324
4360392 .83, 93, 103, 322
4360407 188
4360436 123
4360470 ..... 132, 322
4360475 .... 132, 188, 322
4360476 .... 132, 188, 322
4360542 ..... 89, 107
4360549 ..... 171, 172
4360578 .... 171, 172, 324
4400372 123
4400399 123
4400454 123
4420037 182
4420038 123
4420051 ..... 59, 317, 319
4420055 177
4420060 ..... 172, 173
4420068 ..... 205, 207
4460007 188
4460023 ..... 90, 108
4460027 ..... 89, 107, 309
4460042 ..... 178, 188
4460049 205
4460071 .... 182, 188, 304
4460190 ..... 89, 107
4460225 304
4460226 ... 188, 196, 203, 304, 306, 307, 309, 311
4460227 ... 188, 304, 307, 310
4460234 .... 135, 136, 205
4460265 ..... 196, 203
4460267 ..... 308, 309
4460268 ... 135, 307, 308, 309
4460320 .... 308, 309, 310

PART NUMBER INDEX

4460321.....310
4460326.....308, 309
4460418.....304, 306
4460419.....304, 306
4460424....135, 307, 308, 309, 311
4460425.....205, 310, 311
4460426....132, 178, 182, 189, 306
4460428....171, 172, 188, 304
4460434.....304, 307
4460445.....308, 309
4460457.....307
4460458.....307
4460459.....310
4460460.....307
4460464....188, 304, 305, 307
4460465.....304, 305, 307
4460466.....305
4460467.....311, 329
4460470....132, 188, 304, 306
4460471....132, 188, 304, 306
4460473.....305
4460476.....310
4460488.....132, 188
4460499.....70, 73, 309
4460508.....304, 305
4460509.....304, 305
4460510.....311, 329
4460526.....132, 306
4460536.....307
4460539.....308
4460598....178, 182, 189, 310
4460600.....290
4460607.....290
4460611.....94
4460634.....307
4460635.....307
4460705.....310
4460708.....188, 304, 306
4460709.....309
4460710.....309
4460761.....188, 304, 307
4460789.....310
4460790.....310
4460850.....310
4460865.....304, 305
4460866.....304, 305, 307
4460871....188, 191, 193, 199, 201, 304, 306, 307, 308, 310
4460873.....304, 307
4460874.....132, 304, 306
4460875.....132, 304, 306
4460876.....306
4460878.....307
4460879.....304
4460880.....307, 308
4460887.....304, 307
4460889.....307
4460890.....307
4460891.....305, 307
4460892..... 306
4460894..... 306
4460897..... 305
4460905... 132, 188, 304, 306, 307
4460906..... 310
4460943..... 307
4460944..... 308
4460959..... 309
4460960..... 309, 310
4460961..... 309
4460968..... 171, 172
4461005..... 308
4461006..... 308
4461008..... 308
4461052..... 308
4461053..... 308
4461054..... 308
4461060..... 308
4461070..... 308
4461071..... 306
4461072..... 306
4461073..... 306
4461074..... 306
4461095..... 308
4520171..... 32
4520172..... 32
4520173..... 32
4520210..... 32
4520211..... 32
4520259..... 32
4520283..... 32
4520284..... 32
4520287..... 32
4520288..... 32
4520341..... 32
4520344..... 32
4520345..... 32
4520346..... 32
4566408..... 233
4566425..... 251
4566468... 215, 219, 221, 241
4566471..... 227
4566501..... 223
4566667..... 237
4566832..... 51
4567073..... 83
4567172..... 57
4567241..... 158
4567815..... 95, 102
4568133..... 60
4568721..... 83
4568788..... 83
4569171..... 102
4569177..... 83
4640261..... 57, 59
4640438..... 233, 235
4640509... 215, 219, 221, 223, 225, 227, 229, 231, 233, 235, 237, 239, 257, 259
4640605... 223, 225, 237, 239
4640647..... 257, 259
4640744.... 121, 279, 283
4640750..... 83
4640751..... 93, 102
4640858..... 211, 213
4640862.... 251, 253, 255
4640866..... 64
4640871..... 51
4640902..... 227
4640906..... 66, 269
4640907..... 64
4640908..... 64
4640921..... 65, 73
4640922..... 65, 73
4640923..... 51
4640929..... 171
4640930..... 64
4640932.... 215, 219, 221
4640937..... 51
4640939..... 275
4640999..... 257, 259
4641097..... 63, 69
4641108..... 64
4641139..... 171
4641162..... 211
4641280..... 53, 54
4641284..... 273
4641287..... 53
4641307..... 267
4641319..... 213
4641390..... 213
4641409..... 53
4641410..... 53, 54
4711400 . 51, 65, 95, 101, 135, 158, 171, 178, 182, 328
4711500 ... 53, 57, 65, 66, 83, 162, 188, 269
4711600 ... 11, 19, 57, 65, 84, 95, 102, 148, 153, 157, 162
4711700..... 102
4711800 ... 139, 148, 153, 185
4711900..... 102
4712600..... 57
4713000..... 57
4713400..... 57
4740016..... 12, 17
4740036..... 60
4740076..... 142
4740111..... 59
4740155..... 59
4740158.... 11, 15, 19, 23
4740171..... 142
4740184..... 59
4740256..... 16, 24, 29
4740274..... 83, 95, 102
4740283..... 16
4740362.... 135, 182, 188
4740393..... 31
4740397..... 90, 108, 189
4740411..... 177
4740439..... 152
4740444..... 132
4740463..... 16, 24, 29
4740542..... 15, 23
4740543..... 15
4750800..... 65
4751000 60, 90, 108, 135, 142, 178, 181
4751400..83, 84, 93, 101, 102, 132, 136, 139, 142, 148, 153, 161, 171, 172, 173, 182, 188, 205, 316, 319
4751500..51, 59, 90, 108, 142, 148, 153, 177, 205, 207
4751600....53, 54, 83, 90, 93, 100, 102, 108, 123, 125, 127, 142, 143, 148, 153, 158, 182, 188, 251
4751700.....102
4751800..51, 83, 95, 100, 125, 127, 158, 182, 185, 205
4752000.....84, 94, 100
4761000.....16, 142, 181, 189
4761400.....132
4761600.....57
4770600.....139
4791400.....94, 102
4811900.....83, 90
4831900.....96, 103
4832000.....83, 96, 103
4844790.....147, 153
4844815.....152
4844816.....152
4844817.....152
4844924.....177, 178
4844925.....177, 178
4844928.....178
4844929.....11
4844954.....178
4844955.....177, 178
4844956.....177, 178
4844958.....75
4844960.....11
4844964.....123
4844969.....161
4844972.....162
4844978.....162
4844979.....162
4844983.....157
4844984.....157
4845041.....19
4845127.....148, 153
4845163.....139
4845194.....142
4845203.....142
4845281.....57
4845283.....57
4845287.....177
4845288.....177
4845289.....177, 178
4845290.....177, 178
4845328.....177
4845395.....94, 103
4845404.....93, 103
4845414.....142
4845426.....178
4845450.....57
4845451.....57

4846005 147
4846006 152
4846081 ..... 147, 153
4846101 178
4846184 177
4846194 ..... 177, 178
4846195 ..... 177, 178
4846228 177
4846229 177
4846240 177
4846241 177
4846295 60
4846296 60
4846452 181
4846561 182
4846566 ..... 93, 103
4846573 ..... 148, 154
4846673 205
4846790 83
4846805 83
4860158 32
4891400 65
4891500 ..... 66, 269
4891600 84, 93, 101, 139, 148, 154
4891800 ... 15, 23, 31, 65, 75, 139, 148, 154, 207
4892000 ..... 16, 75
4892600 ..... 148, 154
4895000 31
4921850 329
4921927 ..... 65, 309
4921928 ..... 65, 309
4921957 310
4922482 309
4922484 290
4922493 304
4922494 305
4922498 310
4922508 ..... 306, 308
4922515 ..... 306, 307
4922637 306
4922638 306
4922639 .... 188, 290, 304
4922641 309
4922643 310
4922666 ... 132, 188, 304, 307
4922737 ..... 83, 84
4922764 310
4922810 305
4922811 305
4922890 306
4922891 305
4922892 ..... 182, 310
4922893 305
4922894 ..... 182, 310
4922895 305
4922896 306
4922921 ..... 306, 307
4922970 309
4922978 101
4923212 ..... 306, 307
4923223 306
4923224 308
4923227 ..... 306, 307
4923231 306
4932986 290
4932990 290
4932992 290
4932993 290
4933025 290
4933026 290
4933214 .... 291, 306, 307
4933215 ..... 290, 309
4933216 ..... 290, 309
4933218 290
4933219 290
4933263 291
4933290 .... 291, 306, 307
4933300 ..... 290, 309
4933307 290
4933308 ..... 290, 310
4933312 290
4933319 .... 291, 306, 307
4933330 .... 291, 306, 307
70000122 ..... 89, 107
70000123 ..... 89, 107
70000124 ..... 89, 107
70000125 ..... 89, 107
70000126 ..... 89, 107
70000127 107
70000264 104
70000579 69
70000580 69
70000582 69
70000583 69
70000781 53
70000782 37
70000794 49
70000795 49
70000800 104
70000916 103
70000934 65
70001002 95
70001017 ..... 83, 95, 102
70001119 37
70001120 85
70001248 128
70001423 96
70001498 ..... 95, 103
70001681 96
70001697 ..... 166, 169
70001742 85
70001850 103
70001941 135
70001976 ..... 69, 70, 73
70001999 163
70002000 163
70002001 157
70002002 157
70002011 162
70002012 162
70002063 54
70002064 54
7000209 77
7000214 77
7000216 37
7000217 77
70002200 103
70002212 128
70002234 ..... 95, 103
70002235 ..... 89, 107
70002239 ..... 89, 107
70002240 ..... 89, 107
7000228 77
7000229 77
7000230 77
70002373 245
70002411 96
70002412 253
7000242 77
7000246 77
7000253 77
70002530 96
7000255 77
7000256 77
7000257 77
7000258 77
7000263 77
7000269 77
7000270 77
70002724 201
70002725 201
70002726 201
70002727 201
70002728 201
70002729 201
70002730 193
70002731 193
70002732 193
70002733 193
70002734 193
70002735 193
7000281 38
70002906 193
70003001 104
70003002 104
70003003 104
70003408 54
70003483 182
70003556 95
70003784 188
70004182 83
70004738 203
70004739 203
70004740 203
70004741 203
70004742 203
70004743 203
70004744 203
70004745 203
70004746 203
70004747 203
70004748 203
70004749 203
70004750 203
70004751 203
70004752 195
70004753 195
70004754 195
70004755 195
70004756 195
70004757 195
70004758 195
70004759 195
70004760 195
70004761 195
70004762 195
70004763 195
70004764 195
70004765 195
70004766 195
70004767 195
70004768 195
70004769 195
70004770 195
70004771 195
70004772 195
70004773 195
70004774 196
70004775 196
70004862 123
70005230 203
7000625 ..... 182, 187
70006369 239
70006370 239
70006371 239
70006372 239
70006373 239
70006374 239
70006442 247
70006443 247
70006444 247
70006445 247
70006446 247
70006447 247
70006478 235
70006479 235
70006480 235
70006481 235
70006482 ..... 255, 259
70006483 ..... 255, 259
70006484 259
70006486 225
70006487 225
70006488 225
70006489 225
70006568 229
70006569 229
70006570 229
70006571 229
70006572 229
70006597 245
70006599 245
70006601 245
7000663 ..... 95, 103
70006649 231
70006650 231
70006654 255
70006655 255
70006734 231
70006735 231
70006736 231
70006774 245
70006775 245
70006776 245
70006793 253
70006813 253
70006814 253
70006815 253
70006816 253
70006817 253
70006818 253
70006819 253
70006820 253
70006821 253
7000731 31

PART NUMBER INDEX

7001433.....119
7001438.....112
7001498.....113, 119
7001625.....249
7001626.....249
7001627.....249
7001628.....249
7001629.....249
7001630.....249
7001633.....249
7001711.....35
7001909.....77
7001911.....77
7001913.....37
7001928.....77
7001931.....77
7001985.....77
7001987.....77
7001988.....77
70022564.....245
70023371.....245, 253
70023373.....253
70023915.....229
7002821.....311, 328
7002822.....329
7002823.....311, 328
7002826.....329
7002828.....311
7002840.....51, 328, 329
7003928.....191, 193
7003933.....199
7003935.....199
7003941.....199, 201
7003946.....199
7003953.....191
7003969.....199
7003972.....199, 201
7003973.....199, 201
7003976.....191
7003977.....191
7003980.....199, 201
7003982.....201
7003983.....199, 201
7003986.....199
7003989.....199, 201
7003992.....191, 199
7003993.....191, 199
7003994.....199
7004248.....63
7004275.....329
7004276.....329
7004290.....63
7005881.....79
7005882.....79
7005889.....79
7005890.....79
7005891.....79
7005892.....79
7005893.....79
7006140.....162, 322
7006151.....162
7006152.....157, 162, 163, 322
7006158.....162
7006161.....162
7007207.....118
7007208.....112, 118
7007412..... 113, 119
7007413..... 112, 118
7007414..... 112, 118
7007415..... 43
7007416..... 112
7007417..... 112, 118
7007418..... 43, 118
7007419..... 43, 112, 118
7007420..... 112
7007421..... 112
7007423..... 112, 118
7007424..... 112
7007425..... 41, 112, 118
7007426..... 41, 43
7007427..... 41, 43
7007428..... 41
7007429..... 41
7007430..... 41
7007431..... 41
7007434..... 41
7007435.43, 47, 112, 118
7007436..... 112
7007437... 41, 43, 47, 49, 112, 118
7007438... 41, 43, 47, 49, 112, 118
7007439... 41, 43, 47, 49, 112, 118
7007440..... 112
7007441..... 112, 118
7007442..... 112, 118
7007444..... 112, 118
7007445..... 112
7007446...41, 47, 49, 118
7007449..... 112
7007452..... 118
7007453..... 112, 118
7007454..... 112, 118
7007456..... 112
7007457..... 118
7007458..... 112
7007459.41, 43, 113, 119
7007463..... 113, 119
7007464..... 119
7007465..... 119
7007466..... 113, 119
7007468..... 113
7007469..... 113
7007470..... 113, 118
7007471..... 113
7007472..... 113, 119
7007474..... 113, 119
7007475..... 113, 119
7007476..... 113, 119
7007477..... 113, 119
7007478..... 113, 119
7007482..... 113
7007483..... 113
7007484..... 113, 119
7007485..... 113, 119
7007486..... 113
7007487..... 113, 119
7007488..... 113, 119
7007489..... 121
7007490..... 113
7007491..... 113
7007492..... 113
7007494..... 113, 119
7007496..... 113, 119
7007497.... 113, 119, 308
7007498.... 113, 119, 308
7007499..... 113
7007633..... 77
7010103..... 121
7010104..... 121
7010105..... 121
7010108..... 41
7010109..... 41
7010110..... 41
7010111..... 41
7010112..... 41
7010113..... 41
7010114..... 41
7010115..... 41
7010116..... 41, 119
7010117..... 41
7010118..... 41
7010119..... 41
7010120..... 113
7010121..... 113, 119
7010122..... 113
7010474..... 77
7010488..... 77
7010492..... 77
7010494..... 77
7010542..... 69, 70
7010543..... 64, 69, 70
7011043..... 64
7011044..... 64
7011048..... 64
7011062..... 64
7011063..... 63
7011064..... 63
7011065..... 63
7011066..... 63
7011112.... 216, 219, 221
7011185..... 257
7011328..... 64
7011331..... 165
7011332..... 165
7011346..... 165
7012442..... 51
7012513..... 89, 107
7012514..... 89, 107
7012518..... 64, 69
7012664 82, 93, 102, 322
7012693..... 51
7012694..... 64
7012699..... 64
7012700..... 45
7012701..... 45
7012702..... 45
7012703..... 45
7012704..... 45
7012705..... 45
7012706..... 45
7012707..... 45
7012708..... 45
7012709..... 45
7012710..... 45
7012711..... 45
7012712..... 45
7012713..... 45
7012714..... 45
7012715.....45
7012716.....45
7012768.....322
7012769.....69, 70
7012772...69, 70, 73, 322
7012773.....69, 70, 73
7012774.....70, 73
7012775.....69, 70
7012776.....73
7012799.....70
7012905.....66, 269
7012907.....64
7012914.....69, 70
7012918.....69, 70
7012941.....64
7012943.....64
7012944..64, 66, 69, 269, 322
7012953..64, 69, 73, 171, 227
7012954.....64
7012959.....64
7012961.....64, 227
7012965.....73
7012967.....69, 70
7012969.....70
7012970.....171
7012972.....66, 269
7012974.....66, 269
7012980.....51
7012987.....121
7012988.....121
7012989.....69
7012992.....51
7012993.....51
7012994.....51
7012995.....64
7012998.....69, 70, 73
7013187.....125
7013189.....128
7013711.....63
7013755.....63
7013796.....63
7013799.....63
7014676.....329
7014700.....35
7014701.....35
7014702.....35
7014706.....35
7014709.....35
7014710.....35
7014711.....35
7014712.....35
7014713.....35
7014714.....35
7014715.....35
7014716.....35
7014717.....35
7014718.....35
7014719.....35
7014720.....35
7014721.....35
7014722.....35
7014723.....35
7014724.....35
7014725.....35
7014726.....35

7014727 35
7014728 35
7014729 35
7014730 35
7014731 35
7014800 123
7014801 123
7014802 123
7014810 ..... 123, 322
7014811 123
7016206 32
7016312 ..... 65, 322
7016313 ..... 65, 322
7016314 123
7016322 139
7016328 ..... 95, 103, 324
7016331 ..... 95, 103, 324
7016342 125
7016374 139
7016380 135
7016399 ..... 178, 182
7016422 79
7016423 79
7016424 79
7016425 79
7016426 79
7016427 79
7016502 ..... 157, 322
7016510 157
7016519 162
7016521 162
7016652 ..... 177, 329
7016654 329
7016655 329
7016700 63
7016701 63
7016702 63
7016744 64
7016746 64
7016747 64
7016800 94
7016802 94
7016803 94
7016812 94
7016824 94
7017022 38
7017027 37
7017072 37
7017089 77
7017093 37
7017095 37
7017101 165
7017106 166
7017115 165
7017116 165
7017117 165
7017118 166
7017119 165
7017142 ..... 165, 166
7017156 166
7017157 166
7017158 ..... 166, 169
7017159 ..... 166, 169
7017162 ..... 165, 169
7017163 ..... 165, 169
7017164 ..... 165, 169
7017174 165
7017177 165
7017183 ..... 165, 169
7017193 ..... 165, 169
7017410 69
7017411 69
7017418 69
7017420 ..... 70, 73
7017421 73
7017422 73
7017423 70
7017427 69
7017428 ..... 69, 70
7017496 213
7018612 ..... 31, 75
7018912 ..... 69, 70, 73
7018942 73
7018945 73
7018946 73
7018948 73
7018952 70
7019103 199
7019110 199
7019111 ..... 191, 199
7019112 199
7019114 199
7019115 199
7019122 191
7019123 191
7019141 191
7019142 191
7019143 191
7019144 191
7019145 191
7019147 191
7019149 191
7019150 191
7019151 199
7019154 199
7019155 199
7019160 199
7019161 199
7019162 ..... 199, 201
7019164 ..... 199, 201
7019165 ..... 199, 201
7019166 ..... 199, 322
7019167 ..... 199, 201
7019168 199
7019171 191
7019174 191
7019177 191
7019194 ..... 199, 201
7019197 191
7019658 85, 95, 101, 123
7019680 ..... 89, 107
7020020 65
7020021 65
7020108 ..... 89, 107
7020109 ..... 89, 107
7020110 ..... 89, 107
7020111 ..... 89, 107
7020135 32
7020168 95
7020175 188
7020176 188
7020190 ..... 89, 107
7020192 ..... 89, 107
7020246 131
7020408 ..... 95, 103
7020411 ..... 95, 103
7020447 103
7020449 ..... 96, 103
7020458 ..... 95, 96, 103
7020459 104
7020460 104
7020461 ..... 95, 103
7020462 95
7020464 ..... 95, 103
7020465 ..... 95, 103
7020468 ..... 96, 103
7020471 ..... 96, 103
7020474 96
7020479 ..... 95, 103
7020480 95
7020487 ..... 95, 103
7021200 118
7021201 119
7021202 118
7021203 118
7021206 119
7021207 118
7021212 119
7021214 ..... 113, 119
7021217 119
7021218 119
7021219 119
7021220 119
7021221 119
7021222 119
7021223 118
7021232 119
7021249 ..... 47, 49
7021256 118
7021275 ..... 47, 49
7021310 70
7021625 ..... 53, 54
7021657 51
7022203 64
7022302 ..... 47, 49
7022311 ..... 47, 49
7022313 49
7022314 ..... 47, 49
7022318 47
7022320 47
7022321 47
7022326 ..... 47, 49
7022328 ..... 47, 49
7022368 ..... 47, 49
7022370 47
7022371 ..... 43, 47, 49
7022372 ..... 47, 49
7022397 54
7022399 54
7022808 ..... 191, 193
7022812 199
7022814 191
7022815 ..... 191, 193
7022816 191
7022817 191
7022818 ..... 191, 322
7022819 ..... 191, 193, 308
7022822 199
7022823 199
7022824 ..... 199, 322
7022825 308
7023038 249
7023206 65
7023910 ..... 47, 49
7023917 54
7023933 ..... 53, 54
7023935 54
7023936 54
7023964 43
7023977 118
7023979 119
7024036 45
7024100 77
7024124 37
7024125 37
7024127 37
7024129 37
7024134 38
7024398 ..... 95, 102
7024404 128
7024413 95
7024439 123
7024440 123
7024441 123
7024442 123
7024443 123
7024444 123
7024445 123
7024446 123
7024560 ..... 95, 102
7024565 ..... 96, 103
7024579 ..... 96, 104
7024598 139
7024721 38
7024722 37
7024723 38
7024724 37
7024725 37
7024726 37
7024727 37
7024728 37
7024729 37
7024730 37
7024731 37
7024732 37
7024733 37
7024734 37
7024735 37
7024736 37
7024737 38
7024738 37
7024739 37
7024740 37
7024741 37
7024742 37
7024743 37
7024744 38
7024764 38
7024765 38
7024766 38
7024800 119
7024834 43
7024835 43
7024836 43
7024837 43
7024838 43
7024839 43
7024840 43

PART NUMBER INDEX

7024841.....43
7024842.....43
7024843.....43
7024850.....53, 54
7024851.....119
7024853.....47, 49
7024861.....47
7024862.....47, 49
7024863.....47
7024864.....47
7024865.....47, 49
7024866.....47
7024867.....47, 49
7024868.....47
7024869.....47
7024871.....47, 49
7024879.....213
7024892.....54
7026189.....127
7026197.....128
7026503.....127
7026504.....128
7026505.....128
7026506.....128
7026507.....128
7026508.....128
7026509.....128
7026510..... 128
7026511..... 127
7026512..... 128
7026522..... 95
7026607..... 96, 103
7026608..... 95, 103
7026631..... 95, 103
7026800..... 85
7026801..... 85
7026802..... 85
7026803..... 85
7026804..... 85
7026805..... 85
7026806..... 85
7026807..... 85
7026809..... 85
7026810..... 85
7026811..... 85, 324
7026812..... 85
7026813..... 85
7026814..... 85
7026815..... 85
7026816..... 85
7026817..... 86
7026818..... 86
7026819..... 85
7026820..... 85
7026821..... 85
7026822..... 85
7026823..... 85
7026824..... 85
7026825..... 85
7026826..... 86
7026827..... 86
7026828..... 86
7026829..... 86
7026830..... 85, 324
7026831..... 85
7026832..... 86
7026833..... 85
7026834..... 85
7026835..... 85
7026836..... 85
7026838..... 86
7026839..... 85
7026840..... 85
7026841..... 85
7026843..... 85
7026845..... 86
7026882..... 85
7027001..... 84, 94, 100
7027002..... 84, 94, 100
7027003..... 84, 94, 100
7027004..... 84, 94, 100
7027236.....104
7027239.....104
7027241.....103
7027245.....104
7027246.....103
7027412.....83
7027419.....47, 49
7027608.....103
7027609.....103
7027610.....103
7027740.....49
7027790.....103
7027791.....103
7027792.....103
7027793.....104, 308
7027794.....104, 309
7027795.....104, 324
7027796.....104, 308
7027887.....89, 107
80934561.....128
8405009.....82
8405104.....82
85941017.....101
8896941.....328





Corporate Office
JLG Industries, Inc.
1 JLG Drive
McConnellsburg, PA 17233-9533 USA
(717) 485-5161 (Corporate)
(877) 554-5438 (Customer Support)
(717) 485-6417

Visit our website for JLG Worldwide Locations.
www.jlg.com