Illustrated Parts Manual

Models
450A
450AJ

SN 0300201991 to SN 0300272317*
SN 1300007279 to SN 1300007373
SN B300000100 to SN B300005760*
SN E300002833 to SN E300007990*

***See Revision Log Page for exceptions**

P/N
3121660

April 7, 2020 - Rev R

ANSI

AS/NZS

An Oshkosh Corporation Company

REVISION LOG

NOTE: The 450AJ may be manufactured by JLG Industries in the following countries: USA & Romania. The country of manufacture may be determined by the serial number located on the serial number nameplate. Machines manufactured in the USA will have a prefix number of 03 (i. e. 03xxxxxxxx). Machines manufactured in the China will have a prefix number 0f B3 (i.e. B3xxxxxxxx). Machines manufactured in Romania will have a prefix number of E3 (i. e. E3xxxxxxxx or 13xxxxxxxx).

NOTES:

List of SN exceptions:
0300272185-0300272190,B300005569,E300007814

Use Parts Manual 3121660 for these SNs also:
0300199221, 0300199222, 0300199223, 0300199224, 0300200428, 0300201105, 0300201106, 0300201107, 0300201108, 0300201109, 0300201481, 0300201482, 0300201528, 0300201529, 0300201575, 0300201576, 0300201577, 0300201623, 0300201624, 0300201668, 0300201811, 0300201812, 0300201813, 0300201814, 0300201858, 0300201859, 0300201860, 0300201861, 0300201862, 0300201906, 0300201907, 0300201908, 0300201909, 0300201910, 0300201954, 0300201955, 0300201956, 0300201957, 0300201958

REVISION LOG:

February 1, 2015 - A - Original Issue Of Manual (Edited to B/M 1001166193 Revision D)
May 1, 2015 - B - Revised Manual (Edited to B/M 1001166193 Revision H)
August 1, 2015 - C - Revised Manual (Edited to B/M 1001166193 Revision K) (Revision 4)
November 30, 2015 - D - Revised Manual (Edited to B/M 1001166193 Revision M) (Revision 2)
February 5, 2016 - E - Revised Manual (Edited to B/M 1001166193 Revision N) (Revision 4)
May 9, 2016 - F - Revised Manual (Edited to B/M 1001166193 Revision N) (Revision 1)
August 1, 2016 - G - Revised Manual (Edited to B/M 1001166193 Revision AB) (Revision 3)
November 7, 2016 - H - Revised Manual (Edited to B/M 1001166193 Revision AC) (Revision 2)
February 15, 2017 - I - Revised Manual (Edited to B/M 1001166193 Revision AD) (Revision 2)
May 5, 2017 - J - Revised Manual (Edited to B/M 1001166193 Revision AD) (Revision 2)
August 11, 2017 - K - Revised Manual (Edited to B/M 1001166193 Revision AK) (Revision 3)
November 10, 2017 - L - Revised Manual (Edited to B/M 1001166193 Revision AL) (Revision 2)
February 28, 2018 - M - Revised Manual (Edited to B/M 1001166193 Revision AL) (Revision 2)
May 14, 2018 - N - Revised Manual (Edited to B/M 1001166193 Revision AN)
June 8, 2018 - O - Revised Manual (Edited to B/M 1001166193 Revision AN) (Revision 1)
August 3, 2018 - P - Revised Manual (Edited to B/M 1001166193 Revision AN) (Revision 2)
November 16, 2018 - Q - Revised Manual (Edited to B/M 1001166193 Revision AW) (Revision 5)
April 7, 2020 - R - Revised Manual (Edited to B/M 1001166193 Revision AW) (Revision 5)

GENERAL INFORMATION

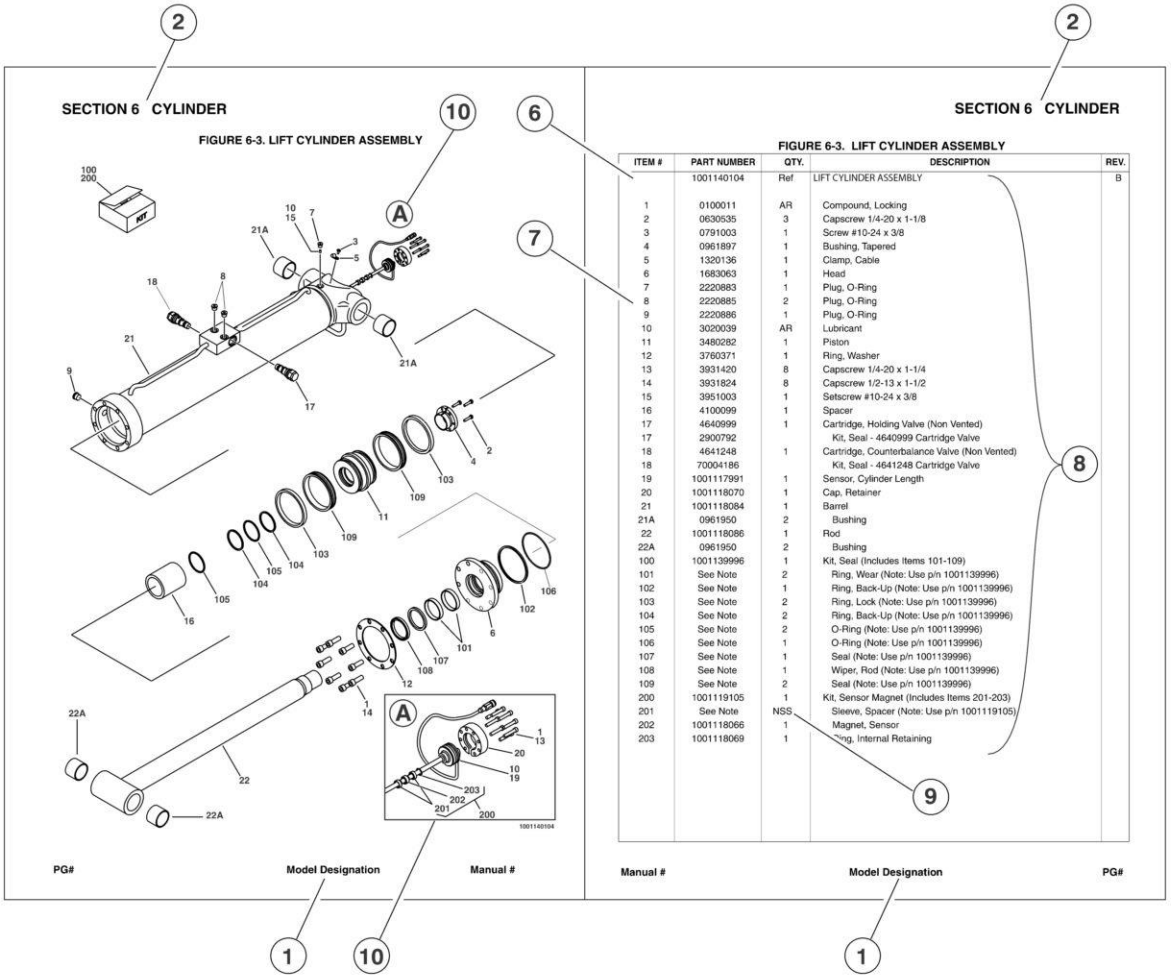

ITEM #	PART NUMBER	QTY.	DESCRIPTION	REV.
	1001140104	Ref	LIFT CYLINDER ASSEMBLY	B
1	0100011	AR	Compound, Locking	
2	0630535	3	Capscrew 1/4-20 x 1-1/8	
3	0791003	1	Screw #10-24 x 3/8	
4	0961897	1	Bushing, Tapered	
5	1320136	1	Clamp, Cable	
6	1683063	1	Head	
7	2220883	1	Plug, O-Ring	
8	2220885	2	Plug, O-Ring	
9	2220886	1	Plug, O-Ring	
10	3020039	AR	Lubricant	
11	3480282	1	Piston	
12	3760371	1	Ring, Washer	
13	3931420	8	Capscrew 1/4-20 x 1-1/4	
14	3931824	8	Capscrew 1/2-13 x 1-1/2	
15	3951003	1	Setscrew #10-24 x 3/8	
16	4100099	1	Spacer	
17	4640999	1	Cartridge, Holding Valve (Non Vented)	
17	2900792		Kit, Seal - 4640999 Cartridge Valve	
18	4641248	1	Cartridge, Counterbalance Valve (Non Vented)	
18	70004186		Kit, Seal - 4641248 Cartridge Valve	
19	1001117991	1	Sensor, Cylinder Length	
20	1001118070	1	Cap, Retainer	
21	1001118084	1	Barrel	
21A	0961950	2	Bushing	
22	1001118086	1	Rod	
22A	0961950	2	Bushing	
100	1001139996	1	Kit, Seal (Includes Items 101-109)	
101	See Note	2	Ring, Wear (Note: Use p/n 1001139996)	
102	See Note	1	Ring, Back-Up (Note: Use p/n 1001139996)	
103	See Note	2	Ring, Lock (Note: Use p/n 1001139996)	
104	See Note	2	Ring, Back-Up (Note: Use p/n 1001139996)	
105	See Note	2	O-Ring (Note: Use p/n 1001139996)	
106	See Note	1	O-Ring (Note: Use p/n 1001139996)	
107	See Note	1	Seal (Note: Use p/n 1001139996)	
108	See Note	1	Wiper, Rod (Note: Use p/n 1001139996)	
109	See Note	2	Seal (Note: Use p/n 1001139996)	
200	1001119105	1	Kit, Sensor Magnet (Includes Items 201-203)	
201	See Note	NSS	Sleeve, Spacer (Note: Use p/n 1001119105)	
202	1001118066	1	Magnet, Sensor	
203	1001118069	1	Ring, Internal Retaining	

1) MACHINE IDENTIFICATION
Machines are identified by model and in some cases a combination of models, serial number (SN) or regional standard (i.e ANSI, CE,CSA). Components may also be identified by SN or manufacturer. common components that may be identified by these characteristics are engines and hydraulic components.

2) PARTS MANUAL ORGANIZATION
Product information in this manual is organized under section titles. Frame, Cylinder, Hydraulic and Electrical are a few examples. Each section is organized by figure and page number. The information within the Figure is then organized by item number, part number, description and corresponding illustration (s).

3) TABLE OF CONTENTS
A table of contents is found toward the beginning of the manual. Figure number, description and page number are provided for quick reference to the page containing the related information.

4) RECOMMENDED SPARE PARTS
The Recommended Spare Parts, located near the end of the manual, referance most frequently used maintenance parts.

5) PART NUMBER INDEX
A numerical index listing all part numbers and the corresponding page number(s) appears at the back of the manual.

GENERAL INFORMATION

6) NON-SERVICED PARTS

In some instances, it is necessary to display non-serviced parts, assemblies or installations. In the case of assemblies and installations there will be a Ref in the Qty column. In case of parts that are not available for service within assemblies or components, there will be a NSS (Not Sold Separately) or NLA (No Longer Available) listed in the Qty. column of the manual.

7) PARTS LIST ITEM NUMBERS

Numbers shown in the item# column correspond to numbers used in the associated illustration (s). Item numbers which are missing from the sequence in the parts list are not used on that page

8) INDENTED PARTS DESCRIPTION

An indented part description is included in the item under which it is indented.

9) ABB REVIATION AND SYMBOLS

AC ..... Alternating Current
ADE. ..... .Advanced Design Electronics
ANSI ..... .American National Standards Institute
AR.. ....As Required
ASSY .... Assembly
AUX... ....A uxiliary
AWG ....American WireGauge
B/M.. ..... Bill of Material
CE.. ....European Conformity
CCW ..... .Counter Clockwise
cm. ..... Centimeter
CW ..... .Clockwise
CSA. ....Canadian Standards Association
CYL... ....Cylinder
DIA. ....Diameter
DC ..... .Direct Current
EMS ..... Emergency Stop
ENG ..... .Engine
FT(ft).. ....Feet
GA(Ga).. ..... .Gauge
HYD ..... Hydraulic
Hz.. ..... Hertz
ID.. ..... .Inside Diameter
in... ..... .inches
ISO..... ..International Organization for Standards
JIC..... ..Joint Industry Council
KG ..... .Kilogram
L.. ....Liter
LB ....Pounds
LCD .... Liquid Crystal Display
LED ..... Light Emitting Diodes
LH... ..... Left Hand
LSS ..... .Load Sensing System
M(m)... ..... Metric/Meter
MM (mm) ....Milimeter
mA. ..... Miliamps
NLA..... ....No Longer Available
NPT ..... National Pipe Threads
NSS ....Not Sold Separately
OD.. ....Outside Diameter
ORB ..... O-Ring Boss
ORFS ..... O-Ring Face Seal
OZ (oz). ..... .Ounces
PG ..... .Page
P/N. ....Part Number
qt. ....Quarts
QTY. ..... .Quantity
REF ..... .Reference
REV ....Revision Level
RH... ..... Right Hand
SAE..... ..... Society of Automotive Engineers
SN.. ....Serial Number
SPEC(S)..... ....Specifications
T/T. ....Turntable
UGM ....Universal G round Module
V. ....Volts
W... ..... Watts
#... ..... Number

10) ILLUSTRATION REFERANCE LETTERS

When necessary, illustrations may contain referance letters that are intended to track information (i. e. hoses, harnesses) from one point to another or to track visual enlargement of components to show details that may be located in another area on the illustration.

Note: Due to continuous product improvements, JLG Industries, Inc. reserves the right to make specification changes without prior notification. Contact JLG Industries, Inc. for updated information.

TABLE OF CONTENTS

SECTION 1 - FRAME 15

FIGURE 1-1. AXLE INSTALLATION 16
FIGURE 1-2. STEER INSTALLATION WITHOUT TOW PACKAGE 18
FIGURE 1-3. STEER INSTALLATION WITH TOW PACKAGE 20
FIGURE 1-4. WHEEL DRIVE INSTALLATION (2WD) 22
FIGURE 1-5. WHEEL DRIVE INSTALLATION (4WD) 24
FIGURE 1-6. HUB - SPINDLE ASSEMBLY 26
FIGURE 1-7. DRIVE HUB AND BRAKE ASSEMBLY - REAR 28
FIGURE 1-8. DRIVE HUB ASSEMBLY - FRONT 32
FIGURE 1-9. DRIVE MOTOR ASSEMBLY (2WD) 34
FIGURE 1-10. DRIVE MOTOR ASSEMBLY (4WD) 36
FIGURE 1-11. FRAME SHIELD INSTALLATION 38
FIGURE 1-12. TIRE AND WHEEL INSTALLATION - 12 X 16.5 FOAM FILLED (AVAILABLE ON ANSI, ANSI EXPORT AND CSA SPECS) 40
FIGURE 1-13. TIRE AND WHEEL INSTALLATION - 12 X 16.5 FOAM FILLED NON MARKING (AVAILABLE ON ANSI, ANSI EXPORT AND CSA SPECS) 42
FIGURE 1-14. TIRE AND WHEEL INSTALLATION - 33 X 12-20 SOLID NON-MARKING (AVAILABLE ON AUSTRALIAN AND CE SPECS) 44
FIGURE 1-15. TIRE AND WHEEL INSTALLATION - 33 X 16LL500 PNEUMATIC TURF AND SAND (AVAILABLE ON ANSI AND ANSI EXPORT SPECS) 46
FIGURE 1-16. TIRE AND WHEEL INSTALLATION - 33/1550 X 16.5 PNEUMATIC (AVAILABLE ON ANSI, ANSI EXPORT AND CSA SPECS) 48
FIGURE 1-17. TIRE AND WHEEL INSTALLATION - 33/1550 X 16.5 PNEUMATIC WITH TIRE SEALANT (AVAILABLE ON ANSI, ANSI EXPORT AND CSA SPECS) 50
FIGURE 1-18. TIRE AND WHEEL INSTALLATION - 33/1550 X 16.5 FOAM-FILLED (AVAILABLE ON ALL SPECS) 52
FIGURE 1-19. TIRE AND WHEEL INSTALLATION - 315/55 D20 FOAM FILLED (AVAILABLE ON AUSTRALIAN, CE AND CHINA SPECS) 54
FIGURE 1-20. TIRE AND WHEEL INSTALLATION - 315/55 D20 FOAM FILLED NON-MARKING (AVAILABLE ON AUSTRALIAN, CE AND CHINA SPECS) 56
FIGURE 1-21. 2WD VALVES INSTALLATION - 450A FRAME MOUNTED 58
FIGURE 1-22. 2WD VALVES INSTALLATION - 450AJ FRAME MOUNTED 60
FIGURE 1-23. 4WD VALVES INSTALLATION - 450A FRAME MOUNTED 62
FIGURE 1-24. 4WD VALVES INSTALLATION - 450AJ FRAME MOUNTED 64
FIGURE 1-25. TRACTION VALVE ASSEMBLY - 2WD 66
FIGURE 1-26. TRACTION VALVE ASSEMBLY - 4WD 68
FIGURE 1-27. TOW PACKAGE INSTALLATION (OPTIONAL) 70
FIGURE 1-28. TOW BAR ASSEMBLY 72

SECTION 2 - TURNTABLE 75

FIGURE 2-1. 2WD VALVES INSTALLATION - 450A TURNTABLE MOUNTED 76
FIGURE 2-2. 2WD VALVES INSTALLATION - 450AJ TURNTABLE MOUNTED 78
FIGURE 2-3. 4WD VALVES INSTALLATION - 450A TURNTABLE MOUNTED 80
FIGURE 2-4. 4WD VALVES INSTALLATION - 450AJ TURNTABLE MOUNTED 82
FIGURE 2-5. MAIN VALVE ASSEMBLY 84
FIGURE 2-6. AUXILIARY PUMP ASSEMBLY 86
FIGURE 2-7. SWING DRIVE AND TURNTABLE BEARING INSTALLATION 88
FIGURE 2-8. SWING MOTOR ASSEMBLY 90
FIGURE 2-9. TURNTABLE BEARING ASSEMBLY 92
FIGURE 2-10. TURNTABLE COVERS INSTALLATION 94
FIGURE 2-11. TURNTABLE LOCK INSTALLATION 96
FIGURE 2-12. TANKS INSTALLATION - DIESEL MACHINES (SN 0300201991 through 0300225480, SN E300002833 through E300004226) 98
FIGURE 2-13. TANKS INSTALLATION - DIESEL MACHINES (SN 0300225481 through 0300272317, SN 1300007279 through 1300007373, SN B300003516 through B300005760, SN E300004227 through E300007990) 100
FIGURE 2-14. TANKS INSTALLATION - GAS MACHINES (SN 0300201991 through 0300225480) 102
FIGURE 2-15. TANKS INSTALLATION - GAS MACHINES (SN 0300225481 through 0300272317) 104
FIGURE 2-16. DRIVE ORIENTATION INSTALLATION 106
FIGURE 2-17. GROUND CONTROL ASSEMBLY - 450A WITH DEUTZ/GM ENGINES (ANSI SPECS) 108
FIGURE 2-18. GROUND CONTROL ASSEMBLY - 450AJ WITH DEUTZ/GM ENGINES (ALL SPECS EXCEPT CE SPECS) 110
FIGURE 2-19. GROUND CONTROL ASSEMBLY - 450AJ WITH DEUTZ ENGINE (CE SPECS ONLY) 112
FIGURE 2-20. GROUND CONTROL ASSEMBLY - 450A WITH KUBOTA ENGINE (ANSI SPECS ONLY) 114
FIGURE 2-21. GROUND CONTROL ASSEMBLY - 450AJ WITH KUBOTA ENGINE (ANSI AND CSA SPECS ONLY) 116
FIGURE 2-22. ELECTRICAL SYSTEM INSTALLATION 118
FIGURE 2-23. BEACON LIGHT INSTALLATION - AMBER 122

TABLE OF CONTENTS

FIGURE 2-24. BEACON LIGHT INSTALLATION - BLUE (SN 0300201991 through 0300202578) 124
FIGURE 2-25. BEACON LIGHT INSTALLATION - BLUE (SN 0300202579 through 0300259091, SN 1300007279 through 1300007373, SN B300003516 through B300005760, SN E300002833 through E300007540) 126
FIGURE 2-26. BEACON LIGHT INSTALLATION - BLUE (SN 0300259092 through 0300272317, SN E300007541 through E300007990) 128
FIGURE 2-27. BEACON LIGHT INSTALLATION - RED (SN 0300214537 through 0300272317, SN 1300007279 through 1300007373, SN B300003516 through B300005760, SN E300003246 through E300007540) 130
FIGURE 2-28. BEACON LIGHT INSTALLATION - RED (SN 0300259092 through 0300272317, SN E300007541 through E300007990) 132
FIGURE 2-29. BATTERY AND CABLE INSTALLATION - USA AND CHINA BUILT MACHINES 134
FIGURE 2-30. BATTERY AND CABLE INSTALLATION - ROMANIAN BUILT MACHINES 136
FIGURE 2-31. HOODS INSTALLATION - 450A WITH DEUTZ/GM ENGINES (SN 0300201991 through 0300222765) 138
FIGURE 2-32. HOODS INSTALLATION - 450A WITH DEUTZ/GM ENGINES (SN 0300222766 through 0300272317) 142
FIGURE 2-33. HOODS INSTALLATION - 450AJ WITH DEUTZ/GM/KUBOTA ENGINES (SN 0300201991 through 0300272317, SN B300003516 through B300005760, SN E300002833 through E300006670) 146
FIGURE 2-34. HOODS INSTALLATION - 450AJ WITH DEUTZ ENGINE (SN E300006671 through E300007990) 150
FIGURE 2-35. HOODS INSTALLATION - 450A WITH KUBOTA ENGINE 154
FIGURE 2-36. HOODS INSTALLATION - 450AJ WITH KUBOTA ENGINE 158
FIGURE 2-37. HOOD ASSEMBLY - TANK SIDE (SN 0300201991 through 0300272317, SN B300003516 through B300005760, SN E300002833 through E300006670) 162
FIGURE 2-38. HOOD ASSEMBLY - TANK SIDE (SN E300006671 through E300007990) 164
FIGURE 2-39. HOOD ASSEMBLY - ENGINE SIDE (SN 0300201991 through 0300272317, SN B300003516 through B300005760, SN E300002833 through E300006670) 166
FIGURE 2-40. HOOD ASSEMBLY - ENGINE SIDE (SN E30000667 through E300007990) 168
FIGURE 2-41. COVERS INSTALLATION - COUNTERWEIGHT (450AJ) (USED ON MACHINES WITH FOAM-FILLED TIRES FOR ANSI, ANSI EXPORT, CSA AND JAPANESE SPECS) 170
FIGURE 2-42. COVERS INSTALLATION - COUNTERWEIGHT (450AJ) (USED ON MACHINES WITH PNEUMATIC TIRES FOR ANSI EXPORT, AUSTRALIAN, CE AND JAPANESE SPECS) 172
FIGURE 2-43. COVERS INSTALLATION - COUNTERWEIGHT (450AJ) (USED ON MACHINES WITH TURF AND SAND TIRES FOR ANSI AND ANSI EXPORT SPECS) 174

SECTION 3 - ENGINE 177

FIGURE 3-1. ENGINE INSTALLATION - DEUTZ D2.9L4 ENGINE (WITHOUT ARCTIC PACKAGE) (ANSI, ANSI EXPORT, CSA AND JAPANESE SPECS) 178
FIGURE 3-2. ENGINE AND PUMP SUB-ASSEMBLY - DEUTZ D2.9L4 (WITHOUT ARCTIC PACKAGE) (ANSI, ANSI EXPORT, CSA AND JAPANESE SPECS) 184
FIGURE 3-3. ENGINE ASSEMBLY - DEUTZ D2.9L4 ENGINE (WITHOUT ARCTIC PACKAGE) (ANSI, ANSI EXPORT, CSA AND JAPANESE SPECS) 186
FIGURE 3-4. ENGINE INSTALLATION - DEUTZ D2.9L4 ENGINE (WITH ARCTIC PACKAGE) (ANSI AND CSA SPECS) 192
FIGURE 3-5. ENGINE AND PUMP SUB-ASSEMBLY - DEUTZ D2.9L4 (WITH ARCTIC PACKAGE) (ANSI AND CSA SPECS) 198
FIGURE 3-6. ENGINE ASSEMBLY - DEUTZ D2.9L4 ENGINE (WITH ARCTIC PACKAGE) (ANSI AND CSA SPECS) 200
FIGURE 3-7. ENGINE INSTALLATION - DEUTZ D2.9L4 ENGINE (CHINA SPEC) 206
FIGURE 3-8. ENGINE ASSEMBLY - DEUTZ D2.9L4 ENGINE (CHINA SPEC) 212
FIGURE 3-9. BRACKET ASSEMBLY - FUEL PUMP AND FILTER (DEUTZ D2.9L4 ENGINE) 218
FIGURE 3-10. BREATHER HEATER INSTALLATION - DEUTZ D2.9L4 ENGINE WITH ARCTIC PACKAGE 220
FIGURE 3-11. ENGINE COMPONENTS - DEUTZ D2.9L4 ENGINE (ANSI AND CSA SPECS) 222
FIGURE 3-12. ENGINE COMPONENTS - DEUTZ D2.9L4 ENGINE (CHINA SPEC) 226
FIGURE 3-13. ENGINE INSTALLATION - DEUTZ D2011 ENGINE (WITHOUT ARCTIC PACKAGE) (ANSI EXPORT, AUSTRALIAN, CE AND CHINA SPECS) 230
FIGURE 3-14. ENGINE AND PUMP SUB-ASSEMBLY - DEUTZ D2011 (WITHOUT ARCTIC PACKAGE) (ANSI EXPORT, AUSTRALIAN, CE AND CHINA SPECS) 234
FIGURE 3-15. ENGINE ASSEMBLY - DEUTZ D2011 ENGINE (WITHOUT ARCTIC PACKAGE) (ANSI EXPORT, AUSTRALIAN, CE AND CHINA SPECS) 236
FIGURE 3-16. ENGINE INSTALLATION - DEUTZ D2011 ENGINE (WITH ARCTIC PACKAGE) (ANSI EXPORT AND CHINA SPECS) 240
FIGURE 3-17. ENGINE AND PUMP SUB-ASSEMBLY - DEUTZ D2011 (WITH ARCTIC PACKAGE) (ANSI EXPORT AND CHINA SPECS) 246
FIGURE 3-18. ENGINE ASSEMBLY - DEUTZ D2011 ENGINE (WITH ARCTIC PACKAGE) (ANSI EXPORT AND CHINA SPECS) 248
FIGURE 3-19. ENGINE COMPONENTS - DEUTZ D2011 252
FIGURE 3-20. ENGINE INSTALLATION - DEUTZ D2011 ENGINE (STAGE V) (WITHOUT ARCTIC PACKAGE) (CE SPECS) 256
FIGURE 3-21. ENGINE AND PUMP SUB-ASSEMBLY - DEUTZ D2011 (STAGE V) (WITHOUT ARCTIC PACKAGE) (CE SPECS) 260
FIGURE 3-22. ENGINE ASSEMBLY - DEUTZ D2011 ENGINE (STAGE V) (WITHOUT ARCTIC PACKAGE) (CE SPECS) 262
FIGURE 3-23. ENGINE COMPONENTS - DEUTZ D2011 (STAGE V) 266

FIGURE 3-24. ENGINE INSTALLATION - GM ENGINE (WITHOUT ARCTIC PACKAGE) (SN 0300201991 through 0300222052) 270
FIGURE 3-25. ENGINE INSTALLATION - GM ENGINE (WITHOUT ARCTIC PACKAGE) (SN 0300222053 through 0300272317) 276
FIGURE 3-26. ENGINE AND PUMP SUB-ASSEMBLY - GM ENGINE (WITHOUT ARCTIC PACKAGE) (SN 0300201991 through 0300222052) 282
FIGURE 3-27. ENGINE AND PUMP SUB-ASSEMBLY - GM ENGINE (WITHOUT ARCTIC PACKAGE) (SN 0300222053 through 0300272317) 284
FIGURE 3-28. ENGINE ASSEMBLY - GM ENGINE (WITHOUT ARCTIC PACKAGE) (SN 0300201991 through 0300222052). 286
FIGURE 3-29. ENGINE ASSEMBLY - GM ENGINE (WITHOUT ARCTIC PACKAGE) (SN 0300222053 through 0300272317). 290
FIGURE 3-30. ENGINE INSTALLATION - GM ENGINE (WITH ARCTIC PACKAGE) (SN 0300201991 through 0300222052) .. 294
FIGURE 3-31. ENGINE INSTALLATION - GM ENGINE (WITH ARCTIC PACKAGE) (SN 0300222053 through 0300272317) .. 300
FIGURE 3-32. ENGINE AND PUMP SUB-ASSEMBLY - GM ENGINE (WITH ARCTIC PACKAGE) (SN 0300201991 through 0300222052) 306
FIGURE 3-33. ENGINE AND PUMP SUB-ASSEMBLY - GM ENGINE (WITH ARCTIC PACKAGE) (SN 0300222053 through 0300272317) 308
FIGURE 3-34. ENGINE ASSEMBLY - GM ENGINE (WITH ARCTIC PACKAGE) (SN 0300201991 through 0300222052) 310
FIGURE 3-35. ENGINE ASSEMBLY - GM ENGINE (WITH ARCTIC PACKAGE) (SN 0300222053 through 0300272317) 314
FIGURE 3-36. PUMP COUPLING KIT – DEUTZ/GM ENGINES 318
FIGURE 3-37. ENGINE INSTALLATION - KUBOTA ENGINE (WITHOUT ARCTIC PACKAGE) (SN 0300201991 through 0300241743) 320
FIGURE 3-38. ENGINE INSTALLATION - KUBOTA ENGINE (WITHOUT ARCTIC PACKAGE) (SN 0300241744 through 0300272317) 326
FIGURE 3-39. ENGINE AND PUMP SUB-ASSEMBLY - KUBOTA ENGINE (WITHOUT ARCTIC PACKAGE) (SN 0300201991 through 0300241743) 332
FIGURE 3-40. ENGINE AND PUMP SUB-ASSEMBLY - KUBOTA ENGINE (WITHOUT ARCTIC PACKAGE) (SN 0300241744 through 0300272317) 334
FIGURE 3-41. ENGINE ASSEMBLY - KUBOTA ENGINE (WITHOUT ARCTIC PACKAGE) (SN 0300201991 through 0300241743) 336
FIGURE 3-42. ENGINE ASSEMBLY - KUBOTA ENGINE (WITHOUT ARCTIC PACKAGE) (SN 0300241744 through 0300272317) 342
FIGURE 3-43. ENGINE INSTALLATION - KUBOTA ENGINE (WITH ARCTIC PACKAGE) (SN 0300201991 through 0300241743) 348
FIGURE 3-44. ENGINE INSTALLATION - KUBOTA ENGINE (WITH ARCTIC PACKAGE) (SN 0300241744 through 0300272317) 354
FIGURE 3-45. ENGINE AND PUMP SUB-ASSEMBLY - KUBOTA ENGINE (WITH ARCTIC PACKAGE) (SN 0300201991 through 0300241743) 360
FIGURE 3-46. ENGINE AND PUMP SUB-ASSEMBLY - KUBOTA ENGINE (WITH ARCTIC PACKAGE) (SN 0300241744 through 0300272317) 362
FIGURE 3-47. ENGINE ASSEMBLY - KUBOTA ENGINE (WITH ARCTIC PACKAGE) (SN 0300201991 through 0300241743) 364
FIGURE 3-48. ENGINE ASSEMBLY - KUBOTA ENGINE (WITH ARCTIC PACKAGE) (SN 0300241744 through 0300272317) 370
FIGURE 3-49. ENGINE COMPONENTS - KUBOTA (SN 0300201991 through 0300241743) 376
FIGURE 3-50. ENGINE COMPONENTS - KUBOTA (SN 0300241744 through 0300272317) 380
FIGURE 3-51. PUMP COUPLING KIT - KUBOTA ENGINE 384
FIGURE 3-52. GEAR PUMP ASSEMBLY 386
FIGURE 3-53. PISTON PUMP ASSEMBLY 388
FIGURE 3-54. SPARK ARRESTOR INSTALLATION - DEUTZ D2.9L4 ENGINE 392
FIGURE 3-55. CATALYTIC SPARK ARRESTOR INSTALLATION - DEUTZ D2011 ENGINE 394
FIGURE 3-56. SPARK ARRESTOR INSTALLATION - DEUTZ D2011 ENGINE 396
FIGURE 3-57. SPARK ARRESTOR INSTALLATION - KUBOTA ENGINE 398
FIGURE 3-58. ENGINE BAFFLE INSTALLATION - WITH DEUTZ/GM ENGINES 400
FIGURE 3-59. ENGINE BAFFLE INSTALLATION – WITH KUBOTA ENGINE 402
FIGURE 3-60. GENERATOR INSTALLATION - 2500W/50HZ (DEUTZ D2011 ENGINE) 404
FIGURE 3-61. GENERATOR INSTALLATION - 2500W/60HZ (DEUTZ D2011 ENGINE) 408
FIGURE 3-62. GENERATOR INSTALLATION - 2500W/60HZ (DEUTZ D2.9L4 ENGINE) 412
FIGURE 3-63. GENERATOR INSTALLATION - 2500W/60HZ (GM ENGINE) 416
FIGURE 3-64. GENERATOR INSTALLATION - 2500W/60HZ (KUBOTA ENGINE) 420
FIGURE 3-65. GENERATOR INSTALLATION - 4000W/50HZ (DEUTZ D2011 ENGINE) 424
FIGURE 3-66. GENERATOR INSTALLATION - 4000W/60HZ (DEUTZ D2011 ENGINE) 428
FIGURE 3-67. GENERATOR INSTALLATION - 4000W/60HZ (DEUTZ D2.9L4 ENGINE) 432
FIGURE 3-68. GENERATOR INSTALLATION - 4000W/60HZ (GM ENGINE) 436
FIGURE 3-69. GENERATOR INSTALLATION - 7500W/50HZ (DEUTZ D2011 ENGINE) 440
FIGURE 3-70. GENERATOR INSTALLATION - 7500W/60HZ (DEUTZ D2011 ENGINE) 444
FIGURE 3-71. GENERATOR INSTALLATION - 7500W/60HZ (DEUTZ D2.9L4 ENGINE) 448
FIGURE 3-72. GENERATOR INSTALLATION - 7500W/60HZ (GM ENGINE) 452
FIGURE 3-73. GENERATOR INSTALLATION - 7500W/60HZ (KUBOTA ENGINE) 456

TABLE OF CONTENTS

SECTION 4 - BOOM 461

FIGURE 4-1. CYLINDERS INSTALLATION - 450A 462
FIGURE 4-2. CYLINDERS INSTALLATION - 450AJ (USA AND CHINA BUILT MACHINES) 464
FIGURE 4-3. CYLINDERS INSTALLATION - 450AJ (ROMANIAN BUILT MACHINES) 466
FIGURE 4-4. BOOM INSTALLATION - 450A 468
FIGURE 4-5. BOOM INSTALLATION WITH AIRLINE - 450A 470
FIGURE 4-6. BOOM INSTALLATION WITH SKYPOWER AND AIRLINE - 450A 472
FIGURE 4-7. BOOM INSTALLATION WITH SKYPOWER - 450A 474
FIGURE 4-8. BOOM INSTALLATION KIT - 450A 476
FIGURE 4-9. BOOM INSTALLATION - 450AJ USA AND CHINA BUILT MACHINES 478
FIGURE 4-10. BOOM INSTALLATION - 450AJ ROMANIAN BUILT MACHINES 480
FIGURE 4-11. JIB INSTALLATION - USA AND CHINA BUILT MACHINES 482
FIGURE 4-12. JIB INSTALLATION - ROMANIAN BUILT MACHINES 484
FIGURE 4-13. MAIN BOOM ASSEMBLY - 450A 486
FIGURE 4-14. MAIN BOOM ASSEMBLY - 450AJ 488
FIGURE 4-15. TOWER BOOM ASSEMBLY - 450A 490
FIGURE 4-16. TOWER BOOM ASSEMBLY - 450AJ USA AND CHINA BUILT MACHINES 492
FIGURE 4-17. TOWER BOOM ASSEMBLY - 450AJ ROMANIAN BUILT MACHINES 494
FIGURE 4-18. ROTATOR ASSEMBLY (SN 0300201991 through 0300232742, SN E300002833 through E300004880) 496
FIGURE 4-19. ROTATOR ASSEMBLY (SN 0300232743 through 0300272317, SN B300003516 through B300005760, SN E300004881 through E300007990, SN 1300007279 through 1300007373) 498
FIGURE 4-20. PLATFORM SUPPORT INSTALLATION - WITHOUT LSS 500
FIGURE 4-21. PLATFORM SUPPORT INSTALLATION - WITH 4 CELL LSS (450AJ ONLY) (SN 0300201991 through 0300202578) 502
FIGURE 4-22. PLATFORM SUPPORT INSTALLATION WITH 4 CELL LSS (450AJ ONLY) (SN 0300202579 through 0300272317, SN E300002833 through E300007990, SN 1300007279 through 1300007373) 506
FIGURE 4-23. PLATFORM SUPPORT INSTALLATION - WITH 1 CELL LSS 508
FIGURE 4-24. 2WD VALVES INSTALLATION - 450A BOOM MOUNTED 512
FIGURE 4-25. 2WD VALVES INSTALLATION - 450AJ BOOM MOUNTED 514
FIGURE 4-26. 4WD VALVES INSTALLATION - 450A BOOM MOUNTED 516
FIGURE 4-27. 4WD VALVES INSTALLATION - 450AJ BOOM MOUNTED 518
FIGURE 4-28. UPRIGHT VALVE ASSEMBLY 520
FIGURE 4-29. BOOM VALVE ASSEMBLY - 450A 522
FIGURE 4-30. BOOM VALVE ASSEMBLY - 450AJ 524

SECTION 5 - PLATFORM 527

FIGURE 5-1. PLATFORM ASSEMBLY - 30IN X 4FT (76CM X 1.22M) - SIDE GATE ENTRY (USA BUILT MACHINES) 528
FIGURE 5-2. PLATFORM ASSEMBLY - 30IN X 5FT (76CM X 1.52M) - SIDE GATE ENTRY (USA AND CHINA BUILT MACHINES) 530
FIGURE 5-3. PLATFORM ASSEMBLY - 30IN X 6FT (76CM X 1.83M) - SIDE GATE ENTRY (USA AND CHINA BUILT MACHINES) 532
FIGURE 5-4. PLATFORM ASSEMBLY - 30IN X 4FT (76CM X 1.22M) - SIDE GATE ENTRY (ROMANIAN BUILT MACHINES) 534
FIGURE 5-5. PLATFORM ASSEMBLY - 30IN X 5FT (76CM X 1.52M) - SIDE GATE ENTRY (ROMANIAN BUILT MACHINES) 536
FIGURE 5-6. PLATFORM ASSEMBLY - 30IN X 6FT (76CM X 1.83M) - SIDE GATE ENTRY (ROMANIAN BUILT MACHINES) 538
FIGURE 5-7. PLATFORM ASSEMBLY - 30IN X 3FT (76CM X .91M) - DROP BAR ENTRY (USA BUILT MACHINES) 540
FIGURE 5-8. PLATFORM ASSEMBLY - 30IN X 4FT (76CM X 1.22M) - WITH DROP BAR (USA BUILT MACHINES) 542
FIGURE 5-9. PLATFORM ASSEMBLY - 30IN X 5FT (76CM X 1.52M) - WITH DROP BAR (USA AND CHINA BUILT MACHINES) 544
FIGURE 5-10. PLATFORM ASSEMBLY - 30IN X 6FT (76CM X 1.83M) - WITH DROP BAR (USA AND CHINA BUILT MACHINES) 546
FIGURE 5-11. PLATFORM ASSEMBLY - 30IN X 3FT (76CM X .91M) - DROP BAR ENTRY (ROMANIAN BUILT MACHINES) 548
FIGURE 5-12. PLATFORM ASSEMBLY - 30IN X 4FT (76CM X 1.22M) - WITH DROP BAR (ROMANIAN BUILT MACHINES) 550
FIGURE 5-13. PLATFORM ASSEMBLY - 30IN X 5FT (76CM X 1.52M) - WITH DROP BAR (ROMANIAN BUILT MACHINES) 552
FIGURE 5-14. PLATFORM ASSEMBLY - 30IN X 6FT (76CM X 1.83M) - WITH DROP BAR (ROMANIAN BUILT MACHINES) 554
FIGURE 5-15. PLATFORM ASSEMBLY - 30IN X 5FT (76CM X 1.52M - FALL ARREST (ANSI, ANSI EXPORT AND CSA SPECS) 556
FIGURE 5-16. CONSOLE BOX INSTALLATION - 450A WITHOUT SKYGUARD (SN 0300201991 through 0300226169) 558
FIGURE 5-17. CONSOLE BOX INSTALLATION - 450AJ WITHOUT SKYGUARD (SN 0300201991 through 0300226169) 560
FIGURE 5-18. CONSOLE BOX INSTALLATION - 450A WITH SKYGUARD (SN 0300201991 through 0300259091) 562
FIGURE 5-19. CONSOLE BOX INSTALLATION - 450A WITH SKYGUARD (SN 0300259092 through 0300272317) 564
FIGURE 5-20. CONSOLE BOX INSTALLATION - 450AJ WITH SKYGUARD (SN 0300201991 through 0300259091, SN B300003516 through B300005760, SN E300002833 through E300007540, SN 1300007279 through 1300007373) 566
FIGURE 5-21. CONSOLE BOX INSTALLATION - 450AJ WITH SKYGUARD (SN 0300259092 through 0300272317, SN E300007541 through E300007990) 568

FIGURE 5-22. PLATFORM CONSOLE BOX ASSEMBLY - 450A WITHOUT SKYGUARD (SN 0300201991 through 0300226169) 570
FIGURE 5-23. PLATFORM CONSOLE BOX ASSEMBLY - 450AJ WITHOUT SKYGUARD (SN 0300201991 through 0300219950) 574
FIGURE 5-24. PLATFORM CONSOLE BOX ASSEMBLY - 450AJ WITHOUT SKYGUARD (SN 0300219951 through 0300226169) 578
FIGURE 5-25. PLATFORM CONSOLE BOX ASSEMBLY - 450A WITH SKYGUARD (SN 0300201991 through 0300259091) . 582
FIGURE 5-26. PLATFORM CONSOLE BOX ASSEMBLY - 450A WITH SKYGUARD (SN 0300259092 through 0300272317) . 586
FIGURE 5-27. PLATFORM CONSOLE BOX ASSEMBLY - 450AJ WITH SKYGUARD (SN 0300201991 through 0300219950, SN E300002833 through E300003608) 590
FIGURE 5-28. PLATFORM CONSOLE BOX ASSEMBLY - 450AJ WITH SKYGUARD (SN 0300219951 through 0300259091, SN B300003516 through B300005760, SN E300003609 through E300007540, SN 1300007279 through 1300007373) 594
FIGURE 5-29. PLATFORM CONSOLE BOX ASSEMBLY - 450AJ WITH SKYGUARD (SN 0300259091 through 0300272317, SN E300007541 through E300007990) 598
FIGURE 5-30. CONTROLLER ASSEMBLY - DRIVE AND STEER 602
FIGURE 5-31. CONTROLLER ASSEMBLY - LIFT AND SWING 604
FIGURE 5-32. FOOTSWITCH ASSEMBLY 608
FIGURE 5-33. TRAY ASSEMBLY 610
FIGURE 5-34. SOFT TOUCH INSTALLATION - 6FT/1.8M PLATFORM (ANSI, ANSI EXPORT AND CSA SPECS) (SN 0300201991 through 0300211852) 612
FIGURE 5-35. SOFT TOUCH INSTALLATION - 6FT/1.8M PLATFORM (ANSI, ANSI EXPORT, CHINA, CSA AND JAPANESE SPECS) (SN 0300211853 through 0300272317, SN B300003516 through B300005760) 614
FIGURE 5-36. SOFT TOUCH INSTALLATION - 5FT/1.52M PLATFORM WITH FALL ARREST (ANSI, ANSI EXPORT AND CSA SPECS) (SN 0300201991 through 0300211852) 616
FIGURE 5-37. SOFT TOUCH INSTALLATION - 5FT/1.52M PLATFORM WITH FALL ARREST (ANSI, ANSI EXPORT, CHINA, CSA AND JAPANESE SPECS) (SN 0300211853 through 0300272317, SN B300003516 through B300005760) 618
FIGURE 5-38. SKYEYE INSTALLATION 620
FIGURE 5-39. SKYGUARD SYSTEM INSTALLATION (SN 0300201991 through 0300259091, SN B300003516 through B300005760, SN E300002833 through E300007540, SN 1300007279 through 1300007373) 622
FIGURE 5-40. SKYGUARD BAR INSTALLATION (SN 0300259092 through 0300272317, SN E300007541 through E300007990) 624
FIGURE 5-41. SKYLINE INSTALLATION 626
FIGURE 5-42. CROSS RAIL INSTALLATION 628
FIGURE 5-43. SKYGLAZIER INSTALLATION 630
FIGURE 5-44. SKYGLAZIER INSTALLATION 632
FIGURE 5-45. SKYWELDER INSTALLATION (50HZ) 634
FIGURE 5-46. SKYWELDER INSTALLATION (60HZ) 636
FIGURE 5-47. SKYWELDER PREP PACKAGE INSTALLATION 638
FIGURE 5-48. WELDER ASSEMBLY 640
FIGURE 5-49. PIPE RACK INSTALLATION (ALL SPECS EXCEPT AUSTRALIAN SPECS) 642
FIGURE 5-50. PIPE RACK INSTALLATION (AUSTRALIAN SPEC) 644

SECTION 6 - CYLINDER 647

FIGURE 6-1. AXLE LOCKOUT CYLINDER ASSEMBLY 648
FIGURE 6-2. LEVEL (PLATFORM SLAVE) CYLINDER ASSEMBLY 650
FIGURE 6-3. LIFT CYLINDER ASSEMBLY - JIB 652
FIGURE 6-4. LIFT CYLINDER ASSEMBLY - 450A MAIN BOOM (SN 0300201991 through 0300235624) 654
FIGURE 6-5. LIFT CYLINDER ASSEMBLY - 450A MAIN BOOM (SN 0300235625 through 0300272317) 656
FIGURE 6-6. LIFT CYLINDER ASSEMBLY - 450AJ MAIN BOOM (USA BUILT MACHINES) (SN 0300201991 through 0300229340) 658
FIGURE 6-7. LIFT CYLINDER ASSEMBLY - 450AJ MAIN BOOM (USA BUILT MACHINES) (SN 0300226835 through 0300234431) 660
FIGURE 6-8. LIFT CYLINDER ASSEMBLY - 450AJ MAIN BOOM (ROMANIAN BUILT MACHINES) (SN E300002833 through E300004190) 662
FIGURE 6-9. LIFT CYLINDER ASSEMBLY - 450AJ MAIN BOOM (SN 0300234432 through 0300272317, SN B300003516 through B300005760, SN E300004191 through E300007990, SN 1300007279 through 1300007373) 664
FIGURE 6-10. LIFT CYLINDER ASSEMBLY - TOWER BOOM 666
FIGURE 6-11. MASTER CYLINDER ASSEMBLY 668
FIGURE 6-12. STEER CYLINDER ASSEMBLY 670
FIGURE 6-13. TELESCOPE CYLINDER ASSEMBLY - 450A 672
FIGURE 6-14. TELESCOPE CYLINDER ASSEMBLY - 450AJ (USA BUILT MACHINES) (SN 0300201991 through 0300234431) 674
FIGURE 6-15. TELESCOPE CYLINDER ASSEMBLY - 450AJ (SN 0300234432 through 0300272317, SN B300003516 through B300005760, SN E300002833 through E300007990, SN 1300007279 through 1300007373) 676

SECTION 7 - HYDRAULIC 679

TABLE OF CONTENTS

FIGURE 7-1. 2WD HYDRAULIC SYSTEM INSTALLATION - 450A 680
FIGURE 7-2. 2WD HYDRAULIC SYSTEM INSTALLATION - 450AJ 686
FIGURE 7-3. 4WD HYDRAULIC SYSTEM INSTALLATION - 450A 692
FIGURE 7-4. 4WD HYDRAULIC SYSTEM INSTALLATION - 450AJ (SN 0300201991 through 0300225480, SN E300002833 through E300004226) 698
FIGURE 7-5. 4WD HYDRAULIC SYSTEM INSTALLATION - 450AJ (SN 0300225481 through 0300272317, SN B300003516 through B300005760, SN E300004227 through E300007990, SN 1300007279 through 1300007373) 704
FIGURE 7-6. HYDRAULIC DIAGRAM LIST 710

SECTION 8 - ELECTRICAL 711

FIGURE 8-1. ELECTRICAL DIAGRAM LIST 712
FIGURE 8-2. AC BOX AT PLATFORM - LOCALLY SUPPLIED COMPONENTS FOR ANSI EXPORT, AUSTRALIAN AND CE SPECS (SN 0300201991 through 0300220578, SN E300002833 through E300003512) 714
FIGURE 8-3. AC BOX AT PLATFORM INSTALLATION - 110V - ANSI, ANSI EXPORT AND CSA SPECS (SN 0300201991 through 0300220578) 716
FIGURE 8-4. AC BOX AT PLATFORM INSTALLATION - 110V - ANSI, ANSI EXPORT, CHINA, CSA AND JAPANESE SPECS (SN 0300220579 through 0300272317, SN B300003516 through B300005760) 718
FIGURE 8-5. AC BOX AT PLATFORM INSTALLATION - 110V IEC YELLOW (CE SPEC) (SN 0300201991 through 0300220578, SN E300002833 through E300003512) 720
FIGURE 8-6. AC BOX AT PLATFORM INSTALLATION - 110V IEC 60309 YELLOW WITHOUT 2500W GENERATOR (CE SPECS) (SN 0300220579 through 0300272317, SN E300003513 through E300007990, SN 1300007279 through 1300007373) 722
FIGURE 8-7. AC BOX AT PLATFORM INSTALLATION - 220V - ANSI, ANSI EXPORT AND CSA SPECS (SN 0300201991 through 0300220578) 724
FIGURE 8-8. AC BOX AT PLATFORM INSTALLATION - 220V IEC BLUE (CE SPEC) (SN 0300201991 through 0300220578, SN E300002833 through E300003512) 726
FIGURE 8-9. AC BOX AT PLATFORM INSTALLATION - 220V IEC 60309 BLUE WITHOUT 2500W GENERATOR (CE SPECS) (SN 0300220579 through 0300272317, SN E300003513 through E300007990, SN 1300007279 through 1300007373) 728
FIGURE 8-10. AC BOX AT PLATFORM INSTALLATION - 220V CEE7 POST GROUND WITH 70MM X 70MM BOX (CE SPEC) (SN 0300201991 through 0300210158, SN E300002833 through E300002763) 730
FIGURE 8-11. AC BOX AT PLATFORM INSTALLATION - 220V CEE7 SIDE GROUND WITH 70MM X 70MM BOX (CE SPEC) (SN 0300201991 through 0300210158, SN E300002833 through E300002763) 732
FIGURE 8-12. AC BOX AT PLATFORM INSTALLATION - 220V CEE7 POST GROUND WITH 2IN X 4IN BOX (CE SPEC) (SN 0300201991 through 0300210158, SN E300002833 through E300002763) 734
FIGURE 8-13. AC BOX AT PLATFORM INSTALLATION - 220V CEE7 POST GROUND WITH 2IN X 4IN BOX (CE SPEC) (SN 0300210159 through 0300220578, SN E300002764 through E300003512) 736
FIGURE 8-14. AC BOX AT PLATFORM INSTALLATION - 220V CEE7 POST GROUND (2X4 BOX) WITHOUT 2500W GENERATOR (CE SPECS) (SN 0300220579 through 0300272317, SN E300003513 through E300007990, SN 1300007279 through 1300007373) 738
FIGURE 8-15. AC BOX AT PLATFORM INSTALLATION - 220V CEE7 SIDE GROUND WITH 2IN X 4IN BOX (CE SPEC) (SN 0300201991 through 0300210158, SN E300002833 through E300002763) 740
FIGURE 8-16. AC BOX AT PLATFORM INSTALLATION - 220V CEE7 SIDE GROUND WITH 2IN X 4IN BOX (CE SPEC) (SN 0300210159 through 0300220578, SN E300002764 through E300003512) 742
FIGURE 8-17. AC BOX AT PLATFORM INSTALLATION - 220V CEE7 SIDE GROUND (2X4 BOX) WITHOUT 2500W GENERATOR (CE SPECS) (SN 0300220579 through 0300272317, SN E300003513 through E300007990, SN 1300007279 through 1300007373) 744
FIGURE 8-18. AC BOX AT PLATFORM INSTALLATION - 220V AFSINT 107 KEYED GROUND WITH 2IN X 4IN BOX (CE SPEC) (SN 0300201991 through 0300220578, SN E300002833 through E300003512) 746
FIGURE 8-19. AC BOX AT PLATFORM INSTALLATION - 220V AFSINT 107 KEYED GROUND (2X4 BOX) WITHOUT 2500W GENERATOR (CE SPECS) (SN 0300220579 through 0300272317, SN E300003513 through E300007990, SN 1300007279 through 1300007373) 748
FIGURE 8-20. AC BOX AT PLATFORM INSTALLATION - 220V CUSTOMER SUPPLIED COMPONENTS (ANSI EXPORT, CE AND CHINA SPECS) 750
FIGURE 8-21. AC CABLE INSTALLATION - WITH TWO BREAKERS (CE SPECS) (SN 0300220579 through 0300272317, SN E300003513 through E300007990, SN 1300007279 through 1300007373) 752
FIGURE 8-22. AC CABLE INSTALLATION - WITH THREE BREAKERS (CE SPECS) (SN 0300220579 through 0300272317, SN E300003513 through E300007990, SN 1300007279 through 1300007373) 754
FIGURE 8-23. BATTERY DISCONNECT SWITCH 756
FIGURE 8-24. BEACON LIGHT HARNESS (BLUE BEACON ONLY) (SN 0300201991 through 0300202578) 758
FIGURE 8-25. BEACON LIGHT HARNESS (BLUE BEACON ONLY) (SN 0300202579 through 0300272317, SN B300003516 through B300005760, SN E300002833 through E300007990, SN 1300007279 through 1300007373) 760
FIGURE 8-26. BEACON EXTENSION HARNESS (SN 0300202579 through 0300221757, SN E300002833 through E300003881) 762
FIGURE 8-27. BOOM CABLES AND CLAMPS INSTALLATION - 450A (WITHOUT ARCTIC PACKAGE) 764
FIGURE 8-28. BOOM CABLES AND CLAMPS INSTALLATION - 450AJ (WITHOUT ARCTIC PACKAGE) 768
FIGURE 8-29. BOOM CABLES AND CLAMPS INSTALLATION - 450A (WITH ARCTIC PACKAGE) 772

FIGURE 8-30. BOOM CABLES AND CLAMPS INSTALLATION - 450AJ (WITH ARCTIC PACKAGE) 776
FIGURE 8-31. BOOM HARNESS - 450A (MAIN BOOM) (WITHOUT ARCTIC PACKAGE) 780
FIGURE 8-32. BOOM HARNESS - 450AJ (MAIN BOOM) (WITHOUT ARCTIC PACKAGE) 782
FIGURE 8-33. BOOM HARNESS - 450A (MAIN BOOM) (WITH ARCTIC PACKAGE) 784
FIGURE 8-34. BOOM HARNESS - 450AJ (MAIN BOOM) (WITH ARCTIC PACKAGE) 786
FIGURE 8-35. BOOM HARNESS - 450A (MAIN BOOM AC CABLE) (WITHOUT ARCTIC PACKAGE) 788
FIGURE 8-36. BOOM HARNESS - 450AJ (MAIN BOOM AC CABLE) (WITHOUT ARCTIC PACKAGE) 790
FIGURE 8-37. BOOM HARNESS - 450A (MAIN BOOM AC CABLE) (WITH ARCTIC PACKAGE) 792
FIGURE 8-38. BOOM HARNESS - 450AJ (MAIN BOOM AC CABLE) (WITH ARCTIC PACKAGE) 794
FIGURE 8-39. BOOM HARNESS - TOWER BOOM (WITHOUT ARCTIC PACKAGE) 796
FIGURE 8-40. BOOM HARNESS - TOWER BOOM (WITH ARCTIC PACKAGE) 798
FIGURE 8-41. BOOM HARNESS - TOWER BOOM AC CABLE (WITHOUT ARCTIC PACKAGE) 800
FIGURE 8-42. BOOM HARNESS - TOWER BOOM AC CABLE (WITH ARCTIC PACKAGE) 802
FIGURE 8-43. BOOM VALVE HARNESS 804
FIGURE 8-44. BREAKER BOX KIT WITH TWO BREAKERS - CE SPEC 806
FIGURE 8-45. BREAKER BOX KIT WITH THREE BREAKERS - CE SPEC 808
FIGURE 8-46. BREAKER BOX KIT - 30MA/16 AMP 810
FIGURE 8-47. CHASSIS SOLENOID HARNESS 812
FIGURE 8-48. ENGINE HARNESS - DEUTZ D2011 814
FIGURE 8-49. ENGINE HARNESS - DEUTZ D2.9L4 816
FIGURE 8-50. ENGINE HARNESS - GM 820
FIGURE 8-51. ENGINE HARNESS - KUBOTA 822
FIGURE 8-52. FUEL HARNESS - DEUTZ D2.9L4 ENGINE 824
FIGURE 8-53. GENERATOR HARNESS - 2500W GENERATOR (60HZ) 826
FIGURE 8-54. GENERATOR HARNESS - 2500W GENERATOR (50HZ) 828
FIGURE 8-55. GENERATOR HARNESS - 4000W GENERATOR 830
FIGURE 8-56. GENERATOR ON/OFF SWITCH HARNESS 832
FIGURE 8-57. GROUND CONTROL PANEL HARNESS 834
FIGURE 8-58. KUBOTA D/F POWER HARNESS 836
FIGURE 8-59. LSS HARNESS 838
FIGURE 8-60. PLATFORM CONSOLE BOX HARNESS (SN 0300201991 through 0300259091, SN B300003516 through B300005760, SN E300002833 through E300007540, SN 1300007279 through 1300007373) 840
FIGURE 8-61. PLATFORM CONSOLE BOX HARNESS (SN 0300259091 through 0300272317, SN E300007541 through E300007990) 844
FIGURE 8-62. PLATFORM INTERFACE HARNESS 846
FIGURE 8-63. RECEPTACLE BOX KIT - 110V IEC YELLOW (CE SPEC) 848
FIGURE 8-64. RECEPTACLE BOX KIT - 220V IEC BLUE (CE SPEC) 850
FIGURE 8-65. RECEPTACLE BOX KIT - 220V CEE7 POST GROUND 2IN X 4IN BOX (CE SPEC) 852
FIGURE 8-66. RECEPTACLE BOX KIT - 220V CEE7 SIDE GROUND 2IN X 4IN BOX (CE SPEC) 854
FIGURE 8-67. RECEPTACLE BOX KIT - 220V CEE7 POST GROUND 70MM X 70MM BOX (CE SPEC) 856
FIGURE 8-68. RECEPTACLE BOX KIT - 220V CEE7 SIDE GROUND 70MM X 70MM BOX (CE SPEC) 858
FIGURE 8-69. RECEPTACLE BOX KIT - 220V AFSINT 107 (CE SPEC) 860
FIGURE 8-70. SKYEYE INTERMEDIATE HARNESS 862
FIGURE 8-71. SKYEYE RECEIVER HARNESS 864
FIGURE 8-72. SKYEYE EMITTER HARNESS 866
FIGURE 8-73. SKYLINE HARNESS 868
FIGURE 8-74. SKYGUARD HARNESS 870
FIGURE 8-75. TURNTABLE HARNESS 872
FIGURE 8-76. VALVE HARNESS - MAIN VALVE 876
FIGURE 8-77. VALVE HARNESS - PLATFORM VALVE 878

SECTION 9 - DECAL 881

FIGURE 9-1. DECAL INSTALLATION - ANSI, ANSI EXPORT AND CHINA SPECS (ENGLISH) 882
FIGURE 9-2. DECAL INSTALLATION - WITH KUBOTA ENGINE (ANSI SPECS) (ENGLISH) 886
FIGURE 9-3. DECAL INSTALLATION - AUSTRALIAN SPEC (ENGLISH) 888
FIGURE 9-4. DECAL INSTALLATION - BRAZIL SPEC (ENGLISH) 890
FIGURE 9-5. DECAL INSTALLATION - CE SPEC (ENGLISH) 892
FIGURE 9-6. DECAL INSTALLATION - CSA SPEC (FRENCH/ENGLISH) 894
FIGURE 9-7. DECAL INSTALLATION - WITH KUBOTA ENGINE (CSA SPEC) (FRENCH/ENGLISH) 896
FIGURE 9-8. DECAL INSTALLATION - CHINESE SPEC (CHINESE/ENGLISH) 898
FIGURE 9-9. DECAL INSTALLATION - JAPANESE SPEC (JAPANESE/ENGLISH) 900
FIGURE 9-10. DECAL INSTALLATION - KOREAN SPEC (KOREAN/ENGLISH) 902
FIGURE 9-11. DECAL INSTALLATION - LATIN AMERICA SPEC (SPANISH/ENGLISH) 904
FIGURE 9-12. DECAL INSTALLATION - OPTIONS 906
FIGURE 9-13. TOW BAR DECAL INSTALLATION - ENGLISH LANGUAGE (ANSI, ANSI EXPORT, CE, CHINA AND JAPANESE SPECS) 908

TABLE OF CONTENTS

FIGURE 9-14. TOW BAR DECAL INSTALLATION - ENGLISH/SPANISH LANGUAGE (ANSI EXPORT, CE AND CHINA SPECS) 910
FIGURE 9-15. TOW BAR DECAL INSTALLATION - SPANISH LANGUAGE (ANSI EXPORT AND CE SPECS) 912

SECTION 10 - RECOMMENDED SERVICE PARTS STOCK 915

FIGURE 10-1. RECOMMENDED SERVICE PARTS STOCK 916

SECTION 11 - SPECIAL OPTIONS 919

FIGURE 11-1. SPECIAL OPTIONS 920

PART NUMBER INDEX 925

SECTION 1 - FRAME

FIGURE 1-1. AXLE INSTALLATION

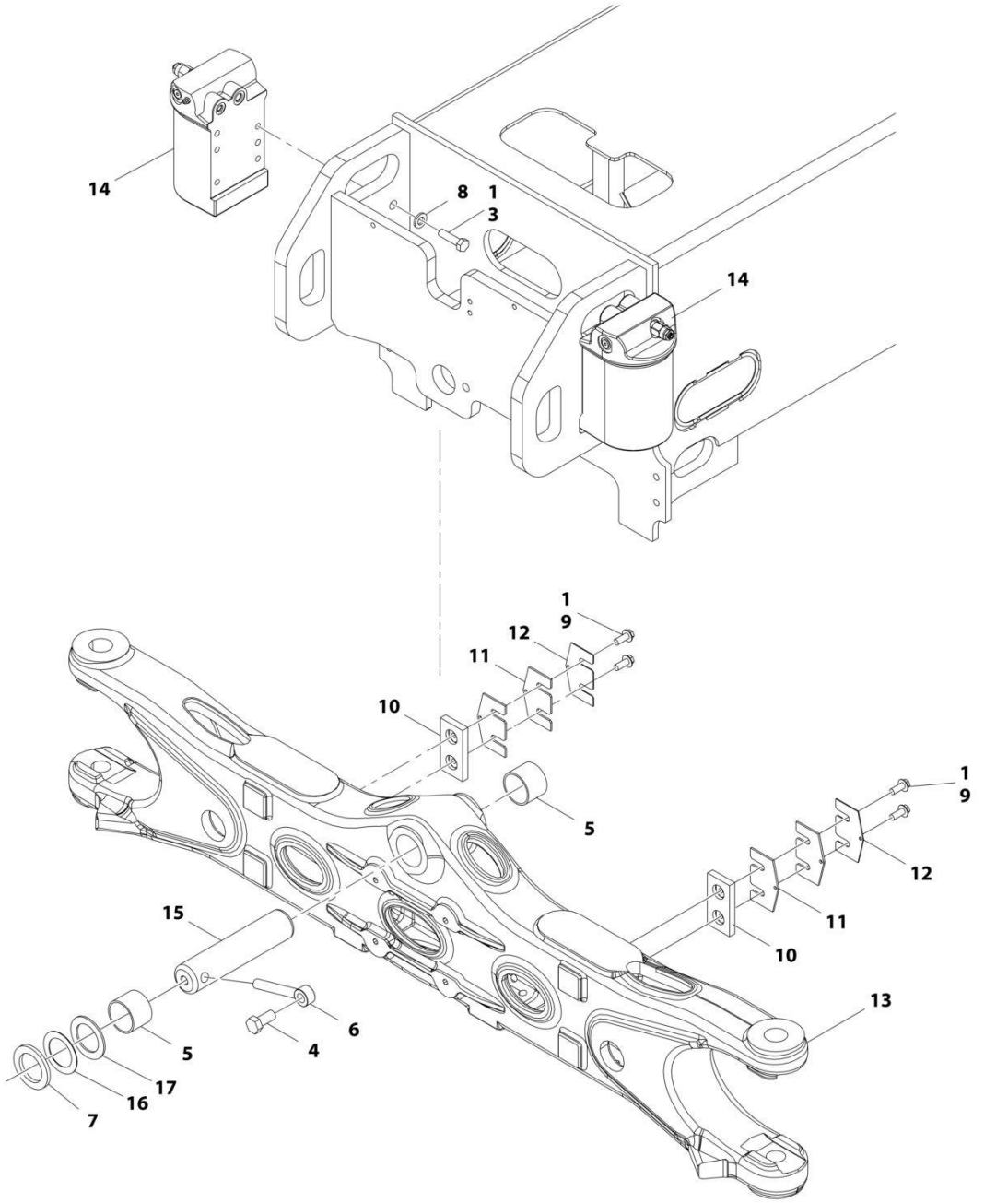

FIGURE 1-1. AXLE INSTALLATION

ITEM	PART NUMBER	QTY	DESCRIPTION	REV
	1001164093	Ref	AXLE INSTALLATION	C
1	0100011	AR	Compound, Locking	
3	0701217	8	Bolt M12 x 45	
4	0761615	1	Bolt M16 x 35	
5	0961950	2	Bearing	
6	3841258	1	Keeper, Pin	
7	4740158	AR	Washer	
8	5241200	8	Washer M12	
9	5251012	4	Bolt M10 x 25	
10	1001118511	2	Pad, Wear	
11	1001118518	4	Shim 11Ga	
12	1001118519	2	Shim 16Ga	
13	1001162995	1	Axle	
14	1001163580	2	Axle Lockout Cylinder Assembly (See CYLINDER SECTION for Breakdown)	
15	1001164552	1	Pin	
16	4071101	AR	Shim **(SN 0300236979 through 0300272317, SN B300003516 through B300005760, SN E300004913 through E300007990, Except SN 0300272185 through 0300272190, Excluding B300005569 and E300007814)**	
17	4740229	AR	Washer **(SN 0300236979 through 0300272317, SN B300003516 through B300005760, SN E300004913 through E300007990, Except SN 0300272185 through 0300272190, Excluding B300005569 and E300007814)**	

FIGURE 1-2. STEER INSTALLATION WITHOUT TOW PACKAGE

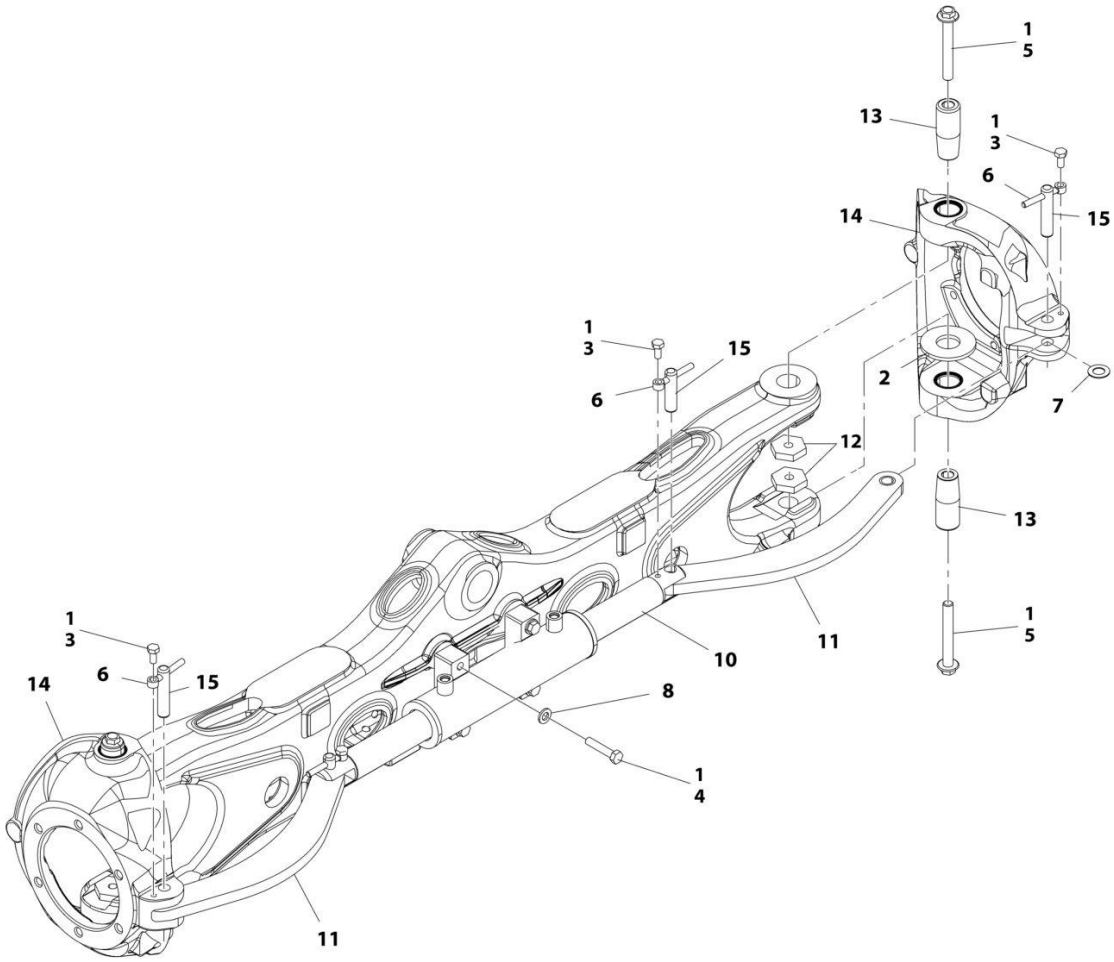

FIGURE 1-2. STEER INSTALLATION WITHOUT TOW PACKAGE

ITEM	PART NUMBER	QTY	DESCRIPTION	REV
	1001164092	Ref	STEER INSTALLATION WITHOUT TOW PACKAGE	F
1	0100011	AR	Compound, Locking	
2	0440271	2	Bearing, Thrust **(SN 0300201991 through 0300241084, SN 1300007279 through 1300007373, SN E300002833 through E300005304)**	
2	1001233139	2	Bearing, Thrust **(SN 0300241085 through 0300272317, SN B300003516 through B300005760, SN E300005305 through E300007990, Except SN 0300272185 through 0300272190, Excluding B300005569 and E300007814)**	
3	0761011	4	Bolt M10 x 22	
4	0711220	4	Bolt M12 x 60 Grade 10.9	
5	1001190368	4	Bolt M16 x 120	
6	3841143	4	Keeper, Pin	
7	4740086	4	Washer	
8	5241200	4	Washer M12	
10	1001163178	1	Steer Cylinder Assembly (See CYLINDER SECTION for Breakdown)	
11	1001163179	2	Link	
11	1001164209	4	Bearing (2 Per Link)	
12	1001176848	4	Nut M16	
13	1001163405	4	Kingpin	
14	1001163715	2	Spindle	
14	0961948	4	Bearing (2 Per Spindle)	
14	1001163716	8	Seal (4 Per Spindle)	
15	3423304	4	Pin	

FIGURE 1-3. STEER INSTALLATION WITH TOW PACKAGE

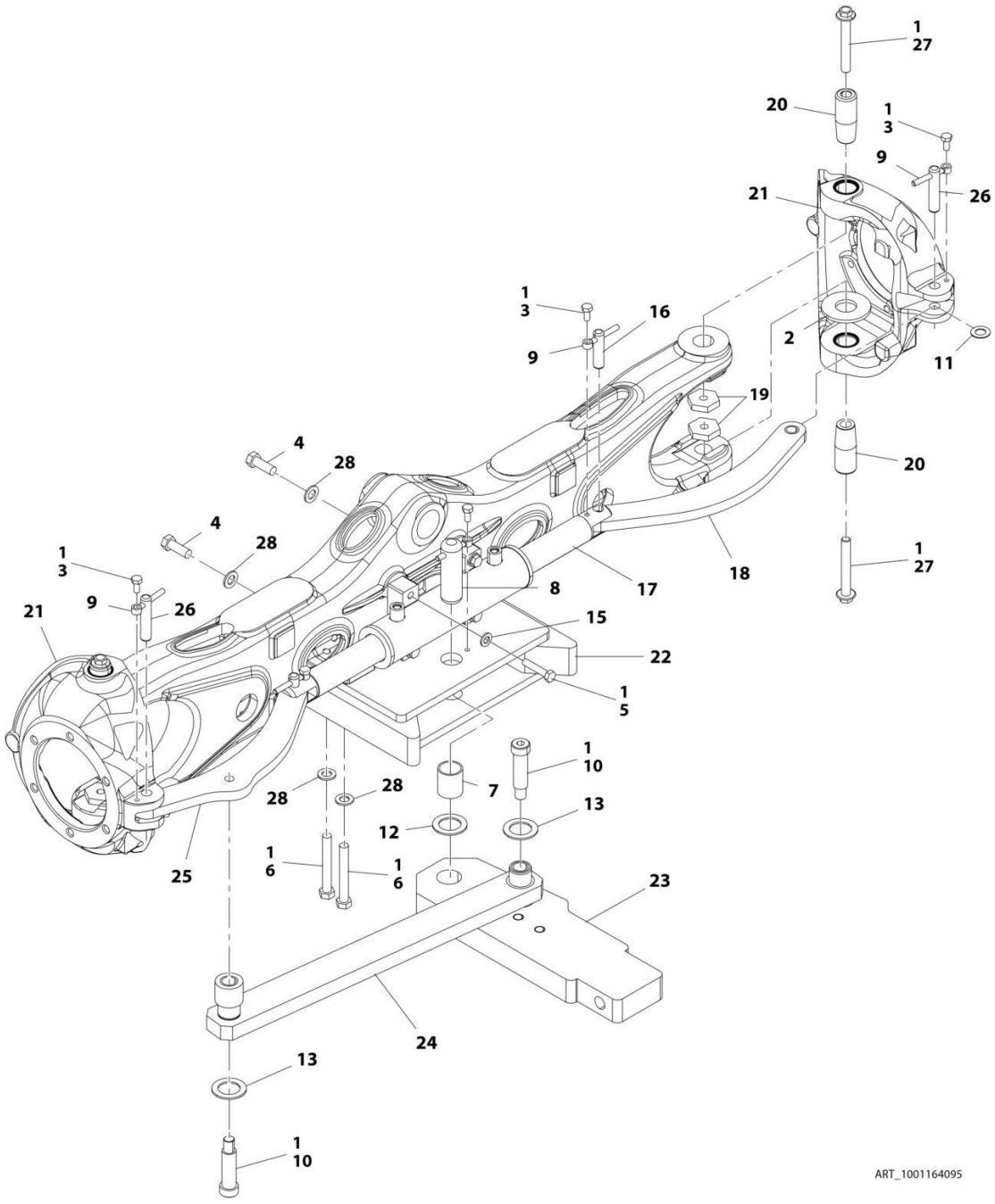

FIGURE 1-3. STEER INSTALLATION WITH TOW PACKAGE

ITEM	PART NUMBER	QTY	DESCRIPTION	REV
	1001164095	Ref	STEER INSTALLATION WITH TOW PACKAGE	D
1	0100011	AR	Compound, Locking	
2	0440271	2	Bearing, Thrust	
3	0761011	5	Bolt M10 x 22	
4	0701617	2	Bolt M16 x 45	
5	0711220	4	Bolt M12 x 60 Grade 10.9	
6	0711629	4	Bolt M16 x 120 Grade 10.9	
7	0962348	1	Bearing	
8	3422848	1	Pin	
9	3841143	5	Keeper, Pin	
10	3900295	2	Bolt 1 x 3	
11	4740086	4	Washer	
12	4740155	1	Washer	
13	4740491	2	Washer	
15	5241200	4	Washer M12	
16	1001139586	2	Pin	
17	1001163178	1	Steer Cylinder Assembly (See CYLINDER SECTION for Breakdown)	
18	1001163179	1	Link	
18	1001164209	2	Bearing	
19	1001176848	4	Nut M16	
20	1001163405	4	Kingpin	
21	1001163715	2	Spindle	
21	0961948	4	Bearing (2 per Spindle)	
21	1001163716	8	Seal, Kingpin (4 per Spindle)	
22	1001163717	1	Bracket	
23	1001163722	1	Plate, Pivot	
24	1001163724	1	Link	
24	0962292	2	Bearing	
25	1001163726	1	Link	
25	1001164209	2	Bearing	
26	3423304	2	Pin	
27	1001190368	4	Bolt M16 x 120	
28	5241600	6	Washer M16	

FIGURE 1-4. WHEEL DRIVE INSTALLATION (2WD)

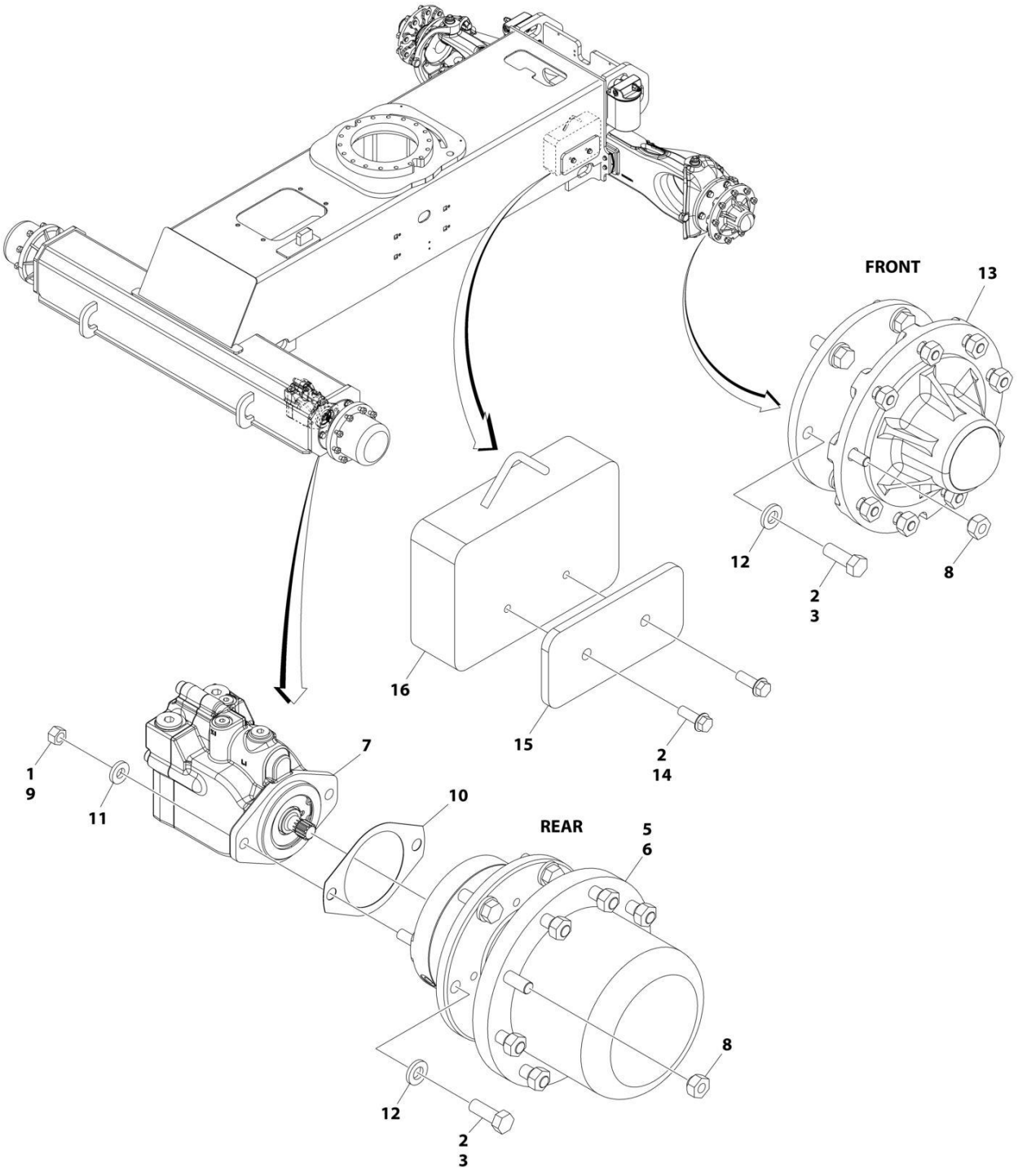

FIGURE 1-4. WHEEL DRIVE INSTALLATION (2WD)

ITEM	PART NUMBER	QTY	DESCRIPTION	REV
	1001214159	Ref	WHEEL DRIVE INSTALLATION (2WD)	B
1	0100011	AR	Compound, Locking	
2	0100019	AR	Compound, Locking	
3	0682014	24	Bolt 5/8 x 1-3/4 Grade 8	
4	2300016	AR	Fluid, Hydraulic	
5	2780267	2	Drive Hub Assembly - Rear (See DRIVE HUB ASSEMBLY - REAR for Breakdown)	
6	3020008	AR	Lubricant	
7	3160351	2	Drive Motor Assembly (See DRIVE MOTOR ASSEMBLY for Breakdown)	
8	3300106	36	Lugnut	
9	3311801	4	Nut 1/2	
10	3960526	2	Gasket, Brake	
11	4891800	4	Washer 1/2	
12	4892000	24	Washer 5/8	
13	1001214174	2	Hub - Spindle Assembly (See HUB - SPINDLE ASSEMBLY for Breakdown)	
14	5251215	4	Bolt M12 x 35	
15	1001215503	2	Plate, Mounting	
16	1001215504	2	Weight, Counter	

FIGURE 1-5. WHEEL DRIVE INSTALLATION (4WD)

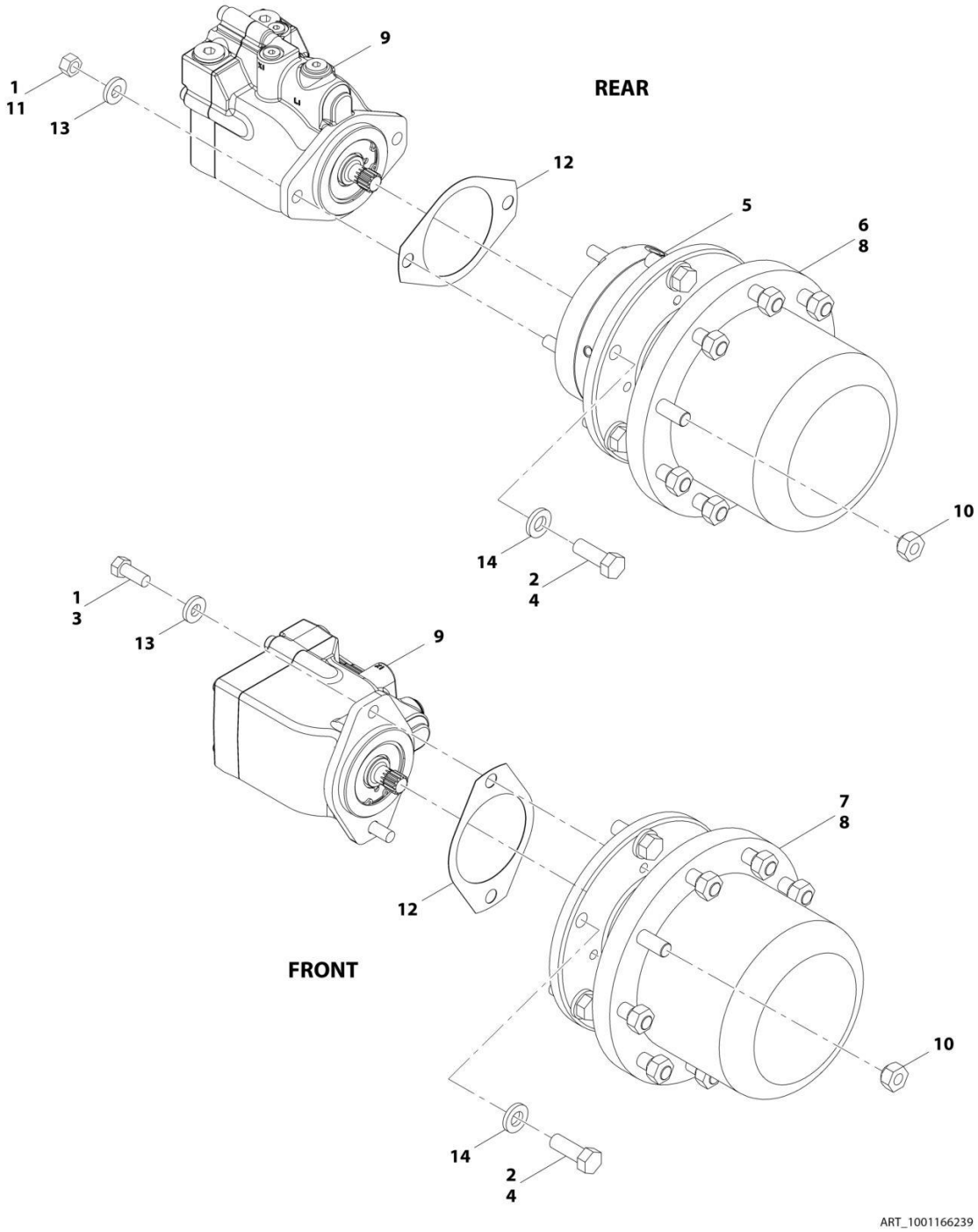

FIGURE 1-5. WHEEL DRIVE INSTALLATION (4WD)

ITEM	PART NUMBER	QTY	DESCRIPTION	REV
	1001166239	Ref	WHEEL DRIVE INSTALLATION (4WD)	C
1	0100011	AR	Compound, Locking	
2	0100019	AR	Compound, Locking	
3	0681810	4	Bolt 1/2 x 1-1/4 Grade 8	
4	0682014	24	Bolt 5/8 x 1-3/4 Grade 8	
5	2300016	AR	Fluid, Hydraulic	
6	2780267	2	Drive Hub Assembly - Rear (See DRIVE HUB ASSEMBLY - REAR for Breakdown)	
7	2780268	2	Drive Hub Assembly - Front (See DRIVE HUB ASSEMBLY - FRONT for Breakdown)	
8	3020008	AR	Lubricant	
9	3160348	4	Drive Motor Assembly (See DRIVE MOTOR ASSEMBLY for Breakdown)	
10	3300106	36	Lugnut	
11	3311801	4	Nut 1/2	
12	3960526	4	Gasket, Brake	
13	4891800	8	Washer 1/2	
14	4892000	24	Washer 5/8	

FIGURE 1-6. HUB - SPINDLE ASSEMBLY

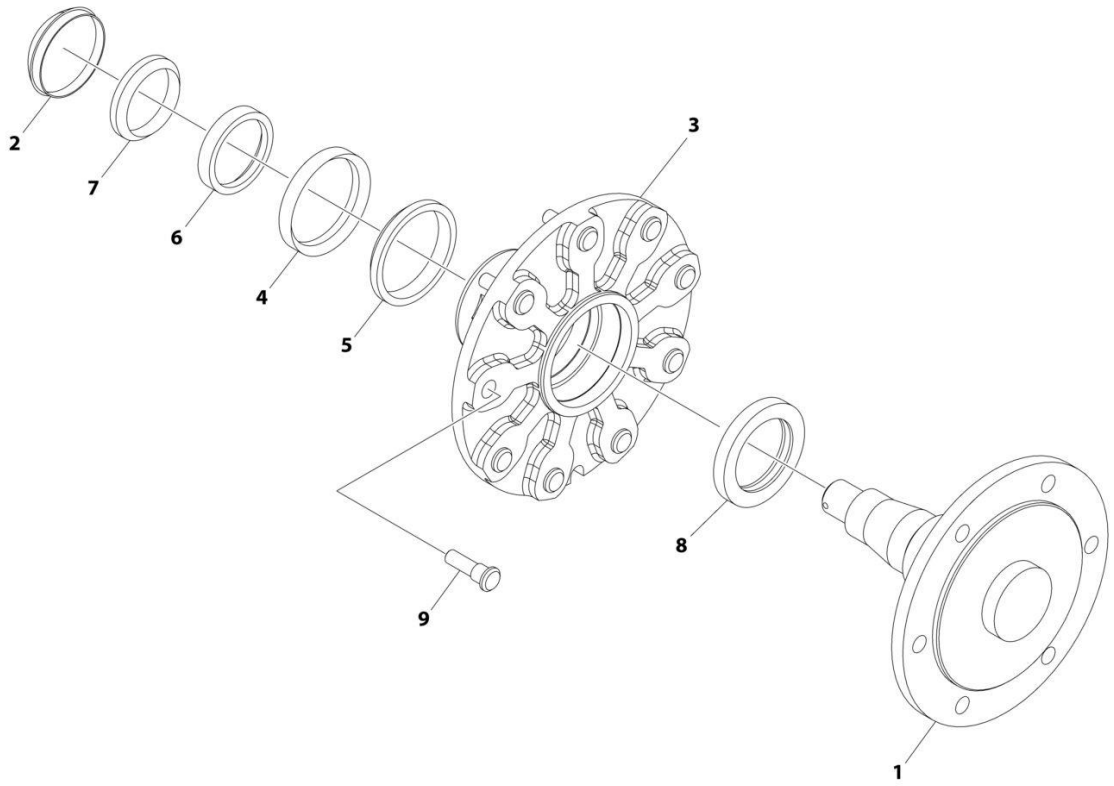

FIGURE 1-6. HUB - SPINDLE ASSEMBLY

ITEM	PART NUMBER	QTY	DESCRIPTION	REV
	1001214174	Ref	HUB - SPINDLE ASSEMBLY	C
1	See Note	NSS	Spindle, Adapter (Note: Not available for Purchase)	
2	7020033	1	Cap, Dust	
3	7020035	1	Hub, Casting	
4	7020036	1	Cup, Bearing	
5	7020037	1	Cone, Bearing	
6	7020038	1	Cup, Bearing	
7	7020039	1	Cone, Bearing	
8	7020040	1	Seal	
9	7020041	9	Stud	

FIGURE 1-7. DRIVE HUB AND BRAKE ASSEMBLY - REAR

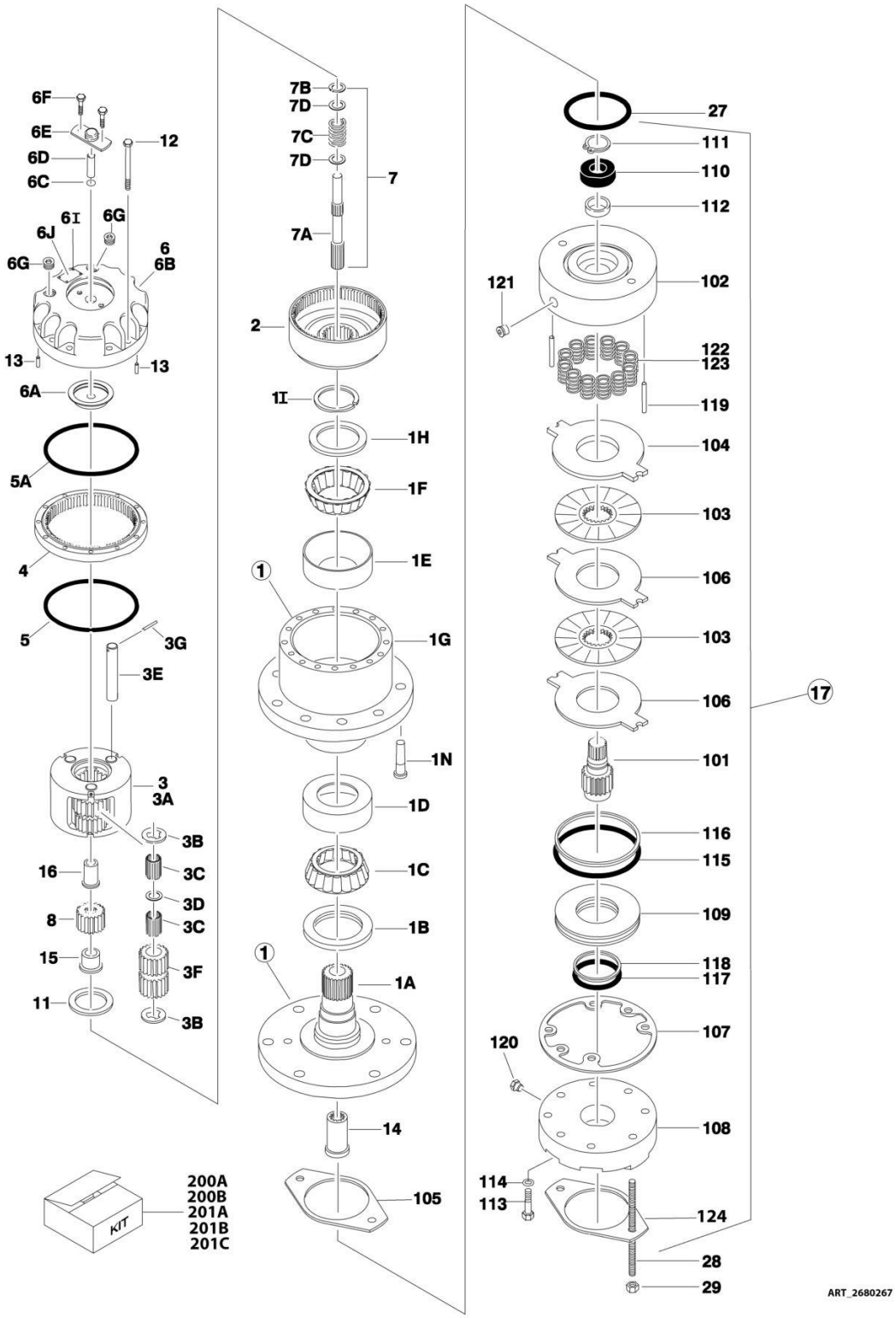

FIGURE 1-7. DRIVE HUB AND BRAKE ASSEMBLY - REAR

ITEM	PART NUMBER	QTY	DESCRIPTION	REV
	2780267	Ref	DRIVE HUB AND BRAKE ASSEMBLY - REAR	I
1	See Note	1	Spindle/Housing Assembly (Note: Purchase Individual Components)	
1A	7017059	1	Spindle	
1B	7001998	1	Seal	
1C	7010429	1	Cone, Bearing (Includes Item 1D)	
1D	7010429	1	Cup, Bearing (Includes Item 1C)	
1E	7000257	1	Cup, Bearing	
1F	7000258	1	Cone, Bearing	
1G	7007601	1	Housing/Ring Gear	
1H	7000232	1	Washer, Thrust	
1I	7000229	1	Ring, Retaining	
1N	7007640	9	Stud, Wheel	
2	7000246	1	Gear, Internal	
3	7024712	1	Carrier Assembly	
3A	See Note	1	Carrier (Note: Use p/n 7024712)	
3B	See Note	6	Ring, Retaining (Note: Use p/n 7024712)	
3C	See Note	AR	Bearing, Needle (Note: Use p/n 7024712)	
3D	See Note	3	Washer, Thrust (Note: Use p/n 7024712)	
3E	See Note	3	Shaft, Planet (Note: Use p/n 7024712)	
3F	See Note	3	Gear, Planet (Note: Use p/n 7024712)	
3G	See Note	3	Roll Pin (Note: Not Available for Purchase)	
4	7000248	1	Ring Gear	
5	7000230	1	O-Ring	
5A	7017070	1	O-Ring	
6	70001349	1	Cover assembly Kit	
6A	See Note	1	Spacer, Thrust (Note: Use p/n 70001349)	
6B	See Note	1	Plate, Cover (Note: Use p/n 70001349)	
6C	See Note	1	O-Ring (Note: Use p/n 70001349)	
6D	See Note	1	Rod, Disconnect (Note: Use p/n 70001349)	
6E	See Note	1	Cap, Disengage (Note: Use p/n 70001349)	
6F	See Note	2	Bolt (Note: Use p/n 70001349)	
6G	See Note	1	Plug, Pipe (Note: Use p/n 70001349)	
6I	See Note	4	Rivet (Note: Not Available for Purchase)	
6J	See Note	1	Plate, ID (Note: Not Available for Purchase)	
7		Ref	Input Shaft Assembly	
7A	7024714	1	Shaft	
7B	7000261	1	Ring, Retaining	
7C	7000262	1	Spring	
7D	7000263	2	Spacer, Thrust	
8	7024713	1	Gear, Sun	
11	7000253	1	Washer, Thrust	
12	7017067	12	Bolt	
13	7017080	4	Pin, Dowell	
14	7000206	1	Coupling	
15	7024715	1	Spacer, Input	
16	7024716	1	Spacer, Input	
17	7024182	1	Brake Assembly (See Items 101-123 for Breakdown)	
27	7024705	1	O-Ring	
28	7024717	2	Rod, Threaded	

SECTION 1 - FRAME

ITEM	PART NUMBER	QTY	DESCRIPTION	REV
29	7024718	2	Nut 1/2in-13NC	
	7024182	Ref	BRAKE ASSEMBLY	
101	7024189	1	Shaft	
102	See Note	1	Housing (Note: Use p/n 7024182)	
103	See Note	2	Plate, Friction (Note: Use p/n 7024193)	
104	See Note	1	Plate, Pressure (Note: Use p/n 7024193)	
105	70005483	1	Gasket	
106	See Note	2	Plate, Outer (Note: Use p/n 7024193)	
107	See Note	1	Gasket (Note: Use Item 200A, 201B or 201C)	
108	7024191	1	Cylinder	
109	7024192	1	Piston	
110	See Note	1	Bearing, Ball (Note: Use p/n 7024197)	
111	See Note	1	Ring, Retaining (Note: Use p/n 7024197)	
112	See Note	1	Seal, Shaft (Note: Use p/n 7024197)	
113	See Note	6	Capscrew (Note: Not Available for Purchase)	
114	See Note	6	Lockwasher (Note: Not Available for Purchase)	
115	See Note	1	O-Ring (Note: Not Available for Purchase)	
116	See Note	1	Ring, Back-up (Note: Not Available for Purchase)	
117	See Note	1	O-Ring (Note: Not Available for Purchase)	
118	See Note	1	Ring, Back-up (Note: Not Available for Purchase)	
119	7024190	2	Pin, Dowel	
120	See Note	1	Plug (Note: Not Available for Purchase)	
121	See Note	2	Plug (Note: Not Available for Purchase)	
122	See Note	12	Spring Kit (Natural) (Note: Use p/n 7024196)	
123	See Note	2	Spring Kit (Blue) (Note: Use p/n 7024196)	
124	70005483	1	Gasket	
		Ref	Kit Options	
200		Ref	Seal Kit Options:	
200A	See Note	1	Hub Seal Kit (Note: Purchase Individual Components)	
200B	7024194	1	Brake Seal Kit (Includes Items 105, 107 & 115-118)	
201		Ref	Repair Kit Options:	
201A	7024196	1	Brake Spring Kit (Includes 12 Natural Colored and 2 Blue Colored Springs Items 122 & 123)	
201B	7024193	1	Brake Friction Disc Kit (Includes Items 103, 104, 106 & 107)	
201C	7024197	1	Brake Bearing Kit (Includes Items 107 & 110-112)	

FIGURE 1-8. DRIVE HUB ASSEMBLY - FRONT

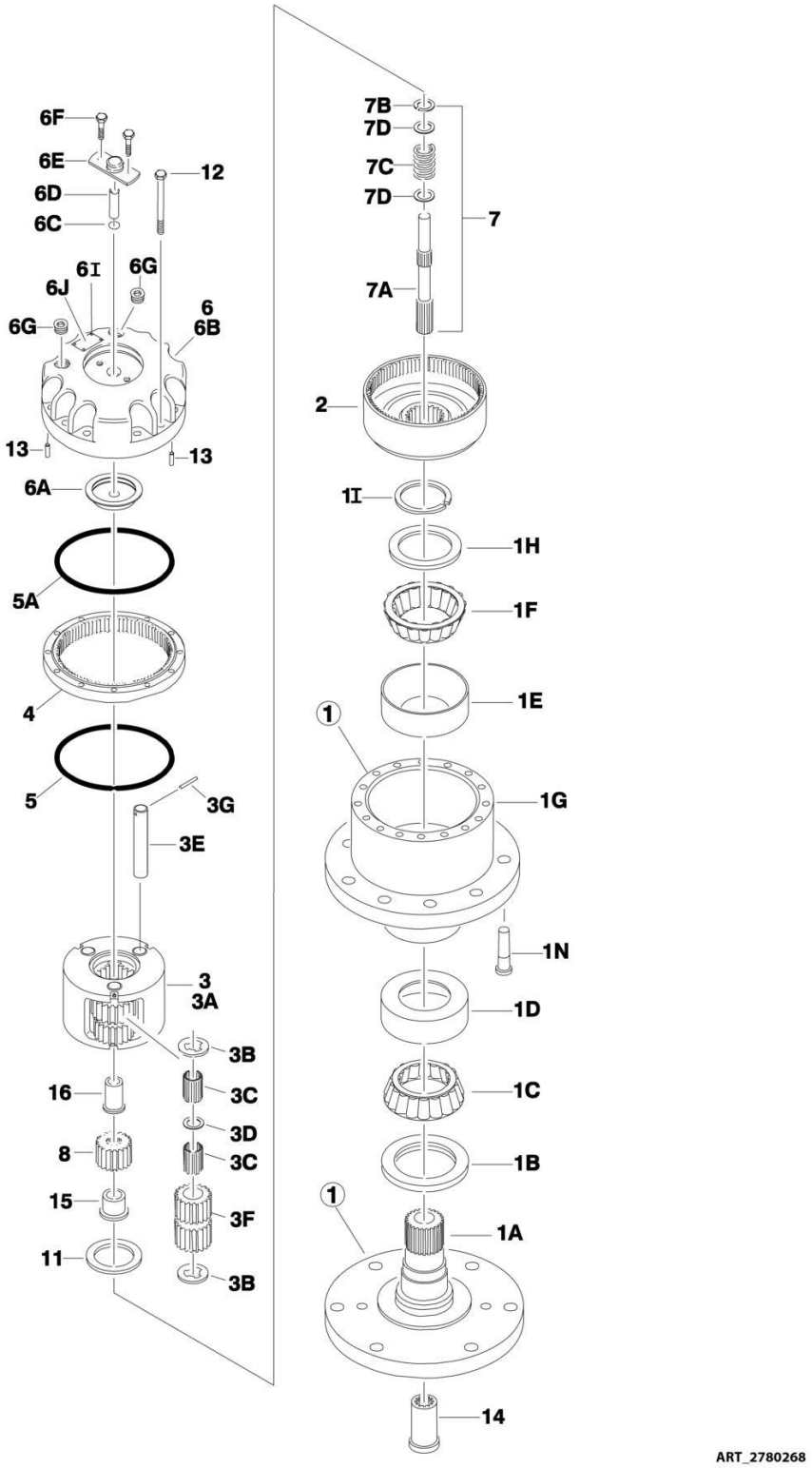

FIGURE 1-8. DRIVE HUB ASSEMBLY - FRONT

ITEM	PART NUMBER	QTY	DESCRIPTION	REV
	2780268	Ref	DRIVE HUB ASSEMBLY - FRONT	A
1	See Note	1	Spindle/Housing Assembly (Note: Purchase Individual Components)	
1A	7017059	1	Spindle	
1B	7001998	1	Seal	
1C	7010429	1	Cone, Bearing (Includes Item 1D)	
1D	7010429	1	Cup, Bearing (Includes Item 1C)	
1E	7000257	1	Cup, Bearing	
1F	7000258	1	Cone, Bearing	
1G	7007601	1	Housing/Ring Gear	
1H	7000232	1	Washer, Thrust	
1I	7000229	1	Ring, Retaining	
1N	7007640	9	Stud, Wheel	
2	7000246	1	Gear, Internal	
3	7024712	1	Carrier Assembly	
3A	See Note	1	Carrier (Note: Use p/n 7024712)	
3B	See Note	6	Ring, Retaining (Note: Use p/n 7024712)	
3C	See Note	AR	Bearing, Needle (Note: Use p/n 7024712)	
3D	See Note	3	Washer, Thrust (Note: Use p/n 7024712)	
3E	See Note	3	Shaft, Planet (Note: Use p/n 7024712)	
3F	See Note	3	Gear, Planet (Note: Use p/n 7024712)	
3G	See Note	3	Roll Pin (Note: Not Available for Purchase)	
4	7000248	1	Ring Gear	
5	7000230	1	O-Ring	
5A	7017070	1	O-Ring	
6	70001349	1	Cover Assembly Kit	
6A	See Note	1	Spacer, Thrust (Note: Use p/n 70001349)	
6B	See Note	1	Plate, Cover (Note: Use p/n 70001349)	
6C	See Note	1	O-Ring (Note: Use p/n 70001349)	
6D	See Note	1	Rod, Disconnect (Note: Use p/n 70001349)	
6E	See Note	1	Cap, Disengage (Note: Use p/n 70001349)	
6F	See Note	2	Bolt (Note: Use p/n 70001349)	
6G	See Note	1	Plug, Pipe (Note: Use p/n 70001349)	
6I	See Note	4	Rivet (Note: Not Available for Purchase)	
6J	See Note	1	Plate, ID (Note: Not Available for Purchase)	
7		Ref	Input Shaft Assembly	
7A	7024714	1	Shaft	
7B	7000261	1	Ring, Retaining	
7C	7000262	1	Spring	
7D	7000263	2	Spacer, Thrust	
8	7024713	1	Gear, Sun	
11	7000253	1	Washer, Thrust	
12	7017067	12	Bolt	
13	7017080	4	Pin, Dowell	
14	7000206	1	Coupling	
15	7024715	1	Spacer, Input	
16	7024716	1	Spacer, Input	

FIGURE 1-9. DRIVE MOTOR ASSEMBLY (2WD)

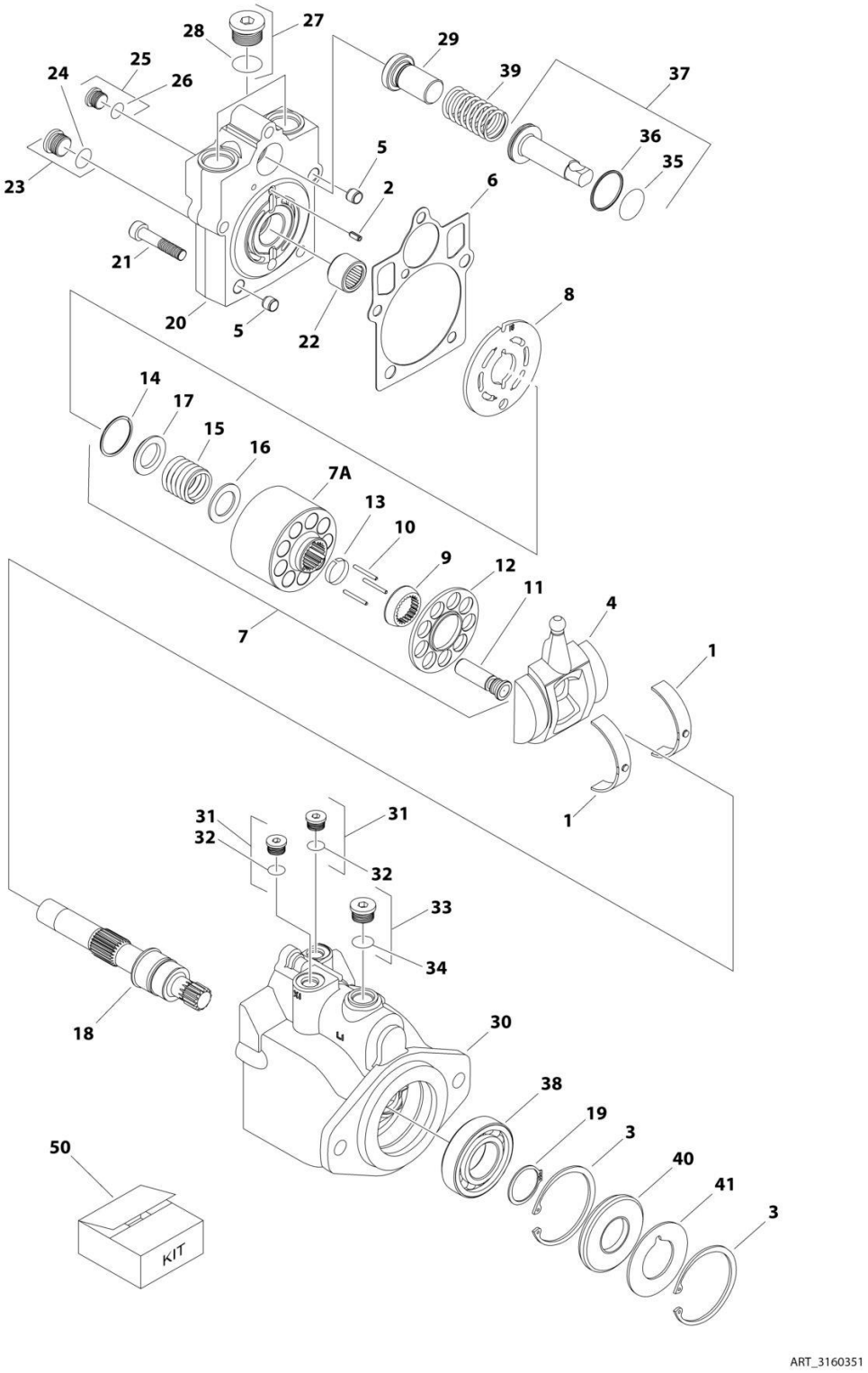

FIGURE 1-9. DRIVE MOTOR ASSEMBLY (2WD)

ITEM	PART NUMBER	QTY	DESCRIPTION	REV
	3160351	Ref	DRIVE MOTOR ASSEMBLY (2WD)	B
1	7022302	2	Bearing, Journal	
2	7007446	1	Pin	
3	7007438	2	Ring, Retaining	
4	7022305	1	Swashplate	
5	See Note	2	Pin (Note: Not Available for Purchase)	
6	7022328	1	Gasket	
7	7023907	1	Cylinder Block Kit (Includes Items 7A & 9-17)	
7A	7023907	1	Block, Cylinder	
8	7023908	1	Plate, Valve	
9	7021277	1	Guide, Slipper Retainer	
10	7021275	3	Pin, Slipper Hold Down	
11	7023907	9	Piston Assembly	
12	7021276	1	Retainer, Hold Down Pin	
13	7023907	1	Retainer, Slipper	
14	7022311	1	Ring, Retaining	
15	7022312	1	Spring	
16	7024868	1	Washer	
17	7022314	1	Retainer, Spring	
18	7023910	1	Shaft	
19	7007439	1	Ring, Retaining	
20	70000797	1	Cap, End - Axial	
21	7022368	5	Screw	
22	7021249	1	Bearing, Needle	
23	2220886	1	Plug (Includes Item 24)	
24	7022328	1	O-Ring	
25	2220883	1	Plug (Includes Item 26)	
26	7022328	1	O-Ring	
27	7027419	2	Plug (Includes Item 28)	
28	7022328	2	O-Ring	
29	7024853	1	Seat, Spring	
30	3160351	1	Housing	
31	2220883	2	Plug (Includes Item 32)	
32	7022328	2	O-Ring	
33	2220886	1	Plug (Includes Item 34)	
34	7022328	1	O-Ring	
35	7022328	1	O-Ring	
36	7022328	1	Ring, Seal	
37	7024854	1	Piston, Servo (Includes Items 35 & 36)	
38	7007437	1	Bearing	
39	7022326	1	Spring	
40	7022328	1	Seal, Lip	
41	7022371	1	Washer, Support	
50	7022328	1	Seal Kit (Includes Items 6, 24, 26, 28, 32, 34, 35, 36 & 40)	

FIGURE 1-10. DRIVE MOTOR ASSEMBLY (4WD)

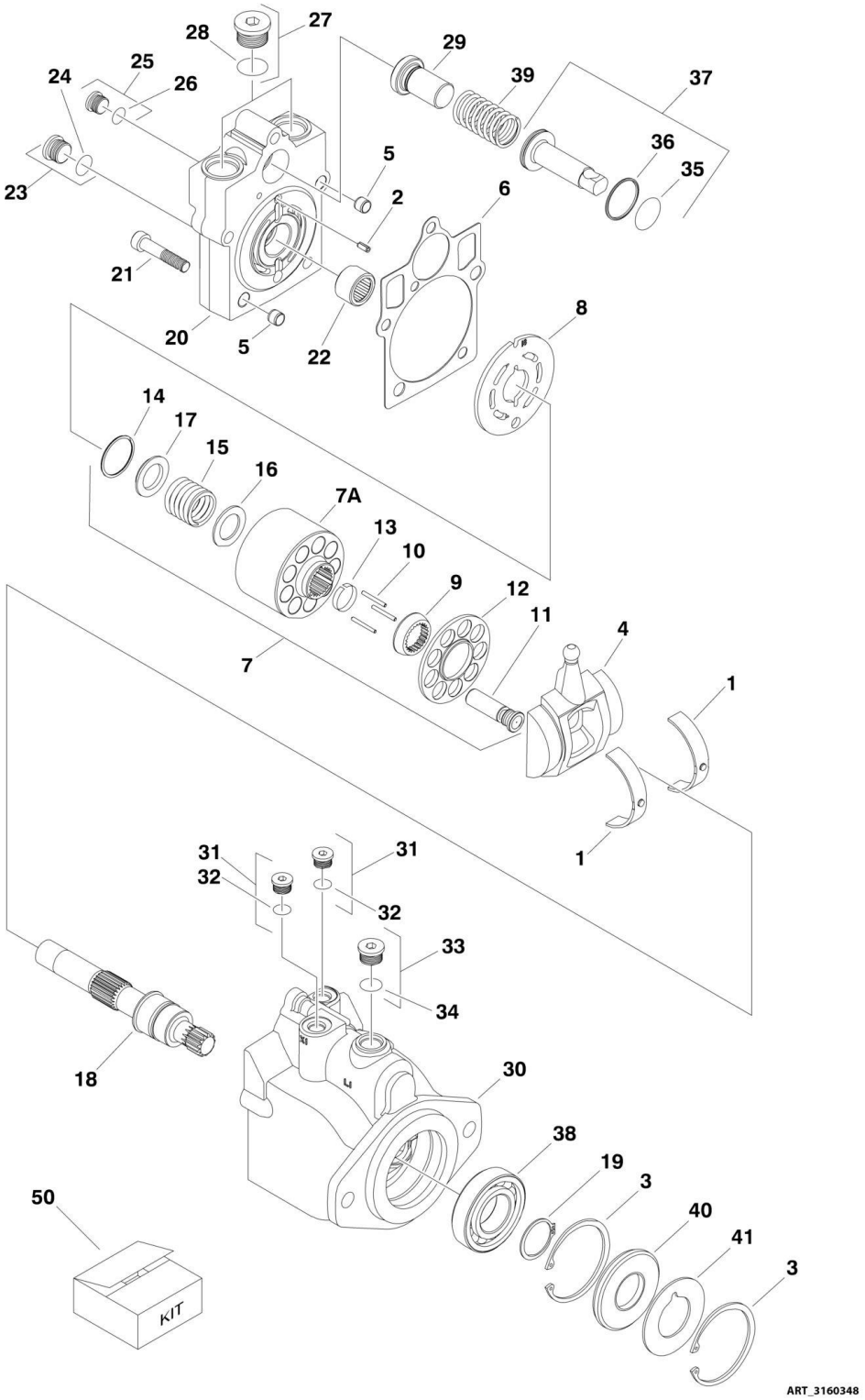

FIGURE 1-10. DRIVE MOTOR ASSEMBLY (4WD)

ITEM	PART NUMBER	QTY	DESCRIPTION	REV
	3160348	Ref	DRIVE MOTOR ASSEMBLY (4WD)	C
1	7022302	2	Bearing, Journal	
2	7007446	1	Pin	
3	7007438	2	Ring, Retaining	
4	7022305	1	Swash Plate	
5	See Note	2	Pin (Note: Not Available for Purchase)	
6	See Note	NSS	Gasket (Note: use Item 50)	
7	7023907	1	Cylinder Block Kit (Includes Items 7A & 9-17)	
7A	See Note	NSS	Block, Cylinder (Note: Use p/n 7023907)	
8	7023908	1	Plate, Valve	
9	7021277	1	Guide, Slipper Retainer	
10	7021275	3	Pin, Slipper Hold Down	
11	See Note	NSS	Piston Assembly (Note: Use p/n 7023907)	
12	7021276	1	Retainer, Hold Down Pin	
13	7022310	1	Retainer, Slipper	
14	7022311	1	Ring, Retaining	
15	7022312	1	Spring	
16	7024868	1	Washer	
17	7022314	1	Retainer, Spring	
18	7023910	1	Shaft	
19	7007439	1	Ring, Retaining	
20	70000797	1	Cap, End - Axial	
21	7022368	5	Screw	
22	7021249	1	Bearing, Needle	
23	2220886	1	Plug (Includes Item 24)	
24	See Note	NSS	O-Ring (Note: Use Item 23 or 50)	
25	2220883	1	Plug (Includes Item 26)	
26	See Note	NSS	O-Ring (Note: Use Item 25 or 50)	
27	2220888	2	Plug (Includes Item 28)	
28	See Note	NSS	O-Ring (Note: Use Item 27 or 50)	
29	7022372	1	Seat, Spring	
30	See Note	NSS	Housing (Note: Use p/n 3160248)	
31	2220883	2	Plug (Includes Item 32)	
32	See Note	NSS	O-Ring (Note: Use Item 31 or 50)	
33	2220886	1	Plug (Includes Item 34)	
34	See Note	NSS	O-Ring (Note: Use Item 33 or 50)	
35	See Note	NSS	O-Ring (Note: Use Item 50)	
36	See Note	NSS	Seal, Ring (Note: Use Item 50)	
37	7024854	1	Piston, Servo (Includes Items 35 & 36)	
38	7007437	1	Bearing	
39	7022326	1	Spring	
40	See Note	NSS	Seal, Lip (Note: Use Item 50)	
41	7022371	1	Washer, Support	
50	7022328	1	Seal Kit (Includes Items 6, 24, 26, 28, 32, 34, 35, 36 & 40)	

FIGURE 1-11. FRAME SHIELD INSTALLATION

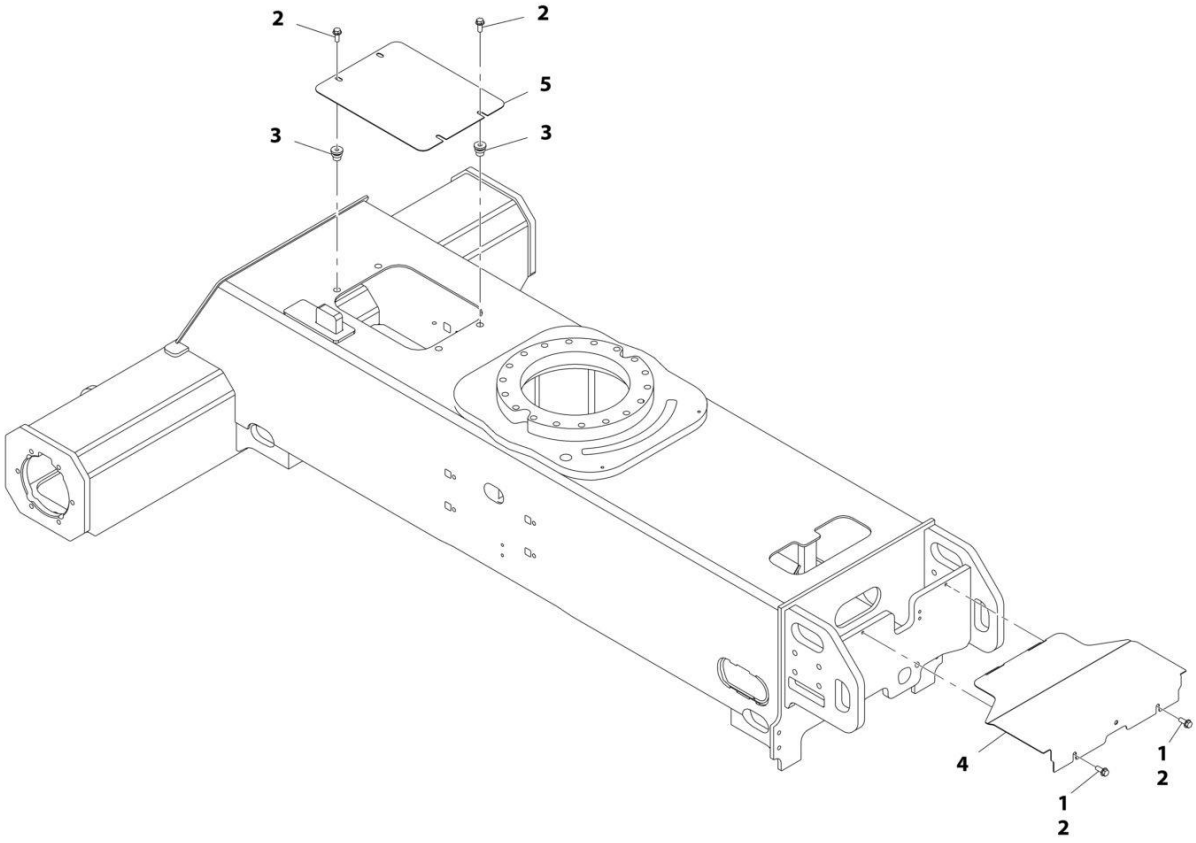

FIGURE 1-11. FRAME SHIELD INSTALLATION

ITEM	PART NUMBER	QTY	DESCRIPTION	REV
	1001162105	Ref	FRAME SHIELD INSTALLATION	B
1	0100011	AR	Compound, Locking	
2	5251012	6	Bolt, M10 x 25	
3	1001180916	4	Nut	
4	1001162107	1	Plate, Valve Cover	
5	1001165968	1	Plate, Cover	

FIGURE 1-12. TIRE AND WHEEL INSTALLATION - 12 X 16.5 FOAM FILLED (AVAILABLE ON ANSI, ANSI EXPORT AND CSA SPECS)

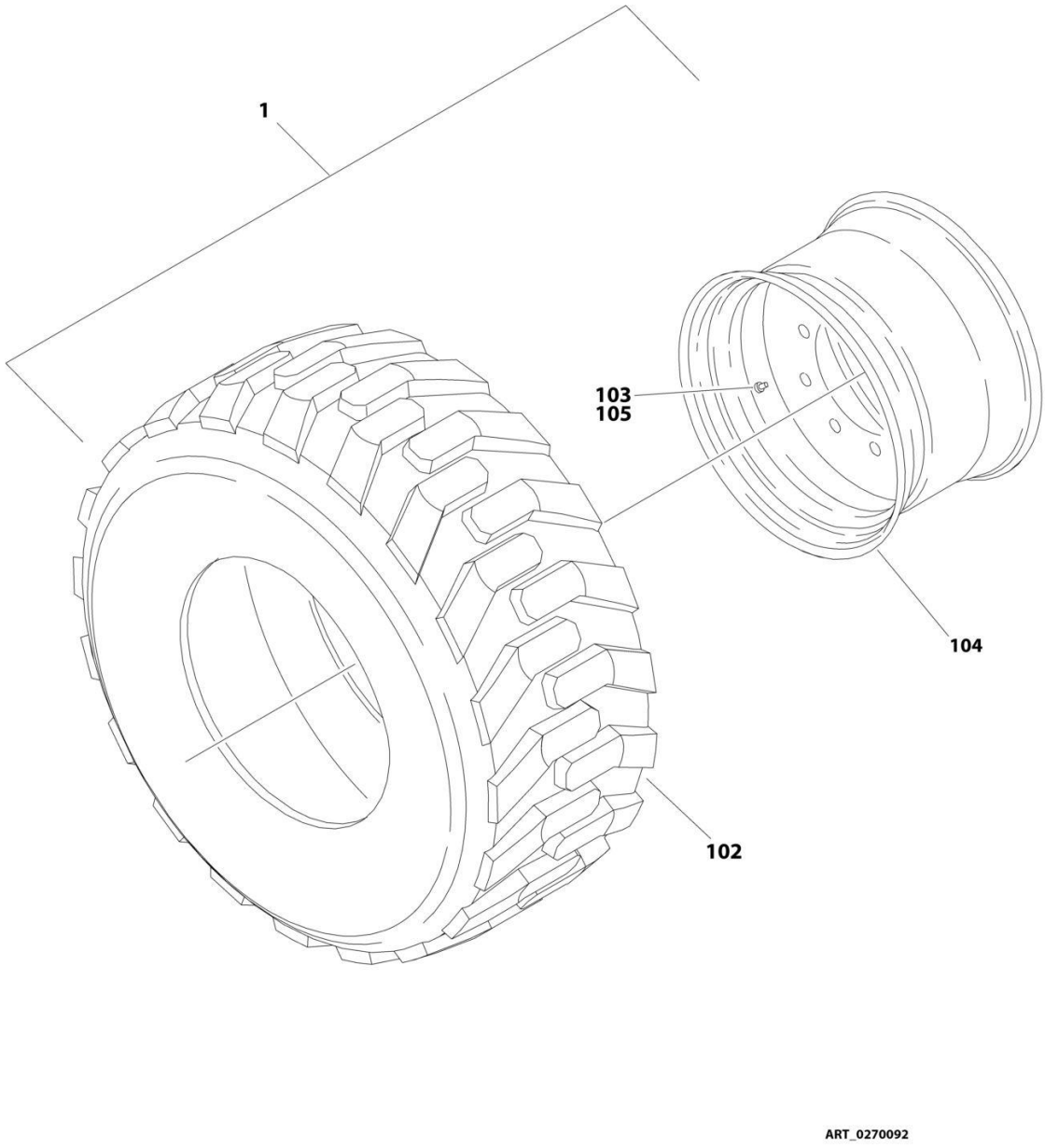

FIGURE 1-12. TIRE AND WHEEL INSTALLATION - 12 X 16.5 FOAM FILLED (AVAILABLE ON ANSI, ANSI EXPORT AND CSA SPECS)

ITEM	PART NUMBER	QTY	DESCRIPTION	REV
	0270092	Ref	TIRE AND WHEEL INSTALLATION - 12 X 16.5 FOAM FILLED (AVAILABLE ON ANSI, ANSI EXPORT AND CSA SPECS)	C
		Ref	Note: Assemblies may require ballast/foam filling to manufacturer's specifications prior to installing on a machine. Refer to Operation and Safety or Service and Maintenance Manuals. Purchase individual tire and/or rim only if able to foam fill tire and wheel assembly, otherwise, purchase complete assembly.	
1	1001148865	2	Tire and Wheel Assembly - 12 x 16.5 (RH Side)	G
1	1001148866	2	Tire and Wheel Assembly - 12 x 16.5 (LH Side)	G
102	4520216	4	Tire - 12 x 16.5	
103	4641122	4	Valve	
104	1001147274	4	Rim, Wheel	
105	1001149953	4	Cap, Valve Stem	

FIGURE 1-13. TIRE AND WHEEL INSTALLATION - 12 X 16.5 FOAM FILLED NON MARKING (AVAILABLE ON ANSI, ANSI EXPORT AND CSA SPECS)

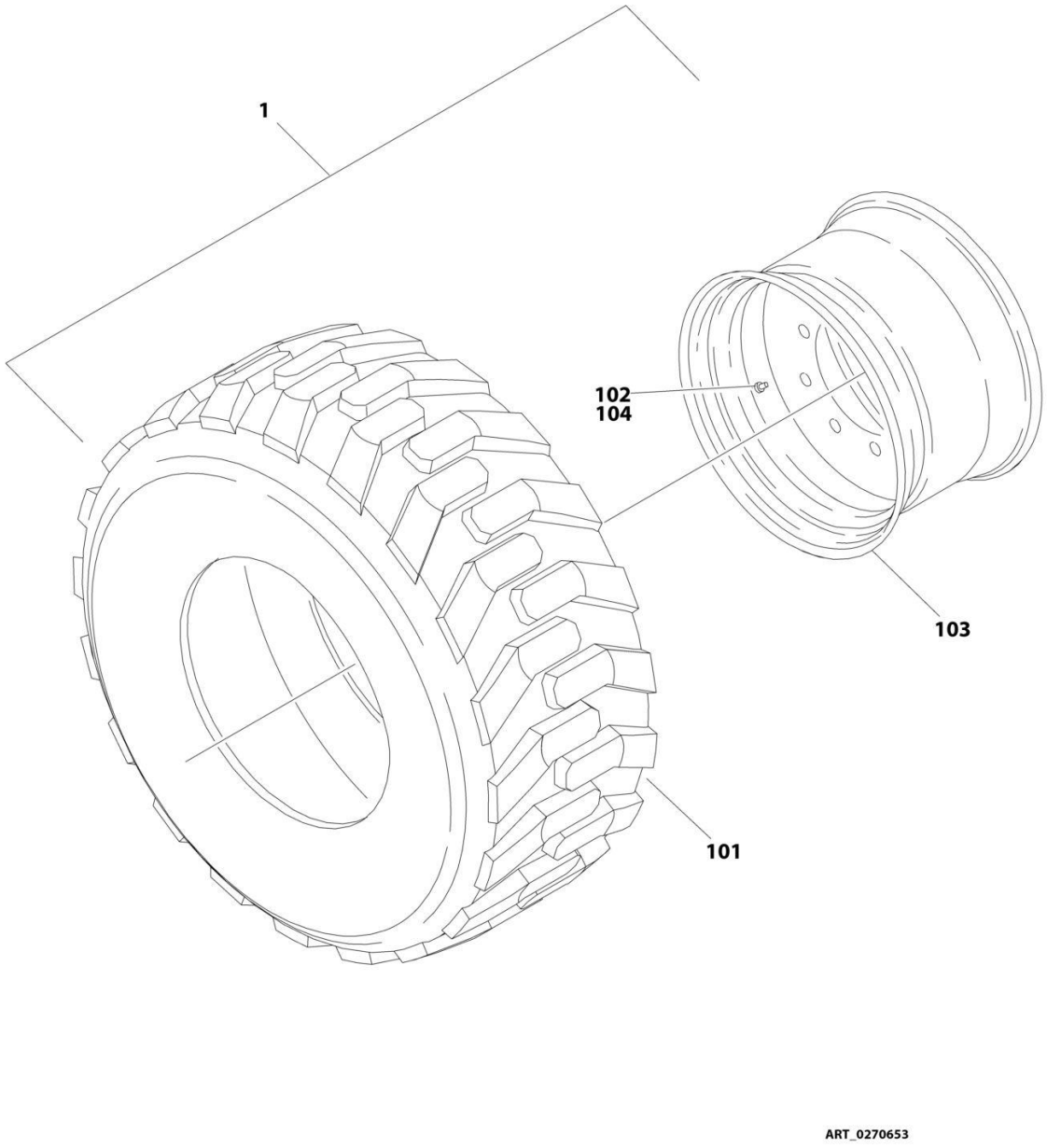

FIGURE 1-13. TIRE AND WHEEL INSTALLATION - 12 X 16.5 FOAM FILLED NON MARKING (AVAILABLE ON ANSI, ANSI EXPORT AND CSA SPECS)

ITEM	PART NUMBER	QTY	DESCRIPTION	REV
	0270653	Ref	TIRE AND WHEEL INSTALLATION - 12 X 16.5 FOAM FILLED NON MARKING (AVAILABLE ON ANSI, ANSI EXPORT AND CSA SPECS)	B
		Ref	Note: Assemblies may require ballast/foam filling to manufacturer's specifications prior to installing on a machine. Refer to Operation and Safety or Service and Maintenance Manuals. Purchase individual tire and/or rim only if able to foam fill tire and wheel assembly, otherwise, purchase complete assembly.	
1	1001148869	2	Tire and Wheel Assembly - 12 x 16.5 Non Marking (RH Side)	H
1	1001148870	2	Tire and Wheel Assembly - 12 x 16.5 Non Marking (LH Side)	H
101	4520240	4	Tire 12 x 16.5 Non-Marking	
102	4641122	4	Valve	
103	1001147274	4	Rim, Wheel	
104	1001149953	4	Cap, Valve Stem	

FIGURE 1-14. TIRE AND WHEEL INSTALLATION - 33 X 12-20 SOLID NON-MARKING (AVAILABLE ON AUSTRALIAN AND CE SPECS)

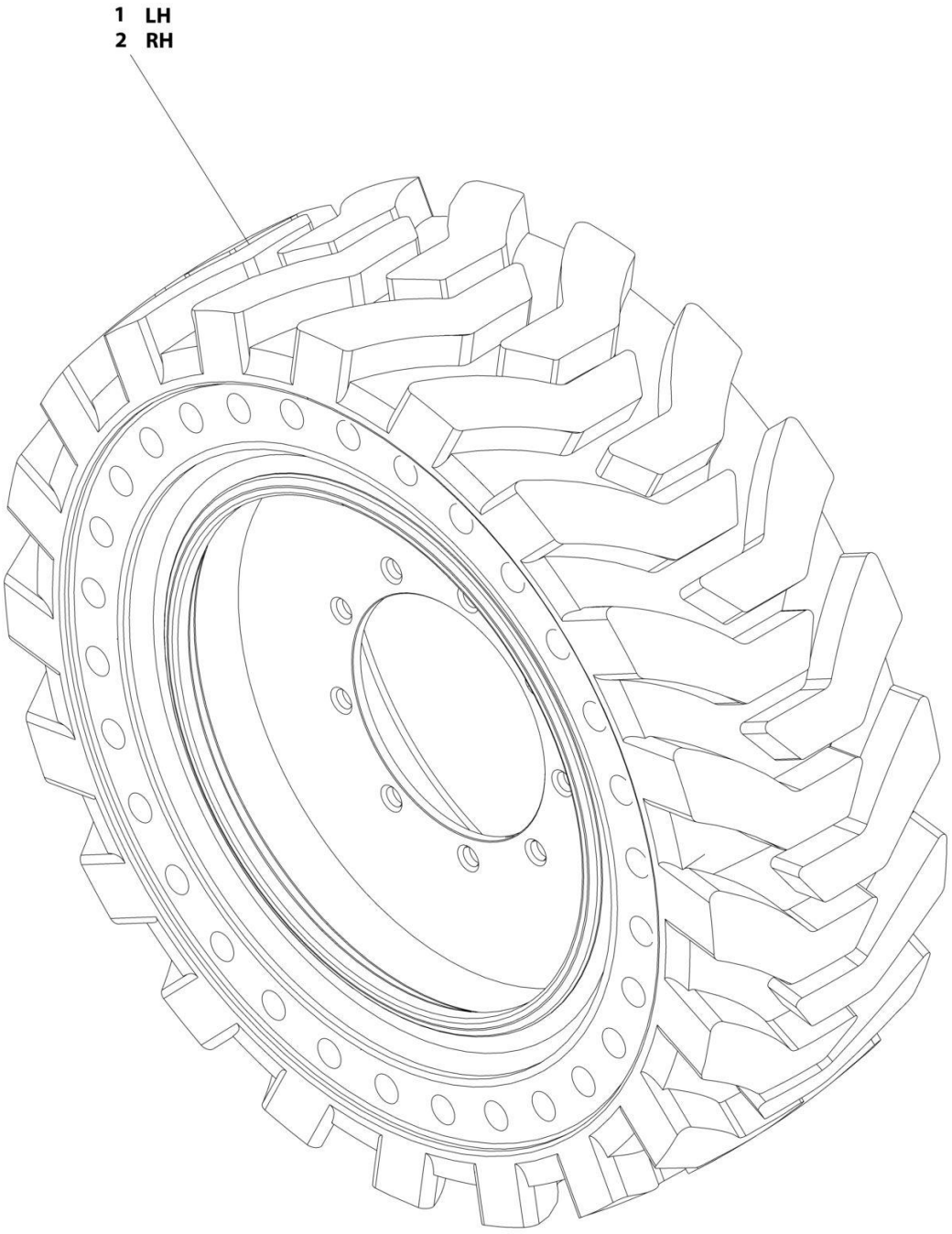

ART_1001169062

FIGURE 1-14. TIRE AND WHEEL INSTALLATION - 33 X 12-20 SOLID NON-MARKING (AVAILABLE ON AUSTRALIAN AND CE SPECS)

ITEM	PART NUMBER	QTY	DESCRIPTION	REV
	1001169062	Ref	TIRE AND WHEEL INSTALLATION - 33 X 12-20 SOLID NON-MARKING (AVAILABLE ON AUSTRALIAN AND CE SPECS)	A
		Ref	Note: Due to critical stabile weights, only replace tire and wheel assemblies with like components.	
1	1001170098	2	Tire and Wheel Assembly - 33 x 12-20 Solid Non-Marking (LH Side)	
2	1001170099	2	Tire and Wheel Assembly - 33 x 12-20 Solid Non-Marking (RH Side)	

FIGURE 1-15. TIRE AND WHEEL INSTALLATION - 33 X 16LL500 PNEUMATIC TURF AND SAND (AVAILABLE ON ANSI AND ANSI EXPORT SPECS)

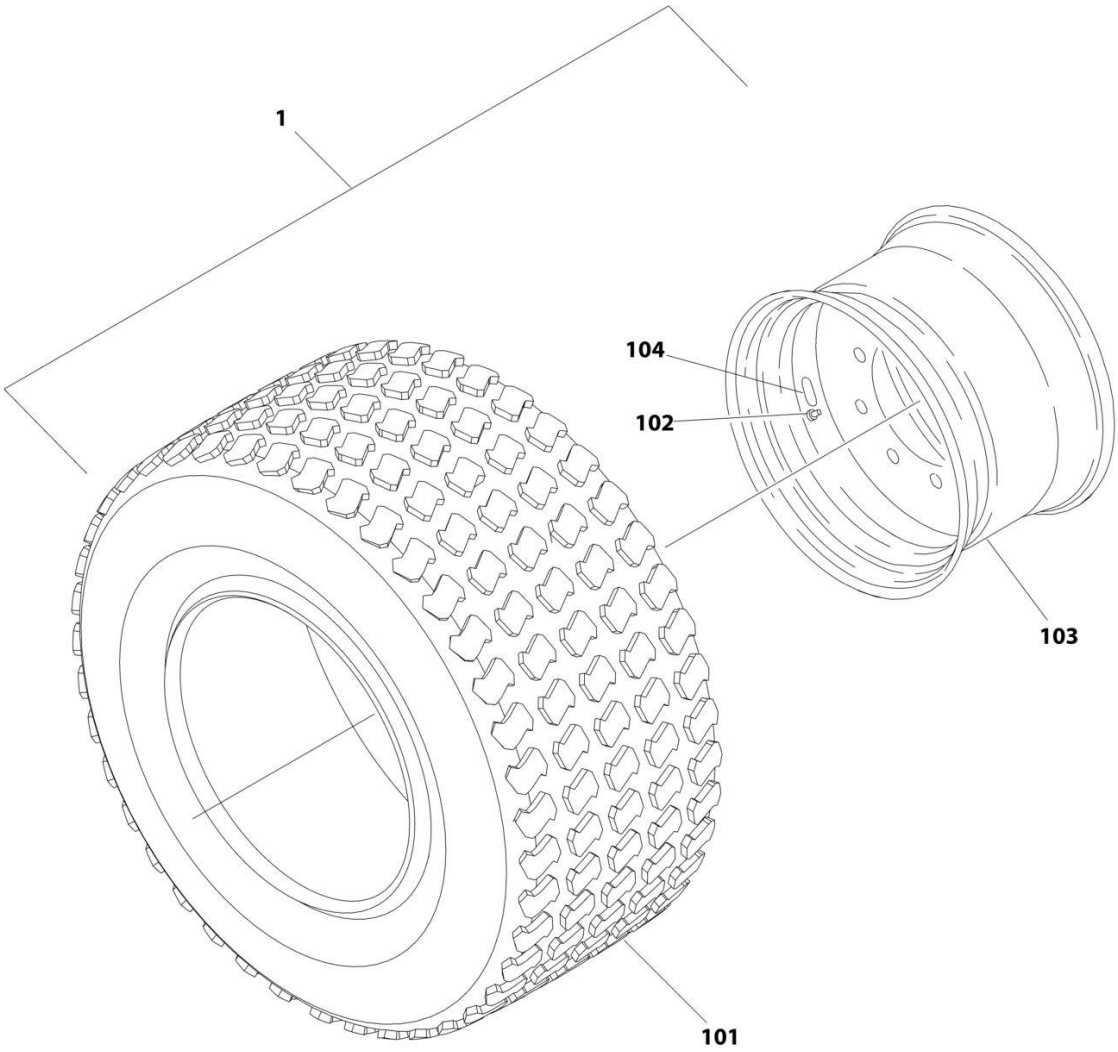

FIGURE 1-15. TIRE AND WHEEL INSTALLATION - 33 X 16LL500 PNEUMATIC TURF AND SAND (AVAILABLE ON ANSI AND ANSI EXPORT SPECS)

ITEM	PART NUMBER	QTY	DESCRIPTION	REV
	1001151030	Ref	TIRE AND WHEEL INSTALLATION - 33 X 16LL500 PNEUMATIC TURF AND SAND (AVAILABLE ON ANSI AND ANSI EXPORT SPECS)	B
1	1001151026	4	Tire and Wheel Assembly	C
101	4520262	4	Tire 33 x 16LL500	
102	4640113	4	Valve, Stem	
103	4860237	4	Rim, Wheel	
104	1703067	4	Decal - Air Pressure	

FIGURE 1-16. TIRE AND WHEEL INSTALLATION - 33/1550 X 16.5 PNEUMATIC (AVAILABLE ON ANSI, ANSI EXPORT AND CSA SPECS)

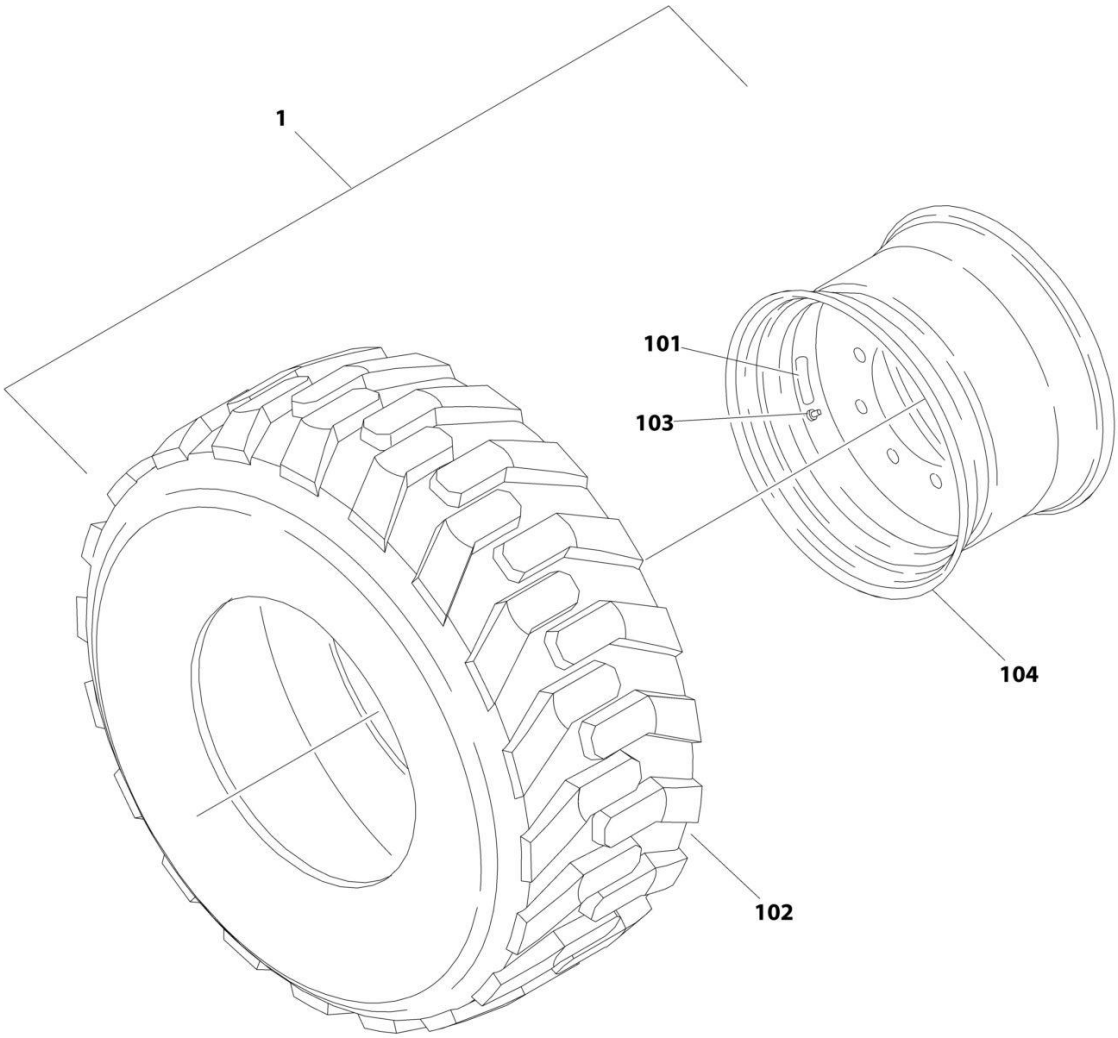

FIGURE 1-16. TIRE AND WHEEL INSTALLATION - 33/1550 X 16.5 PNEUMATIC (AVAILABLE ON ANSI, ANSI EXPORT AND CSA SPECS)

ITEM	PART NUMBER	QTY	DESCRIPTION	REV
	1001169073	Ref	TIRE AND WHEEL INSTALLATION - 33/1550 X 16.5 PNEUMATIC (AVAILABLE ON ANSI, ANSI EXPORT AND CSA SPECS)	A
1	0257755	2	Tire and Wheel Assembly (RH Side)	E
1	0257756	2	Tire and Wheel Assembly (LH Side)	E
101	1702740	4	Decal - Tire Pressure	
102	4520217	4	Tire 33/1550 x 16.5	
103	4640113	4	Valve, Air	
104	4860179	4	Rim, Wheel	

FIGURE 1-17. TIRE AND WHEEL INSTALLATION - 33/1550 X 16.5 PNEUMATIC WITH TIRE SEALANT (AVAILABLE ON ANSI, ANSI EXPORT AND CSA SPECS)

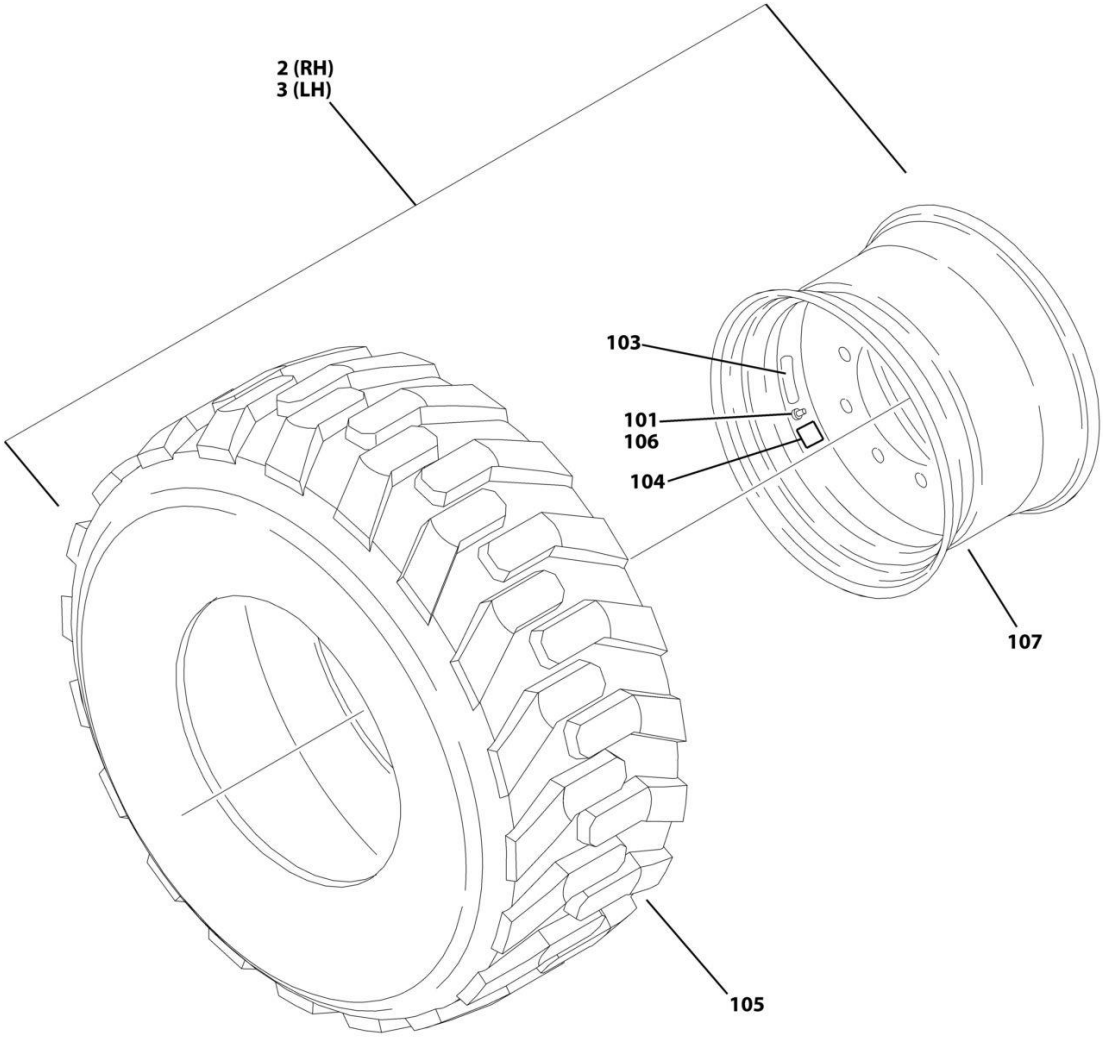

FIGURE 1-17. TIRE AND WHEEL INSTALLATION - 33/1550 X 16.5 PNEUMATIC WITH TIRE SEALANT (AVAILABLE ON ANSI, ANSI EXPORT AND CSA SPECS)

ITEM	PART NUMBER	QTY	DESCRIPTION	REV
	1001169074	Ref	TIRE AND WHEEL INSTALLATION - 33/1550 X 16.5 PNEUMATIC WITH TIRE SEALANT (AVAILABLE ON ANSI, ANSI EXPORT AND CSA SPECS)	B
1	0272341	1	Decal Kit - Tire Sealant (Not Shown) **(SN 0300201991 through 0300211853)**	1/A
1	1705363	1	Decal - Tire Sealant (Not Shown - Located near Ground Controls)	
2	0272360	2	Tire and Wheel Assembly (RH Side)	B
3	0272361	2	Tire and Wheel Assembly (LH Side)	B
101	1120552	4	Cap, Valve Stem (Green)	
103	1702740	4	Decal - Tire Pressure	
104	1705364	4	Decal - Tire Sealant	
105	4520217	4	Tire 33/1550 x 16.5	
106	4640113	4	Valve, Air	
107	4860179	4	Rim, Wheel	

FIGURE 1-18. TIRE AND WHEEL INSTALLATION - 33/1550 X 16.5 FOAM-FILLED (AVAILABLE ON ALL SPECS)

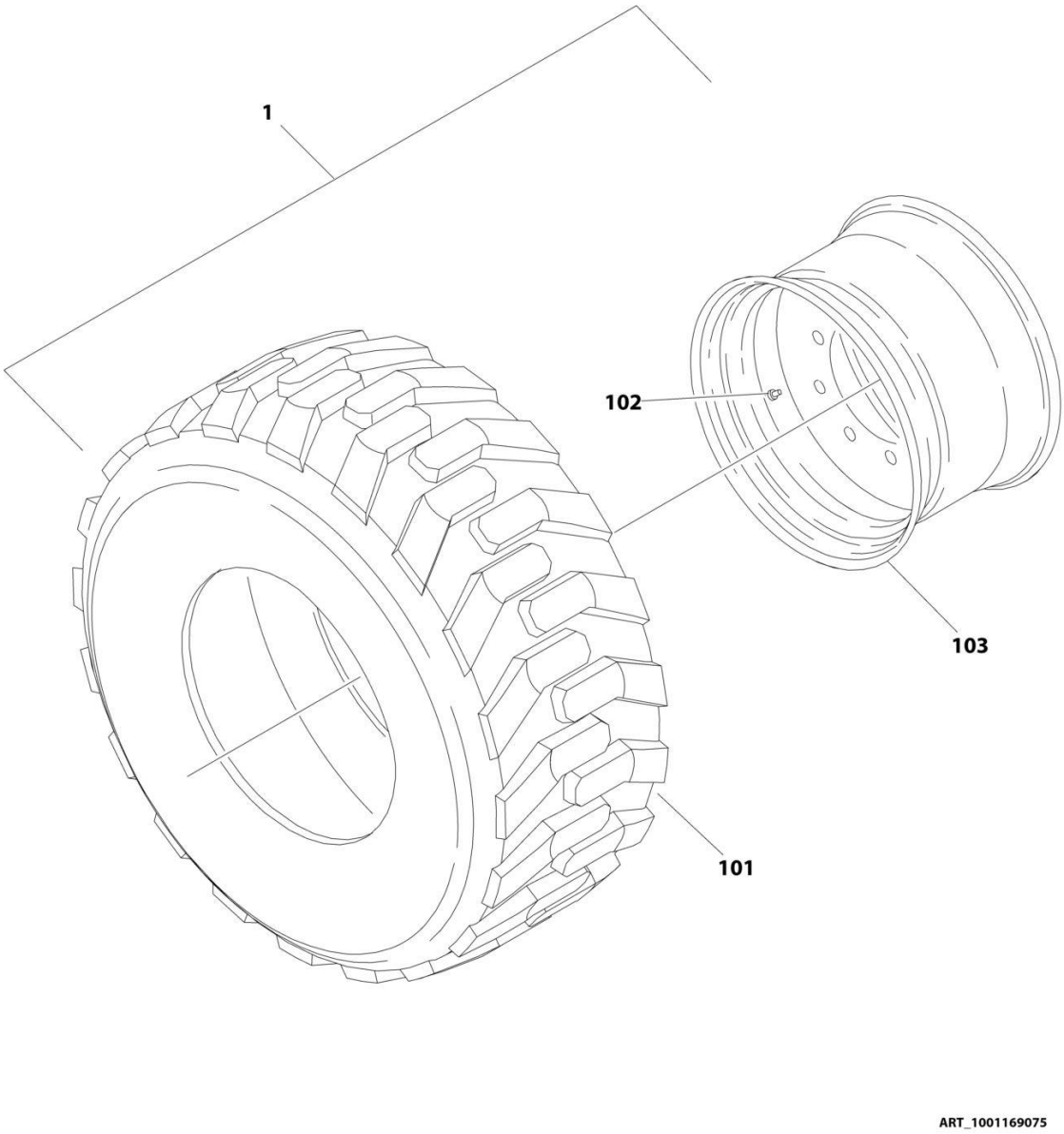

FIGURE 1-18. TIRE AND WHEEL INSTALLATION - 33/1550 X 16.5 FOAM-FILLED (AVAILABLE ON ALL SPECS)

ITEM	PART NUMBER	QTY	DESCRIPTION	REV
	1001169075	Ref	TIRE AND WHEEL INSTALLATION - 33/1550 X 16.5 FOAM-FILLED (AVAILABLE ON ALL SPECS)	A
		Ref	Note: Assemblies may require ballast/foam filling to manufacturer's specifications prior to installing on a machine. Refer to Operation and Safety or Service and Maintenance Manuals. Purchase individual tire and/or rim only if able to foam fill tire and wheel assembly, otherwise, purchase complete assembly.	
1	0258011	2	Tire and Wheel Assembly (RH Side)	I
1	0258012	2	Tire and Wheel Assembly (LH Side)	I
101	4520217	4	Tire, 33/1550 x 16.5	
102	8786514	4	Valve, Stem	
103	4860179	4	Rim, Wheel	

FIGURE 1-19. TIRE AND WHEEL INSTALLATION - 315/55 D20 FOAM FILLED (AVAILABLE ON AUSTRALIAN, CE AND CHINA SPECS)

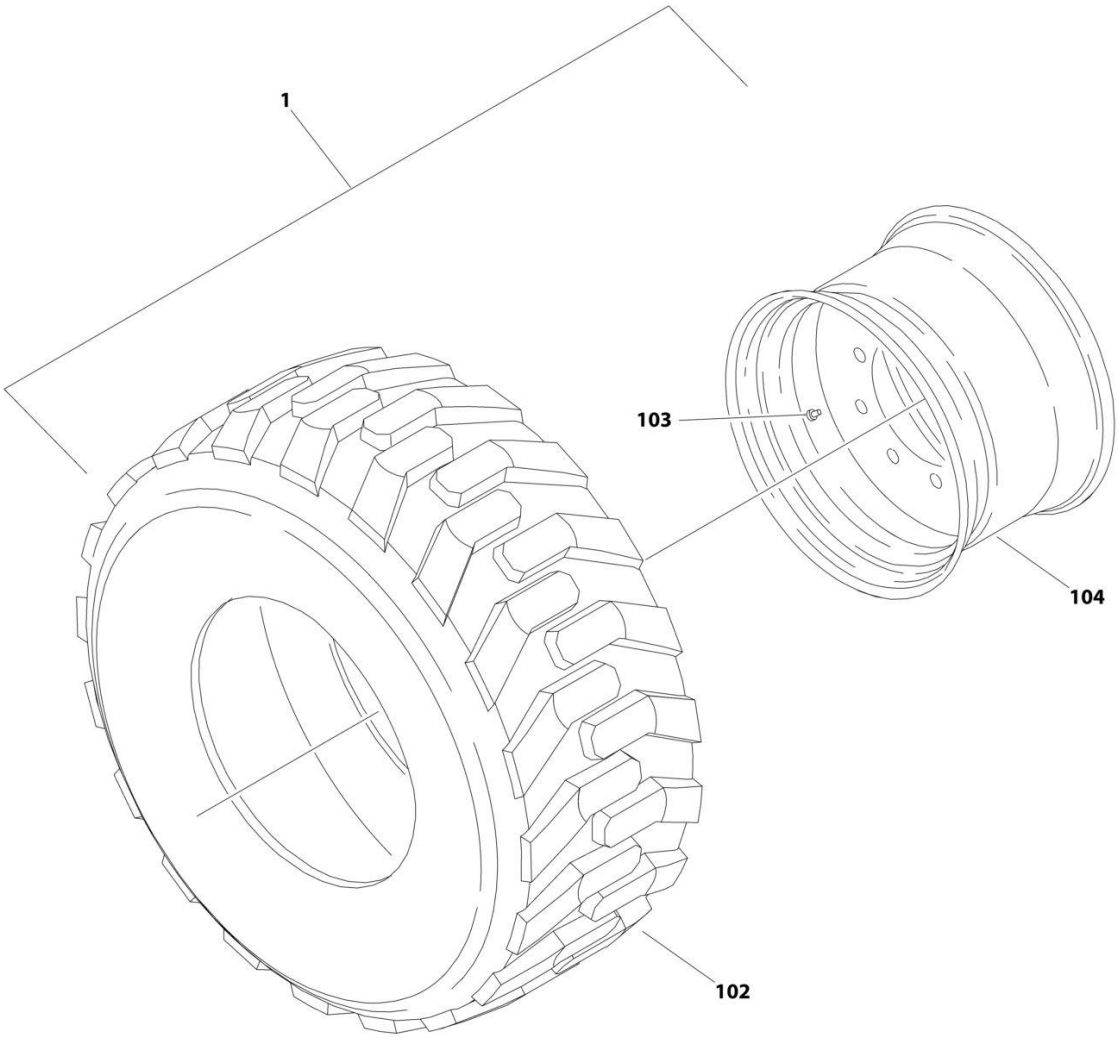

FIGURE 1-19. TIRE AND WHEEL INSTALLATION - 315/55 D20 FOAM FILLED (AVAILABLE ON AUSTRALIAN, CE AND CHINA SPECS)

ITEM	PART NUMBER	QTY	DESCRIPTION	REV
	1001166157	Ref	TIRE AND WHEEL INSTALLATION - 315/55 D20 FOAM FILLED (AVAILABLE ON AUSTRALIAN, CE AND CHINA SPECS)	A
		Ref	Note: Assemblies may require ballast/foam filling to manufacturer's specifications prior to installing on a machine. Refer to Operation and Safety or Service and Maintenance Manuals. Purchase individual tire and/or rim only if able to foam fill tire and wheel assembly, otherwise, purchase complete assembly.	
1	1001166155	2	Tire and Wheel Assembly (LH Side)	I
1	1001166156	2	Tire and Wheel Assembly (RH Side)	I
102	4520608	4	Tire IN315/55/D20	
103	4641122	4	Valve, Stem	
104	1001166153	4	Rim, Wheel	

FIGURE 1-20. TIRE AND WHEEL INSTALLATION - 315/55 D20 FOAM FILLED NON-MARKING (AVAILABLE ON AUSTRALIAN, CE AND CHINA SPECS)

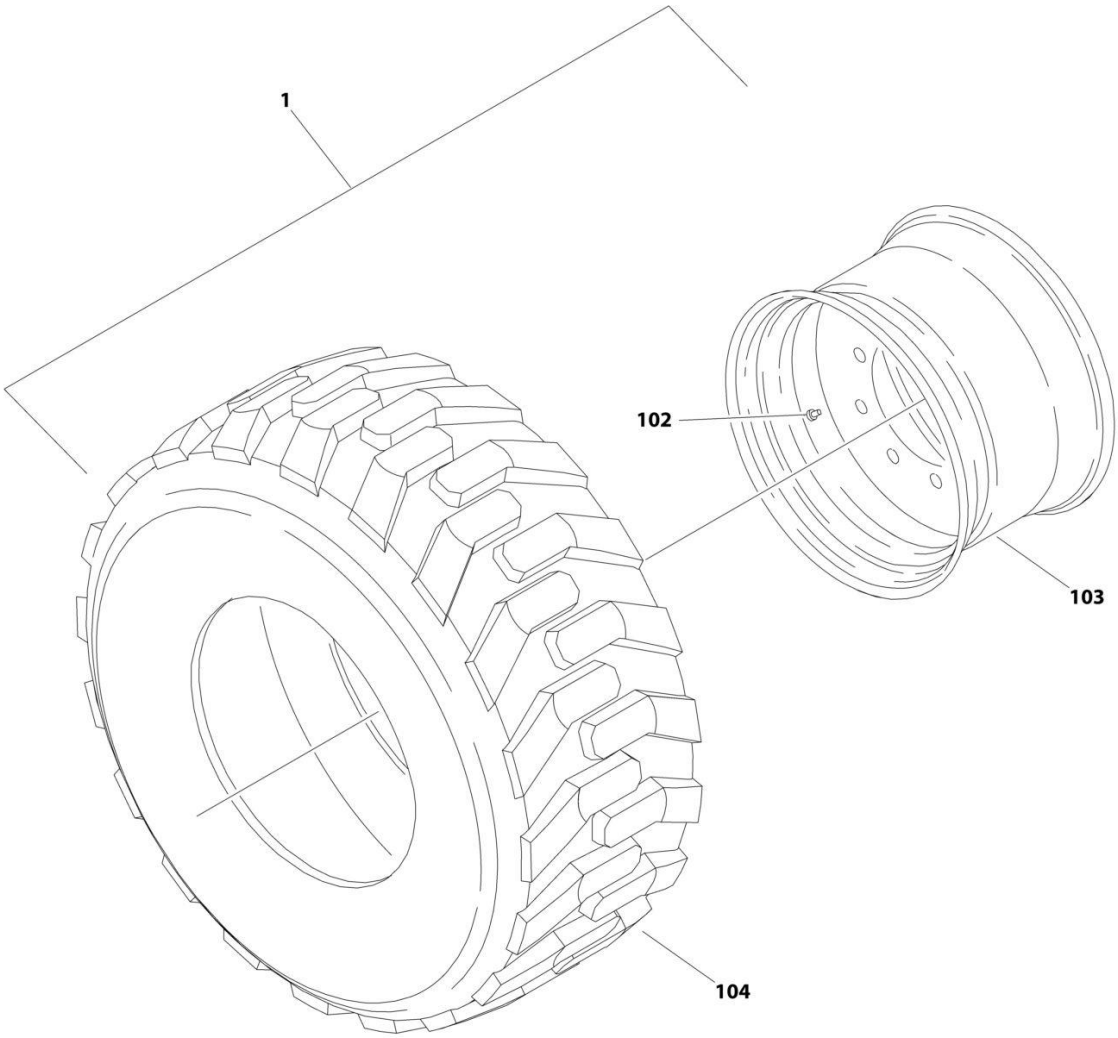

FIGURE 1-20. TIRE AND WHEEL INSTALLATION - 315/55 D20 FOAM FILLED NON-MARKING (AVAILABLE ON AUSTRALIAN, CE AND CHINA SPECS)

ITEM	PART NUMBER	QTY	DESCRIPTION	REV
	1001169058	Ref	TIRE AND WHEEL INSTALLATION - 315/55 D20 FOAM FILLED NON-MARKING (AVAILABLE ON AUSTRALIAN, CE AND CHINA SPECS)	A
		Ref	Note: Assemblies may require ballast/foam filling to manufacturer's specifications prior to installing on a machine. Refer to Operation and Safety or Service and Maintenance Manuals. Purchase individual tire and/or rim only if able to foam fill tire and wheel assembly, otherwise, purchase complete assembly.	
1	1001170459	2	Tire and Wheel Assembly (RH Side)	F
1	1001170460	2	Tire and Wheel Assembly (LH Side)	F
102	4641122	4	Valve, Stem	
103	1001166153	4	Rim, Wheel	
104	1001170458	4	Tire 315/55 D20 Non Marking	

FIGURE 1-21. 2WD VALVES INSTALLATION - 450A FRAME MOUNTED

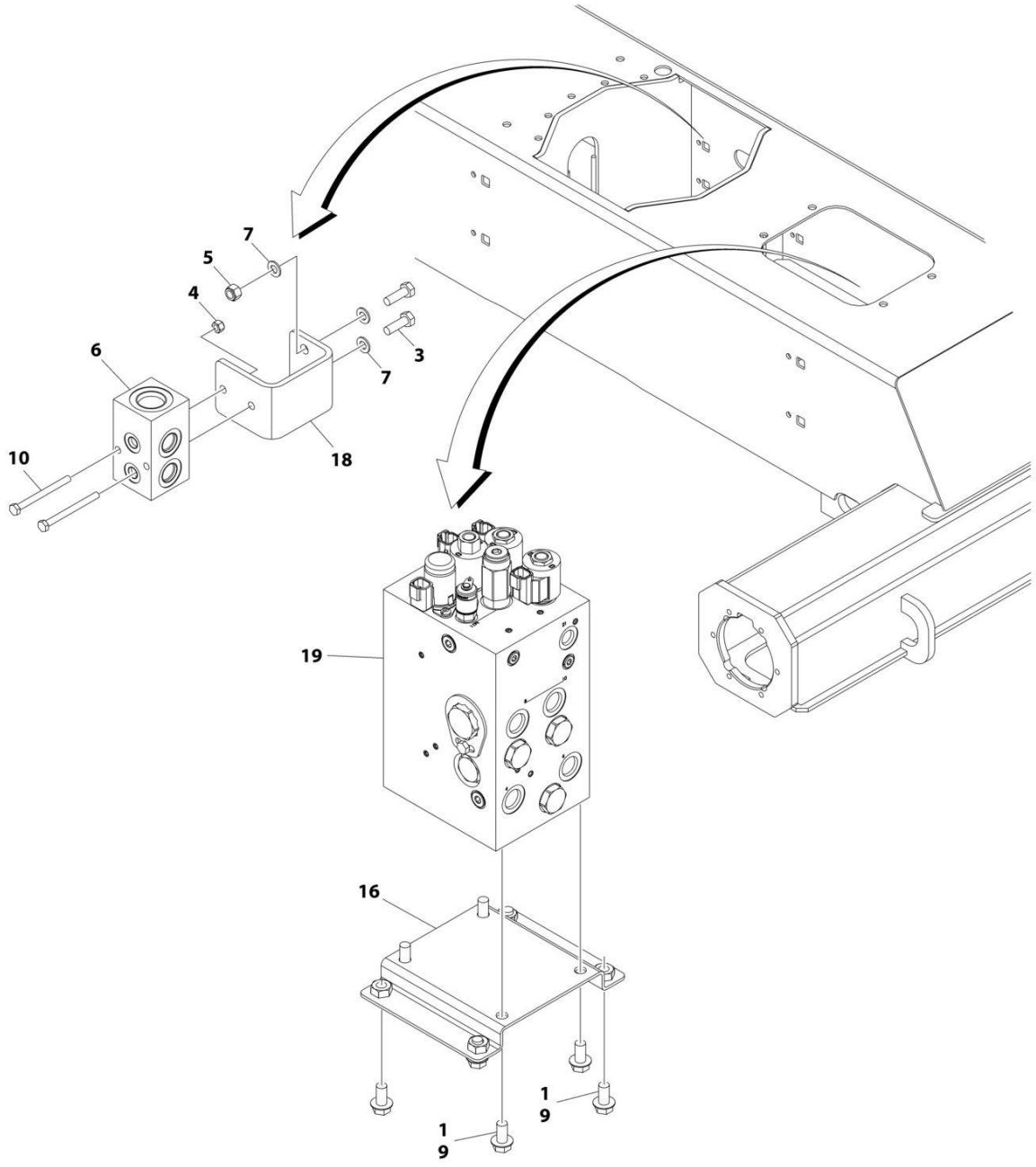

FIGURE 1-21. 2WD VALVES INSTALLATION - 450A FRAME MOUNTED

ITEM	PART NUMBER	QTY	DESCRIPTION	REV
	1001215659	Ref	2WD VALVES INSTALLATION - 450A FRAME MOUNTED	C
1	0100011	AR	Compound, Locking	
3	0760812	2	Bolt M8 x 25	
4	3290605	2	Nut M6	
5	3290805	2	Nut M8	
6	4641155	1	Junction Valve Assembly	
7	4811900	4	Washer M8	
9	5251010	8	Bolt M10 x 20	
10	1001096653	2	Bolt M6 x 70	
16	1001179517	1	Bracket	
18	1001197221	1	Bracket	
19	1001214316	1	Traction Valve Assembly (See TRACTION VALVE ASSEMBLY - 2WD for Breakdown)	

FIGURE 1-22. 2WD VALVES INSTALLATION - 450AJ FRAME MOUNTED

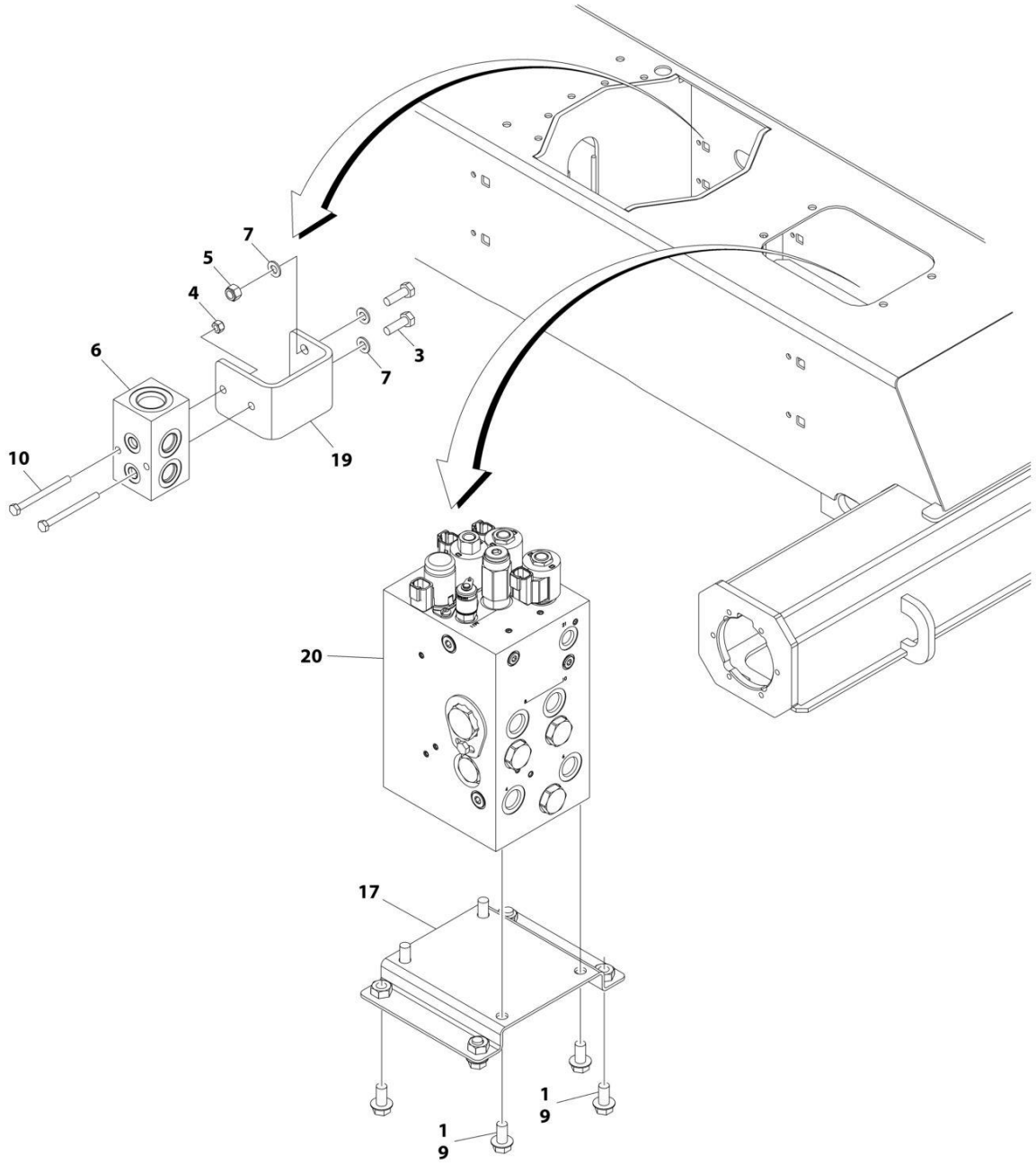

ART_1001214163_1OF3

FIGURE 1-22. 2WD VALVES INSTALLATION - 450AJ FRAME MOUNTED

ITEM	PART NUMBER	QTY	DESCRIPTION	REV
	1001214163	Ref	2WD VALVES INSTALLATION - 450AJ FRAME MOUNTED	B
1	0100011	AR	Compound, Locking	
3	0760812	2	Bolt M8 x 25	
4	3290605	2	Nut M6	
5	3290805	2	Nut M8	
6	4641155	1	Junction Valve Assembly	
7	4811900	4	Washer M8	
9	5251010	8	Bolt M10 x 20	
10	1001096653	2	Bolt M6 x 70	
17	1001179517	1	Bracket	
19	1001197221	1	Bracket	
20	1001214316	1	Traction Valve Assembly (See TRACTION VALVE ASSEMBLY - 2WD for Breakdown)	

FIGURE 1-23. 4WD VALVES INSTALLATION - 450A FRAME MOUNTED

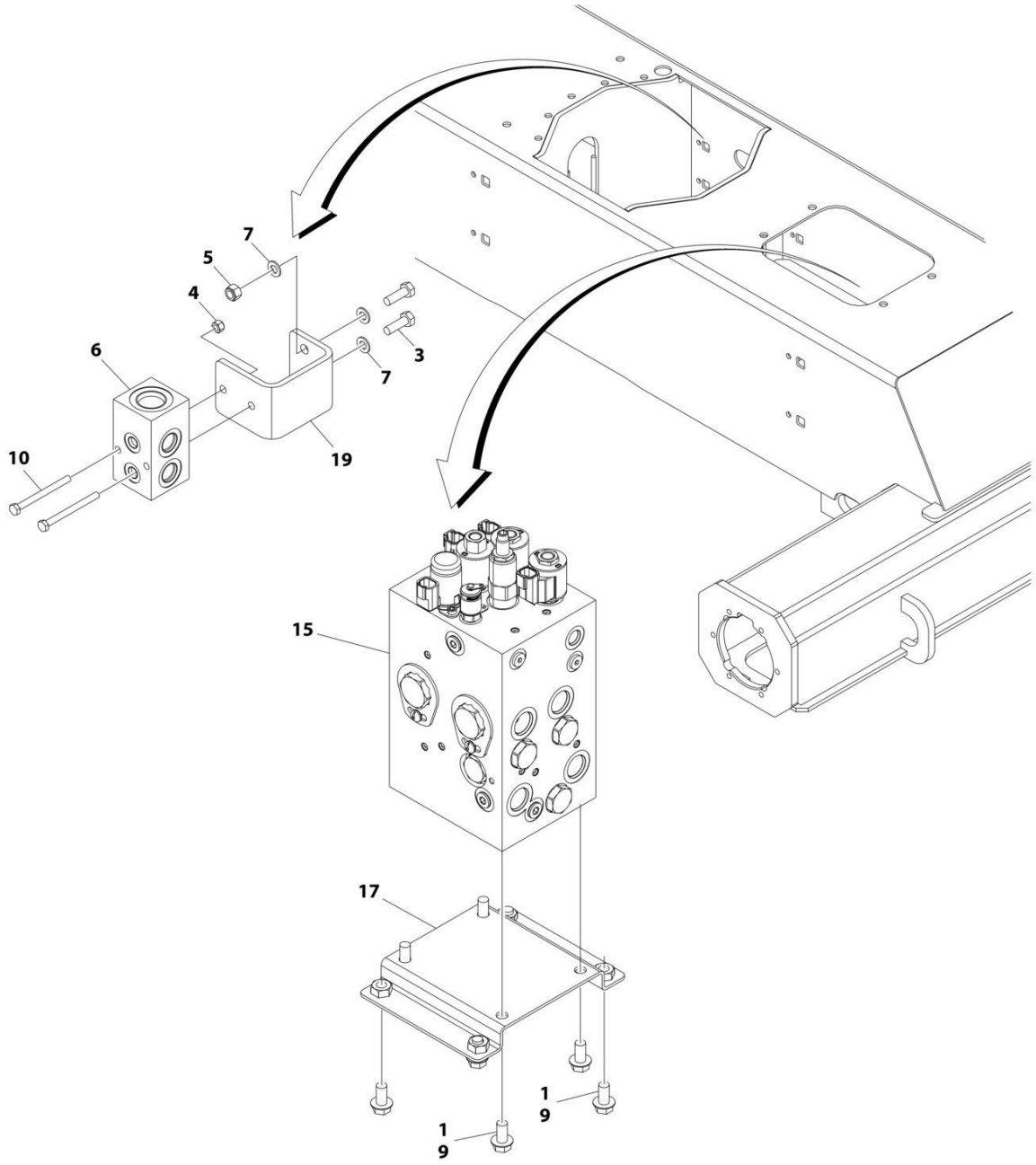

FIGURE 1-23. 4WD VALVES INSTALLATION - 450A FRAME MOUNTED

ITEM	PART NUMBER	QTY	DESCRIPTION	REV
	1001215378	Ref	4WD VALVES INSTALLATION - 450A FRAME MOUNTED	C
1	0100011	AR	Compound, Locking	
3	0760812	2	Bolt M8 x 25	
4	3290605	2	Nut M6	
5	3290805	2	Nut M8	
6	4641155	1	Junction Valve Assembly	
7	4811900	4	Washer M8	
9	5251010	8	Bolt M10 x 20	
10	1001096653	2	Bolt M6 x 70	
15	1001162539	1	Traction Valve Assembly (See TRACTION VALVE ASSEMBLY - 4WD for Breakdown)	
17	1001179517	1	Bracket	
19	1001197221	1	Bracket	

FIGURE 1-24. 4WD VALVES INSTALLATION - 450AJ FRAME MOUNTED

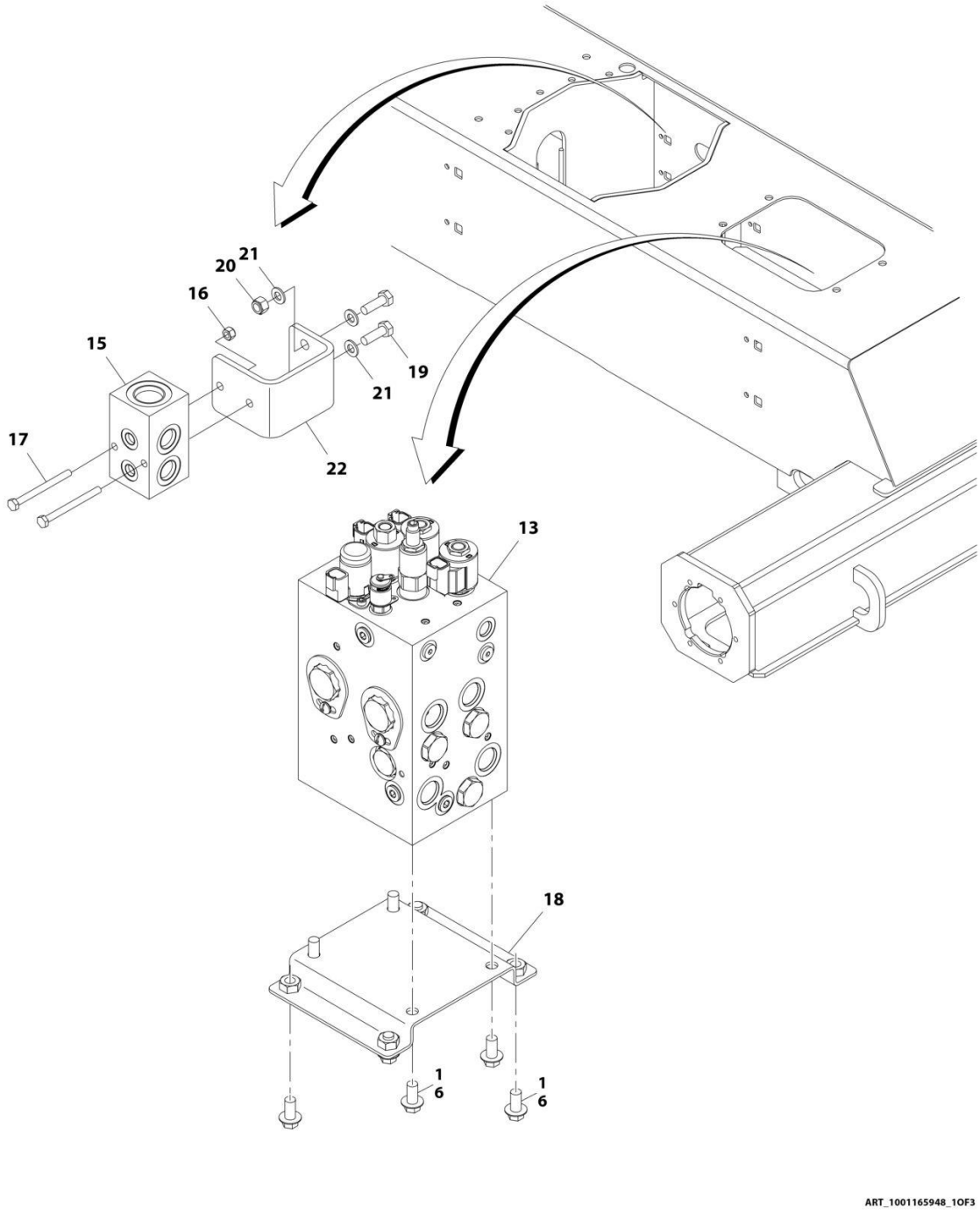

FIGURE 1-24. 4WD VALVES INSTALLATION - 450AJ FRAME MOUNTED

ITEM	PART NUMBER	QTY	DESCRIPTION	REV
	1001165948	Ref	4WD VALVES INSTALLATION - 450AJ FRAME MOUNTED	H
1	0100011	AR	Compound, Locking	
3	0760812	1	Bolt M8 x 25	
6	5251010	4	Bolt M10 x 20	
13	1001162539	1	Traction Valve Assembly (See TRACTION VALVE ASSEMBLY - 4WD for Breakdown)	
15	4641155	1	Junction Valve Assembly	
16	3290605	2	Nut, M6	
17	1001096653	2	Bolt M6 x 70	
18	1001179517	1	Bracket	
19	0760812	1	Bolt M8 x 25	
20	3290805	1	Nut M8	
21	4811900	1	Washer M8	
22	1001197221	1	Bracket **(SN 0300202585 through 0300272317, SN 1300007279 through 1300007373, SN B300003516 through B300005760, SN E300000100 through E300007990, Except SN 0300272185 through 0300272190, Excluding B300005569 and E300007814)**	

FIGURE 1-25. TRACTION VALVE ASSEMBLY - 2WD

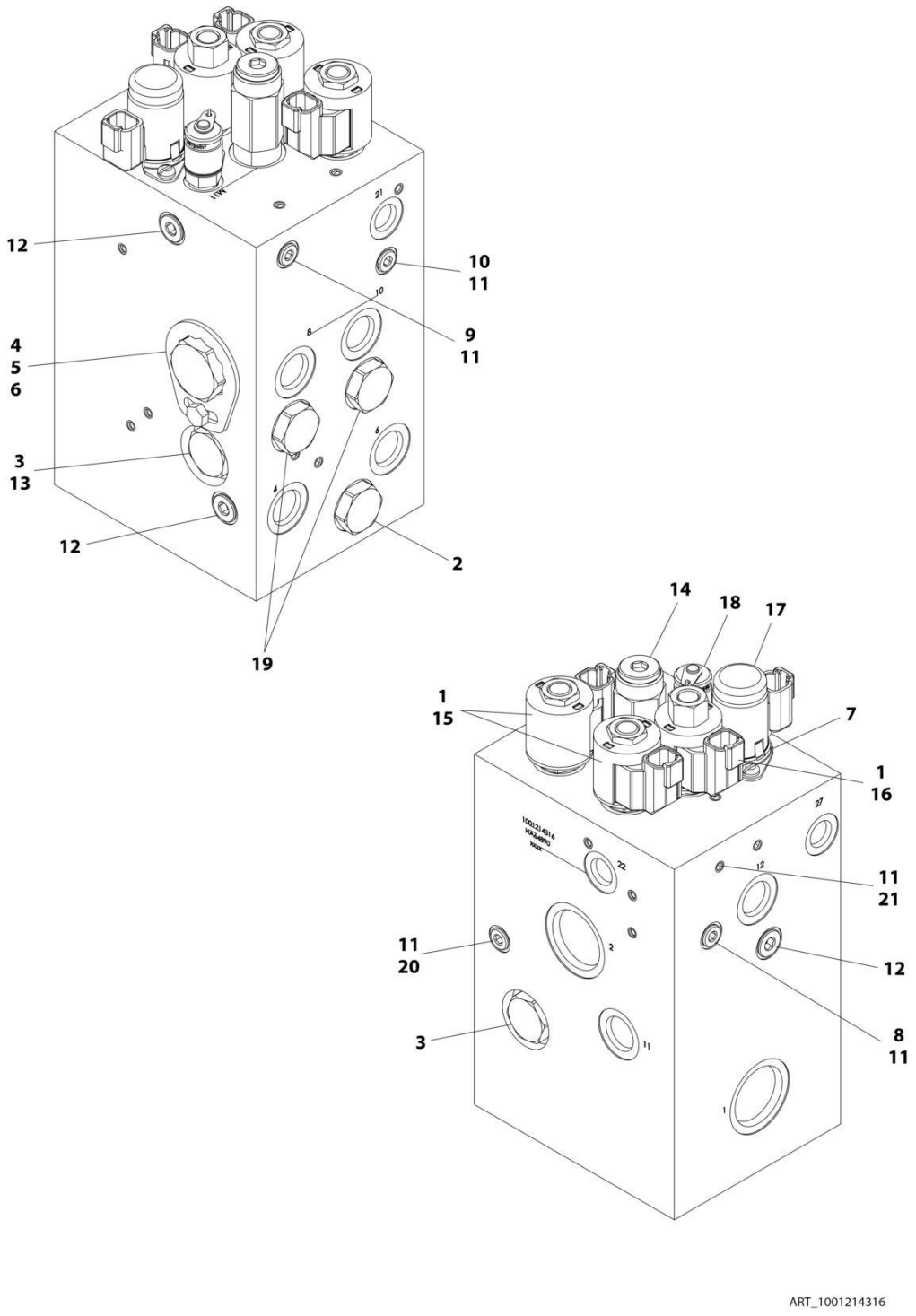

FIGURE 1-25. TRACTION VALVE ASSEMBLY - 2WD

ITEM	PART NUMBER	QTY	DESCRIPTION	REV
	1001214316	Ref	TRACTION VALVE ASSEMBLY - 2WD	D
1	70002386	3	Coil	
2	7022397	1	Cartridge	
2	7022399	1	Seal Kit - 7022397 Valve	
3	70002390	2	Cartridge, Check Valve	
3	7022399	2	Seal Kit - 70002390 Valve	
4	70004885	1	Cartridge, Flow Divider **(SN 0300201991 through 0300221764)**	
4	70006000	1	Cartridge, Flow Divider **(SN 0300221765 through 0300272317, Except SN 0300272185 through 0300272190)**	
4	70004577	1	Seal Kit - 70004885 Valve	
5	70000781	1	Locking Kit	
6	70005827	1	Screw	
7	70004888	2	Screw	
8	7024810	1	Orifice	
9	70005828	1	Orifice	
10	70005829	1	Orifice	
11	2220883	5	Plug #4	
12	70005830	3	Plug #6	
13	7024881	1	Piston, Pilot	
14	70005831	1	Cartridge, Relief Valve	
14	7017496	1	Seal Kit - 70005831 Valve	
15	7012941	2	Cartridge, Solenoid Less Coil	
15	7010543	2	Seal Kit - 7012941 Valve	
15	7022390	2	Nut, Coil	
16	7017410	1	Cartridge, Solenoid Less Coil	
16	7012967	1	Seal Kit - 7017410 Valve	
16	70003978	1	Nut, Coil	
17	70004887	1	Cartridge, Solenoid Less Coil	
17	70023606	1	Seal Kit - 70004887 Valve	
17	7024885	1	Coil	
18	70005832	1	Fitting, Diagnostic	
19	7022397	2	Cartridge **(SN 0300201991 through 0300221764)**	
19	70026444	2	Cartridge **(SN 0300221765 through 0300272317, Except SN 0300272185 through 0300272190)**	
19	7022399	2	Seal Kit - 7022397 or 70026444 Valve	
20	7024810	1	Orifice **(SN 0300201991 through 0300221764)**	
20	70006001	1	Orifice **(SN 0300221765 through 0300272317, Except SN 0300272185 through 0300272190)**	
21	70006002	1	Orifice **(SN 0300221765 through 0300272317, Except SN 0300272185 through 0300272190)**	

FIGURE 1-26. TRACTION VALVE ASSEMBLY - 4WD

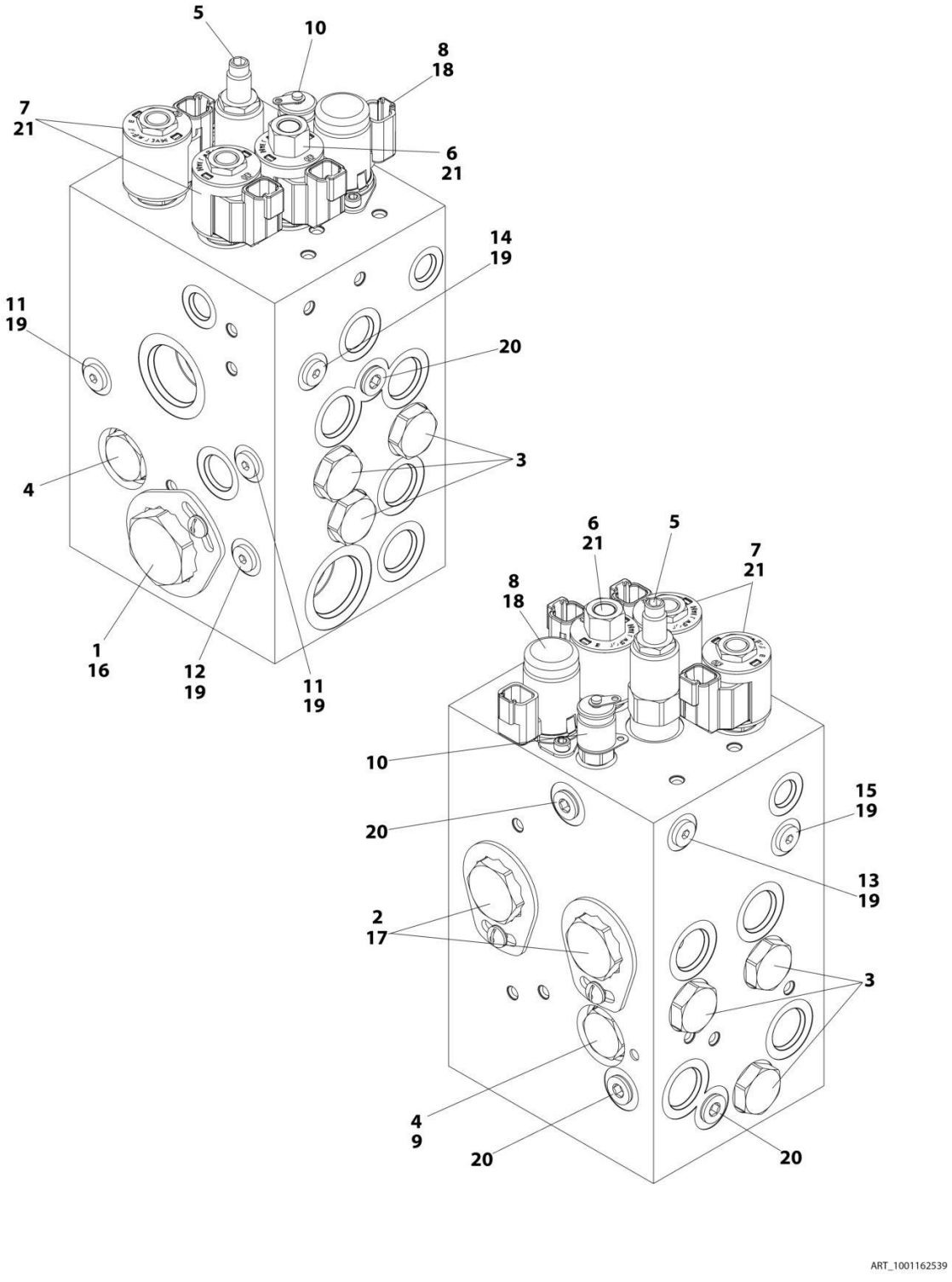

FIGURE 1-26. TRACTION VALVE ASSEMBLY - 4WD

ITEM	PART NUMBER	QTY	DESCRIPTION	REV
	1001162539	Ref	TRACTION VALVE ASSEMBLY - 4WD	D
1	70004017	1	Cartridge, Flow Divider	
1	7021625	1	Seal Kit - 70004017 Valve	
2	70004885	2	Cartridge, Flow Divider	
2	70004577	2	Seal Kit - 70004885 Valve	
3	7022397	6	Cartridge, Check Valve	
3	7022399	6	Seal Kit - 7022397 Valve	
4	7021639	2	Cartridge, Check Valve	
4	2900756	2	Seal Kit - 7021639 Valve	
5	70004886	1	Cartridge, Relief Valve	
5	7017496	1	Seal Kit - 70004886 Valve	
6	7017410	1	Cartridge, Solenoid Less Coil	
6	7012967	1	Seal Kit - 7017410 Valve	
7	7012974	2	Cartridge, Solenoid Less Coil	
7	7010543	2	Seal Kit - 7012974 Valve	
8	70004887	1	Cartridge, Solenoid Less Coil	
8	70023606	1	Seal Kit - 70004887 Valve	
8	7024885	1	Coil	
9	7024881	1	Piston, Pilot	
10	2221086	1	Fitting, Diagnostic	
11	70003975	2	Orifice	
12	70002209	1	Orifice	
13	70002063	1	Orifice	
14	70004884	1	Orifice	
15	70004883	1	Orifice	
16	70000781	1	Locking Kit	
17	70002962	2	Locking Kit	
18	70004888	2	Screw	
19	2220883	6	Plug #4	
20	2220885	5	Plug #6	
21	70002386	3	Coil	

FIGURE 1-27. TOW PACKAGE INSTALLATION (OPTIONAL)

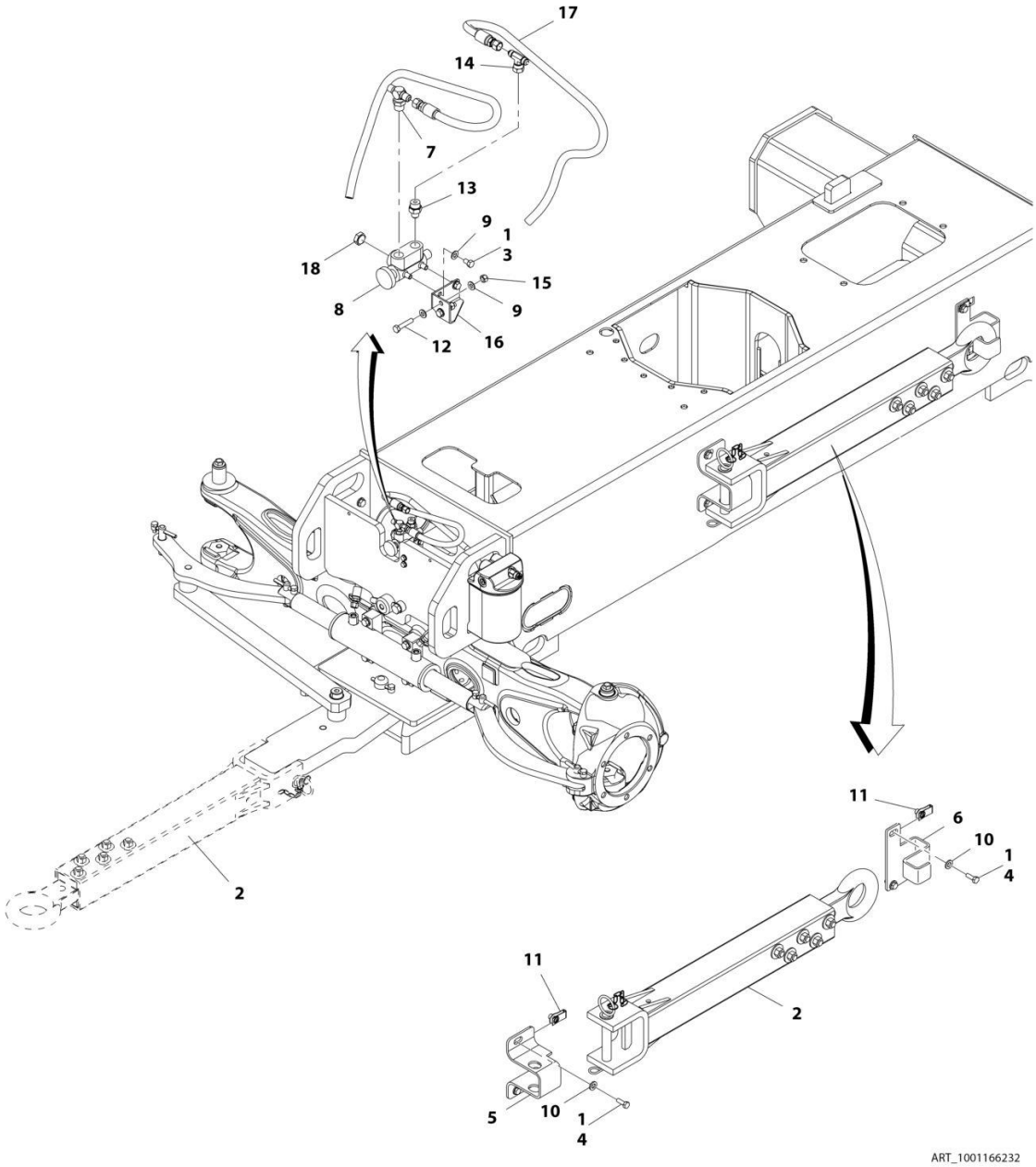

FIGURE 1-27. TOW PACKAGE INSTALLATION (OPTIONAL)

ITEM	PART NUMBER	QTY	DESCRIPTION	REV
	1001166232	Ref	TOW PACKAGE INSTALLATION (OPTIONAL)	D
1	0100011	AR	Compound, Locking	
2	0363019	1	Tow Bar Assembly (See TOW BAR ASSEMBLY for Breakdown)	
3	0641504	2	Bolt 5/16 x 1/2	
4	0701014	4	Bolt M10 x 30	
5	0902733	1	Bracket	
6	0902734	1	Bracket	
7	2221052	1	Fitting, Tee JIC/ORB/JIC	
8	4640261	1	Steer/Tow Select Valve Assembly	
9	4711500	6	Washer 5/16	
10	5241200	4	Washer M12	
11	1001118972	4	Nut M10	
12	0700816	2	Bolt M8 x 40	
13	2220372	1	Fitting, Straight JIC/ORB	
14	2220579	1	Fitting, Tee JIC/FSJIC/JIC	
15	3290805	2	Nut M8	
16	1001181527	1	Bracket	
17	1001181913	2	Hose	
18	2220238	1	Plug	

FIGURE 1-28. TOW BAR ASSEMBLY

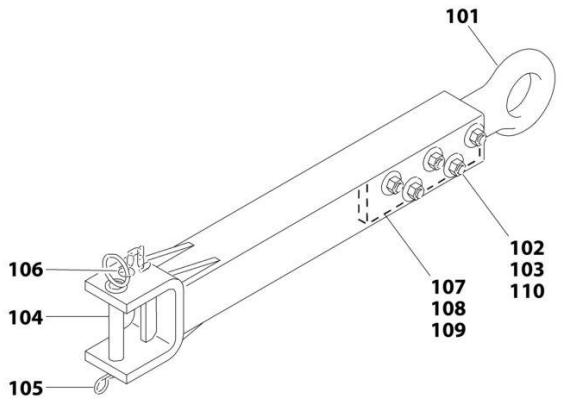

FIGURE 1-28. TOW BAR ASSEMBLY

ITEM	PART NUMBER	QTY	DESCRIPTION	REV
	0363019	Ref	TOW BAR ASSEMBLY	B
101	0360406	1	Pintle, Draw Eye	
102	0682040	5	Bolt 5/8 x 5	
103	3312005	5	Nut 5/8	
104	3420352	1	Pin, Towing	
105	3420372	1	Hairpin	
106	3760170	1	Ring, Split	
107	4070450	2	Shim (.07)	
108	4070560	2	Shim (.88)	
109	4070561	2	Shim (.12)	
110	4752000	10	Washer 5/8	

SECTION 2 - TURNTABLE

FIGURE 2-1. 2WD VALVES INSTALLATION - 450A TURNTABLE MOUNTED

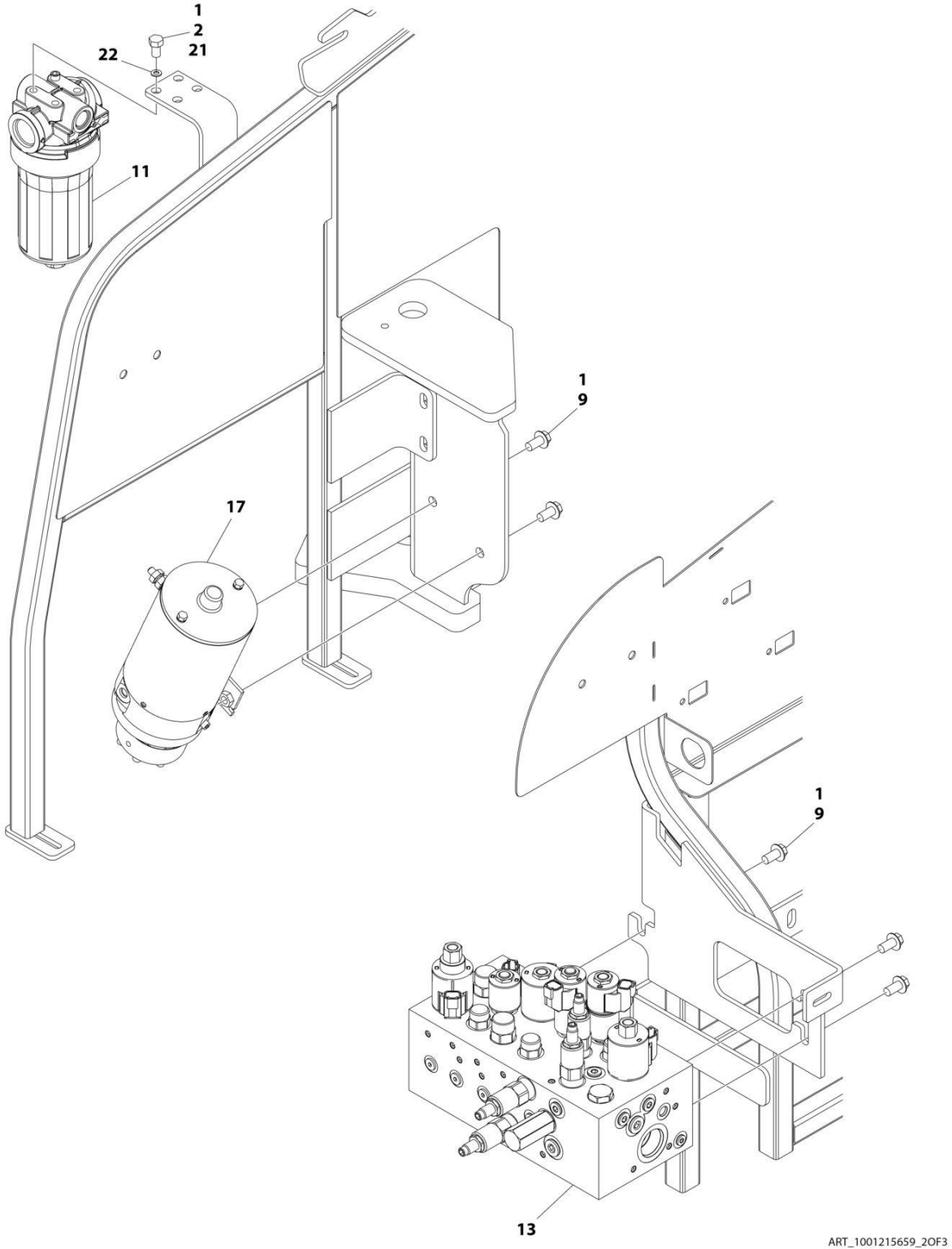

FIGURE 2-1. 2WD VALVES INSTALLATION - 450A TURNTABLE MOUNTED

ITEM	PART NUMBER	QTY	DESCRIPTION	REV
	1001215659	Ref	2WD VALVES INSTALLATION - 450A TURNTABLE MOUNTED	C
1	0100011	AR	Compound, Locking	
2	0641605	AR	Bolt 3/8 x 5/8	
9	5251010	5	Bolt M10 x 20	
11	1001102987	1	Filter, Charge Pump **(SN 0300201991 through 0300237247)**	
11	1001208874	1	Filter, Charge Pump **(SN 0300237248 through 0300272317, Except SN 0300272185 through 0300272190)**	
11	70010383	1	Element, Filter (Includes O-Ring)	
13	1001162534	1	Main Valve Assembly (See MAIN VALVE ASSEMBLY for Breakdown)	
17	1001185821	1	Auxiliary Pump Assembly (See AUXILIARY PUMP ASSEMBLY for Breakdown)	
21	0761010	3	Bolt M10 x 20	
22	4812000	3	Washer M10	

FIGURE 2-2. 2WD VALVES INSTALLATION - 450AJ TURNTABLE MOUNTED

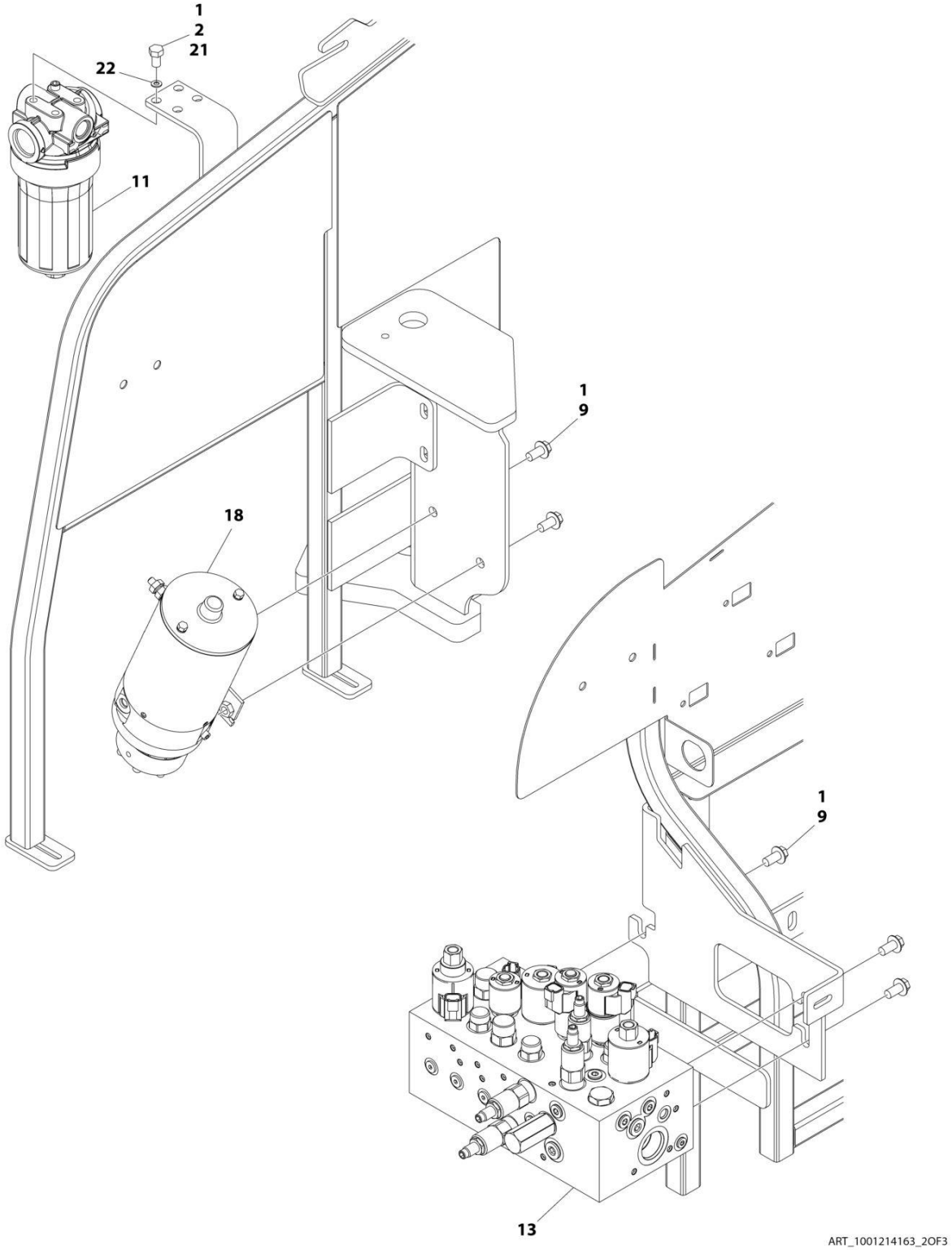

FIGURE 2-2. 2WD VALVES INSTALLATION - 450AJ TURNTABLE MOUNTED

ITEM	PART NUMBER	QTY	DESCRIPTION	REV
	1001214163	Ref	2WD VALVES INSTALLATION – 450AJ TURNTABLE MOUNTED	B
1	0100011	AR	Compound, Locking	
2	0641605	AR	Bolt 3/8 x 5/8	
9	5251010	5	Bolt M10 x 20	
11	1001102987	1	Filter, Charge Pump **(SN 0300201991 through 0300237247)**	
11	1001208874	1	Filter, Charge Pump **(SN 0300237248 through 0300272317, Except SN 0300272185 through 0300272190)**	
11	70010383	1	Element, Filter (Includes O-Ring)	
13	1001162534	1	Main Valve Assembly (See MAIN VALVE ASSEMBLY for Breakdown)	
18	1001185821	1	Auxiliary Pump Assembly (See AUXILIARY PUMP ASSEMBLY for Breakdown)	
21	0761010	3	Bolt M10 x 20	
22	4812000	3	Washer M10	

FIGURE 2-3. 4WD VALVES INSTALLATION - 450A TURNTABLE MOUNTED

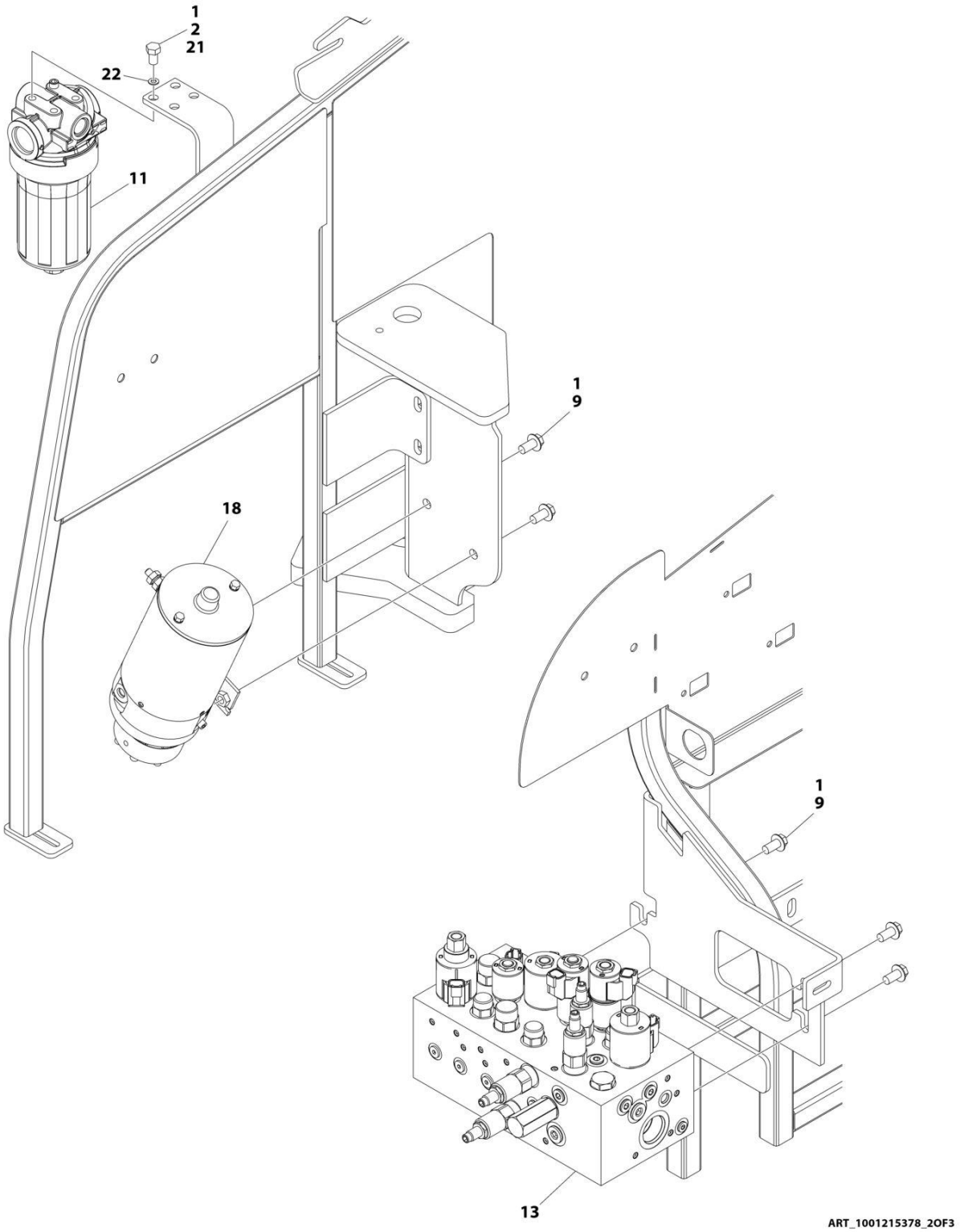

FIGURE 2-3. 4WD VALVES INSTALLATION - 450A TURNTABLE MOUNTED

ITEM	PART NUMBER	QTY	DESCRIPTION	REV
	1001215378	Ref	4WD VALVES INSTALLATION - 450A TURNTABLE MOUNTED	C
1	0100011	AR	Compound, Locking	
2	0641605	AR	Bolt 3/8 x 5/8	
9	5251010	5	Bolt M10 x 20	
11	1001102987	1	Filter, Charge Pump **(SN 0300201991 through 0300237247)**	
11	1001208874	1	Filter, Charge Pump **(SN 0300237248 through 0300272317, Except SN 0300272185 through 0300272190)**	
11	70010383	1	Element, Filter (Includes O-Ring)	
13	1001162534	1	Main Valve Assembly (See MAIN VALVE ASSEMBLY for Breakdown)	
18	1001185821	1	Auxiliary Pump Assembly (See AUXILIARY PUMP ASSEMBLY for Breakdown)	
21	0761010	3	Bolt M10 x 20	
22	4812000	3	Washer M10	

FIGURE 2-4. 4WD VALVES INSTALLATION - 450AJ TURNTABLE MOUNTED

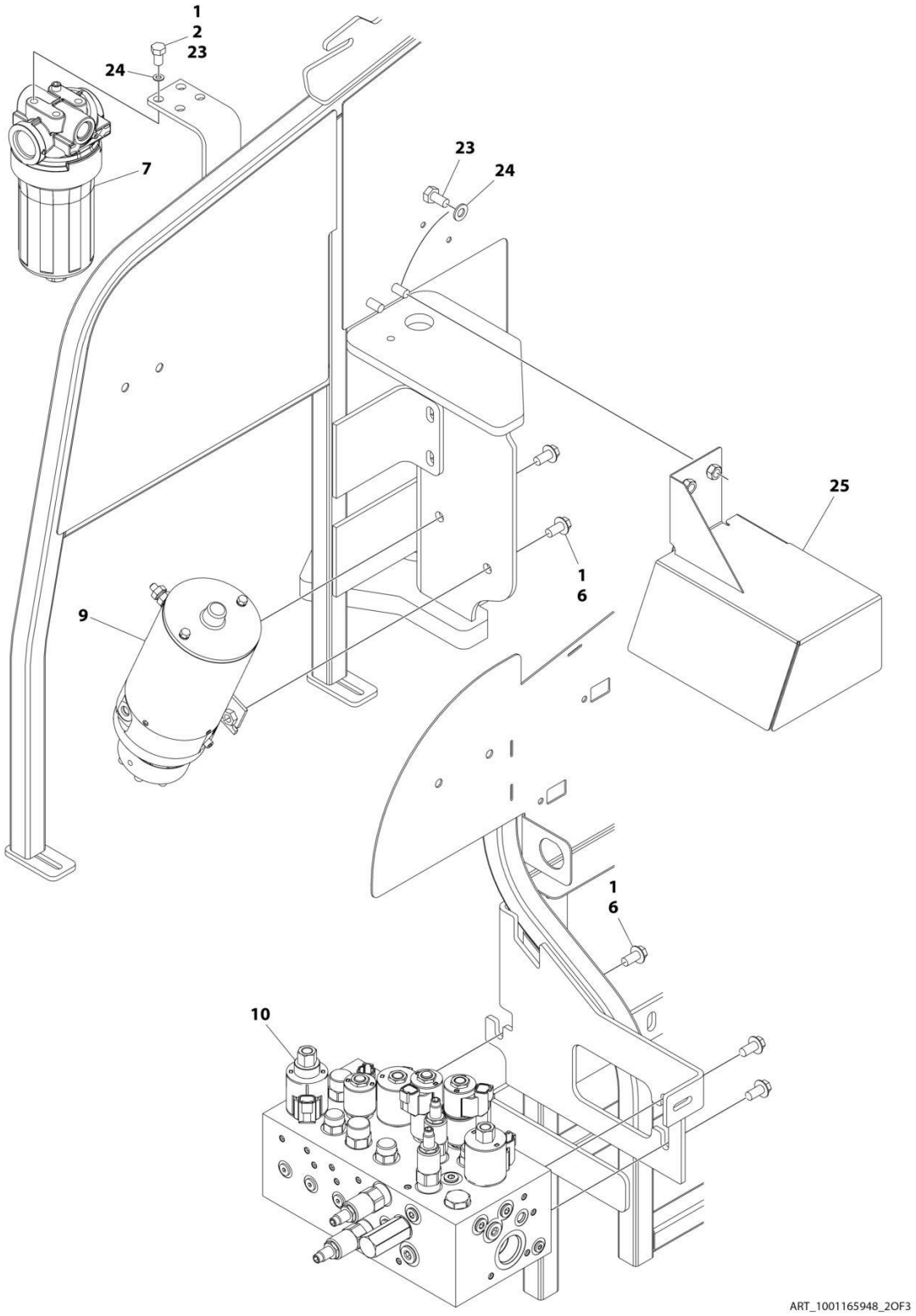

FIGURE 2-4. 4WD VALVES INSTALLATION - 450AJ TURNTABLE MOUNTED

ITEM	PART NUMBER	QTY	DESCRIPTION	REV
	1001165948	Ref	4WD VALVES INSTALLATION - 450AJ TURNTABLE MOUNTED	H
1	0100011	AR	Compound, Locking	
2	0641605	AR	Bolt 3/8 x 5/8	
6	5251010	15	Bolt M10 x 20	
7	1001102987	1	Filter, Charge Pump **(SN 0300201991 through 0300237247, SN 1300007279 through 1300007373, SN E300002833 through E300004945)**	
7	1001208874	1	Filter, Charge Pump **(SN 0300237248 through 0300272317, SN B300003516 through B300005760, SN E300004946 through E300007990, Except SN 0300272185 through 0300272190, Excluding B300005569 and E300007814)**	
7	70010383	1	Element, Filter (Includes O-Ring)	
9	1001185821	1	Auxiliary Pump Assembly (See AUXILIARY PUMP ASSEMBLY for Breakdown)	
10	1001162534	1	Main Valve Assembly (See MAIN VALVE ASSEMBLY for Breakdown)	
23	0761010	AR	Bolt M10 x 20	
24	4812000	AR	Washer M10	
25	1001234295	1	Cover **(SN 0300253982 through 0300272317, SN B300003516 through B300005760, SN E300006373 through E300007990, Except SN 0300272185 through 0300272190, Excluding B300005569 and E300007814)**	

FIGURE 2-5. MAIN VALVE ASSEMBLY

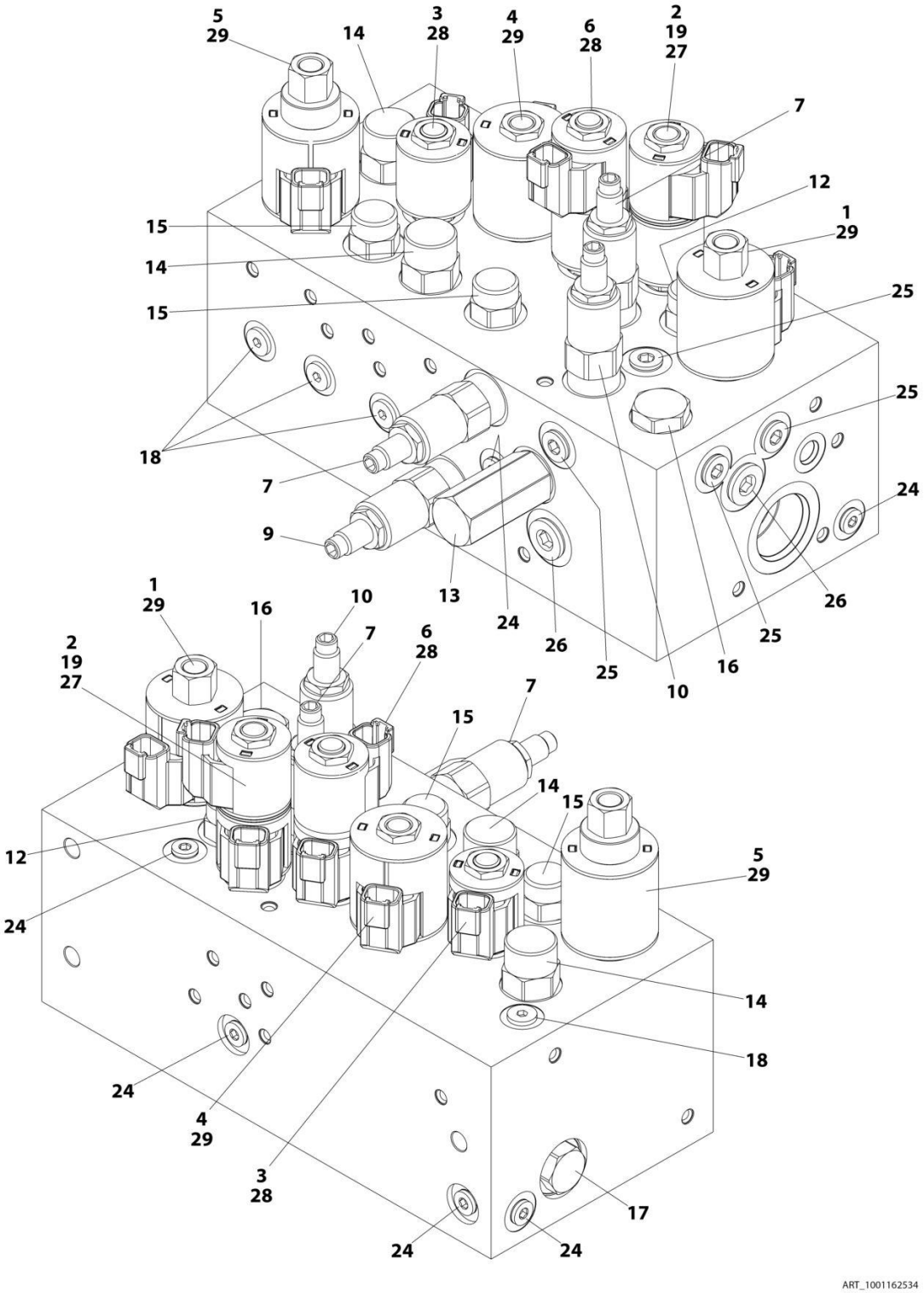

FIGURE 2-5. MAIN VALVE ASSEMBLY

ITEM	PART NUMBER	QTY	DESCRIPTION	REV
	1001162534	Ref	MAIN VALVE ASSEMBLY	F
1	70005069	1	Cartridge, Solenoid Less Coil (Main Dump)	
1	7022399	1	Seal Kit - 70005069 Valve	
1	70003977	1	Nut, Coil	
2	70005217	1	Cartridge, Solenoid Less Coil (Steer)	
2	70005071	1	Seal Kit - 70005217 Valve	
2	7022390	1	Nut, Coil	
3	70005094	1	Cartridge, Solenoid Less Coil (Main Lift Up)	
3	7023936	1	Seal Kit - 70005094 Valve	
3	7022390	1	Nut, Coil	
4	70005076	1	Cartridge, Solenoid Less Coil (Tower Lift Up)	
4	7022399	1	Seal Kit - 70005076 Valve	
4	7022390	1	Nut, Coil	
5	70005095	1	Cartridge, Solenoid Less Coil (Flow Control)	
5	7022399	1	Seal Kit - 70005095 Valve	
5	70003977	1	Nut, Coil	
6	70005096	1	Cartridge, Solenoid Less Coil (Swing)	
6	70005071	1	Seal Kit - 70005096 Valve	
7	70005097	1	Cartridge, Solenoid Less Coil	
7	70005082	2	Seal Kit - 70005097 Valve	
9	70005098	1	Cartridge, Relief Valve	
9	7023936	1	Seal Kit - 70005098 Valve	
10	70005080	1	Cartridge, Relief Valve	
10	7022399	1	Seal Kit - 70005080 Valve	
12	70005218	1	Cartridge, Valve	
12	70005082	1	Seal Kit - 70005218 Valve	
13	70005084	1	Cartridge, Valve	
13	70005085	1	Seal Kit - 70005084 Valve	
14	70005099	2	Cartridge, Valve	
14	70005087	2	Seal Kit - 70005099 Valve	
15	70005088	2	Cartridge, Valve	
15	7023900	2	Seal Kit - 70005088 Valve	
16	70005100	1	Cartridge, Check Valve	
16	7022399	1	Seal Kit - 70005100 Valve	
17	70005089	1	Cartridge, Check Valve	
17	7023936	1	Seal Kit - 70005089 Valve	
18	70005090	5	Cartridge, Check Valve	
18	70005092	5	Seal Kit - 70005092 Valve	
19	See Note	1	Disc, Check Valve (Note: Not Available for Purchase)	
24	91164059	7	Plug	
25	91164079	4	Plug	
26	91164057	2	Plug	
27	70005219	2	Coil	
28	70002386	3	Coil	
29	70003788	3	Coil	

FIGURE 2-6. AUXILIARY PUMP ASSEMBLY

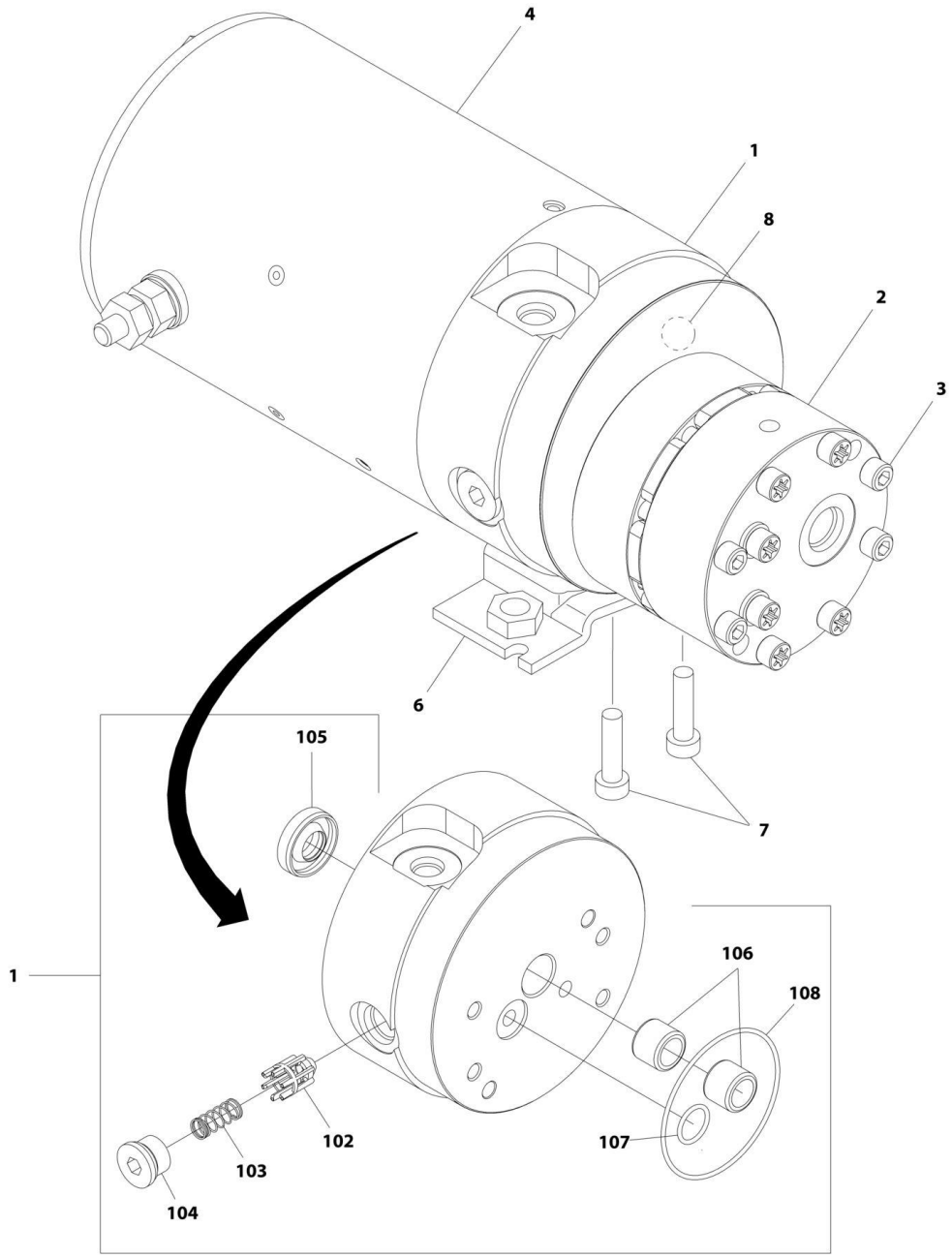

FIGURE 2-6. AUXILIARY PUMP ASSEMBLY

ITEM	PART NUMBER	QTY	DESCRIPTION	REV
	1001185821	Ref	AUXILIARY PUMP ASSEMBLY	B
1	70005065	1	Base Assembly (See Item 102-108 for Breakdown)	
2	70005066	1	Pump Assembly (Note: No Seal Kit or Internal Components are Available - Purchase Complete Pump Assembly)	
3	70005067	4	Capscrew 1/4 x 2-3/4	
4	70004013	1	Motor Assembly (Note: No Internal Components are Available - Purchase Complete Motor Assembly)	
6	70004014	1	Bracket	
7	70004000	2	Capscrew 3/8 x 1	
8	70005068	1	Relief Valve Assembly	
	70005065	Ref	BASE ASSEMBLY	
102	See Note	NSS	Poppet, Check (Note: Not Available - Purchase p/n 70005065)	
103	See Note	NSS	Spring (Note: Not Available - Purchase p/n 70005065)	
104	See Note	NSS	Plug (Note: Not Available - Purchase p/n 70005065)	
105	7026330	1	Seal, Shaft	
106	70005139	2	Bearing	
107	70003612	1	O-Ring	
108	70004267	1	O-Ring	

FIGURE 2-7. SWING DRIVE AND TURNTABLE BEARING INSTALLATION

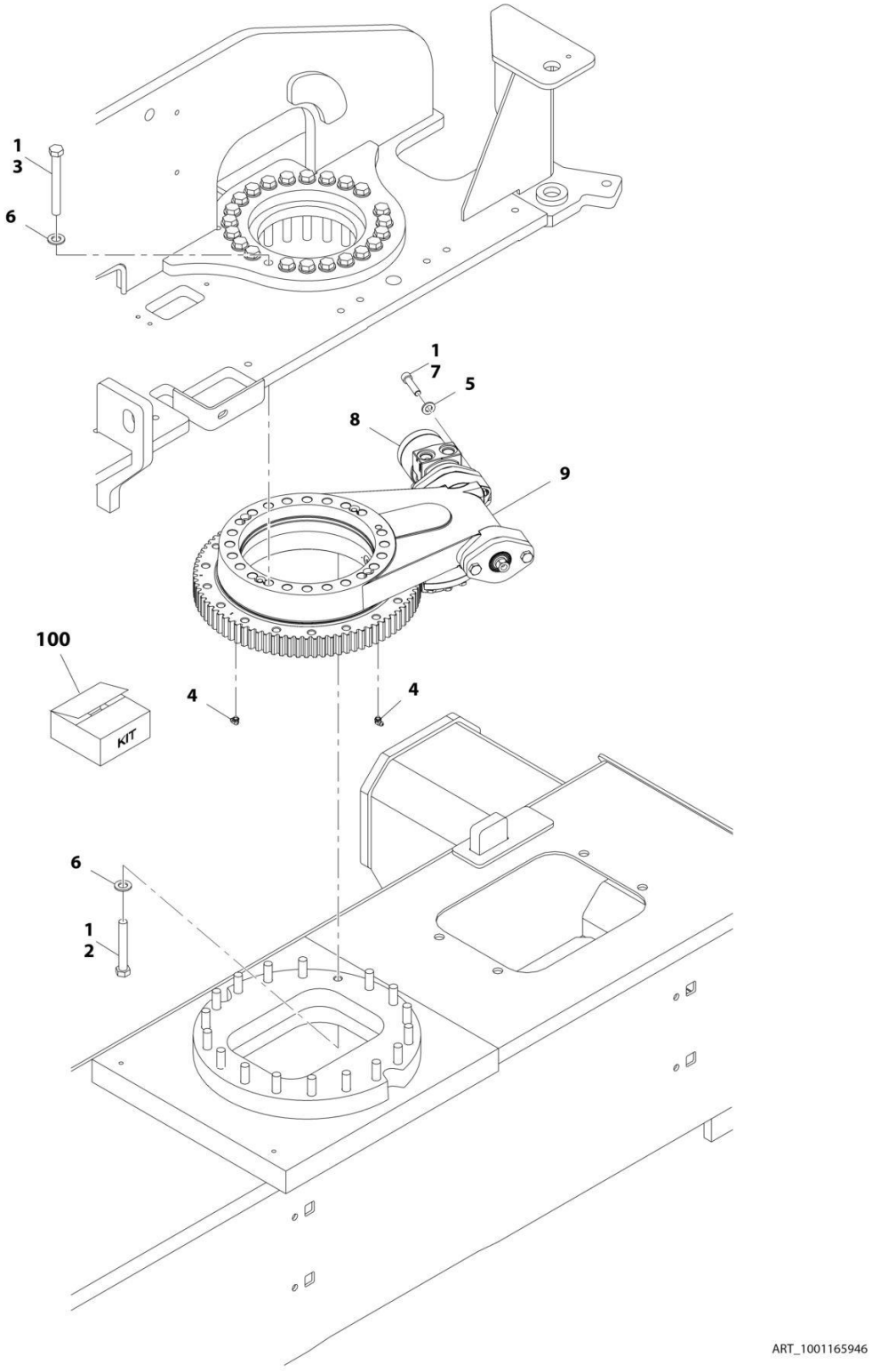

FIGURE 2-7. SWING DRIVE AND TURNTABLE BEARING INSTALLATION

ITEM	PART NUMBER	QTY	DESCRIPTION	REV
	1001165946	Ref	SWING DRIVE AND TURNTABLE BEARING INSTALLATION	B
1	0100019	AR	Compound, Locking	
2	0711628	18	Bolt M16 x 110 Grade 10.9	
3	0711631	23	Bolt M16 x 140	
4	2160001	2	Fitting, Grease 90	
5	5241200	2	Washer M12	
6	5241600	41	Washer M16	
7	5272114	2	Capscrew M12 x 50 Grade 12.9	
8	1001104850	1	Swing Motor Assembly (See SWING MOTOR ASSEMBLY for breakdown)	
9	1001133972	1	Turntable Bearing Assembly (See TURNTABLE BEARING ASSEMBLY for Breakdown)	
100	1001206436	1	Turntable Bearing Kit (Includes Items 2-7 & 9)	

FIGURE 2-8. SWING MOTOR ASSEMBLY

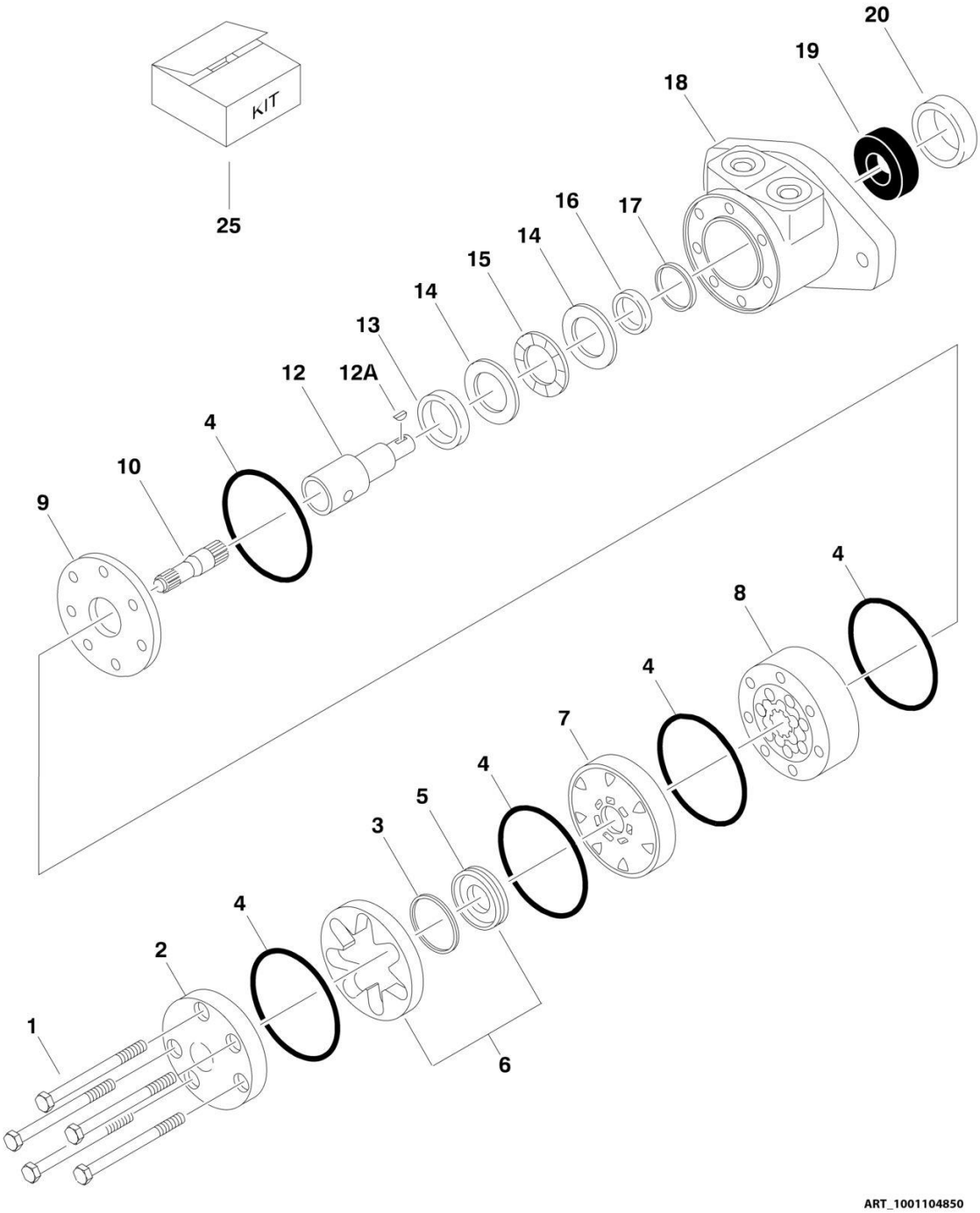

FIGURE 2-8. SWING MOTOR ASSEMBLY

ITEM	PART NUMBER	QTY	DESCRIPTION	REV
	1001104850	Ref	SWING MOTOR ASSEMBLY	A
1	See Note	5	Bolt (Note: Not Available for Purchase)	
2	7004035	1	Cover, End	
3	7023318	1	Seal, Commutator	
4	7004036	5	O-Ring	
5	See Note	NSS	Commutator (Note: Use Item 6)	
6	7024453	1	Commutator and Ring Assembly (Includes Item 5)	
7	7024379	1	Manifold	
8	70002206	1	Rotor Set	
9	7024380	1	Plate, Wear	
10	70002207	1	Link, Drive	
12	70000088	1	Shaft, Coupling	
12A	70000089	1	Key	
13	7024381	1	Bushing, Inner	
14	7004043	1	Thrustwasher	
15	7004044	1	Bearing, Thrust	
16	7004049	1	Seal, Inner Shaft	
17	7004045	1	Ring, Back-up	
18	See Note	NSS	Housing (Note: Not Available - Purchase Complete Motor)	
19	7024390	1	Bearing	
20	7004047	1	Seal, Outer Shaft	
25	7024389	1	Seal Kit (Includes Items 3, 4, 16, 17 & 20)	

FIGURE 2-9. TURNTABLE BEARING ASSEMBLY

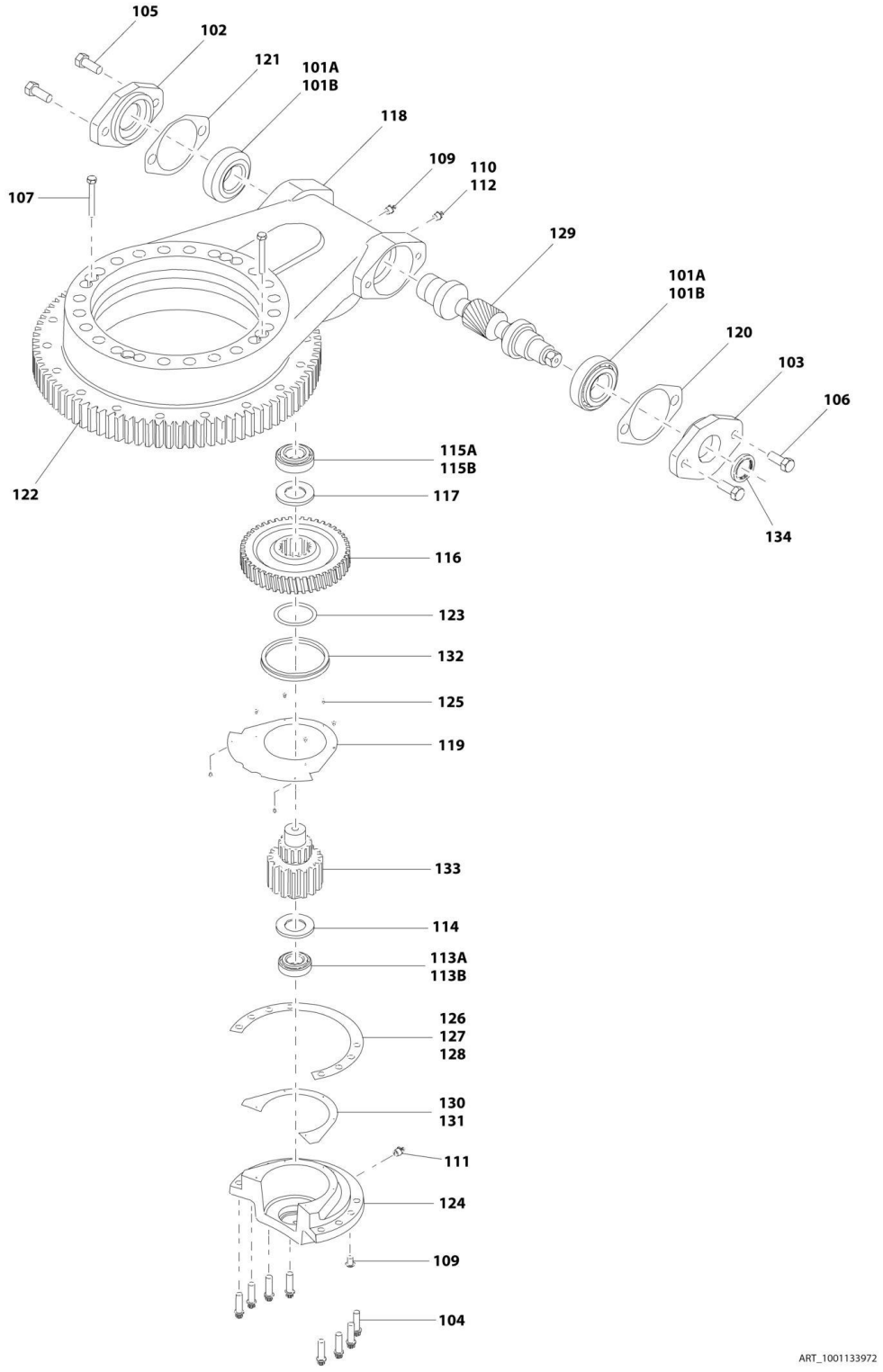

FIGURE 2-9. TURNTABLE BEARING ASSEMBLY

ITEM	PART NUMBER	QTY	DESCRIPTION	REV
	1001133972	Ref	TURNTABLE BEARING ASSEMBLY	D
101A	7026042	2	Cup, Bearing	
101B	7026043	2	Cone, Bearing	
102	7027356	1	Adapter, Motor	
103	7027354	1	Cap, Worm	
104	70004249	8	Bolt M10 x 35 Grade 10.9	
105	70004250	2	Bolt M12 x 30 Grade 10.9	
106	70004251	2	Bolt M12 x 40 Grade 10.9	
107	70004252	2	Bolt M8 x 65mm	
109	70000865	1	Plug	
110	70002649	1	Vent, Pressure	
111	70002651	1	Fitting, Grease	
112	7026044	1	Bushing, Reducer	
113A	7026045	1	Cup, Bearing	
113B	7026047	1	Cone, Bearing	
114	7026046	1	Ring, Grease	
115A	7026048	1	Cup, Bearing	
115B	7026049	1	Cone, Bearing	
116	7026050	1	Worm-Gear	
117	7026052	1	Spacer, Washer	
118	See Note	1	Housing (Note: Not Available - Purchase Complete Assembly)	
119	7026053	1	Cover, Gear	
120	7027350	AR	Shim, Blue (.005in)	
120	7027351	AR	Shim, Clear (.0075in)	
120	7027352	AR	Shim, Brown (.010in)	
121	7027353		Shim, Yellow (.020in)	
122	70004253	1	Bearing, Turntable	
123	70004254	1	O-Ring	
124	70004255	1	Cap, Gear	
125	70004256	8	Bolt M4 x 8	
126	70004257	AR	Shim, Green (.003)	
127	70004258	AR	Shim, Blue (.005)	
128	70004259	AR	Shim, Natural (.0075)	
129	7026057	1	Gear, Worm	
130	70004260	AR	Shim, Blue (.005)	
131	70004261	AR	Shim, Yellow (.020)	
132	70004262	1	Seal, Oil	
133	7026051	1	Pinion, Output	
134	70004263	1	Seal, Oil	

FIGURE 2-10. TURNTABLE COVERS INSTALLATION

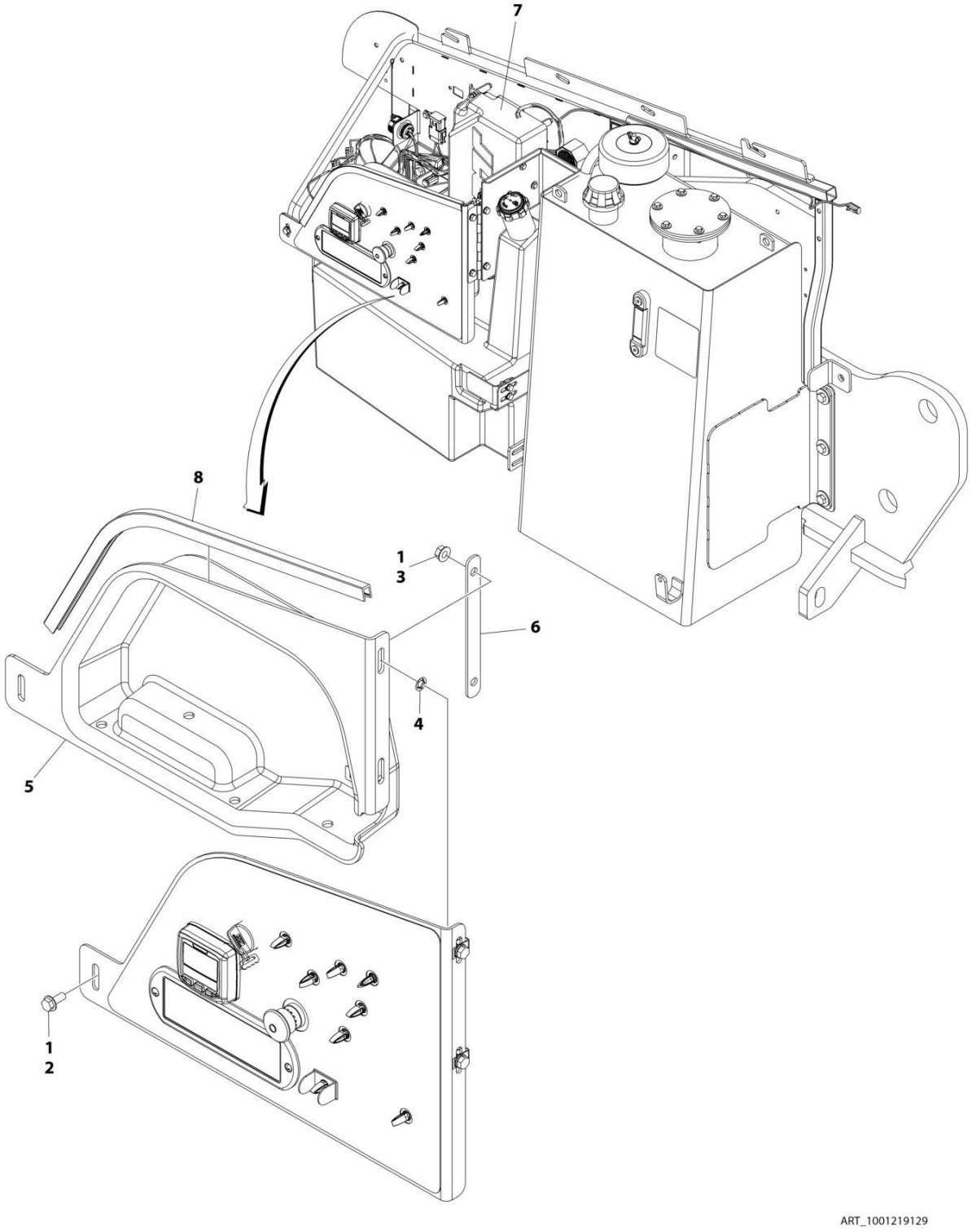

FIGURE 2-10. TURNTABLE COVERS INSTALLATION

ITEM	PART NUMBER	QTY	DESCRIPTION	REV
	1001219129	Ref	TURNTABLE COVERS INSTALLATION	A
1	0100011	AR	Compound, Locking	
2	5250812	1	Bolt M8 x 25	
3	5260800	2	Nut M8	
4	1001119228	2	Nut M8	
5	1001218533	1	Cover	
6	1001218535	1	Plate, Mounting	
7	1001218537	1	Cover	
8	4060806	2 ft/0.6m	Shield, Flex	

FIGURE 2-11. TURNTABLE LOCK INSTALLATION

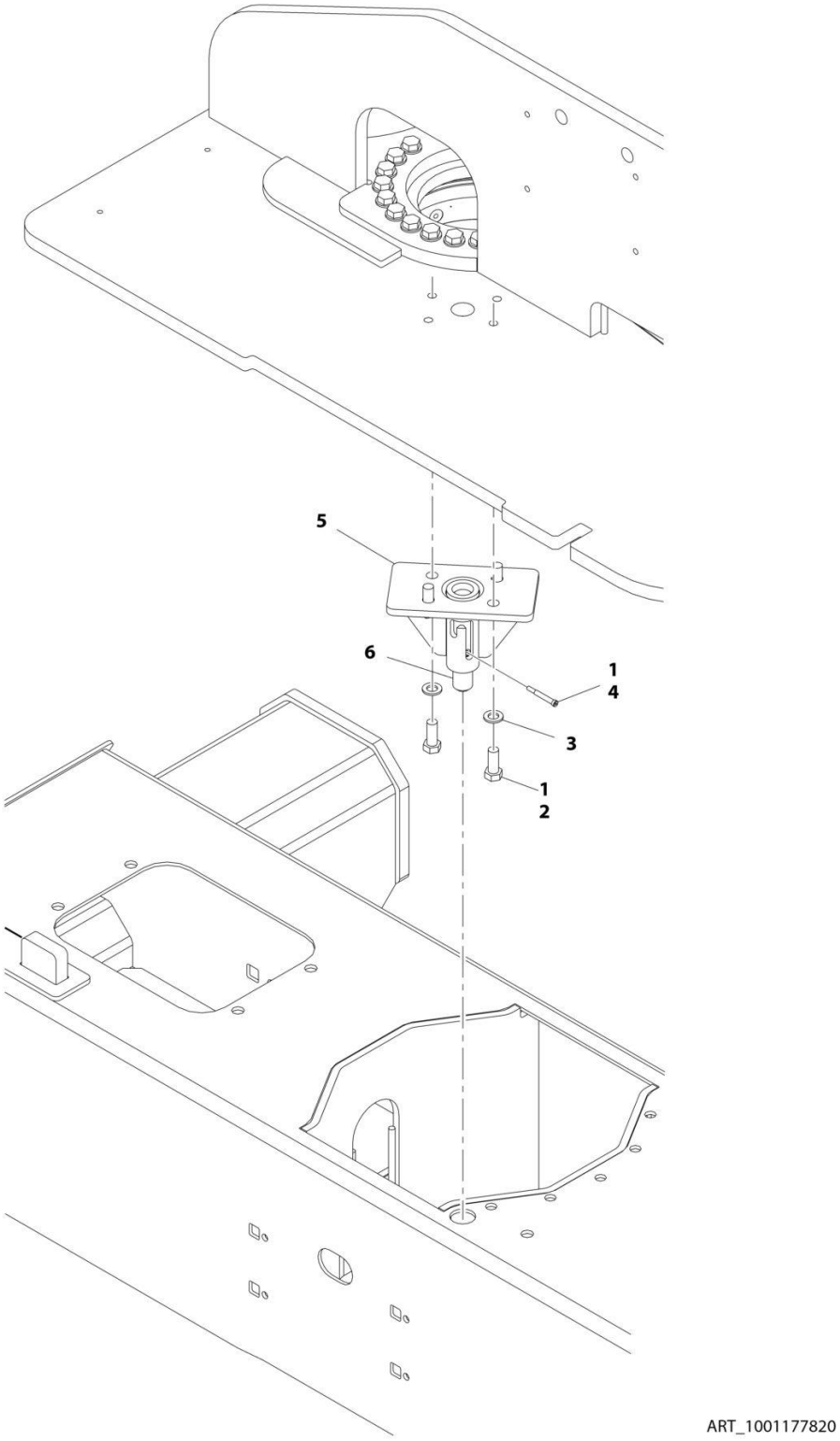

FIGURE 2-11. TURNTABLE LOCK INSTALLATION

ITEM	PART NUMBER	QTY	DESCRIPTION	REV
	1001177820	Ref	TURNTABLE LOCK INSTALLATION	B
1	0100011	AR	Compound, Locking	
2	0701616	4	Bolt M16 x 40	
3	4812300	4	Washer M16	
4	1001157466	1	Bolt M10 x 30	
5	1001177821	1	Support, Lock	
6	1001177834	1	Pin, Lock	
7	1001223118	1	Decal – Lift Diagram (Not Shown) **(SN 0300226581 through 0300272317, SN 1300007279 through 1300007373, SN B300003516 through B300005760, SN E300004121 through E300007990, Except SN 0300272185 through 0300272190, Excluding B300005569 and E300007814)**	

FIGURE 2-12. TANKS INSTALLATION - DIESEL MACHINES (SN 0300201991 through 0300225480, SN E300002833 through E300004226)

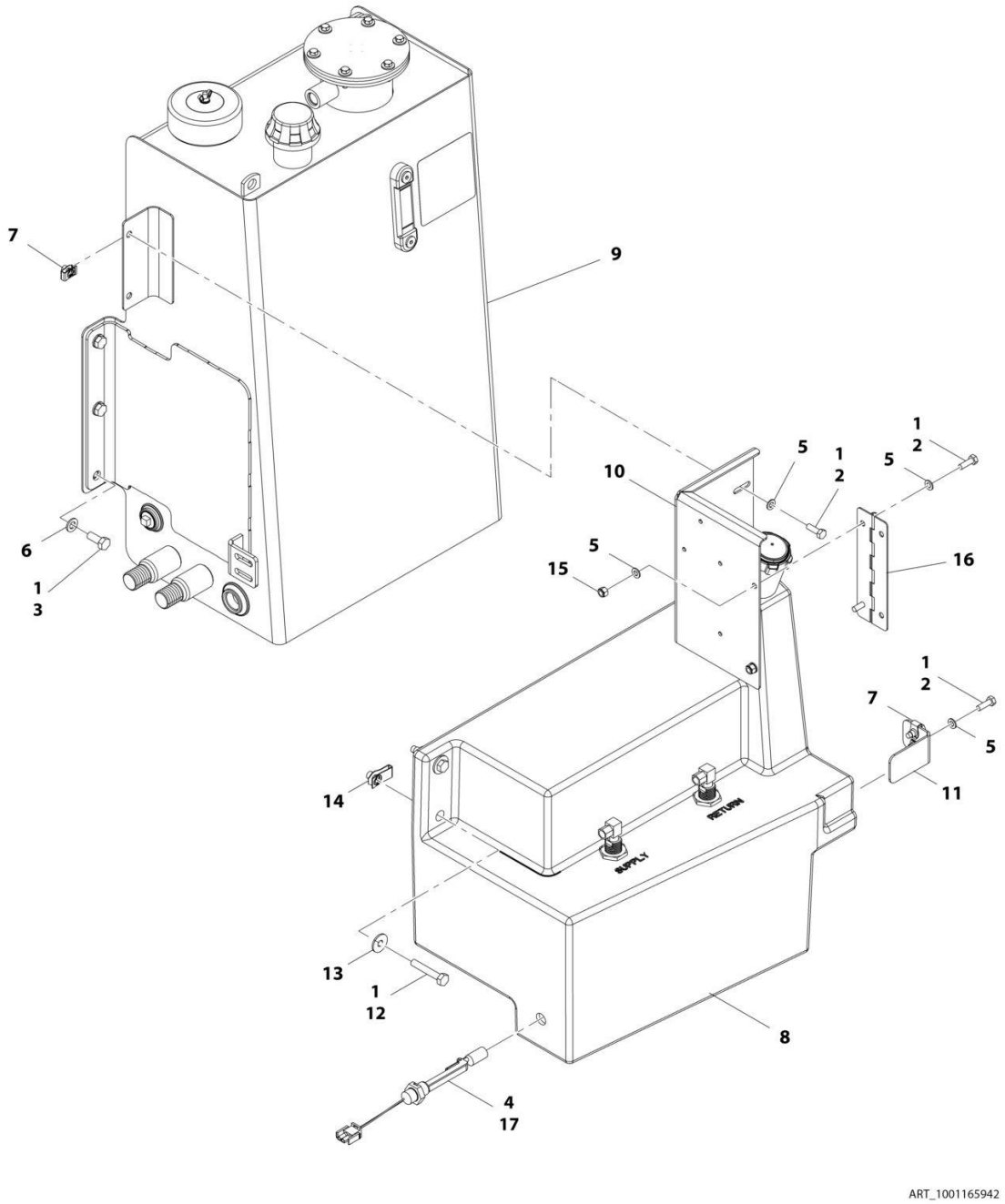

FIGURE 2-12. TANKS INSTALLATION - DIESEL MACHINES (SN 0300201991 through 0300225480, SN E300002833 through E300004226)

ITEM	PART NUMBER	QTY	DESCRIPTION	REV
	1001165942	Ref	TANKS INSTALLATION - DIESEL MACHINES **(SN 0300201991 through 0300225480, SN E300002833 through E300004226)**	G
1	0100011	AR	Compound, Locking	
2	0760812	6	Bolt M8 x 25	
3	0761214	6	Bolt M12 x 30	
4	4360436	1	Switch, Fuel Level	
4	4460320	1	Plug, Male - 2 Position	
4	4460267	1	Pin, Male	
5	4811900	8	Washer M8	
6	4812102	6	Washer M12	
7	1001118274	4	Nut M8	
8	1001163061	1	Fuel Tank Assembly	
8	1001188196	NLA	Cap, Fuel (Use p/n 1001193336)	
8	70004876	2	Tube, Pick-up	
8	0100020	AR	Compound, Locking	
9	1001165816	1	Hydraulic Tank Assembly	
9	70003614	1	Filter Kit (Includes Hydraulic Element, Breather Element and Gasket)	
9	70002838	1	Fill Cap Assembly (Includes Cap, Chain and Fill Basket)	
9	7024441	1	Gauge, Sight	
10	1001169898	1	Support, Ground Control	
11	1001170480	1	Support, Tank	
12	0701020	2	Bolt M10 x 60	
13	4812002	2	Washer M10	
14	1001118972	2	Nut M10	
15	3290805	2	Nut M8	
16	1001179339	1	Hinge	
17	1001182997	AR	Adhesive	

FIGURE 2-13. TANKS INSTALLATION - DIESEL MACHINES (SN 0300225481 through 0300272317, SN 1300007279 through 1300007373, SN B300003516 through B300005760, SN E300004227 through E300007990)

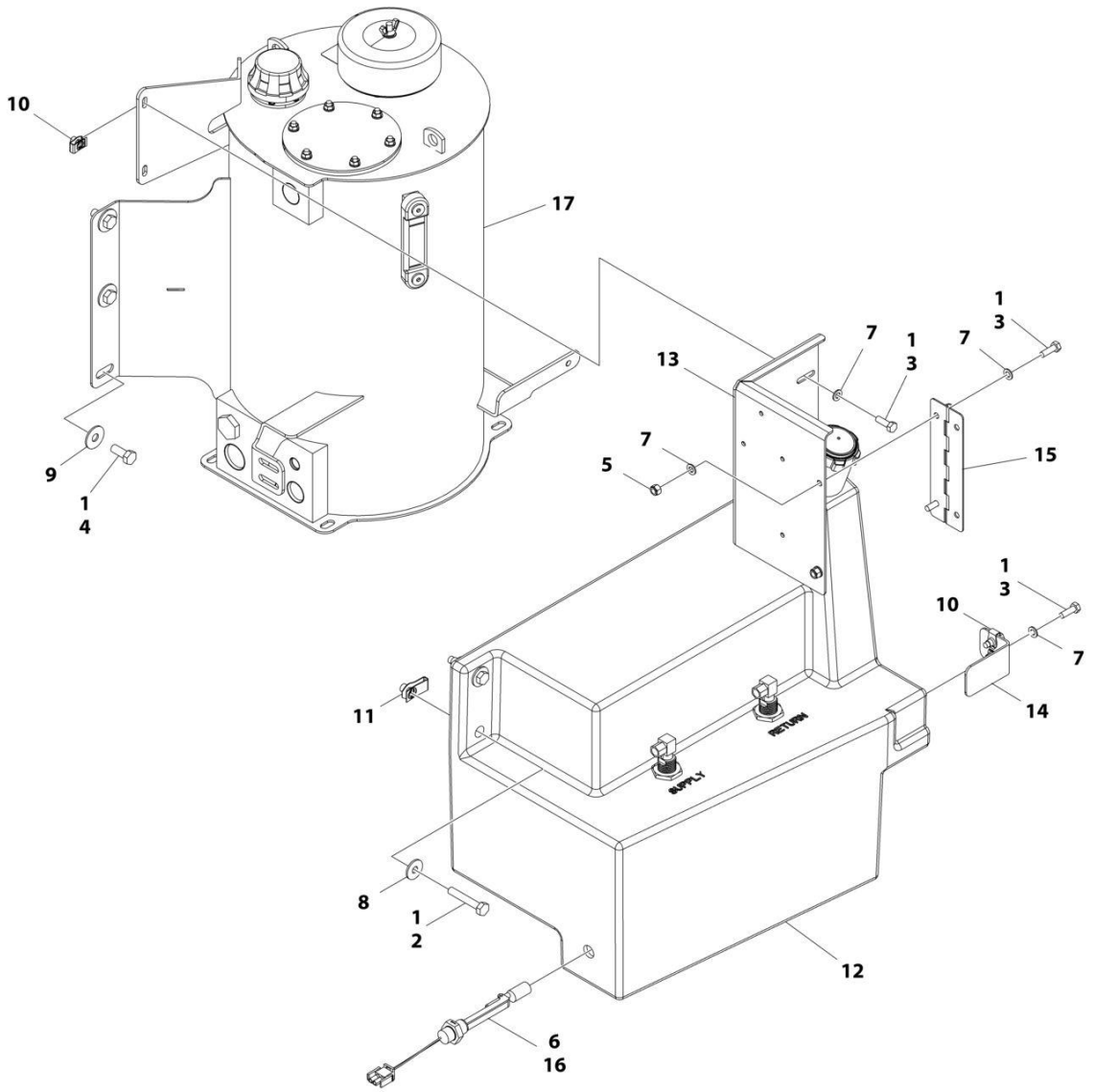

FIGURE 2-13. TANKS INSTALLATION - DIESEL MACHINES (SN 0300225481 through 0300272317, SN 1300007279 through 1300007373, SN B300003516 through B300005760, SN E300004227 through E300007990)

ITEM	PART NUMBER	QTY	DESCRIPTION	REV
	1001207347	Ref	TANKS INSTALLATION - DIESEL MACHINES	B
1	0100011	AR	Compound, Locking	
2	0701020	2	Bolt M10 x 60	
3	0760812	6	Bolt M8 x 25	
4	0761214	6	Bolt M12 x 30	
5	3290805	2	Nut M8	
6	4360436	1	Switch, Fuel Level	
6	4460320	1	Plug, Male - 2 Position	
6	4460267	1	Pin, Male	
7	4811900	8	Washer M8	
8	4812002	2	Washer M10	
9	4812102	6	Washer M12	
10	1001118274	4	Nut M8	
11	1001118972	2	Nut M10	
12	1001163061	1	Fuel Tank Assembly	
12	1001188196	NLA	Cap, Fuel (Use p/n 1001193336) **(SN 0300225481 through 0300233722, SN E300004227 through E300004844)**	
12	1001193336	1	Cap, Fuel **(SN 0300233723 through 0300272317, SN 1300007279 through 1300007373, SN B300003516 through B300005760, SN E300004845 through E300007990, Except SN 0300272185 through 0300272190, Excluding B300005569 and E300007814)**	
12	70004876	2	Tube, Pick-up	
12	0100020	AR	Compound, Locking	
13	1001169898	1	Support, Ground Control	
14	1001170480	1	Support, Tank	
15	1001179339	1	Hinge	
16	1001182997	AR	Adhesive	
17	1001206916	1	Hydraulic Tank Assembly	
17	70003614	1	Filter Kit (Includes Hydraulic Element, Breather Element and Gasket)	
17	70002838	1	Fill Cap Assembly (Includes Cap, Chain and Fill Basket)	
17	7024441	1	Gauge, Sight	
17	70002112	1	Plug, Drain	

FIGURE 2-14. TANKS INSTALLATION - GAS MACHINES (SN 0300201991 through 0300225480)

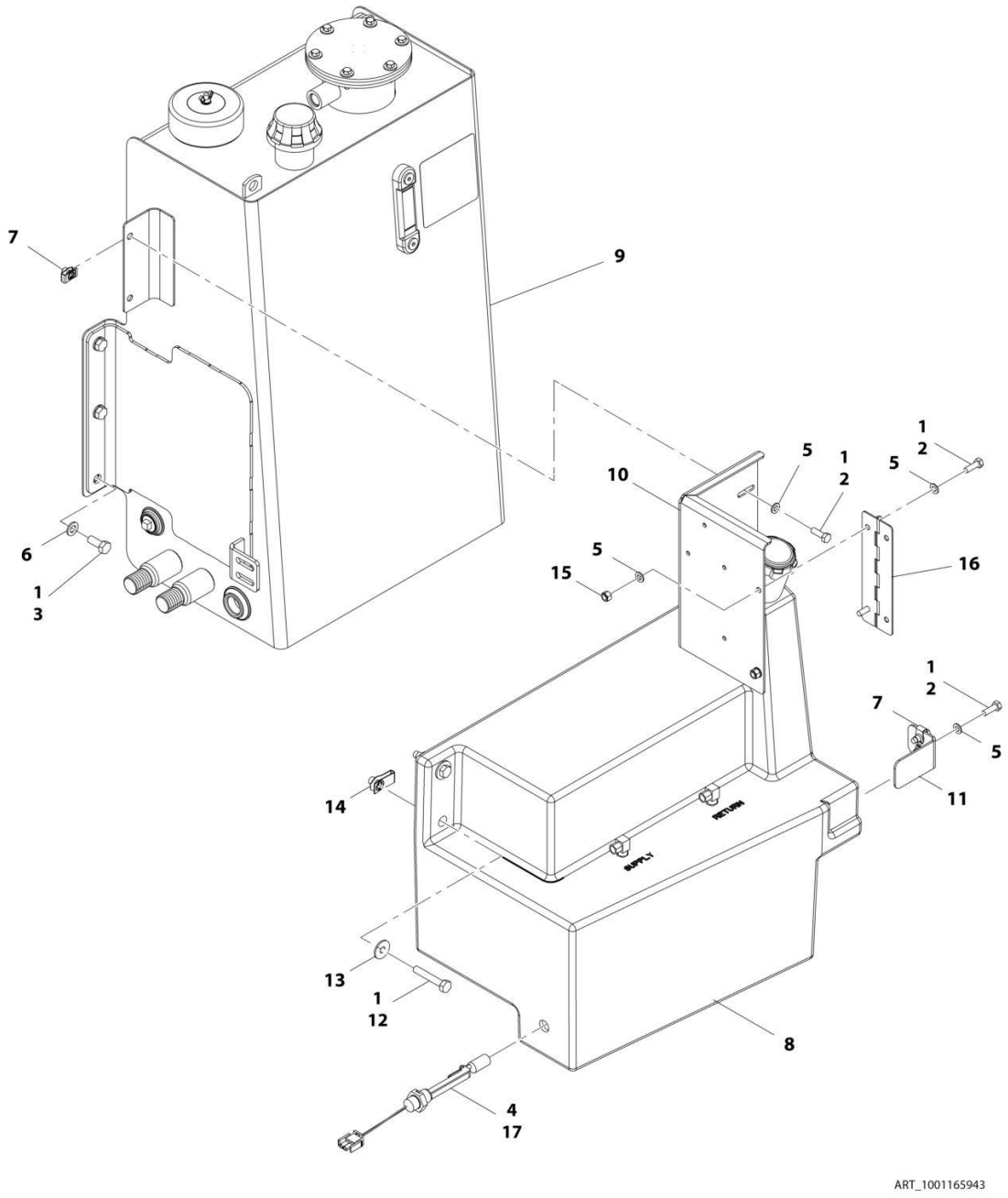

FIGURE 2-14. TANKS INSTALLATION - GAS MACHINES (SN 0300201991 through 0300225480)

ITEM	PART NUMBER	QTY	DESCRIPTION	REV
	1001165943	Ref	TANKS INSTALLATION - GAS MACHINES **(SN 0300201991 through 0300225480)**	H
1	0100011	AR	Compound, Locking	
2	0760812	6	Bolt M8 x 25	
3	0761214	6	Bolt M12 x 30	
4	4360436	1	Switch, Fuel Level	
4	4460320	1	Plug, Male - 2 Position	
4	4460267	1	Pin, Male	
5	4811900	8	Washer M8	
6	4812102	6	Washer M12	
7	1001118274	4	Nut M8	
8	1001163062	1	Fuel Tank Assembly	
8	1001188197	NLA	Cap, Tank (Use p/n 1001211336) **(SN 0300201991 through 0300216295)**	
8	1001211336	1	Cap, Tank **(SN 0300216296 through 0300222765)**	
8	70004877	2	Tube, Pick-up	
8	0100020	AR	Compound, Locking	
9	1001165816	1	Hydraulic Tank Assembly	
9	70003614	1	Filter Kit (Includes Hydraulic Element, Breather Element and Gasket)	
9	70002838	1	Fill Cap Assembly (Includes Cap, Chain and Fill Basket)	
9	7024441	1	Gauge, Sight	
10	1001169898	1	Support, Ground Control	
11	1001170480	1	Support, Tank	
12	0701020	2	Bolt M10 x 60	
13	4812002	2	Washer M10	
14	1001118972	2	Nut M10	
15	3290805	2	Nut M8	
16	1001179339	1	Hinge	
17	1001182997	AR	Adhesive	

FIGURE 2-15. TANKS INSTALLATION - GAS MACHINES (SN 0300225481 through 0300272317)

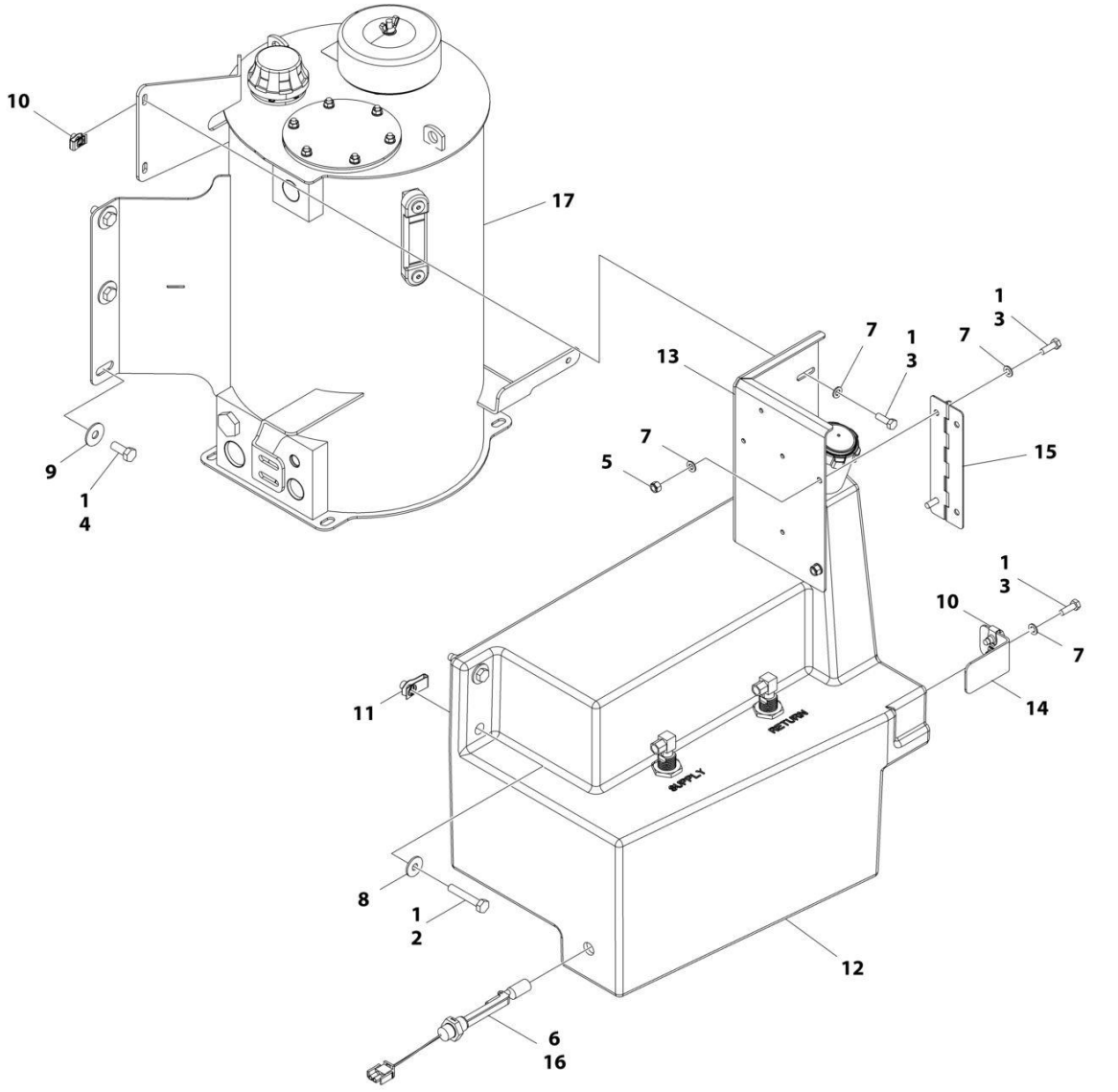

FIGURE 2-15. TANKS INSTALLATION - GAS MACHINES (SN 0300225481 through 0300272317)

ITEM	PART NUMBER	QTY	DESCRIPTION	REV
	1001207348	Ref	TANKS INSTALLATION - GAS MACHINES	B
1	0100011	AR	Compound, Locking	
2	0701020	2	Bolt M10 x 60	
3	0760812	6	Bolt M8 x 25	
4	0761214	6	Bolt M12 x 30	
5	3290805	2	Nut M8	
6	4360436	1	Switch, Fuel Level	
6	4460320	1	Plug, Male - 2 Position	
6	4460267	1	Pin, Male	
7	4811900	8	Washer M8	
8	4812002	2	Washer M10	
9	4812102	6	Washer M12	
10	1001118274	4	Nut M8	
11	1001118972	2	Nut M10	
12	1001163062	1	Fuel Tank Assembly	
12	1001211336	1	Cap, Tank	
12	70004877	2	Tube, Pick-up	
12	0100020	AR	Compound, Locking	
13	1001169898	1	Support, Ground Control	
14	1001170480	1	Support, Tank	
15	1001179339	1	Hinge	
16	1001182997	AR	Adhesive	
17	1001206916	1	Hydraulic Tank Assembly	
17	70003614	1	Filter Kit (Includes Hydraulic Element, Breather Element and Gasket)	
17	70002838	1	Fill Cap Assembly (Includes Cap, Chain and Fill Basket)	
17	7024441	1	Gauge, Sight	
17	70002112	1	Plug, Drain	

FIGURE 2-16. DRIVE ORIENTATION INSTALLATION

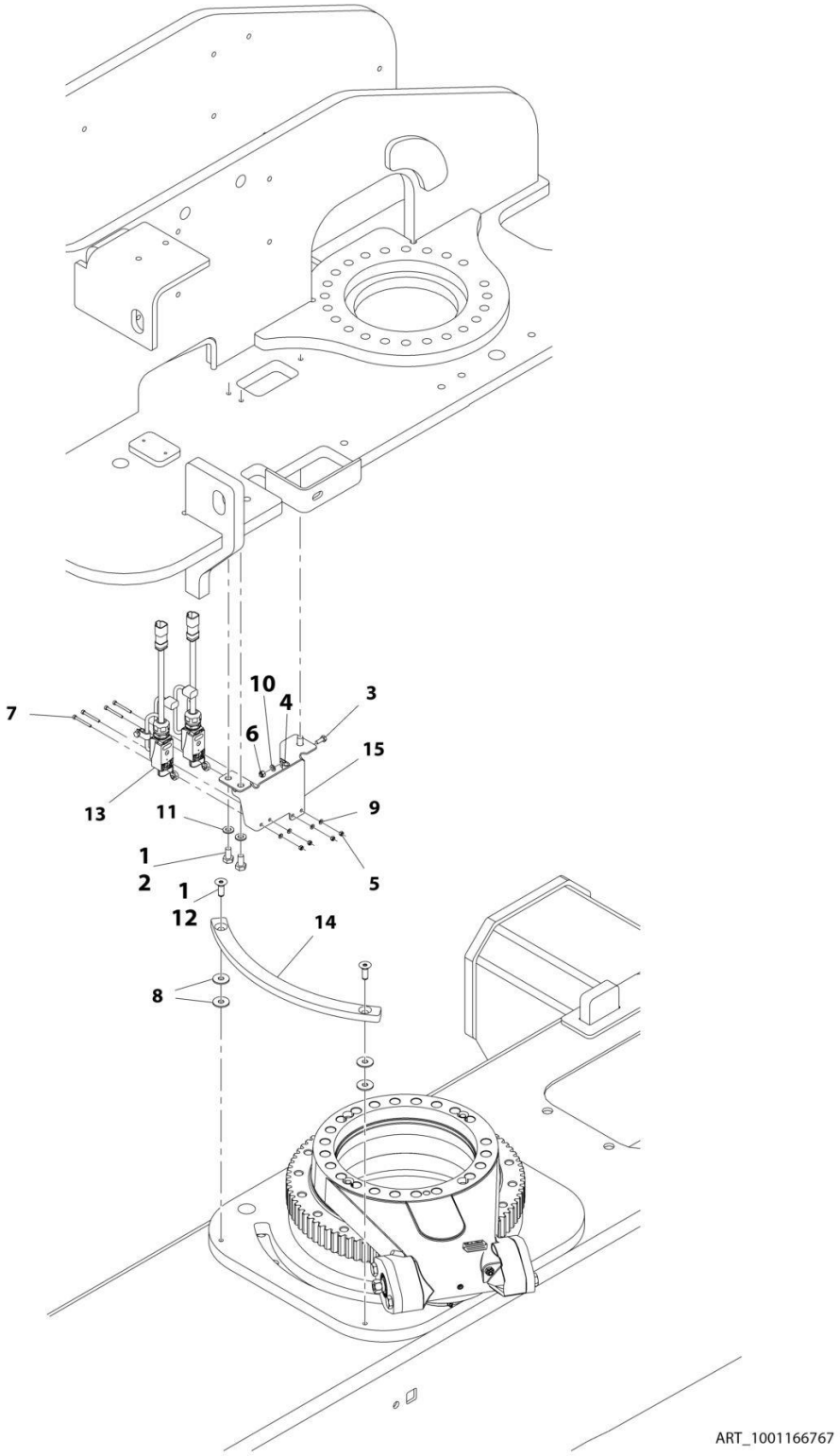

FIGURE 2-16. DRIVE ORIENTATION INSTALLATION

ITEM	PART NUMBER	QTY	DESCRIPTION	REV
	1001166767	Ref	DRIVE ORIENTATION INSTALLATION	F
1	0100011	AR	Compound, Locking	
2	0761010	3	Bolt M10 x 20	
3	0760608	2	Bolt M6 x 16	
4	1321293	2	Clamp, Cable	
5	3290405	4	Nut M4	
6	3290605	2	Nut M6	
7	4031512	4	Capscrew M4 x 40	
8	4812002	4	Washer M10	
9	4811400	4	Washer M4	
10	4811700	2	Washer M6	
11	4812000	3	Washer M10	
12	8310614	2	Screw M10 x 30	
13	1001119176	2	Switch, Limit	
13	1001129407	1	Receptacle, Female - 4 Position	
13	4460464	4	Pin, Male	
14	1001162106	1	Cam	
15	1001166768	1	Bracket	
16	8881800	AR	Tie-Strap (Not Shown)	

FIGURE 2-17. GROUND CONTROL ASSEMBLY - 450A WITH DEUTZ/GM ENGINES (ANSI SPECS)

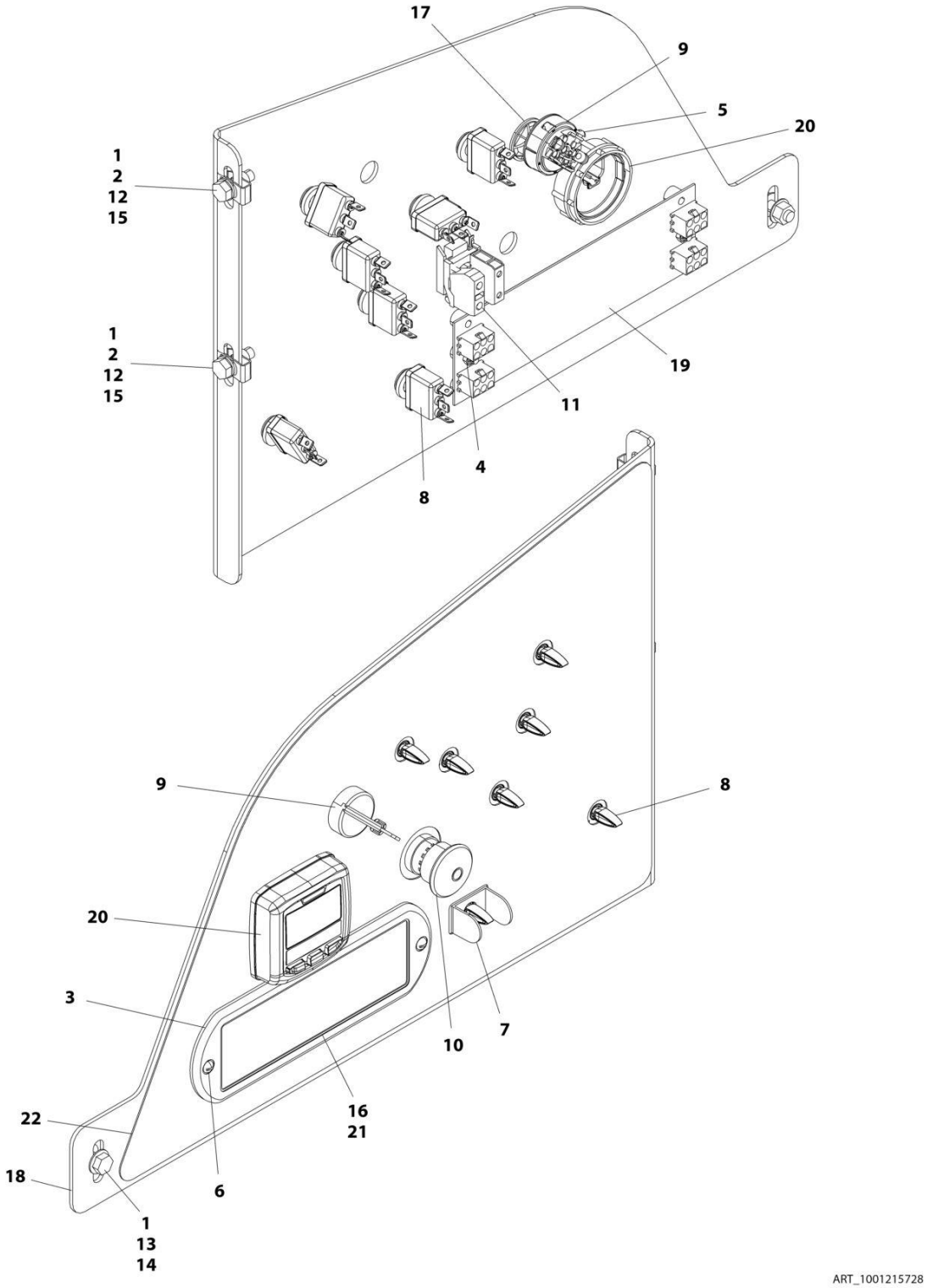

FIGURE 2-17. GROUND CONTROL ASSEMBLY - 450A WITH DEUTZ/GM ENGINES (ANSI SPECS)

ITEM	PART NUMBER	QTY	DESCRIPTION	REV
	1001215728	Ref	GROUND CONTROL ASSEMBLY - 450A WITH DEUTZ/GM ENGINES (ANSI SPECS)	B
1	0100011	AR	Compound, Locking	
2	0760812	2	Bolt M8 x 25	
3	1670829	1	Bezel, Front	
4	3300408	2	Nut	
5	3910804	3	Screw M8 x 1/4	
6	3911018	2	Screw #10 x 1-1/8	
7	4060906	1	Guard, Switch	
8	4360328	7	Switch, Toggle	
9	4360469	1	Switch, Key	
9	2860030	1	Key, Replacement	
10	4360475	1	Switch, Emergency	
10	7020175	1	Cap	
10	7020176	1	Block, Contact	
11	4360476	1	Block, Contact	
12	4811900	2	Washer M8	
13	5250810	1	Bolt M8 x 20	
14	5260800	1	Nut M8	
15	1001118274	2	Nut M8	
16	1001146220	1	Display, Light	
17	1001151393	1	Shim .063	
18	1001169896	1	Panel, Ground Control	
19	1001170838	1	PC Board, LED Light	
20	1001171482	1	Gauge, Display	
21	1001173529	1	Decal - Light Display	
22	1001215588	1	Decal - Ground Control	

FIGURE 2-18. GROUND CONTROL ASSEMBLY - 450AJ WITH DEUTZ/GM ENGINES (ALL SPECS EXCEPT CE SPECS)

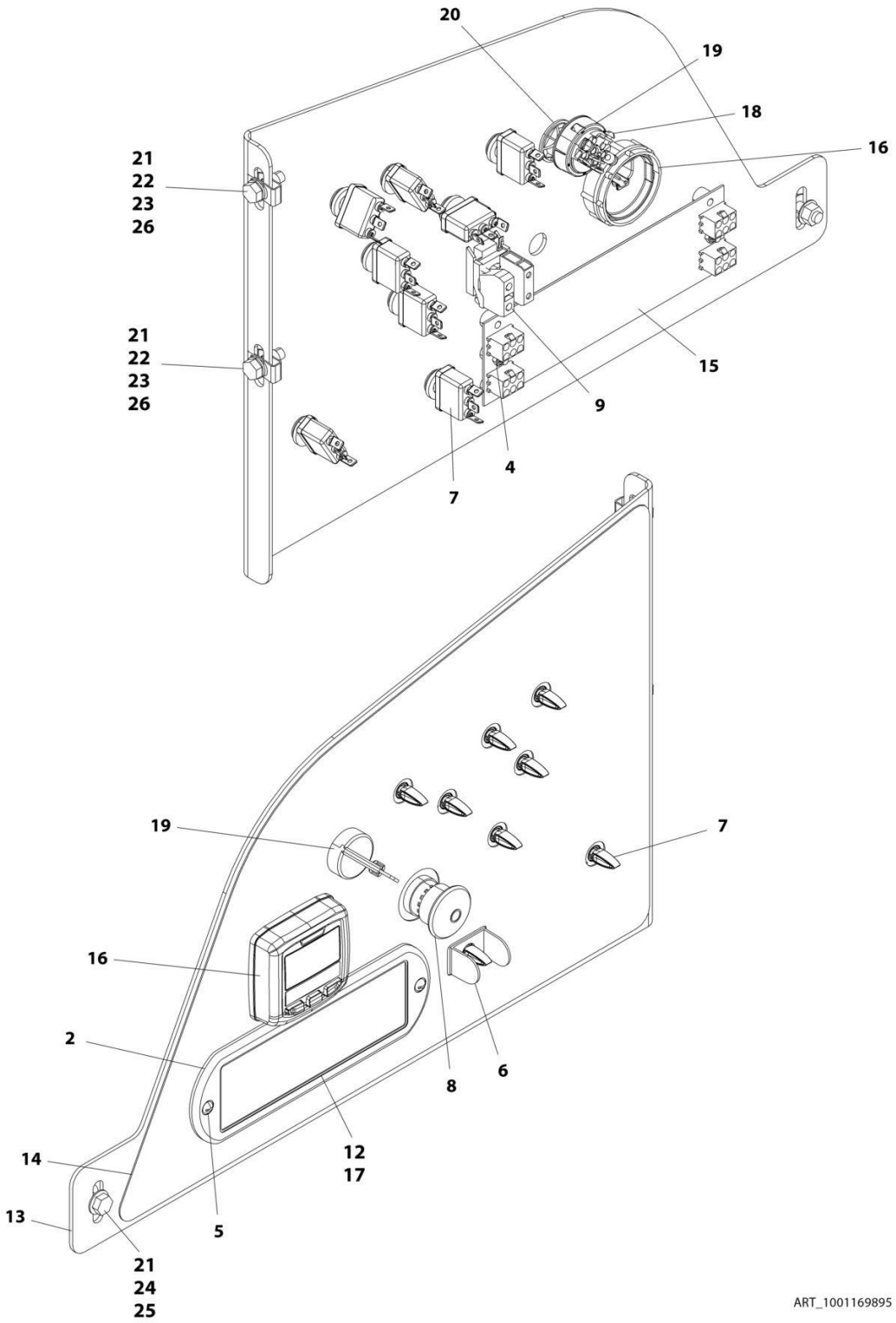

FIGURE 2-18. GROUND CONTROL ASSEMBLY - 450AJ WITH DEUTZ/GM ENGINES (ALL SPECS EXCEPT CE SPECS)

ITEM	PART NUMBER	QTY	DESCRIPTION	REV
	1001169895	Ref	GROUND CONTROL ASSEMBLY - 450AJ WITH DEUTZ/GM ENGINES (ALL SPECS EXCEPT CE SPECS)	E
2	1670829	1	Bezel, Front	
4	3300408	2	Nut	
5	3911018	2	Screw #10 x 1-1/8	
6	4060906	1	Guard, Switch	
7	4360328	8	Switch, Toggle	
8	4360475	1	Switch, Emergency	
8	7020175	1	Cap	
8	7020176	1	Block, Contact	
9	4360476	1	Block, Contact	
12	1001146220	1	Display, Light	
13	1001169896	1	Panel, Ground Control	
14	1001169897	1	Decal - Ground Control	
15	1001170838	1	PC Board, LED Light	
16	1001171482	1	Gauge, Display	
17	1001173529	1	Decal - Light Display	
18	3910804	3	Screw M8 x 1/4	
19	4360469	1	Switch, Key	
19	2860030	1	Key, Replacement	
20	1001151393	1	Shim .063	
21	0100011	AR	Compound, Locking	
22	0760812	2	Bolt M8 x 25	
23	4811900	2	Washer M8	
24	5250810	1	Bolt M8 x 20	
25	5260800	1	Nut M8	
26	1001118274	2	Nut M8	

FIGURE 2-19. GROUND CONTROL ASSEMBLY - 450AJ WITH DEUTZ ENGINE (CE SPECS ONLY)

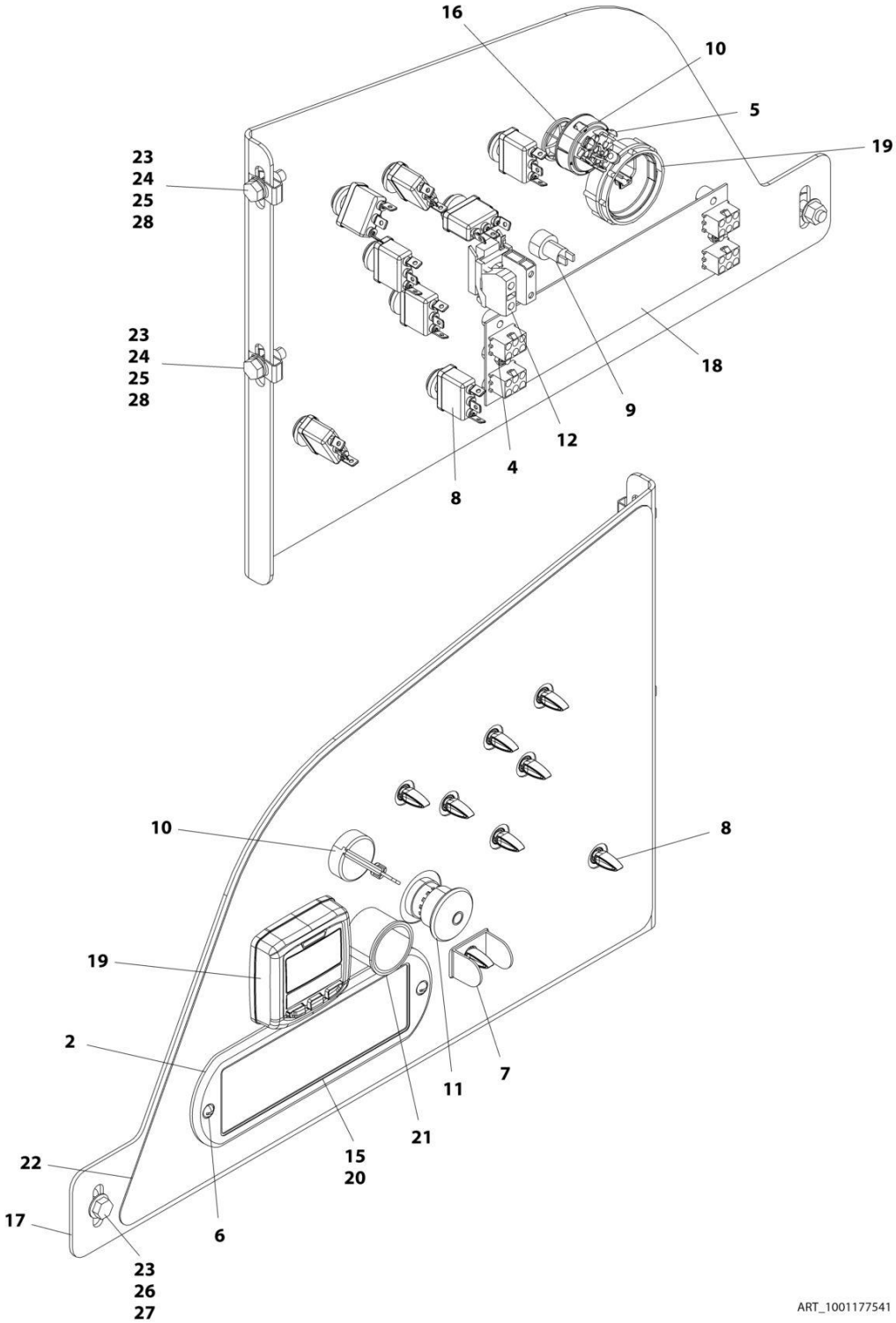

FIGURE 2-19. GROUND CONTROL ASSEMBLY - 450AJ WITH DEUTZ ENGINE (CE SPECS ONLY)

ITEM	PART NUMBER	QTY	DESCRIPTION	REV
	1001177541	Ref	GROUND CONTROL ASSEMBLY - 450AJ WITH DEUTZ ENGINE (CE SPECS ONLY)	E
2	1670829	1	Bezel, Front	
4	3300408	2	Nut	
5	3910804	3	Screw M8 x 1/4	
6	3911018	2	Screw #10 x 1-1/8	
7	4060906	1	Guard, Switch	
8	4360328	8	Switch, Toggle	
9	4360387	1	Switch, Push Button	
10	4360469	1	Switch, Key	
10	2860030	1	Key, Replacement	
11	4360475	1	Switch, Emergency	
11	7020175	1	Cap	
11	7020176	1	Block, Contact	
12	4360476	1	Block, Contact	
15	1001146220	1	Display, Light	
16	1001151393	1	Shim .063	
17	1001169896	1	Panel, Ground Control	
18	1001170838	1	PC Board, LED Light	
19	1001171482	1	Gauge, Display	
20	1001173529	1	Decal - Light Display	
21	1001176469	1	Shroud, Switch	
22	1001177543	1	Decal - Ground Control	
23	0100011	AR	Compound, Locking	
24	0760812	2	Bolt M8 x 25	
25	4811900	2	Washer M8	
24	5250810	1	Bolt M8 x 20	
27	5260800	1	Nut M8	
28	1001118274	2	Nut M8	

FIGURE 2-20. GROUND CONTROL ASSEMBLY - 450A WITH KUBOTA ENGINE (ANSI SPECS ONLY)

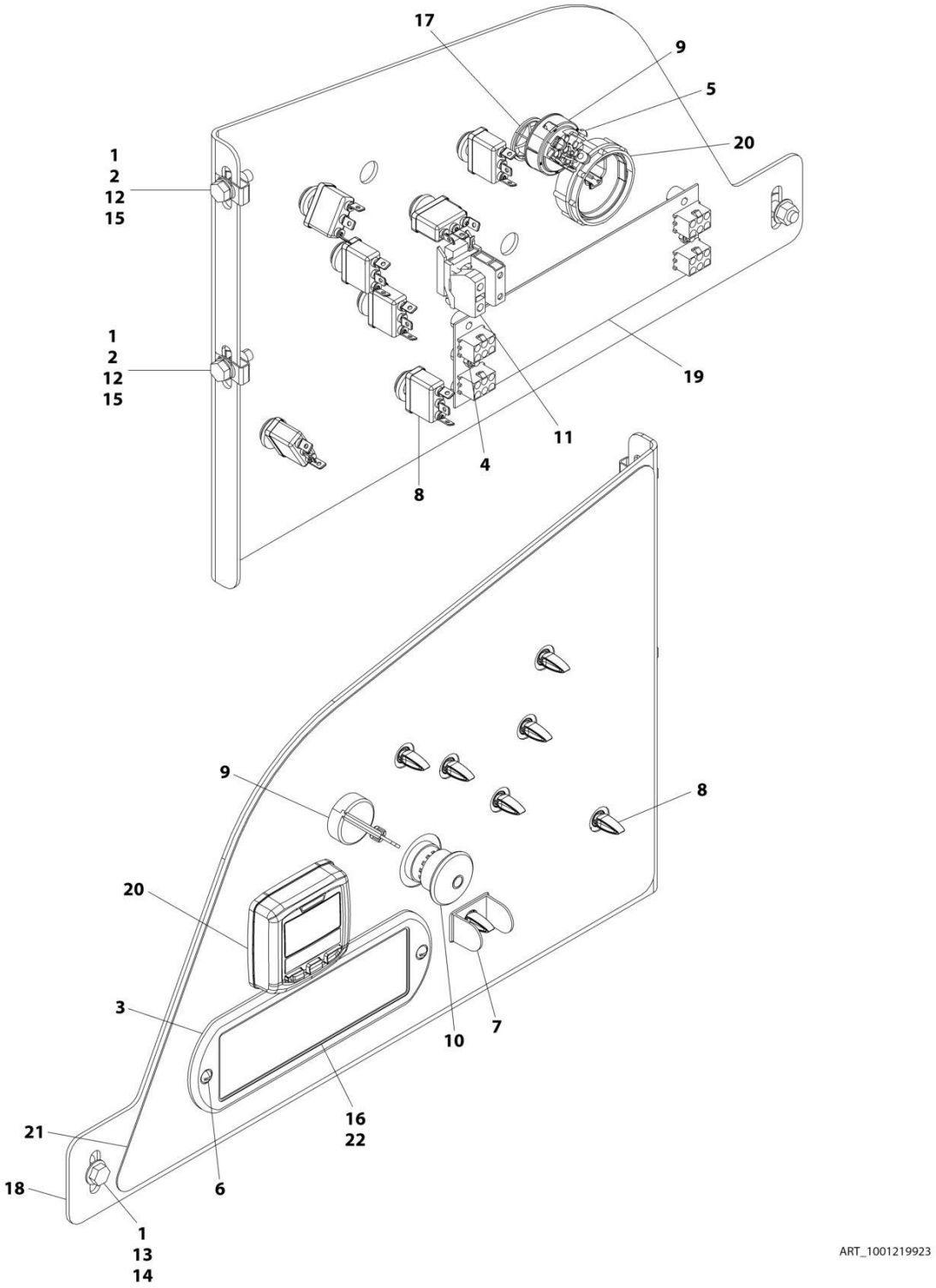

FIGURE 2-20. GROUND CONTROL ASSEMBLY - 450A WITH KUBOTA ENGINE (ANSI SPECS ONLY)

ITEM	PART NUMBER	QTY	DESCRIPTION	REV
	1001219923	Ref	GROUND CONTROL ASSEMBLY - 450A WITH KUBOTA ENGINE (ANSI SPECS ONLY)	B
1	0100011	AR	Compound, Locking	
2	0760812	2	Bolt M8 x 25	
3	1670829	1	Bezel, Front	
4	3300408	2	Nut	
5	3910804	3	Screw M8 x 1/4	
6	3911018	2	Screw #10 x 1-1/8	
7	4060906	1	Guard, Switch	
8	4360328	7	Switch, Toggle	
9	4360469	1	Switch, Key	
9	2860030	1	Key, Replacement	
10	4360475	1	Switch, Emergency	
10	7020175	1	Cap	
10	7020176	1	Block, Contact	
11	4360476	1	Block, Contact	
12	4811900	2	Washer M8	
13	5250810	1	Bolt M8 x 20	
14	5260800	1	Nut M8	
15	1001118274	2	Nut M8	
16	1001146220	1	Display, Light	
17	1001151393	1	Shim .063	
18	1001169896	1	Panel, Ground Control	
19	1001170838	1	PC Board, LED Light	
20	1001171482	1	Gauge, Display	
21	1001215588	1	Decal - Ground Control	
22	1001216407	1	Decal - Light Display	

FIGURE 2-21. GROUND CONTROL ASSEMBLY - 450AJ WITH KUBOTA ENGINE (ANSI AND CSA SPECS ONLY)

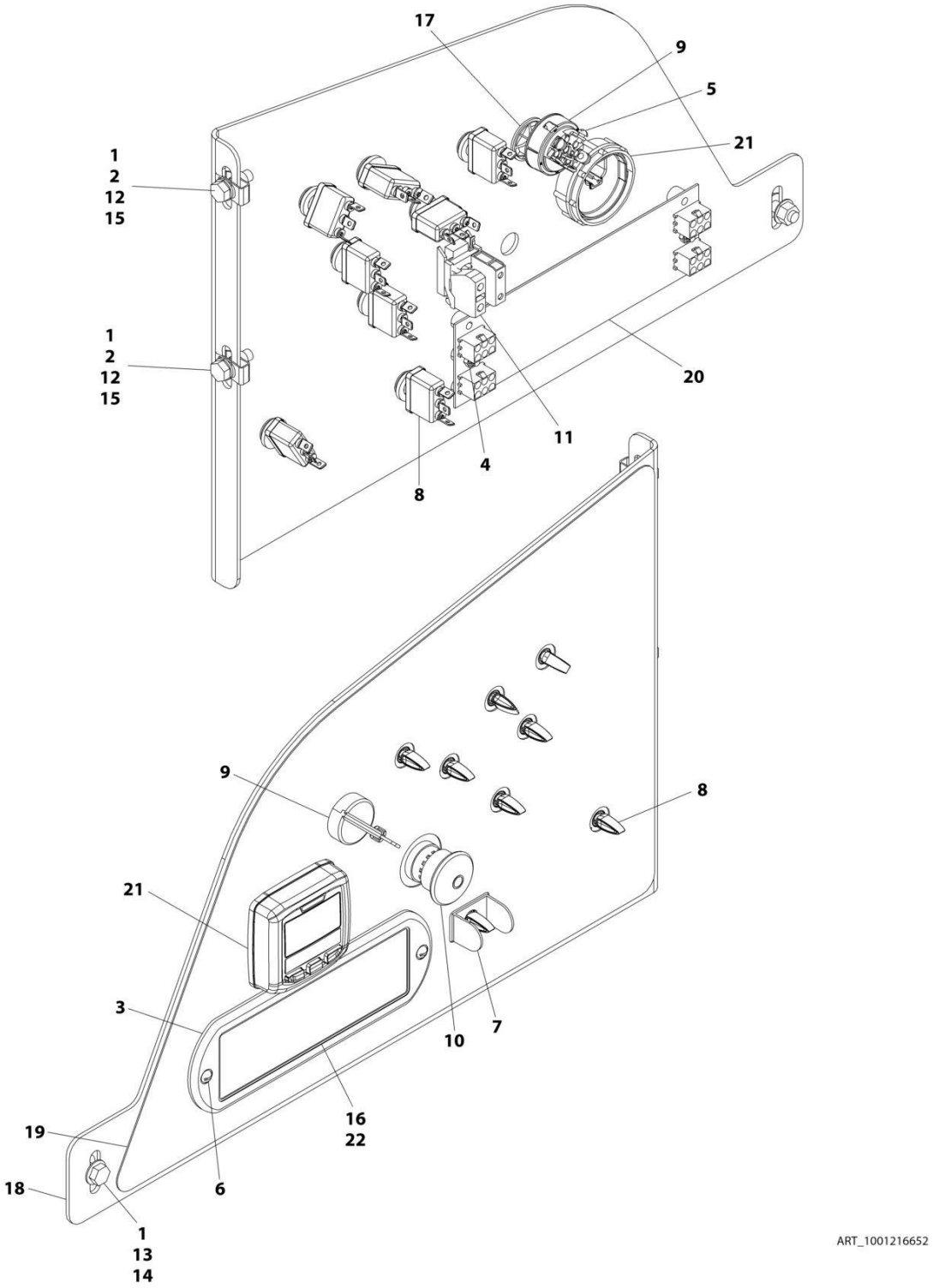

FIGURE 2-21. GROUND CONTROL ASSEMBLY - 450AJ WITH KUBOTA ENGINE (ANSI AND CSA SPECS ONLY)

ITEM	PART NUMBER	QTY	DESCRIPTION	REV
	1001216652	Ref	GROUND CONTROL ASSEMBLY - 450AJ WITH KUBOTA ENGINE (ANSI AND CSA SPECS ONLY)	B
1	0100011	AR	Compound, Locking	
2	0760812	2	Bolt M8 x 25	
3	1670829	1	Bezel, Front	
4	3300408	2	Nut	
5	3910804	3	Screw M8 x 1/4	
6	3911018	2	Screw #10 x 1-1/8	
7	4060906	1	Guard, Switch	
8	4360328	8	Switch, Toggle	
9	4360469	1	Switch, Key	
9	2860030	1	Key, Replacement	
10	4360475	1	Switch, Emergency	
10	7020175	1	Cap	
10	7020176	1	Block, Contact	
11	4360476	1	Block, Contact	
12	4811900	2	Washer M8	
13	5250810	1	Bolt M8 x 20	
14	5260800	1	Nut M8	
15	1001118274	2	Nut M8	
16	1001146220	1	Display, Light	
17	1001151393	1	Shim .063	
18	1001169896	1	Panel, Ground Control	
19	1001169897	1	Decal - Ground Control	
20	1001170838	1	PC Board, LED Light	
21	1001171482	1	Gauge, Display	
22	1001216407	1	Decal - Light Display	

FIGURE 2-22. ELECTRICAL SYSTEM INSTALLATION

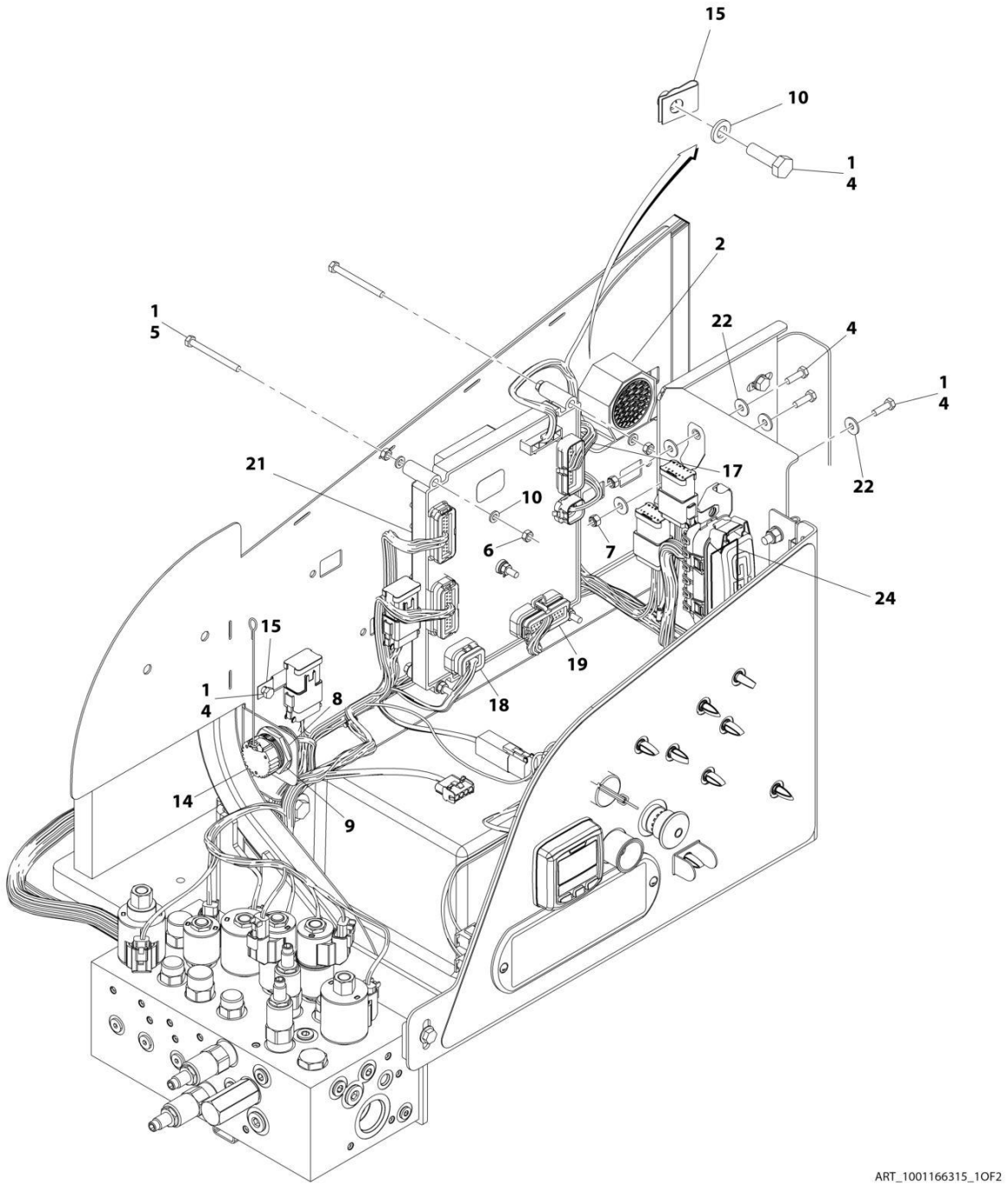

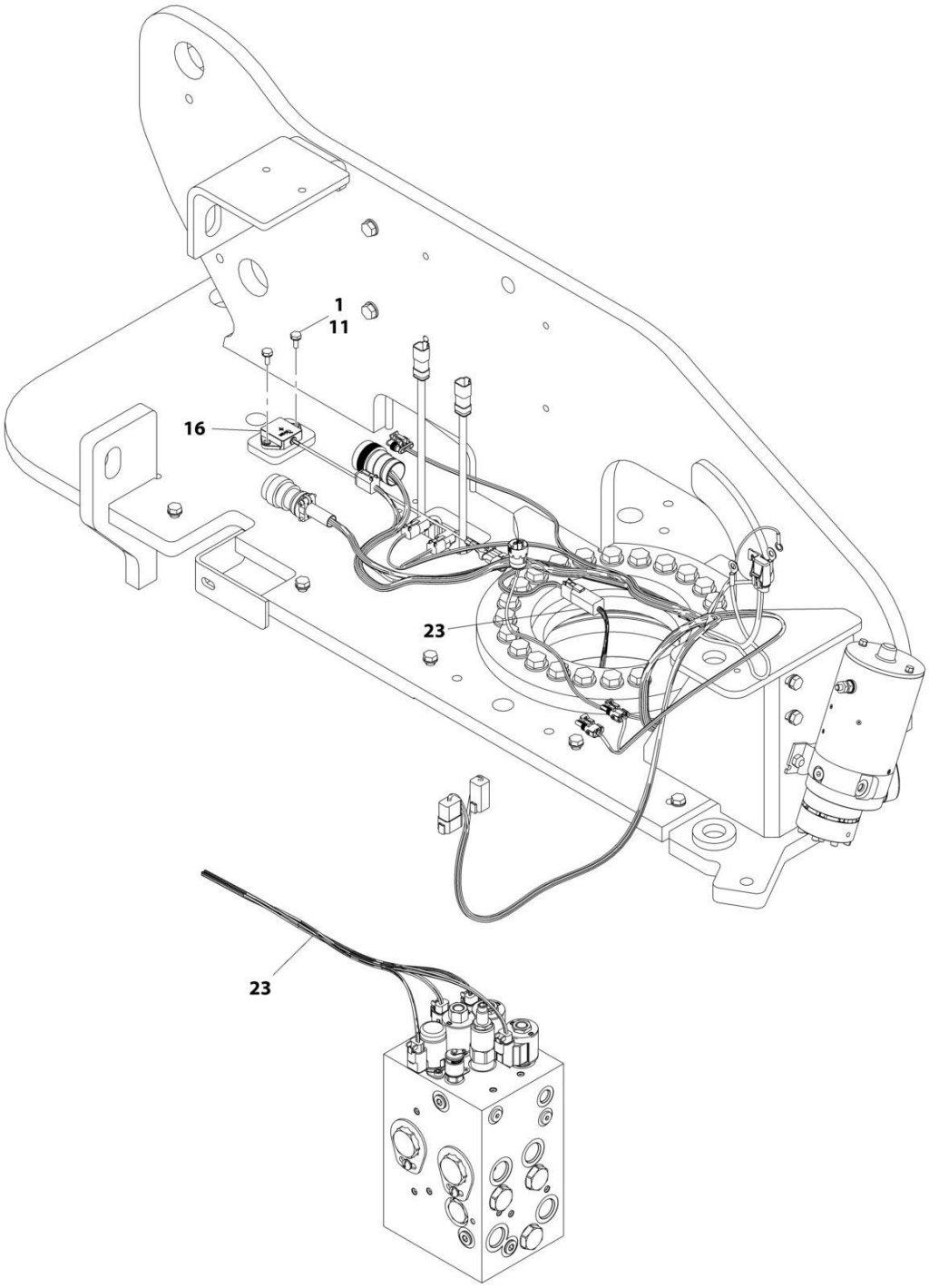

DETAIL OF TRACTION VALVE

ART_1001166315_2OF2

FIGURE 2-22. ELECTRICAL SYSTEM INSTALLATION

ITEM	PART NUMBER	QTY	DESCRIPTION	REV
	1001166315	Ref	ELECTRICAL SYSTEM INSTALLATION	H
1	0100011	AR	Compound, Locking	
2	0140043	1	Alarm	
2	4460536	1	Receptacle, Female - 3 Position	
2	4460943	3	Pin, Male	
4	0760610	7	Bolt M6 x 20	
5	0760621	5	Bolt M6 x 65	
6	3290601	10	Nut M6	
7	3290605	2	Nut M6	
8	4460496	1	Washer, Terminal	
9	4460497	1	Nut, Terminal	
10	4811700	12	Washer M6	
11	5250608	2	Bolt M6 x 16	
14	1001106736	1	Cap, Dust	
15	1001130220	3	Nut, Tinnerman M6	
16	1001181325	1	Sensor **(SN 0300201991 through 0300243661, SN 1300007279 through 1300007373, SN E300002833 through E300005341)**	
16	1001219601	1	Sensor **(SN 0300243662 through 0300272317, SN B300003516 through B300005760, SN E300005342 through E300007990, Except SN 0300272185 through 0300272190, Excluding B300005569 and E300007814)**	
16	See Note	1	Receptacle, Female - 4 Position (Note: Not Available for Purchase)	
16	See Note	4	Pin, Male (Note: Not Available for Purchase)	
17	1001186007	1	Turntable Harness (See ELECTRICAL SECTION for Breakdown)	
18	1001164736	1	Valve Harness - Main Valve (See ELECTRICAL SECTION for Breakdown)	
19	1001164737	1	Ground Control Panel Harness (See ELECTRICAL SECTION for Breakdown)	
21	1001170094	1	Module, Ground Control	
	See Note	Ref	Note: Re-calibration Required when Replaced	
22	4811702	7	Washer M6	
23	1001179236	1	Chassis Solenoid Harness (See ELECTRICAL SECTION for Breakdown)	
24	1001196637	1	Decal - Fuse Box	

FIGURE 2-23. BEACON LIGHT INSTALLATION - AMBER

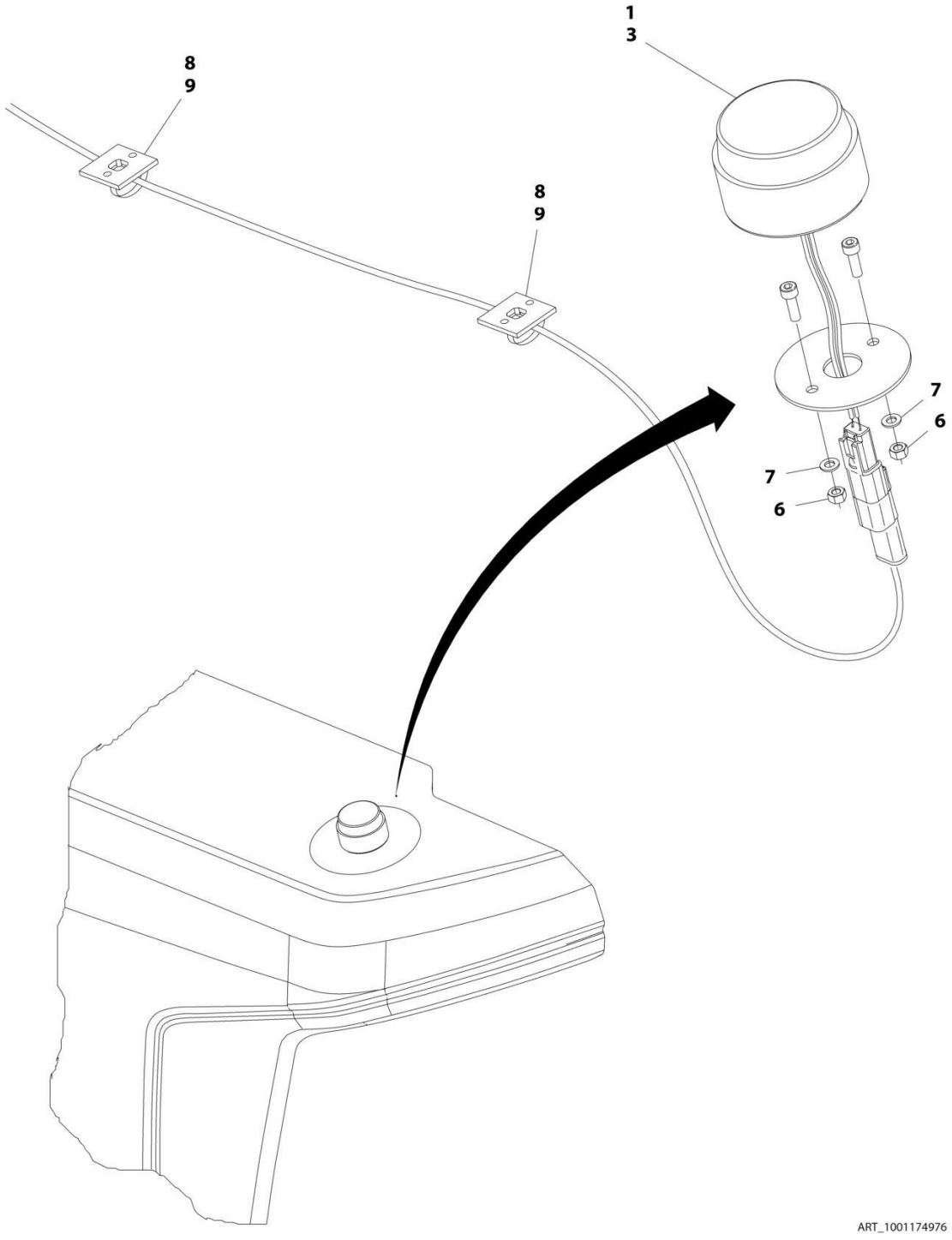

FIGURE 2-23. BEACON LIGHT INSTALLATION - AMBER

ITEM	PART NUMBER	QTY	DESCRIPTION	REV
	1001174976	Ref	BEACON LIGHT INSTALLATION - AMBER	D
1	0100048	AR	Compound, Silicone	
3	1001181405	1	Lamp, Strobe	
3	4460897	1	Receptacle, Female - 2 Position	
3	4460464	2	Pin, Male	
6	3290505	2	Nut M5	
7	4811600	2	Washer M5	
8	4240032	AR	Tie-Strap	
9	4460234	2	Mount, Tie-Strap	

FIGURE 2-24. BEACON LIGHT INSTALLATION - BLUE (SN 0300201991 through 0300202578)

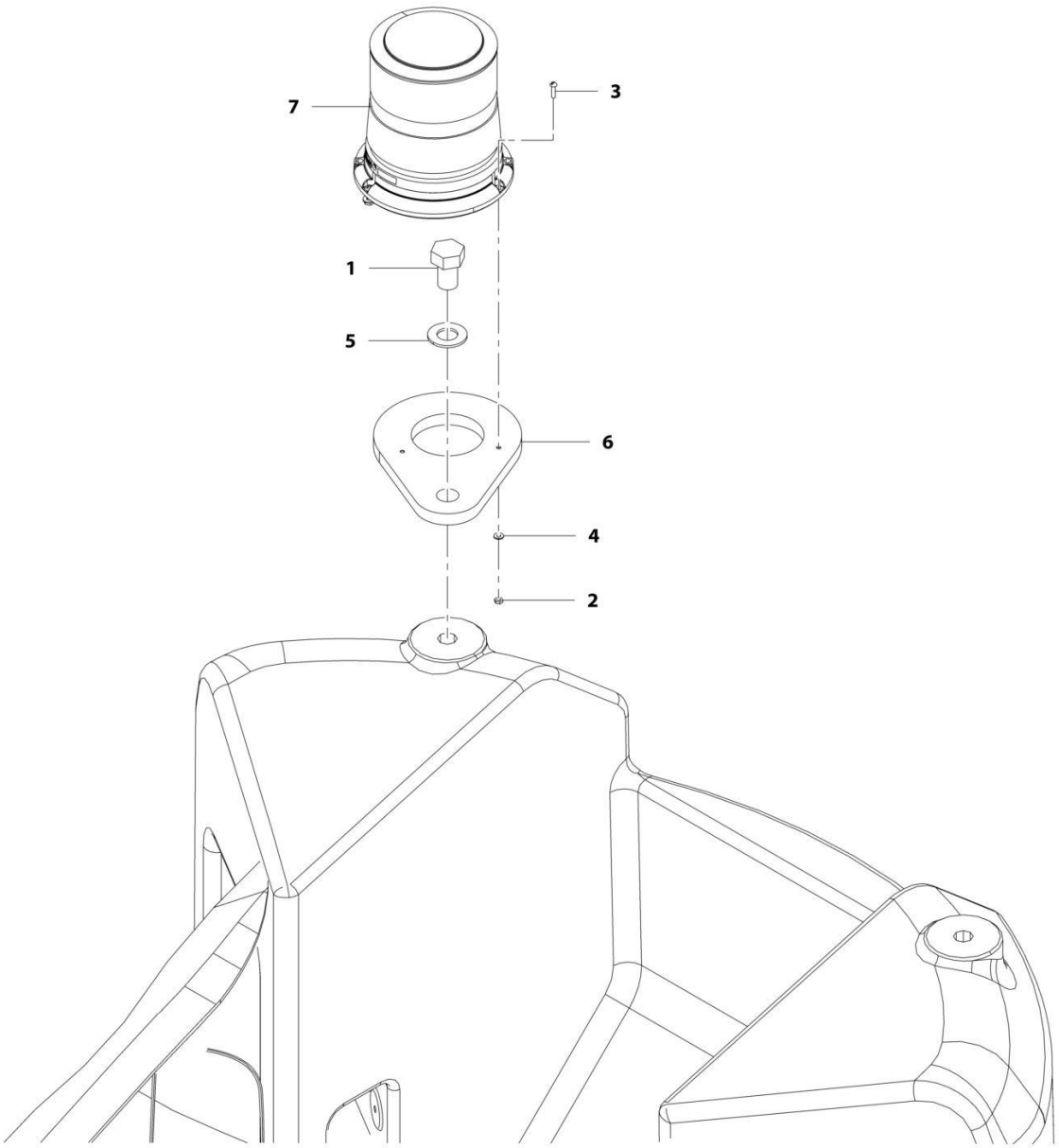

FIGURE 2-24. BEACON LIGHT INSTALLATION - BLUE (SN 0300201991 through 0300202578)

ITEM	PART NUMBER	QTY	DESCRIPTION	REV
	1001189194	Ref	BEACON LIGHT INSTALLATION - BLUE **(SN 0300201991 through 0300202578)**	C
1	0642612	1	Bolt 1 x 1-1/2	
2	3311005	3	Nut #10	
3	3911012	3	Screw #10 x 3/4	
4	4711000	3	Washer #10	
5	4712600	1	Washer 1	
6	1001142694	1	Bracket, Mounting	
7	1001143431	NLA	Light, Beacon (Use p/n 1001210696 and 1001200910)	
7	4460897	1	Receptacle, Female - 2 Position	
7	4460943	2	Pin, Male	
8	1001149570	1	Beacon Harness (Not Shown - See ELECTRICAL SECTION for Breakdown)	

FIGURE 2-25. BEACON LIGHT INSTALLATION - BLUE (SN 0300202579 through 0300259091, SN 1300007279 through 1300007373, SN B300003516 through B300005760, SN E300002833 through E300007540)

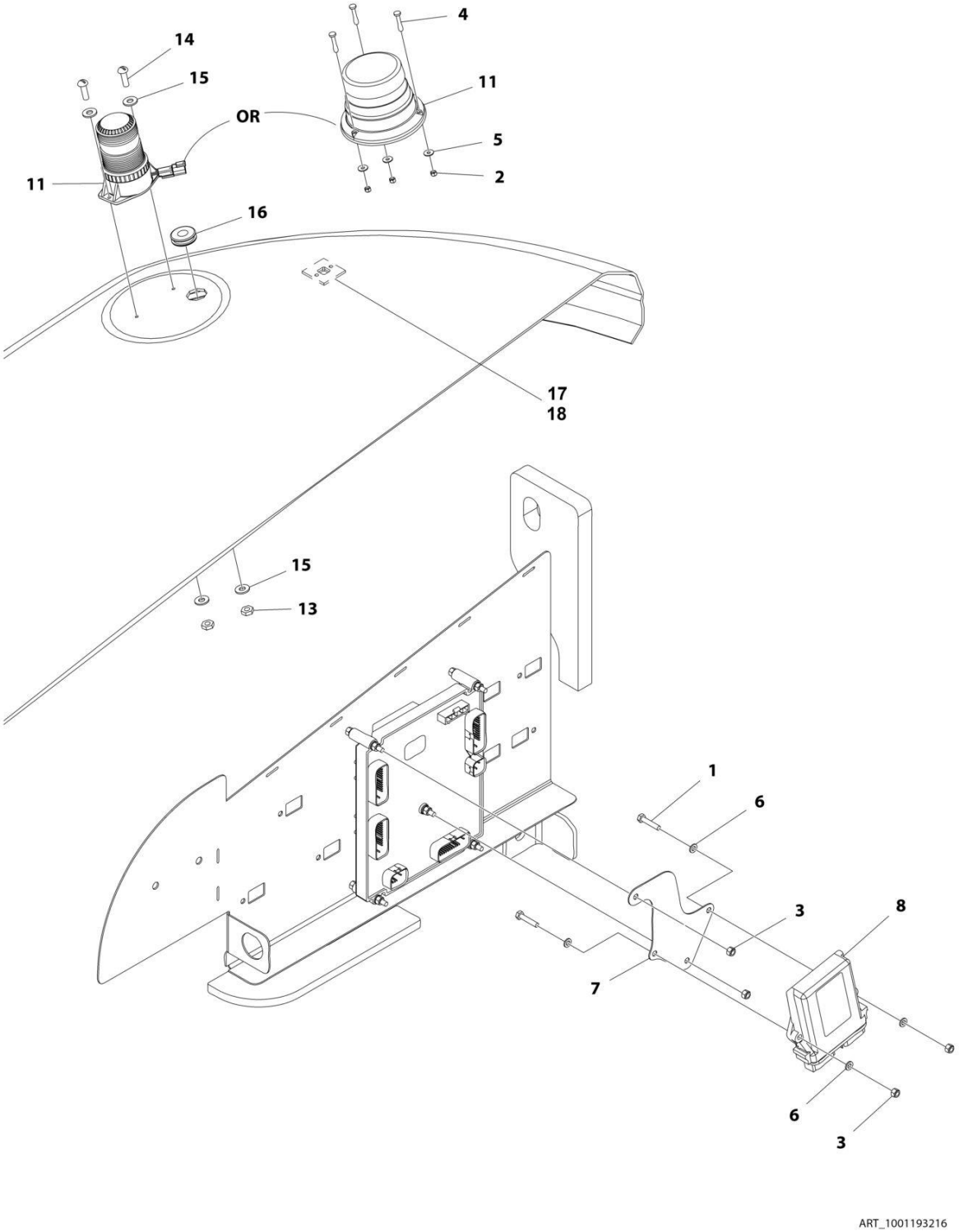

FIGURE 2-25. BEACON LIGHT INSTALLATION - BLUE (SN 0300202579 through 0300259091, SN 1300007279 through 1300007373, SN B300003516 through B300005760, SN E300002833 through E300007540)

ITEM	PART NUMBER	QTY	DESCRIPTION	REV
	1001193216	Ref	BEACON LIGHT INSTALLATION - BLUE	G
1	0760614	2	Bolt M6 x 30	
2	3290505	3	Nut M5	
3	3290605	4	Nut M6	
4	4010514	3	Screw M5 x 30	
5	4811602	3	Washer M5	
6	4811700	4	Washer M6	
7	1001100433	1	Mount, Module	
8	1001142683	1	Decal - Control	
9	1001142736	1	Beacon Harness (Not Shown - See ELECTRICAL SECTION for Breakdown)	
11	1001193061	NLA	Light, Beacon (Use p/n 1001210696 and 1001200910) **(SN 0300202579 through 0300217211, SN E300002833 through E300003258)**	
11	1001200910	1	Light, Beacon **(SN 0300217212 through 0300259091, SN 1300007279 through 1300007373, SN B300003516 through B300005760, SN E300003259 through E300007540, Excluding B300005569)**	
11	4460897	1	Receptacle, Female - 2 Position	
11	4460943	2	Pin, Male	
12	1001196458	1	Beacon Extension Harness (Not Shown - See ELECTRICAL SECTION for Breakdown) **(SN 0300201991 through 0300221757, SN E300002833 through E300003881)**	
13	3311005	2	Nut #10	
14	3911010	2	Screw #10 x 5/8	
15	4711000	4	Washer #10	
16	2540020	1	Grommet **(SN 0300221757 through 0300259091, SN 1300007279 through 1300007373, SN B300003516 through B300005760, SN E300003609 through E300007540, Excluding B300005569)**	
17	4240032	3	Tie-Strap	
18	4460488	3	Terminal, Mounting	

FIGURE 2-26. BEACON LIGHT INSTALLATION - BLUE (SN 0300259092 through 0300272317, SN E300007541 through E300007990)

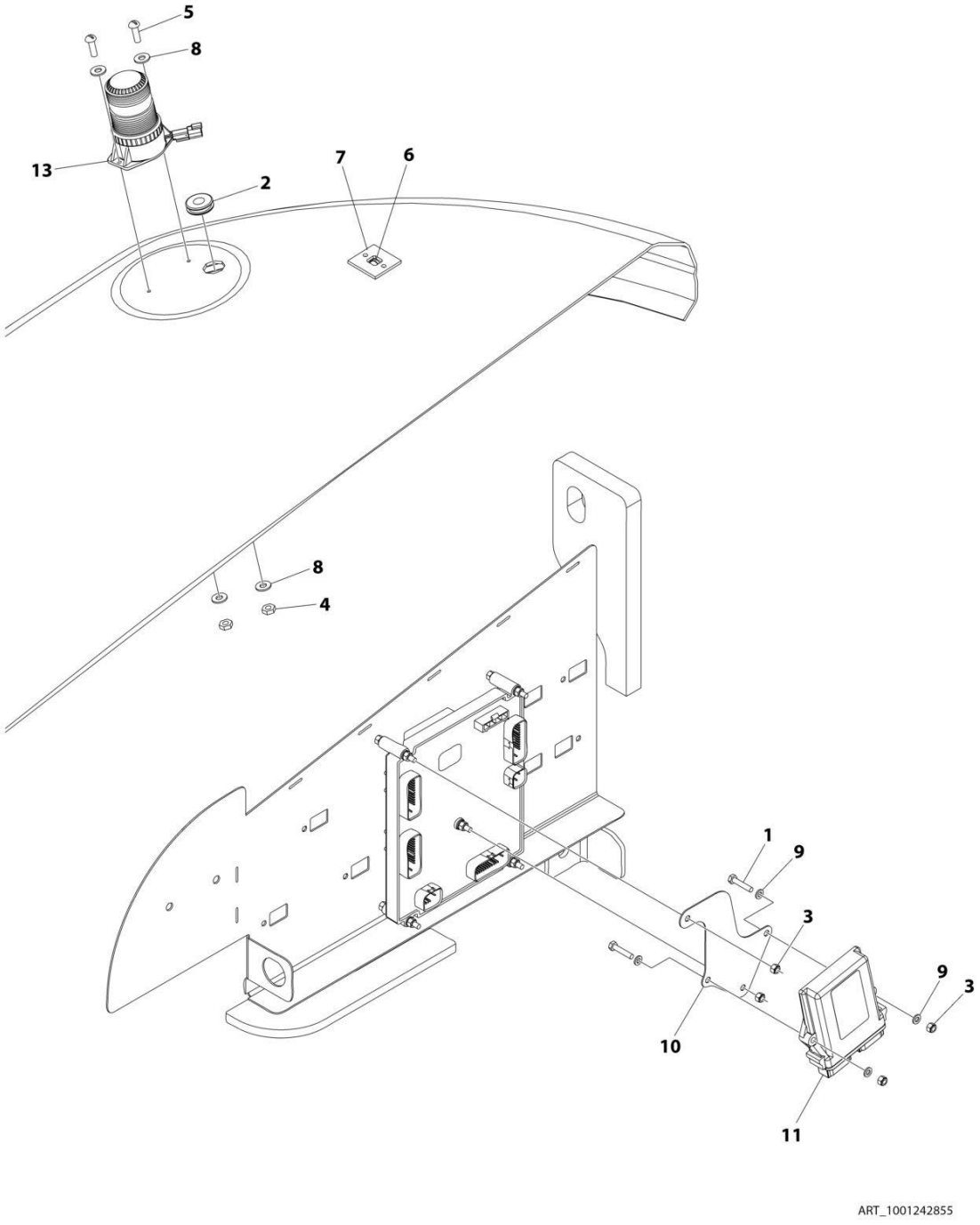

FIGURE 2-26. BEACON LIGHT INSTALLATION - BLUE (SN 0300259092 through 0300272317, SN E300007541 through E300007990)

ITEM	PART NUMBER	QTY	DESCRIPTION	REV
	1001242855	Ref	BEACON LIGHT INSTALLATION - BLUE	A
1	0760614	2	Bolt M6 x 30	
2	2540020	1	Grommet	
3	3290605	4	Nut M6	
4	3311005	2	Nut #10	
5	3911010	2	Screw #10 x 5/8	
6	4240032	AR	Tie-Strap	
7	4460488	AR	Terminal, Mounting	
8	4711000	4	Washer #10	
9	4811700	4	Washer M6	
10	1001100433	1	Mount, Module	
11	1001142683	1	Module, Control	
12	1001142736	1	Beacon Harness (Not Shown - See Separate Breakdown in ELECTRICAL SECTION)	
13	1001200910	1	Light, Beacon	
13	4460897	1	Receptacle, Female - 2 Position	
13	4460943	2	Pin, Male	

FIGURE 2-27. BEACON LIGHT INSTALLATION - RED (SN 0300214537 through 0300272317, SN 1300007279 through 1300007373, SN B300003516 through B300005760, SN E300003246 through E300007540)

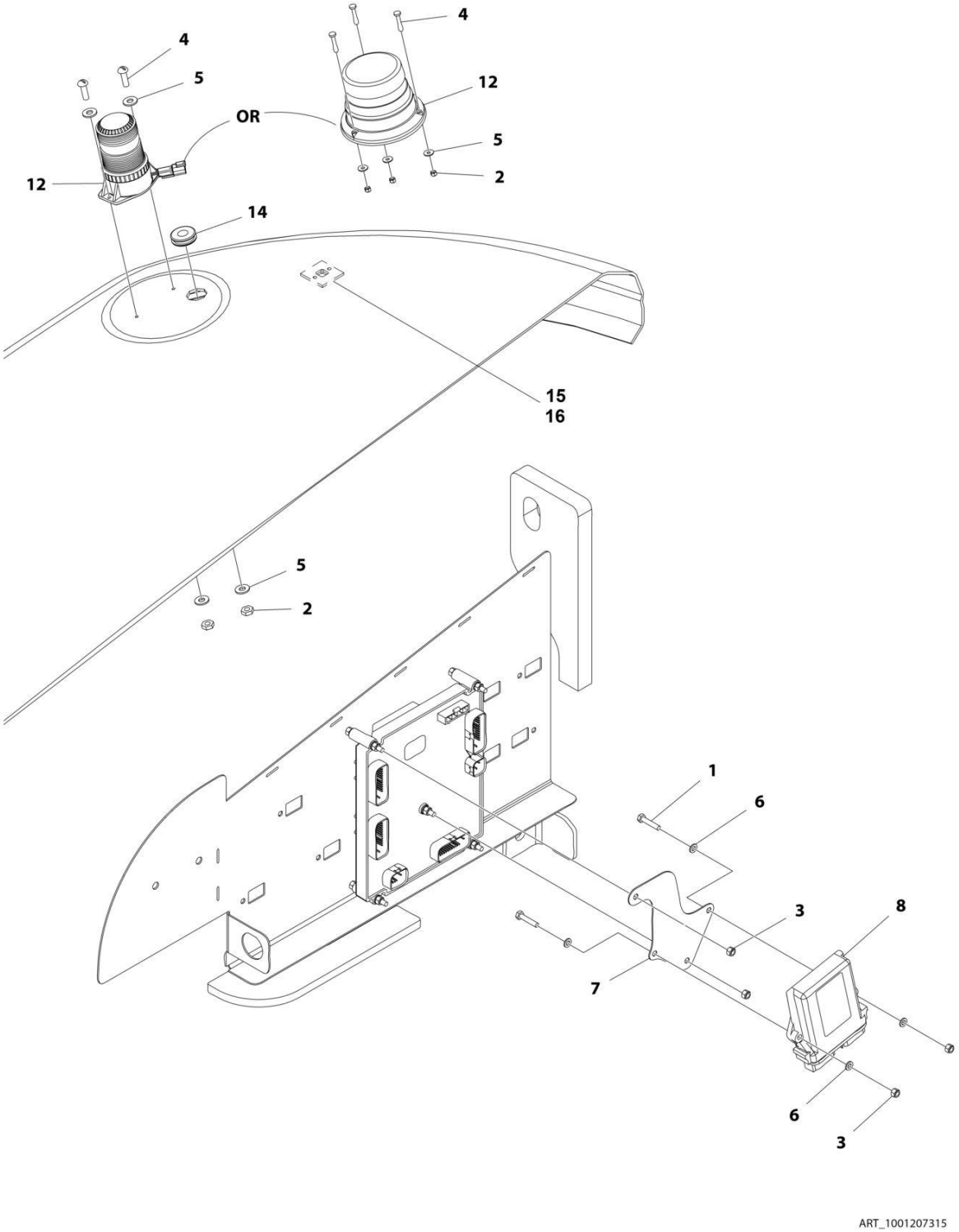

FIGURE 2-27. BEACON LIGHT INSTALLATION - RED (SN 0300214537 through 0300272317, SN 1300007279 through 1300007373, SN B300003516 through B300005760, SN E300003246 through E300007540)

ITEM	PART NUMBER	QTY	DESCRIPTION	REV
	1001207315	Ref	BEACON LIGHT INSTALLATION - RED	G
1	0760614	2	Bolt M6 x 30	
2	3290505	3	Nut M5	
2	3311005	2	Nut #10	
3	3290605	4	Nut M6	
4	4010514	3	Screw M5 x 30	
4	3911010	2	Screw #10 x 5/8	
5	4811602	3	Washer M5	
5	4711000	4	Washer #10	
6	4811700	4	Washer M6	
7	1001100433	1	Mount, Module	
8	1001142683	1	Decal - Control	
9	1001142736	1	Beacon Harness (Not Shown - See ELECTRICAL SECTION for Breakdown)	
11	1001196458	1	Beacon Extension Harness (Not Shown - See ELECTRICAL SECTION for Breakdown) **(SN 0300201991 through 0300221757, SN E300002833 through E300003881)**	
12	1001207302	NLA	Light, Beacon (Use p/n 1001210696 and 1001207004) **(SN 0300201991 through 0300217226, SN E300002833 through E300003258)**	
12	1001207004	1	Light, Beacon **(SN 0300217227 through 0300259091, SN 1300007279 through 1300007373, SN B300003516 through B300005760, SN E300003259 through E300007540, Excluding B300005569)**	
12	4460897	1	Receptacle, Female - 2 Position	
12	4460943	2	Pin, Male	
14	2540020	1	Grommet **(SN 0300221757 through 0300259091, SN 1300007279 through 1300007373, SN B300003516 through 0300259091, SN E300003609 through E300007540)**	
15	4240032	3	Tie-Strap	
16	4460488	3	Terminal, Mounting	

FIGURE 2-28. BEACON LIGHT INSTALLATION - RED (SN 0300259092 through 0300272317, SN E300007541 through E300007990)

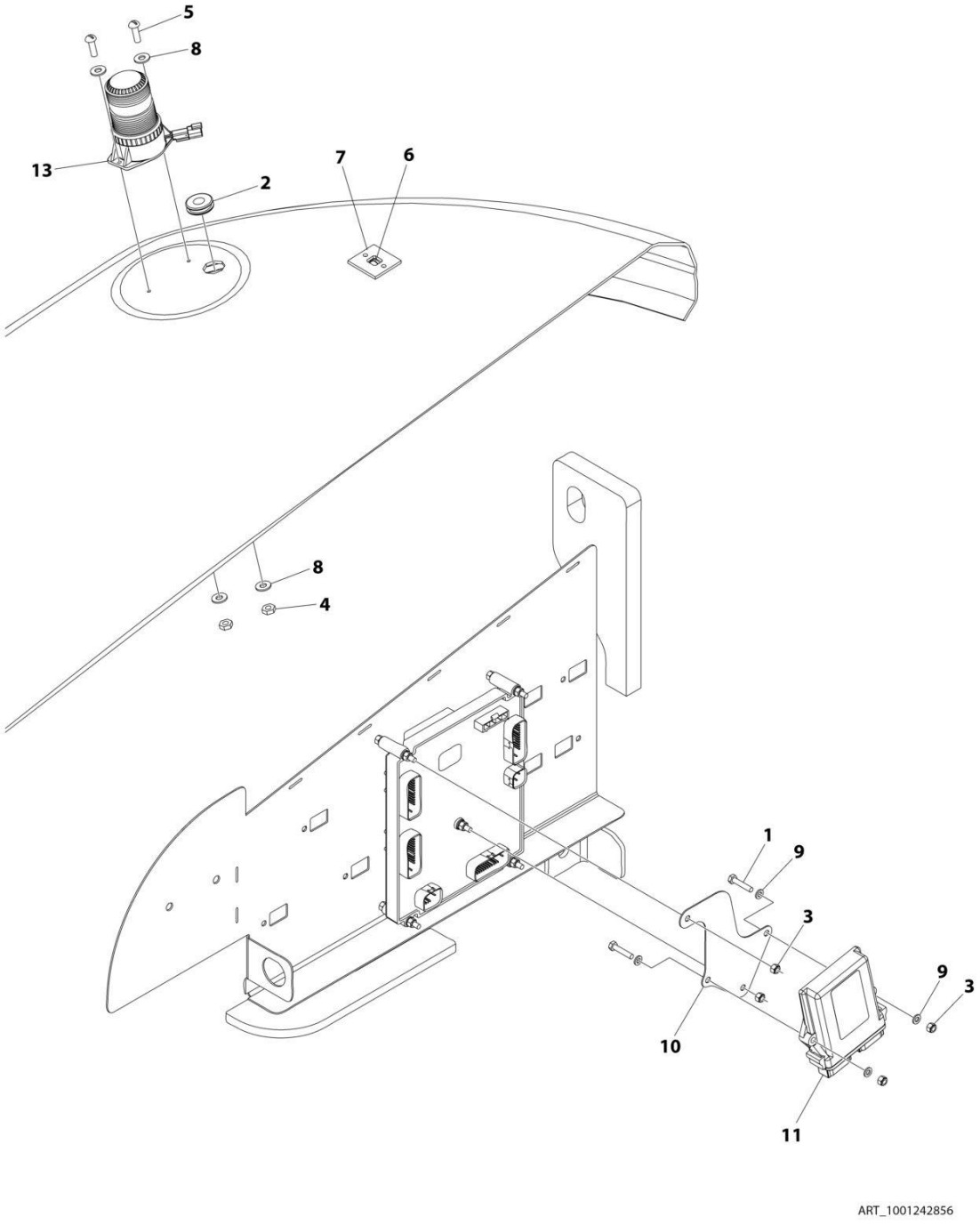

FIGURE 2-28. BEACON LIGHT INSTALLATION - RED (SN 0300259092 through 0300272317, SN E300007541 through E300007990)

ITEM	PART NUMBER	QTY	DESCRIPTION	REV
	1001242856	Ref	BEACON LIGHT INSTALLATION - RED	A
1	0760614	2	Bolt M6 x 30	
2	2540020	1	Grommet	
3	3290605	4	Nut M6	
4	3311005	2	Nut #10	
5	3911010	2	Screw #10 x 5/8	
6	4240032	AR	Tie-Strap	
7	4460488	AR	Terminal, Mounting	
8	4711000	4	Washer #10	
9	4811700	4	Washer M6	
10	1001100433	1	Mount, Module	
11	1001142683	1	Module, Control	
12	1001142736	1	Beacon Harness (Not Shown - See Separate Breakdown in ELECTRICAL SECTION)	
13	1001207004	1	Light, Beacon	
13	4460897	1	Receptacle, Female - 2 Position	
13	4460943	2	Pin, Male	

FIGURE 2-29. BATTERY AND CABLE INSTALLATION - USA AND CHINA BUILT MACHINES

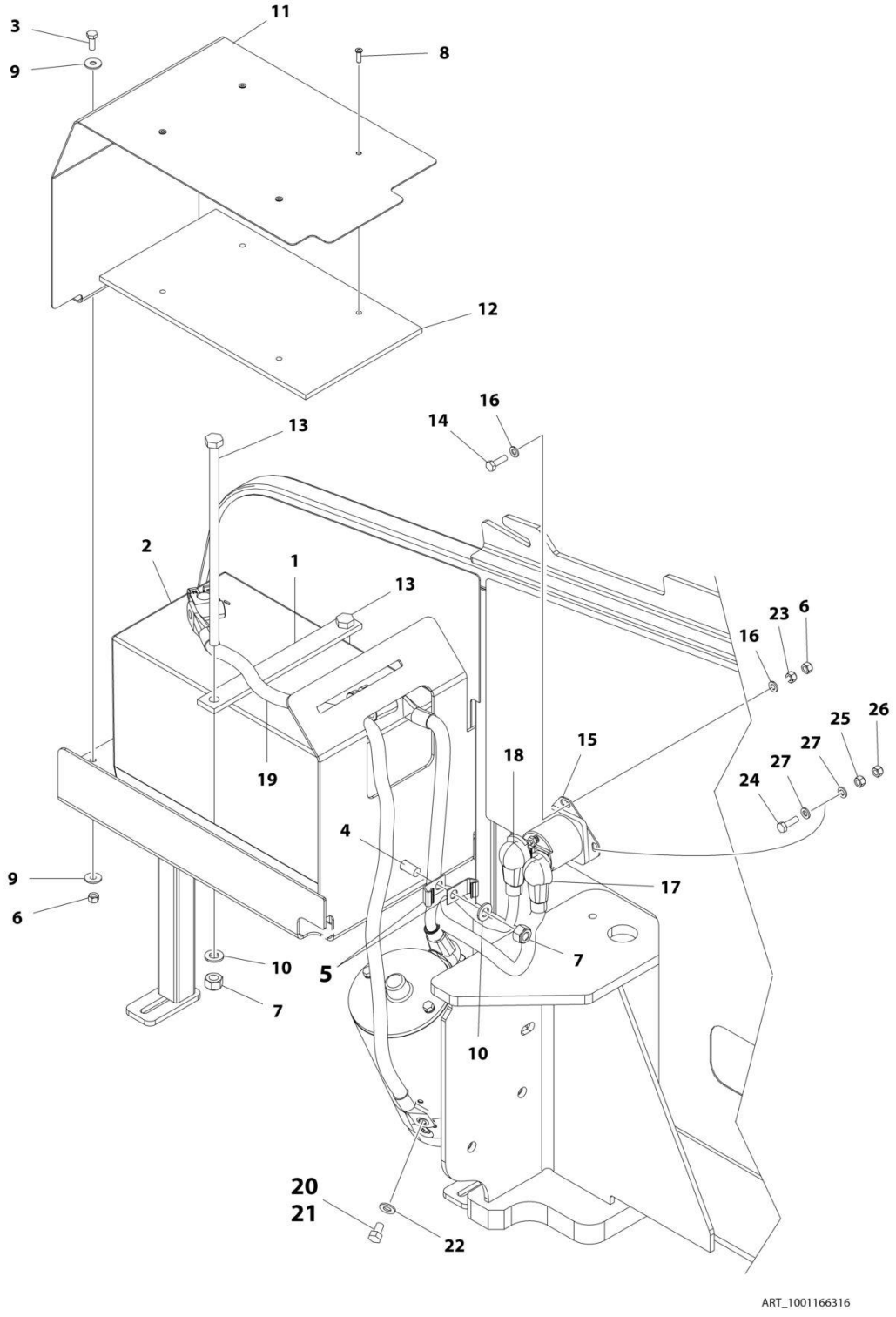

FIGURE 2-29. BATTERY AND CABLE INSTALLATION - USA AND CHINA BUILT MACHINES

ITEM	PART NUMBER	QTY	DESCRIPTION	REV
	1001166316	Ref	BATTERY AND CABLE INSTALLATION - USA AND CHINA BUILT MACHINES	G
1	0361810	1	Bar, Hold-down	
2	0400075	1	Battery	
3	0760608	2	Bolt M6 x 16	
3	0760610	2	Bolt M6 x 20	
4	0761012	1	Bolt M10 x 25	
5	1320223	2	J-Clip	
6	3290605	AR	Nut M6	
7	3291005	3	Nut M10	
8	3820032	4	Rivet	
9	4811702	4	Washer M6	
10	4812000	4	Washer M10	
11	1001117240	1	Cover	
12	1001119278	1	Insulation	
13	1001119280	2	Bolt M16 x 260	
14	0760612	AR	Bolt M6 x 25	
15	3740067	1	Relay	
15	3300220	2	Nut 3/8	
15	1001111424	2	Washer 3/8	
15	3321001	1	Nut #10	
15	4761000	1	Washer #10	
16	4811700	AR	Washer M6	
17	1001171678	1	Cable, Battery (Positive + to Aux Relay)	
18	1001171679	1	Cable, Battery (Aux Relay to Aux Pump)	
19	1001171680	1	Cable, Battery (Negative – to Aux Pump)	
20	0100011	AR	Compound, Locking	
21	0641504	1	Bolt 5/16 x 1/2	
22	4711500	1	Washer 5/16	
23	3290601	2	Nut M6	
24	0760512	1	Bolt M5 x 25	
25	3290501	1	Nut M5	
26	3290505	1	Nut M5	
27	4811600	2	Washer M5	

FIGURE 2-30. BATTERY AND CABLE INSTALLATION - ROMANIAN BUILT MACHINES

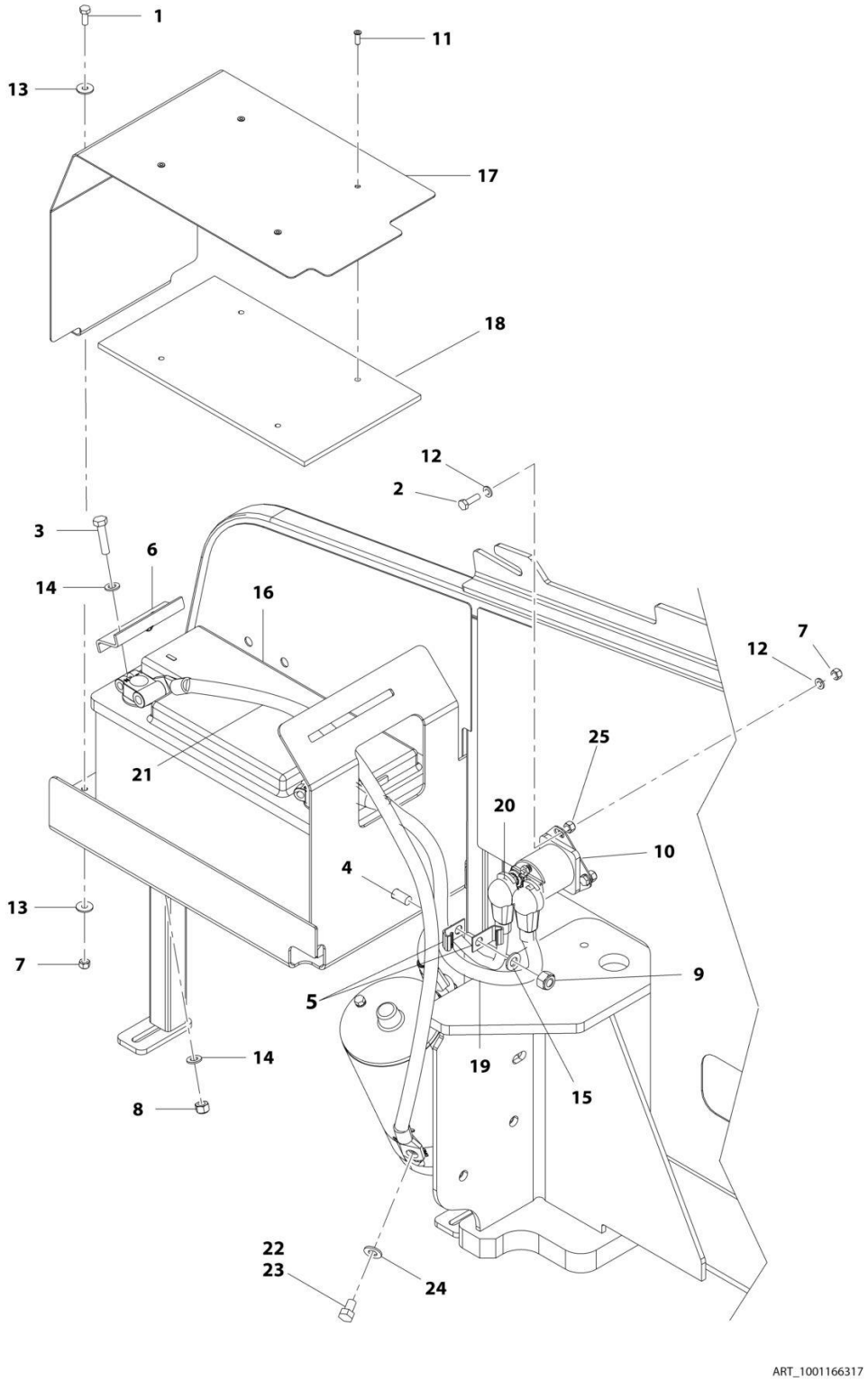

FIGURE 2-30. BATTERY AND CABLE INSTALLATION - ROMANIAN BUILT MACHINES

ITEM	PART NUMBER	QTY	DESCRIPTION	REV
	1001166317	Ref	BATTERY AND CABLE INSTALLATION - ROMANIAN BUILT MACHINES	F
1	0760608	2	Bolt M6 x 16	
1	0760610	2	Bolt M6 x 20	
2	0760612	2	Bolt M6 x 25	
3	0760815	2	Bolt M8 x 35	
4	0761012	1	Bolt M10 x 25	
5	1320223	2	J-Clip	
6	1787217	1	Clamp	
7	3290605	4	Nut M6	
8	3290805	2	Nut M8	
9	3291005	1	Nut M10	
10	3740067	1	Relay	
10	3300220	2	Nut 3/8	
10	1001111424	2	Washer 3/8	
10	3321001	1	Nut #10	
10	4761000	1	Washer #10	
11	3820032	4	Rivet	
12	4811700	4	Washer M6	
13	4811702	4	Washer M6	
14	4811900	4	Washer M8	
15	4812000	2	Washer M10	
16	8008750	1	Battery	
17	1001117240	1	Cover	
18	1001119278	1	Insulation	
19	1001171678	1	Cable, Battery (Positive + to Aux Relay) **(SN E300002833 through E300002975)**	
19	1001205752	1	Cable, Battery (Positive + to Aux Relay) **(SN 1300007279 through 1300007373, SN E300002976 through E300007990, Excluding E300007814)**	
20	1001171679	1	Cable, Battery (Aux Relay to Aux Pump)	
21	1001171680	1	Cable, Battery (Negative – to Aux Pump) **(SN E300002833 through E300002975)**	
21	1001205750	1	Cable, Battery (Negative – to Aux Pump) **(SN 1300007279 through 1300007373, SN E300002976 through E300007990, Excluding E300007814)**	
22	0100011	AR	Compound, Locking	
23	0641504	1	Bolt 5/16 x 1/2	
24	4711500	1	Washer 5/16	
25	3290601	2	Nut M6	

FIGURE 2-31. HOODS INSTALLATION - 450A WITH DEUTZ/GM ENGINES (SN 0300201991 through 0300222765)

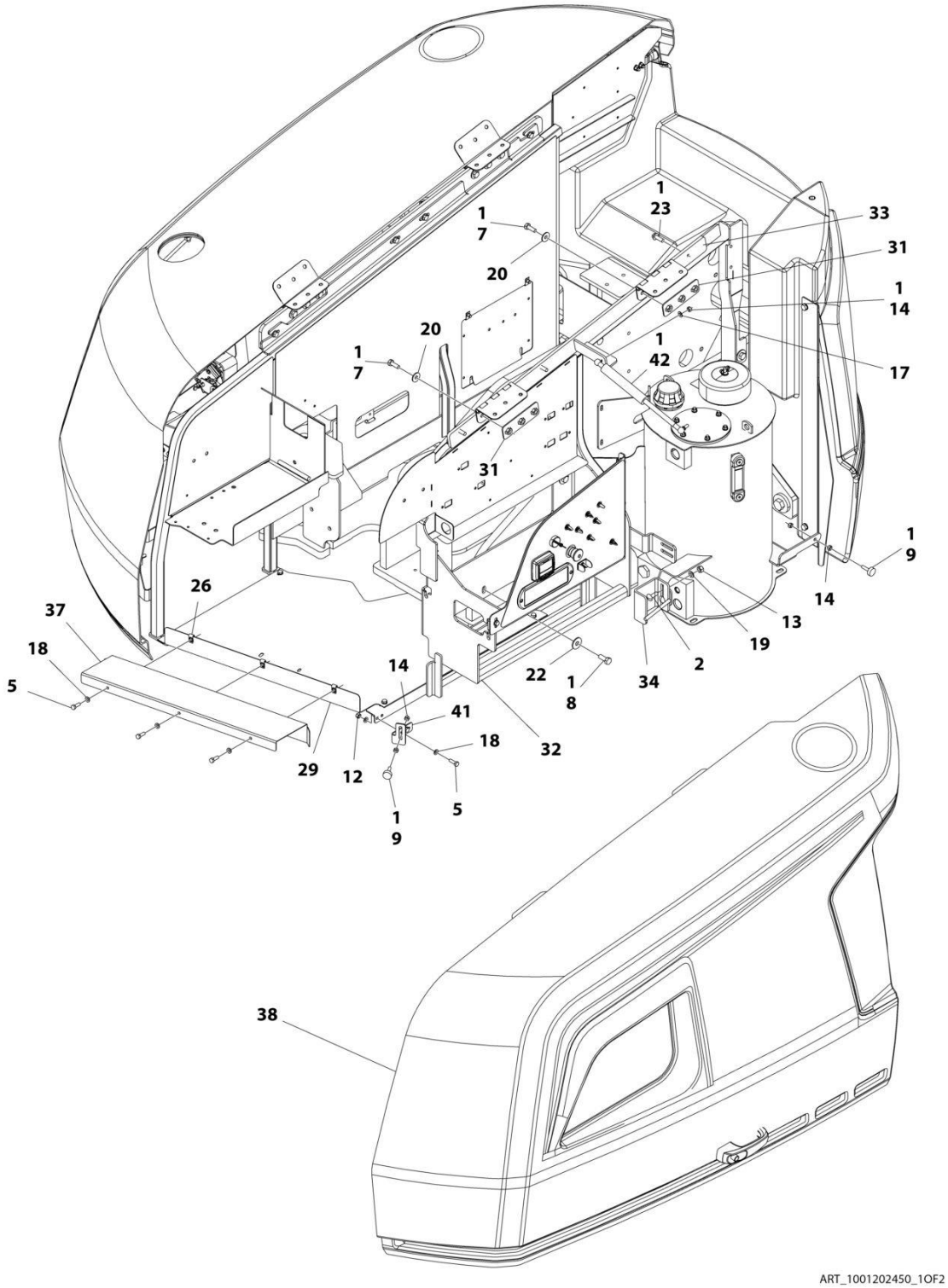

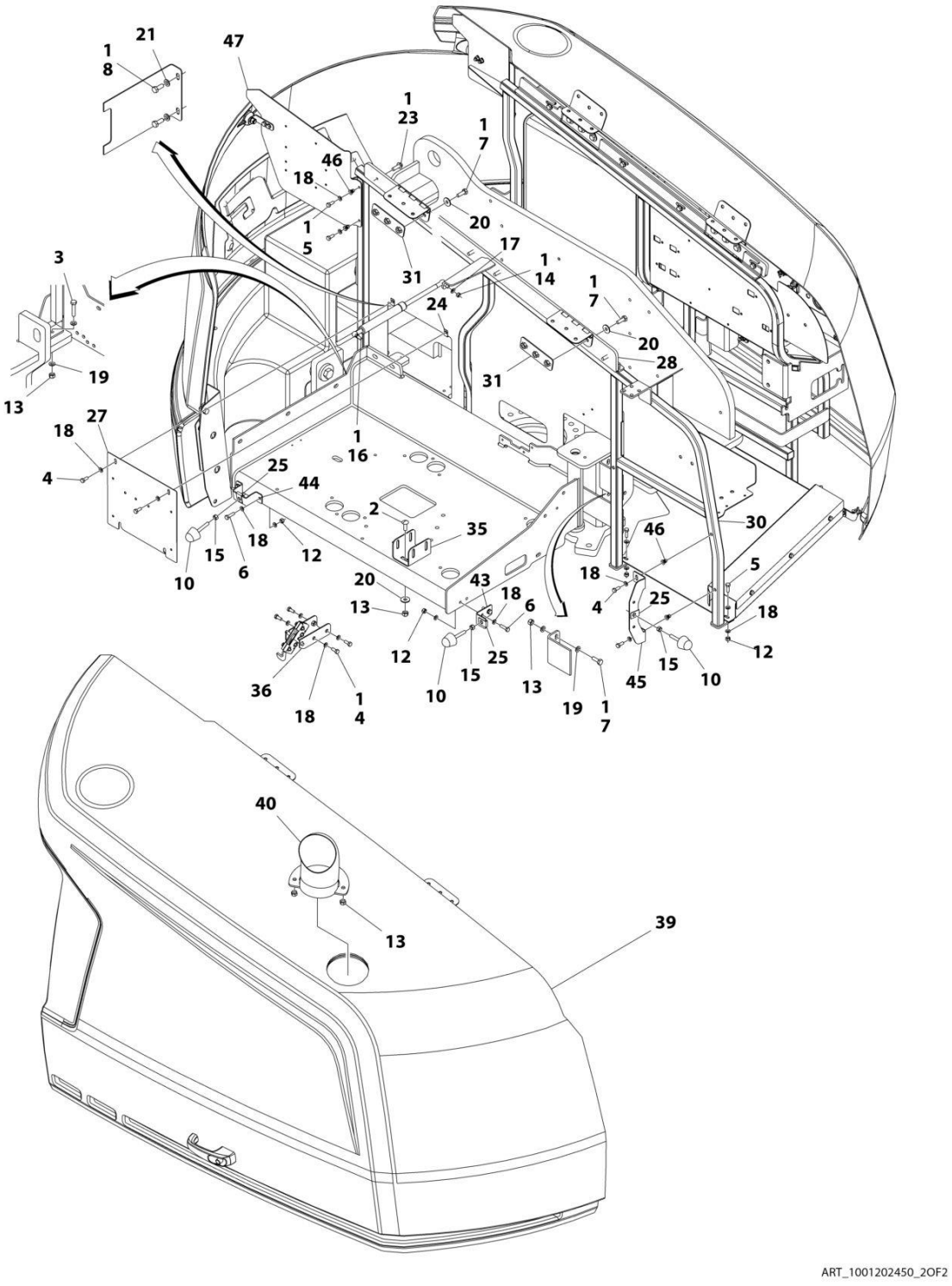
ART_1001202450_2OF2

FIGURE 2-31. HOODS INSTALLATION - 450A WITH DEUTZ/GM ENGINES (SN 0300201991 through 0300222765)

ITEM	PART NUMBER	QTY	DESCRIPTION	REV
	1001202450	Ref	HOODS INSTALLATION – 450A WITH DEUTZ/GM ENGINES **(SN 0300201991 through 0300222765)**	C
1	0100011	AR	Compound, Locking	
2	0630613	4	Bolt M10 x 30	
3	0701018	5	Bolt M10 x 50	
4	0760810	8	Bolt M8 x 20	
5	0760812	11	Bolt M8 x 25	
6	0760814	4	Bolt M8 x 30	
7	0761014	14	Bolt M10 x 30	
8	0761214	6	Bolt M12 x 30	
9	0940049	2	Bumper	
10	0940071	3	Bumper	
11	1701691	2	Decal - No Step	
12	3290805	10	Nut M8	
13	3291005	14	Nut M10	
14	3311501	6	Nut 5/16	
15	3311601	3	Nut 3/8	
16	4160182	1	Spring, Gas	
17	4711500	2	Washer 5/16	
18	4811900	33	Washer M8	
19	4812000	16	Washer M10	
20	4812002	14	Washer M10	
21	4812100	2	Washer M12	
22	4812102	4	Washer M12	
23	5251014	8	Bolt M10 x 30	
24	8310686	2	Nut, Retainer M8	
25	88662523	3	Nut, Tinnerman	
26	1001118274	3	Nut M8	
27	1001167149	1	Panel, Filler	
28	1001167159	1	Mount	
29	1001167163	1	Tray	
30	1001167169	1	Mount	
31	1001169046	4	Nut	
32	1001211716	1	Support, Hood	
33	1001170018	1	Mount	
34	1001170022	1	Mount	
35	1001170859	1	Mount	
36	1001170860	1	Support	
37	1001171216	1	Cover	
38	1001172282	1	Hood Assembly - Tank Side (See HOOD ASSEMBLY - TANK SIDE for Breakdown)	
39	1001172833	1	Hood Assembly - Engine Side (See HOOD ASSEMBLY - ENGINE SIDE for Breakdown)	
40	1001174098	1	Pipe, Exhaust	
41	1001179904	1	Mount	
42	1001182169	1	Spring, Gas	
43	1001182875	1	Mount	
44	1001182877	1	Mount	
45	1001182879	1	Mount	

ITEM	PART NUMBER	QTY	DESCRIPTION	REV
46	1001191832	4	Rivnut M8	
47	1001211717	1	Support	

FIGURE 2-32. HOODS INSTALLATION - 450A WITH DEUTZ/GM ENGINES (SN 0300222766 through 0300272317)

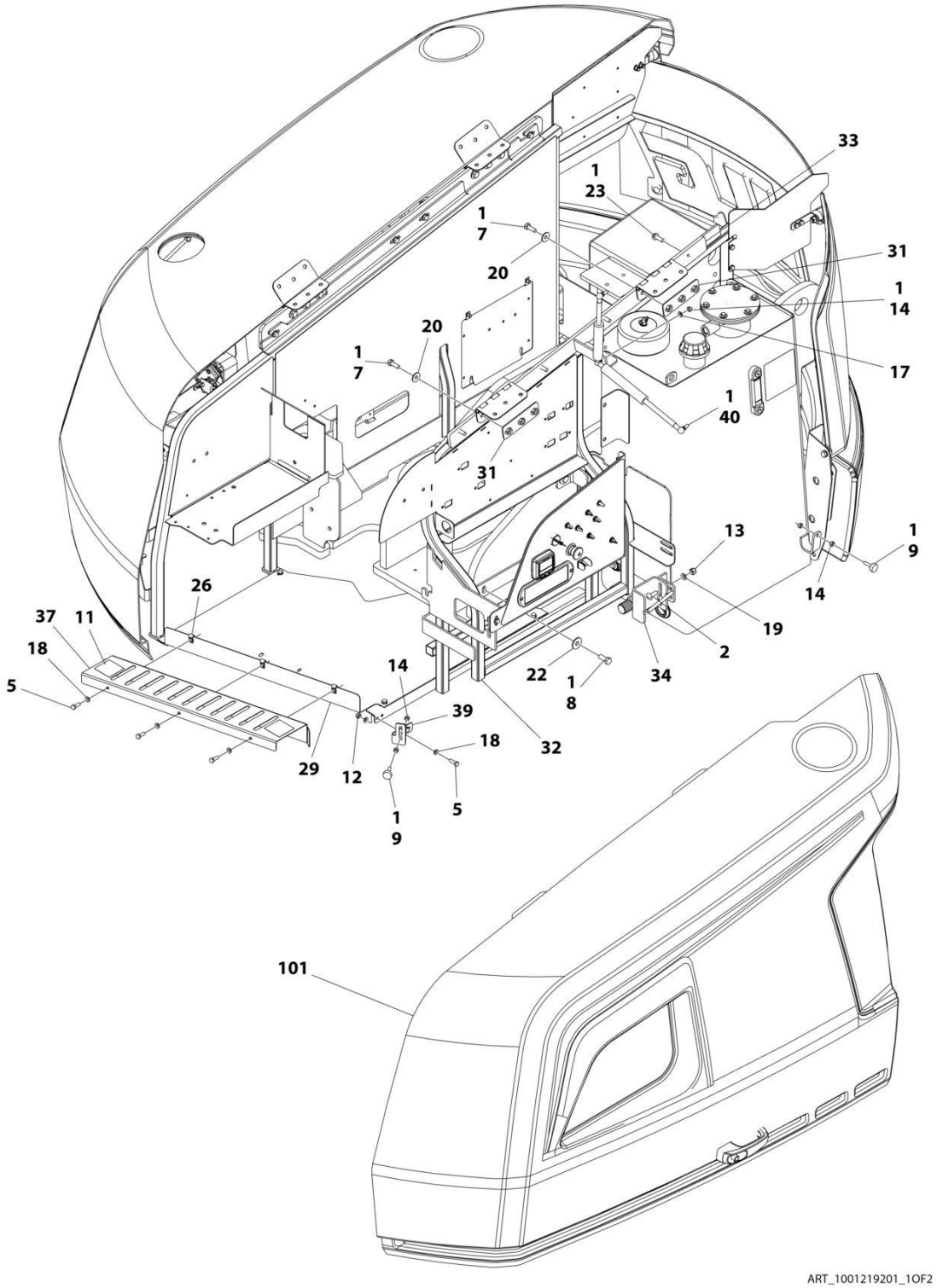

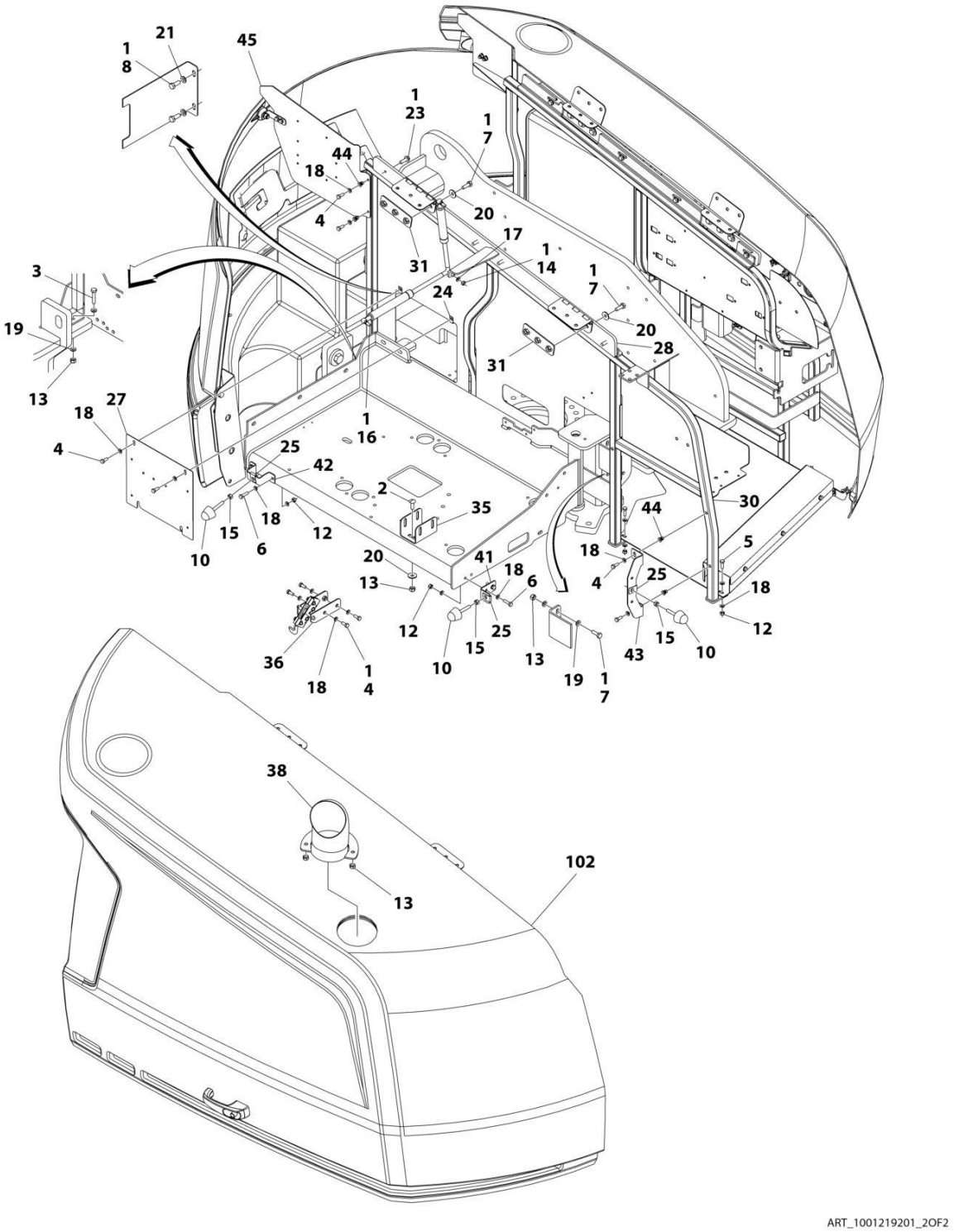
ART_1001219201_2OF2

FIGURE 2-32. HOODS INSTALLATION - 450A WITH DEUTZ/GM ENGINES (SN 0300222766 through 0300272317)

ITEM	PART NUMBER	QTY	DESCRIPTION	REV
	1001219201	Ref	HOODS INSTALLATION – 450A WITH DEUTZ/GM ENGINES	C
1	0100011	AR	Compound, Locking	
2	0630613	4	Bolt M10 x 30	
3	0701018	5	Bolt M10 x 50	
4	0760810	AR	Bolt M8 x 20	
5	0760812	AR	Bolt M8 x 25	
6	0760814	4	Bolt M8 x 30	
7	0761014	14	Bolt M10 x 30	
8	0761214	6	Bolt M12 x 30	
9	0940049	2	Bumper	
10	0940071	3	Bumper	
11	1701691	2	Decal - No Step	
12	3290805	10	Nut M8	
13	3291005	14	Nut M10	
14	3311501	6	Nut 5/16	
15	3311601	3	Nut 3/8	
16	4160182	1	Spring, Gas	
17	4711500	2	Washer 5/16	
18	4811900	33	Washer M8	
19	4812000	16	Washer M10	
20	4812002	14	Washer M10	
21	4812100	2	Washer M12	
22	4812102	4	Washer M12	
23	5251014	8	Bolt M10 x 30	
24	8310686	2	Nut, Retainer M8	
25	88662523	3	Nut, Tinnerman	
26	1001118274	3	Nut M8	
27	1001167149	1	Panel, Filler	
28	1001167159	1	Mount	
29	1001167163	1	Tray	
30	1001167169	1	Mount	
31	1001169046	4	Nut	
32	1001170001	1	Support, Hood **(SN 0300222766 through 0300225644)**	
32	1001211716	1	Support, Hood **(SN 0300225645 through 0300272317, Except SN 0300272185 through 0300272190)**	
33	1001170018	1	Mount	
34	1001170022	1	Mount	
35	1001170859	1	Mount	
36	1001170860	NLA	Support (Use p/n 1001223777) **(SN 0300222766 through 0300226828)**	
36	1001223777	1	Support **(SN 0300226829 through 0300272317, Except SN 0300272185 through 0300272190)**	
37	1001171216	1	Cover	
38	1001174098	1	Pipe, Exhaust	
39	1001179904	1	Mount	
40	1001182169	1	Spring, Gas	
41	1001182875	1	Mount	
42	1001182877	1	Mount	
43	1001182879	1	Mount	

ITEM	PART NUMBER	QTY	DESCRIPTION	REV
44	1001191832	4	Rivnut M8	
45	1001200086	1	Support **(SN 0300222766 through 0300225644)**	
45	1001211717	1	Support **(SN 0300225645 through 0300272317, Except SN 0300272185 through 0300272190)**	
100	1001219203	1	Hood Kit (Includes Items 101-102)	
101	1001172282	1	Hood Assembly - Tank Side (See HOOD ASSEMBLY - TANK SIDE for Breakdown)	
102	1001172833	1	Hood Assembly - Engine Side (See HOOD ASSEMBLY – ENGINE SIDE for Breakdown)	

FIGURE 2-33. HOODS INSTALLATION - 450AJ WITH DEUTZ/GM/KUBOTA ENGINES (SN 0300201991 through 0300272317, SN B300003516 through B300005760, SN E300002833 through E300006670)

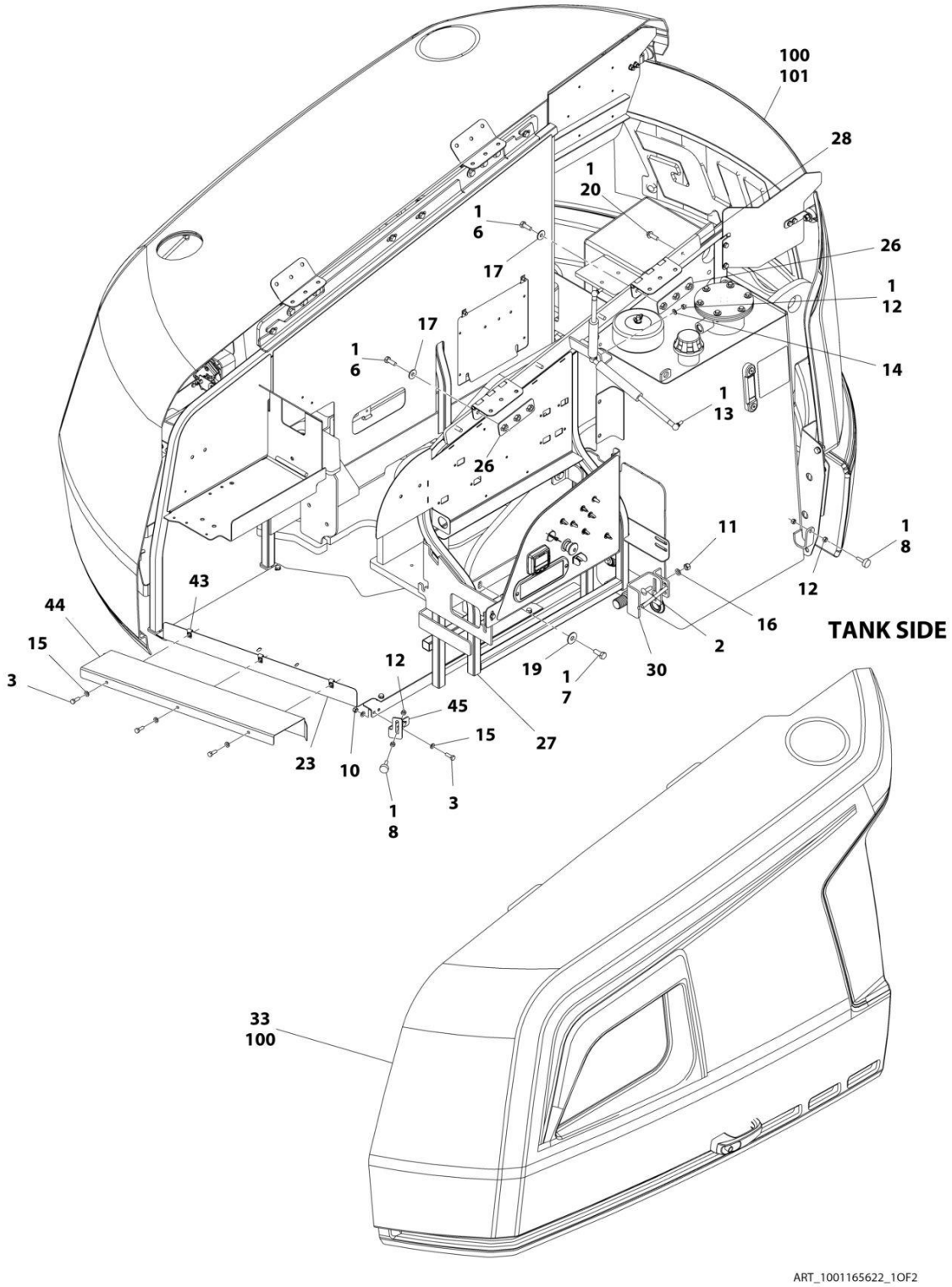

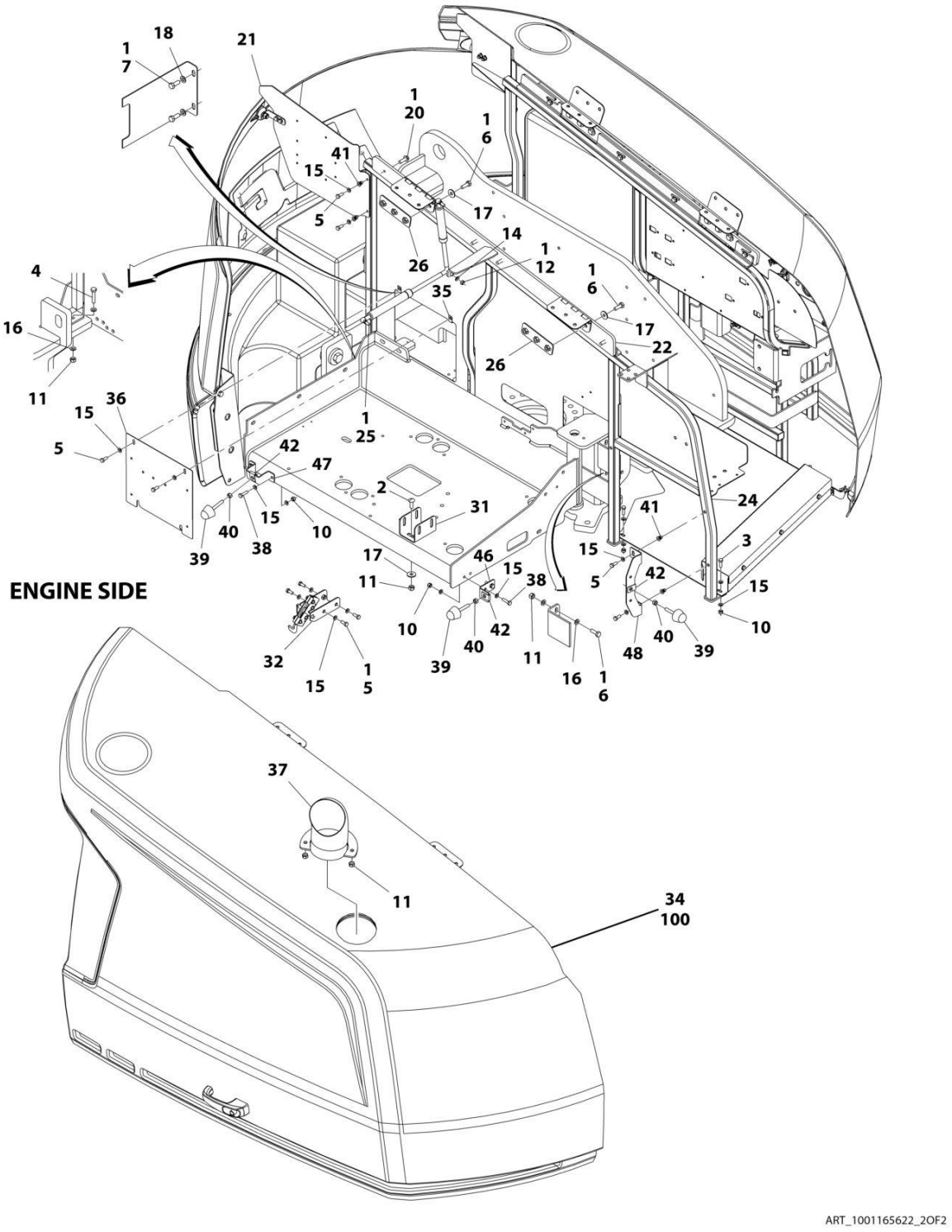
ENGINE SIDE
ART_1001165622_2OF2

FIGURE 2-33. HOODS INSTALLATION - 450AJ WITH DEUTZ/GM/KUBOTA ENGINES (SN 0300201991 through 0300272317, SN B300003516 through B300005760, SN E300002833 through E300006670)

ITEM	PART NUMBER	QTY	DESCRIPTION	REV
	1001165622	Ref	HOODS INSTALLATION – 450AJ WITH DEUTZ/GM/KUBOTA ENGINES	L
1	0100011	AR	Compound, Locking	
2	0630613	4	Bolt M10 x 30	
3	0760812	AR	Bolt M8 x 25	
4	0701018	5	Bolt M10 x 50	
5	0760810	AR	Bolt M8 x 20	
6	0761014	14	Bolt M10 x 30	
7	0761214	6	Bolt M12 x 30	
8	0940049	2	Bumper	
10	3290805	10	Nut M8	
11	3291005	14	Nut M10	
12	3311501	6	Nut 5/16	
13	1001182169	1	Spring, Gas	
14	4711500	2	Washer 5/16	
15	4811900	33	Washer M8	
16	4812000	16	Washer M10	
17	4812002	14	Washer M10	
18	4812100	2	Washer M12	
19	4812102	4	Washer M12	
20	5251014	8	Bolt M10 x 30	
21	1001167153	NLA	Panel, Filler (Use p/n 1001211717) **(SN 0300201991 through 0300205472)**	
21	1001200086	NLA	Panel, Filler (Use p/n 1001211717) **(SN 0300205473 through 0300223528, SN E300002833 through E300003753)**	
21	1001211717	1	Panel, Filler **(SN 0300223529 through 0300272317, SN 1300007279 through 1300007373, SN B300003516 through B300005760, SN E300003754 through E300006670, Except SN 0300272185 through 0300272190, Excluding B300005569)**	
22	1001167159	1	Mount	
23	1001167163	1	Tray	
24	1001167169	1	Mount	
25	4160182	1	Spring, Gas	
26	1001169046	4	Nut	
27	1001170001	NLA	Support, Hood (Use p/n 1001211716) **(SN 0300201991 through 0300223528, SN E300002833 through E300003753)**	
27	1001211716	1	Support, Hood **(SN 0300223529 through 0300272317, SN 1300007279 through 1300007373, SN B300003516 through B300005760, SN E300003754 through E300006670, Except SN 0300272185 through 0300272190, Excluding B300005569)**	
28	1001170018	1	Mount	
30	1001170022	1	Mount	
31	1001170859	1	Mount	
32	1001170860	NLA	Support (Use p/n 1001223777) **(SN 0300201991 through 0300226828, SN E300002833 through E300001783)**	
32	1001223777	1	Support **(SN 0300226829 through 0300272317, SN 1300007279 through 1300007373, SN B300003516 through B300005760, SN E300001784 through E300006670, Except SN 0300272185 through 0300272190, Excluding B300005569)**	
33	1001172282	1	Hood Assembly - Tank Side (See HOOD ASSEMBLY - TANK SIDE for Breakdown)	
34	1001172833	1	Hood Assembly - Engine Side (See HOOD ASSEMBLY - ENGINE	

ITEM	PART NUMBER	QTY	DESCRIPTION	REV
			SIDE for Breakdown)	
35	8310686	2	Nut, Retainer M8	
36	1001167149	1	Panel, Filler	
37	1001174098	1	Pipe, Exhaust **(SN 0300201991 through 0300249129, SN 1300007279 through 1300007373, SN E300002833 through E300006195)**	
37	1001233899	1	Pipe, Exhaust **(SN 0300249130 through 0300272317, SN B300003516 through B300005760, SN E300006196 through E300006670, Except SN 0300272185 through 0300272190, Excluding B300005569)**	
38	0760814	4	Bolt M8 x 30	
39	0940071	3	Bumper	
40	3311601	3	Nut 3/8	
41	1001191832	4	Rivnut M8	
42	88662523	3	Nut, Tinnerman	
43	1001118274	3	Nut M8	
44	1001171216	1	Cover	
45	1001179904	1	Mount	
46	1001182875	1	Mount	
47	1001182877	1	Mount	
48	1001182879	1	Mount	
49	1701691	2	Decal - No Step	
100	1001202451	1	Hood Kit (Includes Items 33, 34 & 101) **(SN 0300207381 through 0300272317, SN 1300007279 through 1300007373, SN B300003516 through B300005760, SN E300002834 through E300006670, Except SN 0300272185 through 0300272190, Excluding B300005569)**	
101	1001169183	1	Hood, Front **(SN 0300207381 through 0300272317, SN 1300007279 through 1300007373, SN B300003516 through B300005760, SN E300002834 through E300006670, Except SN 0300272185 through 0300272190, Excluding B300005569)**	

FIGURE 2-34. HOODS INSTALLATION - 450AJ WITH DEUTZ ENGINE (SN E300006671 through E300007990)

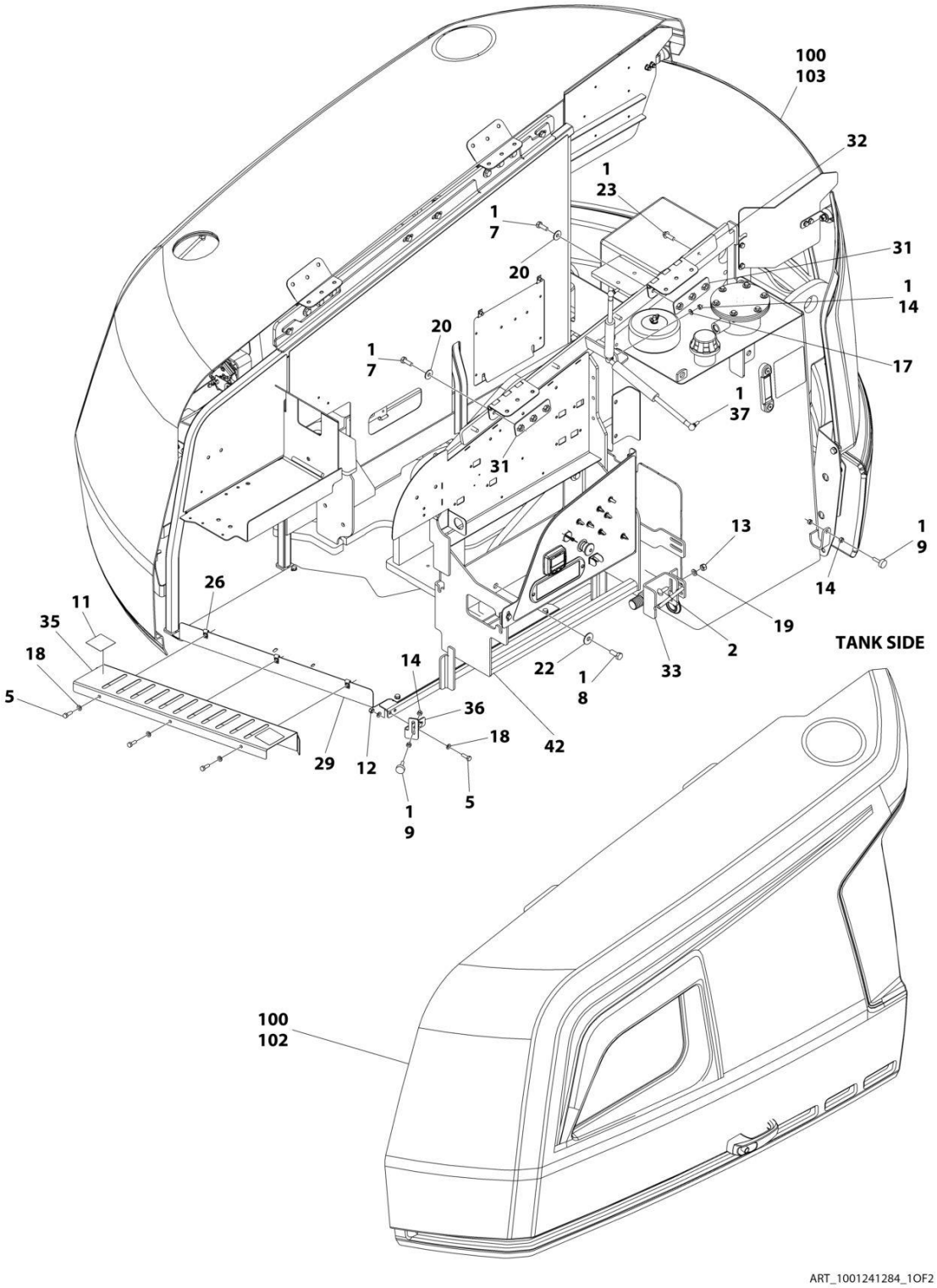

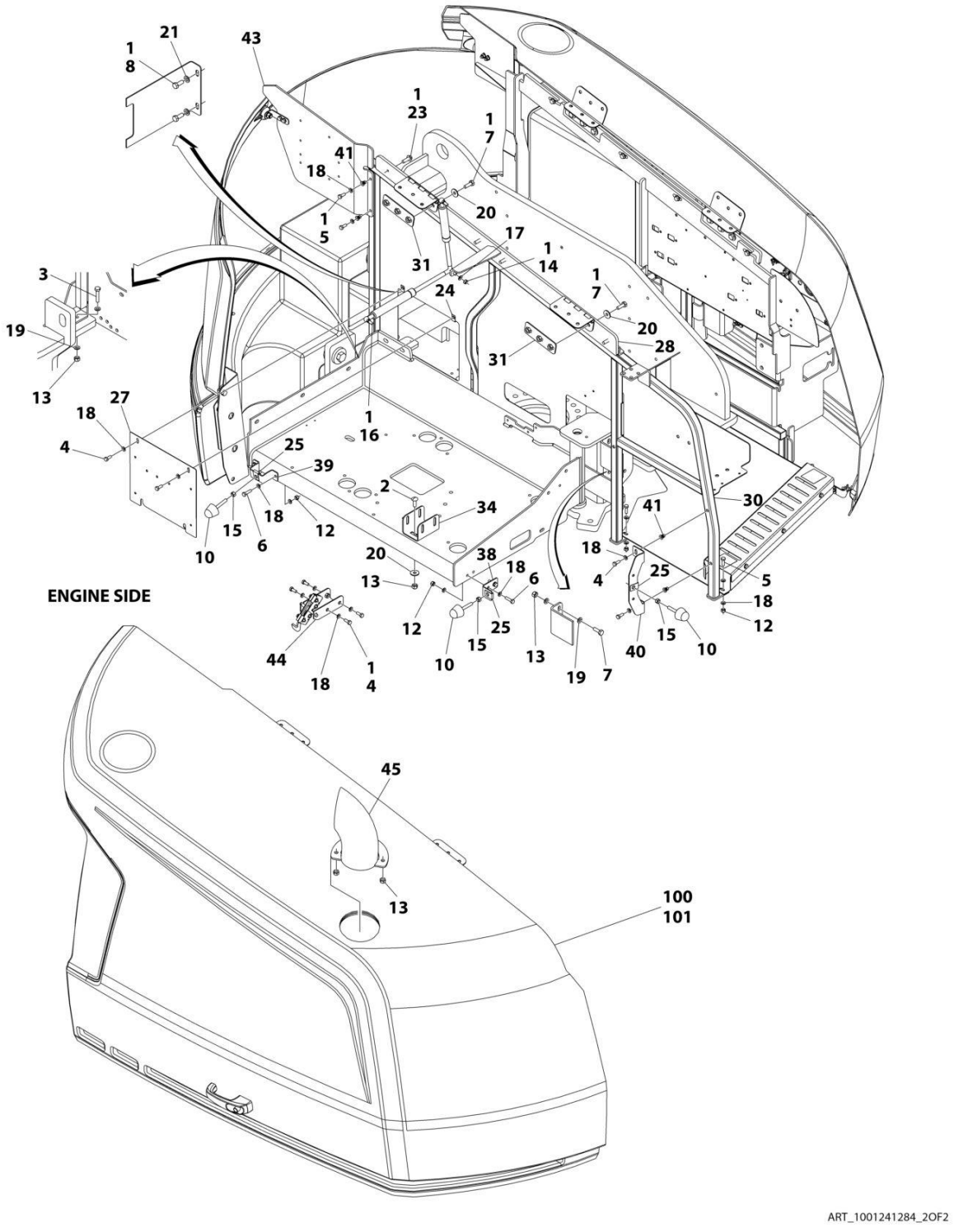
ENGINE SIDE
ART_1001241284_2OF2

FIGURE 2-34. HOODS INSTALLATION - 450AJ WITH DEUTZ ENGINE (SN E300006671 through E300007990)

ITEM	PART NUMBER	QTY	DESCRIPTION	REV
	1001241284	Ref	HOODS INSTALLATION	A
1	0100011	AR	Compound, Locking	
2	0630613	4	Bolt M10 x 30	
3	0701018	5	Bolt M10 x 50	
4	0760810	8	Bolt M8 x 20	
5	0760812	11	Bolt M8 x 25	
6	0760814	4	Bolt M8 x 30	
7	0761014	14	Bolt M10 x 30	
8	0761214	6	Bolt M12 x 30	
9	0940049	2	Bumper	
10	0940071	3	Bumper	
11	1701691	2	Decal - No Step	
12	3290805	10	Nut M8	
13	3291005	14	Nut M10	
14	3311501	6	Nut 5/16	
15	3311601	3	Nut 3/8	
16	4160182	1	Spring, Gas	
17	4711500	2	Washer 5/16	
18	4811900	33	Washer M8	
19	4812000	16	Washer M10	
20	4812002	14	Washer M10	
21	4812100	2	Washer M12	
22	4812102	4	Washer M12	
23	5251014	8	Bolt M10 x 30	
24	8310686	2	Nut, Retainer M8	
25	88662523	3	Nut, Tinnerman	
26	1001118274	3	Nut M8	
27	1001167149	1	Panel, Filler	
28	1001167159	1	Mount	
29	1001167163	1	Tray	
30	1001167169	1	Mount	
31	1001169046	4	Nut	
32	1001170018	1	Mount	
33	1001170022	1	Mount	
34	1001170859	1	Mount	
35	1001171216	1	Cover	
36	1001179904	1	Mount	
37	1001182169	1	Spring, Gas	
38	1001182875	1	Mount	
39	1001182877	1	Mount	
40	1001182879	1	Mount	
41	1001191832	4	Rivnut M8	
42	1001211716	1	Support, Hood	
43	1001211717	1	Panel, Filler	
44	1001223777	1	Support	
45	1001233899	1	Pipe, Exhaust	
100	1001241289	Ref	Hood Kit (Includes Items 101-103)	
101	1001241295	1	Hood Assembly - Engine Side (See Separate Breakdown in this Section)	

ITEM	PART NUMBER	QTY	DESCRIPTION	REV
102	1001241296	1	Hood Assembly - Tank Side (See Separate Breakdown in this Section)	
103	1001241299	1	Hood Assembly - Front	

FIGURE 2-35. HOODS INSTALLATION - 450A WITH KUBOTA ENGINE

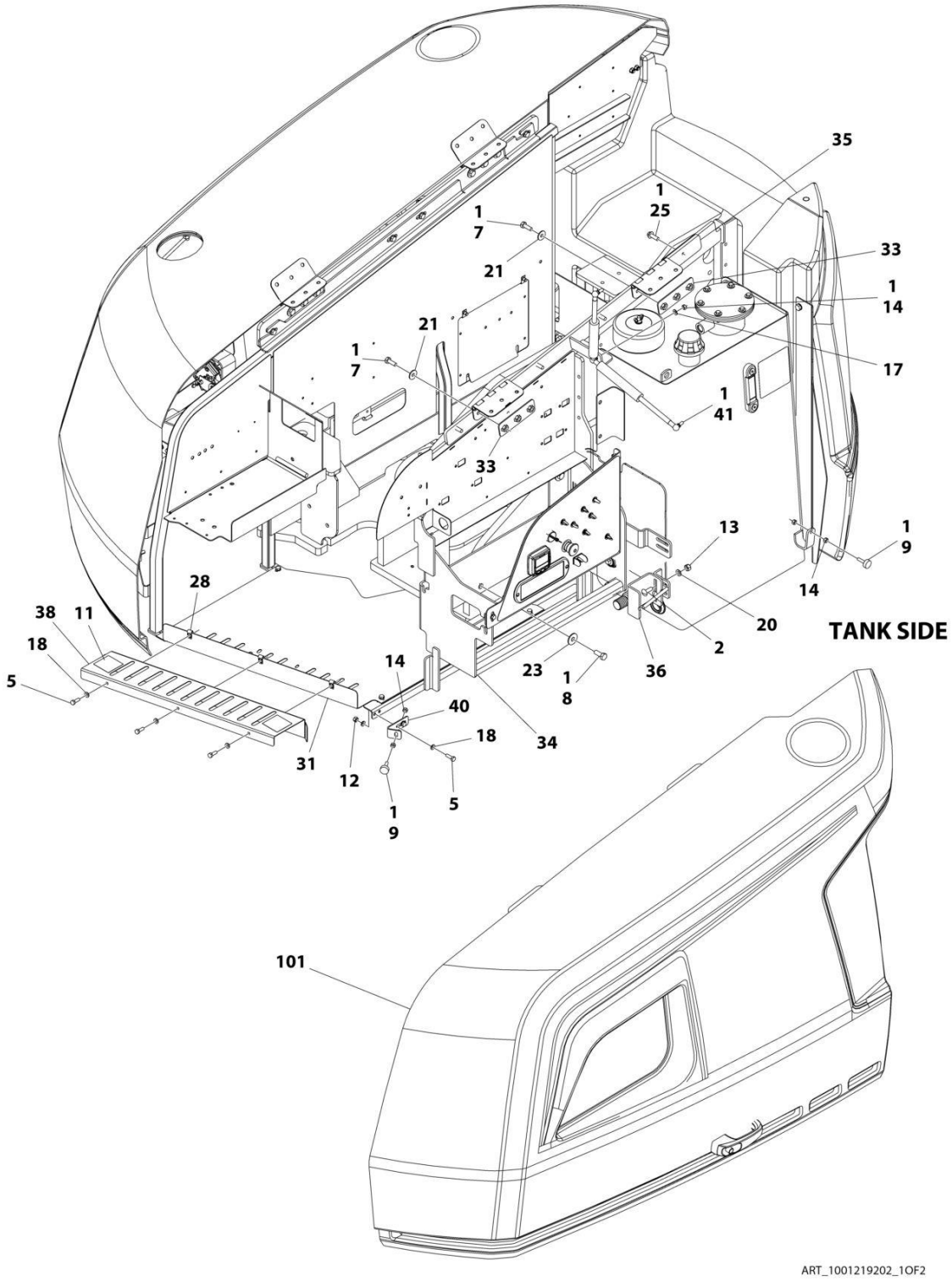

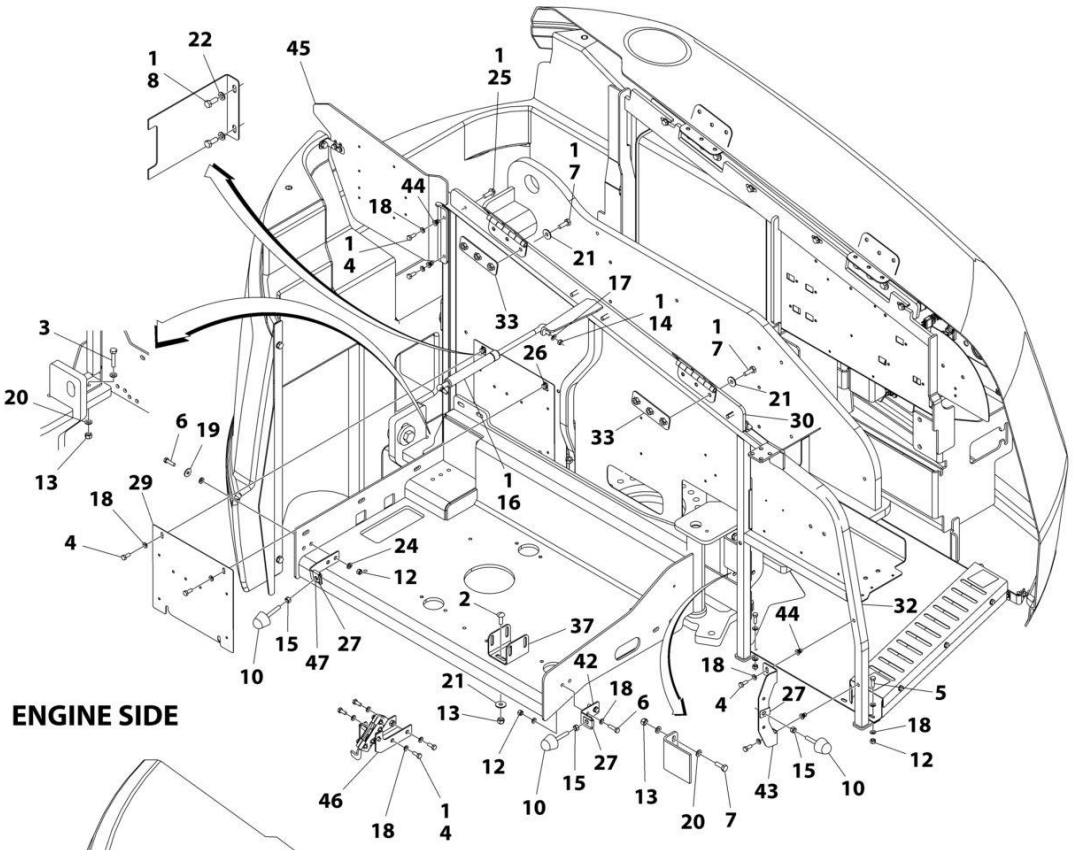

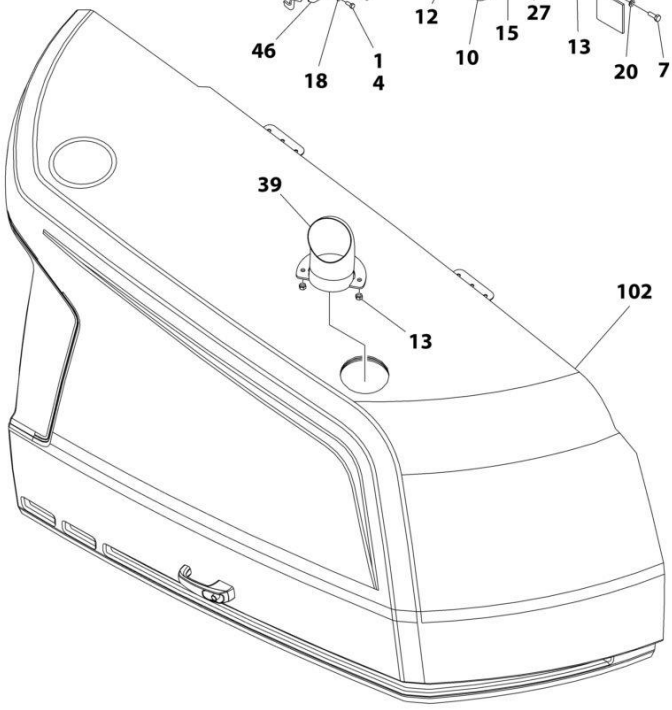

ART_1001219202_2OF2

FIGURE 2-35. HOODS INSTALLATION - 450A WITH KUBOTA ENGINE

ITEM	PART NUMBER	QTY	DESCRIPTION	REV
	1001219202	Ref	HOODS INSTALLATION – 450A WITH KUBOTA ENGINE	B
1	0100011	AR	Compound, Locking	
2	0630613	4	Bolt M10 x 30	
3	0701018	5	Bolt M10 x 50	
4	0760810	10	Bolt M8 x 20	
5	0760812	AR	Bolt M8 x 25	
6	0760814	AR	Bolt M8 x 30	
7	0761014	14	Bolt M10 x 30	
8	0761214	6	Bolt M12 x 30	
9	0940049	2	Bumper	
10	0940071	3	Bumper	
11	1701691	2	Decal - No Step	
12	3290805	10	Nut M8	
13	3291005	14	Nut M10	
14	3311501	6	Nut 5/16	
15	3311601	3	Nut 3/8	
16	4160182	1	Spring, Gas	
17	4711500	2	Washer 5/16	
18	4811900	29	Washer M8	
19	4811902	2	Washer M8	
20	4812000	16	Washer M10	
21	4812002	14	Washer M10	
22	4812100	2	Washer M12	
23	4812102	4	Washer M12	
24	5240800	4	Washer M8	
25	5251014	8	Bolt M10 x 30	
26	8310686	2	Nut, Retainer M8	
27	88662523	3	Nut, Tinnerman	
28	1001118274	3	Nut M8	
29	1001167149	1	Panel, Filler	
30	1001167159	1	Mount	
31	1001167163	1	Tray	
32	1001167169	1	Mount	
33	1001169046	4	Nut	
34	1001170001	1	Support, Hood **(SN 0300222766 through 0300225644)**	
34	1001211716	1	Support, Hood **(SN 0300225645 through 0300272317, Except SN 0300272185 through 0300272190)**	
35	1001170018	1	Mount	
36	1001170022	1	Mount	
37	1001170859	1	Mount	
38	1001171216	1	Cover	
39	1001174098	1	Pipe, Exhaust	
40	1001179904	1	Mount	
41	1001182169	1	Spring, Gas	
42	1001182875	1	Mount	
43	1001182879	1	Mount	
44	1001191832	4	Rivnut M8	
45	1001200086	1	Support **(SN 0300222766 through 0300225644)**	
45	1001211717	1	Support **(SN 0300225645 through 0300272317, Except SN 0300272185 through 0300272190)**	

ITEM	PART NUMBER	QTY	DESCRIPTION	REV
46	1001215394	1	Support	
47	1001216677	1	Bracket	
100	1001219203	1	Hood Kit (Includes Items 101-102)	
101	1001172282	1	Hood Assembly - Tank Side (See HOOD ASSEMBLY - TANK SIDE for Breakdown)	
102	1001172833	1	Hood Assembly - Engine Side (See HOOD ASSEMBLY - ENGINE SIDE for Breakdown)	

FIGURE 2-36. HOODS INSTALLATION - 450AJ WITH KUBOTA ENGINE

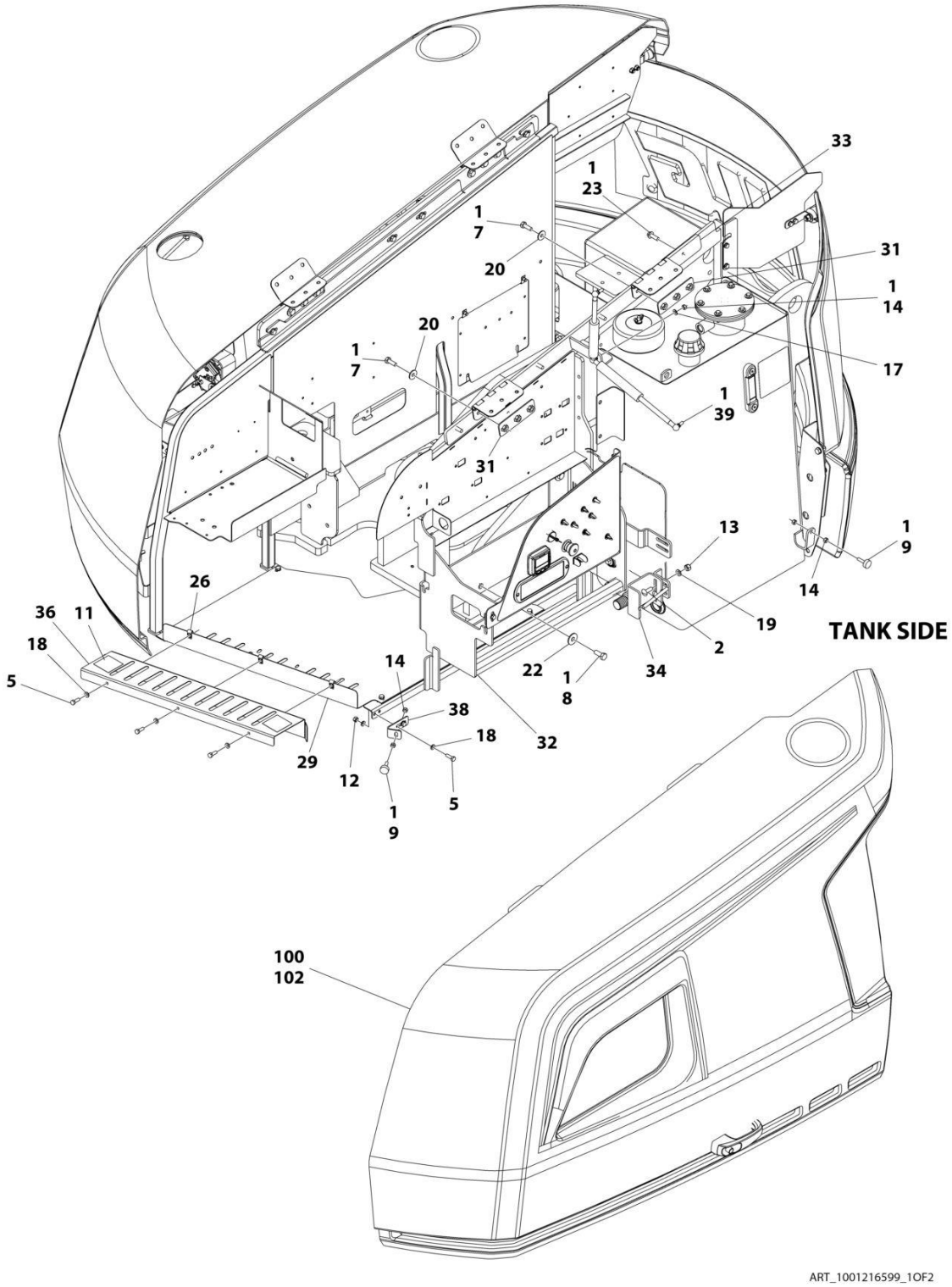

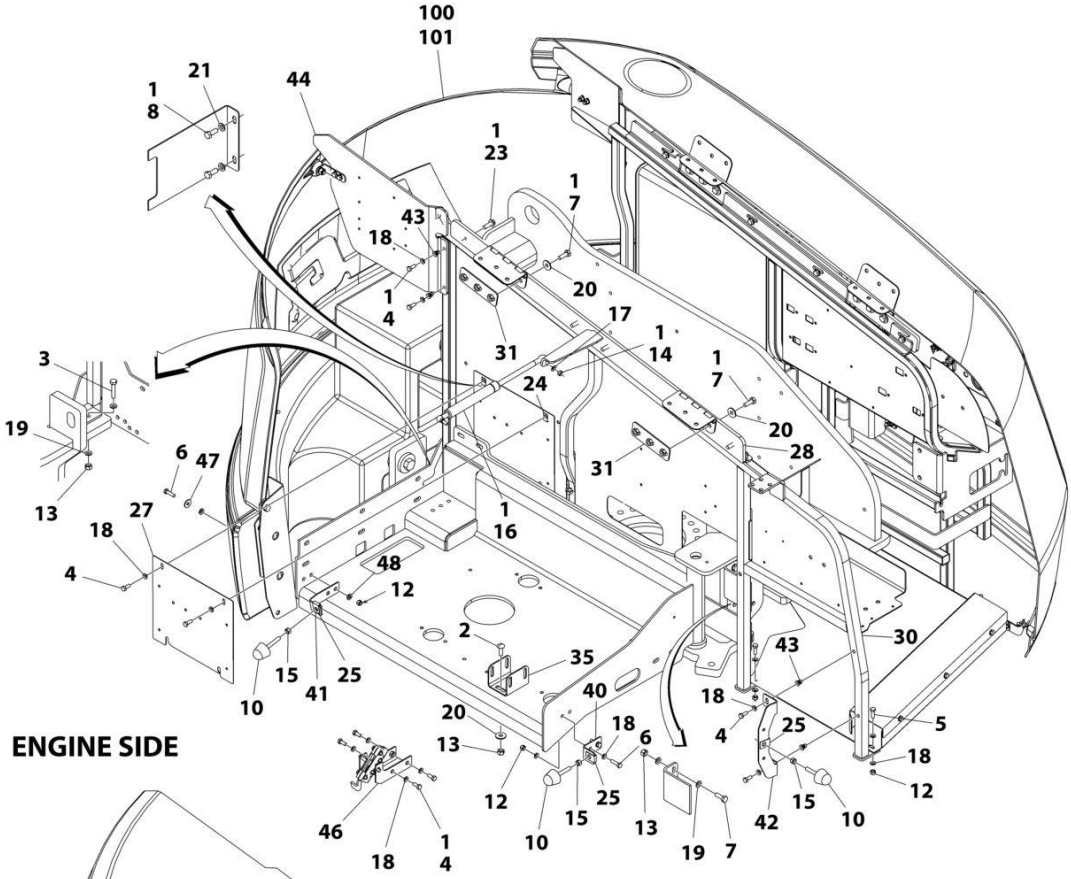

ENGINE SIDE

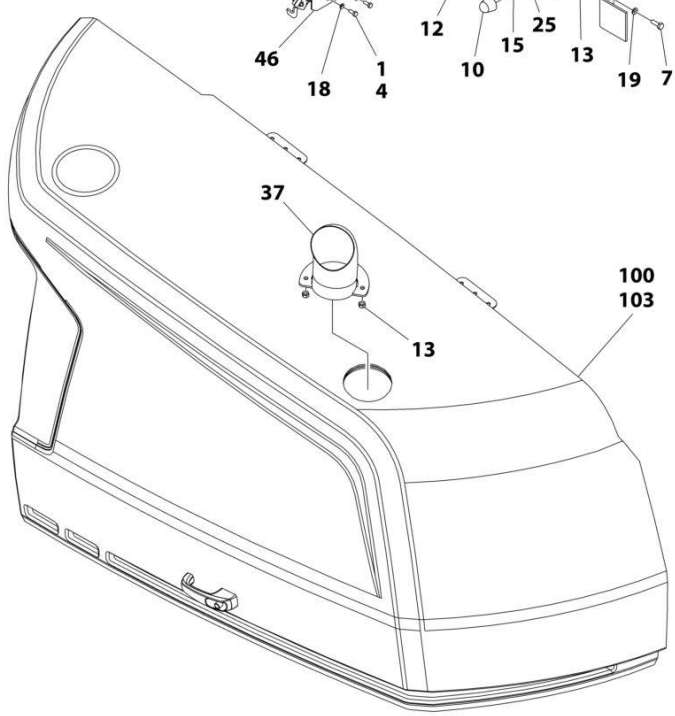

ART_1001216599_2OF2

FIGURE 2-36. HOODS INSTALLATION - 450AJ WITH KUBOTA ENGINE

ITEM	PART NUMBER	QTY	DESCRIPTION	REV
	1001216599	Ref	HOODS INSTALLATION – KUBOTA ENGINE - 450AJ WITH KUBOTA ENGINE	C
1	0100011	AR	Compound, Locking	
2	0630613	4	Bolt M10 x 30	
3	0701018	5	Bolt M10 x 50	
4	0760810	AR	Bolt M8 x 20	
5	0760812	AR	Bolt M8 x 25	
6	0760814	4	Bolt M8 x 30	
7	0761014	14	Bolt M10 x 30	
8	0761214	6	Bolt M12 x 30	
9	0940049	2	Bumper	
10	0940071	6	Bumper	
11	1701691	2	Decal - No Step	
12	3290805	10	Nut M8	
13	3291005	14	Nut M10	
14	3311501	6	Nut 5/16	
15	3311601	3	Nut 3/8	
16	4160182	1	Spring, Gas	
17	4711500	2	Washer 5/16	
18	4811900	29	Washer M8	
19	4812000	19	Washer M10	
20	4812002	14	Washer M10	
21	4812100	2	Washer M12	
22	4812102	4	Washer M12	
23	5251014	8	Bolt M10 x 30	
24	8310686	2	Nut, Retainer M8	
25	88662523	3	Nut, Tinnerman	
26	1001118274	3	Nut M8	
27	1001167149	1	Panel, Filler	
28	1001167159	1	Mount	
29	1001167163	1	Tray	
30	1001167169	1	Mount	
31	1001169046	4	Nut	
32	1001170001	NLA	Support, Hood (Note: Use p/n 1001211716) **(SN 0300201991 through 0300223528)**	
32	1001211716	1	Support, Hood **(SN 0300223529 through 0300272317, Except SN 0300272185 through 0300272190)**	
33	1001170018	1	Mount	
34	1001170022	1	Mount	
35	1001170859	1	Mount	
36	1001171216	1	Cover	
37	1001174098	1	Pipe, Exhaust	
38	1001179904	1	Mount	
39	1001182169	1	Spring, Gas	
40	1001182875	1	Mount	
41	1001216677	1	Bracket	
42	1001182879	1	Mount	
43	1001191832	4	Rivnut M8	
44	1001200086	NLA	Support (Note: Use p/n 1001211717) **(SN 0300201991 through 0300223528)**	

ITEM	PART NUMBER	QTY	DESCRIPTION	REV
44	1001211717	1	Support **(SN 0300223529 through 0300272317, Except SN 0300272185 through 0300272190)**	
46	1001215394	1	Support	
47	4811702	2	Washer M6	
48	5240800	4	Washer M8	
100	1001202451	1	Hood Kit (Includes Items 101-103)	
101	1001169183	1	Hood, Front	
102	1001172282	1	Hood Assembly - Tank Side (See HOOD ASSEMBLY - TANK SIDE for Breakdown)	
103	1001172833	1	Hood Assembly - Engine Side (See HOOD ASSEMBLY - ENGINE SIDE for Breakdown)	

FIGURE 2-37. HOOD ASSEMBLY - TANK SIDE (SN 0300201991 through 0300272317, SN B300003516 through B300005760, SN E300002833 through E300006670)

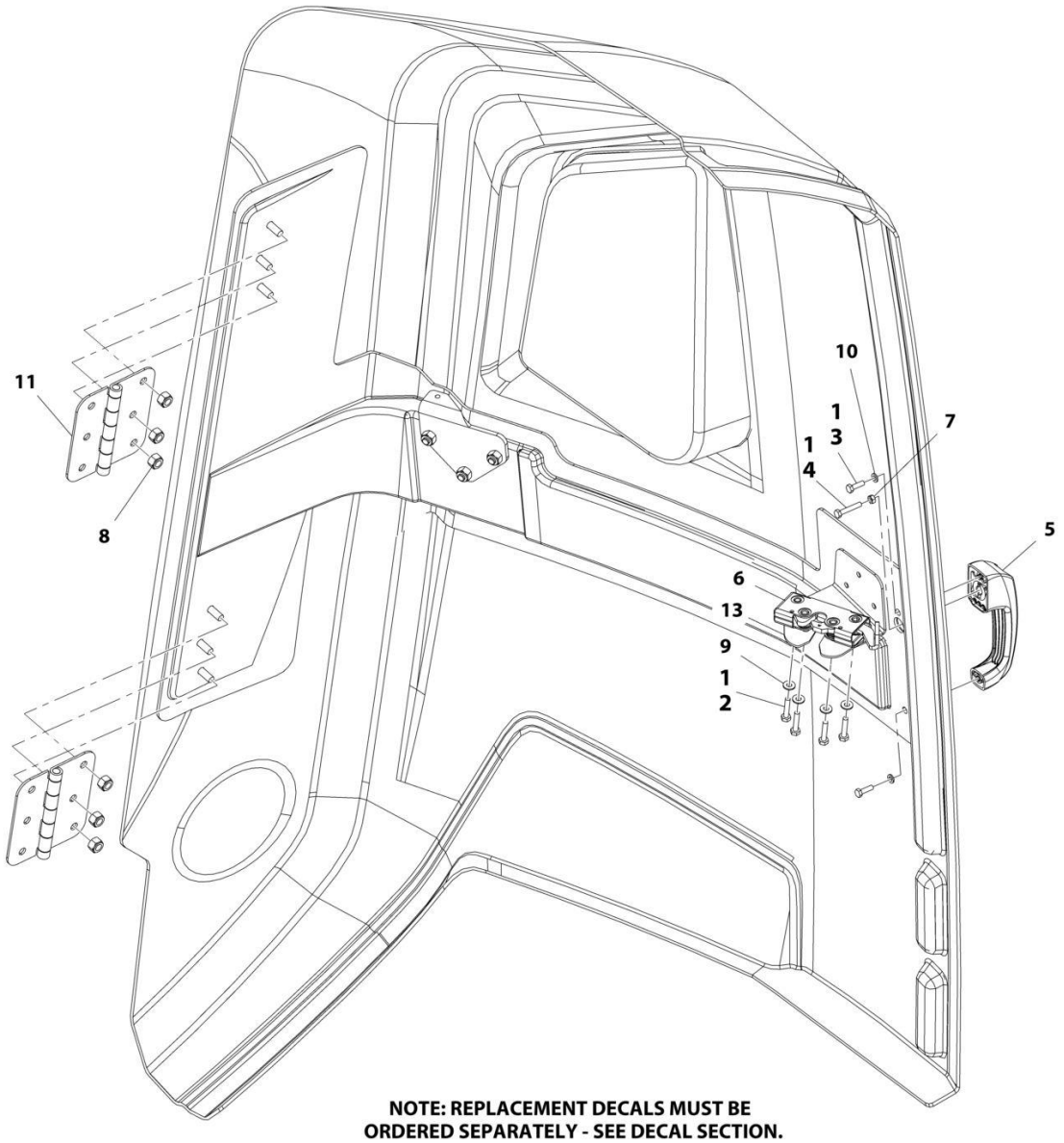

FIGURE 2-37. HOOD ASSEMBLY - TANK SIDE (SN 0300201991 through 0300272317, SN B300003516 through B300005760, SN E300002833 through E300006670)

ITEM	PART NUMBER	QTY	DESCRIPTION	REV
	1001172282	Ref	HOOD ASSEMBLY - TANK SIDE	C
1	0100011	AR	Compound, Locking	
2	0641410	4	Bolt 1/4 x 1-1/4	
3	0760610	2	Bolt M6 x 20	
4	0760615	1	Bolt M6 x 35	
5	2560187	1	Handle	
6	2940173	1	Latch	
7	3290601	1	Nut M6	
8	3291005	6	Nut M10	
9	4711400	4	Washer 1/4	
10	4811700	2	Washer M6	
11	1001139384	2	Hinge	
13	1001200458	1	Plate, Latch Guide	

FIGURE 2-38. HOOD ASSEMBLY - TANK SIDE (SN E300006671 through E300007990)

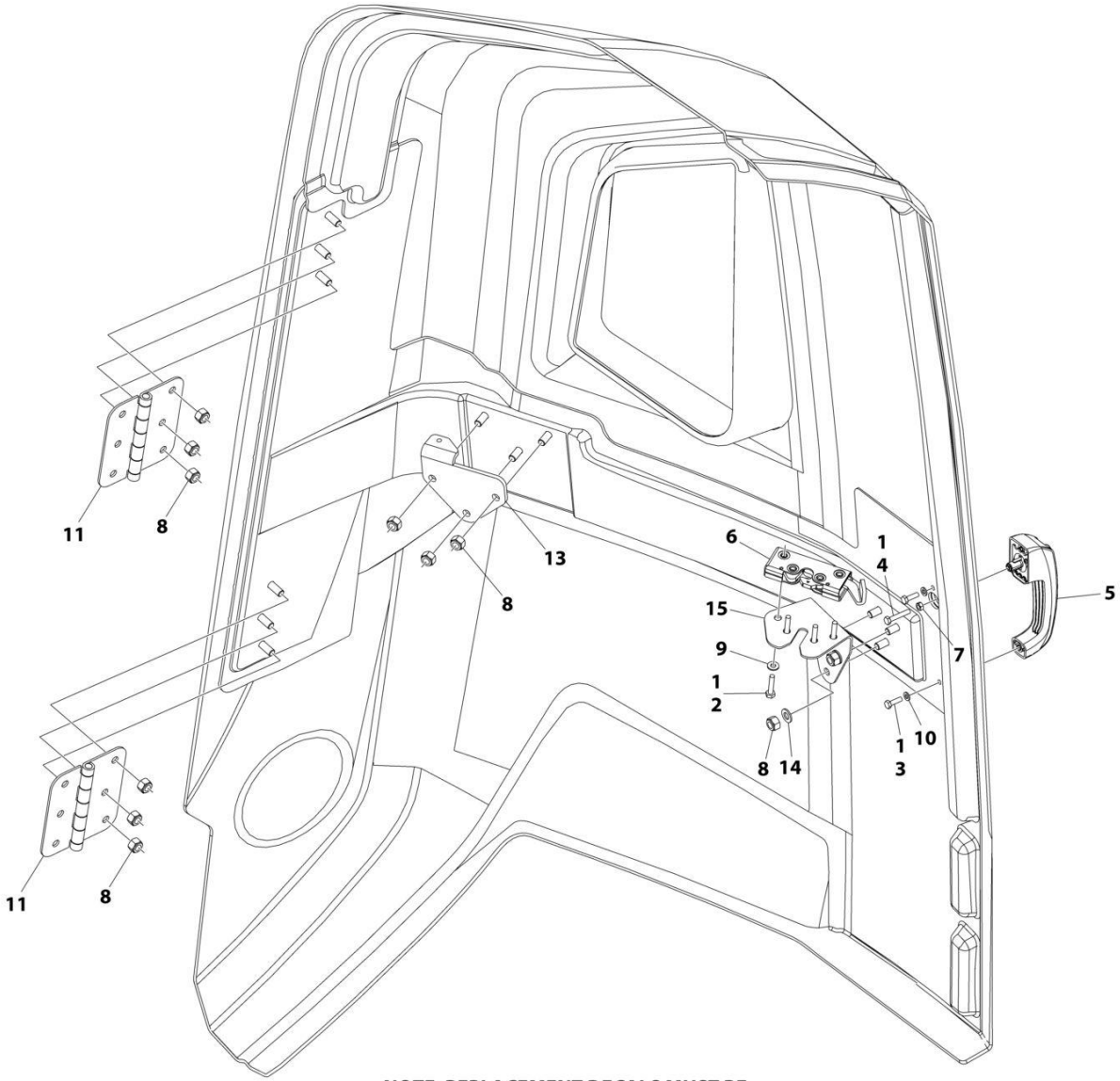

FIGURE 2-38. HOOD ASSEMBLY - TANK SIDE (SN E300006671 through E300007990)

ITEM	PART NUMBER	QTY	DESCRIPTION	REV
	1001241296	Ref	HOOD ASSEMBLY - TANK SIDE	A
1	0100011	AR	Compound, Locking	
2	0641410	4	Bolt 1/4 x 1-1/4	
3	0760610	2	Bolt M6 x 20	
4	0760615	1	Bolt M6 x 35	
5	2560187	1	Handle	
6	2940173	1	Latch	
7	3290601	1	Nut M6	
8	3291005	12	Nut M10	
9	4711400	4	Washer 1/4	
10	4811700	2	Washer M6	
11	1001139384	2	Hinge	
13	1001170475	1	Bracket	
14	4812000	3	Washer M10	
15	1001203322	1	Support	

FIGURE 2-39. HOOD ASSEMBLY - ENGINE SIDE (SN 0300201991 through 0300272317, SN B300003516 through B300005760, SN E300002833 through E300006670)

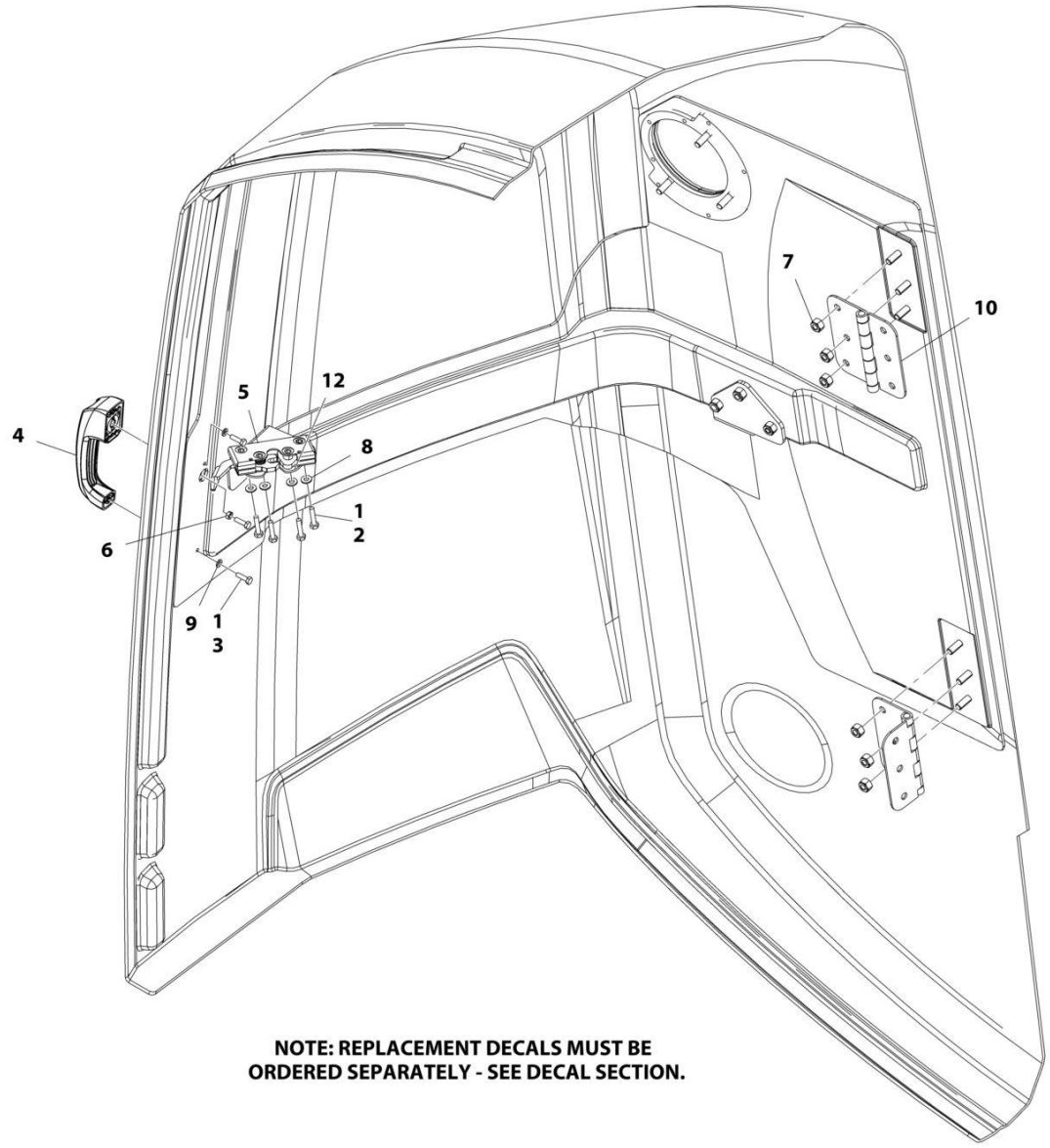

FIGURE 2-39. HOOD ASSEMBLY - ENGINE SIDE (SN 0300201991 through 0300272317, SN B300003516 through B300005760, SN E300002833 through E300006670)

ITEM	PART NUMBER	QTY	DESCRIPTION	REV
	1001172833	Ref	HOOD ASSEMBLY - ENGINE SIDE	C
1	0100011	AR	Compound, Locking	
2	0641410	4	Bolt 1/4 x 1-1/4	
3	0760610	3	Bolt M6 x 20	
4	2560187	1	Handle	
5	2940173	1	Latch	
6	3290601	1	Nut M6	
7	3291005	6	Nut M10	
8	4711400	4	Washer 1/4	
9	4811700	2	Washer M6	
10	1001139384	2	Hinge	
12	1001200458	1	Plate, Latch Guide	

FIGURE 2-40. HOOD ASSEMBLY - ENGINE SIDE (SN E30000667 through E300007990)

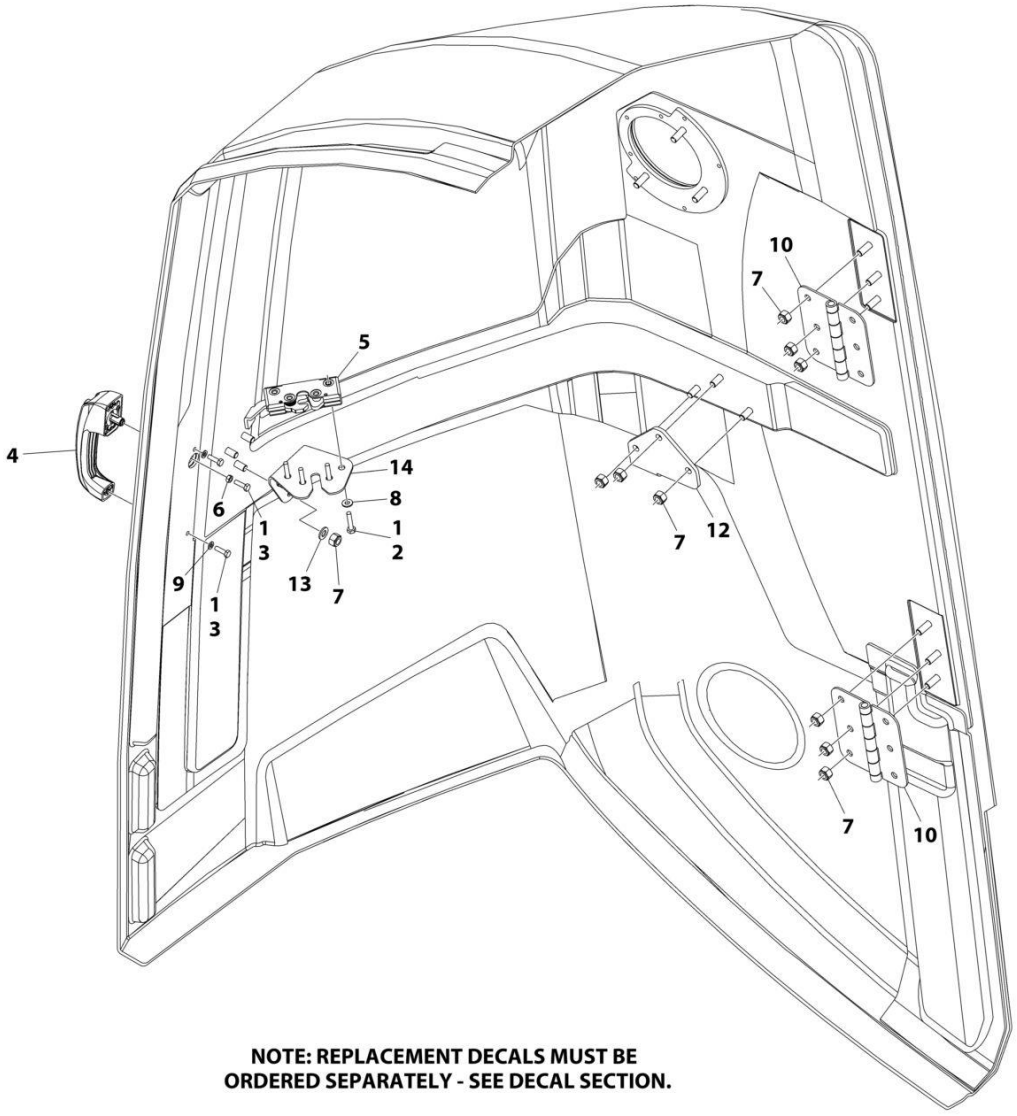

ART_1001241295

FIGURE 2-40. HOOD ASSEMBLY - ENGINE SIDE (SN E30000667 through E300007990)

ITEM	PART NUMBER	QTY	DESCRIPTION	REV
	1001241295	Ref	HOOD ASSEMBLY - ENGINE SIDE	B
1	0100011	AR	Compound, Locking	
2	0641410	4	Bolt 1/4 x 1-1/4	
3	0760610	3	Bolt M6 x 20	
4	2560187	1	Handle	
5	2940173	1	Latch	
6	3290601	1	Nut M6	
7	3291005	12	Nut M10	
8	4711400	4	Washer 1/4	
9	4811700	2	Washer M6	
10	1001139384	2	Hinge	
12	1001178228	1	Bracket	
13	4812000	3	Washer M10	
14	1001202830	1	Support	

FIGURE 2-41. COVERS INSTALLATION - COUNTERWEIGHT (450AJ) (USED ON MACHINES WITH FOAM-FILLED TIRES FOR ANSI, ANSI EXPORT, CSA AND JAPANESE SPECS)

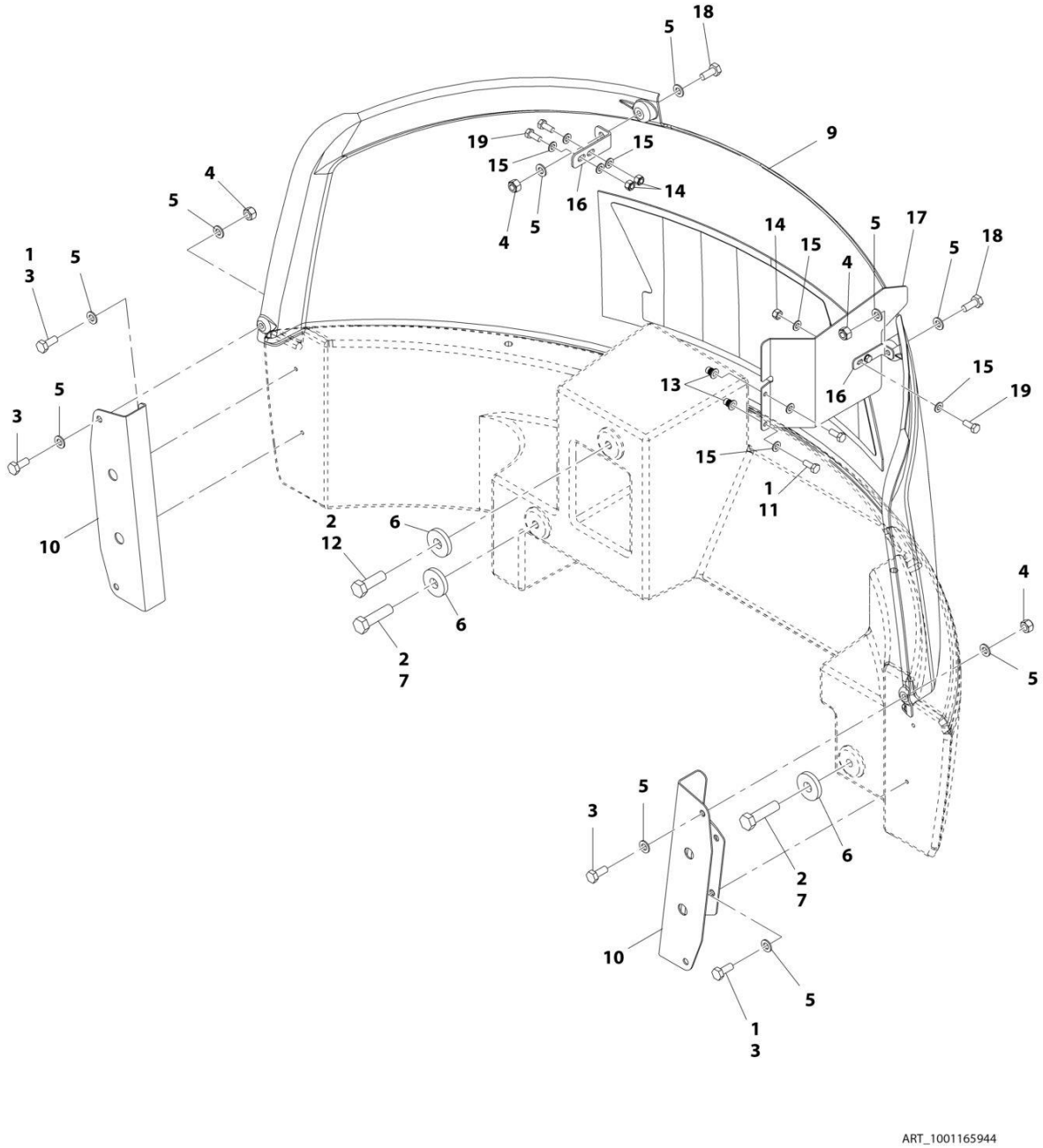

FIGURE 2-41. COVERS INSTALLATION - COUNTERWEIGHT (450AJ) (USED ON MACHINES WITH FOAM-FILLED TIRES FOR ANSI, ANSI EXPORT, CSA AND JAPANESE SPECS)

ITEM	PART NUMBER	QTY	DESCRIPTION	REV
	1001165944	Ref	COVERS INSTALLATION - COUNTERWEIGHT (450AJ) (USED ON MACHINES WITH FOAM-FILLED TIRES FOR ANSI, ANSI EXPORT, CSA AND JAPANESE SPECS)	H
1	0100011	AR	Compound, Locking	
2	0100019	AR	Compound, Locking	
3	0701012	6	Bolt M10 x 25	
4	3291005	4	Nut M10	
5	4812000	12	Washer M10	
6	1001119051	3	Washer	
7	1001119057	2	Bolt M20 x 75	
9	1001169183	1	Hood **(SN 0300201991 through 0300207381)**	
10	1001170131	2	Bracket	
11	0760810	2	Bolt M8 x 20	
11	0760812	2	Bolt M8 x 25	
11	0760815	2	Bolt M8 x 35	
12	0762020	1	Bolt M20 x 60	
13	1001191832	2	Rivnut M8	
13	3290805	2	Nut M8	
14	3290805	AR	Nut M8	
15	4811900	AR	Washer M8	
16	1001167825	2	Mount	
17	1001170025	NLA	Panel (Use p/n 1001212728) **(SN 0300201991 through 0300205472)**	
17	1001200088	NLA	Panel (Use p/n 1001212728) **(SN 0300205473 through 0300223528)**	
17	1001212728	1	Panel **(SN 0300223529 through 0300272317, SN B300003516 through B300005760, Except SN 0300272185 through 0300272190, Excluding B300005569)**	
18	0701012	AR	Bolt M10 x 25	
18	0701014	AR	Bolt M10 x 30	
19	0760810	AR	Bolt M8 x 20	
19	0760812	AR	Bolt M8 x 25	

FIGURE 2-42. COVERS INSTALLATION - COUNTERWEIGHT (450AJ) (USED ON MACHINES WITH PNEUMATIC TIRES FOR ANSI EXPORT, AUSTRALIAN, CE AND JAPANESE SPECS)

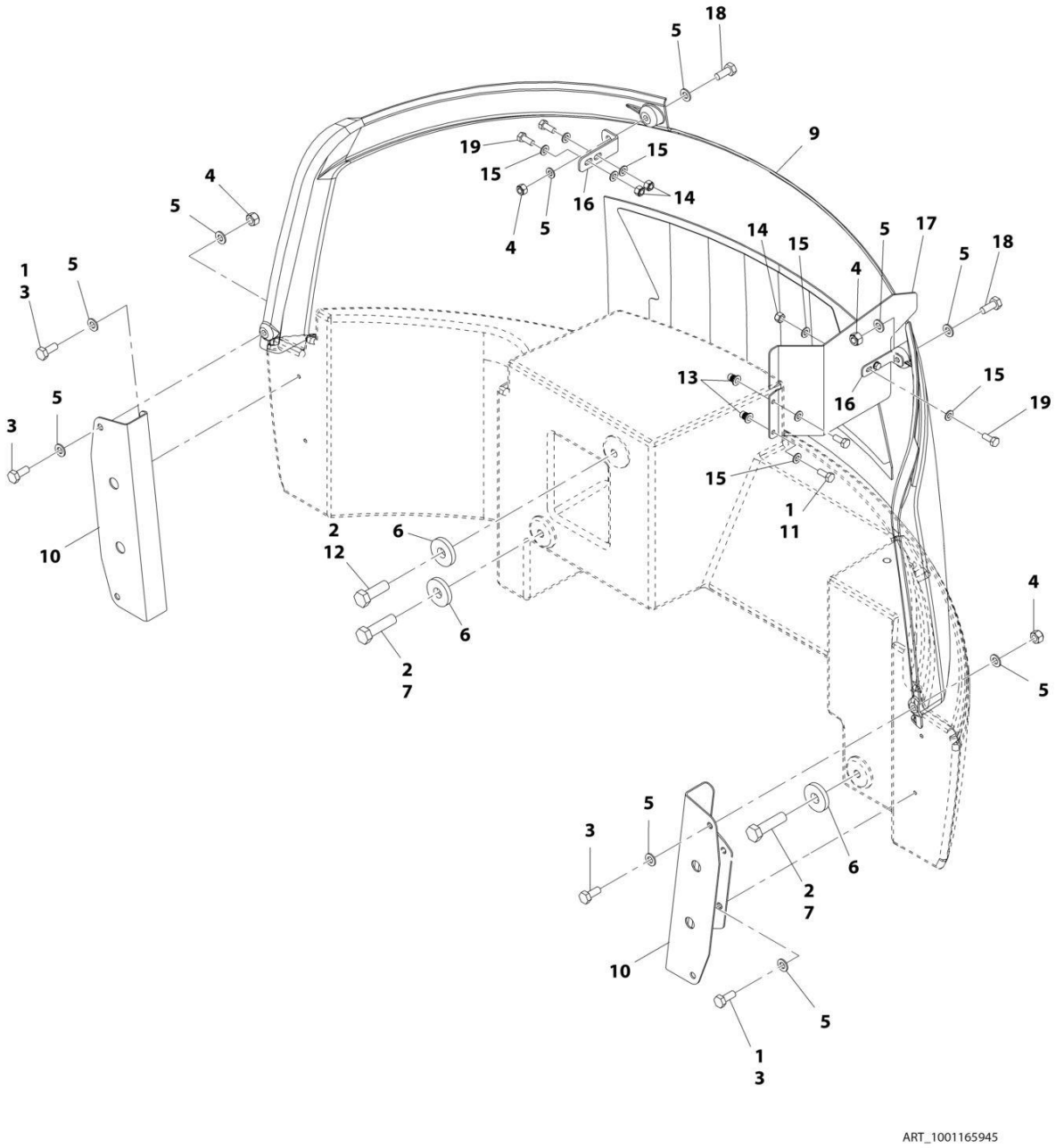

FIGURE 2-42. COVERS INSTALLATION - COUNTERWEIGHT (450AJ) (USED ON MACHINES WITH PNEUMATIC TIRES FOR ANSI EXPORT, AUSTRALIAN, CE AND JAPANESE SPECS)

ITEM	PART NUMBER	QTY	DESCRIPTION	REV
	1001165945	Ref	COVERS INSTALLATION - COUNTERWEIGHT (450AJ) (USED ON MACHINES WITH PNEUMATIC TIRES FOR ANSI EXPORT, AUSTRALIAN, CE AND JAPANESE SPECS)	H
1	0100011	AR	Compound, Locking	
2	0100019	AR	Compound, Locking	
3	0701012	6	Bolt M10 x 25	
4	3291005	4	Nut M10	
5	4812000	12	Washer M10	
6	1001119051	3	Washer	
7	1001119057	2	Bolt M20 x 75	
9	1001169183	1	Hood **(SN 0300201991 through 0300207381)**	
10	1001170131	2	Bracket	
11	0760810	2	Bolt M8 x 20	
11	0760812	2	Bolt M8 x 25	
11	0760815	2	Bolt M8 x 35	
12	0762020	1	Bolt M20 x 60	
13	1001191832	2	Rivnut M8	
13	3290805	2	Nut M8	
14	3290805	AR	Nut M8	
15	4811900	AR	Washer M8	
16	1001167825	2	Mount	
17	1001170025	NLA	Panel (Use p/n 1001212728) **(SN 0300201991 through 0300205472)**	
17	1001200088	NLA	Panel (Use p/n 1001212728) **(SN 0300205473 through 0300223528)**	
17	1001212728	1	Panel **(SN 0300223529 through 0300272317, Except SN 0300272185 through 0300272190)**	
18	0701012	AR	Bolt M10 x 25	
18	0701014	AR	Bolt M10 x 30	
19	0760810	AR	Bolt M8 x 20	
19	0760812	AR	Bolt M8 x 25	

FIGURE 2-43. COVERS INSTALLATION - COUNTERWEIGHT (450AJ) (USED ON MACHINES WITH TURF AND SAND TIRES FOR ANSI AND ANSI EXPORT SPECS)

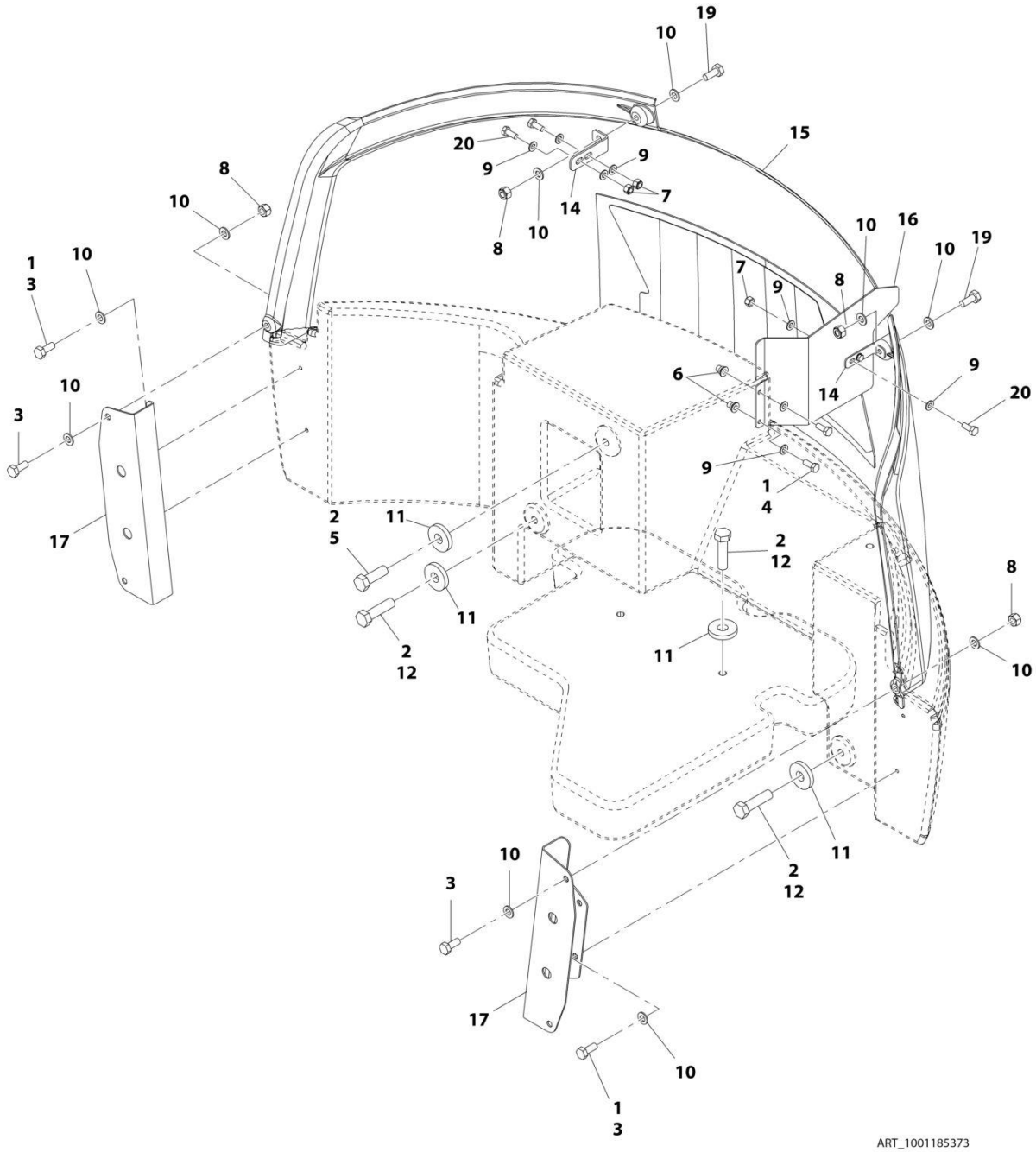

FIGURE 2-43. COVERS INSTALLATION - COUNTERWEIGHT (450AJ) (USED ON MACHINES WITH TURF AND SAND TIRES FOR ANSI AND ANSI EXPORT SPECS)

ITEM	PART NUMBER	QTY	DESCRIPTION	REV
	1001185373	Ref	COVERS INSTALLATION - COUNTERWEIGHT (450AJ) (USED ON MACHINES WITH TURF AND SAND TIRES FOR ANSI AND ANSI EXPORT SPECS)	G
1	0100011	AR	Compound, Locking	
2	0100019	AR	Compound, Locking	
3	0701012	6	Bolt M10 x 25	
4	0760810	2	Bolt M8 x 20	
4	0760812	2	Bolt M8 x 25	
4	0760815	2	Bolt M8 x 35	
5	0762020	1	Bolt M20 x 60	
6	1001191832	2	Rivnut M8	
6	3290805	2	Nut M8	
7	3290805	AR	Nut M8	
8	3291005	4	Nut M10	
9	4811900	AR	Washer M8	
10	4812000	12	Washer M10	
11	1001119051	5	Washer	
12	1001119057	4	Bolt M20 x 75	
14	1001167825	2	Mount	
15	1001169183	1	Hood **(SN 0300201991 through 0300207381)**	
16	1001170025	NLA	Panel (Use p/n 1001212728) **(SN 0300201991 through 0300205472)**	
16	1001200088	NLA	Panel (Use p/n 1001212728) **(SN 0300205473 through 0300223528)**	
16	1001212728	1	Panel **(SN 0300223529 through 0300272317, Except SN 0300272185 through 0300272190)**	
17	1001170131	2	Bracket	
19	0701012	AR	Bolt M10 x 25	
19	0701014	AR	Bolt M10 x 30	
20	0760810	AR	Bolt M8 x 20	
20	0760812	AR	Bolt M8 x 25	

SECTION 3 - ENGINE

FIGURE 3-1. ENGINE INSTALLATION - DEUTZ D2.9L4 ENGINE (WITHOUT ARCTIC PACKAGE) (ANSI, ANSI EXPORT, CSA AND JAPANESE SPECS)

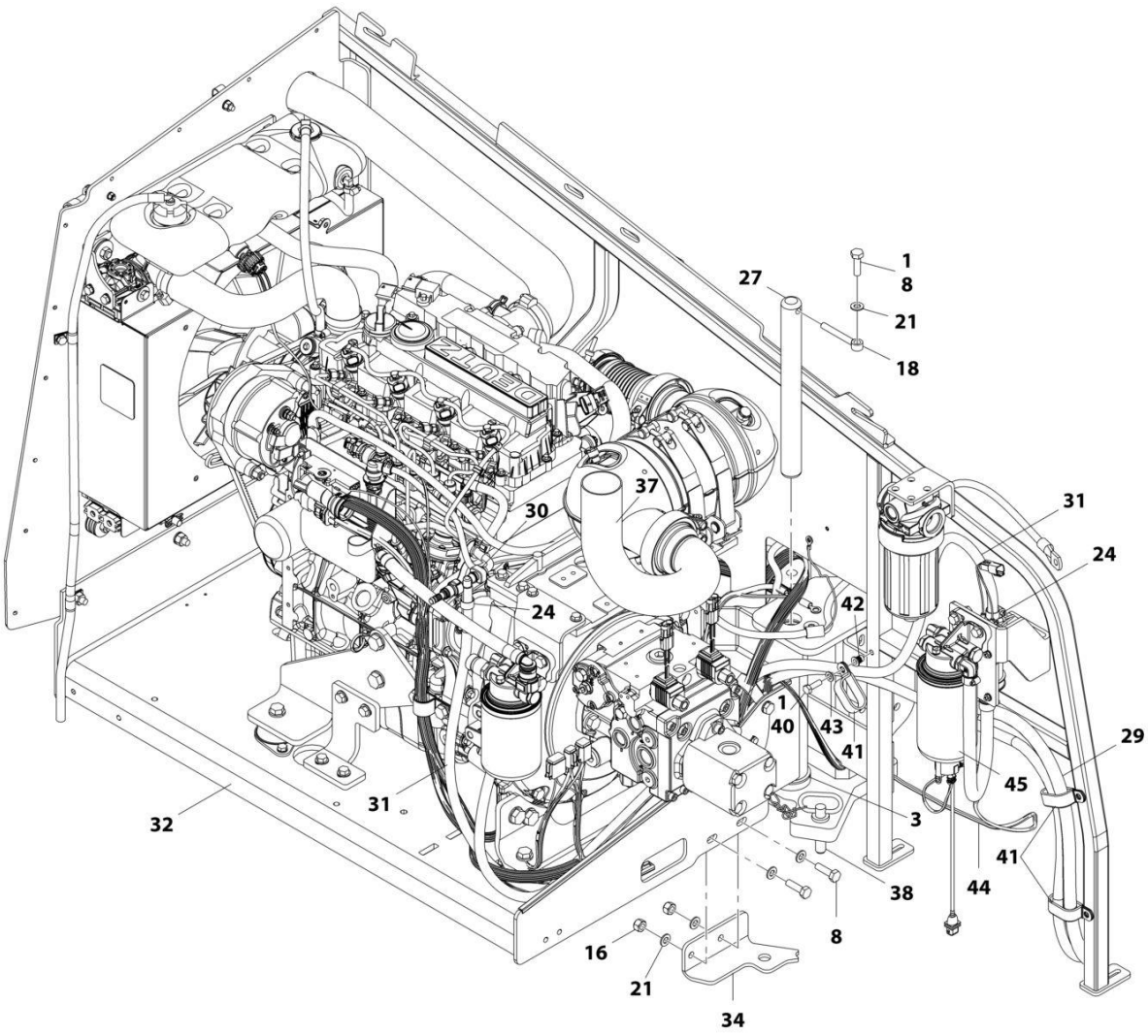

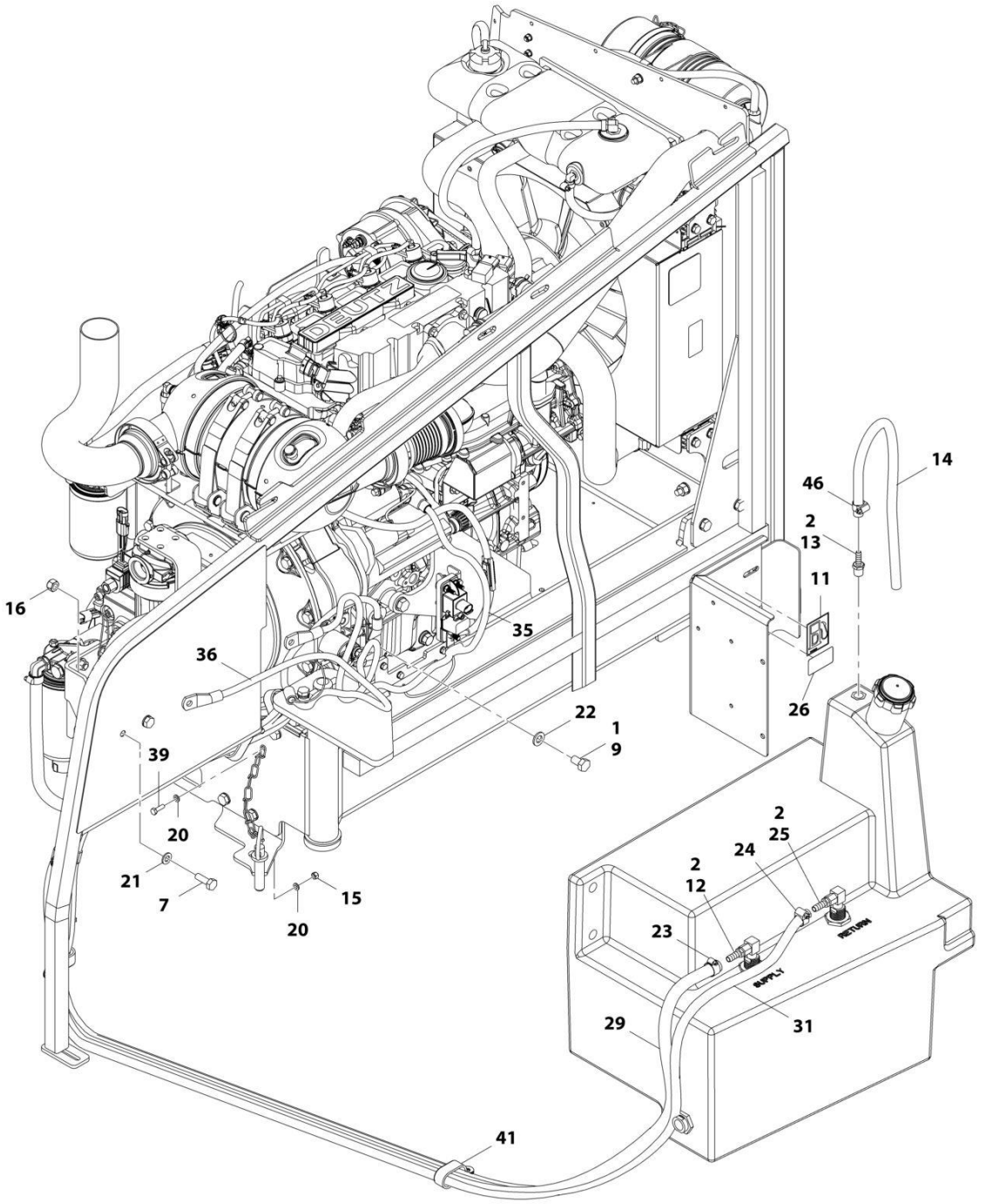

ART_1001166304_2OF3

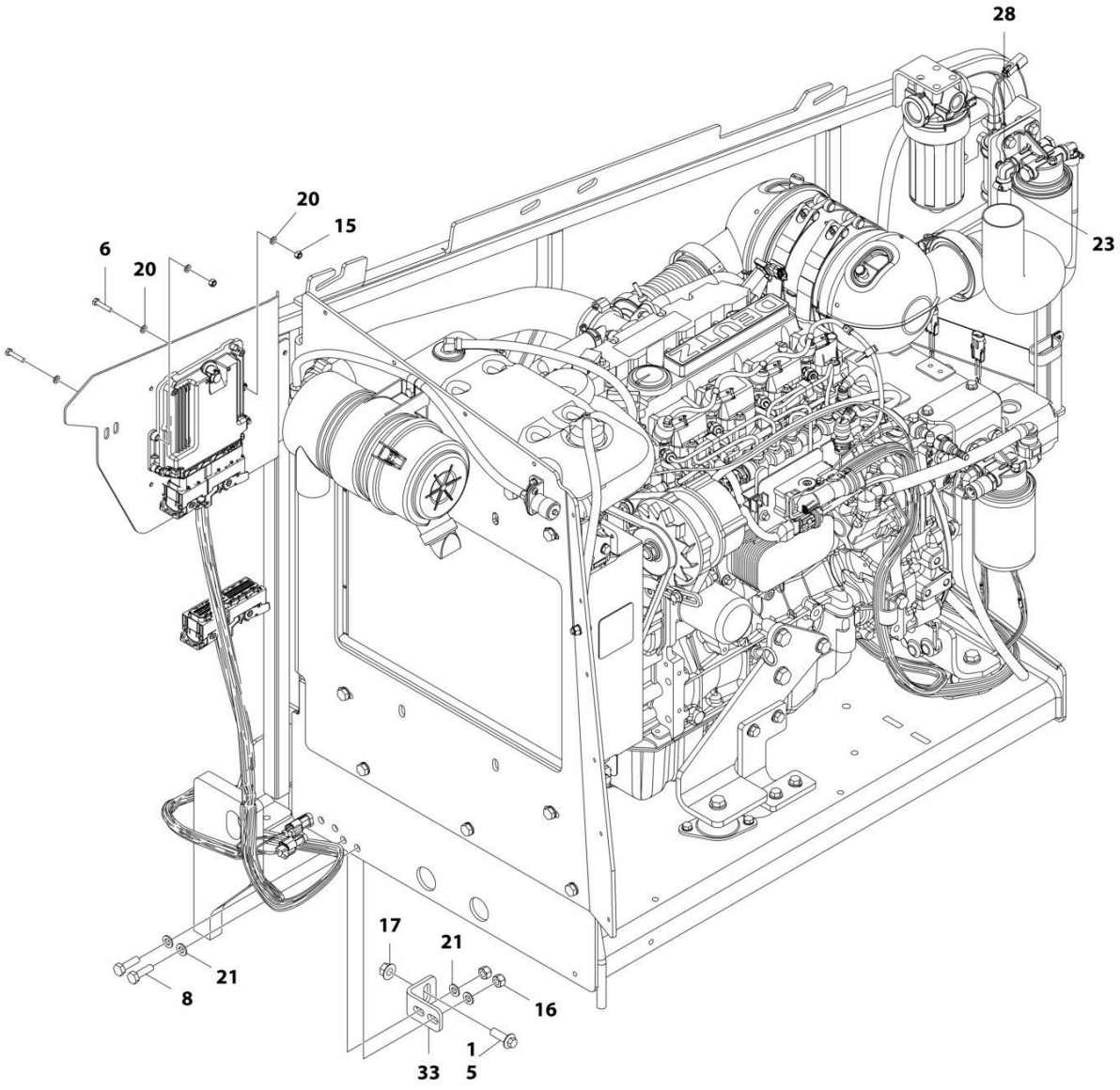
28
20
15
6
20
23
17
21
21
8
16
1
33
5
ART_1001166304_3OF3

FIGURE 3-1. ENGINE INSTALLATION - DEUTZ D2.9L4 ENGINE (WITHOUT ARCTIC PACKAGE) (ANSI, ANSI EXPORT, CSA AND JAPANESE SPECS)

ITEM	PART NUMBER	QTY	DESCRIPTION	REV
	1001166304	Ref	ENGINE INSTALLATION - DEUTZ D2.9L4 ENGINE (WITHOUT ARCTIC PACKAGE) (ANSI, ANSI EXPORT, CSA AND JAPANESE SPECS)	F
1	0100011	AR	Compound, Locking	
2	0100020	AR	Sealant, Pipe	
3	0440162	1	Bearing	
5	5251215	1	Bolt, M12 x 35mm	
6	0760614	4	Bolt, M6 x 30mm	
7	0761014	2	Bolt, M10 x 30mm	
8	0761015	5	Bolt, M10 x 35mm	
9	0761210	1	Bolt, M12 x 20mm	
11	1701505	1	Decal - Diesel Fuel	
12	2180832	1	Fitting, Barbed	
13	2180876	1	Fitting, Barbed	
14	2720058	2 ft /0.6m	Hose	
15	3290605	5	Nut, Lock M6 x 1	
16	3291005	6	Nut, Lock M10 x 1.5	
17	5261200	1	Nut, Flange M12 Grade 10.9	
18	3841143	1	Keeper, Pin	
20	4811700	10	Washer, M6	
21	4812000	11	Washer, M10	
22	4812100	1	Washer, M12	
23	8405006	2	Clamp	
24	8410013	4	Clamp	
25	8430007	1	Coupling	
26	1001125387	1	Decal - Ultra Low Sulfur Diesel	
27	1001135196	1	Pin	
28	1001142501	1	Fitting, Barbed 90	
29	1001154405	7.25 ft /2.21m	Hose	
30	1001155823	1	Coupling, Quick Disconnect 90	
31	1001165035	17.25 ft /5.26m	Hose	
32	1001166001	1	Engine and Pump Sub-Assembly - Deutz D2.9L4 (Without Arctic Package) (ANSI, ANSI Export, CSA and Japanese Specs) (See ENGINE AND PUMP SUB-ASSEMBLY - DEUTZ D2.9L4 (WITHOUT ARCTIC PACKAGE) (ANSI, ANSI EXPORT, CSA AND JAPANESE SPECS) for Breakdown)	
33	1001167512	1	Bracket	
34	1001169823	1	Plate, Engine Lock	
35	1001171683	1	Cable, Battery (Red) (Battery Positive to Auxiliary Power Relay)	
36	1001171684	1	Cable, Battery (Black) (Battery Negative to Auxiliary Power Pump)	
37	1001172736	1	Pipe, Exhaust	
38	3422532	1	Pin	
39	0760610	1	Bolt, M6 x 20mm	
40	0760812	1	Bolt, M8 x 25mm	
41	1321716	4	Clamp	
42	1001191832	1	Nut, Rivet M8	
43	4811900	1	Washer, M8	
44	1001181358	1	Harness, Fuel Pump (See ELECTRICAL SECTION for Breakdown)	

ITEM	PART NUMBER	QTY	DESCRIPTION	REV
45	1001162335	1	Bracket Assembly - Fuel Pump/Filter (See BRACKET ASSEMBLY - FUEL PUMP AND FILTER (DEUTZ D2.9L4 ENGINE) for Breakdown)	
46	1320022	1	Clamp	

FIGURE 3-2. ENGINE AND PUMP SUB-ASSEMBLY - DEUTZ D2.9L4 (WITHOUT ARCTIC PACKAGE) (ANSI, ANSI EXPORT, CSA AND JAPANESE SPECS)

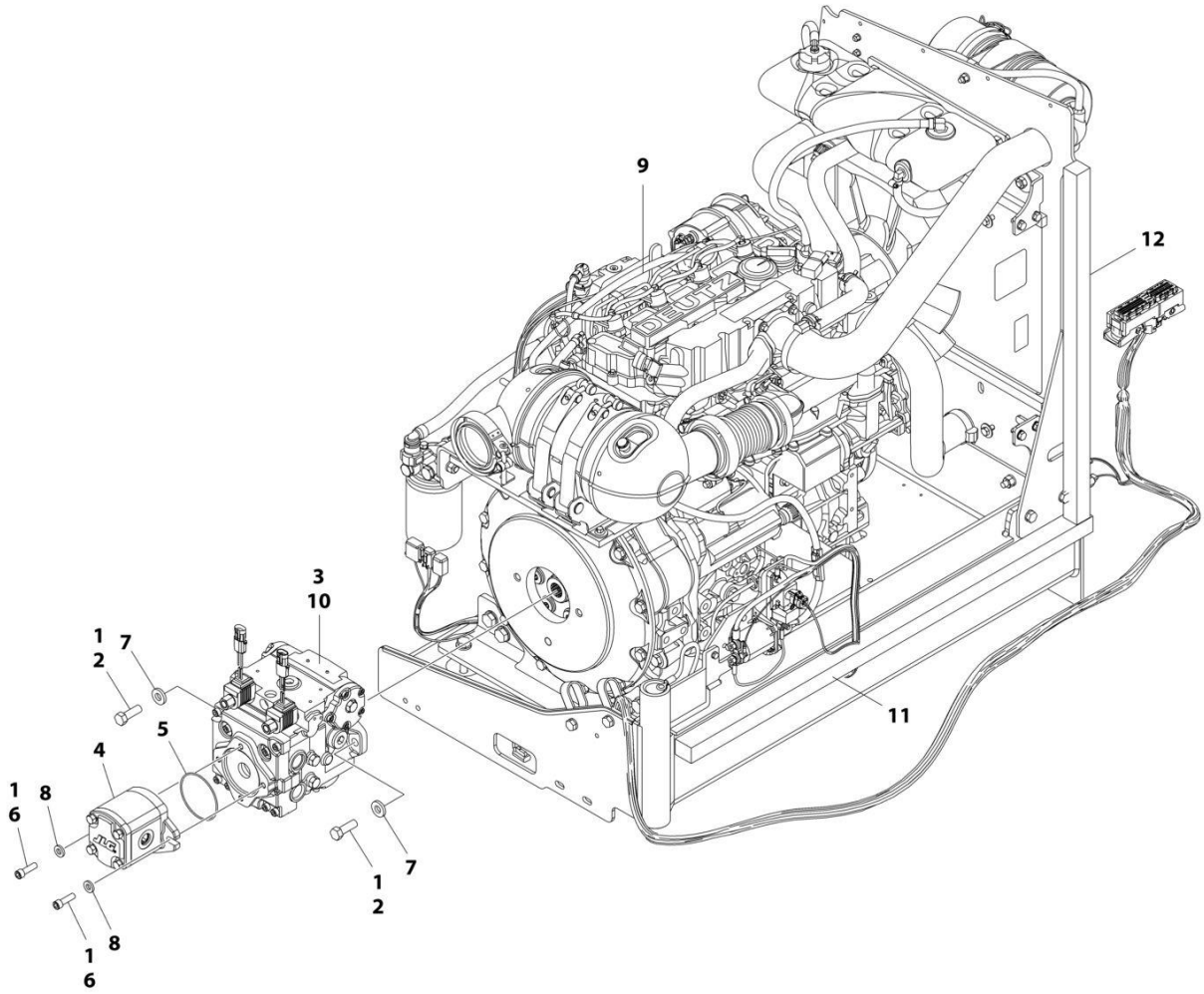

FIGURE 3-2. ENGINE AND PUMP SUB-ASSEMBLY - DEUTZ D2.9L4 (WITHOUT ARCTIC PACKAGE) (ANSI, ANSI EXPORT, CSA AND JAPANESE SPECS)

ITEM	PART NUMBER	QTY	DESCRIPTION	REV
	1001166001	Ref	ENGINE AND PUMP SUB-ASSEMBLY - DEUTZ D2.9L4 (WITHOUT ARCTIC PACKAGE) (ANSI, ANSI EXPORT, CSA AND JAPANESE SPECS)	G
1	0100011	AR	Compound, Locking	
2	0641812	2	Bolt, 1/2-13 x 1-1/2	
3	3020037	AR	Lube	
4	3600242	1	Gear Pump Assembly (See GEAR PUMP ASSEMBLY for Breakdown) **(SN 0300201991 through 0300233105)**	
4	1001214207	1	Gear Pump Assembly **(SN 0300233106 through 0300272317, SN B300003516 through B300005760, Except SN 0300272185 through 0300272190, Excluding B300005569)**	
4	70006356	1	Seal Kit - 1001214207 Pump	
5	3790152	1	O-Ring	
6	3931620	2	Capscrew 3/8 x 1-1/4	
6	3931618	2	Capscrew 3/8 x 1-1/8	
7	4891800	2	Washer 1/2 Hardened	
8	4891600	2	Washer, 3/8 Hardened	
9	1001166000	1	Engine Assembly - Deutz D2.9L4 Engine (Without Arctic Package) (ANSI, ANSI Export, CSA and Japanese Specs) (See ENGINE ASSEMBLY - DEUTZ D2.9L4 ENGINE (WITHOUT ARCTIC PACKAGE) (ANSI, ANSI EXPORT, CSA AND JAPANESE SPECS) for Breakdown)	
10	1001167036	1	Piston Pump Assembly (See PISTON PUMP ASSEMBLY for Breakdown)	
11	1001171953	1	Seal	
12	1001171954	1	Seal	

FIGURE 3-3. ENGINE ASSEMBLY - DEUTZ D2.9L4 ENGINE (WITHOUT ARCTIC PACKAGE) (ANSI, ANSI EXPORT, CSA AND JAPANESE SPECS)

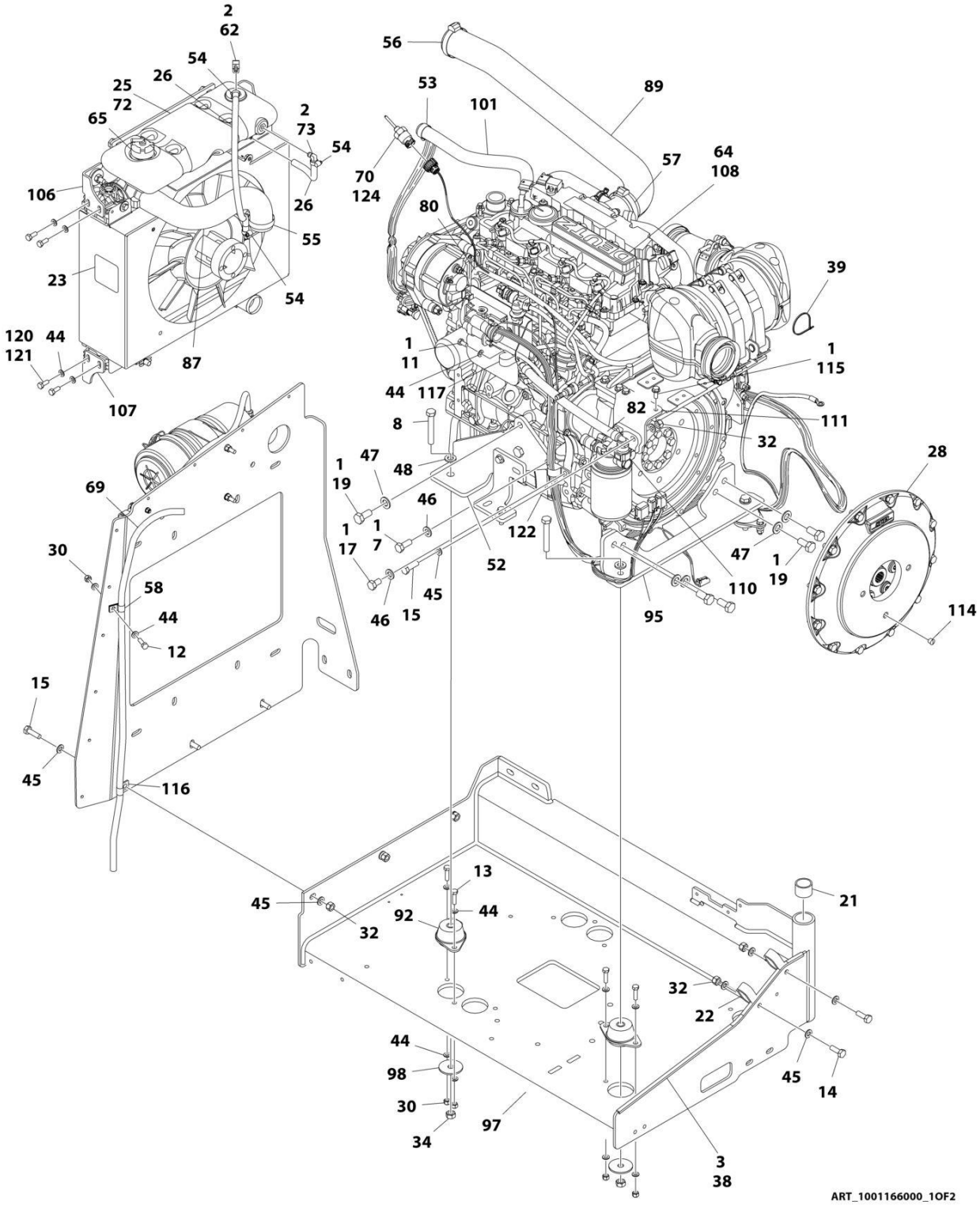

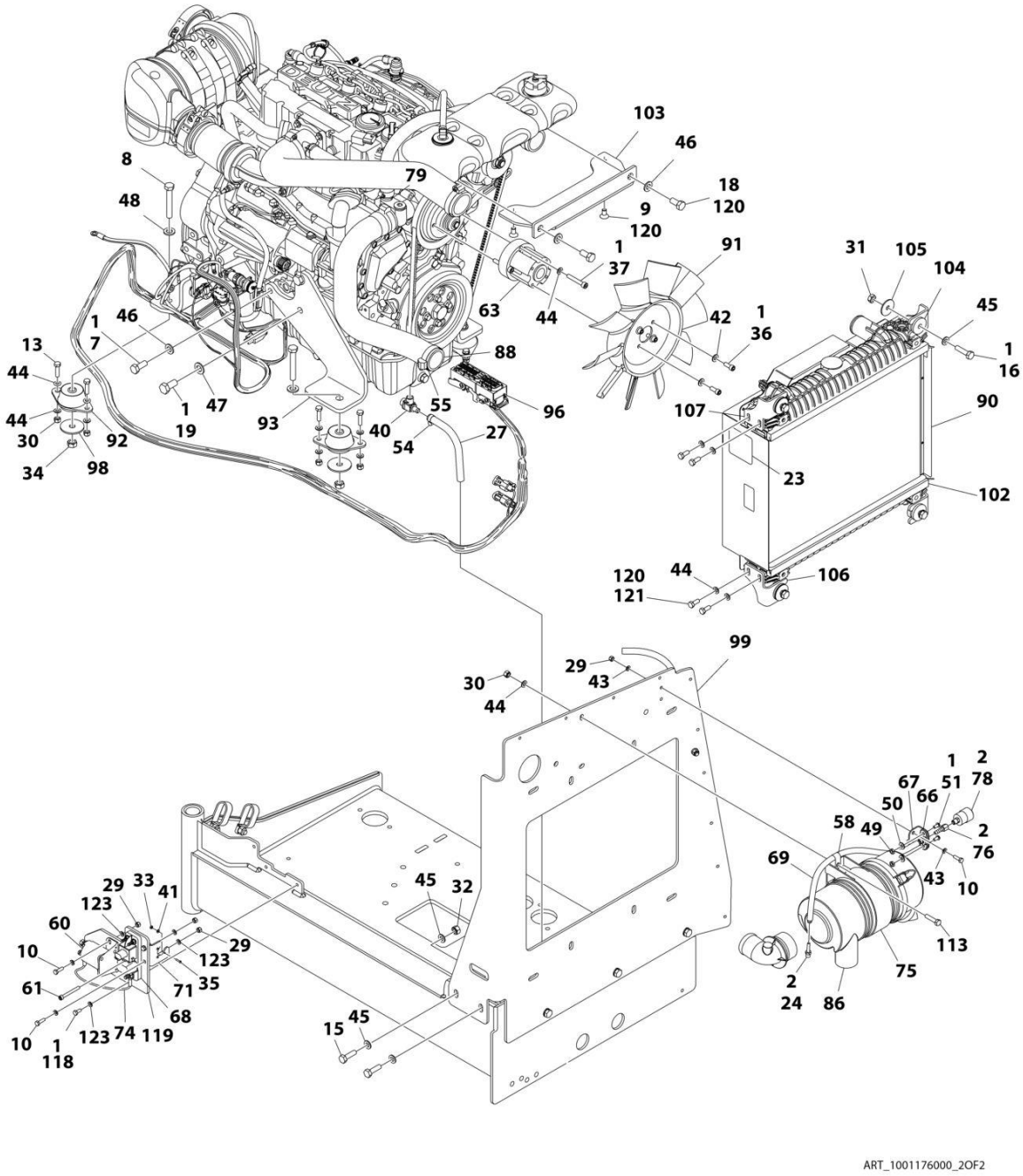
ART_1001176000_2OF2

FIGURE 3-3. ENGINE ASSEMBLY - DEUTZ D2.9L4 ENGINE (WITHOUT ARCTIC PACKAGE) (ANSI, ANSI EXPORT, CSA AND JAPANESE SPECS)

ITEM	PART NUMBER	QTY	DESCRIPTION	REV
	1001166000	Ref	ENGINE ASSEMBLY - DEUTZ D2.9L4 ENGINE (WITHOUT ARCTIC PACKAGE) (ANSI, ANSI EXPORT, CSA AND JAPANESE SPECS)	R
1	0100011	AR	Compound, Locking	
2	0100020	AR	Sealant, Pipe	
3	0100081	AR	Adhesive	
7	0711214	AR	Bolt, M12 x 30mm	
8	0711224	4	Bolt, M12 x 80mm Grade 10.9	
9	0741606	2	Screw, 3/8-16 x .75	
10	0760610	6	Bolt, M6 x 20mm	
11	0760808	1	Bolt, M8 x 16mm	
12	0760812	1	Bolt, M8 x 25mm	
13	0760814	8	Bolt, M8 x 30mm	
14	0761014	2	Bolt, M10 x 30mm	
15	0761015	7	Bolt, M10 x 35mm	
16	0761016	4	Bolt, M10 x 40mm	
17	0761210	1	Bolt, M12 x 20mm	
18	0761212	2	Bolt, M12 x 25mm	
19	0771414	8	Bolt, M14 x 30mm Grade 10.9	
21	0961951	2	Bushing	
22	1321716	2	Clamp	
23	1703162	2	Decal - Caution Fan	
24	2220315	1	Fitting, Straight Barbed	
25	2300004	3 gal/ 11.3L	Coolant	
26	2720015	2 ft/ 0.61m	Hose	
27	2720340	8 in/ 20.3cm	Hose	
28	2902065	1	Pump Coupling Kit (See PUMP COUPLING KIT for Breakdown)	
29	3290605	7	Nut, Lock, M6 x 1	
30	3290805	11	Nut, Lock, M8 x 1.25	
31	3291001	4	Nut, M10 x 1.5	
32	3291005	9	Nut, Lock, M10 x 1.5	
33	3310401	3	Nut, #4-40	
34	3331215	4	Nut, M12 x 1.75	
35	3910408	3	Screw, 4-40 x 1/2	
36	3931512	4	Capscrew, 5/16-18 x 3/4	
37	4031914	4	Bolt, M8 x 50mm	
38	4060805	2.25 ft/ 0.69m	Trim, Flex Shield	
39	4240099	AR	Tie-Strap	
40	4640751	1	Valve, Oil Drain	
41	4710400	3	Washer, #4	
42	4711500	4	Washer, 5/16	
43	4811700	16	Washer, M6	
44	4811900	35	Washer, M8	
45	4812000	22	Washer, M10	
46	4812100	AR	Washer, M12	
47	4812200	AR	Washer, M14	

ITEM	PART NUMBER	QTY	DESCRIPTION	REV
48	5241200	4	Washer, M12 Hardened	
49	8305401	2	Nut, Jam,.250-20	
50	8307109	2	Washer, .250	
51	8310548	2	Screw, 1/4-20 x 1/2	
52	1001166922	1	Plate, Engine Mount	
53	8405007	2	Clamp	
54	8405009	5	Clamp	
55	8405104	4	Clamp	
56	8405202	1	Clamp	
57	8405204	1	Clamp	
58	8406109	2	Clip	
60	1001117308	1	Relay, 200Amp	
60	3300220	2	Nut	
60	3321001	2	Nut, #10-32	
60	4761000	2	Washer, Lock #10	
60	1001111424	2	Washer	
61	1001118878	1	Bolt, M6 x 55mm	
62	1001134488	1	Fitting, Barbed	
63	1001144116	1	Spacer, Fan	
64	1001136079	2.4 gal /9L	Oil Motor	
65	1001136834	1	Cap, Tank	
66	1001138173	1	Support, Service Indicator	
67	1001138175	1	Bracket, Service Indicator	
68	1001138228	1	Relay, Power Module	
68	70023592	1	Fuse 20Amp	
68	70023593	1	Fuse 30Amp	
69	1001138248	5.25 ft/ 1.6m	Tube	
70	1001138827	1	Sensor, Coolant Level	
71	1001139240	1	Bracket	
72	1001140535	1	Tank, Surge **(SN 0300201991 through 0300241750)**	
72	1001230635	1	Tank, Surge (Includes Items 2, 62, 70 & 73) **(SN 0300241751 through 0300272317, SN B300003516 through B300005760, Except SN 0300272185 through 0300272190, Excluding B300005569)**	
73	1001140564	1	Fitting, Barbed 90	
74	1001141304	1	Harness, Glow Plug	
75	1001141694	1	Clamp, Air Cleaner	
76	1001141995	1	Fitting, Barbed	
78	1001143390	1	Indicator	
79	1001143797	1	Fitting, Barbed	
80	1001178788	1	Cable, Alternator	
82	1001152489	1	Fitting, Barbed 90	
86	1001165388	1	Air Cleaner Assembly	
86	70003783	1	Element, Air Cleaner	
87	1001165405	1	Hose, Upper Radiator	
88	1001165406	1	Hose, Lower Radiator	
89	1001165721	1	Hose, Air Intake	
90	1001165722	1	Radiator	
91	1001165849	1	Fan	
92	1001166718	4	Mount, Motor	
93	1001166921	1	Plate, Engine Mount	

SECTION 3 - ENGINE

ITEM	PART NUMBER	QTY	DESCRIPTION	REV
95	1001166924	1	Plate, Engine Mount	
96	1001167108	1	Harness Engine - Deutz D2.9L4 (See ELECTRICAL SECTION for Breakdown)	
97	1001167520	1	Tray, Engine	
98	1001168018	4	Washer, Special	
99	1001168026	1	Plate, Radiator Mounting	
101	1001168099	1	Hose	
102	1001168166	2	Seal	
103	1001168950	1	Bracket	
104	1001169054	4	Isolator	
105	1001169138	4	Washer, Snubbing	
106	1001169967	2	Bracket	
107	1001170035	2	Bracket	
108	1001170617	1	Engine, Deutz D2.9L4 (See ENGINE COMPONENTS - DEUTZ D2.9L4 ENGINE for Breakdown)	
110	1001177359	1	Hose	
111	1001178876	1	Mount, Fuel Filter	
113	0760815	2	Bolt, M8 x 35mm	
114	3520054	1	Plug	
115	5250810	2	Bolt, M8 x 20mm	
116	8406110	1	Clip	
117	8406201	1	Clip	
118	0760607	3	Bolt, M6 x 14mm	
119	1001179903	1	Bracket	
120	1001180620	AR	Adhesive	
121	0760810	8	Bolt, M8 x 20mm	
122	1001191620	1	Clamp	
123	4811702	12	Washer, M6	
124	1001182997	AR	Adhesive, Permatex **(SN 0300201991 through 0300241750)**	

FIGURE 3-4. ENGINE INSTALLATION - DEUTZ D2.9L4 ENGINE (WITH ARCTIC PACKAGE) (ANSI AND CSA SPECS)

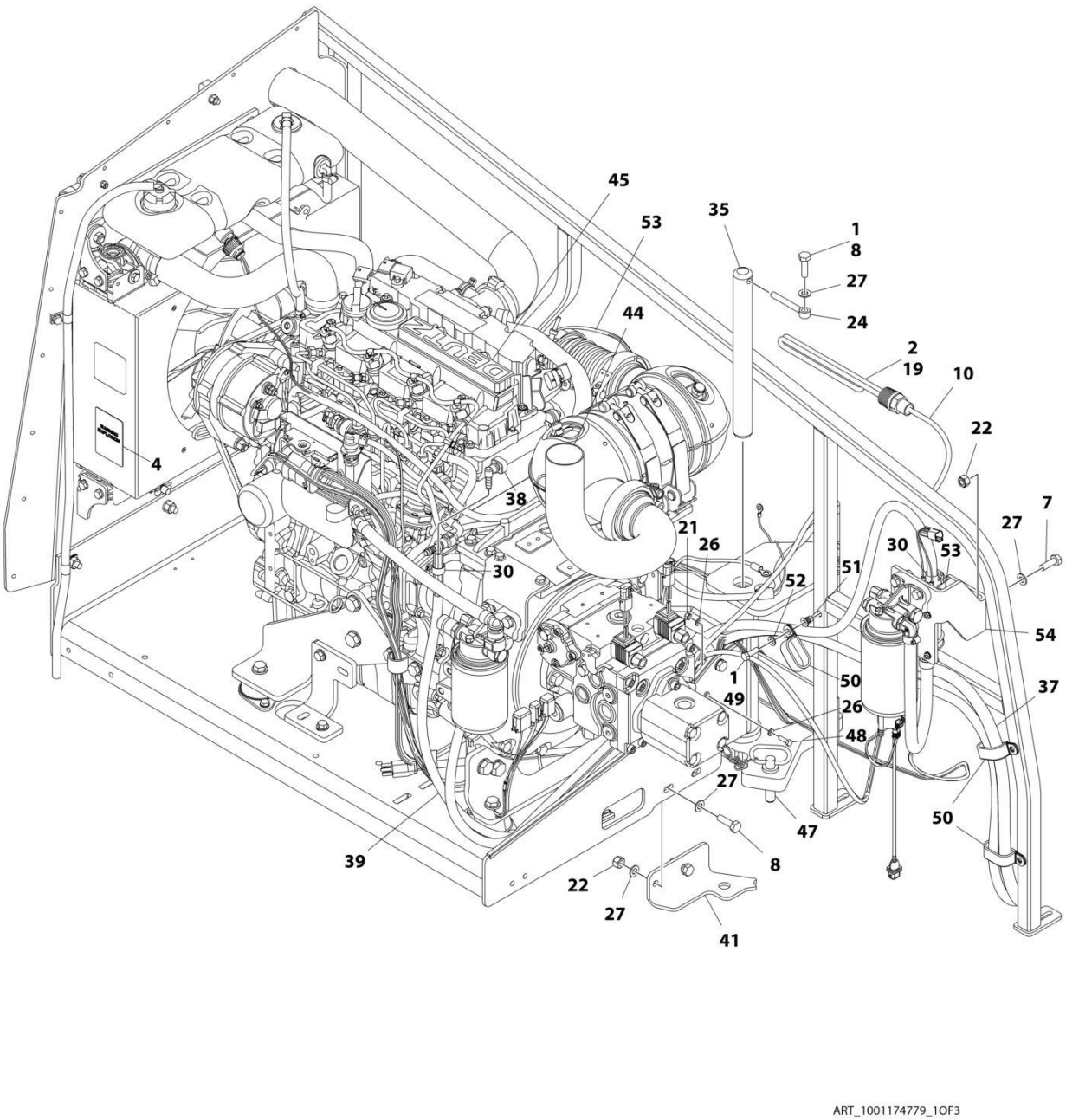

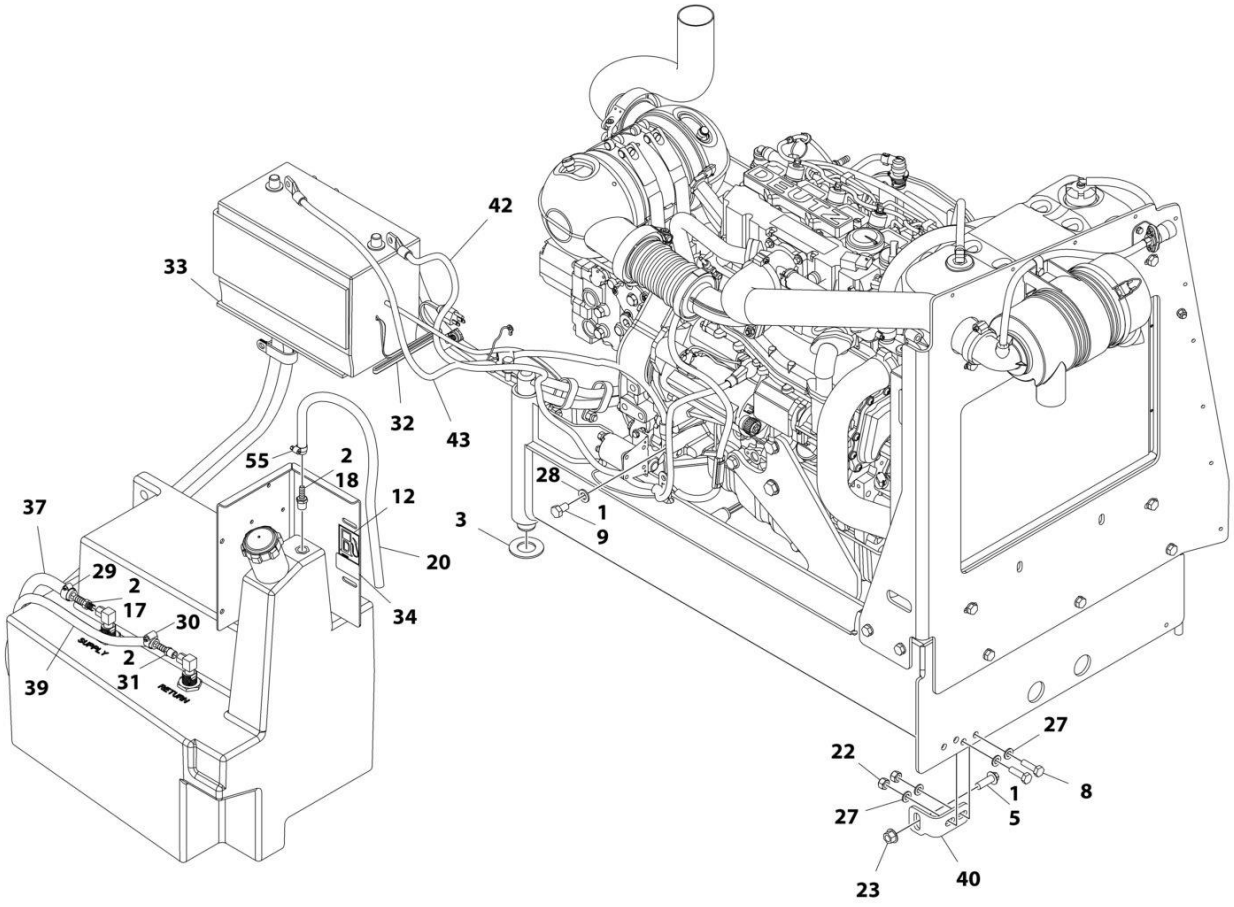

ART_1001174779_2OF3

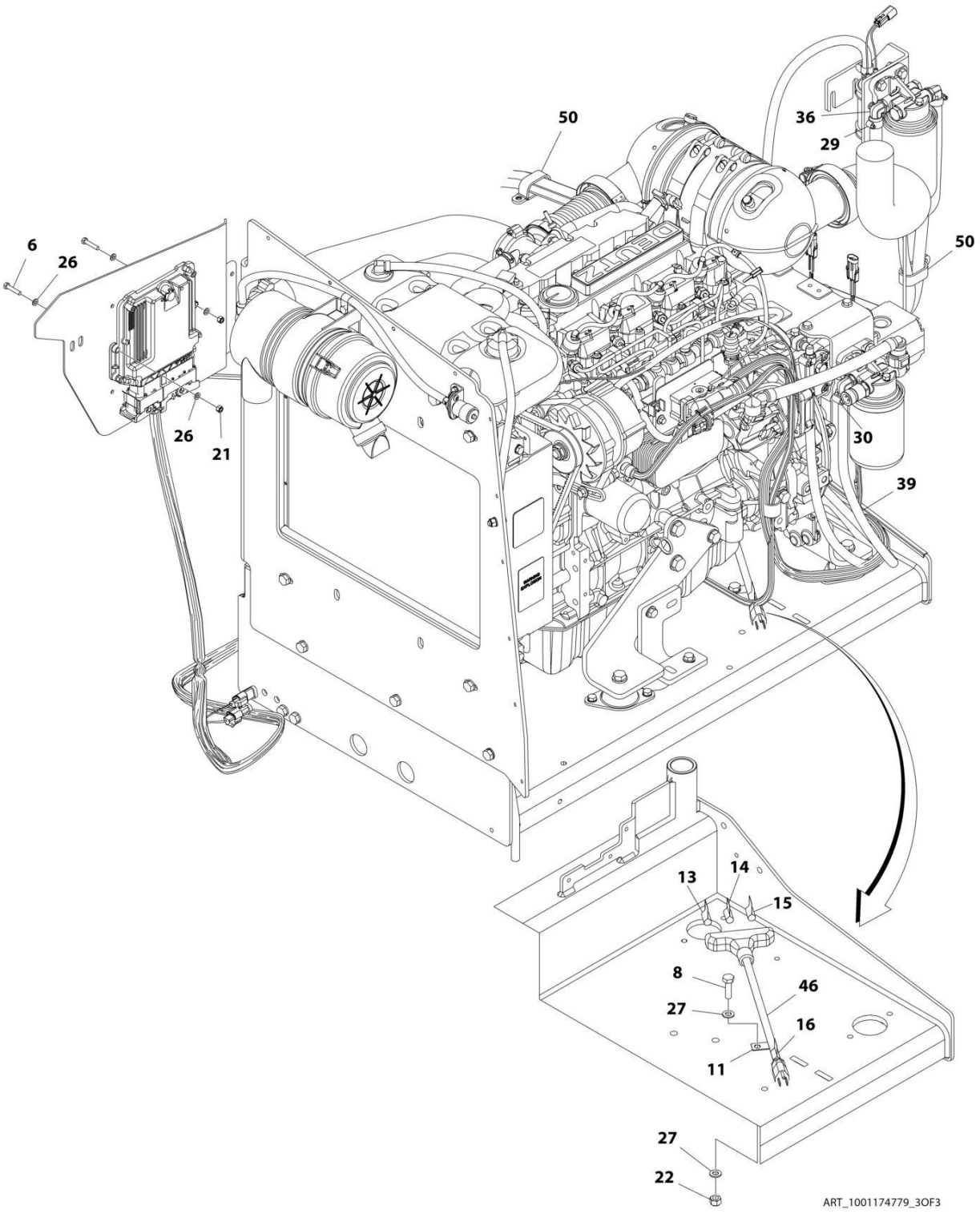
50
36
29
6
26
50
26
21
30
39
13
14
15
8
46
27
16
11
27
22
ART_1001174779_3OF3

FIGURE 3-4. ENGINE INSTALLATION - DEUTZ D2.9L4 ENGINE (WITH ARCTIC PACKAGE) (ANSI AND CSA SPECS)

ITEM	PART NUMBER	QTY	DESCRIPTION	REV
	1001174779	Ref	ENGINE INSTALLATION - DEUTZ D2.9L4 ENGINE (WITH ARCTIC PACKAGE) (ANSI AND CSA SPECS)	G
1	0100011	AR	Compound, Locking	
2	0100020	AR	Sealant, Pipe	
3	0440162	1	Bearing	
4	1704972	1	Decal - Warning Explosion/Fire	
5	5251215	1	Bolt, M12 x 35mm	
6	0760614	4	Bolt, M6 x 30mm	
7	0761014	2	Bolt, M10 x 30mm	
8	0761015	6	Bolt, M10 x 35mm	
9	0761210	1	Bolt, M12 x 20mm	
10	1060625	1	Cable, Immersion Heater **(SN 0300201991 through 0300206616)**	
11	1320223	1	Clamp	
12	1701505	1	Decal - Diesel Fuel	
13	1702941	1	Decal - Battery Heater	
14	1702942	1	Decal - Engine Block Heater	
15	1702943	1	Decal - Hydraulic Tank Heater	
16	1702944	1	Decal - Heater Cord	
17	2180832	1	Fitting, Barbed	
18	2180876	1	Fitting, Barbed	
19	2580050	1	Heater, Hydraulic Tank **(SN 0300201991 through 0300206616)**	
19	1001188972	1	Heater, Hydraulic Tank **(SN 0300206617 through 0300272317, Except SN 0300272185 through 0300272190)**	
20	2720058	2 ft /0.61m	Hose	
21	3290605	5	Nut, Lock M6 x 1	
22	3291005	7	Nut, Lock M10 x 1.5	
23	5261200	1	Nut, Flange M12 Grade 10.9	
24	3841143	1	Keeper, Pin	
26	4811700	10	Washer, M6	
27	4812000	13	Washer, M10	
28	4812100	1	Washer, M12	
29	8405006	2	Clamp	
30	8410013	4	Clamp	
31	8430007	1	Coupling	
32	1001097000	1	Heater, Battery **(SN 0300201991 through 0300206616)**	
32	2580024	1	Heater, Battery **(SN 0300206617 through 0300272317, Except SN 0300272185 through 0300272190)**	
33	1001119278	1	Insulate	
34	1001125387	1	Decal - Ultra Low Sulfur Fuel	
35	1001135196	1	Pin	
36	1001142501	1	Fitting, Barbed 90	
37	1001154405	7.25 ft /2.21m	Hose	
38	1001155823	1	Coupling, Quick Disconnect 90	
39	1001165035	17.25 ft /5.26m	Hose	
40	1001167512	1	Bracket, Engine Tray	
41	1001169823	1	Plate, Engine Lock	
42	1001171683	1	Cable, Battery (Red) (Battery Positive to Auxiliary Power Relay)	

ITEM	PART NUMBER	QTY	DESCRIPTION	REV
43	1001171684	1	Cable, Battery (Black) (Battery Negative to Auxiliary Power Pump)	
44	1001172736	1	Pipe, Exhaust	
45	1001174778	1	Engine and Pump Sub-Assembly - Deutz D2.9L4 (With Arctic Package) (ANSI and CSA Specs) (See ENGINE AND PUMP SUB-ASSEMBLY - DEUTZ D2.9L4 (WITH ARCTIC PACKAGE) (ANSI AND CSA SPECS) for Breakdown)	
46	1060626	1	Plug, 3 Way	
47	3422532	1	Pin	
48	0760610	1	Bolt, M6 x 20mm	
49	0760812	1	Bolt, M8 x 25mm	
50	1321716	4	Clamp	
51	1001191832	1	Nut, Rivet M8	
52	4811900	1	Washer, M8	
53	1001181358	1	Harness, Fuel Pump (See ELECTRICAL SECTION for Breakdown)	
54	1001162335	1	Bracket Assembly - Fuel Pump/Filter (See BRACKET ASSEMBLY - FUEL PUMP AND FILTER (DEUTZ D2.9L4 ENGINE) for Breakdown)	
55	1320022	1	Clamp	
56	1001233763	Ref	Breather Heater Installation (Not Shown - See Separate Breakdown in this Section) **(SN 0300245521 through 0300272317, Except SN 0300272185 through 0300272190)**	
56	1001196634	1	Fuse, 2 Amp	
56	1001232842	1	Breather Heater Kit	
56	2400060	1	Holder, Fuse	

FIGURE 3-5. ENGINE AND PUMP SUB-ASSEMBLY - DEUTZ D2.9L4 (WITH ARCTIC PACKAGE) (ANSI AND CSA SPECS)

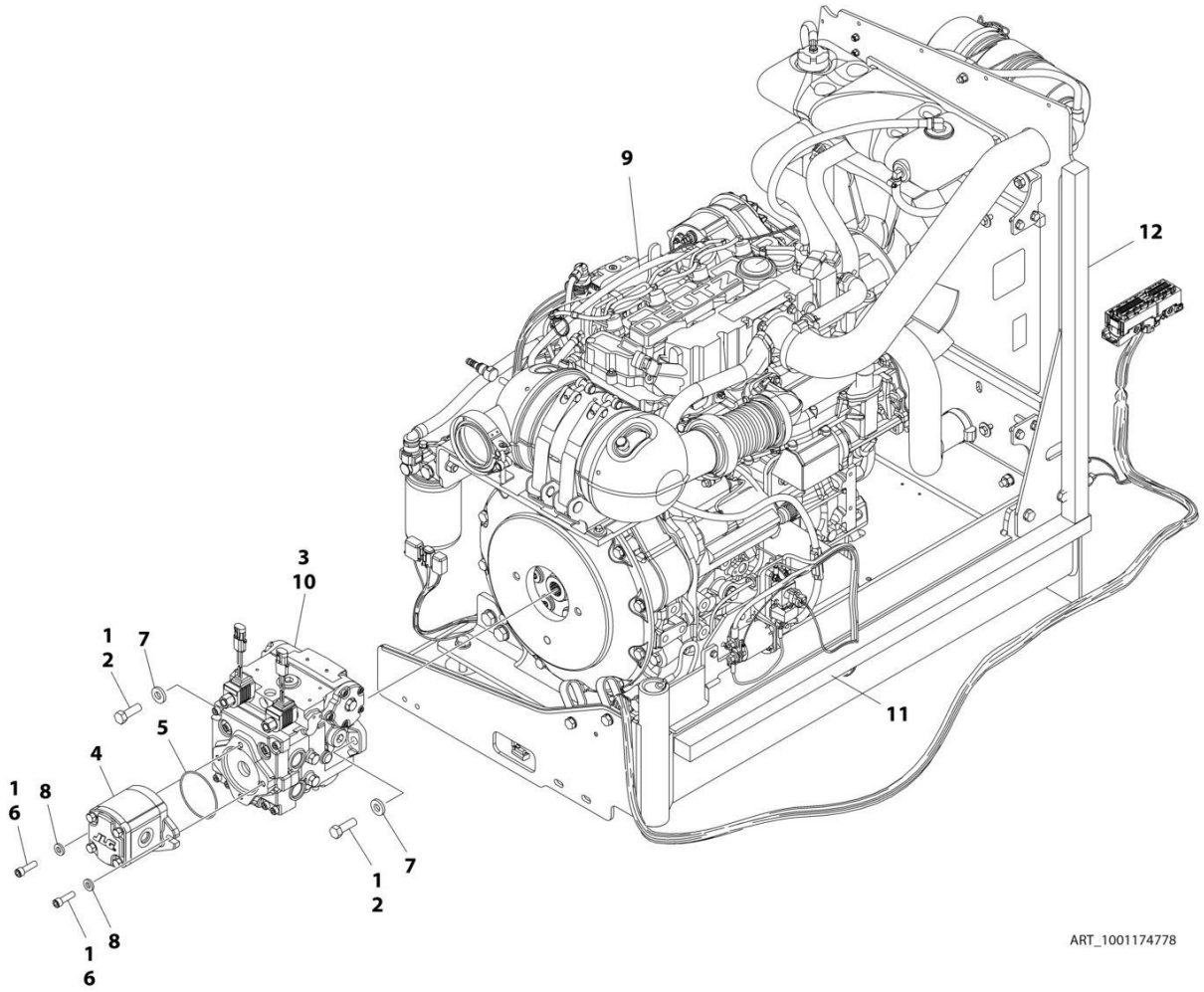

FIGURE 3-5. ENGINE AND PUMP SUB-ASSEMBLY - DEUTZ D2.9L4 (WITH ARCTIC PACKAGE) (ANSI AND CSA SPECS)

ITEM	PART NUMBER	QTY	DESCRIPTION	REV
	1001174778	Ref	ENGINE AND PUMP SUB-ASSEMBLY - DEUTZ D2.9L4 (WITH ARCTIC PACKAGE) (ANSI AND CSA SPECS)	F
1	0100011	AR	Compound, Locking	
2	0641812	2	Bolt, 1/2-13 x 1-1/2	
3	3020037	AR	Lube	
4	3600242	1	Gear Pump Assembly (See GEAR PUMP ASSEMBLY for Breakdown) **(SN 0300201991 through 0300233105)**	
4	1001214207	1	Gear Pump Assembly **(SN 0300233106 through 0300272317, Except SN 0300272185 through 0300272190)**	
4	70006356	1	Seal Kit - 1001214207 Pump	
5	3790152	1	O-Ring	
6	3931620	2	Capscrew 3/8 x 1-1/4	
6	3931618	2	Capscrew 3/8 x 1-1/8	
7	4891800	2	Washer, 1/2 Hardened	
8	4891600	2	Washer, 3/8 ID Hardened	
9	1001174777	1	Engine Assembly - Deutz D2.9L4 Engine (With Arctic Package) (ANSI and CSA Specs) (See ENGINE ASSEMBLY - DEUTZ D2.9L4 ENGINE (WITH ARCTIC PACKAGE) (ANSI AND CSA SPECS) for Breakdown)	
10	1001167036	1	Piston Pump Assembly (See PISTON PUMP ASSEMBLY for Breakdown)	
11	1001171953	1	Seal	
12	1001171954	1	Seal	

FIGURE 3-6. ENGINE ASSEMBLY - DEUTZ D2.9L4 ENGINE (WITH ARCTIC PACKAGE) (ANSI AND CSA SPECS)

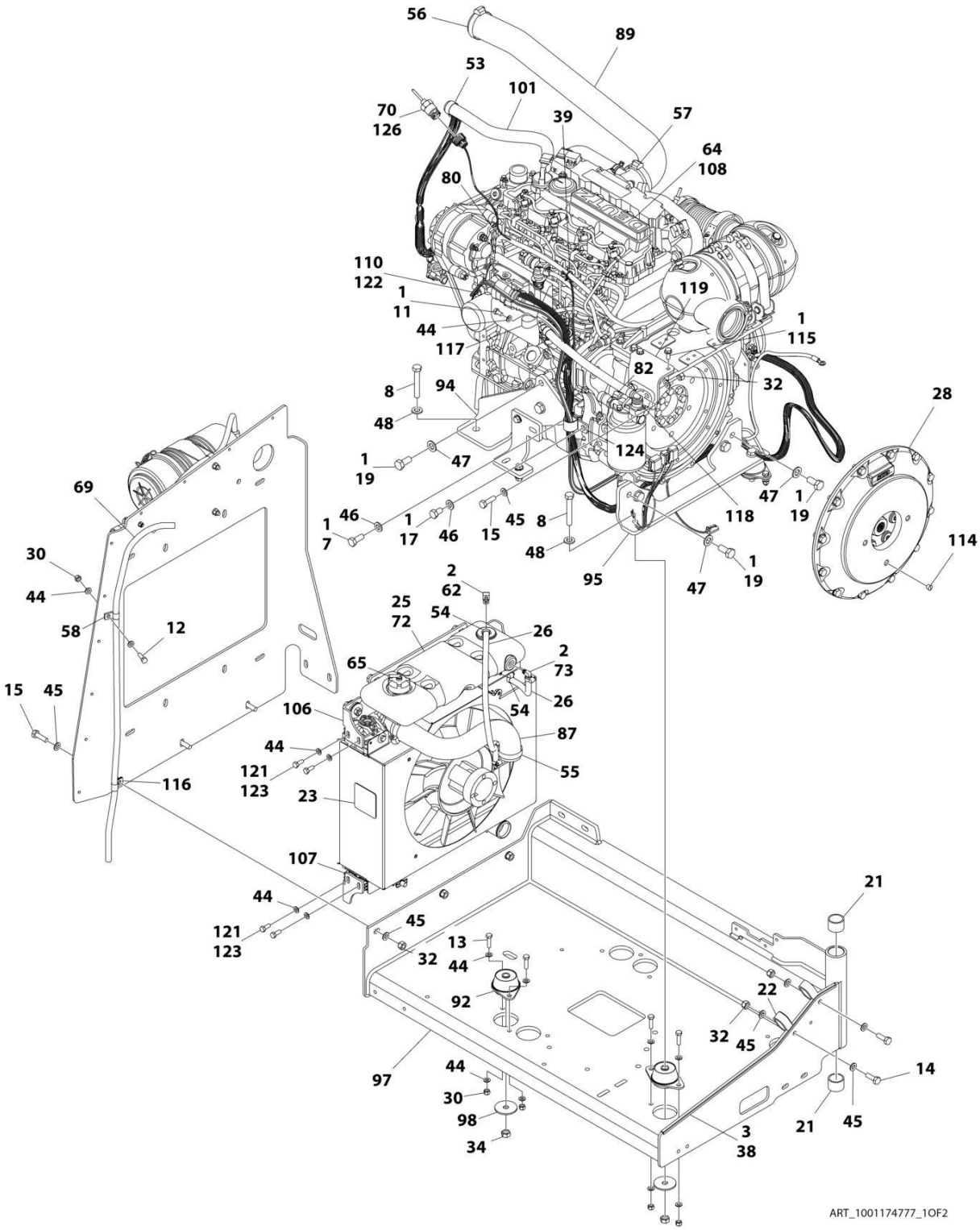

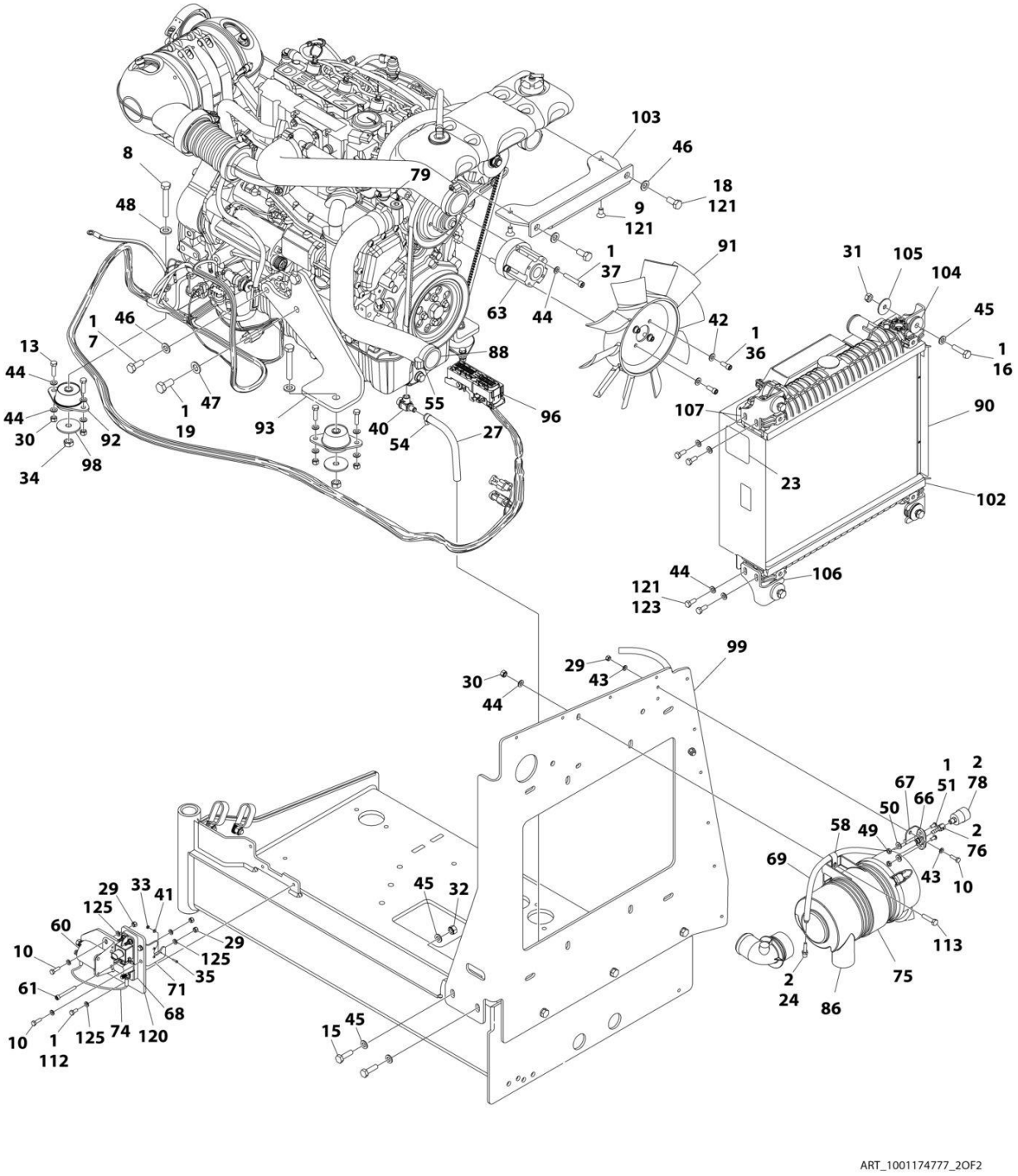
ART_1001174777_2OF2

FIGURE 3-6. ENGINE ASSEMBLY - DEUTZ D2.9L4 ENGINE (WITH ARCTIC PACKAGE) (ANSI AND CSA SPECS)

ITEM	PART NUMBER	QTY	DESCRIPTION	REV
	1001174777	Ref	ENGINE ASSEMBLY - DEUTZ D2.9L4 ENGINE (WITH ARCTIC PACKAGE) (ANSI AND CSA SPECS)	Q
1	0100011	AR	Compound, Locking	
2	0100020	AR	Sealant, Pipe	
3	0100081	AR	Adhesive	
7	0711214	AR	Bolt, M12 x 30mm	
8	0711224	4	Bolt, M12 x 80mm	
9	0741606	2	Screw, 3/8-16 x .75	
10	0760610	6	Bolt, M6 x 20mm	
11	0760808	1	Bolt, M8 x 16mm	
12	0760812	1	Bolt, M8 x 25mm	
13	0760814	8	Bolt, M8 x 30mm	
14	0761014	2	Bolt, M10 x 30mm	
15	0761015	7	Bolt, M10 x 35mm	
16	0761016	4	Bolt, M10 x 40mm	
17	0761210	1	Bolt, M12 x 20mm	
18	0761212	2	Bolt, M12 x 25mm	
19	0771414	AR	Bolt, M14 x 30mm Grade 10.9	
21	0961951	2	Bushing	
22	1321716	2	Clamp	
23	1703162	2	Decal - Caution Fan	
24	2220315	1	Fitting, Barbed	
25	2300041	3 gal/ 11.3L	Coolant	
26	2720015	2 ft/ 0.61m	Hose	
27	2720340	8 in/ 0.2m	Hose	
28	2902065	1	Pump Coupling Kit (See PUMP COUPLING KIT for Breakdown)	
29	3290605	7	Nut, Lock M6 x 1	
30	3290805	11	Nut, Lock M8 x 1.25	
31	3291001	4	Nut, M10 x 1.5	
32	3291005	9	Nut, Lock M10 x 1.5	
33	3310401	3	Nut, #4-40	
34	3331215	4	Nut, M12 x 1.75	
35	3910408	3	Screw, 4-40 x 1/2	
36	3931512	4	Capscrew, 5/16-18 x 3/4	
37	4031914	4	Bolt, M8 x 50mm	
38	4060805	2.25 ft/ 0.69m	Trim, Flex Shield	
39	4240099	AR	Tie-Strap	
40	4640751	1	Valve, Oil Drain	
41	4710400	3	Washer, #4	
42	4711500	4	Washer, 5/16	
43	4811700	AR	Washer, M6	
44	4811900	35	Washer, M8	
45	4812000	22	Washer, M10	
46	4812100	AR	Washer, M12	
47	4812200	AR	Washer, M14	
48	5241200	4	Washer, M12 Hardened	
49	8305401	2	Nut, Jam .250-20	

ITEM	PART NUMBER	QTY	DESCRIPTION	REV
50	8307109	2	Washer, .250	
51	8310548	2	Screw, 1/4 NC x 1/2	
53	8405007	2	Clamp	
54	8405009	5	Clamp	
55	8405104	4	Clamp	
56	8405202	1	Clamp	
57	8405204	1	Clamp	
58	8406109	2	Clip	
60	1001117308	1	Relay, 200Amp	
60	3300220	2	Nut	
60	3321001	2	Nut, #10-32	
60	4761000	2	Washer, Lock #10	
60	1001111424	2	Washer	
61	1001118878	1	Bolt, M6 x 55mm	
62	1001134488	1	Fitting, Barbed 90	
63	1001144116	1	Spacer, Fan	
64	1001136172	2.4 gal /9L	Oil, Motor	
65	1001136834	1	Cap, Tank	
66	1001138173	1	Support, Service Indicator	
67	1001138175	1	Bracket, Service Indicator	
68	1001138228	1	Relay, Power Module	
68	70023592	1	Fuse 20Amp	
68	70023593	1	Fuse 30Amp	
69	1001138248	5.25 ft/ 1.6m	Tube	
70	1001138827	1	Sensor, Coolant Level	
71	1001139240	1	Bracket	
72	1001140535	1	Tank, Surge **(SN 0300201991 through 0300241750)**	
72	1001230635	1	Tank, Surge (Includes Items 2, 62, 70 & 73) **(SN 0300241751 through 0300272317, Except SN 0300272185 through 0300272190)**	
73	1001140564	1	Fitting, Barbed 90	
74	1001141304	1	Harness, Glow Plug	
75	1001141694	1	Clamp, Air Cleaner	
76	1001141995	1	Fitting, Barbed	
78	1001143390	1	Indicator	
79	1001143797	1	Fitting, Barbed	
80	1001178788	1	Cable, Alternator	
82	1001152489	1	Fitting, Barbed 90	
86	1001165388	1	Air Cleaner Assembly	
86	70003783	1	Element, Air Cleaner	
87	1001165405	1	Hose, Upper Radiator	
88	1001165406	1	Hose, Lower Radiator	
89	1001165721	1	Hose, Air Intake	
90	1001165722	1	Radiator	
91	1001165849	1	Fan	
92	1001166718	4	Mount, Motor	
93	1001166921	1	Plate, Engine Mount	
94	1001166922	1	Plate, Engine Mount	
95	1001166924	1	Plate, Engine Mount	
96	1001167108	1	Harness Engine - Deutz D2.9L4 (See ELECTRICAL SECTION for Breakdown)	

SECTION 3 - ENGINE

ITEM	PART NUMBER	QTY	DESCRIPTION	REV
97	1001167520	1	Tray, Engine	
98	1001168018	4	Washer, Special	
99	1001168026	1	Plate, Radiator Mounting	
101	1001168099	1	Hose	
102	1001168166	2	Seal	
103	1001168950	1	Bracket	
104	1001169054	4	Isolator	
105	1001169138	4	Washer, Snubbing	
106	1001169967	2	Bracket	
107	1001170035	2	Bracket	
108	1001170617	1	Engine, Deutz D2.9L4 (See ENGINE COMPONENTS - DEUTZ D2.9L4 ENGINE for Breakdown)	
110	1001140312	1	Heater, Engine Block	
112	0760607	3	Bolt, M6 x 14mm	
113	0760815	2	Bolt, M8 x 35mm	
114	3520054	1	Plug	
115	5250810	2	Bolt, M8 x 20mm	
116	8406110	1	Clip	
117	8406201	1	Clip	
118	1001177359	1	Hose	
119	1001178876	1	Mount, Fuel Filter	
120	1001179903	1	Bracket	
121	1001180620	AR	Adhesive	
122	1001181895	AR	Adhesive	
123	0760810	8	Bolt, M8 x 20mm	
124	1001191620	1	Clamp	
125	4811702	12	Washer, M6	
126	1001182997	AR	Adhesive, Permatex **(SN 0300201991 through 0300241750)**	

FIGURE 3-7. ENGINE INSTALLATION - DEUTZ D2.9L4 ENGINE (CHINA SPEC)

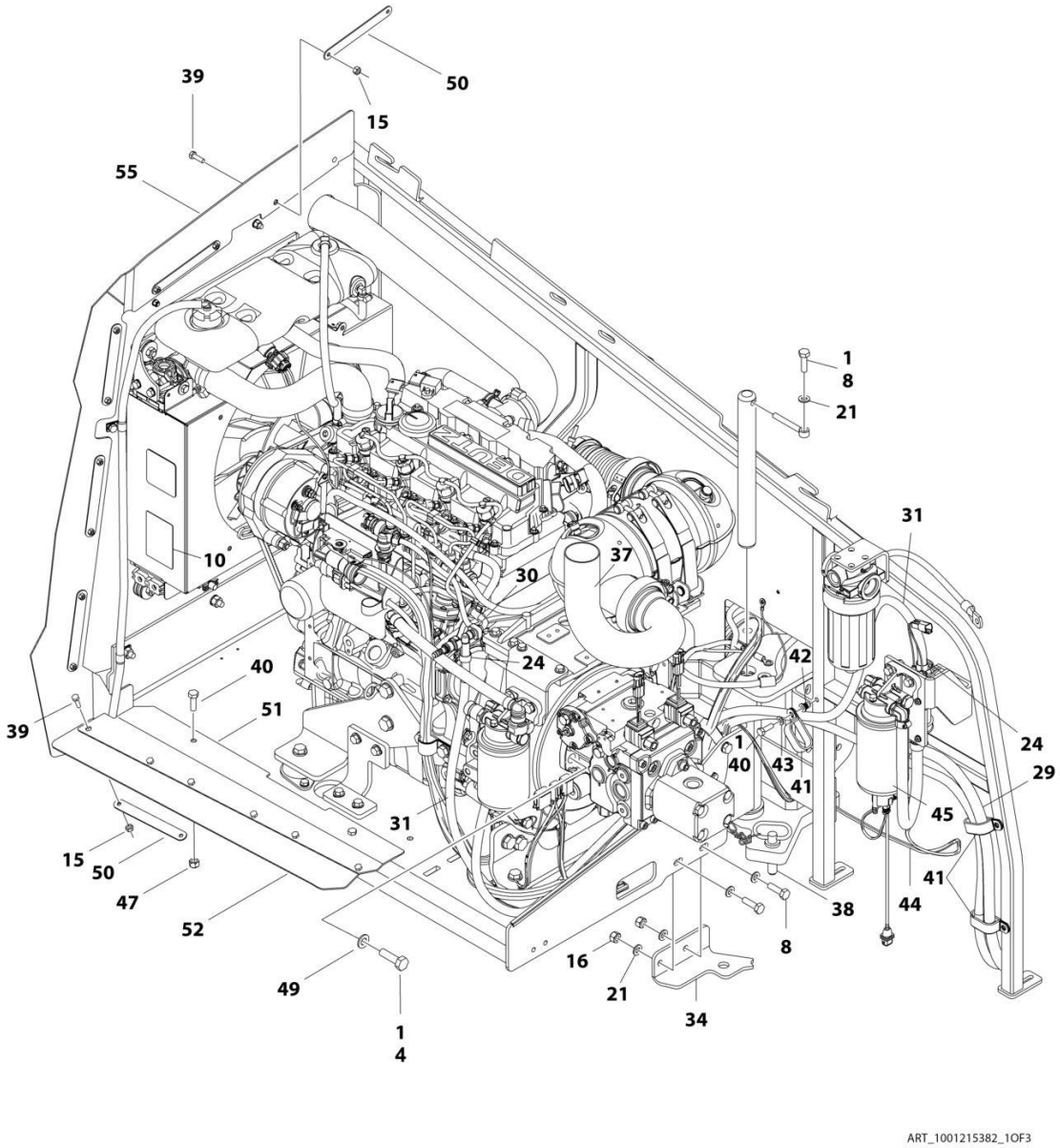

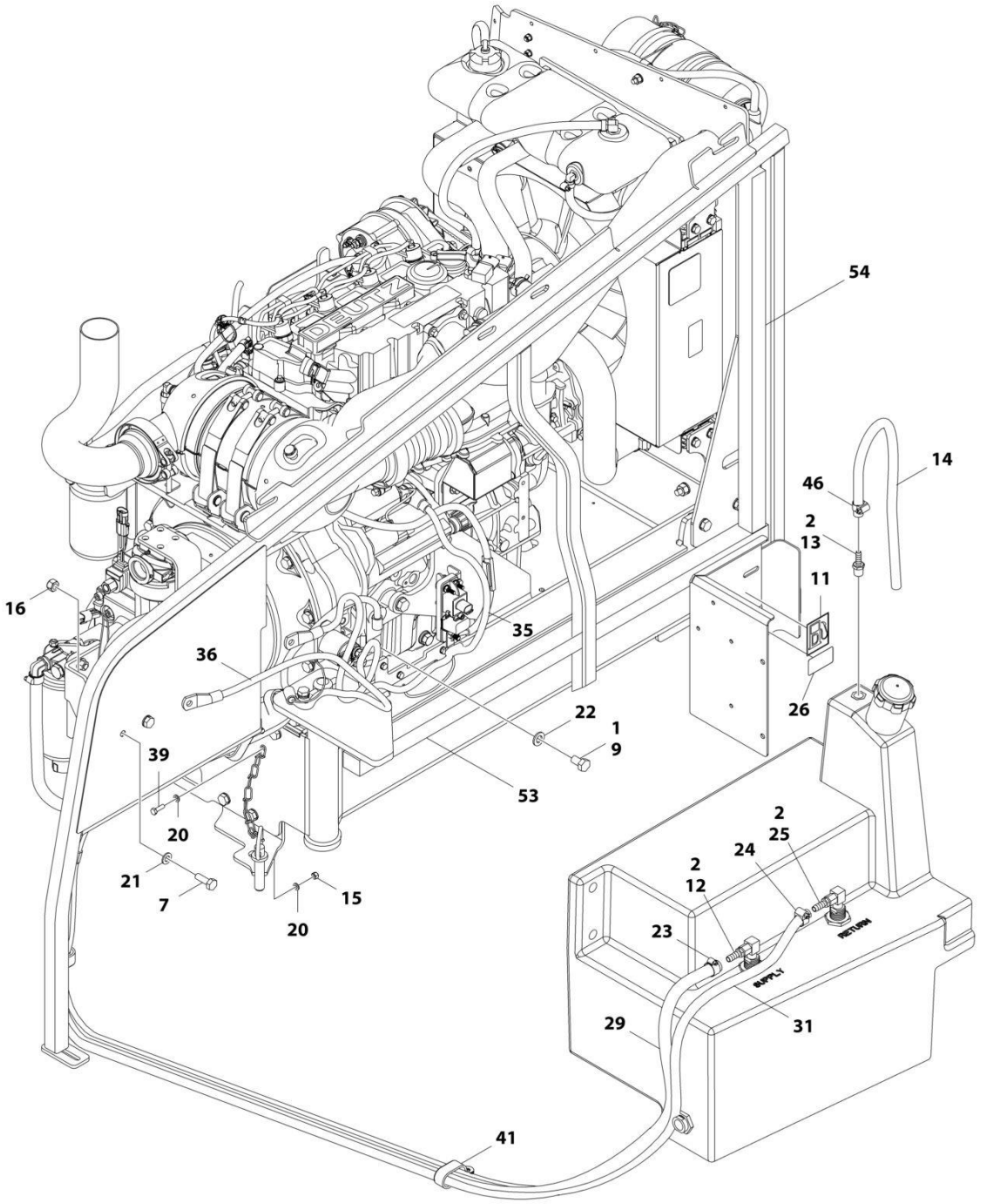
54
14
46
2
13
11
16
35
36
22
1
9
26
39
53
20
21
7
15
20
2
25
24
2
12
23
RETURN
SUPPLY
29
31
41
ART_1001215382_2OF3

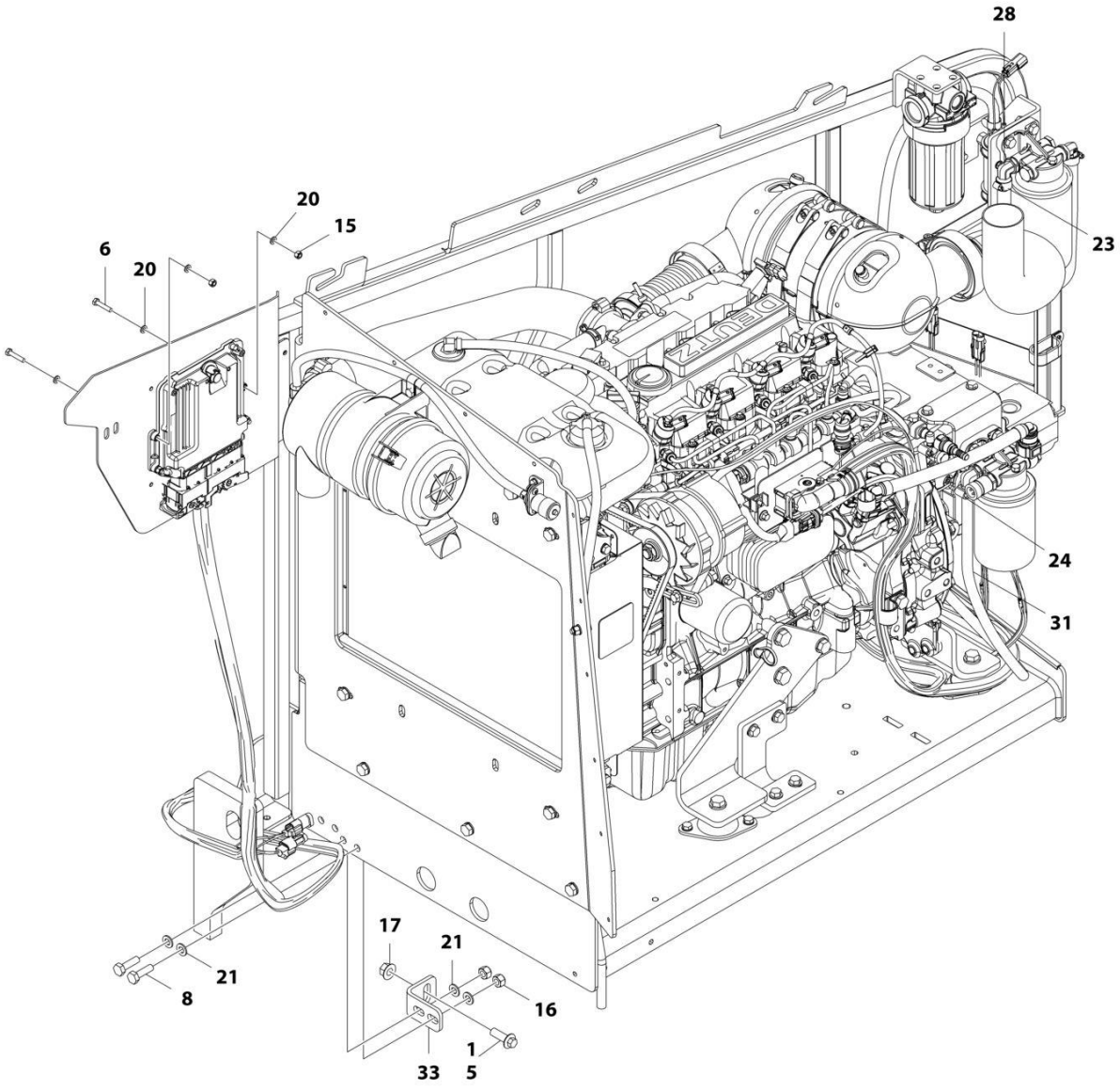
28
20
15
6
20
23
24
31
17
21
21
8
16
1
33
5
ART_1001215382_3OF3

FIGURE 3-7. ENGINE INSTALLATION - DEUTZ D2.9L4 ENGINE (CHINA SPEC)

ITEM	PART NUMBER	QTY	DESCRIPTION	REV
	1001215382	Ref	ENGINE INSTALLATION - DEUTZ D2.9L4 ENGINE (CHINA SPEC)	A
		Ref	Note: For pump installation (See ENGINE AND PUMP SUB-ASSEMBLY - DEUTZ D2.9L4 (WITHOUT ARCTIC PACKAGE) (ANSI AND CSA SPECS)	
1	0100011	AR	Compound, Locking	
2	0100020	AR	Sealant, Pipe	
3	3020037	AR	Lube (Not Shown)	
4	0641812	2	Bolt, 1/2-13 x 1-1/2	
5	5251215	1	Bolt, M12 x 35mm	
6	0760614	4	Bolt, M6 x 30mm	
7	0761014	2	Bolt, M10 x 30mm	
8	0761015	5	Bolt, M10 x 35mm	
9	0761210	1	Bolt, M12 x 20mm	
10	1706060	1	Decal - Warning Explosion/Fire	
11	1701505	1	Decal - Diesel Fuel	
12	2180832	1	Fitting, Barbed	
13	2180876	1	Fitting, Barbed	
14	2720058	2 ft /0.6m	Hose	
15	3290605	22	Nut, Lock M6 x 1	
16	3291005	6	Nut, Lock M10 x 1.5	
17	5261200	1	Nut, Flange M12 Grade 10.9	
20	4811700	10	Washer, M6	
21	4812000	11	Washer, M10	
22	4812100	1	Washer, M12	
23	8405006	2	Clamp	
24	8410013	4	Clamp	
25	8430007	1	Coupling	
26	1001125387	1	Decal - Ultra Low Sulfur Diesel	
28	1001142501	1	Fitting, Barbed 90	
29	1001154405	7.25 ft /2.21m	Hose	
30	1001155823	1	Coupling, Quick Disconnect 90	
31	1001165035	17.25 ft /5.26m	Hose	
33	1001167512	1	Bracket	
34	1001169823	1	Plate, Engine Lock	
35	1001171683	1	Cable, Battery (Red) (Battery Positive to Auxiliary Power Relay)	
36	1001171684	1	Cable, Battery (Black) (Battery Negative to Auxiliary Power Pump)	
37	1001172736	1	Pipe, Exhaust	
38	3422532	1	Pin	
39	0760610	18	Bolt, M6 x 20mm	
40	0760812	3	Bolt, M8 x 25mm	
41	1321716	4	Clamp	
42	1001191832	1	Nut, Rivet M8	
43	4811900	1	Washer, M8	
44	1001181358	1	Harness, Fuel Pump (See ELECTRICAL SECTION for Breakdown)	
45	1001162335	1	Bracket Assembly - Fuel Pump/Filter (See BRACKET ASSEMBLY - FUEL PUMP AND FILTER (DEUTZ D2.9L4 ENGINE) for Breakdown)	

ITEM	PART NUMBER	QTY	DESCRIPTION	REV
46	1320022	1	Clamp	
47	3290805	2	Nut, Lock M8 x 1.25	
48	4811702	1	Washer, M6	
49	4891800	2	Washer, 1/2 Hardened	
50	1001167164	8	Plate, Support	
51	1001170663	1	Bracket	
52	1001170664	1	Seal	
53	1001171953	1	Seal	
54	1001171954	1	Seal	
55	1001172264	1	Seal	
56	1001214042	1	Engine Assembly - Deutz D2.9L4 (See ENGINE ASSEMBLY - DEUTZ D2.9L4 (CHINA SPEC) for Breakdown)	

FIGURE 3-8. ENGINE ASSEMBLY - DEUTZ D2.9L4 ENGINE (CHINA SPEC)

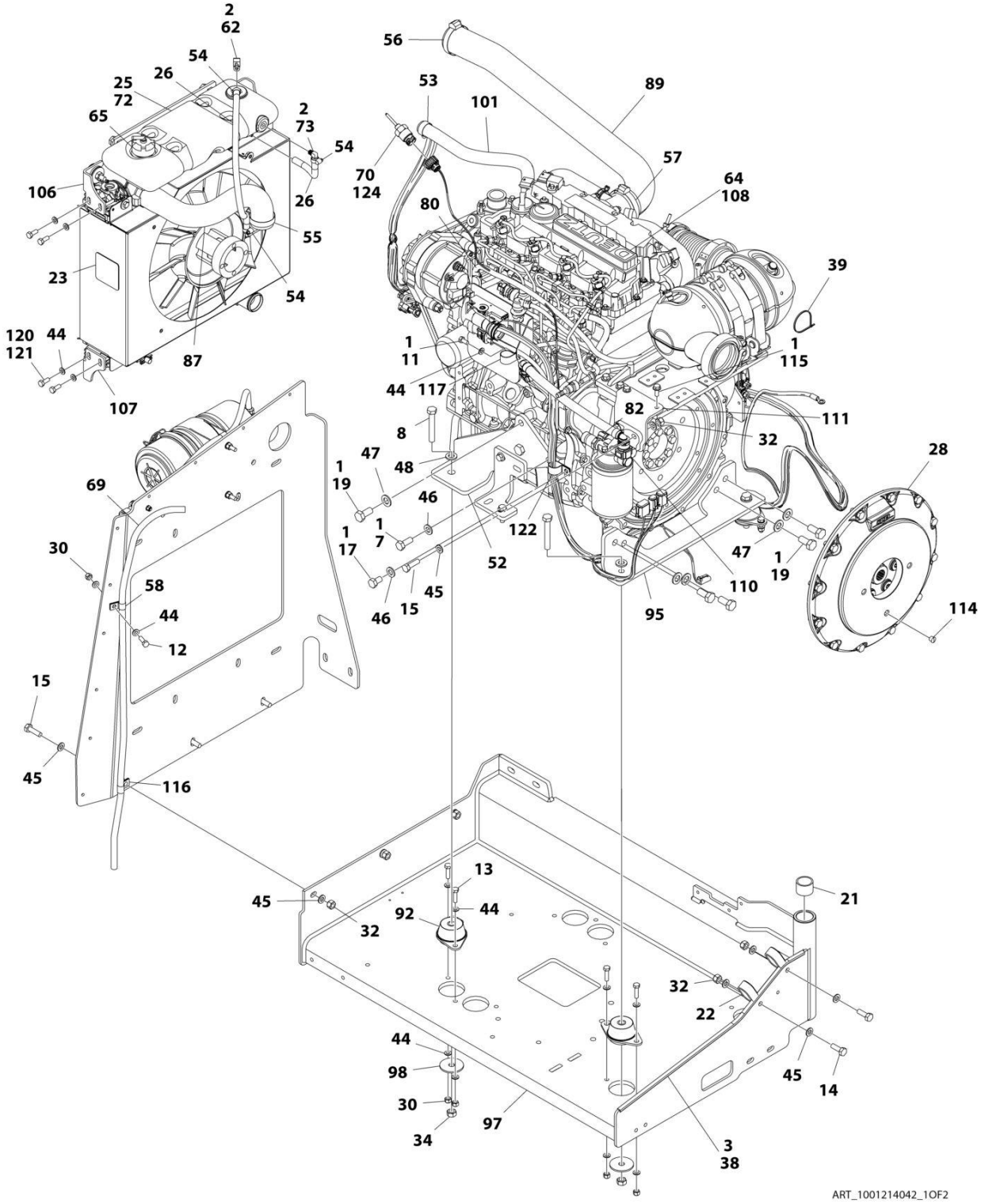

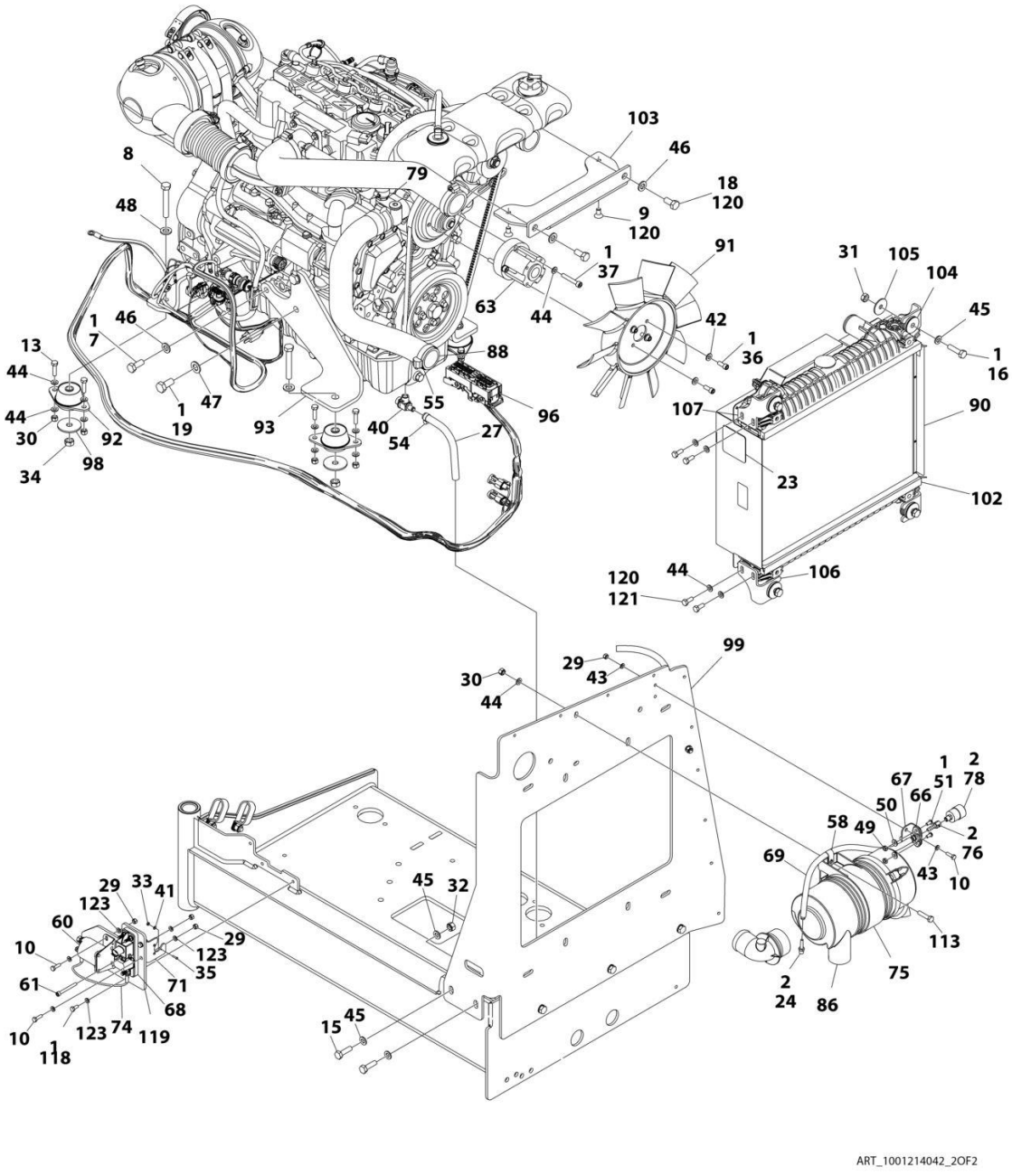
ART_1001214042_2OF2

FIGURE 3-8. ENGINE ASSEMBLY - DEUTZ D2.9L4 ENGINE (CHINA SPEC)

ITEM	PART NUMBER	QTY	DESCRIPTION	REV
	1001214042	Ref	ENGINE ASSEMBLY - DEUTZ D2.9L4 ENGINE (CHINA SPEC)	D
1	0100011	AR	Compound, Locking	
2	0100020	AR	Sealant, Pipe	
3	0100081	AR	Adhesive	
7	0711214	AR	Bolt, M12 x 30mm	
8	0711224	4	Bolt, M12 x 80mm Grade 10.9	
9	0741606	2	Screw, 3/8-16 x .75	
10	0760610	6	Bolt, M6 x 20mm	
11	0760808	1	Bolt, M8 x 16mm	
12	0760812	1	Bolt, M8 x 25mm	
13	0760814	8	Bolt, M8 x 30mm	
14	0761014	2	Bolt, M10 x 30mm	
15	0761015	7	Bolt, M10 x 35mm	
16	0761016	4	Bolt, M10 x 40mm	
17	0761210	1	Bolt, M12 x 20mm	
18	0761212	2	Bolt, M12 x 25mm	
19	0771414	9	Bolt, M14 x 30mm Grade 10.9	
21	0961951	2	Bushing	
22	1321716	2	Clamp	
23	1703162	2	Decal - Caution Fan	
24	2220315	1	Fitting, Straight Barbed	
25	2300004	3 gl/11.3L	Coolant	
26	2720015	2 ft/0.61m	Hose	
27	2720340	8 in/20.3cm	Hose	
28	2902065	1	Pump Coupling Kit (See PUMP COUPLING KIT for Breakdown)	
29	3290605	7	Nut, Lock, M6 x 1	
30	3290805	11	Nut, Lock, M8 x 1.25	
31	3291001	4	Nut, M10 x 1.5	
32	3291005	9	Nut, Lock, M10 x 1.5	
33	3310401	3	Nut, #4-40	
34	3331215	4	Nut, M12 x 1.75	
35	3910408	3	Screw, 4-40 x 1/2	
36	3931512	4	Capscrew, 5/16-18 x 3/4	
37	4031914	4	Bolt, M8 x 50mm	
38	4060805	2.25 ft /0.69m	Trim, Flex Shield	
39	4240099	AR	Tie-Strap	
40	4640751	1	Valve, Oil Drain	
41	4710400	3	Washer, #4	
42	4711500	4	Washer, 5/16	
43	4811700	4	Washer, M6	
44	4811900	35	Washer, M8	
45	4812000	22	Washer, M10	
46	4812100	AR	Washer, M12	
47	4812200	AR	Washer, M14	
48	5241200	4	Washer, M12 Hardened	
49	8305401	2	Nut, Jam,.250-20	
50	8307109	2	Washer, .250	
51	8310548	2	Screw, 1/4-20 x 1/2	

ITEM	PART NUMBER	QTY	DESCRIPTION	REV
52	1001166922	1	Plate, Engine Mount	
53	8405007	2	Clamp	
54	8405009	5	Clamp	
55	8405104	4	Clamp	
56	8405202	1	Clamp	
57	8405204	1	Clamp	
58	8406109	2	Clip	
60	1001117308	1	Relay, 200Amp	
60	3300220	2	Nut	
60	3321001	2	Nut, #10-32	
60	4761000	2	Washer, Lock #10	
60	1001111424	2	Washer	
61	1001118878	1	Bolt, M6 x 55mm	
62	1001134488	1	Fitting, Barbed	
63	1001144116	1	Spacer, Fan	
64	1001136079	2.4 gl /9L	Oil Motor	
65	1001136834	1	Cap, Tank	
66	1001138173	1	Support, Service Indicator	
67	1001138175	1	Bracket, Service Indicator	
68	1001138228	1	Relay, Power Module	
68	70023592	1	Fuse 20Amp	
68	70023593	1	Fuse 30Amp	
69	1001138248	5.25 ft /1.6m	Tube	
70	1001138827	1	Sensor, Coolant Level	
71	1001139240	1	Bracket	
72	1001140535	1	Tank, Surge	
73	1001140564	1	Fitting, Barbed 90	
74	1001141304	1	Harness, Glow Plug	
75	1001141694	1	Clamp, Air Cleaner	
76	1001141995	1	Fitting, Barbed	
78	1001143390	1	Indicator	
79	1001143797	1	Fitting, Barbed	
80	1001178788	1	Cable, Alternator	
82	1001152489	1	Fitting, Barbed 90	
86	1001165388	1	Air Cleaner Assembly	
86	70003783	1	Element, Air Cleaner	
87	1001165405	1	Hose, Upper Radiator	
88	1001165406	1	Hose, Lower Radiator	
89	1001165721	1	Hose, Air Intake	
90	1001165722	1	Radiator	
91	1001165849	1	Fan	
92	1001166718	4	Mount, Motor	
93	1001166921	1	Plate, Engine Mount	
95	1001166924	1	Plate, Engine Mount	
96	1001167108	1	Harness Engine - Deutz D2.9L4 (See ELECTRICAL SECTION for Breakdown)	
97	1001167520	1	Tray, Engine	
98	1001168018	4	Washer, Special	
99	1001168026	1	Plate, Radiator Mounting	
101	1001168099	1	Hose	
102	1001168166	2	Seal	

SECTION 3 - ENGINE

ITEM	PART NUMBER	QTY	DESCRIPTION	REV
103	1001168950	1	Bracket	
104	1001169054	4	Isolator	
105	1001169138	4	Washer, Snubbing	
106	1001169967	2	Bracket	
107	1001170035	2	Bracket	
108	1001214038	1	Engine, Deutz D2.9L4 (See ENGINE COMPONENTS - DEUTZ D2.9L4 ENGINE (CHINA SPEC) for Breakdown)	
110	1001177359	1	Hose	
111	1001178876	1	Mount, Fuel Filter	
113	0760815	2	Bolt, M8 x 35mm	
114	3520054	1	Plug	
115	5250810	2	Bolt, M8 x 20mm	
116	8406110	1	Clip	
117	8406201	1	Clip	
118	0760607	3	Bolt, M6 x 14mm	
119	1001179903	1	Bracket	
120	1001180620	AR	Adhesive	
121	0760810	8	Bolt, M8 x 20mm	
122	1001191620	1	Clamp	
123	4811702	12	Washer, M6	
124	1001182997	AR	Adhesive, Permatex	

FIGURE 3-9. BRACKET ASSEMBLY - FUEL PUMP AND FILTER (DEUTZ D2.9L4 ENGINE)

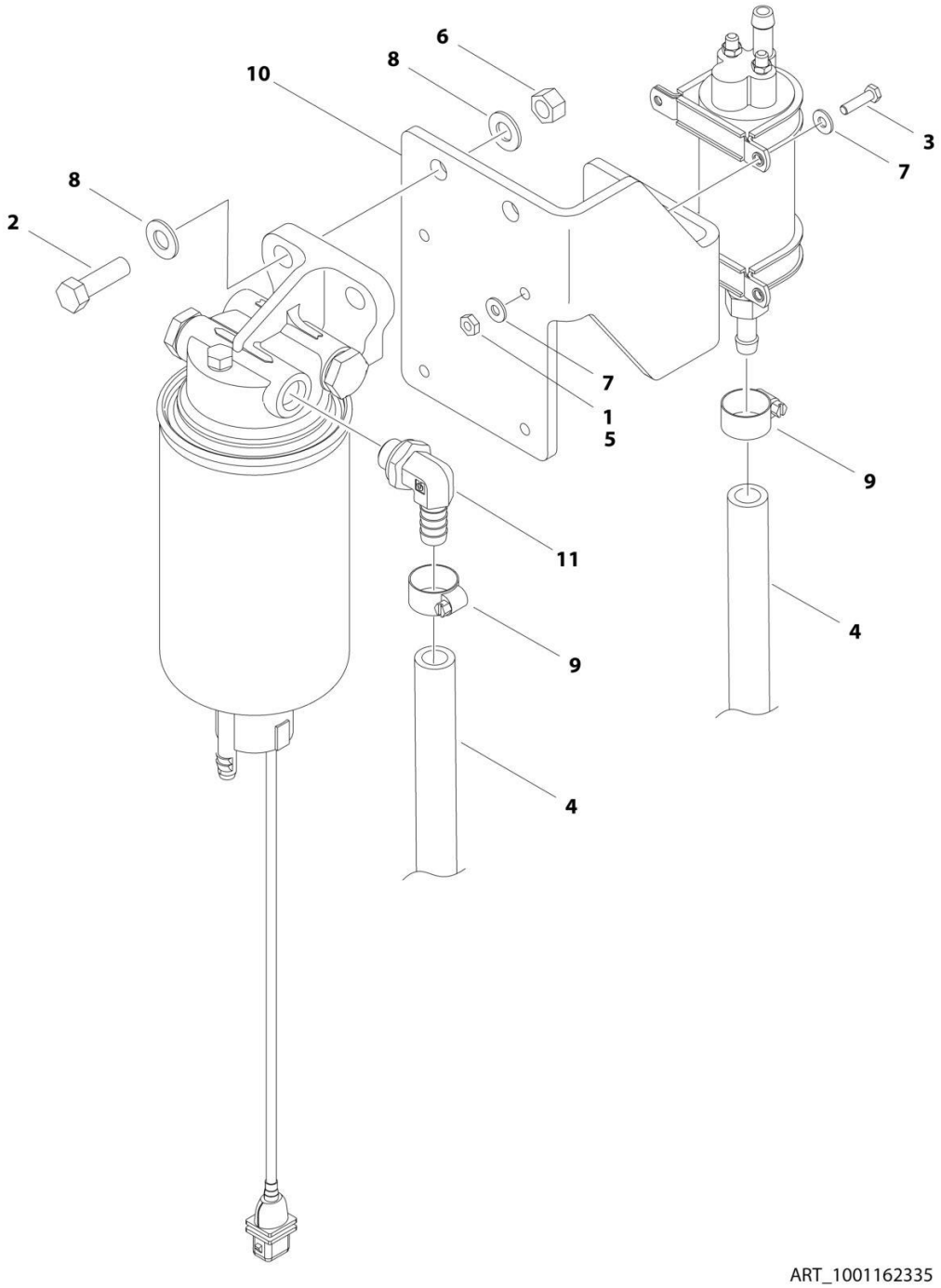

FIGURE 3-9. BRACKET ASSEMBLY - FUEL PUMP AND FILTER (DEUTZ D2.9L4 ENGINE)

ITEM	PART NUMBER	QTY	DESCRIPTION	REV
	1001162335	Ref	BRACKET ASSEMBLY - FUEL PUMP AND FILTER (DEUTZ D2.9L4 ENGINE)	D
1	0100011	AR	Compound, Locking	
2	0641610	2	Bolt, 3/8-16 x 1-1/4	
3	0721006	4	Bolt, #10-24 x 3/4	
4	1001154405	1.5 ft /0.4m	Hose	
5	3311001	4	Nut, #10-20	
6	3311605	2	Nut, Lock 3/8-16	
7	4711000	8	Washer #10	
8	4711600	4	Washer, 3/8	
9	8405006	2	Clamp	
10	1001141870	1	Plate, Fuel Pump Mounting	
11	1001142501	1	Fitting, Elbow Barbed	

FIGURE 3-10. BREATHER HEATER INSTALLATION - DEUTZ D2.9L4 ENGINE WITH ARCTIC PACKAGE

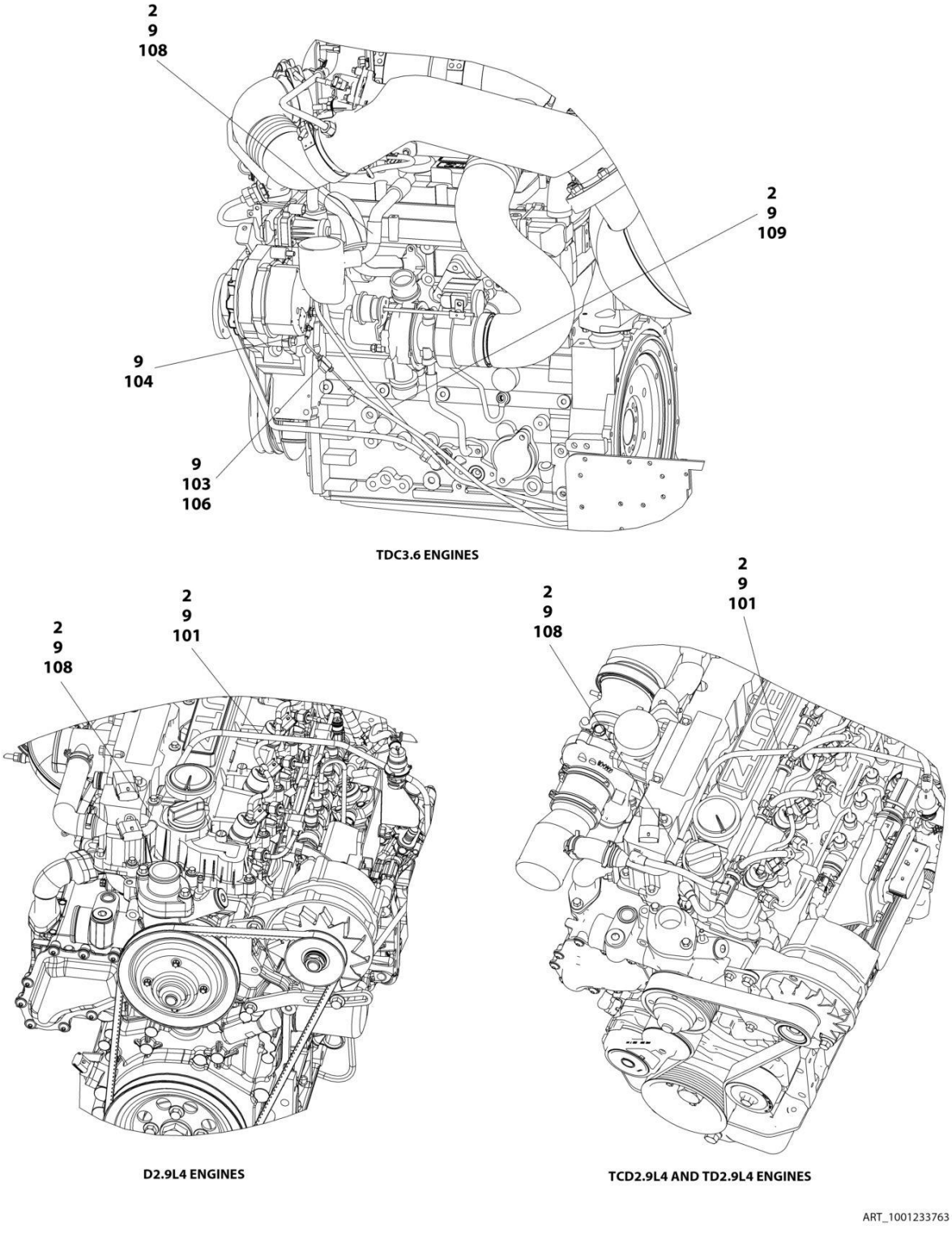

FIGURE 3-10. BREATHER HEATER INSTALLATION - DEUTZ D2.9L4 ENGINE WITH ARCTIC PACKAGE

ITEM	PART NUMBER	QTY	DESCRIPTION	REV
	1001233763	Ref	BREATHER HEATER INSTALLATION - DEUTZ ENGINES	D
2	4240099	AR	Tie-Strap	
9	1001243895	1	Breather Heater Harness	C
101	2820035	AR	Insulation	
103	2400060	1	Fuseholder with Cover	
104	4460043	1	Terminal, Ring	
105	4460722	1	Terminal, Ring (Not Shown)	
106	1001196634	1	Fuse - 2 Amp	
108	1001232842	1	Breather Heater Kit	

FIGURE 3-11. ENGINE COMPONENTS - DEUTZ D2.9L4 ENGINE (ANSI AND CSA SPECS)

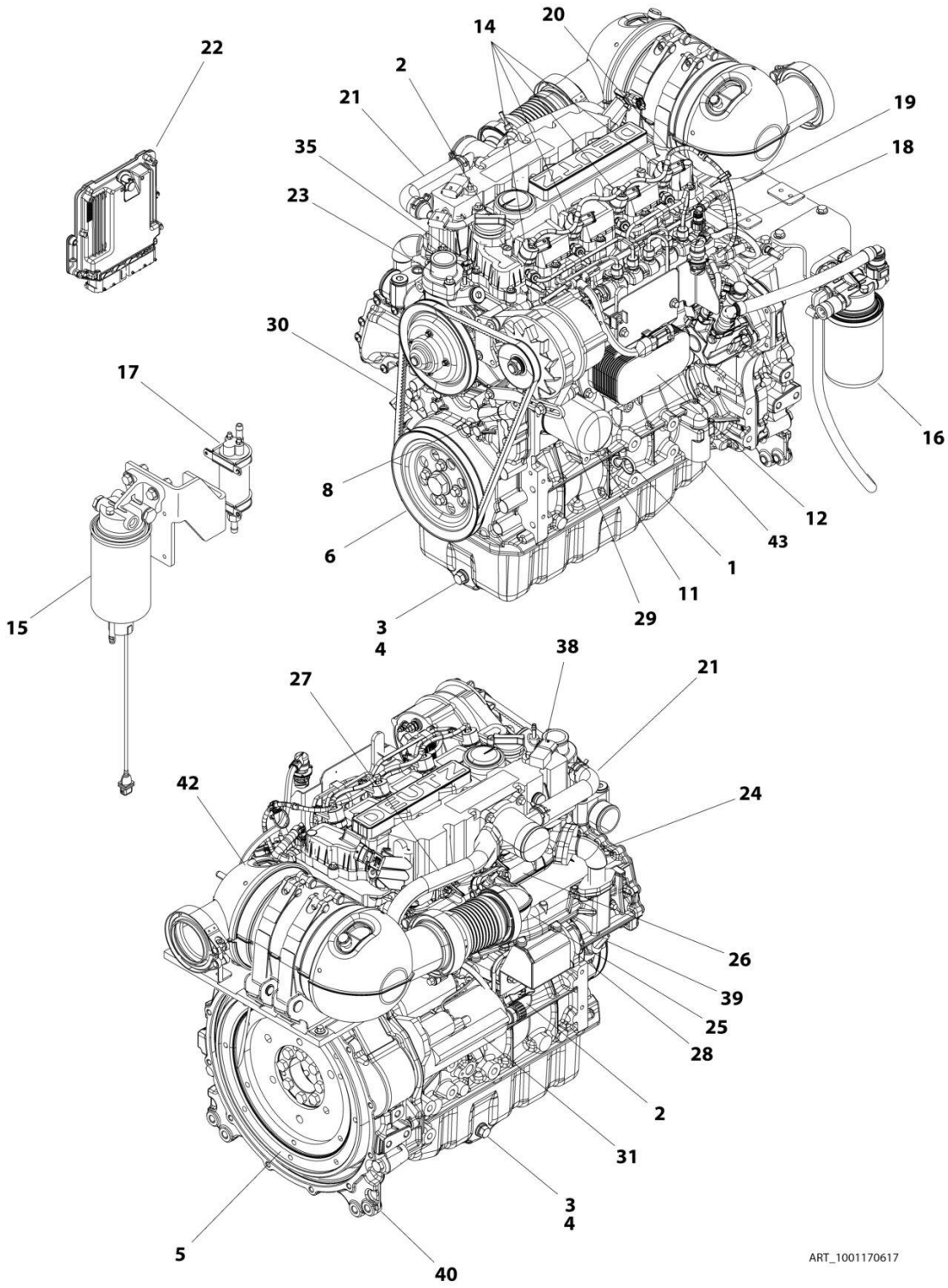

FIGURE 3-11. ENGINE COMPONENTS - DEUTZ D2.9L4 ENGINE (ANSI AND CSA SPECS)

ITEM	PART NUMBER	QTY	DESCRIPTION	REV
	1001170617	Ref	ENGINE COMPONENTS - DEUTZ D2.9L4 ENGINE (ANSI AND CSA SPECS)	E
1	70024904	1	Dipstick	
1	70024905	1	O-Ring	
2	7020465	2	Cap, Filler	
3	70025088	2	Plug, Oil	
4	7020404	2	Ring, Sealing	
5	70001870	1	Flywheel	
5	7024579	1	Ring, Gear	
6	70025198	1	Pulley, Crank	
7	70024906	1	Gasket, Head (Not Shown)	
7	70025195	1	Gasket, Valve Cover (Not Shown)	
7	70005171	1	Gasket, Valve Cover (Not Shown)	
8	70025076	1	Valve	
8	70025091	1	Plug	
8	70025176	1	Spring	
8	70025082	1	Seal	
9	70004280	1	Seal, Crankshaft (Front) (Not Shown)	
9	70002718	1	Seal, Crankshaft (Rear) (Not Shown)	
10	70005172	1	Pump, Oil Lube (Not Shown)	
10	70025135	1	O-Ring (Not Shown)	
10	70005173	1	Gasket (Not Shown)	
11	7016331	1	Filter, Oil	
12	70004275	1	Cooler, Oil	
12	70024925	1	Gasket	
13	70025171	1	Pipe, Oil Suction (Not Shown)	
14	70004281	4	Injector, Fuel	
14	70025140	4	Washer, Sealing	
14	70025146	4	Clamp (Top of Injector)	
14	70025145	4	O-Ring	
14	70025154	4	Shoe, Clamping	
15	70024961	1	Bracket, Fuel Filter	
15	70025153	1	Filter, Fuel	
15	70024513	1	Cable, Sensor	
15	70025239	1	Seal	
16	70025160	1	Bracket, Fuel Filter	
16	70025161	1	Filter, Fuel	
16	70024504	1	Sensor, Pressure	
16	70024920	1	O-Ring	
16	70004513	2	Ring, Sealing	
17	70005174	NLA	Pump, Fuel (Use p/n 1001226098)	
17	70025144	2	Clamp	
18	70025151	1	Rail, Fuel	
18	70025235	1	Repair Kit	
18	70025240	1	O-Ring	
19	70025182	1	Line, Fuel (Cylinder 1 + 2)	
19	70025183	1	Line, Fuel (Cylinder 3 + 4)	
19	70025184	1	Line, Fuel (Fuel Rail to Pump)	
20	70024502	1	Fuel Return pipe	
20	70025185	1	Hose, Fuel	

ITEM	PART NUMBER	QTY	DESCRIPTION	REV
20	70025101	2	Clamp	
20	70025109	2	Clamp	
20	70025115	1	Clamp, Pipe	
20	70025133	1	Hose	
20	70025148	1	Connector, Plug-in	
21	70005182	1	Elbow, Air Charger	
21	70005176	1	O-Ring	
21	70005177	1	Gasket	
21	70005180	1	Line, Breather	
21	70005181	1	O-Ring	
21	70005183	1	Line, Breather	
21	70025111	2	Clamp	
22	70025210	1	Module, ECU	
23	70024910	1	Pump, Water	
23	70025084	1	Plug	
23	7020492	1	O-Ring	
23	70025200	1	Seal	
23	70024473	1	Thermostat	
23	70005184	1	O-Ring (Thermostat)	
23	70025142	1	Cover, Thermostat	
23	70025159	1	Pulley, Water Pump	
24	70025177	1	Pipe	
24	70025179	1	Gasket	
25	70005185	1	Manifold	
25	70024912	1	Gasket	
26	70004282	1	Manifold, Exhaust	
26	70025164	1	Gasket, Exhaust Manifold	
27	70005186	1	Pipe	
27	70025179	1	Gasket (Two Hole)	
27	70025180	1	Gasket (Three Hole)	
28	70004283	1	Module, ERG	
28	70005188	1	Valve, Control	
28	70005189	1	Parts, Service	
29	70024914	1	Alternator	
29	70025149	1	Regulator	
29	70025131	1	Fan	
29	70025150	1	Pulley	
29	70025191	1	Plate, Retaining	
29	70025201	1	Bracket, Alternator	
30	70024913	1	V-Belt	
31	70024915	1	Starter	
32	70025231	1	Harness, Glow Plug (Not Shown)	
32	70025233	1	Connector (Not Shown)	
33	70025221	1	Connector, Plug-In (Not Shown)	
33	70025781	1	Connector, Plug-In (Not Shown)	
33	70025779	1	Ring, Fastening (Not Shown)	
34	70004284	1	Harness, Engine (Not Shown)	
34	70025165	1	Plate, Retaining (Not Shown)	
34	70025216	1	Adapter (Not Shown)	
34	70025215	1	Bracket, Fixing (Not Shown)	
34	70025228	2	Bracket (Not Shown)	

ITEM	PART NUMBER	QTY	DESCRIPTION	REV
34	70025226	1	Connector, Plug-In (Not Shown)	
34	70025220	5	Connector, Plug-In (Not Shown)	
34	70025222	3	Connector, Plug-In (Not Shown)	
34	70025223	1	Connector, Plug-In (Not Shown)	
34	70025219	1	Connector, Plug-In (Not Shown)	
34	70025238	1	Connector, Plug-In (Not Shown)	
34	70025221	2	Connector, Plug-In (Not Shown)	
34	70025217	8	Clamp (Not Shown)	
34	70025213	2	Clip (Not Shown)	
34	70025209	1	Bracket (Not Shown)	
34	70025225	1	Support (Not Shown)	
34	70025218	3	Clamp (Not Shown)	
34	70025237	1	Connector, Plug-In (Not Shown)	
34	70025214	1	Cap (Not Shown)	
34	70025224	2	Clamp (Not Shown)	
34	70025166	1	Support, Harness (Not Shown)	
34	70025211	1	Plate, Retaining (Not Shown)	
34	70025189	1	Plate, Retaining (Not Shown)	
34	70025236	1	Support, Harness (Not Shown)	
35	70024918	1	Sender, Temperature	
36	70024504	1	Sensor, Pressure (Not Shown - Located Left Side Front)	
36	70024920	1	O-Ring (Not Shown)	
37	70024503	1	Sensor, Speed (Not Shown)	
37	70005191	1	O-Ring	
38	70024507	1	Sensor, Pressure	
38	70025120	1	Seal	
39	70024503	1	Sensor, Speed	
39	70024917	1	Seal	
40	70025192	1	Housing	
40	70025113	2	Pin	
41	70000345	4	Plug, Glow (Not Shown)	
42	70005446	1	Outlet, Muffler	
42	70025241	1	Clip	
42	70025242	2	Gasket	
42	70004504	1	Compensator	
42	70024512	1	Clamp	
42	70025877	1	Clamp	
43	70124530	1	Valve, Relief	
43	70025660	1	Plug	
43	70124538	1	Spring	
43	70104570	1	Seal	

FIGURE 3-12. ENGINE COMPONENTS - DEUTZ D2.9L4 ENGINE (CHINA SPEC)

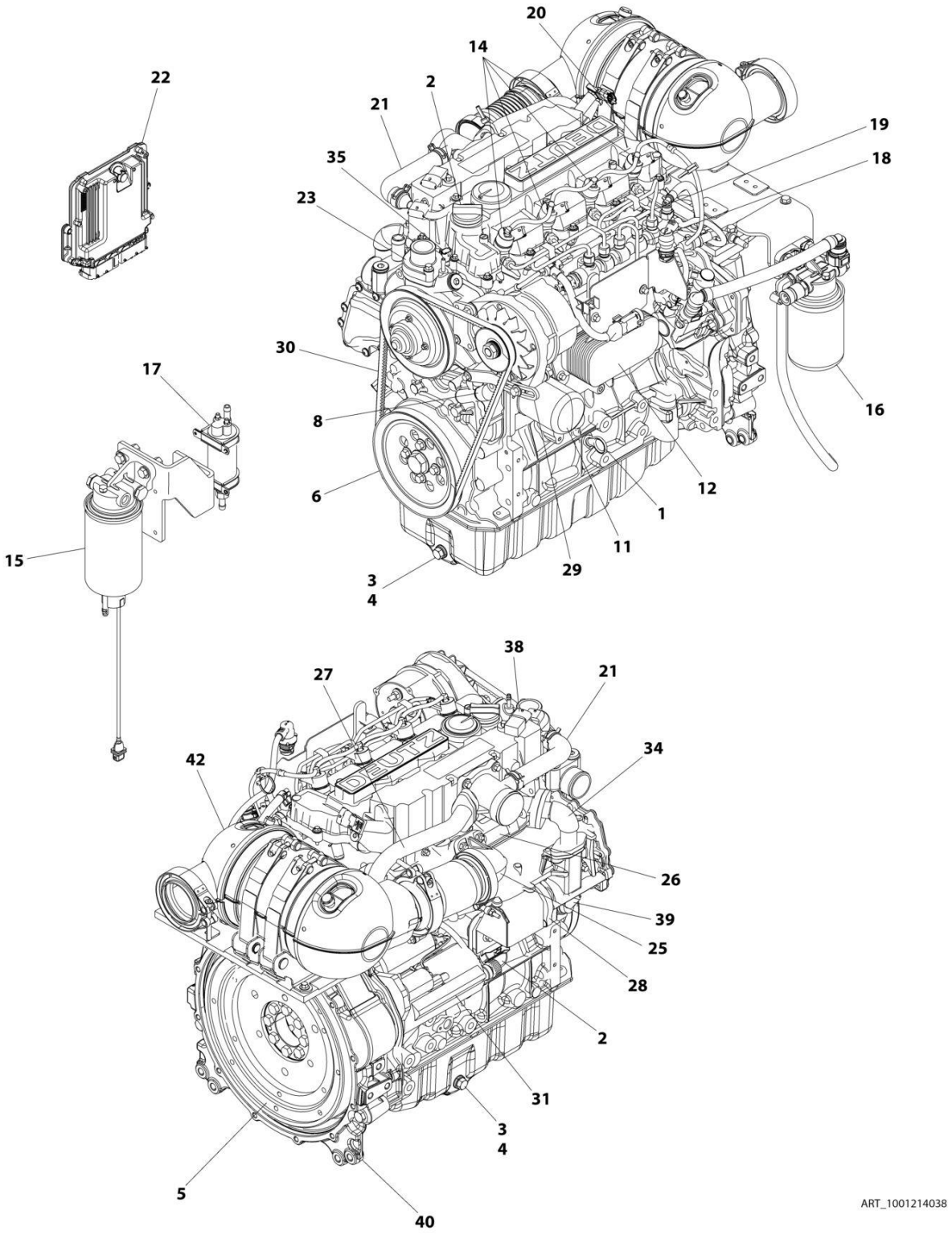

FIGURE 3-12. ENGINE COMPONENTS - DEUTZ D2.9L4 ENGINE (CHINA SPEC)

ITEM	PART NUMBER	QTY	DESCRIPTION	REV
	1001214038	Ref	ENGINE COMPONENTS - DEUTZ D2.9L4 ENGINE (CHINA SPEC)	B
1	70024904	1	Dipstick	
1	70024905	1	O-Ring	
2	7020465	2	Cap, Filler	
3	70005941	2	Plug, Oil	
4	70005942	2	Ring, Sealing	
5	70001870	1	Flywheel	
5	7024579	1	Ring, Gear	
6	70025198	1	Pulley, Crank	
7	70024906	1	Gasket, Head (Not Shown)	
7	70025205	1	Gasket, Valve Cover (Not Shown)	
7	70005171	1	Gasket, Valve Cover (Not Shown)	
8	70025076	1	Valve	
8	70025091	1	Plug	
8	70025176	1	Spring	
8	70025082	1	Seal	
9	70004280	1	Seal, Crankshaft (Front) (Not Shown)	
9	70002718	1	Seal, Crankshaft (Rear) (Not Shown)	
10	70005172	1	Pump, Oil Lube (Not Shown)	
10	70025135	1	O-Ring (Not Shown)	
10	70005173	1	Gasket (Not Shown)	
11	7016331	1	Filter, Oil	
12	70024494	1	Cooler, Oil	
12	70024925	1	Gasket	
13	70025171	1	Pipe, Oil Suction (Not Shown)	
14	70004281	4	Injector, Fuel	
14	70025140	4	Washer, Sealing	
14	70025146	4	Clamp (Top of Injector)	
14	70025145	4	O-Ring	
14	70025154	4	Shoe, Clamping	
15	70024961	1	Fuel Filter Assembly w/Filter	
15	70025153	1	Filter, Fuel	
15	70024513	1	Cable, Sensor	
15	70025239	1	Seal	
16	70025160	1	Fuel Filter Assembly w/Filter	
16	70025161	1	Filter, Fuel	
16	70024504	1	Sensor, Pressure	
16	70024920	1	O-Ring	
16	70004513	2	Ring, Sealing	
17	70005174	NLA	Pump, Fuel (Use p/n 1001226098)	
17	70025144	2	Clamp	
18	70025151	1	Rail, Fuel	
18	70025235	1	Repair Kit	
18	70025240	1	O-Ring	
19	70025182	1	Line, Fuel (Cylinder 1 + 2)	
19	70025183	1	Line, Fuel (Cylinder 3 + 4)	
19	70025184	1	Line, Fuel (Fuel Rail to Pump)	
20	70024502	1	Fuel Return pipe	
20	70025185	1	Hose, Fuel	
20	70025101	2	Clamp	

ITEM	PART NUMBER	QTY	DESCRIPTION	REV
20	70025109	2	Clamp	
20	70025115	1	Clamp, Pipe	
20	70025133	1	Hose	
20	70025148	1	Connector, Plug-in	
21	70005182	1	Elbow, Air Charger	
21	70005176	1	O-Ring	
21	70005177	1	Gasket	
21	70005180	1	Line, Breather	
21	70005181	1	O-Ring	
21	70005183	1	Line, Breather	
21	70025111	2	Clamp	
22	70025210	1	Module, ECU	
23	70024910	1	Pump, Water	
23	70025084	1	Plug	
23	7020492	1	O-Ring	
23	70025200	1	Seal	
23	70005929	1	Thermostat	
23	70005184	1	O-Ring (Thermostat)	
23	70025142	1	Cover, Thermostat	
23	70025159	1	Pulley, Water Pump	
24	70026995	1	Pipe	
24	70025179	1	Gasket	
25	70005185	1	Manifold	
25	70024912	1	Gasket	
26	70004282	1	Manifold, Exhaust	
26	70025164	1	Gasket, Exhaust Manifold	
27	70005186	1	Pipe	
27	70025179	1	Gasket (Two Hole)	
27	70025180	1	Gasket (Three Hole)	
28	70004283	1	Module, ERG	
28	70005188	1	Valve, Control	
28	70005189	1	Parts, Service	
29	70024914	1	Alternator	
29	70025149	1	Regulator	
29	70025131	1	Fan	
29	70025150	1	Pulley	
29	70025191	1	Plate, Retaining	
29	70025201	1	Bracket, Alternator	
30	70024913	1	V-Belt	
31	70024915	1	Starter	
31	70005647	1	Solenoid	
31	70005648	1	Relay	
32	70025231	1	Harness, Glow Plug (Not Shown)	
32	70025233	1	Connector (Not Shown)	
33	70025221	1	Connector, Plug-In (Not Shown)	
33	70025781	1	Connector, Plug-In (Not Shown)	
33	70025779	1	Ring, Fastening (Not Shown)	
34	70004284	1	Harness, Engine (Not Shown)	
34	70025165	1	Plate, Retaining (Not Shown)	
34	70025216	1	Adapter (Not Shown)	
34	70025215	1	Bracket, Fixing (Not Shown)	

ITEM	PART NUMBER	QTY	DESCRIPTION	REV
34	70025228	2	Bracket (Not Shown)	
34	70025226	1	Connector, Plug-In (Not Shown)	
34	70025220	5	Connector, Plug-In (Not Shown)	
34	70025222	3	Connector, Plug-In (Not Shown)	
34	70025223	1	Connector, Plug-In (Not Shown)	
34	70025219	1	Connector, Plug-In (Not Shown)	
34	70025238	1	Connector, Plug-In (Not Shown)	
34	70025221	2	Connector, Plug-In (Not Shown)	
34	70025217	8	Clamp (Not Shown)	
34	70025213	2	Clip (Not Shown)	
34	70025209	1	Bracket (Not Shown)	
34	70025225	1	Support (Not Shown)	
34	70025218	3	Clamp (Not Shown)	
34	70025237	1	Connector, Plug-In (Not Shown)	
34	70025214	1	Cap (Not Shown)	
34	70025224	2	Clamp (Not Shown)	
34	70025166	1	Support, Harness (Not Shown)	
34	70025211	1	Plate, Retaining (Not Shown)	
34	70025189	1	Plate, Retaining (Not Shown)	
34	70025236	1	Support, Harness (Not Shown)	
35	70024918	1	Sender, Temperature	
36	70024504	1	Sensor, Pressure (Not Shown - Located Left Side Front)	
36	70024920	1	O-Ring (Not Shown)	
37	70026210	1	Sensor, Speed (Not Shown)	
37	70005191	1	O-Ring	
38	70024507	1	Sensor, Pressure	
38	70025120	1	Seal	
39	70026210	1	Sensor, Speed	
39	70024917	1	Seal	
40	70025192	1	Housing	
40	70025113	2	Pin	
41	70000345	4	Plug, Glow (Not Shown)	
42	70005446	1	Outlet, Muffler	
42	70025877	1	Clamp	
42	70025242	2	Gasket	
42	70004504	1	Compensator	
42	70005527	1	Clamp	
42	70025877	1	Clamp	
42	70005940	1	Muffler	
43	70024924	1	High Pressure Fuel Pump	
43	70025152	1	O-Ring	
43	70004505	1	Valve, Overflow	
43	70004506	1	O-Ring	
43	70004507	1	O-Ring	
43	70004508	1	Valve, Controller	
43	70004509	1	O-Ring	
43	70004510	1	Gasket	
43	70024517	1	Seal	

FIGURE 3-13. ENGINE INSTALLATION - DEUTZ D2011 ENGINE (WITHOUT ARCTIC PACKAGE) (ANSI EXPORT, AUSTRALIAN, CE AND CHINA SPECS)

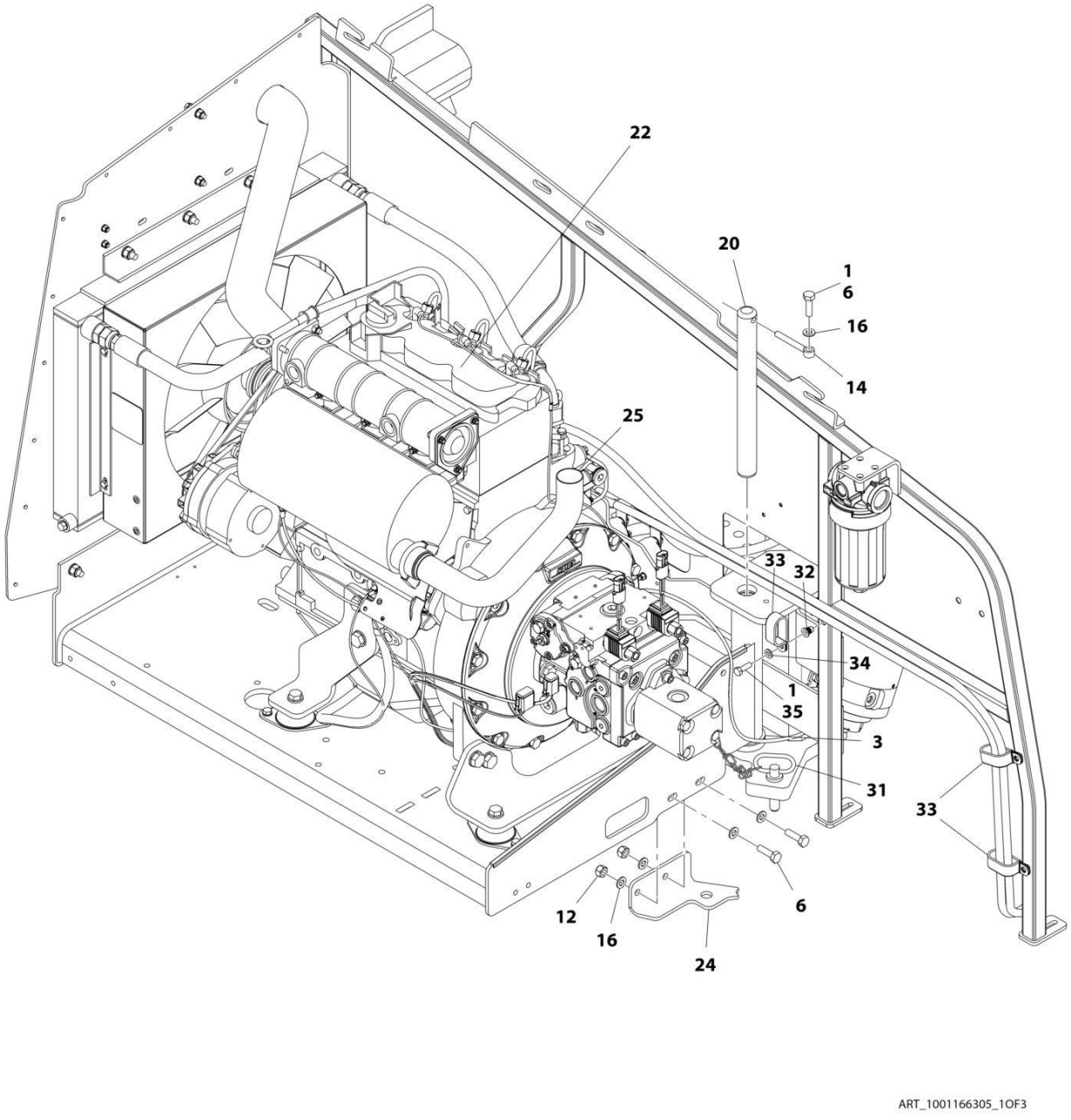

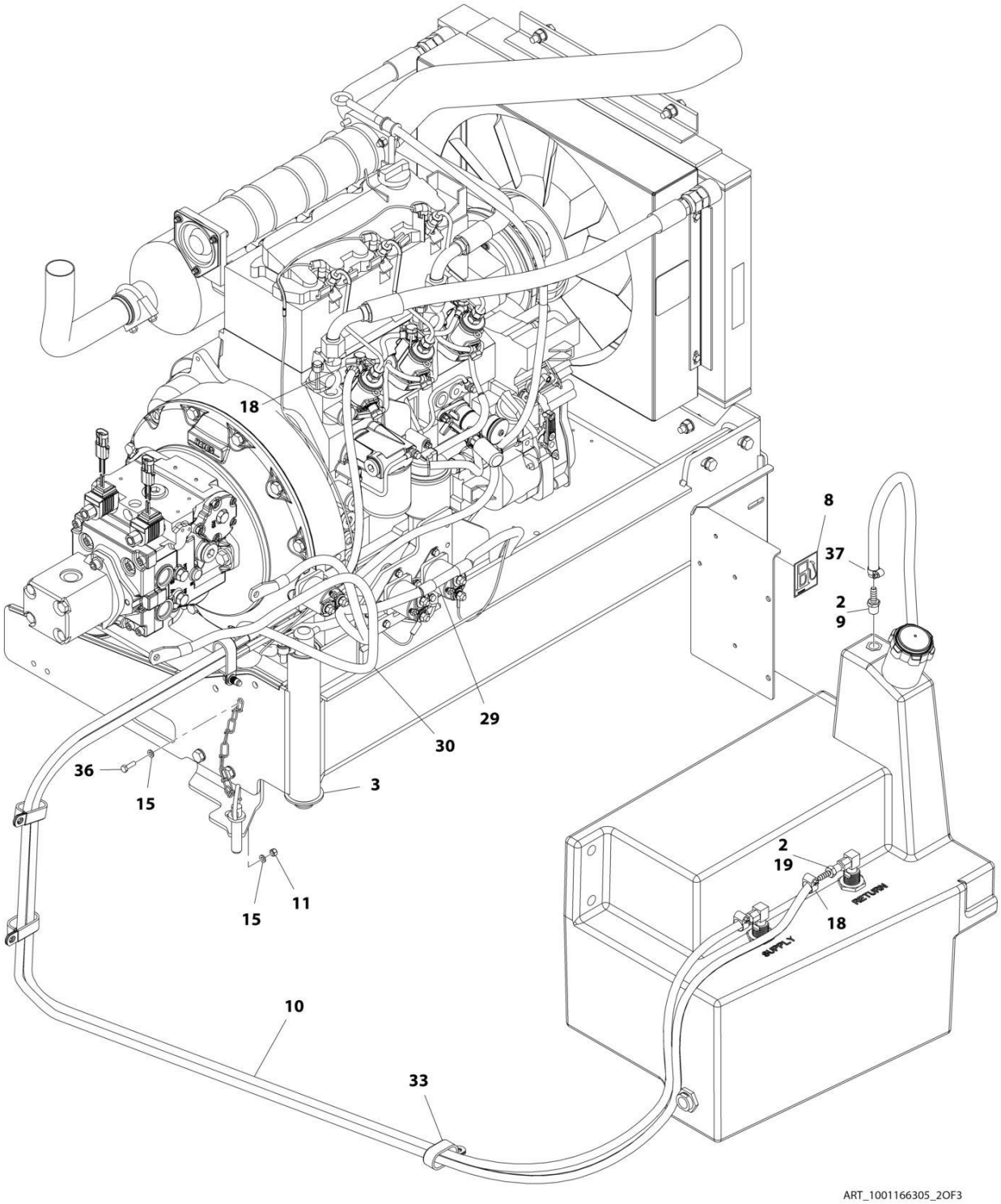
18
8
37
2
9
29
30
36
15
3
15
11
2
19
18
RETURN
SUPPLY
10
33
ART_1001166305_2OF3

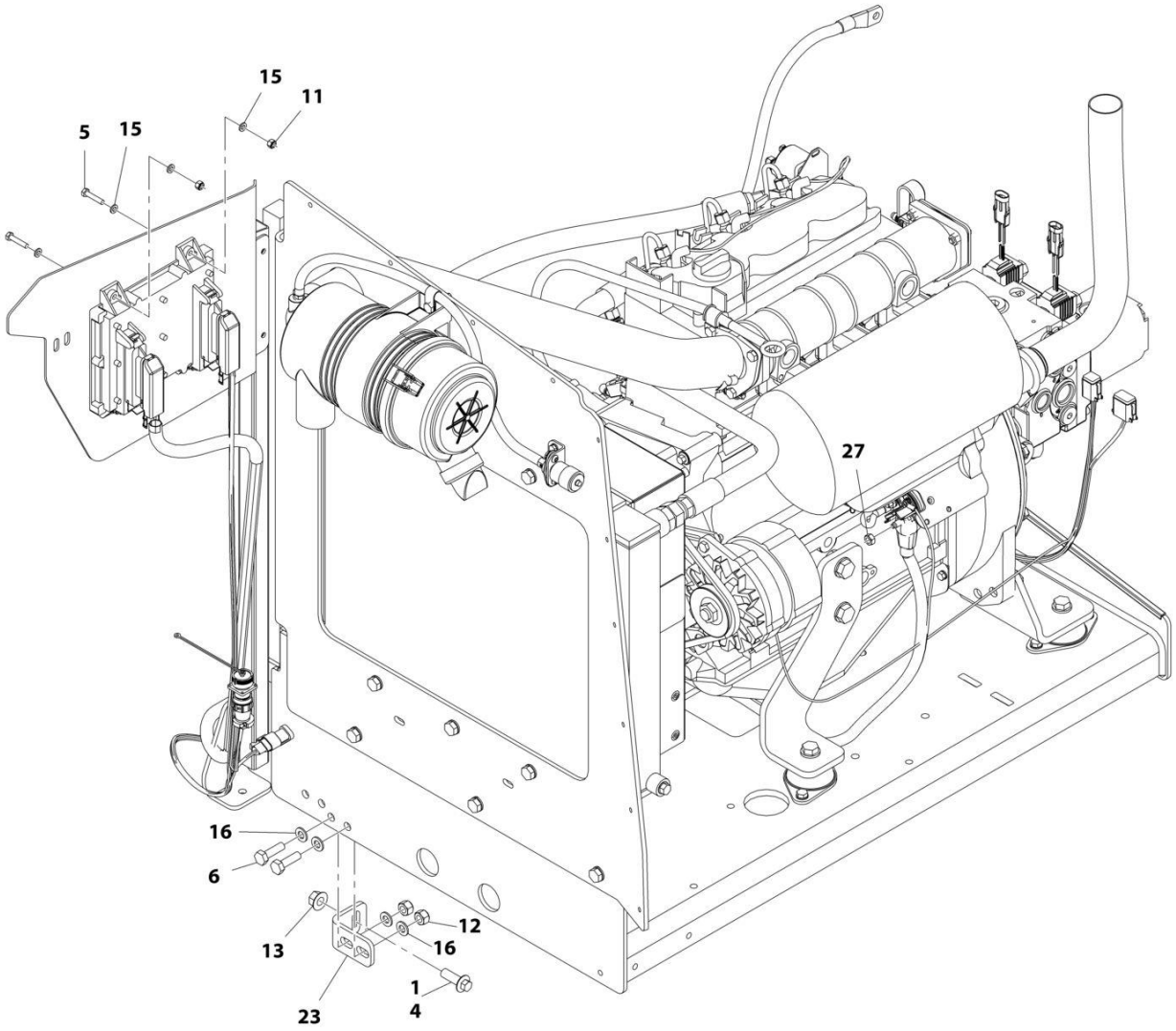

ART_1001166305_3OF3

FIGURE 3-13. ENGINE INSTALLATION - DEUTZ D2011 ENGINE (WITHOUT ARCTIC PACKAGE) (ANSI EXPORT, AUSTRALIAN, CE AND CHINA SPECS)

ITEM	PART NUMBER	QTY	DESCRIPTION	REV
	1001166305	Ref	ENGINE INSTALLATION - DEUTZ D2011 ENGINE (WITHOUT ARCTIC PACKAGE) (ANSI EXPORT, AUSTRALIAN, CE AND CHINA SPECS)	F
1	0100011	AR	Compound, Locking	
2	0100020	AR	Sealant, Pipe	
3	0440162	1	Bearing	
4	5251215	1	Bolt, M12 x 35mm	
5	0760614	4	Bolt, M6 x 30mm	
6	0761015	5	Bolt, M10 x 35mm	
7	1704972	1	Decal - Warning Explosion/Fire	
8	1701505	1	Decal - Diesel Fuel	
9	2180876	1	Fitting, Barbed	
10	2720058	22 ft /6.7m	Hose	
11	3290605	5	Nut, Lock M6 x 1	
12	3291005	4	Nut, Lock M10 x 1.5	
13	5261200	1	Nut, Flange M12 Grade 10.9	
14	3841143	1	Keeper, Pin	
15	4811700	10	Washer, M6	
16	4812000	9	Washer, M10	
18	8410013	4	Clamp	
19	2180348	2	Fitting, Barbed	
20	1001135196	1	Pin	
22	1001166021	1	Engine and Pump Sub-Assembly - Deutz D2011 (Without Arctic Package) (ANSI Export, Australian, CE and China Specs) (See ENGINE AND PUMP SUB-ASSEMBLY - DEUTZ D2011 (WITHOUT ARCTIC PACKAGE) (ANSI EXPORT, AUSTRALIAN, CE AND CHINA SPECS) for Breakdown)	
23	1001167512	1	Bracket, Engine	
24	1001169823	1	Bracket, Engine	
25	1001172202	1	Pipe, Exhaust	
27	3290801	1	Nut, M8 x 1.25	
29	1001171681	1	Cable, Battery (Red) (Battery Positive to Auxiliary Power Relay)	
30	1001171682	1	Cable, Battery (Black) (Battery Negative to Auxiliary Power Pump)	
31	3422532	1	Pin	
32	1001191832	1	Nut, Rivet, M8	
33	1321716	4	Clamp	
34	4811900	1	Washer, M8	
35	0760812	1	Bolt, M8 x 25mm	
36	0760610	1	Bolt, M6 x 20mm	
37	1320022	1	Clamp	

FIGURE 3-14. ENGINE AND PUMP SUB-ASSEMBLY - DEUTZ D2011 (WITHOUT ARCTIC PACKAGE) (ANSI EXPORT, AUSTRALIAN, CE AND CHINA SPECS)

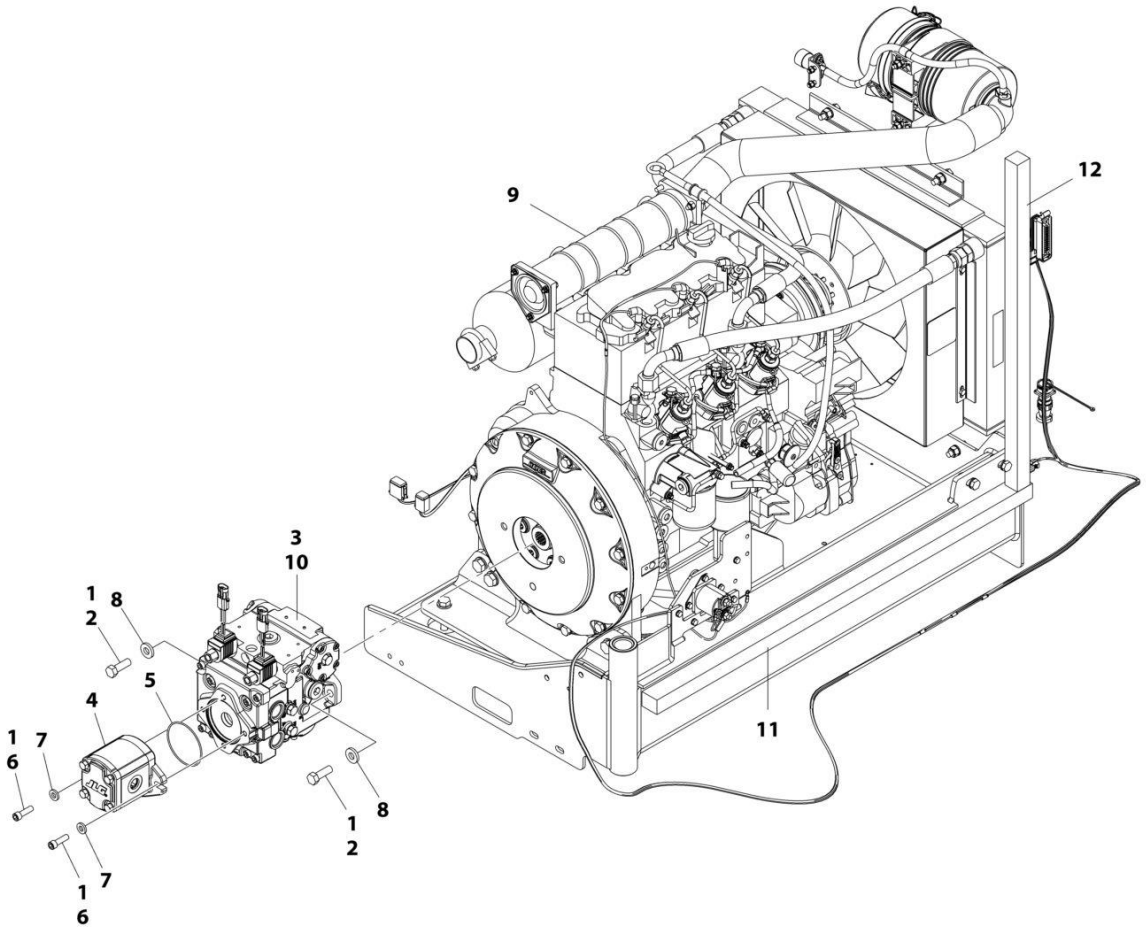

FIGURE 3-14. ENGINE AND PUMP SUB-ASSEMBLY - DEUTZ D2011 (WITHOUT ARCTIC PACKAGE) (ANSI EXPORT, AUSTRALIAN, CE AND CHINA SPECS)

ITEM	PART NUMBER	QTY	DESCRIPTION	REV
	1001166021	Ref	ENGINE AND PUMP SUB-ASSEMBLY - DEUTZ D2011 (WITHOUT ARCTIC PACKAGE) (ANSI EXPORT, AUSTRALIAN, CE AND CHINA SPECS)	E
1	0100011	AR	Compound, Locking	
2	0641812	2	Bolt, 1/2-13 x 1-1/2	
3	3020037	AR	Lube	
4	3600242	1	Gear Pump Assembly (See GEAR PUMP ASSEMBLY for Breakdown) **(SN 0300201991 through 0300233105, SN E300002833 through E300004770)**	
4	1001214207	1	Gear Pump Assembly **(SN 0300233106 through 0300272317, SN 1300007279 through 1300007373, SN B300003516 through B300005760, SN E300004771 through E300007990, Except SN 0300272185 through 0300272190, Excluding B300005569 and E300007814)**	
4	70006356	1	Seal Kit - 1001214207 Pump	
5	3790152	1	O-Ring	
6	3931620	2	Capscrew 3/8 x 1-1/4	
6	3931618	2	Capscrew 3/8 x 1-1/8	
7	4891600	2	Washer, 3/8 Hardened	
8	4891800	2	Washer, 1/2 Hardened	
9	1001166020	1	Engine Assembly - Deutz D2011 Engine (Without Arctic Package) (ANSI Export, Australian, CE and China Specs) (See ENGINE ASSEMBLY - DEUTZ D2011 ENGINE (WITHOUT ARCTIC PACKAGE) (ANSI EXPORT, AUSTRALIAN, CE AND CHINA SPECS) for Breakdown)	
10	1001167036	1	Piston Pump Assembly (See PISTON PUMP ASSEMBLY for Breakdown)	
11	1001171953	1	Seal	
12	1001171954	1	Seal	

FIGURE 3-15. ENGINE ASSEMBLY - DEUTZ D2011 ENGINE (WITHOUT ARCTIC PACKAGE) (ANSI EXPORT, AUSTRALIAN, CE AND CHINA SPECS)

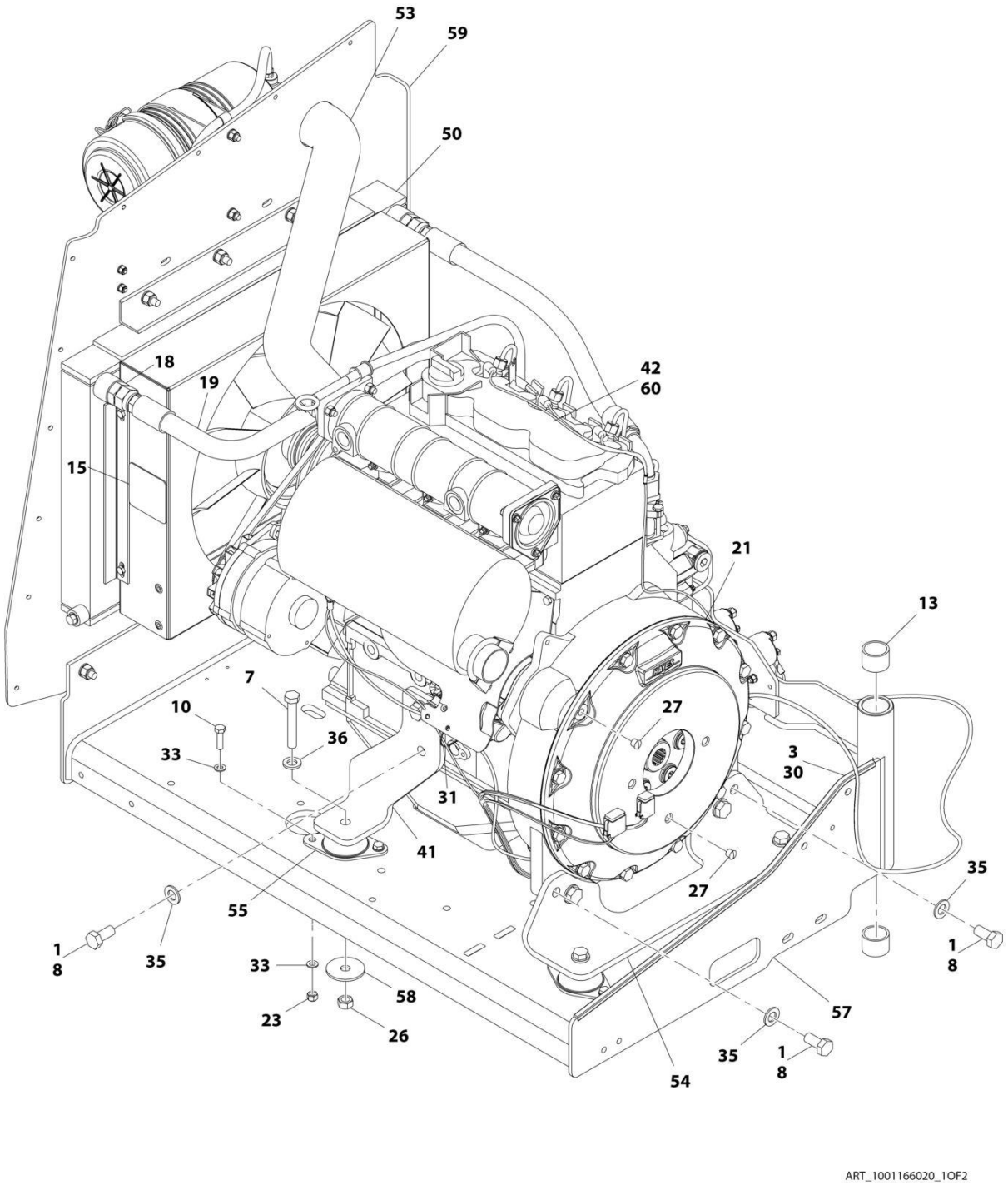

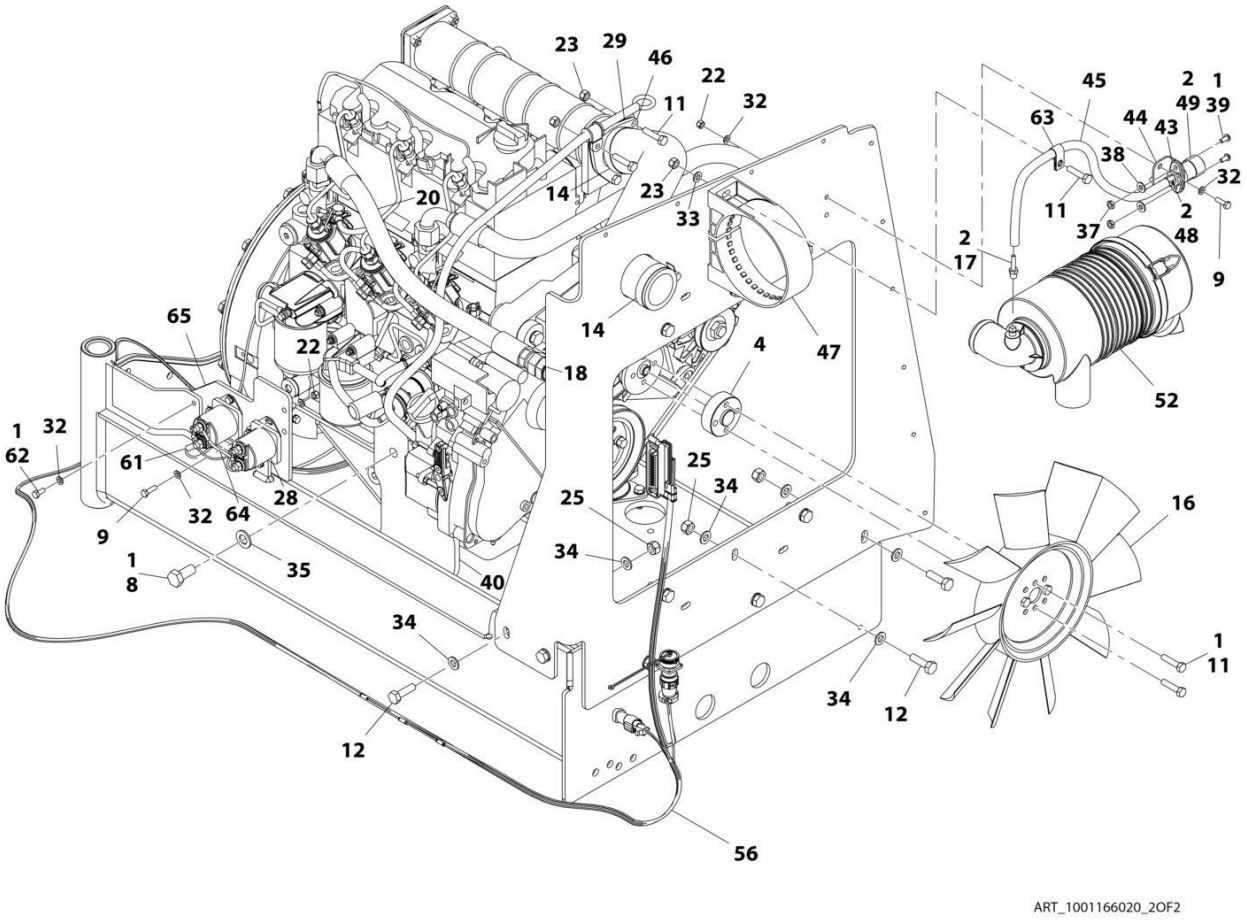

ART_1001166020_2OF2

FIGURE 3-15. ENGINE ASSEMBLY - DEUTZ D2011 ENGINE (WITHOUT ARCTIC PACKAGE) (ANSI EXPORT, AUSTRALIAN, CE AND CHINA SPECS)

ITEM	PART NUMBER	QTY	DESCRIPTION	REV
	1001166020	Ref	ENGINE ASSEMBLY - DEUTZ D2011 ENGINE (WITHOUT ARCTIC PACKAGE) (ANSI EXPORT, AUSTRALIAN, CE AND CHINA SPECS)	K
1	0100011	AR	Compound, Locking	
2	0100020	AR	Sealant, Pipe	
3	0100081	AR	Adhesive	
4	0080231	1	Spacer, Fan	
7	0711224	4	Bolt, M12 x 80mm Grade 10.9	
8	0771414	8	Bolt, M14 x 30mm Grade 10.9	
9	0760610	6	Bolt, M6 x 20mm	
10	0760814	8	Bolt, M8 x 30mm	
11	0760815	9	Bolt, M8 x 35mm	
12	0761015	11	Bolt, M10 x 35mm	
13	0961951	2	Bushing	
14	1320016	2	Clamp	
15	1703162	2	Decal - Caution Fan	
16	2060025	1	Fan	
17	2220315	1	Fitting, Barbed	
18	2220451	2	Fitting, Straight JIC/ORB	
19	2720398	1	Hose	
20	2720447	1	Hose	
21	2902065	1	Pump Coupling Kit (See PUMP COUPLING KIT for Breakdown)	
22	3290605	6	Nut, Lock, M6 x 1	
23	3290805	13	Nut, Lock M8 x 1.25	
25	3291005	11	Nut, Lock M10 x 1.5	
26	3331215	4	Nut, M12 x 1.75	
27	3520054	2	Plug	
28	3740067	2	Relay Assembly	
28	3300220	2	Nut	
28	3321001	1	Nut, #10-32	
28	3740140	1	Relay	
28	4761000	1	Washer, Lock #10	
28	1001111424	2	Washer	
29	3960407	1	Gasket	
30	4060805	2.25 ft/ 0.69m	Trim, Flex Shield	
31	4240099	AR	Tie-Strap	
32	4811700	15	Washer, M6	
33	4811900	20	Washer, M8	
34	4812000	22	Washer, M10	
35	4812200	8	Washer, M14	
36	5241200	4	Washer, M12 Hardened	
37	8305401	2	Nut, Jam .250-20	
38	8307109	2	Washer, .250	
39	8310548	2	Screw, 1/4 NC x 1/2	
40	1001132195	1	Bracket, Engine Mount	
41	1001132196	1	Bracket, Engine Mount	
42	1001136079	3 gal/ 11.3L	Oil, Motor	
43	1001138173	1	Support, Service Indicator	

ITEM	PART NUMBER	QTY	DESCRIPTION	REV
44	1001138175	1	Bracket, Service Indicator	
45	1001138248	2 ft/ 0.61m	Tube	
46	1001139819	1	Adapter, Air Intake	
47	1001141694	1	Clamp, Air Cleaner	
48	1001141995	1	Fitting, Barbed	
49	1001143390	1	Indicator	
50	1001150998	1	Radiator	
52	1001165388	1	Air Cleaner Assembly	
52	70003783	1	Element, Air Cleaner	
53	1001165389	1	Hose	
54	1001166717	1	Bracket, Engine Mount	
55	1001166718	4	Isolator, Engine Mount	
56	1001167111	1	Harness Engine - Deutz D2011 (See ELECTRICAL SECTION for Breakdown)	
57	1001167520	1	Tray, Engine	
58	1001168018	4	Washer, Snubbing	
59	1001168059	1	Plate, Radiator Mounting	
60	1001170693	1	Engine, Deutz D2011 (See ENGINE COMPONENTS - DEUTZ D2011 ENGINE for Breakdown)	
61	4923451	1	Harness, Glow Plugs	
62	0760614	3	Bolt, M6 x 30	
63	8406109	1	Clip	
64	1001178859	1	Cable, Alternator	
65	1001179903	1	Bracket **(SN 0300201991 through 0300216879, SN E300002833 through E300003245)**	
65	1001214975	1	Bracket **(SN 0300216880 through 0300272317, SN 1300007279 through 1300007373, SN B300003516 through B300005760, SN E300003246 through E300007990, Except SN 0300272185 through 0300272190, Excluding B300005569 and E300007814)**	

FIGURE 3-16. ENGINE INSTALLATION - DEUTZ D2011 ENGINE (WITH ARCTIC PACKAGE) (ANSI EXPORT AND CHINA SPECS)

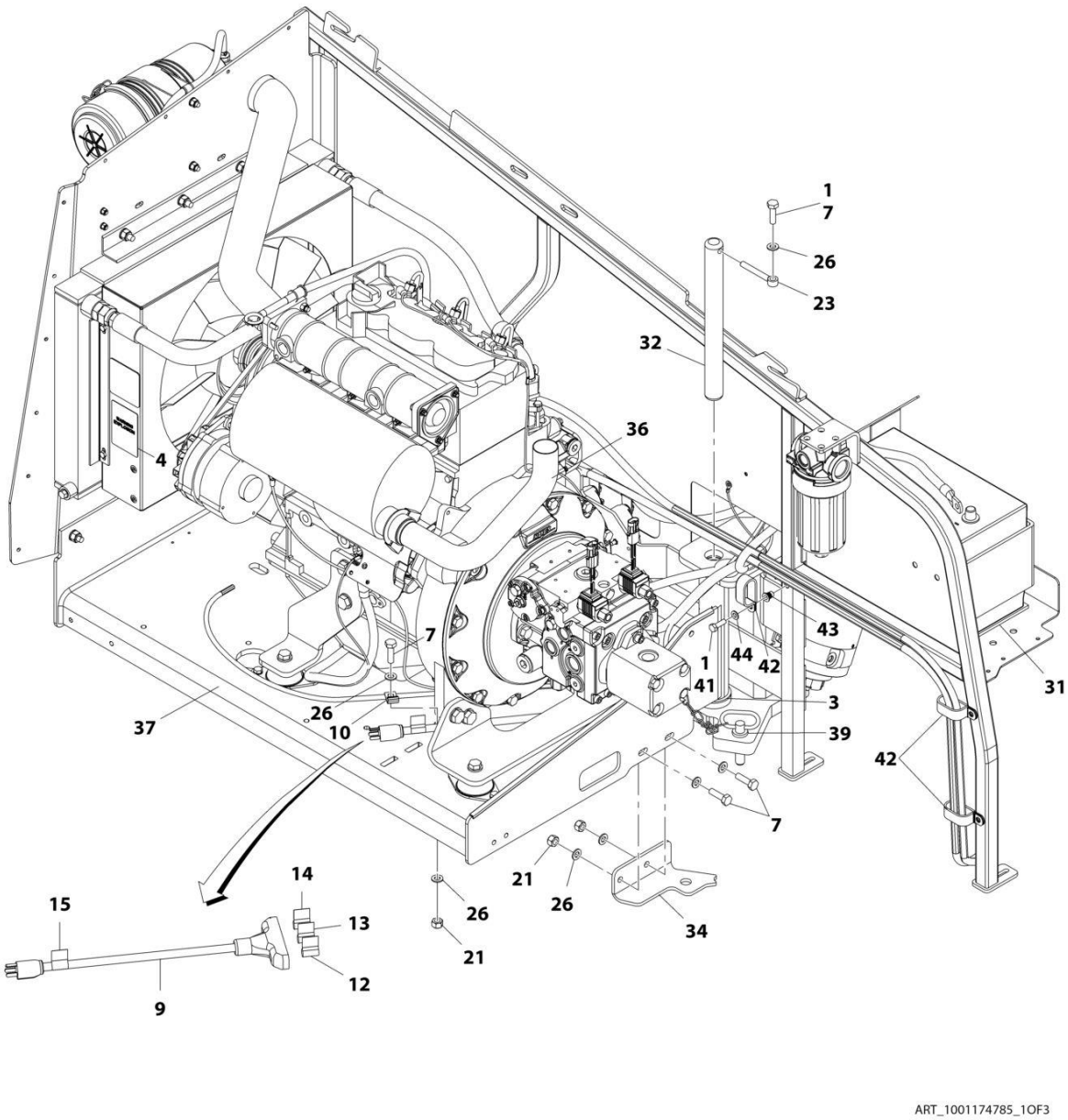

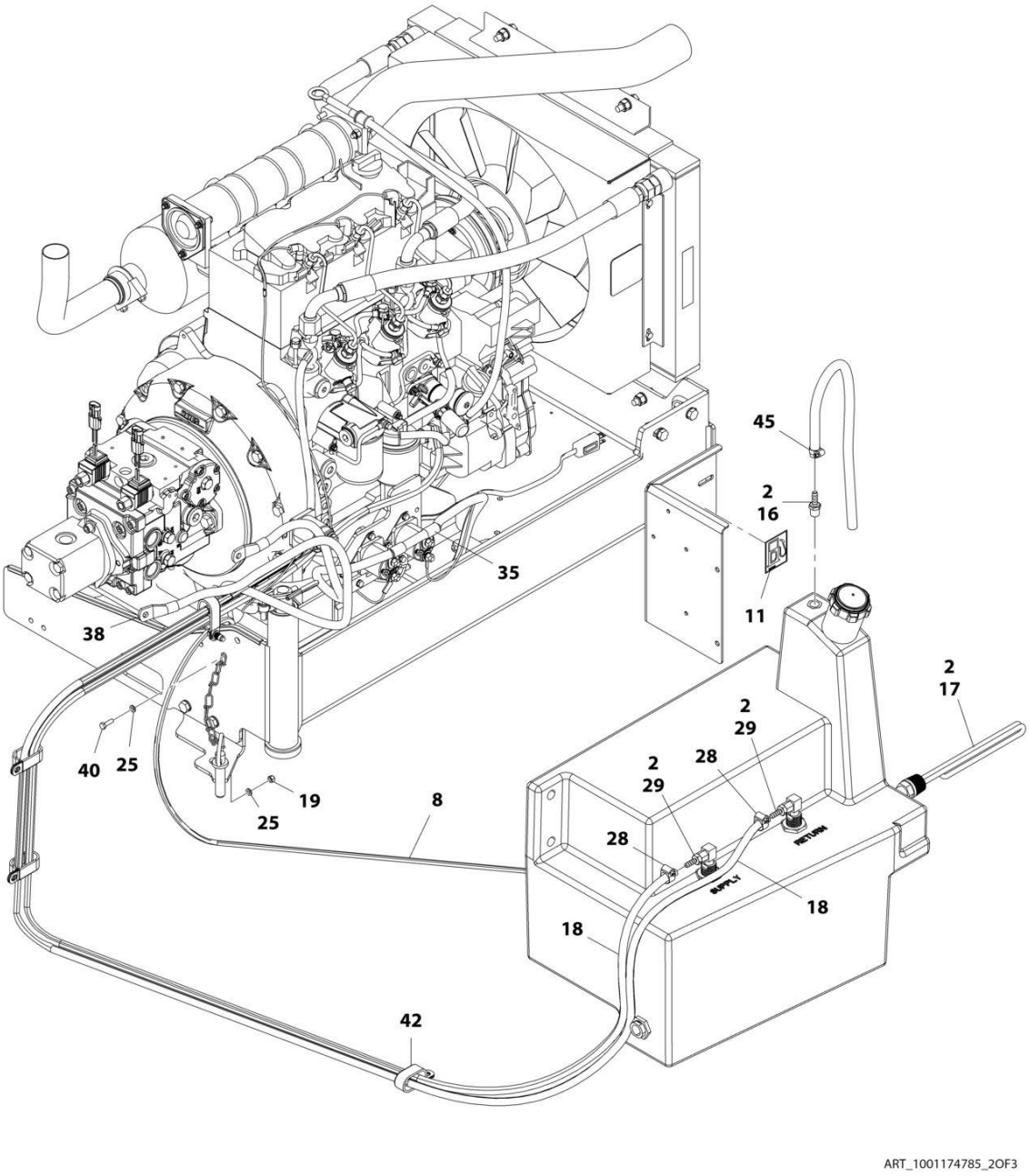
45
2
16
35
11
38
2
17
2
29
28
2
29
40
25
19
25
8
28
18
18
42
ART_1001174785_2OF3

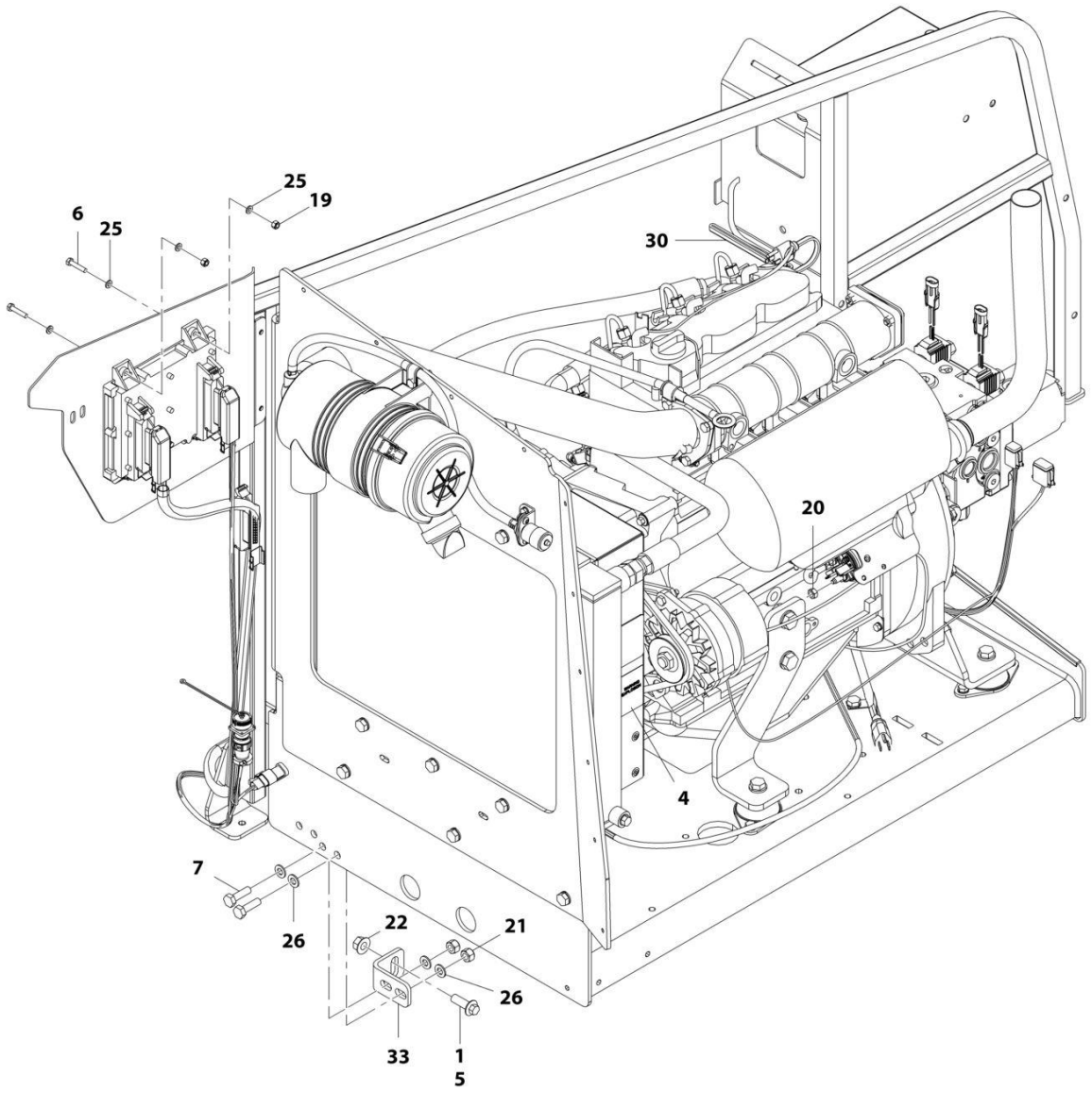

ART_1001174785_3OF3

FIGURE 3-16. ENGINE INSTALLATION - DEUTZ D2011 ENGINE (WITH ARCTIC PACKAGE) (ANSI EXPORT AND CHINA SPECS)

ITEM	PART NUMBER	QTY	DESCRIPTION	REV
	1001174785	Ref	ENGINE INSTALLATION - DEUTZ D2011 ENGINE (WITH ARCTIC PACKAGE) (ANSI EXPORT AND CHINA SPECS)	F
1	0100011	AR	Compound, Locking	
2	0100020	AR	Sealant, Pipe	
3	0440162	1	Bearing	
4	1704972	1	Decal - Warning Explosion/Fire	
5	5251215	1	Bolt, M12 x 35mm	
6	0760614	4	Bolt, M6 x 30mm	
7	0761015	6	Bolt, M10 x 35mm	
8	1060625	1	Cable, Immersion Heater **(SN 0300201991 through 0300206616)**	
9	1060626	1	Plug, 3 Way	
10	1320223	1	Clamp	
11	1701505	1	Decal - Diesel Fuel	
12	1702941	1	Decal - Battery Heater	
13	1702942	1	Decal - Engine Block Heater	
14	1702943	1	Decal - Hydraulic Tank Heater	
15	1702944	1	Decal - Heater Cord	
16	2180876	1	Fitting, Barbed	
17	2580050	1	Heater, Hydraulic Tank **(SN 0300201991 through 0300206616)**	
17	1001188972	1	Heater, Hydraulic Tank **(SN 0300206617 through 0300272317, SN B300003516 through B300005760, Except SN 0300272185 through 0300272190, Excluding B300005569)**	
18	2720058	22 ft /6.7m	Hose	
19	3290605	5	Nut, Lock M6 x 1	
20	3290801	1	Hex Nut, M8 x 1.25	
21	3291005	5	Nut, Lock M10 x 1.5	
22	5261200	1	Nut, Flange M12 Grade 10.9	
23	3841143	1	Keeper, Pin	
25	4811700	10	Washer, M6	
26	4812000	11	Washer, M10	
28	8410013	4	Clamp	
29	2180348	2	Fitting, Barbed	
30	1001097000	1	Heater, Battery **(SN 0300201991 through 0300206616)**	
30	2580024	1	Heater, Battery **(SN 0300206617 through 0300272317, SN B300003516 through B300005760, Except SN 0300272185 through 0300272190, Excluding B300005569)**	
31	1001119278	1	Insulate	
32	1001135196	1	Pin	
33	1001167512	1	Bracket, Engine	
34	1001169823	1	Plate, Engine Lock	
35	1001171681	1	Cable, Battery (Red) (Battery Positive to Auxiliary Power Relay)	
36	1001172202	1	Pipe, Exhaust	
37	1001174784	1	Engine and Pump Sub-Assembly - Deutz D2011 (With Arctic Package) (ANSI Export and China Specs) (See ENGINE AND PUMP SUB-ASSEMBLY - DEUTZ D2011 (WITH ARCTIC PACKAGE) (ANSI EXPORT AND CHINA SPECS) for Breakdown)	
38	1001171682	1	Cable, Battery (Black) (Battery Negative to Auxiliary Power Pump)	
39	3422532	1	Pin	
40	0760610	1	Bolt, M6 x 20mm	
41	0760812	1	Bolt, M8 x 25mm	

ITEM	PART NUMBER	QTY	DESCRIPTION	REV
42	1321716	4	Clamp	
43	1001191832	1	Nut, Rivet M8	
44	4811900	1	Washer, M8	
45	1320022	1	Clamp	

FIGURE 3-17. ENGINE AND PUMP SUB-ASSEMBLY - DEUTZ D2011 (WITH ARCTIC PACKAGE) (ANSI EXPORT AND CHINA SPECS)

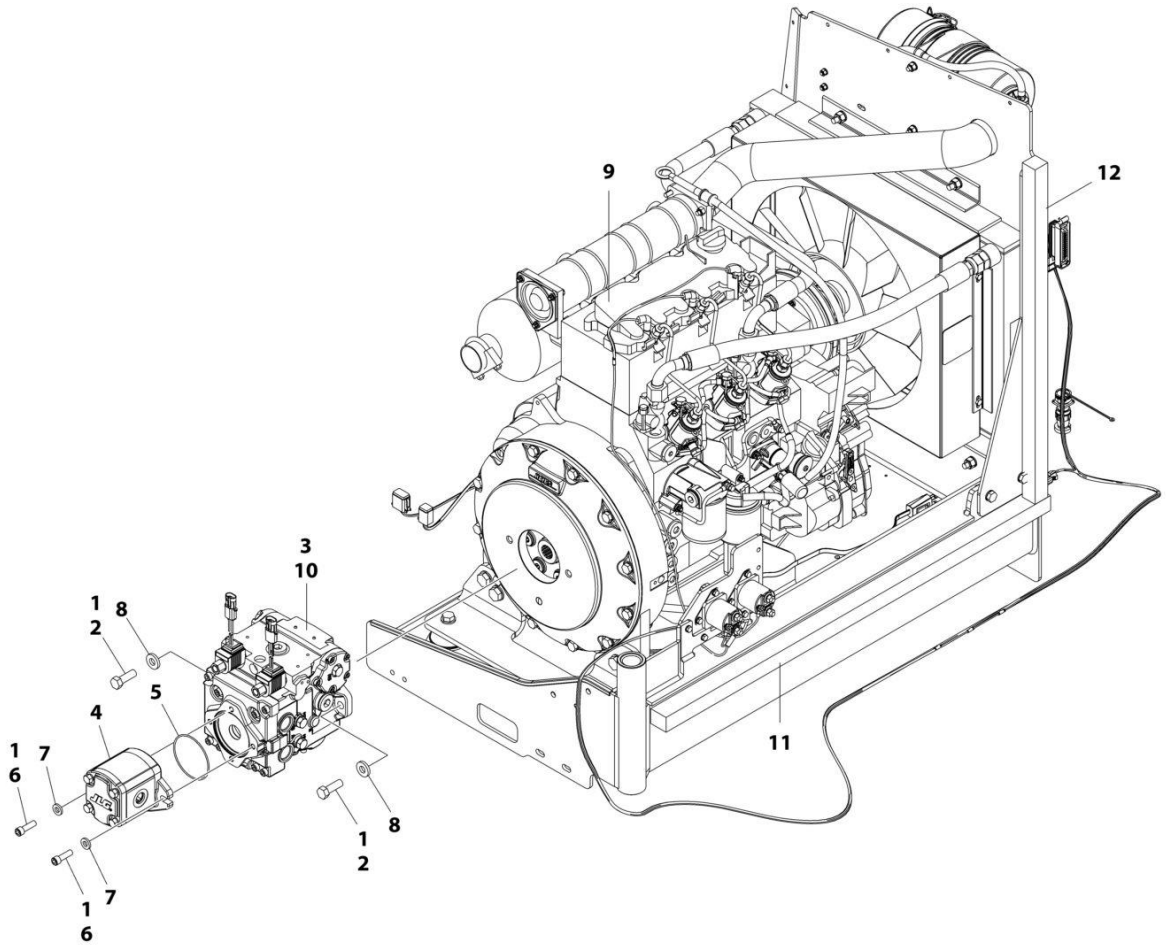

FIGURE 3-17. ENGINE AND PUMP SUB-ASSEMBLY - DEUTZ D2011 (WITH ARCTIC PACKAGE) (ANSI EXPORT AND CHINA SPECS)

ITEM	PART NUMBER	QTY	DESCRIPTION	REV
	1001174784	Ref	ENGINE AND PUMP SUB-ASSEMBLY - DEUTZ D2011 (WITH ARCTIC PACKAGE) (ANSI EXPORT AND CHINA SPECS)	E
1	0100011	AR	Compound, Locking	
2	0641812	2	Bolt, 1/2-13 x 1-1/2	
3	3020037	AR	Lube	
4	3600242	1	Gear Pump Assembly (See GEAR PUMP ASSEMBLY for Breakdown) **(SN 0300201991 through 0300233105)**	
4	1001214207	1	Gear Pump Assembly **(SN 0300233106 through 0300272317, SN B300003516 through B300005760, Except SN 0300272185 through 0300272190, Excluding B300005569)**	
4	70006356	1	Seal Kit - 1001214207 Pump	
5	3790152	1	O-Ring	
6	3931620	2	Capscrew 3/8 x 1-1/4	
6	3931618	2	Capscrew 3/8 x 1-1/8	
7	4891600	2	Washer, 3/8 Hardened	
8	4891800	2	Washer, 1/2 Hardened	
9	1001174783	1	Engine Assembly - Deutz D2011 Engine (With Arctic Package) (ANSI Export and China Specs) (See ENGINE ASSEMBLY - DEUTZ D2011 ENGINE (WITH ARCTIC PACKAGE) (ANSI EXPORT AND CHINA SPECS) for Breakdown)	
10	1001167036	1	Piston Pump Assembly (See PISTON PUMP ASSEMBLY for Breakdown)	
11	1001171953	1	Seal	
12	1001171954	1	Seal	

FIGURE 3-18. ENGINE ASSEMBLY - DEUTZ D2011 ENGINE (WITH ARCTIC PACKAGE) (ANSI EXPORT AND CHINA SPECS)

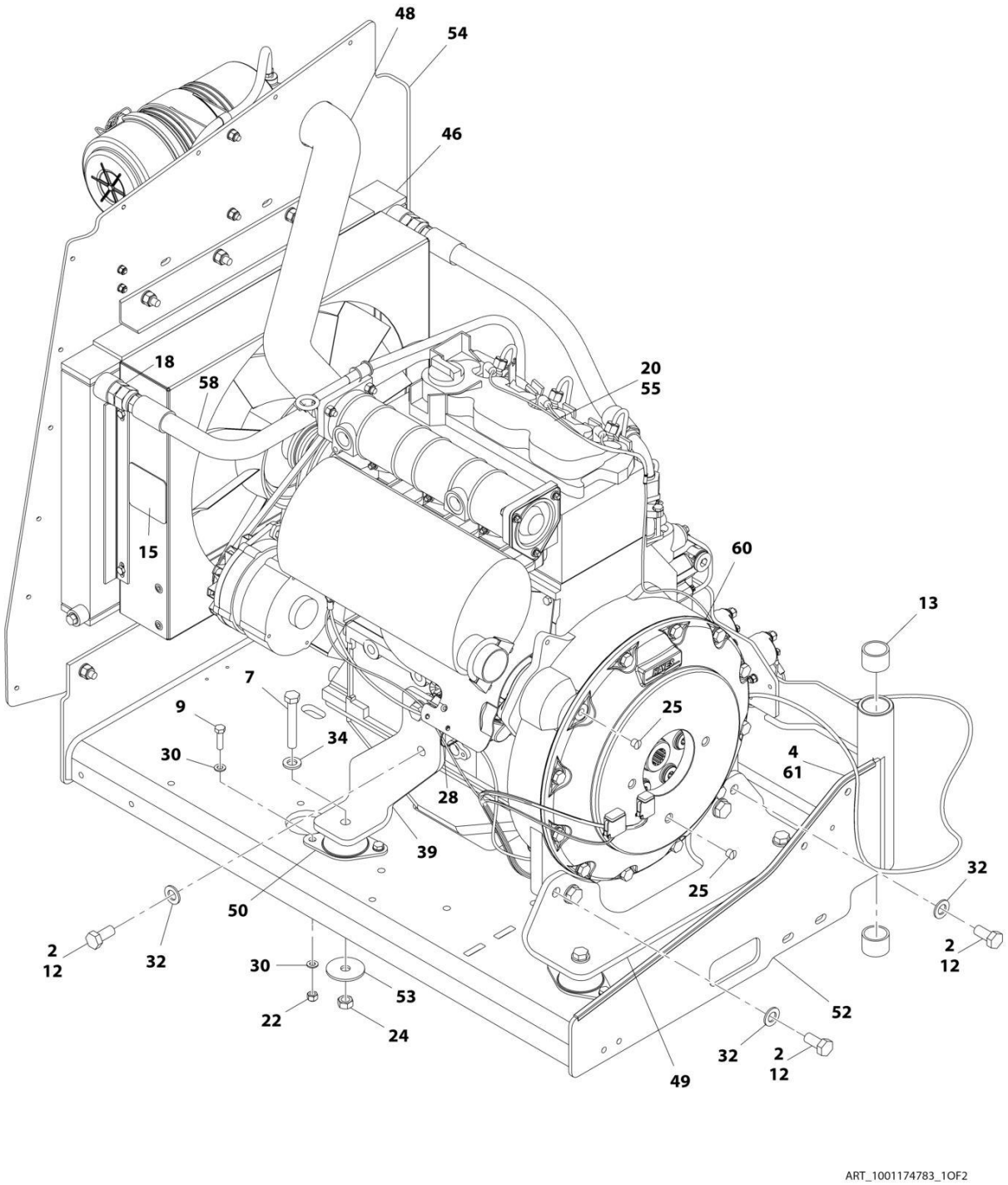

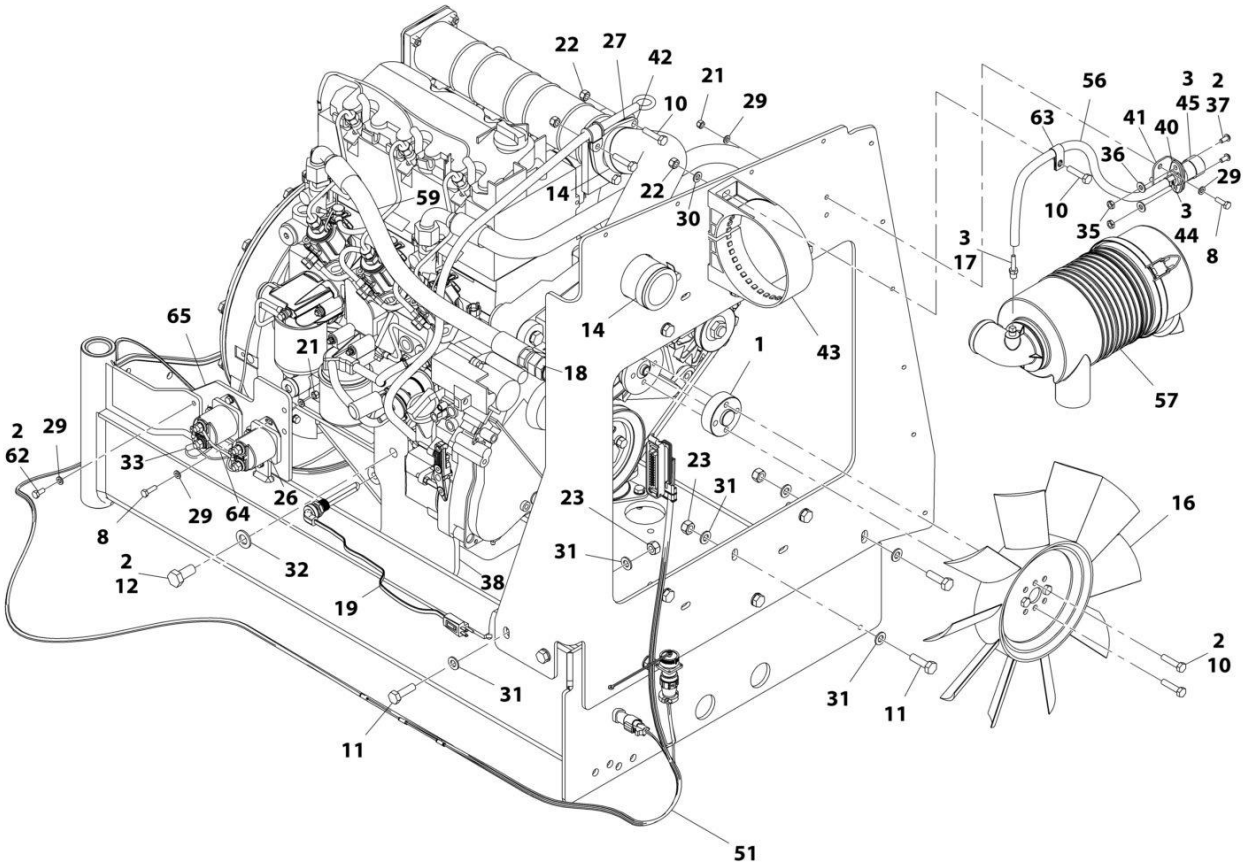
22
27
42
21
10
29
59
14
22
30
56
3
2
45
37
63
41
40
36
29
10
3
35
44
8
3
17
57
65
21
18
14
1
43
2
29
62
33
29
64
26
8
2
12
32
38
19
23
31
23
31
16
2
10
31
11
31
11
51
ART_1001174783_2OF2

FIGURE 3-18. ENGINE ASSEMBLY - DEUTZ D2011 ENGINE (WITH ARCTIC PACKAGE) (ANSI EXPORT AND CHINA SPECS)

ITEM	PART NUMBER	QTY	DESCRIPTION	REV
	1001174783	Ref	ENGINE ASSEMBLY - DEUTZ D2011 ENGINE (WITH ARCTIC PACKAGE) (ANSI EXPORT AND CHINA SPECS)	J
1	0080231	1	Spacer, Fan	
2	0100011	AR	Compound, Locking	
3	0100020	AR	Sealant, Pipe	
4	0100081	AR	Adhesive	
7	0711224	4	Bolt, M12 x 80mm Grade 10.9	
8	0760610	6	Bolt, M6 x 20mm	
9	0760814	8	Bolt, M8 x 30mm	
10	0760815	9	Bolt, M8 x 35mm	
11	0761015	11	Bolt, M10 x 35mm	
12	0771414	8	Bolt, M14 x 30mm Grade 10.9	
13	0961951	2	Bushing	
14	1320016	2	Clamp	
15	1703162	2	Decal - Caution Fan	
16	2060025	1	Fan	
17	2220315	1	Fitting, Barbed	
18	2220451	2	Fitting, Straight JIC/ORB	
19	2580062	1	Heater, Engine Block	
20	3020044	3 gal/ 11.3L	Oil, Motor	
21	3290605	6	Nut, Lock M6 x 1	
22	3290805	13	Nut, Lock M8 x 1.25	
23	3291005	11	Nut, Lock M10 x 1.5	
24	3331215	4	Nut, M12 x 1.75	
25	3520054	2	Plug	
26	3740067	2	Relay Assembly	
26	3300220	2	Nut	
26	3321001	1	Nut, #10-32	
26	3740140	1	Relay	
26	4761000	1	Washer, Lock #10	
26	1001111424	2	Washer	
27	3960407	1	Gasket	
28	4240099	AR	Tie-Strap (Not Shown)	
29	4811700	15	Washer, M6	
30	4811900	20	Washer, M8	
31	4812000	22	Washer, M10	
32	4812200	8	Washer, M14	
33	4923451	1	Harness, Glow Plugs	
34	5241200	4	Washer, M12 Hardened	
35	8305401	2	Nut, Jam, .250-20	
36	8307109	2	Washer, .250	
37	8310548	2	Screw, 1/4 NC x 1/2	
38	1001132195	1	Bracket, Engine Mount	
39	1001132196	1	Bracket, Engine Mount	
40	1001138173	1	Support, Service Indicator	
41	1001138175	1	Bracket, Service Indicator	
42	1001139819	1	Adapter, Air Intake	
43	1001141694	1	Clamp, Air Cleaner	

ITEM	PART NUMBER	QTY	DESCRIPTION	REV
44	1001141995	1	Fitting, Barbed	
45	1001143390	1	Indicator	
46	1001150998	1	Radiator	
48	1001165389	1	Hose	
49	1001166717	1	Bracket, Engine Mount	
50	1001166718	4	Isolator, Engine Mount	
51	1001167111	1	Harness Engine - Deutz D2011 (See ELECTRICAL SECTION for Breakdown)	
52	1001167520	1	Tray, Engine	
53	1001168018	4	Washer, Snubbing	
54	1001168059	1	Plate, Radiator Mounting	
55	1001170693	1	Engine, Deutz D2011 (See ENGINE COMPONENTS - DEUTZ D2011 ENGINE for Breakdown)	
56	1001138248	2 ft/ 0.61m	Tube	
57	1001165388	1	Air Cleaner Assembly	
57	70003783	1	Element, Air Cleaner	
58	2720398	1	Hose	
59	2720447	1	Hose	
60	2902065	1	Pump Coupling Kit (See PUMP COUPLING KIT for Breakdown)	
61	4060805	2.25 ft/ 0.69m	Trim, Flex Shield	
62	0760614	3	Bolt, M6 x 30	
63	8406109	1	Clip	
64	1001178859	1	Cable, Alternator	
65	1001179903	1	Bracket **(SN 0300201991 through 0300216879)**	
65	1001214975	1	Bracket **(SN 0300216880 through 0300272317, SN B300003516 through B300005760, Except SN 0300272185 through 0300272190, Excluding B300005569)**	

FIGURE 3-19. ENGINE COMPONENTS - DEUTZ D2011

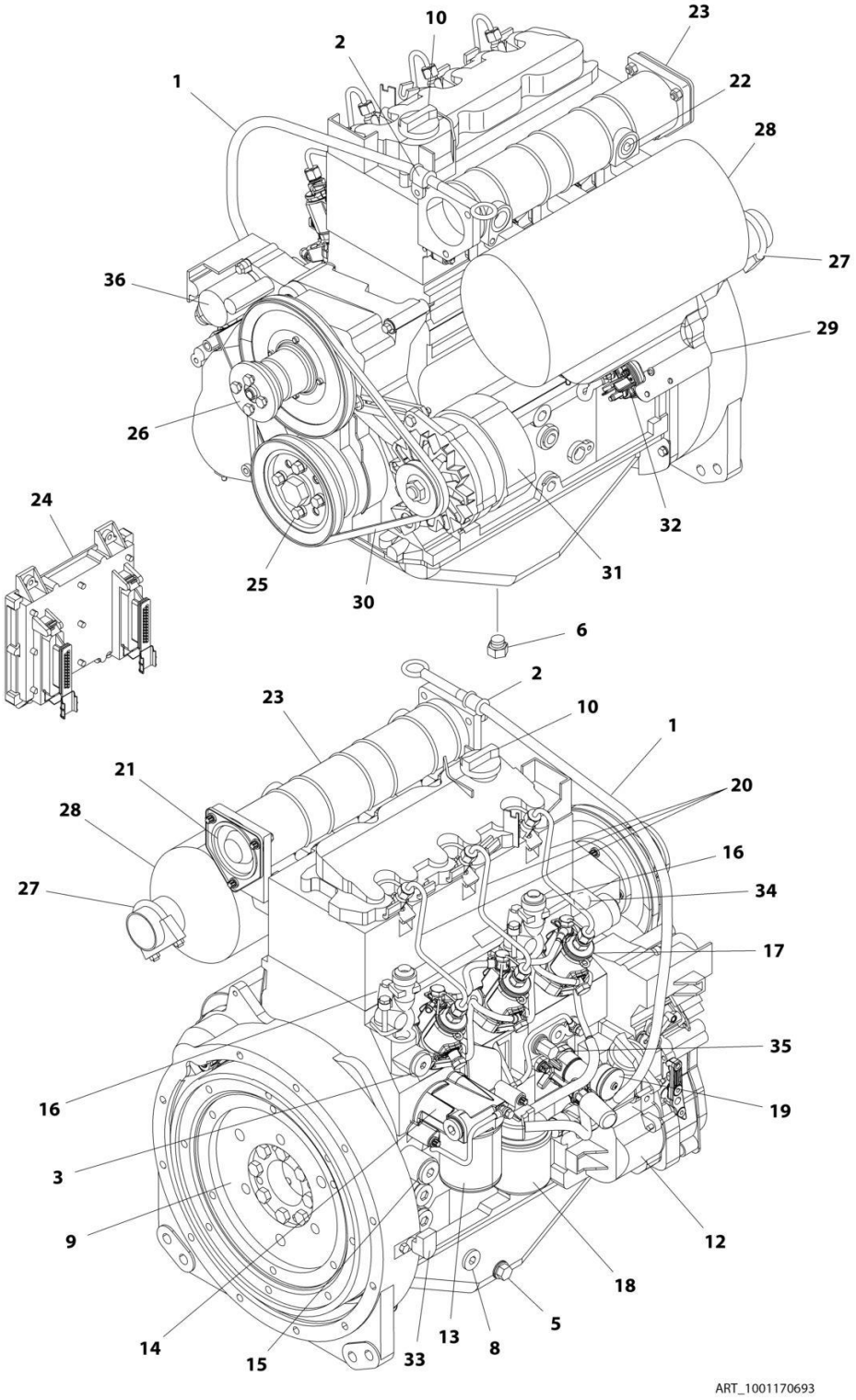

FIGURE 3-19. ENGINE COMPONENTS - DEUTZ D2011

ITEM	PART NUMBER	QTY	DESCRIPTION	REV
	1001170693	Ref	ENGINE COMPONENTS - DEUTZ D2011	C
1	70001002	1	Tube, Dipstick	
1	7020403	1	Seal, Tube	
1	7020026	1	Dipstick	
2	70001654	1	Clamp	
2	70001655	1	Bolt	
3	70003475	1	Thermostat	
3	7020460	1	Spring	
4		Ref	Seal and Gasket Options (Not Shown):	
4	70002718	1	Seal, Rear Main	
4	7020430	1	Gasket, Valve Cover	
4	70003479	1	Gasket, Head - 1 Notch	
4	70003480	1	Gasket, Head - 2 Notch	
4	70003481	1	Gasket, Head - 3 Notch	
5	70025088	1	Plug	
6	70025667	1	Plug	
7	70025123	22	Bolt, Torx (Oil Pan Bolts) (Not Shown)	
8	7020492	1	Seal	
8	70025084	1	Plug	
9	70001870	1	Flywheel	
9	7024579	1	Ring Gear (Part of Flywheel)	
9	70025139	8	Bolt	
10	7020465	1	Cap, Oil Fill	
11	70000800	1	Timing Belt/Idler Kit (Includes Timing Belt, Tensioner and Tensioner Bolt) (Not Shown)	
12	70001850	1	Pump, Lubricating	
12	7020468	1	Seal, Pump to Engine Block (Not Shown)	
13	7016331	1	Filter, Oil	
14	70003472	1	Bracket, Oil Filter (Includes Plug with Seal, Temperature Sensor, Control Valve and Compression Spring)	
14	7027236	1	Sender, Temperature	
14	70025082	1	Seal, Plug	
14	70025091	1	Plug	
14	70003473	1	Gasket, Bracket to Engine Block (Not Shown)	
15	70001181	1	Valve	
15	70025091	1	Plug	
15	70025082	1	Seal, Plug	
16	70004268	2	Connector, Radiator Neck	
16	70004269	2	Seal, Radiator Neck to Engine Block	
17	70000912	3	Pump, Fuel Injector - A Spec	
17	70000913	3	Pump, Fuel Injector - B Spec	
17	70000914	3	Pump, Fuel Injector - C Spec	
17	70000915	3	Pump, Fuel Injector - D Spec	
17	70003464	3	O-Ring, Pump to Engine Block	
18	7020023	1	Filter, Fuel	
18	70003463	1	Filter, Fuel - RME Resistant	
18	70001423	1	Bracket, Fuel Filter	
19	70000916	1	Pump Fuel Supply	
19	70000917	1	O-Seal Between Fuel Pump and Engine Block	
19	70000918	1	Sealing Ring Between Hand Pump and Supply Pump	

SECTION 3 - ENGINE

ITEM	PART NUMBER	QTY	DESCRIPTION	REV
19	70000919	1	Pump, Hand	
19	70001435	1	Repair Kit	
19	70025694	2	Bolt, Torx	
20	70000931	3	Pipe, High Pressure	
21	70003469	1	Flange, Intake	
21	70003468	1	Seal	
22	70025084	1	Plug	
22	7020492	1	Seal, Plug	
23	7027903	1	Manifold, Air Intake	
23	70001871	3	Gasket Between Manifold and Engine Block	
24	See Note	1	Module, Engine Control (Note: Not Currently Available)	
24	7027796	1	Cable, Electrical Between Module and Engine Harness (Not Shown)	
24	70001872	1	Harness, Engine (Connects to p/n 70004060) (Not Shown)	
24	70004060	1	Plug, Connector Located on Cable Near Module (Not Shown)	
24	70004059	1	Plug, Analyzer (Not Shown)	
25	70025123	4	Bolt, Torx	
26	70000787	1	Support, Fan (Includes Support, Internal Shaft, Bearings and Circlip)	
27	70001844	1	Clamp	
28	See Note	1	Muffler (Note: See ENGINE ASSEMBLY)	
28	7020471	3	Gasket, Exhaust Between Muffler and Engine Block	
28	70004270	6	Stud, Muffler	
29	70001498	1	Shield, Starter	
29	70025693	3	Bolt	
30	70004102	1	V-Belt	
31	70004056	1	Alternator (Includes Voltage Regulator and Gaskets, Fan and Fan Mounting Hardware)	
31	70001868	1	Regulator, Voltage	
31	70001866	1	Gasket Set, Voltage Regulator	
31	70025131	1	Fan	
31	70025086	1	Nut, Fan	
31	70000851	1	Bracket, Alternator Mounting	
31	70002234	1	Bracket, Alternator Adjustment	
31	70004103	1	Harness, Alternator (Not Shown)	
32	7020479	1	Starter	
32	70025121	2	Bolt, Starter Mounting	
32	70004058	1	Relay	
32	70004062	1	Harness, Starter (Not Shown)	
33	7024565	1	Sensor, Speed	
33	70003931	1	Bolt	
33	70003932	1	Spacer, Sleeve	
34	7027791	1	Sender, Temperature	
35	7027790	1	Sensor, Oil Pressure	
36	7027792	1	Actuator	
37	70000345	3	Plug, Glow (Not Shown)	

FIGURE 3-20. ENGINE INSTALLATION - DEUTZ D2011 ENGINE (STAGE V) (WITHOUT ARCTIC PACKAGE) (CE SPECS)

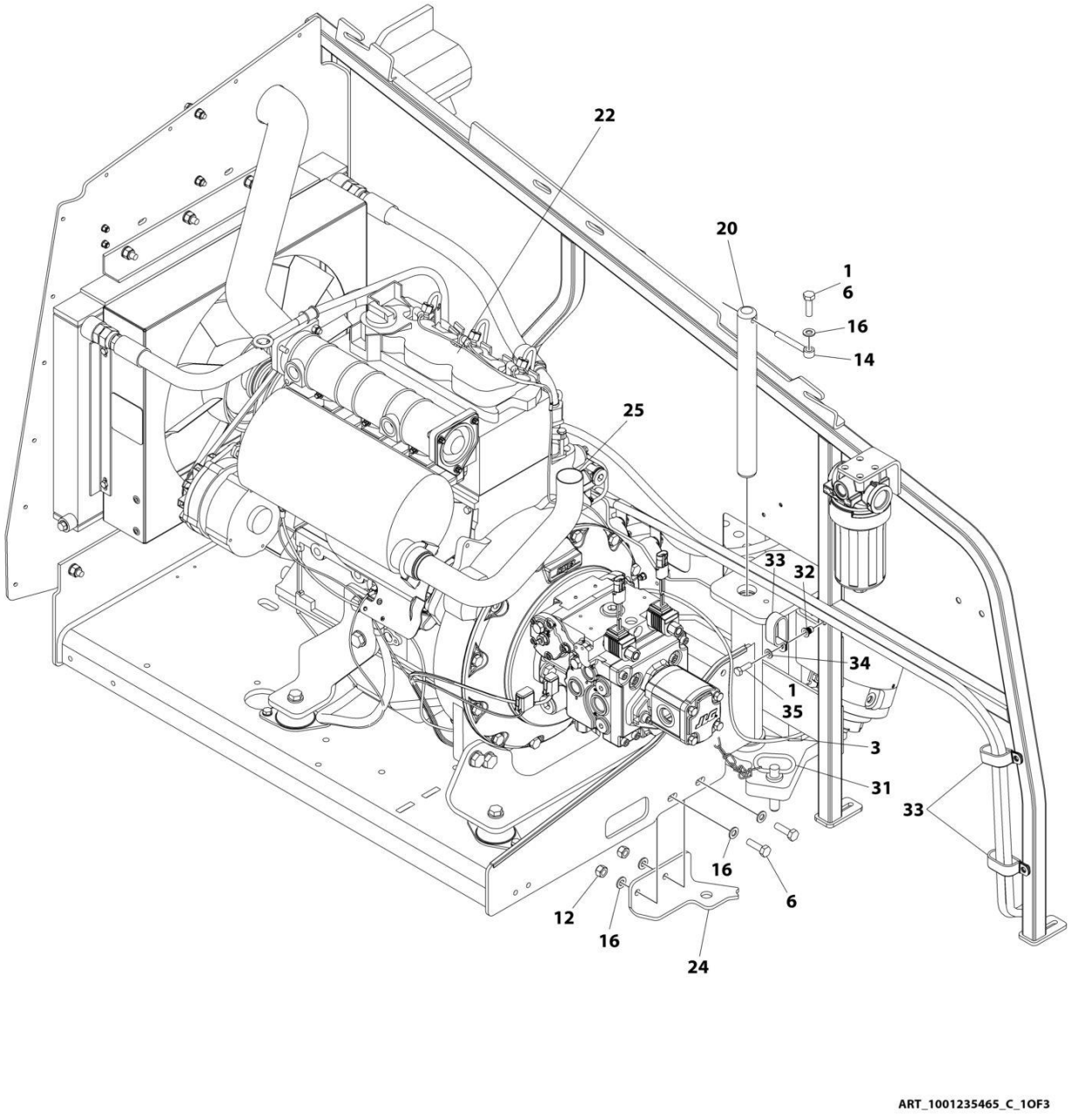

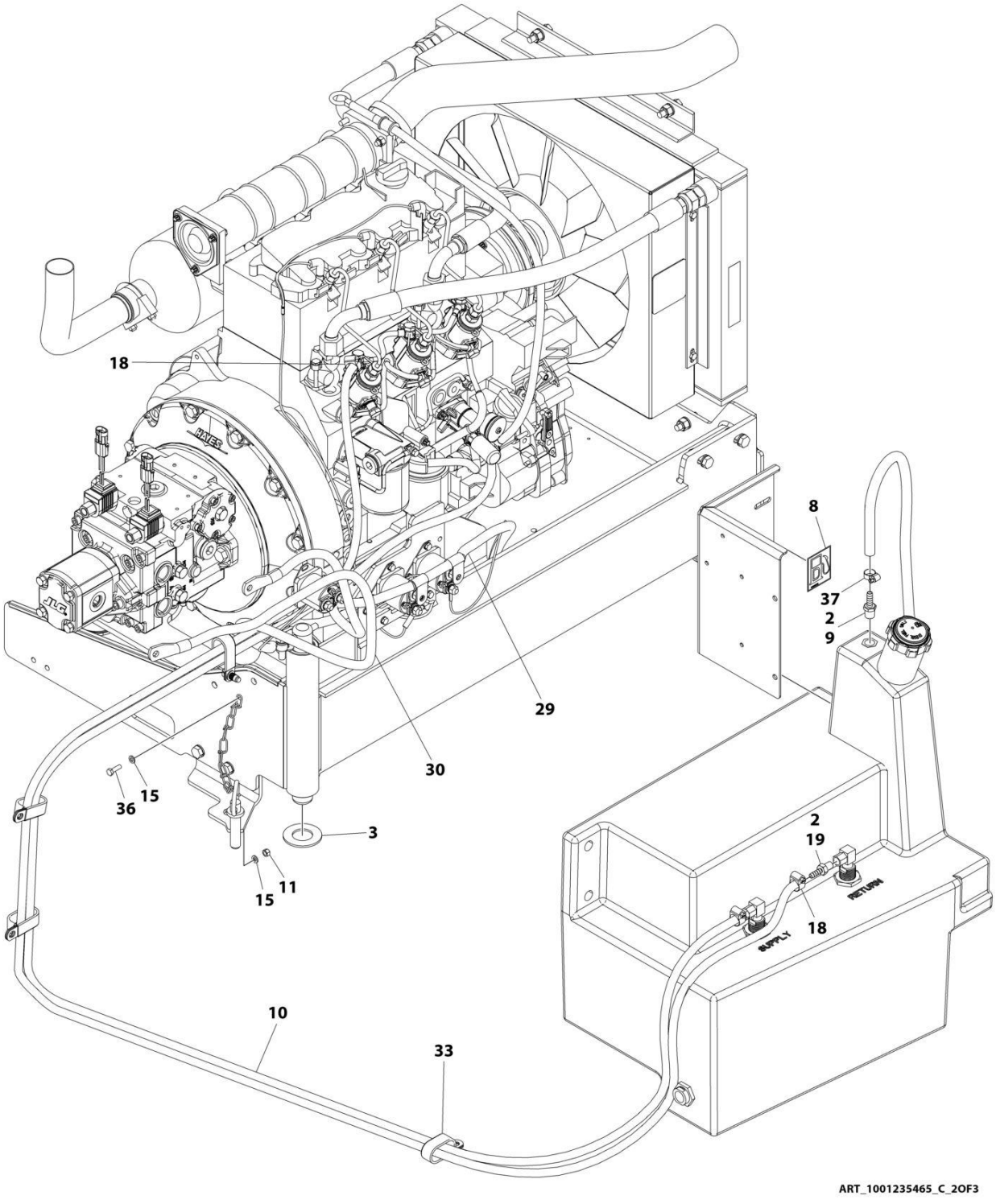
18
8
37
2
9
29
30
36
15
3
2
19
15
11
RETURN
18
SUPPLY
10
33
ART_1001235465_C_2OF3

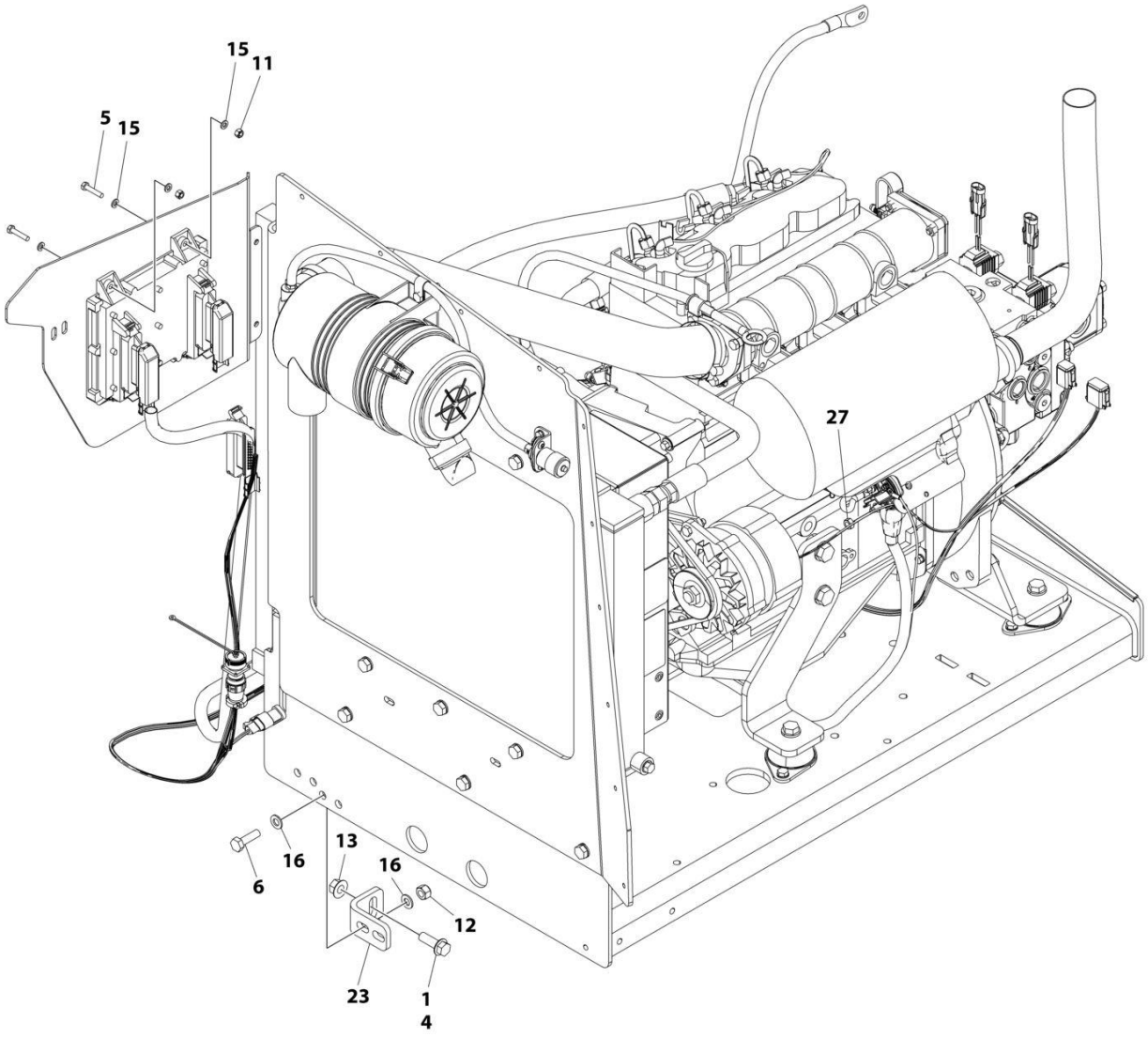

ART_1001235465_C_3OF3

FIGURE 3-20. ENGINE INSTALLATION - DEUTZ D2011 ENGINE (STAGE V) (WITHOUT ARCTIC PACKAGE) (CE SPECS)

ITEM	PART NUMBER	QTY	DESCRIPTION	REV
	1001235465	Ref	ENGINE INSTALLATION - DEUTZ D2011 ENGINE (STAGE V) (WITHOUT ARCTIC PACKAGE)	C
1	0100011	AR	Compound, Locking	
2	0100020	AR	Sealant, Pipe	
3	0440162	1	Bearing	
4	5251215	1	Bolt M12 x 35	
5	0760614	4	Bolt M6 x 30	
6	0761015	5	Bolt M10 x 35	
8	1701505	1	Decal - Diesel Fuel	
9	2180876	1	Fitting, Barbed	
10	2720058	22 ft /6.7m	Hose	
11	3290605	5	Nut M6	
12	3291005	4	Nut M10	
13	5261200	1	Nut M12	
14	3841143	1	Keeper, Pin	
15	4811700	10	Washer M6	
16	4812000	9	Washer M10	
18	8410013	4	Clamp	
19	2180348	2	Fitting, Barbed	
20	1001135196	1	Pin	
22	1001235461	1	Engine and Pump Sub-Assembly - Deutz D2011 (Stage V) (Without Arctic Package) (See Separate Breakdown in this Section)	
23	1001167512	1	Bracket, Engine	
24	1001169823	1	Bracket, Engine	
25	1001172202	1	Pipe, Exhaust	
27	3290801	1	Nut M8	
29	1001171681	1	Cable, Battery (Red) (Battery Positive to Auxiliary Power Relay)	
30	1001171682	1	Cable, Battery (Black) (Battery Negative to Auxiliary Power Pump)	
31	3422532	1	Pin	
32	1001191832	1	Nut Rivet, M8	
33	1321716	4	Clamp	
34	4811900	1	Washer M8	
35	0760812	1	Bolt M8 x 25	
36	0760610	1	Bolt M6 x 20	
37	1320022	1	Clamp	

FIGURE 3-21. ENGINE AND PUMP SUB-ASSEMBLY - DEUTZ D2011 (STAGE V) (WITHOUT ARCTIC PACKAGE) (CE SPECS)

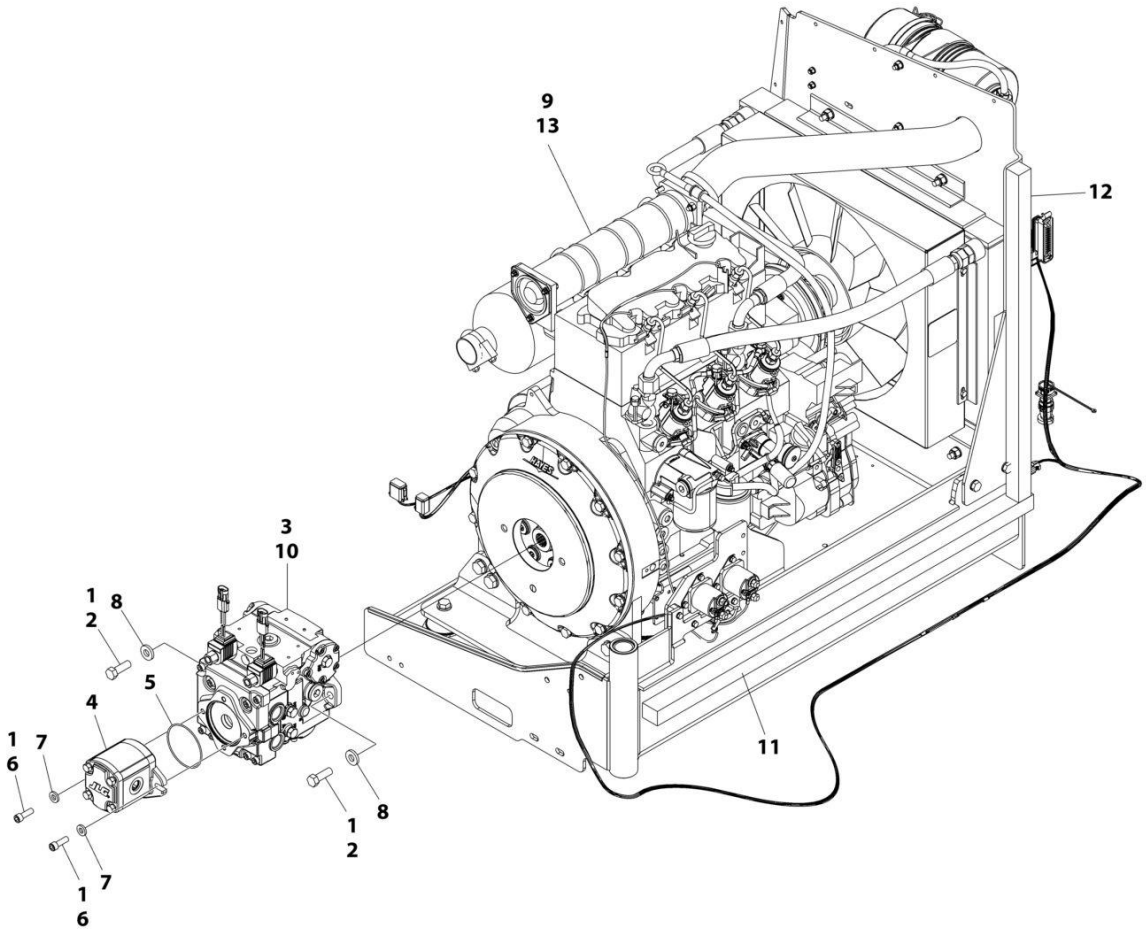

FIGURE 3-21. ENGINE AND PUMP SUB-ASSEMBLY - DEUTZ D2011 (STAGE V) (WITHOUT ARCTIC PACKAGE) (CE SPECS)

ITEM	PART NUMBER	QTY	DESCRIPTION	REV
	1001235461	Ref	ENGINE AND PUMP SUB-ASSEMBLY - DEUTZ D2011 (STAGE V) (WITHOUT ARCTIC PACKAGE)	B
1	0100011	AR	Compound, Locking	
2	0641812	2	Bolt 1/2 x 1-1/2	
3	3020037	AR	Lube	
4	1001214207	1	Gear Pump Assembly	
4	70006356	1	Seal Kit - 1001214207 Pump	
5	3790152	1	O-Ring	
6	3931618	2	Capscrew 3/8 x 1-1/8	
7	4891600	2	Washer 3/8	
8	4891800	2	Washer 1/2	
9	1001235462	1	Engine Assembly - Deutz D2011 Engine (Stage V) (Without Arctic Package) (CE Specs) (See ENGINE ASSEMBLY - DEUTZ D2011 (STAGE V) ENGINE (WITHOUT ARCTIC PACKAGE) (CE SPECS) for Breakdown)	
10	1001167036	1	Piston Pump Assembly (See PISTON PUMP ASSEMBLY for Breakdown)	
11	1001171953	1	Seal	
12	1001171954	1	Seal	
13	1001235455	1	Engine, Deutz D2011 (Stage V) (See ENGINE COMPONENTS - DEUTZ D2011 ENGINE (STAGE V) for Breakdown) **(SN 0300255835 through 0300272317, SN E300006671 through E300007990, SN B300000100 through B300005760, Except SN 0300272185 through 0300272190, Excluding E300007814 and B300005569)**	

FIGURE 3-22. ENGINE ASSEMBLY - DEUTZ D2011 ENGINE (STAGE V) (WITHOUT ARCTIC PACKAGE) (CE SPECS)

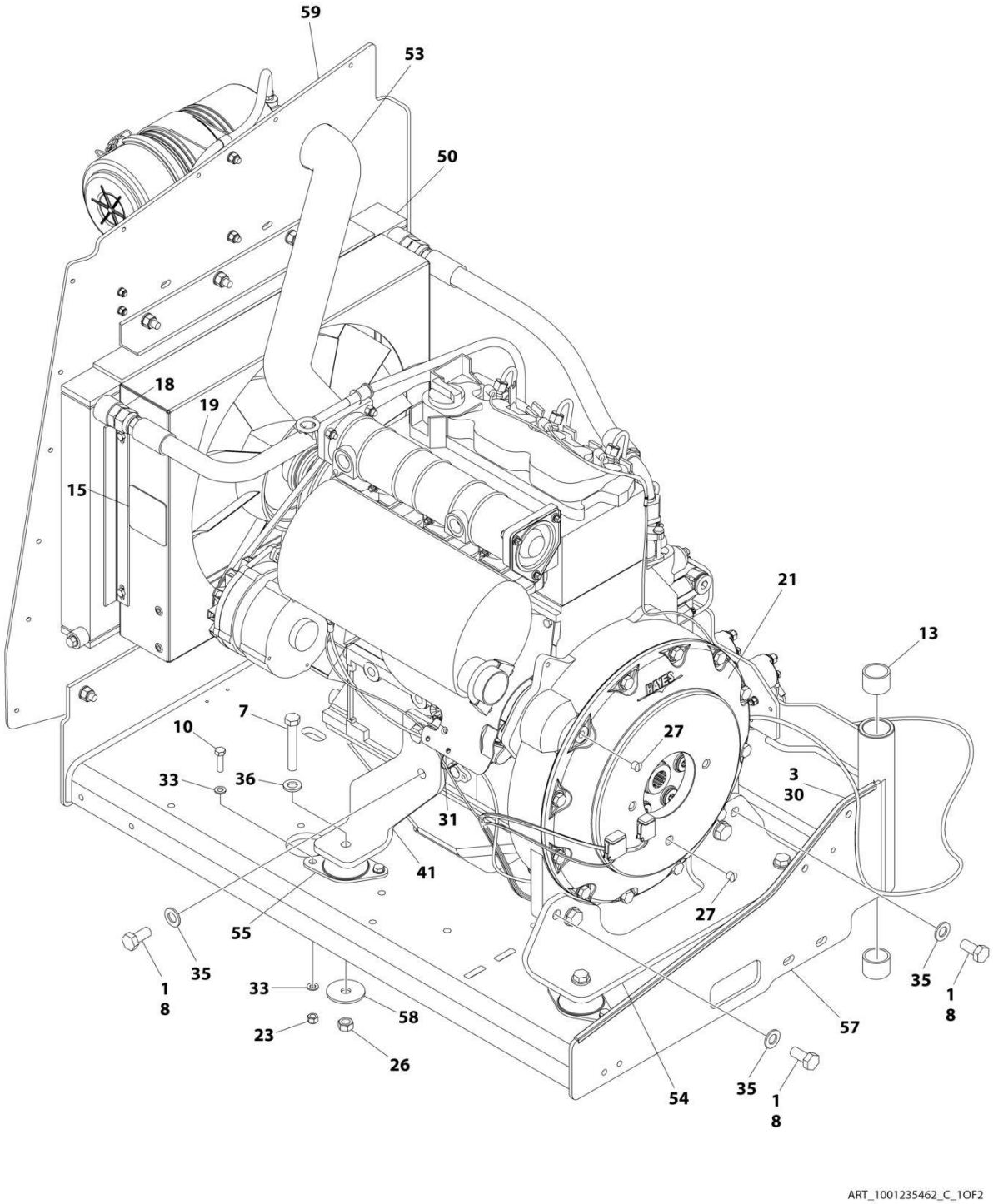

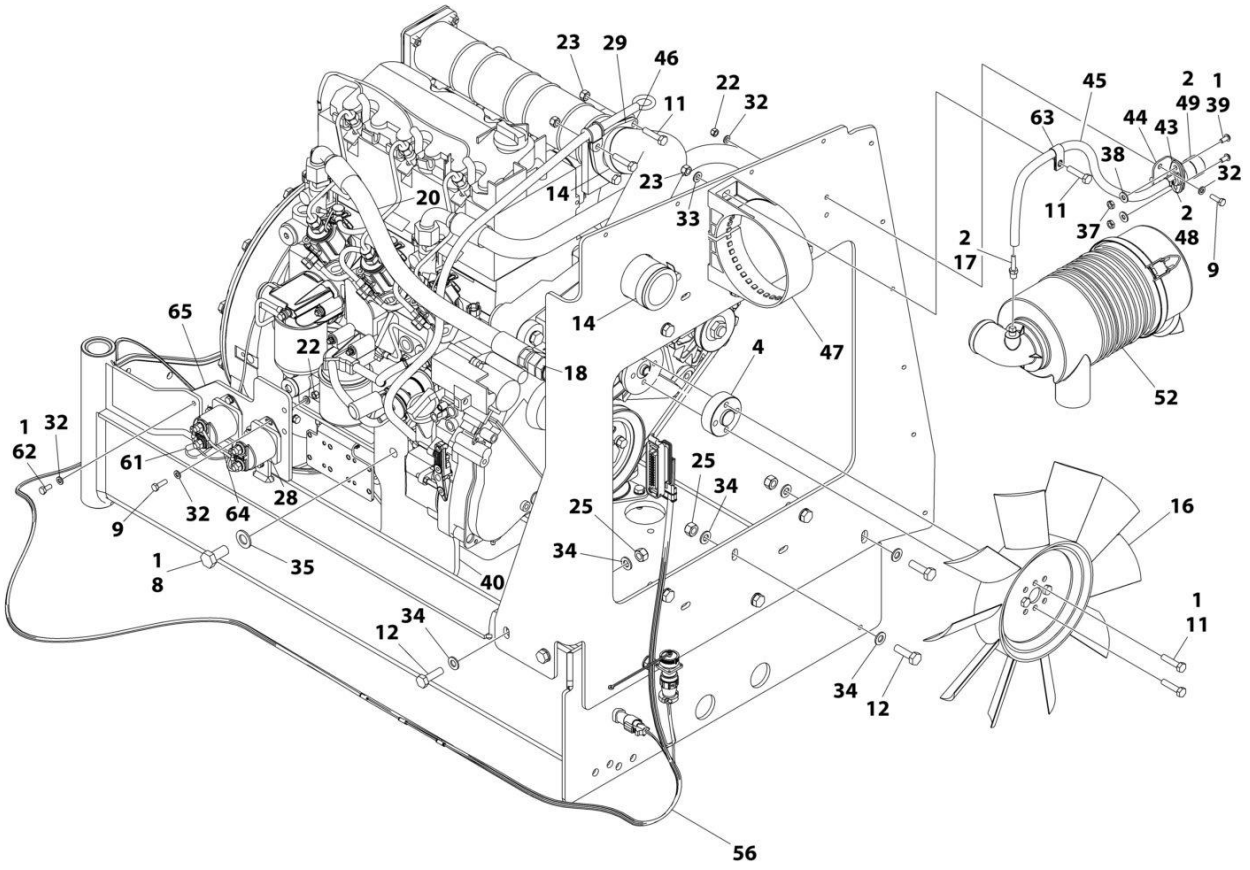

ART_1001235462_C_2OF2

FIGURE 3-22. ENGINE ASSEMBLY - DEUTZ D2011 ENGINE (STAGE V) (WITHOUT ARCTIC PACKAGE) (CE SPECS)

ITEM	PART NUMBER	QTY	DESCRIPTION	REV
	1001235462	Ref	ENGINE ASSEMBLY - DEUTZ D2011 ENGINE (STAGE V) (WITHOUT ARCTIC PACKAGE)	C
1	0100011	AR	Compound, Locking	
2	0100020	AR	Sealant, Pipe	
3	0100081	AR	Adhesive	
4	0080231	1	Spacer, Fan	
7	0711224	4	Bolt M12 x 80	
8	0771414	8	Bolt M14 x 30	
9	0760610	6	Bolt M6 x 20	
10	0760814	8	Bolt M8 x 30	
11	0760815	9	Bolt M8 x 35	
12	0761015	11	Bolt M10 x 35	
13	0961951	2	Bushing	
14	1320016	2	Clamp	
15	1703162	2	Decal - Caution Fan	
16	2060025	1	Fan	
17	2220315	1	Fitting, Barbed	
18	2220451	2	Fitting, Straight JIC/ORB	
19	2720398	1	Hose	
20	2720447	1	Hose	
21	2902065	1	Pump Coupling Kit (See Separate Breakdown in this Section)	
22	3290605	6	Nut M6	
23	3290805	13	Nut M8	
25	3291005	11	Nut M10	
26	3331215	4	Nut M12	
27	3520054	2	Plug	
28	3740067	2	Relay Assembly	
28	3300220	2	Nut	
28	3321001	1	Nut #10	
28	3740140	1	Relay	
28	4761000	1	Washer #10	
28	1001111424	2	Washer	
29	3960407	1	Gasket	
30	4060805	2.25 ft / 0.69m	Trim-Flex	
31	4240099	AR	Tie-Strap	
32	4811700	15	Washer M6	
33	4811900	20	Washer M8	
34	4812000	22	Washer M10	
35	4812200	8	Washer M14	
36	5241200	4	Washer M12	
37	8305401	2	Nut 1/4	
38	8307109	2	Washer 1/4	
39	8310548	2	Screw 1/4 NC x 1/2	
40	1001132195	1	Bracket, Engine Mount	
41	1001132196	1	Bracket, Engine Mount	
43	1001138173	1	Support, Service Indicator	
44	1001138175	1	Bracket, Service Indicator	
45	1001138248	2 ft	Tube	

ITEM	PART NUMBER	QTY	DESCRIPTION	REV
		/0.61m		
46	1001139819	1	Adapter, Air Intake	
47	1001141694	1	Clamp, Air Cleaner	
48	1001141995	1	Fitting, Barbed	
49	1001143390	1	Indicator	
50	1001150998	1	Radiator	
52	1001165388	1	Air Cleaner Assembly	
52	70003783	1	Element, Air Cleaner	
53	1001165389	1	Hose	
54	1001166717	1	Bracket, Engine Mount	
55	1001166718	4	Isolator, Engine Mount	
56	1001167111	1	Harness Engine - Deutz D2011 (See Separate Breakdown in ELECTRICAL SECTION)	
57	1001167520	1	Tray, Engine	
58	1001168018	4	Washer, Snubbing	
59	1001168059	1	Plate, Radiator Mounting	
61	4923451	1	Harness, Glow Plugs	
62	0760614	3	Bolt M6 x 30	
63	8406109	1	Clip	
64	1001178859	1	Cable, Alternator	
65	1001214975	1	Bracket	

FIGURE 3-23. ENGINE COMPONENTS - DEUTZ D2011 (STAGE V)

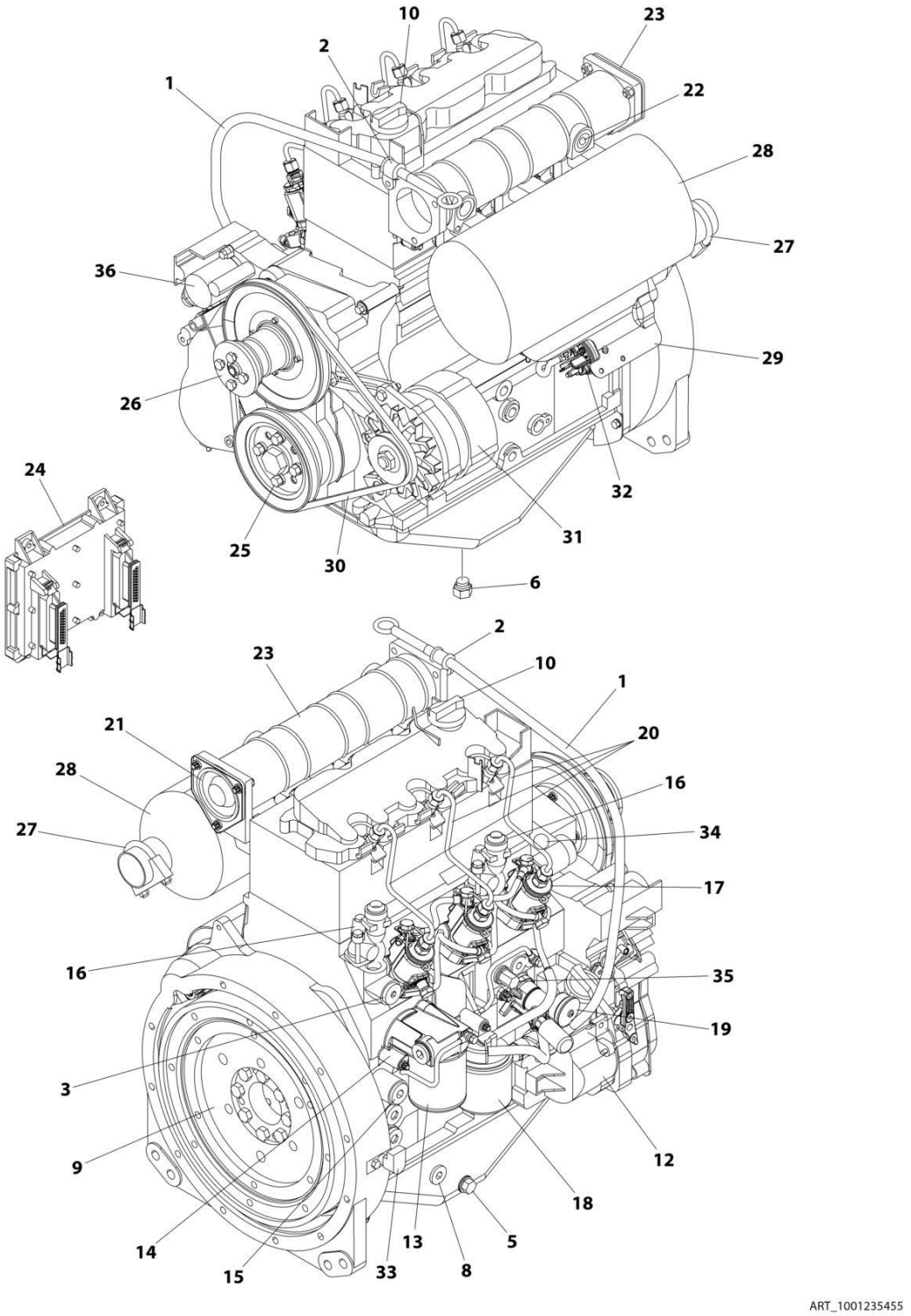

FIGURE 3-23. ENGINE COMPONENTS - DEUTZ D2011 (STAGE V)

ITEM	PART NUMBER	QTY	DESCRIPTION	REV
	1001235455	Ref	ENGINE COMPONENTS - DEUTZ D2011 (STAGE V) ENGINE	B
1	70001002	1	Tube, Dipstick	
1	7020403	1	Seal, Tube	
1	7020026	1	Dipstick	
2	70001654	1	Clamp	
2	70001655	1	Bolt	
3	70003475	1	Thermostat	
3	7020460	1	Spring	
4		Ref	Seal and Gasket Options (Not Shown):	
4	70002718	1	Seal, Rear Main	
4	7020430	1	Gasket, Valve Cover	
4	70003479	1	Gasket, Head - 1 Notch	
4	70003480	1	Gasket, Head - 2 Notch	
4	70003481	1	Gasket, Head - 3 Notch	
5	70025088	1	Plug	
6	70025667	1	Plug	
7	70025123	22	Bolt, Torx (Oil Pan Bolts) (Not Shown)	
8	7020492	1	Seal	
8	70025084	1	Plug	
9	70001870	1	Flywheel	
9	7024579	1	Ring Gear (Part of Flywheel)	
9	70025139	8	Bolt	
10	7020465	1	Cap, Oil Fill	
11	70000800	1	Timing Belt/Idler Kit (Includes Timing Belt, Tensioner and Tensioner Bolt) (Not Shown)	
12	70001850	1	Pump, Lubricating	
12	7020468	1	Seal, Pump to Engine Block (Not Shown)	
13	7016331	1	Filter, Oil	
14	70003472	1	Bracket, Oil Filter (Includes Plug with Seal, Temperature Sensor, Control Valve and Compression Spring)	
14	7027236	1	Sender, Temperature	
14	70025082	1	Seal, Plug	
14	70025091	1	Plug	
14	70003473	1	Gasket, Bracket to Engine Block (Not Shown)	
15	70001181	1	Valve	
15	70025091	1	Plug	
15	70025082	1	Seal, Plug	
16	70004268	2	Connector, Radiator Neck	
16	70004269	2	Seal, Radiator Neck to Engine Block	
17	70000912	3	Pump, Fuel Injector - A Spec	
17	70000913	3	Pump, Fuel Injector - B Spec	
17	70000914	3	Pump, Fuel Injector - C Spec	
17	70000915	3	Pump, Fuel Injector - D Spec	
17	70003464	3	O-Ring, Pump to Engine Block	
18	7020023	1	Filter, Fuel	
18	70003463	1	Filter, Fuel - RME Resistant	
18	70001423	1	Bracket, Fuel Filter	
19	70000916	1	Pump Fuel Supply	
19	70000917	1	O-Seal Between Fuel Pump and Engine Block	
19	70000918	1	Sealing Ring Between Hand Pump and Supply Pump	

SECTION 3 - ENGINE

ITEM	PART NUMBER	QTY	DESCRIPTION	REV
19	70000919	1	Pump, Hand	
19	70001435	1	Repair Kit	
19	70025694	2	Bolt, Torx	
20	70000931	3	Pipe, High Pressure	
21	70003469	1	Flange, Intake	
21	70003468	1	Seal	
22	70025084	1	Plug	
22	7020492	1	Seal, Plug	
23	7027903	1	Manifold, Air Intake	
23	70001871	3	Gasket Between Manifold and Engine Block	
24	7027795	1	Module, Engine Control	
24	7027796	1	Cable, Electrical Between Module and Engine Harness (Not Shown)	
24	70001872	1	Harness, Engine (Connects to p/n 70004060) (Not Shown)	
24	70004060	1	Plug, Connector Located on Cable Near Module (Not Shown)	
24	70004059	1	Plug, Analyzer (Not Shown)	
25	70025123	4	Bolt, Torx	
26	70000787	1	Support, Fan (Includes Support, Internal Shaft, Bearings and Circlip)	
27	70001844	1	Clamp	
28	See Note	1	Muffler (Note: See ENGINE ASSEMBLY)	
28	7020471	3	Gasket, Exhaust Between Muffler and Engine Block	
28	70004270	6	Stud, Muffler	
29	70001498	1	Shield, Starter	
29	70025693	3	Bolt	
30	70004102	1	V-Belt	
31	70004056	1	Alternator (Includes Voltage Regulator and Gaskets, Fan and Fan Mounting Hardware)	
31	70001868	1	Regulator, Voltage	
31	70001866	1	Gasket Set, Voltage Regulator	
31	70025131	1	Fan	
31	70025086	1	Nut, Fan	
31	70000851	1	Bracket, Alternator Mounting	
31	70002234	1	Bracket, Alternator Adjustment	
31	70004103	1	Harness, Alternator (Not Shown)	
32	7020479	1	Starter	
32	70025121	2	Bolt, Starter Mounting	
32	70004058	1	Relay	
32	70004062	1	Harness, Starter (Not Shown)	
33	7024565	1	Sensor, Speed	
33	70003931	1	Bolt	
33	70003932	1	Spacer, Sleeve	
34	7027791	1	Sender, Temperature	
35	7027790	1	Sensor, Oil Pressure	
36	7027792	1	Actuator	
37	70000345	3	Plug, Glow (Not Shown)	

FIGURE 3-24. ENGINE INSTALLATION - GM ENGINE (WITHOUT ARCTIC PACKAGE) (SN 0300201991 through 0300222052)

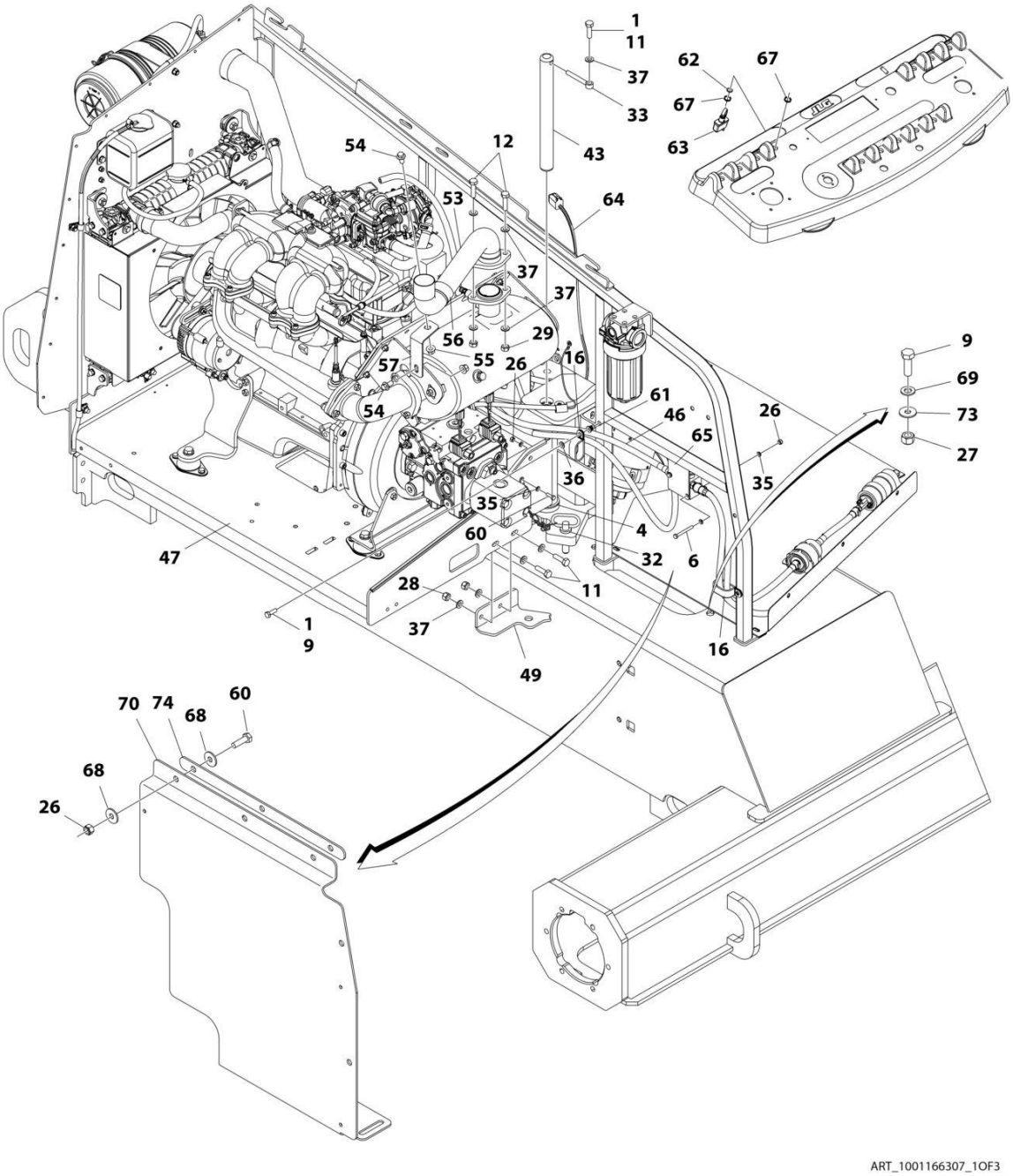

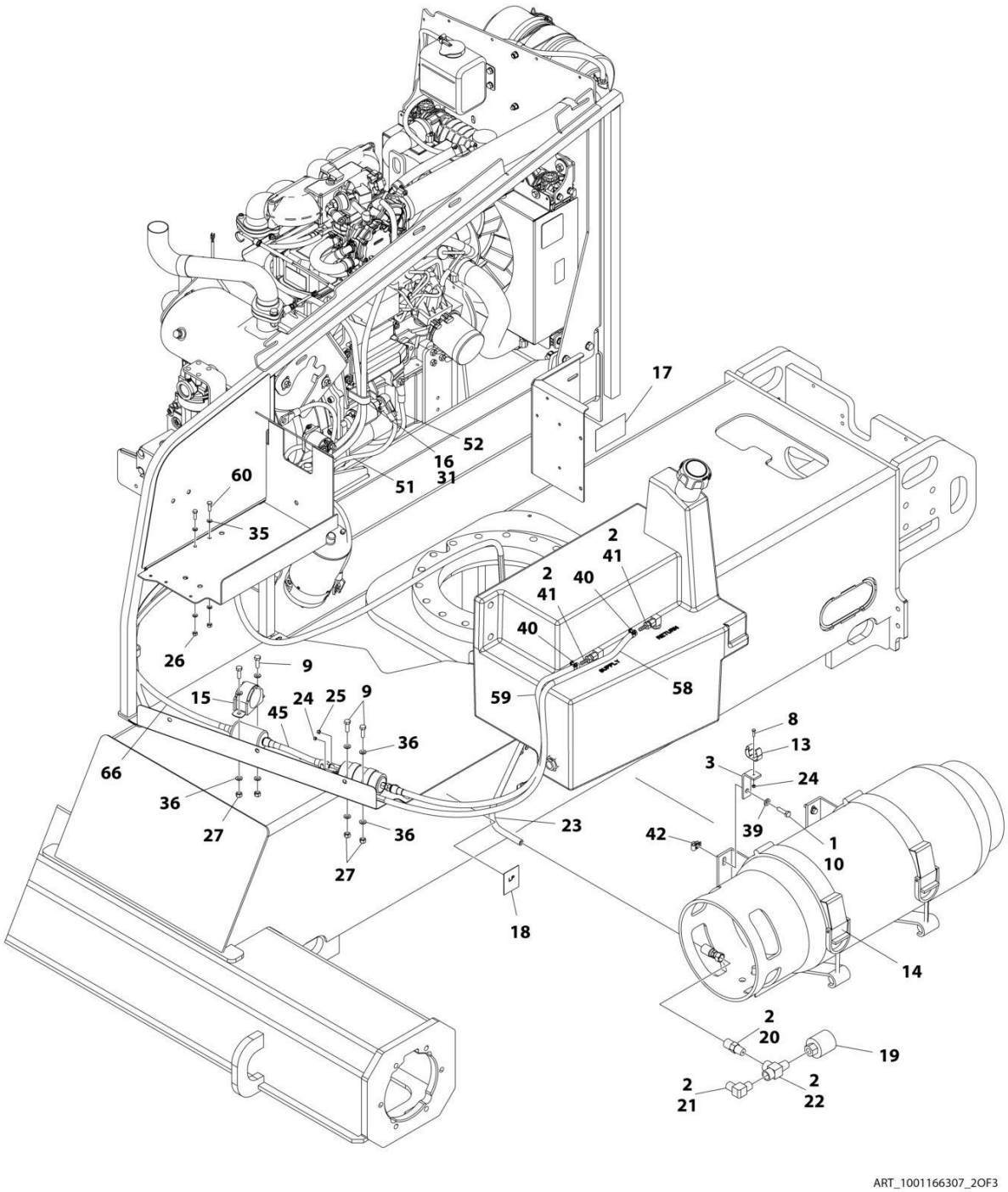
17
52
16
31
51
60
35
2
41
2
40
41
40
58
59
26
9
15
24
25
9
45
36
66
36
27
36
27
23
18
8
13
3
24
39
42
1
10
14
2
20
19
2
21
2
22
ART_1001166307_2OF3

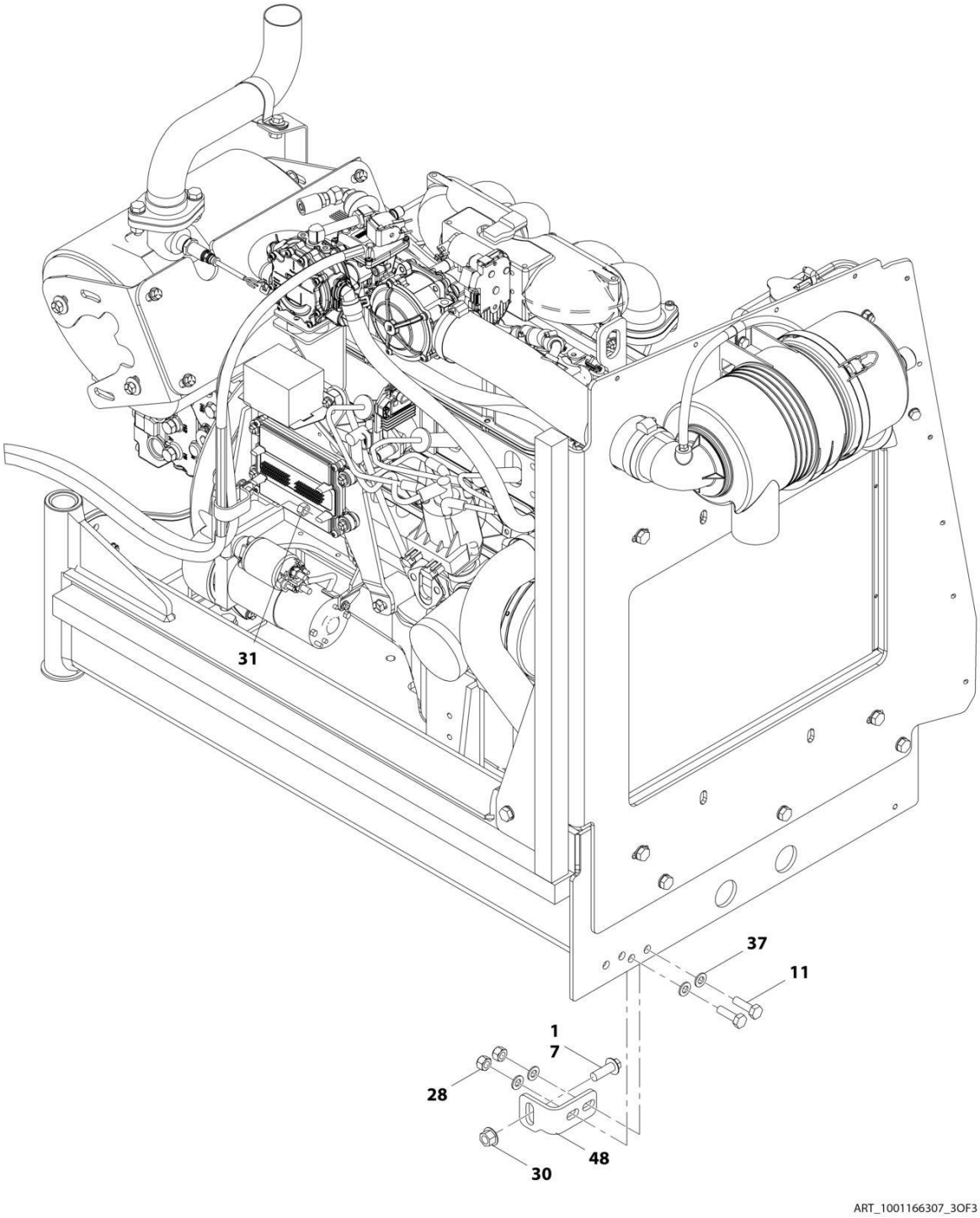
31
37
11
1
7
28
48
30
ART_1001166307_3OF3

FIGURE 3-24. ENGINE INSTALLATION - GM ENGINE (WITHOUT ARCTIC PACKAGE) (SN 0300201991 through 0300222052)

ITEM	PART NUMBER	QTY	DESCRIPTION	REV
	1001166307	Ref	ENGINE INSTALLATION - GM ENGINE (WITHOUT ARCTIC PACKAGE) **(SN 0300201991 through 0300222052)**	J
1	0100011	AR	Compound, Locking	
2	0100020	AR	Sealant, Pipe	
3	0181949	1	Angle	
4	0440162	1	Bearing	
6	0700619	2	Bolt, M6 x 55mm	
7	5251215	1	Bolt, M12 x 35mm	
8	0760408	1	Bolt, M4 x 16mm	
9	0760812	6	Bolt, M8 x 25mm	
10	0760814	4	Bolt, M8 x 30mm	
11	0761015	5	Bolt, M10 x 35mm	
12	0761016	2	Bolt, M10 x 40mm	
13	1320218	1	Clamp	
14	1320220	1	Clamp Kit - LP	
14	4400275	1	Tank, LPG (Aluminum Tank)	
14	4400420	1	Tank, LPG (Steel Tank)	
15	1320323	1	Clamp	
16	1321716	3	Clamp	
17	1701542	1	Decal - Gas	
18	1701543	1	Decal - LPG	
19	2180387	1	Fitting, LP	
20	2180389	1	Fitting	
21	2180504	1	Fitting, Barbed	
22	2220290	1	Fitting, Tee FNPTF/NPTF/FNPTF	
23	2720149	1	Hose	
24	3290405	2	Nut, Lock M4 x 0.7	
25	3290505	1	Nut, Lock M5 x 0.8	
26	3290605	8	Nut, Lock M6 x 1	
27	3290805	5	Nut, Lock M8 x 1.25	
28	3291005	4	Nut, Lock M10 x 1.5	
29	3291007	2	Nut, Lock M10 x 1.5	
30	5261200	1	Nut, 12mm Grade 10.9	
31	3311605	1	Nut, Lock 3/8-16 **(SN 0300201991 through 0300214749)**	
32	3422532	1	Pin	
33	3841143	1	Keeper, Pin	
35	4811700	10	Washer, M6	
36	4811900	9	Washer, M8	
37	4812000	13	Washer, M10	
39	5240800	4	Washer, M8 Hardened	
40	1001174486	2	Clamp	
41	2180348	2	Fitting, Barbed	
42	1001118274	4	Nut, Special M8 x 1.25	
43	1001135196	1	Pin	
45	1001156823	1	Hose	
46	1001182405	1	Hose	
47	1001166202	1	Engine and Pump Sub-Assembly - GM Engine (Without Arctic Package) (See ENGINE AND PUMP SUB-ASSEMBLY - GM ENGINE (WITHOUT ARCTIC PACKAGE) for Breakdown)	

ITEM	PART NUMBER	QTY	DESCRIPTION	REV
48	1001167512	1	Bracket, Engine Tray Stow	
49	1001169823	1	Plate, Engine Lock	
51	1001171685	1	Cable, Battery (Red) (Battery Positive to Auxiliary Power Relay)	
52	1001171686	1	Cable, Battery (Black) (Battery Negative to Pivot Pin to Engine Ground)	
53	1001172795	1	Pipe, Exhaust	
54	5251010	2	Bolt, M10 x 20mm	
55	5261018	2	Nut, Flange M10	
56	1001170719	1	Clamp	
57	1001172003	1	Support, Muffler	
58	1001177228	1	Hose	
59	1001177167	1	Hose	
60	0760610	6	Bolt, M6 x 20mm	
61	1001191832	1	Nut, Rivet M8	
62	3790012	1	O-Ring	
63	1001161710	1	Switch, Toggle	
64	1001180017	1	Harness Engine - GM Engine (See ELECTRICAL SECTION for Breakdown)	
65	1001182150	1	Bracket	
66	1001182404	1	Hose	
67	1001155044	2	Nut, Special 15/32-32	
68	4811702	6	Washer M6	
69	4811902	1	Washer M8	
70	1001196376	1	Seal, Rubber	
71	4460466	8	Terminal, Sealing Plug (Not Shown) **(SN 0300206617 through 0300272317, Except SN 0300272185 through 0300272190)**	
72	4460930	1	Plug (Not Shown) **(SN 0300206617 through 0300272317, Except SN 0300272185 through 0300272190)**	
73	4812002	2	Washer M10 **(SN 0300206617 through 0300272317, Except SN 0300272185 through 0300272190)**	
74	1001204123	1	Plate, Support **(SN 0300210489 through 0300272317, Except SN 0300272185 through 0300272190)**	

FIGURE 3-25. ENGINE INSTALLATION - GM ENGINE (WITHOUT ARCTIC PACKAGE) (SN 0300222053 through 0300272317)

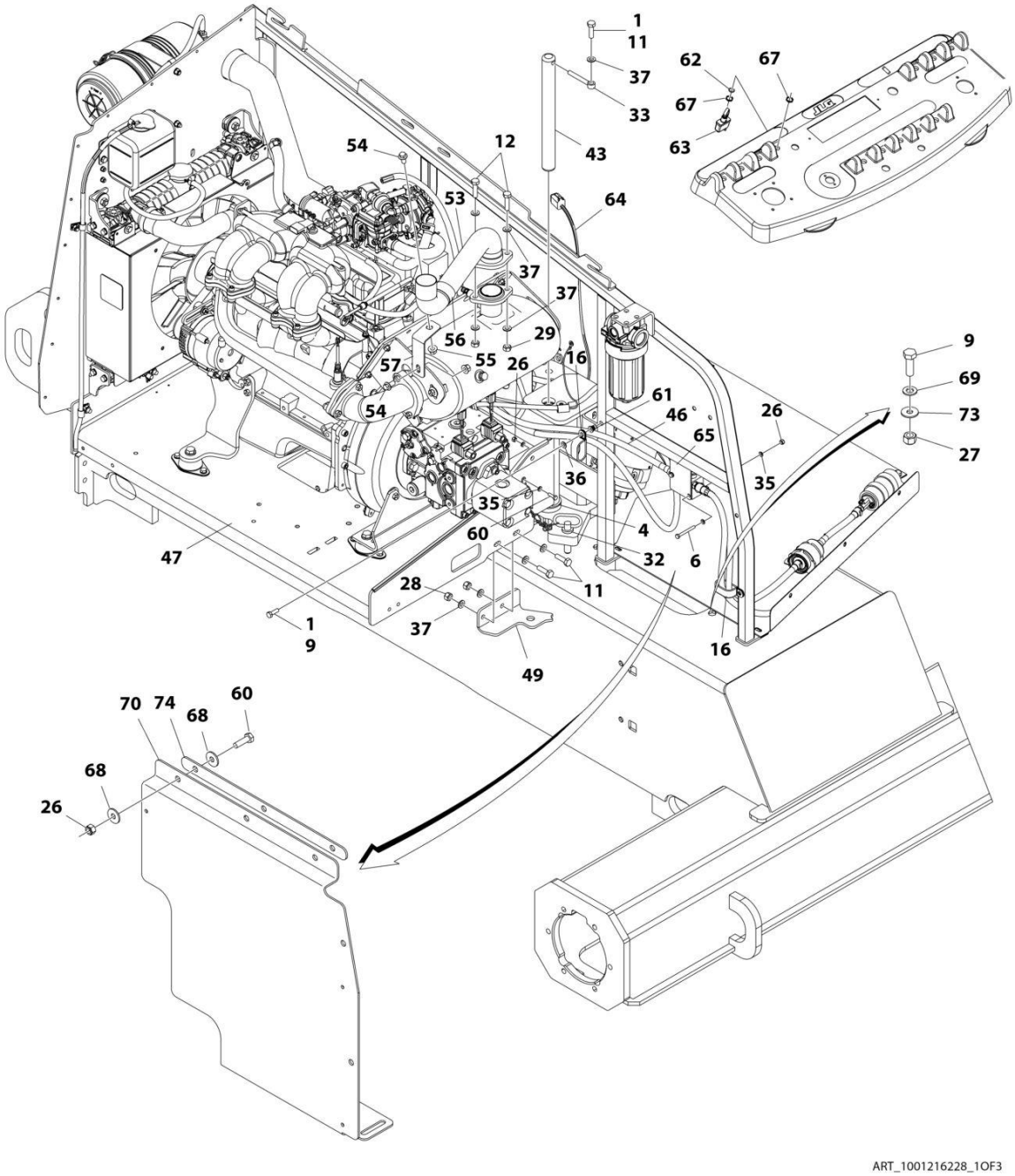

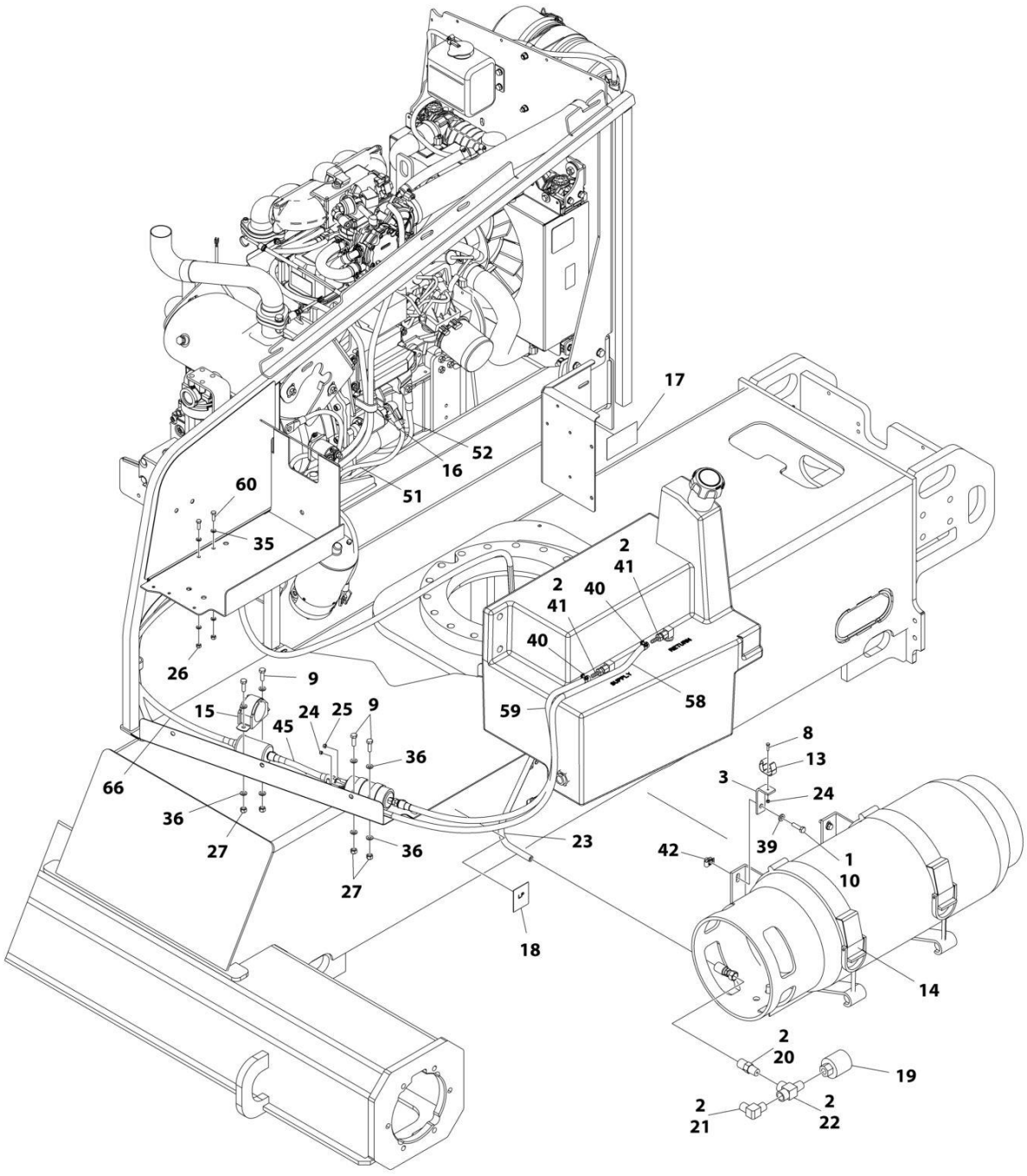

ART_1001216228_2OF3

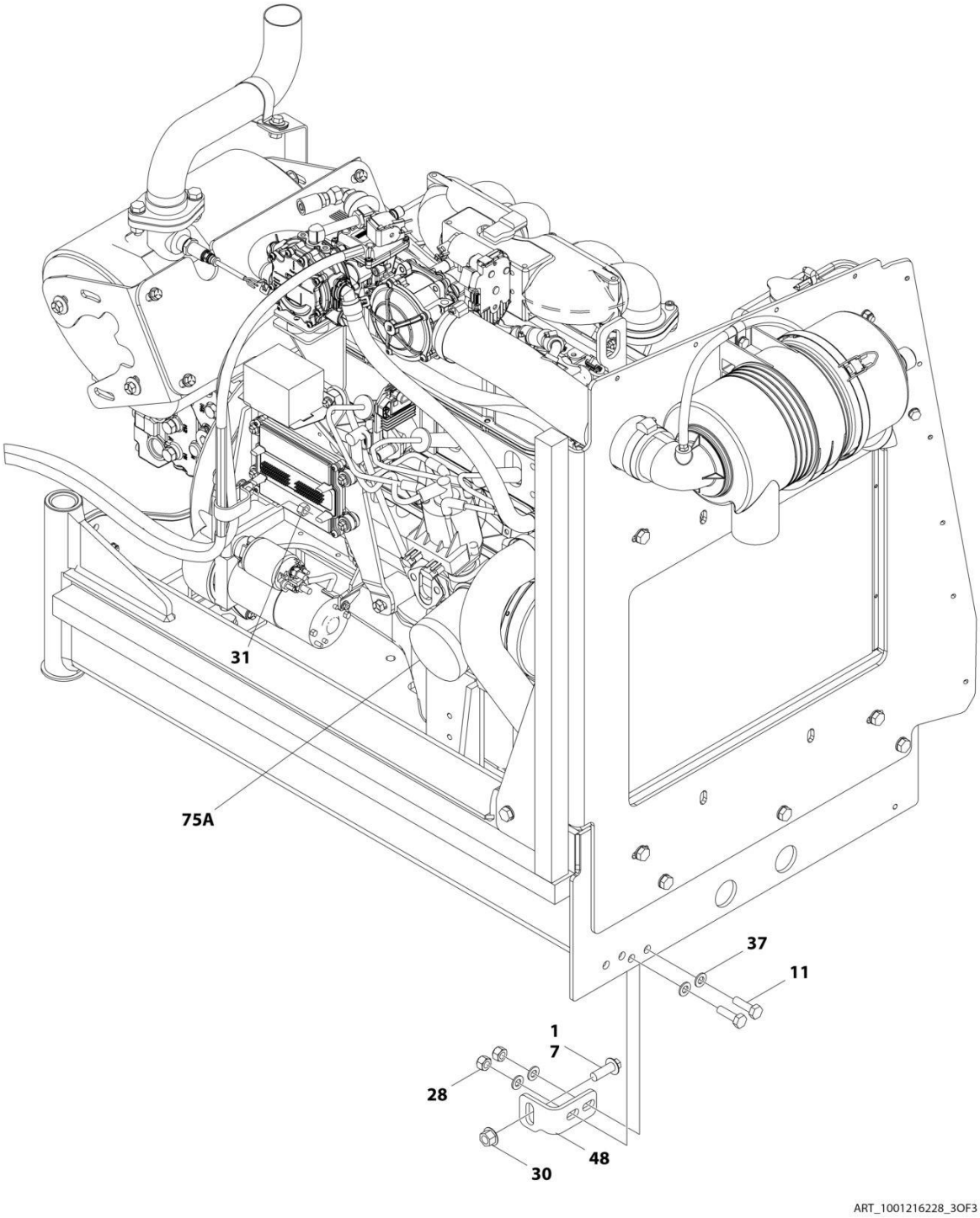
31
75A
37
11
1
7
28
48
30
ART_1001216228_3OF3

FIGURE 3-25. ENGINE INSTALLATION - GM ENGINE (WITHOUT ARCTIC PACKAGE) (SN 0300222053 through 0300272317)

ITEM	PART NUMBER	QTY	DESCRIPTION	REV
	1001216228	Ref	ENGINE INSTALLATION - GM ENGINE (WITHOUT ARCTIC PACKAGE)	C
1	0100011	AR	Compound, Locking	
2	0100020	AR	Sealant, Pipe	
3	0181949	1	Angle	
4	0440162	1	Bearing	
6	0700619	2	Bolt, M6 x 55mm	
7	5251215	1	Bolt, M12 x 35mm	
8	0760408	1	Bolt, M4 x 16mm	
9	0760812	6	Bolt, M8 x 25mm	
10	0760814	4	Bolt, M8 x 30mm	
11	0761015	5	Bolt, M10 x 35mm	
12	0761016	2	Bolt, M10 x 40mm	
13	1320218	1	Clamp	
14	1320220	1	Clamp Kit - LP	
14	4400275	1	Tank, LPG (Aluminum Tank)	
14	4400420	1	Tank, LPG (Steel Tank)	
15	1320323	1	Clamp	
16	1321716	2	Clamp	
17	1701542	1	Decal - Gas	
18	1701543	1	Decal - LPG	
19	2180387	1	Fitting, LP	
20	2180389	1	Fitting	
21	2180504	1	Fitting, Barbed	
22	2220290	1	Fitting, Tee FNPTF/NPTF/FNPTF	
23	2720149	1	Hose	
24	3290405	2	Nut, Lock M4 x 0.7	
25	3290505	1	Nut, Lock M5 x 0.8	
26	3290605	8	Nut, Lock M6 x 1	
27	3290805	5	Nut, Lock M8 x 1.25	
28	3291005	4	Nut, Lock M10 x 1.5	
29	3291007	2	Nut, Lock M10 x 1.5	
30	5261200	1	Nut, 12mm Grade 10.9	
32	3422532	1	Pin	
33	3841143	1	Keeper, Pin	
35	4811700	10	Washer, M6	
36	4811900	9	Washer, M8	
37	4812000	13	Washer, M10	
39	5240800	4	Washer, M8 Hardened	
40	1001174486	2	Clamp	
41	2180348	2	Fitting, Barbed	
42	1001118274	4	Nut, Special M8 x 1.25	
43	1001135196	1	Pin	
45	1001156823	1	Hose	
46	1001182405	1	Hose	
47	1001216224	1	Engine and Pump Sub-Assembly - GM Engine (Without Arctic Package) (See ENGINE AND PUMP SUB-ASSEMBLY - GM ENGINE (WITHOUT ARCTIC PACKAGE) for Breakdown)	
48	1001167512	1	Bracket, Engine Tray Stow	

SECTION 3 - ENGINE

ITEM	PART NUMBER	QTY	DESCRIPTION	REV
49	1001169823	1	Plate, Engine Lock	
51	1001171685	1	Cable, Battery (Red) (Battery Positive to Auxiliary Power Relay)	
52	1001166970	1	Cable, Battery (Black) (Battery Negative to Pivot Pin to Engine Ground)	
53	1001172795	1	Pipe, Exhaust	
54	5251010	2	Bolt, M10 x 20mm	
55	5261018	2	Nut, Flange M10	
56	1001170719	1	Clamp	
57	1001172003	1	Support, Muffler	
58	1001177228	1	Hose	
59	1001177167	1	Hose	
60	0760610	6	Bolt, M6 x 20mm	
61	1001191832	1	Nut, Rivet M8	
62	3790012	1	O-Ring	
63	1001161710	1	Switch, Toggle	
64	1001180017	1	Harness Engine - GM Engine (See ELECTRICAL SECTION for Breakdown)	
65	1001182150	1	Bracket	
66	1001182404	1	Hose	
67	1001155044	2	Nut, Special 15/32-32	
68	4811702	6	Washer M6	
69	4811902	1	Washer M8	
70	1001196376	1	Seal, Rubber	
71	4460466	8	Terminal, Sealing Plug (Not Shown)	
72	4460930	1	Plug (Not Shown)	
73	4812002	2	Washer M10	
74	1001204123	1	Plate, Support	
75	1001216219	1	Engine, GM 3.0L (See GM Engine Supplement P/N 3121245 for Breakdown of Additional Components) **(SN 0300222053 through 0300223920)**	
75	1001214862	1	Engine, GM 3.0L (See GM Engine Supplement P/N 3121245 for Breakdown of Additional Components) **(SN 0300223921 through 0300272317, Except SN 0300272185 through 0300272190)**	
75A	7027965	1	Filter, Oil	

FIGURE 3-26. ENGINE AND PUMP SUB-ASSEMBLY - GM ENGINE (WITHOUT ARCTIC PACKAGE) (SN 0300201991 through 0300222052)

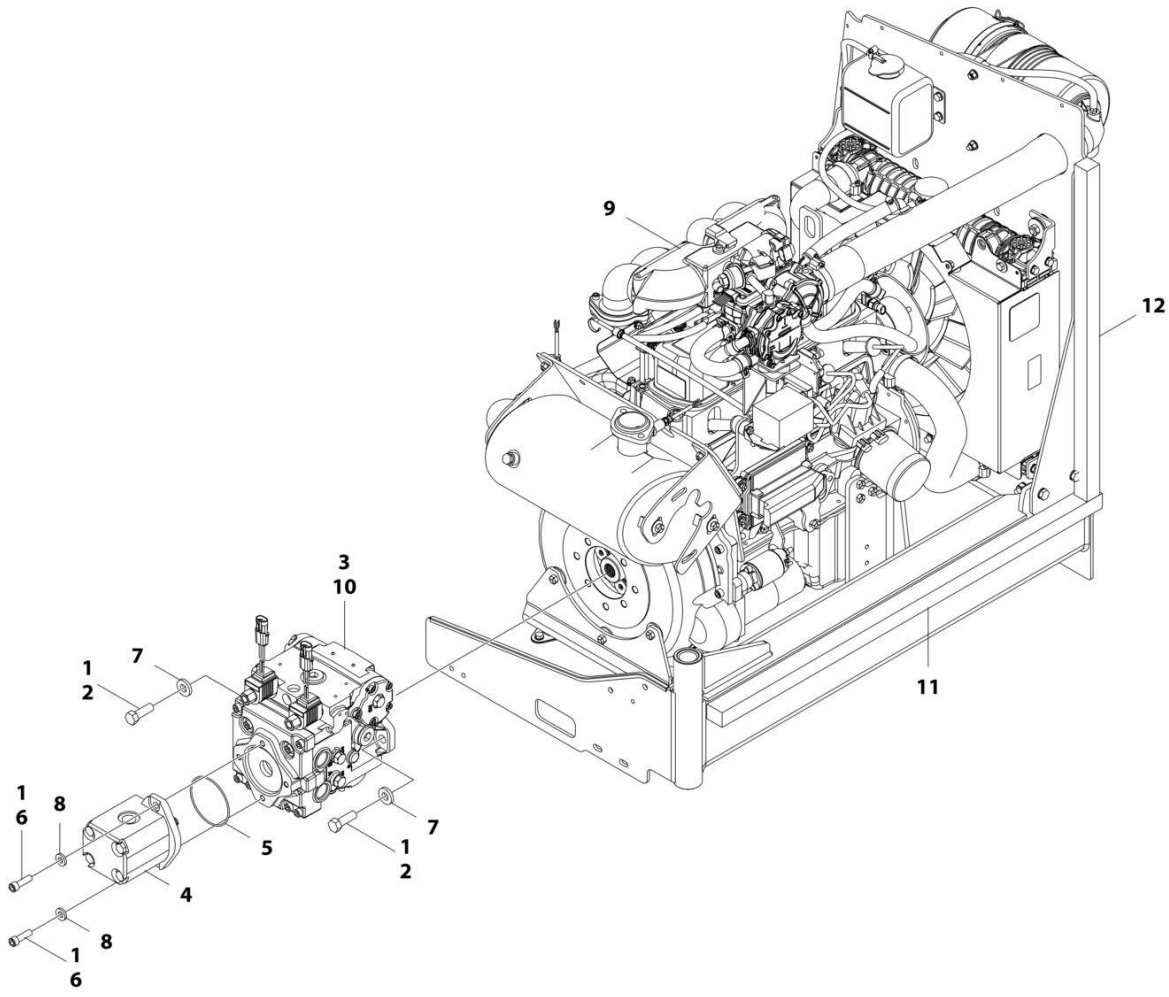

FIGURE 3-26. ENGINE AND PUMP SUB-ASSEMBLY - GM ENGINE (WITHOUT ARCTIC PACKAGE) (SN 0300201991 through 0300222052)

ITEM	PART NUMBER	QTY	DESCRIPTION	REV
	1001166202	1	ENGINE AND PUMP SUB-ASSEMBLY - GM ENGINE (WITHOUT ARCTIC PACKAGE) **(SN 0300201991 through 0300222052)**	J
1	0100011	AR	Compound, Locking	
2	0641812	2	Bolt, 1/2-13 x 1-1/2	
3	3020037	AR	Lube	
4	3600242	1	Gear Pump Assembly (See GEAR PUMP ASSEMBLY for Breakdown)	
5	3790152	1	O-Ring	
6	3931620	2	Capscrew, 3/8-16 x 1-1/4	
7	4891800	2	Washer, 1/2 Hardened	
8	4891600	2	Washer, 3/8 Hardened	
9	1001166203	1	Engine Assembly - GM Engine (Without Arctic Package) (See ENGINE ASSEMBLY - GM ENGINE (WITHOUT ARCTIC PACKAGE) for Breakdown)	
10	1001167036	1	Piston Pump Assembly (See PISTON PUMP ASSEMBLY for Breakdown)	
11	1001171953	1	Seal	
12	1001171954	1	Seal	

FIGURE 3-27. ENGINE AND PUMP SUB-ASSEMBLY - GM ENGINE (WITHOUT ARCTIC PACKAGE) (SN 0300222053 through 0300272317)

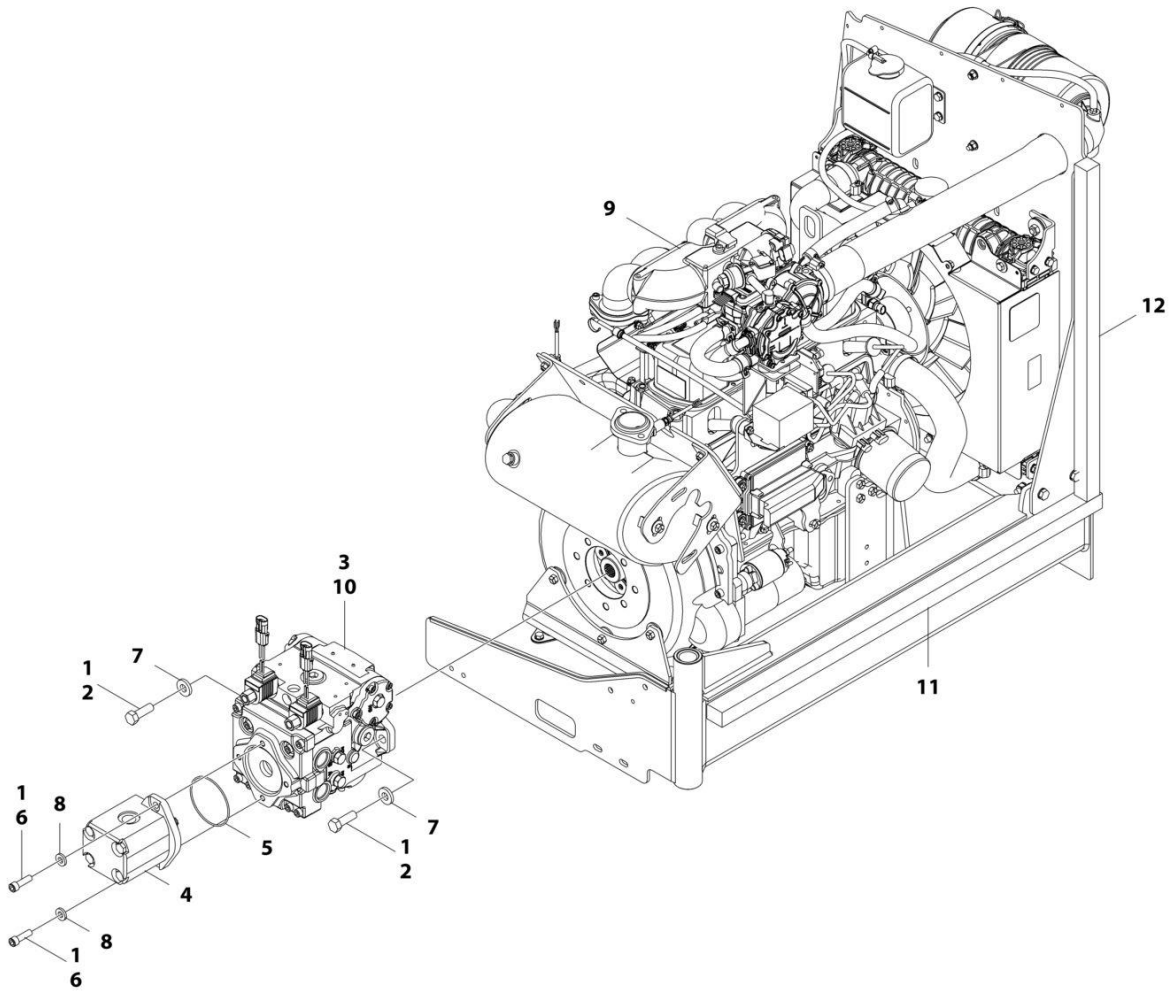

FIGURE 3-27. ENGINE AND PUMP SUB-ASSEMBLY - GM ENGINE (WITHOUT ARCTIC PACKAGE) (SN 0300222053 through 0300272317)

ITEM	PART NUMBER	QTY	DESCRIPTION	REV
	1001216224	Ref	ENGINE AND PUMP SUB-ASSEMBLY - GM ENGINE (WITHOUT ARCTIC PACKAGE)	F
1	0100011	AR	Compound, Locking	
2	0641812	2	Bolt, 1/2-13 x 1-1/2	
3	3020037	AR	Lube	
4	3600242	1	Gear Pump Assembly (See GEAR PUMP ASSEMBLY for Breakdown) **(SN 0300222053 through 0300236982)**	
4	1001214207	1	Gear Pump Assembly **(SN 0300236983 through 0300272317, Except SN 0300272185 through 0300272190)**	
4	70006356	1	Seal Kit – 1001214207 Pump	
5	3790152	1	O-Ring	
6	3931620	2	Capscrew 3/8 x 1-1/4	
6	3931618	2	Capscrew 3/8 x 1-1/8	
7	4891800	2	Washer, 1/2 Hardened	
8	4891600	2	Washer, 3/8 Hardened	
9	1001216222	1	Engine Assembly - GM Engine (Without Arctic Package) (See ENGINE ASSEMBLY - GM ENGINE (WITHOUT ARCTIC PACKAGE) for Breakdown)	
10	1001167036	1	Piston Pump Assembly (See PISTON PUMP ASSEMBLY for Breakdown)	
11	1001171953	1	Seal	
12	1001171954	1	Seal	

FIGURE 3-28. ENGINE ASSEMBLY - GM ENGINE (WITHOUT ARCTIC PACKAGE) (SN 0300201991 through 0300222052)

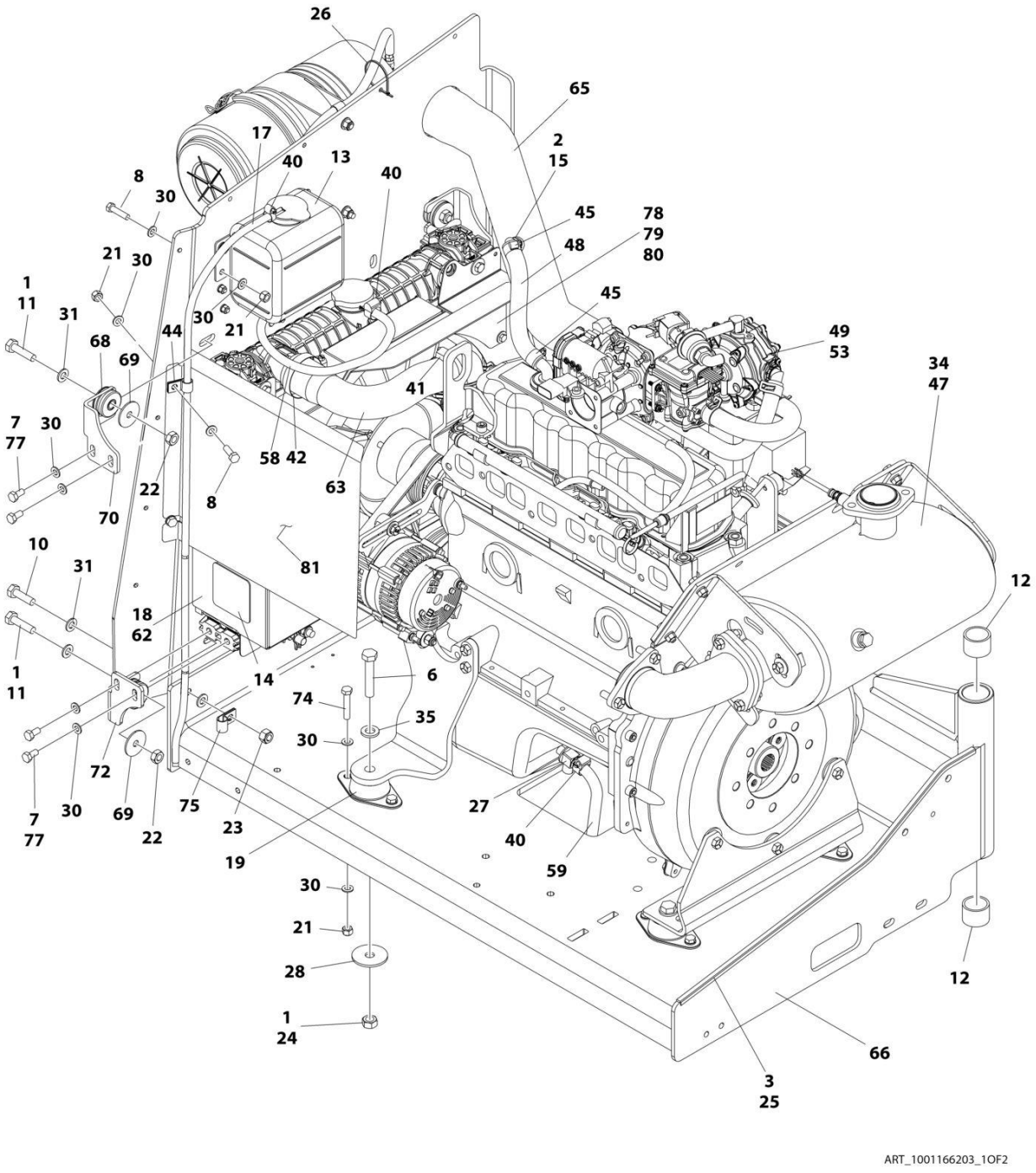

ART_1001166203_1OF2

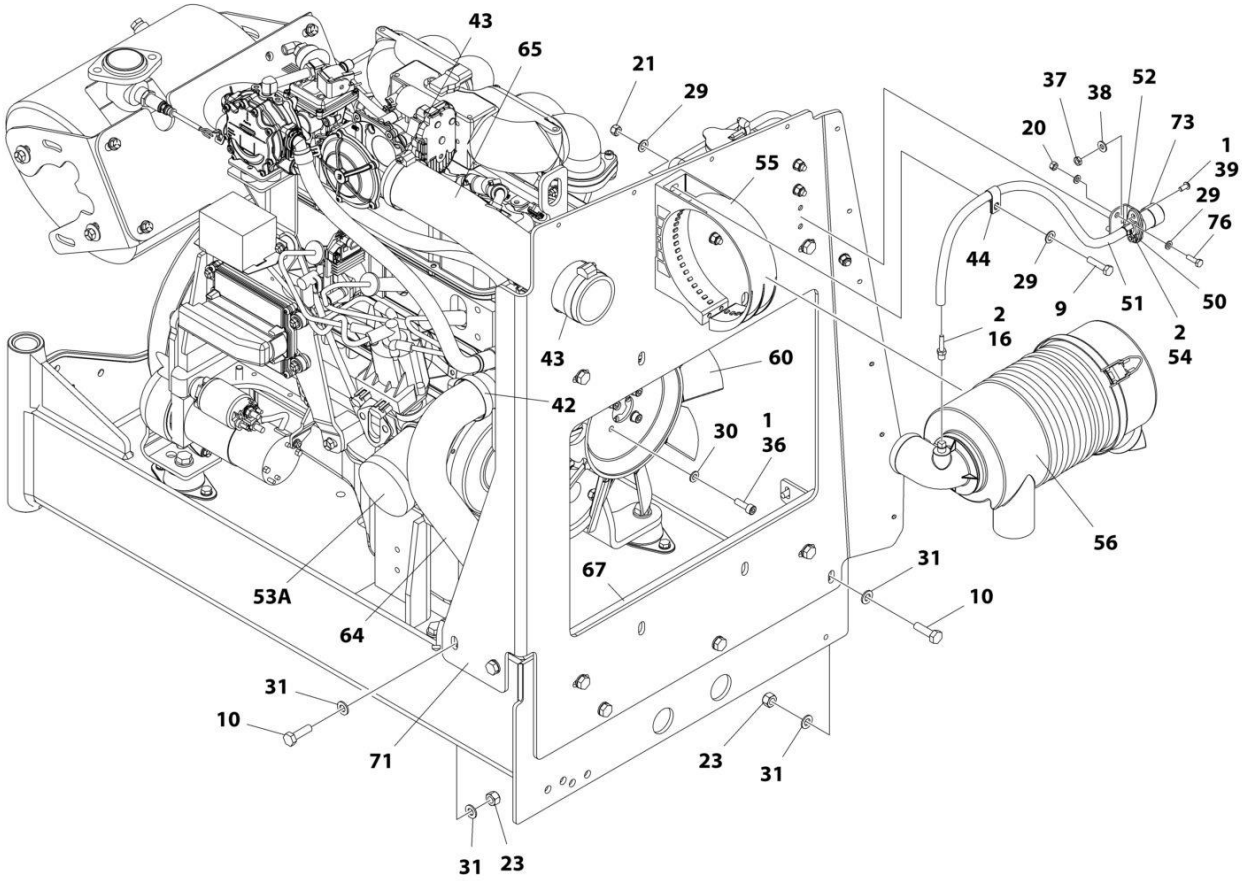

ART_1001166203_2OF2

FIGURE 3-28. ENGINE ASSEMBLY - GM ENGINE (WITHOUT ARCTIC PACKAGE) (SN 0300201991 through 0300222052)

ITEM	PART NUMBER	QTY	DESCRIPTION	REV
	1001166203	Ref	ENGINE ASSEMBLY - GM ENGINE (WITHOUT ARCTIC PACKAGE) **(SN 0300201991 through 0300222052)**	J
1	0100011	AR	Compound, Locking	
2	0100020	AR	Sealant, Pipe	
3	0100081	AR	Adhesive	
6	0711221	4	Bolt, M12 x 65mm Grade 10.9	
7	0760808	8	Bolt, M8 x 16mm	
8	0760812	6	Bolt, M8 x 25mm	
9	0760815	2	Bolt, M8 x 35mm	
10	0761015	5	Bolt, M10 x 35mm	
11	0761016	4	Bolt, M10 x 40mm	
12	0961951	2	Bushing	
13	1580011	1	Container, Coolant Overflow	
14	1703162	2	Decal - Caution Fan	
15	2180877	1	Fitting, Barbed 90	
16	2220315	1	Fitting, Barbed	
17	2720271	38.5 in /97.8cm	Hose	
18	2300004	2.7 gal /10.2L	Coolant, Anti-Freeze	
19	3200406	4	Mount, Rubber	
20	3290607	2	Nut, Lock M6 x 1	
21	3290805	16	Nut, Lock M8 x 1.25	
22	3291001	4	Nut, Lock M10 x 1.5	
23	3291005	5	Nut, Lock M10 x 1.5	
24	3331211	4	Nut, Lock M12 x 1.75	
25	4060805	2.25 ft /0.69m	Trim, Flex Shield	
26	4240099	AR	Tie-Strap	
27	4640952	1	Valve, Oil Drain	
28	4740274	4	Washer, Snubbing	
29	4811700	4	Washer, M6	
30	4811900	44	Washer, M8	
31	4812000	14	Washer, M10	
34	4920385	10 ft	Wire, Safety	
35	5241200	4	Washer, M12 Hardened	
36	5271809	4	Bolt, M8 x 25mm	
37	8305401	2	Nut, Jam .250-20	
38	8307109	2	Washer, .250	
39	8310548	2	Screw, 1/4 NC x 1/2	
40	8405009	4	Clamp	
41	8405103	1	Clamp	
42	8405201	3	Clamp	
43	8405203	2	Clamp	
44	8406109	2	Clip	
45	8410009	2	Clamp	
47	1001091794	1	Insulation, Muffler	
48	1001091892	8 in /20cm	Hose	
49	1001190775	4.5 qt /4.3L	Oil, Engine	

ITEM	PART NUMBER	QTY	DESCRIPTION	REV
50	1001138173	1	Support, Service Indicator	
51	1001138248	2 ft /0.61m	Hose	
52	1001138175	1	Bracket, Service Indicator	
53	1001181430	1	Engine, GM 3.0L (See GM Engine Supplement P/N 3121245 for Breakdown of Additional Components)	
53A	7027965	1	Filter, Oil	
54	1001141995	1	Fitting, Barbed	
55	1001147812	1	Clamp. Air Cleaner	
56	1001147813	1	Air Cleaner Assembly Including Filter Element	
56	70004020	1	Element, Filter (Not Shown)	
58	1001156819	14.5 in /37cm	Hose	
59	1001165035	8 in /20.3cm	Hose	
60	2060025	1	Fan	
62	1001167193	1	Radiator	
63	1001167382	1	Hose, Upper Radiator	
64	1001167383	1	Hose, Lower Radiator	
65	1001167384	1	Hose, Air Intake	
66	1001167895	1	Tray, Engine	
67	1001168166	2	Seal	
68	1001169054	4	Isolator, Radiator	
69	1001169138	4	Washer, Snubbing	
70	1001169967	2	Bracket	
71	1001195714	1	Plate, Radiator Mounting	
72	1001170035	2	Bracket	
73	1001170981	1	Indicator	
74	0760814	8	Bolt, M8 x 30mm	
75	8406110	1	Clip	
76	0760610	2	Bolt, M6 x 20mm	
77	1001180620	AR	Adhesive	
78	0760606	2	Bolt M6 x 12 **(SN 0300201991 through 0300211979)**	
78	5250605	2	Bolt M6 x 10 **(SN 0300211980 through 0300272317, Except SN 0300272185 through 0300272190)**	
79	4811702	2	Washer M6 **(SN 0300201991 through 0300211979)**	
80	1001195699	1	Deflector, Air	
81	1001195700	1	Deflector, Air	

FIGURE 3-29. ENGINE ASSEMBLY - GM ENGINE (WITHOUT ARCTIC PACKAGE) (SN 0300222053 through 0300272317)

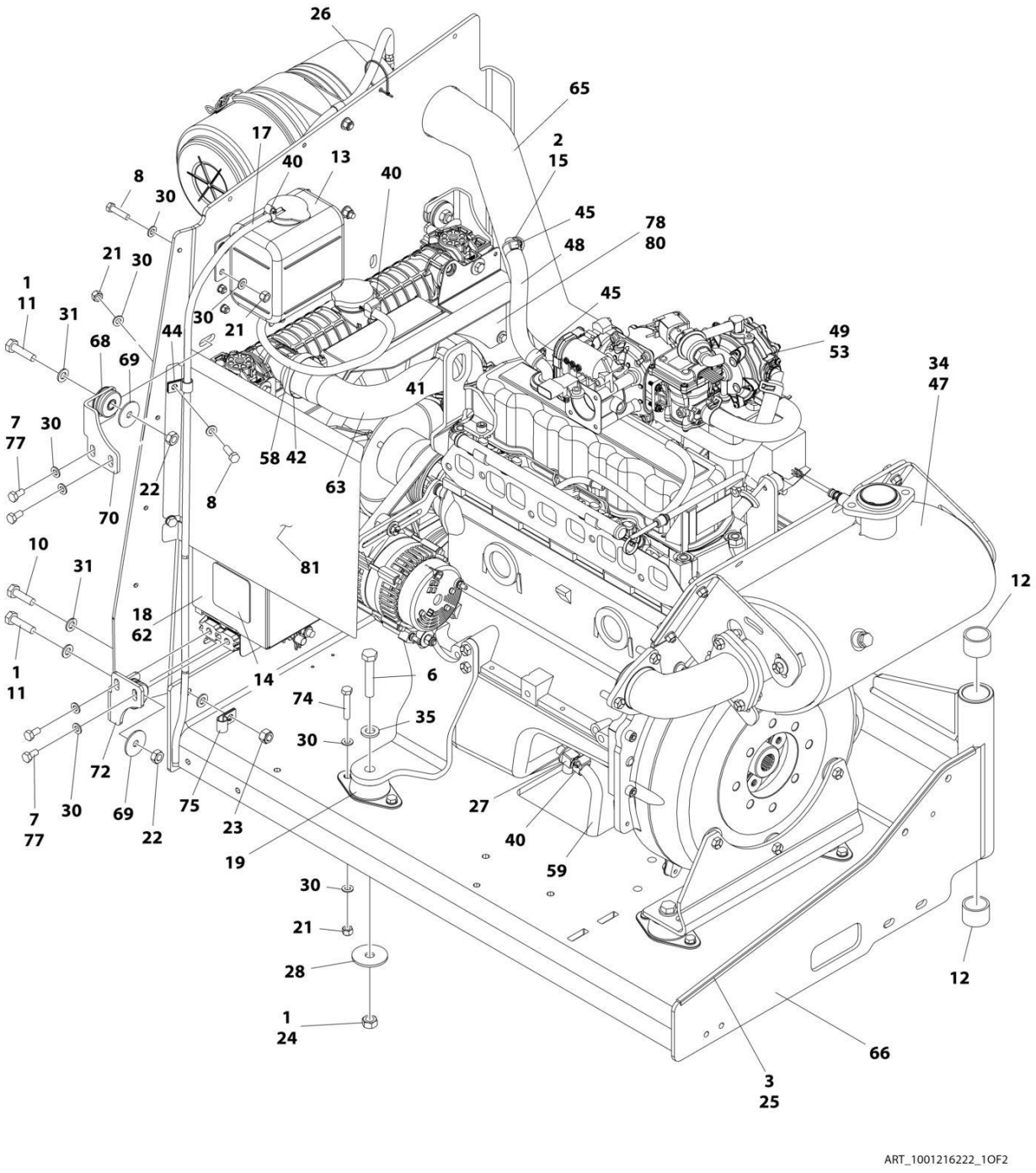

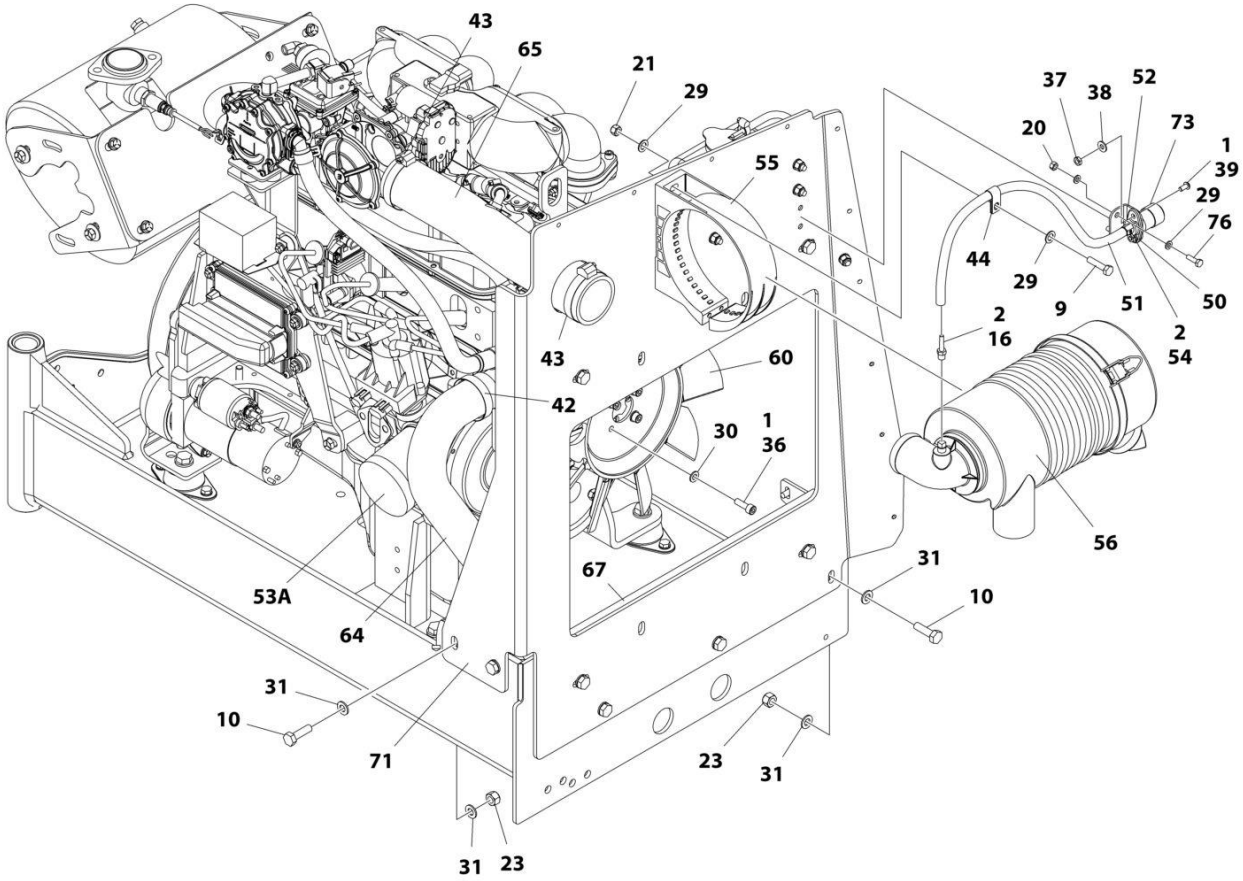

ART_1001216222_2OF2

FIGURE 3-29. ENGINE ASSEMBLY - GM ENGINE (WITHOUT ARCTIC PACKAGE) (SN 0300222053 through 0300272317)

ITEM	PART NUMBER	QTY	DESCRIPTION	REV
	1001216222	Ref	ENGINE ASSEMBLY - GM ENGINE (WITHOUT ARCTIC PACKAGE)	C
1	0100011	AR	Compound, Locking	
2	0100020	AR	Sealant, Pipe	
3	0100081	AR	Adhesive	
6	0711221	4	Bolt, M12 x 65mm Grade 10.9	
7	0760808	8	Bolt, M8 x 16mm	
8	0760812	6	Bolt, M8 x 25mm	
9	0760815	2	Bolt, M8 x 35mm	
10	0761015	5	Bolt, M10 x 35mm	
11	0761016	4	Bolt, M10 x 40mm	
12	0961951	2	Bushing	
13	1580011	1	Container, Coolant Overflow	
14	1703162	2	Decal - Caution Fan	
15	2180877	1	Fitting, Barbed 90	
16	2220315	1	Fitting, Barbed	
17	2720271	38.5 in/ 97.8cm	Hose	
18	2300004	2.7 gal/ 10.2L	Coolant, Anti-Freeze	
19	3200406	4	Mount, Rubber	
20	3290607	2	Nut, Lock M6 x 1	
21	3290805	16	Nut, Lock M8 x 1.25	
22	3291001	4	Nut, Lock M10 x 1.5	
23	3291005	5	Nut, Lock M10 x 1.5	
24	3331211	4	Nut, Lock M12 x 1.75	
25	4060805	2.3 ft /0.7m	Trim, Flex Shield	
26	4240099	AR	Tie-Strap	
27	4640952	1	Valve, Oil Drain	
28	4740274	4	Washer, Snubbing	
29	4811700	4	Washer, M6	
30	4811900	44	Washer, M8	
31	4812000	14	Washer, M10	
34	4920385	10 ft/3.0m	Wire, Safety	
35	5241200	4	Washer, M12 Hardened	
36	5271809	4	Bolt, M8 x 25mm	
37	8305401	2	Nut, Jam .250-20	
38	8307109	2	Washer, .250	
39	8310548	2	Screw, 1/4 NC x 1/2	
40	8405009	4	Clamp	
41	8405103	1	Clamp	
42	8405201	3	Clamp	
43	8405203	2	Clamp	
44	8406109	2	Clip	
45	8410009	2	Clamp	
47	1001091794	1	Insulation, Muffler	
48	1001091892	8 in /20cm	Hose	
49	1001190775	4.5 qt/ 4.3L	Oil, Engine	

ITEM	PART NUMBER	QTY	DESCRIPTION	REV
50	1001138173	1	Support, Service Indicator	
51	1001138248	2 ft /0.6m	Hose	
52	1001138175	1	Bracket, Service Indicator	
53	1001216219	1	Engine, GM 3.0L (See GM Engine Supplement P/N 3121245 for Breakdown of Additional Components)	
53A	7027965	1	Filter, Oil	
54	1001141995	1	Fitting, Barbed	
55	1001147812	1	Clamp. Air Cleaner	
56	1001147813	1	Air Cleaner Assembly Including Filter Element	
56	70004020	1	Element, Filter (Not Shown)	
58	1001156819	14.5 in/ 37cm	Hose	
59	1001165035	8 in/ 20.3cm	Hose	
60	2060025	1	Fan	
62	1001167193	1	Radiator	
63	1001167382	1	Hose, Upper Radiator	
64	1001167383	1	Hose, Lower Radiator	
65	1001167384	1	Hose, Air Intake	
66	1001167895	1	Tray, Engine	
67	1001168166	2	Seal	
68	1001169054	4	Isolator, Radiator	
69	1001169138	4	Washer, Snubbing	
70	1001169967	2	Bracket	
71	1001195714	1	Plate, Radiator Mounting	
72	1001170035	2	Bracket	
73	1001170981	1	Indicator	
74	0760814	8	Bolt, M8 x 30mm	
75	8406110	1	Clip	
76	0760610	2	Bolt, M6 x 20mm	
77	1001180620	AR	Adhesive	
78	5250605	2	Bolt M6 x 10	
80	1001195699	1	Deflector, Air	
81	1001195700	1	Deflector, Air	

FIGURE 3-30. ENGINE INSTALLATION - GM ENGINE (WITH ARCTIC PACKAGE) (SN 0300201991 through 0300222052)

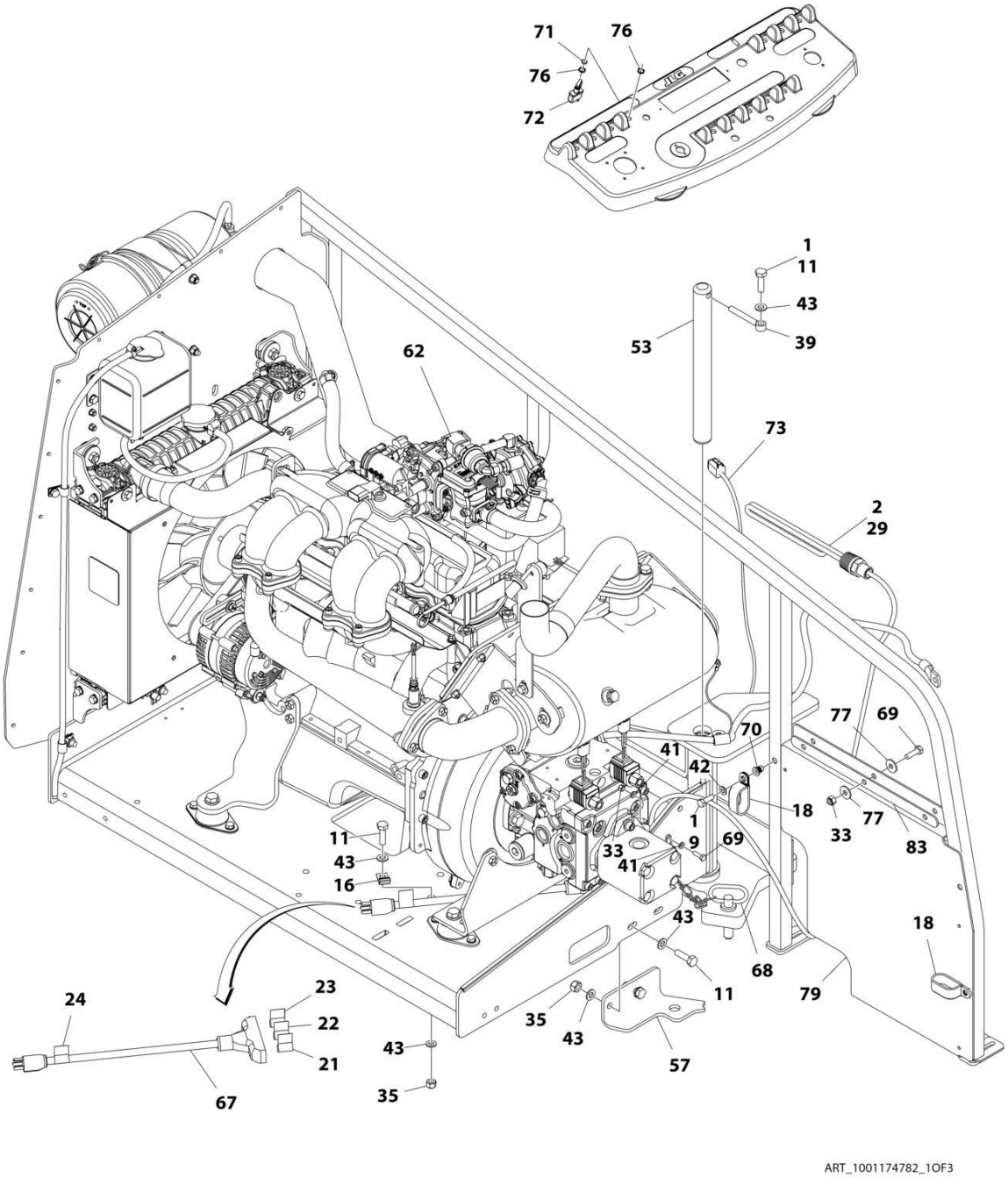

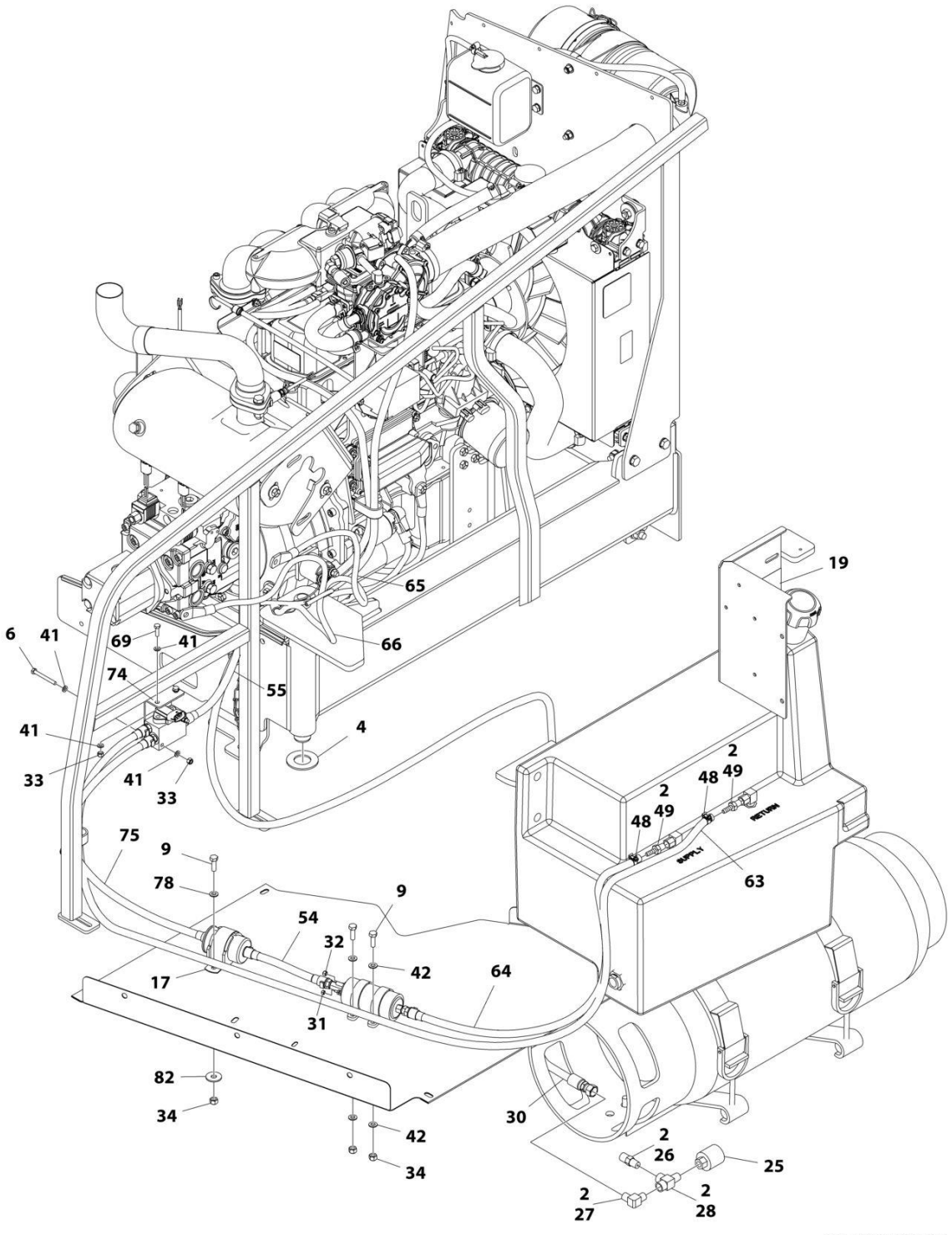
19
65
6
41
69
41
66
74
55
4
41
33
41
33
2
48
49
2
48
49
RETURN
SUPPLY
63
75
9
78
9
54
32
42
64
17
31
82
34
30
42
34
2
26
25
2
27
28
ART_1001174782_2OF3

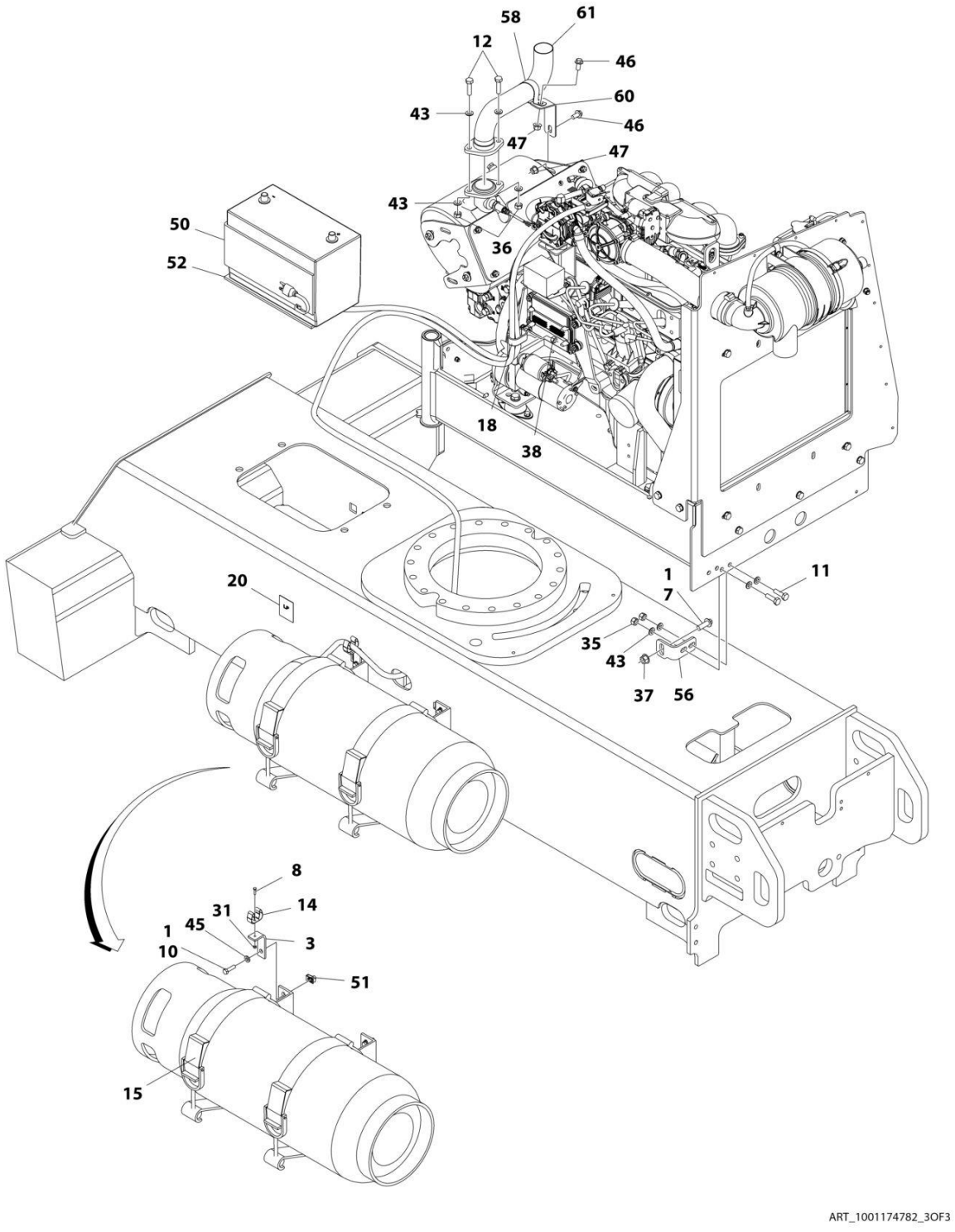
58
61
12
46
60
43
46
47
47
43
50
52
36
18
38
20
1
7
11
35
43
37
56
8
14
31
45
1
10
3
51
15
ART_1001174782_3OF3

FIGURE 3-30. ENGINE INSTALLATION - GM ENGINE (WITH ARCTIC PACKAGE) (SN 0300201991 through 0300222052)

ITEM	PART NUMBER	QTY	DESCRIPTION	REV
	1001174782	Ref	ENGINE INSTALLATION - GM ENGINE (WITH ARCTIC PACKAGE) **(SN 0300201991 through 0300222052)**	I
1	0100011	AR	Compound, Locking	
2	0100020	AR	Sealant, Pipe	
3	0181949	1	Angle	
4	0440162	1	Bearing	
6	0700619	2	Bolt, M6 x 55mm	
7	5251215	1	Bolt, M12 x 35mm	
8	0760408	1	Bolt, M4 x 16mm	
9	0760812	6	Bolt, M8 x 25mm	
10	0760814	4	Bolt, M8 x 30mm	
11	0761015	6	Bolt, M10 x 35mm	
12	0761016	2	Bolt, M10 x 40mm	
13	1060625	1	Cable, Immersion Heater **(SN 0300201991 through 0300206616)**	
14	1320218	1	Clamp	
15	1320220	1	Clamp Kit - LP	
15	4400275	1	Tank, LPG (Aluminum Tank)	
15	4400420	1	Tank, LPG (Steel Tank)	
16	1320223	1	Clamp	
17	1320323	1	Clamp	
18	1321716	3	Clamp	
19	1701542	1	Decal - Gas	
20	1701543	1	Decal - LPG	
21	1702941	1	Decal - Battery Heater	
22	1702942	1	Decal - Engine Block Heater	
23	1702943	1	Decal - Hydraulic Tank Heater	
24	1702944	1	Decal - Heater Cord	
25	2180387	1	Fitting, LP	
26	2180389	1	Fitting	
27	2180504	1	Fitting, Elbow	
28	2220290	1	Fitting, Tee FNPTF/NPTF/FNPTF	
29	2580050	1	Heater, Hydraulic Tank **(SN 0300201991 through 0300206616)**	
29	1001188972	1	Heater, Hydraulic Tank **(SN 0300206617 through 0300272317, Except SN 0300272185 through 0300272190)**	
30	2720149	1	Hose	
31	3290405	2	Nut, Lock M4 x 0.7	
32	3290505	1	Nut, Lock M5 x 0.8	
33	3290605	8	Nut, Lock M6 x 1	
34	3290805	5	Nut, Lock M8 x 1.25	
35	3291005	5	Nut, Lock M10 x 1.5	
36	3291007	2	Nut, Lock M10 x 1.5	
37	5261200	1	Nut, Flange M12 Grade 10.9	
38	3311605	1	Nut, Lock 3/8-16 **(SN 0300201991 through 0300214749)**	
39	3841143	1	Keeper, Pin	
41	4811700	10	Washer, M6	
42	4811900	9	Washer, M8	
43	4812000	15	Washer, M10	
45	5240800	4	Washer, M8 Hardened	
46	5251010	2	Bolt, M10 x 20mm	

ITEM	PART NUMBER	QTY	DESCRIPTION	REV
47	5261018	2	Nut, Flange M10	
48	1001174486	2	Clamp	
49	2180348	2	Fitting, Barbed	
50	1001097000	1	Heater, Battery **(SN 0300201991 through 0300206616)**	
50	2580024	1	Heater, Battery **(SN 0300206617 through 0300272317, Except SN 0300272185 through 0300272190)**	
51	1001118274	4	Nut, Special M8 x 1.25	
52	1001119278	1	Insulate	
53	1001135196	1	Pin	
54	1001156823	1	Hose	
55	1001182405	1	Hose	
56	1001167512	1	Bracket	
57	1001169823	1	Plate, Engine Lock	
58	1001170719	1	Clamp	
60	1001172003	1	Support, Muffler	
61	1001172795	1	Pipe, Exhaust	
62	1001174781	1	Engine and Pump Sub-Assembly - GM Engine (With Arctic Package) (See ENGINE AND PUMP SUB-ASSEMBLY - GM ENGINE (WITH ARCTIC PACKAGE) for Breakdown)	
63	1001177228	1	Hose	
64	1001177167	1	Hose	
65	1001171685	1	Cable, Battery (Red) (Battery Positive to Auxiliary Power Relay)	
66	1001171686	1	Cable, Battery (Black) (Battery Negative to Pivot Pin to Engine Ground)	
67	1060626	1	Cord, 3 Way Extension	
68	3422532	1	Pin	
69	0760610	6	Bolt, M6 x 20mm	
70	1001191832	1	Nut, Rivet M8	
71	3790012	1	O-Ring	
72	1001161710	1	Switch, Toggle	
73	1001180017	1	Harness Engine - GM Engine (See ELECTRICAL SECTION for Breakdown)	
74	1001182150	1	Bracket	
75	1001182404	1	Hose	
76	1001155044	2	Nut, Special 15/32-32	
77	4811702	6	Washer M6	
78	4811902	1	Washer M8	
79	1001196376	1	Seal, Rubber	
80	4460466	8	Plug, Terminal (Not Shown) **(SN 0300206617 through 0300272317, Except SN 0300272185 through 0300272190)**	
81	4460930	1	Plug, Male - 8 Position (Not Shown) **(SN 0300206617 through 0300272317, Except SN 0300272185 through 0300272190)**	
82	4812002	2	Washer M10 **(SN 0300206617 through 0300272317, Except SN 0300272185 through 0300272190)**	
83	1001204123	1	Plate, Support **(SN 0300210489 through 0300272317, Except SN 0300272185 through 0300272190)**	

FIGURE 3-31. ENGINE INSTALLATION - GM ENGINE (WITH ARCTIC PACKAGE) (SN 0300222053 through 0300272317)

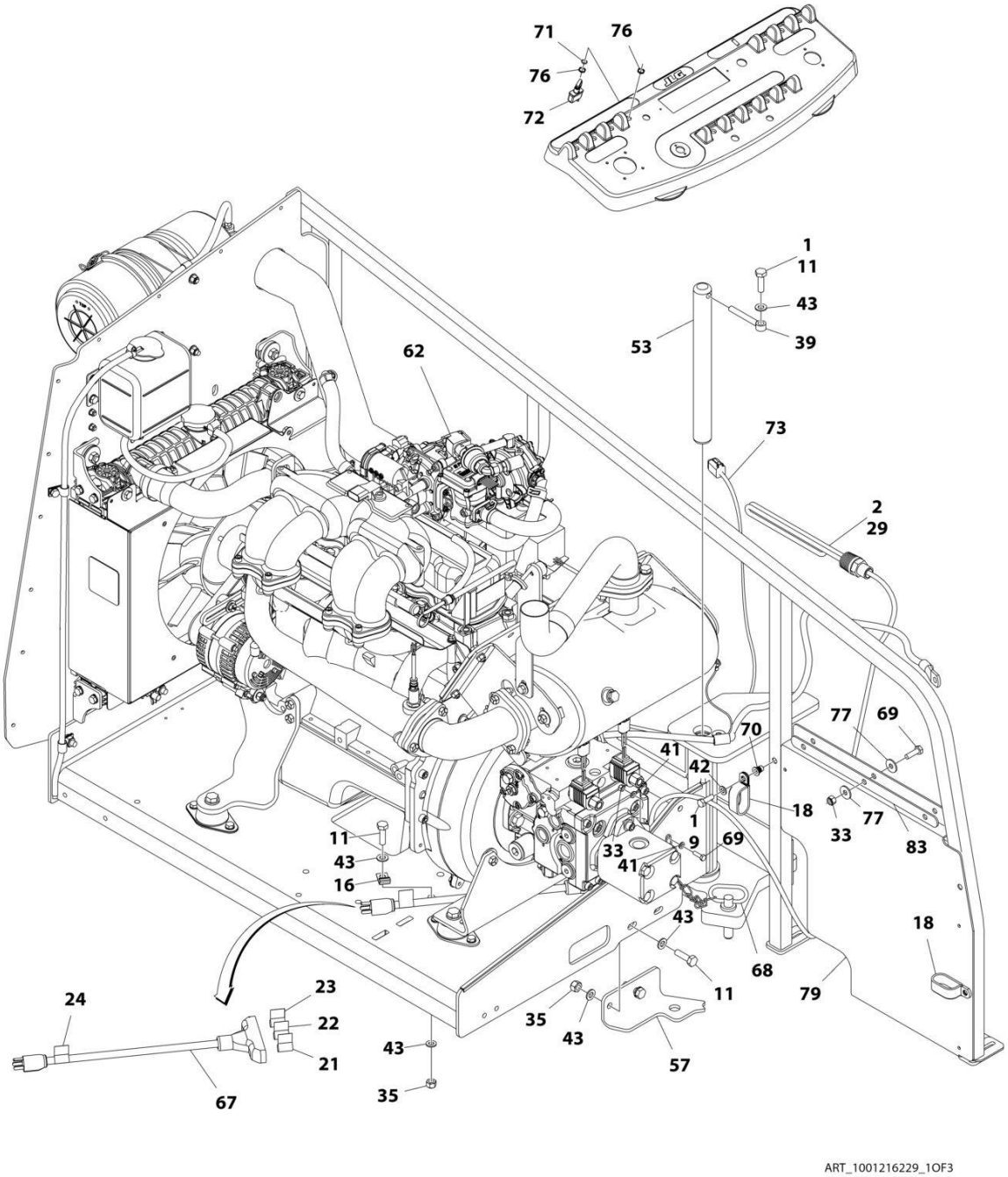

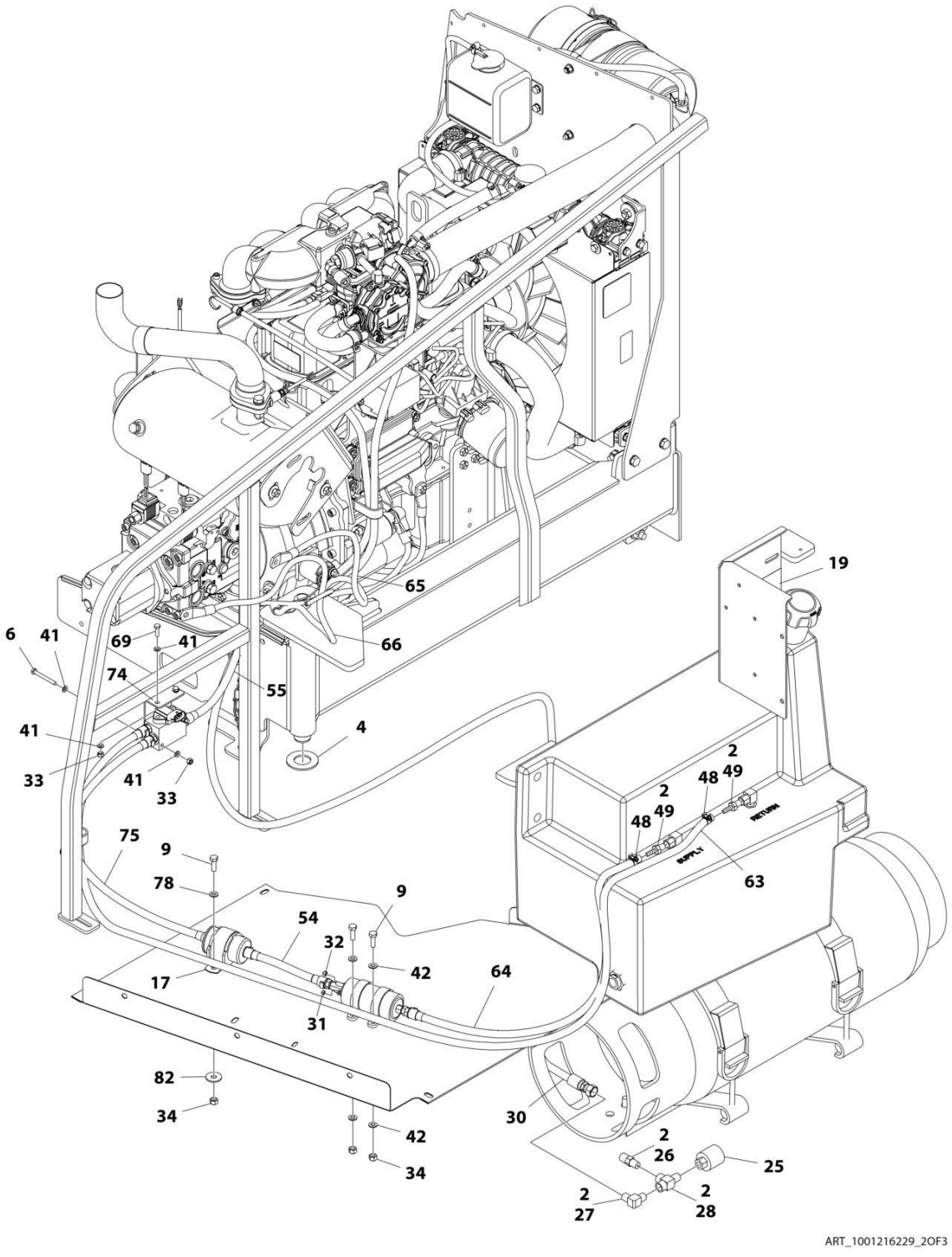
19
65
6
41
69
41
66
74
55
4
41
33
41
33
2
48
49
2
48
49
RETURN
SUPPLY
63
75
9
78
9
54
32
42
64
17
31
82
34
30
42
34
2
26
25
2
27
28
ART_1001216229_2OF3

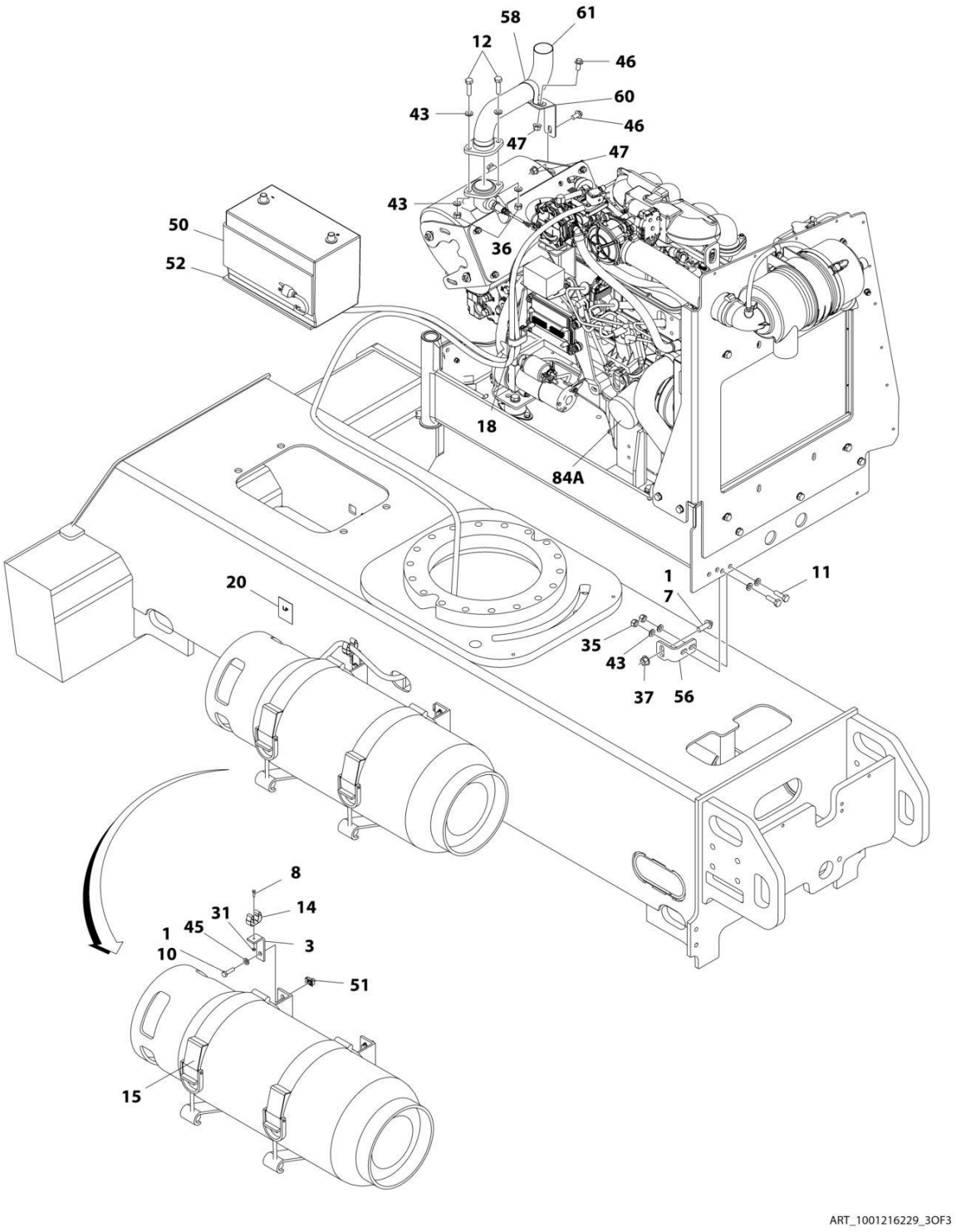
58
61
12
46
60
43
46
47
47
43
50
52
36
18
84A
20
1
7
11
35
43
37
56
8
14
31
45
1
10
3
51
15
ART_1001216229_3OF3

FIGURE 3-31. ENGINE INSTALLATION - GM ENGINE (WITH ARCTIC PACKAGE) (SN 0300222053 through 0300272317)

ITEM	PART NUMBER	QTY	DESCRIPTION	REV
	1001216229	Ref	ENGINE INSTALLATION - GM ENGINE (WITH ARCTIC PACKAGE)	C
1	0100011	AR	Compound, Locking	
2	0100020	AR	Sealant, Pipe	
3	0181949	1	Angle	
4	0440162	1	Bearing	
6	0700619	2	Bolt, M6 x 55mm	
7	5251215	1	Bolt, M12 x 35mm	
8	0760408	1	Bolt, M4 x 16mm	
9	0760812	6	Bolt, M8 x 25mm	
10	0760814	4	Bolt, M8 x 30mm	
11	0761015	6	Bolt, M10 x 35mm	
12	0761016	2	Bolt, M10 x 40mm	
14	1320218	1	Clamp	
15	1320220	1	Clamp Kit - LP	
15	4400275	1	Tank, LPG (Aluminum Tank)	
15	4400420	1	Tank, LPG (Steel Tank)	
16	1320223	1	Clamp	
17	1320323	1	Clamp	
18	1321716	3	Clamp	
19	1701542	1	Decal - Gas	
20	1701543	1	Decal - LPG	
21	1702941	1	Decal - Battery Heater	
22	1702942	1	Decal - Engine Block Heater	
23	1702943	1	Decal - Hydraulic Tank Heater	
24	1702944	1	Decal - Heater Cord	
25	2180387	1	Fitting, LP	
26	2180389	1	Fitting	
27	2180504	1	Fitting, Elbow	
28	2220290	1	Fitting, Tee FNPTF/NPTF/FNPTF	
29	1001188972	1	Heater, Hydraulic Tank	
30	2720149	1	Hose	
31	3290405	2	Nut, Lock M4 x 0.7	
32	3290505	1	Nut, Lock M5 x 0.8	
33	3290605	8	Nut, Lock M6 x 1	
34	3290805	5	Nut, Lock M8 x 1.25	
35	3291005	5	Nut, Lock M10 x 1.5	
36	3291007	2	Nut, Lock M10 x 1.5	
37	5261200	1	Nut, Flange M12 Grade 10.9	
39	3841143	1	Keeper, Pin	
41	4811700	10	Washer, M6	
42	4811900	9	Washer, M8	
43	4812000	15	Washer, M10	
45	5240800	4	Washer, M8 Hardened	
46	5251010	2	Bolt, M10 x 20mm	
47	5261018	2	Nut, Flange M10	
48	1001174486	2	Clamp	
49	2180348	2	Fitting, Barbed	
50	2580024	1	Heater, Battery	

ITEM	PART NUMBER	QTY	DESCRIPTION	REV
51	1001118274	4	Nut, Special M8 x 1.25	
52	1001119278	1	Insulate	
53	1001135196	1	Pin	
54	1001156823	1	Hose	
55	1001182405	1	Hose	
56	1001167512	1	Bracket	
57	1001169823	1	Plate, Engine Lock	
58	1001170719	1	Clamp	
60	1001172003	1	Support, Muffler	
61	1001172795	1	Pipe, Exhaust	
62	1001216225	1	Engine and Pump Sub-Assembly - GM Engine (With Arctic Package) (See ENGINE AND PUMP SUB-ASSEMBLY - GM ENGINE (WITH ARCTIC PACKAGE) for Breakdown)	
63	1001177228	1	Hose	
64	1001177167	1	Hose	
65	1001171685	1	Cable, Battery (Red) (Battery Positive to Auxiliary Power Relay)	
66	1001171686	1	Cable, Battery (Black) (Battery Negative to Pivot Pin to Engine Ground)	
67	1060626	1	Cord, 3 Way Extension	
68	3422532	1	Pin	
69	0760610	6	Bolt, M6 x 20mm	
70	1001191832	1	Nut, Rivet M8	
71	3790012	1	O-Ring	
72	1001161710	1	Switch, Toggle	
73	1001180017	1	Harness Engine - GM Engine (See ELECTRICAL SECTION for Breakdown)	
74	1001182150	1	Bracket	
75	1001182404	1	Hose	
76	1001155044	2	Nut, Special 15/32-32	
77	4811702	6	Washer M6	
78	4811902	1	Washer M8	
79	1001196376	1	Seal, Rubber	
80	4460466	8	Plug, Terminal (Not Shown)	
81	4460930	1	Plug, Male - 8 Position (Not Shown)	
82	4812002	2	Washer M10	
83	1001204123	1	Plate, Support	
84	1001216219	1	Engine, GM 3.0L (See GM Engine Supplement P/N 3121245 for Breakdown of Additional Components) **(SN 0300222053 through 0300223920)**	
84	1001214862	1	Engine, GM 3.0L (See GM Engine Supplement P/N 3121245 for Breakdown of Additional Components) **(SN 0300223921 through 0300272317, Except SN 0300272185 through 0300272190)**	
84A	7027965	1	Filter, Oil	

FIGURE 3-32. ENGINE AND PUMP SUB-ASSEMBLY - GM ENGINE (WITH ARCTIC PACKAGE) (SN 0300201991 through 0300222052)

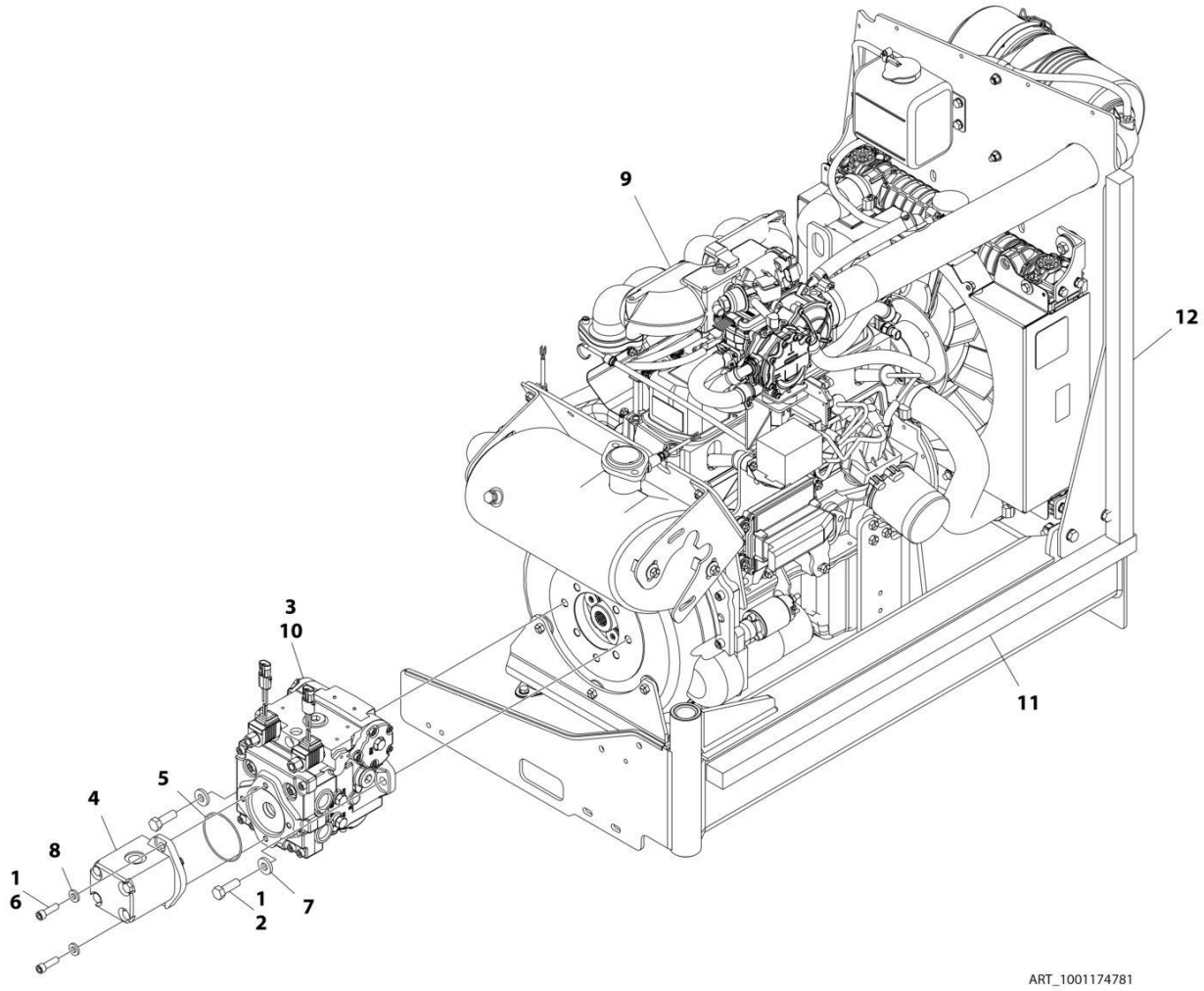

FIGURE 3-32. ENGINE AND PUMP SUB-ASSEMBLY - GM ENGINE (WITH ARCTIC PACKAGE) (SN 0300201991 through 0300222052)

ITEM	PART NUMBER	QTY	DESCRIPTION	REV
	1001174781	Ref	ENGINE AND PUMP SUB-ASSEMBLY - GM ENGINE (WITH ARCTIC PACKAGE) **(SN 0300201991 through 0300222052)**	J
1	0100011	AR	Compound, Locking	
2	0641812	2	Bolt, 1/2-13 x 1-1/2	
3	3020037	AR	Lube	
4	3600242	1	Gear Pump Assembly (See GEAR PUMP ASSEMBLY for Breakdown)	
5	3790152	1	O-Ring	
6	3931620	2	Capscrew, 3/8-16 x 1-1/4	
7	4891800	2	Washer, 1/2 Hardened	
8	4891600	2	Washer, 3/8 Hardened	
9	1001174780	1	Engine Assembly - GM Engine (With Arctic Package) (See ENGINE ASSEMBLY - GM ENGINE (WITH ARCTIC PACKAGE) for Breakdown)	
10	1001167036	1	Piston Pump Assembly (See PISTON PUMP ASSEMBLY for Breakdown)	
11	1001171953	1	Seal	
12	1001171954	1	Seal	

FIGURE 3-33. ENGINE AND PUMP SUB-ASSEMBLY - GM ENGINE (WITH ARCTIC PACKAGE) (SN 0300222053 through 0300272317)

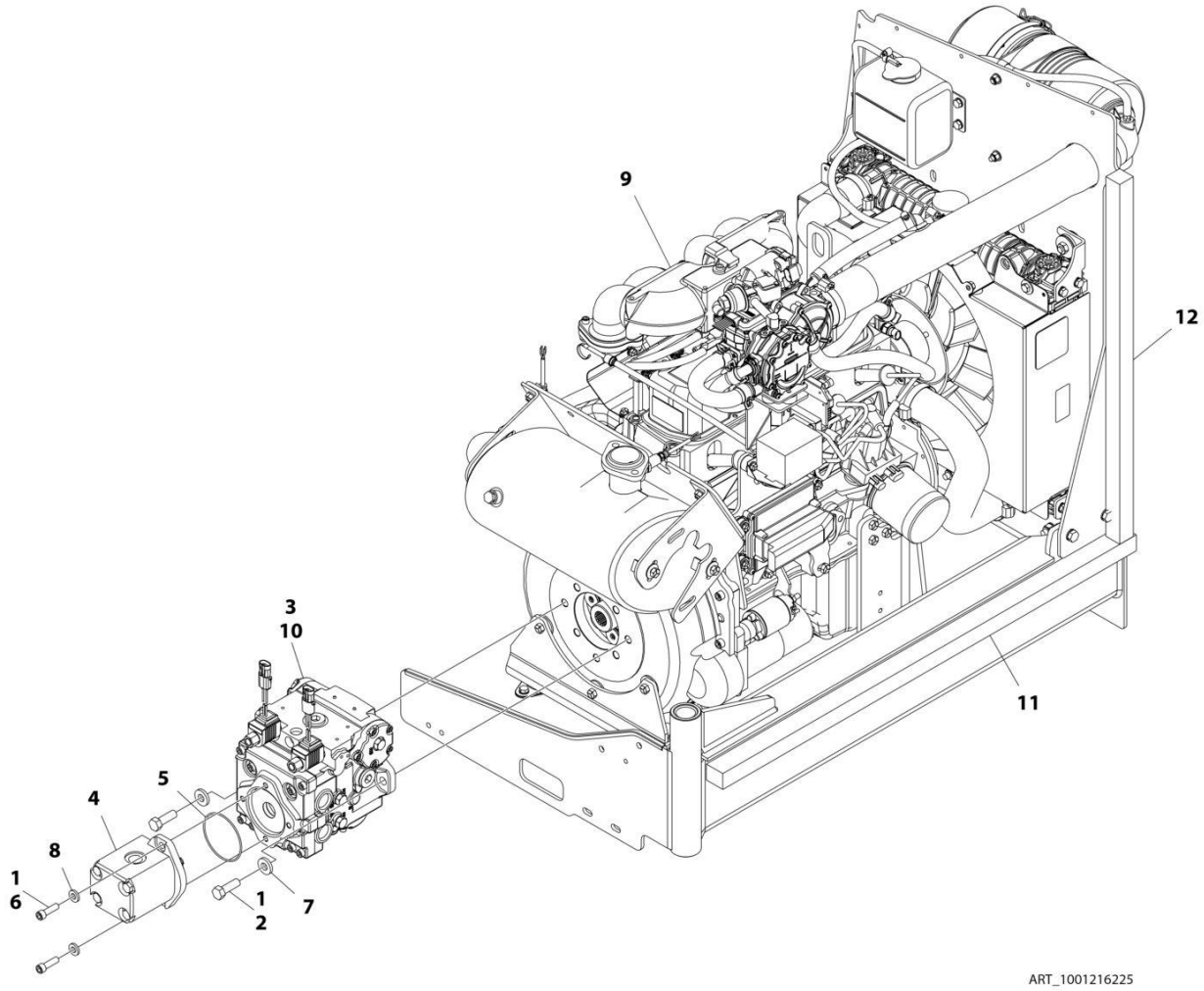

FIGURE 3-33. ENGINE AND PUMP SUB-ASSEMBLY - GM ENGINE (WITH ARCTIC PACKAGE) (SN 0300222053 through 0300272317)

ITEM	PART NUMBER	QTY	DESCRIPTION	REV
	1001216225	Ref	ENGINE AND PUMP SUB-ASSEMBLY - GM ENGINE (WITH ARCTIC PACKAGE)	F
1	0100011	AR	Compound, Locking	
2	0641812	2	Bolt, 1/2-13 x 1-1/2	
3	3020037	AR	Lube	
4	3600242	1	Gear Pump Assembly (See GEAR PUMP ASSEMBLY for Breakdown) **(SN 0300222053 through 0300236982)**	
4	1001214207	1	Gear Pump Assembly **(SN 0300236983 through 0300272317, Except SN 0300272185 through 0300272190)**	
4	70006356	1	Seal Kit – 1001214207 Pump	
5	3790152	1	O-Ring	
6	3931620	2	Capscrew 3/8 x 1-1/4	
6	3931618	2	Capscrew 3/8 x 1-1/8	
7	4891800	2	Washer, 1/2 Hardened	
8	4891600	2	Washer, 3/8 Hardened	
9	1001216223	1	Engine Assembly - GM Engine (With Arctic Package) (See ENGINE ASSEMBLY - GM ENGINE (WITH ARCTIC PACKAGE) for Breakdown)	
10	1001167036	1	Piston Pump Assembly (See PISTON PUMP ASSEMBLY for Breakdown)	
11	1001171953	1	Seal	
12	1001171954	1	Seal	

FIGURE 3-34. ENGINE ASSEMBLY - GM ENGINE (WITH ARCTIC PACKAGE) (SN 0300201991 through 0300222052)

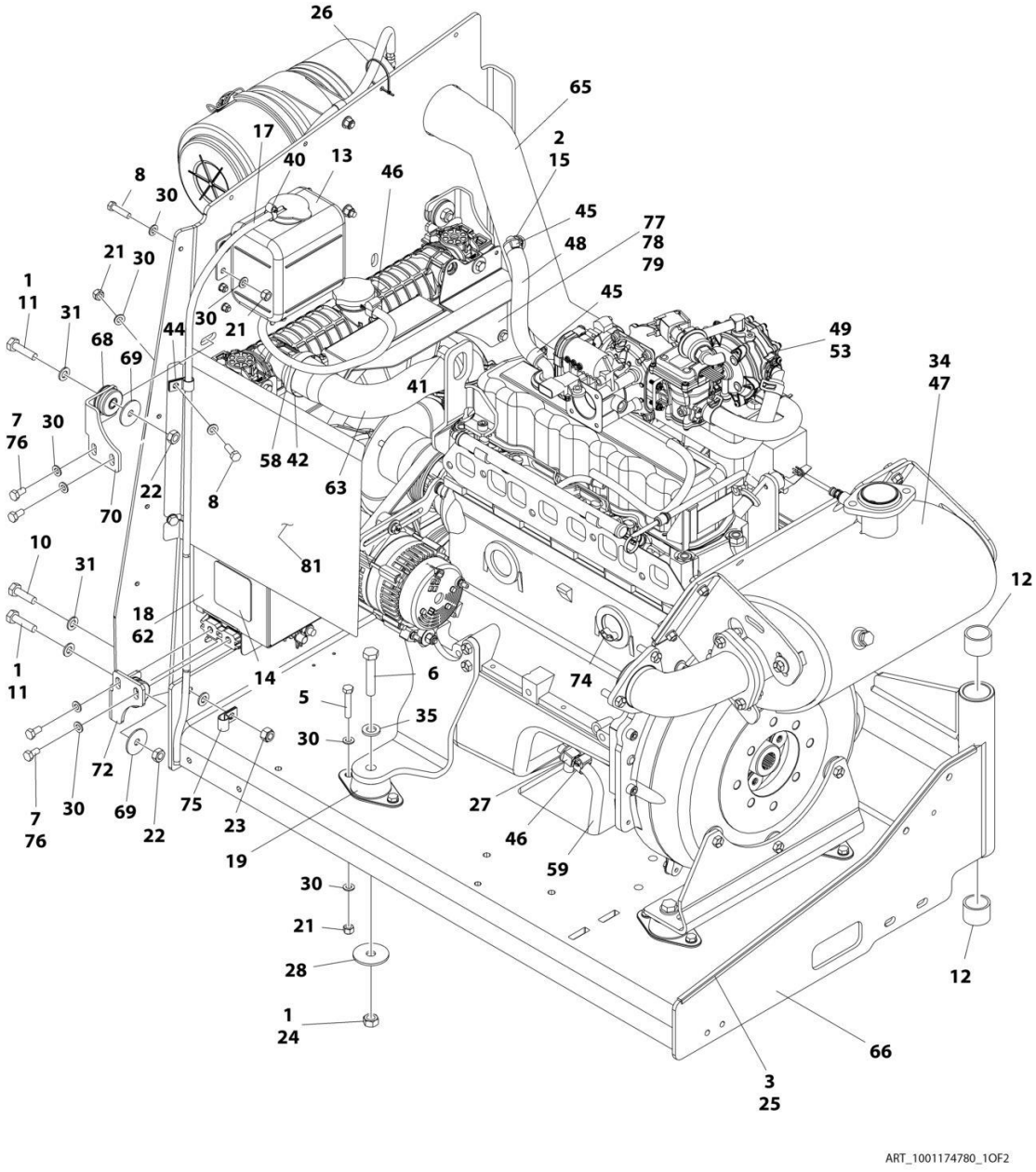

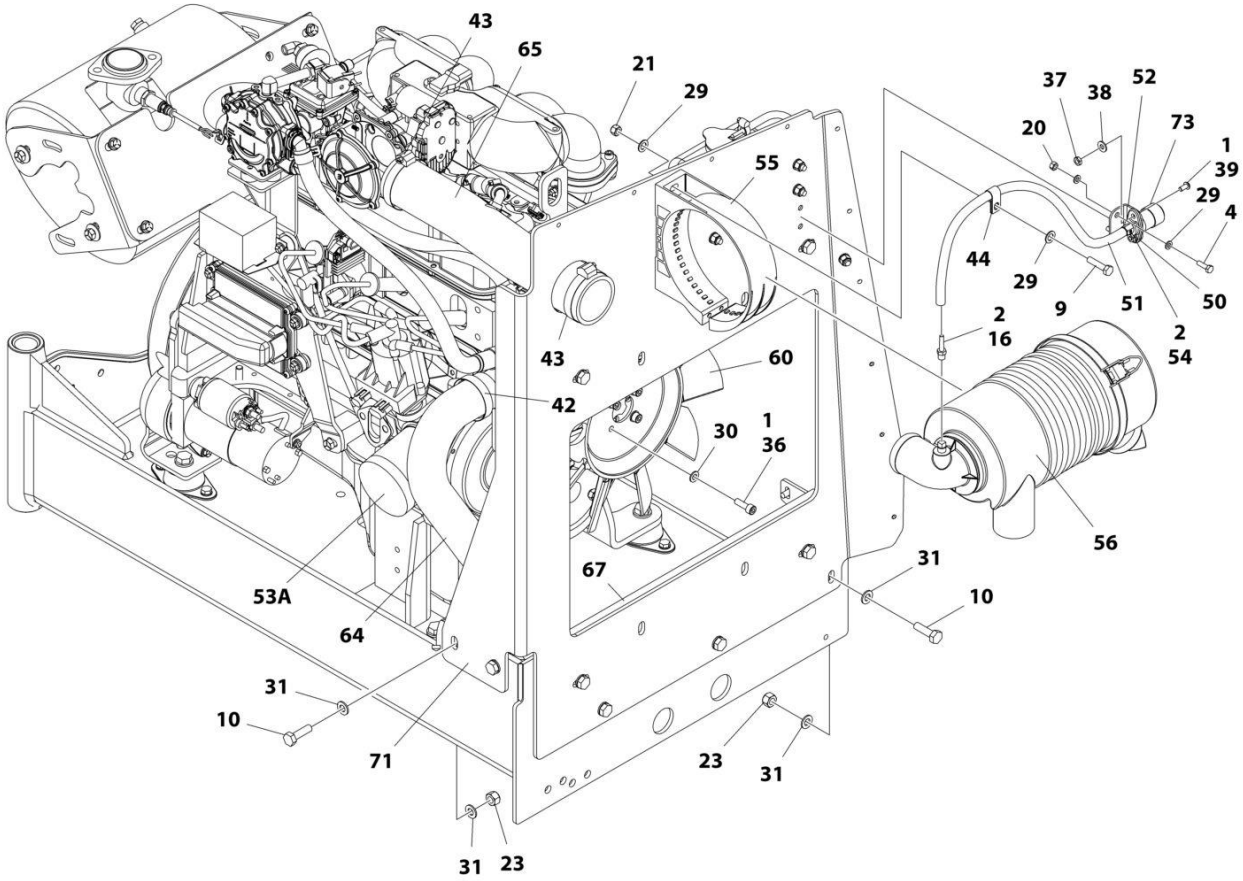

ART_1001174780_2OF2

FIGURE 3-34. ENGINE ASSEMBLY - GM ENGINE (WITH ARCTIC PACKAGE) (SN 0300201991 through 0300222052)

ITEM	PART NUMBER	QTY	DESCRIPTION	REV
	1001174780	Ref	ENGINE ASSEMBLY - GM ENGINE (WITH ARCTIC PACKAGE) **(SN 0300201991 through 0300222052)**	J
1	0100011	AR	Compound, Locking	
2	0100020	AR	Sealant, Pipe	
3	0100081	AR	Adhesive	
4	0760610	2	Bolt, M6 x 20mm	
5	0760814	8	Bolt, M8 x 30mm	
6	0711221	4	Bolt, M12 x 65mm Grade 10.9	
7	0760808	8	Bolt, M8 x 16mm	
8	0760812	6	Bolt, M8 x 25mm	
9	0760815	2	Bolt, M8 x 35mm	
10	0761015	5	Bolt, M10 x 35mm	
11	0761016	4	Bolt, M10 x 40mm	
12	0961951	2	Bushing	
13	1580011	1	Container, Coolant Overflow	
14	1703162	2	Decal - Caution Fan	
15	2180877	1	Fitting, Elbow	
16	2220315	1	Fitting, Barbed	
17	2720271	38.5 in /97.8cm	Hose	
18	2300041	2.7 gal /10.2L	Coolant, Anti-Freeze	
19	3200406	4	Mount, Rubber	
20	3290607	2	Nut, Lock M6 x 1	
21	3290805	16	Nut, Lock M8 x 1.25	
22	3291001	4	Nut, M10 x 1.5	
23	3291005	5	Nut, Lock M10 x 1.5	
24	3331211	4	Nut, M12 x 1.75	
25	4060805	2.25 ft /0.69m	Trim, Flex Shield	
26	4240099	AR	Tie-Strap	
27	4640952	1	Valve, Oil Drain	
28	4740274	4	Washer, Snubbing	
29	4811700	4	Washer, M6	
30	4811900	44	Washer, M8	
31	4812000	14	Washer, M10	
34	4920385	10 ft/3m	Wire, Safety	
35	5241200	4	Washer, M12 Hardened	
36	5271809	4	Bolt, M8 x 25mm	
37	8305401	2	Nut, Jam .250-20	
38	8307109	2	Washer, .250	
39	8310548	2	Screw, 1/4 NC x 1/2	
40	8405009	1	Clamp	
41	8405103	1	Clamp	
42	8405201	3	Clamp	
43	8405203	2	Clamp	
44	8406109	2	Clip	
45	8410009	2	Clamp	
46	8410013	3	Clamp	
47	1001091794	1	Insulation, Muffler	

ITEM	PART NUMBER	QTY	DESCRIPTION	REV
48	1001091892	8 in /20cm	Hose	
49	1001115931	4.5 qt /4.3L	Oil, Motor	
50	1001138173	1	Support, Service Indicator	
51	1001138248	2 ft /0.61m	Hose	
52	1001138175	1	Bracket, Service Indicator	
53	1001181430	1	Engine, GM 3.0L (See GM Engine Supplement P/N 3121245 for Breakdown of Additional Components)	
53	7027972	1	Filter, Fuel (Not Shown - Located on Tank of Machine)	
53	70002895	1	Module, ECU	
53A	7027965	1	Filter, Oil	
54	1001141995	1	Fitting, Barbed	
55	1001147812	1	Clamp. Air Cleaner	
56	1001147813	1	Air Cleaner Assembly Including Filter Element	
56	70004020	1	Element, Filter (Not Shown)	
58	1001156819	14.5 in /37cm	Hose	
59	1001165035	8 in /20.3cm	Hose	
60	2060025	1	Fan	
62	1001167193	1	Radiator	
63	1001167382	1	Hose, Upper Radiator	
64	1001167383	1	Hose, Lower Radiator	
65	1001167384	1	Hose, Air Intake	
66	1001167895	1	Tray, Engine	
67	1001168166	2	Seal	
68	1001169054	4	Isolator, Radiator	
69	1001169138	4	Washer, Snubbing	
70	1001169967	2	Bracket	
71	1001169974	1	Plate, Radiator Mounting	
72	1001170035	2	Bracket	
73	1001170981	1	Indicator	
74	2580063	1	Heater, Engine Block	
75	8406110	1	Clip	
76	1001180620	AR	Adhesive	
77	0760606	2	Bolt M6 x 12	
77	5250605	2	Bolt M6 x 10	
78	4811702	2	Washer M6	
79	1001195699	1	Deflector, Air	
80	1001195700	1	Deflector, Air	

FIGURE 3-35. ENGINE ASSEMBLY - GM ENGINE (WITH ARCTIC PACKAGE) (SN 0300222053 through 0300272317)

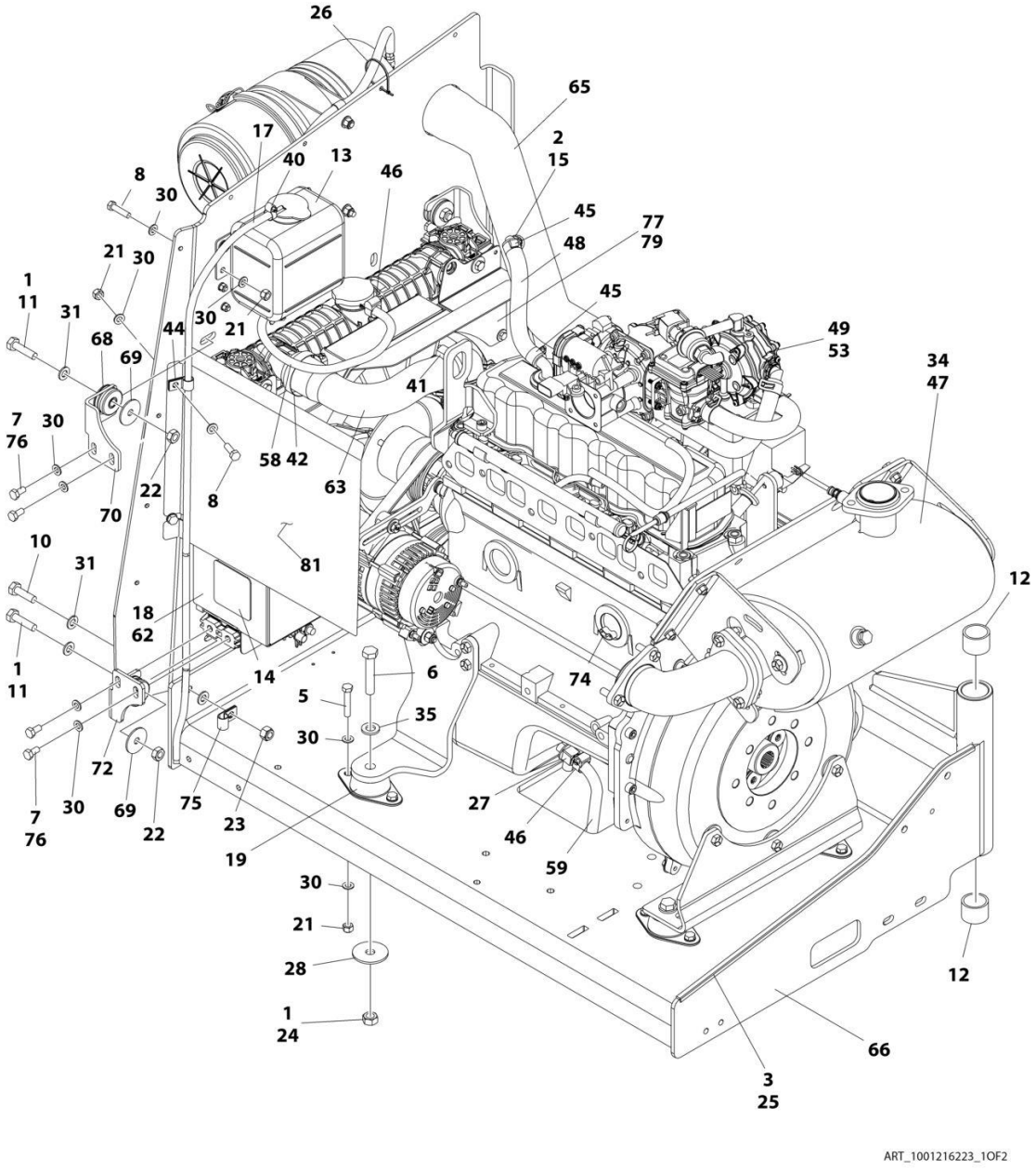

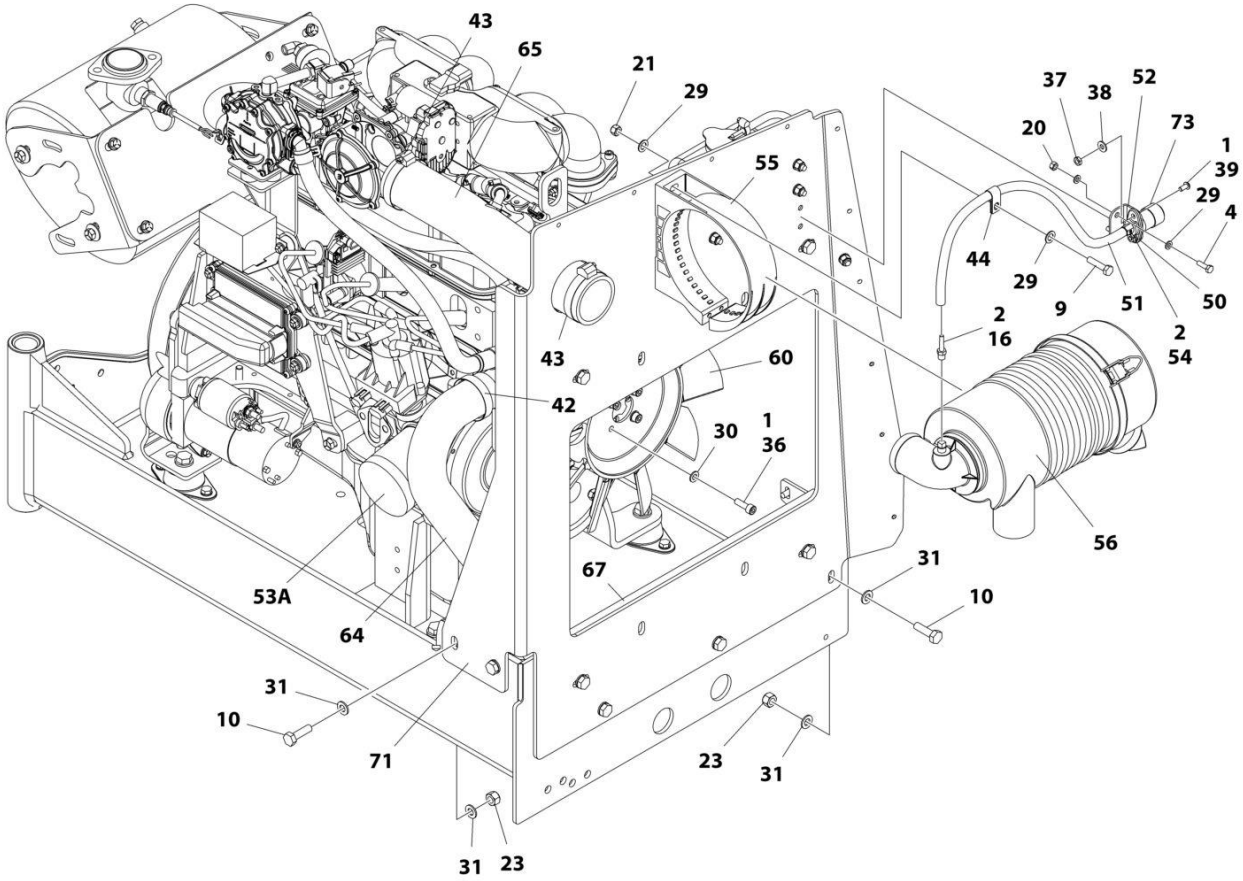

ART_1001216223_2OF2

FIGURE 3-35. ENGINE ASSEMBLY - GM ENGINE (WITH ARCTIC PACKAGE) (SN 0300222053 through 0300272317)

ITEM	PART NUMBER	QTY	DESCRIPTION	REV
	1001216223	Ref	ENGINE ASSEMBLY - GM ENGINE (WITH ARCTIC PACKAGE)	C
1	0100011	AR	Compound, Locking	
2	0100020	AR	Sealant, Pipe	
3	0100081	AR	Adhesive	
4	0760610	2	Bolt, M6 x 20mm	
5	0760814	8	Bolt, M8 x 30mm	
6	0711221	4	Bolt, M12 x 65mm Grade 10.9	
7	0760808	8	Bolt, M8 x 16mm	
8	0760812	6	Bolt, M8 x 25mm	
9	0760815	2	Bolt, M8 x 35mm	
10	0761015	5	Bolt, M10 x 35mm	
11	0761016	4	Bolt, M10 x 40mm	
12	0961951	2	Bushing	
13	1580011	1	Container, Coolant Overflow	
14	1703162	2	Decal - Caution Fan	
15	2180877	1	Fitting, Elbow	
16	2220315	1	Fitting, Barbed	
17	2720271	38.5 in/ 97.8cm	Hose	
18	2300041	2.7 gal/ 10.2L	Coolant, Anti-Freeze	
19	3200406	4	Mount, Rubber	
20	3290607	2	Nut, Lock M6 x 1	
21	3290805	16	Nut, Lock M8 x 1.25	
22	3291001	4	Nut, M10 x 1.5	
23	3291005	5	Nut, Lock M10 x 1.5	
24	3331211	4	Nut, M12 x 1.75	
25	4060805	2.25 ft/ 0.69m	Trim, Flex Shield	
26	4240099	AR	Tie-Strap	
27	4640952	1	Valve, Oil Drain	
28	4740274	4	Washer, Snubbing	
29	4811700	4	Washer, M6	
30	4811900	44	Washer, M8	
31	4812000	14	Washer, M10	
34	4920385	10 ft/3m	Wire, Safety	
35	5241200	4	Washer, M12 Hardened	
36	5271809	4	Bolt, M8 x 25mm	
37	8305401	2	Nut, Jam .250-20	
38	8307109	2	Washer, .250	
39	8310548	2	Screw, 1/4 NC x 1/2	
40	8405009	1	Clamp	
41	8405103	1	Clamp	
42	8405201	3	Clamp	
43	8405203	2	Clamp	
44	8406109	2	Clip	
45	8410009	2	Clamp	
46	8410013	3	Clamp	
47	1001091794	1	Insulation, Muffler	

ITEM	PART NUMBER	QTY	DESCRIPTION	REV
48	1001091892	8 in/20cm	Hose	
49	1001115931	4.5 qt/ 4.3L	Oil, Motor	
50	1001138173	1	Support, Service Indicator	
51	1001138248	2 ft/ 0.61m	Hose	
52	1001138175	1	Bracket, Service Indicator	
53	1001216219	1	Engine, GM 3.0L (See GM Engine Supplement P/N 3121245 for Breakdown of Additional Components)	
53A	7027965	1	Filter, Oil	
54	1001141995	1	Fitting, Barbed	
55	1001147812	1	Clamp. Air Cleaner	
56	1001147813	1	Air Cleaner Assembly Including Filter Element	
56	70004020	1	Element, Filter (Not Shown)	
58	1001156819	14.5 in/ 37cm	Hose	
59	1001165035	8 in/ 20.3cm	Hose	
60	2060025	1	Fan	
62	1001167193	1	Radiator	
63	1001167382	1	Hose, Upper Radiator	
64	1001167383	1	Hose, Lower Radiator	
65	1001167384	1	Hose, Air Intake	
66	1001167895	1	Tray, Engine	
67	1001168166	2	Seal	
68	1001169054	4	Isolator, Radiator	
69	1001169138	4	Washer, Snubbing	
70	1001169967	2	Bracket	
71	1001195714	1	Plate, Radiator Mounting	
72	1001170035	2	Bracket	
73	1001170981	1	Indicator	
74	2580063	1	Heater, Engine Block	
75	8406110	1	Clip	
76	1001180620	AR	Adhesive	
77	5250605	2	Bolt M6 x 10 **(SN 0300211980 through 0300272317, Except SN 0300272185 through 0300272190)**	
79	1001195699	1	Deflector, Air	
80	1001195700	1	Deflector, Air	

FIGURE 3-36. PUMP COUPLING KIT – DEUTZ/GM ENGINES

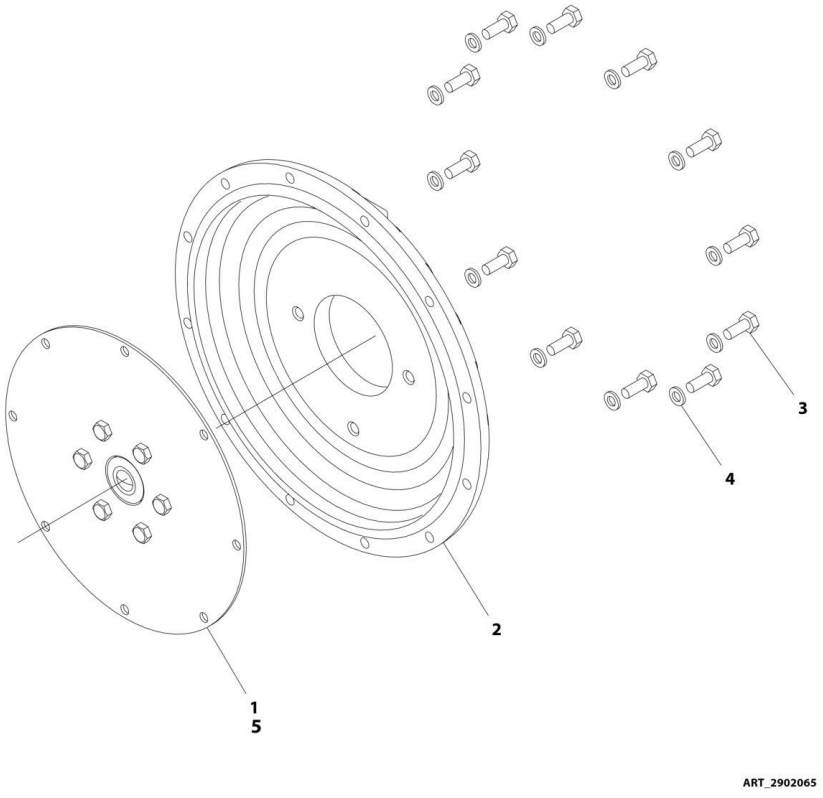

FIGURE 3-36. PUMP COUPLING KIT – DEUTZ/GM ENGINES

ITEM	PART NUMBER	QTY	DESCRIPTION	REV
	2902065	Ref	PUMP COUPLING KIT – DEUTZ/GM ENGINES	K
1	70000793	1	Coupling, Hayes	
2	See Note	NSS	Plate, Pump Adapter (Note: Purchase p/n 2902065)	
3	See Note	NSS	Bolt M10 x 30 (Note: Purchase p/n 2902065)	
4	See Note	NSS	Washer M10 (Note: Purchase p/n 2902065)	
5	3020021	AR	Grease, Coupling	

FIGURE 3-37. ENGINE INSTALLATION - KUBOTA ENGINE (WITHOUT ARCTIC PACKAGE) (SN 0300201991 through 0300241743)

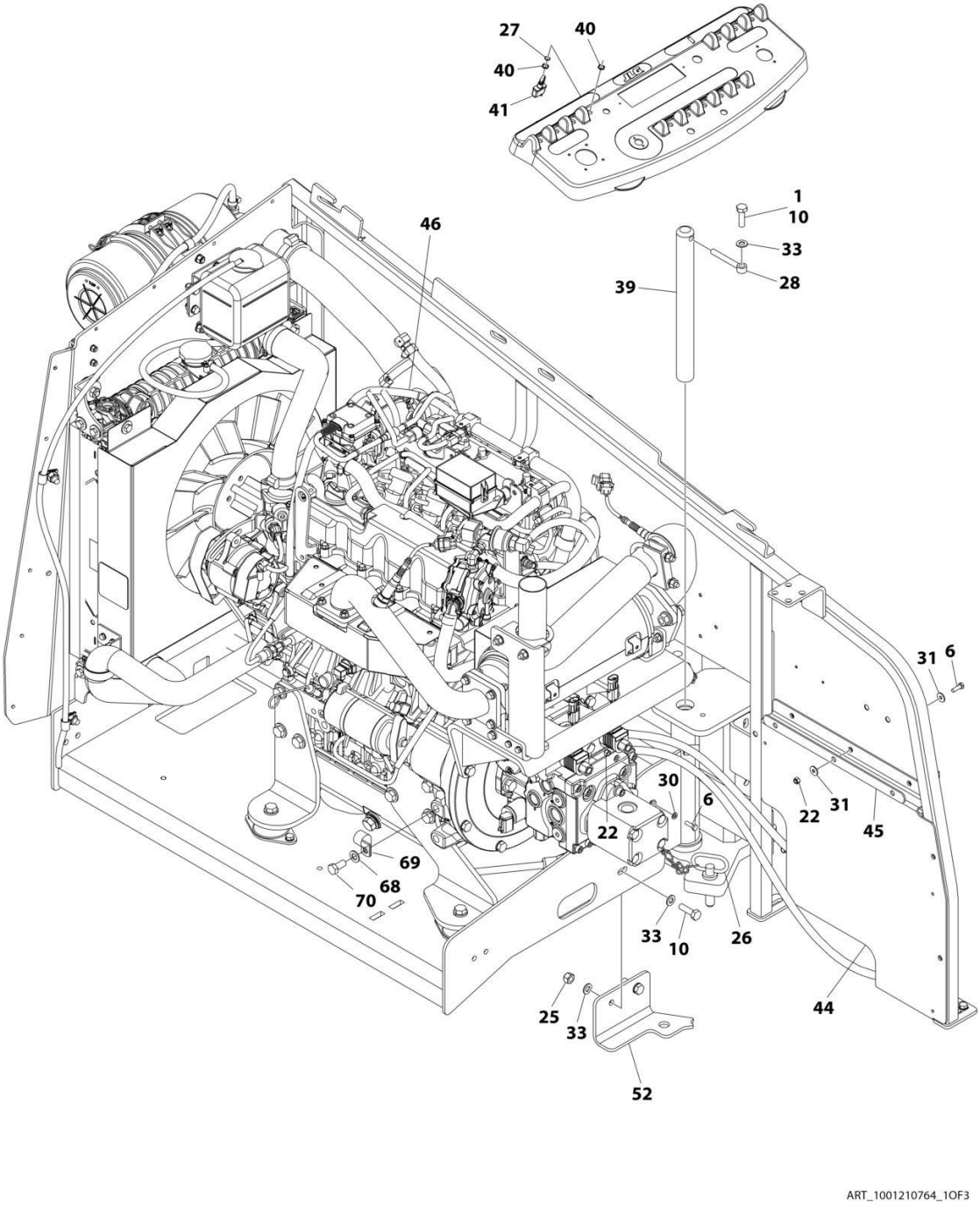

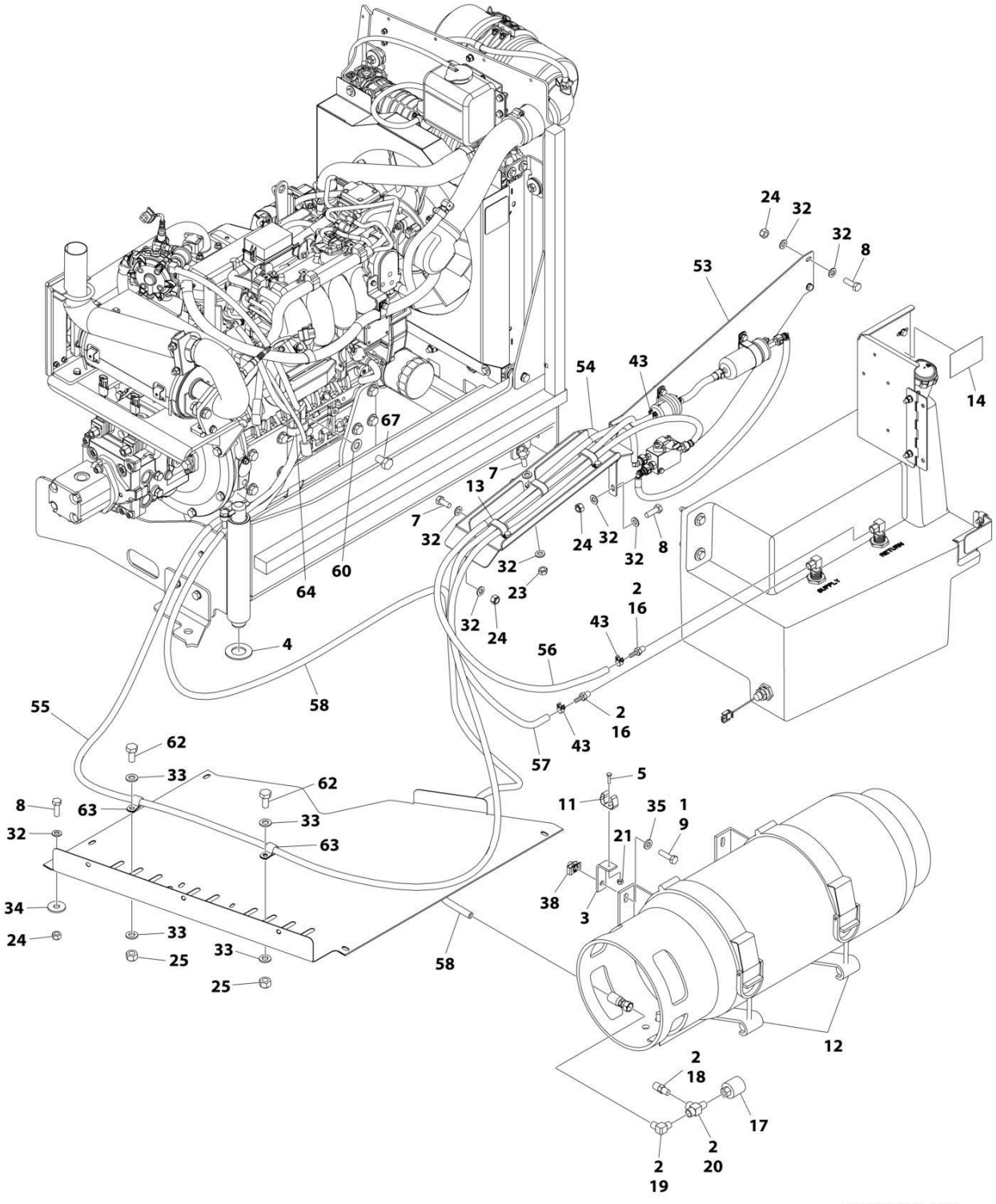
ART_1001210764_2OF3

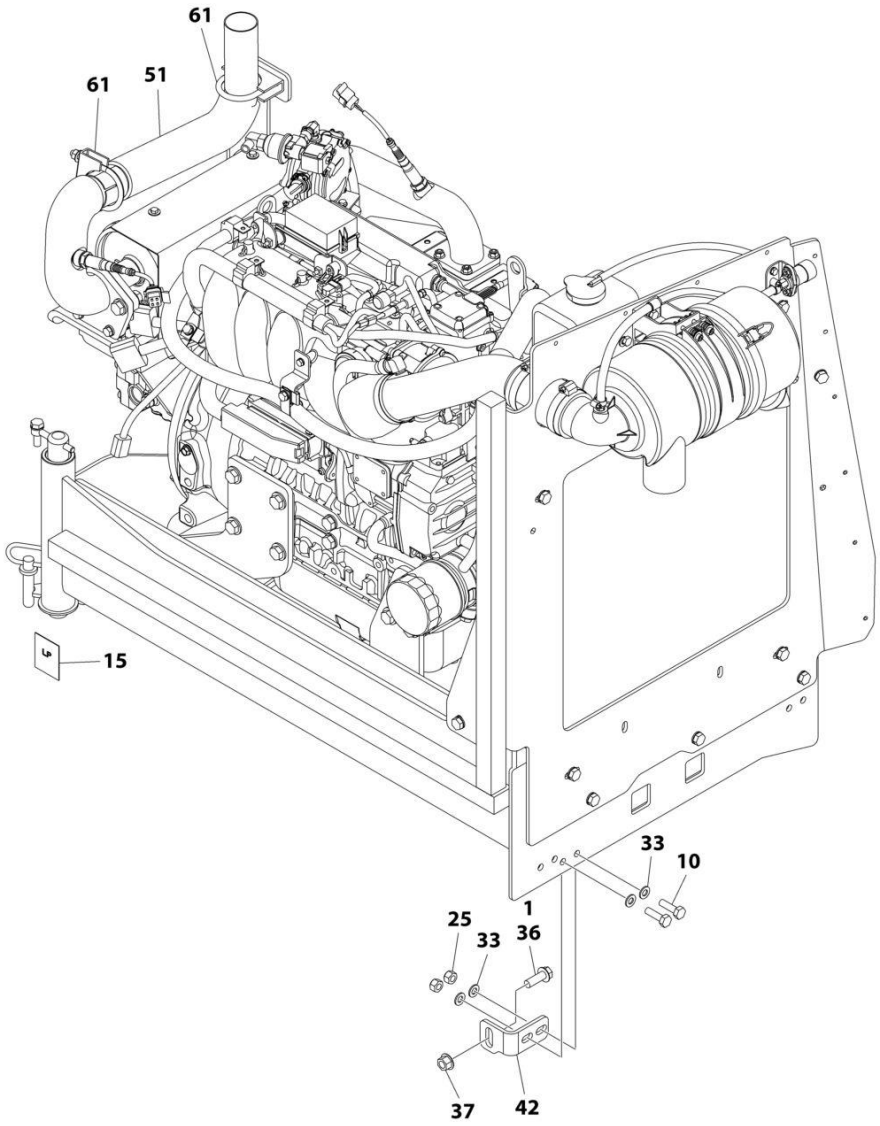

ART_1001210764_3OF3

FIGURE 3-37. ENGINE INSTALLATION - KUBOTA ENGINE (WITHOUT ARCTIC PACKAGE) (SN 0300201991 through 0300241743)

ITEM	PART NUMBER	QTY	DESCRIPTION	REV
	1001210764	Ref	ENGINE INSTALLATION - KUBOTA ENGINE (WITHOUT ARCTIC PACKAGE)	H
1	0100011	AR	Compound, Locking	
2	0100020	AR	Sealant, Pipe	
3	0181949	1	Angle	
4	0440162	1	Bearing	
5	0760408	1	Bolt, M4 x 16	
6	0760610	4	Bolt, M6 x 20	
7	0760810	6	Bolt, M8 x 20	
8	0760812	AR	Bolt, M8 x 25	
9	0760814	4	Bolt, M8 x 30	
10	0761015	5	Bolt, M10 x 35	
11	1320218	1	Clamp	
12	1320220	1	Clamp Kit - LP	
13	1321283	3	Clamp	
14	1701542	1	Decal - Gas	
15	1701543	1	Decal - LPG	
16	2180348	2	Fitting, Barbed	
17	2180387	1	Fitting, LP	
18	2180389	1	Fitting	
19	2180504	1	Fitting, Barbed	
20	2220290	1	Fitting, Tee FNPTF/NPTF/FNPTF	
21	3290405	1	Nut, Lock M4	
22	3290605	4	Nut, Lock M6	
23	3290801	3	Nut, M8	
24	3290805	AR	Nut, Lock M8	
25	3291005	6	Nut, Lock M10	
26	3422532	1	Pin	
27	3790012	1	O-Ring	
28	3841143	1	Keeper, Pin	
29	4240099	AR	Tie-Strap (Not Shown)	
30	4811700	2	Washer, M6	
31	4811702	6	Washer, M6	
32	4811900	AR	Washer, M8	
33	4812000	13	Washer, M10	
34	4812002	1	Washer, M10	
35	5240800	4	Washer, M8 Hardened	
36	5251215	1	Bolt, M12 x 35	
37	5261200	1	Nut, M12 Grade 10.9	
38	1001118274	4	Nut, Special M8	
39	1001135196	1	Pin	
40	1001155044	2	Nut, Special 15/32-32	
41	1001161710	1	Switch, Toggle	
42	1001167512	1	Bracket, Engine Tray Stow	
43	1001174486	3	Clamp	
44	1001196376	1	Seal, Rubber	
45	1001204123	1	Plate, Support	
46	1001210765	1	Engine and Pump Sub-Assembly - Kubota Engine (Without Arctic Package) (See ENGINE AND PUMP SUB-ASSEMBLY - KUBOTA	

ITEM	PART NUMBER	QTY	DESCRIPTION	REV
			ENGINE (WITHOUT ARCTIC PACKAGE) for Breakdown)	
47	1001212257	1	Cable, Battery (Red) (Alternator Positive to Starter) (Not Shown)	
48	1001213060	1	Cable, Battery (Red) (Battery Positive to Auxiliary Power Relay) (Not Shown)	
49	1001213061	1	Cable, Battery (Black) (Battery Negative to Pivot Pin to Engine Ground) (Not Shown)	
50	1001213706	1	Harness Engine - Kubota Engine (Not Shown - See ELECTRICAL SECTION for Breakdown)	
51	1001214503	1	Pipe, Tail Pipe	
52	1001215259	1	Plate, Engine Lock	
53	1001215813	1	Mount, Fuel System	
54	1001216308	1	Support, Fuel Lines	
55	1001216400	1	Hose	
56	1001216401	1	Hose	
57	1001156819	4.5 ft/ 1.3m	Hose	
58	1001216405	1	Hose	
60	4812100	2	Washer M12	
61	1001217785	2	Clamp	
62	0761011	2	Bolt M10 x 22	
63	1320061	2	Clamp **(SN 0300201991 through 0300228359)**	
63	85841094	6	Clamp **(SN 0300228360 through 0300272317, Except SN 0300272185 through 0300272190)**	
64	1321716	1	Clamp **(SN 0300201991 through 0300228359)**	
64	1001195039	1	Clamp **(SN 0300228360 through 0300272317, Except SN 0300272185 through 0300272190)**	
65	4460466	8	Terminal, Sealing Plug (Not Shown)	
66	4460930	1	Plug (Not Shown)	
67	1001217494	2	Bolt M12 x 20	
68	4812200	1	Washer M14	
69	24431386	1	Clamp **(SN 0300228360 through 0300272317, Except SN 0300272185 through 0300272190)**	
70	1001217345	1	Bolt M14 x 30	
71	1001229797	1	Harness, Kubota D/F Power (Not Shown - See ELECTRICAL SECTION for Breakdown) **(SN 0300237442 through 0300272317, Except SN 0300272185 through 0300272190)**	

FIGURE 3-38. ENGINE INSTALLATION - KUBOTA ENGINE (WITHOUT ARCTIC PACKAGE) (SN 0300241744 through 0300272317)

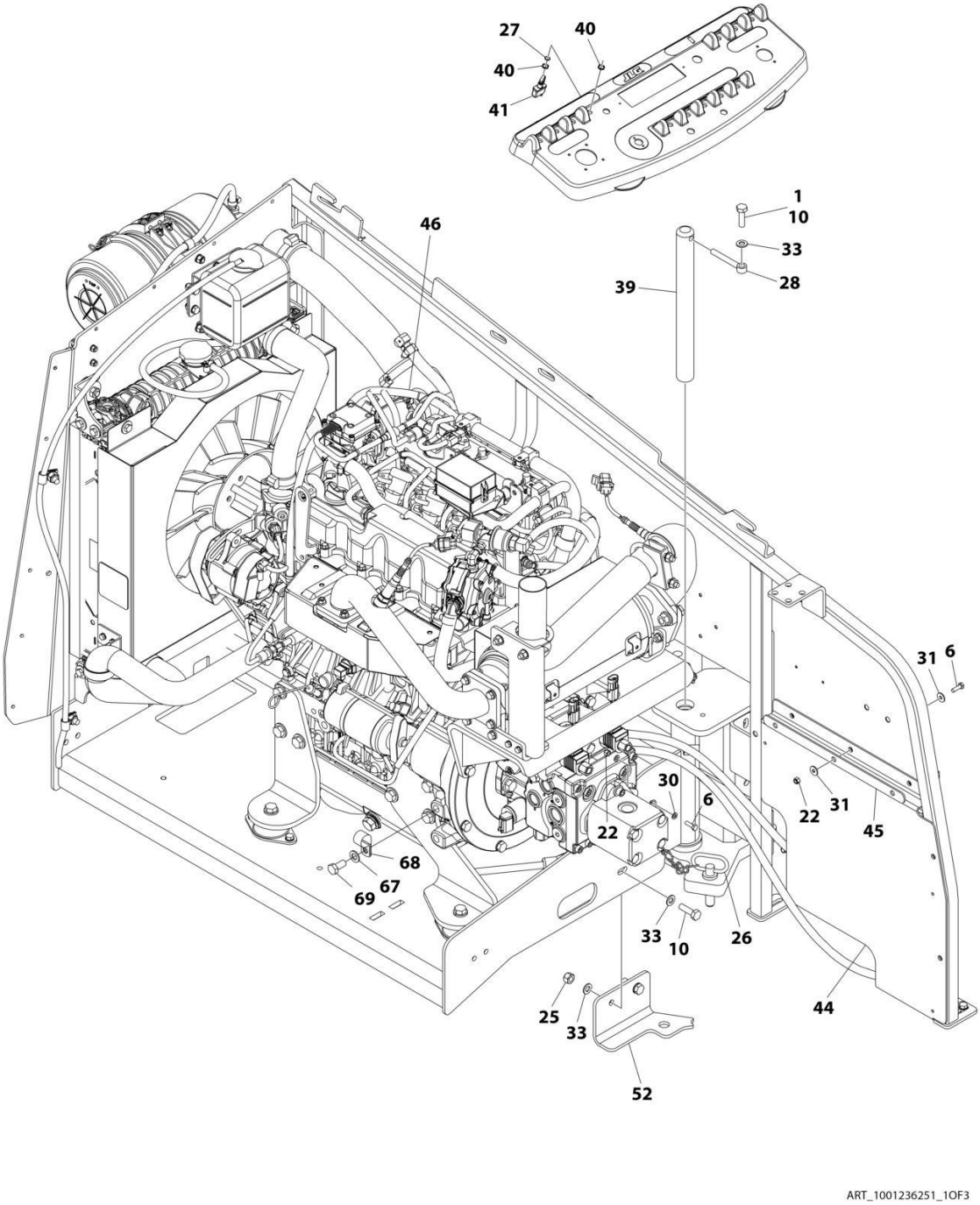

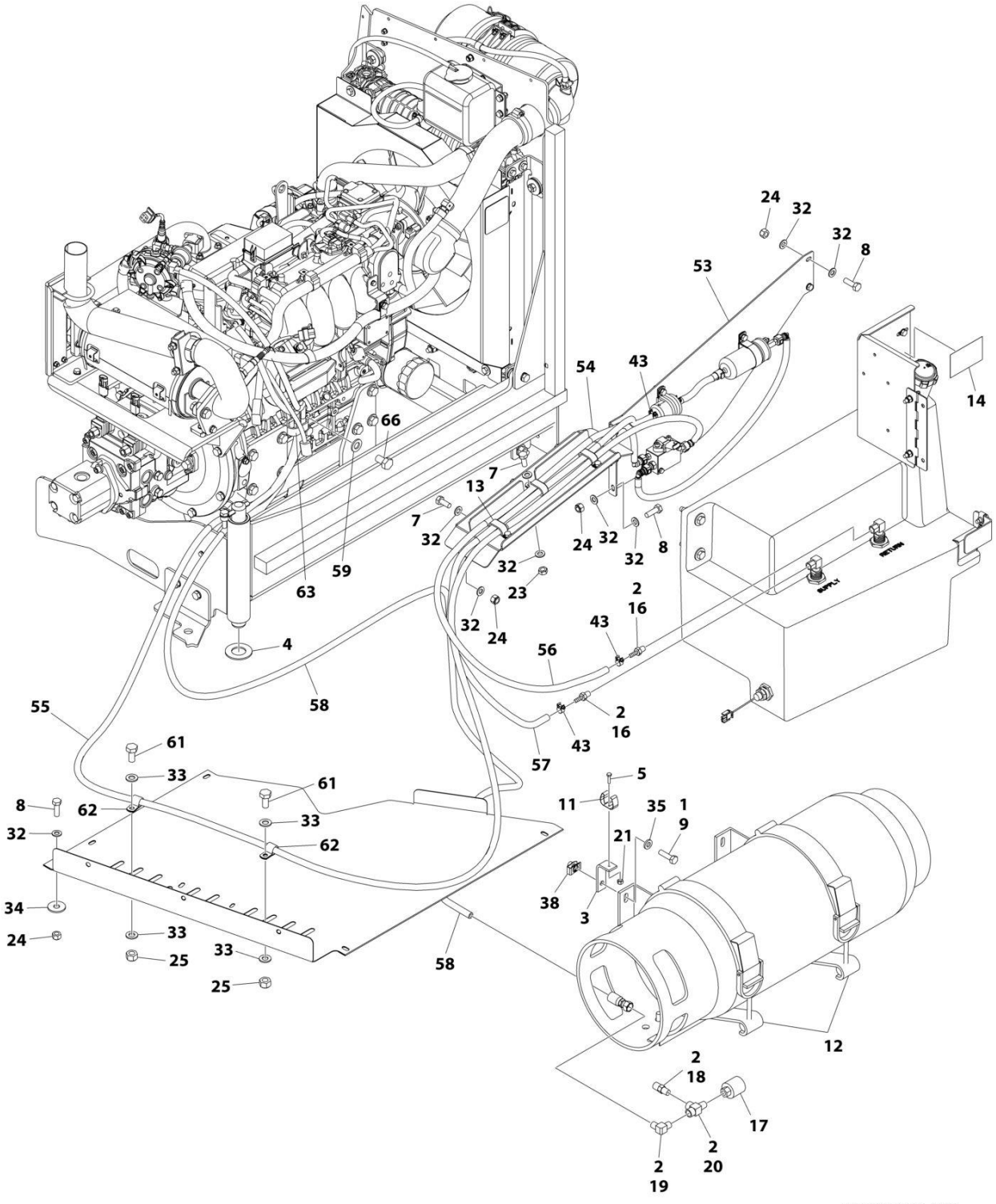
ART_1001236251_2OF3

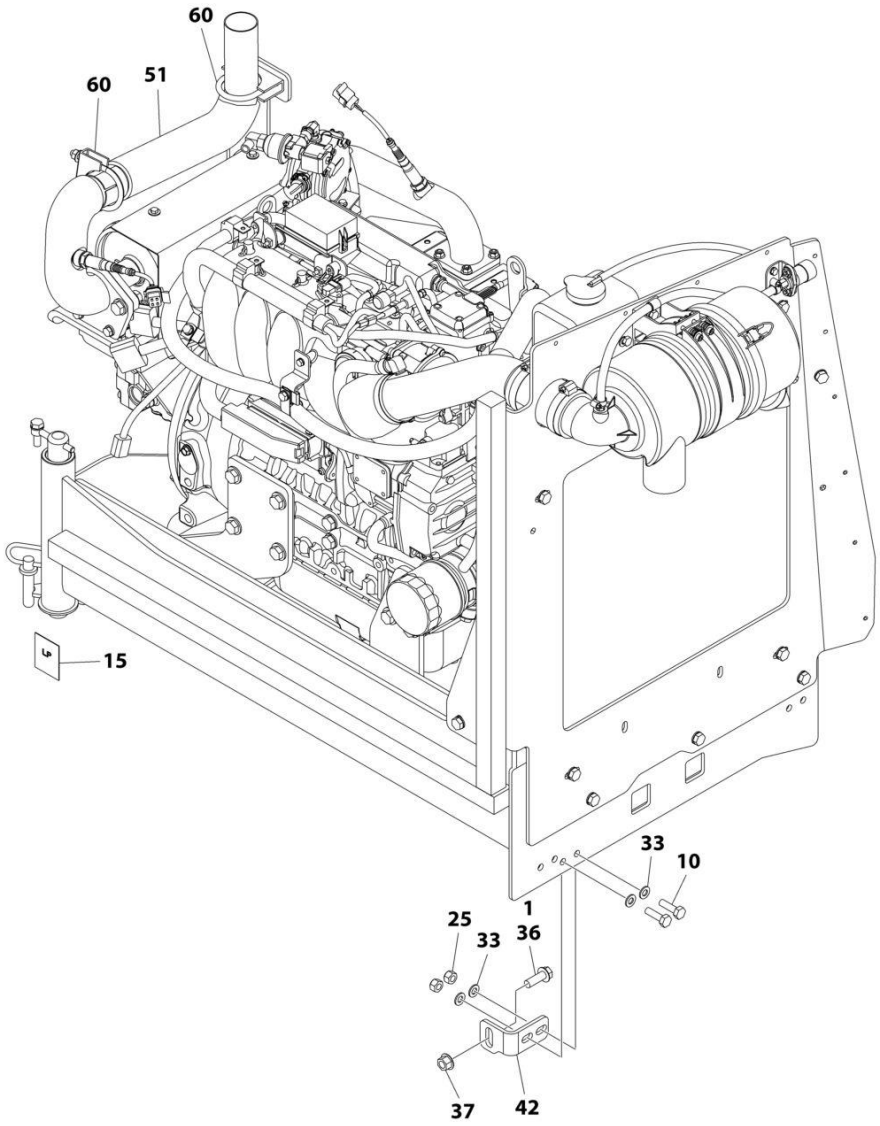

ART_1001236251_3OF3

FIGURE 3-38. ENGINE INSTALLATION - KUBOTA ENGINE (WITHOUT ARCTIC PACKAGE) (SN 0300241744 through 0300272317)

ITEM	PART NUMBER	QTY	DESCRIPTION	REV
	1001236251	Ref	ENGINE INSTALLATION - KUBOTA ENGINE (WITHOUT ARCTIC PACKAGE)	A
1	0100011	AR	Compound, Locking	
2	0100020	AR	Sealant, Pipe	
3	0181949	1	Angle	
4	0440162	1	Bearing	
5	0760408	1	Bolt M4 x 16	
6	0760610	4	Bolt M6 x 20	
7	0760810	6	Bolt M8 x 20	
8	0760812	4	Bolt M8 x 25	
9	0760814	4	Bolt M8 x 30	
10	0761015	5	Bolt M10 x 35	
11	1320218	1	Clamp	
12	1320220	1	Clamp Kit - LP	
13	1321283	3	Clamp	
14	1701542	1	Decal - Gas	
15	1701543	1	Decal - LPG	
16	2180348	2	Fitting, Barbed	
17	2180387	1	Fitting, LP	
18	2180389	1	Fitting	
19	2180504	1	Fitting, Barbed	
20	2220290	1	Fitting, Tee FNPTF/NPTF/FNPTF	
21	3290405	1	Nut Lock M4	
22	3290605	4	Nut Lock M6	
23	3290801	3	Nut M8	
24	3290805	7	Nut Lock M8	
25	3291005	8	Nut Lock M10	
26	3422532	1	Pin	
27	3790012	1	O-Ring	
28	3841143	1	Keeper, Pin	
29	4240099	AR	Tie-Strap (Not Shown)	
30	4811700	2	Washer M6	
31	4811702	6	Washer M6	
32	4811900	19	Washer M8	
33	4812000	17	Washer M10	
34	4812002	1	Washer M10	
35	5240800	4	Washer M8 Hardened	
36	5251215	1	Bolt M12 x 35	
37	5261200	1	Nut M12 Grade 10.9	
38	1001118274	4	Nut Special M8	
39	1001135196	1	Pin	
40	1001155044	2	Nut Special 15/32	
41	1001161710	1	Switch, Toggle	
42	1001167512	1	Bracket, Engine Tray Stow	
43	1001174486	3	Clamp	
44	1001196376	1	Seal, Rubber	
45	1001204123	1	Plate, Support	
46	1001236254	1	Engine and Pump Sub-Assembly - Kubota Engine (Without Arctic Package) (See ENGINE AND PUMP SUB-ASSEMBLY - KUBOTA	

SECTION 3 - ENGINE

ITEM	PART NUMBER	QTY	DESCRIPTION	REV
			ENGINE (WITHOUT ARCTIC PACKAGE) for Breakdown)	
47	1001212257	1	Cable, Battery (Red) (Alternator Positive to Starter) (Not Shown)	
48	1001213060	1	Cable, Battery (Red) (Battery Positive to Auxiliary Power Relay) (Not Shown)	
49	1001213061	1	Cable, Battery (Black) (Battery Negative to Pivot Pin to Engine Ground) (Not Shown)	
50	1001213706	1	Harness Engine - Kubota Engine (Not Shown - See ELECTRICAL SECTION for Breakdown)	
51	1001214503	1	Pipe, Tail Pipe	
52	1001215259	1	Plate, Engine Lock	
53	1001215813	1	Mount, Fuel System	
54	1001216308	1	Support, Fuel Lines	
55	1001216400	1	Hose	
56	1001216401	1	Hose	
57	1001156819	4.5 ft/ 1.3m	Hose	
58	1001216405	1	Hose	
59	4812100	2	Washer M12	
60	1001217785	2	Clamp	
61	0761011	2	Bolt M10 x 22	
62	85841094	6	Clamp	
63	1001195039	1	Clamp	
64	4460466	8	Terminal, Sealing Plug (Not Shown)	
65	4460930	1	Plug (Not Shown)	
66	1001217494	2	Bolt M12 x 20	
67	4812200	1	Washer M14	
68	24431386	1	Clamp	
69	1001217345	1	Bolt M14 x 30	
70	1001229797	1	Harness, Kubota D/F Power (Not Shown - See ELECTRICAL SECTION for Breakdown)	

FIGURE 3-39. ENGINE AND PUMP SUB-ASSEMBLY - KUBOTA ENGINE (WITHOUT ARCTIC PACKAGE) (SN 0300201991 through 0300241743)

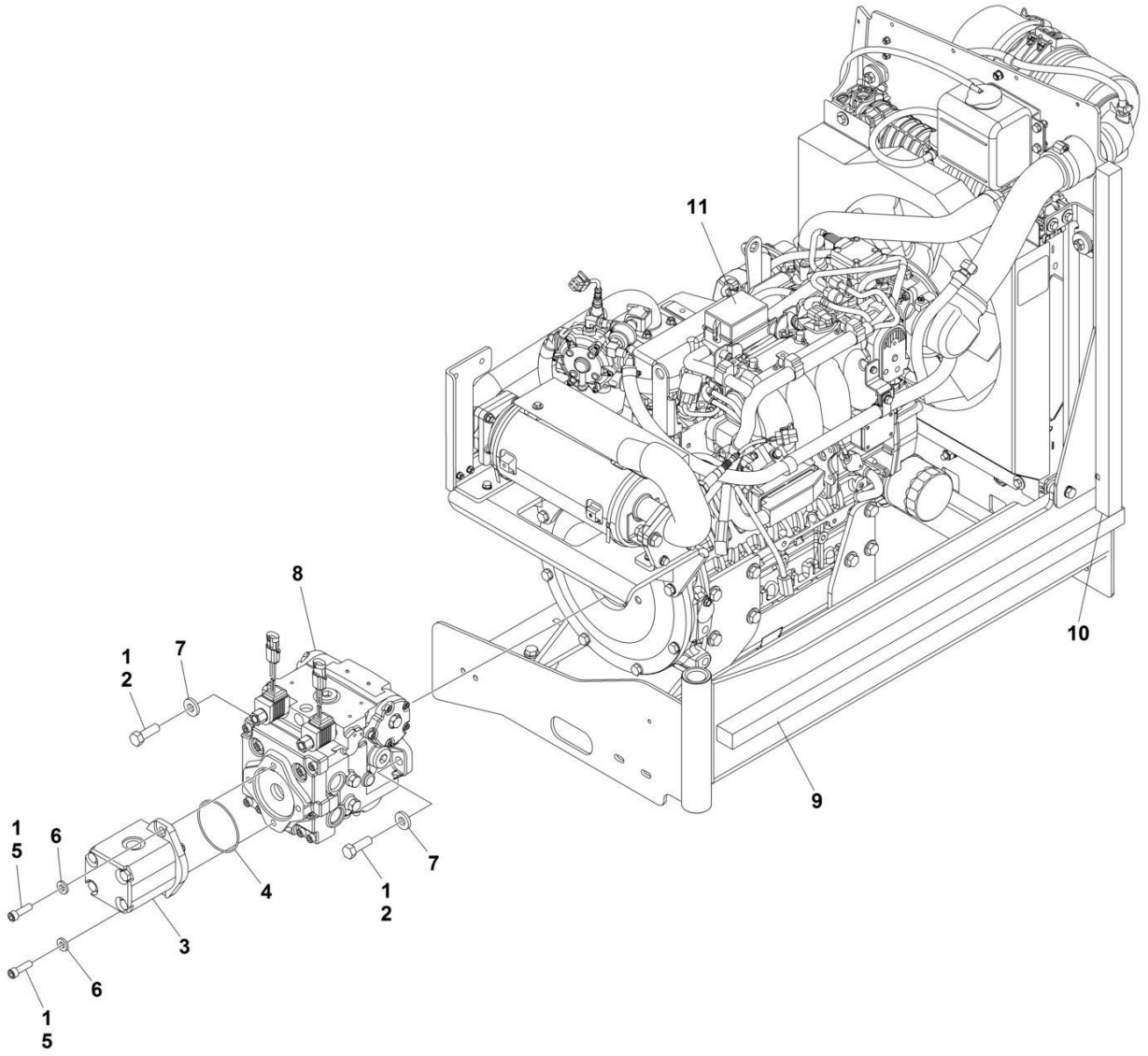

FIGURE 3-39. ENGINE AND PUMP SUB-ASSEMBLY - KUBOTA ENGINE (WITHOUT ARCTIC PACKAGE) (SN 0300201991 through 0300241743)

ITEM	PART NUMBER	QTY	DESCRIPTION	REV
	1001210765	Ref	ENGINE AND PUMP SUB-ASSEMBLY - KUBOTA ENGINE (WITHOUT ARCTIC PACKAGE)	E
1	0100011	AR	Compound, Locking	
2	0641812	2	Bolt, 1/2-13 x 1-1/2	
3	3600242	1	Gear Pump Assembly (See GEAR PUMP ASSEMBLY for Breakdown) **(SN 0300201991 through 0300236982)**	
3	1001214207	1	Gear Pump Assembly **(SN 0300236983 through 0300272317, Except SN 0300272185 through 0300272190)**	
3	70006356	1	Seal Kit – 1001214207 Pump	
4	3790152	1	O-Ring	
5	3931620	2	Capscrew 3/8 x 1-1/4	
5	3931618	2	Capscrew 3/8 x 1-1/8	
6	4891600	2	Washer, 3/8 Hardened	
7	4891800	2	Washer, 1/2 Hardened	
8	1001167036	1	Piston Pump Assembly (See PISTON PUMP ASSEMBLY for Breakdown)	
9	1001171953	1	Seal	
10	1001171954	1	Seal	
11	1001210421	1	Engine Assembly - Kubota Engine (Without Arctic Package) (See ENGINE ASSEMBLY - KUBOTA ENGINE (WITHOUT ARCTIC PACKAGE) for Breakdown)	

FIGURE 3-40. ENGINE AND PUMP SUB-ASSEMBLY - KUBOTA ENGINE (WITHOUT ARCTIC PACKAGE) (SN 0300241744 through 0300272317)

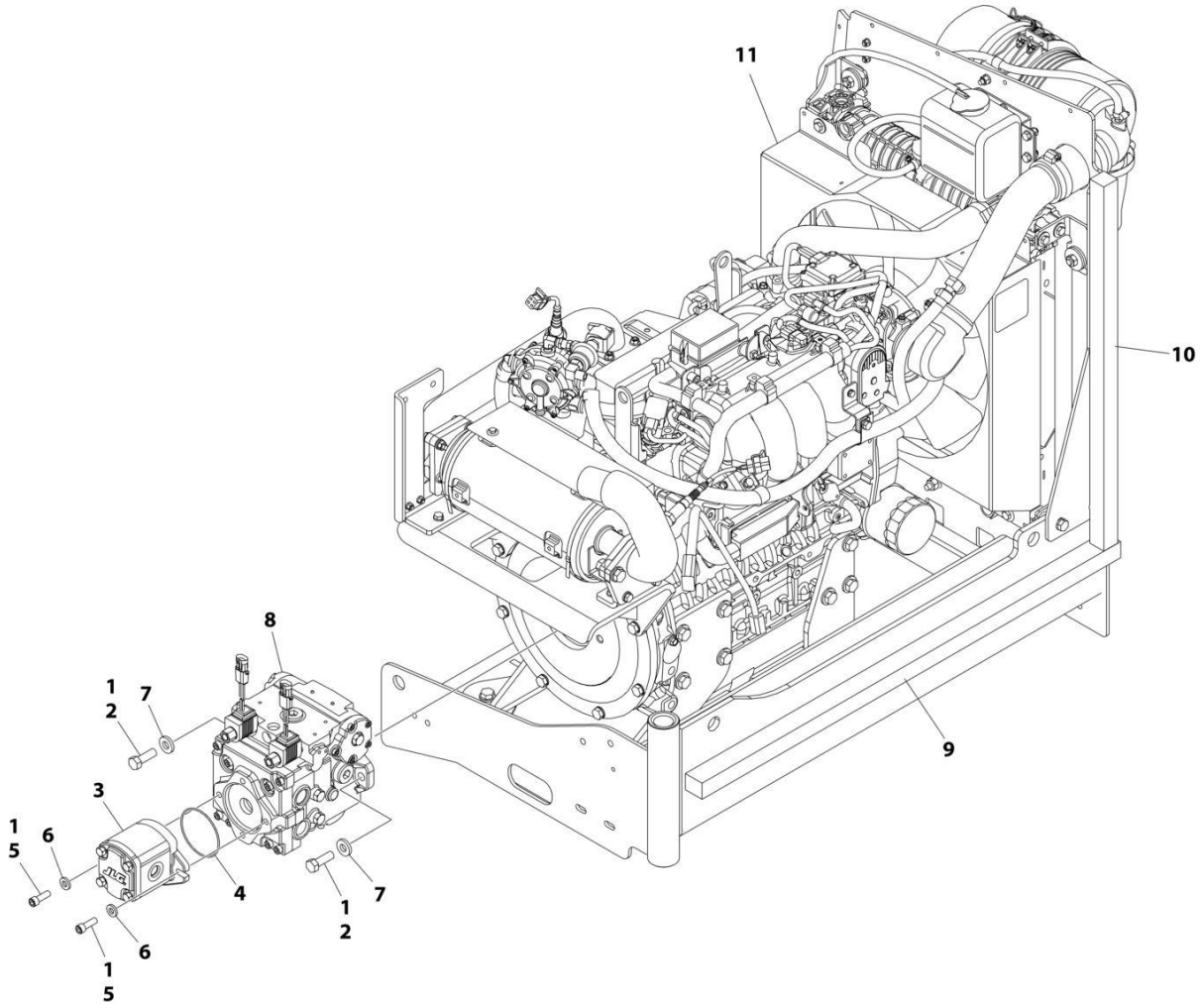

FIGURE 3-40. ENGINE AND PUMP SUB-ASSEMBLY - KUBOTA ENGINE (WITHOUT ARCTIC PACKAGE) (SN 0300241744 through 0300272317)

ITEM	PART NUMBER	QTY	DESCRIPTION	REV
	1001236254	Ref	ENGINE AND PUMP SUB-ASSEMBLY - KUBOTA ENGINE (WITHOUT ARCTIC PACKAGE)	A
1	0100011	AR	Compound, Locking	
2	0641812	2	Bolt 1/2 x 1-1/2	
3	1001214207	1	Gear Pump Assembly	
3	70006356	1	Seal Kit - 1001214207 Pump	
4	3790152	1	O-Ring	
5	3931618	2	Capscrew 3/8 x 1-1/8	
6	4891600	2	Washer 3/8 Hardened	
7	4891800	2	Washer 1/2 Hardened	
8	1001167036	1	Piston Pump Assembly (See PISTON PUMP ASSEMBLY for Breakdown)	
9	1001171953	1	Seal	
10	1001171954	1	Seal	
11	1001236256	1	Engine Assembly - Kubota Engine (Without Arctic Package) (See ENGINE ASSEMBLY - KUBOTA ENGINE (WITHOUT ARCTIC PACKAGE) for Breakdown)	

FIGURE 3-41. ENGINE ASSEMBLY - KUBOTA ENGINE (WITHOUT ARCTIC PACKAGE) (SN 0300201991 through 0300241743)

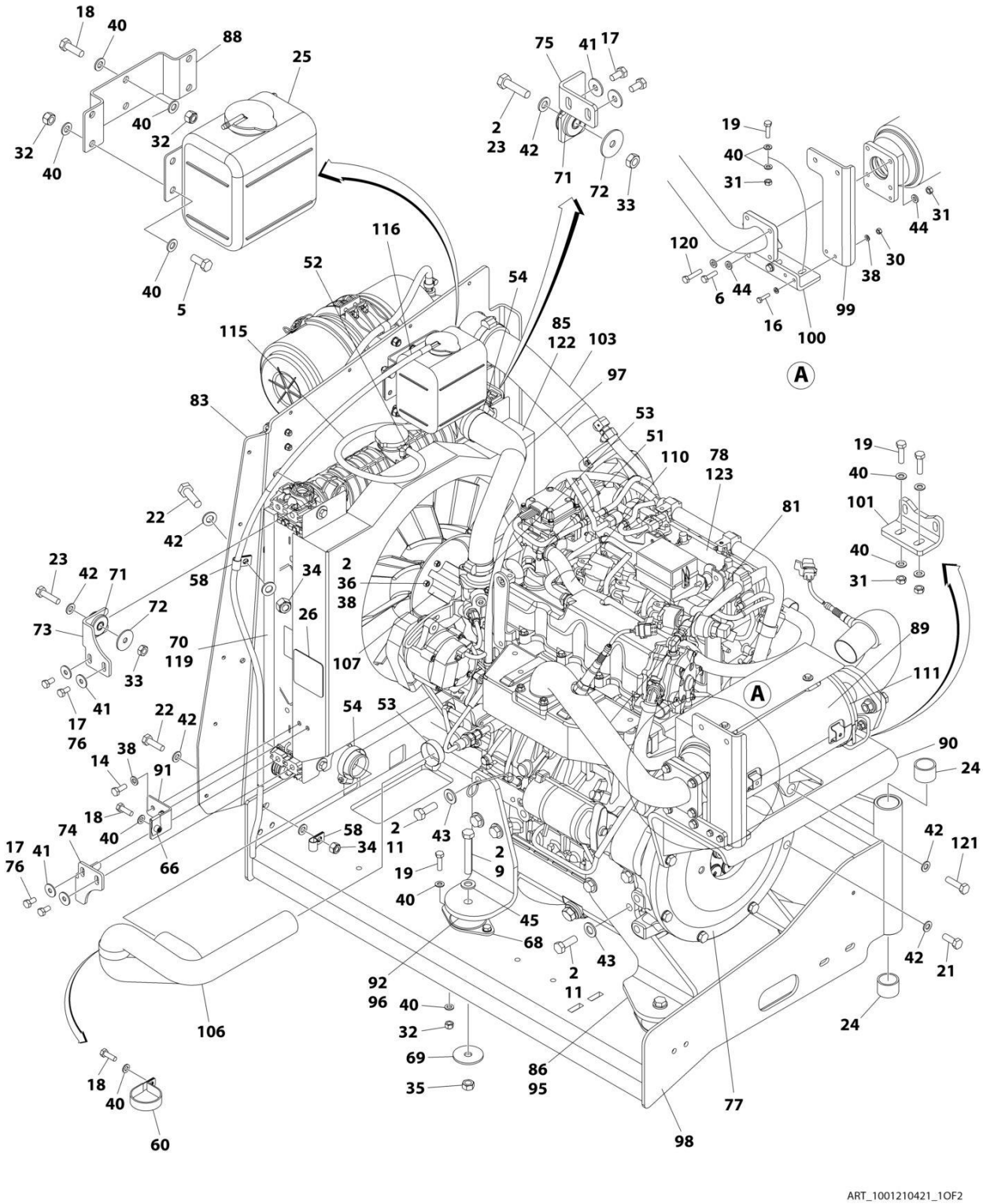

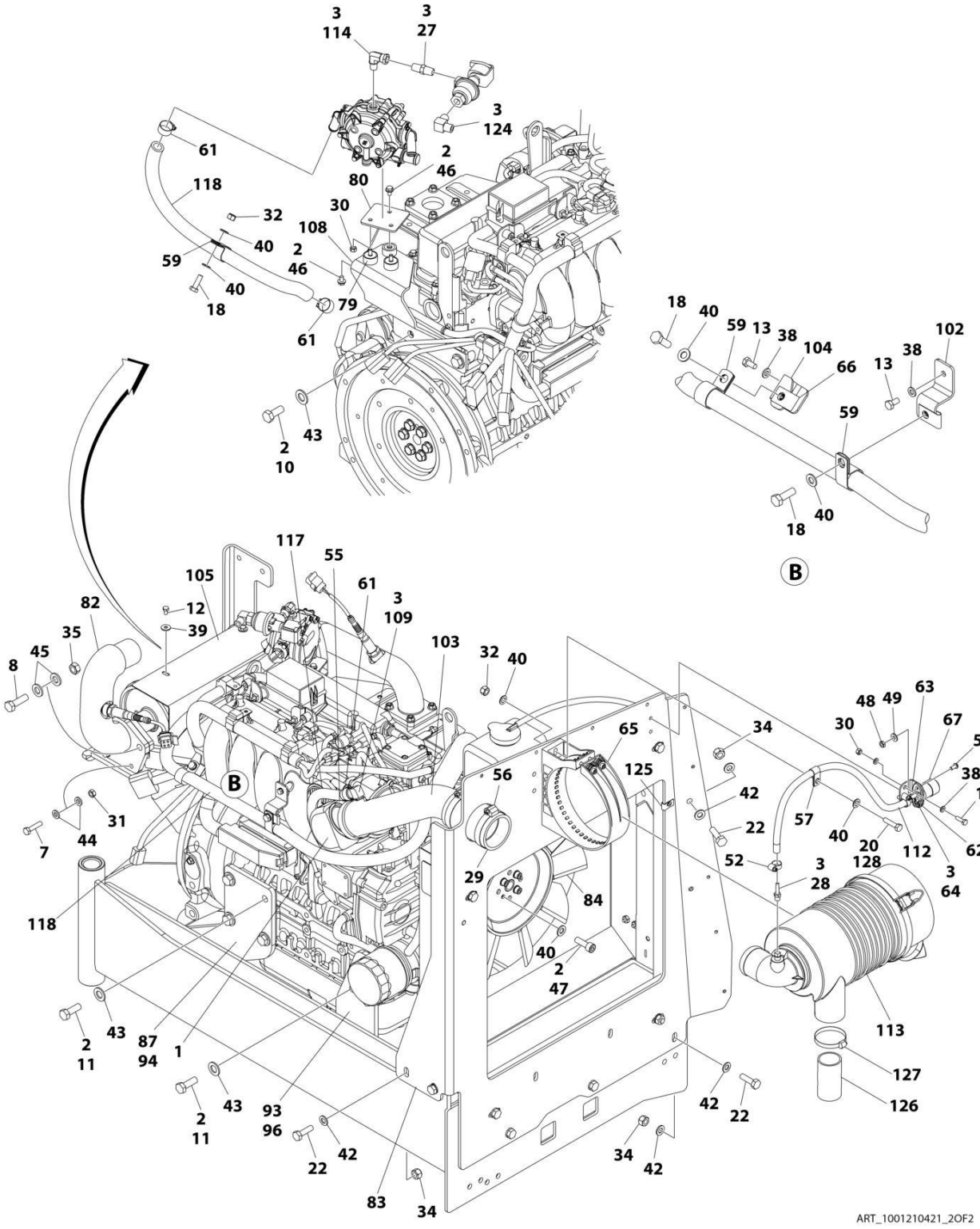
3
114
3
27
3
124
61
2
46
80
118
30
32
108
40
2
46
59
40
18
79
61
43
2
10
18
40
59
13
38
104
66
13
38
102
59
40
18
B
117
55
105
61
3
109
82
12
39
35
103
32
40
45
8
48
49
63
67
30
34
50
65
125
38
15
56
42
57
31
22
40
20
112
62
7
44
52
3
128
3
64
29
28
84
118
40
2
47
113
43
87
94
1
2
11
127
43
93
96
42
22
126
2
11
42
22
34
42
83
34
ART_1001210421_2OF2

FIGURE 3-41. ENGINE ASSEMBLY - KUBOTA ENGINE (WITHOUT ARCTIC PACKAGE) (SN 0300201991 through 0300241743)

ITEM	PART NUMBER	QTY	DESCRIPTION	REV
	1001210421	Ref	ENGINE ASSEMBLY - KUBOTA ENGINE (WITHOUT ARCTIC PACKAGE)	H
1	0080201	1	Adapter, 90	
2	0100011	AR	Compound, Locking	
3	0100020	AR	Sealant, Pipe	
5	0700810	4	Bolt M8 x 20	
6	0700814	2	Bolt M8 x 30	
7	0700815	2	Bolt M8 x 35	
8	0701216	2	Bolt M12 x 40	
9	0701224	4	Bolt M12 x 80	
10	0711214	2	Bolt M12 x 30	
10	1001217494	2	Bolt M12 x 20	
11	1001217343	14	Bolt M12 x 35	
12	0760605	4	Bolt M6 x 10	
13	0760606	2	Bolt M6 x 12	
14	0760608	2	Bolt M6 x 16	
15	0760610	2	Bolt M6 x 20	
16	0760612	2	Bolt M6 x 25	
17	0760808	8	Bolt M8 x 16	
18	0760812	6	Bolt M8 x 25	
19	0760814	12	Bolt M8 x 30	
20	0760815	1	Bolt M8 x 35	
21	0761014	4	Bolt M10 x 30	
22	0761015	6	Bolt M10 x 35	
23	0761016	4	Bolt M10 x 40	
24	0961951	2	Bushing	
25	1580011	1	Container, Coolant Overflow	
26	1703162	2	Decal - Caution Fan	
27	2220261	1	Fitting, Nipple NPTF/NPTF	
28	2220315	1	Fitting, Barbed	
29	2720644	1	Hose	
30	3290607	5	Nut, Lock M6 x 1	
31	3290801	10	Nut, M8	
32	3290805	17	Nut, Lock M8 x 1.25	
33	3291001	4	Nut, Lock M10 x 1.5	
34	3291005	6	Nut, Lock M10 x 1.5	
35	3291201	6	Nut M12	
36	4031711	4	Bolt M6 x 35	
37	4240099	AR	Tie-Strap (Not Shown)	
38	4811700	16	Washer, M6	
39	4811702	4	Washer, M6	
40	4811900	49	Washer, M8	
41	4811902	8	Washer, M8	
42	4812000	24	Washer, M10	
43	4812200	16	Washer, M14	
43	5241400	16	Washer, M14	
44	5240800	14	Washer, M8 Hardened	
45	5241200	8	Washer, M12 Hardened	
46	5250605	3	Bolt M6 x 10	

ITEM	PART NUMBER	QTY	DESCRIPTION	REV
47	5271809	4	Bolt, M8 x 25mm	
48	8305401	2	Nut, Jam .250-20	
49	8307109	2	Washer, .250	
50	8310548	2	Screw, 1/4 NC x 1/2	
51	8405007	2	Clamp **(SN 0300201991 through 0300228359)**	
51	1001173535	2	Clamp **(SN 0300228360 through 0300272317, Except SN 0300272185 through 0300272190)**	
52	8405009	4	Clamp	
53	8405102	2	Clamp	
54	8405104	2	Clamp	
55	8405202	1	Clamp	
56	8405203	3	Clamp	
57	8406109	1	Clip	
58	8406110	1	Clip	
59	8406201	3	Clip	
60	8410001	1	Clamp	
61	8410009	6	Clamp	
62	1001138173	1	Support, Service Indicator	
63	1001138175	1	Bracket, Service Indicator	
64	1001141995	1	Fitting, Barbed	
65	1001147812	1	Clamp. Air Cleaner	
66	1001149160	3	Nut M8	
67	1001149639	1	Indicator, Air Intake	
68	1001166718	4	Isolator, Engine Mount	
69	1001168018	4	Washer, Snubbing	
70	1001168166	2	Seal	
71	1001169054	4	Isolator, Radiator	
72	1001169138	4	Washer, Snubbing	
73	1001169967	2	Bracket	
74	1001170035	1	Bracket	
75	1001176330	1	Bracket	
76	1001180620	AR	Adhesive	
77	1001209844	1	Pump Coupling Kit (See PUMP COUPLING KIT for Breakdown)	
78	1001210763	1	Engine, Kubota	
79	1001211794	3	Mount	
80	1001211797	1	Mount	
81	1001212989	1	Pipe, Exhaust (Inlet)	
82	1001212993	1	Pipe Exhaust (Outlet)	
83	1001213305	1	Plate, Mounting	
84	1001213357	1	Fan	
85	1001213423	1	Radiator	
86	1001213425	1	Plate, Engine Mount (Left Rear)	
87	1001213426	1	Plate, Engine Mount (Right Rear)	
88	1001213482	1	Bracket	
89	1001213824	1	Insulation	
90	1001214138	1	Bracket	
91	1001214205	1	Support	
92	1001214233	1	Plate (Front Left)	
93	1001214234	1	Plate (Front Right)	
94	1001214276	1	Shim	
95	1001214277	1	Shim	
96	1001214278	2	Shim	

SECTION 3 - ENGINE

ITEM	PART NUMBER	QTY	DESCRIPTION	REV
97	1001214307	1	Hose	
98	1001214508	1	Support	
99	1001214553	1	Support	
100	1001214555	1	Bracket	
101	1001214556	1	Bracket	
102	1001214558	1	Bracket	
103	1001214598	1	Tube	
104	1001214599	1	Bracket	
105	1001214664	1	Cover	
106	1001214694	1	Hose	
107	1001214729	1	Spacer	
108	1001214841	1	Bracket	
109	1001215125	1	Fitting, 90	
110	1001215869	1	Hose	
111	1001137336	2	Strap	
112	1001138248	2 ft/ 0.61m	Tube	
113	1001147813	1	Air Cleaner Assembly Including Filter Element	
113	70004020	1	Element, Filter (Not Shown)	
114	2220064	1	Fitting, 90 FSNPSM/NPTF	
115	2720058	1.75 ft/ 0.53m	Hose	
116	2720271	4 ft/ 1.22m	Hose	
117	2720615	1.25 ft/ 0.38m	Hose	
118	82033995	5.5 ft/ 1.68m	Hose	
119	1001216825	2	Seal	
120	0700816	4	Bolt M8 x 40	
121	0701016	4	Bolt M10 x 40	
122	2300004	2.7 gal/ 10.2L	Coolant, Anti-Freeze	
123	1001190775	10 qt/ 9.4L	Oil, Engine	
124	2180504	1	Fitting, Barbed	
125	1001118274	1	Nut, Special M8	
126	1001001939	1	Tube, Flex	
127	8410011	1	Clamp	
128	0760815	1	Bolt M8 x 35	
128	0760816	1	Bolt M8 x 40	

FIGURE 3-42. ENGINE ASSEMBLY - KUBOTA ENGINE (WITHOUT ARCTIC PACKAGE) (SN 0300241744 through 0300272317)

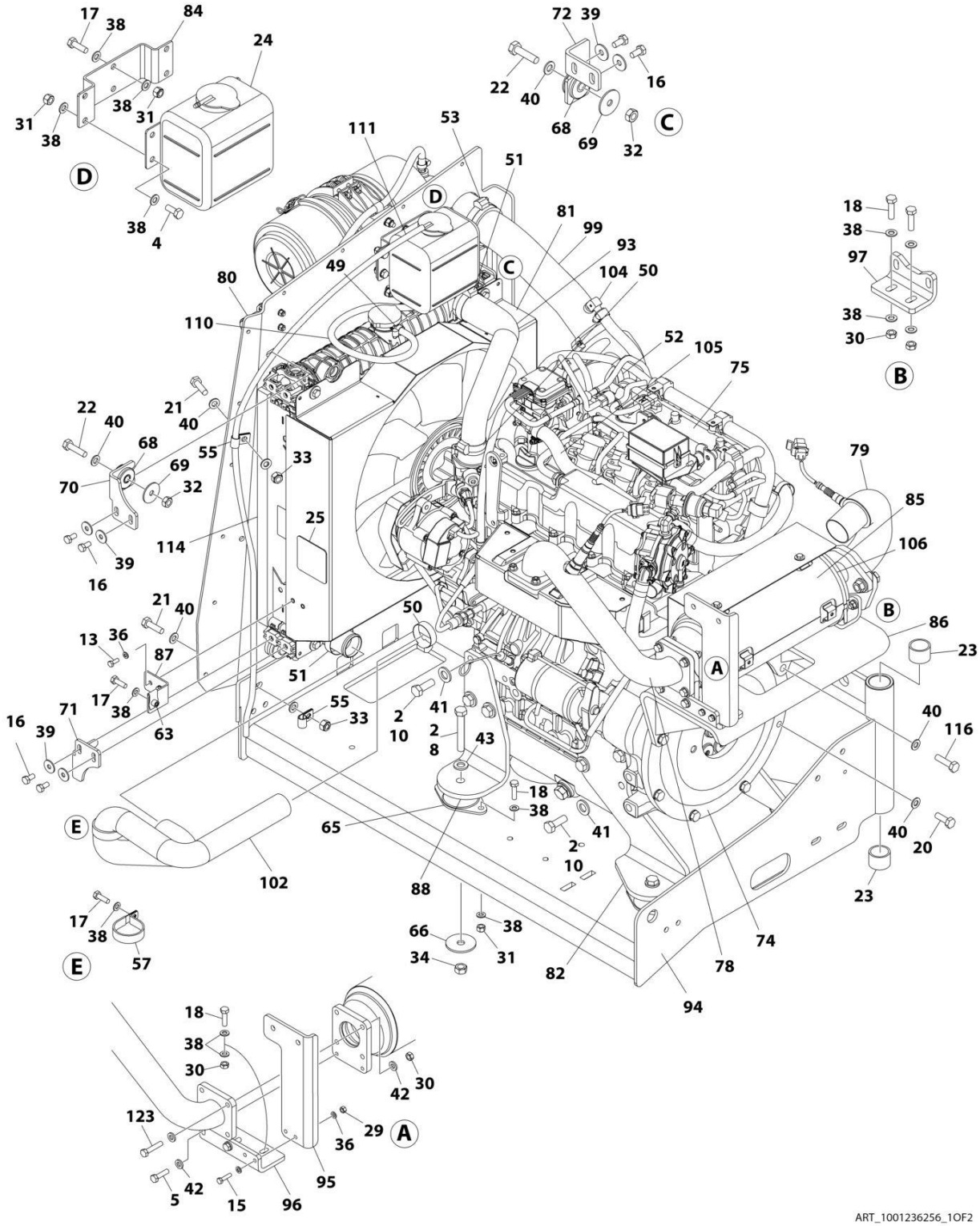

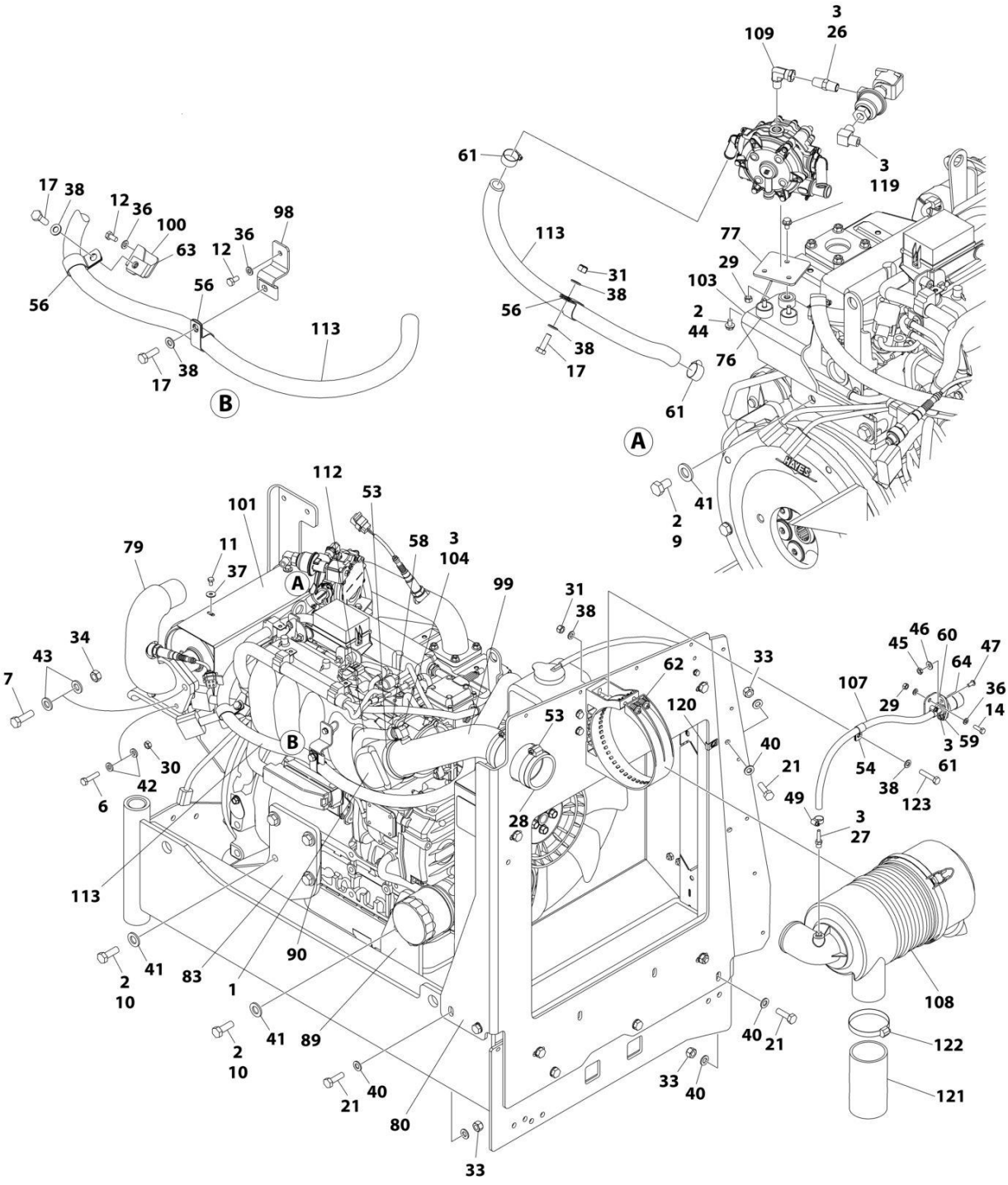
ART_1001236256_2OF2

FIGURE 3-42. ENGINE ASSEMBLY - KUBOTA ENGINE (WITHOUT ARCTIC PACKAGE) (SN 0300241744 through 0300272317)

ITEM	PART NUMBER	QTY	DESCRIPTION	REV
	1001236256	Ref	ENGINE ASSEMBLY - KUBOTA ENGINE (WITHOUT ARCTIC PACKAGE)	A
1	0080201	1	Adapter, 90	
2	0100011	AR	Compound, Locking	
3	0100020	AR	Sealant, Pipe	
4	0700810	4	Bolt M8 x 20	
5	0700814	2	Bolt M8 x 30	
6	0700815	2	Bolt M8 x 35	
7	0701216	2	Bolt M12 x 40	
8	0701224	4	Bolt M12 x 80	
9	1001217494	2	Bolt M12 x 20	
10	1001217343	14	Bolt M12 x 35	
11	0760605	4	Bolt M6 x 10	
12	0760606	2	Bolt M6 x 12	
13	0760608	2	Bolt M6 x 16	
14	0760610	2	Bolt M6 x 20	
15	0760612	2	Bolt M6 x 25	
16	0760808	8	Bolt M8 x 16	
17	0760812	6	Bolt M8 x 25	
18	0760814	12	Bolt M8 x 30	
19	0760815	1	Bolt M8 x 35	
20	0761014	4	Bolt M10 x 30	
21	0761015	6	Bolt M10 x 35	
22	0761016	4	Bolt M10 x 40	
23	0961951	2	Bushing	
24	1580011	1	Container, Coolant Overflow	
25	1703162	2	Decal - Caution Fan	
26	2220261	1	Fitting, Nipple NPTF/NPTF	
27	2220315	1	Fitting, Barbed	
28	2720644	1	Hose	
29	3290607	5	Nut Lock M6 x 1	
30	3290801	10	Nut M8	
31	3290805	17	Nut Lock M8 x 1.25	
32	3291001	4	Nut Lock M10 x 1.5	
33	3291005	6	Nut Lock M10 x 1.5	
34	3291201	6	Nut M12	
35	4240099	AR	Tie-Strap (Not Shown)	
36	4811700	12	Washer M6	
37	4811702	4	Washer M6	
38	4811900	45	Washer M8	
39	4811902	8	Washer M8	
40	4812000	24	Washer M10	
41	5241400	16	Washer M14	
42	5240800	14	Washer M8 Hardened	
43	5241200	8	Washer M12 Hardened	
44	5250605	3	Bolt M6 x 10	
45	8305401	2	Nut, Jam .250-20	
46	8307109	2	Washer, .250	
47	8310548	2	Screw 1/4 NC x 1/2	

ITEM	PART NUMBER	QTY	DESCRIPTION	REV
48	1001173535	2	Clamp	
49	8405009	4	Clamp	
50	8405102	2	Clamp	
51	8405104	2	Clamp	
52	8405202	1	Clamp	
53	8405203	3	Clamp	
54	8406109	1	Clip	
55	8406110	2	Clip	
56	8406201	3	Clip	
57	8410001	1	Clamp	
58	8410009	6	Clamp	
59	1001138173	1	Support, Service Indicator	
60	1001138175	1	Bracket, Service Indicator	
61	1001141995	1	Fitting, Barbed	
62	1001147812	1	Clamp. Air Cleaner	
63	1001149160	3	Nut M8	
64	1001149639	1	Indicator, Air Intake	
65	1001166718	4	Isolator, Engine Mount	
66	1001168018	4	Washer, Snubbing	
67	1001168166	2	Seal	
68	1001169054	4	Isolator, Radiator	
69	1001169138	4	Washer, Snubbing	
70	1001169967	2	Bracket	
71	1001170035	1	Bracket	
72	1001176330	1	Bracket	
73	1001180620	AR	Adhesive	
74	1001209844	1	Pump Coupling Kit (See PUMP COUPLING KIT for Breakdown)	
75	1001236393	1	Engine, Kubota	
76	1001211794	3	Mount	
77	1001211797	1	Mount	
78	1001212989	1	Pipe, Exhaust (Inlet)	
79	1001212993	1	Pipe Exhaust (Outlet)	
80	1001213305	1	Plate, Mounting	
81	1001236257	1	Radiator	
82	1001213425	1	Plate, Engine Mount (Left Rear)	
83	1001213426	1	Plate, Engine Mount (Right Rear)	
84	1001213482	1	Bracket	
85	1001213824	1	Insulation	
86	1001214138	1	Bracket	
87	1001214205	1	Support	
88	1001214233	1	Plate (Front Left)	
89	1001214234	1	Plate (Front Right)	
90	1001214276	1	Shim	
91	1001214277	1	Shim	
92	1001214278	2	Shim	
93	1001214307	1	Hose	
94	1001214508	1	Support	
95	1001214553	1	Support	
96	1001214555	1	Bracket	
97	1001214556	1	Bracket	
98	1001214558	1	Bracket	

ITEM	PART NUMBER	QTY	DESCRIPTION	REV
99	1001214598	1	Tube	
100	1001214599	1	Bracket	
101	1001214664	1	Cover	
102	1001214694	1	Hose	
103	1001214841	1	Bracket	
104	1001215125	1	Fitting, 90	
105	1001215869	1	Hose	
106	1001137336	2	Strap	
107	1001138248	2 ft/ 0.61m	Tube	
108	1001147813	1	Air Cleaner Assembly Including Filter Element	
108	70004020	1	Element, Filter (Not Shown)	
109	2220064	1	Fitting, 90 FSNPSM/NPTF	
110	2720058	1.75 ft/ 0.53m	Hose	
111	2720271	4 ft/ 1.22m	Hose	
112	2720615	1.25 ft/ 0.38m	Hose	
113	82033995	5.5 ft/ 1.68m	Hose	
114	1001216825	2	Seal	
115	0700816	4	Bolt M8 x 40	
116	0701016	4	Bolt M10 x 40	
117	2300004	2.7 gal /10.2L	Coolant, Anti-Freeze	
118	1001190775	10 qt/ 9.4L	Oil, Engine	
119	2180504	1	Fitting, Barbed	
120	1001118274	1	Nut Special M8	
121	1001001939	1	Tube, Flex	
122	8410011	1	Clamp	
123	0760816	1	Bolt M8 x 40	

FIGURE 3-43. ENGINE INSTALLATION - KUBOTA ENGINE (WITH ARCTIC PACKAGE) (SN 0300201991 through 0300241743)

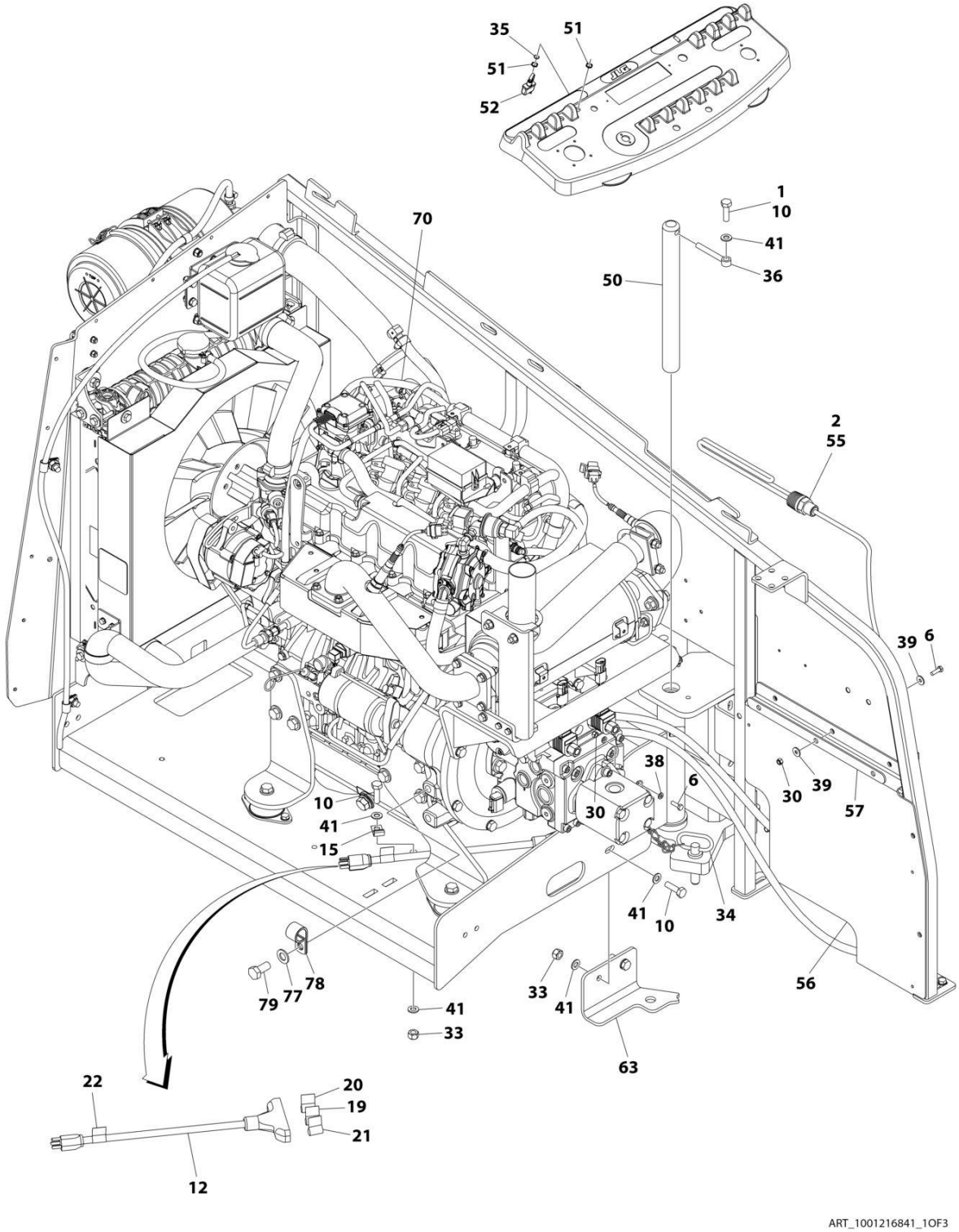

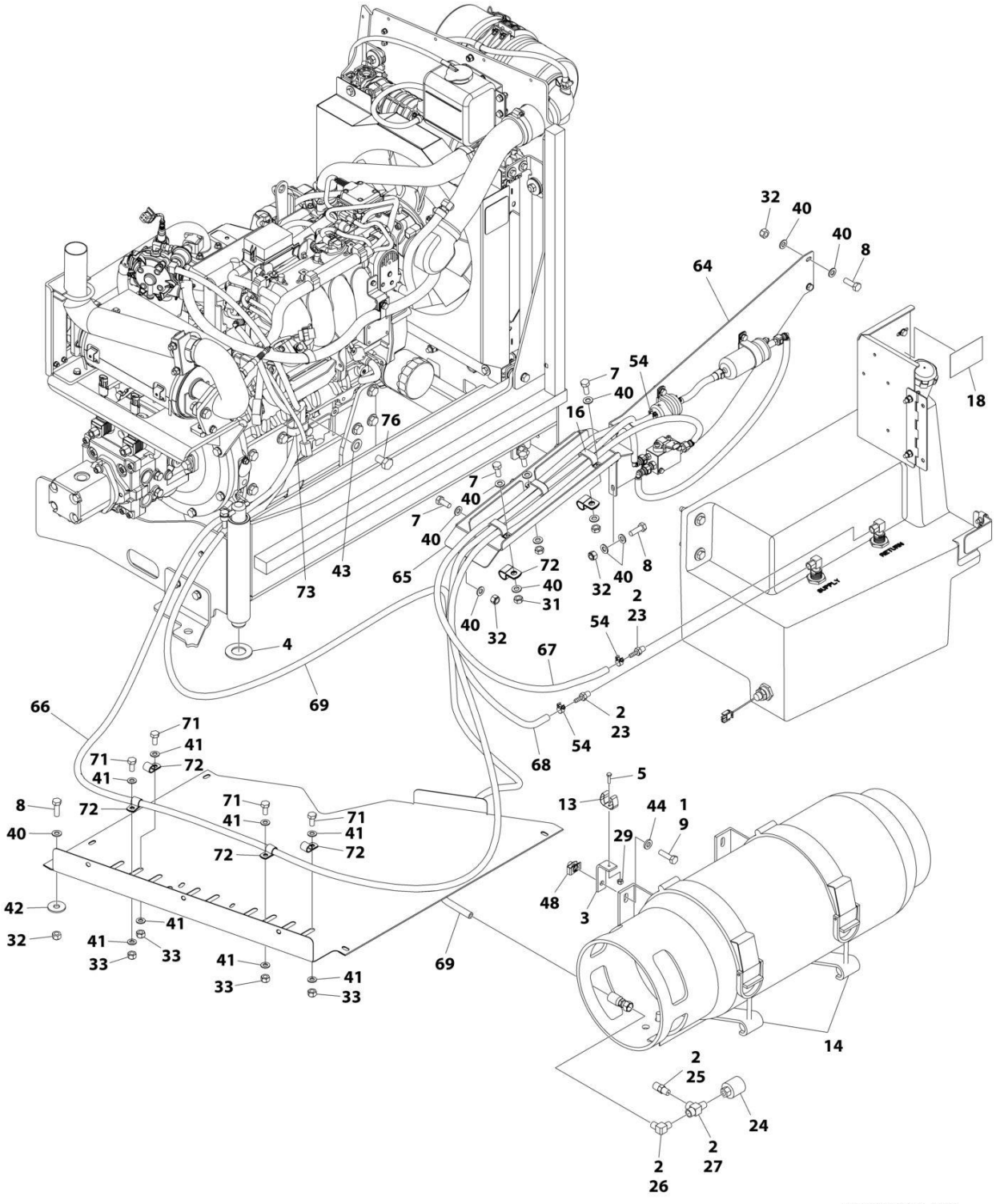
ART_1001216841_2OF3

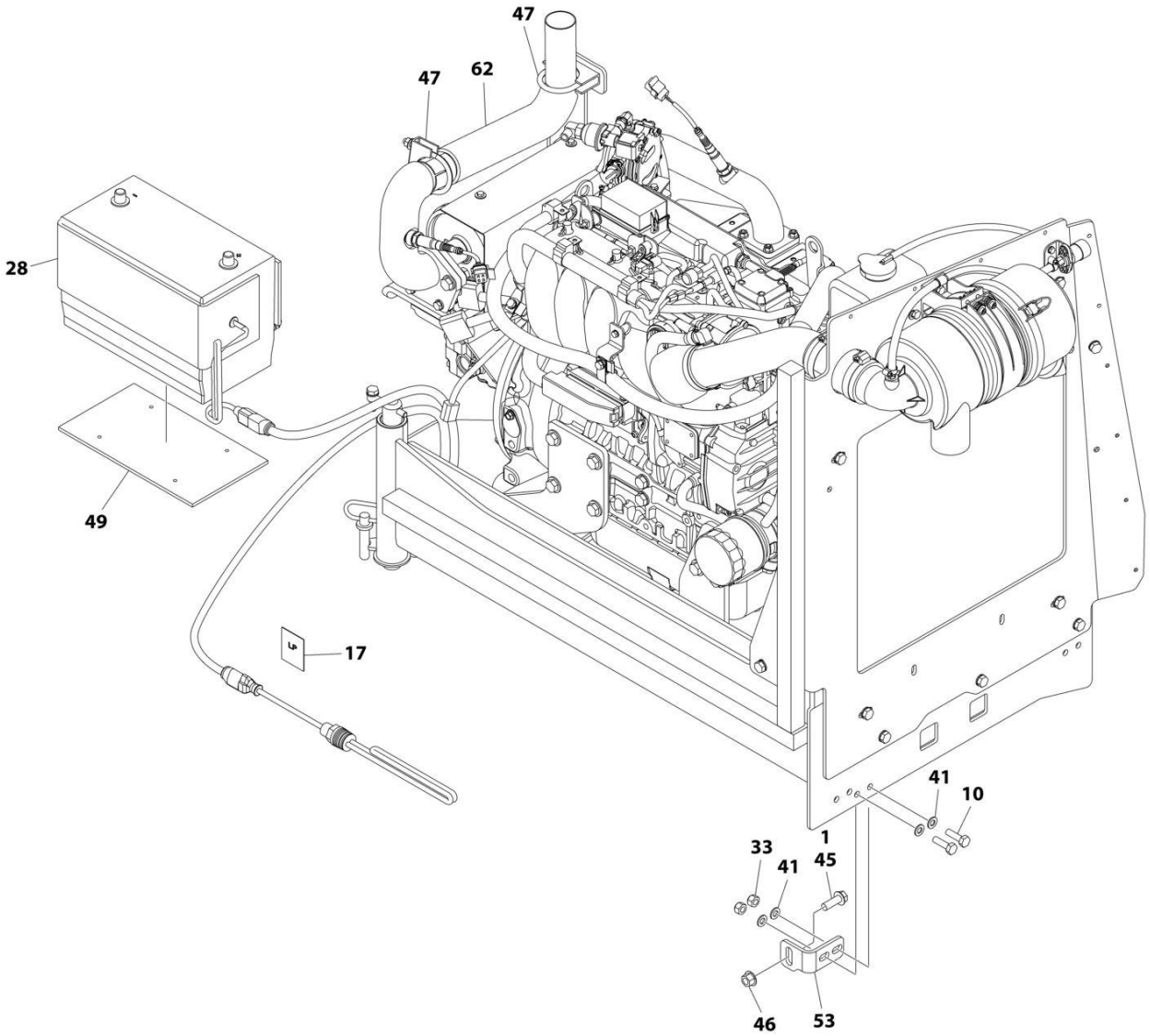

ART_1001216841_3OF3

FIGURE 3-43. ENGINE INSTALLATION - KUBOTA ENGINE (WITH ARCTIC PACKAGE) (SN 0300201991 through 0300241743)

ITEM	PART NUMBER	QTY	DESCRIPTION	REV
	1001216841	Ref	ENGINE INSTALLATION - KUBOTA ENGINE (WITH ARCTIC PACKAGE)	F
1	0100011	AR	Compound, Locking	
2	0100020	AR	Sealant, Pipe	
3	0181949	1	Angle	
4	0440162	1	Bearing	
5	0760408	1	Bolt, M4 x 16	
6	0760610	4	Bolt, M6 x 20	
7	0760810	6	Bolt, M8 x 20	
8	0760812	AR	Bolt, M8 x 25	
9	0760814	4	Bolt, M8 x 30	
10	0761015	6	Bolt, M10 x 35	
12	1060626	1	Cord, 3 Way Extension	
13	1320218	1	Clamp	
14	1320220	1	Clamp Kit - LP	
15	1320223	1	Clamp	
16	1321283	3	Clamp	
17	1701543	1	Decal - LPG	
18	1701542	1	Decal - Gas	
19	1702941	1	Decal - Battery Heater	
20	1702942	1	Decal - Engine Block Heater	
21	1702943	1	Decal - Hydraulic Tank Heater	
22	1702944	1	Decal - Heater Cord	
23	2180348	2	Fitting, Barbed	
24	2180387	1	Fitting, LP	
25	2180389	1	Fitting	
26	2180504	1	Fitting, Barbed	
27	2220290	1	Fitting, Tee FNPTF/NPTF/FNPTF	
28	2580024	1	Heater, Battery	
29	3290405	1	Nut M4	
30	3290605	4	Nut M6	
31	3290801	3	Nut M8	
32	3290805	AR	Nut M8	
33	3291005	AR	Nut M10	
34	3422532	1	Pin	
35	3790012	1	O-Ring	
36	3841143	1	Keeper, Pin	
37	4240099	AR	Tie-Strap (Not Shown)	
38	4811700	2	Washer, M6	
39	4811702	6	Washer, M6	
40	4811900	AR	Washer, M8	
41	4812000	AR	Washer, M10	
42	4812002	1	Washer M10	
43	4812100	2	Washer M12	
44	5240800	4	Washer, M8	
45	5251215	1	Bolt, M12 x 35	
46	5261200	1	Nut, M12 Grade 10.9	
47	1001217785	2	Clamp	
48	1001118274	4	Nut, Special M8	

ITEM	PART NUMBER	QTY	DESCRIPTION	REV
49	1001119278	1	Insulate	
50	1001135196	1	Pin	
51	1001155044	2	Nut, Special 15/32	
52	1001161710	1	Switch, Toggle	
53	1001167512	1	Bracket, Engine Tray Stow	
54	1001174486	3	Clamp	
55	1001188972	1	Heater, Hydraulic Tank	
56	1001196376	1	Seal, Rubber	
57	1001204123	1	Plate, Support	
58	1001212257	1	Cable, Battery (Red) (Alternator Positive to Starter) (Not Shown)	
59	1001213060	1	Cable, Battery (Red) (Battery Positive to Auxiliary Power Relay) (Not Shown)	
60	1001213061	1	Cable, Battery (Black) (Battery Negative to Pivot Pin to Engine Ground) (Not Shown)	
61	1001213706	1	Harness Engine - Kubota Engine (Not Shown - See ELECTRICAL SECTION for Breakdown)	
62	1001214503	1	Pipe, Tail Pipe	
63	1001215259	1	Plate, Engine Lock	
64	1001215813	1	Mount, Fuel System	
65	1001216308	1	Support, Fuel Lines	
66	1001216400	1	Hose	
67	1001216401	1	Hose	
68	1001156819	4.5 ft/ 1.4m	Hose	
69	1001216405	1	Hose	
70	1001216827	1	Engine and Pump Sub-Assembly - Kubota Engine (With Arctic Package) (See ENGINE AND PUMP SUB-ASSEMBLY - KUBOTA ENGINE (WITH ARCTIC PACKAGE) for Breakdown)	
71	0761011	AR	Bolt M10 x 22	
72	1320061	2	Clamp **(SN 0300201991 through 0300229317)**	
72	85841094	6	Clamp **(SN 0300229318 through 0300272317, Except SN 0300272185 through 0300272190)**	
73	1321716	1	Clamp **(SN 0300201991 through 0300229317)**	
73	1001195039	1	Clamp **(SN 0300229318 through 0300272317, Except SN 0300272185 through 0300272190)**	
74	4460466	8	Seal, Terminal (Not Shown)	
75	4460930	1	Plug (Not Shown)	
76	1001217494	2	Bolt M12 x 20	
77	4812200	1	Washer M14	
78	24431386	1	Clamp **(SN 0300229318 through 0300272317, Except SN 0300272185 through 0300272190)**	
79	1001217345	1	Bolt M14 x 30	
80	1001229797	1	Harness, Kubota D/F Power (Not Shown - See ELECTRICAL SECTION for Breakdown) **(SN 0300237442 through 0300272317, Except SN 0300272185 through 0300272190)**	

FIGURE 3-44. ENGINE INSTALLATION - KUBOTA ENGINE (WITH ARCTIC PACKAGE) (SN 0300241744 through 0300272317)

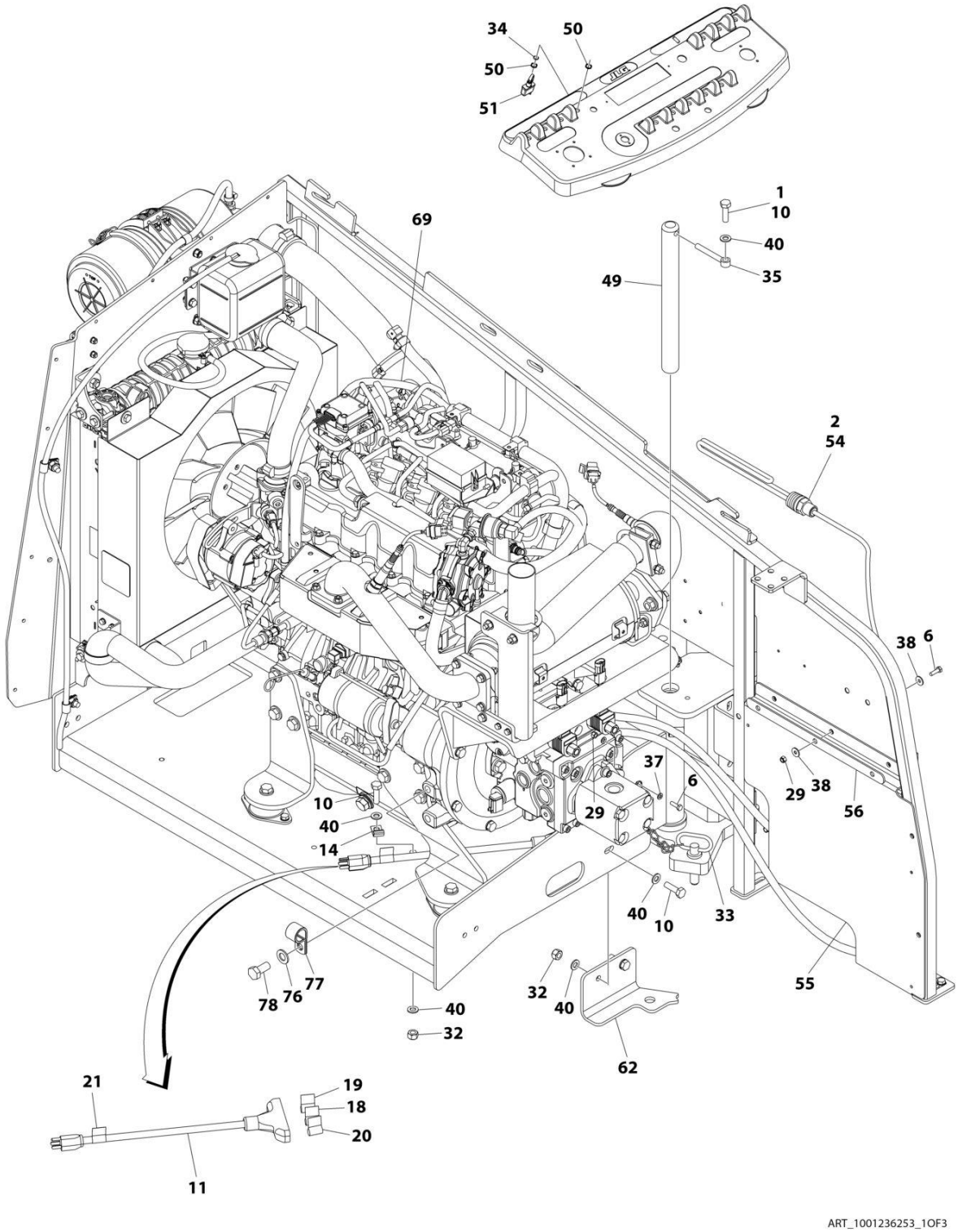

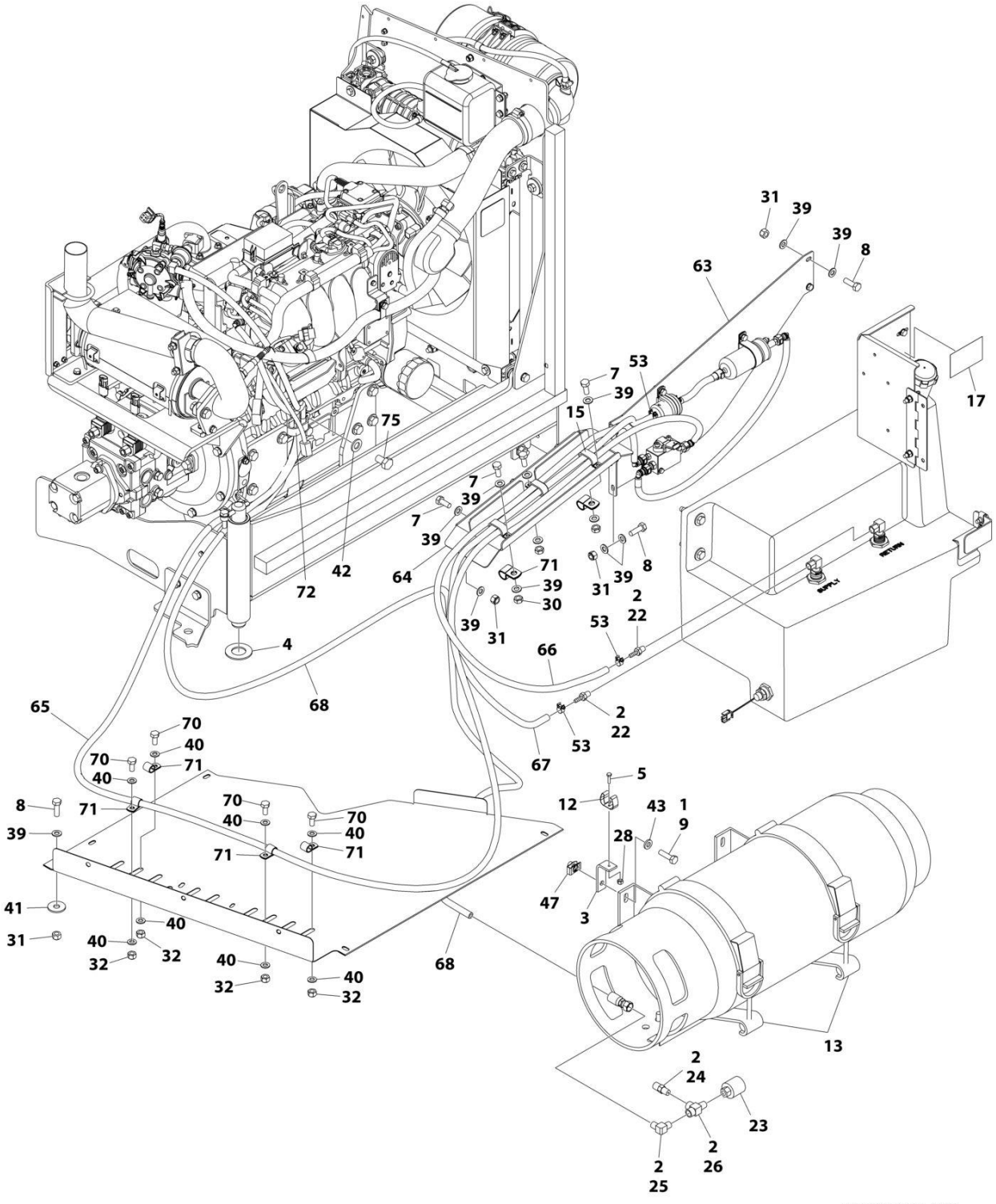
ART_1001236253_2OF3

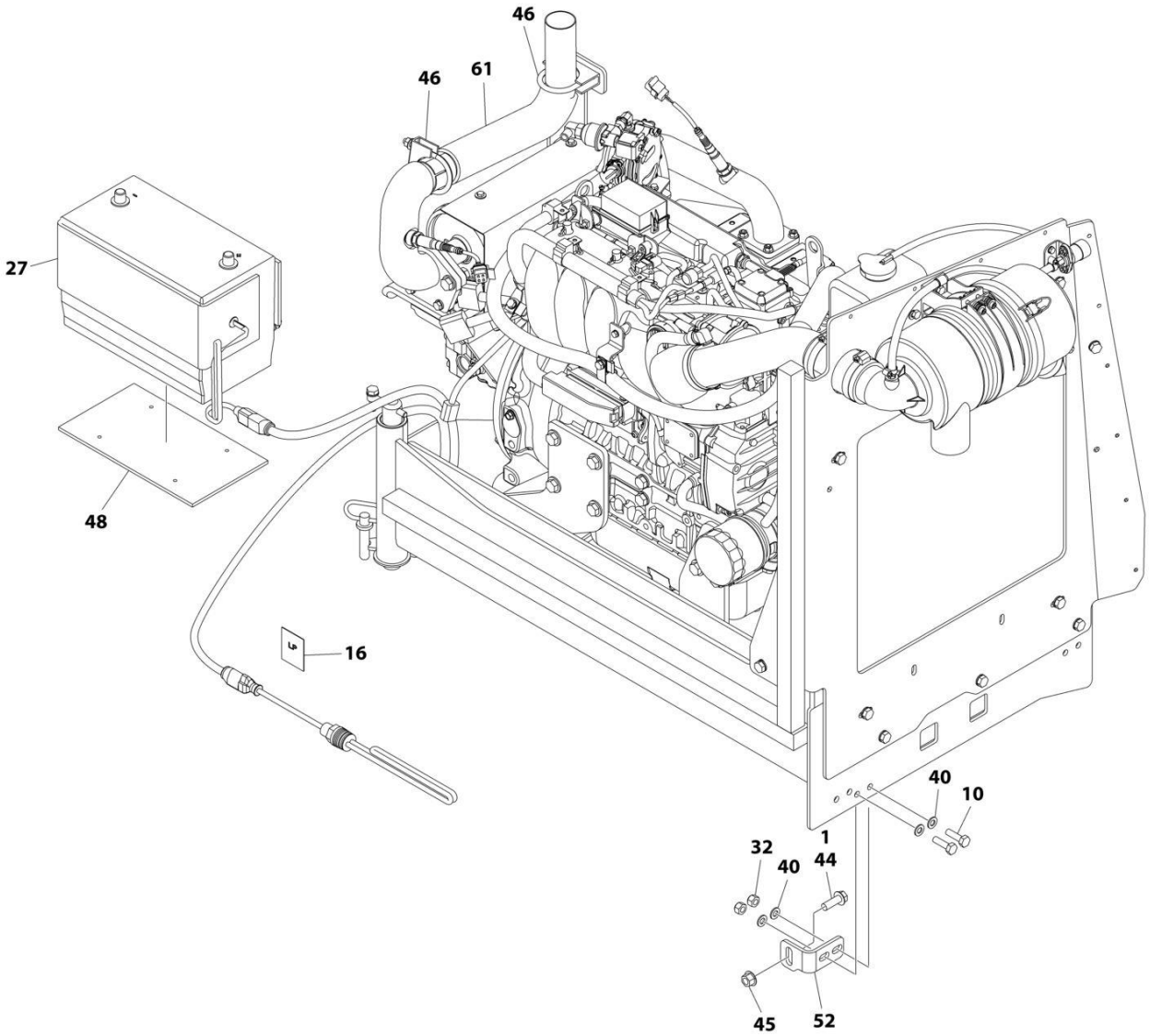

ART_1001236253_3OF3

FIGURE 3-44. ENGINE INSTALLATION - KUBOTA ENGINE (WITH ARCTIC PACKAGE) (SN 0300241744 through 0300272317)

ITEM	PART NUMBER	QTY	DESCRIPTION	REV
	1001236253	Ref	ENGINE INSTALLATION - KUBOTA ENGINE (WITH ARCTIC PACKAGE)	A
1	0100011	AR	Compound, Locking	
2	0100020	AR	Sealant, Pipe	
3	0181949	1	Angle	
4	0440162	1	Bearing	
5	0760408	1	Bolt M4 x 16	
6	0760610	4	Bolt M6 x 20	
7	0760810	6	Bolt M8 x 20	
8	0760812	4	Bolt M8 x 25	
9	0760814	4	Bolt M8 x 30	
10	0761015	6	Bolt M10 x 35	
11	1060626	1	Cord, 3 Way Extension	
12	1320218	1	Clamp	
13	1320220	1	Clamp Kit - LP	
14	1320223	1	Clamp	
15	1321283	3	Clamp	
16	1701543	1	Decal - LPG	
17	1701542	1	Decal - Gas	
18	1702941	1	Decal - Battery Heater	
19	1702942	1	Decal - Engine Block Heater	
20	1702943	1	Decal - Hydraulic Tank Heater	
21	1702944	1	Decal - Heater Cord	
22	2180348	2	Fitting, Barbed	
23	2180387	1	Fitting, LP	
24	2180389	1	Fitting	
25	2180504	1	Fitting, Barbed	
26	2220290	1	Fitting, Tee FNPTF/NPTF/FNPTF	
27	2580024	1	Heater, Battery	
28	3290405	1	Nut M4	
29	3290605	4	Nut M6	
30	3290801	3	Nut M8	
31	3290805	7	Nut M8	
32	3291005	9	Nut M10	
33	3422532	1	Pin	
34	3790012	1	O-Ring	
35	3841143	1	Keeper, Pin	
36	4240099	AR	Tie-Strap (Not Shown)	
37	4811700	2	Washer M6	
38	4811702	6	Washer M6	
39	4811900	19	Washer M8	
40	4812000	19	Washer M10	
41	4812002	1	Washer M10	
42	4812100	2	Washer M12	
43	5240800	4	Washer M8	
44	5251215	1	Bolt M12 x 35	
45	5261200	1	Nut M12 Grade 10.9	
46	1001217785	2	Clamp	
47	1001118274	4	Nut Special M8	

ITEM	PART NUMBER	QTY	DESCRIPTION	REV
48	1001119278	1	Insulate	
49	1001135196	1	Pin	
50	1001155044	2	Nut, Special 15/32	
51	1001161710	1	Switch, Toggle	
52	1001167512	1	Bracket, Engine Tray Stow	
53	1001174486	3	Clamp	
54	1001188972	1	Heater, Hydraulic Tank	
55	1001196376	1	Seal, Rubber	
56	1001204123	1	Plate, Support	
57	1001212257	1	Cable, Battery (Red) (Alternator Positive to Starter) (Not Shown)	
58	1001213060	1	Cable, Battery (Red) (Battery Positive to Auxiliary Power Relay) (Not Shown)	
59	1001213061	1	Cable, Battery (Black) (Battery Negative to Pivot Pin to Engine Ground) (Not Shown)	
60	1001213706	1	Harness Engine - Kubota Engine (Not Shown - See ELECTRICAL SECTION for Breakdown)	
61	1001214503	1	Pipe, Tail Pipe	
62	1001215259	1	Plate, Engine Lock	
63	1001215813	1	Mount, Fuel System	
64	1001216308	1	Support, Fuel Lines	
65	1001216400	1	Hose	
66	1001216401	1	Hose	
67	1001156819	4.5 ft/ 1.4m	Hose	
68	1001216405	1	Hose	
69	1001236258	1	Engine and Pump Sub-Assembly - Kubota Engine (With Arctic Package) (See ENGINE AND PUMP SUB-ASSEMBLY - KUBOTA ENGINE (WITH ARCTIC PACKAGE) for Breakdown)	
70	0761011	4	Bolt M10 x 22	
71	85841094	6	Clamp	
72	1001195039	1	Clamp	
73	4460466	8	Seal, Terminal (Not Shown)	
74	4460930	1	Plug (Not Shown)	
75	1001217494	2	Bolt M12 x 20	
76	4812200	1	Washer M14	
77	24431386	1	Clamp	
78	1001217345	1	Bolt M14 x 30	
79	1001229797	1	Harness, Kubota D/F Power (Not Shown - See ELECTRICAL SECTION for Breakdown)	

FIGURE 3-45. ENGINE AND PUMP SUB-ASSEMBLY - KUBOTA ENGINE (WITH ARCTIC PACKAGE) (SN 0300201991 through 0300241743)

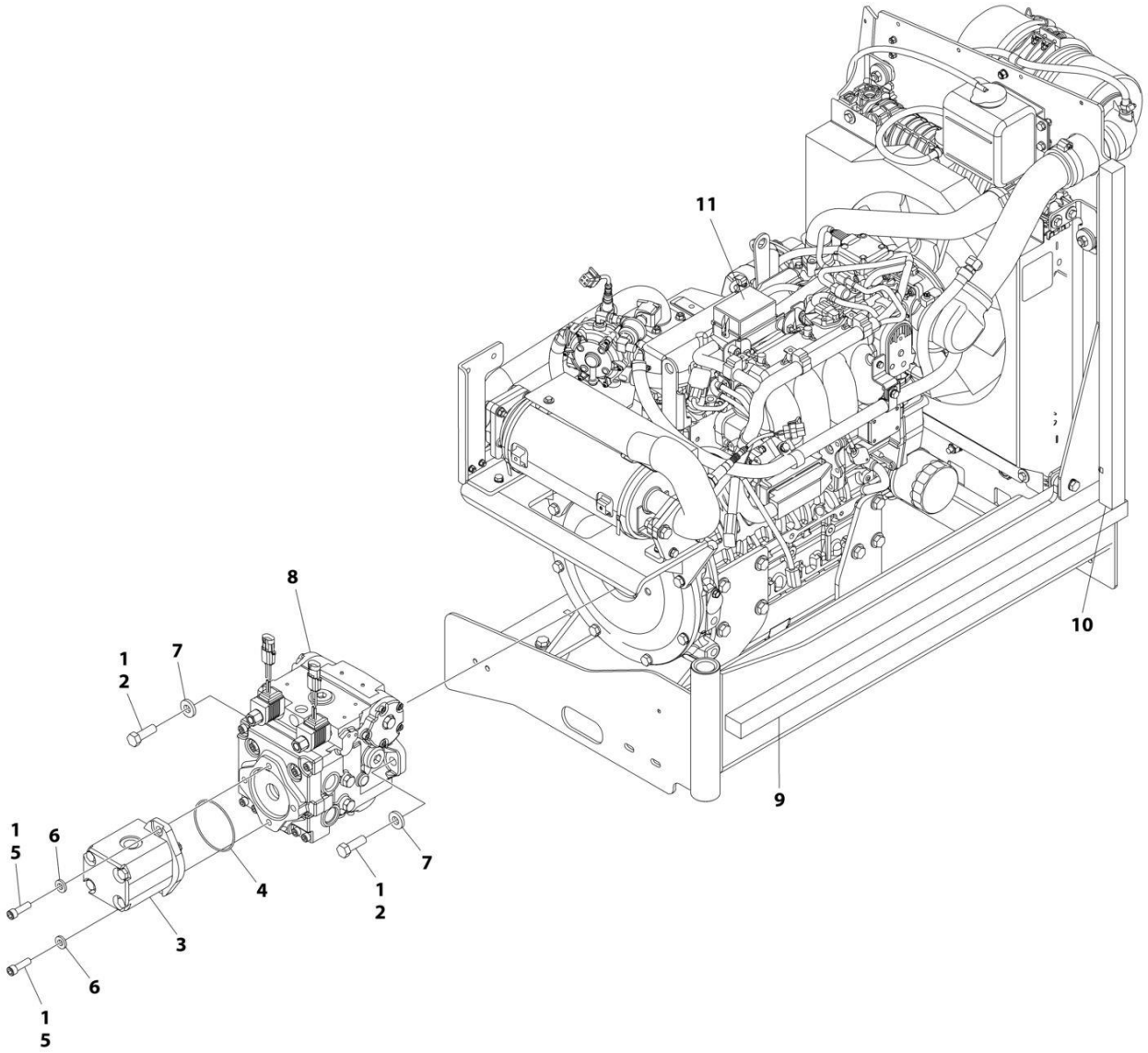

FIGURE 3-45. ENGINE AND PUMP SUB-ASSEMBLY - KUBOTA ENGINE (WITH ARCTIC PACKAGE) (SN 0300201991 through 0300241743)

ITEM	PART NUMBER	QTY	DESCRIPTION	REV
	1001216827	Ref	ENGINE AND PUMP SUB-ASSEMBLY - KUBOTA ENGINE (WITH ARCTIC PACKAGE)	E
1	0100011	AR	Compound, Locking	
2	0641812	2	Bolt 1/2 x 1-1/2	
3	3600242	1	Gear Pump Assembly (See GEAR PUMP ASSEMBLY for Breakdown) **(SN 0300201991 through 0300236982)**	
3	1001214207	1	Gear Pump Assembly **(SN 0300236983 through 0300272317, Except SN 0300272185 through 0300272190)**	
3	70006356	1	Seal Kit – 1001214207 Pump	
4	3790152	1	O-Ring	
5	3931620	2	Capscrew 3/8 x 1-1/4	
5	3931618	2	Capscrew 3/8 x 1-1/8	
6	4891600	2	Washer 3/8	
7	4891800	2	Washer 1/2	
8	1001167036	1	Piston Pump Assembly (See PISTON PUMP ASSEMBLY for Breakdown)	
9	1001171953	1	Seal	
10	1001171954	1	Seal	
11	1001216826	1	Engine Assembly - Kubota Engine (With Arctic Package) (See ENGINE ASSEMBLY - KUBOTA ENGINE (WITH ARCTIC PACKAGE) for Breakdown)	

FIGURE 3-46. ENGINE AND PUMP SUB-ASSEMBLY - KUBOTA ENGINE (WITH ARCTIC PACKAGE) (SN 0300241744 through 0300272317)

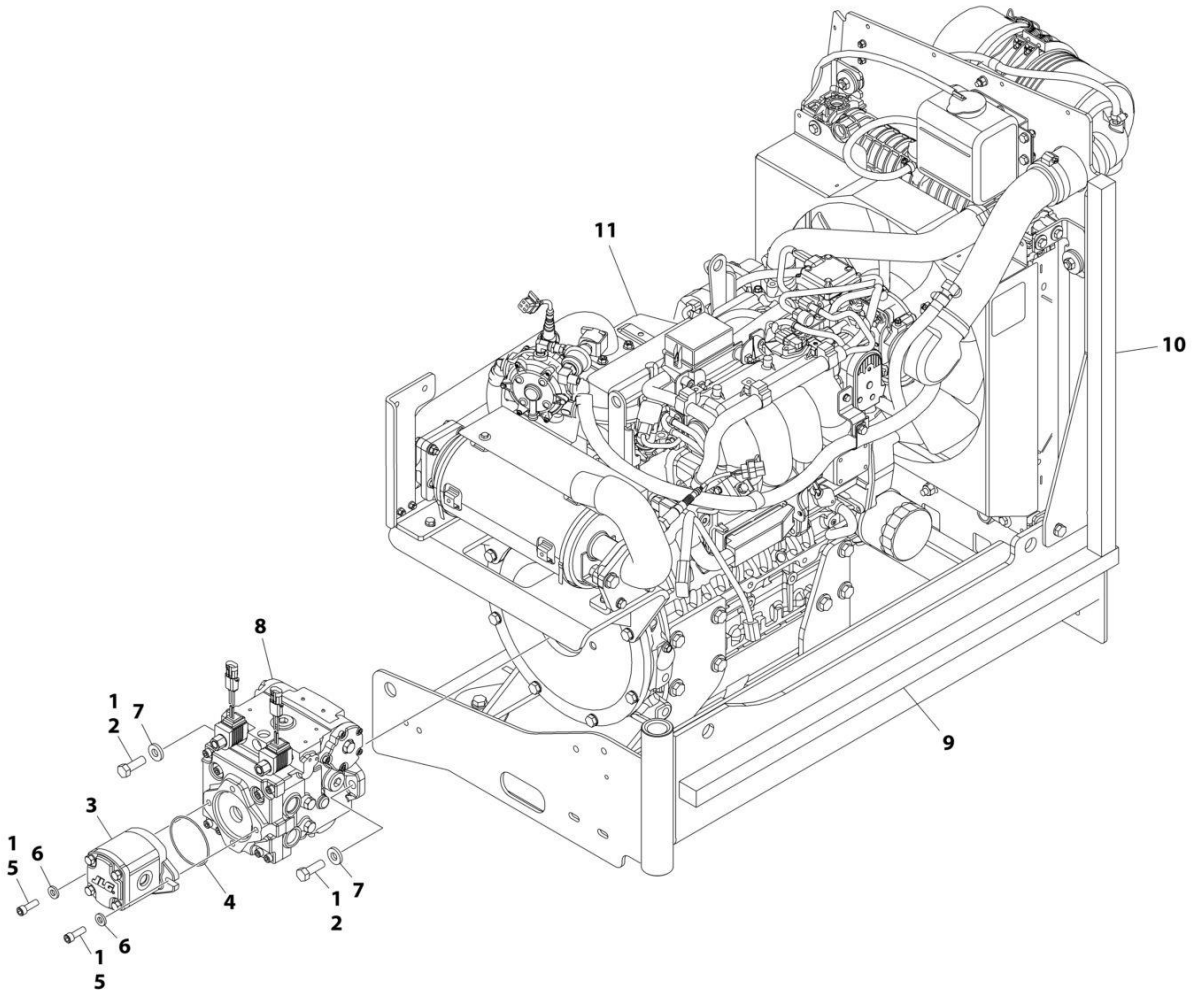

FIGURE 3-46. ENGINE AND PUMP SUB-ASSEMBLY - KUBOTA ENGINE (WITH ARCTIC PACKAGE) (SN 0300241744 through 0300272317)

ITEM	PART NUMBER	QTY	DESCRIPTION	REV
	1001236258	Ref	ENGINE AND PUMP SUB-ASSEMBLY - KUBOTA ENGINE (WITH ARCTIC PACKAGE)	A
1	0100011	AR	Compound, Locking	
2	0641812	2	Bolt 1/2 x 1-1/2	
3	1001214207	1	Gear Pump Assembly	
3	70006356	1	Seal Kit - 1001214207 Pump	
4	3790152	1	O-Ring	
5	3931618	2	Capscrew 3/8 x 1-1/8	
6	4891600	2	Washer 3/8	
7	4891800	2	Washer 1/2	
8	1001167036	1	Piston Pump Assembly (See PISTON PUMP ASSEMBLY for Breakdown)	
9	1001171953	1	Seal	
10	1001171954	1	Seal	
11	1001236259	1	Engine Assembly - Kubota Engine (With Arctic Package) (See ENGINE ASSEMBLY - KUBOTA ENGINE (WITH ARCTIC PACKAGE) for Breakdown)	

FIGURE 3-47. ENGINE ASSEMBLY - KUBOTA ENGINE (WITH ARCTIC PACKAGE) (SN 0300201991 through 0300241743)

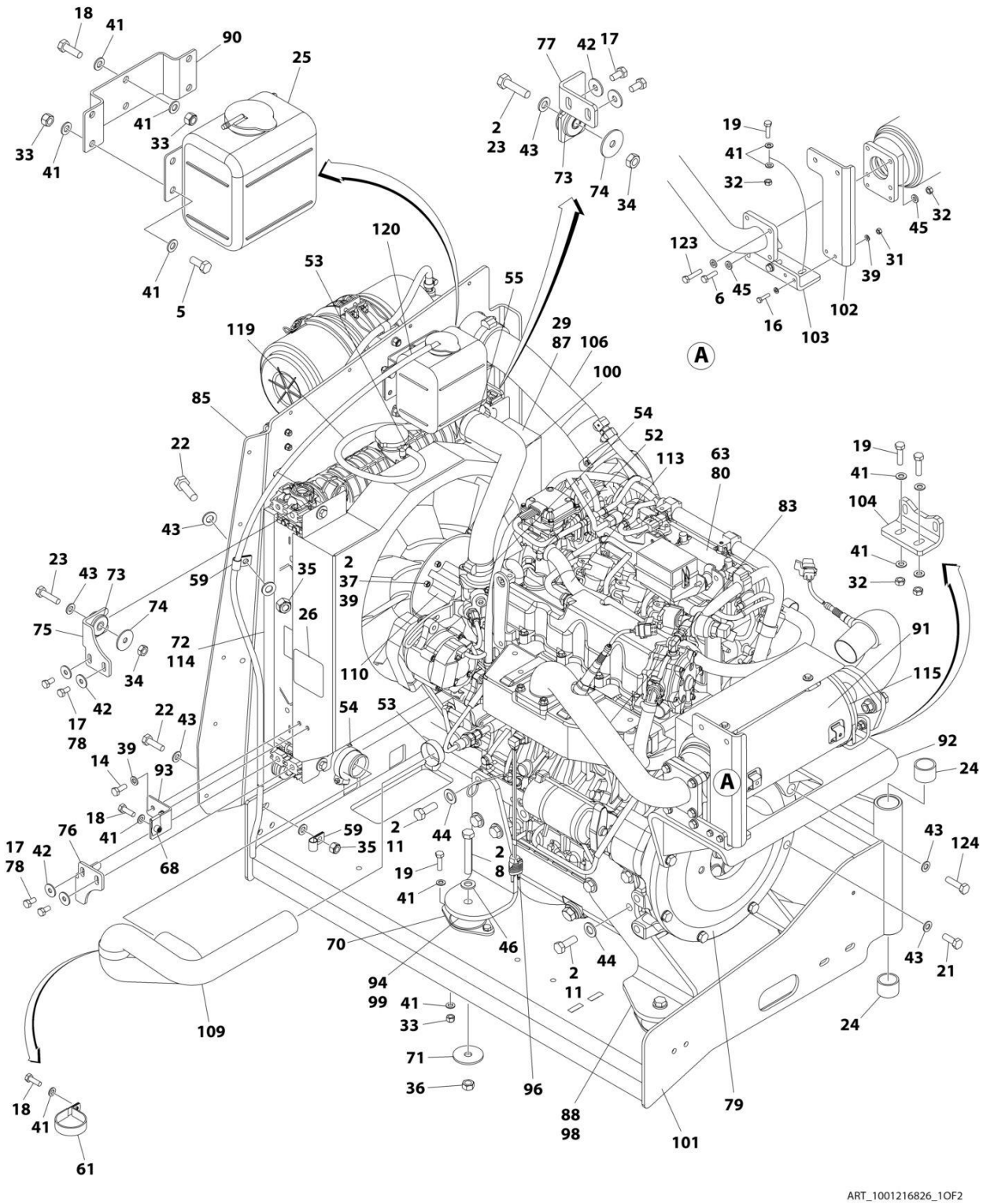

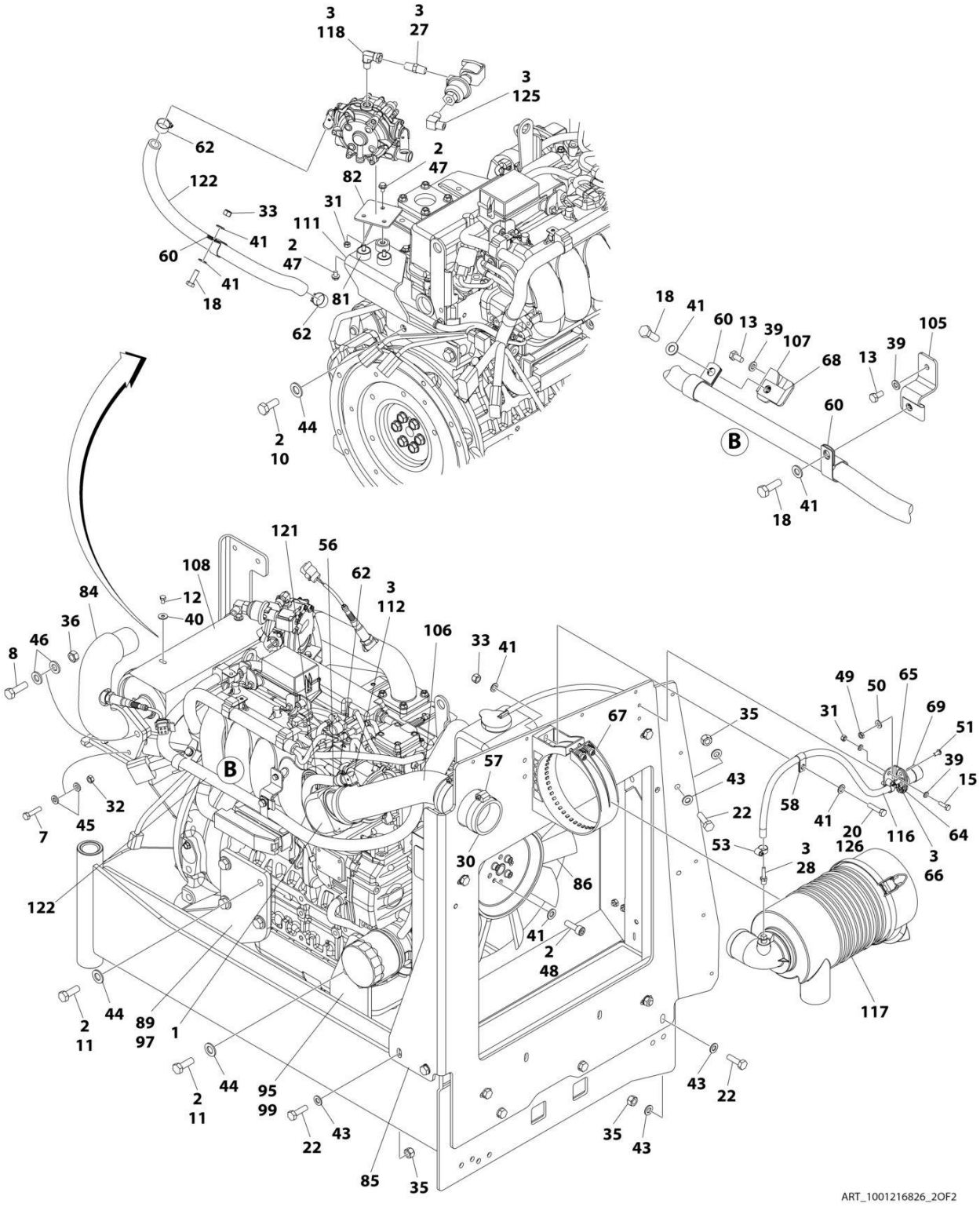
3
118
3
27
3
125
62
2
47
82
122
31
33
111
41
2
60
47
41
18
81
62
44
2
10
18
41
60
13
39
107
68
13
39
105
60
B
41
18
121
56
108
62
3
112
84
12
40
36
106
33
41
8
46
49
50
65
69
31
35
67
51
39
15
57
43
B
32
58
41
20
116
64
7
45
22
126
3
53
3
28
66
30
86
122
41
2
48
117
2
11
44
89
97
1
2
11
44
95
99
43
22
43
22
35
43
85
35
ART_1001216826_2OF2

FIGURE 3-47. ENGINE ASSEMBLY - KUBOTA ENGINE (WITH ARCTIC PACKAGE) (SN 0300201991 through 0300241743)

ITEM	PART NUMBER	QTY	DESCRIPTION	REV
	1001216826	Ref	ENGINE ASSEMBLY - KUBOTA ENGINE (WITH ARCTIC PACKAGE)	E
1	0080201	1	Adapter, 90	
2	0100011	AR	Compound, Locking	
3	0100020	AR	Sealant, Pipe	
5	0700810	4	Bolt M8 x 20	
6	0700814	2	Bolt M8 x 30	
7	0700815	2	Bolt M8 x 35	
8	0701216	2	Bolt M12 x 40	
9	0701224	4	Bolt M12 x 80	
10	0711214	2	Bolt M12 x 30	
10	1001217494	2	Bolt M12 x 20	
11	1001217343	14	Bolt M12 x 35	
12	0760605	4	Bolt M6 x 10	
13	0760606	2	Bolt M6 x 12	
14	0760608	2	Bolt M6 x 16	
15	0760610	2	Bolt M6 x 20	
16	0760612	2	Bolt M6 x 25	
17	0760808	8	Bolt M8 x 16	
18	0760812	6	Bolt M8 x 25	
19	0760814	12	Bolt M8 x 30	
20	0760815	1	Bolt M8 x 35	
21	0761014	4	Bolt M10 x 30	
22	0761015	6	Bolt M10 x 35	
23	0761016	4	Bolt M10 x 40	
24	0961951	2	Bushing	
25	1580011	1	Container, Coolant Overflow	
26	1703162	2	Decal - Caution Fan	
27	2220261	1	Fitting, Nipple NPTF/NPTF	
28	2220315	1	Fitting, Barbed	
29	2300041	2.2 gal/ 8.5L	Coolant, Anti-Freeze	
30	2720644	1	Hose	
31	3290607	5	Nut M6 x 1	
32	3290801	10	Nut, M8	
33	3290805	17	Nut M8 x 1.25	
34	3291001	4	Nut M10 x 1.5	
35	3291005	6	Nut M10 x 1.5	
36	3291201	6	Nut M12	
37	4031711	4	Bolt M6 x 35	
38	4240099	AR	Tie-Strap (Not Shown)	
39	4811700	16	Washer, M6	
40	4811702	4	Washer, M6	
41	4811900	49	Washer, M8	
42	4811902	8	Washer, M8	
43	4812000	24	Washer, M10	
44	4812200	16	Washer, M14	
44	5241400	16	Washer, M14	
45	5240800	14	Washer, M8	

ITEM	PART NUMBER	QTY	DESCRIPTION	REV
46	5241200	8	Washer, M12	
47	5250605	3	Bolt M6 x 10	
48	5271809	4	Bolt M8 x 25	
49	8305401	2	Nut, Jam .250-20	
50	8307109	2	Washer, .250	
51	8310548	2	Screw 1/4 x 1/2	
52	8405007	2	Clamp **(SN 0300201991 through 0300228359)**	
52	1001173535	2	Clamp **(SN 0300228360 through 0300272317, Except SN 0300272185 through 0300272190)**	
53	8405009	4	Clamp	
54	8405102	2	Clamp	
55	8405104	2	Clamp	
56	8405202	1	Clamp	
57	8405203	3	Clamp	
58	8406109	1	Clip	
59	8406110	2	Clip	
60	8406201	3	Clip	
61	8410001	1	Clamp	
62	8410009	6	Clamp	
63	1001190775	10 qt/ 9.4L	Oil, Engine	
64	1001138173	1	Support, Service Indicator	
65	1001138175	1	Bracket, Service Indicator	
66	1001141995	1	Fitting, Barbed	
67	1001147812	1	Clamp, Air Cleaner	
68	1001149160	3	Nut M8	
69	1001149639	1	Indicator, Air Intake	
70	1001166718	4	Isolator, Engine Mount	
71	1001168018	4	Washer, Snubbing	
72	1001168166	2	Seal	
73	1001169054	4	Isolator, Radiator	
74	1001169138	4	Washer, Snubbing	
75	1001169967	2	Bracket	
76	1001170035	1	Bracket	
77	1001176330	1	Bracket	
78	1001180620	AR	Adhesive	
79	1001209844	1	Pump Coupling Kit (See PUMP COUPLING KIT for Breakdown)	
80	1001210763	1	Engine, Kubota	
81	1001211794	3	Mount	
82	1001211797	1	Mount	
83	1001212989	1	Pipe, Exhaust (Inlet)	
84	1001212993	1	Pipe, Exhaust (Outlet)	
85	1001213305	1	Plate, Mounting	
86	1001213357	1	Fan	
87	1001213423	1	Radiator	
88	1001213425	1	Plate, Engine Mount (Left Rear)	
89	1001213426	1	Plate, Engine Mount (Right Rear)	
90	1001213482	1	Bracket	
91	1001213824	1	Insulation	
92	1001214138	1	Bracket	
93	1001214205	1	Support	
94	1001214233	1	Plate (Front Left)	

ITEM	PART NUMBER	QTY	DESCRIPTION	REV
95	1001214234	1	Plate (Front Right)	
96	1001214269	1	Heater, Block	
97	1001214276	1	Shim	
98	1001214277	1	Shim	
99	1001214278	2	Shim	
100	1001214307	1	Hose	
101	1001214508	1	Support	
102	1001214553	1	Support	
103	1001214555	1	Bracket	
104	1001214556	1	Bracket	
105	1001214558	1	Bracket	
106	1001214598	1	Tube	
107	1001214599	1	Bracket	
108	1001214664	1	Cover	
109	1001214694	1	Hose	
110	1001214729	1	Spacer	
111	1001214841	1	Bracket	
112	1001215125	1	Fitting, 90	
113	1001215869	1	Hose	
114	1001216825	2	Seal	
115	1001137336	2	Strap	
116	1001138248	2 ft/0.6m	Tube	
117	1001147813	1	Air Cleaner Assembly Including Filter Element	
117	70004020	1	Element, Filter (Not Shown)	
118	2220064	1	Fitting, 90 FSNPSM/NPTF	
119	2720058	1.8 ft/ 0.5m	Hose	
120	2720271	4 ft/1.2m	Hose	
121	2720615	1.2 ft/ 0.4m	Hose	
122	82033995	5.5 ft/ 1.7m	Hose	
123	0700816	4	Bolt M8 x 40	
124	0701016	4	Bolt M10 x 40	
125	2180504	1	Fitting, Barbed	
126	0760815	1	Bolt M8 x 35	
126	0760816	1	Bolt M8 x 40	

FIGURE 3-48. ENGINE ASSEMBLY - KUBOTA ENGINE (WITH ARCTIC PACKAGE) (SN 0300241744 through 0300272317)

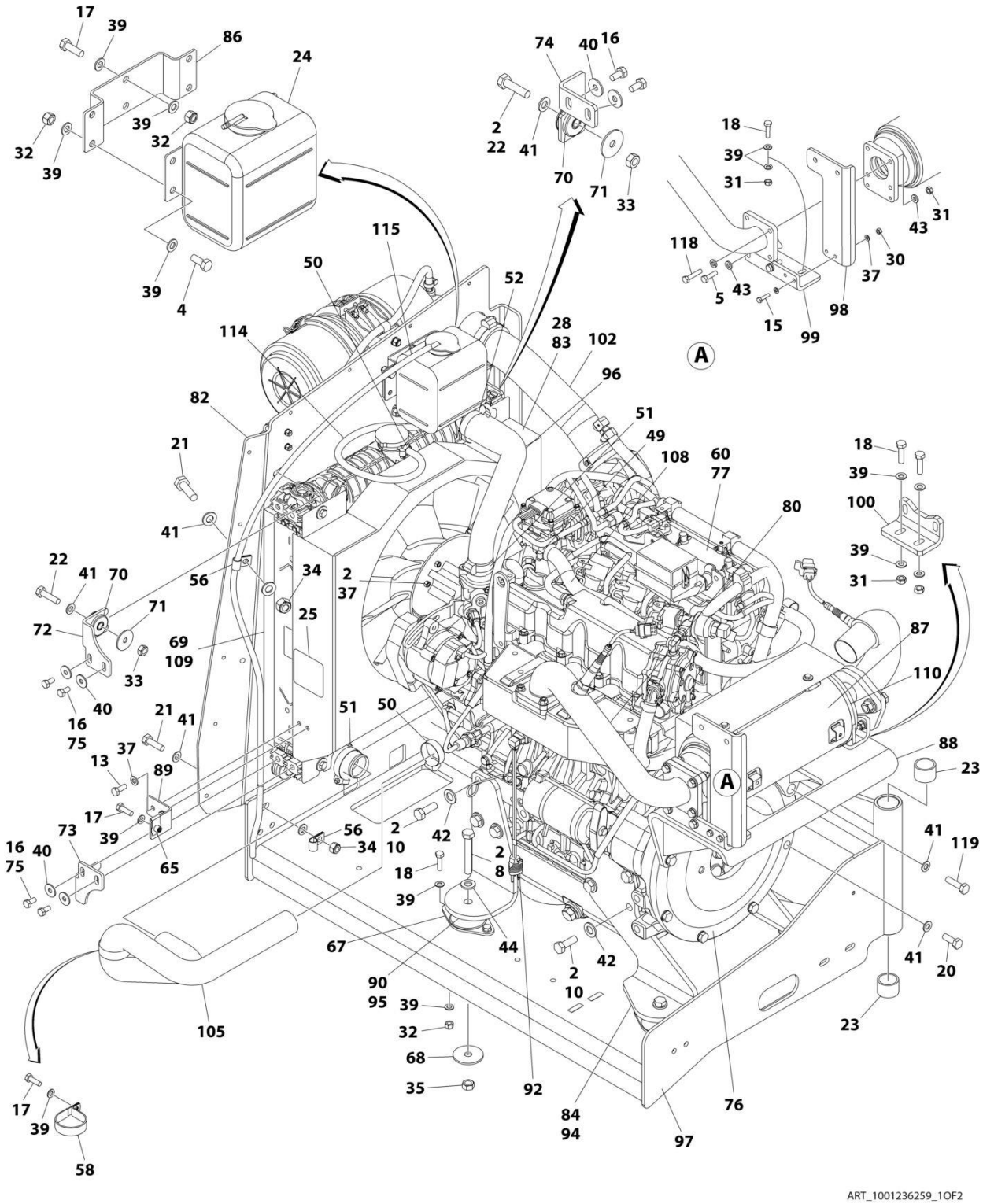

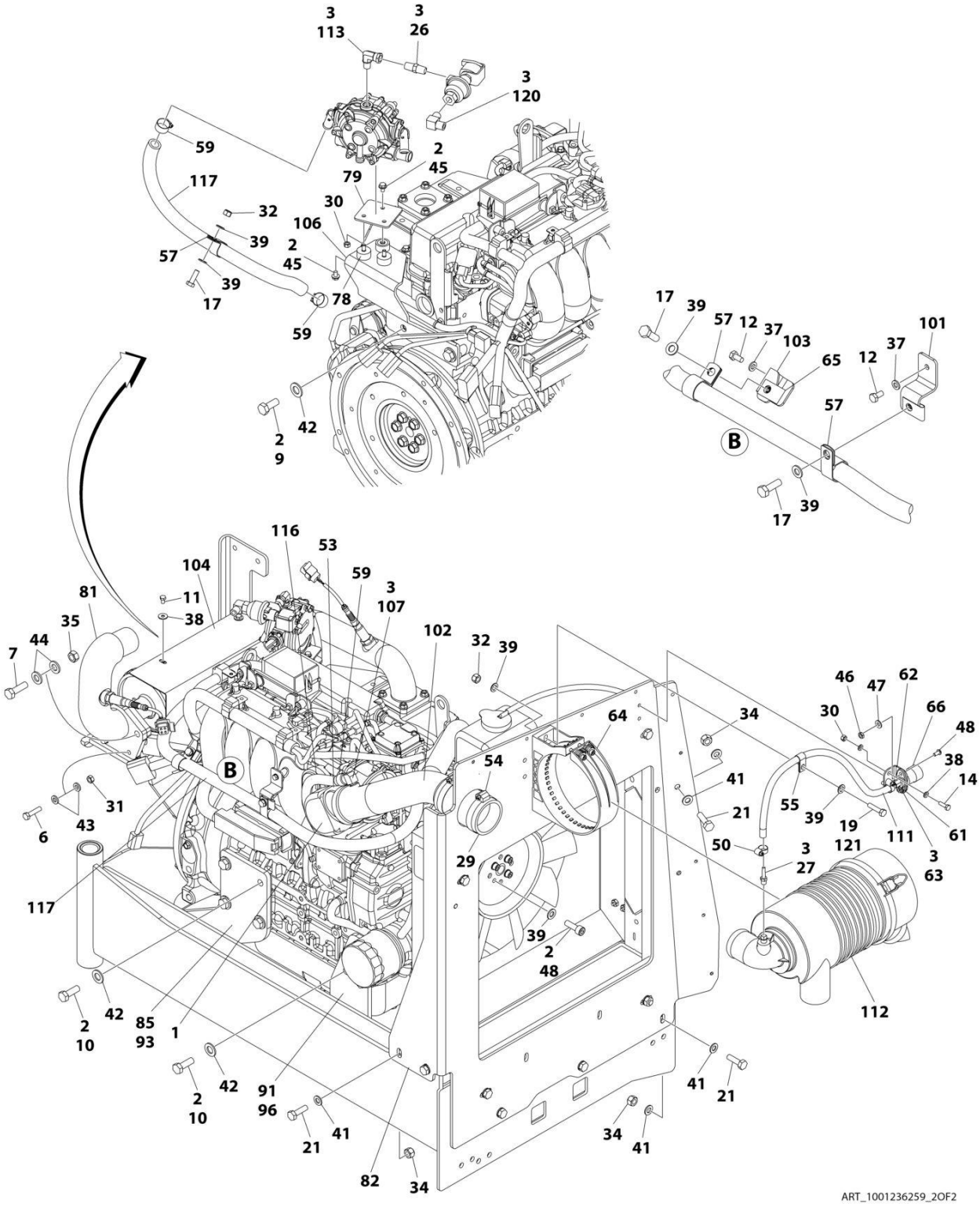
3
113
3
26
3
120
59
117
2
45
79
32
30
106
39
57
2
45
39
17
78
59
42
2
9
17
39
57
12
37
103
65
12
37
101
57
B
39
17
116
53
104
59
3
107
81
11
38
35
102
32
39
7
44
46
47
62
30
66
48
64
34
38
14
B
54
41
31
21
55
39
19
111
61
6
43
50
3
121
3
63
29
27
117
39
2
48
112
2
10
42
85
93
1
2
10
42
91
96
41
21
21
41
34
41
82
34
ART_1001236259_2OF2

FIGURE 3-48. ENGINE ASSEMBLY - KUBOTA ENGINE (WITH ARCTIC PACKAGE) (SN 0300241744 through 0300272317)

ITEM	PART NUMBER	QTY	DESCRIPTION	REV
	1001236259	Ref	ENGINE ASSEMBLY - KUBOTA ENGINE (WITH ARCTIC PACKAGE)	A
1	0080201	1	Adapter, 90	
2	0100011	AR	Compound, Locking	
3	0100020	AR	Sealant, Pipe	
4	0700810	4	Bolt M8 x 20	
5	0700814	2	Bolt M8 x 30	
6	0700815	2	Bolt M8 x 35	
7	0701216	2	Bolt M12 x 40	
8	0701224	4	Bolt M12 x 80	
9	1001217494	2	Bolt M12 x 20	
10	1001217343	14	Bolt M12 x 35	
11	0760605	4	Bolt M6 x 10	
12	0760606	2	Bolt M6 x 12	
13	0760608	2	Bolt M6 x 16	
14	0760610	2	Bolt M6 x 20	
15	0760612	2	Bolt M6 x 25	
16	0760808	8	Bolt M8 x 16	
17	0760812	6	Bolt M8 x 25	
18	0760814	12	Bolt M8 x 30	
19	0760815	1	Bolt M8 x 35	
20	0761014	4	Bolt M10 x 30	
21	0761015	6	Bolt M10 x 35	
22	0761016	4	Bolt M10 x 40	
23	0961951	2	Bushing	
24	1580011	1	Container, Coolant Overflow	
25	1703162	2	Decal - Caution Fan	
26	2220261	1	Fitting, Nipple NPTF/NPTF	
27	2220315	1	Fitting, Barbed	
28	2300041	2.2 gal/ 8.5L	Coolant, Anti-Freeze	
29	2720644	1	Hose	
30	3290607	5	Nut M6 x 1	
31	3290801	10	Nut M8	
32	3290805	17	Nut M8 x 1.25	
33	3291001	4	Nut M10 x 1.5	
34	3291005	6	Nut M10 x 1.5	
35	3291201	6	Nut M12	
36	4240099	AR	Tie-Strap (Not Shown)	
37	4811700	16	Washer M6	
38	4811702	4	Washer M6	
39	4811900	45	Washer M8	
40	4811902	8	Washer M8	
41	4812000	24	Washer M10	
42	5241400	16	Washer M14	
43	5240800	14	Washer M8	
44	5241200	8	Washer M12	
45	5250605	3	Bolt M6 x 10	
46	8305401	2	Nut, Jam .250-20	

ITEM	PART NUMBER	QTY	DESCRIPTION	REV
47	8307109	2	Washer, .250	
48	8310548	2	Screw 1/4 x 1/2	
49	1001173535	2	Clamp	
50	8405009	4	Clamp	
51	8405102	2	Clamp	
52	8405104	2	Clamp	
53	8405202	1	Clamp	
54	8405203	3	Clamp	
55	8406109	1	Clip	
56	8406110	2	Clip	
57	8406201	3	Clip	
58	8410001	1	Clamp	
59	8410009	6	Clamp	
60	1001190775	10 qt/ 9.4L	Oil, Engine	
61	1001138173	1	Support, Service Indicator	
62	1001138175	1	Bracket, Service Indicator	
63	1001141995	1	Fitting, Barbed	
64	1001147812	1	Clamp, Air Cleaner	
65	1001149160	3	Nut M8	
66	1001149639	1	Indicator, Air Intake	
67	1001166718	4	Isolator, Engine Mount	
68	1001168018	4	Washer, Snubbing	
69	1001168166	2	Seal	
70	1001169054	4	Isolator, Radiator	
71	1001169138	4	Washer, Snubbing	
72	1001169967	2	Bracket	
73	1001170035	1	Bracket	
74	1001176330	1	Bracket	
75	1001180620	AR	Adhesive	
76	1001209844	1	Pump Coupling Kit (See PUMP COUPLING KIT for Breakdown)	
77	1001236393	1	Engine, Kubota (See ENGINE COMPONENTS - KUBOTA ENGINE for Breakdown)	
78	1001211794	3	Mount	
79	1001211797	1	Mount	
80	1001212989	1	Pipe, Exhaust (Inlet)	
81	1001212993	1	Pipe, Exhaust (Outlet)	
82	1001213305	1	Plate, Mounting	
83	1001236257	1	Radiator	
84	1001213425	1	Plate, Engine Mount (Left Rear)	
85	1001213426	1	Plate, Engine Mount (Right Rear)	
86	1001213482	1	Bracket	
87	1001213824	1	Insulation	
88	1001214138	1	Bracket	
89	1001214205	1	Support	
90	1001214233	1	Plate (Front Left)	
91	1001214234	1	Plate (Front Right)	
92	1001214269	1	Heater, Block	
93	1001214276	1	Shim	
94	1001214277	1	Shim	
95	1001214278	2	Shim	
96	1001214307	1	Hose	

ITEM	PART NUMBER	QTY	DESCRIPTION	REV
97	1001214508	1	Support	
98	1001214553	1	Support	
99	1001214555	1	Bracket	
100	1001214556	1	Bracket	
101	1001214558	1	Bracket	
102	1001214598	1	Tube	
103	1001214599	1	Bracket	
104	1001214664	1	Cover	
105	1001214694	1	Hose	
106	1001214841	1	Bracket	
107	1001215125	1	Fitting, 90	
108	1001215869	1	Hose	
109	1001216825	2	Seal	
110	1001137336	2	Strap	
111	1001138248	2 ft/ 0.6m	Tube	
112	1001147813	1	Air Cleaner Assembly Including Filter Element	
112	70004020	1	Element, Filter (Not Shown)	
113	2220064	1	Fitting, 90 FSNPSM/NPTF	
114	2720058	1.8 ft/ 0.5m	Hose	
115	2720271	4 ft/ 1.2m	Hose	
116	2720615	1.2 ft/ 0.4m	Hose	
117	82033995	5.5 ft/ 1.7m	Hose	
118	0700816	4	Bolt M8 x 40	
119	0701016	4	Bolt M10 x 40	
120	2180504	1	Fitting, Barbed	
121	0760816	1	Bolt M8 x 40	

FIGURE 3-49. ENGINE COMPONENTS - KUBOTA (SN 0300201991 through 0300241743)

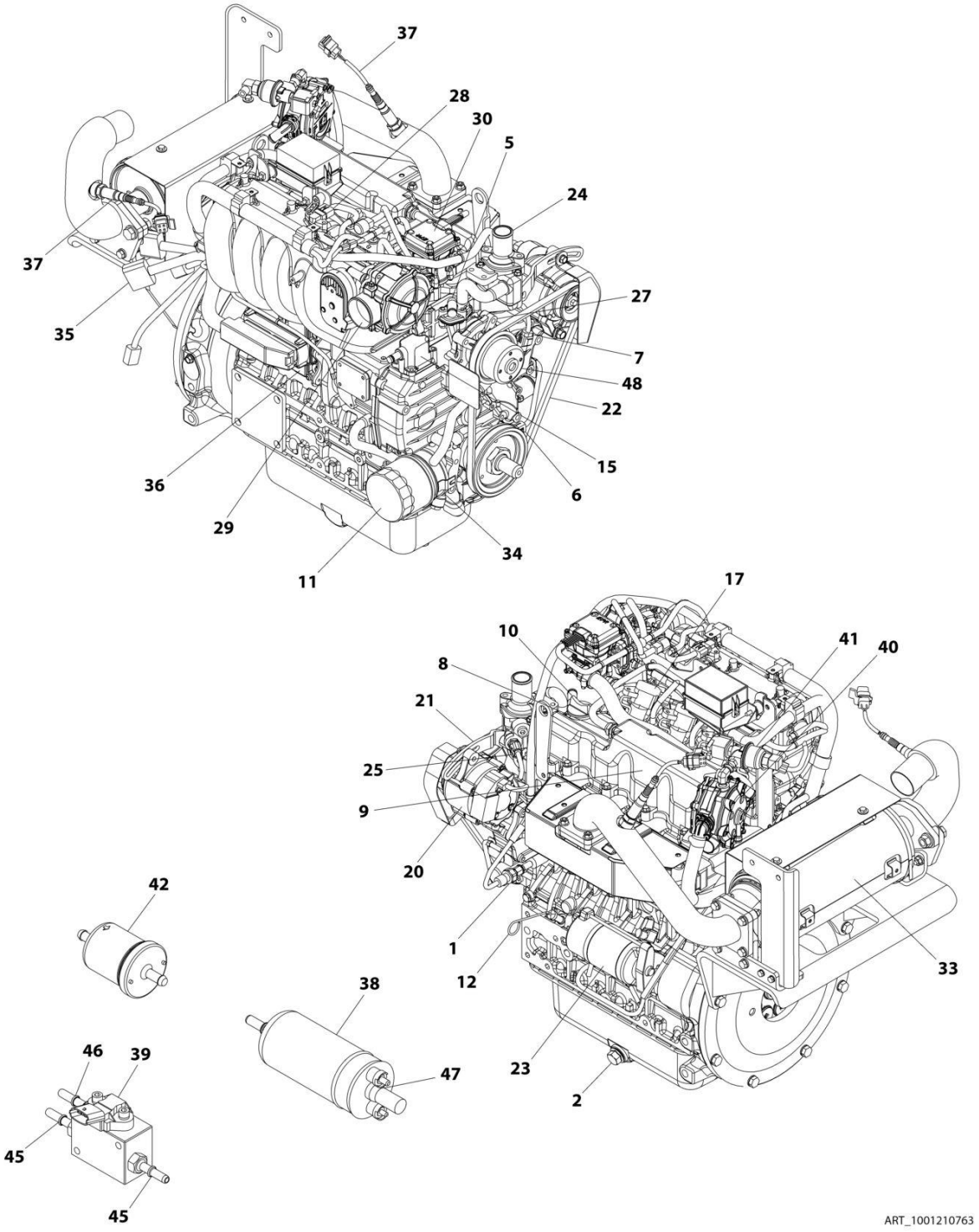

FIGURE 3-49. ENGINE COMPONENTS - KUBOTA (SN 0300201991 through 0300241743)

ITEM	PART NUMBER	QTY	DESCRIPTION	REV
	1001210763	Ref	ENGINE COMPONENTS - KUBOTA	D
1	70005745	1	Switch, Oil	
1	70006013	1	Adapter	
2	7023154	1	Plug, Drain	
2	7017904	1	Gasket, Oil Pan Drain	
3	70006014	1	Gasket, Cylinder Head (Not Shown)	
4	70006015	1	Sensor (Knock) (Not Shown – Located on Left Side of Engine)	
5	70006016	1	Flange Assembly (Water Return)	
5	70002316	1	Pipe	
5	70006017	1	Gasket	
6	70005737	1	Sensor Stick Assembly	
7	70006018	1	Sensor	
8	70006019	1	Valve (PCV)	
8	70006020	1	Seal	
9	7017932	3	Element, Breather	
9	70006021	1	Gasket	
10	70002318	1	Oil Filler Cap	
10	70006022	1	O-Ring	
11	70006023	1	Filter, Oil	
12	70006024	1	Dipstick	
13	70006025	1	Pump Assembly, Oil (Not Shown – Located Under Front Cover)	
13	70006026	1	Gasket	
13	70006027	1	Key	
14	70006028	1	Flywheel (Not Shown – Located Behind Coupling Plate)	
14	70006029	1	Ring Gear (Part of Flywheel)	
15	70006030	1	Flange Assembly (Breather)	
15	70002316	1	Pipe	
15	70006031	1	Gasket	
16	70006035	1	Pipe Assembly (Not Shown)	
16	70005727	1	Gasket	
17	70006034	4	Coil	
17	70006033	4	Spark Plug	
18	70006032	1	Gasket (Not Shown)	
19	70005751	4	Injector (Not Shown)	
20	70006036	1	Alternator (Includes Voltage Regulator and Gaskets, Fan and Fan Mounting Hardware)	
21	70006037	1	Bracket	
22	70006038	1	Belt	
23	70006039	1	Starter	
24	70006041	1	Thermostat	
24	70002326	1	Gasket	
25	70005726	1	Sensor	
25	70006042	1	O-Ring	
26	70006040	1	Gasket (Not Shown – Located Between Engine Head and Water Flange)	
27	70006043	1	Water Pump Assembly	
27	70004829	1	Pipe	
27	70006044	1	Gasket	
28	70005746	1	Sensor (TMAP)	
28	70005747	1	O-Ring	

SECTION 3 - ENGINE

ITEM	PART NUMBER	QTY	DESCRIPTION	REV
29	70006049	1	Mixer Assembly	
29	70006050	1	Seal, Rubber	
29	70006045	1	Throttle Body	
29	70006046	1	Gasket	
29	70006047	1	Adapter	
29	70006048	1	O-Ring	
30	70006051	1	Regulator Assembly	
30	70006052	1	Seal, Rubber	
30	70006053	1	Seal, Rubber	
30	70006054	1	Seal, Rubber	
31	70006055	1	Gasket (Not Shown – Located Between Intake Manifold and Engine Head)	
32	70006056	1	Gasket (Not Shown – Located Between Exhaust Manifold and Engine Head)	
33	70006057	1	Muffler	
33	70006065	1	Gasket	
33	70006066	1	Gasket	
33	70006072	1	Gasket	
34	70006058	1	Oil Cooler Assembly	
34	70006059	1	Seal	
34	7017959	2	Clamp	
35	70006060	1	Engine Harness	
36	70006061	1	Module, Engine Control	
37	70006062	2	Sensor (O2)	
38	70006063	1	Pump, Fuel	
39	70006064	1	Manifold (FPM)	
40	70006067	1	Regulator Assembly	
40	70006068	1	Connector	
40	70006069	3	Clip	
40	70006070	2	Connector	
41	70006071	1	Valve, Lockoff	
41	70006078	1	Valve, Lockoff Kit	
42	7017992	1	Filter, Fuel	
43	70006079	1	Gasket Kit (Upper) (Not Shown)	
44	70006080	1	Gasket Kit (Lower) (Not Shown)	
45	70006074	2	Joint (Includes O-Ring)	
46	70006075	1	Joint (Includes O-Ring)	
47	70006076	1	Joint (Includes O-Ring)	
47	70006077	1	Gasket	
48	70006379	1	Pulley	

FIGURE 3-50. ENGINE COMPONENTS - KUBOTA (SN 0300241744 through 0300272317)

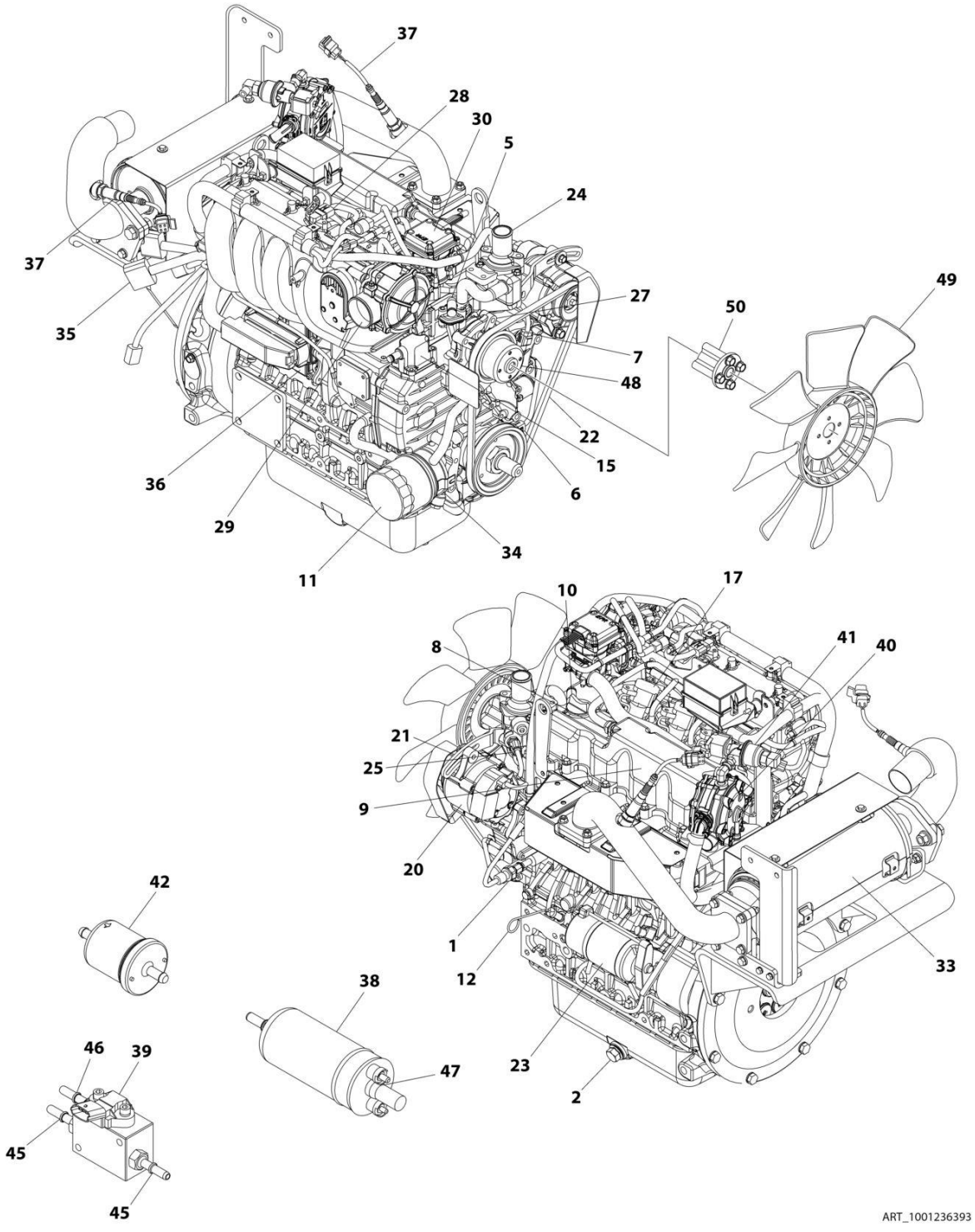

FIGURE 3-50. ENGINE COMPONENTS - KUBOTA (SN 0300241744 through 0300272317)

ITEM	PART NUMBER	QTY	DESCRIPTION	REV
	1001236393	Ref	ENGINE COMPONENTS - KUBOTA	A
1	70005745	1	Switch, Oil	
1	70006013	1	Adapter	
2	7023154	1	Plug, Drain	
2	7017904	1	Gasket, Oil Pan Drain	
3	70006014	1	Gasket, Cylinder Head (Not Shown)	
4	70006015	1	Sensor (Knock) (Not Shown - Located on Left Side of Engine)	
5	70006016	1	Flange Assembly (Water Return)	
5	70002316	1	Pipe	
5	70006017	1	Gasket	
6	70005737	1	Sensor Stick Assembly	
7	70006018	1	Sensor	
8	70006019	1	Valve (PCV)	
8	70006020	1	Seal	
9	7017932	3	Element, Breather	
9	70006021	1	Gasket	
10	70002318	1	Oil Filler Cap	
10	70006022	1	O-Ring	
11	70006023	1	Filter, Oil	
12	70006024	1	Dipstick	
13	70006025	1	Pump Assembly, Oil (Not Shown - Located Under Front Cover)	
13	70006026	1	Gasket	
13	70006027	1	Key	
14	70006028	1	Flywheel (Not Shown - Located Behind Coupling Plate)	
14	70006029	1	Ring Gear (Part of Flywheel)	
15	70006030	1	Flange Assembly (Breather)	
15	70002316	1	Pipe	
15	70006031	1	Gasket	
16	70006035	1	Pipe Assembly (Not Shown)	
16	70005727	1	Gasket	
17	70006034	4	Coil	
17	70006033	4	Spark Plug	
18	70006032	1	Gasket (Not Shown)	
19	70005751	4	Injector (Not Shown)	
20	70006036	1	Alternator (Includes Voltage Regulator and Gaskets, Fan and Fan Mounting Hardware)	
21	70006037	1	Bracket	
22	70006038	1	Belt	
23	70006039	1	Starter	
24	70006041	1	Thermostat	
24	70002326	1	Gasket	
25	70005726	1	Sensor	
25	70006042	1	O-Ring	
26	70006040	1	Gasket (Not Shown - Located Between Engine Head and Water Flange)	
27	70006043	1	Water Pump Assembly	
27	70004829	1	Pipe	
27	70006044	1	Gasket	
28	70005746	1	Sensor (TMAP)	
28	70005747	1	O-Ring	

ITEM	PART NUMBER	QTY	DESCRIPTION	REV
29	70006049	1	Mixer Assembly	
29	70006050	1	Seal, Rubber	
29	70006045	1	Throttle Body	
29	70006046	1	Gasket	
29	70006047	1	Adapter	
29	70006048	1	O-Ring	
30	70006051	1	Regulator Assembly	
30	70006052	1	Seal, Rubber	
30	70006053	1	Seal, Rubber	
30	70006054	1	Seal, Rubber	
31	70006055	1	Gasket (Not Shown - Located Between Intake Manifold and Engine Head)	
32	70006056	1	Gasket (Not Shown - Located Between Exhaust Manifold and Engine Head)	
33	70006057	1	Muffler	
33	70006065	1	Gasket	
33	70006066	1	Gasket	
33	70006072	1	Gasket	
34	70006058	1	Oil Cooler Assembly	
34	70006059	1	Seal	
34	7017959	2	Clamp	
35	70006060	1	Engine Harness	
36	70006061	1	Module, Engine Control	
37	70006062	2	Sensor (O2)	
38	70006063	1	Pump, Fuel	
39	70006064	1	Manifold (FPM)	
40	70006067	1	Regulator Assembly	
40	70006068	1	Connector	
40	70006069	3	Clip	
40	70006070	2	Connector	
41	70006071	1	Valve, Lockoff	
41	70006078	1	Valve, Lockoff Kit	
42	7017992	1	Filter, Fuel	
43	70006079	1	Gasket Kit (Upper) (Not Shown)	
44	70006080	1	Gasket Kit (Lower) (Not Shown)	
45	70006074	2	Joint (Includes O-Ring)	
46	70006075	1	Joint (Includes O-Ring)	
47	70006076	1	Joint (Includes O-Ring)	
47	70006077	1	Gasket	
48	70006379	1	Pulley	
49	70006639	1	Fan	
50	70006640	1	Collar, Fan	

FIGURE 3-51. PUMP COUPLING KIT - KUBOTA ENGINE

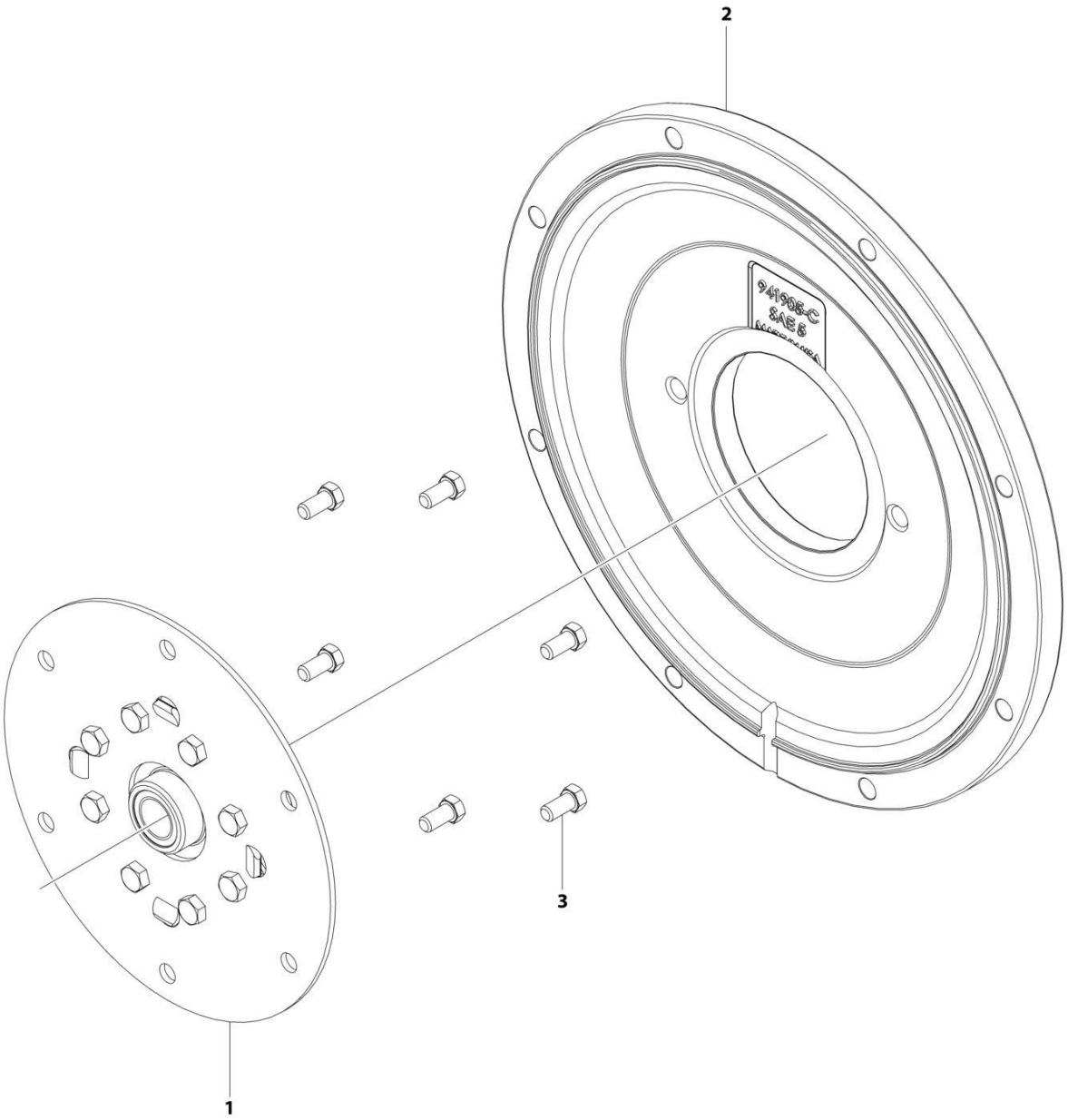

FIGURE 3-51. PUMP COUPLING KIT - KUBOTA ENGINE

ITEM	PART NUMBER	QTY	DESCRIPTION	REV
	1001209844	Ref	PUMP COUPLING KIT – KUBOTA ENGINE	B
1	70006010	1	Coupling Assembly, Hayes	
2	70006011	1	Plate, Pump Adapter	
3	70006012	1	Bolt Kit	

FIGURE 3-52. GEAR PUMP ASSEMBLY

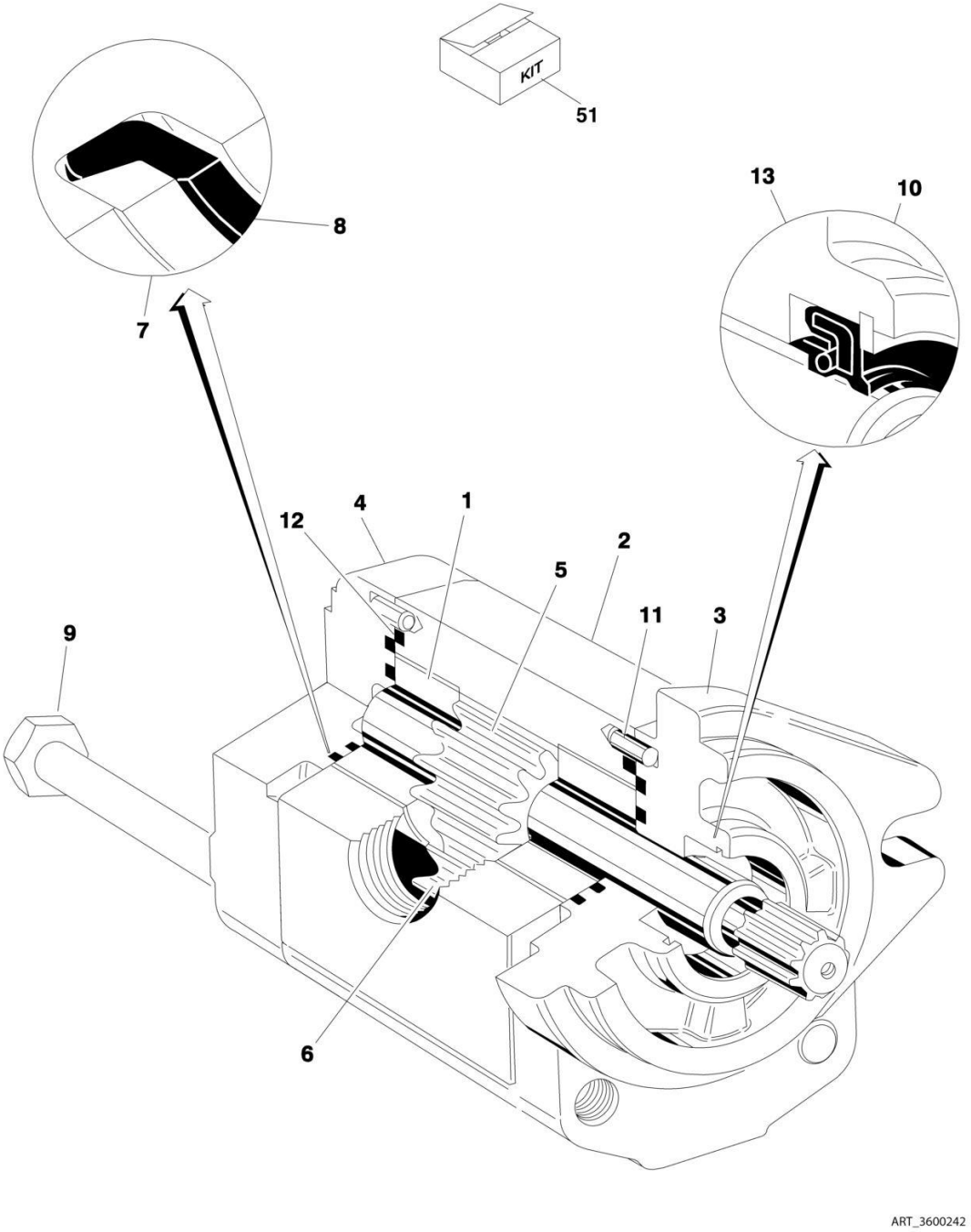

FIGURE 3-52. GEAR PUMP ASSEMBLY

ITEM	PART NUMBER	QTY	DESCRIPTION	REV
	3600242	Ref	GEAR PUMP ASSEMBLY	
1	7010105	2	Bearing/Bushing	
2	See Note	NSS	Housing (Note: Not Available - Purchase Complete Assembly)	
3	See Note	NSS	Flange (Note: Not Available - Purchase Complete Assembly)	
4	7010103	1	Cover	
5	7012987	1	Gear, Drive	
6	7012988	1	Gear, Idler	
7	7007489	2	Ring, Anti-Extrusion	
8	7007489	2	Seal	
9	See Note	4	Bolt (Note: Not Available for Purchase)	
10	7010104	1	Ring, Retaining	
11	See Note	4	Pin, Dowel (Note: Not Available for Purchase)	
12	7007489	2	Seal, O-Ring	
13	7007489	1	Seal, Shaft	
51	7007489	1	Seal Kit (Includes Items 7, 8, 12 & 13)	

FIGURE 3-53. PISTON PUMP ASSEMBLY

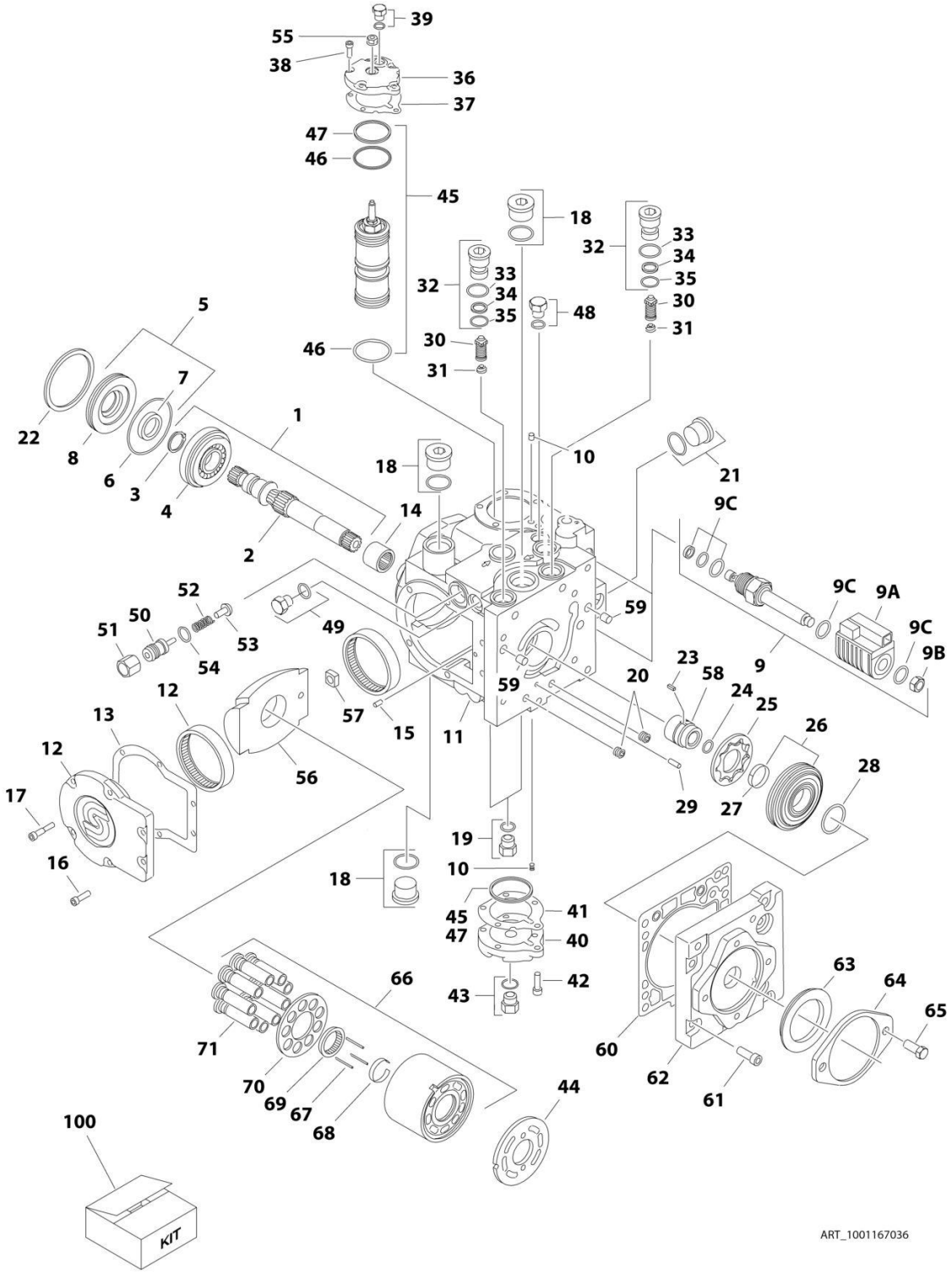

FIGURE 3-53. PISTON PUMP ASSEMBLY

ITEM	PART NUMBER	QTY	DESCRIPTION	REV
	1001167036	Ref	PISTON PUMP ASSEMBLY	C
1	7021240	1	Shaft Assembly (Includes Items 2-4)	
2	7021237	1	Shaft	
3	7021238	1	Ring, Retaining	
4	7021239	1	Bearing, Roller	
5	70004896	1	Shaft Seal Kit (Includes Items 6-8)	
6	7021241	1	O-Ring	
7	7021242	1	Seal, Lip	
8	7021243	1	Carrier, Seal Shaft	
9	7024855	2	Solenoid Assembly	
9A	70004897	2	Coil (1 Per Assembly)	
9B	7024857	2	Nut (1 Per Assembly)	
9C	7024858	2	Seal Kit - 7024855 Cartridge (1 Per Assembly)	
10	70004889	2	Orifice	
11	See Note	1	Housing Assembly (Note: Not Available for Purchase)	
12	7021248	1	Side Cover Assembly (Includes Item 13)	
13	70004891	1	Gasket	
14	7021249	1	Bearing, Needle	
15	See Note	1	Pin (Note: Not Available for Purchase)	
16	70004890	2	Screw	
17	70004892	4	Screw	
18	7007419	2	Plug Assembly (Includes O-Ring)	
19	7007420	2	Plug Assembly (Includes O-Ring)	
20	See Note	2	Plug (Note: Not Available for Purchase)	
21	7007419	1	Plug Assembly (Includes O-Ring)	
22	7021257	1	Ring, Retaining	
23	70004893	1	Key	
24	7022341	1	Ring, Retaining	
25	7021258	1	Gerotor	
26	70004894	1	Gerotor Cover Assembly (Includes Item 27)	
27	7021259	1	Bearing, Journal	
28	7021262	1	O-Ring	
29	See Note	1	Pin (Note: Not Available for Purchase)	
30	7021263	2	Bypass Valve Assembly	
31	7024800	2	Spring	
32	7021265	2	Bypass Valve Assembly (Includes Items 32-34)	
33	7007415	2	O-Ring	
34	7021293	2	Ring, Back-up	
35	7022300	2	O-Ring	
36	70004895	1	Cover, Servo	
37	7021253	1	Gasket	
38	70004892	5	Screw	
39	7007420	1	Plug Assembly (Includes O-Ring)	
40	7021268	1	Cover, Servo	
41	7021253	1	Gasket	
42	70004892	5	Screw	
43	7007420	1	Plug Assembly (Includes O-Ring)	
44	7021281	1	Plate, Valve	
45	70004898	1	Servo Piston Kit (Includes Items 46 & 47)	
46	7007495	2	O-Ring	

ITEM	PART NUMBER	QTY	DESCRIPTION	REV
47	7007493	2	O-Ring	
48	7007420	1	Plug Assembly (Includes O-Ring)	
49	70004900	1	Plug Assembly (Includes O-Ring)	
50	7022346	1	Adjuster	
51	7021290	1	Nut	
52	7022347	1	Spring	
53	70004901	1	Poppet	
54	7007415	1	O-Ring	
55	70004902	1	Nut, Seal	
56	70004903	1	Swash Plate	
57	70004904	1	Bearing Assembly	
58	70004905	1	Coupling	
59	7001481	2	Pin	
60	70002257	1	Gasket	
61	70004906	8	Screw	
62	70004907	1	Cover, Charge Pump	
63	70004908	1	Seal	
64	7021299	1	Plate, Cover	
65	7007289	2	Screw	
66	70004909	1	Cylinder Block Assembly (Includes Items 67-71)	
67	70004910	3	Pin, Slipper Hold Down	
68	7021276	1	Retainer, Hold Down Pin	
69	7021277	1	Guide, Slipper Retainer	
70	7021278	1	Retainer, Slipper	
71	70004911	1	Piston Assembly	
100	70004899	1	Seal Kit (Includes Items 5-8, 33-35, 37, 41,46, 47 & 54)	

FIGURE 3-54. SPARK ARRESTOR INSTALLATION - DEUTZ D2.9L4 ENGINE

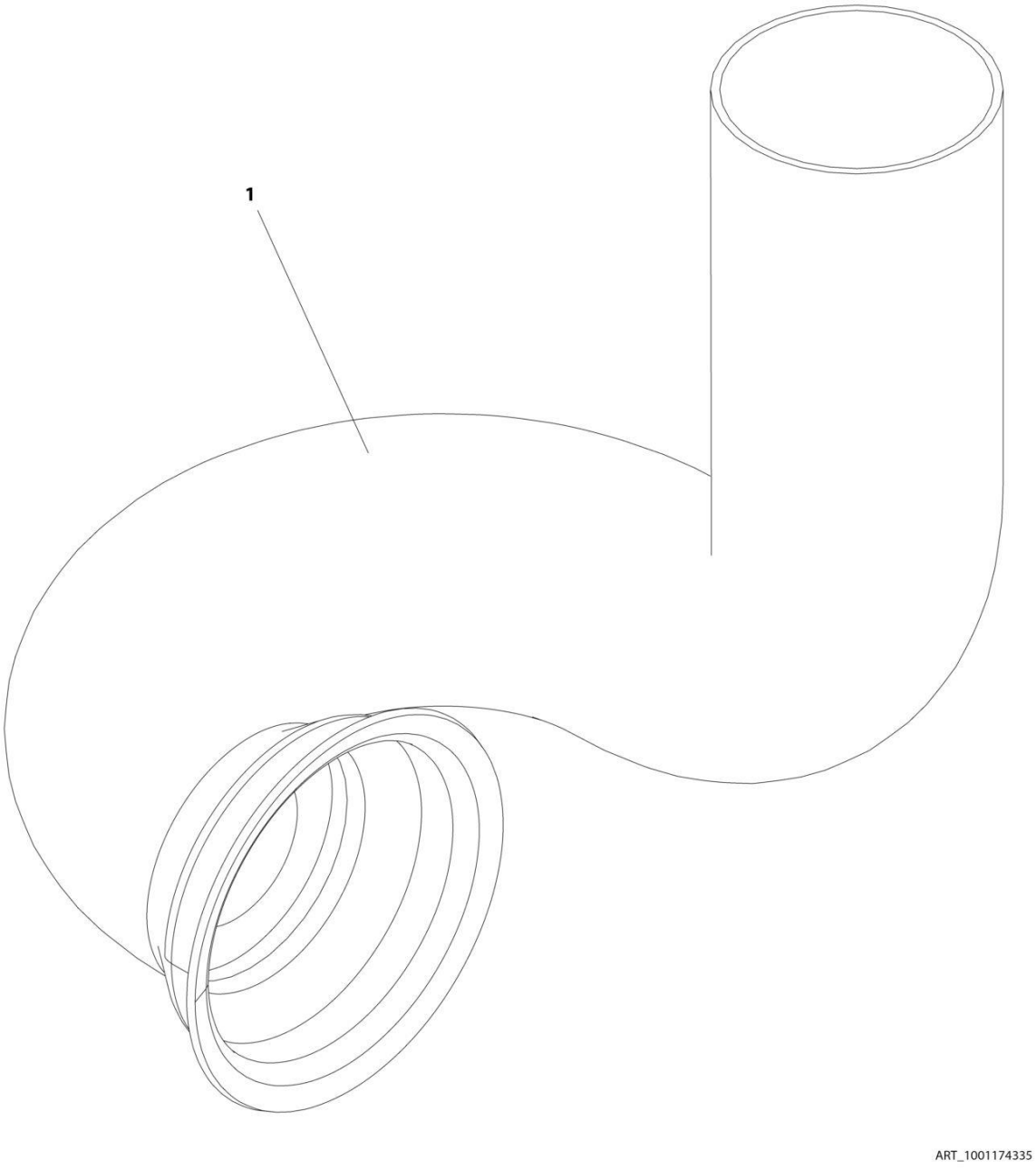

FIGURE 3-54. SPARK ARRESTOR INSTALLATION - DEUTZ D2.9L4 ENGINE

ITEM	PART NUMBER	QTY	DESCRIPTION	REV
	1001174335	Ref	SPARK ARRESTOR INSTALLATION - DEUTZ D2.9L4 ENGINE	A
1	1001172737	1	Muffler, Spark Arrestor	

FIGURE 3-55. CATALYTIC SPARK ARRESTOR INSTALLATION - DEUTZ D2011 ENGINE

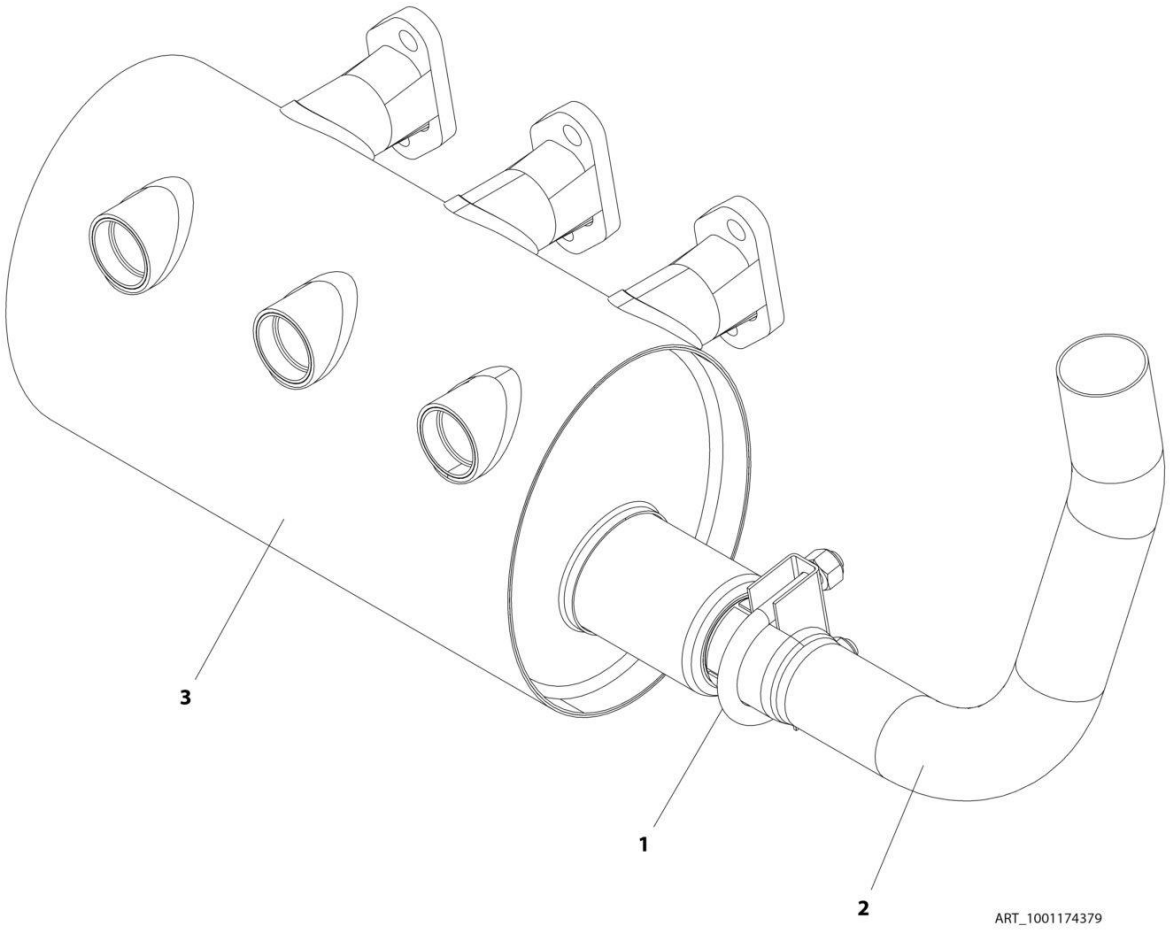

FIGURE 3-55. CATALYTIC SPARK ARRESTOR INSTALLATION - DEUTZ D2011 ENGINE

ITEM	PART NUMBER	QTY	DESCRIPTION	REV
	1001174379	Ref	CATALYTIC SPARK ARRESTOR INSTALLATION - DEUTZ D2011 ENGINE	A
1	1320176	1	Clamp	
2	1001169525	1	Pipe, Exhaust	
3	1001170225	1	Muffler, Catalytic Spark Arresting	

FIGURE 3-56. SPARK ARRESTOR INSTALLATION - DEUTZ D2011 ENGINE

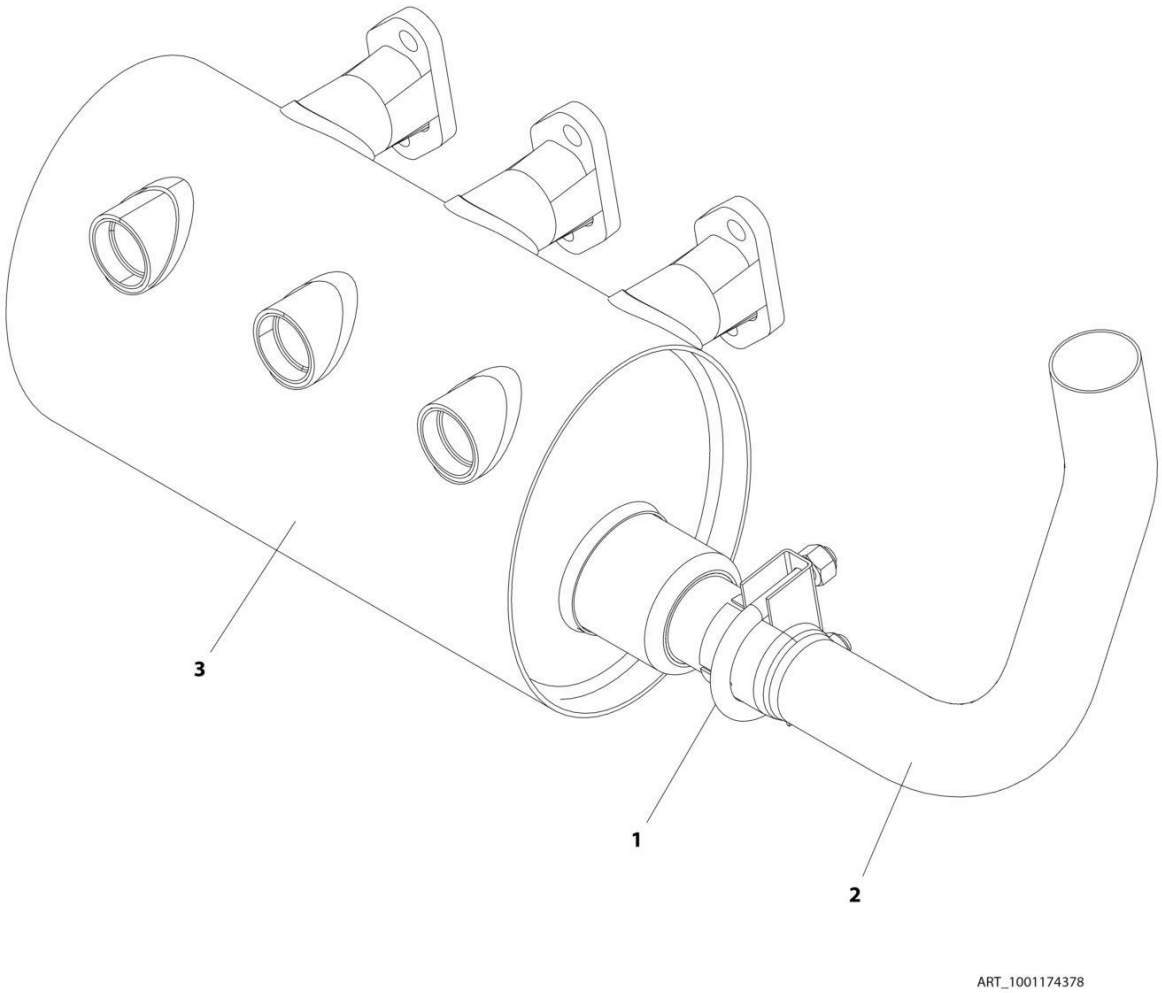

FIGURE 3-56. SPARK ARRESTOR INSTALLATION - DEUTZ D2011 ENGINE

ITEM	PART NUMBER	QTY	DESCRIPTION	REV
	1001174378	Ref	SPARK ARRESTOR INSTALLATION - DEUTZ D2011 ENGINE	A
1	1320176	1	Clamp	
2	1001169525	1	Pipe, Exhaust	
3	1001170224	1	Muffler, Spark Arresting	

FIGURE 3-57. SPARK ARRESTOR INSTALLATION - KUBOTA ENGINE

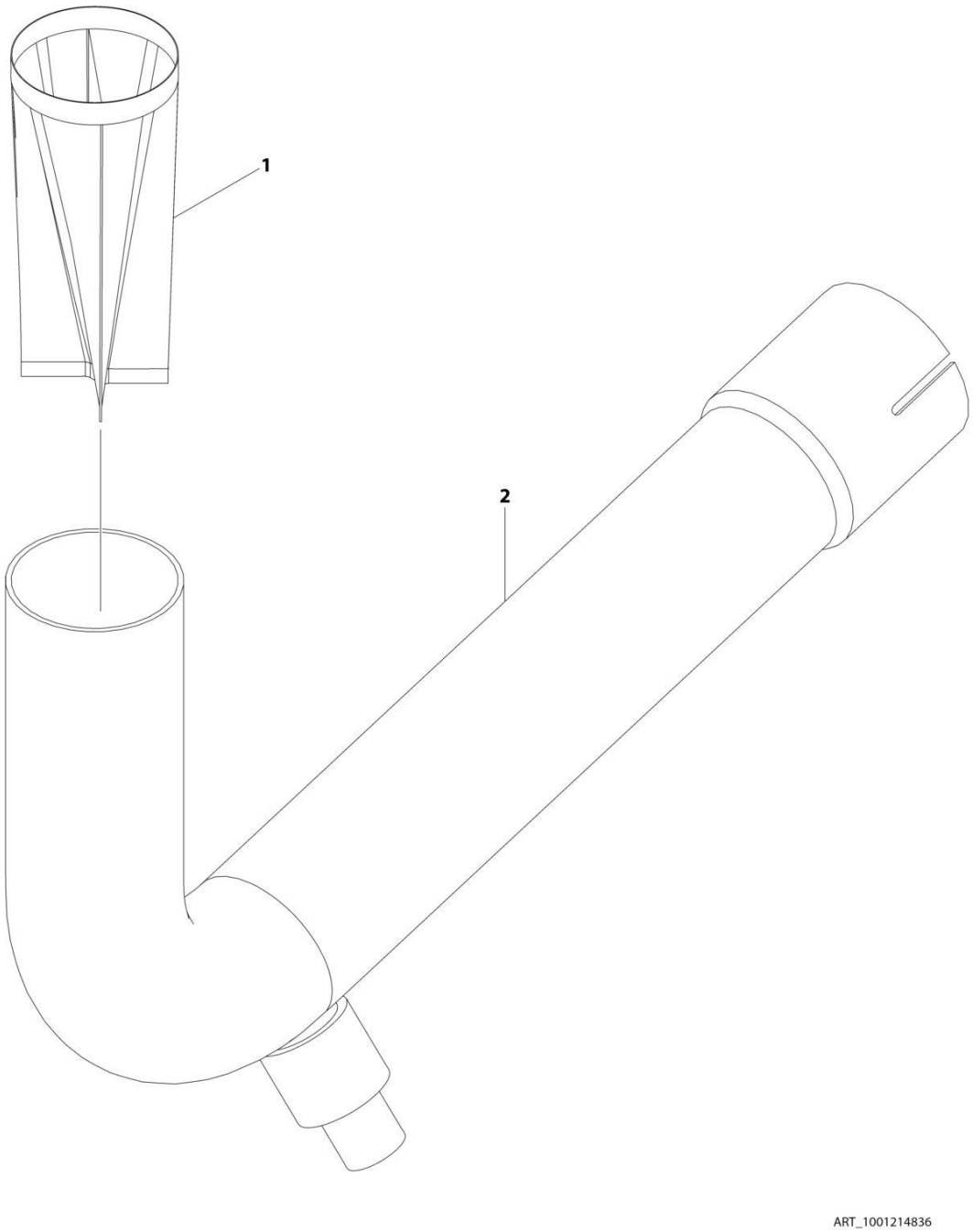

FIGURE 3-57. SPARK ARRESTOR INSTALLATION - KUBOTA ENGINE

ITEM	PART NUMBER	QTY	DESCRIPTION	REV
	1001214836	Ref	SPARK ARRESTOR INSTALLATION - KUBOTA ENGINE	D
1	1001214355	1	Muffler, Spark Arrestor	
2	1001216072	1	Pipe	

FIGURE 3-58. ENGINE BAFFLE INSTALLATION - WITH DEUTZ/GM ENGINES

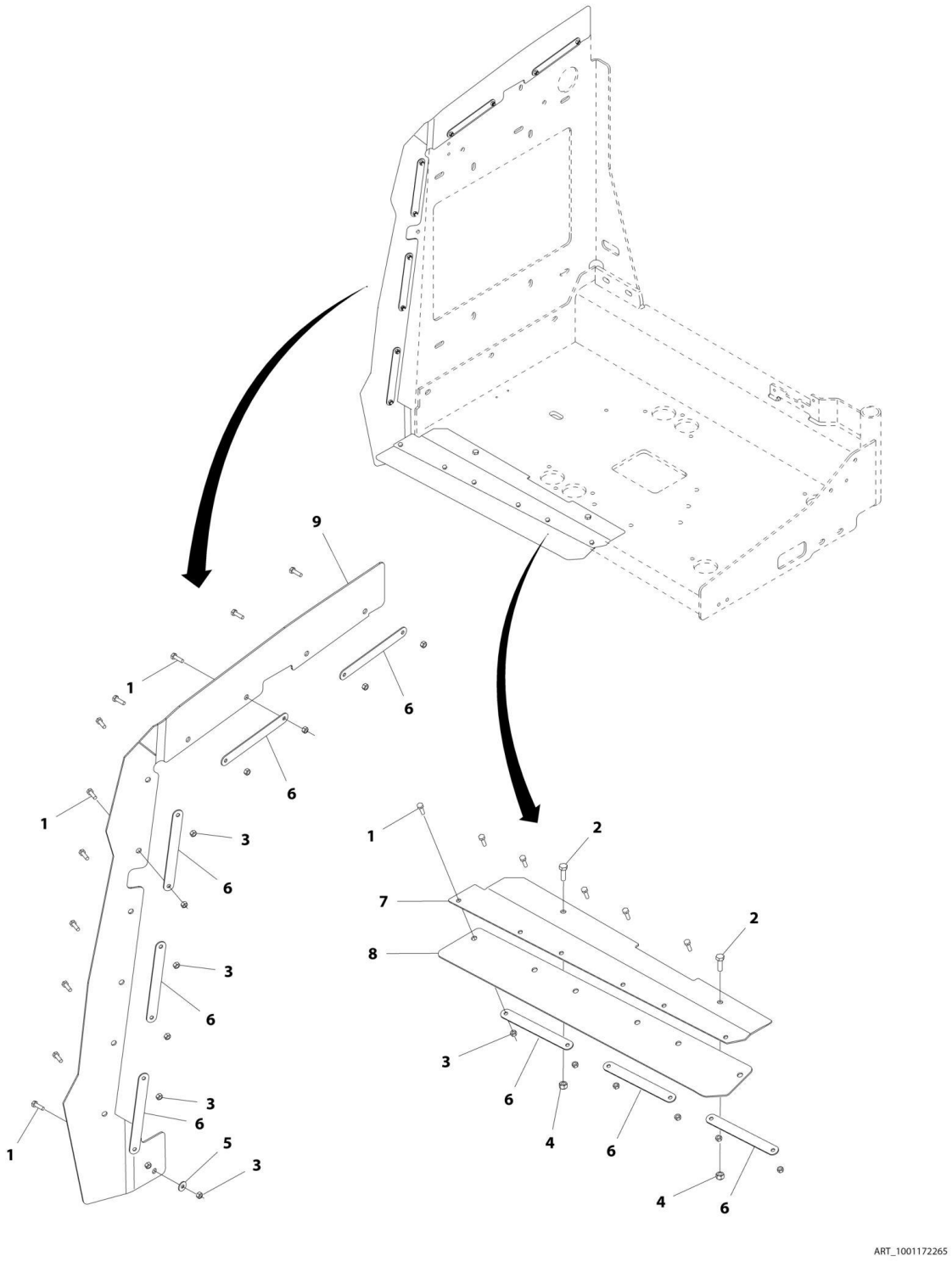

FIGURE 3-58. ENGINE BAFFLE INSTALLATION - WITH DEUTZ/GM ENGINES

ITEM	PART NUMBER	QTY	DESCRIPTION	REV
	1001172265	Ref	ENGINE BAFFLE INSTALLATION - WITH DEUTZ/GM ENGINES	B
1	0760610	17	Bolt, M6 x 20mm	
2	0760812	2	Bolt, M8 x 25mm	
3	3290605	17	Nut, Lock M6 x 1	
4	3290805	2	Nut, Lock M8 x 1.25	
5	4811702	1	Washer, M6	
6	1001167164	8	Plate, Support	
7	1001170663	1	Bracket	
8	1001170664	1	Seal	
9	1001172264	1	Seal	

FIGURE 3-59. ENGINE BAFFLE INSTALLATION – WITH KUBOTA ENGINE

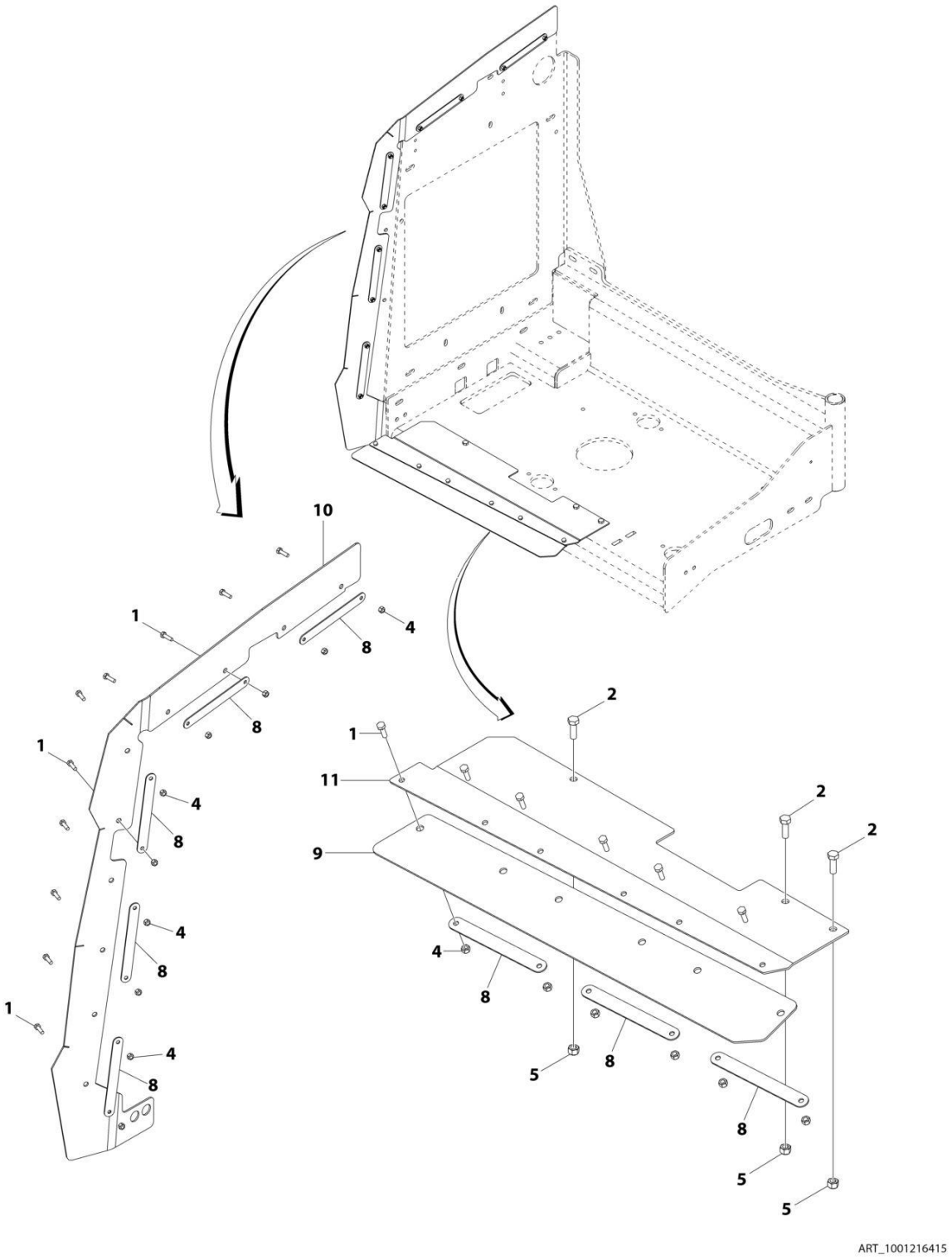

FIGURE 3-59. ENGINE BAFFLE INSTALLATION – WITH KUBOTA ENGINE

ITEM	PART NUMBER	QTY	DESCRIPTION	REV
	1001216415	Ref	ENGINE BAFFLE INSTALLATION – WITH KUBOTA ENGINE	C
1	0760610	16	Bolt, M6 x 20mm	
2	0760812	3	Bolt, M8 x 25mm	
4	3290605	16	Nut, Lock M6 x 1	
5	3290805	3	Nut, Lock M8 x 1.25	
8	1001167164	8	Plate, Support	
9	1001170664	1	Seal	
10	1001216416	1	Seal	
11	1001216512	1	Bracket	

FIGURE 3-60. GENERATOR INSTALLATION - 2500W/50HZ (DEUTZ D2011 ENGINE)

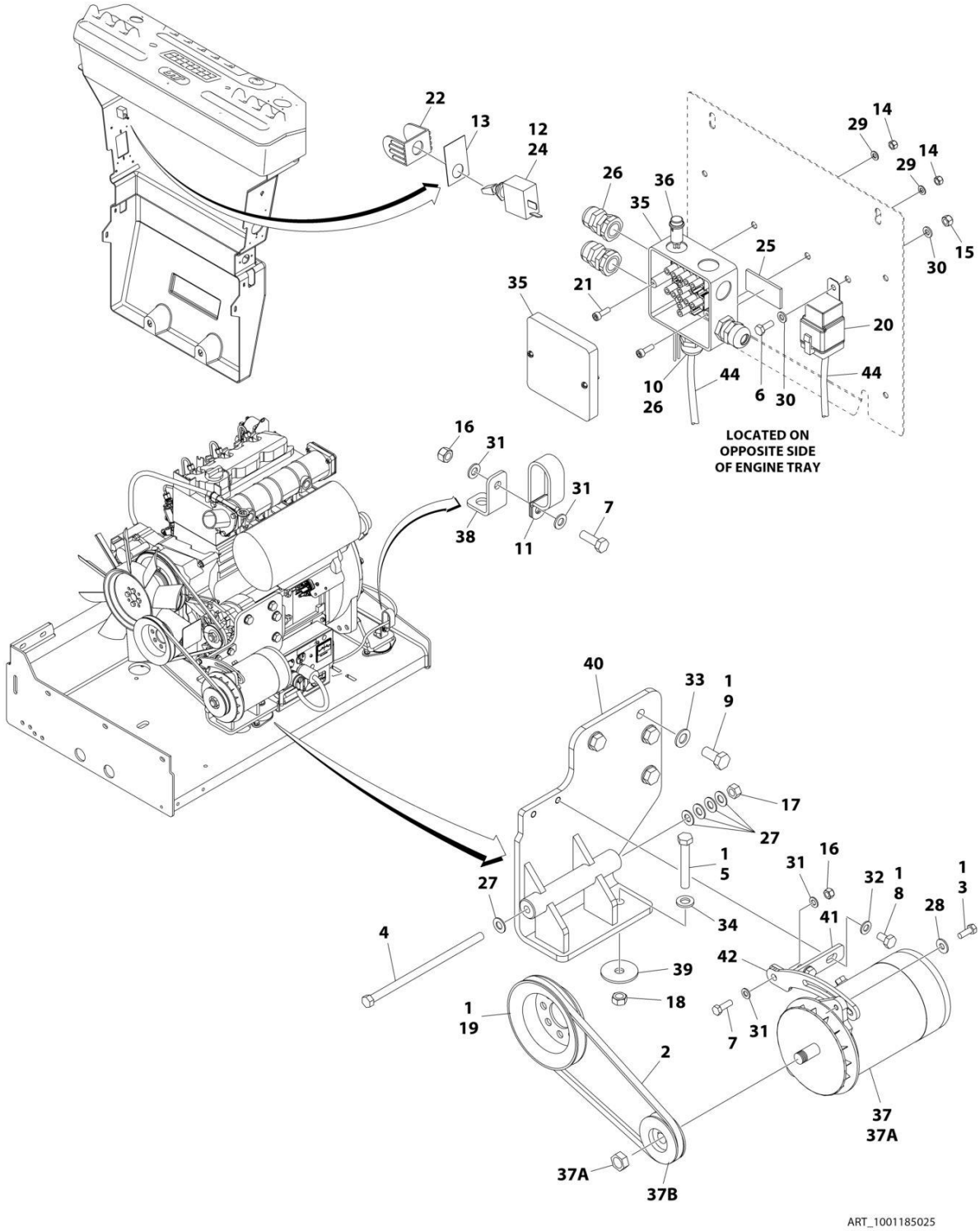

FIGURE 3-60. GENERATOR INSTALLATION - 2500W/50HZ (DEUTZ D2011 ENGINE)

ITEM	PART NUMBER	QTY	DESCRIPTION	REV
	1001185025	Ref	GENERATOR INSTALLATION - 2500W/50Hz (DEUTZ D2011 ENGINE)	C
1	0100011	AR	Compound, Locking	
2	0480120	1	Belt	
3	0641507	1	Bolt 5/16 x 7/8	
4	0641772	1	Bolt 7/16 x 9	
5	0711224	1	Bolt M12 x 80 Grade 10.9	
6	0760608	1	Bolt M6 x 16	
7	0760812	2	Bolt M8 x 25	
8	0761009	2	Bolt M10 x 18	
9	0771414	4	Bolt M14 x 30 Grade 10.9	
10	0962449	1	Bushing	
11	1321716	1	Clamp	
12	2820031	AR	Heat Shrink	
13	See Note	1	Nameplate (Note: Not Available for Purchase)	
14	3290505	2	Nut M5	
15	3290605	1	Nut M6	
16	3290805	2	Nut M8	
17	3311705	1	Nut 7/16	
18	3331211	1	Nut M12	
19	3580158	1	Pulley	
20	3740080	1	Relay	
21	4031607	2	Bolt M5 x 16	
22	4060802	1	Guard, Switch	
23	4240099	AR	Tie-Strap (Not Shown)	
24	4360336	1	Switch, Toggle	
25	4420060	AR	Tape, Double Sided	
26	4460968	3	Connector, Strain Relief	
27	4711700	5	Washer 7/16	
28	4751500	1	Washer 5/16	
29	4811600	2	Washer M5	
30	4811700	2	Washer M6	
31	4811900	4	Washer M8	
32	4812000	2	Washer M10	
33	4812200	4	Washer M14	
34	5241200	1	Washer M12 Hardened	
35	1001099869	1	Box, Junction	
36	1001100233	1	Light Red	
37	1001100321	1	Generator and Control Box Assembly	
	See Note	Ref	Note: Replacement Generators come standard with p/n 3580134 pulley. This pulley may not be correct for all applications. Refer to pulley options below.	
37A	70000123	1	Armature with Slip Rings	
37A	7012513	4	Cap, Brush Holder	
37A	7020108	4	Brush	
37A	7020109	4	Holder, Brush	
37A	7012514	1	Fan	
37A	7020110	1	Bell, Front	
37A	7020111	1	Bell, Rear	
37A	7020190	2	Bearing	

SECTION 3 - ENGINE

ITEM	PART NUMBER	QTY	DESCRIPTION	REV
37B	7027887	1	Key, Woodruff	
38	1001148641	1	Bracket	
39	1001168018	1	Washer, Snubbing	
40	1001184637	1	Mount, Engine	
41	1001184644	1	Support	
42	1001184645	1	Bracket	
43	1001188732	1	Wiring Diagram (Not Shown - See ELECTRICAL SECTION for Breakdown)	
44	1001187352	1	Harness, Generator (See ELECTRICAL SECTION for Breakdown)	

FIGURE 3-61. GENERATOR INSTALLATION - 2500W/60HZ (DEUTZ D2011 ENGINE)

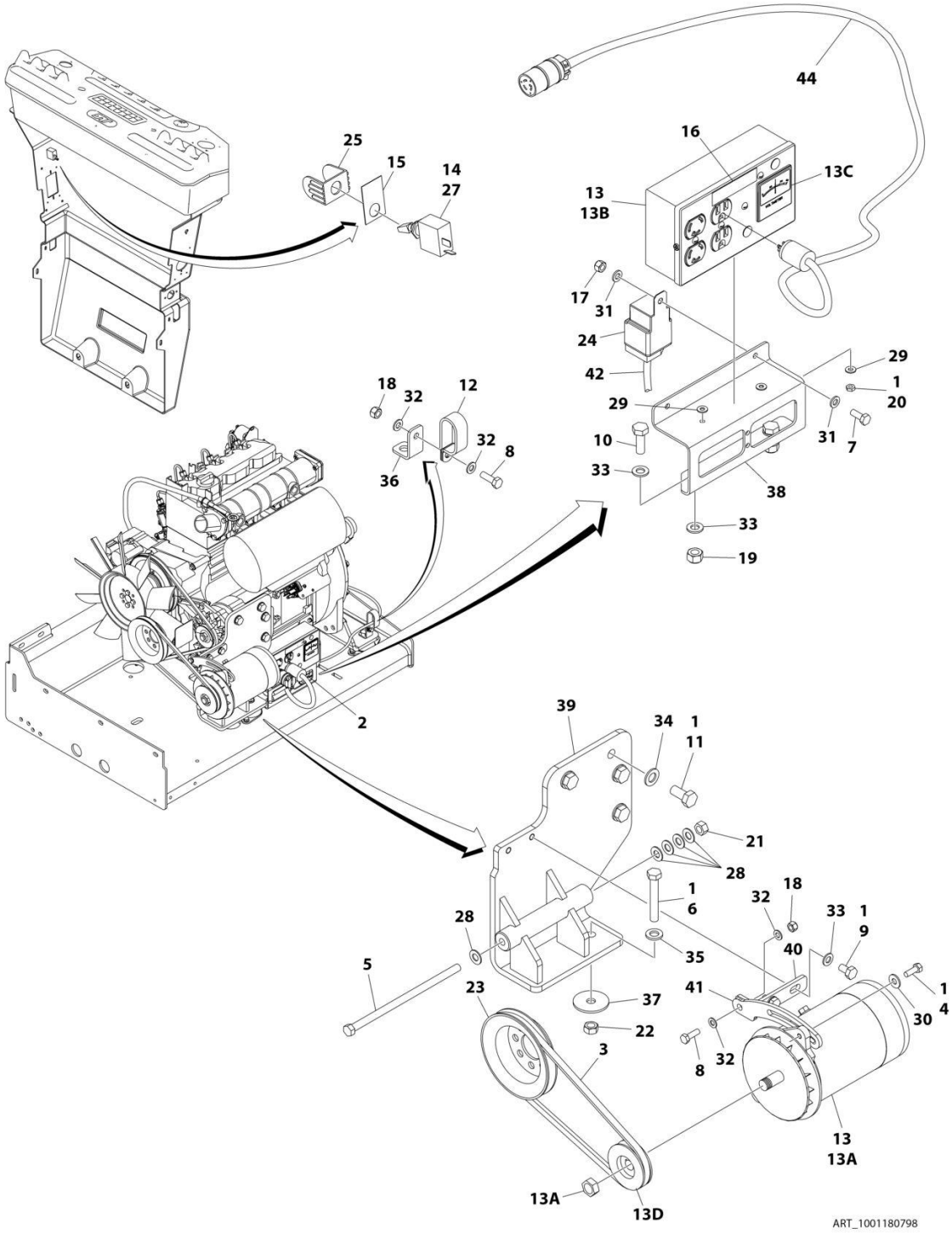

FIGURE 3-61. GENERATOR INSTALLATION - 2500W/60HZ (DEUTZ D2011 ENGINE)

ITEM	PART NUMBER	QTY	DESCRIPTION	REV
	1001180798	Ref	GENERATOR INSTALLATION - 2500W/60Hz (DEUTZ D2011 ENGINE)	C
1	0100011	AR	Compound, Locking	
2	0100048	AR	Grease, Dielectric	
3	0480122	1	Belt	
4	0641507	1	Bolt 5/16 x 7/8	
5	0641772	1	Bolt 7/16 x 9	
6	0711224	1	Bolt M12 x 80 Grade 10.9	
7	0760608	1	Bolt M6 x 16	
8	0760812	2	Bolt M8 x 25	
9	0761009	2	Bolt M10 x 18	
10	0761014	2	Bolt M10 x 30	
11	0771414	4	Bolt M14 x 30 Grade 10.9	
12	1321716	1	Clamp	
13	2460055	1	Generator and Control Box Assembly	
13A	7012558	1	Generator	
	See Note	Ref	Note: Replacement Generators come standard with p/n 3580134 pulley. This pulley may not be correct for all applications. Refer to pulley options below.	
13A	7026199	1	Armature with Slip Rings	
13A	7012513	3	Cap, Brush Holder	
13A	7020108	4	Brush	
13A	7020109	4	Holder, Brush	
13A	7012514	1	Fan	
13A	7020110	1	Bell, Front	
13A	7020111	1	Bell, Rear	
13A	7020190	1	Bearing	
13B	7019680	1	Box, Control	
13B	4460190	1	Receptacle, Standard	
13B	4460027	1	Receptacle, Twistlock	
13B	4360542	1	Breaker, Circuit	
13B	3520028	1	Plug, Hole	
13B	4460961	1	Connector - 4 Position	
13B	4460705	4	Pin, Male	
13B	4460321	1	Connector - 4 Position (Note: Mate to p/n 4460961 Purchase Separately)	
13B	4460268	3	Socket, Female (Note: Mate to p/n 4460705 Purchase Separately)	
13C	2420203	1	Voltmeter	
13D	3580276	1	Pulley	
13D	7027887	1	Key, Woodruff	
14	2820031	AR	Heat Shrink	
15	See Note	1	Nameplate (Note: Not Available for Purchase)	
16	3251243	1	Nameplate 120V-60Hz	
17	3290605	1	Nut M6	
18	3290805	2	Nut M8	
19	3291005	2	Nut M10	
20	3311001	2	Nut #10	
21	3311705	1	Nut 7/16	
22	3331211	1	Nut M12	
23	3580158	1	Pulley	

ITEM	PART NUMBER	QTY	DESCRIPTION	REV
24	3740080	1	Relay	
25	4060802	1	Guard, Switch	
26	4240099	AR	Tie-Strap (Not Shown)	
27	4360336	1	Switch, Toggle	
28	4711700	5	Washer 7/16	
29	4751000	4	Washer #10	
30	4751500	1	Washer 5/16	
31	4811700	2	Washer M6	
32	4811900	4	Washer M8	
33	4812000	6	Washer M10	
34	4812200	4	Washer M14	
35	5241200	1	Washer M12 Hardened	
36	1001148641	1	Bracket	
37	1001168018	1	Washer, Snubbing	
38	1001183477	1	Support	
39	1001184637	1	Mount, Engine	
40	1001184644	1	Support	
41	1001184645	1	Bracket	
42	1001187522	1	Harness, Generator (See ELECTRICAL SECTION for Breakdown)	
43	1001188731	1	Wiring Diagram (Not Shown - See ELECTRICAL SECTION for Breakdown)	
44	1001182296	1	Harness, Inverter **(SN 0300218673 through 0300272317, SN 1300007279 through 1300007373, SN B300003516 through B300005760, SN E300003358 through E300007990, Except SN 0300272185 through 0300272190, Excluding B300005569 and E300007814)**	
44	1060494	10 ft/3.5m	Cable, Electrical - 12/3	
44	4460134	1	Receptacle, Female	
44	4460138	1	Plug, Male	

FIGURE 3-62. GENERATOR INSTALLATION - 2500W/60HZ (DEUTZ D2.9L4 ENGINE)

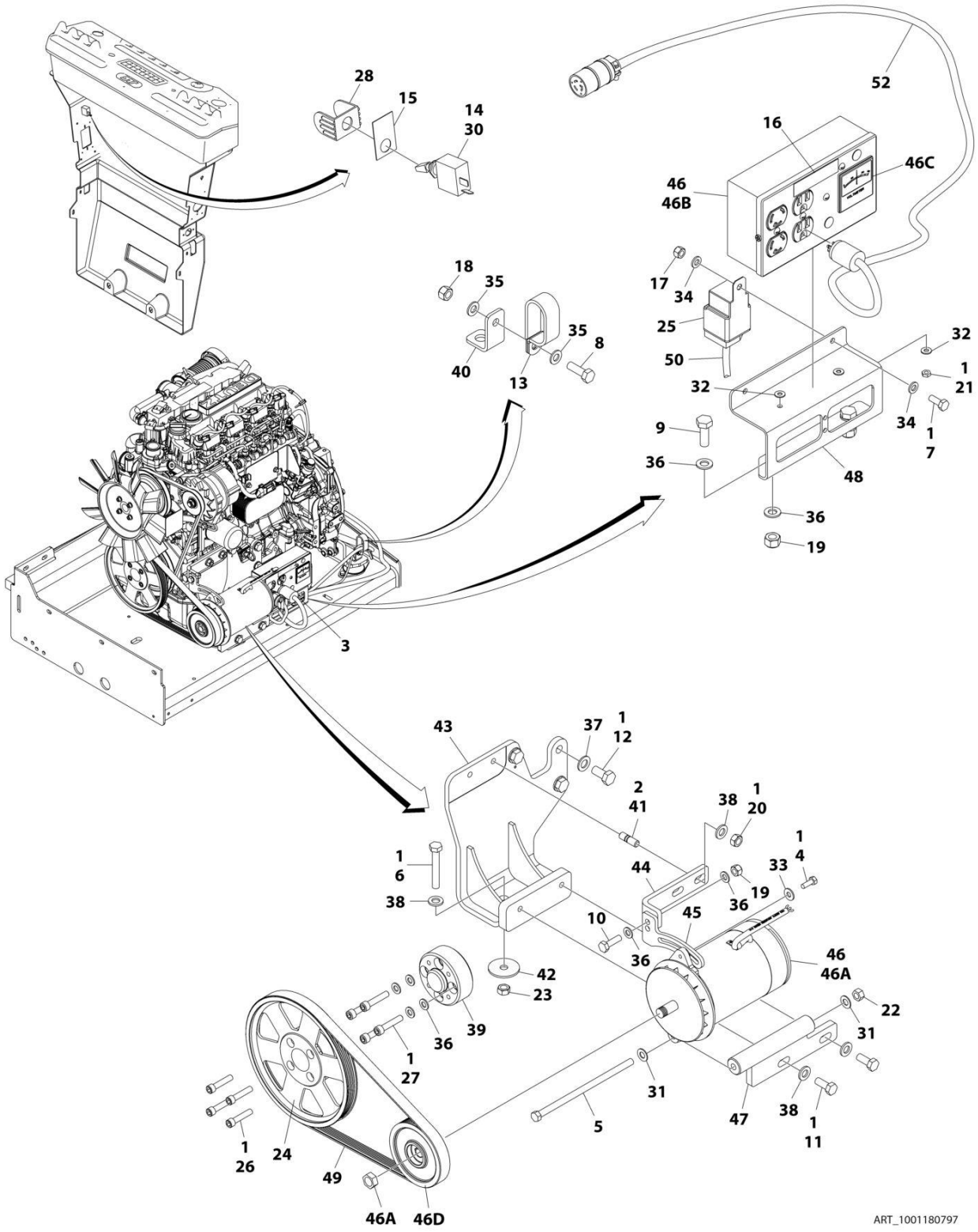

FIGURE 3-62. GENERATOR INSTALLATION - 2500W/60HZ (DEUTZ D2.9L4 ENGINE)

ITEM	PART NUMBER	QTY	DESCRIPTION	REV
	1001180797	Ref	GENERATOR INSTALLATION – 2500W/60Hz (DEUTZ D2.9L4 ENGINE)	E
1	0100011	AR	Compound, Locking	
2	0100019	AR	Compound, Locking	
3	0100048	AR	Grease, Dielectric	
4	0641507	1	Bolt 5/16 x 7/8	
5	0641772	1	Bolt 7/16 x 9	
6	0711224	1	Bolt M12 x 80 Grade 10.9	
7	0760608	1	Bolt M6 x 16	
8	0760812	1	Bolt M8 x 25	
9	0761014	2	Bolt M10 x 30	
10	0761015	1	Bolt M10 x 35	
11	0761214	2	Bolt M12 x 30	
12	0771414	3	Bolt M14 x 30 Grade 10.9	
13	1321716	1	Clamp	
14	2820031	AR	Heat Shrink	
15	See Note	1	Nameplate (Note: Not Available for Purchase)	
16	3251243	1	Nameplate 120V-60Hz	
17	3290605	1	Nut M6	
18	3290805	1	Nut M8	
19	3291005	3	Nut M10	
20	3291201	2	Nut M12	
21	3311001	2	Nut #10	
22	3311705	1	Nut 7/16	
23	3331211	1	Nut M12	
24	3580320	1	Pulley	
25	3740080	1	Relay	
26	3931628	4	Capscrew 3/8 x 1-3/4	
27	4032013	4	Bolt M10 x 45	
27	4032014	4	Bolt M10 x 50	
28	4060802	1	Guard, Switch	
29	4240099	AR	Tie-Strap (Not Shown)	
30	4360336	1	Switch, Toggle	
31	4711700	2	Washer 7/16	
32	4751000	4	Washer #10	
33	4751500	1	Washer 5/16	
34	4811700	2	Washer M6	
35	4811900	2	Washer M8	
36	4812000	AR	Washer M10	
37	4812200	3	Washer M14	
38	5241200	5	Washer M12 Hardened	
39	1001135679	1	Adapter	
40	1001148641	1	Bracket	
41	1001155041	2	Stud	
42	1001168018	1	Washer, Snubbing	
43	1001168207	1	Support	
44	1001179836	1	Mount, Upper Generator	
45	1001179837	1	Arm Adjustment	
46	1001180001	1	Generator	
46A	7026199	1	Armature with Slip Rings	

ITEM	PART NUMBER	QTY	DESCRIPTION	REV
46A	7012513	3	Cap, Brush Holder	
46A	7020108	4	Brush	
46A	7020109	4	Holder, Brush	
46A	7012514	1	Fan	
46A	7020110	1	Bell, Front	
46A	7020111	1	Bell, Rear	
46A	7020190	1	Bearing	
46B	7019680	1	Box, Control	
46B	4460190	1	Receptacle, Standard	
46B	4460027	1	Receptacle, Twistlock	
46B	4360542	1	Breaker, Circuit	
46B	3520028	1	Plug, Hole	
46B	4460961	1	Connector - 4 Position	
46B	4460705	4	Pin, Male	
46B	4460321	1	Connector - 4 Position (Note: Mate to p/n 4460961 Purchase Separately)	
46B	4460268	3	Socket, Female (Note: Mate to p/n 4460705 Purchase Separately)	
46C	2420203	1	Voltmeter	
46D	1001179893	1	Pulley	
46D	7027887	1	Key, Woodruff	
47	1001181243	1	Mount, Lower Generator	
48	1001183477	1	Support	
49	1001148138	1	Belt	
50	1001187522	1	Harness, Generator (See ELECTRICAL SECTION for Breakdown)	
51	1001188731	1	Wiring Diagram (Not Shown - See ELECTRICAL SECTION for Breakdown)	
52	1001182296	1	Harness, Inverter **(SN 0300218673 through 0300272317, SN B300003516 through B300005760, Except SN 0300272185 through 0300272190, Excluding B300005569)**	
52	1060494	10 ft/3.5m	Cable, Electrical - 12/3	
52	4460134	1	Receptacle, Female	
52	4460138	1	Plug, Male	

FIGURE 3-63. GENERATOR INSTALLATION - 2500W/60HZ (GM ENGINE)

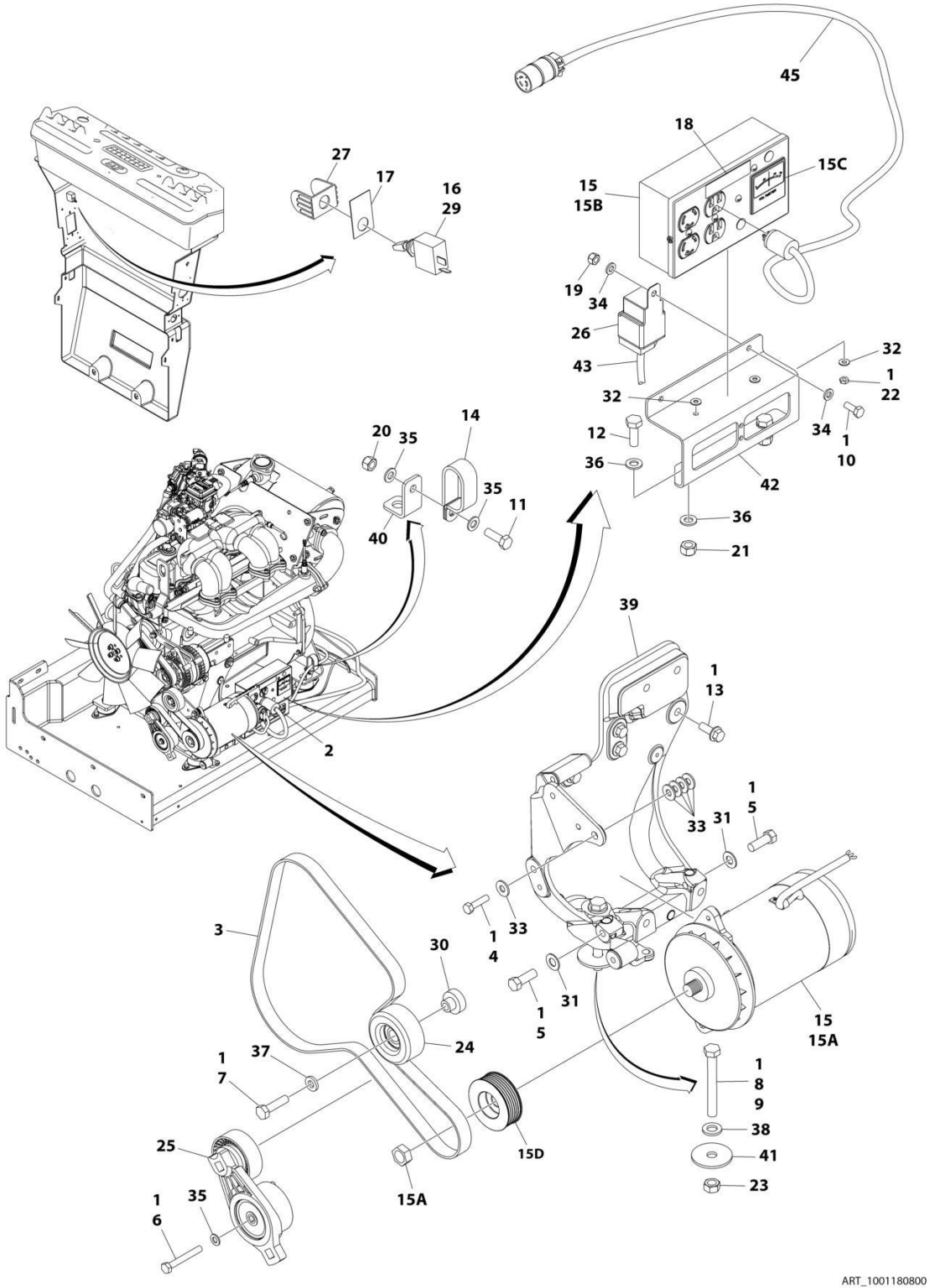

FIGURE 3-63. GENERATOR INSTALLATION - 2500W/60HZ (GM ENGINE)

ITEM	PART NUMBER	QTY	DESCRIPTION	REV
	1001180800	Ref	GENERATOR INSTALLATION - 2500W/60Hz (GM ENGINE)	C
1	0100011	AR	Compound, Locking	
2	0100048	AR	Grease, Dielectric	
3	0480142	1	Belt	
4	0641510	1	Bolt 5/16 x 1-1/4	
5	0641710	2	Bolt 7/16 x 1-1/4	
6	0700820	1	Bolt M8 x 60	
7	0701016	1	Bolt M10 x 40	
8	0711221	1	Bolt M12 x 65 Grade 10.9	
9	0711227	1	Bolt M12 x 100	
10	0760608	1	Bolt M6 x 16	
11	0760812	1	Bolt M8 x 25	
12	0761014	2	Bolt M10 x 30	
13	0811608	4	Screw 3/8 x 1	
14	1321716	1	Clamp	
15	2460051	1	Generator and Control Box Assembly	
15A	7012558	1	Generator - 110V/60Hz	
15A	7026199	1	Armature with Slip Rings	
15A	7012513	4	Cap, Brush Holder	
15A	7020108	4	Brush	
15A	7020109	4	Holder, Brush	
15A	7012514	1	Fan	
15A	7020110	1	Bell, Front	
15A	7020111	1	Bell, Rear	
15A	7020190	2	Bearing	
15B	7019680	1	Box, Control - 110V/60Hz	
15B	4460190	1	Receptacle, Standard (110V Only)	
15B	4460027	1	Receptacle, Twistlock (110V Only)	
15B	4360542	1	Breaker, Circuit	
15B	3520028	1	Plug, Hole	
15B	4460961	1	Connector - 4 Position	
15B	4460705	4	Pin, Male	
15B	4460321	1	Connector - 4 Position (Note: Mate to p/n 4460961 Purchase Separately)	
15B	4460268	3	Socket, Female (Note: Mate to p/n 4460705 Purchase Separately)	
15C	2420203	1	Voltmeter	
15D	3580324	1	Pulley	
15D	7027887	1	Key, Woodruff	
16	2820031	AR	Heat Shrink	
17	See Note	1	Nameplate (Note: Not Available for Purchase)	
18	3251243	1	Nameplate 120V-60Hz	
19	3290605	1	Nut M6	
20	3290805	1	Nut M8	
21	3291005	2	Nut M10	
22	3311001	2	Nut #10	
23	3331211	1	Nut M12	
24	3580312	1	Pulley	
25	3580348	1	Pulley	
26	3740080	1	Relay	
27	4060802	1	Guard, Switch	

ITEM	PART NUMBER	QTY	DESCRIPTION	REV
28	4240099	AR	Tie-Strap (Not Shown)	
29	4360336	1	Switch, Toggle	
30	4568735	1	Spacer	
31	4711700	2	Washer 7/16	
32	4751000	4	Washer #10	
33	4751500	5	Washer 5/16	
34	4811700	2	Washer M6	
35	4811900	3	Washer M8	
36	4812000	4	Washer M10	
37	4891600	1	Washer 3/8	
38	5241200	1	Washer M12 Hardened	
39	1001141181	1	Support	
40	1001148641	1	Bracket	
41	1001168018	1	Washer, Snubbing	
42	1001183477	1	Support	
43	1001187522	1	Harness, Generator (See ELECTRICAL SECTION for Breakdown)	
44	1001188731	1	Wiring Diagram (Not Shown - See ELECTRICAL SECTION for Breakdown)	
45	1001182296	1	Harness, Inverter **(SN 0300218673 through 0300272317, Except SN 0300272185 through 0300272190)**	
45	1060494	10 ft/3.5m	Cable, Electrical - 12/3	
45	4460134	1	Receptacle, Female	
45	4460138	1	Plug, Male	

FIGURE 3-64. GENERATOR INSTALLATION - 2500W/60HZ (KUBOTA ENGINE)

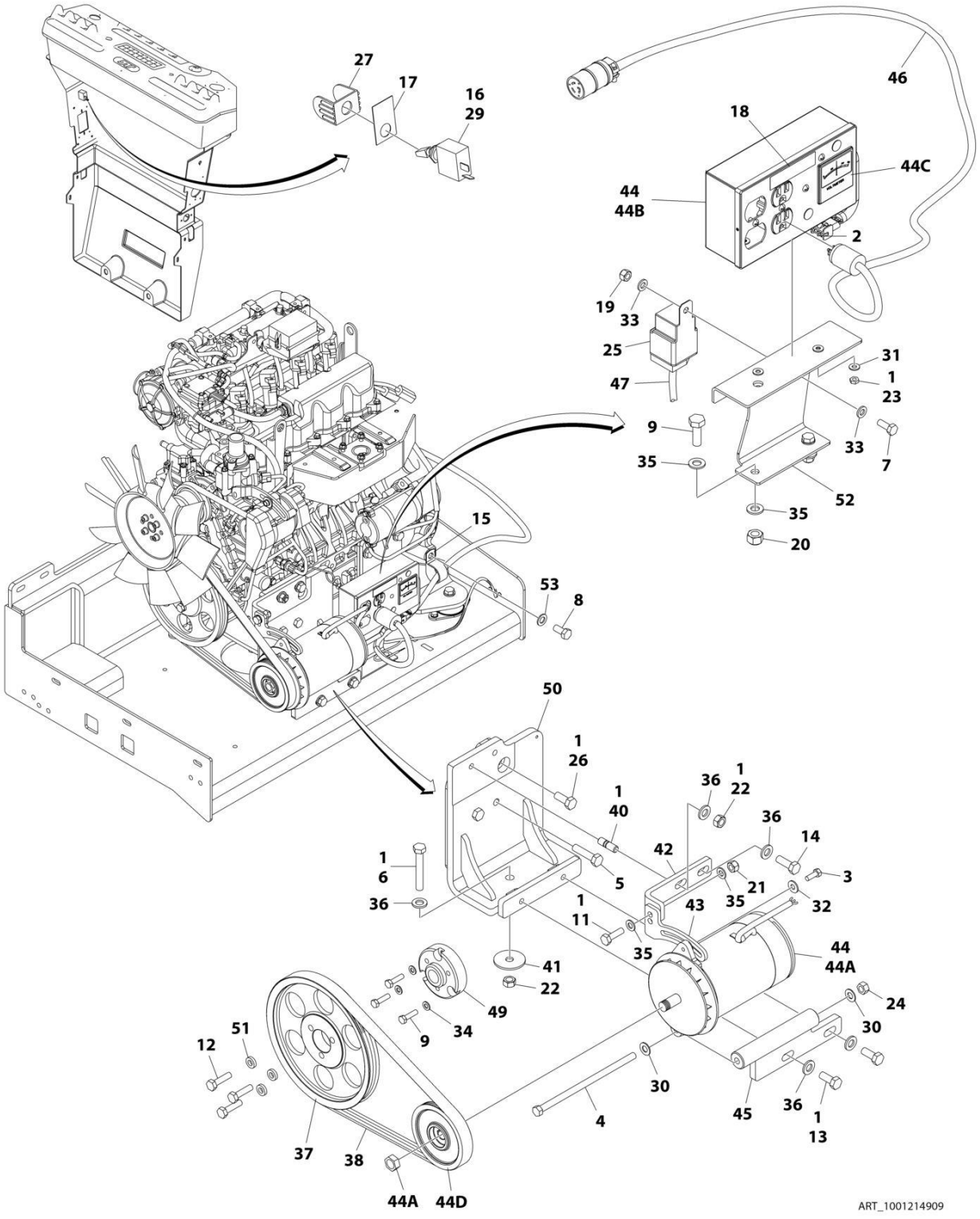

FIGURE 3-64. GENERATOR INSTALLATION - 2500W/60HZ (KUBOTA ENGINE)

ITEM	PART NUMBER	QTY	DESCRIPTION	REV
	1001214909	Ref	GENERATOR INSTALLATION - 2500W/60Hz (KUBOTA ENGINE)	E
1	0100011	AR	Compound, Locking	
2	0100048	AR	Grease, Dielectric	
3	0641507	1	Bolt 5/16 x 7/8	
4	0641772	1	Bolt 7/16 x 9	
5	1001217344	2	Bolt M12 x 50	
6	0711224	1	Bolt M12 x 80 Grade 10.9	
6	0701224	1	Bolt M12 x 80	
7	0760608	1	Bolt M6 x 16	
8	1001217345	1	Bolt M14 x 30	
9	0760814	5	Bolt M8 x 30	
11	0761015	1	Bolt M10 x 35	
12	0761016	3	Bolt M10 x 40	
13	0761214	2	Bolt M12 x 30	
14	0761215	1	Bolt M12 x 35	
15	84521061	1	Clamp	
16	2820031	AR	Heat Shrink	
17	See Note	1	Nameplate (Note: Not Available for Purchase)	
18	3251243	1	Nameplate 120V-60Hz	
19	3290605	1	Nut M6	
20	3290805	2	Nut M8	
21	3291005	1	Nut M10	
22	3291201	2	Nut M12	
23	3311001	2	Nut #10	
24	3311705	1	Nut 7/16	
25	3740080	1	Relay	
26	1001217342	1	Bolt M12 x 30	
27	4060802	1	Guard, Switch	
28	4240099	AR	Tie-Strap (Not Shown)	
29	4360336	1	Switch, Toggle	
30	4711700	2	Washer 7/16	
31	4751000	4	Washer #10	
32	4751500	1	Washer 5/16	
33	4811700	2	Washer M6	
34	4811900	5	Washer M8	
35	4812000	4	Washer M10	
36	5241200	5	Washer M12 Hardened	
37	1001147233	1	Pulley	
38	1001148138	1	Belt	
40	1001155041	1	Stud	
41	1001168018	1	Washer, Snubbing	
42	1001179836	1	Mount, Upper Generator	
43	1001179837	1	Arm Adjustment	
44	1001180001	1	Generator	
44A	7026199	1	Armature with Slip Rings	
44A	7012513	3	Cap, Brush Holder	
44A	7020108	4	Brush	
44A	7020109	4	Holder, Brush	
44A	7012514	1	Fan	
44A	7020110	1	Bell, Front	

ITEM	PART NUMBER	QTY	DESCRIPTION	REV
44A	7020111	1	Bell, Rear	
44A	7020190	1	Bearing	
44B	7019680	1	Box, Control	
44B	4460190	1	Receptacle, Standard	
44B	4460027	1	Receptacle, Twistlock	
44B	4360542	1	Breaker, Circuit	
44B	3520028	1	Plug, Hole	
44B	4460961	1	Connector - 4 Position	
44B	4460705	4	Pin, Male	
44B	4460321	1	Connector - 4 Position (Note: Mate to p/n 4460961 Purchase Separately)	
44B	4460268	3	Socket, Female (Note: Mate to p/n 4460705 Purchase Separately)	
44C	2420203	1	Voltmeter	
44D	1001179893	1	Pulley	
44D	7027887	1	Key, Woodruff	
45	1001181243	1	Mount, Lower Generator	
46	1001182296	1	Harness, Inverter	
46	1060494	10 ft /3.5m	Cable, Electrical - 12/3	
46	4460134	1	Receptacle, Female	
46	4460138	1	Plug, Male	
47	1001187522	1	Harness, Generator (See ELECTRICAL SECTION for Breakdown)	
48	1001188731	1	Wiring Diagram (Not Shown - See ELECTRICAL SECTION for Breakdown)	
49	1001213029	1	Adapter, Pulley	
50	1001214546	1	Support	
51	1001216805	1	Spacer	
52	1001216840	1	Support	
53	4812200	1	Washer M14	

FIGURE 3-65. GENERATOR INSTALLATION - 4000W/50HZ (DEUTZ D2011 ENGINE)

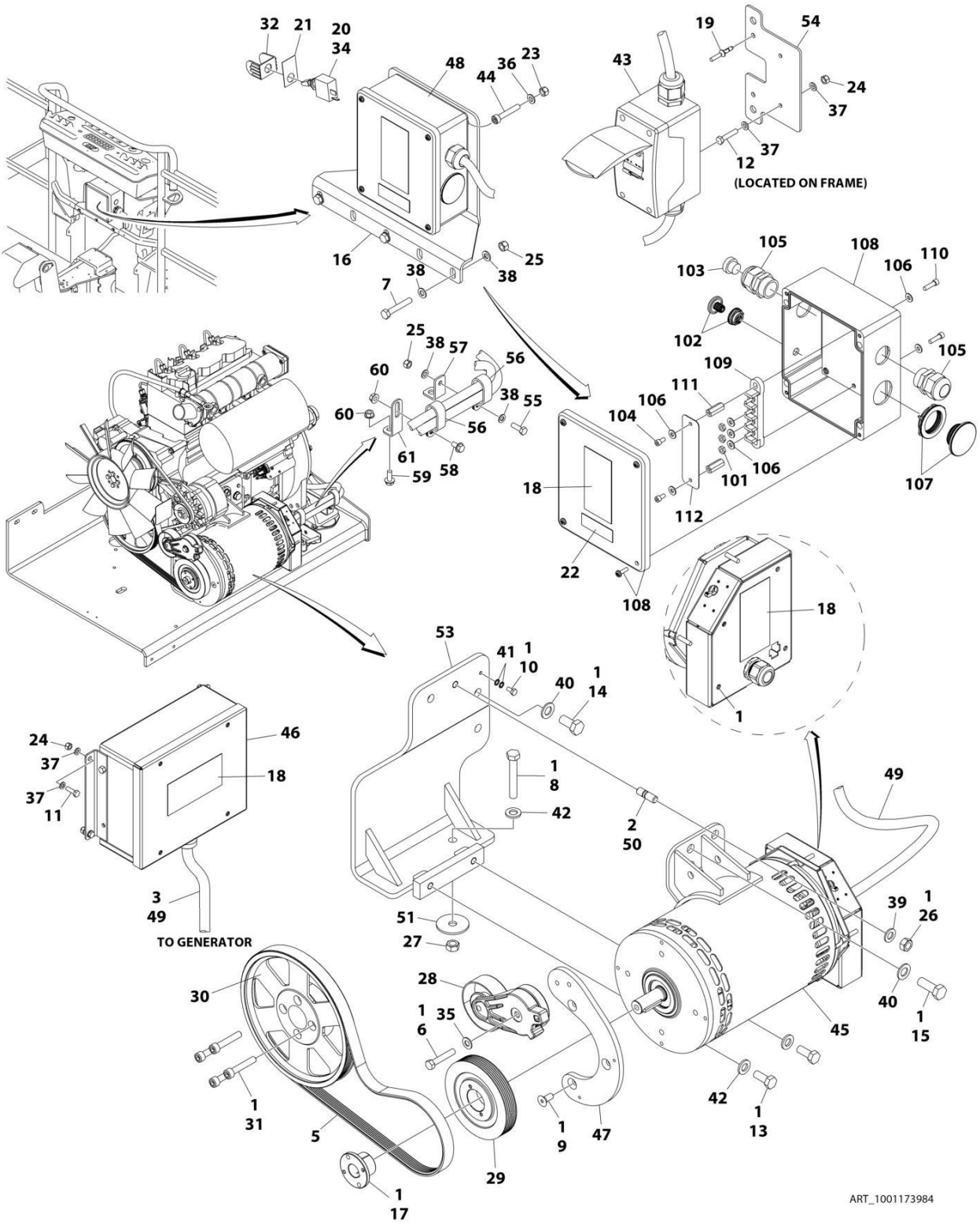

FIGURE 3-65. GENERATOR INSTALLATION - 4000W/50HZ (DEUTZ D2011 ENGINE)

ITEM	PART NUMBER	QTY	DESCRIPTION	REV
	1001173984	Ref	GENERATOR INSTALLATION - 4000W/50Hz (DEUTZ D2011 ENGINE)	H
1	0100011	AR	Compound, Locking	
2	0100019	AR	Compound, Locking	
3	0100048	AR	Grease, Dielectric	
4	0100079	AR	Sealant (Not Shown)	
5	0480126	1	Belt	
6	0641616	1	Bolt 3/8 x 2	
7	0700818	AR	Bolt M8 x 50	
8	0711224	1	Bolt M12 x 80 Grade 10.9	
9	0741607	3	Screw 3/8 x 7/8	
10	0760606	1	Bolt M6 x 12	
11	0760610	4	Bolt M6 x 20	
12	0760614	2	Bolt M6 x 30	
13	0761214	2	Bolt M12 x 30	
14	0771414	2	Bolt M14 x 30 Grade 10.9	
15	0771416	1	Bolt M14 x 40	
16	0902888	1	Bracket **(SN 0300201991 through 0300208597, SN E300002833 through E300002838)**	
17	0962520	1	Bushing	
18	1705489	AR	Decal - Hazardous Voltage	
19	2080040	2	Fastener, Huck	
20	2820031	AR	Heat Shrink	
21	See Note	1	Nameplate (Note: Not Available for Purchase)	
22	3251242	1	Decal - 240V / 50Hz **(SN 0300201991 through 0300208597, SN E300002833 through E300002838)**	
23	3290505	AR	Nut M5	
24	3290605	6	Nut M6	
25	3290805	AR	Nut M8	
26	3291201	1	Nut M12	
27	3331211	1	Nut M12	
28	3580317	1	Pulley	
29	3580319	1	Pulley	
30	3580320	1	Pulley	
31	4032015	4	Bolt M10 x 55	
32	4060802	1	Guard, Switch	
33	4240099	AR	Tie-Strap (Not Shown)	
34	4360336	1	Switch, Toggle	
35	4711600	1	Washer 3/8	
36	4811600	AR	Washer M5	
37	4811700	12	Washer M6	
38	4811900	AR	Washer M8	
39	4812100	1	Washer M12	
40	4812200	3	Washer M14	
41	4871700	2	Washer M6	
42	5241200	3	Washer M12 Hardened	
43	1001096070	1	Breaker Box Kit (50Hz) (See ELECTRICAL SECTION for Breakdown)	
44	1001104029	AR	Screw M5 x 30	
45	1001138565	1	Generator Assembly	

ITEM	PART NUMBER	QTY	DESCRIPTION	REV
45	70003709	1	Ring, Retaining (External)	
45	70003708	1	Ring, Retaining (Internal)	
45	70001966	1	Bearing	
45	70004092	1	Endbell (Shaft End)	
45	70004171	1	Key	
45	70004676	1	Rotor	
45	70004677	1	Stator	
45	70004678	1	Endbell (Rear)	
45	70004679	1	Cover, Endbell (Rear)	
45	70004680	1	Enclosure, Wiring	
45	70004681	1	Cover, Enclosure	
45	70004682	1	Switch, Reset (Located on Enclosure Cover)	
45	70004683	1	Connector, Strain Relief (Located on Enclosure Cover)	
46	1001138566	1	Box, Control	
46	70006552	1	Capacitor	
46	70006553	1	Relay	
47	1001139357	1	Mount, Tensioner	
48	1001152458	Ref	Generator Junction Box Components (See Items 101-112 for Breakdown) **(SN 0300201991 through 0300208597, SN E300002833 through E300002838)**	
49	1001152532	1	Harness, Generator (See ELECTRICAL SECTION for Breakdown)	
50	1001155041	1	Stud **(SN 0300201991 through 0300218672, SN E300002833 through E300003357)**	
50	1001196382	1	Stud **(SN 0300218673 through 0300272317, SN 1300007279 through 1300007373, SN B300003516 through B300005760, SN E300003358 through E300007990, Except SN 0300272185 through 0300272190, Excluding B300005569 and E300007814)**	
51	1001168018	1	Washer, Snubbing	
53	1001173925	1	Mount	
54	1001174158	1	Mount	
55	0760812	1	Bolt M8 x 25	
56	1321716	AR	Clamp	
57	1001148641	1	Bracket	
58	5250808	AR	Bolt M8 x 16	
59	5250810	AR	Bolt M8 x 20	
60	5260800	AR	Nut M8	
61	1001223122	1	Support **(SN 0300226829 through 0300272317, SN 1300007279 through 1300007373, SN B300003516 through B300005760, SN E300004184 through E300007990, Except SN 0300272185 through 0300272190, Excluding B300005569 and E300007814)**	
	1001152458	Ref	GENERATOR JUNCTION BOX COMPONENTS **(SN 0300201991 through 0300208597, SN E300002833 through E300002838)**	
101	3311001	3	Nut #10	
102	1001155813	1	Plug	
103	3520192	1	Plug	
104	3900300	2	Capscrew #10 x 3/8	
105	4460425	2	Connector, Strain Relief	
106	4711000	7	Washer #10	
107	1001148648	1	Plug	
108	1001152456	1	Box, Junction	
109	1001152530	1	Terminal, Block	
110	3900267	2	Screw	
111	1001158008	2	Stand-Off	

ITEM	PART NUMBER	QTY	DESCRIPTION	REV
112	1001158363	1	Cover, Terminal Block	

FIGURE 3-66. GENERATOR INSTALLATION - 4000W/60HZ (DEUTZ D2011 ENGINE)

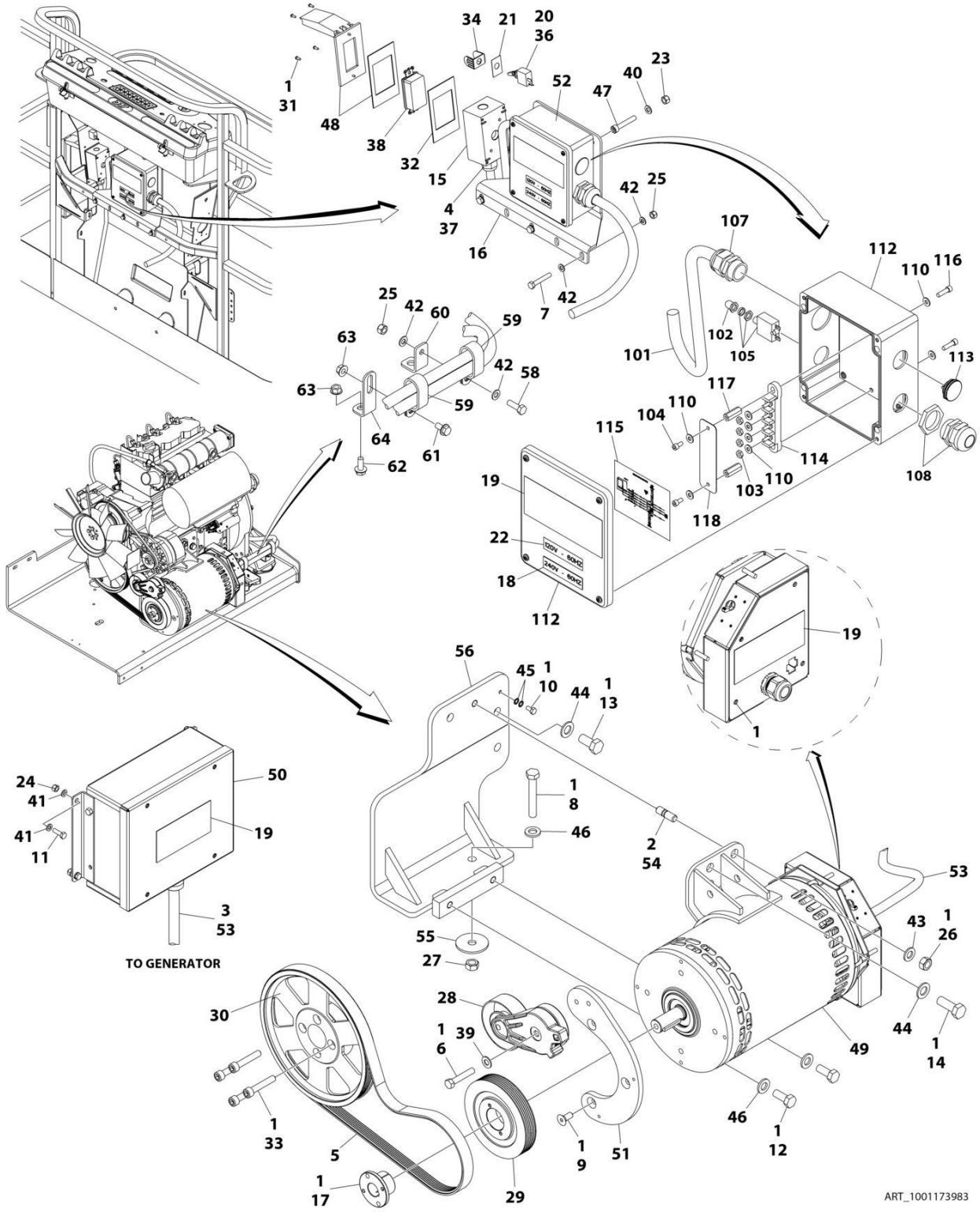

FIGURE 3-66. GENERATOR INSTALLATION - 4000W/60HZ (DEUTZ D2011 ENGINE)

ITEM	PART NUMBER	QTY	DESCRIPTION	REV
	1001173983	Ref	GENERATOR INSTALLATION - 4000W/60Hz (DEUTZ D2011 ENGINE)	E
1	0100011	AR	Compound, Locking	
2	0100019	AR	Compound, Locking	
3	0100048	AR	Grease, Dielectric	
4	0100079	AR	Sealant	
5	0480128	1	Belt	
6	0641616	1	Bolt 3/8 x 2	
7	0700818	3	Bolt M8 x 50	
8	0711224	1	Bolt M12 x 80 Grade 10.9	
9	0741607	3	Screw 3/8 x 7/8	
10	0760606	1	Bolt M6 x 12	
11	0760610	4	Bolt M6 x 20	
12	0761214	2	Bolt M12 x 30	
13	0771414	2	Bolt M14 x 30 Grade 10.9	
14	0771416	1	Bolt M14 x 40	
15	0860038	1	Box, Switch	
16	0902888	1	Bracket	
17	0962520	1	Bushing	
18	1705374	1	Decal - 240V-60Hz	
19	1705387	3	Decal - Hazardous Voltage	
20	2820031	AR	Heat Shrink	
21	See Note	1	Nameplate (Note: Not Available for Purchase)	
22	3251243	1	Nameplate 120V-60Hz	
23	3290505	4	Nut M5	
24	3290605	4	Nut M6	
25	3290805	4	Nut M8	
26	3291201	2	Nut M12	
27	3331211	1	Nut M12	
28	3580317	1	Pulley	
29	3580318	1	Pulley	
30	3580320	1	Pulley	
31	3910606	4	Screw #6 x 3/8	
32	3960422	1	Gasket	
33	4032015	4	Bolt M10 x 55	
34	4060802	1	Guard, Switch	
35	4240099	AR	Tie-Strap (Not Shown)	
36	4360336	1	Switch, Toggle	
37	4460071	1	Connector, Strain Relief	
38	4460346	1	Receptacle	
39	4711600	1	Washer 3/8	
40	4811600	4	Washer M5	
41	4811700	8	Washer M6	
42	4811900	8	Washer M8	
43	4812100	1	Washer M12	
44	4812200	3	Washer M14	
45	4871700	2	Washer M6	
46	5241200	3	Washer M12 Hardened	
47	1001104029	4	Screw M5 x 30	
48	1001110873	1	Shield, Cover	

ITEM	PART NUMBER	QTY	DESCRIPTION	REV
49	1001129858	1	Generator	
49	70003709	1	Ring, Retaining (External)	
49	70003708	1	Ring, Retaining (Internal)	
49	70001966	1	Bearing	
49	70004092	1	Endbell (Shaft End)	
49	70004171	1	Key	
49	70004676	1	Rotor	
49	70004684	1	Stator	
49	70004678	1	Endbell (Rear)	
49	70004679	1	Cover, Endbell (Rear)	
49	70004680	1	Enclosure, Wiring	
49	70004685	1	Cover, Enclosure	
49	70004682	1	Switch, Reset (Located on Enclosure Cover)	
49	70004098	1	Connector, Strain Relief (Located on Enclosure Cover)	
50	1001138566	1	Box, Control	
50	70006552	1	Capacitor	
50	70006553	1	Relay	
51	1001139357	1	Mount, Tensioner	
52	1001152457	1	Generator Junction Box Assembly (See Items 101-118 for Breakdown)	
53	1001152532	1	Harness, Generator (See ELECTRICAL SECTION for Breakdown)	
54	1001196382	1	Stud	
55	1001168018	1	Washer, Snubbing	
56	1001173925	1	Mount	
57	1001175631	1	Wiring Diagram (Not Shown - See ELECTRICAL SECTION for Breakdown)	
58	0760812	1	Bolt M8 x 25	
59	1321716	AR	Clamp	
60	1001148641	1	Bracket	
61	5250808	AR	Bolt M8 x 16	
62	5250810	AR	Bolt M8 x 20	
63	5260800	AR	Nut M8	
64	1001223122	1	Support **(SN 0300226829 through 0300272317, SN B300003516 through B300005760, Except SN 0300272185 through 0300272190, Excluding B300005569)**	
	1001152457	Ref	GENERATOR JUNCTION BOX COMPONENTS	
101	1001179154	2.5 ft /0.76m	Cable, Electrical - 12/3	
102	3300396	1	Cover, Breaker	
103	3311001	4	Nut #10	
104	3900300	2	Screw	
105	4360070	1	Breaker, Circuit - 15Amp	
107	4460425	1	Connector, Strain Relief (LH Side)	
108	4460426	1	Connector, Strain Relief (RH Side)	
110	4711000	8	Washer #10	
112	1001152456	1	Box, Junction	
113	1001152525	1	Plug	
114	1001152530	1	Terminal, Block	
115	1001153260	1	Decal - Wiring Diagram	
116	3900267	2	Screw	
117	1001158008	2	Stand-Off	
118	1001158363	1	Cover, Terminal Block	

FIGURE 3-67. GENERATOR INSTALLATION - 4000W/60HZ (DEUTZ D2.9L4 ENGINE)

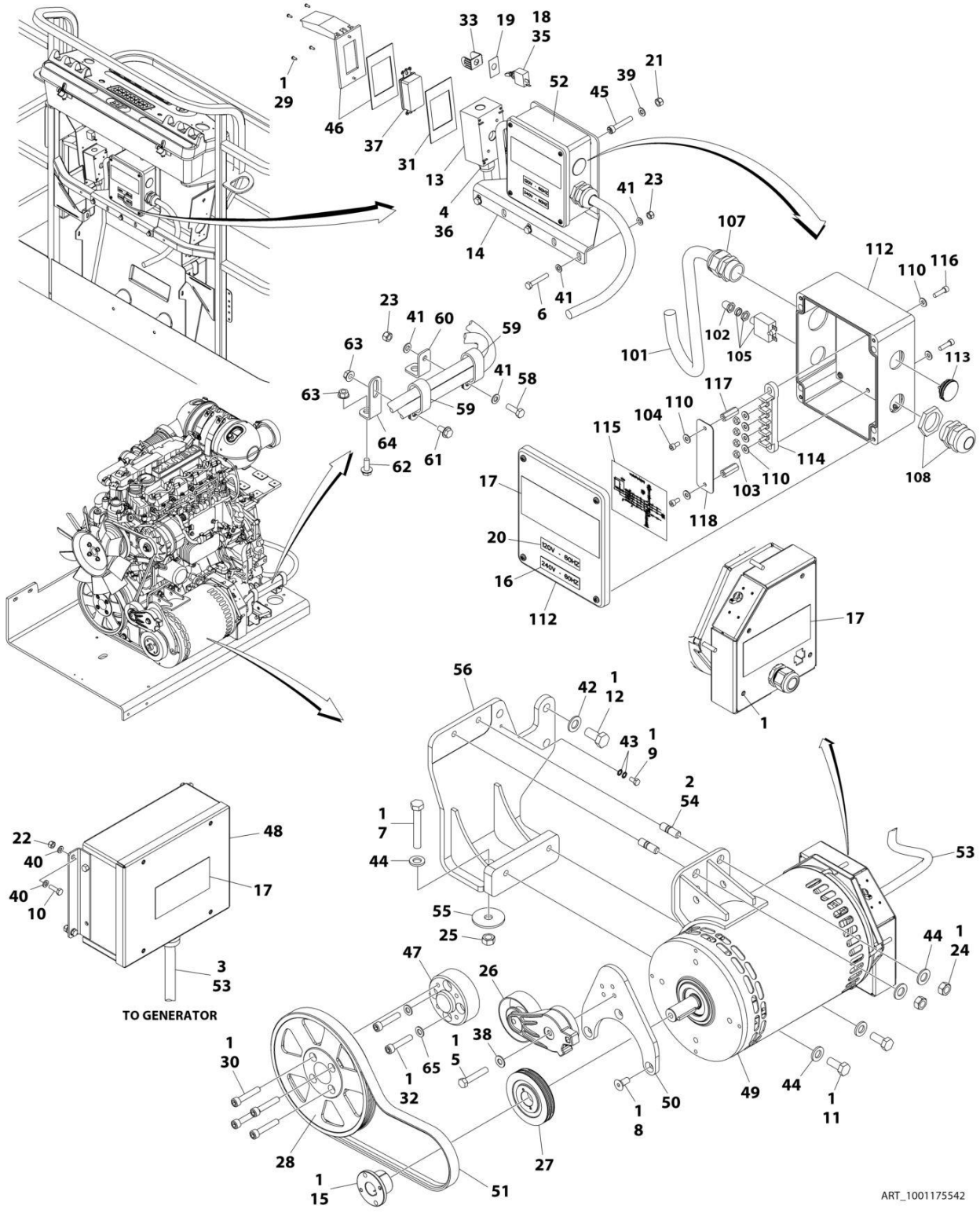

FIGURE 3-67. GENERATOR INSTALLATION - 4000W/60HZ (DEUTZ D2.9L4 ENGINE)

ITEM	PART NUMBER	QTY	DESCRIPTION	REV
	1001175542	Ref	GENERATOR INSTALLATION - 4000W/60Hz (DEUTZ D2.9L4 ENGINE)	H
1	0100011	AR	Compound, Locking	
2	0100019	AR	Compound, Locking	
3	0100048	AR	Grease, Dielectric	
4	0100079	AR	Sealant	
5	0641616	1	Bolt 3/8 x 2	
6	0700818	3	Bolt M8 x 50	
7	0711224	1	Bolt M12 x 80 Grade 10.9	
8	0741607	3	Screw 3/8 x 7/8	
9	0760606	1	Bolt M6 x 12	
10	0760610	4	Bolt M6 x 20	
11	0761212	2	Bolt M12 x 25	
12	0771414	3	Bolt M14 x 30 Grade 10.9	
13	0860038	1	Box, Switch	
14	0902888	1	Bracket	
15	0962520	1	Bushing	
16	1705374	1	Decal - 240V-60Hz	
17	1705387	3	Decal - Hazardous Voltage	
18	2820031	AR	Heat Shrink	
19	See Note	1	Nameplate (Note: Not Available for Purchase)	
20	3251243	1	Nameplate 120V-60Hz	
21	3290505	4	Nut M5	
22	3290605	4	Nut M6	
23	3290805	4	Nut M8	
24	3291201	2	Nut M12	
25	3331211	1	Nut M12	
26	3580317	1	Pulley	
27	3580318	1	Pulley	
28	3580320	1	Pulley	
29	3910606	4	Screw #6 x 3/8	
30	3931628	4	Capscrew 3/8 x 1-3/4	
31	3960422	1	Gasket	
32	4032013	4	Capscrew M10 x 45	
32	4032014	4	Capscrew M10 x 50	
33	4060802	1	Guard, Switch	
34	4240099	AR	Tie-Strap (Not Shown)	
35	4360336	1	Switch, Toggle	
36	4460071	1	Connector, Strain Relief	
37	4460346	1	Receptacle	
38	4711600	1	Washer 3/8	
39	4811600	4	Washer M5	
40	4811700	8	Washer M6	
41	4811900	8	Washer M8	
42	4812200	3	Washer M14	
43	4871700	2	Washer M6	
44	5241200	5	Washer M12 Hardened	
45	1001104029	4	Screw M5 x 30	
46	1001110873	1	Shield, Cover	
47	1001135679	1	Adapter	

ITEM	PART NUMBER	QTY	DESCRIPTION	REV
48	1001138566	1	Box, Control	
48	70006552	1	Capacitor	
48	70006553	1	Relay	
49	1001140346	1	Generator Assembly	
49	70003709	1	Ring, Retaining (External)	
49	70003708	1	Ring, Retaining (Internal)	
49	70001966	1	Bearing	
49	70004092	1	Endbell (Shaft End)	
49	70004099	1	Key	
49	70004676	1	Rotor	
49	70004687	1	Stator	
49	70004678	1	Endbell (Rear)	
49	70004679	1	Cover, Endbell (Rear)	
49	70004680	1	Enclosure, Wiring	
49	70004685	1	Cover, Enclosure	
49	70004682	1	Switch, Reset (Located on Enclosure Cover)	
49	70004098	1	Connector, Strain Relief (Located on Enclosure Cover)	
50	1001142643	1	Support	
51	1001142646	1	Belt	
52	1001152457	1	Generator Junction Box Assembly (See Items 101-118 for Breakdown)	
53	1001152532	1	Harness, Generator (See ELECTRICAL SECTION for Breakdown)	
54	1001155041	2	Stud **(SN 0300201991 through 0300208597)**	
54	1001196382	2	Stud **(SN 0300208598 through 0300272317, SN B300003516 through B300005760, Except SN 0300272185 through 0300272190, Excluding B300005569)**	
55	1001168018	1	Washer, Snubbing	
56	1001168207	1	Support	
57	1001175631	1	Wiring Diagram (Not Shown - See ELECTRICAL SECTION for Breakdown)	
58	0760812	1	Bolt M8 x 25	
59	1321716	AR	Clamp	
60	1001148641	1	Bracket	
61	5250808	AR	Bolt M8 x 16	
62	5250810	AR	Bolt M8 x 20	
63	5260800	AR	Nut M8	
64	1001223122	1	Support **(SN 0300226829 through 0300272317, SN B300003516 through B300005760, Except SN 0300272185 through 0300272190, Excluding B300005569)**	
65	4812000	4	Washer M10	
	1001152457	Ref	GENERATOR JUNCTION BOX COMPONENTS	
101	1001179154	2.5 ft /0.8m	Cable, Electrical - 12/3	
102	3300396	1	Cover, Breaker	
103	3311001	4	Nut #10	
104	3900300	2	Screw	
105	4360070	1	Breaker, Circuit - 15Amp	
107	4460425	1	Connector, Strain Relief (LH Side)	
108	4460426	1	Connector, Strain Relief (RH Side)	
110	4711000	8	Washer #10	
112	1001152456	1	Box, Junction	
113	1001152525	1	Plug	
114	1001152530	1	Terminal, Block	

ITEM	PART NUMBER	QTY	DESCRIPTION	REV
115	1001153260	1	Decal - Wiring Diagram	
116	3900267	2	Screw	
117	1001158008	2	Stand-Off	
118	1001158363	1	Cover, Terminal Block	

FIGURE 3-68. GENERATOR INSTALLATION - 4000W/60HZ (GM ENGINE)

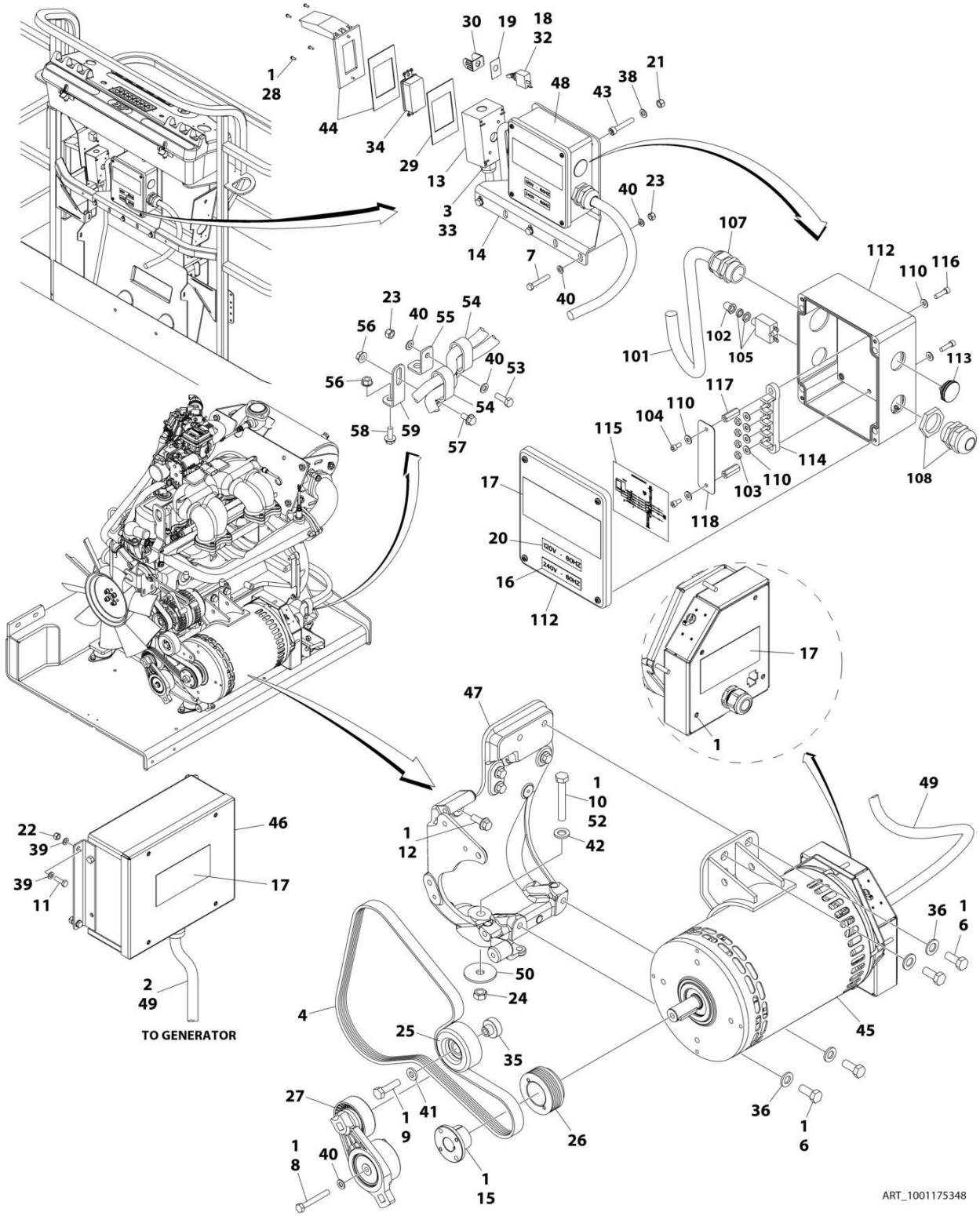

FIGURE 3-68. GENERATOR INSTALLATION - 4000W/60HZ (GM ENGINE)

ITEM	PART NUMBER	QTY	DESCRIPTION	REV
	1001175348	Ref	GENERATOR INSTALLATION - 4000W/60Hz (GM ENGINE)	E
1	0100011	AR	Compound, Locking	
2	0100048	AR	Grease, Dielectric	
3	0100079	AR	Sealant	
4	0480142	1	Belt	
6	0641808	4	Bolt 1/2 x 1	
7	0700818	3	Bolt M8 x 50	
8	0700820	1	Bolt M8 x 60	
9	0701016	1	Bolt M10 x 40	
10	0711227	1	Bolt M12 x 100	
11	0760610	4	Bolt M6 x 20	
12	0811608	4	Screw 3/8 x 1	
13	0860038	1	Box, Switch	
14	0902888	1	Bracket	
15	0962520	1	Bushing	
16	1705374	1	Decal - 240V-60Hz	
17	1705387	3	Decal - Hazardous Voltage	
18	2820031	AR	Heat Shrink	
19	See Note	1	Nameplate (Note: Not Available for Purchase)	
20	3251243	1	Nameplate 120V-60Hz	
21	3290505	4	Nut M5	
22	3290605	4	Nut M6	
23	3290805	4	Nut M8	
24	3331211	1	Nut M12	
25	3580312	1	Pulley	
26	3580314	1	Pulley	
27	3580348	1	Pulley	
28	3910606	4	Screw #6 x 3/8	
29	3960422	1	Gasket	
30	4060802	1	Guard, Switch	
31	4240099	AR	Tie-Strap (Not Shown)	
32	4360336	1	Switch, Toggle	
33	4460071	1	Connector, Strain Relief	
34	4460346	1	Receptacle	
35	4568735	1	Spacer	
36	4711800	4	Washer 1/2	
38	4811600	4	Washer M5	
39	4811700	8	Washer M6	
40	4811900	9	Washer M8	
41	4891600	1	Washer 3/8	
42	5241200	1	Washer M12 Hardened	
43	1001104029	4	Screw M5 x 30	
44	1001110873	1	Shield, Cover	
45	1001129858	1	Generator	
45	70003709	1	Ring, Retaining (External)	
45	70003708	1	Ring, Retaining (Internal)	
45	70001966	1	Bearing	
45	70004092	1	Endbell (Shaft End)	
45	70004171	1	Key	
45	70004676	1	Rotor	

ITEM	PART NUMBER	QTY	DESCRIPTION	REV
45	70004684	1	Stator	
45	70004678	1	Endbell (Rear)	
45	70004679	1	Cover, Endbell (Rear)	
45	70004680	1	Enclosure, Wiring	
45	70004685	1	Cover, Enclosure	
45	70004682	1	Switch, Reset (Located on Enclosure Cover)	
45	70004098	1	Connector, Strain Relief (Located on Enclosure Cover)	
46	1001138566	1	Box, Control	
46	70006552	1	Capacitor	
46	70006553	1	Relay	
47	1001141181	1	Support	
48	1001152457	1	Generator Junction Box Assembly (See Items 101-118 for Breakdown)	
49	1001152532	1	Harness, Generator (See ELECTRICAL SECTION for Breakdown)	
50	1001168018	1	Washer, Snubbing	
51	1001175631	1	Wiring Diagram (Not Shown - See ELECTRICAL SECTION for Breakdown)	
52	0711221	1	Bolt M12 x 65 Grade 10.9	
53	0760812	1	Bolt M8 x 25	
54	1321716	AR	Clamp	
55	1001148641	1	Bracket	
56	5260800	AR	Nut M8	
57	5250808	AR	Bolt M8 x 16	
58	5250810	AR	Bolt M8 x 20	
59	1001223122	1	Support **(SN 0300226829 through 0300272317, Except SN 0300272185 through 0300272190)**	
	1001152457	Ref	GENERATOR JUNCTION BOX COMPONENTS	
101	1001179154	2.5 ft /0.8m	Cable, Electrical - 12/3	
102	3300396	1	Cover, Breaker	
103	3311001	4	Nut #10	
104	3900300	2	Screw	
105	4360070	1	Breaker, Circuit - 15Amp	
107	4460425	1	Connector, Strain Relief (LH Side)	
108	4460426	1	Connector, Strain Relief (RH Side)	
110	4711000	8	Washer #10	
112	1001152456	1	Box, Junction	
113	1001152525	1	Plug	
114	1001152530	1	Terminal, Block	
115	1001153260	1	Decal - Wiring Diagram	
116	3900267	2	Screw	
117	1001158008	2	Stand-Off	
118	1001158363	1	Cover, Terminal Block	

FIGURE 3-69. GENERATOR INSTALLATION - 7500W/50HZ (DEUTZ D2011 ENGINE)

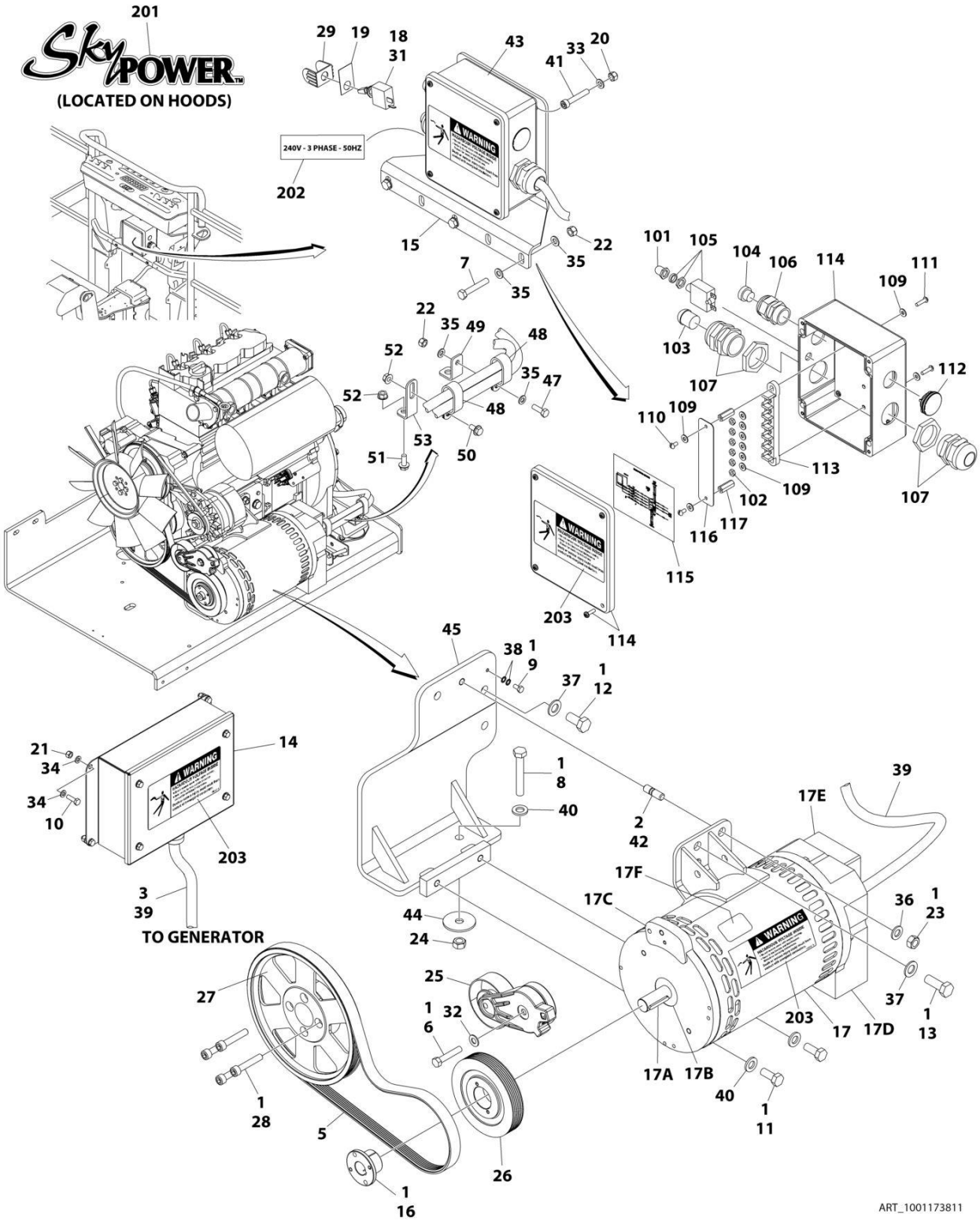

FIGURE 3-69. GENERATOR INSTALLATION - 7500W/50HZ (DEUTZ D2011 ENGINE)

ITEM	PART NUMBER	QTY	DESCRIPTION	REV
	1001173811	Ref	GENERATOR INSTALLATION - 7500W/50Hz (DEUTZ D2011 ENGINE)	E
1	0100011	AR	Compound, Locking	
2	0100019	AR	Compound, Locking	
3	0100048	AR	Grease, Dielectric	
4	0100079	AR	Sealant (Not Shown)	
5	0480126	1	Belt	
6	0641616	1	Bolt 3/8 x 2	
7	0700818	3	Bolt M8 x 50	
8	0711224	1	Bolt M12 x 80 Grade 10.9	
9	0760606	1	Bolt M6 x 12	
10	0760610	4	Bolt M6 x 20	
11	0761214	2	Bolt M12 x 30	
12	0771414	2	Bolt M14 x 30 Grade 10.9	
13	0771416	1	Bolt M14 x 40	
14	0861572	1	Control Box Assembly	
14	7024488	1	Card, Circuit - Generator Power	
14	See Note	NSS	Fuse (Note: Not Available - Purchase Locally)	
14	7024489	1	Card, Circuit - Control	
14	70000619	1	Harness, Control Box (Internal)	
15	0902888	1	Bracket	
16	0962520	1	Bushing	
17	2460048	1	Generator Assembly	
17	70001100	1	Rotor (Includes p/n 70001384 & 70000863) (Not Shown)	
17	70001384	1	Bearing, Ball Radial (Not Shown)	
17	70000863	1	Fan (Not Shown)	
17	70002088	1	Stator (Not Shown)	
17	70002297	1	Stud	
17	70003631	1	Brushholder Assembly (Not Shown)	
17A	70004171	1	Key	
17B	70001966	1	Bearing, Ball Radial (Located in Belt Tensioner Endbell)	
17B	70003708	1	Ring, Internal Retaining (Located in Belt Tensioner Endbell)	
17B	70003709	1	Ring, External Retaining (Located in Belt Tensioner Endbell)	
17C	70001953	1	Endbell, Belt Tensioner	
17D	70004169	1	Endbell, Brush Block	
17E	70004169	1	Shroud	
17E	See Note	NSS	Insulator, Endbell (Note: Not Available for Purchase)	
17E	7027799	1	Block, Connector 6 Position (Not Shown)	
17E	70002460	1	Nut, Brass (Attaches p/n 7027799 to Cover) (Not Shown)	
17E	7024485	1	Breaker, Circuit 30Amp (Not Shown)	
17E	70001696	1	Boot, Breaker (Not Shown)	
17E	7026626	1	Connector, 6 Position (Includes Seal) (Not Shown - Plugs into Item 39)	
17E	7026597	1	Connector, with Leads (Not Shown)	
17E	7026188	1	Clamp, Cable Options (Not Shown)	
17E	70004169	1	Plate, End Panel	
17E	70001974	1	Decal - Terminal Connections	
17F	70001973	1	Decal - Warning Moving Parts	
18	2820031	AR	Heat Shrink	
19	3252764	1	Nameplate	

ITEM	PART NUMBER	QTY	DESCRIPTION	REV
20	3290505	4	Nut M5	
21	3290605	4	Nut M6	
22	3290805	4	Nut M8	
23	3291201	1	Nut M12	
24	3331211	1	Nut M12	
25	3580317	1	Pulley	
26	3580319	1	Pulley	
27	3580320	1	Pulley	
28	4032015	4	Bolt M10 x 55	
29	4060802	1	Guard, Switch	
30	4240099	AR	Tie-Strap (Not Shown)	
31	4360336	1	Switch, Toggle	
32	4711600	1	Washer 3/8	
33	4811600	4	Washer M5	
34	4811700	8	Washer M6	
35	4811900	8	Washer M8	
36	4812100	1	Washer M12	
37	4812200	3	Washer M14	
38	4871700	2	Washer M6	
39	4922925	1	Harness, Generator	
39	4460225	1	Plug, Male 6 Position (Plugs into Generator)	
39	See Note	NSS	Socket, Female (Use with 4460225)	
39	See Note	NSS	Seal, Plug (Use with 4460225)	
39	See Note	NSS	Seal, Interface (Use with 4460225)	
40	5241200	3	Washer M12 Hardened	
41	1001104029	4	Screw M5 x 30	
42	1001155041	1	Stud **(SN 0300201991 through 0300208597, SN E300002833 through E300002838)**	
42	1001196382	1	Stud **(SN 0300208598 through 0300272317, SN 1300007279 through 1300007373, SN B300003516 through B300005760, SN E300002839 through E300007990, Except SN 0300272185 through 0300272190, Excluding B300005569 and E300007814)**	
43	1001157525	1	Junction Box Assembly (See Items 101-117 for Breakdown)	
44	1001168018	1	Washer, Snubbing	
45	1001173925	1	Mount	
46	1001174675	1	Wiring Diagram (Not Shown - See ELECTRICAL SECTION for Breakdown)	
47	0760812	1	Bolt M8 x 25	
48	1321716	AR	Clamp	
49	1001148641	1	Bracket	
50	5250808	AR	Bolt M8 x 16	
51	5250810	AR	Bolt M8 x 20	
52	5260800	AR	Nut M8	
53	1001223122	1	Support **(SN 0300226829 through 0300272317, SN 1300007279 through 1300007373, SN B300003516 through B300005760, SN E300004184 through E300007990, Except SN 0300272185 through 0300272190, Excluding B300005569 and E300007814)**	
	1001157525	Ref	JUNCTION BOX ASSEMBLY	B
101	3300396	1	Cover, Fuse	
102	3311001	6	Nut #10-24NC	
103	3520189	1	Plug	
104	3520192	1	Plug	
105	4360070	1	Circuit Breaker - 15Amp	

ITEM	PART NUMBER	QTY	DESCRIPTION	REV
106	4460425	1	Connector, Strain Relief	
107	4460426	2	Connector, Strain Relief	
109	4711000	10	Flatwasher, #10 Thin	
110	10702077	2	Screw #10-32NF x 3/8in	
111	10702082	2	Screw #10-32NF x 3/4in	
112	1001152525	1	Plug	
113	1001157520	1	Block, Terminal	
114	1001157521	1	Box, Junction	
115	1001157528	1	Decal - Wiring Schematic	
116	1001158007	1	Cover, PVC	
117	1001158008	2	Stand-Off	
	0272589	Ref	DECAL INSTALLATION	A
201	1705460	2	Decal - SkyPower	
202	1705461	1	Decal - 240V - 3 Phase - 50Hz	
203	1705489	3	Decal - Hazardous Voltage	

FIGURE 3-70. GENERATOR INSTALLATION - 7500W/60HZ (DEUTZ D2011 ENGINE)

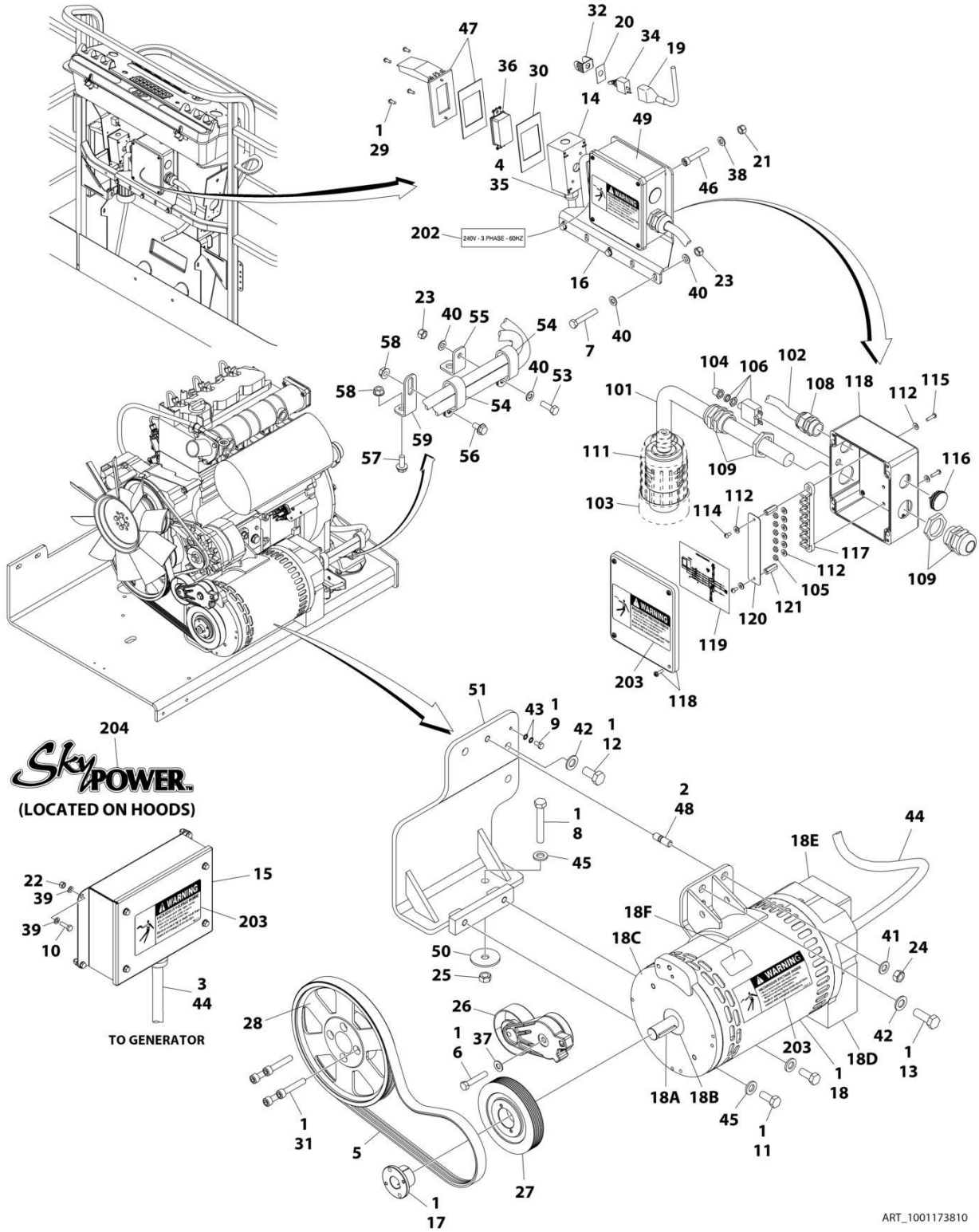

FIGURE 3-70. GENERATOR INSTALLATION - 7500W/60HZ (DEUTZ D2011 ENGINE)

ITEM	PART NUMBER	QTY	DESCRIPTION	REV
	1001173810	Ref	GENERATOR INSTALLATION - 7500W/60Hz (DEUTZ D2011 ENGINE)	E
1	0100011	AR	Compound, Locking	
2	0100019	AR	Compound, Locking	
3	0100048	AR	Grease, Dielectric	
4	0100079	AR	Sealant	
5	0480128	1	Belt	
6	0641616	1	Bolt 3/8 x 2	
7	0700818	3	Bolt M8 x 50	
8	0711224	1	Bolt M12 x 80 Grade 10.9	
9	0760606	1	Bolt M6 x 12	
10	0760610	4	Bolt M6 x 20	
11	0761214	2	Bolt M12 x 30	
12	0771414	2	Bolt M14 x 30 Grade 10.9	
13	0771416	1	Bolt M14 x 40	
14	0860038	1	Box, Switch	
15	0861538	1	Control Box Assembly	
15	7024488	1	Card, Circuit - Generator Power	
15	See Note	NSS	Fuse (Note: Not Available - Purchase Locally)	
15	7024489	1	Card, Circuit - Control	
15	70000619	1	Harness, Control Box (Internal)	
16	0902888	1	Bracket	
17	0962520	1	Bushing	
18	2460048	1	Generator Assembly	
18	70001100	1	Rotor (Includes p/n 70001384 & 70000863) (Not Shown)	
18	70001384	1	Bearing, Ball Radial (Not Shown)	
18	70000863	1	Fan (Not Shown)	
18	70002088	1	Stator (Not Shown)	
18	70002297	1	Stud	
18	70003631	1	Brushholder Assembly (Not Shown)	
18A	70004171	1	Key	
18B	70001966	1	Bearing, Ball Radial (Located in Belt Tensioner Endbell)	
18B	70003708	1	Ring, Internal Retaining (Located in Belt Tensioner Endbell)	
18B	70003709	1	Ring, External Retaining (Located in Belt Tensioner Endbell)	
18C	70001953	1	Endbell, Belt Tensioner	
18D	70004169	1	Endbell, Brush Block	
18E	70004169	1	Shroud	
18E	See Note	NSS	Insulator, Endbell (Note: Not Available for Purchase)	
18E	7027799	1	Block, Connector 6 Position (Not Shown)	
18E	70002460	1	Nut, Brass (Attaches p/n 7027799 to Cover) (Not Shown)	
18E	7024485	1	Breaker, Circuit 30Amp (Not Shown)	
18E	70001696	1	Boot, Breaker (Not Shown)	
18E	7026626	1	Connector, 6 Position (Includes Seal) (Not Shown - Plugs into Item 39)	
18E	7026597	1	Connector, with Leads (Not Shown)	
18E	7026188	1	Clamp, Cable Options (Not Shown)	
18E	70004169	1	Plate, End Panel	
18E	70001974	1	Decal - Terminal Connections	
18F	70001973	1	Decal - Warning Moving Parts	
19	2820031	AR	Heat Shrink	

ITEM	PART NUMBER	QTY	DESCRIPTION	REV
20	3252764	1	Nameplate	
21	3290505	4	Nut M5	
22	3290605	4	Nut M6	
23	3290805	4	Nut M8	
24	3291201	1	Nut M12	
25	3331211	1	Nut M12	
26	3580317	1	Pulley	
27	3580318	1	Pulley	
28	3580320	1	Pulley	
29	3910606	4	Screw #6 x 3/8	
30	3960422	1	Gasket	
31	4032015	4	Bolt M10 x 55	
32	4060802	1	Guard, Switch	
33	4240099	AR	Tie-Strap (Not Shown)	
34	4360336	1	Switch, Toggle	
35	4460071	1	Connector, Strain Relief	
36	4460346	1	Receptacle	
37	4711600	1	Washer 3/8	
38	4811600	4	Washer M5	
39	4811700	8	Washer M6	
40	4811900	8	Washer M8	
41	4812100	1	Washer M12	
42	4812200	3	Washer M14	
43	4871700	2	Washer M6	
44	4922925	1	Harness, Generator	
44	4460225	1	Plug, Male 6 Position (Plugs into Generator)	
44	See Note	NSS	Socket, Female (Use with 4460225)	
44	See Note	NSS	Seal, Plug (Use with 4460225)	
44	See Note	NSS	Seal, Interface (Use with 4460225)	
45	5241200	3	Washer M12 Hardened	
46	1001104029	4	Screw M5 x 30	
47	1001110873	1	Shield, Cover	
48	1001155041	1	Stud **(SN 0300201991 through 0300208597)**	
48	1001196382	1	Stud **(SN 0300208598 through 0300272317, SN B300003516 through B300005760, Except SN 0300272185 through 0300272190, Excluding B300005569)**	
49	1001157592	1	Junction Box Assembly Options (See Items 101-121 for Breakdown)	
50	1001168018	1	Washer, Snubbing	
51	1001173925	1	Mount	
52	1001174675	1	Wiring Diagram (Not Shown - See ELECTRICAL SECTION for Breakdown)	
53	0760812	1	Bolt M8 x 25	
54	1321716	AR	Clamp	
55	1001148641	1	Bracket	
56	5250808	AR	Bolt M8 x 16	
57	5250810	AR	Bolt M8 x 20	
58	5260800	AR	Nut M8	
59	1001223122	1	Support **(SN 0300226829 through 0300272317, SN B300003516 through B300005760, Except SN 0300272185 through 0300272190, Excluding B300005569)**	
	1001157592	Ref	JUNCTION BOX ASSEMBLY	C
101	1060343	1.5 ft	Cable, Electrical 10/4	

ITEM	PART NUMBER	QTY	DESCRIPTION	REV
		/0.5m		
102	1001179154	2.5 ft /0.8m	Cable, Electrical 12/3	
103	1671092	1	Cover	
104	3300396	1	Cover, Fuse	
105	3311001	6	Nut #10-24NC	
106	4360070	1	Circuit Breaker - 15Amp	
108	4460425	1	Connector, Strain Relief	
109	4460426	2	Connector, Strain Relief	
111	4460963	1	Connector	
112	4711000	10	Flatwasher, #10 Thin	
114	10702077	2	Screw #10-32NF x 3/8in	
115	10702082	2	Screw #10-32NF x 3/4in	
116	1001152525	1	Plug	
117	1001157520	1	Block, Terminal	
118	1001157521	1	Box, Junction	
119	1001157528	1	Decal - Wiring Schematic	
120	1001158007	1	Cover, PVC	
121	1001158008	2	Stand-Off	
	0273380	Ref	DECAL INSTALLATION	B
202	1705375	1	Decal - 240V - 3 Phase - 60Hz	
203	1705387	3	Decal - Hazardous Voltage	
204	1705460	2	Decal - SkyPower	

FIGURE 3-71. GENERATOR INSTALLATION - 7500W/60HZ (DEUTZ D2.9L4 ENGINE)

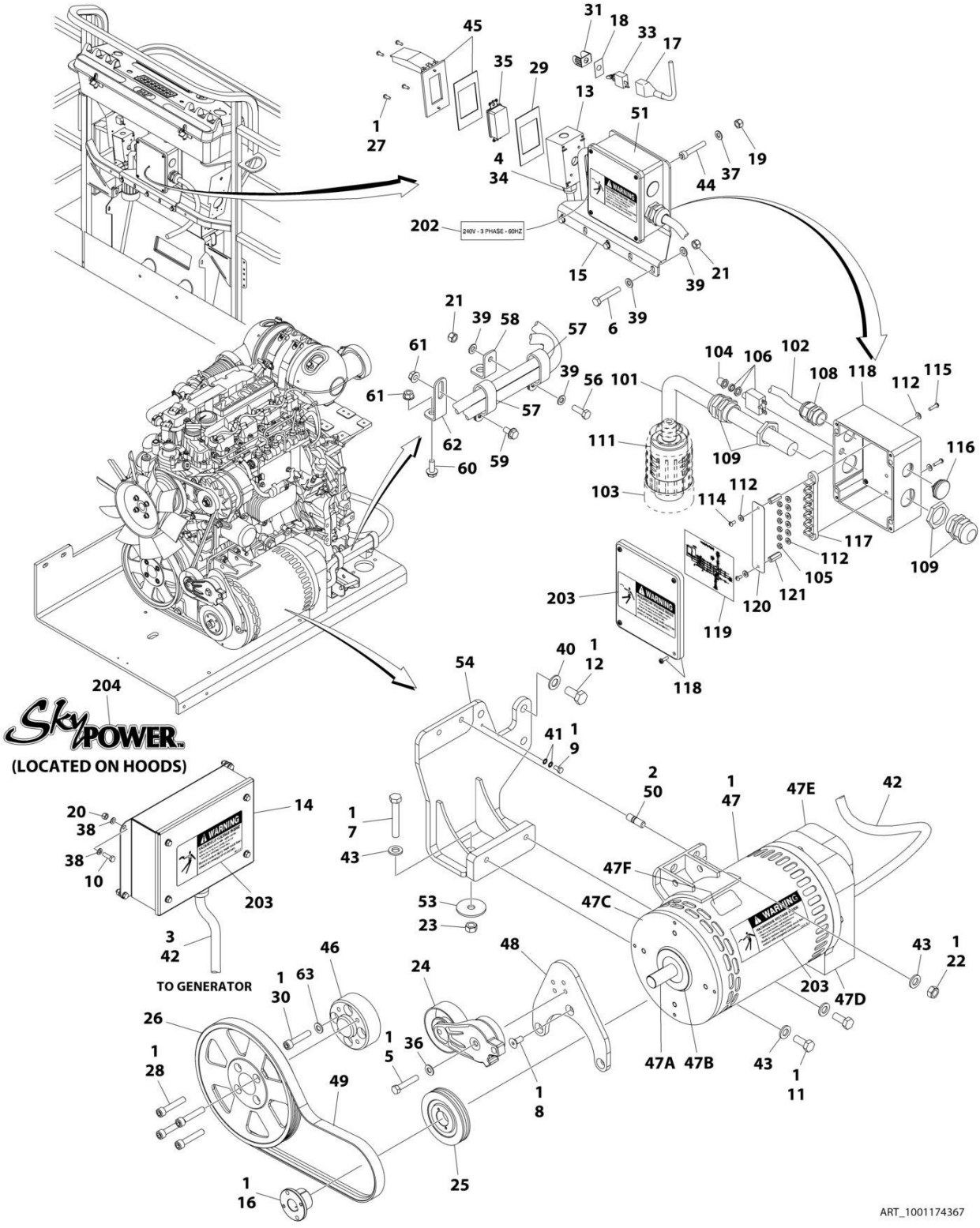

FIGURE 3-71. GENERATOR INSTALLATION - 7500W/60HZ (DEUTZ D2.9L4 ENGINE)

ITEM	PART NUMBER	QTY	DESCRIPTION	REV
	1001174367	Ref	GENERATOR INSTALLATION - 7500W/60Hz (DEUTZ D2.9L4 ENGINE)	H
1	0100011	AR	Compound, Locking	
2	0100019	AR	Compound, Locking	
3	0100048	AR	Grease, Dielectric	
4	0100079	AR	Sealant	
5	0641616	1	Bolt 3/8 x 2	
6	0700818	3	Bolt M8 x 50	
7	0711224	1	Bolt M12 x 80 Grade 10.9	
8	0741607	3	Screw 3/8 x 7/8	
9	0760606	1	Bolt M6 x 12	
10	0760610	4	Bolt M6 x 20	
11	0761212	2	Bolt M12 x 25	
12	0771414	3	Bolt M14 x 30 Grade 10.9	
13	0860038	1	Box, Switch	
14	0861538	1	Control Box Assembly	
14	7024488	1	Card, Circuit - Generator Power	
14	See Note	NSS	Fuse (Note: Not Available - Purchase Locally)	
14	7024489	1	Card, Circuit - Control	
14	70000619	1	Harness, Control Box (Internal)	
15	0902888	1	Bracket	
16	0962520	1	Bushing	
17	2820031	AR	Heat Shrink	
18	3252764	1	Nameplate	
19	3290505	4	Nut M5	
20	3290605	4	Nut M6	
21	3290805	4	Nut M8	
22	3291201	2	Nut M12	
23	3331211	1	Nut M12	
24	3580317	1	Pulley	
25	3580318	1	Pulley	
26	3580320	1	Pulley	
27	3910606	4	Screw #6 x 3/8	
28	3931628	4	Capscrew 3/8 x 1-3/4	
29	3960422	1	Gasket	
30	4032013	4	Bolt M10 x 45	
30	4032014	4	Bolt M10 x 50	
31	4060802	1	Guard, Switch	
32	4240099	AR	Tie-Strap (Not Shown)	
33	4360336	1	Switch, Toggle	
34	4460071	1	Connector, Strain Relief	
35	4460346	1	Receptacle	
36	4711600	1	Washer 3/8	
37	4811600	4	Washer M5	
38	4811700	8	Washer M6	
39	4811900	8	Washer M8	
40	4812200	3	Washer M14	
41	4871700	2	Washer M6	
42	4922925	1	Harness, Generator	
42	4460225	1	Plug, Male 6 Position (Plugs into Generator)	

ITEM	PART NUMBER	QTY	DESCRIPTION	REV
42	See Note	NSS	Socket, Female (Use with 4460225)	
42	See Note	NSS	Seal, Plug (Use with 4460225)	
42	See Note	NSS	Seal, Interface (Use with 4460225)	
43	5241200	5	Washer M12 Hardened	
44	1001104029	4	Screw M5 x 30	
45	1001110873	1	Shield, Cover	
46	1001135679	1	Adapter	
47	1001136988	NLA	Generator Assembly (Use p/n 1001212223) **(SN 0300201991 through 0300226168)**	
47	1001212223	1	Generator Assembly **(SN 0300226169 through 0300272317, SN B300003516 through B300005760, Except SN 0300272185 through 0300272190, Excluding B300005569)**	
47	70001100	1	Rotor (Includes p/n 70001384 & 70000863) (Not Shown)	
47	70001384	1	Bearing, Ball Radial (Not Shown)	
47	70000863	1	Fan (Not Shown)	
47	70004093	1	Stator (Not Shown) (1001136988 Generator)	
47	70006093	1	Stator (Not Shown) (1001212223 Generator)	
47	70002297	1	Stud	
47	70003631	1	Brushholder Assembly (Not Shown)	
47A	70004099	1	Key	
47B	70001966	1	Bearing, Ball Radial (Located in Belt Tensioner Endbell)	
47B	70003708	1	Ring, Internal Retaining (Located in Belt Tensioner Endbell)	
47B	70003709	1	Ring, External Retaining (Located in Belt Tensioner Endbell)	
47C	70004092	1	Endbell, Belt Tensioner	
47D	70004094	1	Endbell, Brush Block	
47E	70004096	1	Shroud (1001136988 Generator)	
47E	70006094	1	Shroud (1001212223 Generator)	
47E	70004097	1	Insulator, Endbell (1001136988 Generator)	
47E	70002291	1	Insulator, Endbell (1001212223 Generator)	
47E	7027799	1	Block, Connector 6 Position (Not Shown)	
47E	70002460	1	Nut, Brass (Attaches p/n 7027799 to Cover) (Not Shown)	
47E	7024485	1	Breaker, Circuit 30Amp (Not Shown) (1001136988 Generator)	
47E	70006095	1	Breaker, Circuit 30Amp (Not Shown) (1001212223 Generator)	
47E	70001696	1	Boot, Breaker (Not Shown) (1001136988 Generator)	
47E	70006096	1	Guard, Breaker (Not Shown) (1001212223 Generator)	
47E	7026626	1	Connector, 6 Position (Includes Seal) (Not Shown - Plugs into Item 36)	
47E	7026597	1	Connector, with Leads (Not Shown)	
47E	70004098	1	Clamp, Cable (Not Shown)	
47E	70004095	1	Plate, End Panel (1001136988 Generator)	
47E	70006097	1	Plate, End Panel (1001212223 Generator)	
47E	70001974	1	Decal - Terminal Connections	
47F	70001973	1	Decal - Warning Moving Parts	
48	1001142643	1	Support	
49	1001142646	1	Belt	
50	1001155041	2	Stud **(SN 0300201991 through 0300208597)**	
50	1001196382	2	Stud **(SN 0300208598 through 0300272317, SN B300003516 through B300005760, Except SN 0300272185 through 0300272190, Excluding B300005569)**	
51	1001157592	1	Junction Box Assembly Options (See Items 101-121 for Breakdown)	
53	1001168018	1	Washer, Snubbing	
54	1001168207	1	Support	

ITEM	PART NUMBER	QTY	DESCRIPTION	REV
55	1001174675	1	Wiring Diagram (Not Shown - See ELECTRICAL SECTION for Breakdown)	
56	0760812	1	Bolt M8 x 25	
57	1321716	AR	Clamp	
58	1001148641	1	Bracket	
59	5250808	AR	Bolt M8 x 16	
60	5250810	AR	Bolt M8 x 20	
61	5260800	AR	Nut M8	
62	1001223122	1	Support **(SN 0300226829 through 0300272317, SN B300003516 through B300005760, Except SN 0300272185 through 0300272190, Excluding B300005569)**	
63	4812000	4	Washer M10	
	1001157592	Ref	JUNCTION BOX ASSEMBLY	C
101	1060343	1.5 ft/ 0.5m	Cable, Electrical 10/4	
102	1001179154	2.5 ft/ 0.8m	Cable, Electrical 12/3	
103	1671092	1	Cover	
104	3300396	1	Cover, Fuse	
105	3311001	6	Nut #10-24NC	
106	4360070	1	Circuit Breaker - 15Amp	
108	4460425	1	Connector, Strain Relief	
109	4460426	2	Connector, Strain Relief	
111	4460963	1	Connector	
112	4711000	10	Flatwasher, #10 Thin	
114	10702077	2	Screw #10-32NF x 3/8in	
115	10702082	2	Screw #10-32NF x 3/4in	
116	1001152525	1	Plug	
117	1001157520	1	Block, Terminal	
118	1001157521	1	Box, Junction	
119	1001157528	1	Decal - Wiring Schematic	
120	1001158007	1	Cover, PVC	
121	1001158008	2	Stand-Off	
	0273380	Ref	DECAL INSTALLATION	B
202	1705375	1	Decal - 240V - 3 Phase - 60Hz	
203	1705387	3	Decal - Hazardous Voltage	
204	1705460	2	Decal - SkyPower	

FIGURE 3-72. GENERATOR INSTALLATION - 7500W/60HZ (GM ENGINE)

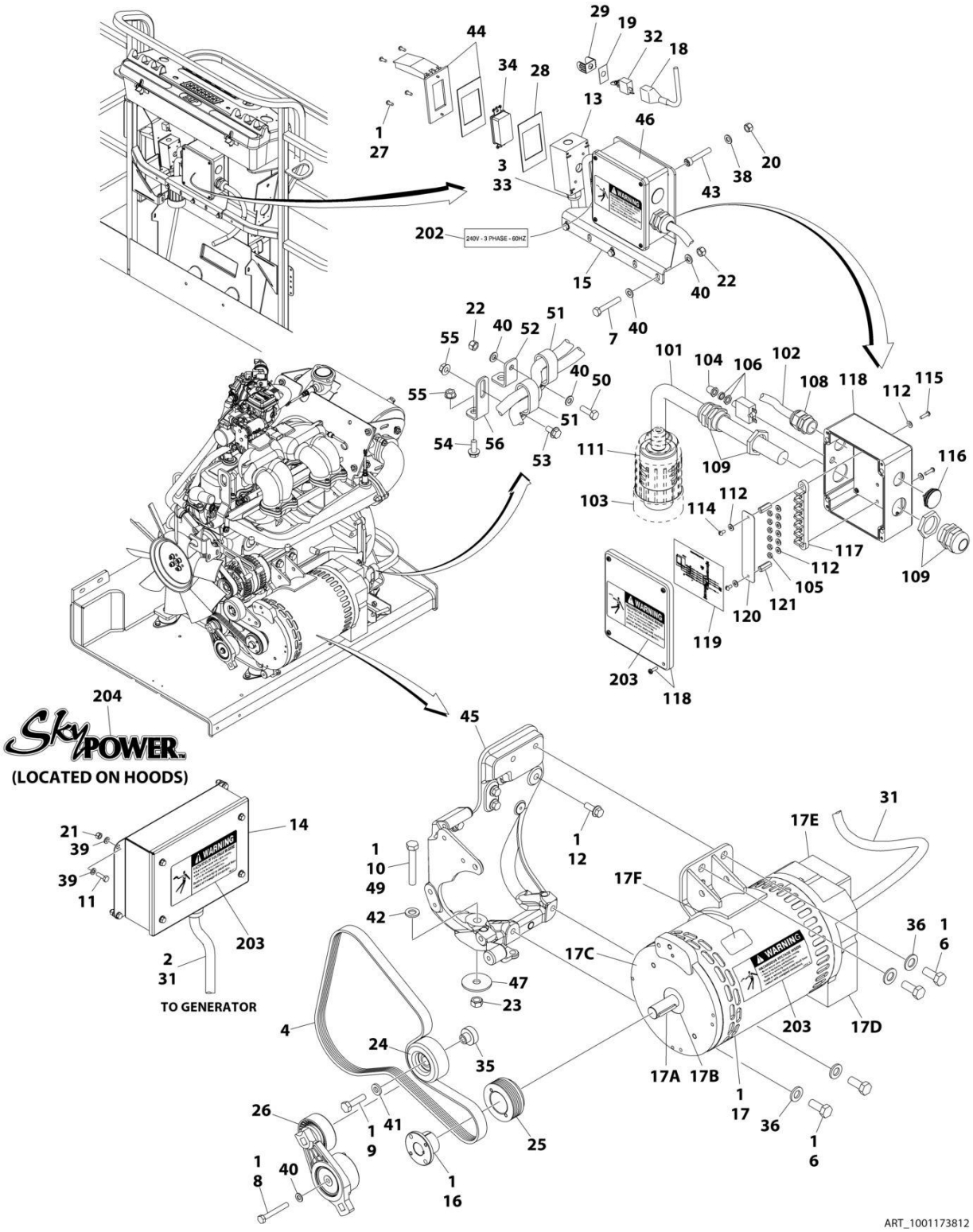

FIGURE 3-72. GENERATOR INSTALLATION - 7500W/60HZ (GM ENGINE)

ITEM	PART NUMBER	QTY	DESCRIPTION	REV
	1001173812	Ref	GENERATOR INSTALLATION - 7500W/60HZ (GM ENGINE)	E
1	0100011	AR	Compound, Locking	
2	0100048	AR	Grease, Dielectric	
3	0100079	AR	Sealant	
4	0480142	1	Belt	
6	0641808	4	Bolt 1/2 x 1	
7	0700818	3	Bolt M8 x 50	
8	0700820	1	Bolt M8 x 60	
9	0701016	1	Bolt M10 x 40	
10	0711227	1	Bolt M12 x 100	
11	0760610	4	Bolt M6 x 20	
12	0811608	4	Screw 3/8 x 1	
13	0860038	1	Box, Switch	
14	0861538	1	Control Box Assembly	
14	7024488	1	Card, Circuit - Generator Power	
14	See Note	NSS	Fuse (Note: Not Available - Purchase Locally)	
14	7024489	1	Card, Circuit - Control	
14	70000619	1	Harness, Control Box (Internal)	
15	0902888	1	Bracket	
16	0962520	1	Bushing	
17	2460048	1	Generator Assembly	
17	70001100	1	Rotor (Includes p/n 70001384 & 70000863) (Not Shown)	
17	70001384	1	Bearing, Ball Radial (Not Shown)	
17	70000863	1	Fan (Not Shown)	
17	70002088	1	Stator (Not Shown)	
17	70002297	1	Stud	
17	70003631	1	Brushholder Assembly (Not Shown)	
17A	70004171	1	Key	
17B	70001966	1	Bearing, Ball Radial (Located in Belt Tensioner Endbell)	
17B	70003708	1	Ring, Internal Retaining (Located in Belt Tensioner Endbell)	
17B	70003709	1	Ring, External Retaining (Located in Belt Tensioner Endbell)	
17C	70001953	1	Endbell, Belt Tensioner	
17D	70004169	1	Endbell, Brush Block	
17E	70004169	1	Shroud	
17E	See Note	NSS	Insulator, Endbell (Note: Not Available for Purchase)	
17E	7027799	1	Block, Connector - 6 Position (Not Shown)	
17E	70002460	1	Nut, Brass (Attaches p/n 7027799 to Cover) (Not Shown)	
17E	7024485	1	Breaker, Circuit 30Amp (Not Shown)	
17E	70001696	1	Boot, Breaker (Not Shown)	
17E	7026626	1	Connector - 6 Position (Includes Seal) (Not Shown - Plugs into Item 39)	
17E	7026597	1	Connector, with Leads (Not Shown)	
17E	7026188	1	Clamp, Cable Options (Not Shown)	
17E	70004169	1	Plate, End Panel	
17E	70001974	1	Decal - Terminal Connections	
17F	70001973	1	Decal - Warning Moving Parts	
18	2820031	AR	Heat Shrink	
19	3252764	1	Nameplate	
20	3290505	4	Nut M5	
21	3290605	4	Nut M6	

ITEM	PART NUMBER	QTY	DESCRIPTION	REV
22	3290805	4	Nut M8	
23	3331211	1	Nut M12	
24	3580312	1	Pulley	
25	3580314	1	Pulley	
26	3580348	1	Pulley	
27	3910606	4	Screw #6 x 3/8	
28	3960422	1	Gasket	
29	4060802	1	Guard, Switch	
30	4240099	AR	Tie-Strap (Not Shown)	
31	4922925	1	Harness, Generator	
31	4460225	1	Plug, Male - 6 Position (Plugs into Generator)	
31	See Note	NSS	Socket, Female (Use with 4460225)	
31	See Note	NSS	Seal, Plug (Use with 4460225)	
31	See Note	NSS	Seal, Interface (Use with 4460225)	
32	4360336	1	Switch, Toggle	
33	4460071	1	Connector, Strain Relief	
34	4460346	1	Receptacle	
35	4568735	1	Spacer	
36	4711800	4	Washer 1/2	
38	4811600	4	Washer M5	
39	4811700	8	Washer M6	
40	4811900	9	Washer M8	
41	4891600	1	Washer 3/8	
42	5241200	1	Washer M12 Hardened	
43	1001104029	4	Screw M5 x 30	
44	1001110873	1	Shield, Cover	
45	1001141181	1	Support	
46	1001157592	1	Junction Box Assembly (See Items 101-121 for Breakdown)	
47	1001168018	1	Washer, Snubbing	
48	1001174675	1	Wiring Diagram (Not Shown - See ELECTRICAL SECTION for Breakdown)	
49	0711221	1	Bolt M12 x 65 Grade 10.9	
50	0760812	1	Bolt M8 x 25	
51	1321716	AR	Clamp	
52	1001148641	1	Bracket	
53	5250808	AR	Bolt M8 x 16	
54	5250810	AR	Bolt M8 x 20	
55	5260800	AR	Nut M8	
56	1001223122	1	Support **(SN 0300226829 through 0300272317, Except SN 0300272185 through 0300272190)**	
	1001157592	Ref	JUNCTION BOX ASSEMBLY	C
101	1060343	1.5 ft /0.5m	Cable, Electrical 10/4	
102	1001179154	2.5 ft /0.8m	Cable, Electrical 12/3	
103	1671092	1	Cover	
104	3300396	1	Cover, Fuse	
105	3311001	6	Nut #10-24NC	
106	4360070	1	Circuit Breaker - 15Amp	
108	4460425	1	Connector, Strain Relief	
109	4460426	2	Connector, Strain Relief	
111	4460963	1	Connector	

ITEM	PART NUMBER	QTY	DESCRIPTION	REV
112	4711000	10	Flatwasher, #10 Thin	
114	10702077	2	Screw #10-32NF x 3/8in	
115	10702082	2	Screw #10-32NF x 3/4in	
116	1001152525	1	Plug	
117	1001157520	1	Block, Terminal	
118	1001157521	1	Box, Junction	
119	1001157528	1	Decal - Wiring Schematic	
120	1001158007	1	Cover, PVC	
121	1001158008	2	Stand-Off	
	0273380	Ref	DECAL INSTALLATION	B
202	1705375	1	Decal - 240V-3 Phase-60Hz	
203	1705387	3	Decal - Hazardous Voltage	
204	1705460	2	Decal - SkyPower	

FIGURE 3-73. GENERATOR INSTALLATION - 7500W/60HZ (KUBOTA ENGINE)

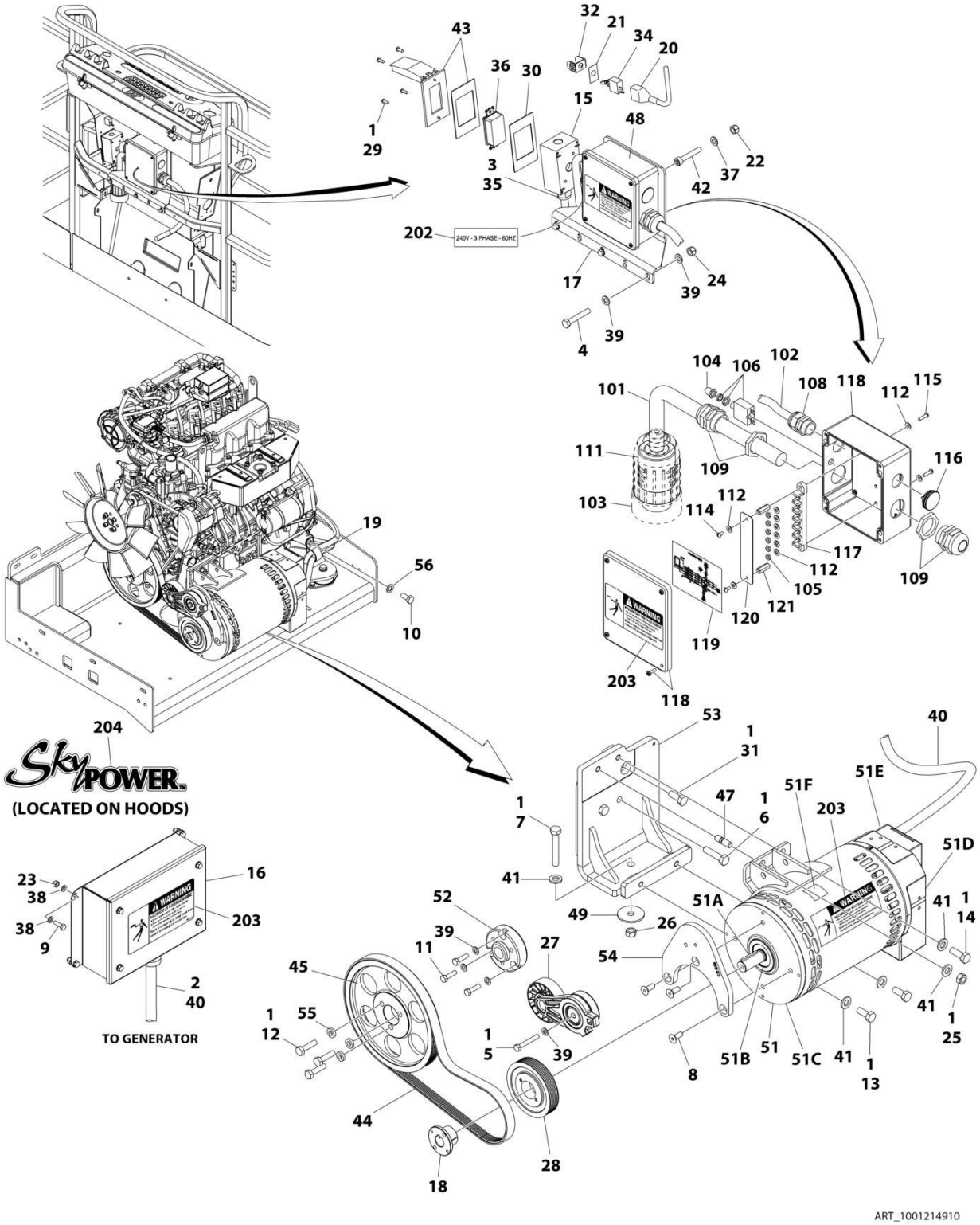

FIGURE 3-73. GENERATOR INSTALLATION - 7500W/60HZ (KUBOTA ENGINE)

ITEM	PART NUMBER	QTY	DESCRIPTION	REV
	1001214910	Ref	GENERATOR INSTALLATION - 7500W/60HZ (KUBOTA ENGINE)	C
1	0100011	AR	Compound, Locking	
2	0100048	AR	Grease, Dielectric	
3	0100079	AR	Sealant	
4	0700818	3	Bolt M8 x 50	
5	0700819	1	Bolt M8 x 55	
6	1001217344	2	Bolt M12 x 50	
7	0711224	1	Bolt M12 x 80 Grade 10.9	
7	0701224	1	Bolt M12 x 80	
8	0741608	3	Screw 3/8 x 1	
9	0760610	4	Bolt M6 x 20	
10	1001217345	1	Bolt M14 x 30	
11	0760814	3	Bolt M8 x 30	
12	0701016	3	Bolt M10 x 40	
13	0761214	2	Bolt M12 x 30	
14	0761215	1	Bolt M12 x 35	
15	0860038	1	Box, Switch	
16	0861538	1	Control Box Assembly	
16	7024488	1	Card, Circuit - Generator Power	
16	See Note	NSS	Fuse (Note: Not Available - Purchase Locally)	
16	7024489	1	Card, Circuit - Control	
16	70000619	1	Harness, Control Box (Internal)	
17	0902888	1	Bracket	
18	0962520	1	Bushing	
19	84521062	1	Clamp	
20	2820031	AR	Heat Shrink	
21	3252764	1	Nameplate	
22	3290505	4	Nut M5	
23	3290605	4	Nut M6	
24	3290805	3	Nut M8	
25	3291201	1	Nut M12	
26	3331211	1	Nut M12	
26	3291201	1	Nut M12	
27	3580317	1	Pulley	
28	3580318	1	Pulley	
29	3910606	4	Screw #6 x 3/8	
30	3960422	1	Gasket	
31	1001217342	1	Bolt M12 x 30	
32	4060802	1	Guard, Switch	
33	4240099	AR	Tie-Strap (Not Shown)	
34	4360336	1	Switch, Toggle	
35	4460071	1	Connector, Strain Relief	
36	4460346	1	Receptacle	
37	4811600	4	Washer M5	
38	4811700	8	Washer M6	
39	4811900	10	Washer M8	
40	4922925	1	Harness, Generator	
40	4460225	1	Plug, Male - 6 Position (Plugs into Generator)	
40	See Note	NSS	Socket, Female (Use with 4460225)	
40	See Note	NSS	Seal, Plug (Use with 4460225)	

ITEM	PART NUMBER	QTY	DESCRIPTION	REV
40	See Note	NSS	Seal, Interface (Use with 4460225)	
41	5241200	5	Washer M12 Hardened	
42	1001104029	4	Screw M5 x 30	
43	1001110873	1	Shield, Cover	
44	0480129	1	Belt	
45	1001147233	1	Pulley	
47	1001155041	1	Stud	
48	1001157592	1	Junction Box Assembly (See Items 101-121 for Breakdown)	
49	1001168018	1	Washer, Snubbing	
50	1001174675	1	Wiring Diagram (Not Shown - See ELECTRICAL SECTION for Breakdown)	
51	1001212223	1	Generator Assembly	
51	70001100	1	Rotor (Includes p/n 70001384 & 70000863) (Not Shown)	
51	70001384	1	Bearing, Ball Radial (Not Shown)	
51	70000863	1	Fan (Not Shown)	
51	70006093	1	Stator (Not Shown)	
51	70002297	1	Stud	
51	70003631	1	Brushholder Assembly (Not Shown)	
51A	70004099	1	Key	
51B	70001966	1	Bearing, Ball Radial (Located in Belt Tensioner Endbell)	
51B	70003708	1	Ring, Internal Retaining (Located in Belt Tensioner Endbell)	
51B	70003709	1	Ring, External Retaining (Located in Belt Tensioner Endbell)	
51C	70004092	1	Endbell, Belt Tensioner	
51D	70004094	1	Endbell, Brush Block	
51E	70006094	1	Shroud	
51E	70002291	1	Insulator, Endbell	
51E	7027799	1	Block, Connector 6 Position (Not Shown)	
51E	70002460	1	Nut, Brass (Attaches p/n 7027799 to Cover) (Not Shown)	
51E	70006095	1	Breaker, Circuit 30Amp (Not Shown)	
51E	70006096	1	Guard, Breaker (Not Shown)	
51E	7026626	1	Connector, 6 Position (Includes Seal) (Not Shown - Plugs into Item 36)	
51E	70004098	1	Clamp, Cable (Not Shown)	
51E	70006097	1	Plate, End Panel	
51E	70001974	1	Decal - Terminal Connections	
51F	70001973	1	Decal - Warning Moving Parts	
52	1001213029	1	Adapter, Pulley	
53	1001214546	1	Support	
54	1001215523	1	Support	
55	1001216805	3	Spacer	
56	4812200	1	Washer M14	
	1001157592	Ref	JUNCTION BOX ASSEMBLY	C
101	1060343	1.5 ft /0.5m	Cable, Electrical 10/4	
102	1001179154	2.5 ft /0.8m	Cable, Electrical 12/3	
103	1671092	1	Cover	
104	3300396	1	Cover, Fuse	
105	3311001	6	Nut #10	
106	4360070	1	Circuit Breaker - 15Amp	
108	4460425	1	Connector, Strain Relief	
109	4460426	2	Connector, Strain Relief	

ITEM	PART NUMBER	QTY	DESCRIPTION	REV
111	4460963	1	Connector	
112	4711000	10	Washer #10	
114	10702077	2	Screw #10 x 3/8in	
115	10702082	2	Screw #10 x 3/4in	
116	1001152525	1	Plug	
117	1001157520	1	Block, Terminal	
118	1001157521	1	Box, Junction	
119	1001157528	1	Decal - Wiring Schematic	
120	1001158007	1	Cover, PVC	
121	1001158008	2	Stand-Off	
	0273380	Ref	DECAL INSTALLATION	B
202	1705375	1	Decal - 240V-3 Phase-60Hz	
203	1705387	3	Decal - Hazardous Voltage	
204	1705460	2	Decal - SkyPower	

SECTION 4 - BOOM

FIGURE 4-1. CYLINDERS INSTALLATION - 450A

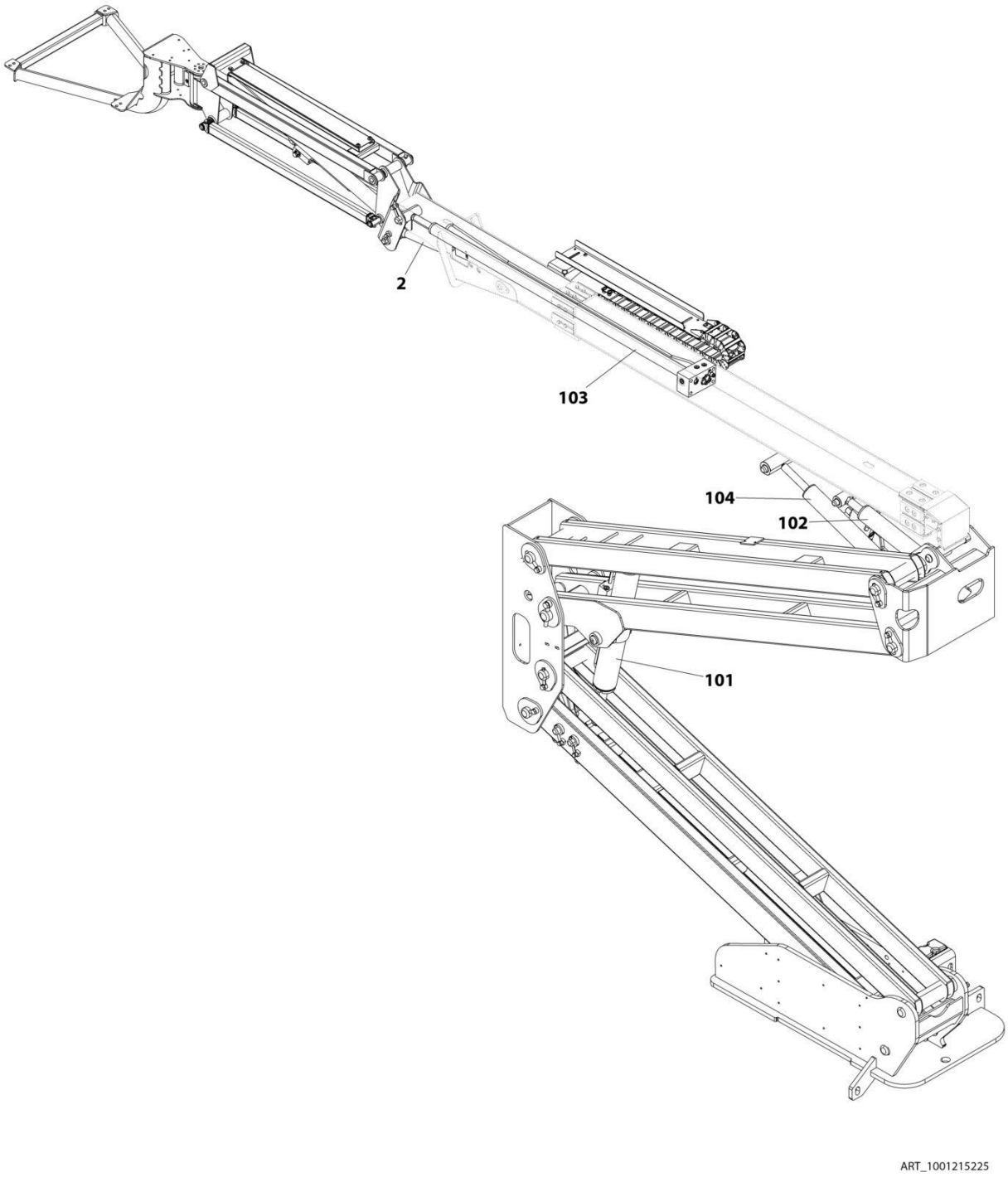

FIGURE 4-1. CYLINDERS INSTALLATION - 450A

ITEM	PART NUMBER	QTY	DESCRIPTION	REV
	1001215225	Ref	CYLINDERS INSTALLATION - 450A	C
2	1001161716	1	Level (Platform Slave) Cylinder Assembly (See CYLINDER SECTION for Breakdown)	
100	1001219004	Ref	CYLINDER KIT INSTALLATION	B
101	1001161715	1	Lift Cylinder Assembly - Tower Boom (See CYLINDER SECTION for Breakdown)	
102	1001161717	1	Master Cylinder Assembly (See CYLINDER SECTION for Breakdown)	
103	1001161804	1	Telescope Cylinder Assembly (See CYLINDER SECTION for Breakdown)	
104	1001181706	1	Lift Cylinder Assembly - Main Boom (See CYLINDER SECTION for Breakdown) **(SN 0300201991 through 0300235624)**	
104	1001217681	1	Lift Cylinder Assembly - Main Boom (See CYLINDER SECTION for Breakdown) **(SN 0300235625 through 0300272317, Except SN 0300272185 through 0300272190)**	

FIGURE 4-2. CYLINDERS INSTALLATION - 450AJ (USA AND CHINA BUILT MACHINES)

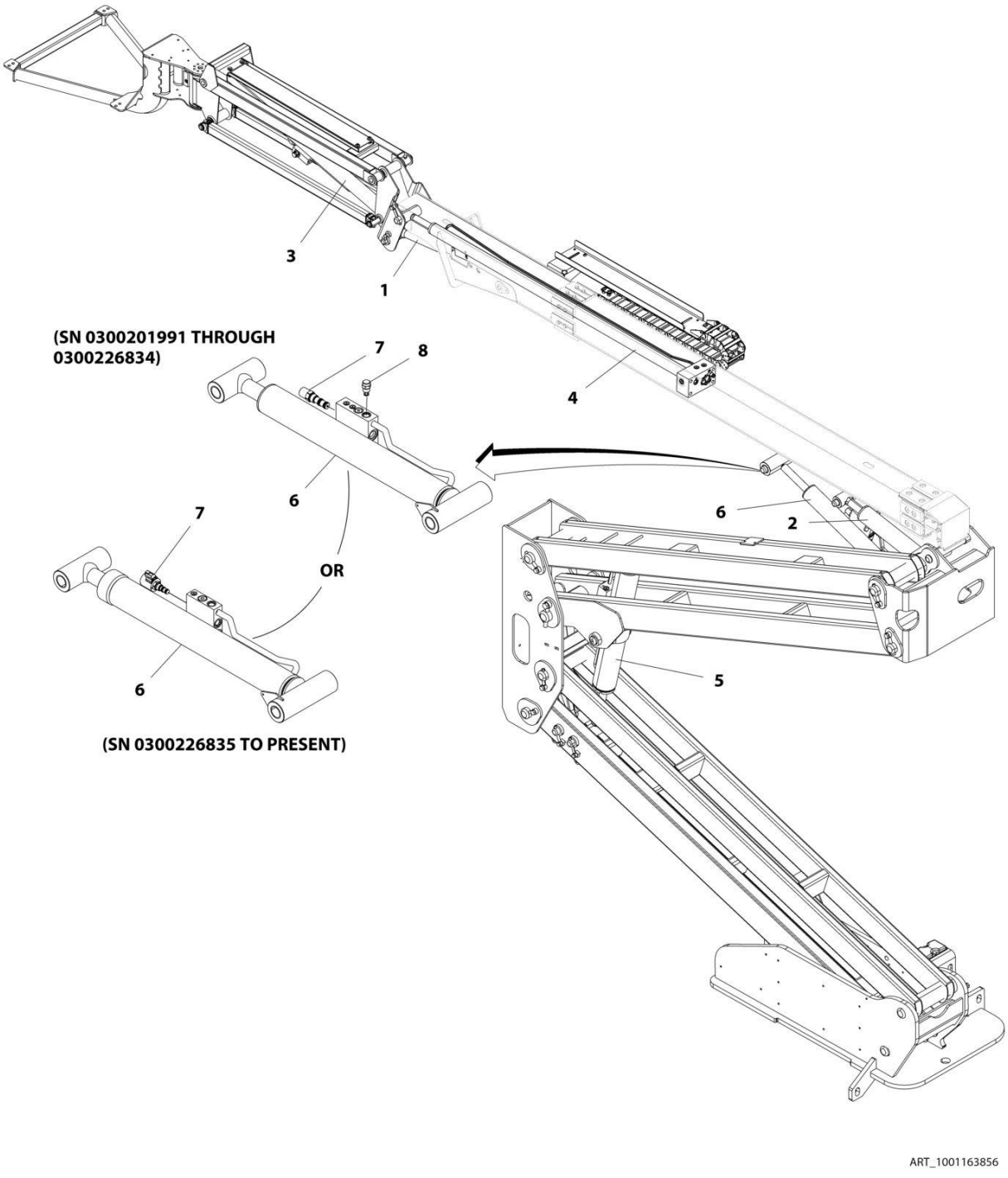

FIGURE 4-2. CYLINDERS INSTALLATION - 450AJ (USA AND CHINA BUILT MACHINES)

ITEM	PART NUMBER	QTY	DESCRIPTION	REV
	1001163856	Ref	CYLINDERS INSTALLATION - 450AJ (USA AND CHINA BUILT MACHINES)	E
1	1001161716	1	Level (Platform Slave) Cylinder Assembly (See CYLINDER SECTION for Breakdown)	
2	1001161717	1	Master Cylinder Assembly (See CYLINDER SECTION for Breakdown)	
3	1001163767	1	Lift Cylinder Assembly - Jib (See CYLINDER SECTION for Breakdown)	
4	1001164523	1	Telescope Cylinder Assembly (See CYLINDER SECTION for Breakdown) **(SN 0300201991 through 0300234431)**	
4	1001161713	1	Telescope Cylinder Assembly (See CYLINDER SECTION for Breakdown) **(SN 0300234432 through 0300272317, SN B300003516 through B300005760, Except SN 0300272185 through 0300272190, Excluding B300005569)**	
5	1001161715	1	Lift Cylinder Assembly - Tower Boom (See CYLINDER SECTION for Breakdown)	
6	1001181705	1	Lift Cylinder Assembly - Main Boom (See CYLINDER SECTION for Breakdown) **(SN 0300201991 through 0300226834)**	
6	1001212069	1	Lift Cylinder Assembly - Main Boom (See CYLINDER SECTION for Breakdown) **(SN 0300226835 through 0300234431)**	
6	1001217676	1	Lift Cylinder Assembly - Main Boom (See CYLINDER SECTION for Breakdown) **(SN 0300234432 through 0300272317, SN B300003516 through B300005760, Except SN 0300272185 through 0300272190, Excluding B300005569)**	
7	1001148972	1	Valve, Solenoid Cartridge with Coil **(SN 0300201991 through 0300226834)**	
7	70002401	1	Valve, Solenoid Cartridge Less Coil	
7	7017496	1	Seal Kit - 70002401 and 1001148972 Valves	
7	70003788	1	Coil	
7	1001206625	1	Valve, Solenoid Cartridge with Coil **(SN 0300226835 through 0300234431)**	
7	70006104	1	Valve, Solenoid Cartridge Less Coil	
7	70006105	1	Seal Kit - 70006104 and 1001206625 Valves	
7	70003788	1	Coil	
7	7022390	1	Nut, Coil	
8	1001164709	1	Valve, Solenoid Cartridge with Coil **(SN 0300226835 through 0300234431)**	
8	7017467	1	Valve, Solenoid Cartridge Less Coil	
8	7012967	1	Seal Kit - 7017467 and 1001164709 Valves	
8	70002386	1	Coil	

FIGURE 4-3. CYLINDERS INSTALLATION - 450AJ (ROMANIAN BUILT MACHINES)

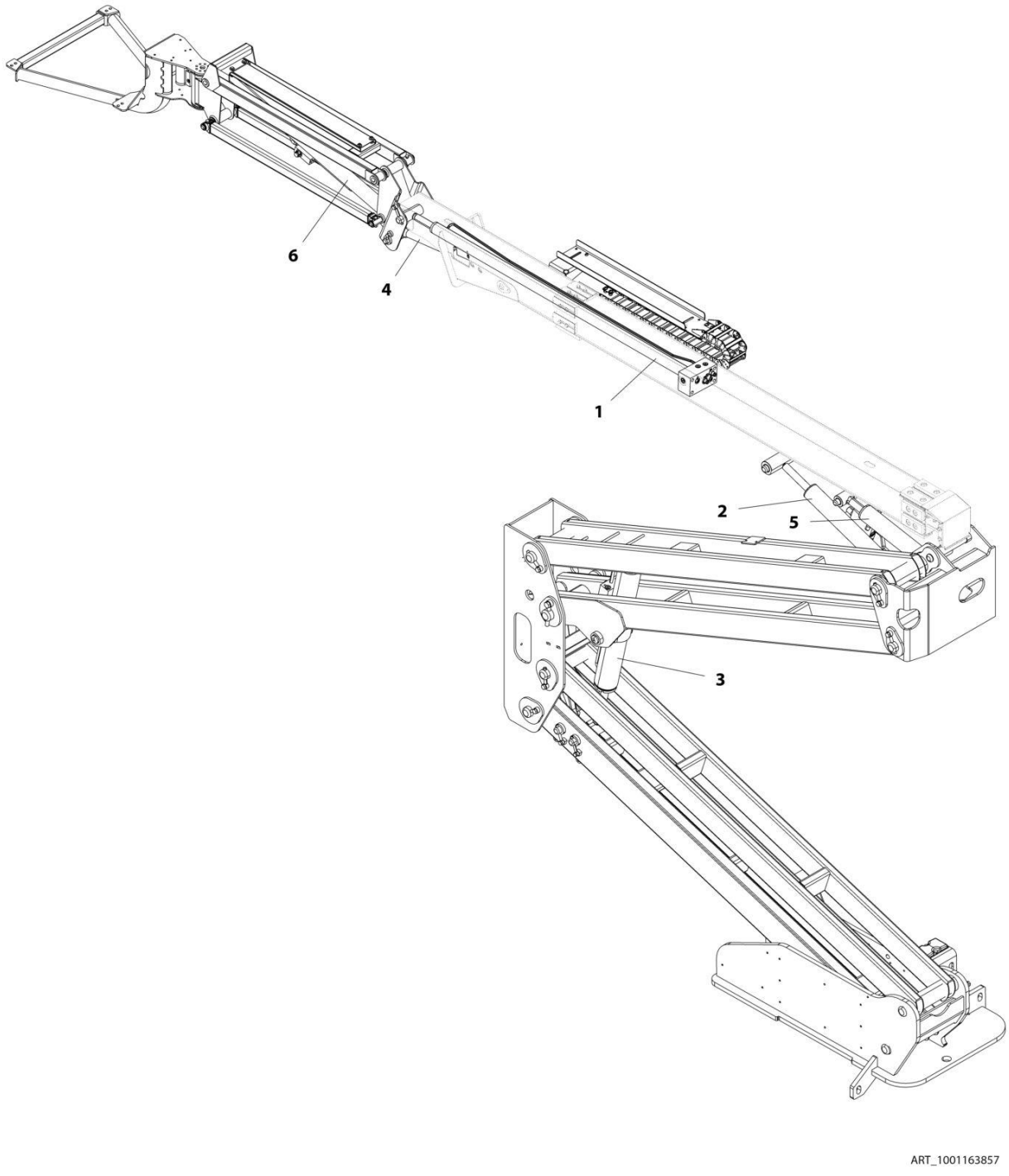

FIGURE 4-3. CYLINDERS INSTALLATION - 450AJ (ROMANIAN BUILT MACHINES)

ITEM	PART NUMBER	QTY	DESCRIPTION	REV
	1001163857	Ref	CYLINDERS INSTALLATION - 450AJ (ROMANIAN BUILT MACHINES)	C
1	1001161713	1	Telescope Cylinder Assembly (See CYLINDER SECTION for Breakdown)	
2	1001181324	1	Lift Cylinder Assembly - Main Boom (See CYLINDER SECTION for Breakdown) **(SN E300002833 through E300004225)**	
2	1001217676	1	Lift Cylinder Assembly - Main Boom (See CYLINDER SECTION for Breakdown) **(SN 1300007279 through 1300007373, SN E300004226 through E300007990, Excluding E300007814)**	
3	1001161715	1	Lift Cylinder Assembly - Tower Boom (See CYLINDER SECTION for Breakdown)	
4	1001161716	1	Level (Platform Slave) Cylinder Assembly (See CYLINDER SECTION for Breakdown)	
5	1001161717	1	Master Cylinder Assembly (See CYLINDER SECTION for Breakdown)	
6	1001163767	1	Lift Cylinder Assembly - Jib (See CYLINDER SECTION for Breakdown)	

FIGURE 4-4. BOOM INSTALLATION - 450A

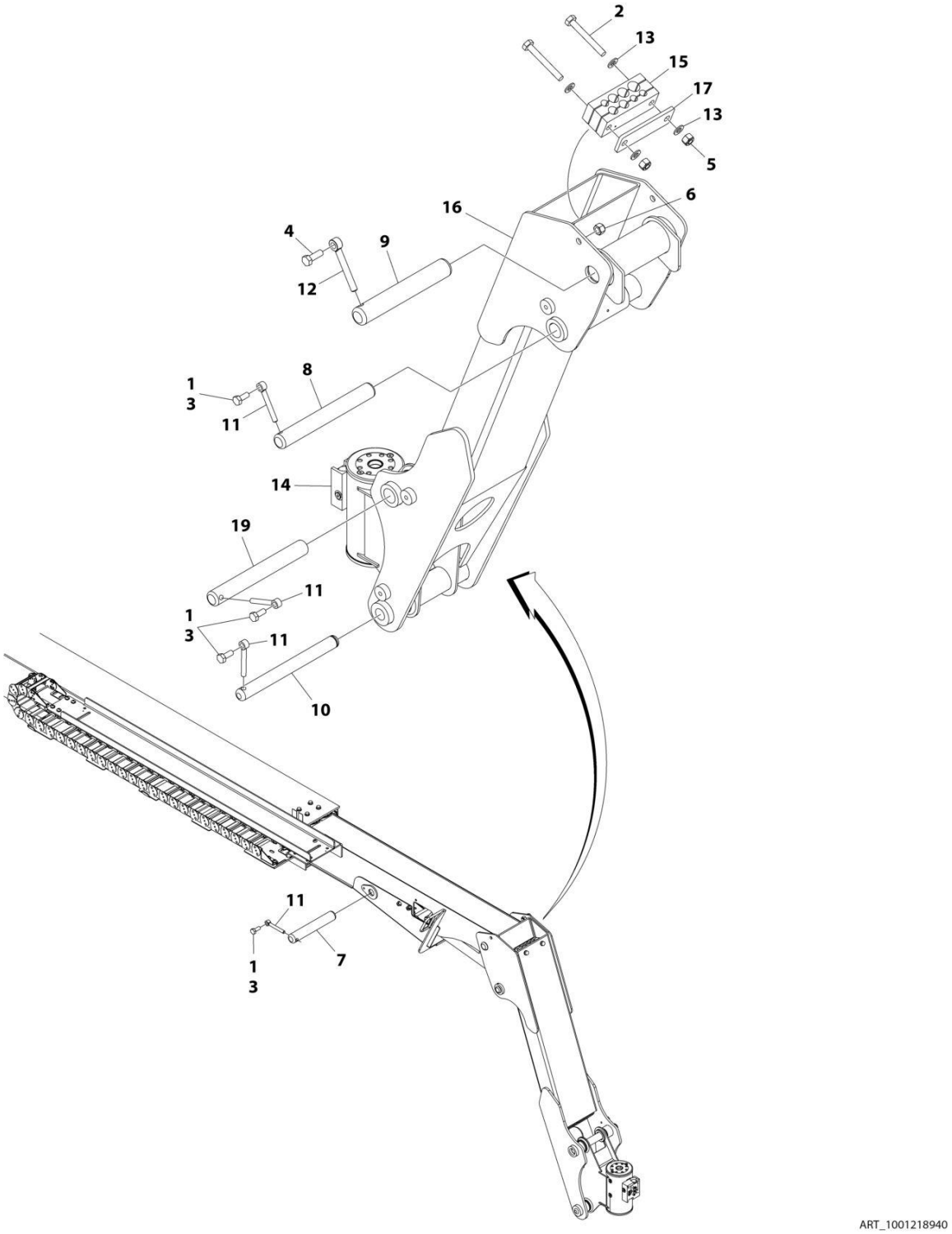

FIGURE 4-4. BOOM INSTALLATION - 450A

ITEM	PART NUMBER	QTY	DESCRIPTION	REV
	1001218940	Ref	BOOM INSTALLATION - 450A	C
1	0100011	AR	Compound, Locking	
2	0761024	2	Bolt M10 x 80	
3	0761012	4	Bolt M10 x 25	
4	0761015	1	Bolt M10 x 35	
5	3291005	2	Nut M10 x 1.5 (Grade8)	
6	3291205	1	Nut M12 x 1.75 (Grade8)	
7	3422755	1	Pin	
8	3422792	1	Pin	
9	3422793	1	Pin	
10	3423105	1	Pin	
11	3841143	4	Keeper, Pin	
12	3841203	1	Keeper, Pin	
13	4812000	4	Washer, M10	
14	1001165302	NLA	Rotator Assembly (Use p/n 1001217779) (See ROTATOR ASSEMBLY for Breakdown) **(SN 0300201991 through 0300232742)**	
14	1001217779	1	Rotator Assembly (See ROTATOR ASSEMBLY for Breakdown) **(SN 0300232743 through 0300272317, Except SN 0300272185 through 0300272190)**	
15	1001166656	1	Block, Clamping	
16	1001215058	1	Link, Fixed Jib	
17	1001216639	1	Clamp	
19	3422792	1	Pin **(SN 0300201991 through 0300235624)**	
19	3422790	1	Pin **(SN 0300235625 through 0300272317, Except SN 0300272185 through 0300272190)**	
100	1001218943	Ref	BOOM INSTALLATION (Not Shown)	A
101	1001219001	1	Cables and Clamps Installation (Not Shown - See ELECTRICAL SECTION for Breakdown)	
102	1001219003	1	Boom Installation Kit (Not Shown - See BOOM INSTALLATION (450A) for Breakdown)	

FIGURE 4-5. BOOM INSTALLATION WITH AIRLINE - 450A

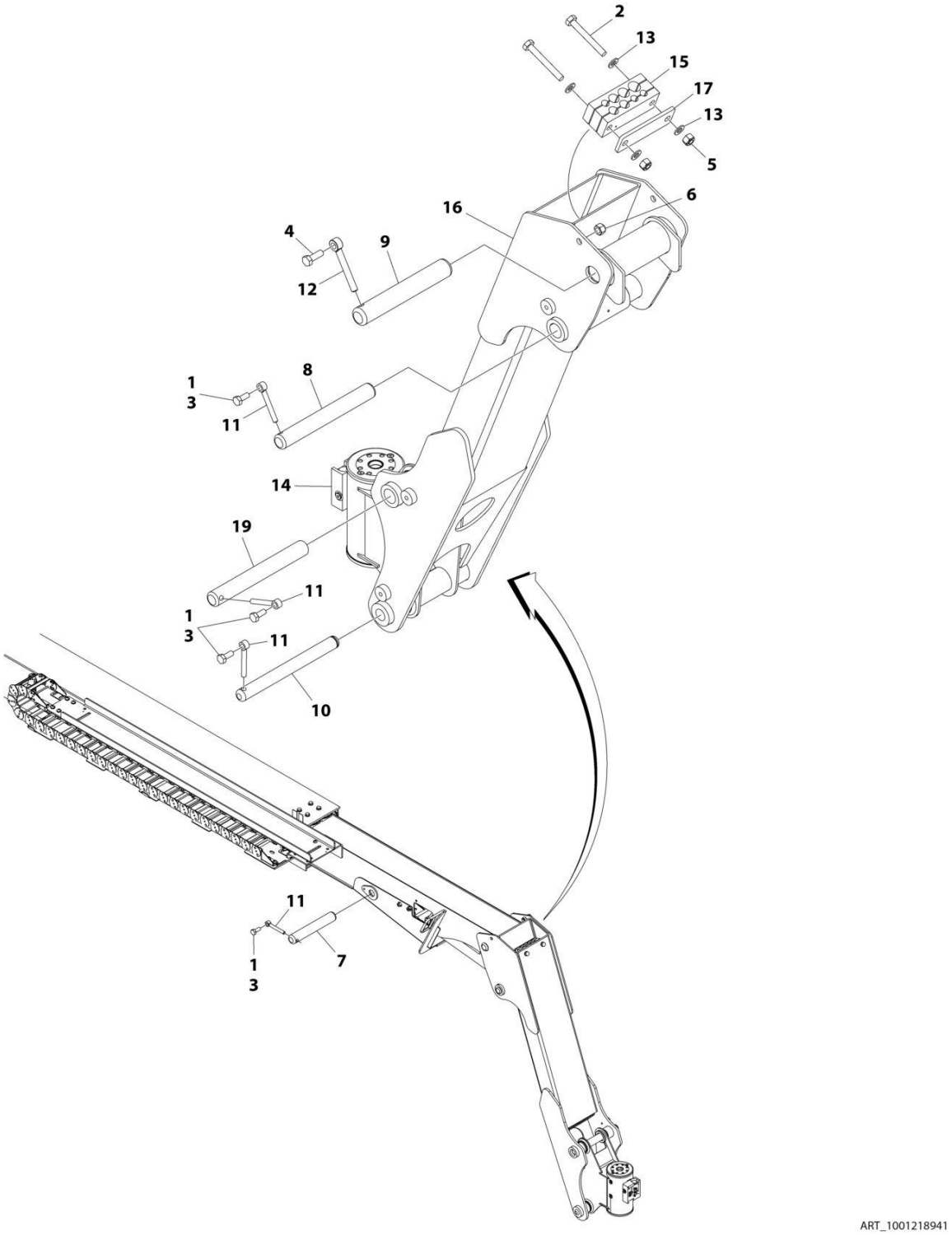

FIGURE 4-5. BOOM INSTALLATION WITH AIRLINE - 450A

ITEM	PART NUMBER	QTY	DESCRIPTION	REV
	1001218941	Ref	BOOM INSTALLATION WITH AIRLINE- 450A	C
1	0100011	AR	Compound, Locking	
2	0761024	2	Bolt M10 x 80	
3	0761012	4	Bolt M10 x 25	
4	0761015	1	Bolt M10 x 35	
5	3291005	2	Nut M10 x 1.5 (Grade8)	
6	3291205	1	Nut M12 x 1.75 (Grade8)	
7	3422755	1	Pin	
8	3422792	1	Pin	
9	3422793	1	Pin	
10	3423105	1	Pin	
11	3841143	4	Keeper, Pin	
12	3841203	1	Keeper, Pin	
13	4812000	4	Washer, M10	
14	1001165302	NLA	Rotator Assembly (Use p/n 1001217779) (See ROTATOR ASSEMBLY for Breakdown) **(SN 0300201991 through 0300232742)**	
14	1001217779	1	Rotator Assembly (See ROTATOR ASSEMBLY for Breakdown) **(SN 0300232743 through 0300272317, Except SN 0300272185 through 0300272190)**	
15	1001166656	1	Block, Clamping	
16	1001215058	1	Link, Fixed Jib	
17	1001216639	1	Clamp	
19	3422792	1	Pin **(SN 0300201991 through 0300235624)**	
19	3422790	1	Pin **(SN 0300235625 through 0300272317, Except SN 0300272185 through 0300272190)**	
100	1001218946	Ref	BOOM INSTALLATION WITH AIRLINE (Not Shown)	A
101	1001219000	1	Airline Installation Kit (Not Shown - See SPECIAL OPTIONS)	
102	1001219001	1	Cables and Clamps Installation (Not Shown - See ELECTRICAL SECTION for Breakdown)	
103	1001219003	1	Boom Installation Kit (Not Shown - See BOOM INSTALLATION (450A) for Breakdown)	

FIGURE 4-6. BOOM INSTALLATION WITH SKYPOWER AND AIRLINE - 450A

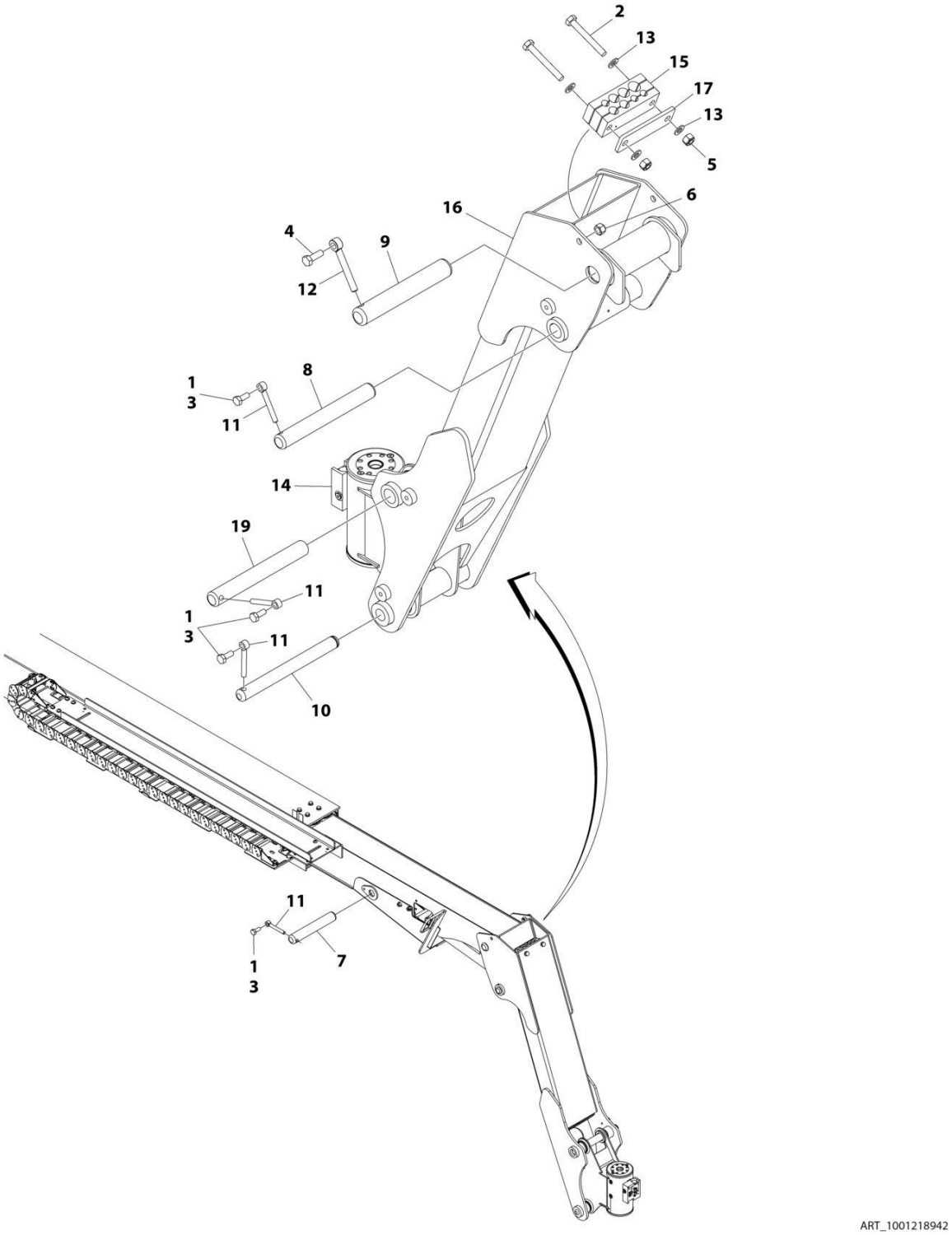

FIGURE 4-6. BOOM INSTALLATION WITH SKYPOWER AND AIRLINE - 450A

ITEM	PART NUMBER	QTY	DESCRIPTION	REV
	1001218942	Ref	BOOM INSTALLATION WITH SKYPOWER AND AIRLINE- 450A	C
1	0100011	AR	Compound, Locking	
2	0761024	2	Bolt M10 x 80	
3	0761012	4	Bolt M10 x 25	
4	0761015	1	Bolt M10 x 35	
5	3291005	2	Nut M10 x 1.5 (Grade8)	
6	3291205	1	Nut M12 x 1.75 (Grade8)	
7	3422755	1	Pin	
8	3422792	1	Pin	
9	3422793	1	Pin	
10	3423105	1	Pin	
11	3841143	4	Keeper, Pin	
12	3841203	1	Keeper, Pin	
13	4812000	4	Washer, M10	
14	1001165302	NLA	Rotator Assembly (Use p/n 1001217779) (See ROTATOR ASSEMBLY for Breakdown) **(SN 0300201991 through 0300232742)**	
14	1001217779	1	Rotator Assembly (See ROTATOR ASSEMBLY for Breakdown) **(SN 0300232743 through 0300272317, Except SN 0300272185 through 0300272190)**	
15	1001166656	1	Block, Clamping	
16	1001215058	1	Link, Fixed Jib	
17	1001216639	1	Clamp	
19	3422792	1	Pin **(SN 0300201991 through 0300235624)**	
19	3422790	1	Pin **(SN 0300235625 through 0300272317, Except SN 0300272185 through 0300272190)**	
100	1001218947	Ref	BOOM INSTALLATION WITH AIRLINE (Not Shown)	A
101	1001219000	1	Airline Installation Kit (Not Shown - See SPECIAL OPTIONS)	
102	1001219002	1	Cables and Clamps Installation (Not Shown - See SPECIAL OPTIONS)	
103	1001219003	1	Boom Installation Kit (Not Shown - See BOOM INSTALLATION (450A) for Breakdown)	

FIGURE 4-7. BOOM INSTALLATION WITH SKYPOWER - 450A

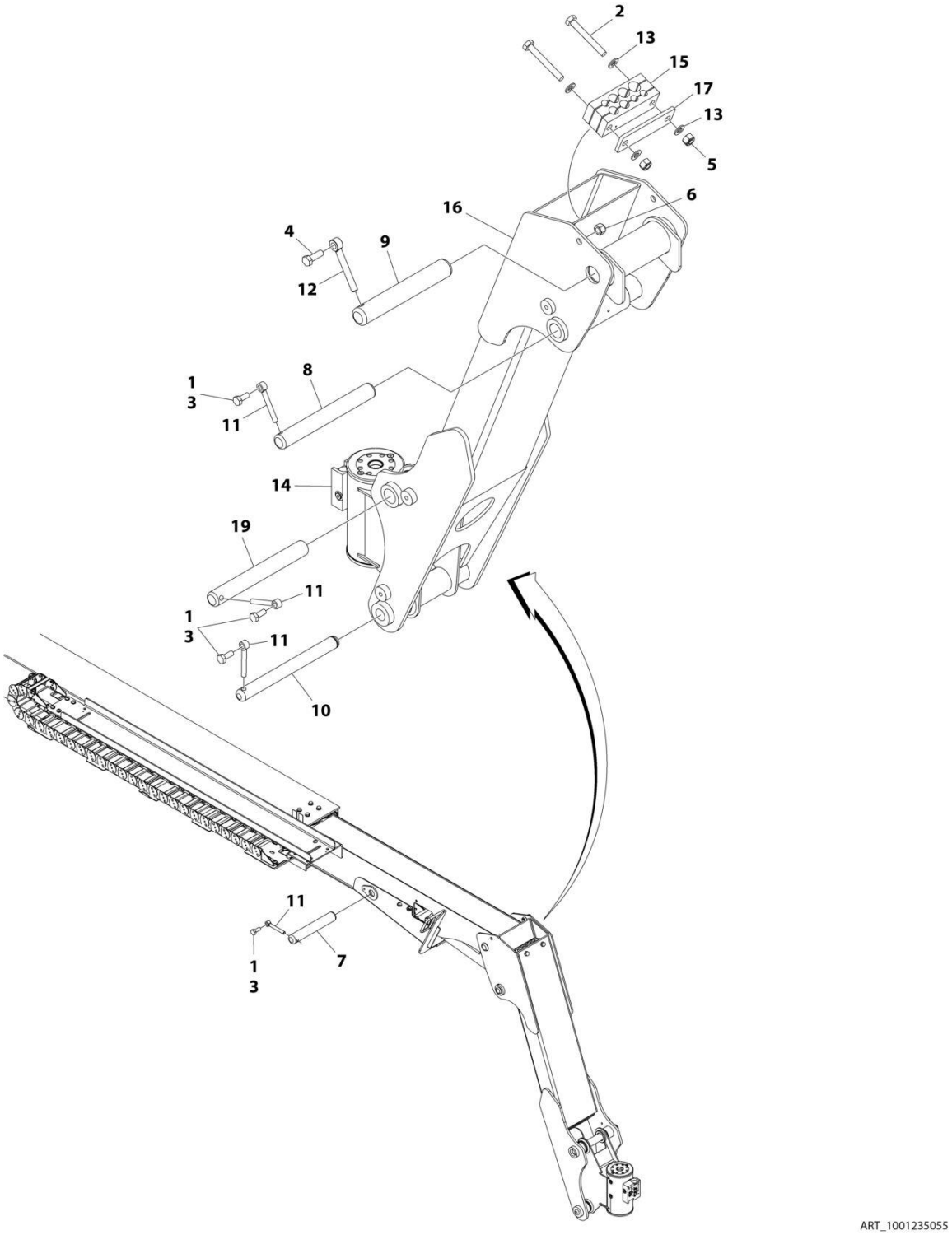

FIGURE 4-7. BOOM INSTALLATION WITH SKYPOWER - 450A

ITEM	PART NUMBER	QTY	DESCRIPTION	REV
	1001235055	Ref	BOOM INSTALLATION WITH SKYPOWER	A
1	0100011	AR	Compound, Locking	
2	0761024	2	Bolt M10 x 80	
3	0761012	4	Bolt M10 x 25	
4	0761015	1	Bolt M10 x 35	
5	3291005	2	Nut M10 x 1.5 (Grade8)	
6	3291205	1	Nut M12 x 1.75 (Grade8)	
7	3422755	1	Pin	
8	3422792	1	Pin	
9	3422793	1	Pin	
10	3423105	1	Pin	
11	3841143	4	Keeper, Pin	
12	3841203	1	Keeper, Pin	
13	4812000	4	Washer, M10	
14	1001217779	1	Rotator Assembly (See ROTATOR ASSEMBLY for Breakdown) **(SN 0300232743 through 0300272317, Except SN 0300272185 through 0300272190)**	
15	1001166656	1	Block, Clamping	
16	1001215058	1	Link, Fixed Jib	
17	1001216639	1	Clamp	
19	3422790	1	Pin **(SN 0300235625 through 0300272317, Except SN 0300272185 through 0300272190)**	
100	1001235053	Ref	BOOM INSTALLATION WITH AIRLINE (Not Shown)	A
101	1001219002	1	Cables and Clamps Installation (Not Shown - See SPECIAL OPTIONS)	
102	1001219003	1	Boom Installation Kit (Not Shown - See BOOM INSTALLATION (450A) for Breakdown)	

FIGURE 4-8. BOOM INSTALLATION KIT - 450A

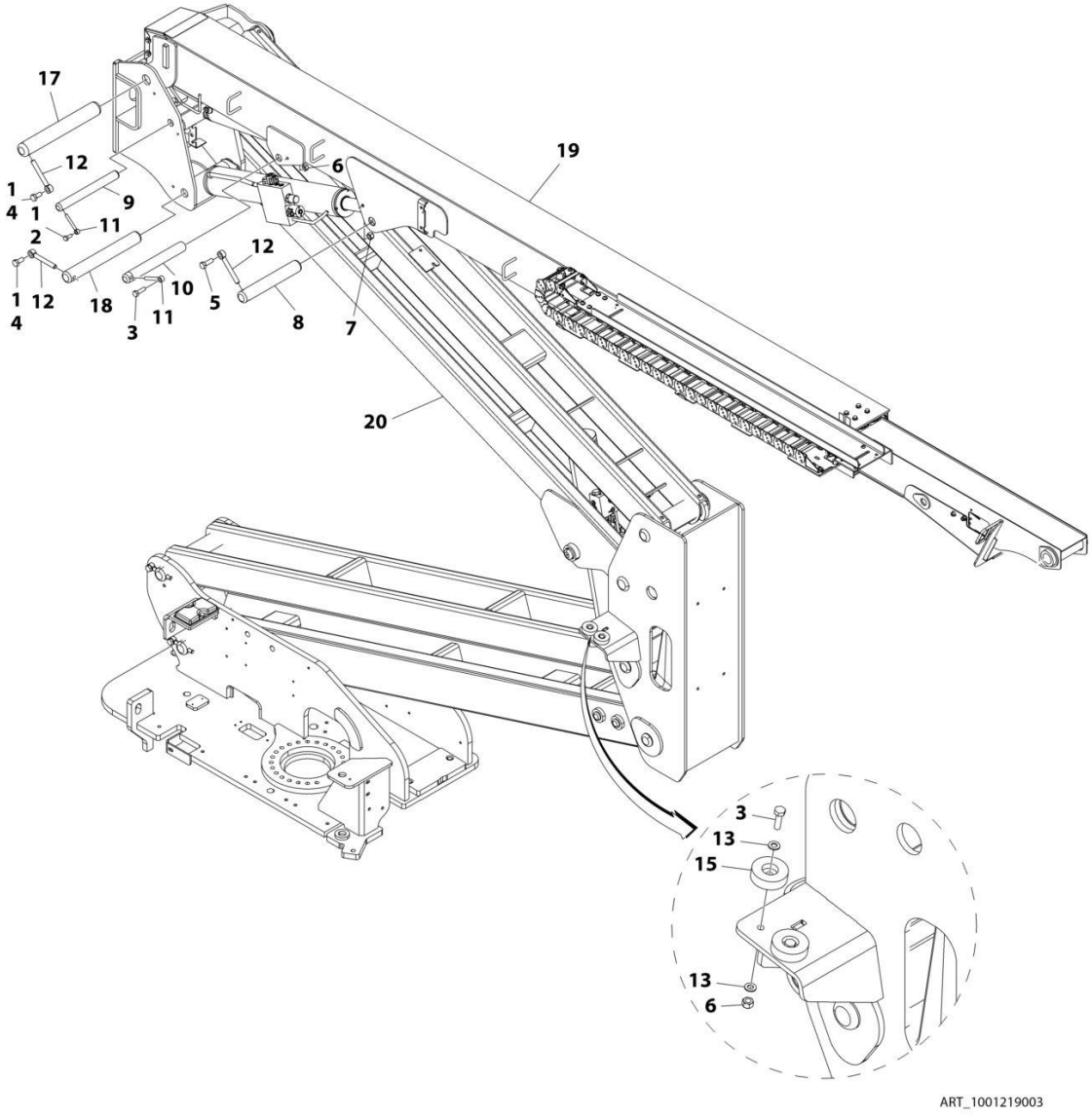

FIGURE 4-8. BOOM INSTALLATION KIT - 450A

ITEM	PART NUMBER	QTY	DESCRIPTION	REV
	1001219003	Ref	BOOM INSTALLATION KIT - 450A	B
1	0100011	AR	Compound, Locking	
2	0761012	1	Bolt M10 x 25	
3	0761015	3	Bolt M10 x 35	
4	0761212	2	Bolt M12 x 25	
5	0761215	1	Bolt M12 x 35	
6	3291005	3	Nut M10 x 1.5 (Grade8)	
7	3291205	2	Nut M12 x 1.75 (Grade8)	
8	3422793	2	Pin	
9	3422806	1	Pin	
10	3423038	1	Pin	
11	3841143	2	Keeper, Pin	
12	3841203	3	Keeper, Pin	
13	4812000	4	Washer, M10	
14	5251010	2	Bolt M10 x 25	
15	1001112607	2	Block, Boom Rest	
16	1001162535	1	Upright Valve Assembly (Not Shown - See UPRIGHT VALVE ASSEMBLY for Breakdown)	
17	1001169246	1	Pin	
18	1001169247	1	Pin	
19	1001179626	1	Main Boom Assembly (See MAIN BOOM ASSEMBLY - 450A for Breakdown)	
20	1001180006	1	Tower Boom Assembly (See TOWER BOOM ASSEMBLY - 450A USA BUILT MACHINES for Breakdown)	
200	1001219004	1	Cylinder Installation (Not Shown - See CYLINDER INSTALLATION - 450A for Breakdown)	

FIGURE 4-9. BOOM INSTALLATION - 450AJ USA AND CHINA BUILT MACHINES

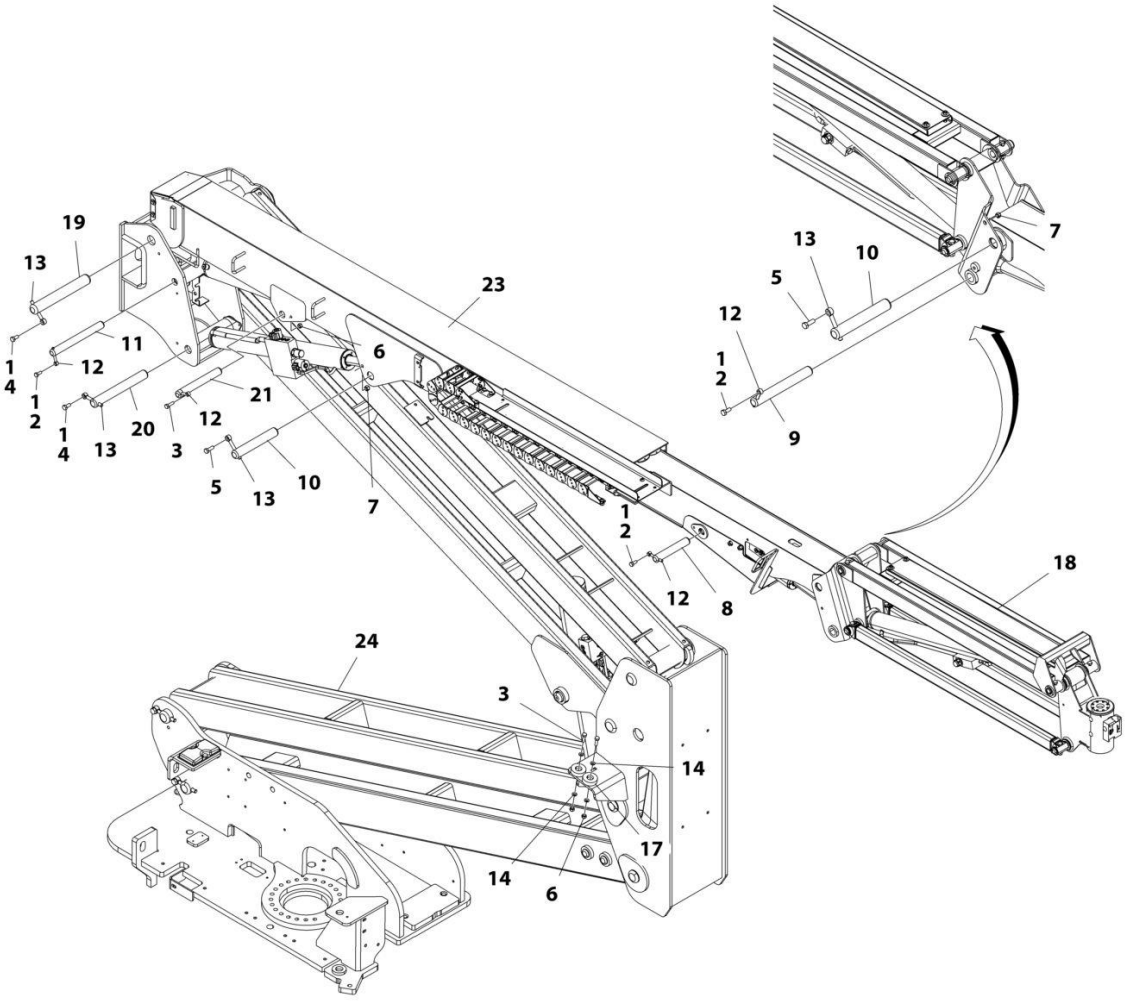

FIGURE 4-9. BOOM INSTALLATION - 450AJ USA AND CHINA BUILT MACHINES

ITEM	PART NUMBER	QTY	DESCRIPTION	REV
	1001180872	Ref	BOOM INSTALLATION - 450AJ USA AND CHINA BUILT MACHINES	D
1	0100011	AR	Compound, Locking	
2	0761012	3	Bolt, M10 x 25mm	
3	0761015	3	Bolt, M10 x 35mm	
4	0761212	2	Bolt, M12 x 25mm	
5	0761215	2	Bolt, M12 x 35mm	
6	3291005	3	Nut, Lock M10 x 1.5 (Grade8)	
7	3291205	2	Nut, Lock M12 x 1.75 (Grade8)	
8	3422755	1	Pin	
9	3422792	1	Pin	
10	3422793	2	Pin	
11	3422806	1	Pin	
12	3841143	4	Keeper, Pin	
13	3841203	4	Keeper, Pin	
14	4812000	4	Washer, M10	
17	1001112607	2	Block, Boom Rest	
18	1001164016	1	Jib Installation (See JIB INSTALLATION - 450AJ USA AND CHINA BUILT MACHINES for Breakdown)	
19	1001169246	1	Pin	
20	1001169247	1	Pin	
21	3423038	1	Pin	
23	1001178636	1	Main Boom Assembly (See MAIN BOOM ASSEMBLY - 450AJ for Breakdown)	
24	1001180004	1	Tower Boom Assembly (See TOWER BOOM ASSEMBLY - 450AJ USA AND CHINA BUILT MACHINES for Breakdown)	

FIGURE 4-10. BOOM INSTALLATION - 450AJ ROMANIAN BUILT MACHINES

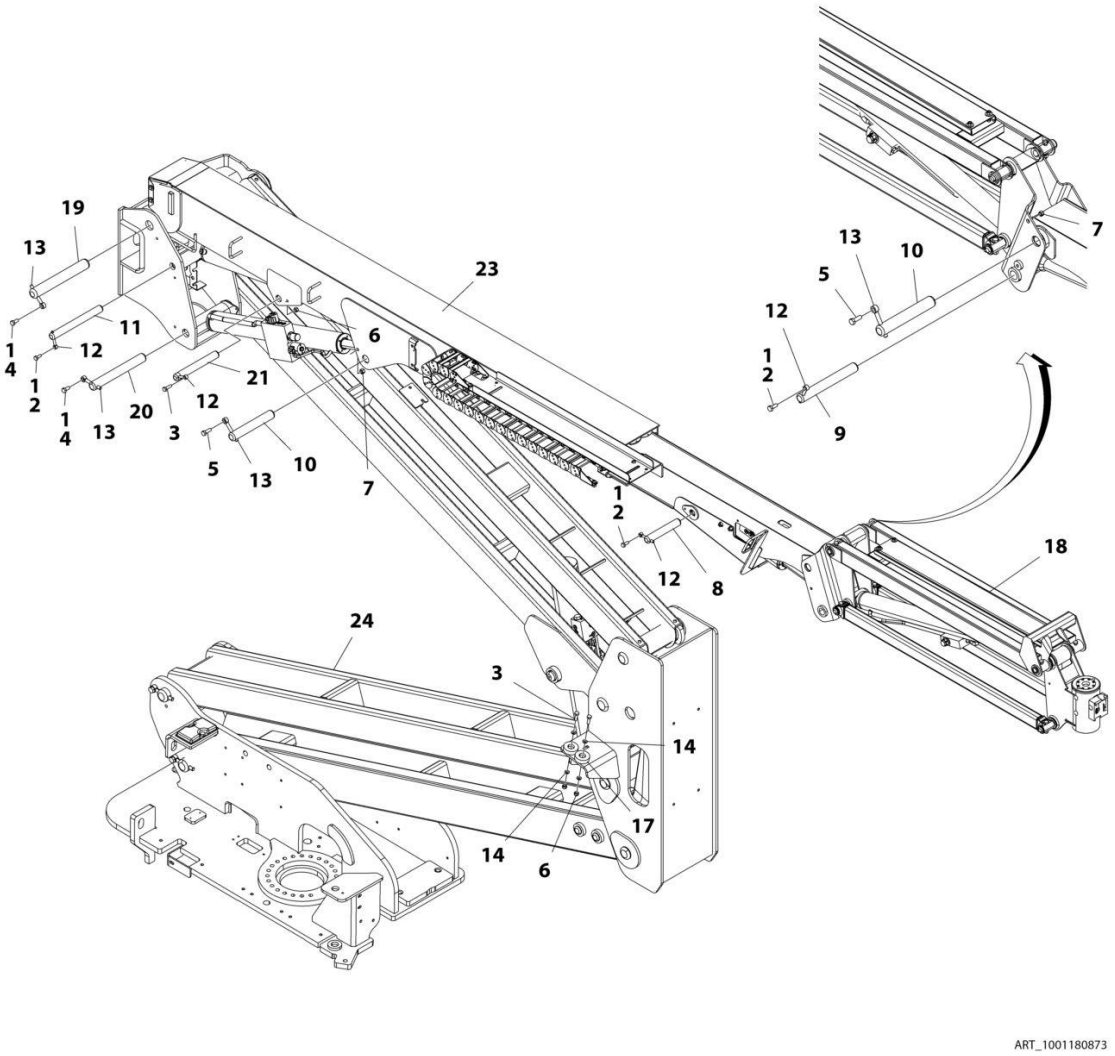

FIGURE 4-10. BOOM INSTALLATION - 450AJ ROMANIAN BUILT MACHINES

ITEM	PART NUMBER	QTY	DESCRIPTION	REV
	1001180873	Ref	BOOM INSTALLATION - 450AJ ROMANIAN BUILT MACHINES	C
1	0100011	AR	Compound, Locking	
2	0761012	3	Bolt, M10 x 25mm	
3	0761015	3	Bolt, M10 x 35mm	
4	0761212	2	Bolt, M12 x 25mm	
5	0761215	2	Bolt, M12 x 35mm	
6	3291005	3	Nut, Lock M10 x 1.5	
7	3291205	2	Nut, Lock M12 x 1.75	
8	3422755	1	Pin	
9	3422792	1	Pin	
10	3422793	2	Pin	
11	3422806	1	Pin	
12	3841143	4	Keeper, Pin	
13	3841203	4	Keeper, Pin	
14	4812000	4	Washer, M10	
17	1001112607	2	Block, Boom Rest	
18	1001164017	1	Jib Installation (See JIB INSTALLATION - 450AJ ROMANIAN BUILT MACHINES for Breakdown)	
19	1001169246	1	Pin	
20	1001169247	1	Pin	
21	3423038	1	Pin	
23	1001178636	1	Main Boom Assembly (See MAIN BOOM ASSEMBLY - 450AJ for Breakdown)	
24	1001180005	1	Tower Boom Assembly (See TOWER BOOM ASSEMBLY - 450AJ ROMANIAN BUILT MACHINES for Breakdown)	

FIGURE 4-11. JIB INSTALLATION - USA AND CHINA BUILT MACHINES

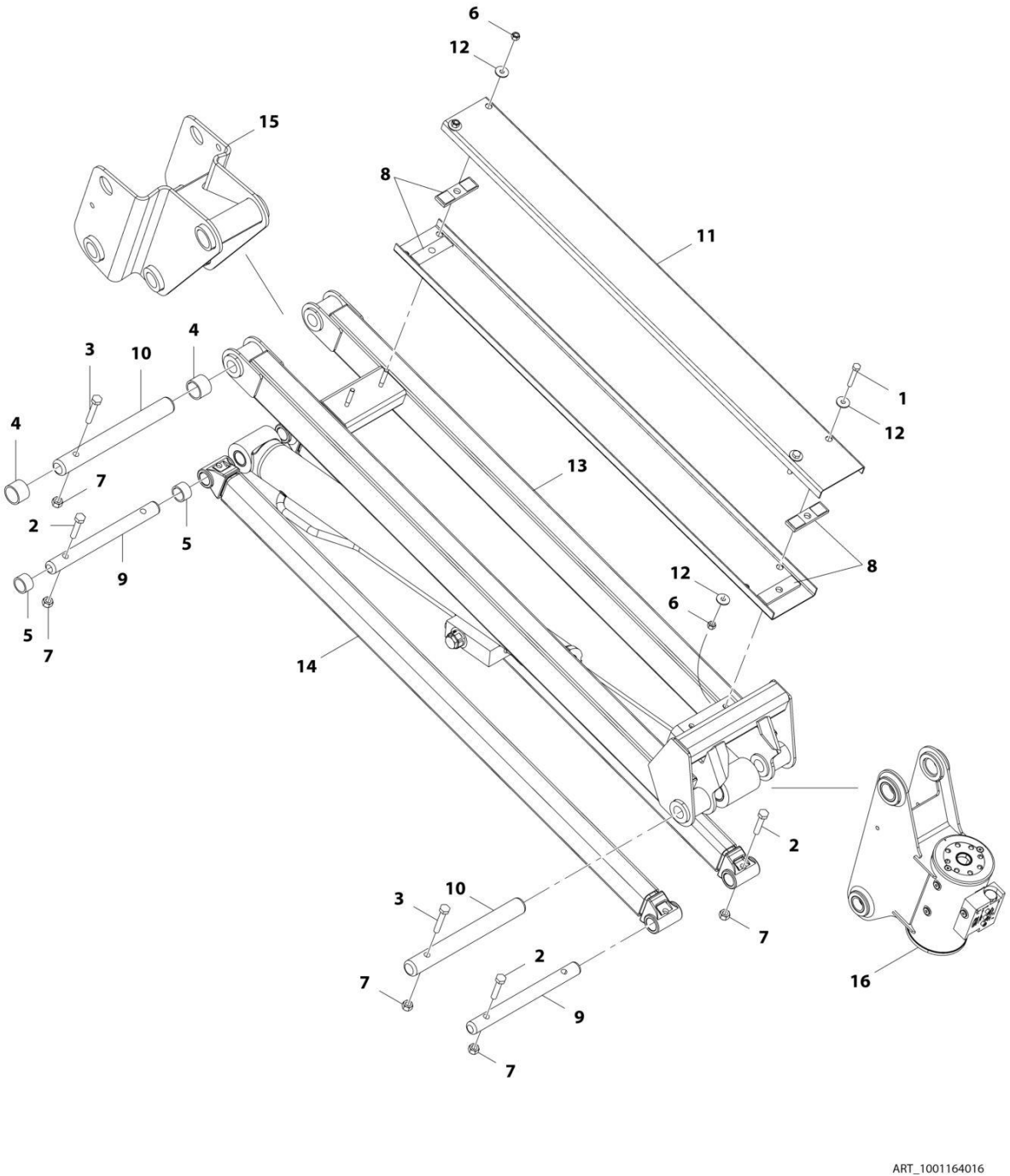

FIGURE 4-11. JIB INSTALLATION - USA AND CHINA BUILT MACHINES

ITEM	PART NUMBER	QTY	DESCRIPTION	REV
	1001164016	Ref	JIB INSTALLATION - USA AND CHINA BUILT MACHINES	D
1	0700820	2	Bolt, M8 x 60	
2	0701019	4	Bolt, M10 x 55	
3	0701020	2	Bolt, M10 x 60	
4	0961951	2	Bushing	
5	0962292	2	Bearing	
6	3290805	4	Nut, M8	
7	3291005	6	Nut, M10	
8	3340860	4	Pad, Rubber	
9	3422791	2	Pin	
10	1001116550	2	Pin	
11	3572551	2	Channel	
12	4811902	6	Washer, M8	
13	1001118482	1	Link (Upper)	
14	1001094670	2	Link (Lower)	
15	1001163937	1	Pivot	
16	1001165302	NLA	Rotator Assembly (Use p/n 1001217779) (See ROTATOR ASSEMBLY for Breakdown) **(SN 0300201991 through 0300232742)**	
16	1001217779	1	Rotator Assembly (See ROTATOR ASSEMBLY for Breakdown) **(SN 0300232743 through 0300272317, SN B300003516 through B300005760, Except SN 0300272185 through 0300272190, Excluding B300005569)**	

FIGURE 4-12. JIB INSTALLATION - ROMANIAN BUILT MACHINES

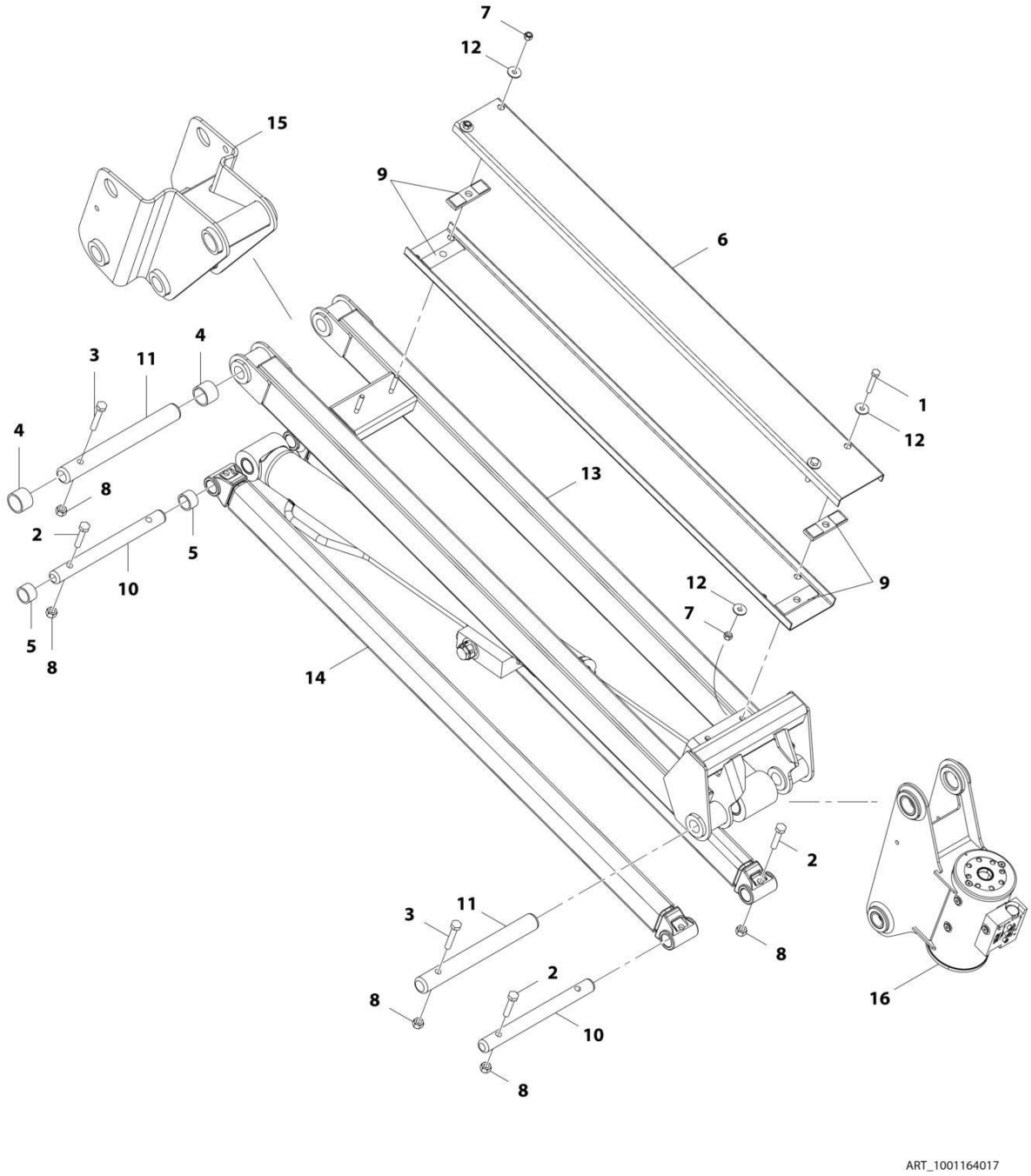

FIGURE 4-12. JIB INSTALLATION - ROMANIAN BUILT MACHINES

ITEM	PART NUMBER	QTY	DESCRIPTION	REV
	1001164017	Ref	JIB INSTALLATION - ROMANIAN BUILT MACHINES	D
1	0700820	2	Bolt, M8 x 60	
2	0701019	4	Bolt, M8 x 55	
3	0701020	2	Bolt, M10 x 60	
4	0961951	2	Bushing	
5	0962292	2	Bearing	
6	3572551	2	Channel	
7	3290805	4	Nut, M8	
8	3291005	6	Nut, M10	
9	3340860	4	Pad, Rubber	
10	3422791	2	Pin	
11	1001116550	2	Pin	
12	4811902	6	Washer, M8	
13	1001183171	1	Link (Upper)	
14	4846689	2	Link (Lower)	
15	1001163937	1	Pivot	
16	1001165302	NLA	Rotator Assembly (Use p/n 1001217779) (See ROTATOR ASSEMBLY for Breakdown) **(SN E300002833 through E300004880)**	
16	1001217779	1	Rotator Assembly (See ROTATOR ASSEMBLY for Breakdown) **(SN 1300007279 through 1300007373, SN E300004881 through E300007990, Excluding E300007814)**	

FIGURE 4-13. MAIN BOOM ASSEMBLY - 450A

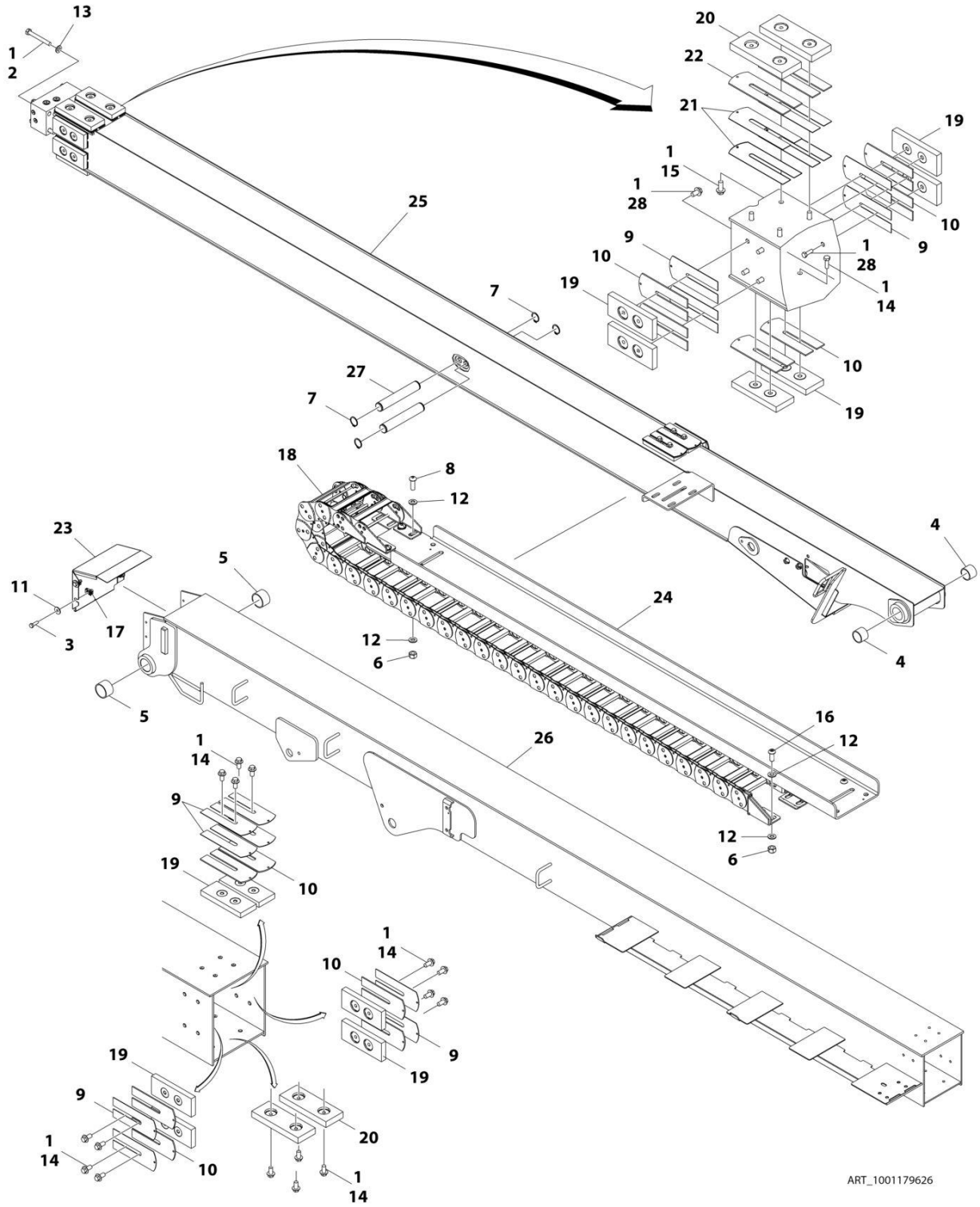

FIGURE 4-13. MAIN BOOM ASSEMBLY - 450A

ITEM	PART NUMBER	QTY	DESCRIPTION	REV
	1001179626	Ref	MAIN BOOM ASSEMBLY - 450A	C
1	0100011	AR	Compound, Locking	
2	0711227	4	Bolt, M12 x 100mm	
3	0760812	4	Bolt, M8 x 25mm	
4	0961948	2	Bearing	
5	0961949	2	Bearing	
6	3291005	10	Nut, Lock M10 x 1.5	
7	3760351	4	Ring, Retaining	
8	3900351	4	Screw, M10 x 1.5 x 30mm	
9	4070897	12	Shim	
10	4070898	12	Shim	
11	4811902	4	Washer, M8	
12	4812000	18	Washer, M10	
13	5241200	4	Washer, M12 Hardened	
14	5251010	20	Bolt, M10 x 20mm	
15	5251012	4	Bolt, M10 x 25mm	
16	8310668	6	Screw, M10-1.5 x 25mm Grade 10.9	
17	1001118274	4	Nut, M8 x 1.25	
18	1001168190	1	Powertrack Assembly (Use p/n 1001224894) **(SN 0300201991 through 0300229634, SN E300002833 through E300004534)**	
18	70005104	1	Link, Repair	
18	70005105	1	Feet, Mounting	
18	1001224894	1	Powertrack Assembly **(SN 0300229635 through 0300272317, SN 1300007279 through 1300007373, SN E300004535 through E300007990, Except SN 0300272185 through 0300272190, Excluding E300007814)**	
18	70006256	1	Link, Repair	
18	70006272	1	Feet, Mounting	
19	1001169304	12	Pad, Wear	
20	1001169305	4	Pad, Wear	
21	1001169402	4	Shim	
22	1001169403	2	Shim	
23	1001170226	1	Cover, Boom End	
24	1001170334	1	Tube, Carrier	
25	1001178554	1	Fly, Boom	
26	1001178555	1	Base, Boom	
27	1001180541	2	Pin	
28	5251009	8	Bolt, M10 x 18mm	

FIGURE 4-14. MAIN BOOM ASSEMBLY - 450AJ

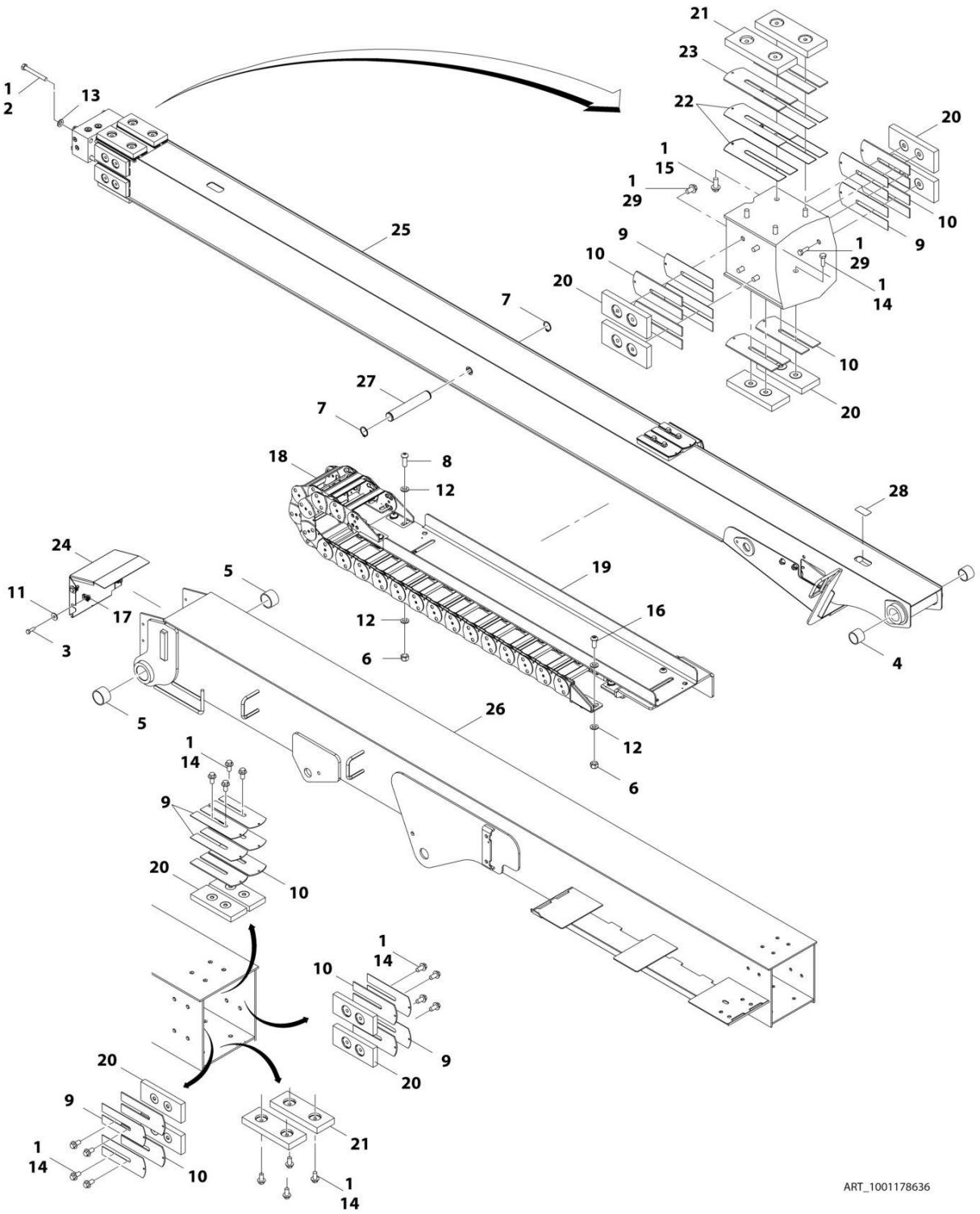

FIGURE 4-14. MAIN BOOM ASSEMBLY - 450AJ

ITEM	PART NUMBER	QTY	DESCRIPTION	REV
	1001178636	Ref	MAIN BOOM ASSEMBLY - 450AJ	C
1	0100011	AR	Compound, Locking	
2	0711227	4	Bolt, M12 x 100mm	
3	0760812	4	Bolt, M8 x 25mm	
4	0961948	2	Bearing	
5	0961949	2	Bearing	
6	3291005	10	Nut, Lock M10 x 1.5	
7	3760115	2	Ring, Retaining	
8	3900351	4	Screw, M10 x 1.5 x 30mm	
9	4070897	12	Shim	
10	4070898	12	Shim	
11	4811902	4	Washer, M8	
12	4812000	18	Washer, M10	
13	5241200	4	Washer, M12 Hardened	
14	5251010	20	Bolt, M10 x 20mm	
15	5251012	4	Bolt, M10 x 25mm	
16	8310668	6	Screw, M10-1.5 x 25mm Grade 10.9	
17	1001118274	4	Nut, M8 x 1.25	
18	1001166646	NLA	Powertrack Assembly (Use p/n 1001224889) **(SN 0300201991 through 0300229634, SN E300002833 through E300005434)**	
18	70005102	1	Link, Repair	
18	70005103	1	Feet, Mounting	
18	1001224889	1	Powertrack Assembly **(SN 0300229635 through 0300272317, SN 1300007279 through 1300007373, SN B300003516 through B300005760, SN E300004535 through E300007990, Except SN 0300272185 through 0300272190, Excluding B300005569 and E300007814)**	
18	70006256	1	Link, Repair	
18	70006271	1	Feet, Mounting	
19	1001166651	1	Tube, Carrier	
20	1001169304	12	Pad, Wear	
21	1001169305	4	Pad, Wear	
22	1001169402	4	Shim	
23	1001169403	2	Shim	
24	1001170226	1	Cover, Boom End	
25	1001177896	1	Fly, Boom	
26	1001177897	1	Base, Boom	
27	1001180540	1	Pin	
28	1670836	1	Cover	
29	5251009	8	Bolt, M10 x 18mm	

FIGURE 4-15. TOWER BOOM ASSEMBLY - 450A

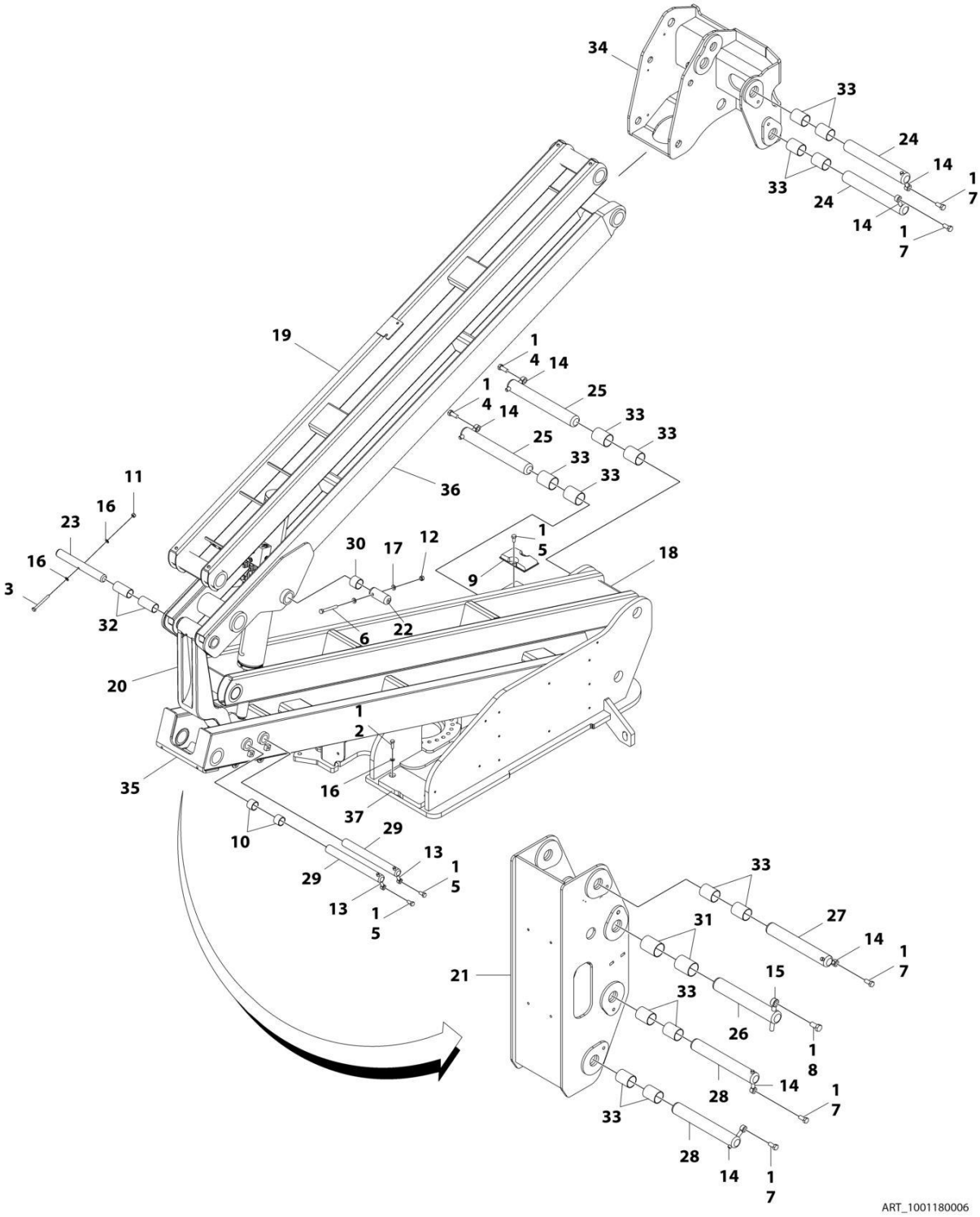

FIGURE 4-15. TOWER BOOM ASSEMBLY - 450A

ITEM	PART NUMBER	QTY	DESCRIPTION	REV
	1001180006	Ref	TOWER BOOM ASSEMBLY - 450A	B
1	0100011	AR	Compound, Locking	
2	0701015	2	Bolt, M10 x 35mm	
3	0701027	1	Bolt, M10 x 100mm	
4	0701616	2	Bolt, M16 x 40mm	
5	0761212	4	Bolt, M12 x 25mm	
6	0761227	2	Bolt, M12 x 100mm	
7	0761615	5	Bolt, M16 x 35mm	
8	0762016	1	Bolt, M20 x 40mm	
9	0940048	1	Bumper	
10	0961948	2	Bearing	
11	3291005	1	Nut, Lock M10 x 1.5	
12	3291205	2	Nut, Lock M12 x 1.75	
13	3841203	2	Keeper, Pin	
14	3841258	7	Keeper, Pin	
15	3841287	1	Keeper, Pin	
16	4812000	4	Washer, M10	
17	4812100	4	Washer, M12	
18	1001160859	1	Link, Lower Tower Boom	
19	1001160872	1	Link, Upper Tower Boom	
20	1001166096	1	Link, Timing	
21	1001166853	1	Upright, Lower	
22	1001169240	2	Pin	
23	1001169241	1	Pin	
24	1001169242	2	Pin	
25	1001169249	2	Pin	
26	1001169295	1	Pin	
27	1001169296	1	Pin	
28	1001169297	2	Pin	
29	1001169298	2	Pin	
30	1001169299	2	Bearing	
31	1001169300	2	Bearing	
32	1001169301	2	Bearing	
33	1001169302	14	Bearing	
34	1001174065	1	Upright, Upper	
35	1001178133	1	Tower Boom (Lower)	
36	1001178135	1	Tower, Boom (Upper)	
37	1001180056	1	Pad, Wear	
38	1001227993	1	Tower Boom Kit (Not Shown – Includes Items 18, 19, 35 & 36)	

FIGURE 4-16. TOWER BOOM ASSEMBLY - 450AJ USA AND CHINA BUILT MACHINES

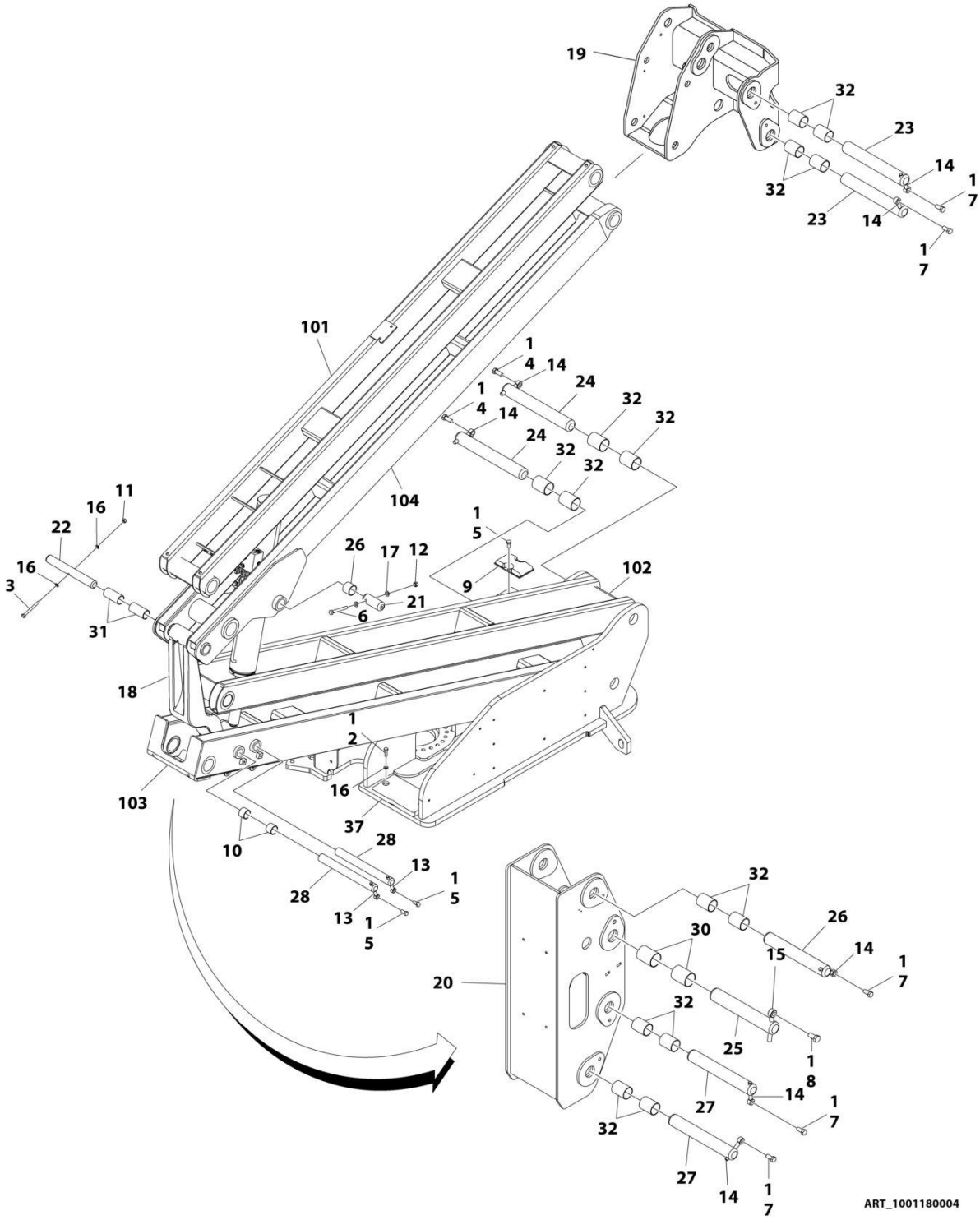

FIGURE 4-16. TOWER BOOM ASSEMBLY - 450AJ USA AND CHINA BUILT MACHINES

ITEM	PART NUMBER	QTY	DESCRIPTION	REV
	1001180004	Ref	TOWER BOOM ASSEMBLY - 450AJ USA AND CHINA BUILT MACHINES	D
1	0100011	AR	Compound, Locking	
2	0701015	2	Bolt, M10 x 35mm	
3	0701027	1	Bolt, M10 x 100mm	
4	0701616	2	Bolt, M16 x 40mm	
5	0761212	4	Bolt, M12 x 25mm	
6	0761227	2	Bolt, M12 x 100mm	
7	0761615	5	Bolt, M16 x 35mm	
8	0762016	1	Bolt, M20 x 40mm	
9	0940048	1	Bumper	
10	0961948	2	Bearing	
11	3291005	1	Nut, Lock M10 x 1.5	
12	3291205	2	Nut, Lock M12 x 1.75	
13	3841203	2	Keeper, Pin	
14	3841258	7	Keeper, Pin	
15	3841287	1	Keeper, Pin	
16	4812000	4	Washer, M10	
17	4812100	4	Washer, M12	
18	1001166096	1	Link, Timing	
19	1001166852	1	Upright, Upper	
20	1001166853	1	Upright, Lower	
21	1001169240	2	Pin	
22	1001169241	1	Pin	
23	1001169242	2	Pin	
24	1001169249	2	Pin	
25	1001169295	1	Pin	
26	1001169296	1	Pin	
27	1001169297	2	Pin	
28	1001169298	2	Pin	
29	1001169299	2	Bearing	
30	1001169300	2	Bearing	
31	1001169301	2	Bearing	
32	1001169302	14	Bearing	
37	1001180056	1	Pad, Wear	
100	1001190633	Ref	Tower Boom Kit (Not Shown - Includes Items 101-104)	
101	1001174536	1	Link, Upper Tower Boom	
102	1001174537	1	Link, Lower Tower Boom	
103	1001178133	1	Tower Boom (Lower)	
104	1001178135	1	Tower, Boom (Upper)	

FIGURE 4-17. TOWER BOOM ASSEMBLY - 450AJ ROMANIAN BUILT MACHINES

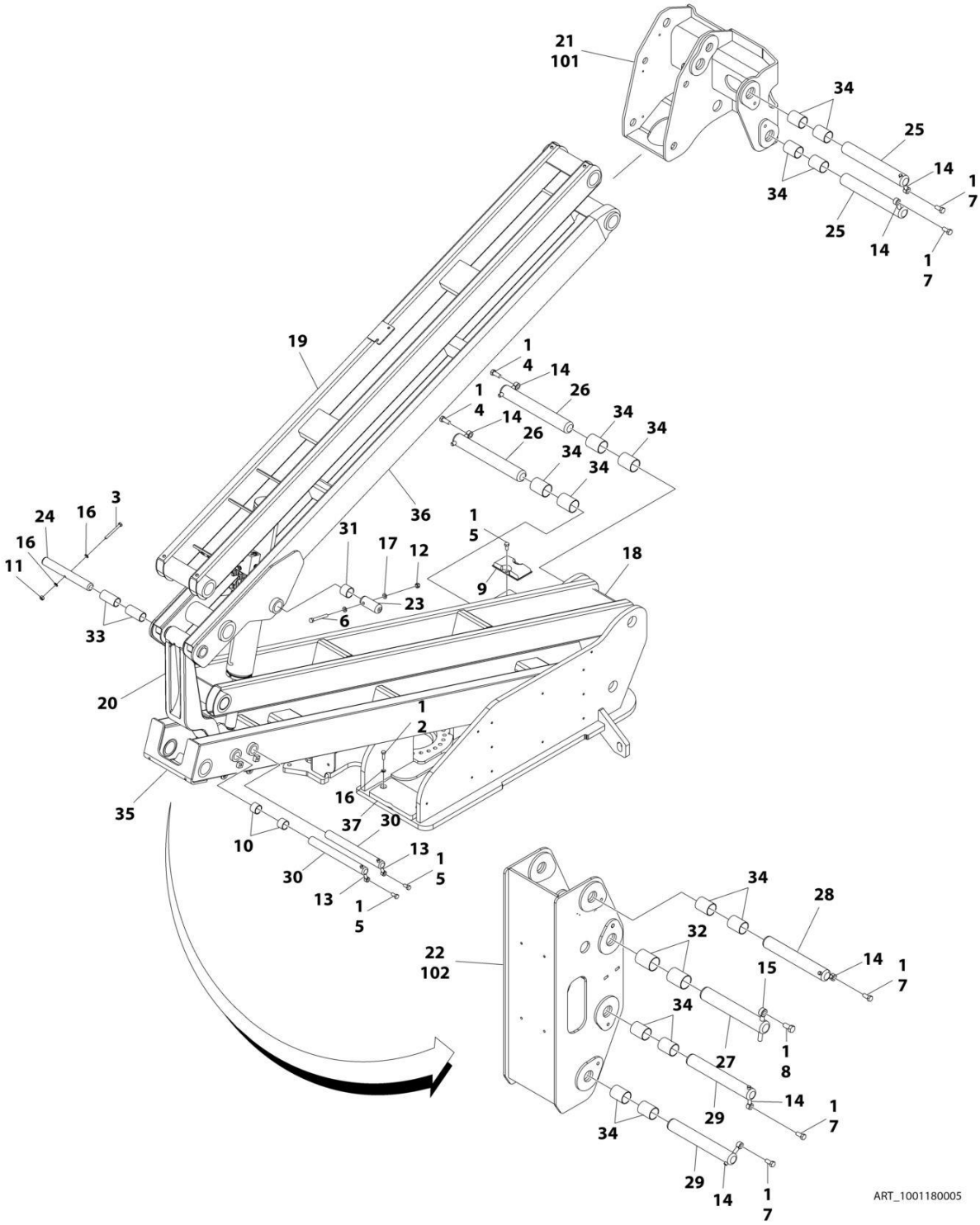

FIGURE 4-17. TOWER BOOM ASSEMBLY - 450AJ ROMANIAN BUILT MACHINES

ITEM	PART NUMBER	QTY	DESCRIPTION	REV
	1001180005	Ref	TOWER BOOM ASSEMBLY - 450AJ ROMANIAN BUILT MACHINES	C
1	0100011	AR	Compound, Locking	
2	0701015	2	Bolt, M10 x 35mm	
3	0701027	1	Bolt, M10 x 100mm	
4	0701616	2	Bolt, M16 x 40mm	
5	0761212	4	Bolt, M12 x 25mm	
6	0761227	2	Bolt, M12 x 100mm	
7	0761615	5	Bolt, M16 x 35mm	
8	0762016	1	Bolt, M20 x 40mm	
9	0940048	1	Bumper	
10	0961948	2	Bearing	
11	3291005	1	Nut, Lock M10 x 1.5	
12	3291205	2	Nut, Lock M12 x 1.75	
13	3841203	2	Keeper, Pin	
14	3841258	7	Keeper, Pin	
15	3841287	1	Keeper, Pin	
16	4812000	4	Washer, M10	
17	4812100	4	Washer, M12	
18	1001160859	1	Link, Lower Tower Boom	
19	1001160872	1	Link, Upper Tower Boom	
20	1001166096	1	Link, Timing	
21	1001166852	1	Upright, Upper **(SN 1300007279 through 1300007373, SN E300002833 through E300004945)**	
22	1001166853	1	Upright, Lower **(SN 1300007279 through 1300007373, SN E300002833 through E300004945)**	
23	1001169240	2	Pin	
24	1001169241	1	Pin	
25	1001169242	2	Pin	
26	1001169249	2	Pin	
27	1001169295	1	Pin	
28	1001169296	1	Pin	
29	1001169297	2	Pin	
30	1001169298	2	Pin	
31	1001169299	2	Bearing	
32	1001169300	2	Bearing	
33	1001169301	2	Bearing	
34	1001169302	14	Bearing	
35	1001178133	1	Tower Boom (Lower)	
36	1001178135	1	Tower, Boom (Upper)	
37	1001180056	1	Pad, Wear	
100	1001233153_NOT_RELEASED	1	Upright Kit (Not Shown - Includes Items 101 & 102) **(SN E300004946 through E300007990, Excluding E300007814)**	
101	1001166852	1	Upright, Upper	
102	1001166853	1	Upright, Lower	

FIGURE 4-18. ROTATOR ASSEMBLY (SN 0300201991 through 0300232742, SN E300002833 through E300004880)

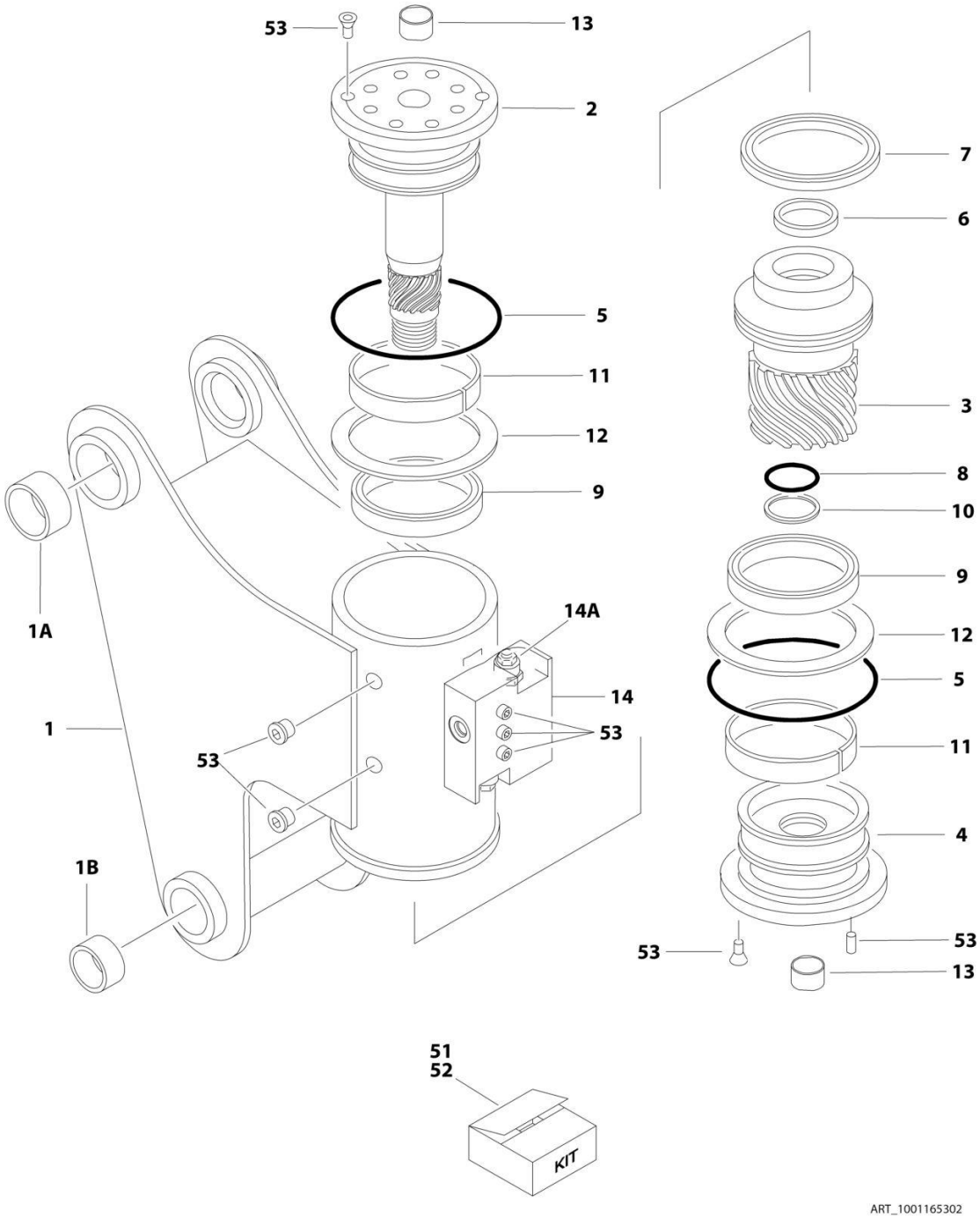

FIGURE 4-18. ROTATOR ASSEMBLY (SN 0300201991 through 0300232742, SN E300002833 through E300004880)

ITEM	PART NUMBER	QTY	DESCRIPTION	REV
	1001165302	Ref	ROTATOR ASSEMBLY **(SN 0300201991 through 0300232742, SN E300002833 through E300004880)**	I
1	See Note	NSS	Housing (Note: Purchase Complete Assembly)	
1A	0962257	2	Bushing	
1B	0961947	2	Bushing	
2	7017162	1	Shaft	
3	7017163	1	Piston	
4	7017164	1	Cap, End	
5	See Note	NSS	O-Ring (Note: Use p/n 70000342)	
6	See Note	NSS	Seal, Rod (Note: Purchase p/n 70000342)	
7	See Note	NSS	Seal, Piston (Note: Purchase p/n 70000342)	
8	See Note	NSS	Seal, Cap (Note: Purchase p/n 70000342)	
9	See Note	NSS	Packing, Bearing (Note: Purchase p/n 70000342)	
10	See Note	NSS	Ring, Back-up (Note: Purchase p/n 70000342)	
11	See Note	NSS	Bearing, Shaft (Note: Purchase p/n 7017159)	
12	See Note	NSS	Washer, Thrust (Note: Purchase p/n 7017159)	
13	7017195	2	Bushing	
14	7017172	1	Counterbalance Valve Assembly	
14A	7017192	2	Valve Cartridge (No Seal Kit Available)	
51	70000342	1	Seal Kit (Includes Items 5-10)	
52	7017159	1	Bearing Kit (Includes Items 11 & 12)	
53	7017142	1	Hardware Kit	

FIGURE 4-19. ROTATOR ASSEMBLY (SN 0300232743 through 0300272317, SN B300003516 through B300005760, SN E300004881 through E300007990, SN 1300007279 through 1300007373)

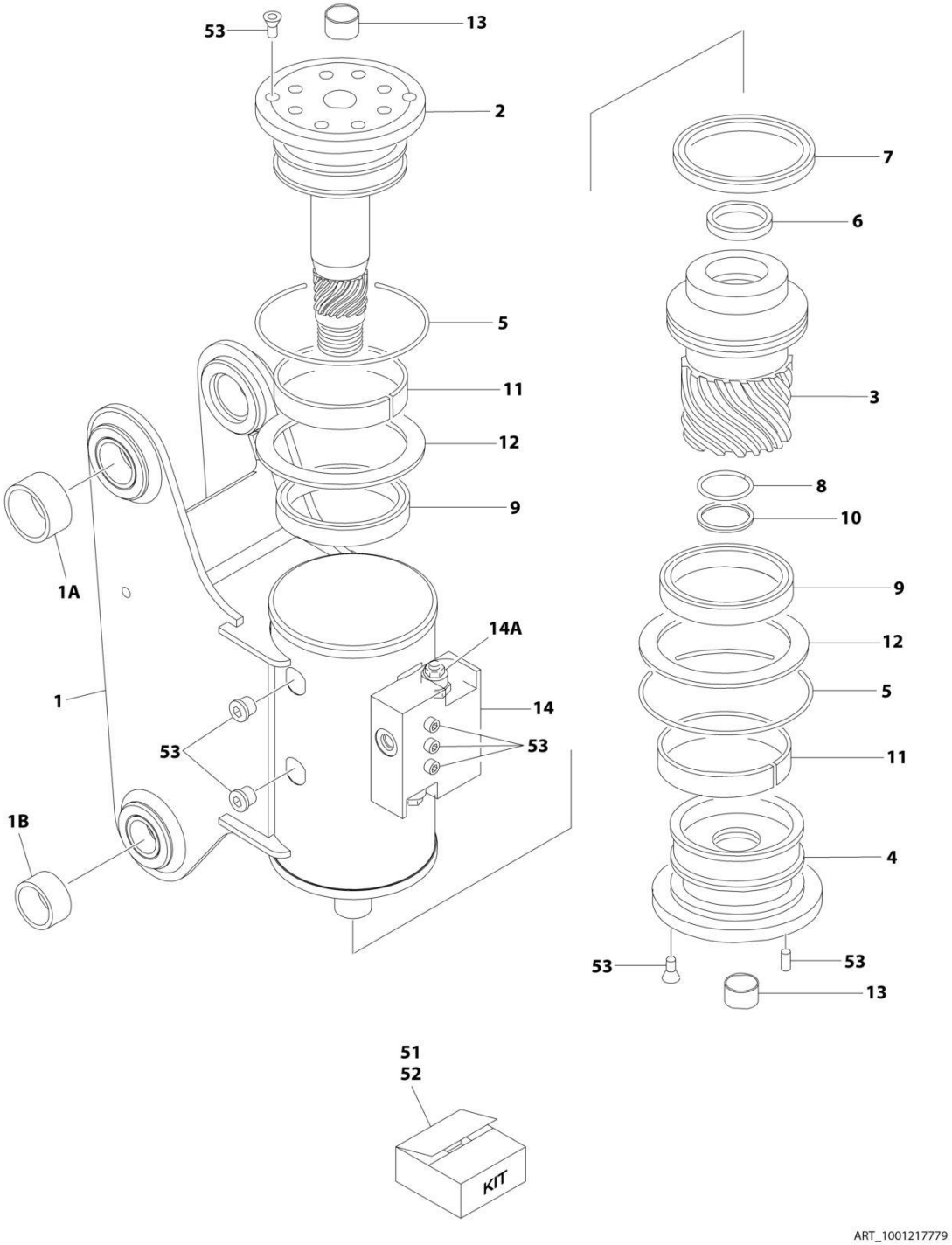

FIGURE 4-19. ROTATOR ASSEMBLY (SN 0300232743 through 0300272317, SN B300003516 through B300005760, SN E300004881 through E300007990, SN 1300007279 through 1300007373)

ITEM	PART NUMBER	QTY	DESCRIPTION	REV
	1001217779	Ref	ROTATOR ASSEMBLY	B
1	See Note	NSS	Housing (Note: Purchase Complete Assembly)	
1A	0962257	2	Bushing	
1B	0961947	2	Bushing	
2	7017162	1	Shaft	
3	7017163	1	Piston	
4	7017164	1	Cap, End	
5	See Note	NSS	O-Ring (Note: Use p/n 70000342)	
6	See Note	NSS	Seal, Rod (Note: Purchase p/n 70000342)	
7	See Note	NSS	Seal, Piston (Note: Purchase p/n 70000342)	
8	See Note	NSS	Seal, Cap (Note: Purchase p/n 70000342)	
9	See Note	NSS	Packing, Bearing (Note: Purchase p/n 70000342)	
10	See Note	NSS	Ring, Back-up (Note: Purchase p/n 70000342)	
11	See Note	NSS	Bearing, Shaft (Note: Purchase p/n 7017159)	
12	See Note	NSS	Washer, Thrust (Note: Purchase p/n 7017159)	
13	7017195	2	Bushing	
14	7017172	1	Counterbalance Valve Assembly	
14A	7017192	2	Valve Cartridge (No Seal Kit Available)	
51	70000342	1	Seal Kit (Includes Items 5-10)	
52	7017159	1	Bearing Kit (Includes Items 11 & 12)	
53	7017142	1	Hardware Kit	

FIGURE 4-20. PLATFORM SUPPORT INSTALLATION - WITHOUT LSS

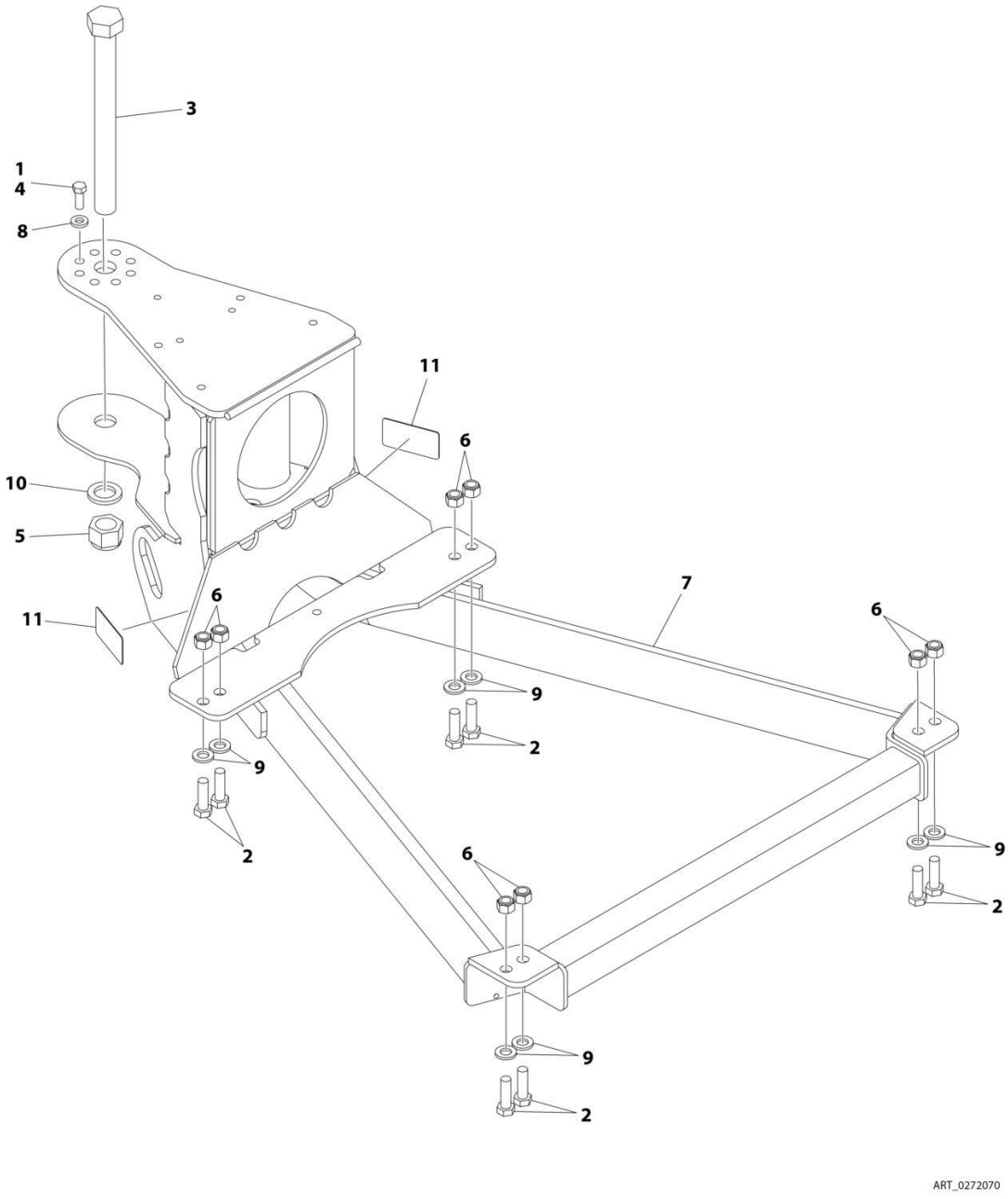

FIGURE 4-20. PLATFORM SUPPORT INSTALLATION - WITHOUT LSS

ITEM	PART NUMBER	QTY	DESCRIPTION	REV
	0272070	Ref	PLATFORM SUPPORT INSTALLATION - WITHOUT LSS	I
1	0100011	AR	Compound, Locking	
2	0641812	8	Bolt 1/2 x 1-1/2	
2	0761216	8	Bolt M12 x 40	
3	0642684	1	Bolt 1 x 10-1/2	
4	0681608	8	Bolt 3/8 x 1	
5	3300243	1	Nut 1	
6	3311805	8	Nut 1/2	
6	3291205	8	Nut M12	
7	4846573	1	Support	
8	4891600	8	Washer 3/8	
9	4891800	8	Washer 1/2	
9	5241200	8	Washer M12	
10	4892600	1	Washer 1	
11	1001216630	1	Decal - Tie Down/No Lift	

FIGURE 4-21. PLATFORM SUPPORT INSTALLATION - WITH 4 CELL LSS (450AJ ONLY) (SN 0300201991 through 0300202578)

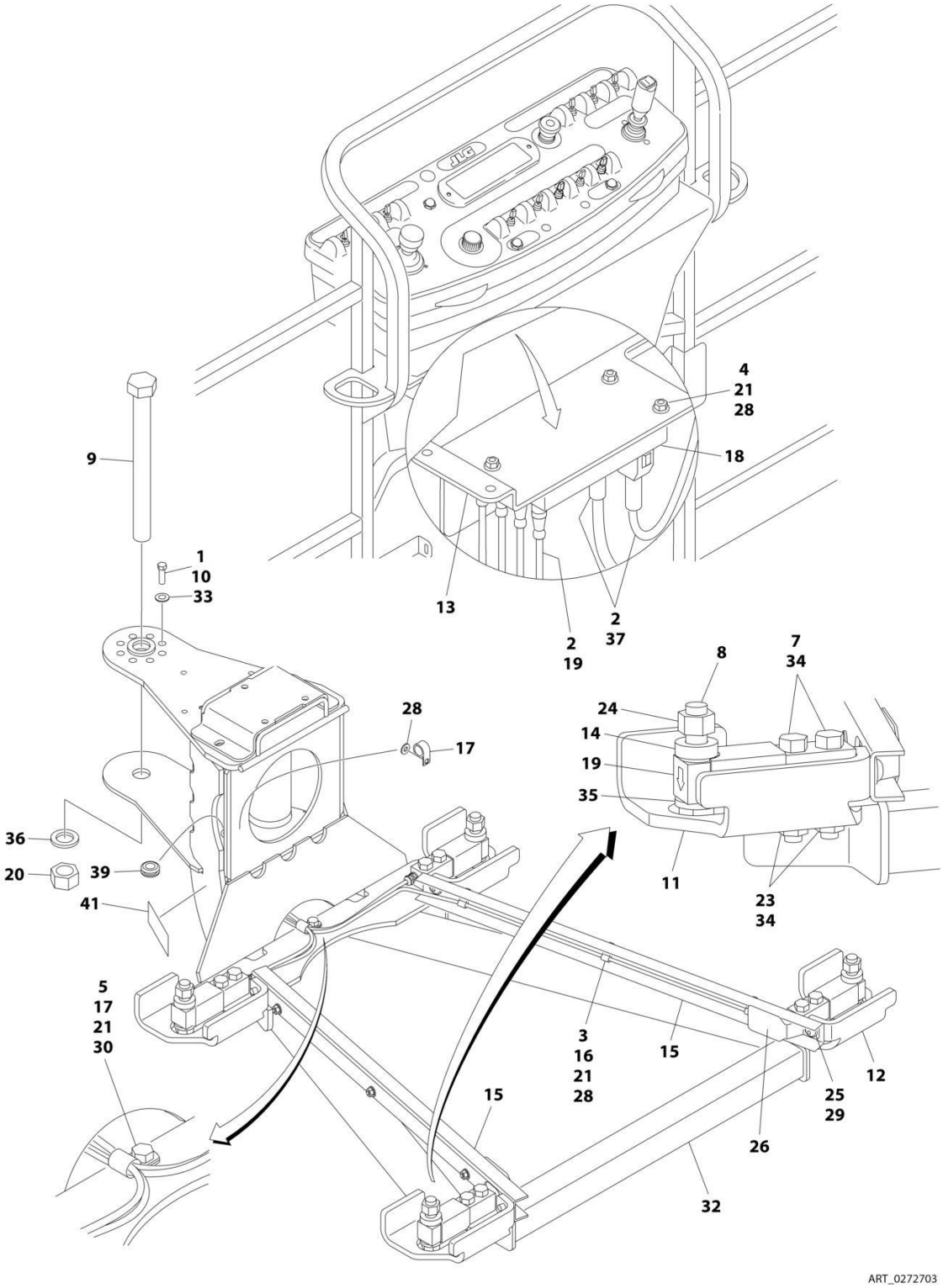

FIGURE 4-21. PLATFORM SUPPORT INSTALLATION - WITH 4 CELL LSS (450AJ ONLY) (SN 0300201991 through 0300202578)

ITEM	PART NUMBER	QTY	DESCRIPTION	REV
	0272703	Ref	PLATFORM SUPPORT INSTALLATION - WITH 4 CELL LSS (450AJ ONLY) **(SN 0300201991 through 0300202578)**	Q
1	0100011	AR	Compound, Locking	
2	0100048	AR	Grease, Dielectric	
3	0641405	6	Bolt 1/4 x 5/8	
4	0641416	3	Bolt 1/4 x 2	
5	0641407	1	Bolt 1/4 x 7/8	
7	0641822	8	Bolt 1/2 x 2-3/4	
8	0642024	4	Bolt 5/8 x 3	
9	0642684	1	Bolt 1 x 10-1/2	
10	0681608	8	Bolt 3/8 x 1 Grade 8	
11	0902919	2	Bracket, Cell Guard	
12	0902920	2	Bracket, Cell Guard	
13	1001113483	1	Bracket, Module Mount	
14	0962450	4	Bushing, Spacer	
15	1271538	2	Channel	
16	1320136	6	Clamp	
17	1320224	2	Clamp	
18	1600387	1	Module, Control - LSS (Note: Recalibration Required When Replaced)	
19	2420202	4	Cell, Load (Includes Cable)	
20	3272605	1	Nut 1 Grade 8	
21	3311405	13	Nut 1/4	
23	3311805	8	Nut 1/2	
24	3312005	4	Nut 5/8	
25	3900283	4	Screw 3/8 x 3/4	
26	4061054	2	Shield	
27	4240033	AR	Tie-Strap (Not Shown)	
28	4711400	10	Washer 1/4	
29	4711600	4	Washer 3/8	
30	4751400	1	Washer 1/4	
32	4846573	1	Support, Platform	
33	4891600	8	Washer 3/8	
34	4891800	8	Washer 1/2	
35	4892000	4	Washer 5/8	
36	4892600	1	Washer 1	
37	4922869	1	LSS Harness	
37	4922705	1	Analyzer Harness (Not Shown)	
37	4460761	1	Receptacle, Female - 4 Position (Not Shown)	
37	4460226	1	Socket, Female	
37	4460836	1	Connector - 12 Position (Black) (J2)	
37	4460465	1	Socket, Female	
37	4460466	1	Plug, Terminal	
37	0840055	1	Boot	
37	4460933	1	Connector - 12 Position (Grey) (J1)	
37	4460465	1	Socket, Female	
37	4460466	1	Plug, Terminal	
37	0840055	1	Boot	
39	2540038	1	Grommet	

SECTION 4 - BOOM

ITEM	PART NUMBER	QTY	DESCRIPTION	REV
40	2920129	1	Bulb, Light (Not Shown - Located on Ground Control Box)	
41	1001216630	2	Decal - Tie Down/No Lift	

FIGURE 4-22. PLATFORM SUPPORT INSTALLATION WITH 4 CELL LSS (450AJ ONLY) (SN 0300202579 through 0300272317, SN E300002833 through E300007990, SN 1300007279 through 1300007373)

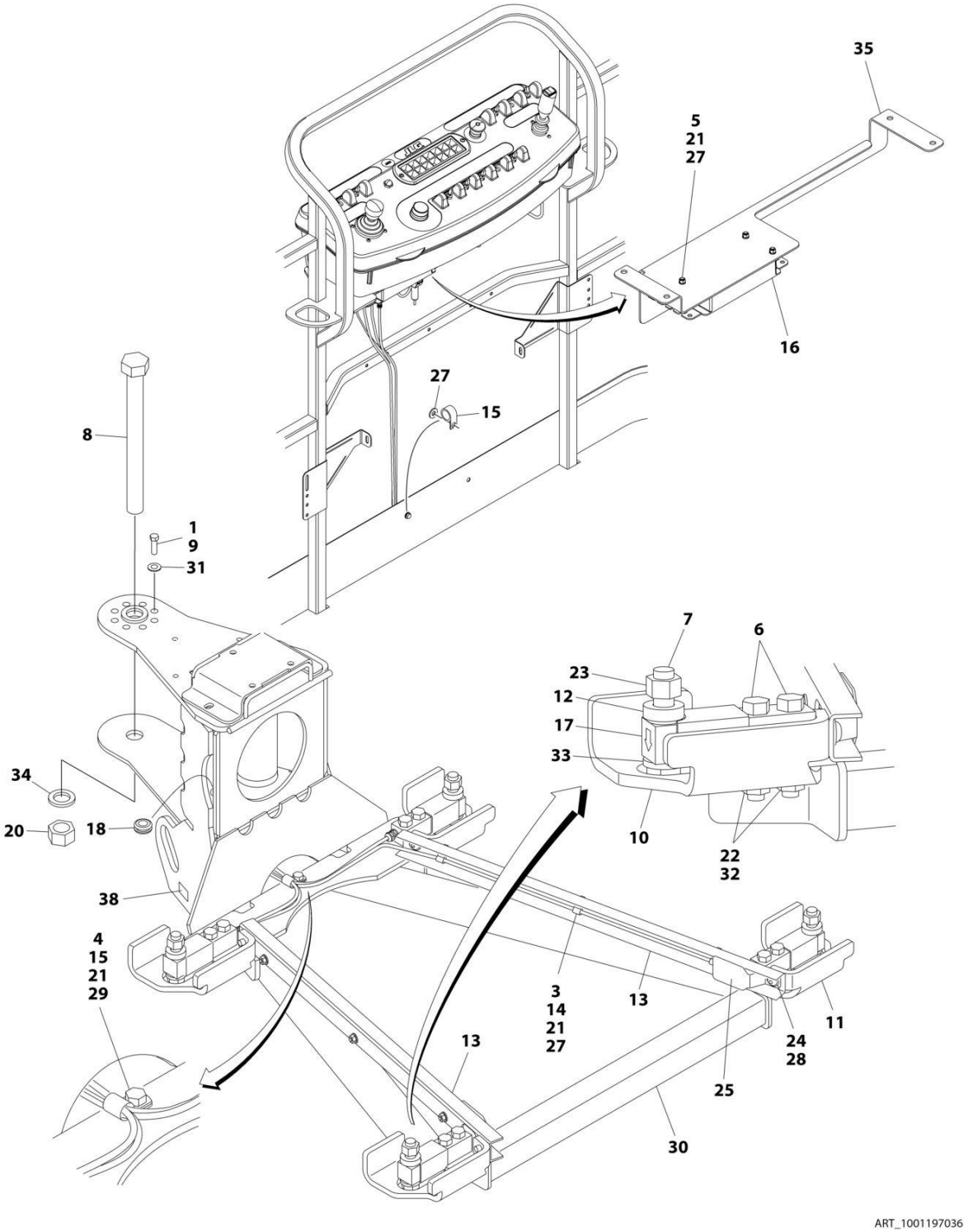

FIGURE 4-22. PLATFORM SUPPORT INSTALLATION WITH 4 CELL LSS (450AJ ONLY) (SN 0300202579 through 0300272317, SN E300002833 through E300007990, SN 1300007279 through 1300007373)

ITEM	PART NUMBER	QTY	DESCRIPTION	REV
	1001197036	Ref	PLATFORM SUPPORT INSTALLATION WITH 4 CELL LSS (450AJ ONLY)	F
1	0100011	AR	Compound, Locking	
2	0100048	AR	Silicon, Compound (Not Shown)	
3	0641405	6	Bolt 1/4 x 5/8	
4	0641407	1	Bolt 1/4 x 7/8	
5	0641416	3	Bolt 1/4 x 2	
6	0641822	8	Bolt 1/2 x 2-3/4	
7	0642024	4	Bolt 5/8 x 3	
8	0642684	1	Bolt 1/8 x 10-1/2	
9	0681608	8	Bolt 3/8 x 1	
10	0902919	2	Bracket, LH	
11	0902920	2	Bracket, RH	
12	0962450	4	Bushing, Spacer	
13	1271538	2	Channel, Load Cell Wire	
14	1320136	6	Clamp, Cable	
15	1320224	2	Clamp, Cable	
16	1600387	1	Controller, Load Sense	
17	2420202	4	Gauge	
18	2540038	1	Grommet	
20	3272605	1	Nut 1	
21	3311405	10	Nut 1/4	
22	3311805	8	Nut 1/2	
23	3312005	4	Nut 5/8	
24	3900283	4	Screw 3/8 x 3/4	
25	4061054	2	Shield	
26	4240033	AR	Tie-Strap (Not Shown)	
27	4711400	13	Washer 1/4	
28	4711600	4	Washer 3/8	
29	4751400	1	Washer 1/4	
30	4846573	1	Weldment	
31	4891600	8	Washer 3/8	
32	4891800	8	Washer 1/2	
33	4892000	4	Washer 5/8	
34	4892600	1	Washer 1	
35	1001113483	1	Bracket	
36	1001120371	1	LSS Harness (Not Shown - See ELECTRICAL SECTION for Breakdown)	
37	4460428	1	Connector, Strain Relief (Not Shown)	
38	1001216630	2	Decal - Tie Down/No Lift	

FIGURE 4-23. PLATFORM SUPPORT INSTALLATION - WITH 1 CELL LSS

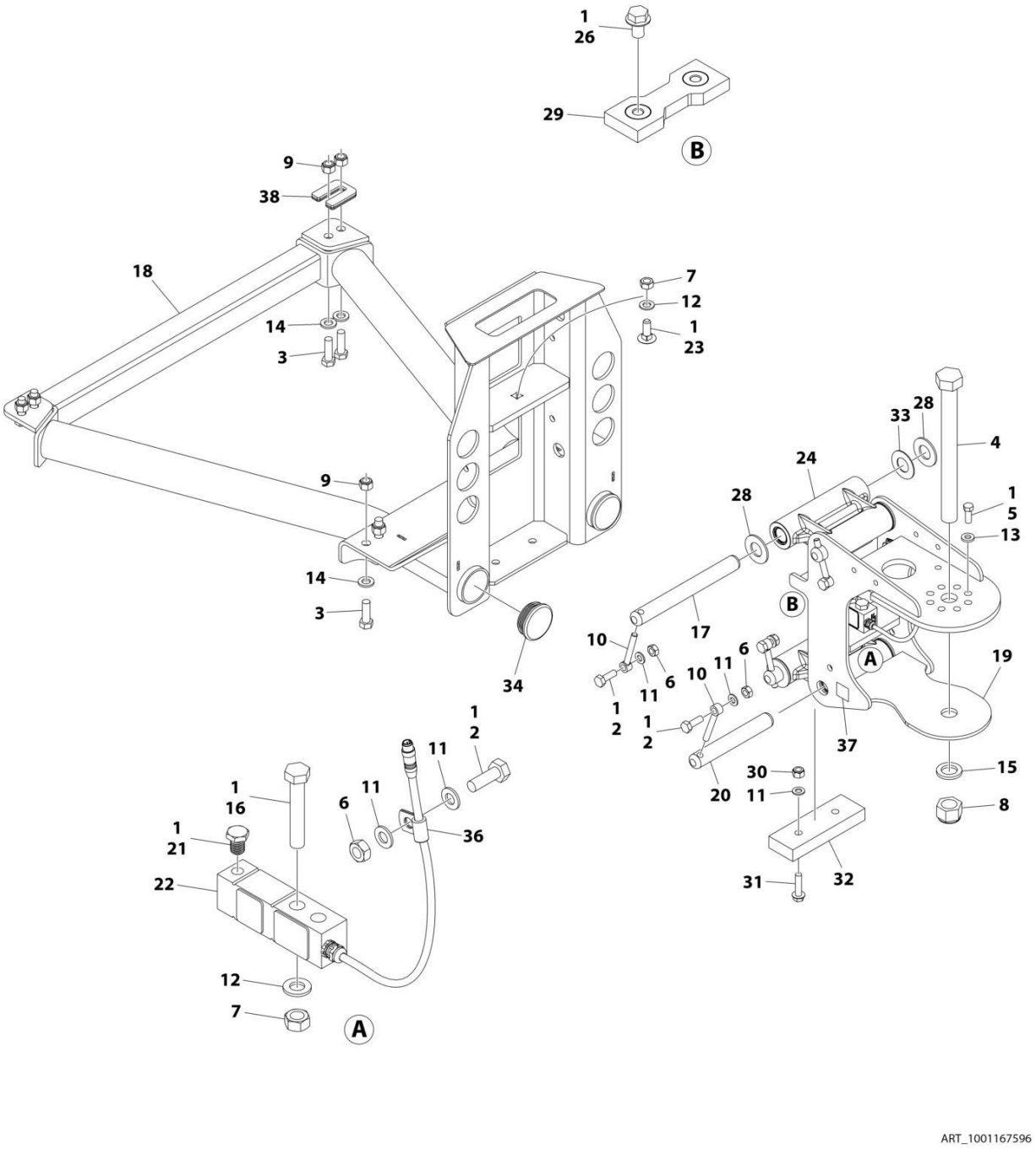

FIGURE 4-23. PLATFORM SUPPORT INSTALLATION - WITH 1 CELL LSS

ITEM	PART NUMBER	QTY	DESCRIPTION	REV
	1001167596	Ref	PLATFORM SUPPORT INSTALLATION - WITH 1 CELL LSS	K
1	0100011	AR	Compound, Locking	
2	0761014	AR	Bolt M10 x 30	
3	0641812	8	Bolt 1/2 x 1-1/2	
3	0761216	8	Bolt M12 x 40	
4	0642684	1	Bolt 1 x 10-1/2	
5	0681608	8	Bolt 3/8 x 1	
6	3291001	AR	Nut M10	
7	3291201	3	Nut M12	
8	3300243	1	Nut 1	
9	3311805	8	Nut 1/2	
9	3291205	8	Nut M12	
10	3841143	4	Keeper	
11	4812000	AR	Washer M10	
12	4812100	3	Washer M12	
13	4891600	8	Washer 3/8	
14	4891800	8	Washer 1/2	
14	5241200	8	Washer M12	
15	4892600	1	Washer 1	
16	1001098828	2	Bolt M12 x 70 Grade 10.9	
17	1001167565	2	Pin	
18	1001200494	1	Support	
19	1001167567	1	Platform Support	
20	1001168402	2	Pin	
21	1001188622	1	Screw M12	
22	1001172663	1	Gauge, Load Sensing	
23	1001188844	1	Bolt M12 x 35	
24	1001201351	2	LSS Link Assembly	
24	1001187382	4	Bearing	
24	1001187383	4	Seal	
26	5251008	2	Bolt M10 x 16	
27	1001175244	1	Harness, LSS (Not Shown) **(SN 0300201991 through 0300222765, SN E300003609 through E300003749)**	
28	1001189002	8	Bearing	
29	1001190985	1	Pad, Wear	
30	3291005	2	Nut M10	
31	5251016	1	Bolt M10 x 40	
32	1001200491	1	Plate	
33	1001189001	4	Bearing	
34	1001204725	2	Plug	
35	4460428	1	Connector, Strain Relief (Not Shown) **(SN 0300201991 through 0300222765, SN E300003609 through E300003749)**	
36	91203039	1	Clamp **(SN 0300222766 through 0300272317, SN 1300007279 through 1300007373, SN B300003516 through B300005760, SN E300003750 through E300007990, Except SN 0300272185 through 0300272190, Excluding B300005569 and E300007814)**	
37	1001216630	2	Decal - Tie Down/No Lift **(SN 0300222766 through 0300272317, SN 1300007279 through 1300007373, SN B300003516 through B300005760, SN E300003750 through E300007990, Except SN 0300272185 through 0300272190, Excluding B300005569 and E300007814)**	
38	1001238421	AR	Platform Leveling Kit **(SN 0300253993 through 0300272317, SN**	

ITEM	PART NUMBER	QTY	DESCRIPTION	REV
			B300003516 through B300005760, SN E300006362 through E300007990, Except SN 0300272185 through 0300272190, Excluding B300005569 and E300007814)	

FIGURE 4-24. 2WD VALVES INSTALLATION - 450A BOOM MOUNTED

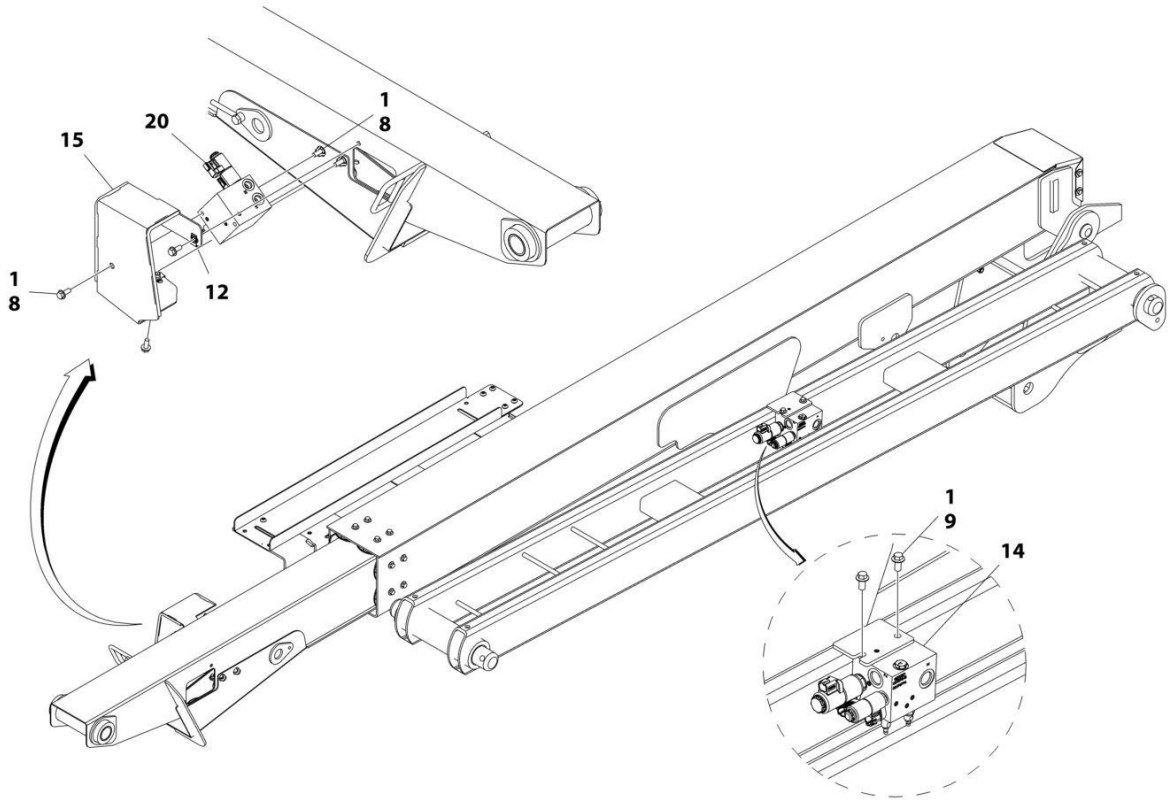

ART_1001215659_3OF3

FIGURE 4-24. 2WD VALVES INSTALLATION - 450A BOOM MOUNTED

ITEM	PART NUMBER	QTY	DESCRIPTION	REV
	1001215659	Ref	2WD VALVES INSTALLATION - 450A BOOM MOUNTED	C
1	0100011	AR	Compound, Locking	
8	5250810	5	Bolt M8 x 20	
9	5251010	2	Bolt M10 x 20	
12	1001118274	2	Nut M8	
14	1001162535	1	Upright Valve Assembly (See UPRIGHT VALVE ASSEMBLY for Breakdown)	
15	1001170375	1	Shield	
20	1001215105	1	Boom Valve Assembly - Fixed Jib (See BOOM VALVE ASSEMBLY - FIXED JIB for Breakdown)	

FIGURE 4-25. 2WD VALVES INSTALLATION - 450AJ BOOM MOUNTED

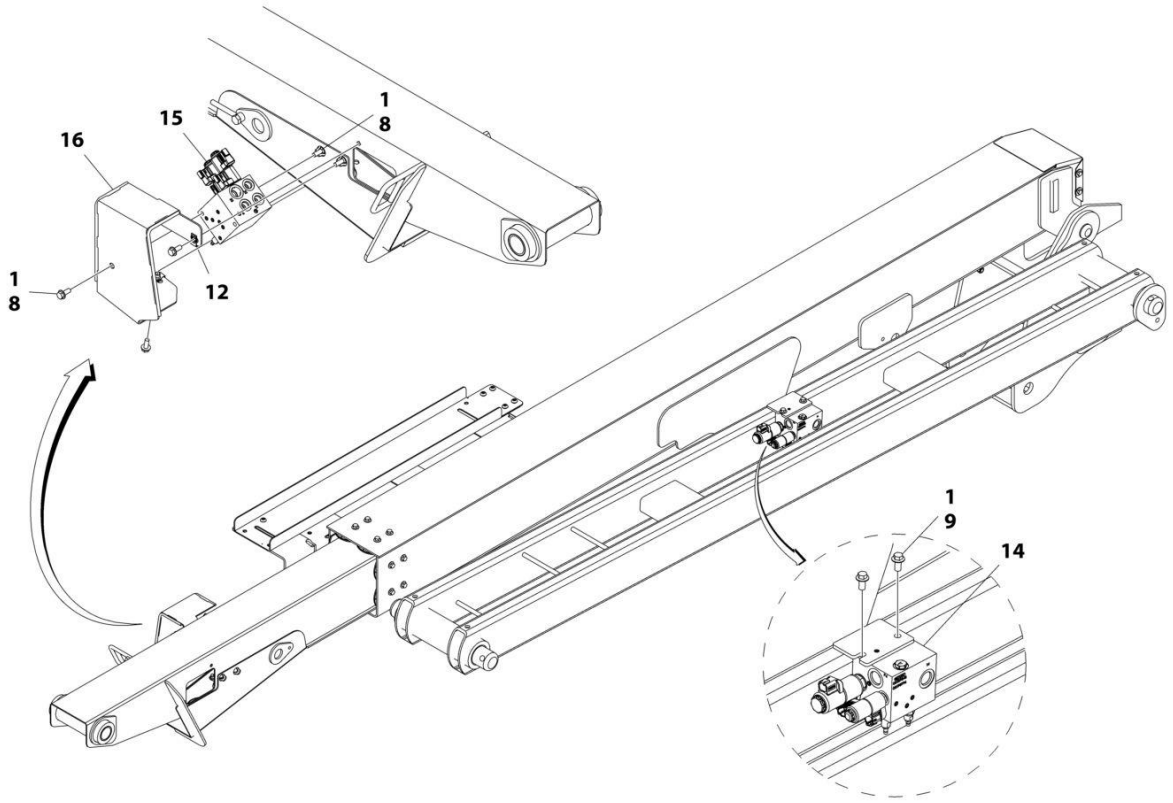

FIGURE 4-25. 2WD VALVES INSTALLATION - 450AJ BOOM MOUNTED

ITEM	PART NUMBER	QTY	DESCRIPTION	REV
	1001214163	Ref	2WD VALVES INSTALLATION - 450AJ BOOM MOUNTED	B
1	0100011	AR	Compound, Locking	
8	5250810	3	Bolt M8 x 20	
9	5251010	2	Bolt M10 x 20	
12	1001118274	2	Nut M8	
14	1001162535	1	Upright Valve Assembly (See UPRIGHT VALVE ASSEMBLY for Breakdown)	
15	1001162536	1	Boom Valve Assembly (See BOOM VALVE ASSEMBLY for Breakdown)	
16	1001170375	1	Shield	

FIGURE 4-26. 4WD VALVES INSTALLATION - 450A BOOM MOUNTED

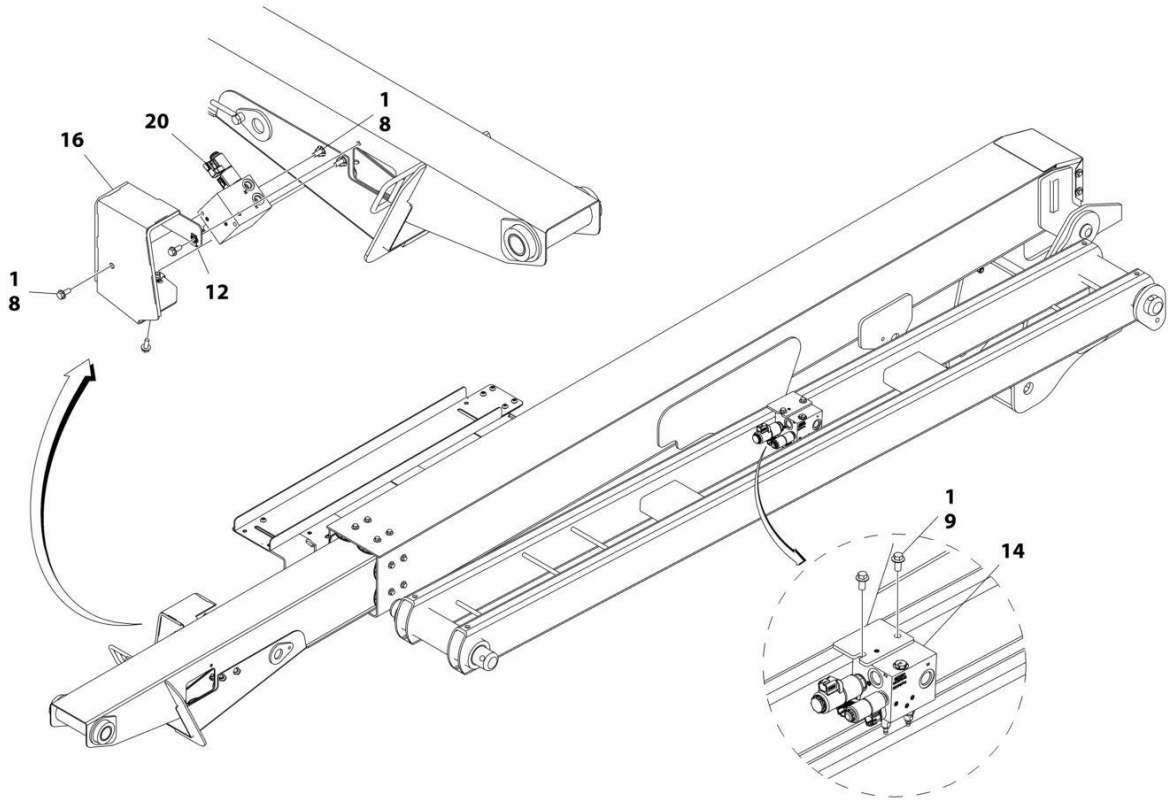

FIGURE 4-26. 4WD VALVES INSTALLATION - 450A BOOM MOUNTED

ITEM	PART NUMBER	QTY	DESCRIPTION	REV
	1001215378	Ref	4WD VALVES INSTALLATION - 450A BOOM MOUNTED	C
1	0100011	AR	Compound, Locking	
8	5250810	5	Bolt M8 x 20	
9	5251010	2	Bolt M10 x 20	
12	1001118274	2	Nut M8	
14	1001162535	1	Upright Valve Assembly (See UPRIGHT VALVE ASSEMBLY for Breakdown)	
16	1001170375	1	Shield	
20	1001215105	1	Boom Valve Assembly - Fixed Jib (See BOOM VALVE ASSEMBLY - FIXED JIB for Breakdown)	

FIGURE 4-27. 4WD VALVES INSTALLATION - 450AJ BOOM MOUNTED

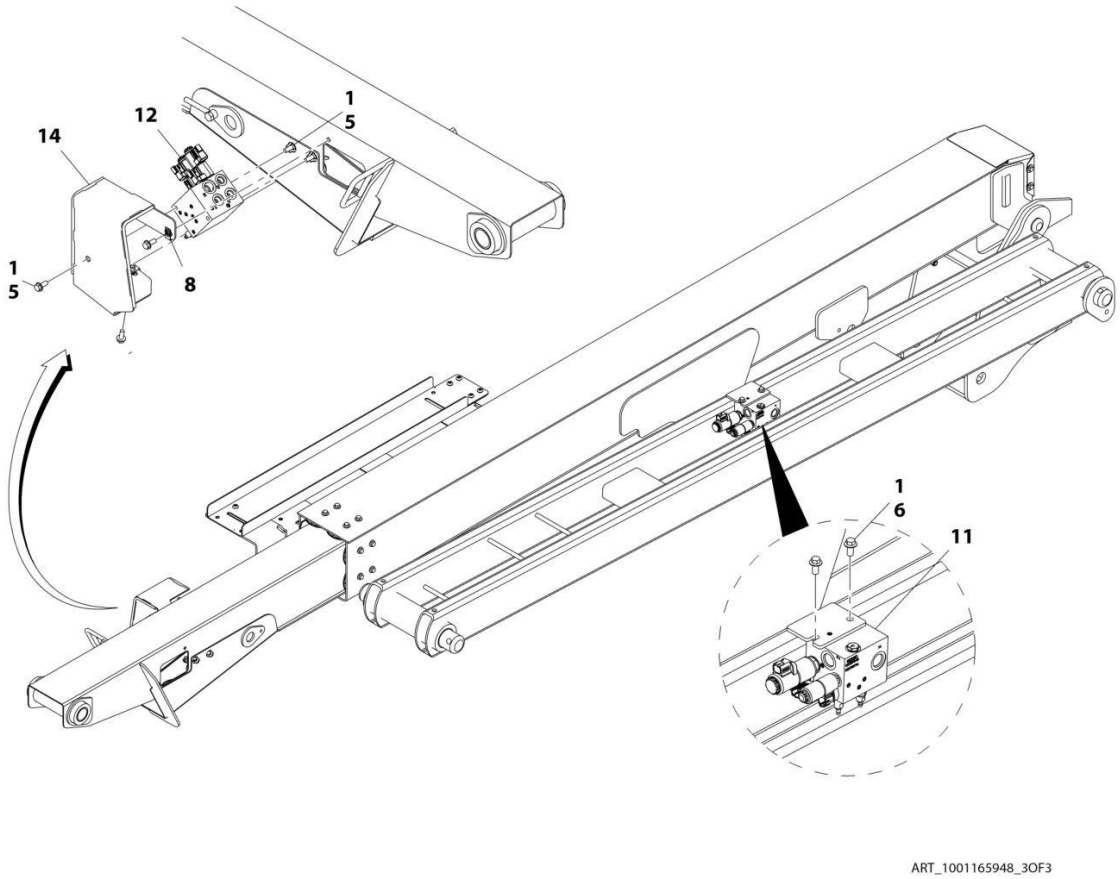

FIGURE 4-27. 4WD VALVES INSTALLATION - 450AJ BOOM MOUNTED

ITEM	PART NUMBER	QTY	DESCRIPTION	REV
	1001165948	Ref	4WD VALVES INSTALLATION - 450AJ BOOM MOUNTED	H
1	0100011	AR	Compound, Locking	
5	5250810	5	Bolt M8 x 20	
6	5251010	2	Bolt M10 x 20	
8	1001118274	2	Nut M8	
11	1001162535	1	Upright Valve Assembly (See UPRIGHT VALVE ASSEMBLY for Breakdown)	
12	1001162536	1	Boom Valve Assembly (See BOOM VALVE ASSEMBLY for Breakdown)	
14	1001170375	1	Shield	

FIGURE 4-28. UPRIGHT VALVE ASSEMBLY

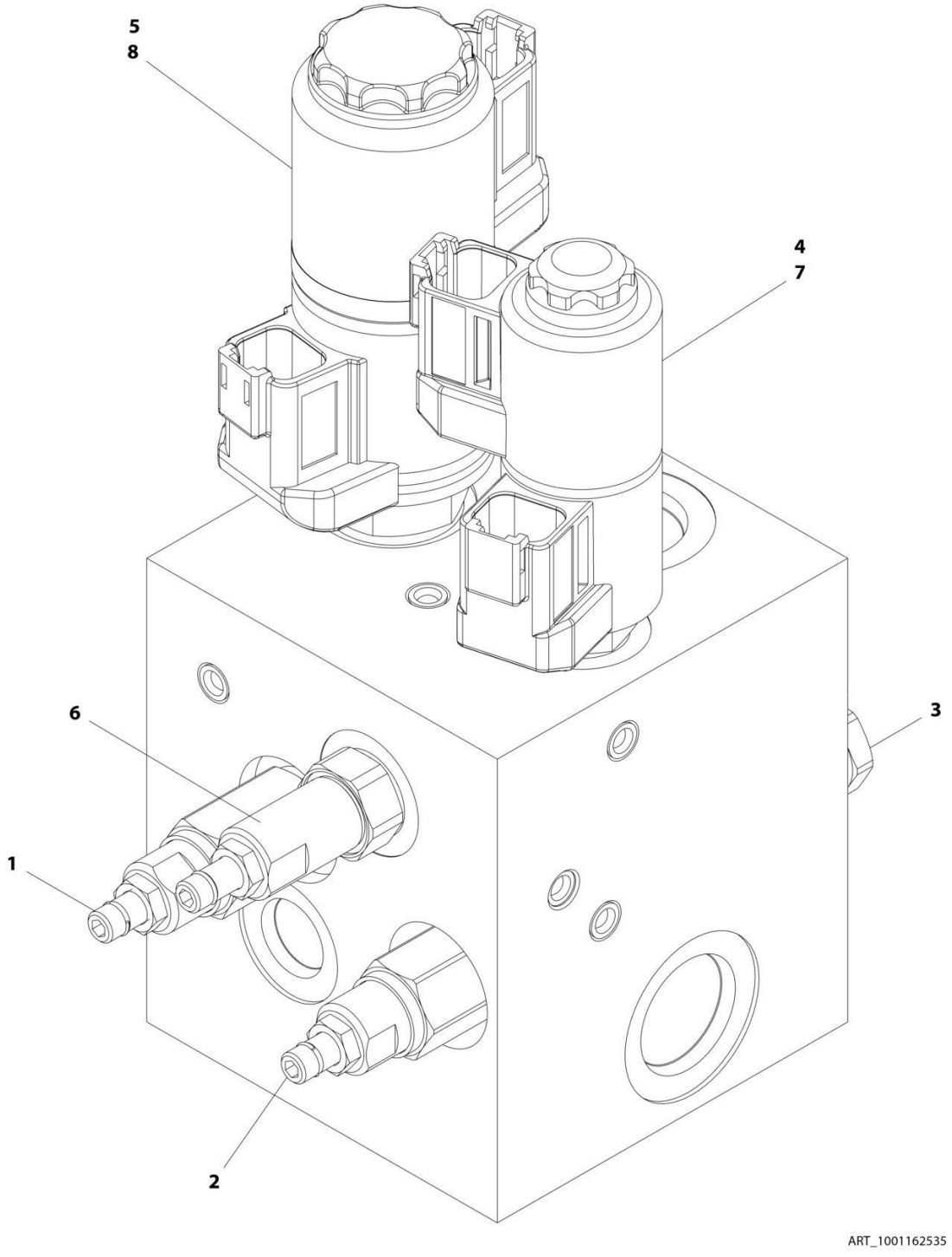

FIGURE 4-28. UPRIGHT VALVE ASSEMBLY

ITEM	PART NUMBER	QTY	DESCRIPTION	REV
	1001162535	Ref	UPRIGHT VALVE ASSEMBLY	D
1	70004864	1	Cartridge, Valve	
1	70004875	1	Seal Kit - 70004864 Valve	
2	70004865	1	Cartridge, Valve	
2	70004875	1	Seal Kit - 70004865 Valve	
3	70004866	1	Cartridge, Relief Valve	
3	70004867	1	Seal Kit - 70004866 Valve	
4	70004868	1	Cartridge, Solenoid Valve Less Coil	
4	70004869	1	Seal Kit - 70004868 Valve	
5	7027625	1	Cartridge, Solenoid Valve Less Coil	
5	70000100	1	Seal Kit - 7027625 Valve	
6	70004870	1	Cartridge, Valve **(SN 0300201991 through 0300243197, SN 1300007279 through 1300007373, SN E300002833 through E300005519)**	
6	70006660	1	Cartridge, Valve **(SN 0300243198 through 0300272317, SN B300003516 through B300005760, SN E300005520 through E300007990, Except SN 0300272185 through 0300272190, Excluding B300005569 and E300007814)**	
6	70004867	1	Seal Kit - 70004870/70006660 Valve	
7	70004871	2	Coil	
8	7027628	2	Coil	

FIGURE 4-29. BOOM VALVE ASSEMBLY - 450A

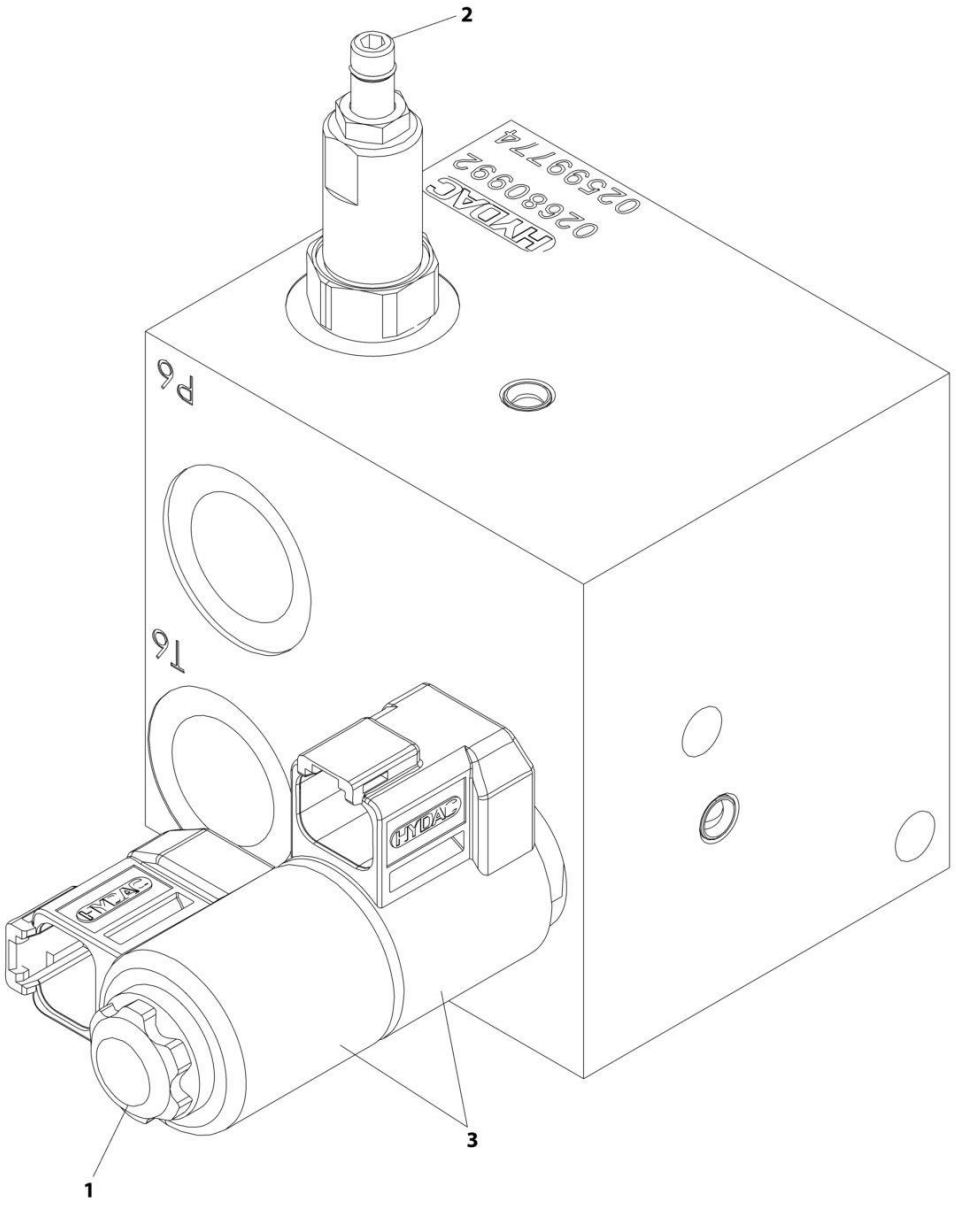

ART_1001215105

FIGURE 4-29. BOOM VALVE ASSEMBLY - 450A

ITEM	PART NUMBER	QTY	DESCRIPTION	REV
	1001215105	Ref	BOOM VALVE ASSEMBLY - 450A	A
1	70005243	1	Cartridge, Solenoid Valve Less Coil	
1	70004869	1	Seal Kit - 70005243 Valve	
2	70004873	1	Cartridge, Valve	
2	70004867	1	Seal Kit - 70004873 Valve	
3	70004871	2	Coil	

FIGURE 4-30. BOOM VALVE ASSEMBLY - 450AJ

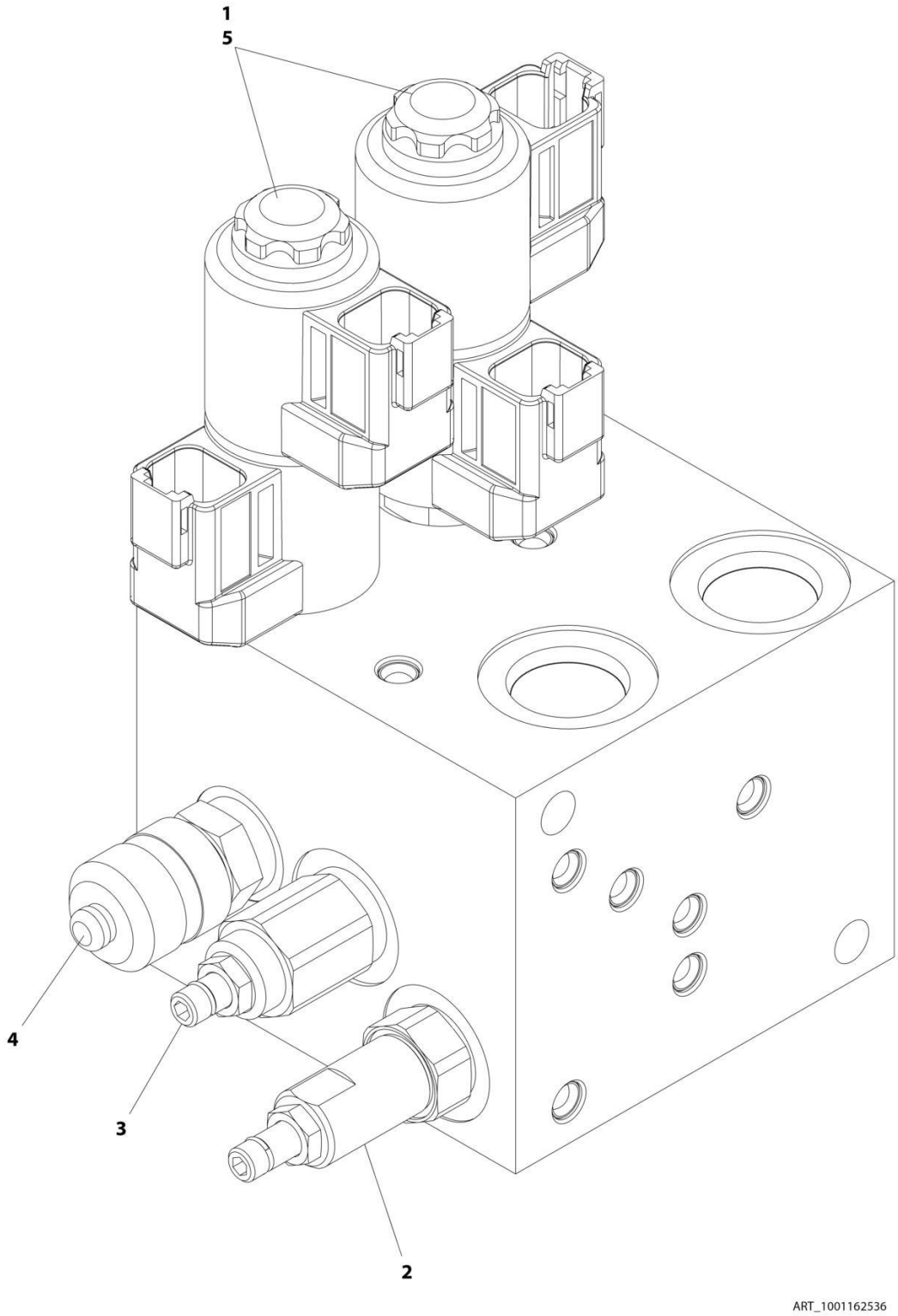

FIGURE 4-30. BOOM VALVE ASSEMBLY - 450AJ

ITEM	PART NUMBER	QTY	DESCRIPTION	REV
	1001162536	Ref	BOOM VALVE ASSEMBLY - 450AJ	F
1	70005243	2	Cartridge, Solenoid Valve Less Coil	
1	70004869	2	Seal Kit - 70005243 Valve	
2	70004873	1	Cartridge, Valve	
2	70004867	1	Seal Kit - 70004873 Valve	
3	70004874	1	Cartridge, Valve **(SN 0300201991 through 0300250093, SN E300002833 through E300006401)**	
3	70006970	1	Cartridge, Valve **(SN 0300250094 through 0300272317, SN B300003516 through B300005760, SN E300006402 through E300007990, Except SN 0300272185 through 0300272190, Excluding B300005569 and E300007814)**	
3	70004867	1	Seal Kit - 70004874 & 70006970 Valve	
4	2221086	1	Fitting, Test	
5	70004871	4	Coil	

SECTION 5 - PLATFORM

FIGURE 5-1. PLATFORM ASSEMBLY - 30IN X 4FT (76CM X 1.22M) - SIDE GATE ENTRY (USA BUILT MACHINES)

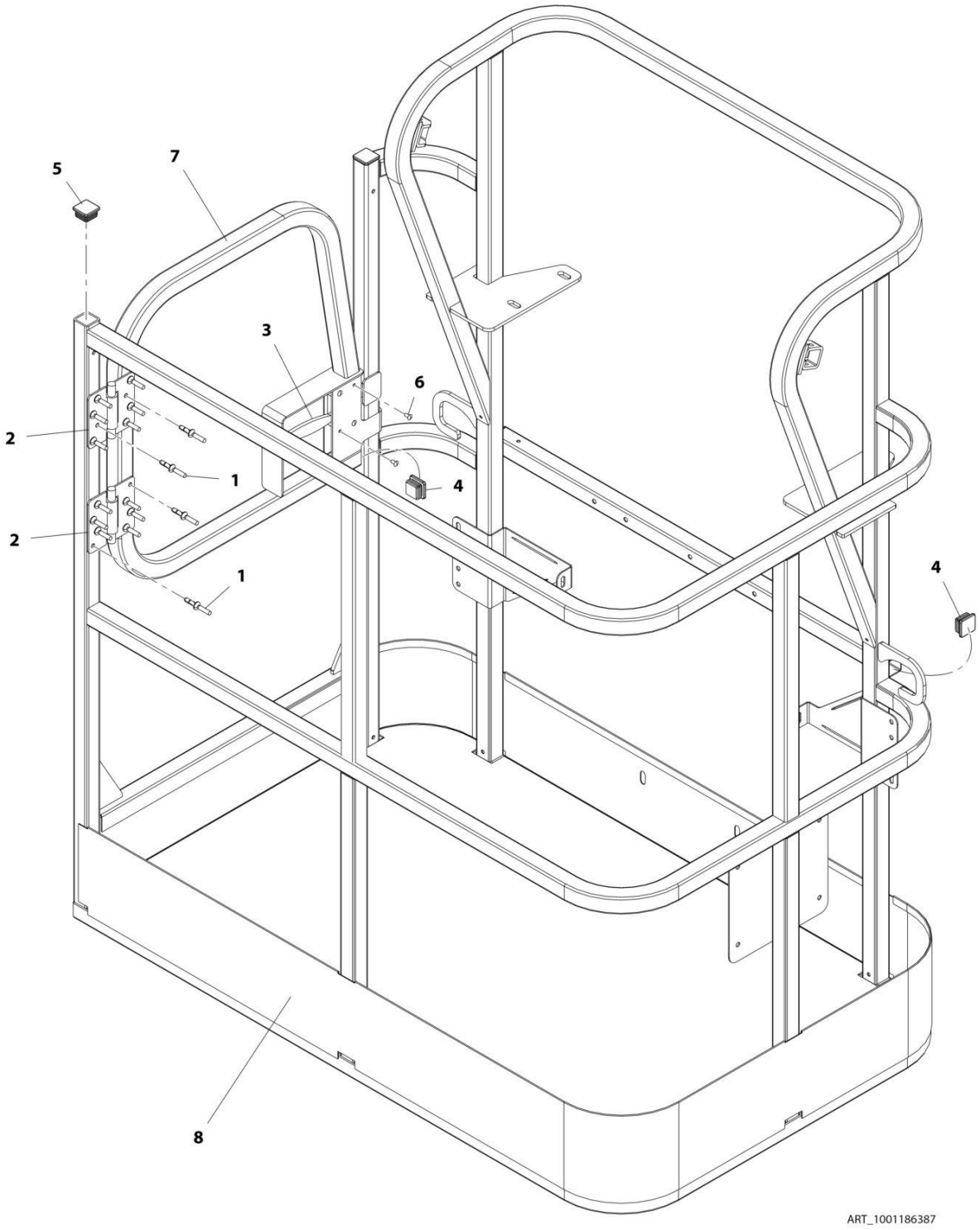

FIGURE 5-1. PLATFORM ASSEMBLY - 30IN X 4FT (76CM X 1.22M) - SIDE GATE ENTRY (USA BUILT MACHINES)

ITEM	PART NUMBER	QTY	DESCRIPTION	REV
	1001186387	Ref	PLATFORM ASSEMBLY - 30IN X 4FT (76CM X 1.22M) - SIDE GATE ENTRY (USA BUILT MACHINES)	C
	See Note	Ref	Note: Platform and Mesh must be ordered separately for Platforms with Mesh. See SPECIAL OPTIONS SECTION for Mesh Installations.	
	See Note	Ref	Note: Replacement Decals Must be Ordered Separately - See DECALS SECTION.	
1	2080040	16	Fastener, Huck	
2	2600281	2	Hinge, Self-Closing	
3	2940074	1	Latch	
4	3520072	3	Cap, Plug	
5	3520198	2	Cap, Plug	
6	3820020	4	Rivet	
7	1001144629	1	Gate, Weldment	
8	See Note	1	Platform, Weldment (Note: Not Available - Purchase Platform Assembly)	

FIGURE 5-2. PLATFORM ASSEMBLY - 30IN X 5FT (76CM X 1.52M) - SIDE GATE ENTRY (USA AND CHINA BUILT MACHINES)

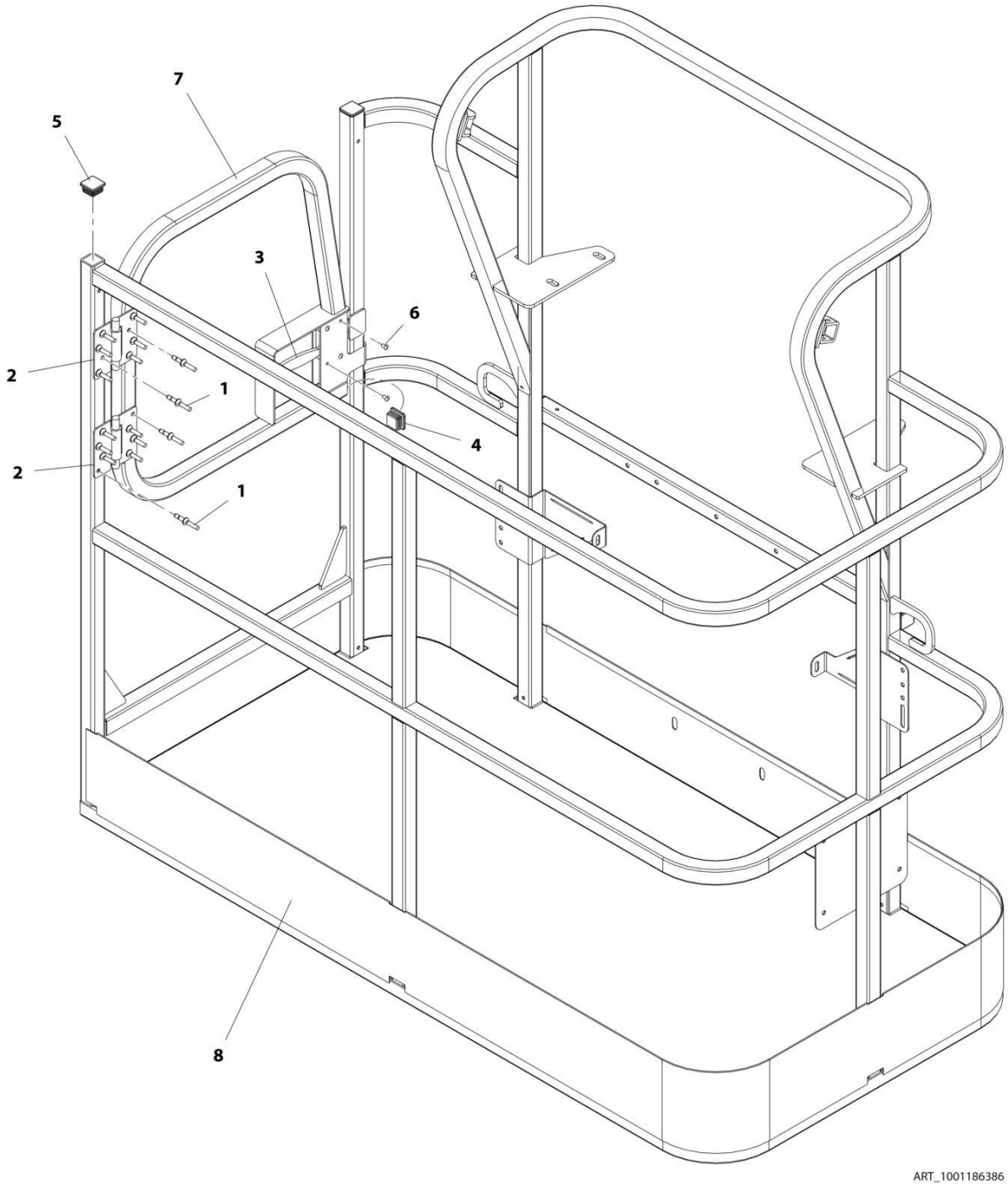

FIGURE 5-2. PLATFORM ASSEMBLY - 30IN X 5FT (76CM X 1.52M) - SIDE GATE ENTRY (USA AND CHINA BUILT MACHINES)

ITEM	PART NUMBER	QTY	DESCRIPTION	REV
	1001186386	Ref	PLATFORM ASSEMBLY - 30IN X 5FT (76CM X 1.52M) - SIDE GATE ENTRY (USA AND CHINA BUILT MACHINES)	C
	See Note	Ref	Note: Platform and Mesh must be ordered separately for Platforms with Mesh. See SPECIAL OPTIONS SECTION for Mesh Installations.	
	See Note	Ref	Note: Replacement Decals Must be Ordered Separately - See DECALS SECTION.	
1	2080040	16	Fastener, Huck	
2	2600281	2	Hinge, Self-Closing	
3	2940074	1	Latch	
4	3520072	3	Cap, Plug	
5	3520198	2	Cap, Plug	
6	3820020	4	Rivet	
7	1001144629	1	Gate, Weldment	
8	See Note	1	Platform, Weldment (Note: Not Available - Purchase Platform Assembly)	

FIGURE 5-3. PLATFORM ASSEMBLY - 30IN X 6FT (76CM X 1.83M) - SIDE GATE ENTRY (USA AND CHINA BUILT MACHINES)

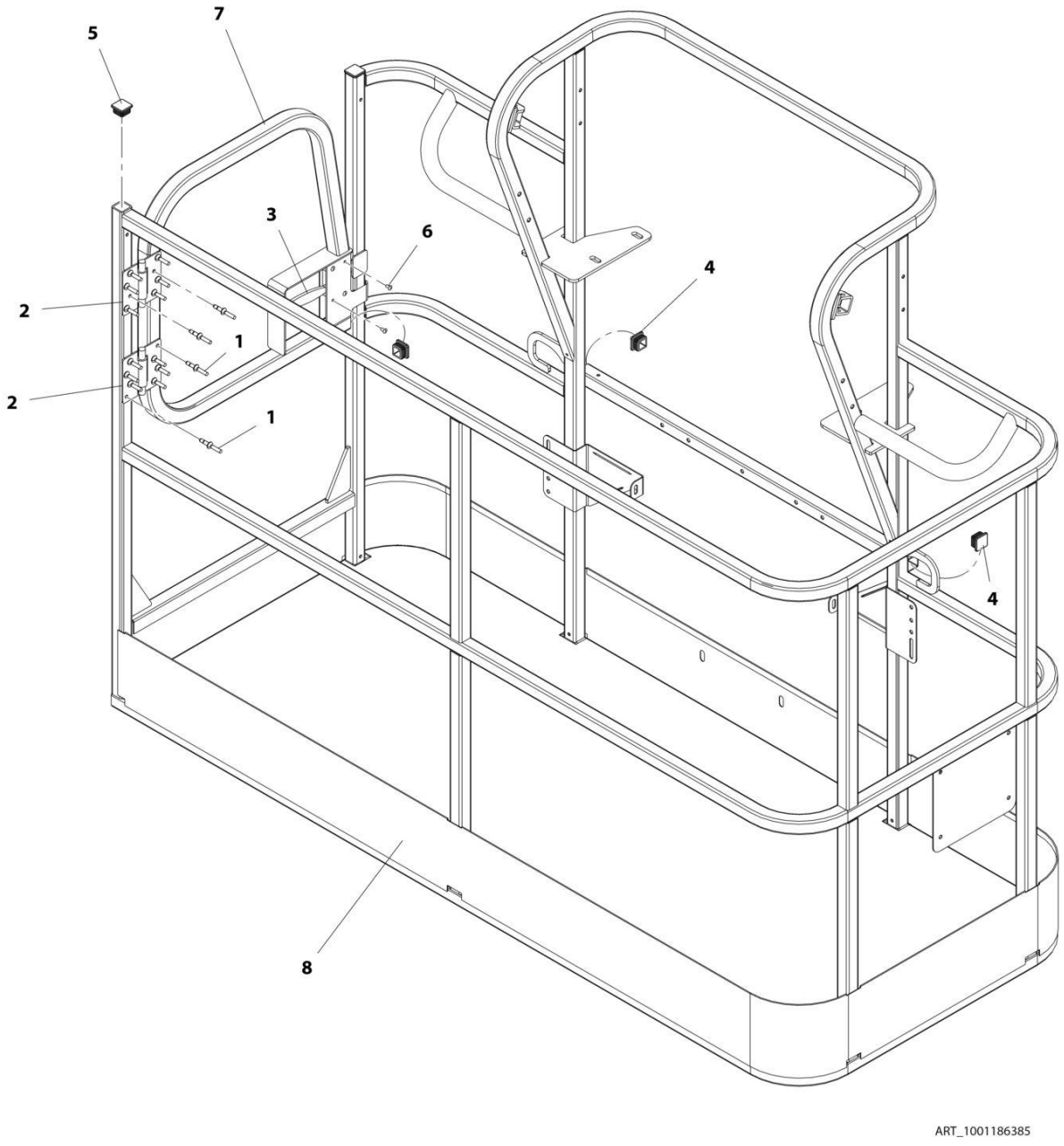

FIGURE 5-3. PLATFORM ASSEMBLY - 30IN X 6FT (76CM X 1.83M) - SIDE GATE ENTRY (USA AND CHINA BUILT MACHINES)

ITEM	PART NUMBER	QTY	DESCRIPTION	REV
	1001186385	Ref	PLATFORM ASSEMBLY - 30IN X 6FT (76CM X 1.83M) - SIDE GATE ENTRY (USA AND CHINA BUILT MACHINES)	D
	See Note	Ref	Note: Platform and Mesh must be ordered separately for Platforms with Mesh. See SPECIAL OPTIONS SECTION for Mesh Installations.	
	See Note	Ref	Note: Replacement Decals Must be Ordered Separately - See DECALS SECTION.	
1	2080040	16	Fastener, Huck	
2	2600281	2	Hinge, Self-Closing	
3	2940074	1	Latch	
4	3520072	3	Cap, Plug	
5	3520198	2	Cap, Plug	
6	3820020	4	Rivet	
7	1001144629	1	Gate, Weldment	
8	See Note	1	Platform, Weldment (Note: Not Available - Purchase Platform Assembly)	

FIGURE 5-4. PLATFORM ASSEMBLY - 30IN X 4FT (76CM X 1.22M) - SIDE GATE ENTRY (ROMANIAN BUILT MACHINES)

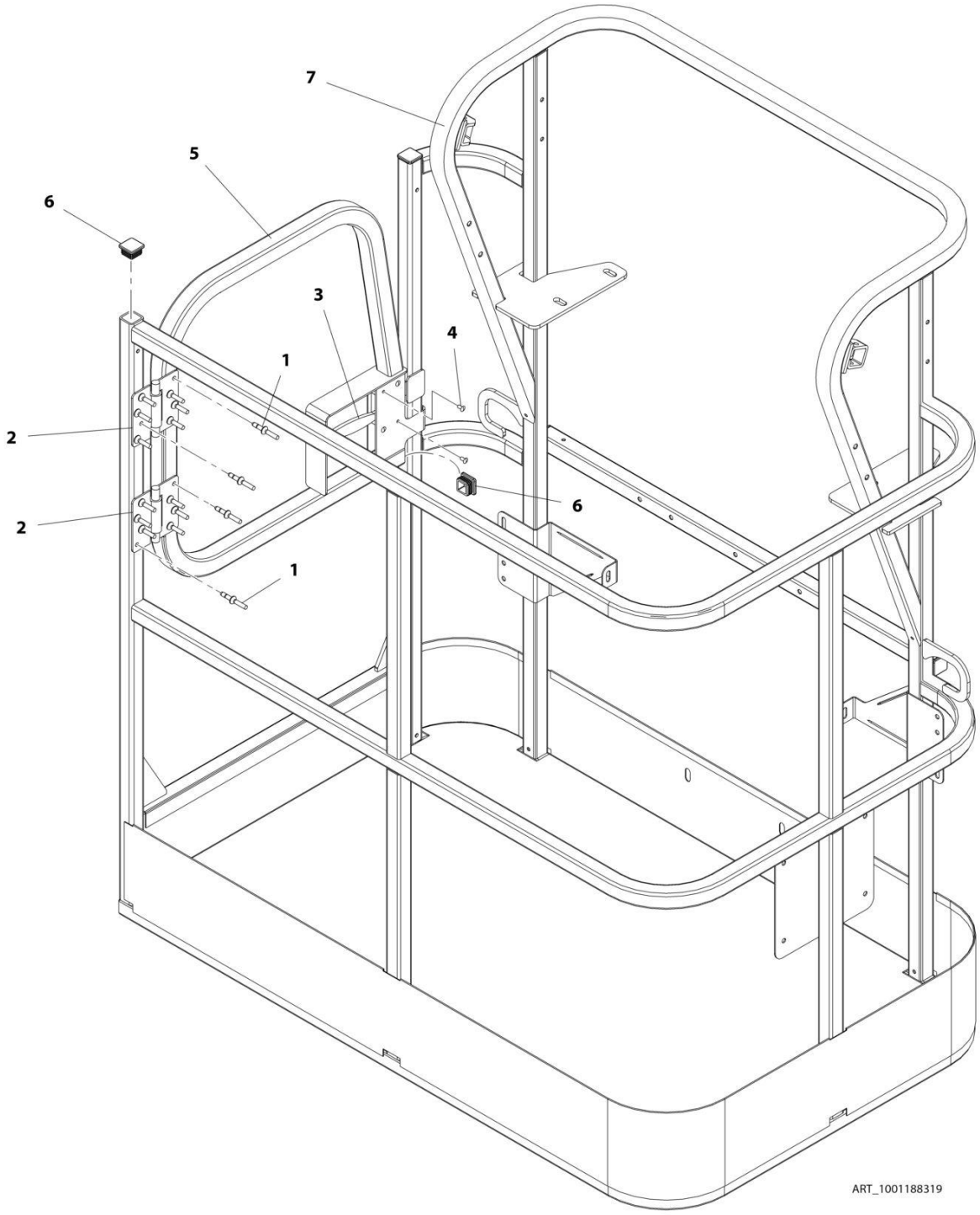

FIGURE 5-4. PLATFORM ASSEMBLY - 30IN X 4FT (76CM X 1.22M) - SIDE GATE ENTRY (ROMANIAN BUILT MACHINES)

ITEM	PART NUMBER	QTY	DESCRIPTION	REV
	1001188319	Ref	PLATFORM ASSEMBLY - 30IN X 4FT (76CM X 1.22M) - SIDE GATE ENTRY (ROMANIAN BUILT MACHINES)	C
	See Note	Ref	Note: Platform and Mesh must be ordered separately for Platforms with Mesh. See SPECIAL OPTIONS SECTION for Mesh Installations.	
	See Note	Ref	Note: Replacement Decals Must be Ordered Separately - See DECALS SECTION.	
1	2080040	16	Fastener, Huck	
2	2600281	2	Hinge, Self-Closing	
3	2940074	1	Latch	
4	3820020	4	Rivet	
5	1001144629	1	Gate, Weldment	
6	1001145781	5	Cap, Plug	
7	See Note	1	Platform, Weldment (Note: Not Available - Purchase Platform Assembly)	

FIGURE 5-5. PLATFORM ASSEMBLY - 30IN X 5FT (76CM X 1.52M) - SIDE GATE ENTRY (ROMANIAN BUILT MACHINES)

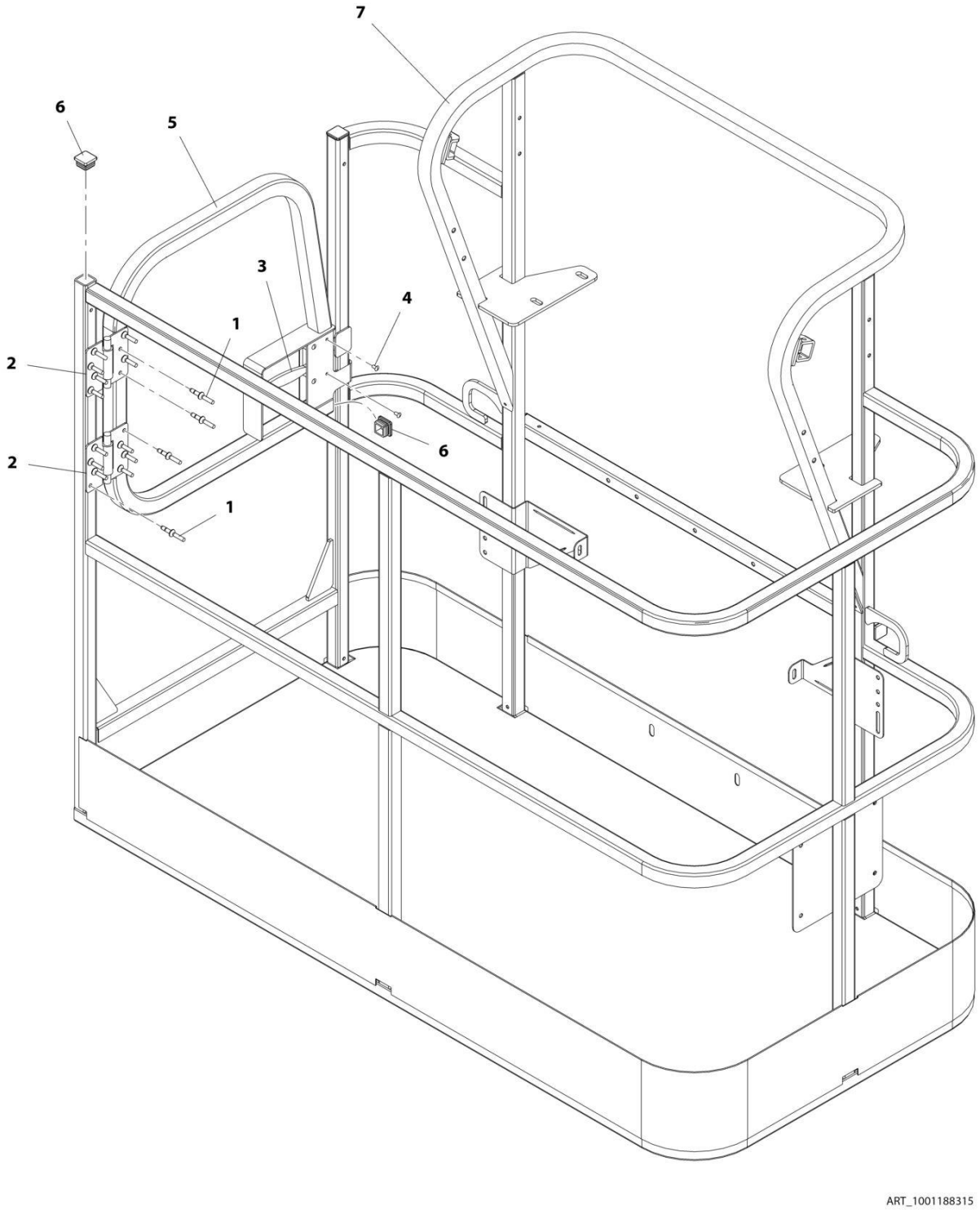

FIGURE 5-5. PLATFORM ASSEMBLY - 30IN X 5FT (76CM X 1.52M) - SIDE GATE ENTRY (ROMANIAN BUILT MACHINES)

ITEM	PART NUMBER	QTY	DESCRIPTION	REV
	1001188315	Ref	PLATFORM ASSEMBLY - 30IN X 5FT (76CM X 1.52M) - SIDE GATE ENTRY (ROMANIAN BUILT MACHINES)	D
	See Note	Ref	Note: Platform and Mesh must be ordered separately for Platforms with Mesh. See SPECIAL OPTIONS SECTION for Mesh Installations.	
	See Note	Ref	Note: Replacement Decals Must be Ordered Separately - See DECALS SECTION.	
1	2080040	16	Fastener, Huck	
2	2600281	2	Hinge, Self-Closing	
3	2940074	1	Latch	
4	3820020	4	Rivet	
5	1001144629	1	Gate, Weldment	
6	1001145781	5	Cap, Plug	
7	See Note	1	Platform, Weldment (Note: Not Available - Purchase Platform Assembly)	

FIGURE 5-6. PLATFORM ASSEMBLY - 30IN X 6FT (76CM X 1.83M) - SIDE GATE ENTRY (ROMANIAN BUILT MACHINES)

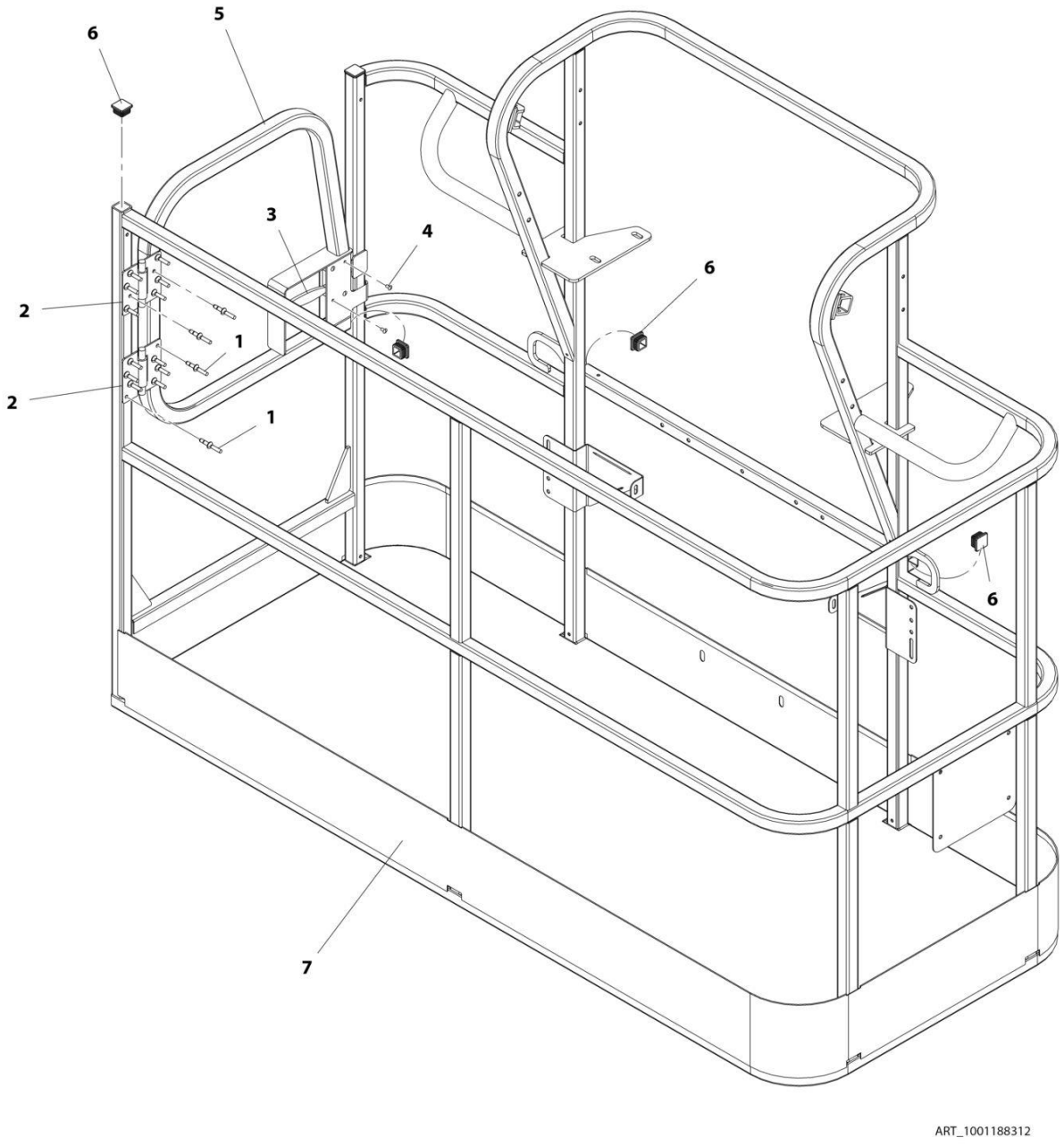

FIGURE 5-6. PLATFORM ASSEMBLY - 30IN X 6FT (76CM X 1.83M) - SIDE GATE ENTRY (ROMANIAN BUILT MACHINES)

ITEM	PART NUMBER	QTY	DESCRIPTION	REV
	1001188312	Ref	PLATFORM ASSEMBLY - 30IN X 6FT (76CM X 1.83M) - SIDE GATE ENTRY (ROMANIAN BUILT MACHINES)	E
	See Note	Ref	Note: Platform and Mesh must be ordered separately for Platforms with Mesh. See SPECIAL OPTIONS SECTION for Mesh Installations.	
	See Note	Ref	Note: Replacement Decals Must be Ordered Separately - See DECALS SECTION.	
1	2080040	16	Fastener, Huck	
2	2600281	2	Hinge, Self-Closing	
3	2940074	1	Latch	
4	3820020	4	Rivet	
5	1001144629	1	Gate, Weldment	
6	1001145781	5	Cap, Plug	
7	See Note	1	Platform, Weldment (Note: Not Available - Purchase Platform Assembly)	

FIGURE 5-7. PLATFORM ASSEMBLY - 30IN X 3FT (76CM X .91M) - DROP BAR ENTRY (USA BUILT MACHINES)

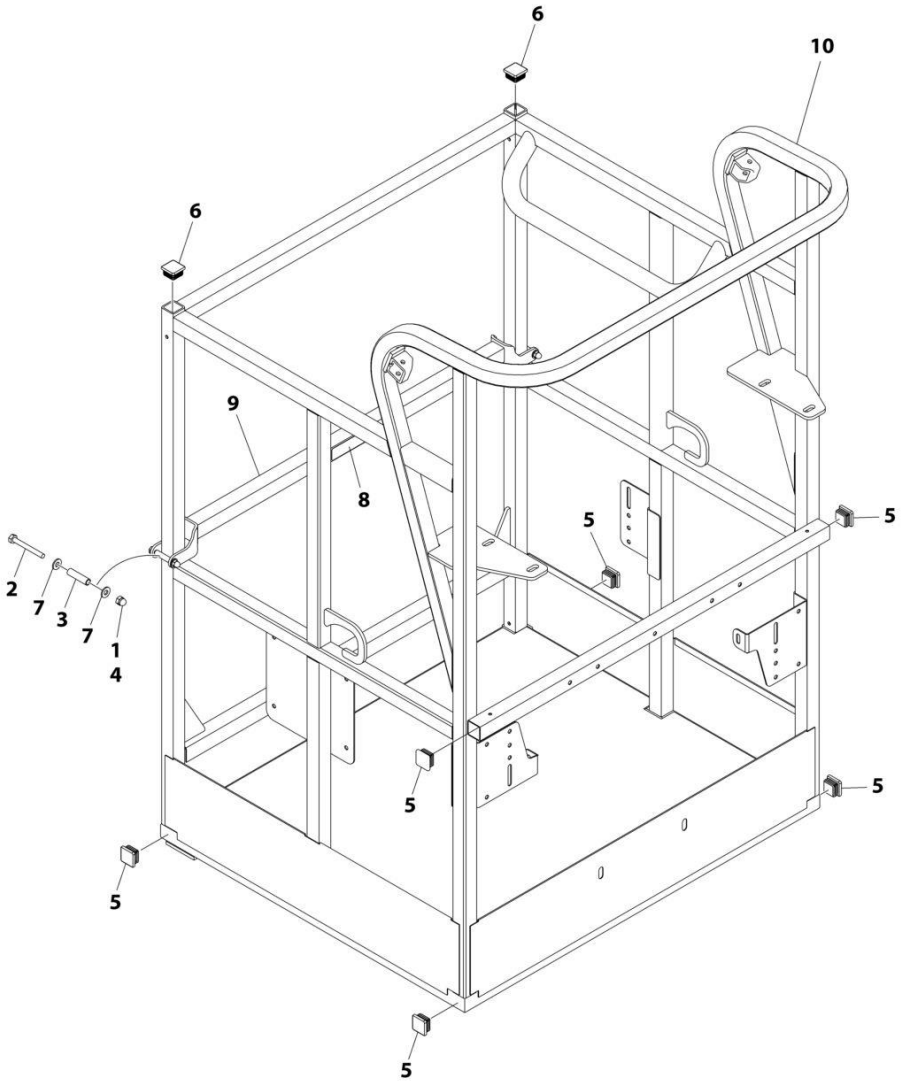

ART_1001228215

FIGURE 5-7. PLATFORM ASSEMBLY - 30IN X 3FT (76CM X .91M) - DROP BAR ENTRY (USA BUILT MACHINES)

ITEM	PART NUMBER	QTY	DESCRIPTION	REV
	1001228215	Ref	PLATFORM ASSEMBLY - 30IN X 3FT (76CM X .91M) - DROP BAR ENTRY (USA BUILT MACHINES)	A
	See Note	Ref	Note: Platform and Mesh must be ordered separately for Platforms with Mesh. See SPECIAL OPTIONS SECTION for Mesh Installations.	
	See Note	Ref	Note: Replacement Decals Must be Ordered Separately - See DECAL SECTION.	
1	0100011	AR	Compound, Locking	
2	0641418	2	Bolt 1/4 x 2-1/4	
3	0961845	2	Bushing	
4	3300151	2	Nut, Acorn	
5	3520072	6	Plug	
6	3520198	2	Plug	
7	4711400	4	Washer 1/4	
8	1001140429	1	Decal - Drop Bar	
9	1001226872	1	Bar, Drop	
10	See Note	NSS	Platform, Weldment (Note: Not Available - Purchase Platform Assembly)	

FIGURE 5-8. PLATFORM ASSEMBLY - 30IN X 4FT (76CM X 1.22M) - WITH DROP BAR (USA BUILT MACHINES)

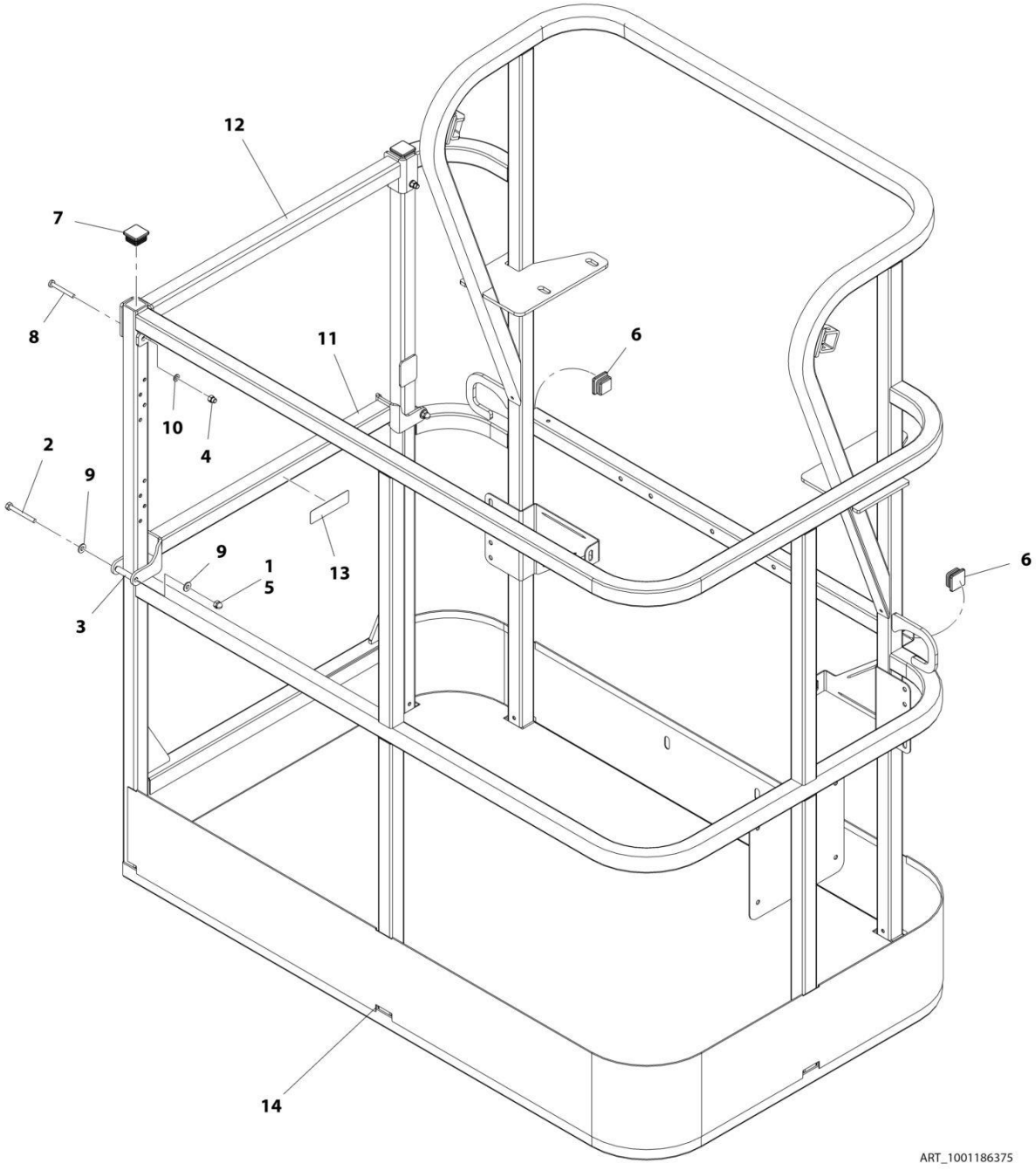

FIGURE 5-8. PLATFORM ASSEMBLY - 30IN X 4FT (76CM X 1.22M) - WITH DROP BAR (USA BUILT MACHINES)

ITEM	PART NUMBER	QTY	DESCRIPTION	REV
	1001186375	Ref	PLATFORM ASSEMBLY - 30IN X 4FT (76CM X 1.22M) - WITH DROP BAR (USA BUILT MACHINES)	B
	See Note	Ref	Note: Platform and Mesh must be ordered separately for Platforms with Mesh. See SPECIAL OPTIONS SECTION for Mesh Installations.	
	See Note	Ref	Note: Replacement Decals Must be Ordered Separately - See DECALS SECTION.	
1	0100011	AR	Compound, Locking	
2	0641418	2	Bolt, 1/4-20 x 2-1/4	
3	0961845	2	Bushing	
4	3290606	2	Nut, M6 x 1	
5	3300151	2	Nut, Acorn 1/4-20	
6	3520072	2	Cap, Plug	
7	3520198	2	Cap, Plug	
8	4010618	2	Screw, M6 x 50mm	
9	4711400	4	Washer, 1/4	
10	4811700	2	Washer, M6	
11	1001138494	1	Bar, Drop	
12	1001138514	1	Rail (Top)	
13	1001140429	1	Decal - Drop Bar	
14	See Note	1	Platform, Weldment (Note: Not Available - Purchase Platform Assembly)	

FIGURE 5-9. PLATFORM ASSEMBLY - 30IN X 5FT (76CM X 1.52M) - WITH DROP BAR (USA AND CHINA BUILT MACHINES)

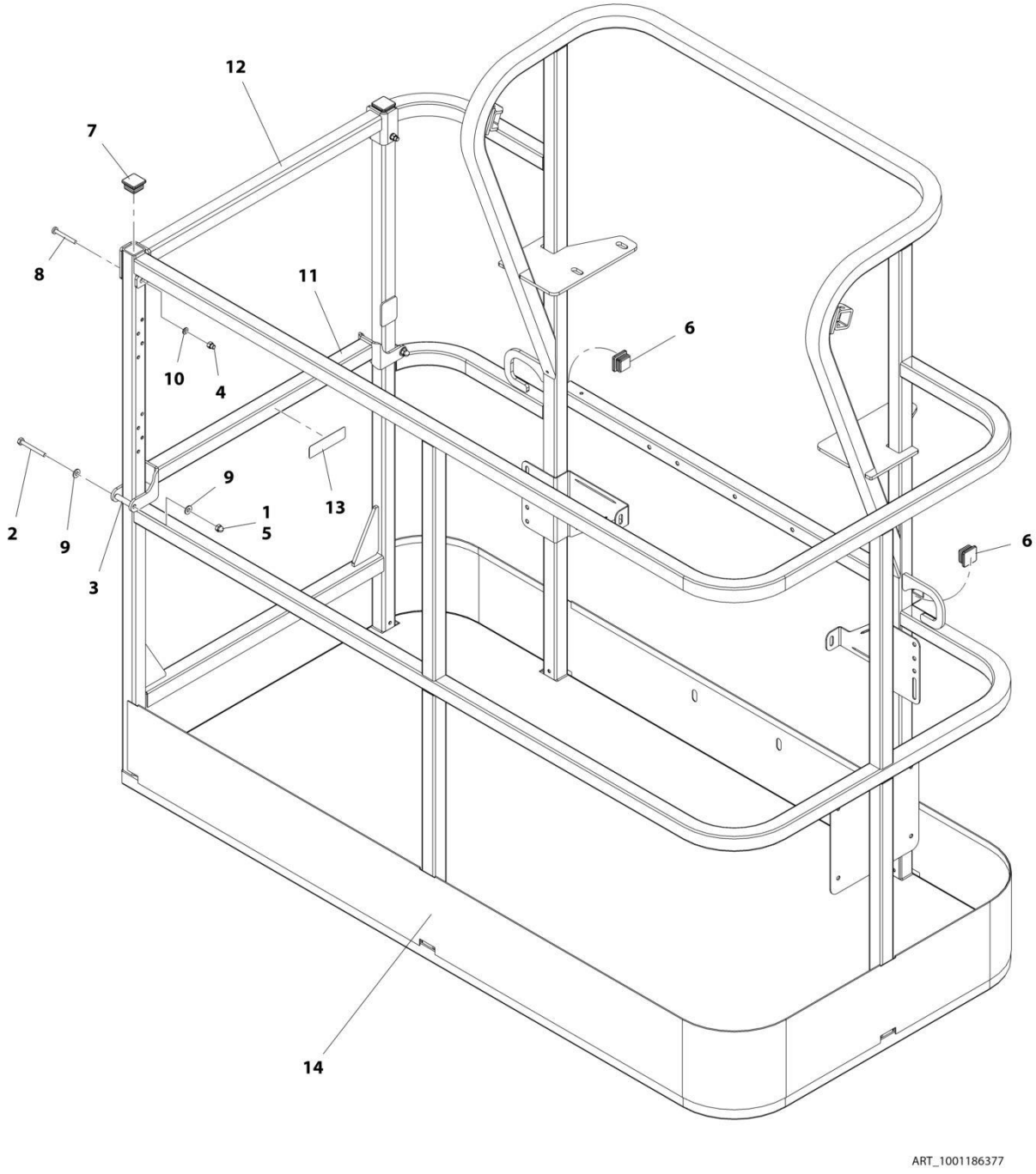

FIGURE 5-9. PLATFORM ASSEMBLY - 30IN X 5FT (76CM X 1.52M) - WITH DROP BAR (USA AND CHINA BUILT MACHINES)

ITEM	PART NUMBER	QTY	DESCRIPTION	REV
	1001186377	Ref	PLATFORM ASSEMBLY - 30IN X 5FT (76CM X 1.52M) - WITH DROP BAR (USA AND CHINA BUILT MACHINES)	C
	See Note	Ref	Note: Platform and Mesh must be ordered separately for Platforms with Mesh. See SPECIAL OPTIONS SECTION for Mesh Installations.	
	See Note	Ref	Note: Replacement Decals Must be Ordered Separately - See DECALS SECTION.	
1	0100011	AR	Compound, Locking	
2	0641418	2	Bolt, 1/4-20 x 2-1/4	
2	0641420	2	Bolt, 1/4-20 x 2-1/2	
3	0961845	2	Bushing	
4	3290606	2	Nut, M6 x 1	
5	3300151	2	Nut, Acorn 1/4-20	
6	3520072	2	Cap, Plug	
7	3520198	2	Cap, Plug	
8	4010618	2	Screw, M6 x 50mm	
9	4711400	4	Washer, 1/4	
10	4811700	2	Washer, M6	
11	1001138494	1	Bar, Drop	
12	1001138514	1	Rail (Top)	
13	1001140429	1	Decal - Drop Bar	
14	See Note	1	Platform, Weldment (Note: Not Available - Purchase Platform Assembly)	

FIGURE 5-10. PLATFORM ASSEMBLY - 30IN X 6FT (76CM X 1.83M) - WITH DROP BAR (USA AND CHINA BUILT MACHINES)

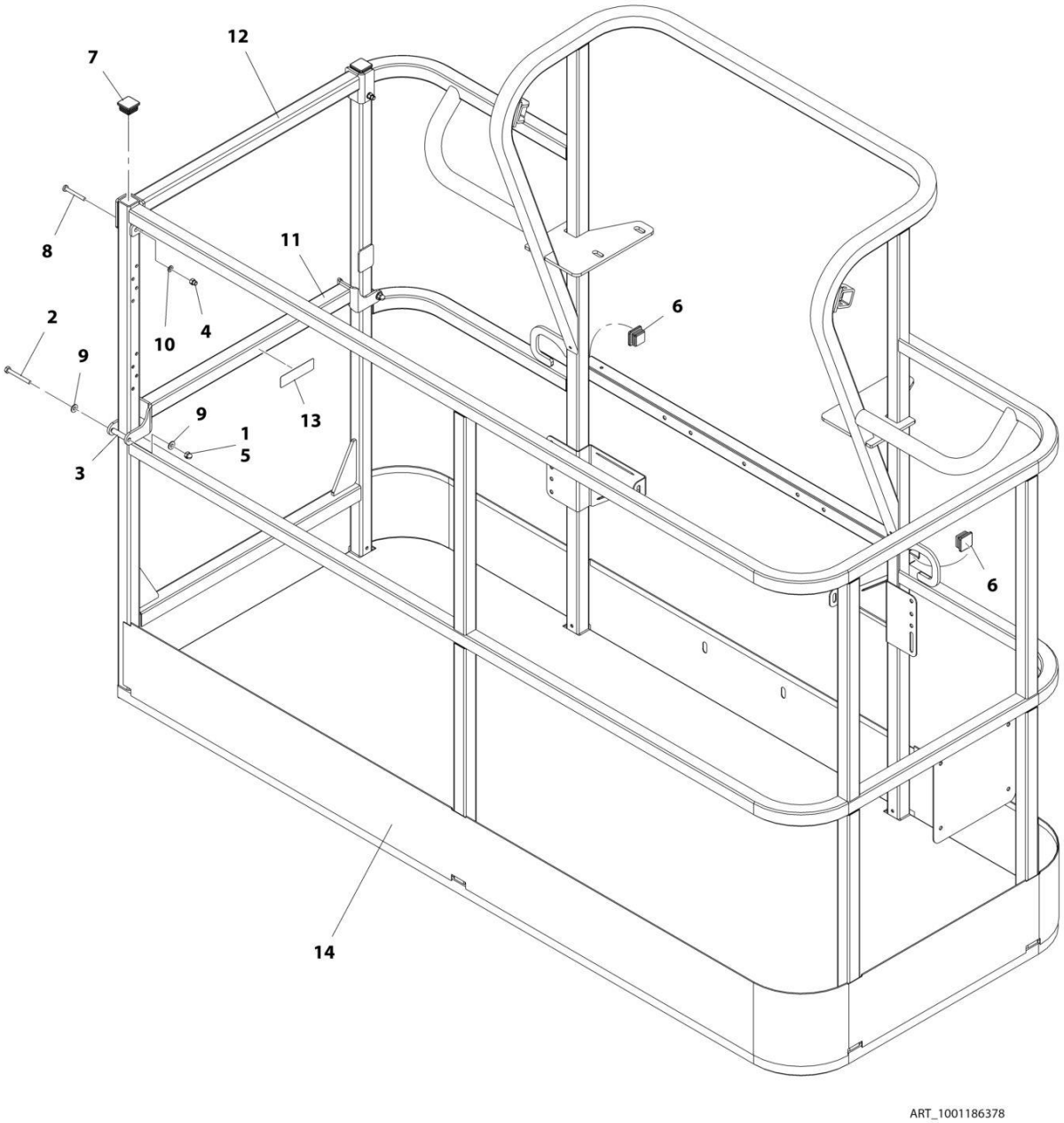

FIGURE 5-10. PLATFORM ASSEMBLY - 30IN X 6FT (76CM X 1.83M) - WITH DROP BAR (USA AND CHINA BUILT MACHINES)

ITEM	PART NUMBER	QTY	DESCRIPTION	REV
	1001186378	Ref	PLATFORM ASSEMBLY - 30IN X 6FT (76CM X 1.83M) - WITH DROP BAR (USA AND CHINA BUILT MACHINES)	B
	See Note	Ref	Note: Platform and Mesh must be ordered separately for Platforms with Mesh. See SPECIAL OPTIONS SECTION for Mesh Installations.	
	See Note	Ref	Note: Replacement Decals Must be Ordered Separately - See DECALS SECTION.	
1	0100011	AR	Compound, Locking	
2	0641418	2	Bolt, 1/4-20 x 2-1/4	
3	0961845	2	Bushing	
4	3290606	2	Nut, M6 x 1	
5	3300151	2	Nut, Acorn 1/4-20	
6	3520072	2	Cap, Plug	
7	3520198	2	Cap, Plug	
8	4010618	2	Screw, M6 x 50mm	
9	4711400	4	Washer, 1/4	
10	4811700	2	Washer, M6	
11	1001138494	1	Bar, Drop	
12	1001138514	1	Rail (Top)	
13	1001140429	1	Decal - Drop Bar	
14	See Note	1	Platform, Weldment (Note: Not Available - Purchase Platform Assembly)	

FIGURE 5-11. PLATFORM ASSEMBLY - 30IN X 3FT (76CM X .91M) - DROP BAR ENTRY (ROMANIAN BUILT MACHINES)

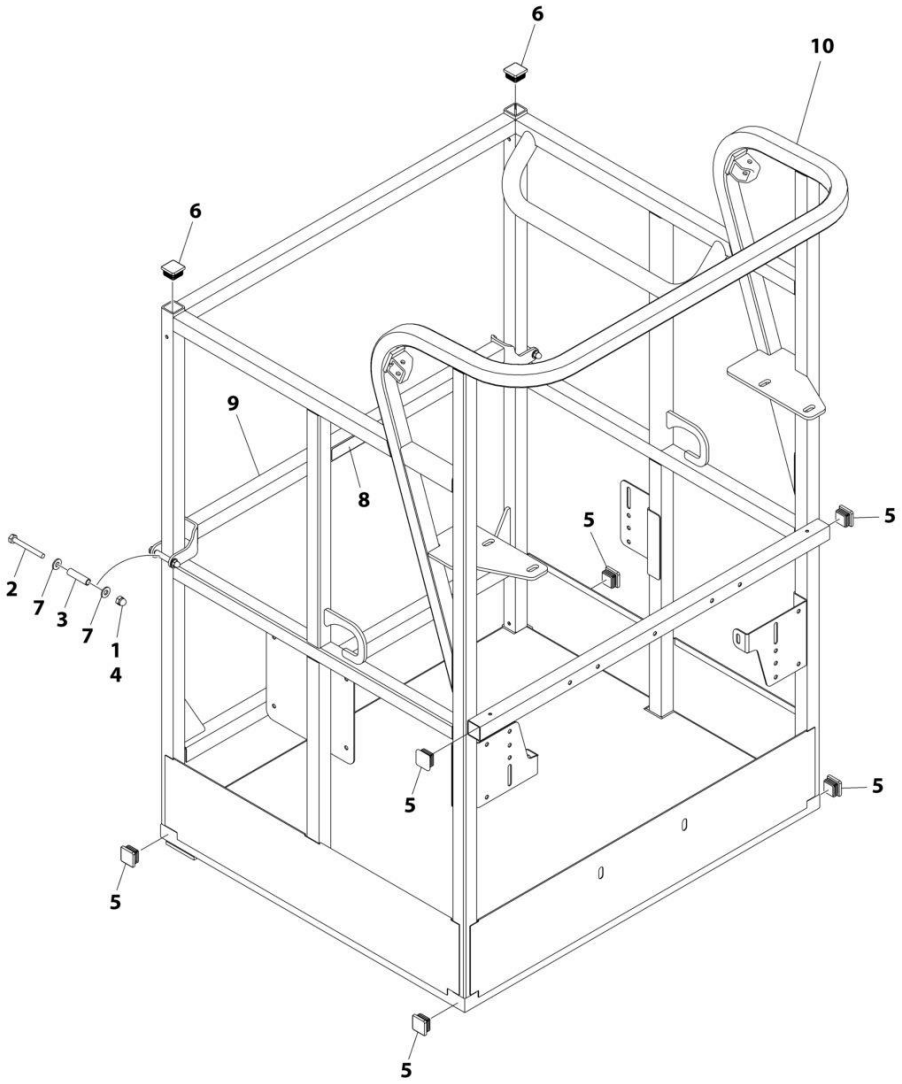

FIGURE 5-11. PLATFORM ASSEMBLY - 30IN X 3FT (76CM X .91M) - DROP BAR ENTRY (ROMANIAN BUILT MACHINES)

ITEM	PART NUMBER	QTY	DESCRIPTION	REV
	1001228215	Ref	PLATFORM ASSEMBLY - 30IN X 3FT (76CM X .91M) - DROP BAR ENTRY (ROMANIAN BUILT MACHINES)	A
	See Note	Ref	Note: Platform and Mesh must be ordered separately for Platforms with Mesh. See SPECIAL OPTIONS SECTION for Mesh Installations.	
	See Note	Ref	Note: Replacement Decals Must be Ordered Separately - See DECAL SECTION.	
1	0100011	AR	Compound, Locking	
2	0641418	2	Bolt 1/4 x 2-1/4	
3	0961845	2	Bushing	
4	3300151	2	Nut, Acorn	
5	3520072	6	Plug	
6	3520198	2	Plug	
7	4711400	4	Washer 1/4	
8	1001140429	1	Decal - Drop Bar	
9	1001226872	1	Bar, Drop	
10	See Note	NSS	Platform, Weldment (Note: Not Available - Purchase Platform Assembly)	

FIGURE 5-12. PLATFORM ASSEMBLY - 30IN X 4FT (76CM X 1.22M) - WITH DROP BAR (ROMANIAN BUILT MACHINES)

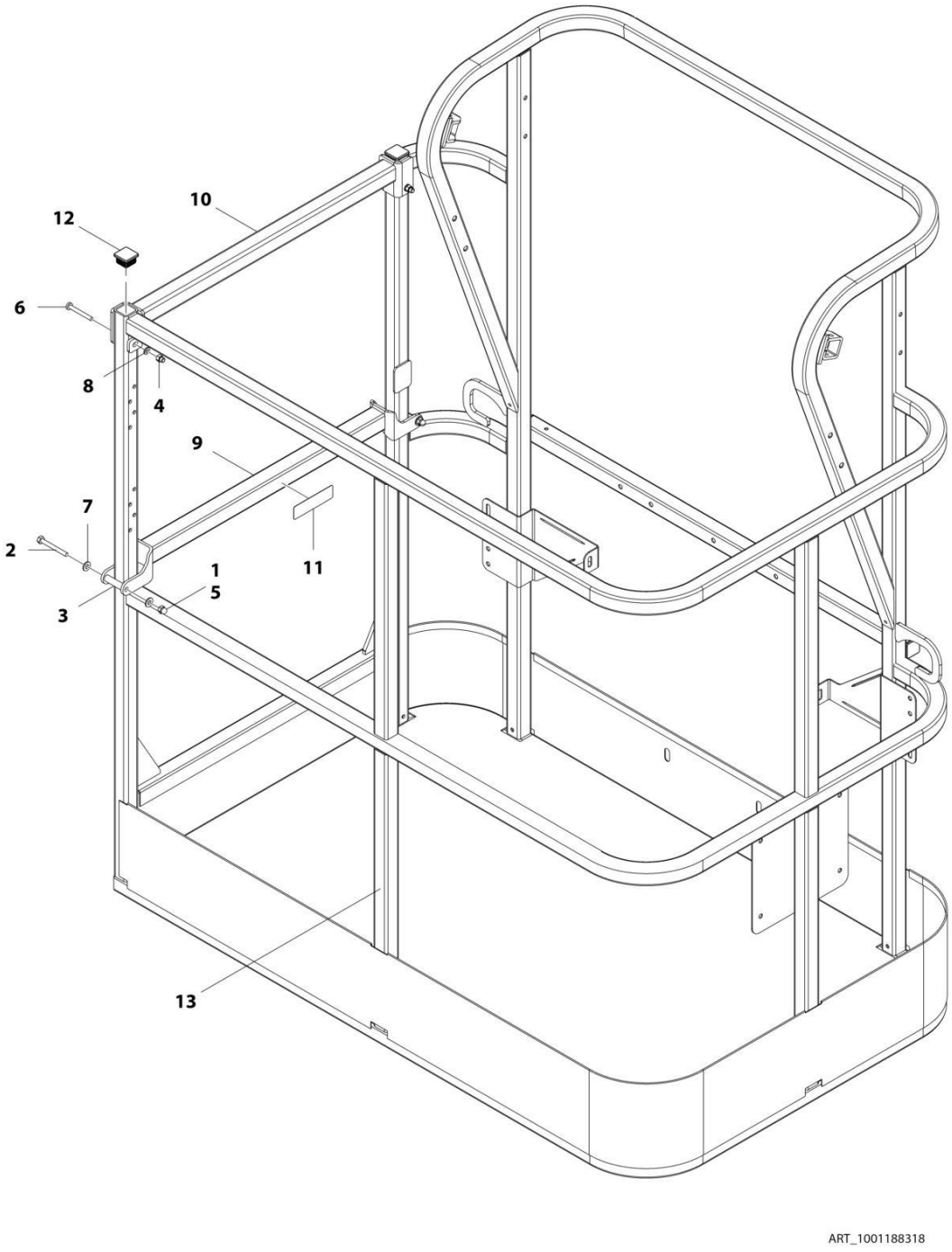

FIGURE 5-12. PLATFORM ASSEMBLY - 30IN X 4FT (76CM X 1.22M) - WITH DROP BAR (ROMANIAN BUILT MACHINES)

ITEM	PART NUMBER	QTY	DESCRIPTION	REV
	1001188318	Ref	PLATFORM ASSEMBLY - 30IN X 4FT (76CM X 1.22M) - WITH DROP BAR (ROMANIAN BUILT MACHINES)	B
	See Note	Ref	Note: Platform and Mesh must be ordered separately for Platforms with Mesh. See SPECIAL OPTIONS SECTION for Mesh Installations.	
	See Note	Ref	Note: Replacement Decals Must be Ordered Separately - See DECALS SECTION.	
1	0100011	AR	Compound, Locking	
2	0641418	2	Bolt, 1/4-20 x 2-1/4	
3	0961845	2	Bushing	
4	3290606	2	Nut, M6 x 1	
5	3300151	2	Nut, Acorn 1/4-20	
6	4010618	2	Screw, M6 x 50mm	
7	4711400	4	Washer, 1/4	
8	4811700	2	Washer, M6	
9	1001138494	1	Bar, Drop	
10	1001138514	1	Rail (Top)	
11	1001140429	1	Decal - Drop Bar	
12	1001145781	4	Cap, Plug	
13	See Note	1	Platform, Weldment (Note: Not Available - Purchase Platform Assembly)	

FIGURE 5-13. PLATFORM ASSEMBLY - 30IN X 5FT (76CM X 1.52M) - WITH DROP BAR (ROMANIAN BUILT MACHINES)

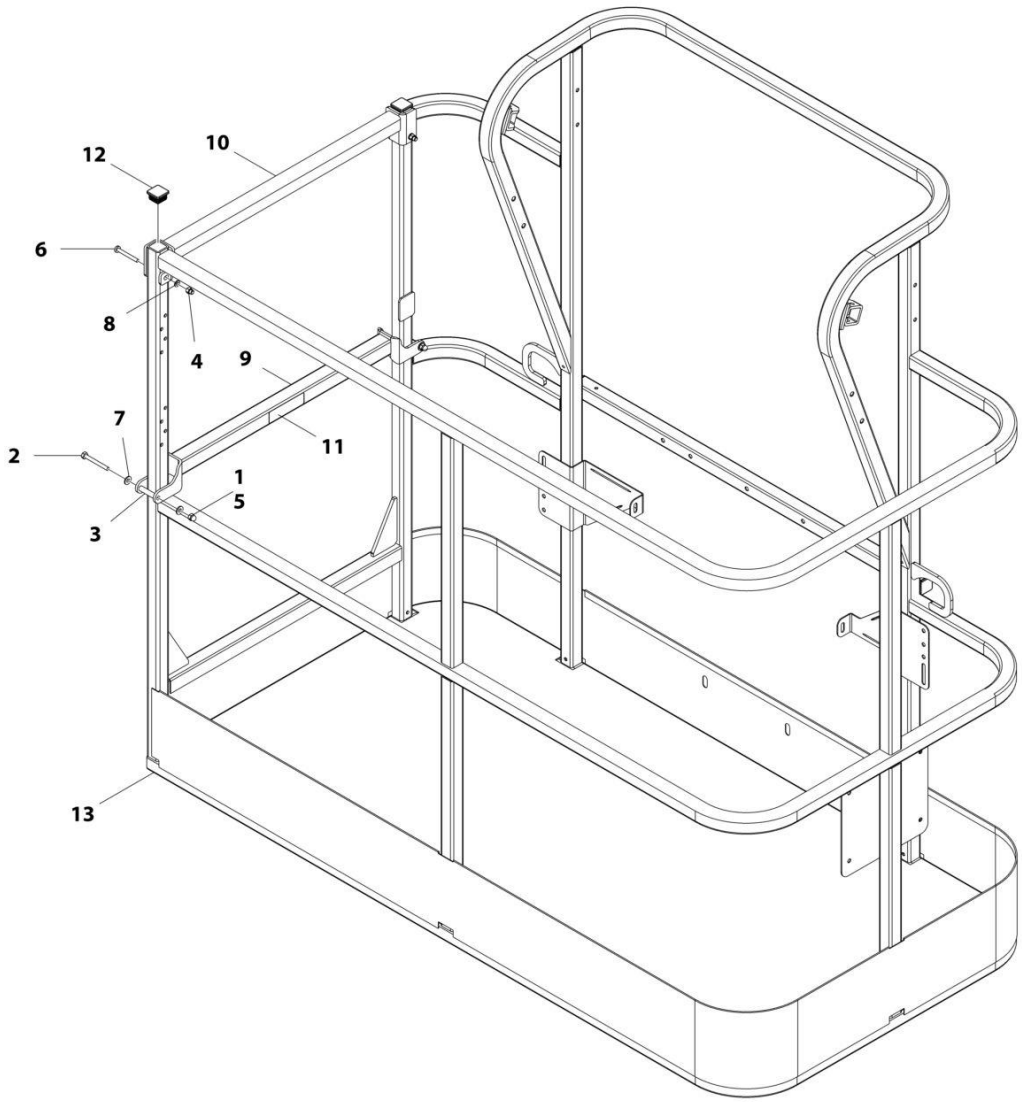

FIGURE 5-13. PLATFORM ASSEMBLY - 30IN X 5FT (76CM X 1.52M) - WITH DROP BAR (ROMANIAN BUILT MACHINES)

ITEM	PART NUMBER	QTY	DESCRIPTION	REV
	1001188314	Ref	PLATFORM ASSEMBLY - 30IN X 5FT (76CM X 1.52M) - WITH DROP BAR (ROMANIAN BUILT MACHINES)	B
	See Note	Ref	Note: Platform and Mesh must be ordered separately for Platforms with Mesh. See SPECIAL OPTIONS SECTION for Mesh Installations.	
	See Note	Ref	Note: Replacement Decals Must be Ordered Separately - See DECALS SECTION.	
1	0100011	AR	Compound, Locking	
2	0641418	2	Bolt, 1/4-20 x 2-1/4	
3	0961845	2	Bushing	
4	3290606	2	Nut, M6 x 1	
5	3300151	2	Nut, Acorn 1/4-20	
6	4010618	2	Screw, M6 x 50mm	
7	4711400	4	Washer, 1/4	
8	4811700	2	Washer, M6	
9	1001138494	1	Bar, Drop	
10	1001138514	1	Rail (Top)	
11	1001140429	1	Decal - Drop Bar	
12	1001145781	4	Cap, Plug	
13	See Note	1	Platform, Weldment (Note: Not Available - Purchase Platform Assembly)	

FIGURE 5-14. PLATFORM ASSEMBLY - 30IN X 6FT (76CM X 1.83M) - WITH DROP BAR (ROMANIAN BUILT MACHINES)

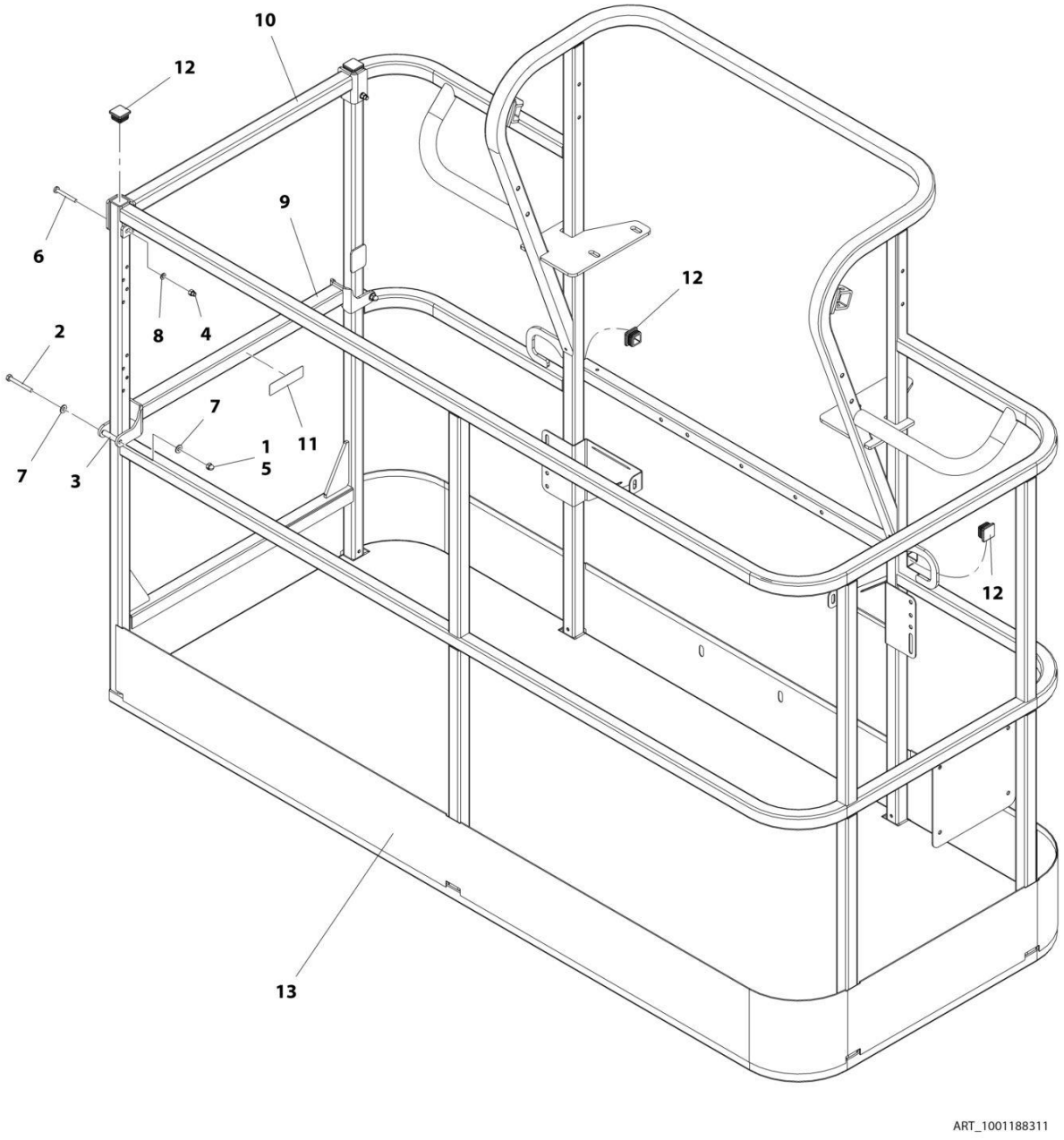

FIGURE 5-14. PLATFORM ASSEMBLY - 30IN X 6FT (76CM X 1.83M) - WITH DROP BAR (ROMANIAN BUILT MACHINES)

ITEM	PART NUMBER	QTY	DESCRIPTION	REV
	1001188311	Ref	PLATFORM ASSEMBLY - 30IN X 6FT (76CM X 1.83M) - WITH DROP BAR (ROMANIAN BUILT MACHINES)	B
	See Note	Ref	Note: Platform and Mesh must be ordered separately for Platforms with Mesh. See SPECIAL OPTIONS SECTION for Mesh Installations.	
	See Note	Ref	Note: Replacement Decals Must be Ordered Separately - See DECALS SECTION.	
1	0100011	AR	Compound, Locking	
2	0641418	2	Bolt, 1/4-20 x 2-1/4	
3	0961845	2	Bushing	
4	3290606	2	Nut, M6 x 1	
5	3300151	2	Nut, Acorn 1/4-20	
6	4010618	2	Screw, M6 x 50mm	
7	4711400	4	Washer, 1/4	
8	4811700	2	Washer, M6	
9	1001138494	1	Bar, Drop	
10	1001138514	1	Rail (Top)	
11	1001140429	1	Decal - Drop Bar	
12	1001145781	4	Cap, Plug	
13	See Note	1	Platform, Weldment (Note: Not Available - Purchase Platform Assembly)	

FIGURE 5-15. PLATFORM ASSEMBLY - 30IN X 5FT (76CM X 1.52M - FALL ARREST (ANSI, ANSI EXPORT AND CSA SPECS)

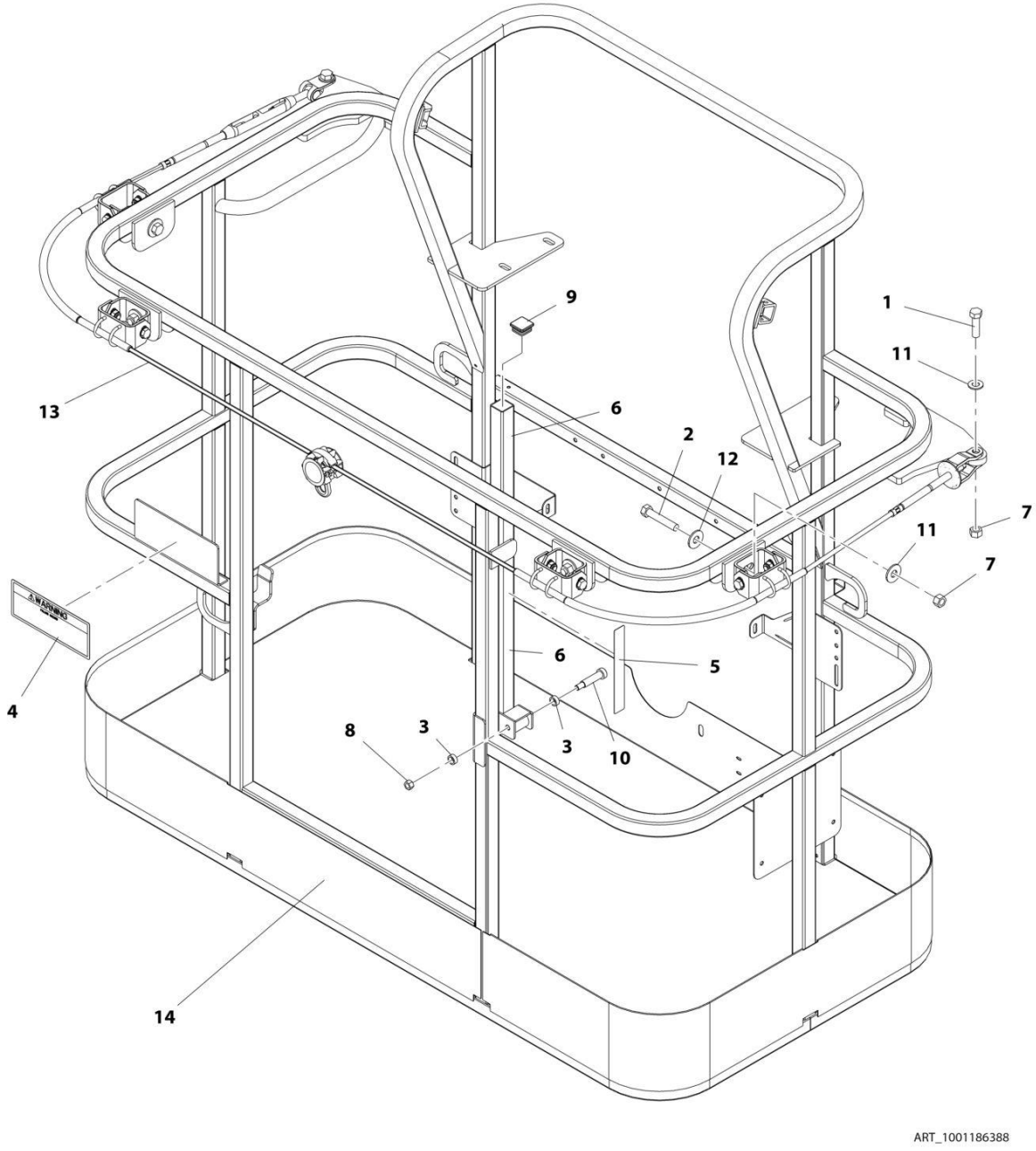

FIGURE 5-15. PLATFORM ASSEMBLY - 30IN X 5FT (76CM X 1.52M - FALL ARREST (ANSI, ANSI EXPORT AND CSA SPECS)

ITEM	PART NUMBER	QTY	DESCRIPTION	REV
	1001186388	Ref	PLATFORM ASSEMBLY - 30IN X 5FT (76CM X 1.52M - FALL ARREST (ANSI, ANSI EXPORT AND CSA SPECS)	C
	See Note	Ref	Note: Fall Arrest Not Available on CE Spec Platform Assembly.	
	See Note	Ref	Note: Replacement Decals Must be Ordered Separately - See DECALS SECTION.	
1	0681814	2	Bolt, 1/2-13 x 1-3/4 (Grade 8)	
2	0681822	4	Bolt, 1/2-13 x 2-3/4 (Grade 8)	
3	0962270	2	Bearing	
4	1705014	1	Decal - Safety	
5	1706385	1	Decal - Drop Bar	
6	2410014	1	Gate, Weldment	
7	3271805	6	Nut, Lock 1/2-13	
8	3311605	1	Nut, Lock 3/8-16	
9	3520072	1	Cap, Plug	
10	3900054	1	Bolt, 1/2-13 x 1-3/4	
11	4711800	6	Washer, 1/2	
12	4751800	4	Washer, 1/2	
13	1001112943	1	Lanyard **(SN 0300201991 through 0300213992)**	
13	1001203654	1	Lanyard **(SN 0300213993 through 0300272317, SN 1300007279 through 1300007373, SN B300003516 through B300005760, SN E300002833 through E300007990, Except SN 0300272185 through 0300272190, Excluding B300005569 and E300007814)**	
14	See Note	1	Platform, Weldment (Note: Not Available - Purchase Platform Assembly)	

FIGURE 5-16. CONSOLE BOX INSTALLATION - 450A WITHOUT SKYGUARD (SN 0300201991 through 0300226169)

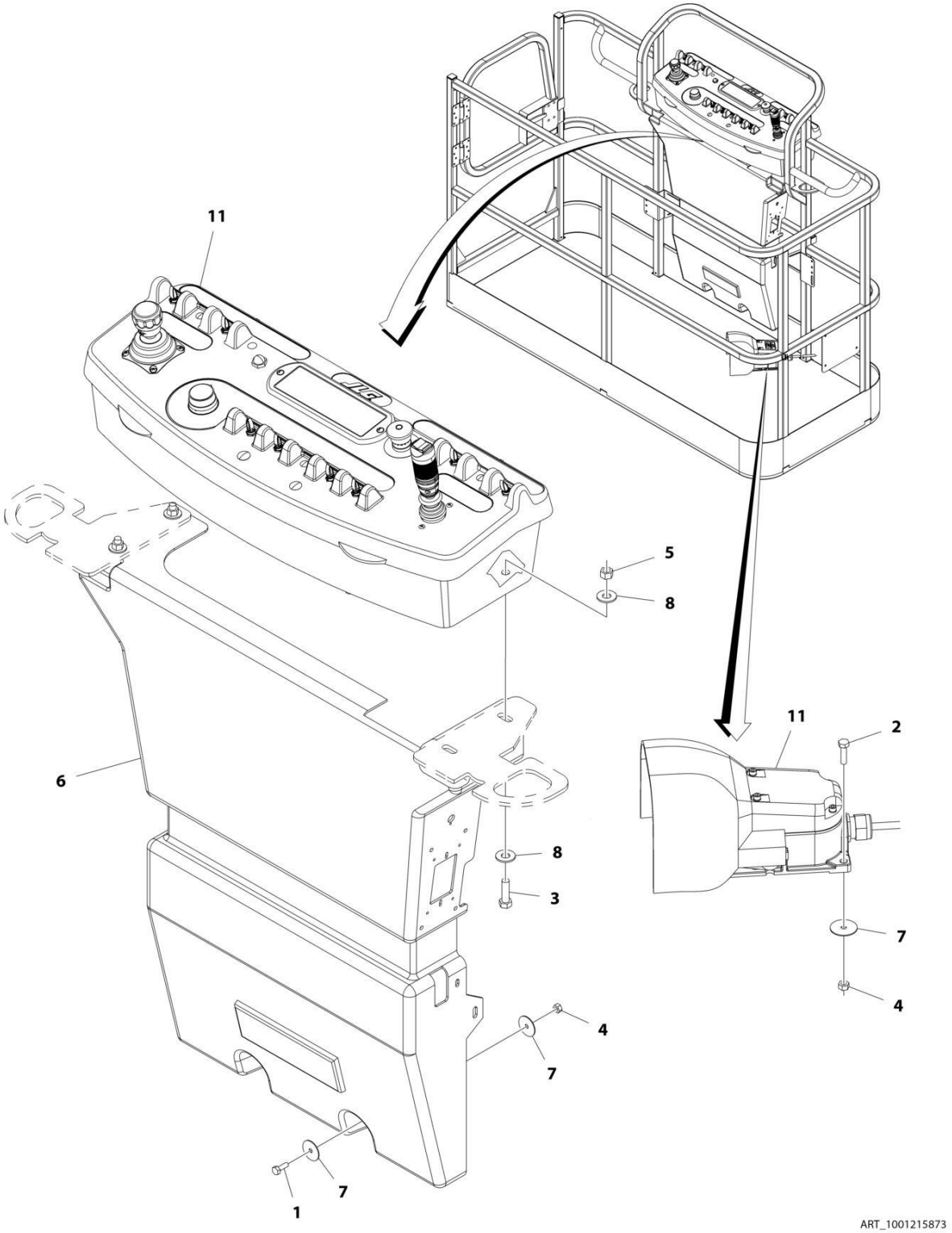

FIGURE 5-16. CONSOLE BOX INSTALLATION - 450A WITHOUT SKYGUARD (SN 0300201991 through 0300226169)

ITEM	PART NUMBER	QTY	DESCRIPTION	REV
	1001215873	Ref	CONSOLE BOX INSTALLATION - 450A WITHOUT SKYGUARD **(SN 0300201991 through 0300226169)**	A
1	0641406	2	Bolt, 1/4-20 x 3/4	
2	0641408	3	Bolt, 1/4-20 x 1	
3	0641610	4	Bolt, 3/8-16 x 1-1/4	
4	3311405	5	Nut, Lock 1/4-20	
5	3311605	4	Nut, Lock 3/8-16	
6	3380434	1	Panel, Decal Mount	
7	4740362	7	Washer, 1/4	
8	4751600	8	Washer, 3/8	
9	1001144295	2	Cap, Connector (Not Shown)	
10	1001164728	1	Harness, Platform Valve (Not Shown - See ELECTRICAL SECTION for Breakdown)	
11	1001215872	1	Platform Console Box Assembly (See PLATFORM CONSOLE BOX ASSEMBLY - 450A WITHOUT SKYGUARD for Breakdown)	

FIGURE 5-17. CONSOLE BOX INSTALLATION - 450AJ WITHOUT SKYGUARD (SN 0300201991 through 0300226169)

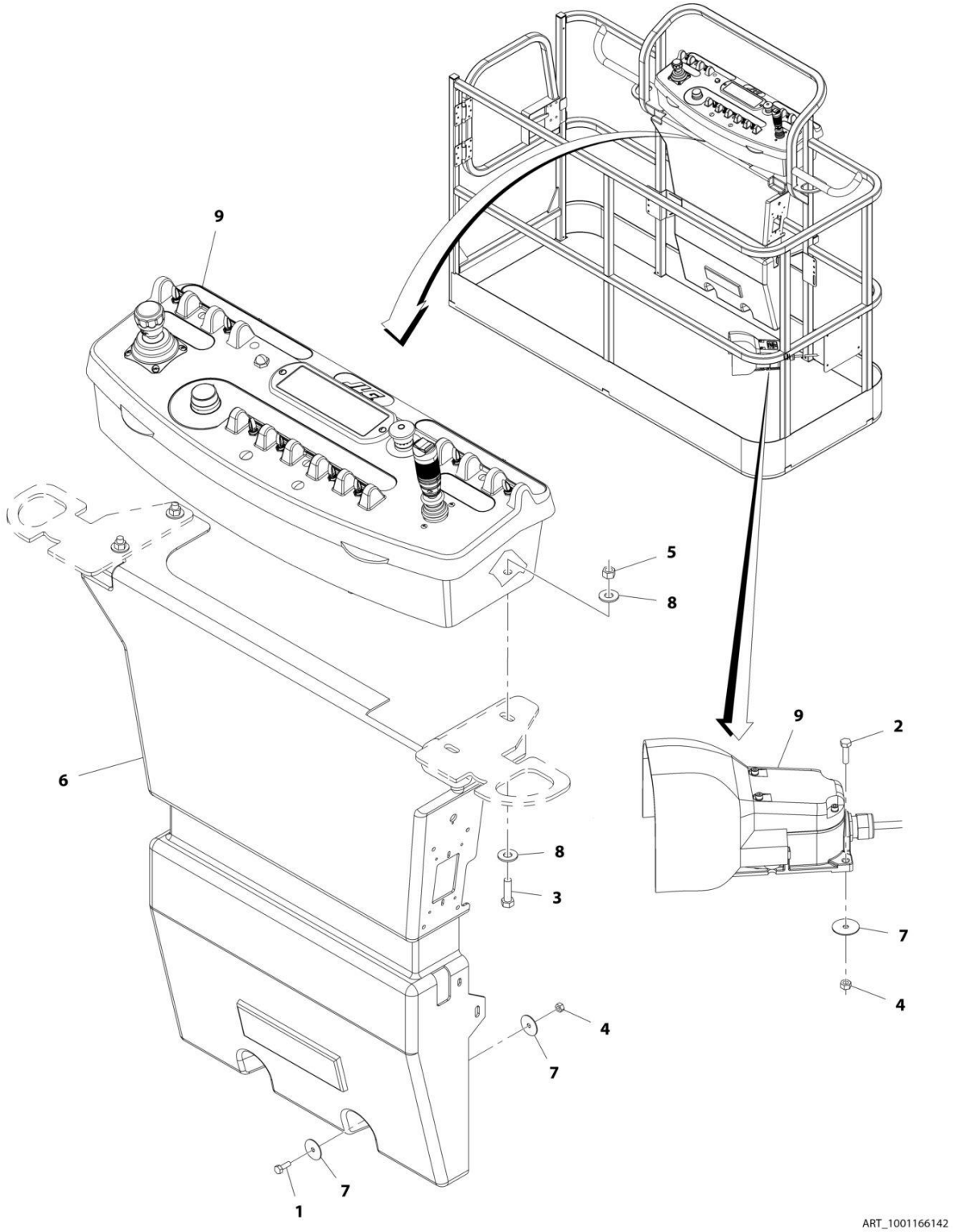

FIGURE 5-17. CONSOLE BOX INSTALLATION - 450AJ WITHOUT SKYGUARD (SN 0300201991 through 0300226169)

ITEM	PART NUMBER	QTY	DESCRIPTION	REV
	1001166142	Ref	CONSOLE BOX INSTALLATION - 450AJ WITHOUT SKYGUARD **(SN 0300201991 through 0300226169)**	C
1	0641406	2	Bolt, 1/4-20 x 3/4	
2	0641408	3	Bolt, 1/4-20 x 1	
3	0641610	4	Bolt, 3/8-16 x 1-1/4	
4	3311405	5	Nut, Lock 1/4-20	
5	3311605	4	Nut, Lock 3/8-16	
6	3380434	1	Panel, Decal Mount	
7	4740362	7	Washer, 1/4	
8	4751600	8	Washer, 3/8	
9	1001167267	NLA	Platform Console Box Assembly (See PLATFORM CONSOLE BOX ASSEMBLY - 450AJ WITHOUT SKYGUARD for Breakdown) (Use p/n 1001202612) **(SN 0300201991 through 0300219950)**	
9	1001202612	1	Platform Console Box Assembly (See PLATFORM CONSOLE BOX ASSEMBLY - 450AJ WITHOUT SKYGUARD for Breakdown) **(SN 0300219951 through 0300226169)**	
10	1001164728	1	Harness, Platform Valve (Not Shown - See ELECTRICAL SECTION for Breakdown) **(SN 0300212508 through 0300226169)**	

FIGURE 5-18. CONSOLE BOX INSTALLATION - 450A WITH SKYGUARD (SN 0300201991 through 0300259091)

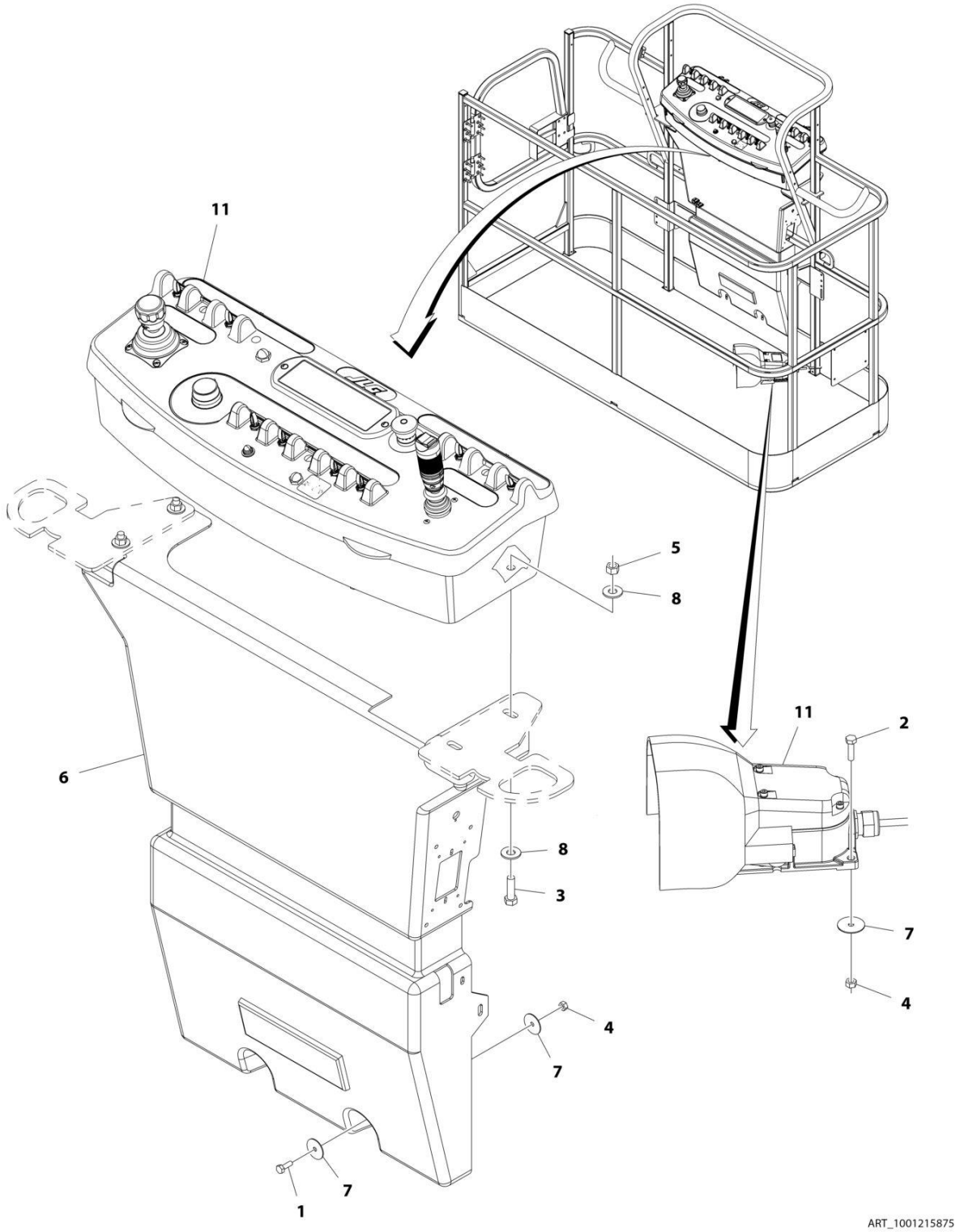

FIGURE 5-18. CONSOLE BOX INSTALLATION - 450A WITH SKYGUARD (SN 0300201991 through 0300259091)

ITEM	PART NUMBER	QTY	DESCRIPTION	REV
	1001215875	Ref	CONSOLE BOX INSTALLATION - 450A WITH SKYGUARD	B
1	0641406	2	Bolt 1/4 x 3/4	
2	0641408	3	Bolt 1/4 x 1	
3	0641610	4	Bolt 3/8 x 1-1/4	
4	3311405	5	Nut Lock 1/4	
5	3311605	4	Nut Lock 3/8	
6	3380434	1	Panel, Decal Mount	
7	4740362	7	Washer 1/4	
8	4751600	8	Washer 3/8	
9	1001144295	2	Cap, Connector (Not Shown)	
10	1001164728	1	Harness, Platform Valve (Not Shown - See ELECTRICAL SECTION for Breakdown)	
11	1001215874	1	Platform Console Box Assembly (See PLATFORM CONSOLE BOX ASSEMBLY - 450A WITH SKYGUARD for Breakdown)	

FIGURE 5-19. CONSOLE BOX INSTALLATION - 450A WITH SKYGUARD (SN 0300259092 through 0300272317)

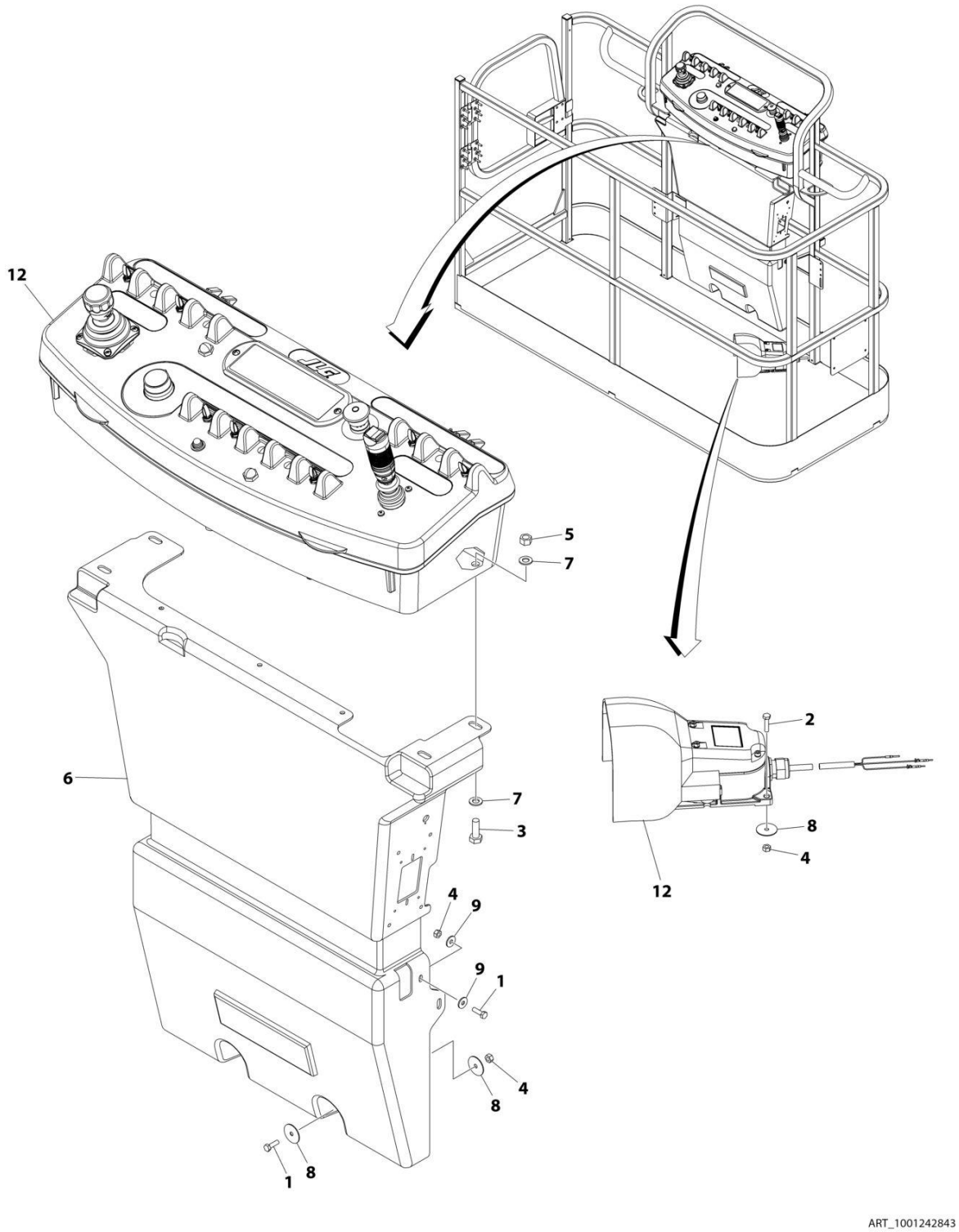

FIGURE 5-19. CONSOLE BOX INSTALLATION - 450A WITH SKYGUARD (SN 0300259092 through 0300272317)

ITEM	PART NUMBER	QTY	DESCRIPTION	REV
	1001242843	Ref	CONSOLE BOX INSTALLATION - 450A WITH SKYGUARD	A
1	0641406	4	Bolt 1/4 x 3/4	
2	0641408	3	Bolt 1/4 x 1	
3	0641610	4	Bolt 3/8 x 1-1/4	
4	3311405	7	Nut Lock 1/4	
5	3311605	4	Nut Lock 3/8	
6	3380434	1	Panel, Decal Mount	
7	4751600	8	Washer 3/8	
8	4740362	7	Washer 1/4	
9	4751400	4	Washer 1/4	
10	1001144295	2	Cap, Connector (Not Shown)	
11	1001164728	1	Harness, Platform Valve (Not Shown - See ELECTRICAL SECTION for Breakdown)	
12	1001242848	1	Platform Console Box Assembly (See PLATFORM CONSOLE BOX ASSEMBLY - 450A WITH SKYGUARD for Breakdown)	

FIGURE 5-20. CONSOLE BOX INSTALLATION - 450AJ WITH SKYGUARD (SN 0300201991 through 0300259091, SN B300003516 through B300005760, SN E300002833 through E300007540, SN 1300007279 through 1300007373)

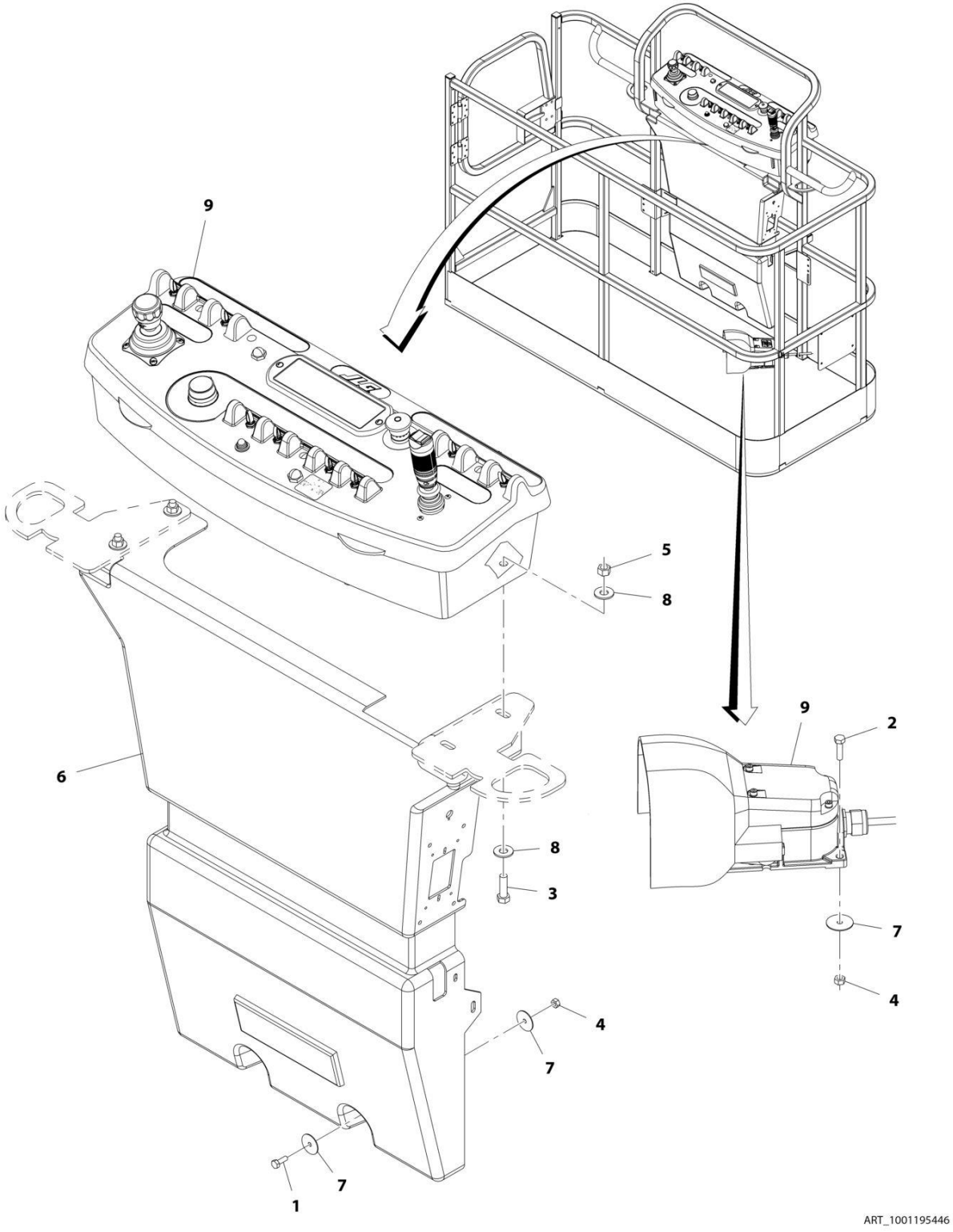

FIGURE 5-20. CONSOLE BOX INSTALLATION - 450AJ WITH SKYGUARD (SN 0300201991 through 0300259091, SN B300003516 through B300005760, SN E300002833 through E300007540, SN 1300007279 through 1300007373)

ITEM	PART NUMBER	QTY	DESCRIPTION	REV
	1001195446	Ref	CONSOLE BOX INSTALLATION - 450AJ WITH SKYGUARD	D
1	0641406	2	Bolt, 1/4-20 x 3/4	
2	0641408	3	Bolt, 1/4-20 x 1	
3	0641610	4	Bolt, 3/8-16 x 1-1/4	
4	3311405	5	Nut, Lock 1/4-20	
5	3311605	4	Nut, Lock 3/8-16	
6	3380434	1	Panel, Decal Mount	
7	4740362	7	Washer, 1/4	
8	4751600	8	Washer, 3/8	
9	1001195444	NLA	Platform Console Box Assembly (See PLATFORM CONSOLE BOX ASSEMBLY - WITH SKYGUARD for Breakdown) (Use p/n 1001202611) **(SN 0300201991 through 0300219950, SN E300002833 through E300003608)**	
9	1001202611	1	Platform Console Box Assembly (See PLATFORM CONSOLE BOX ASSEMBLY - WITH SKYGUARD for Breakdown) **(SN 0300219951 through 0300259091, SN 1300007279 through 1300007373, SN B300003516 through B300005760, SN E300003609 through E300007540, Excluding B300005569)**	
10	1001164728	1	Harness, Platform Valve (Not Shown - See ELECTRICAL SECTION for Breakdown) **(SN 0300212508 through 0300259091, SN 1300007279 through 1300007373, SN B300003516 through B300005760, SN E300003014 through E300007540, Excluding B300005569)**	

FIGURE 5-21. CONSOLE BOX INSTALLATION - 450AJ WITH SKYGUARD (SN 0300259092 through 0300272317, SN E300007541 through E300007990)

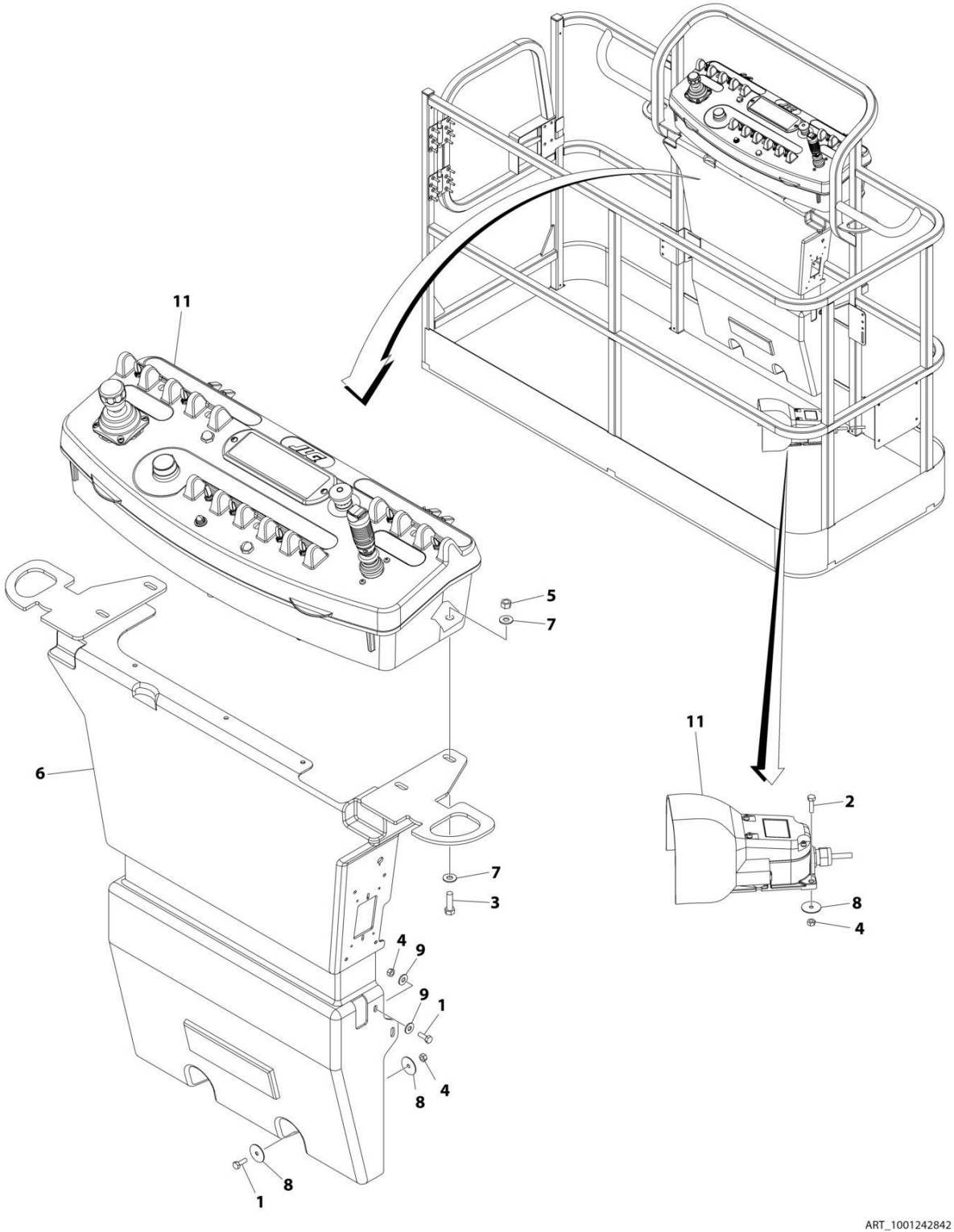

FIGURE 5-21. CONSOLE BOX INSTALLATION - 450AJ WITH SKYGUARD (SN 0300259092 through 0300272317, SN E300007541 through E300007990)

ITEM	PART NUMBER	QTY	DESCRIPTION	REV
	1001242842	Ref	CONSOLE BOX INSTALLATION - 450AJ WITH SKYGUARD	A
1	0641406	4	Bolt 1/4 x 3/4	
2	0641408	3	Bolt 1/4 x 1	
3	0641610	4	Bolt 3/8 x 1-1/4	
4	3311405	7	Nut Lock 1/4	
5	3311605	4	Nut Lock 3/8	
6	3380434	1	Panel, Decal Mount	
7	4751600	8	Washer 3/8	
8	4740362	7	Washer 1/4	
9	4751400	4	Washer 1/4	
10	1001164728	1	Harness, Platform Valve (Not Shown - See ELECTRICAL SECTION for Breakdown)	
11	1001242847	1	Platform Console Box Assembly (See PLATFORM CONSOLE BOX ASSEMBLY - WITH SKYGUARD for Breakdown)	

FIGURE 5-22. PLATFORM CONSOLE BOX ASSEMBLY - 450A WITHOUT SKYGUARD (SN 0300201991 through 0300226169)

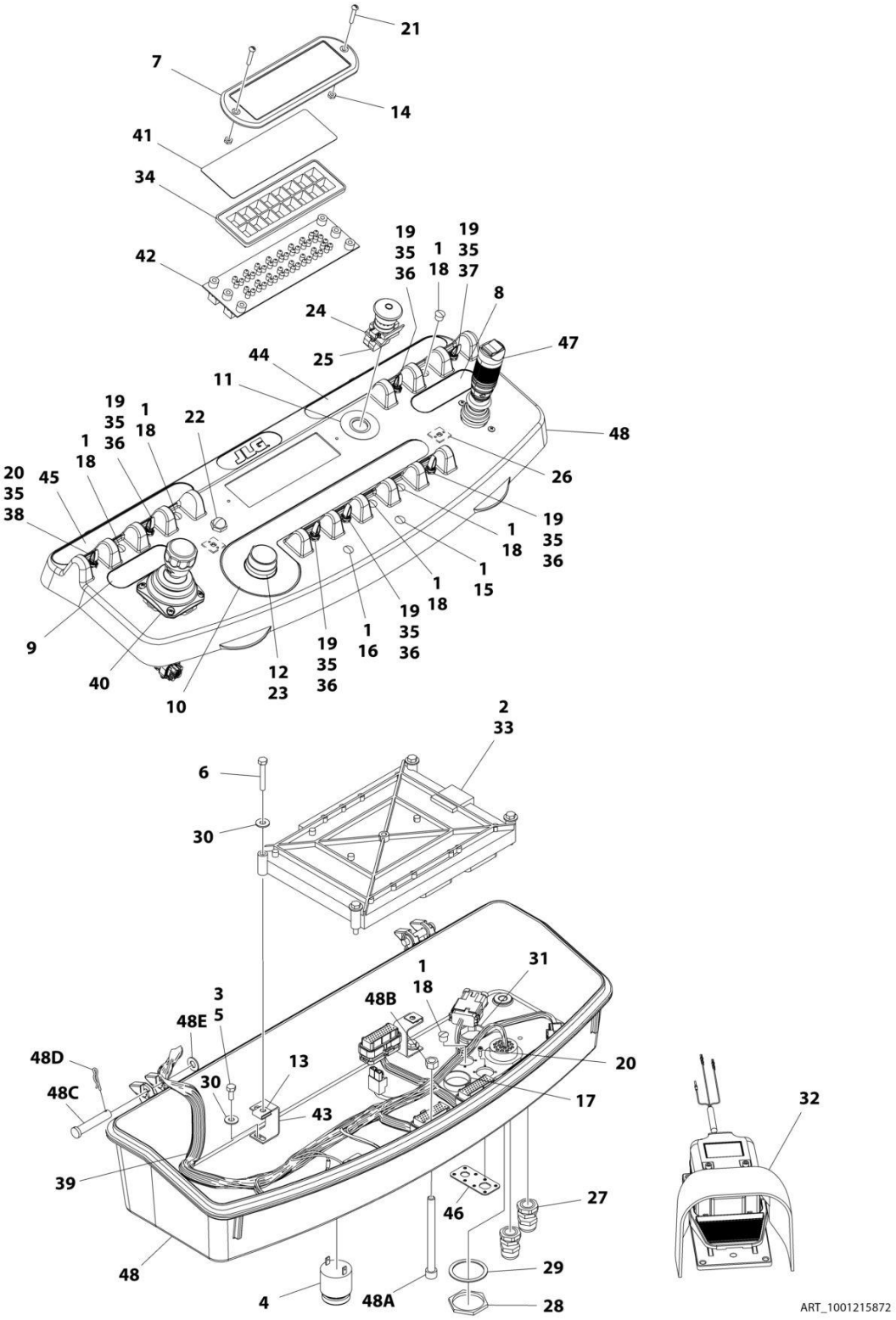

FIGURE 5-22. PLATFORM CONSOLE BOX ASSEMBLY - 450A WITHOUT SKYGUARD (SN 0300201991 through 0300226169)

ITEM	PART NUMBER	QTY	DESCRIPTION	REV
	1001215872	Ref	PLATFORM CONSOLE BOX ASSEMBLY - 450A WITHOUT SKYGUARD **(SN 0300201991 through 0300226169)**	A
1	0100009	AR	Sealant	
2	0100048	AR	Grease, Dielectric	
3	0100081	AR	Adhesive	
4	0140011	1	Alarm	
5	0641405	4	Bolt 1/4 x 5/8	
6	0641414	4	Bolt 1/4 x 1-3/4	
7	1670829	1	Bezel	
8	1702565	1	Decal - Drive and Steer	
9	1702566	1	Decal - Lift and Swing	
10	1702567	1	Decal - Function Speed	
11	1704260	1	Decal - EMS	
12	2560136	1	Handle, Knob	
13	3300353	4	Nut	
14	3300408	2	Nut	
15	3520026	1	Plug	
16	3520027	1	Plug	
17	3520035	1	Plug	
18	3520054	6	Plug	
19	3790012	7	O-Ring	
20	3900349	8	Screw	
21	3911018	2	Screw 10 x 1-1/8	
22	4360387	1	Switch, Pushbutton	
23	4360407	1	Switch, Potentiometer	
24	4360475	1	Switch, Emergency	
24	7020175	1	Cap, Red	
24	7020176	1	Contact Block	
25	4360476	1	Switch, Contact	
26	4460234	2	Terminal	
27	4460428	2	Connector, Strain Relief	
28	4460470	1	Nut	
29	4460471	1	Washer	
30	4751400	8	Washer 1/4	
31	1001110434	1	Plug	
32	1001117174	1	Footswitch Assembly (See FOOTSWITCH ASSEMBLY for Breakdown)	
33	1001118412	1	Controller, Module (Note: Re-calibration Required when Replaced)	
34	1001146220	1	Housing, Display Light	
35	1001155044	7	Nut 15/32	
36	1001155045	5	Switch, Toggle	
37	1001159256	1	Switch, Toggle	
38	1001161709	1	Switch, Toggle	
39	1001164353	1	Harness, Platform Console Box (See ELECTRICAL SECTION for Breakdown)	
40	1001166539	NLA	Controller Assembly (Lift and Swing) (See CONTROLLER ASSEMBLY (LIFT AND SWING) for Breakdown) (Note: Use p/n 1001129555 as Replacement)	
41	1001170446	1	Decal - Platform Display	
42	1001170838	1	Gauge, Led Panel	

SECTION 5 - PLATFORM

ITEM	PART NUMBER	QTY	DESCRIPTION	REV
43	1001172760	4	Bracket	
44	1001184618	1	Decal - Stop	
45	1001184626	1	Decal - Horn	
46	1001213882	1	Mount	
47	1001166538	NLA	Controller Assembly (Drive and Steer) (Use p/n 1001212415) (See CONTROLLER ASSEMBLY (DRIVE AND STEER) for Breakdown)	
48	1001215228	1	Platform Console Box	
48A	0630568	1	Capscrew 3/8 x 4-1/2	
48B	3311601	1	Nut 3/8	
48C	3430616	2	Pin, Clevis	
48D	3470003	2	Hairpin	
48E	4711600	2	Washer 3/8	

FIGURE 5-23. PLATFORM CONSOLE BOX ASSEMBLY - 450AJ WITHOUT SKYGUARD (SN 0300201991 through 0300219950)

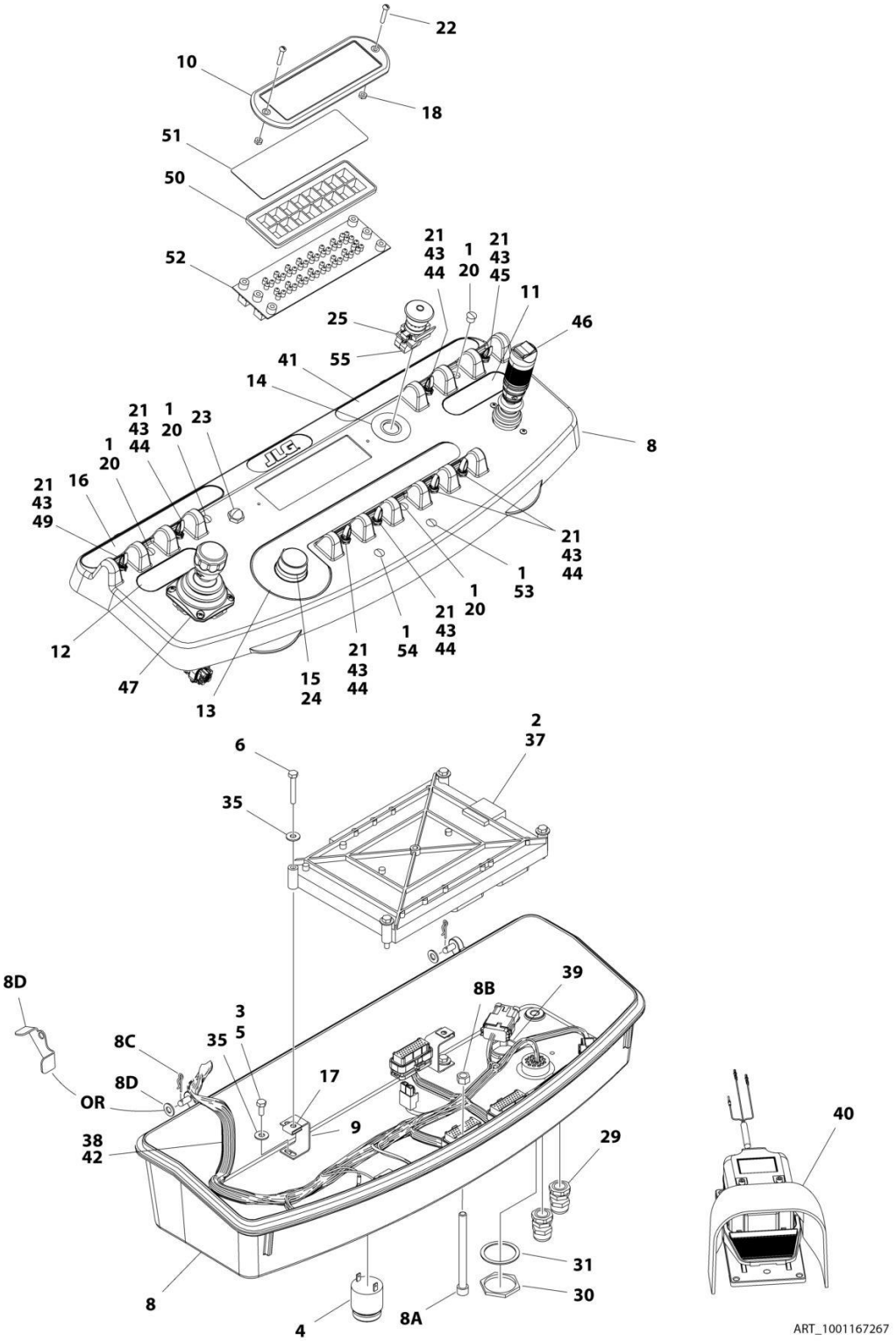

FIGURE 5-23. PLATFORM CONSOLE BOX ASSEMBLY - 450AJ WITHOUT SKYGUARD (SN 0300201991 through 0300219950)

ITEM	PART NUMBER	QTY	DESCRIPTION	REV
	1001167267	Ref	PLATFORM CONSOLE BOX ASSEMBLY - 450AJ WITHOUT SKYGUARD **(SN 0300201991 through 0300219950)**	J
1	0100009	AR	Sealant	
2	0100048	AR	Grease, Dielectric	
3	0100081	AR	Adhesive	
4	0140011	1	Alarm	
5	0641404	4	Bolt, 1/4-20 x 1/2	
6	0641414	4	Bolt, 1/4-20 x 1-3/4	
8	1001184324	1	Platform Console Box	
8A	0630568	1	Capscrew, 3/8-16 x 4-1/2	
8B	3311601	1	Nut, 3/8-16	
8C	3470003	2	Hairpin	
8D	4711500	2	Washer, 5/16	
8D	1001200575	2	Bracket, Stop	
9	0902751	NLA	Bracket (Use p/n 1001172760) **(SN 0300201991 through 0300207005)**	
9	1001172760	4	Bracket **(SN 0300207006 through 0300219950)**	
10	1670829	1	Bezel	
11	1702565	1	Decal - Drive and Steer	
12	1702566	1	Decal - Lift and Swing	
13	1702567	1	Decal - Function Speed	
14	1704260	1	Decal - EMS	
15	2560136	1	Handle, Knob	
16	1001184626	1	Decal - Horn	
17	3300353	4	Nut, Tinnerman	
18	3300408	2	Nut, Lock	
20	3520054	4	Plug	
21	3790012	8	O-Ring	
22	3911018	2	Screw, 10-24 x 1-1/8	
23	4360387	1	Switch, Pushbutton	
24	4360407	1	Switch, Potentiometer	
25	4360475	1	Switch, Emergency	
25	7020175	1	Cap, Red	
25	7020176	1	Contact Block	
28	4460234	2	Terminal	
29	4460428	2	Connector, Strain Relief	
30	4460470	1	Nut, Terminal	
31	4460471	1	Washer, Lock	
35	4751400	8	Washer, 1/4	
37	1001118412	1	Controller, Module (Note: Re-calibration Required when Replaced)	
38	1001164353	1	Harness, Platform Console Box (See ELECTRICAL SECTION for Breakdown)	
39	1001110434	1	Plug	
40	1001117174	1	Footswitch Assembly (See FOOTSWITCH ASSEMBLY for Breakdown)	
41	1001184618	1	Decal - Stop	
42	1001164728	1	Harness, Platform Valve (See ELECTRICAL SECTION for Breakdown) **(SN 0300201991 through 0300212508)**	
43	1001155044	8	Nut, Special 15/32-32	
44	1001155045	6	Switch, Toggle	

SECTION 5 - PLATFORM

ITEM	PART NUMBER	QTY	DESCRIPTION	REV
45	1001159256	1	Switch, Toggle	
46	1001166538	NLA	Controller Assembly (Drive and Steer) (Use p/n 1001212415) (See CONTROLLER ASSEMBLY (DRIVE AND STEER) for Breakdown)	
47	1001166539	NLA	Controller Assembly (Lift and Swing) (See CONTROLLER ASSEMBLY (LIFT AND SWING) for Breakdown) (Note: Use p/n 1001129555 as Replacement)	
49	1001161709	1	Switch, Toggle	
50	1001146220	1	Housing, Display Light	
51	1001170446	1	Decal - Platform Display	
52	1001170838	1	Gauge, Led Panel	
53	3520026	1	Plug	
54	3520027	1	Plug	
55	4360476	1	Switch, Contact	

FIGURE 5-24. PLATFORM CONSOLE BOX ASSEMBLY - 450AJ WITHOUT SKYGUARD (SN 0300219951 through 0300226169)

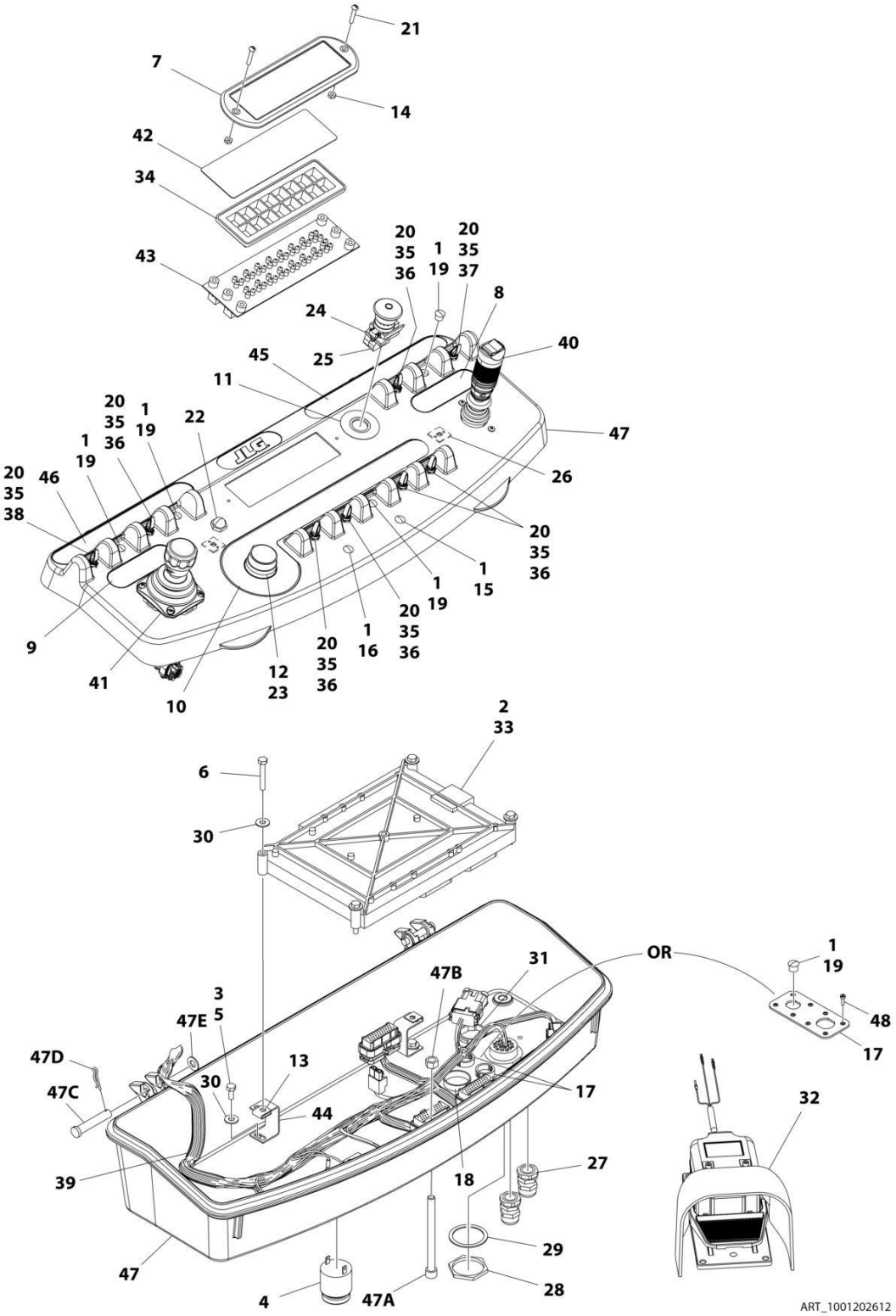

FIGURE 5-24. PLATFORM CONSOLE BOX ASSEMBLY - 450AJ WITHOUT SKYGUARD (SN 0300219951 through 0300226169)

ITEM	PART NUMBER	QTY	DESCRIPTION	REV
	1001202612	Ref	PLATFORM CONSOLE BOX ASSEMBLY - 450AJ WITHOUT SKYGUARD **(SN 0300219951 through 0300226169)**	C
1	0100009	AR	Sealant	
2	0100048	AR	Grease, Dielectric	
3	0100081	AR	Adhesive	
4	0140011	1	Alarm	
5	0641405	4	Bolt 1/4 x 5/8	
6	0641414	4	Bolt 1/4 x 1-3/4	
7	1670829	1	Bezel	
8	1702565	1	Decal - Drive and Steer	
9	1702566	1	Decal - Lift and Swing	
10	1702567	1	Decal - Function Speed	
11	1704260	1	Decal - EMS	
12	2560136	1	Handle, Knob	
13	3300353	4	Nut	
14	3300408	2	Nut	
15	3520026	1	Plug	
16	3520027	1	Plug	
17	3520033	2	Plug **(SN 0300219951 through 0300222765)**	
17	1001213882	1	Connector, Mounting **(SN 0300222766 through 0300226169)**	
18	3520035	1	Plug	
19	3520054	AR	Plug	
20	3790012	8	O-Ring	
21	3911018	2	Screw 10 x 1-1/8	
22	4360387	1	Switch, Pushbutton	
23	4360407	1	Switch, Potentiometer	
24	4360475	1	Switch, Emergency	
24	7020175	1	Cap, Red	
24	7020176	1	Contact Block	
25	4360476	1	Switch, Contact	
26	4460234	2	Terminal	
27	4460428	2	Connector, Strain Relief	
28	4460470	1	Nut	
29	4460471	1	Washer	
30	4751400	8	Washer 1/4	
31	1001110434	1	Plug	
32	1001117174	1	Footswitch Assembly (See FOOTSWITCH ASSEMBLY for Breakdown)	
33	1001118412	1	Controller, Module (Note: Re-calibration Required when Replaced)	
34	1001146220	1	Housing, Display Light	
35	1001155044	8	Nut 15/32	
36	1001155045	6	Switch, Toggle	
37	1001159256	1	Switch, Toggle	
38	1001161709	1	Switch, Toggle	
39	1001164353	1	Harness, Platform Console Box (See ELECTRICAL SECTION for Breakdown)	
40	1001166538	NLA	Controller Assembly (Drive and Steer) (Use p/n 1001212415) (See CONTROLLER ASSEMBLY (DRIVE AND STEER) for Breakdown)	
41	1001166539	NLA	Controller Assembly (Lift and Swing) (See CONTROLLER ASSEMBLY (LIFT AND SWING) for Breakdown) (Note: Use p/n	

ITEM	PART NUMBER	QTY	DESCRIPTION	REV
			1001129555 as Replacement)	
42	1001170446	1	Decal - Platform Display	
43	1001170838	1	Gauge, Led Panel	
44	1001172760	4	Bracket	
45	1001184618	1	Decal - Stop	
46	1001184626	1	Decal - Horn	
47	1001201891	1	Platform Console Box **(SN 0300219951 through 0300222765)**	
47	1001215228	1	Platform Console Box **(SN 0300222766 through 0300226169)**	
47A	0630568	1	Capscrew 3/8 x 4-1/2	
47B	3311601	1	Nut 3/8	
47C	3430616	2	Pin, Clevis	
47D	3470003	2	Hairpin	
47E	4711600	2	Washer 3/8	
48	3900349	8	Screw **(SN 0300222766 through 0300226169)**	

FIGURE 5-25. PLATFORM CONSOLE BOX ASSEMBLY - 450A WITH SKYGUARD (SN 0300201991 through 0300259091)

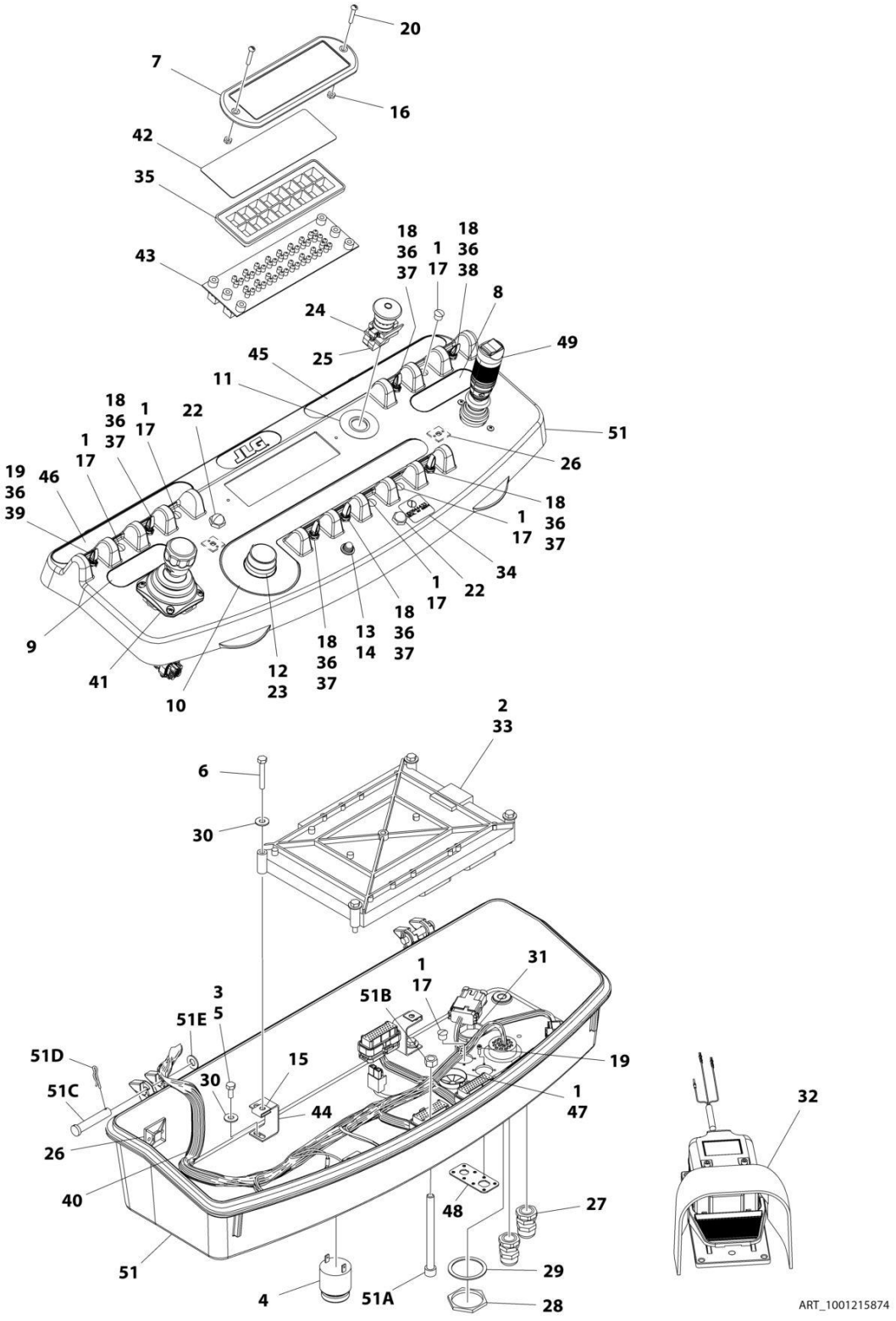

FIGURE 5-25. PLATFORM CONSOLE BOX ASSEMBLY - 450A WITH SKYGUARD (SN 0300201991 through 0300259091)

ITEM	PART NUMBER	QTY	DESCRIPTION	REV
	1001215874	Ref	PLATFORM CONSOLE BOX ASSEMBLY - 450A WITH SKYGUARD	B
1	0100009	AR	Sealant	
2	0100048	AR	Grease, Dielectric	
3	0100081	AR	Adhesive	
4	0140011	1	Alarm	
5	0641405	4	Bolt 1/4 x 5/8	
6	0641414	4	Bolt 1/4 x 1-3/4	
7	1670829	1	Bezel	
8	1702565	1	Decal - Drive and Steer	
9	1702566	1	Decal - Lift and Swing	
10	1702567	1	Decal - Function Speed	
11	1704260	1	Decal - EMS	
12	2560136	1	Handle, Knob	
13	2920028	1	Light, Indicator	
14	2920029	1	Bulb, Light	
15	3300353	4	Nut	
16	3300408	2	Nut	
17	3520054	6	Plug	
18	3790012	7	O-Ring	
19	3900349	8	Screw	
20	3911018	2	Screw 10 x 1-1/8	
21	4240099	AR	Tie-Strap (Not Shown)	
22	4360387	2	Switch, Pushbutton	
23	4360407	1	Switch, Potentiometer	
24	4360475	1	Switch, Emergency	
24	7020175	1	Cap, Red	
24	7020176	1	Contact Block	
25	4360476	1	Block, Contact	
26	4460234	4	Terminal	
27	4460428	2	Connector, Strain Relief	
28	4460470	1	Nut	
29	4460471	1	Washer	
30	4751400	8	Washer 1/4	
31	1001110434	1	Plug	
32	1001117174	1	Footswitch Assembly (See FOOTSWITCH ASSEMBLY for Breakdown)	
33	1001118412	1	Module, Control	
34	1001144433	1	Decal - No Weight SkyGuard	
35	1001146220	1	Housing, Display Light	
36	1001155044	7	Nut 15/32	
37	1001155045	5	Switch, Toggle	
38	1001159256	1	Switch, Toggle	
39	1001161709	1	Switch, Toggle	
40	1001164353	1	Harness, Platform Console Box (See ELECTRICAL SECTION for Breakdown)	
41	1001166539	NLA	Controller Assembly (Lift and Swing) (See CONTROLLER ASSEMBLY (LIFT AND SWING) for Breakdown) (Note: Use p/n 1001129555 as Replacement)	
42	1001170446	1	Decal - Platform Display	

SECTION 5 - PLATFORM

ITEM	PART NUMBER	QTY	DESCRIPTION	REV
43	1001170838	1	Gauge, Led Panel	
44	1001172760	4	Bracket	
45	1001184618	1	Decal - Stop	
46	1001184626	1	Decal - Horn	
47	1001185281	1	Plug	
48	1001213882	1	Mount	
49	1001166538	NLA	Controller Assembly (Drive and Steer) (Use p/n 1001212415) (See CONTROLLER ASSEMBLY (DRIVE AND STEER) for Breakdown)	
50	1001192292	1	Harness, SkyGuard (Not Shown - See ELECTRICAL SECTION for Breakdown)	
51	1001215228	1	Platform Console Box	
51A	0630568	1	Capscrew 3/8 x 4-1/2	
51B	3311601	1	Nut 3/8	
51C	3430616	2	Pin, Clevis	
51D	3470003	2	Hairpin	
51E	4711600	2	Washer 3/8	

FIGURE 5-26. PLATFORM CONSOLE BOX ASSEMBLY - 450A WITH SKYGUARD (SN 0300259092 through 0300272317)

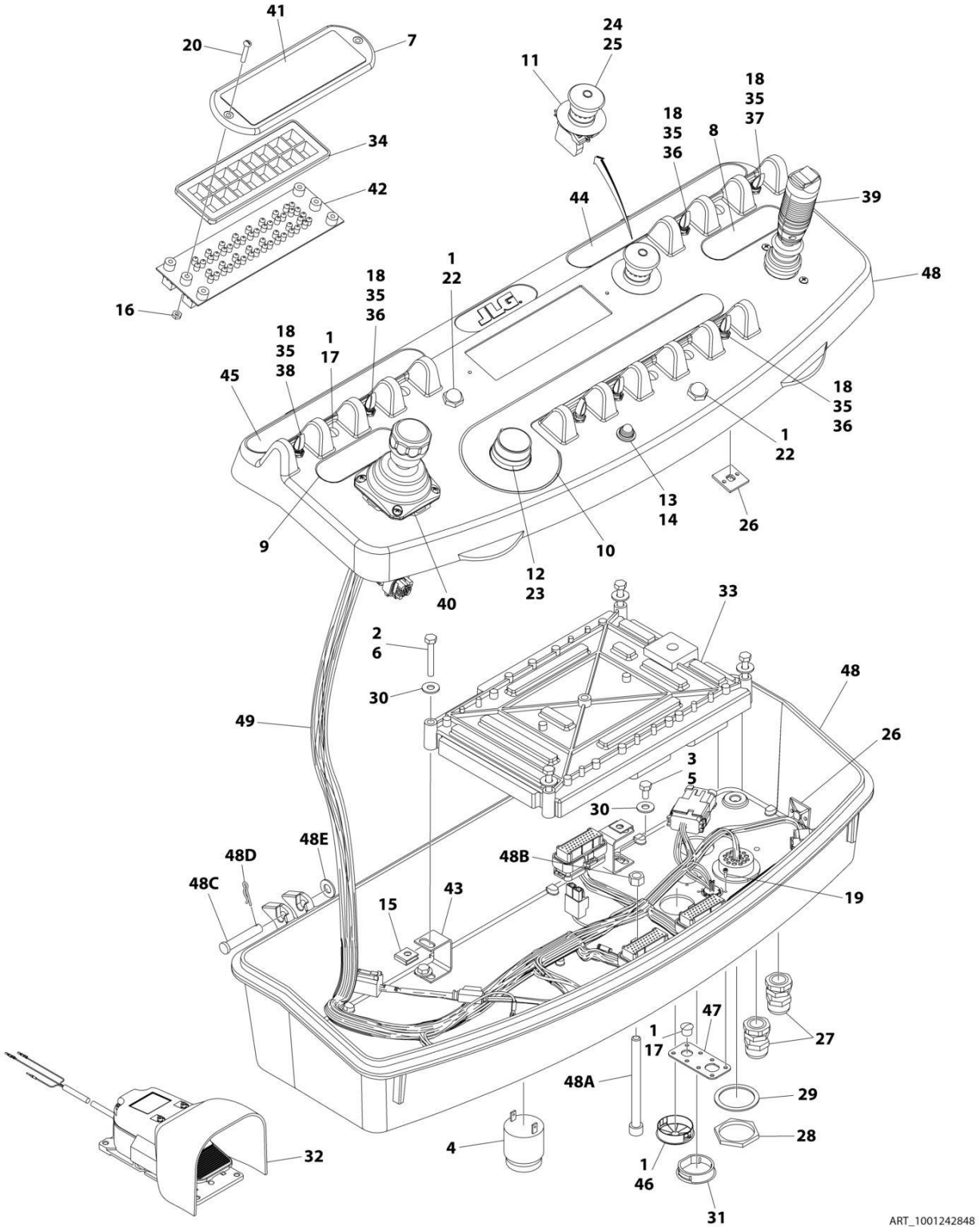

FIGURE 5-26. PLATFORM CONSOLE BOX ASSEMBLY - 450A WITH SKYGUARD (SN 0300259092 through 0300272317)

ITEM	PART NUMBER	QTY	DESCRIPTION	REV
	1001242848	Ref	PLATFORM CONSOLE BOX ASSEMBLY - 450A WITH SKYGUARD	A
1	0100009	AR	Sealant	
2	0100048	AR	Grease, Dielectric	
3	0100035	AR	Compound, Locking	
4	0140011	1	Alarm	
5	0641405	4	Bolt 1/4 x 5/8	
6	0641414	4	Bolt 1/4 x 1-3/4	
7	1670829	1	Bezel	
8	1702565	1	Decal - Drive and Steer	
9	1702566	1	Decal - Lift and Swing	
10	1702567	1	Decal - Function Speed	
11	1704260	1	Decal - EMS	
12	2560136	1	Handle, Knob	
13	2920028	1	Light, Indicator	
14	2920029	1	Bulb, Light	
15	3300353	4	Nut	
16	3300408	2	Nut	
17	3520054	6	Plug	
18	3790012	7	O-Ring	
19	3900349	8	Screw	
20	3911018	2	Screw 10 x 1-1/8	
21	4240099	AR	Tie-Strap (Not Shown)	
22	4360387	2	Switch, Pushbutton	
23	4360407	1	Switch, Potentiometer	
24	4360475	1	Switch, Emergency	
24	7020175	1	Cap, Red	
24	7020176	1	Contact Block	
25	4360476	1	Block, Contact	
26	4460234	4	Terminal	
27	4460428	2	Connector, Strain Relief	
28	4460470	1	Nut	
29	4460471	1	Washer	
30	4751400	8	Washer 1/4	
31	1001110434	1	Plug	
32	1001117174	1	Footswitch Assembly (See FOOTSWITCH ASSEMBLY for Breakdown)	
33	1001118412	1	Module, Control	
34	1001146220	1	Housing, Display Light	
35	1001155044	7	Nut 15/32	
36	1001155045	5	Switch, Toggle	
37	1001159256	1	Switch, Toggle	
38	1001161709	1	Switch, Toggle	
39	1001166538	NLA	Controller Assembly (Drive and Steer) (Use p/n 1001212415) (See CONTROLLER ASSEMBLY (DRIVE AND STEER) for Breakdown)	
40	1001166539	NLA	Controller Assembly (Lift and Swing) (See CONTROLLER ASSEMBLY (LIFT AND SWING) for Breakdown) (Note: Use p/n 1001129555 as Replacement)	
41	1001170446	1	Decal - Platform Display	
42	1001170838	1	Gauge, Led Panel	

SECTION 5 - PLATFORM

ITEM	PART NUMBER	QTY	DESCRIPTION	REV
43	1001172760	4	Bracket	
44	1001184618	1	Decal - Stop	
45	1001184626	1	Decal - Horn	
46	1001185281	1	Plug	
47	1001213882	1	Connector, Mounting	
48	1001215228	1	Platform Console Box	
48A	0630568	1	Capscrew 3/8 x 4-1/2	
48B	3311601	1	Nut 3/8	
48C	3430616	2	Pin, Clevis	
48D	3470003	2	Hairpin	
48E	4711600	2	Washer 3/8	
49	1001243168	1	Harness, Platform Console Box (See ELECTRICAL SECTION for Breakdown)	

FIGURE 5-27. PLATFORM CONSOLE BOX ASSEMBLY - 450AJ WITH SKYGUARD (SN 0300201991 through 0300219950, SN E300002833 through E300003608)

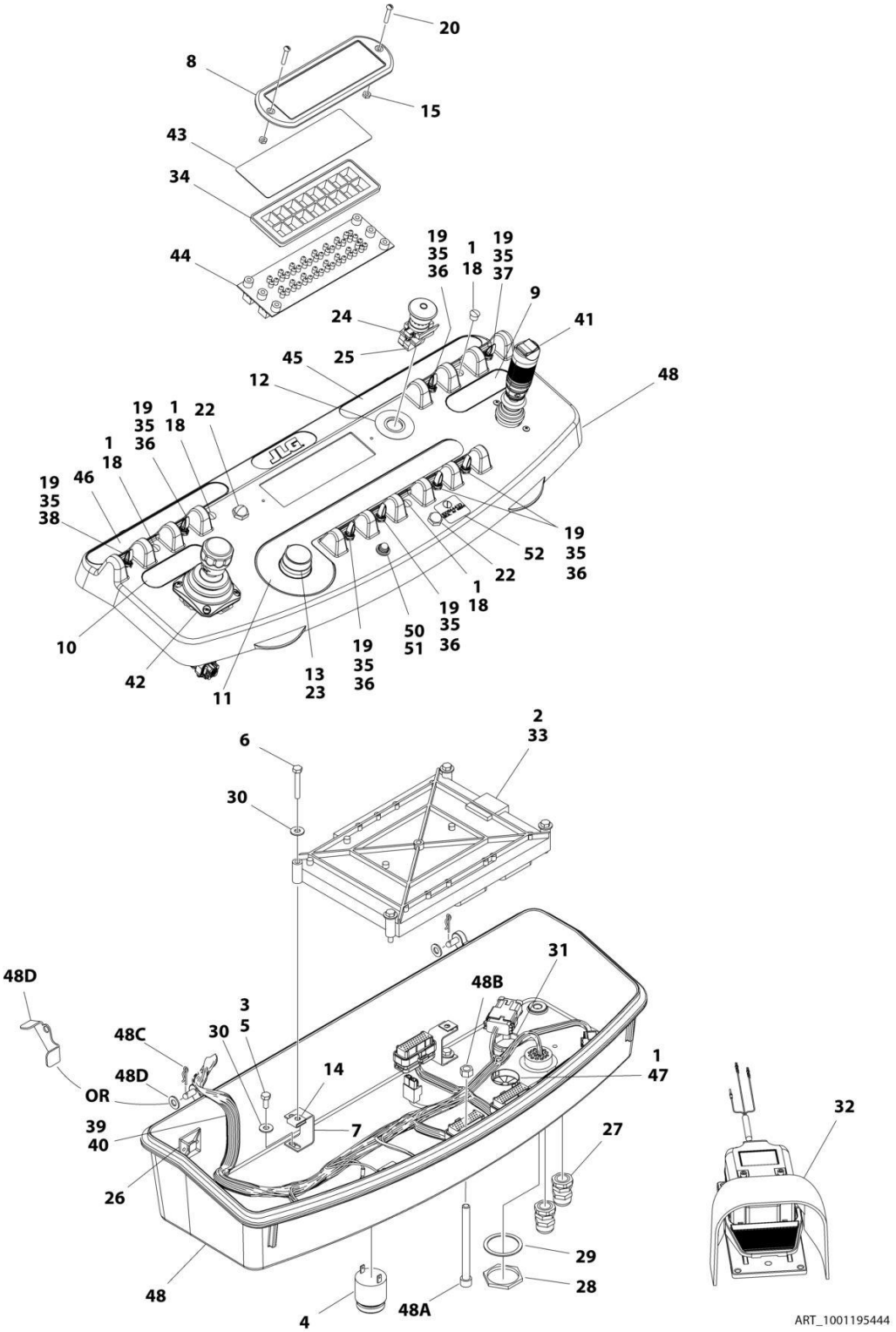

FIGURE 5-27. PLATFORM CONSOLE BOX ASSEMBLY - 450AJ WITH SKYGUARD (SN 0300201991 through 0300219950, SN E300002833 through E300003608)

ITEM	PART NUMBER	QTY	DESCRIPTION	REV
	1001195444	Ref	PLATFORM CONSOLE BOX ASSEMBLY - 450AJ WITH SKYGUARD **(SN 0300201991 through 0300219950, SN E300002833 through E300003608)**	E
1	0100009	AR	Sealant	
2	0100048	AR	Grease, Dielectric	
3	0100081	AR	Adhesive	
4	0140011	1	Alarm	
5	0641405	4	Bolt, 1/4-20 x 5/8	
6	0641414	4	Bolt, 1/4-20 x 1-3/4	
7	0902751	NLA	Bracket (Use p/n 1001172760) **(SN 0300201991 through 0300207005)**	
7	1001172760	4	Bracket **(SN 0300207006 through 0300219950, SN E300002833 through E300003608)**	
8	1670829	1	Bezel	
9	1702565	1	Decal - Drive and Steer	
10	1702566	1	Decal - Lift and Swing	
11	1702567	1	Decal - Function Speed	
12	1704260	1	Decal - EMS	
13	2560136	1	Handle, Knob	
14	3300353	4	Nut, Tinnerman	
15	3300408	2	Nut, Lock	
18	3520054	4	Plug	
19	3790012	8	O-Ring	
20	3911018	2	Screw, 10-24 x 1-1/8LG	
21	4240099	AR	Tie-Strap (Not Shown)	
22	4360387	2	Switch, Pushbutton	
23	4360407	1	Switch, Potentiometer	
24	4360475	1	Switch, Emergency	
24	7020175	1	Cap, Red	
24	7020176	1	Contact Block	
25	4360476	1	Block, Contact	
26	4460234	4	Terminal	
27	4460428	2	Connector, Strain Relief	
28	4460470	1	Nut, Terminal	
29	4460471	1	Washer, Lock	
30	4751400	8	Washer, 1/4	
31	1001110434	1	Plug	
32	1001117174	1	Footswitch Assembly (See FOOTSWITCH ASSEMBLY for Breakdown)	
33	1001118412	1	Controller, Module (Note: Re-calibration Required when Replaced)	
34	1001146220	1	Housing, Display Light	
35	1001155044	8	Nut, Special 15/32-32	
36	1001155045	6	Switch, Toggle	
37	1001159256	1	Switch, Toggle	
38	1001161709	1	Switch, Toggle	
39	1001164353	1	Harness, Platform Console Box (See ELECTRICAL SECTION for Breakdown)	
40	1001164728	1	Harness, Platform Valve (See ELECTRICAL SECTION for Breakdown) **(SN 0300201991 through 0300212508, SN E300002833 through E300003014)**	

SECTION 5 - PLATFORM

ITEM	PART NUMBER	QTY	DESCRIPTION	REV
41	1001166538	NLA	Controller Assembly (Drive and Steer) (Use p/n 1001212415) (See CONTROLLER ASSEMBLY (DRIVE AND STEER) for Breakdown)	
42	1001166539	NLA	Controller Assembly (Lift and Swing) (See CONTROLLER ASSEMBLY (LIFT AND SWING) for Breakdown) (Note: Use p/n 1001129555 as Replacement)	
43	1001170446	1	Decal - Platform Display	
44	1001170838	1	Gauge, Led Panel	
45	1001184618	1	Decal - Stop	
46	1001184626	1	Decal - Horn	
47	1001185281	1	Plug	
48	1001193730	1	Platform Console Box	
48A	0630568	1	Capscrew 3/8 x 4 - 1/2	
48B	3311601	1	Nut 3/8	
48C	3470003	2	Hairpin	
48D	4711500	2	Washer 5/16	
48D	1001200575	2	Bracket, Stop	
49	1001192292	1	Harness, SkyGuard (Not Shown - See ELECTRICAL SECTION for Breakdown)	
50	2920028	1	Light, Indicator	
51	2920029	1	Bulb, Light	
52	1001144433	1	Decal - No Weight SkyGuard	

FIGURE 5-28. PLATFORM CONSOLE BOX ASSEMBLY - 450AJ WITH SKYGUARD (SN 0300219951 through 0300259091, SN B300003516 through B300005760, SN E300003609 through E300007540, SN 1300007279 through 1300007373)

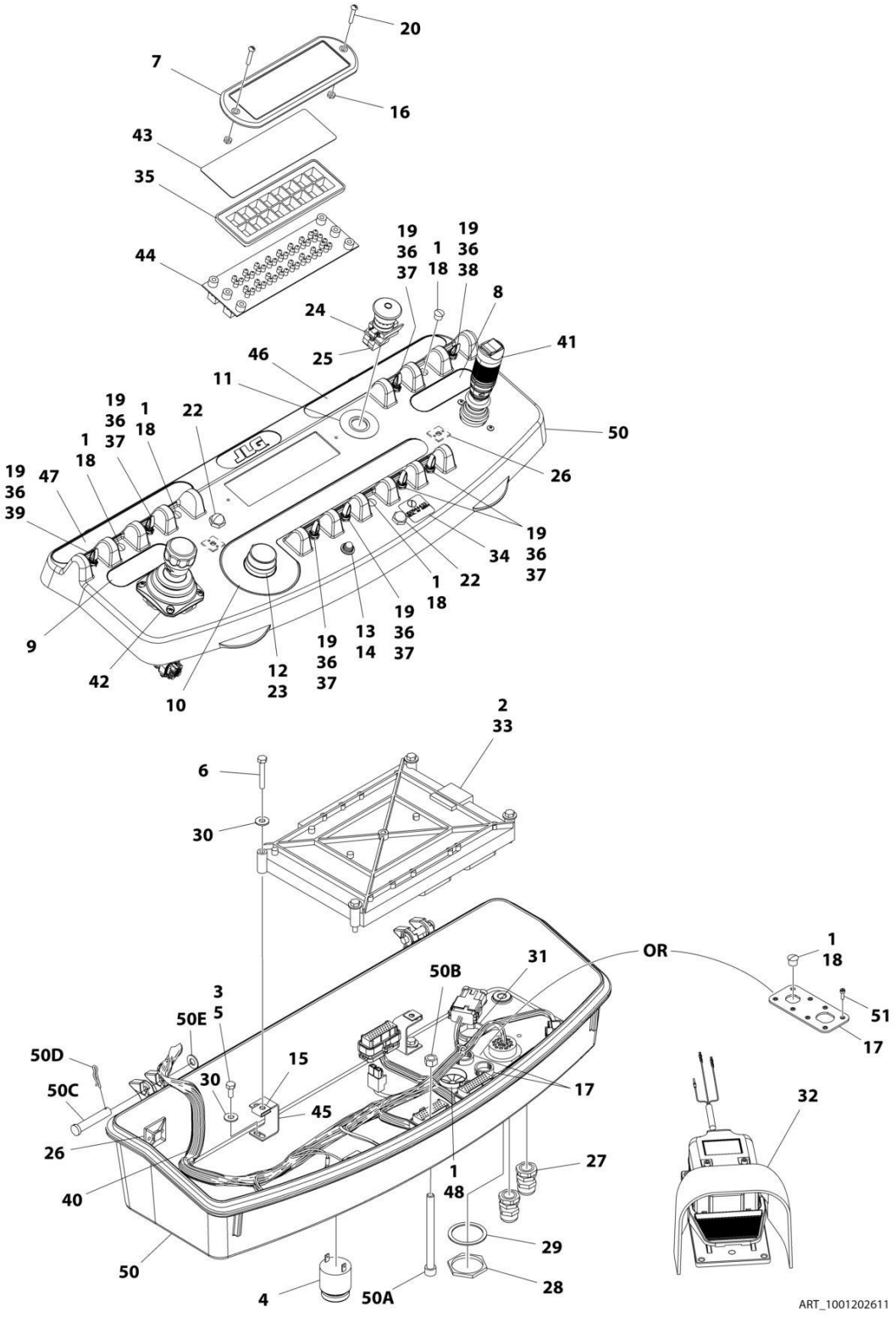

FIGURE 5-28. PLATFORM CONSOLE BOX ASSEMBLY - 450AJ WITH SKYGUARD (SN 0300219951 through 0300259091, SN B300003516 through B300005760, SN E300003609 through E300007540, SN 1300007279 through 1300007373)

ITEM	PART NUMBER	QTY	DESCRIPTION	REV
	1001202611	Ref	PLATFORM CONSOLE BOX ASSEMBLY - 450AJ WITH SKYGUARD	D
1	0100009	AR	Sealant	
2	0100048	AR	Grease, Dielectric	
3	0100081	AR	Adhesive	
4	0140011	1	Alarm	
5	0641405	4	Bolt 1/4 x 5/8	
6	0641414	4	Bolt 1/4 x 1-3/4	
7	1670829	1	Bezel	
8	1702565	1	Decal - Drive and Steer	
9	1702566	1	Decal - Lift and Swing	
10	1702567	1	Decal - Function Speed	
11	1704260	1	Decal - EMS	
12	2560136	1	Handle, Knob	
13	2920028	1	Light, Indicator	
14	2920029	1	Bulb, Light	
15	3300353	4	Nut	
16	3300408	2	Nut	
17	3520033	2	Plug **(SN 0300219951 through 0300222765, SN E300003609 through E300003749)**	
17	1001213882	1	Connector, Mounting **(SN 0300222766 through 0300272317, SN 1300007279 through 1300007373, SN B300003516 through B300005760, SN E300003750 through E300007540, Except SN 0300272185 through 0300272190, Excluding B300005569)**	
18	3520054	AR	Plug	
19	3790012	8	O-Ring	
20	3911018	2	Screw 10 x 1-1/8	
21	4240099	AR	Tie-Strap (Not Shown)	
22	4360387	2	Switch, Pushbutton	
23	4360407	1	Switch, Potentiometer	
24	4360475	1	Switch, Emergency	
24	7020175	1	Cap, Red	
24	7020176	1	Contact Block	
25	4360476	1	Block, Contact	
26	4460234	4	Terminal	
27	4460428	2	Connector, Strain Relief	
28	4460470	1	Nut	
29	4460471	1	Washer	
30	4751400	8	Washer 1/4	
31	1001110434	1	Plug	
32	1001117174	1	Footswitch Assembly (See FOOTSWITCH ASSEMBLY for Breakdown)	
33	1001118412	1	Module, Control	
34	1001144433	1	Decal - No Weight SkyGuard	
35	1001146220	1	Housing, Display Light	
36	1001155044	8	Nut 15/32	
37	1001155045	6	Switch, Toggle	
38	1001159256	1	Switch, Toggle	
39	1001161709	1	Switch, Toggle	

SECTION 5 - PLATFORM

ITEM	PART NUMBER	QTY	DESCRIPTION	REV
40	1001164353	1	Harness, Platform Console Box (See ELECTRICAL SECTION for Breakdown)	
41	1001166538	NLA	Controller Assembly (Drive and Steer) (Use p/n 1001212415) (See CONTROLLER ASSEMBLY (DRIVE AND STEER) for Breakdown)	
42	1001166539	NLA	Controller Assembly (Lift and Swing) (See CONTROLLER ASSEMBLY (LIFT AND SWING) for Breakdown) (Note: Use p/n 1001129555 as Replacement)	
43	1001170446	1	Decal - Platform Display	
44	1001170838	1	Gauge, Led Panel	
45	1001172760	4	Bracket	
46	1001184618	1	Decal - Stop	
47	1001184626	1	Decal - Horn	
48	1001185281	1	Plug	
49	1001192292	1	Harness, SkyGuard (Not Shown - See ELECTRICAL SECTION for Breakdown)	
50	1001201891	1	Platform Console Box **(SN 0300219951 through 0300222765, SN E300003609 through E300003749)**	
50	1001215228	1	Platform Console Box **(SN 0300222766 through 0300272317, SN 1300007279 through 1300007373, SN B300003516 through B300005760, SN E300003750 through E300007540, Except SN 0300272185 through 0300272190, Excluding B300005569)**	
50A	0630568	1	Capscrew 3/8 x 4-1/2	
50B	3311601	1	Nut 3/8	
50C	3430616	2	Pin, Clevis	
50D	3470003	2	Hairpin	
50E	4711600	2	Washer 3/8	
51	3900349	8	Screw **(SN 0300222766 through 0300272317, SN 1300007279 through 1300007373, SN B300003516 through B300005760, SN E300003750 through E300007540, Except SN 0300272185 through 0300272190, Excluding B300005569)**	

FIGURE 5-29. PLATFORM CONSOLE BOX ASSEMBLY - 450AJ WITH SKYGUARD (SN 0300259091 through 0300272317, SN E300007541 through E300007990)

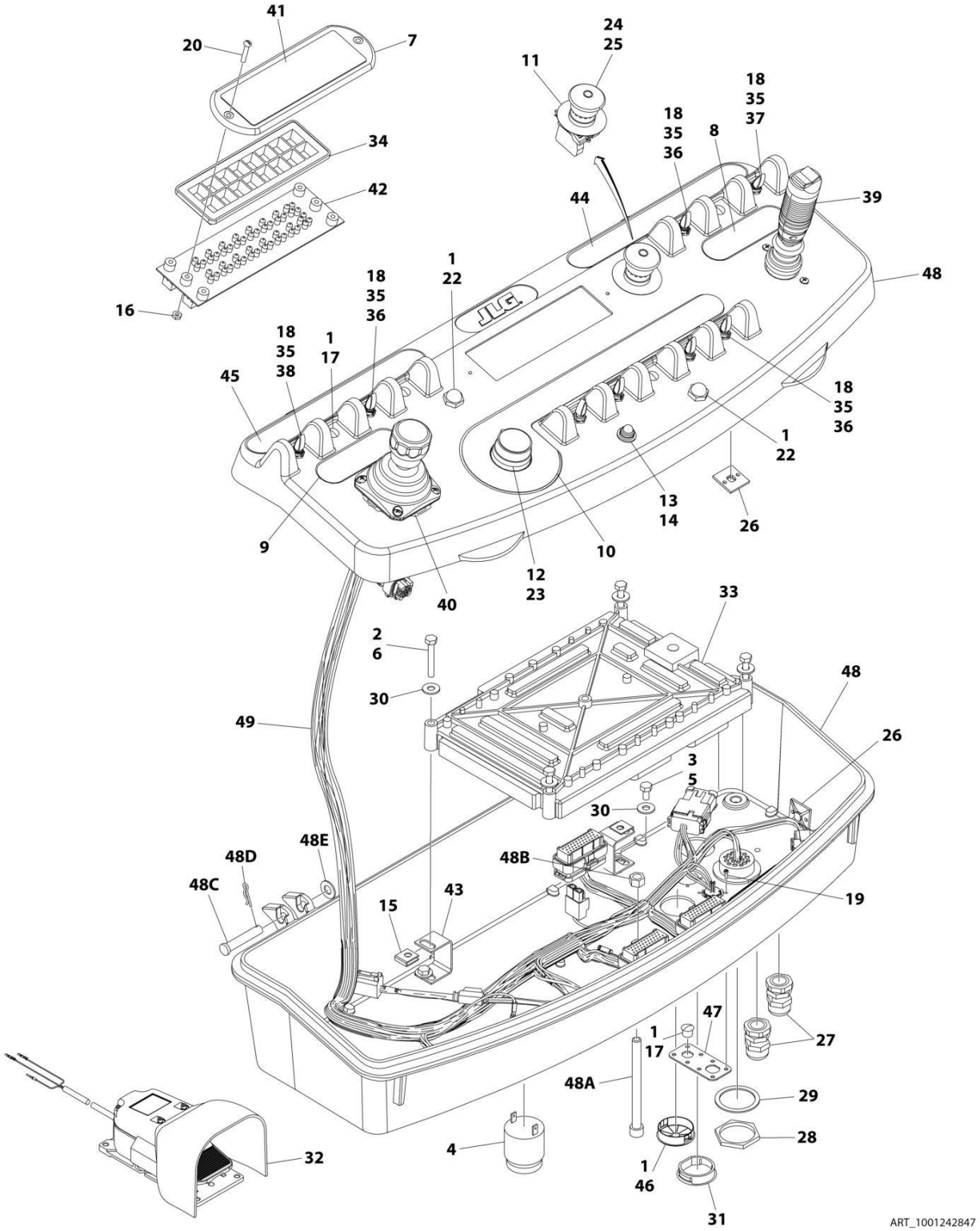

FIGURE 5-29. PLATFORM CONSOLE BOX ASSEMBLY - 450AJ WITH SKYGUARD (SN 0300259091 through 0300272317, SN E300007541 through E300007990)

ITEM	PART NUMBER	QTY	DESCRIPTION	REV
	1001242847	Ref	PLATFORM CONSOLE BOX ASSEMBLY - MACHINES WITH SKYGUARD	A
1	0100009	AR	Sealant	
2	0100048	AR	Grease, Dielectric	
3	0100035	AR	Compound, Locking	
4	0140011	1	Alarm	
5	0641405	4	Bolt 1/4 x 5/8	
6	0641414	4	Bolt 1/4 x 1-3/4	
7	1670829	1	Bezel	
8	1702565	1	Decal - Drive and Steer	
9	1702566	1	Decal - Lift and Swing	
10	1702567	1	Decal - Function Speed	
11	1704260	1	Decal - EMS	
12	2560136	1	Handle, Knob	
13	2920028	1	Light, Indicator	
14	2920029	1	Bulb, Light	
15	3300353	4	Nut	
16	3300408	2	Nut	
17	3520054	5	Plug	
18	3790012	8	O-Ring	
19	3900349	8	Screw	
20	3911018	2	Screw 10 x 1-1/8	
21	4240099	AR	Tie-Strap (Not Shown)	
22	4360387	2	Switch, Pushbutton	
23	4360407	1	Switch, Potentiometer	
24	4360475	1	Switch, Emergency	
24	7020175	1	Cap, Red	
24	7020176	1	Contact Block	
25	4360476	1	Block, Contact	
26	4460234	4	Terminal	
27	4460428	2	Connector, Strain Relief	
28	4460470	1	Nut	
29	4460471	1	Washer	
30	4751400	8	Washer 1/4	
31	1001110434	1	Plug	
32	1001117174	1	Footswitch Assembly (See FOOTSWITCH ASSEMBLY for Breakdown)	
33	1001118412	1	Module, Control	
34	1001146220	1	Housing, Display Light	
35	1001155044	8	Nut 15/32	
36	1001155045	6	Switch, Toggle	
37	1001159256	1	Switch, Toggle	
38	1001161709	1	Switch, Toggle	
39	1001166538	NLA	Controller Assembly (Drive and Steer) (Use p/n 1001212415) (See CONTROLLER ASSEMBLY (DRIVE AND STEER) for Breakdown)	
40	1001166539	NLA	Controller Assembly (Lift and Swing) (See CONTROLLER ASSEMBLY (LIFT AND SWING) for Breakdown) (Note: Use p/n 1001129555 as Replacement)	
41	1001170446	1	Decal - Platform Display	
42	1001170838	1	Gauge, Led Panel	

SECTION 5 - PLATFORM

ITEM	PART NUMBER	QTY	DESCRIPTION	REV
43	1001172760	4	Bracket	
44	1001184618	1	Decal - Stop	
45	1001184626	1	Decal - Horn	
46	1001185281	1	Plug	
47	1001213882	1	Connector, Mounting	
48	1001215228	1	Platform Console Box	
48A	0630568	1	Capscrew 3/8 x 4-1/2	
48B	3311601	1	Nut 3/8	
48C	3430616	2	Pin, Clevis	
48D	3470003	2	Hairpin	
48E	4711600	2	Washer 3/8	
49	1001243168	1	Harness, Platform Console Box (See ELECTRICAL SECTION for Breakdown)	

FIGURE 5-30. CONTROLLER ASSEMBLY - DRIVE AND STEER

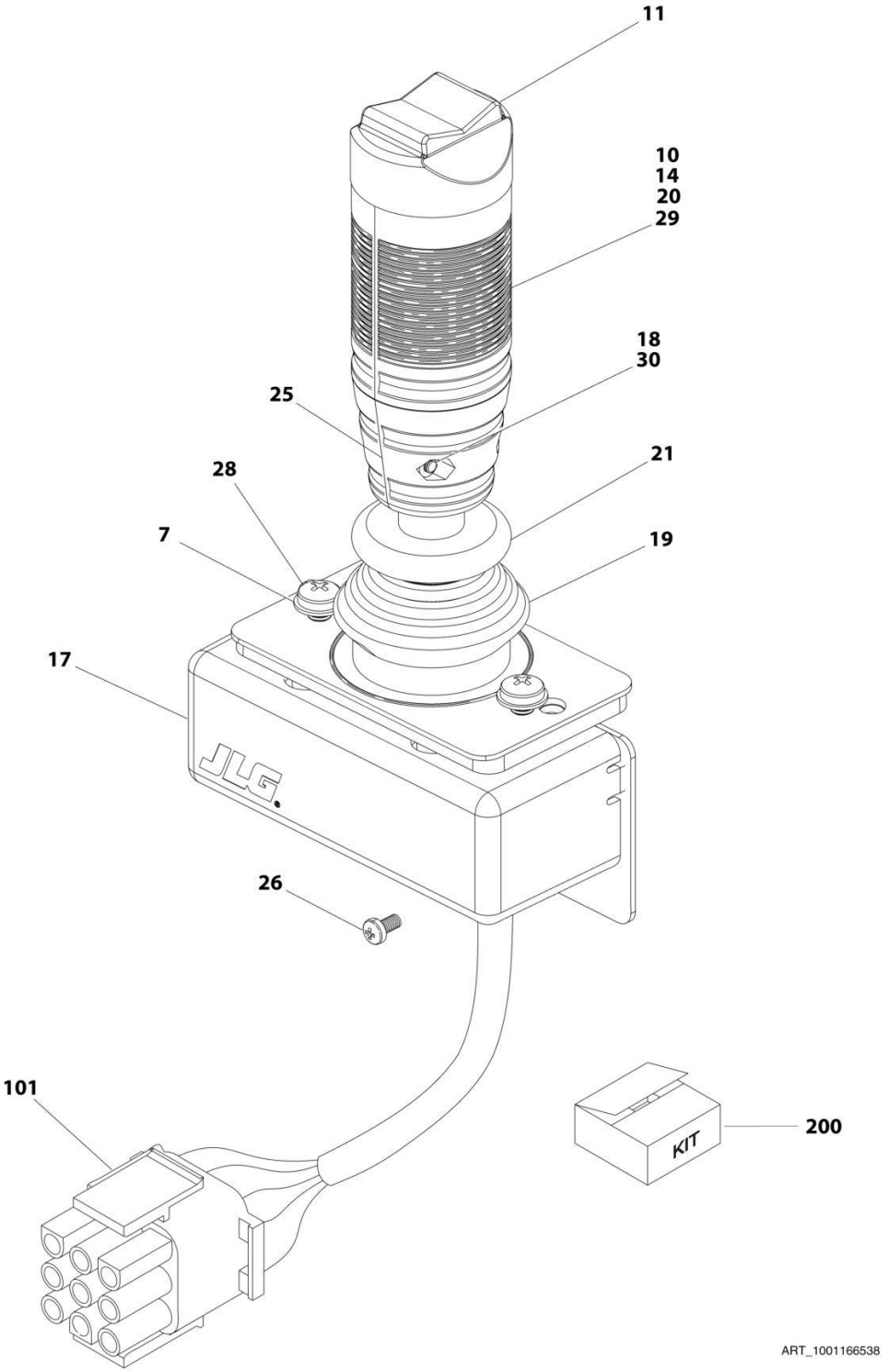

FIGURE 5-30. CONTROLLER ASSEMBLY - DRIVE AND STEER

ITEM	PART NUMBER	QTY	DESCRIPTION	REV
	1001166538	1	CONTROLLER ASSEMBLY - DRIVE AND STEER	G
		Ref	Note: Use p/n 1001212415 as Replacement.	
7	70004738	2	Washer	
10	70004739	1	Roller	
11	70004740	1	Boot, Switch	
14	70004741	2	Half, Handle	
17	70004742	1	Enclosure	
18	70004743	4	Nut	
19	70004744	NLA	Boot, Controller (Use Item 200)	
20	70004745	NLA	Tube, Locking (Use Item 200)	
21	70004746	NLA	Disc, Locking (Use Item 200)	
25	70004747	2	Seal, Rope	
26	70004748	1	Screw, M3 x 6mm	
28	70004749	2	Screw, M5 x 20mm	
29	70004750	1	Pin, Dowel	
30	70004751	4	Screw, M3 x 16mm	
101	4460265	1	Connector - 9 Position	
101	4460226	7	Socket, Female	
200	70005230	1	Boot Kit (Includes Items 19-21)	

FIGURE 5-31. CONTROLLER ASSEMBLY - LIFT AND SWING

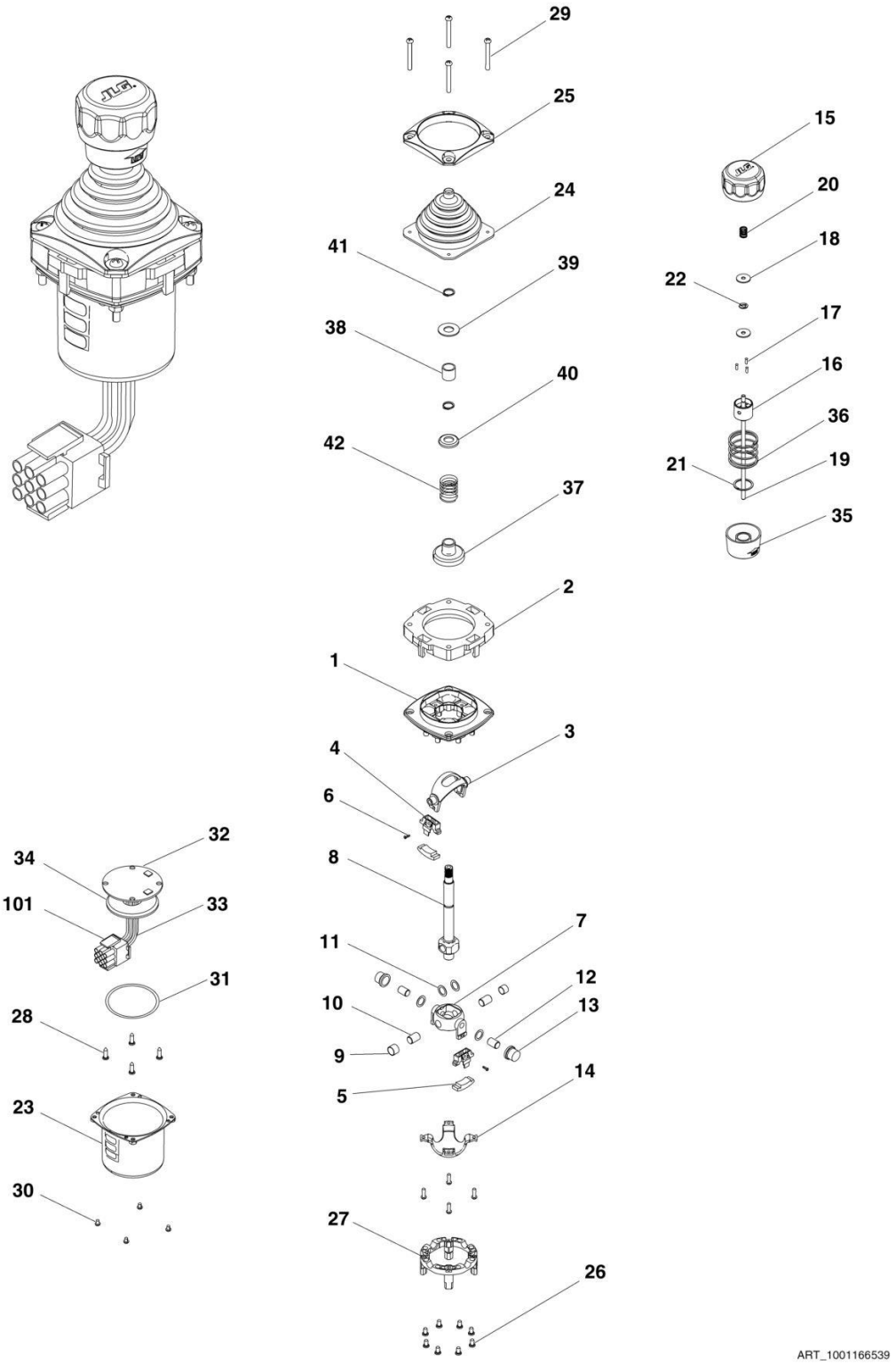

FIGURE 5-31. CONTROLLER ASSEMBLY - LIFT AND SWING

ITEM	PART NUMBER	QTY	DESCRIPTION	REV
	1001166539	Ref	CONTROLLER ASSEMBLY - LIFT AND SWING	D
	See Note	Ref	Note: Use p/n 1001129555 as Replacement	
1	See Note	1	Main Cast Body (Note: Not Available - Purchase Complete Assembly)	
2	70004752	1	Adapter	
3	See Note	NSS	Pivot Arm, Plastic (Note: Not Available - Purchase Complete Assembly)	
4	See Note	NSS	Holder, Magnet (Note: Not Available - Purchase Complete Assembly)	
5	See Note	NSS	Arc, Magnet (Note: Not Available - Purchase Complete Assembly)	
6	See Note	NSS	Screw (Note: Not Available for Purchase)	
7	See Note	NSS	Pivot Arm, Cast (Note: Not Available - Purchase Complete Assembly)	
8	See Note	NSS	Shaft, Main (Note: Not Available - Purchase Complete Assembly)	
9	See Note	NSS	Bearing (Note: Not Available - Purchase Complete Assembly)	
10	See Note	NSS	Pin (Note: Not Available - Purchase Complete Assembly)	
11	See Note	NSS	Shim (Note: Not Available - Purchase Complete Assembly)	
12	See Note	NSS	Pin (Note: Not Available - Purchase Complete Assembly)	
13	See Note	NSS	Bearing (Note: Not Available - Purchase Complete Assembly)	
14	See Note	NSS	Dome, Centering (Note: Not Available - Purchase Complete Assembly)	
15	70004753	1	Cap	
16	70004754	1	Insert, Cap	
17	70004755	3	Pin	
18	70004756	2	Washer	
19	70004757	1	Pin, Centering	
20	70004758	1	Spring	
21	70004759	1	Ring, Retaining	
22	70004760	1	E-Ring	
23	70004761	1	Can, Enclosure	
24	70004762	1	Boot	
25	70004763	1	Bezel	
26	See Note	NSS	Screw (Note: Not Available for Purchase)	
27	See Note	NSS	Base Mounting (Note: Not Available - Purchase Complete Assembly)	
28	See Note	NSS	Screw (Note: Not Available for Purchase)	
29	70004764	4	Screw	
30	70004765	4	Screw	
31	70004766	1	O-Ring	
32	See Note	NSS	Plate (Note: Not Available - Purchase Complete Assembly)	
33	See Note	NSS	Harness (Note: Not Available - Purchase Complete Assembly)	
34	70004767	1	Grommet, Rubber	
35	70004768	1	Housing	
36	70004769	1	Spring	
37	70004770	1	Stopper	
38	70004771	1	Spacer	
39	70004772	1	Washer	
40	70004773	1	Disc	
41	70004774	2	Ring, Retaining	
42	70004775	1	Spring	

SECTION 5 - PLATFORM

ITEM	PART NUMBER	QTY	DESCRIPTION	REV
101	4460265	1	Connector - 9 Position	
101	4460226	6	Socket, Female	

FIGURE 5-32. FOOTSWITCH ASSEMBLY

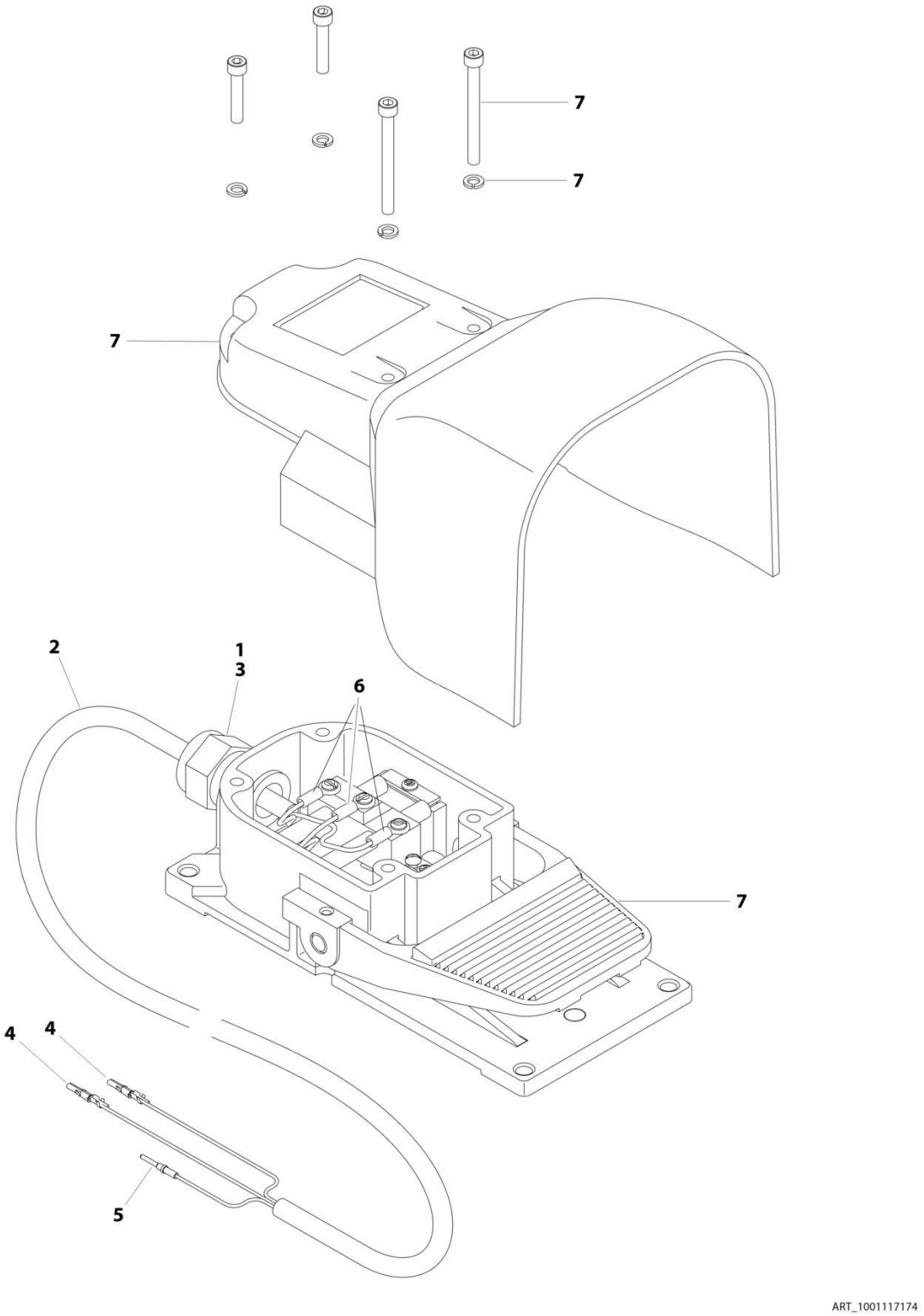

FIGURE 5-32. FOOTSWITCH ASSEMBLY

ITEM	PART NUMBER	QTY	DESCRIPTION	REV
	1001117174	Ref	FOOTSWITCH ASSEMBLY	B
1	0100020	AR	Sealant	
2	1060918	7.5 ft /2.29m	Cable, Electrical - 18/3	
3	4460071	1	Connector, Strain Relief	
4	4460226	2	Socket, Female	
5	4460464	1	Pin, Male	
6	1001098122	3	Terminal	
7	1001117172	1	Footswitch	
7	70002902	1	Switch, 20Amp	
7	70002903	1	Gasket	
7	70002905	1	Cover	
7	70002904	1	Kit, Replacement Bolt	

FIGURE 5-33. TRAY ASSEMBLY

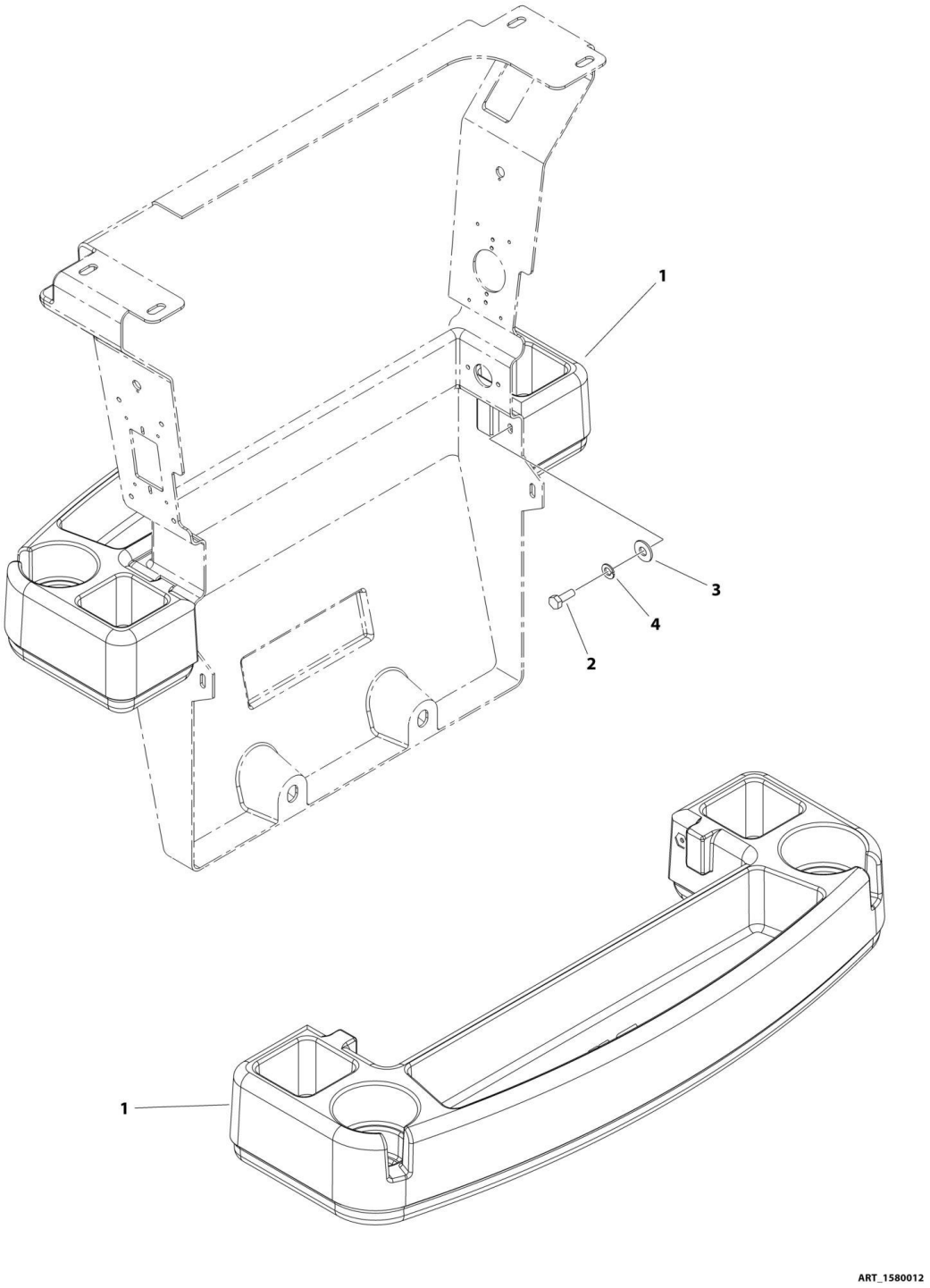

FIGURE 5-33. TRAY ASSEMBLY

ITEM	PART NUMBER	QTY	DESCRIPTION	REV
	1580012	Ref	TRAY ASSEMBLY	C
1	See Note	1	Tray, Storage - Center (Note: Purchase p/n 1580012)	
2	0641406	2	Bolt, 1/4-20 x 3/4	
3	4751400	2	Washer, 1/4	
4	4761400	2	Washer, Locking, 1/4	

FIGURE 5-34. SOFT TOUCH INSTALLATION - 6FT/1.8M PLATFORM (ANSI, ANSI EXPORT AND CSA SPECS) (SN 0300201991 through 0300211852)

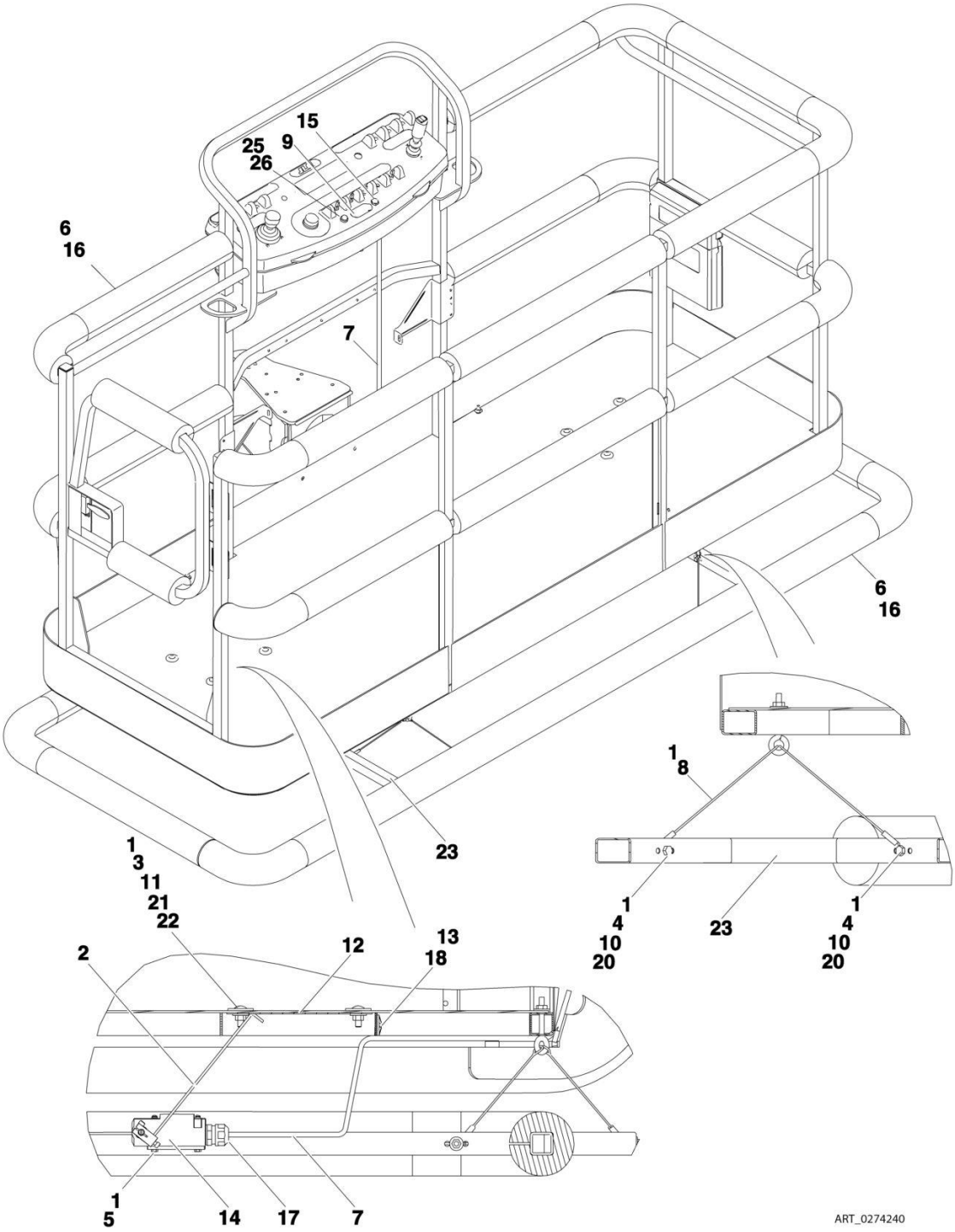

FIGURE 5-34. SOFT TOUCH INSTALLATION - 6FT/1.8M PLATFORM (ANSI, ANSI EXPORT AND CSA SPECS) (SN 0300201991 through 0300211852)

ITEM	PART NUMBER	QTY	DESCRIPTION	REV
	0274240	Ref	SOFT TOUCH INSTALLATION - 6FT/1.8M PLATFORM (ANSI, ANSI EXPORT AND CSA SPECS) **(SN 0300201991 through 0300211852)**	C
1	0100011	AR	Compound, Locking	
2	0200048	2	Arm, Switch	
3	0630462	8	Bolt, Carriage	
4	0641414	8	Bolt, 1/4-20 x 1-3/4	
5	0721005	4	Bolt, #10-24 x 5/8	
6	0940167	1	Bumper Kits (Includes Corners and Enough Straight Material for One Platform)	
7	1060341	15 ft /4.57m	Cable, Electrical - 16/2	
8	1060903	4	Wire Rope and Eyebolt Assembly	
9	1702938	1	Decal - Soft Touch Override	
10	3311401	8	Nut, 1/4-20	
11	3311501	8	Nut, 5/16-18	
12	3575705	2	Plate, Switch Strike	
13	4240099	AR	Tie-Strap	
14	4360057	2	Switch, Limit	
15	4360387	1	Switch, Push Button	
16	4420068	1	Tape, Adhesive	
17	4460049	2	Connector, Strain Relief	
18	4460234	2	Tie-Strap Mount	
19	4460425	1	Connector, Strain Relief (Not Shown - Located on bottom of console box)	
20	4751400	16	Washer, 1/4	
21	4751500	8	Washer, 5/16	
22	4751800	8	Washer, 1/2	
23	4846370	1	Rail, Soft Touch	
24	4933218	1	Soft Touch Wiring Diagram (Not Shown - See ELECTRICAL SECTION for Breakdown)	
25	2920028	1	Lamp, Indicator	
26	2920029	1	Bulb, Light	

FIGURE 5-35. SOFT TOUCH INSTALLATION - 6FT/1.8M PLATFORM (ANSI, ANSI EXPORT, CHINA, CSA AND JAPANESE SPECS) (SN 0300211853 through 0300272317, SN B300003516 through B300005760)

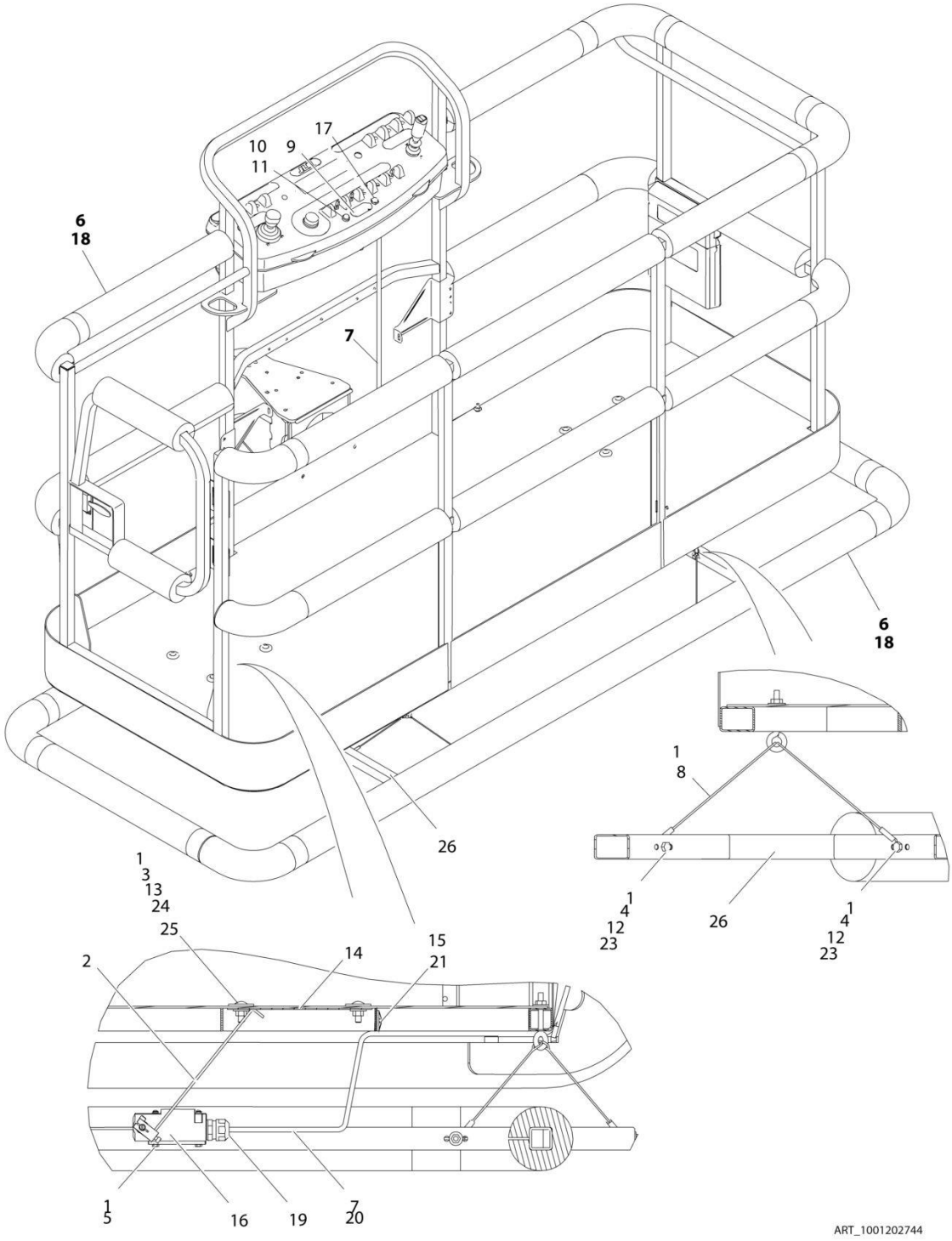

FIGURE 5-35. SOFT TOUCH INSTALLATION - 6FT/1.8M PLATFORM (ANSI, ANSI EXPORT, CHINA, CSA AND JAPANESE SPECS) (SN 0300211853 through 0300272317, SN B300003516 through B300005760)

ITEM	PART NUMBER	QTY	DESCRIPTION	REV
	1001202744	Ref	SOFT TOUCH INSTALLATION - 6FT/1.8M PLATFORM (ANSI, ANSI EXPORT, CHINA, CSA AND JAPANESE SPECS)	B
1	0100011	AR	Compound, Locking	
2	0200048	2	Arm, Switch	
3	0630462	8	Bolt, Carriage	
4	0641414	8	Bolt, 1/4-20 x 1-3/4	
5	0721005	4	Bolt, #10-24 x 5/8	
6	0940167	1	Bumper Kits (Includes Corners and Enough Straight Material for One Platform)	
7	1060341	15 ft /4.57m	Cable, Electrical - 16/2	
8	1060903	4	Wire Rope and Eyebolt Assembly	
9	1702938	1	Decal - Soft Touch Override	
10	2920028	1	Lamp, Indicator	
11	2920029	1	Bulb, Light	
12	3311401	8	Nut, 1/4-20	
13	3311501	8	Nut, 5/16-18	
14	3575705	2	Plate, Switch Strike	
15	4240099	AR	Tie-Strap	
16	4360057	2	Switch, Limit	
17	4360387	1	Switch, Push Button	
18	4420068	1	Tape, Adhesive	
18	1001197017	AR	Tie-Strap	
19	4460049	2	Connector, Strain Relief	
20	4460226	4	Socket, Female	
21	4460234	2	Tie-Strap Mount	
22	4460425	1	Connector, Strain Relief (Not Shown - Located on bottom of console box)	
23	4751400	16	Washer, 1/4	
24	4751500	8	Washer, 5/16	
25	4751800	8	Washer, 1/2	
26	4846370	1	Rail, Soft Touch	

FIGURE 5-36. SOFT TOUCH INSTALLATION - 5FT/1.52M PLATFORM WITH FALL ARREST (ANSI, ANSI EXPORT AND CSA SPECS) (SN 0300201991 through 0300211852)

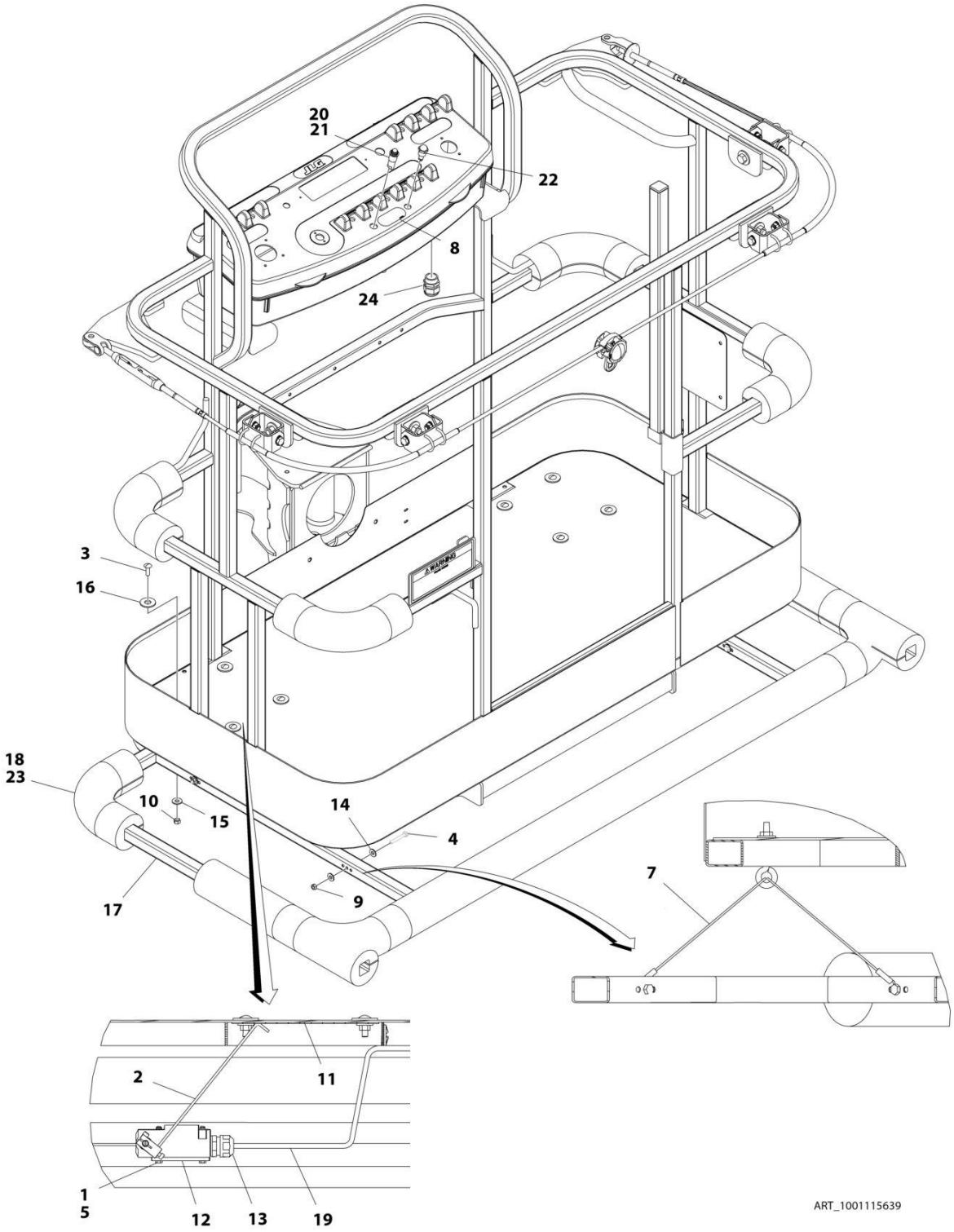

FIGURE 5-36. SOFT TOUCH INSTALLATION - 5FT/1.52M PLATFORM WITH FALL ARREST (ANSI, ANSI EXPORT AND CSA SPECS) (SN 0300201991 through 0300211852)

ITEM	PART NUMBER	QTY	DESCRIPTION	REV
	1001115639	Ref	SOFT TOUCH INSTALLATION - 5FT/1.52M PLATFORM WITH FALL ARREST (ANSI, ANSI EXPORT AND CSA SPECS) **(SN 0300201991 through 0300211852)**	A
1	0100011	AR	Compound, Locking	
2	0200048	2	Arm, Switch	
3	0630462	8	Bolt, Carriage	
4	0641414	8	Bolt, 1/4-20 x 1-3/4	
5	0721005	4	Bolt, #10-24 x 5/8	
6	4933218	1	Soft Touch Wiring Diagram (Not Shown - See ELECTRICAL SECTION for Breakdown)	
7	1060903	4	Wire Rope and Eyebolt Assembly	
8	1702938	1	Decal - Soft Touch Override	
9	3311405	8	Nut, Lock 1/4-20	
10	3311501	8	Nut, 5/16-18	
11	3575705	2	Plate, Switch Strike	
12	4360057	2	Switch, Limit	
13	4460049	2	Connector, Strain Relief	
14	4751400	16	Washer, 1/4	
15	4751500	8	Washer, 5/16	
16	4751800	8	Washer, 1/2	
17	1001115641	1	Rail, Soft Touch	
18	1001115848	1	Bumper Kits (Includes Corners and Enough Straight Material for One Platform)	
19	1060341	15 ft /4.57m	Cable, Electrical - 16/2	
20	2920028	1	Lamp, Indicator	
21	2920029	1	Bulb, Light	
22	4360387	1	Switch, Push Button	
23	4420068	1	Tape, Adhesive	
24	4460425	1	Connector, Strain Relief	

FIGURE 5-37. SOFT TOUCH INSTALLATION - 5FT/1.52M PLATFORM WITH FALL ARREST (ANSI, ANSI EXPORT, CHINA, CSA AND JAPANESE SPECS) (SN 0300211853 through 0300272317, SN B300003516 through B300005760)

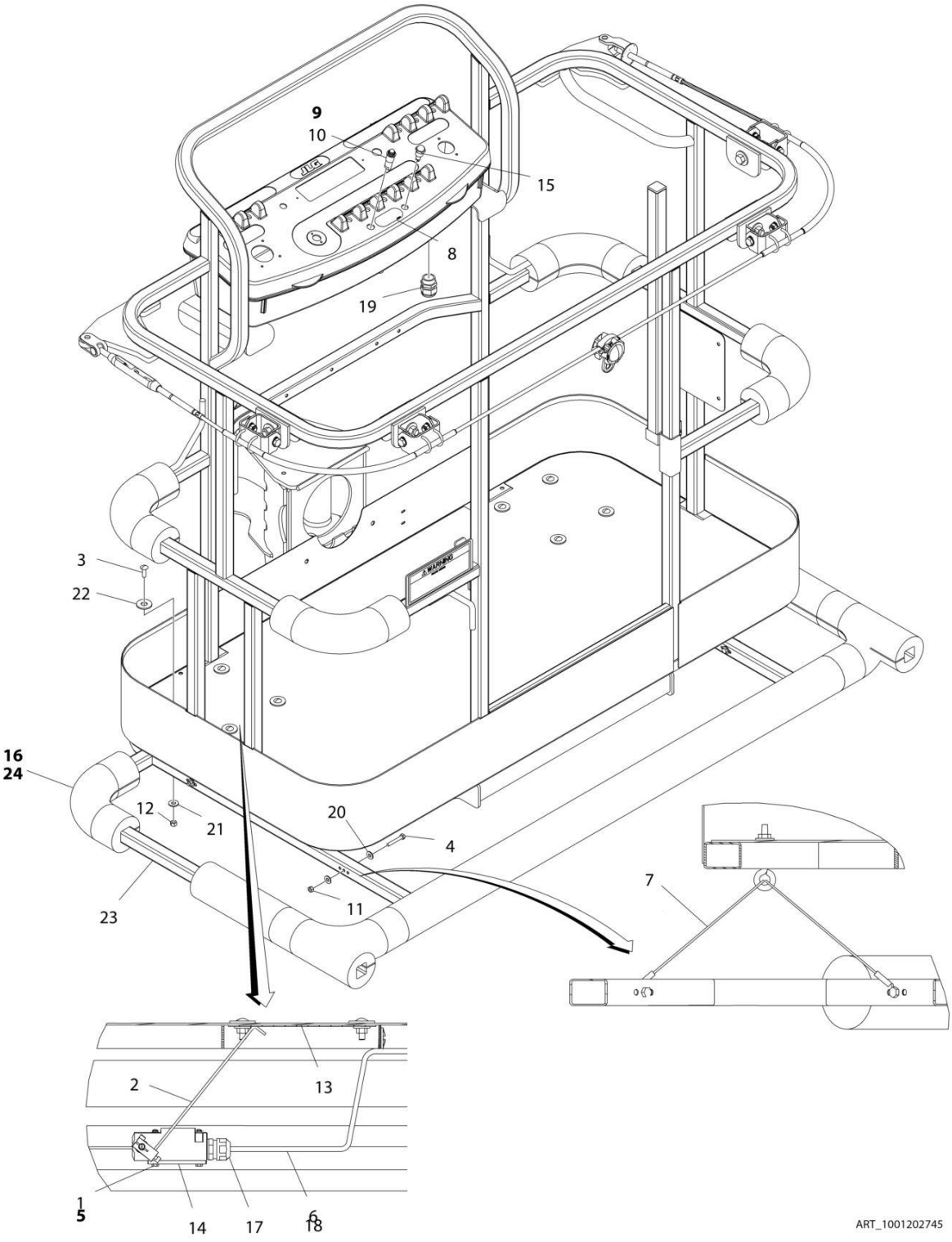

FIGURE 5-37. SOFT TOUCH INSTALLATION - 5FT/1.52M PLATFORM WITH FALL ARREST (ANSI, ANSI EXPORT, CHINA, CSA AND JAPANESE SPECS) (SN 0300211853 through 0300272317, SN B300003516 through B300005760)

ITEM	PART NUMBER	QTY	DESCRIPTION	REV
	1001202745	Ref	SOFT TOUCH INSTALLATION - 5FT/1.52M PLATFORM WITH FALL ARREST (ANSI, ANSI EXPORT, CHINA, CSA AND JAPANESE SPECS)	B
1	0100011	AR	Compound, Locking	
2	0200048	2	Arm, Switch	
3	0630462	8	Bolt, Carriage	
4	0641414	8	Bolt, 1/4-20 x 1-3/4	
5	0721005	4	Bolt, #10-24 x 5/8	
6	1060341	15 ft /4.57m	Cable, Electrical - 16/2	
7	1060903	4	Wire Rope and Eyebolt Assembly	
8	1702938	1	Decal - Soft Touch Override	
9	2920028	1	Lamp, Indicator	
10	2920029	1	Bulb, Light	
11	3311405	8	Nut, Lock 1/4-20	
12	3311501	8	Nut, 5/16-18	
13	3575705	2	Plate, Switch Strike	
14	4360057	2	Switch, Limit	
15	4360387	1	Switch, Push Button	
16	4420068	1	Tape, Adhesive	
16	1001197017	AR	Tie-Strap	
17	4460049	2	Connector, Strain Relief	
18	4460226	4	Socket, Female	
19	4460425	1	Connector, Strain Relief	
20	4751400	16	Washer, 1/4	
21	4751500	8	Washer, 5/16	
22	4751800	8	Washer, 1/2	
23	1001115641	1	Rail, Soft Touch	
24	1001115848	1	Bumper Kits (Includes Corners and Enough Straight Material for One Platform)	

FIGURE 5-38. SKYEYE INSTALLATION

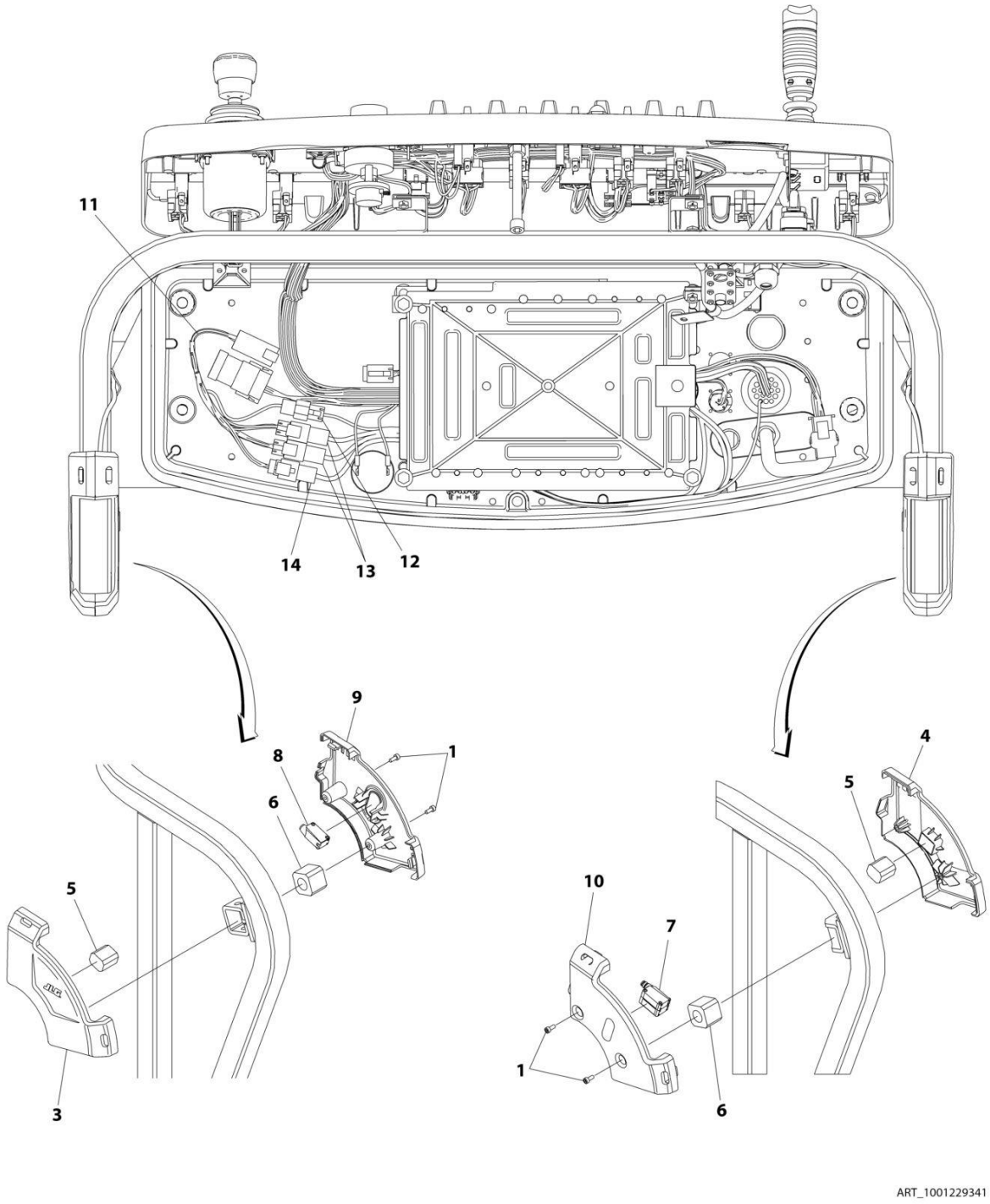

FIGURE 5-38. SKYEYE INSTALLATION

ITEM	PART NUMBER	QTY	DESCRIPTION	REV
	1001229341	Ref	SKYEYE INSTALLATION	A
1	4031505	4	Bolt M4 x 10	
2	4240033	AR	Tie-Strap (Not Shown)	
3	1001227633	1	Housing, LH Outer	
4	1001227634	1	Housing, RH Outer	
5	1001227985	2	Shim	
6	1001227987	2	Shim	
7	1001228224	2	Sensor, Receiver	
8	1001228225	1	Sensor, Emitter	
9	1001232164	1	Housing, LH Inner	
10	1001232165	1	Housing, RH Inner	
11	1001237865	1	Harness, Skyeye Intermediate (See Separate Breakdown in ELECTRICAL Section)	
12	1001238319	1	Harness, Skyeye Drain Jumper	
12	1001187674	1	Plug, Male - 2 Position	
12	4460942	1	Terminal	
12	4460466	1	Plug, Terminal	
12	4460508	1	Pin, Male	
13	1001237863	2	Harness, Skyeye Receiver (See Separate Breakdown in ELECTRICAL Section)	
14	1001237864	1	Harness, Skyeye Emitter (See Separate Breakdown in ELECTRICAL Section)	

FIGURE 5-39. SKYGUARD SYSTEM INSTALLATION (SN 0300201991 through 0300259091, SN B300003516 through B300005760, SN E300002833 through E300007540, SN 1300007279 through 1300007373)

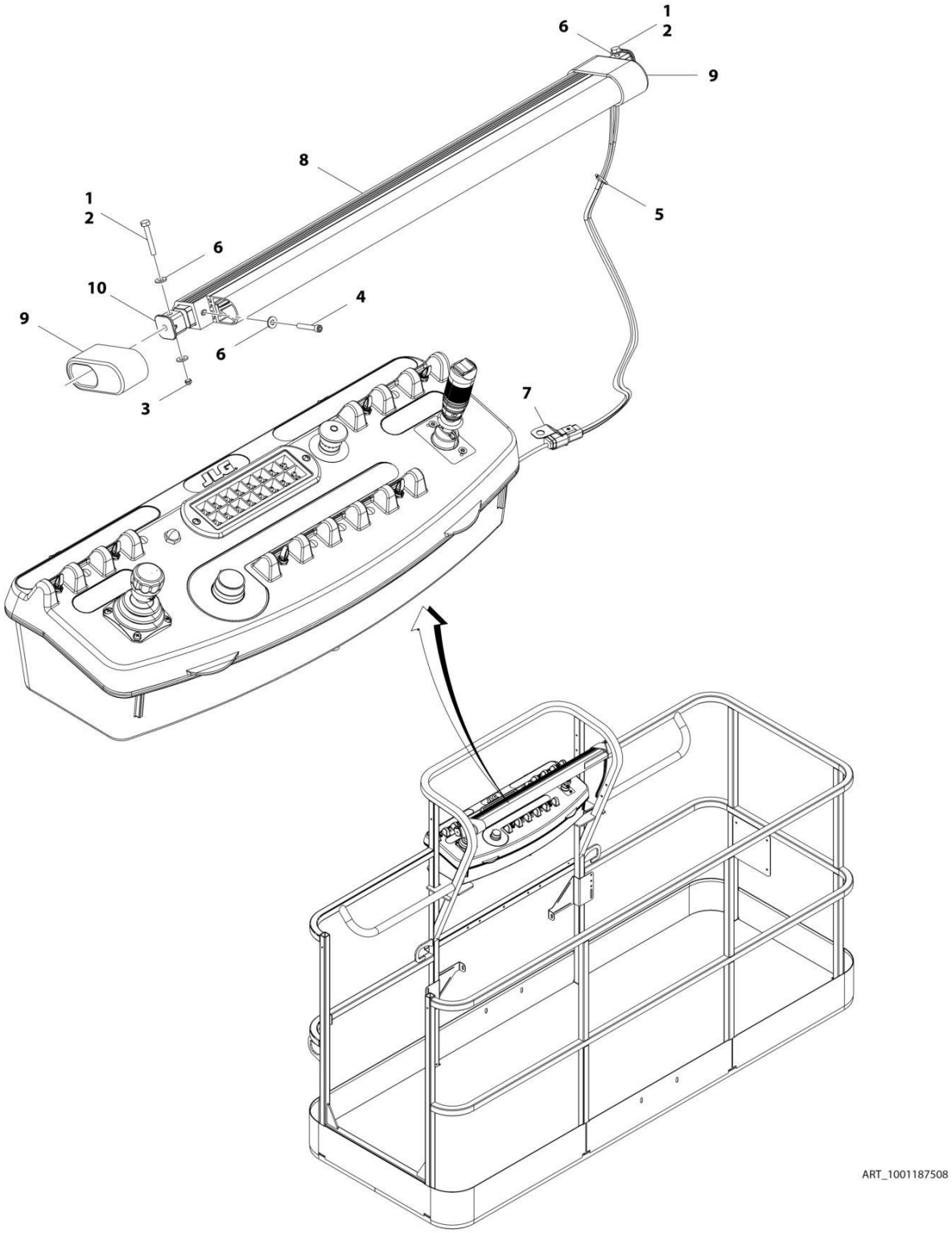

FIGURE 5-39. SKYGUARD SYSTEM INSTALLATION (SN 0300201991 through 0300259091, SN B300003516 through B300005760, SN E300002833 through E300007540, SN 1300007279 through 1300007373)

ITEM	PART NUMBER	QTY	DESCRIPTION	REV
	1001187508	Ref	SKYGUARD SYSTEM INSTALLATION	C
1	0100011	AR	Compound, Locking	
2	0641414	2	Bolt, 1/4-20 x 1-3/4	
3	3300430	2	Nut, Acorn 1/4-20	
4	3931424	2	Capscrew, 1/4-20 x 1-1/2	
4	3931408	2	Capscrew, 1/4-20 x 1/2	
5	4240033	AR	Tie-Strap	
6	4711400	AR	Washer, 1/4	
7	1001120328	1	Mount	
8	1001137673	1	Switch, SkyGuard Assembly	
9	1001186517	2	Cover, Platform Sensor	
10	1001188889	NLA	Support, Block (Use p/n 1001209664) **(SN 0300201991 through 0300243909, SN 1300007279 through 1300007373, SN B300003516 through B300003518, SN E300002833 through E300005618)**	
10	1001209664	2	Support, Block **(SN 0300243910 through 0300272317, SN B300003519 through B300005760, SN E300005619 through E300007540, Except SN 0300272185 through 0300272190, Excluding B300005569)**	

FIGURE 5-40. SKYGUARD BAR INSTALLATION (SN 0300259092 through 0300272317, SN E300007541 through E300007990)

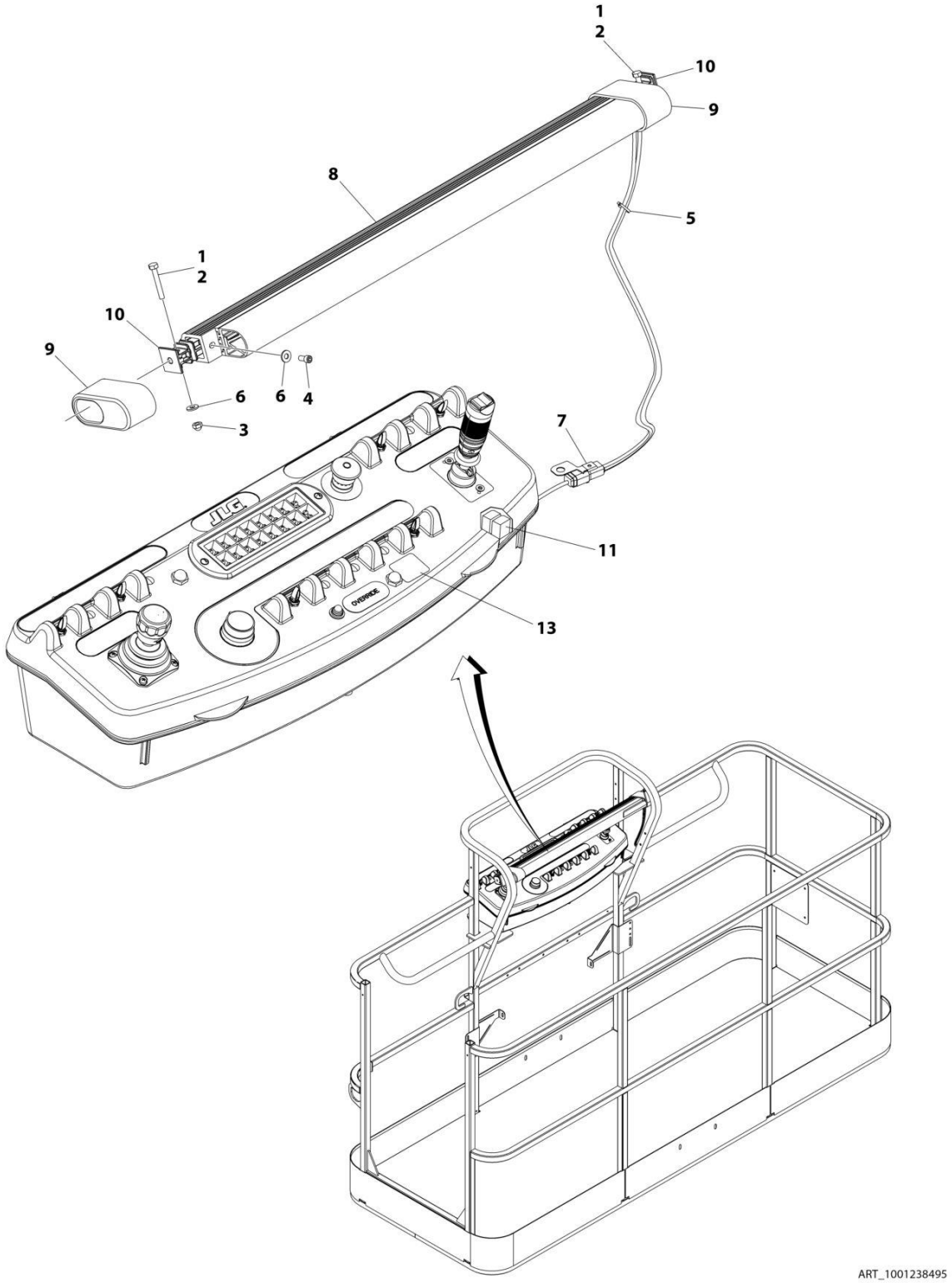

FIGURE 5-40. SKYGUARD BAR INSTALLATION (SN 0300259092 through 0300272317, SN E300007541 through E300007990)

ITEM	PART NUMBER	QTY	DESCRIPTION	REV
	1001238495	Ref	SKYGUARD BAR INSTALLATION	A
1	0100011	AR	Compound, Locking	
2	0641414	2	Bolt 1/4 x 1-3/4	
3	3300430	2	Nut 1/4	
4	3931408	2	Capscrew 1/4 x 1/2	
5	4240033	8	Tie-Strap	
6	4711400	6	Washer 1/4	
7	1001120328	1	Mount	
8	1001137673	1	SkyGuard Switch Assembly	
9	1001186517	2	Cover, Platform Sensor	
10	1001209664	2	Support, Block	
11	1001186431	2	Relay	
12	1001225580	1	Interface Harness Assembly (Not Shown - Located Inside Console Box) (See Separate Breakdown in ELECTRICAL Section)	
13	1001144433	1	Decal - No Weight SkyGuard	

FIGURE 5-41. SKYLINE INSTALLATION

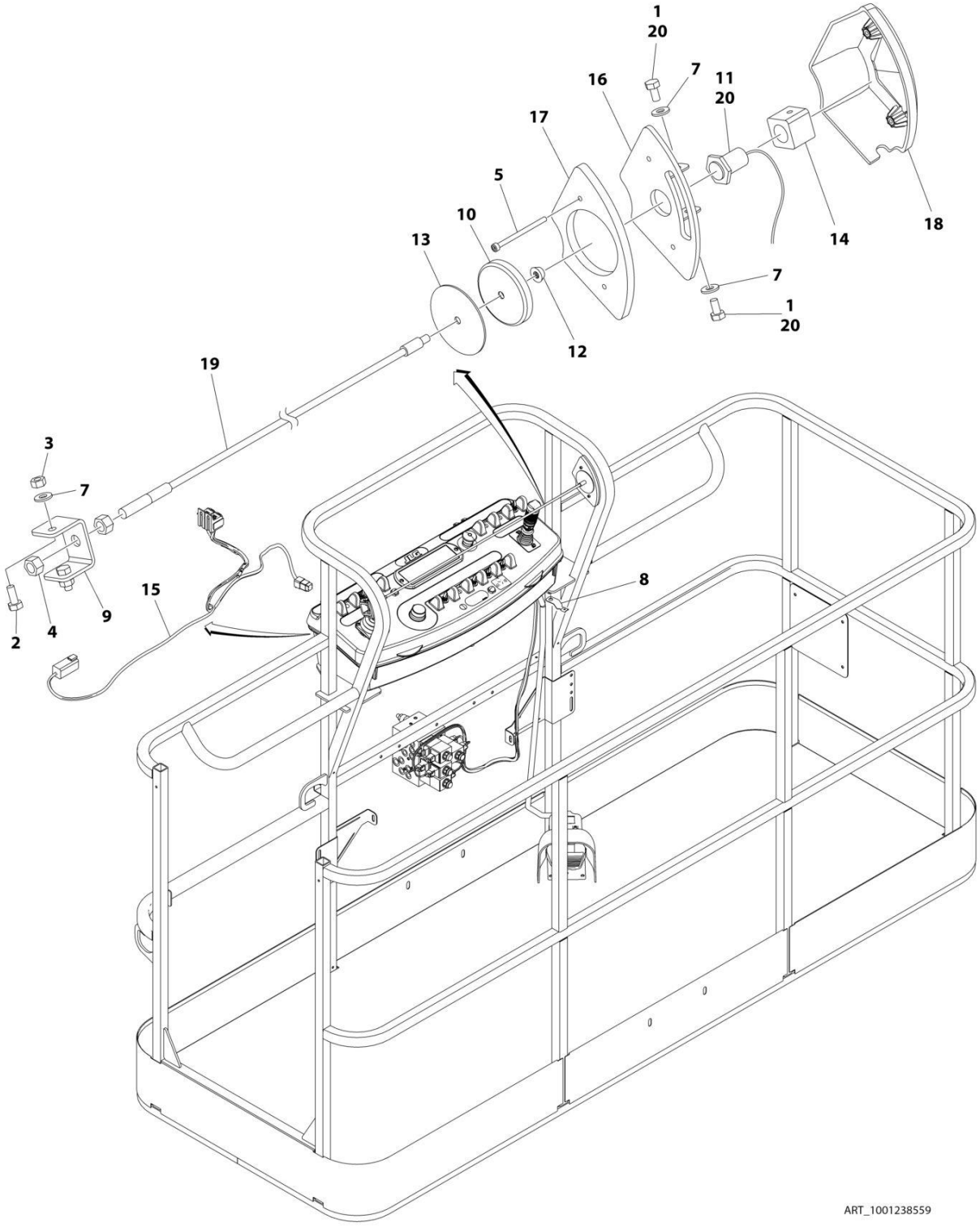

FIGURE 5-41. SKYLINE INSTALLATION

ITEM	PART NUMBER	QTY	DESCRIPTION	REV
	1001238559	Ref	SKYLINE INSTALLATION	C
1	0641404	2	Bolt 1/4 x 1/2	
2	0641405	2	Bolt 1/4 x 5/8	
3	3311405	2	Nut 1/4	
4	3311601	2	Nut 3/8	
5	4031516	2	Capscrew M4 x 60	
6	4240033	AR	Tie-Strap (Not Shown)	
7	4711400	4	Washer 1/4	
8	1001120328	1	Mount	
9	1001232642	1	Bracket	
10	1001232650	1	Magnet	
11	1001232667	1	Sensor, Proximity	
12	1001235011	1	Nut	
13	1001235013	1	Washer	
14	1001236552	1	Block	
15	1001238418	1	Harness, Skyline (See Separate Breakdown in ELECTRICAL Section)	
16	1001238472	1	Mount	
17	1001238477	1	Housing, LH	
18	1001241965	1	Housing, RH	
19	1001238824	1	Rope	
20	0100011	AR	Compound, Locking	

FIGURE 5-42. CROSS RAIL INSTALLATION

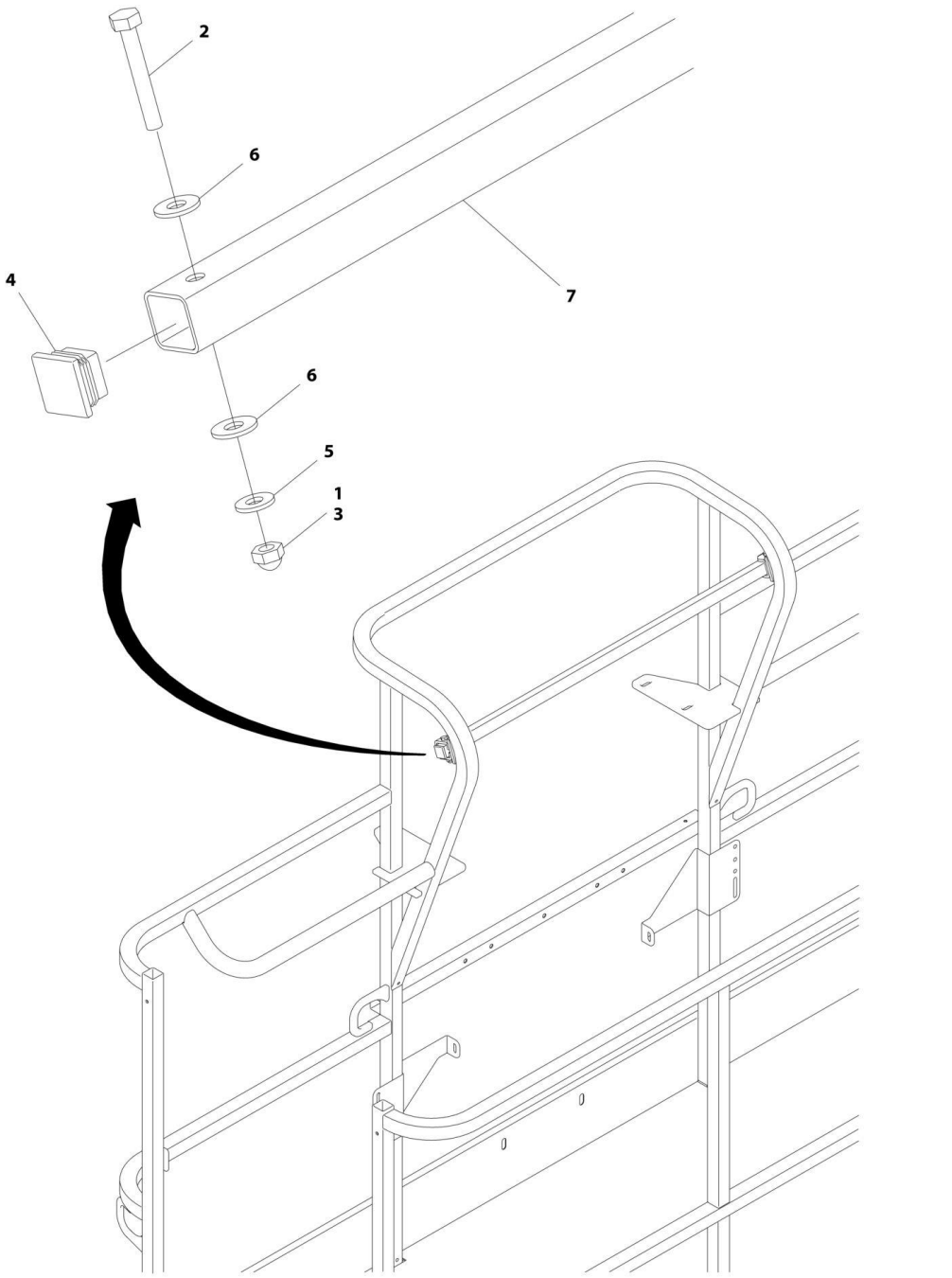

FIGURE 5-42. CROSS RAIL INSTALLATION

ITEM	PART NUMBER	QTY	DESCRIPTION	REV
	1001182138	Ref	CROSS RAIL INSTALLATION	A
1	0100071	AR	Compound, Locking	
2	0641414	2	Bolt 1/4 x 1-3/4	
3	3300430	2	Nut 1/4	
4	3520182	2	Plug	
5	4711400	2	Washer 1/4	
6	4751400	4	Washer 1/4	
7	1001191708	1	Bar	

FIGURE 5-43. SKYGLAZIER INSTALLATION

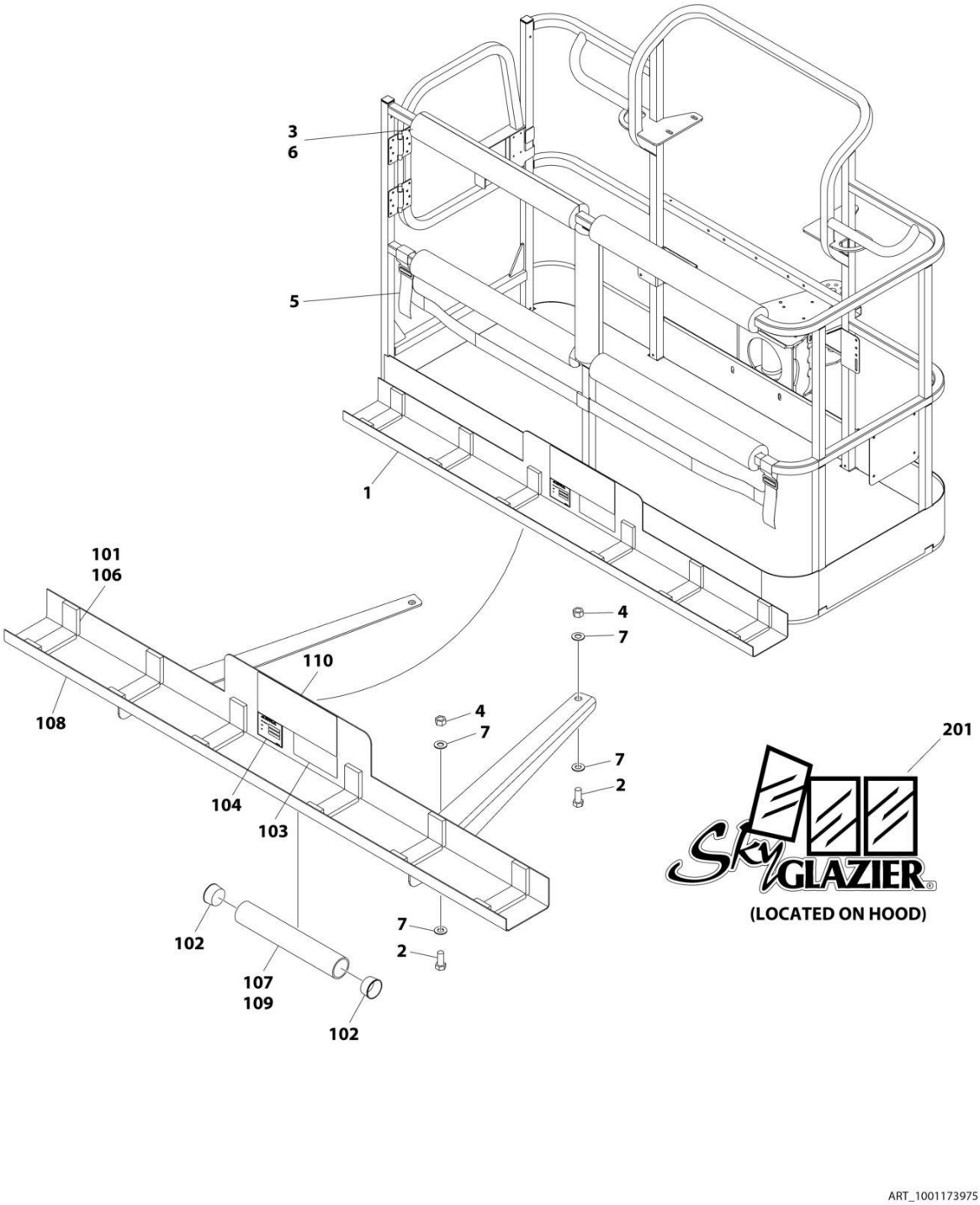

FIGURE 5-43. SKYGLAZIER INSTALLATION

ITEM	PART NUMBER	QTY	DESCRIPTION	REV
		Ref	SKYGLAZIER INSTALLATION	
	1001173975	Ref	ANSI and CSA Specs	B
	1001173975	Ref	Australian Specs	B
1	1001173973	1	Tray Assembly (See Items 101-110 for Breakdown)	
2	0642012	4	Bolt 5/8 x 1-1/2	
3	0940199	1	Bumper Kit	
4	3312005	4	Nut 5/8	
5	4240149	1	Strap Kit	
6	4420014	AR	Tape	
7	4712000	8	Washer 5/8	
	1001173973	Ref	TRAY ASSEMBLY	A
101	0100081	AR	Adhesive	
102	1120555	2	Cap, Tube	
103	1701509	1	Decal - Manual	
104	See Note	NSS	Nameplate - Serial Number (Note: Not Available for Purchase)	
106	3340956	1	Pad Kit	
107	3460334	1	Tube	
108	4341415	1	Support	
109	4420066	AR	Tape, Double Sided	
110	1001173969	NLA	Decal - Glazier Capacity (Use p/n 1001229138) **(SN 0300201991 through 0300241726, SN 1300007279 through 1300007373, SN E30002833 through E300005378)**	
110	1001229138	1	Decal - Glazier Capacity **(SN 300241727 through 0300272317, SN B300003516 through B300005760, SN E300005379 through E300007990, Except SN 0300272185 through 0300272190, Excluding B300005569 and E300007814)**	
201	1705358	2	Decal - SkyGlazier	

FIGURE 5-44. SKYGLAZIER INSTALLATION

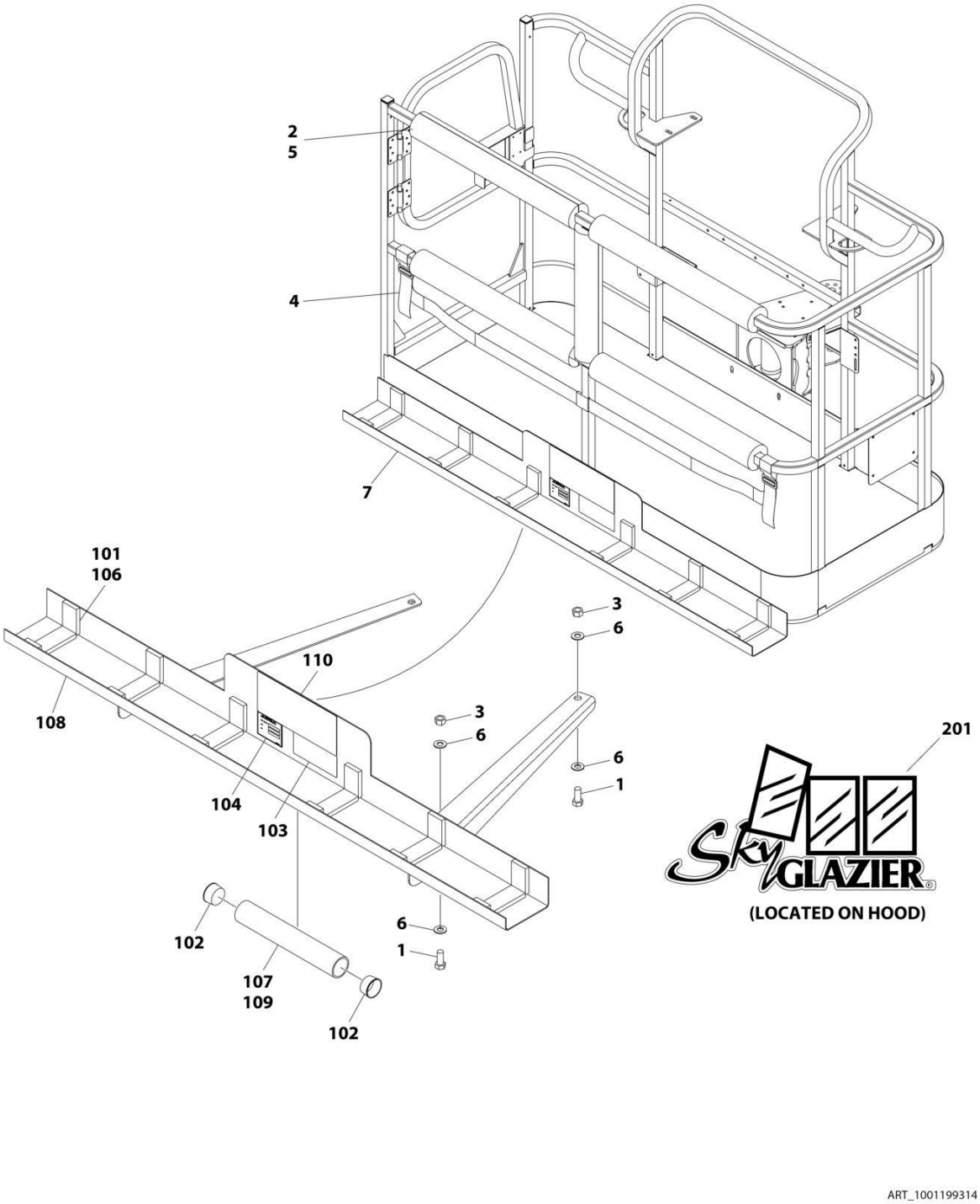

FIGURE 5-44. SKYGLAZIER INSTALLATION

ITEM	PART NUMBER	QTY	DESCRIPTION	REV
	1001199314	Ref	SKYGLAZIER INSTALLATION (AUSTRALIAN SPECS) **(SN 0300201991 through 0300235649, SN E300002833 through E300004873)**	A
1	0642026	4	Bolt 5/8 x 3-1/4	
2	0940199	1	Bumper Kit	
3	3312005	4	Nut 5/8	
4	4240149	1	Strap Kit	
5	4420014	AR	Tape	
6	4712000	8	Washer 5/8	
7	1001173973	1	Tray Assembly (See Items 101-110 for Breakdown)	
	1001173973	Ref	TRAY ASSEMBLY	A
101	0100081	AR	Adhesive	
102	1120555	2	Cap, Tube	
103	1701509	1	Decal - Manual	
104	See Note	NSS	Nameplate - Serial Number (Note: Not Available for Purchase)	
106	3340956	1	Pad Kit	
107	3460334	1	Tube	
108	4341415	1	Support	
109	4420066	AR	Tape, Double Sided	
110	1001173969	NLA	Decal - Glazier Capacity (Use p/n 1001229138)	
201	1705358	2	Decal - SkyGlazier	

FIGURE 5-45. SKYWELDER INSTALLATION (50HZ)

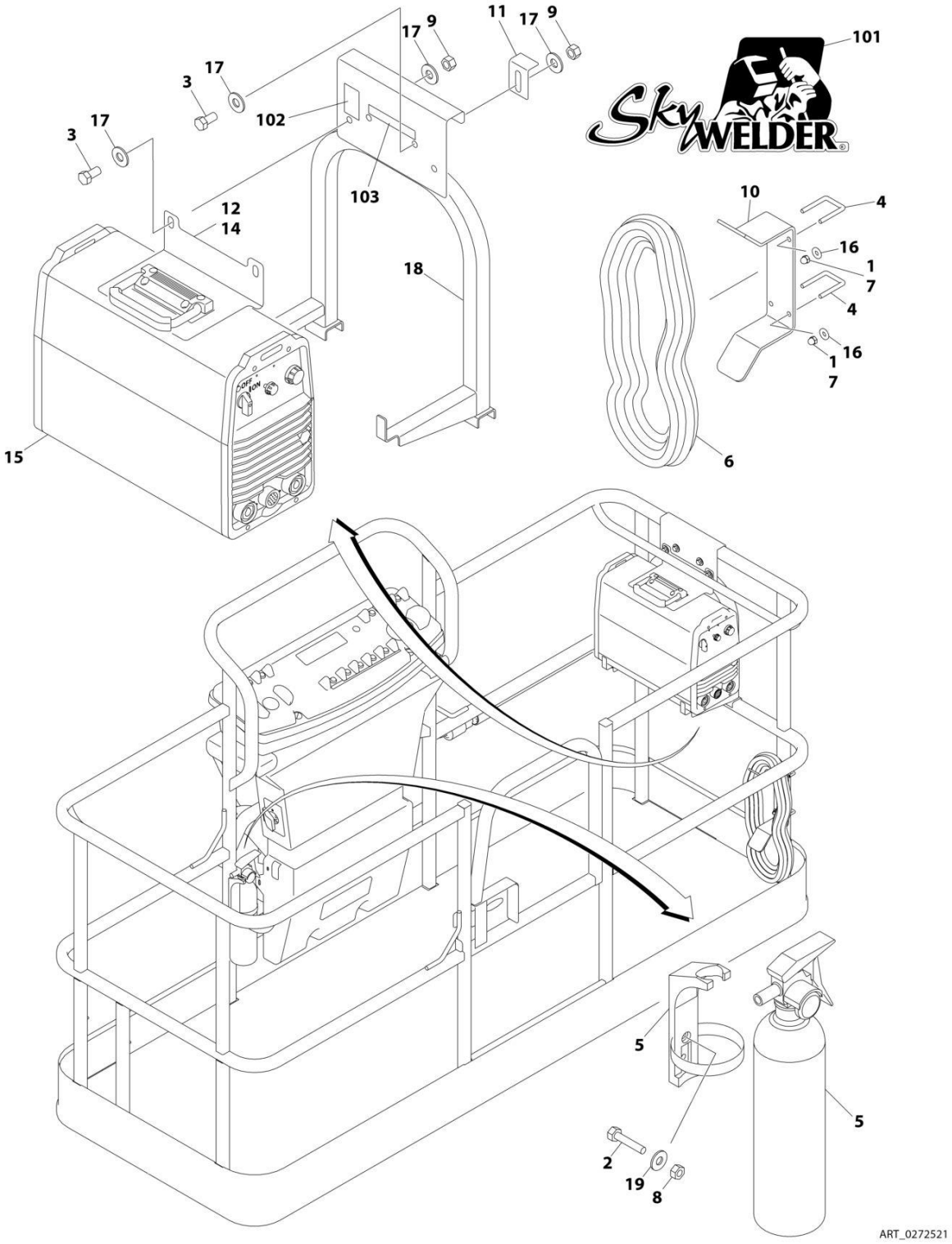

FIGURE 5-45. SKYWELDER INSTALLATION (50HZ)

ITEM	PART NUMBER	QTY	DESCRIPTION	REV
	0272521	Ref	SKYWELDER INSTALLATION (50HZ)	F
		Ref	Note: Australian, CE, Chinese and Japanese Specs Only.	
1	0100011	AR	Compound, Locking	
2	0630518	2	Screw #10 x 3/4	
3	0641606	4	Bolt 3/8 x 3/4	
4	1320302	2	U-Clamp	
5	2030010	1	Extinguisher, Fire	
6	2902217	1	Weld Leads Kit	
7	3300151	4	Nut 1/4	
8	3311005	2	Nut #10	
9	3311605	4	Nut 3/8	
10	3573400	1	Bracket	
11	3577121	2	Angle	
12	3573642	1	Plate	
13	4240099	AR	Tie-Strap (Not Shown)	
14	4420037	AR	Tape	
15	4530028	1	Welder Assembly (See WELDER ASSEMBLY for Breakdown)	
16	4751400	4	Washer 1/4	
17	4751600	8	Washer 3/8	
18	4846627	1	Support	
19	4751000	2	Washer #10	
	0272588	Ref	DECAL INSTALLATION	B
101	1705355	2	Decal - SkyWelder	
102	1705305	1	Decal - Weld Lead	
103	1705466	NLA	Decal - Weight (Use p/n 1001228988) **(SN 0300201991 through 0300233483)**	
103	1001228988	1	Decal - Weight **(SN 0300233484 through 0300272317, SN B300003516 through B300005760, Except SN 0300272185 through 0300272190, Excluding B300005569)**	

FIGURE 5-46. SKYWELDER INSTALLATION (60HZ)

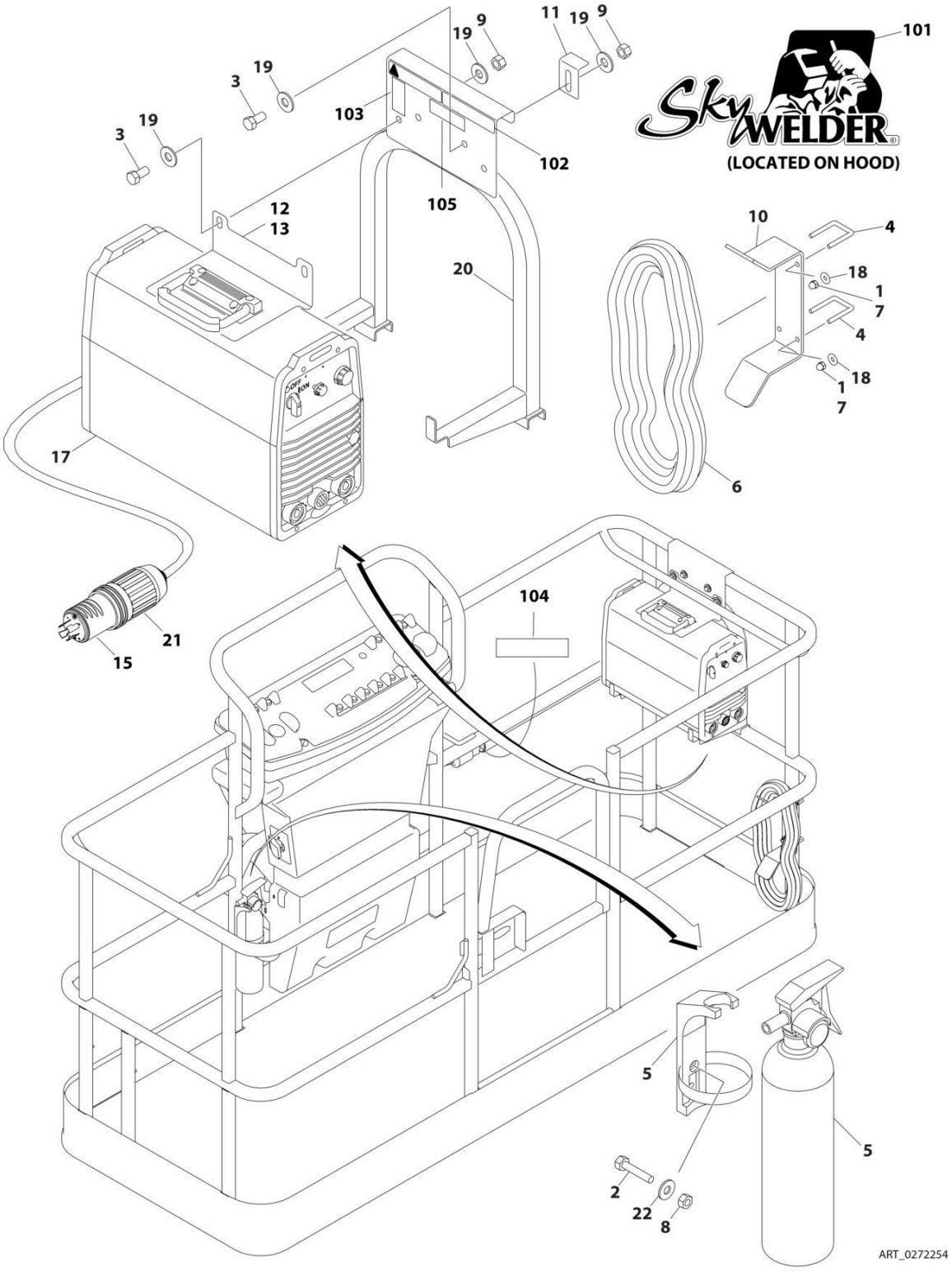

FIGURE 5-46. SKYWELDER INSTALLATION (60HZ)

ITEM	PART NUMBER	QTY	DESCRIPTION	REV
	0272254	Ref	SKYWELDER INSTALLATION (60HZ)	I
		Ref	Note: ANSI, ANSI Export and CSA Specs Only.	
1	0100011	AR	Compound, Locking	
2	0630518	2	Screw #10 x 3/4	
3	0641606	4	Bolt 3/8 x 3/4	
4	1320302	2	U-Clamp	
5	2030010	1	Extinguisher, Fire	
6	2902217	1	Weld Leads Kit	
7	3300151	4	Nut 1/4	
8	3311005	2	Nut #10	
9	3311605	4	Nut 3/8	
10	3573400	1	Bracket	
11	3577121	2	Angle	
12	3573642	1	Plate	
13	4420037	AR	Tape	
14	4240099	AR	Tie-Strap (Not Shown)	
15	4460962	1	Plug, Male Twistlock	
17	4530028	1	Welder Assembly (See WELDER ASSEMBLY for Breakdown)	
18	4751400	4	Washer 1/4	
19	4751600	8	Washer 3/8	
20	4846627	1	Support	
21	1671093	1	Cover, Plug	
22	4751000	2	Washer #10	
	0272448	Ref	DECAL INSTALLATION	B
101	1705355	2	Decal - SkyWelder	
102	1702868	1	Decal - No Hands	
103	1705305	1	Decal - Weld Lead	
104	1705375	1	Decal - 240V - 3 Phase - 60Hz	
105	1705466	NLA	Decal - Weight (Use p/n 1001228988) **(SN 0300201991 through 0300233483)**	
105	1001228988	1	Decal - Weight **(SN 0300233484 through 0300272317, Except SN 0300272185 through 0300272190)**	

FIGURE 5-47. SKYWELDER PREP PACKAGE INSTALLATION

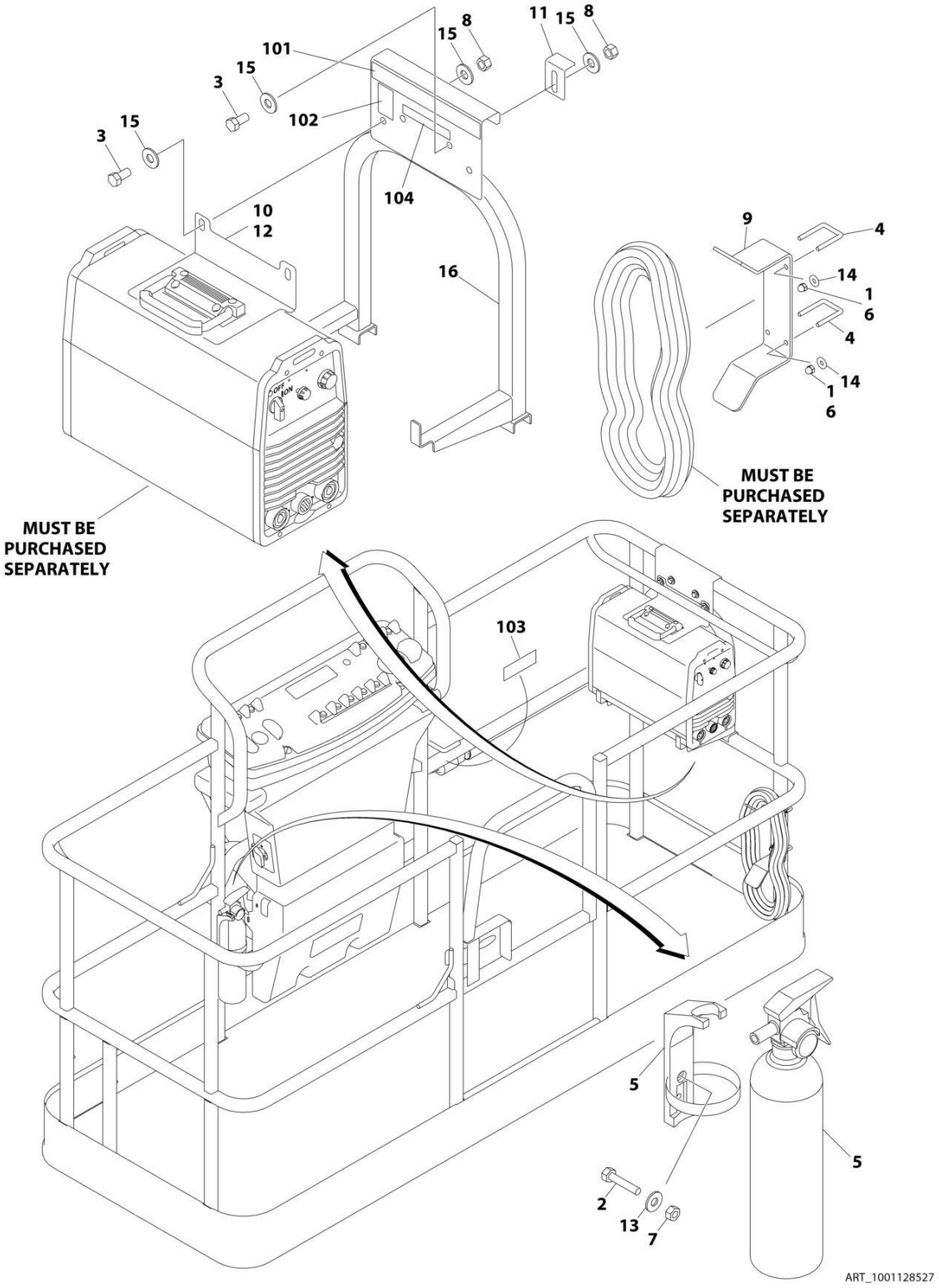

FIGURE 5-47. SKYWELDER PREP PACKAGE INSTALLATION

ITEM	PART NUMBER	QTY	DESCRIPTION	REV
	1001128527	Ref	SKYWELDER PREP PACKAGE INSTALLATION	B
		Ref	Note: ANSI and CSA Specs Only.	
1	0100011	AR	Compound, Locking	
2	0630518	2	Screw #10 x 3/4	
3	0641606	4	Bolt 3/8 x 3/4	
4	1320302	2	U-Clamp	
5	2030010	1	Extinguisher, Fire	
6	3300151	4	Nut 1/4	
7	3311005	2	Nut #10	
8	3311605	4	Nut 3/8	
9	3573400	1	Bracket	
10	3573642	1	Plate, Clamp Top	
11	3577121	2	Plate, Clamp Back	
12	4420037	AR	Tape	
13	4751000	2	Washer #10	
14	4751400	4	Washer 1/4	
15	4751600	8	Washer 3/8	
16	4846627	1	Support	
	1001128556	Ref	DECAL INSTALLATION	B
101	1702868	1	Decal - No Hands	
102	1705305	1	Decal - Weld Lead	
103	1705375	1	Decal - 240V - 3 Phase - 60Hz	
104	1705466	NLA	Decal - Weight (Use p/n 1001228988) **(SN 0300201991 through 0300233483)**	
104	1001228988	1	Decal - Weight **(SN 0300233484 through 0300272317, Except SN 0300272185 through 0300272190)**	

FIGURE 5-48. WELDER ASSEMBLY

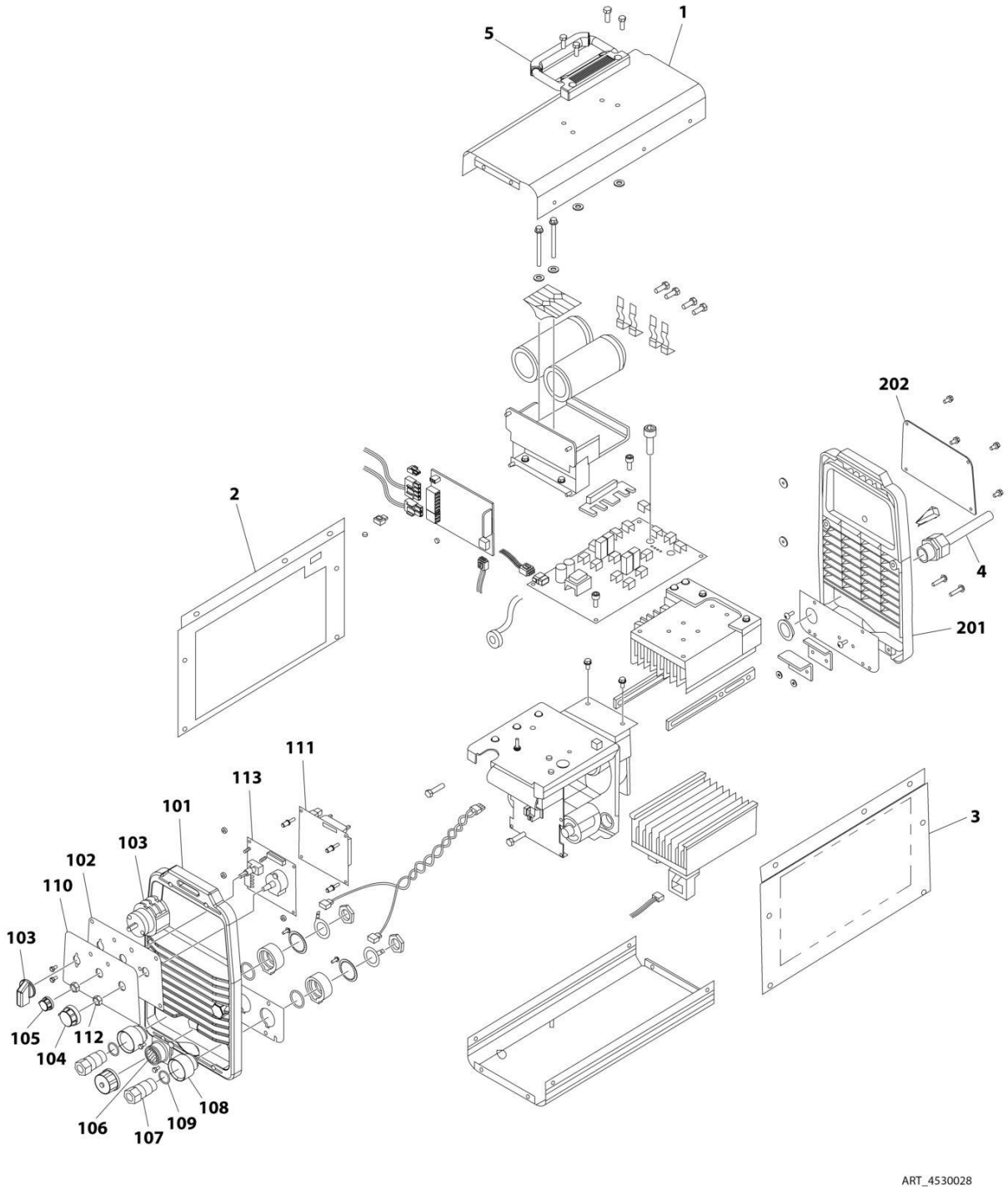

FIGURE 5-48. WELDER ASSEMBLY

ITEM	PART NUMBER	QTY	DESCRIPTION	REV
	4530028	Ref	WELDER ASSEMBLY	B
		Ref	Note: For Other Components, contact your Miller Welder Dealer.	
1	7027773	1	Cover, Top	
1	7027774	1	Decal - Static Precautionary Warning	
2	See Note	NSS	Panel, LH Side (Note: Part of Item 1. Purchase Item 1)	
3	See Note	NSS	Panel, RH Side (Note: Part of Item 1. Purchase Item 1)	
4	7024467	1	Cable, Power	
4	7027775	1	Decal - Electrical Shock Warning	
5	7027776	1	Handle, Carrying	
101	7024462	1	Panel, Front	
102	7024463	1	Panel, Console	
103	7024469	1	Switch with Lead	
104	7024470	1	Knob	
105	7024471	1	Knob	
106	7024472	1	Receptacle with Leads and Plugs	
107	7024473	2	Receptacle, Twistlock Female	
108	7024474	2	Insulator	
109	7024475	2	O-Ring	
110	7027777	1	Nameplate	
111	7027779	1	Circuit Card Assembly (Process Control)	
112	7024478	2	Nut	
113	7027778	1	Circuit Card Assembly (Operator Interface)	
201	7024462	1	Panel, Rear	
202	7027780	1	Panel, Cover	

FIGURE 5-49. PIPE RACK INSTALLATION (ALL SPECS EXCEPT AUSTRALIAN SPECS)

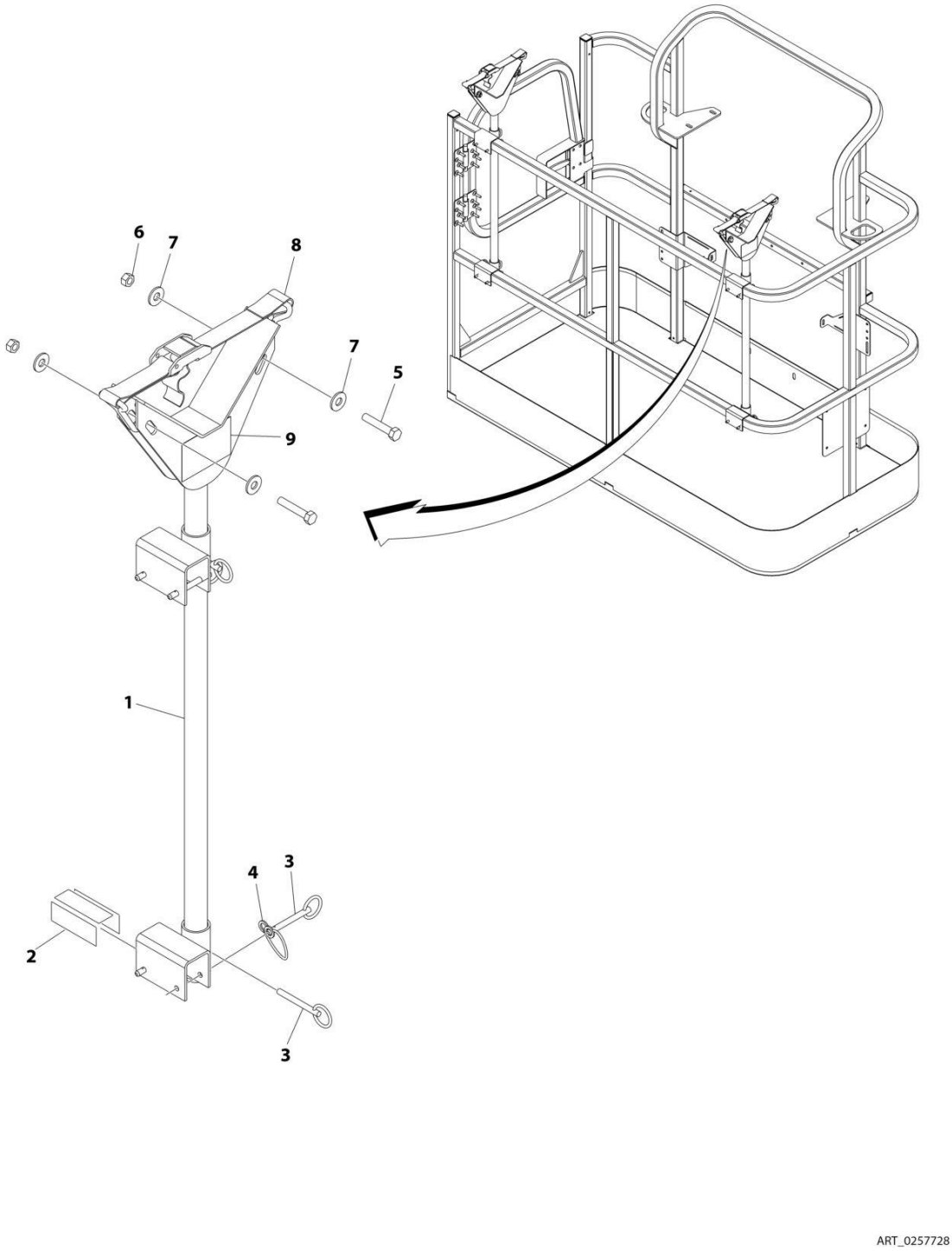

FIGURE 5-49. PIPE RACK INSTALLATION (ALL SPECS EXCEPT AUSTRALIAN SPECS)

ITEM	PART NUMBER	QTY	DESCRIPTION	REV
	0257728	Ref	PIPE RACK INSTALLATION (ALL SPECS EXCEPT AUSTRALIAN SPECS)	2/C
1	4845582	2	Rack, Pipe	
2	4420062	AR	Tape	
3	3422661	10	Pin	
4	1060379	4	Lanyard	
5	0641514	4	Bolt 5/16 x 1-3/4	
6	3311505	4	Nut 5/16	
7	4751500	8	Washer 5/16	
8	0480100	2	Tie-Down	
9	1703683	2	Decal - Capacity	

FIGURE 5-50. PIPE RACK INSTALLATION (AUSTRALIAN SPEC)

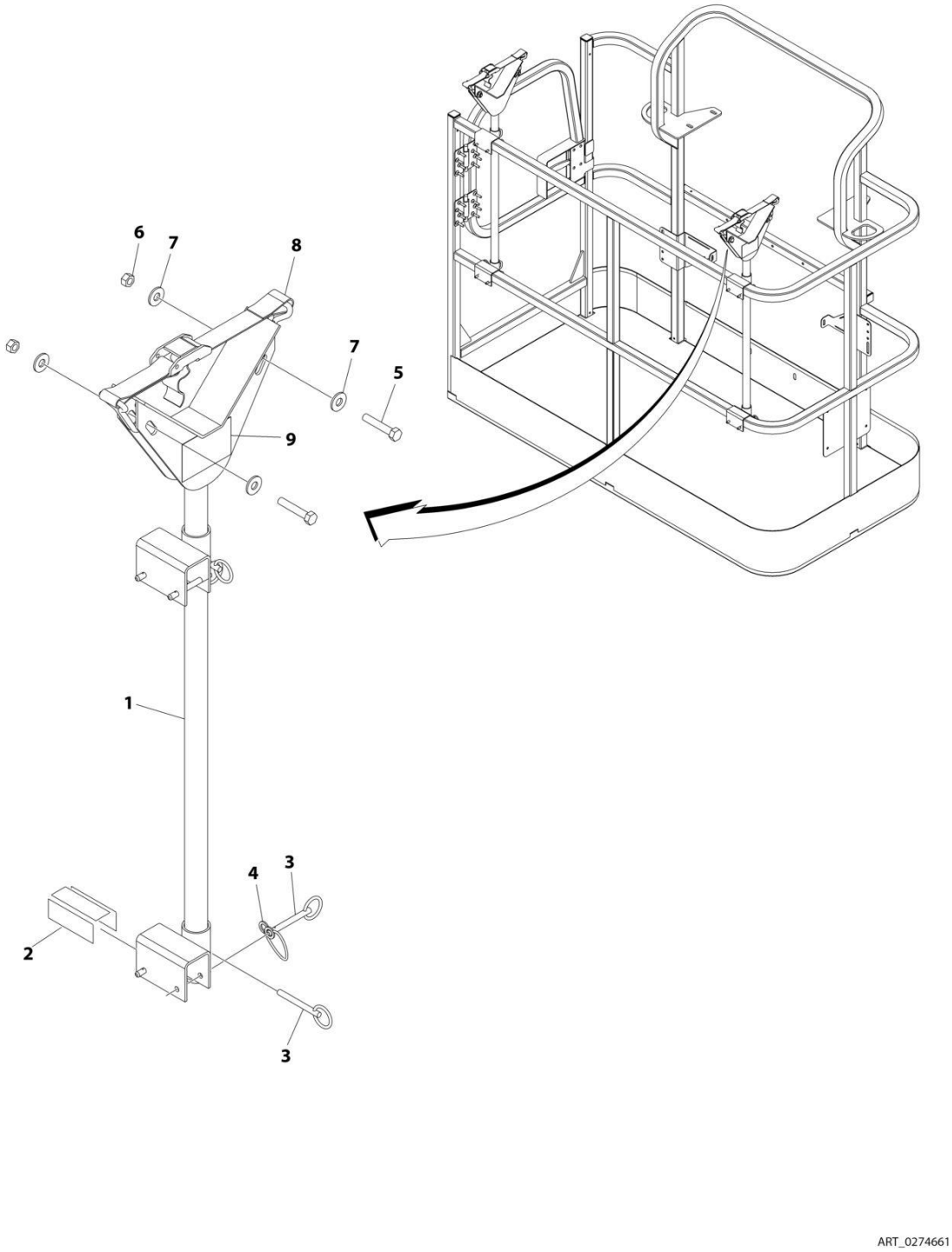

FIGURE 5-50. PIPE RACK INSTALLATION (AUSTRALIAN SPEC)

ITEM	PART NUMBER	QTY	DESCRIPTION	REV
	0274661	Ref	PIPE RACK INSTALLATION (AUSTRALIAN SPEC)	1/A
1	4845582	2	Rack, Pipe	
2	4420062	AR	Tape	
3	3422661	10	Pin	
4	1060379	4	Lanyard	
5	0641514	4	Bolt 5/16 x 1-3/4	
6	3311505	4	Nut 5/16	
7	4751500	8	Washer 5/16	
8	0480100	2	Tie-Down	
9	1706510	2	Decal - Capacity	

SECTION 6 - CYLINDER

SECTION 6 - CYLINDER

FIGURE 6-1. AXLE LOCKOUT CYLINDER ASSEMBLY

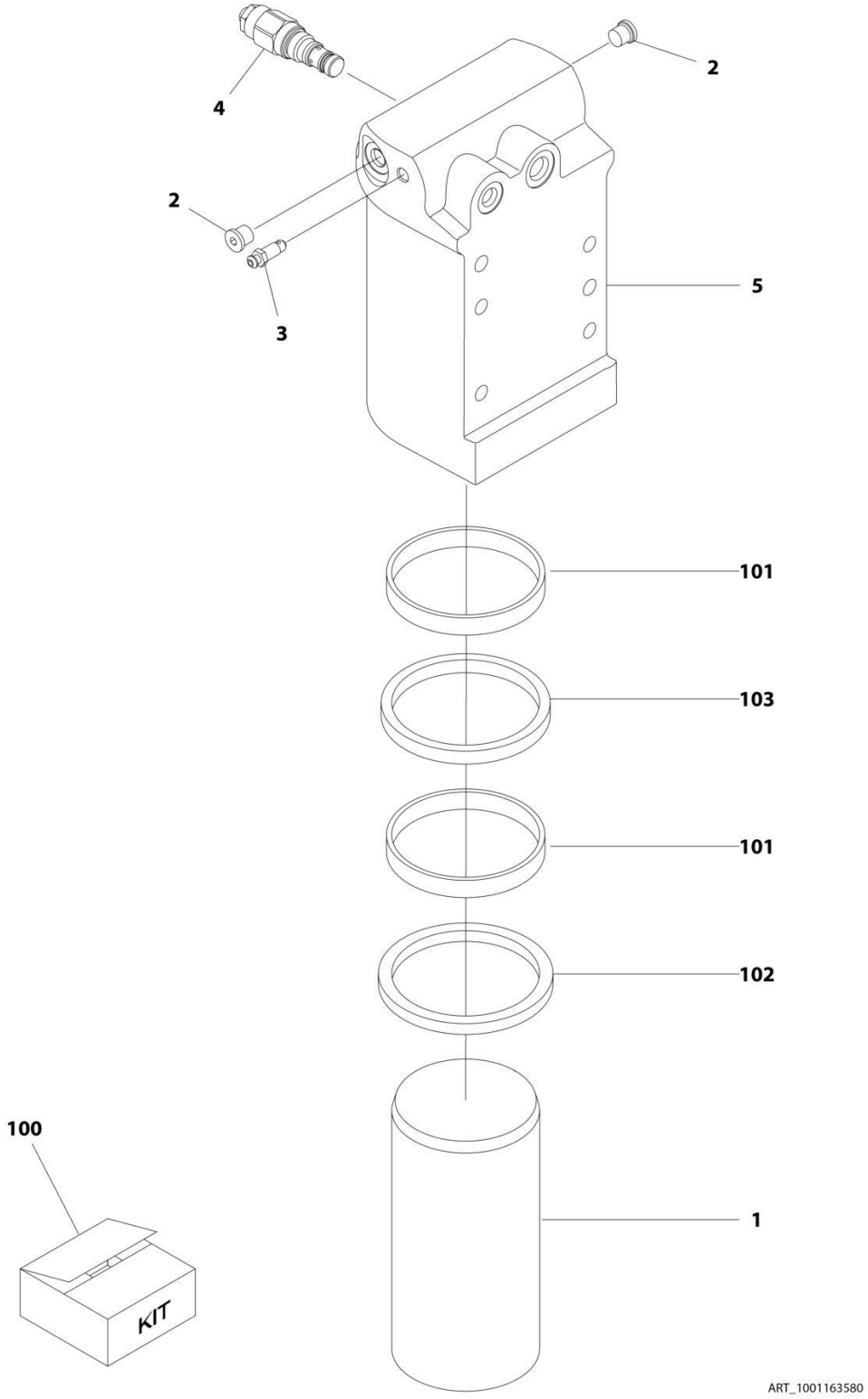

FIGURE 6-1. AXLE LOCKOUT CYLINDER ASSEMBLY

ITEM	PART NUMBER	QTY	DESCRIPTION	REV
	1001163580	Ref	AXLE LOCKOUT CYLINDER ASSEMBLY	G
1	1684290	1	Rod	
2	2220883	2	Plug #4	
3	4640858	1	Valve, Bleeder	
4	1001117372	1	Cartridge, Valve	
4	70002842	1	Seal Kit - 1001117372 Valve	
5	1001164817	1	Barrel	
100	2902266	1	Seal Kit - 1001163590 Cylinder (Includes Items 101-103)	
101	See Note	2	Ring, Wear	
102	See Note	1	Seal	
103	See Note	1	Wiper	

FIGURE 6-2. LEVEL (PLATFORM SLAVE) CYLINDER ASSEMBLY

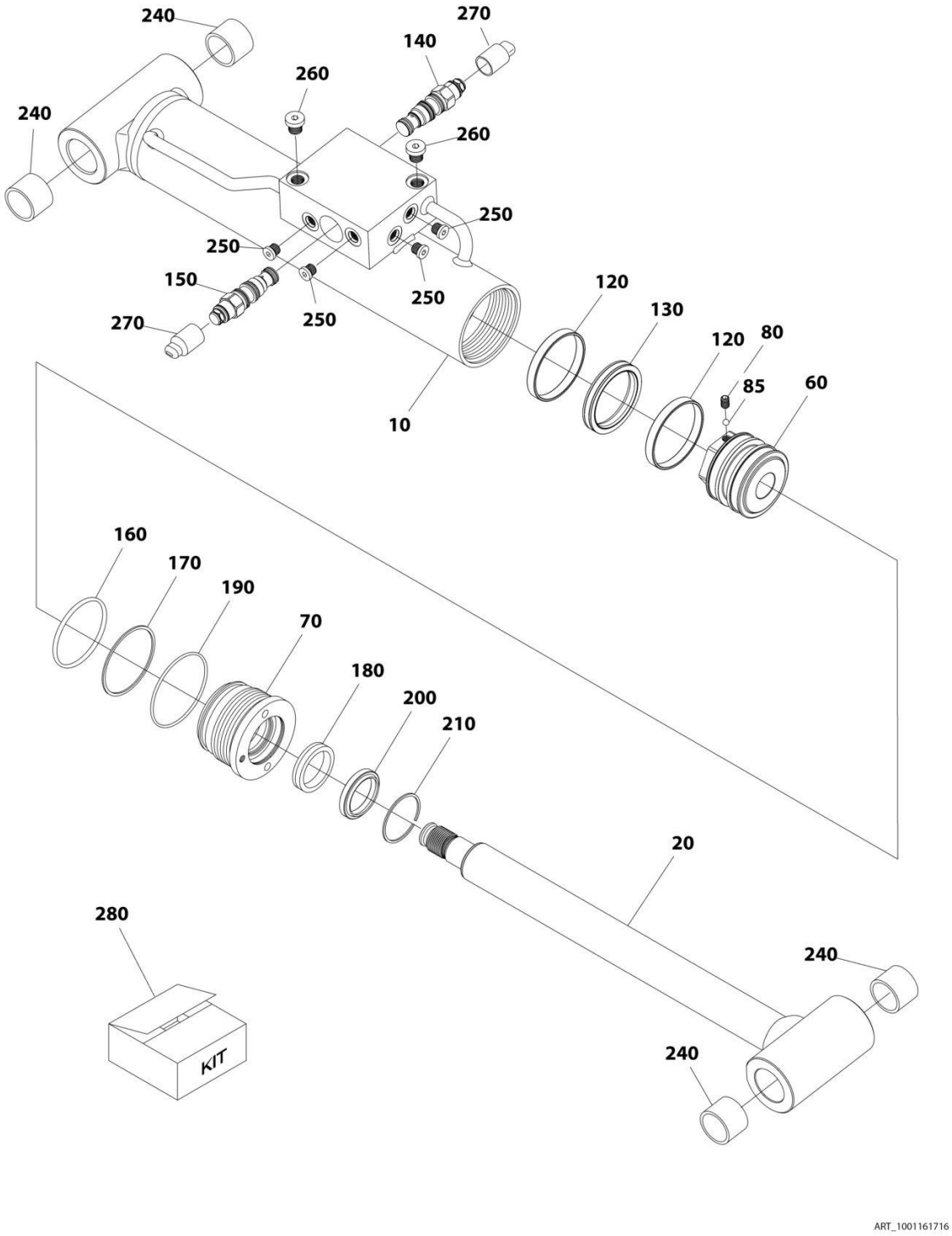

FIGURE 6-2. LEVEL (PLATFORM SLAVE) CYLINDER ASSEMBLY

ITEM	PART NUMBER	QTY	DESCRIPTION	REV
	1001161716	Ref	LEVEL (PLATFORM SLAVE) CYLINDER ASSEMBLY	D
10	70005010	1	Barrel	
20	70005011	1	Rod	
60	70005012	1	Piston	
70	70003837	1	Head	
80	70005013	1	Setscrew	
85	70005014	1	Ball	
120	See Note	NSS	Ring, Bearing (Note: Use Item 280)	
130	See Note	NSS	Seal, Piston (Note: Use Item 280)	
140	70002413	1	Cartridge, Valve	
140	2900770	1	Seal Kit - 70002413 Valve	
150	1001168210	1	Cartridge, Valve	
150	2900770	1	Seal Kit - 1001168210 Valve	
160	See Note	NSS	O-Ring (Note: Use Item 280)	
170	See Note	NSS	Seal (Note: Use Item 280)	
180	See Note	NSS	Seal (Note: Use Item 280)	
190	See Note	NSS	O-Ring (Note: Use Item 280)	
200	See Note	NSS	Wiper (Note: Use Item 280)	
210	70003838	1	Ring, Retaining	
240	0961951	4	Bushing	
250	70025619	4	Plug 7/16	
260	70024262	2	Plug 1/4	
270	See Note	2	Plug, Shipping (Note: Not Available for Purchase)	
280	70005016	1	Seal Kit - 1001161716 Cylinder (Includes Items 120 ,130 & 160-200)	

FIGURE 6-3. LIFT CYLINDER ASSEMBLY - JIB

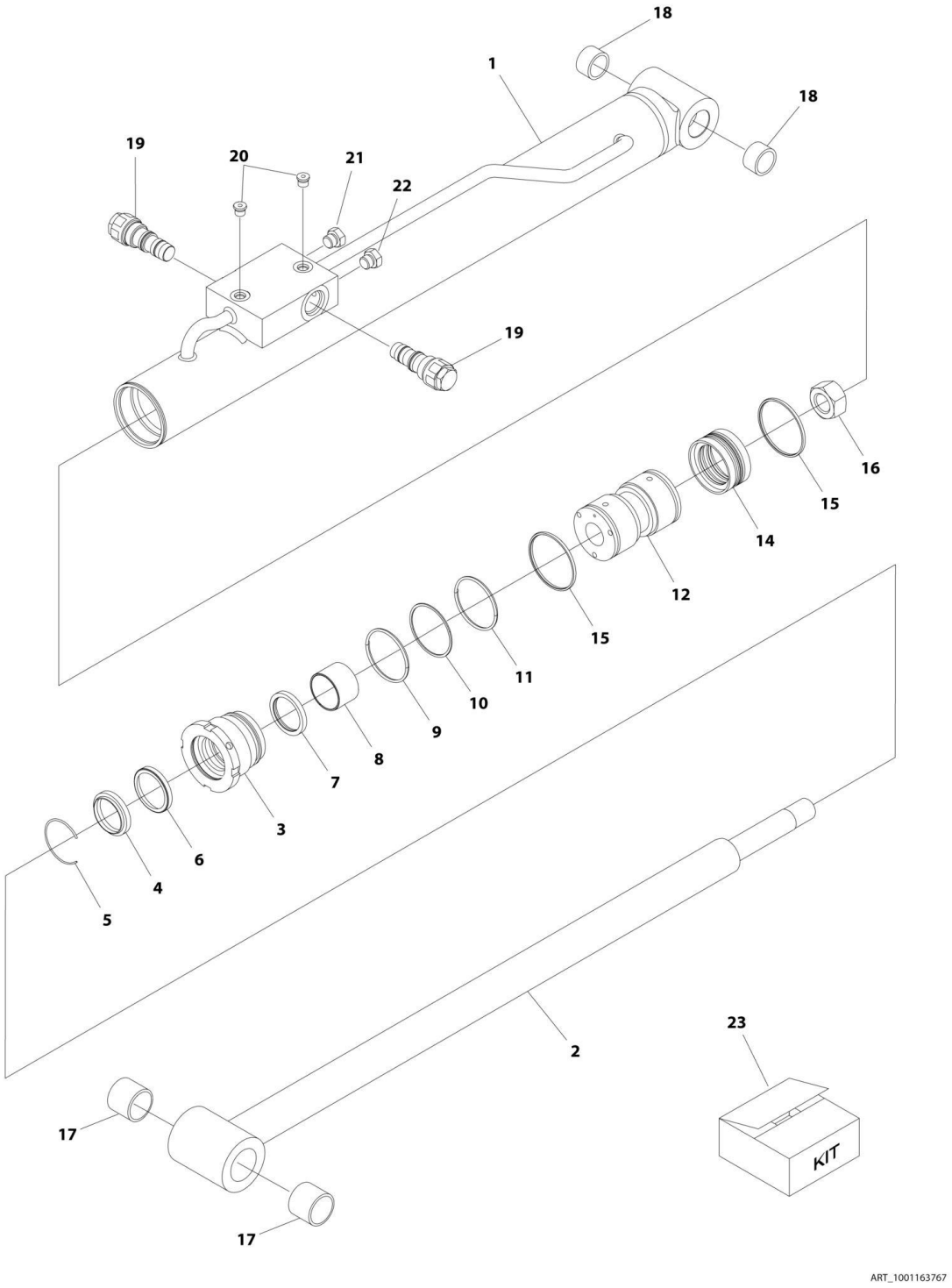

FIGURE 6-3. LIFT CYLINDER ASSEMBLY - JIB

ITEM	PART NUMBER	QTY	DESCRIPTION	REV
	1001163767	Ref	LIFT CYLINDER ASSEMBLY - JIB	B
1	70005155	1	Barrel	
2	70005156	1	Rod	
3	70005157	1	Head	
4	See Note	NSS	Wiper (Note: Use Item 23)	
5	70002373	1	Ring, Retaining	
6	See Note	NSS	Seal, Rod (Note: Use Item 23)	
7	See Note	NSS	Ring, Back-up (Note: Use Item 23)	
8	70005143	1	Bearing, Dry	
9	See Note	NSS	O-Ring (Note: Use Item 23)	
10	See Note	NSS	Ring, Back-up (Note: Use Item 23)	
11	See Note	NSS	O-Ring (Note: Use Item 23)	
12	70002371	1	Piston	
13	See Note	NSS	O-Ring (Note: Use Item 23)	
14	See Note	NSS	Seal, Piston (Note: Use Item 23)	
15	See Note	NSS	Ring, Piston (Note: Use Item 23)	
16	70002335	2	Nut	
17	70005158	2	Bushing	
18	70005159	2	Bushing	
19	4640509	2	Cartridge, Valve	
19	2900792	2	Seal Kit - 4640509 Valve	
20	70023370	2	Plug 7/16	
21	See Note	1	Plug 7/16 (Note: Not Available for Purchase)	
22	See Note	1	Plug 9/16 (Note: Not Available for Purchase)	
23	70005160	1	Seal Kit - 1001163767 Cylinder (Includes Items 4, 6, 7, 9-11 & 13-15)	

FIGURE 6-4. LIFT CYLINDER ASSEMBLY - 450A MAIN BOOM (SN 0300201991 through 0300235624)

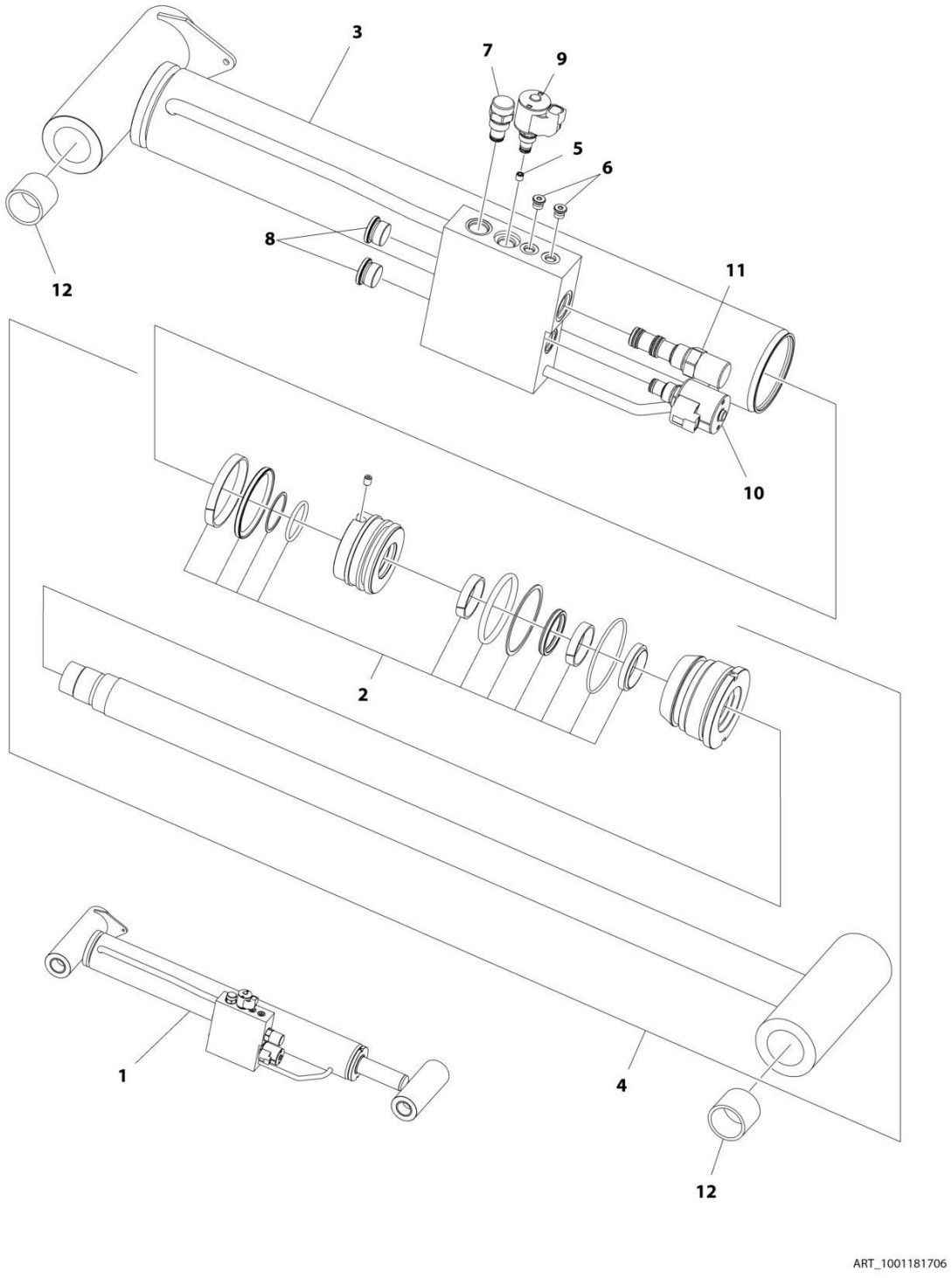

FIGURE 6-4. LIFT CYLINDER ASSEMBLY - 450A MAIN BOOM (SN 0300201991 through 0300235624)

ITEM	PART NUMBER	QTY	DESCRIPTION	REV
1	1001181706	Ref	LIFT CYLINDER ASSEMBLY - 450A MAIN BOOM **(SN 0300201991 through 0300235624)**	B
2	70004969	1	Seal Kit - 1001181706 Cylinder	
3	70004968	1	Barrel	
4	70004967	1	Rod Assembly (Includes Item 2)	
5	2180736	1	Orifice	
6	2220883	2	Plug #4	
7	4641390	1	Cartridge, Check Valve	
7	7017496	1	Seal Kit - 4641390 Valve	
8	See Note	NSS	Plug (Note: Not Available for Purchase)	
9	1001164709	1	Cartridge, Solenoid Valve (Includes Coil)	
9	7017467	1	Cartridge, Solenoid Valve Less Coil	
9	7012998	1	Seal Kit - 1001164709 & 7017467 Valves	
9	70002386	1	Coil	
10	1001148972	1	Cartridge, Solenoid Valve (Includes Coil)	
10	70002401	1	Cartridge, Solenoid Valve Less Coil	
10	7017496	1	Seal Kit - 1001148972 & 70002401 Valves	
10	70003788	1	Coil	
11	1001203628	1	Cartridge, Compensator Valve	
11	7012925	1	Seal Kit - 1001203628 Valve	
12	0961948	4	Bushing	

FIGURE 6-5. LIFT CYLINDER ASSEMBLY - 450A MAIN BOOM (SN 0300235625 through 0300272317)

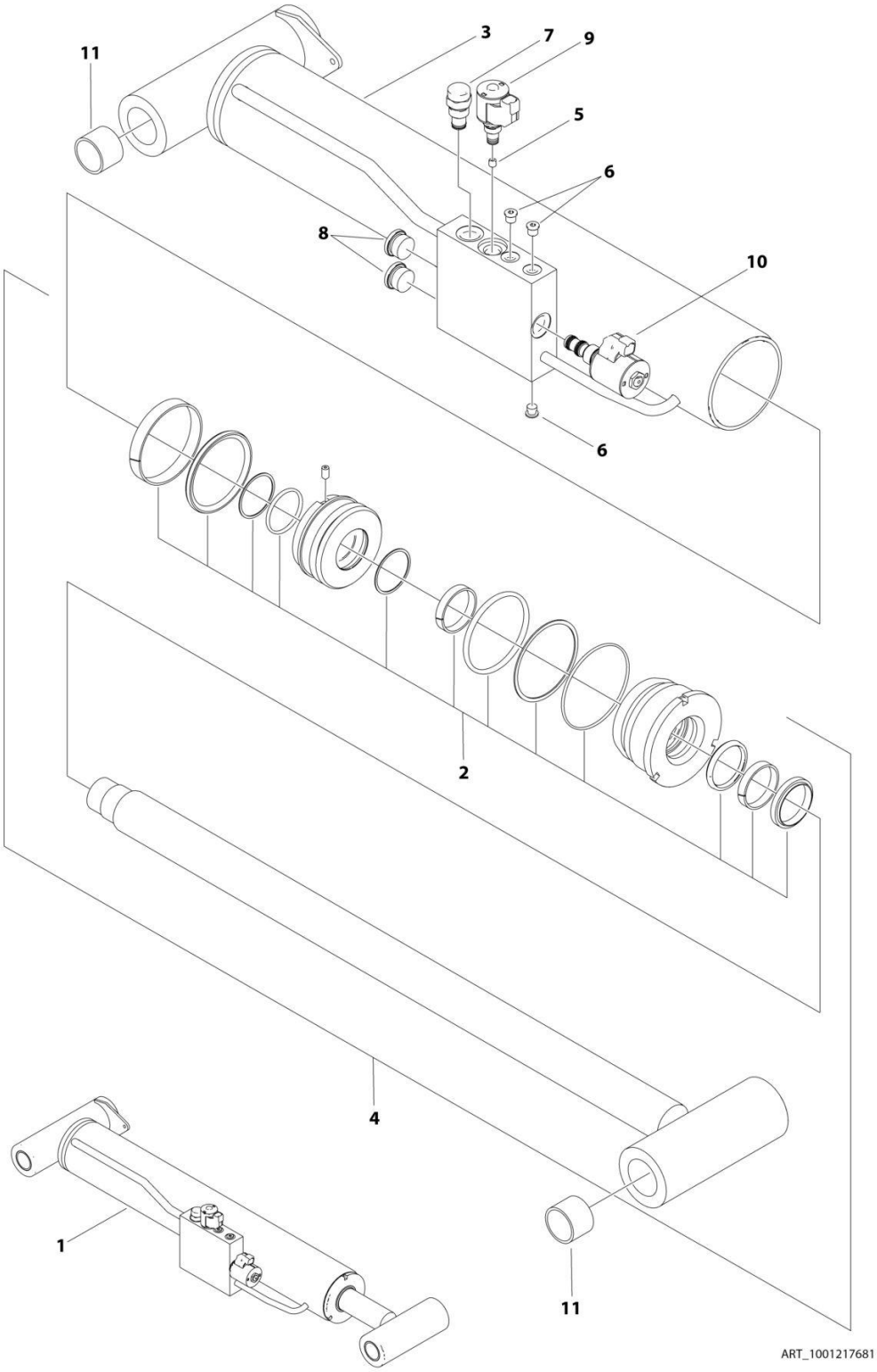

FIGURE 6-5. LIFT CYLINDER ASSEMBLY - 450A MAIN BOOM (SN 0300235625 through 0300272317)

ITEM	PART NUMBER	QTY	DESCRIPTION	REV
1	1001217681	Ref	LIFT CYLINDER ASSEMBLY - 450A MAIN BOOM	A
2	70004969	1	Seal Kit - 1001217681 Cylinder	
3	See Note	NSS	Barrel (Note: Not Available for Purchase)	
4	70004967	1	Rod Assembly (Includes Item 2)	
5	2180736	1	Orifice	
6	2220883	3	Plug #4	
7	4641390	1	Cartridge, Check Valve	
7	7017496	1	Seal Kit - 4641390 Valve	
8	See Note	NSS	Plug (Note: Not Available for Purchase)	
9	1001164709	1	Cartridge, Solenoid Valve (Includes Coil)	
9	7012967	1	Cartridge, Solenoid Valve Less Coil	
9	7012998	1	Seal Kit - 1001164709 & 7017467 Valves	
9	70002386	1	Coil	
10	1001206625	1	Cartridge, Compensator Valve	
10	70006104	4	Cartridge, Solenoid Valve Less Coil	
10	70006105	1	Seal Kit - 70006104 Valve	
10	70003788	1	Coil	
10	7022390	1	Coil Nut	
11	0961948	1	Bushing	

FIGURE 6-6. LIFT CYLINDER ASSEMBLY - 450AJ MAIN BOOM (USA BUILT MACHINES) (SN 0300201991 through 0300229340)

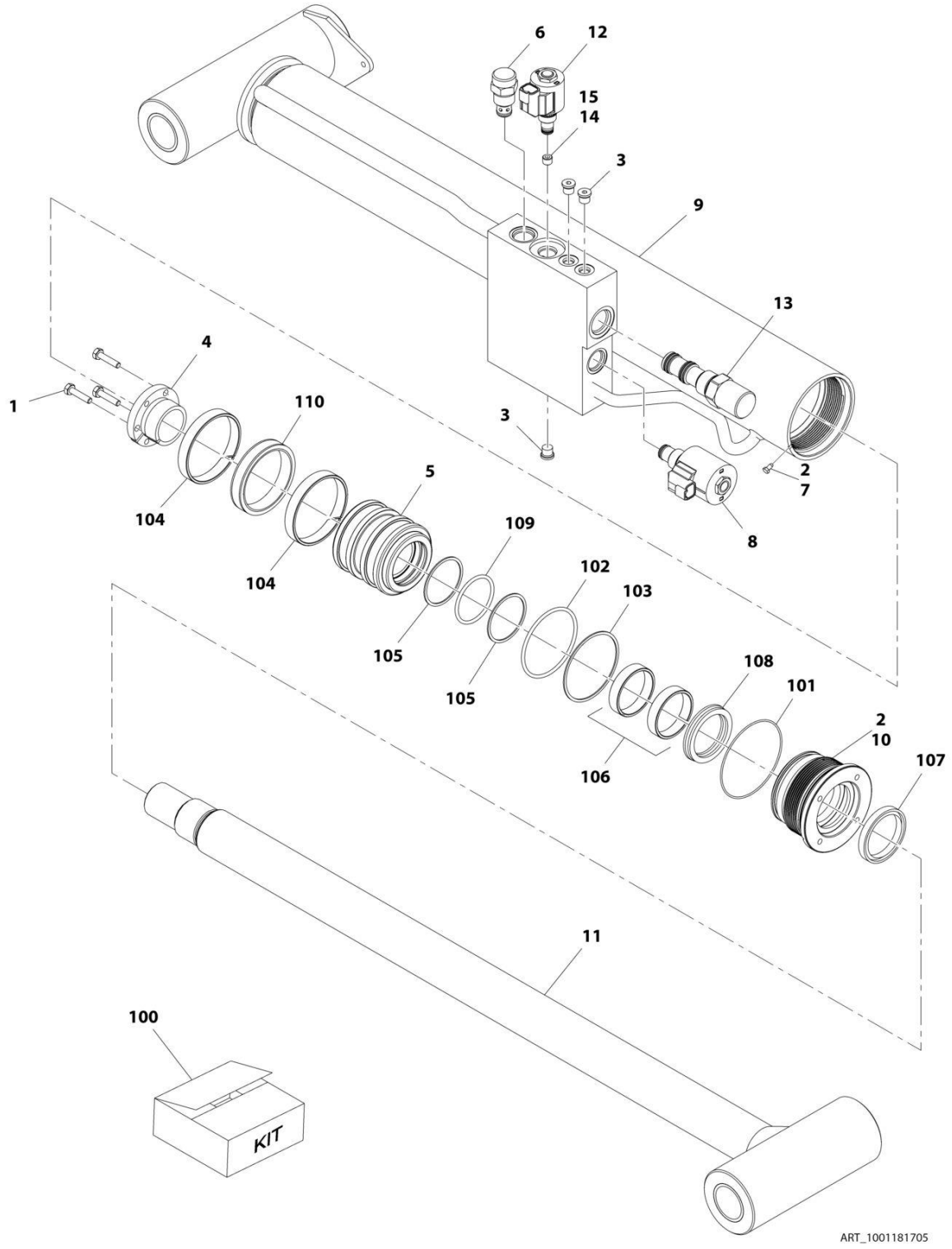

FIGURE 6-6. LIFT CYLINDER ASSEMBLY - 450AJ MAIN BOOM (USA BUILT MACHINES) (SN 0300201991 through 0300229340)

ITEM	PART NUMBER	QTY	DESCRIPTION	REV
	1001181705	Ref	LIFT CYLINDER ASSEMBLY - 450AJ MAIN BOOM (USA BUILT MACHINES) **(SN 0300201991 through 0300229340)**	E
1	0630535	3	Capscrew 1/4 x 1-1/8	
2	3020043	AR	Lubricant	
3	2220883	3	Plug #4	
4	0961896	1	Bushing	
5	1001182017	1	Piston	
6	4641390	1	Cartridge, Check Valve	
6	7017496	1	Seal Kit - 4641390 Valve	
7	1001125137	1	Setscrew #8	
8	See Note	1	Valve, Cartridge (Note: See BOOM SECTION for Components)	
9	1001181995	1	Barrel	
9	0961948	2	Bushing	
10	1001182020	1	Head	
11	1001182018	1	Rod	
11	0961948	2	Bushing	
12	See Note	1	Valve, Cartridge (Note: See BOOM SECTION for Components)	
13	1001165131	1	Valve, Pressure Compensator **(SN 0300201991 through 0300210494)**	
13	1001203628	1	Valve, Pressure Compensator **(SN 0300210495 through 0300229340)**	
13	7012925	1	Seal Kit - 1001165131 & 1001203628 Valve	
14	1001170759	1	Orifice .047	
15	0100035	AR	Compound, Locking	
100	1001182021	1	Seal Kit - 1001181705 Cylinder (Includes Items 101-110)	
101	See Note	NSS	O-Ring (Note: Use Item 100)	
102	See Note	NSS	O-Ring (Note: Use Item 100)	
103	See Note	NSS	Ring, Back-up (Note: Use Item 100)	
104	See Note	NSS	Ring, Wear (Note: Use Item 100)	
105	See Note	NSS	Ring, Back-up (Note: Use Item 100)	
106	See Note	NSS	Ring, Wear (Note: Use Item 100)	
107	See Note	NSS	Wiper (Note: Use Item 100)	
108	See Note	NSS	Seal (Note: Use Item 100)	
109	See Note	NSS	O-Ring (Note: Use Item 100)	
110	See Note	NSS	O-Ring (Note: Use Item 100)	

FIGURE 6-7. LIFT CYLINDER ASSEMBLY - 450AJ MAIN BOOM (USA BUILT MACHINES) (SN 0300226835 through 0300234431)

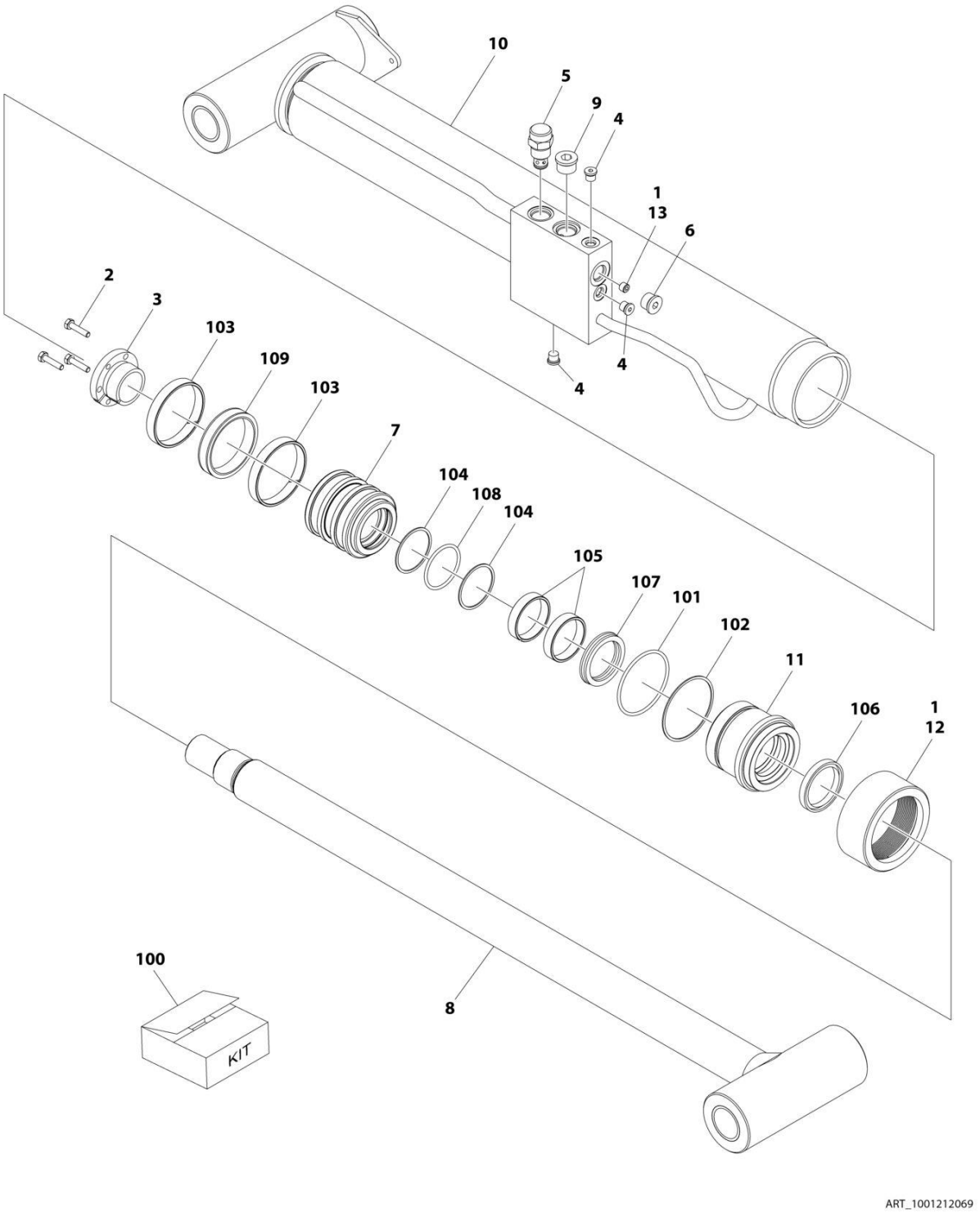

FIGURE 6-7. LIFT CYLINDER ASSEMBLY - 450AJ MAIN BOOM (USA BUILT MACHINES) (SN 0300226835 through 0300234431)

ITEM	PART NUMBER	QTY	DESCRIPTION	REV
	1001212069	Ref	LIFT CYLINDER ASSEMBLY - 450AJ MAIN BOOM (USA BUILT MACHINES) **(SN 0300226835 through 0300234431)**	C
1	0100035	AR	Compound, Locking	
2	0630535	3	Capscrew 1/4 x 1-1/8	
3	0961896	1	Bushing	
4	2220883	3	Plug #4	
5	4641390	1	Cartridge, Check Valve	
5	7017496	1	Seal Kit - 4641390 Valve	
6	2220886	1	Plug #8	
7	1001182017	1	Piston	
8	1001182018	1	Rod	
8	0961948	2	Bushing	
9	2220887	1	Plug	
10	1001212071	1	Barrel	
10	0961948	2	Bushing	
11	1001212073	1	Head	
12	1001212075	1	Cap	
13	1001170759	1	Orifice .047	
100	1001212447	1	Seal Kit - 1001212069 Cylinder (Includes Items 101-110)	
101	See Note	NSS	O-Ring (Note: Use Item 100)	
102	See Note	NSS	Ring, Back-up (Note: Use Item 100)	
103	See Note	NSS	Ring, Wear (Note: Use Item 100)	
104	See Note	NSS	Ring, Back-up (Note: Use Item 100)	
105	See Note	NSS	Ring, Wear (Note: Use Item 100)	
106	See Note	NSS	Wiper (Note: Use Item 100)	
107	See Note	NSS	Seal (Note: Use Item 100)	
108	See Note	NSS	O-Ring (Note: Use Item 100)	
109	See Note	NSS	Seal (Note: Use Item 100)	

FIGURE 6-8. LIFT CYLINDER ASSEMBLY - 450AJ MAIN BOOM (ROMANIAN BUILT MACHINES) (SN E300002833 through E300004190)

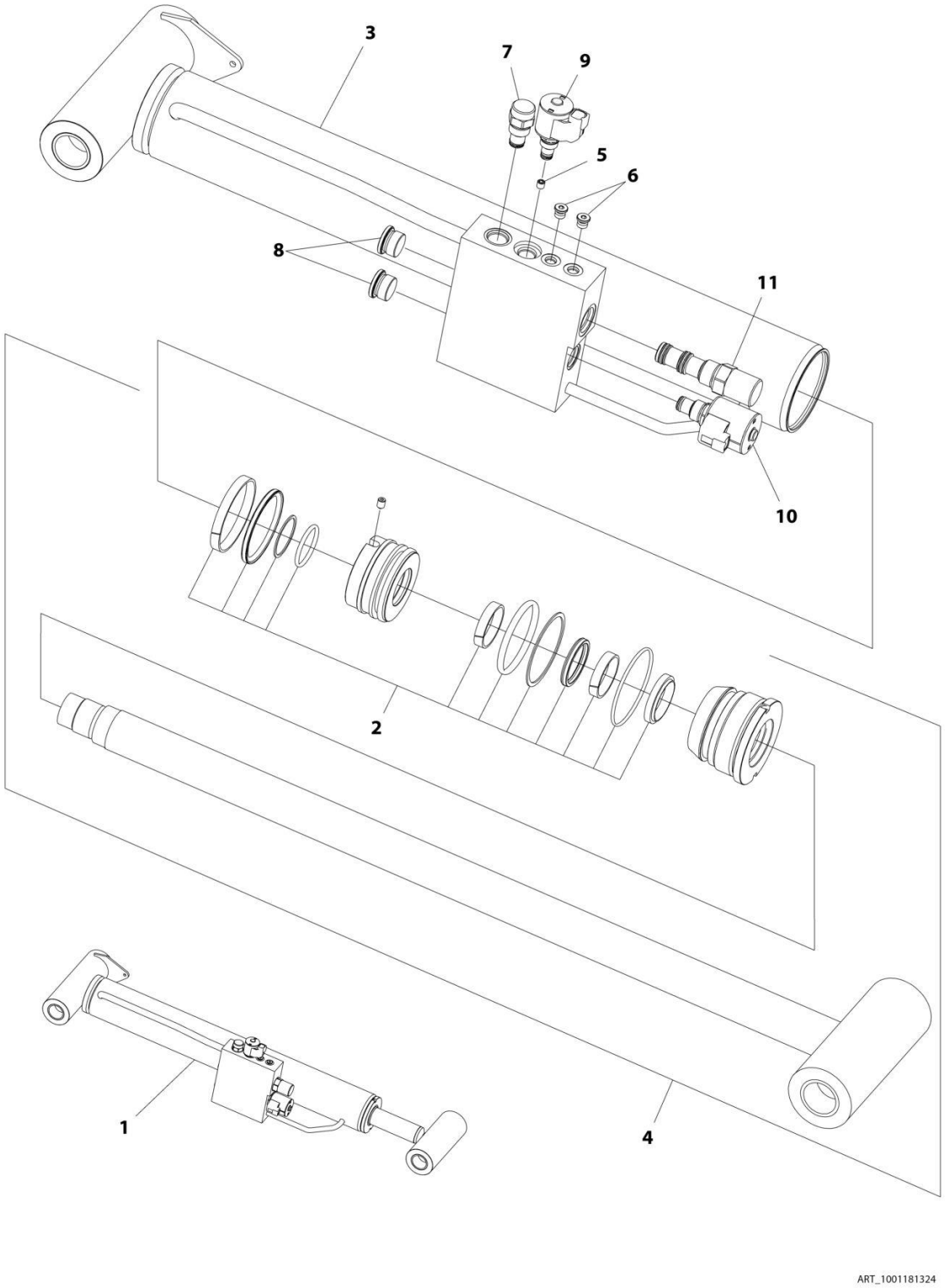

FIGURE 6-8. LIFT CYLINDER ASSEMBLY - 450AJ MAIN BOOM (ROMANIAN BUILT MACHINES) (SN E300002833 through E300004190)

ITEM	PART NUMBER	QTY	DESCRIPTION	REV
1	1001181324	Ref	LIFT CYLINDER ASSEMBLY - 450AJ MAIN BOOM (ROMANIAN BUILT MACHINES) **(SN E300002833 through E300004190)**	C
2	70004963	1	Seal Kit - 1001181324 Cylinder (Part of Item 4)	
3	70004962	1	Barrel (Includes Bushings)	
3	0961948	1	Bushing	
4	70004961	1	Rod Assembly (Includes Seal Kit and Bushings)	
4	0961948	1	Bushing	
5	2180736	1	Orifice	
6	2220883	2	Plug #4	
7	4641390	1	Cartridge, Check Valve	
7	7017496	1	Seal Kit - 4641390 Valve	
8	See Note	NSS	Plug, Shipping (Note: Not Available for Purchase)	
9	1001164709	1	Cartridge, Solenoid Valve (Includes Coil)	
9	7017467	1	Cartridge, Solenoid Valve Less Coil	
9	7012998	1	Seal Kit - 1001164709 & 7017467 Valve	
9	70002386	1	Coil	
10	1001148972	1	Cartridge, Solenoid Valve (Includes Coil)	
10	70002401	1	Cartridge, Solenoid Valve Less Coil	
10	7017496	1	Seal Kit - 1001148972 & 70002401 Valves	
10	70003788	1	Coil	
11	1001165131	1	Cartridge, Compensator Valve **(SN E300002833 through E300003031)**	
11	1001203628	1	Cartridge, Compensator Valve **(SN E300003032 through E300004190)**	
11	7012925	1	Seal Kit - 1001165131 & 1001203628 Valve	

FIGURE 6-9. LIFT CYLINDER ASSEMBLY - 450AJ MAIN BOOM (SN 0300234432 through 0300272317, SN B300003516 through B300005760, SN E300004191 through E300007990, SN 1300007279 through 1300007373)

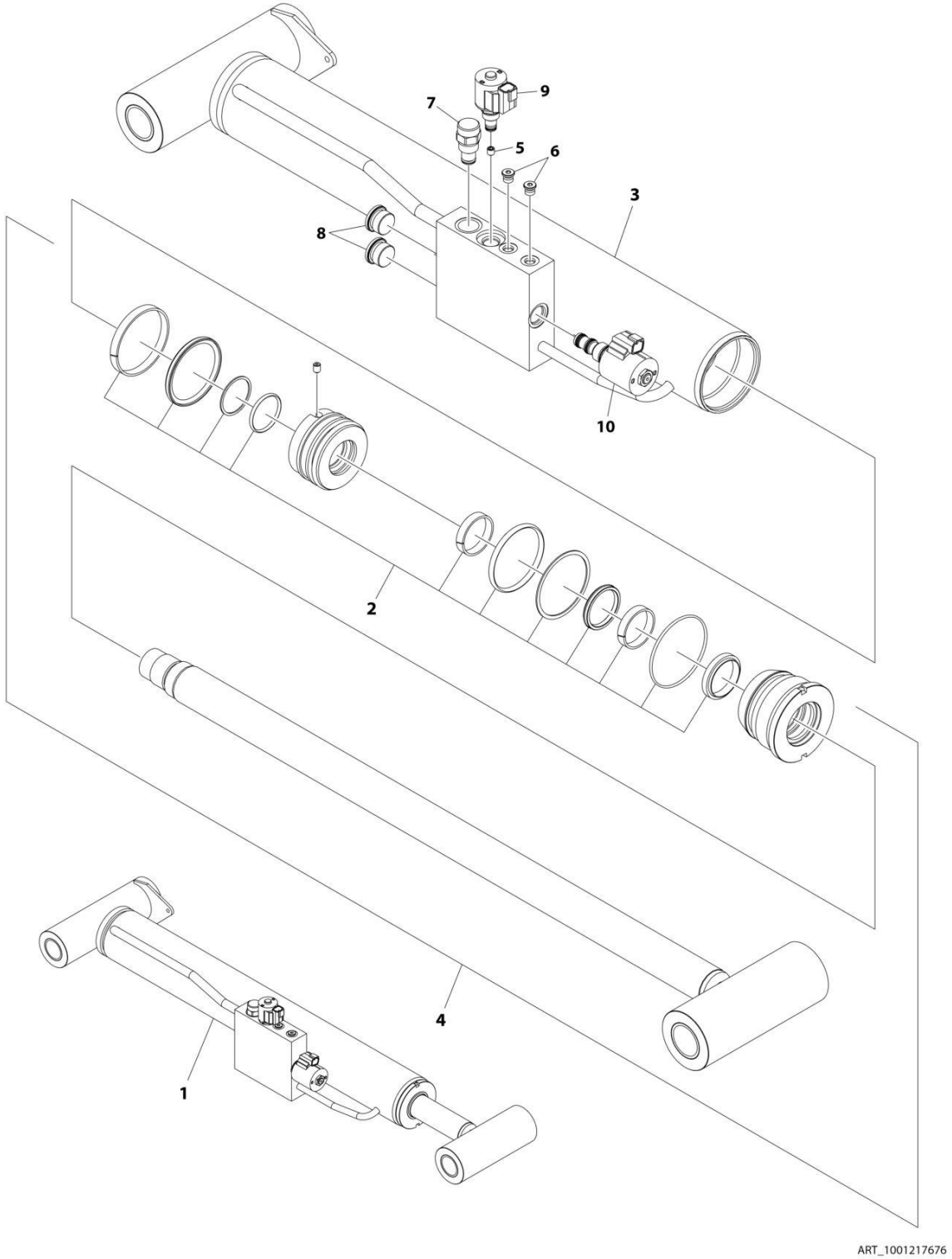

FIGURE 6-9. LIFT CYLINDER ASSEMBLY - 450AJ MAIN BOOM (SN 0300234432 through 0300272317, SN B300003516 through B300005760, SN E300004191 through E300007990, SN 1300007279 through 1300007373)

ITEM	PART NUMBER	QTY	DESCRIPTION	REV
1	1001217676	Ref	LIFT CYLINDER ASSEMBLY - 450AJ MAIN BOOM	C
2	70004963	1	Seal Kit - 1001217676 Cylinder (Part of Item 4)	
3	70004962	NSS	Barrel (Includes Bushings) (Note: Not Available for Purchase)	
3	0961948	2	Bushing	
4	70004961	1	Rod Assembly (Includes Seal Kit and Bushings)	
4	0961948	2	Bushing	
5	2180736	1	Orifice	
6	2220883	3	Plug #4	
7	4641390	1	Cartridge, Check Valve	
7	7017496	1	Seal Kit - 4641390 Valve	
8	See Note	NSS	Plug, Shipping (Note: Not Available for Purchase)	
9	1001164709	1	Cartridge, Solenoid Valve (Includes Coil)	
9	7017467	1	Cartridge, Solenoid Valve Less Coil	
9	7012998	1	Seal Kit - 1001164709 & 7017467 Valve	
9	70002386	1	Coil	
10	1001206625	1	Cartridge, Solenoid Valve (Includes Coil)	
10	70006104	1	Cartridge, Solenoid Valve Less Coil	
10	70006105	1	Seal Kit - 1001206625 & 70006104 Valves	
10	70003788	1	Coil	
10	7022390	1	Nut, Coil	

FIGURE 6-10. LIFT CYLINDER ASSEMBLY - TOWER BOOM

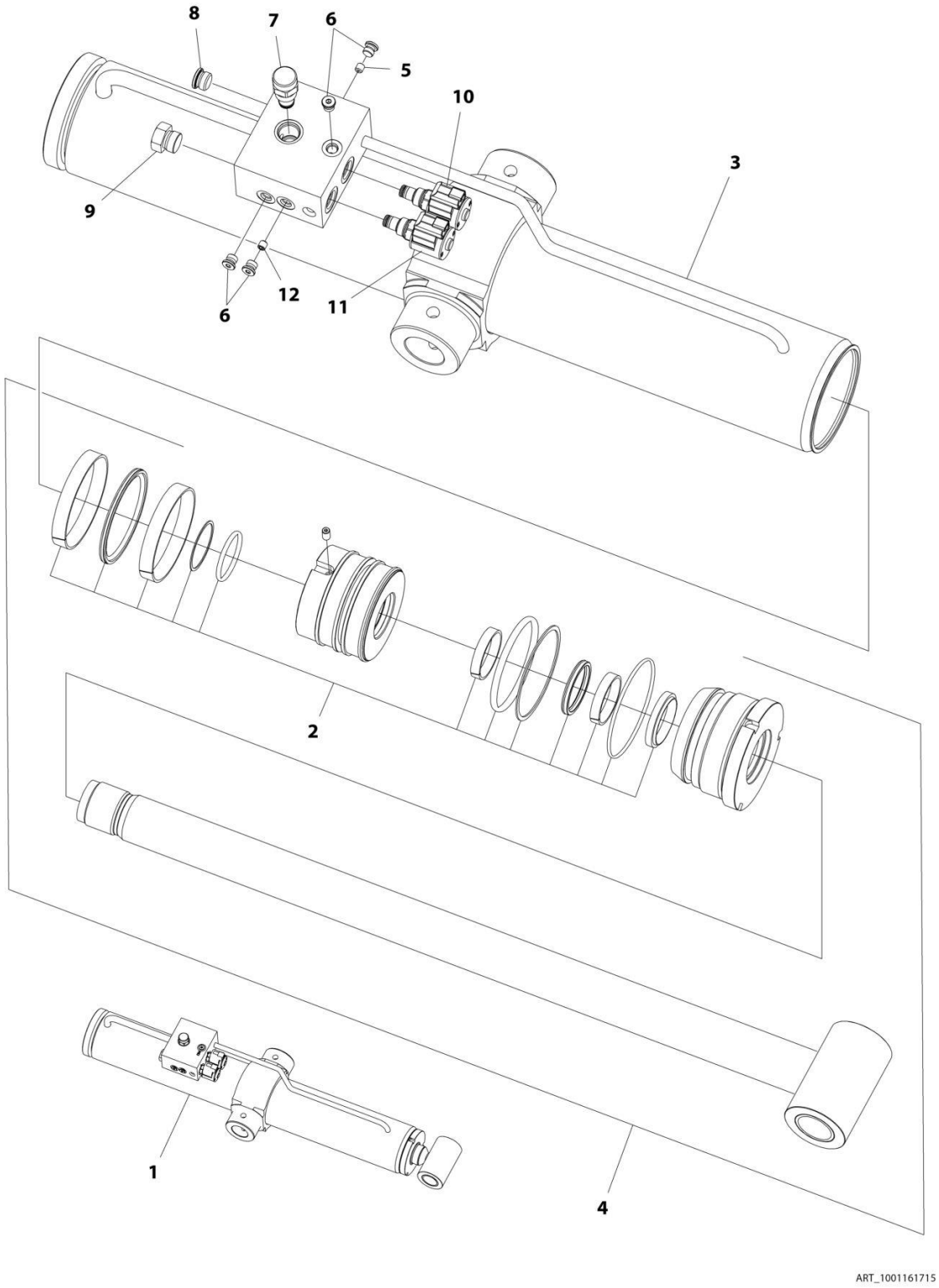

FIGURE 6-10. LIFT CYLINDER ASSEMBLY - TOWER BOOM

ITEM	PART NUMBER	QTY	DESCRIPTION	REV
1	1001161715	1	LIFT CYLINDER ASSEMBLY - TOWER BOOM	G
2	70004966	1	Seal Kit - 1001161715 Cylinder	
3	70004965	1	Barrel	
4	70004964	1	Rod Assembly (Includes Seal Kit and Bushings)	
4	0961948	2	Bushing	
5	70005578	1	Plug, Orifice	
6	2220883	4	Plug #4	
7	4641390	1	Cartridge, Check Valve	
7	7017496	1	Seal Kit - 4641390 Valve	
8	2220886	1	Plug #8	
9	See Note	1	Plug, Shipping (Note: Not Available for Purchase)	
10	1001166208	1	Cartridge, Solenoid Valve (Includes Coil)	
10	7024884	1	Cartridge, Solenoid Valve Less Coil	
10	7012967	1	Seal Kit - 1001166208 & 7024884 Valves	
10	70002386	1	Coil	
11	1001164709	1	Cartridge, Solenoid Valve (Includes Coil)	
11	7017467	1	Cartridge, Solenoid Valve Less Coil	
11	7012998	1	Seal Kit - 1001164709 & 7017467 Valves	
11	70002386	1	Coil	
12	70005577	1	Plug, Orifice	

FIGURE 6-11. MASTER CYLINDER ASSEMBLY

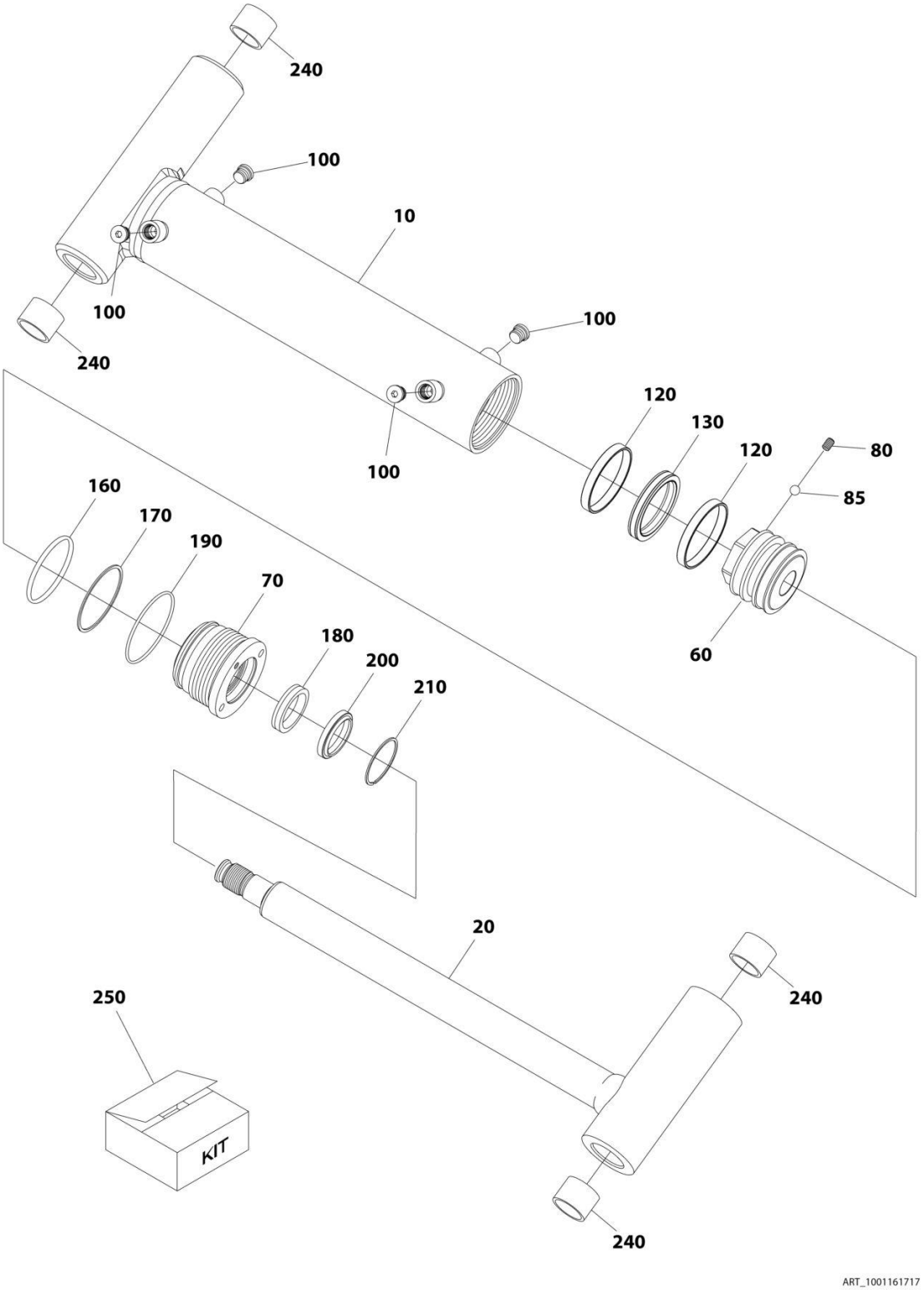

FIGURE 6-11. MASTER CYLINDER ASSEMBLY

ITEM	PART NUMBER	QTY	DESCRIPTION	REV
	1001161717	Ref	MASTER CYLINDER ASSEMBLY	D
10	70005017	1	Barrel	
20	70005018	1	Rod	
60	70005012	1	Piston	
70	70003837	1	Head	
80	70005013	1	Setscrew	
85	70005014	1	Ball	
100	70025959	4	Plug 9/16	
120	See Note	NSS	Ring, Piston (Note: Use Item 250)	
130	See Note	NSS	Seal (Note: Use Item 250)	
160	See Note	NSS	O-Ring (Note: Use Item 250)	
170	See Note	NSS	Ring (Note: Use Item 250)	
180	See Note	NSS	Seal (Note: Use Item 250)	
190	See Note	NSS	O-Ring (Note: Use Item 250)	
200	See Note	NSS	Wiper (Note: Use Item 250)	
210	70003838	1	Ring, Retaining	
240	0961951	4	Bushing	
250	70005016	1	Seal Kit - 1001161717 Cylinder (Includes Items 120-200)	

FIGURE 6-12. STEER CYLINDER ASSEMBLY

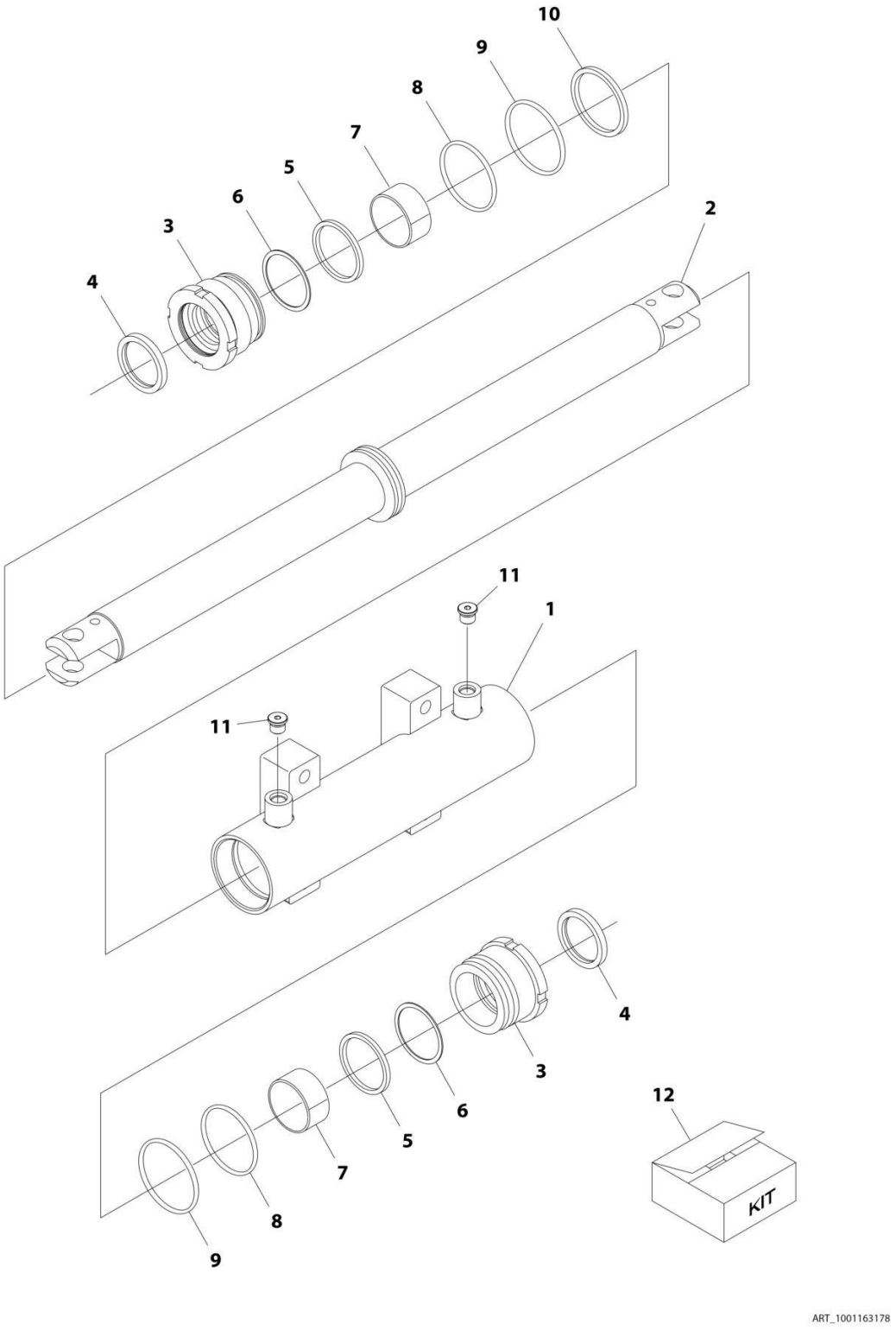

FIGURE 6-12. STEER CYLINDER ASSEMBLY

ITEM	PART NUMBER	QTY	DESCRIPTION	REV
	1001163178	Ref	STEER CYLINDER ASSEMBLY	D
1	70005150	1	Barrel	
2	70005151	1	Rod	
3	70005152	2	Head	
4	See Note	NSS	Wiper (Note: Use Item 12)	
5	See Note	NSS	Seal, Rod (Note: Use Item 12)	
6	See Note	NSS	Ring, Back-up (Note: Use Item 12)	
7	70005153	2	Bearing, Dry	
8	See Note	NSS	O-Ring (Note: Use Item 12)	
9	See Note	NSS	O-Ring (Note: Use Item 12)	
10	See Note	NSS	Seal, Piston (Note: Use Item 12)	
11	See Note	2	Plug 9/16 (Note: Not Available for Purchase)	
12	70005154	1	Seal Kit - 1001163178 Cylinder (Includes Items 4-6 & 8-10)	

FIGURE 6-13. TELESCOPE CYLINDER ASSEMBLY - 450A

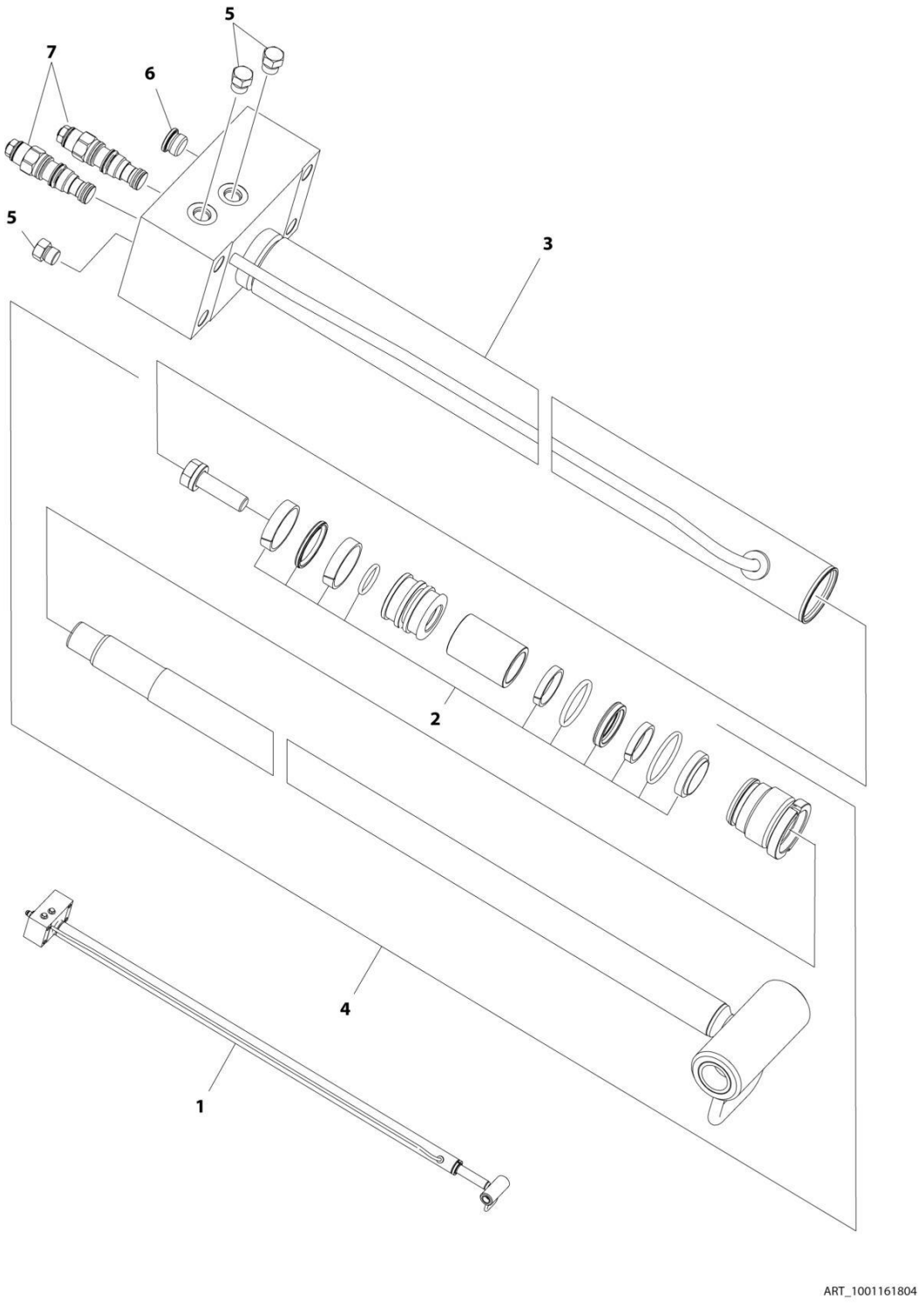

FIGURE 6-13. TELESCOPE CYLINDER ASSEMBLY - 450A

ITEM	PART NUMBER	QTY	DESCRIPTION	REV
1	1001161804	Ref	TELESCOPE CYLINDER ASSEMBLY - 450A	E
2	70004960	1	Seal Kit - 1001161804 Cylinder (Part of Item 4)	
3	70004959	1	Barrel	
4	70004958	1	Rod Assembly (Includes Seal Kit)	
5	2220885	3	Plug #6wmellott	
6	2220886	1	Plug #8	
7	4640771	2	Cartridge, Valve	
7	2900770	2	Seal Kit - 4460771 Valve	

FIGURE 6-14. TELESCOPE CYLINDER ASSEMBLY - 450AJ (USA BUILT MACHINES) (SN 0300201991 through 0300234431)

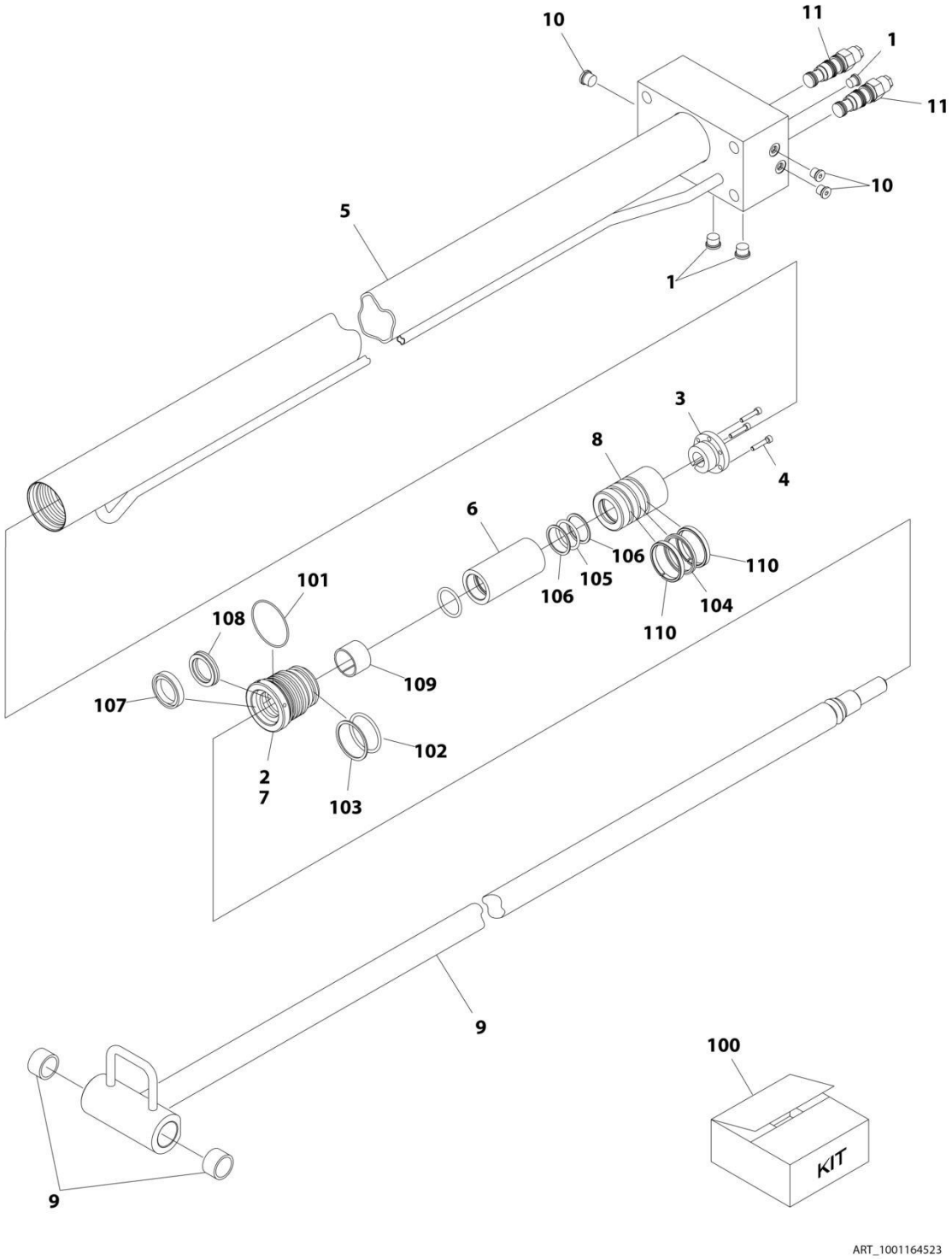

FIGURE 6-14. TELESCOPE CYLINDER ASSEMBLY - 450AJ (USA BUILT MACHINES) (SN 0300201991 through 0300234431)

ITEM	PART NUMBER	QTY	DESCRIPTION	REV
	1001164523	Ref	TELESCOPE CYLINDER ASSEMBLY - 450AJ (USA BUILT MACHINES) **(SN 0300201991 through 0300234431)**	H
1	2220883	3	Plug #4	
2	3020043	AR	Lubricant	
3	0962185	1	Bushing, Tapered	
4	0630534	3	Capscrew 10 x 1	
5	1001164289	1	Barrel	
6	1001164295	1	Spacer	
7	1001164298	1	Head	
8	3480227	1	Piston	
9	1001164300	1	Rod	
9	0962292	2	Bushing	
10	2220885	3	Plug #6	
11	4640771	2	Cartridge, Valve	
11	2900770	2	Seal Kit - 4640771 Valve	
100	1001164297	1	Seal Kit - 1001164523 Cylinder (Includes Items 101-110)	
101	See Note	NSS	O-Ring (Note: Use Item 100)	
102	See Note	NSS	O-Ring (Note: Use Item 100)	
103	See Note	NSS	Ring, Back-up (Note: Use Item 100)	
104	See Note	NSS	Seal (Note: Use Item 100)	
105	See Note	NSS	O-Ring (Note: Use Item 100)	
106	See Note	NSS	Ring, Back-up (Note: Use Item 100)	
107	See Note	NSS	Wiper (Note: Use Item 100)	
108	See Note	NSS	Seal (Note: Use Item 100)	
109	See Note	NSS	Ring, Wear (Note: Use Item 100)	
110	See Note	NSS	Ring, Wear (Note: Use Item 100)	

FIGURE 6-15. TELESCOPE CYLINDER ASSEMBLY - 450AJ (SN 0300234432 through 0300272317, SN B300003516 through B300005760, SN E300002833 through E300007990, SN 1300007279 through 1300007373)

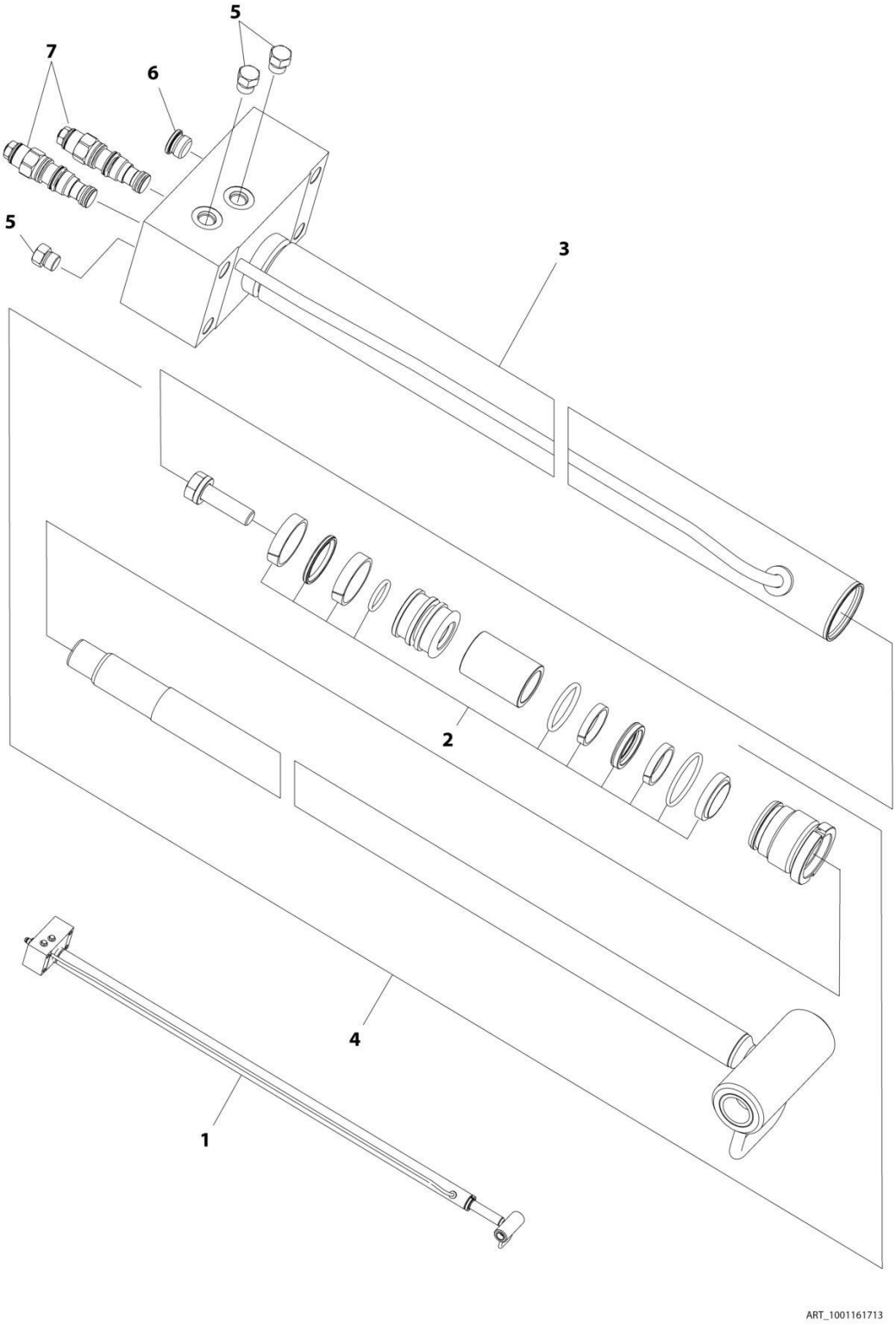

FIGURE 6-15. TELESCOPE CYLINDER ASSEMBLY - 450AJ (SN 0300234432 through 0300272317, SN B300003516 through B300005760, SN E300002833 through E300007990, SN 1300007279 through 1300007373)

ITEM	PART NUMBER	QTY	DESCRIPTION	REV
1	1001161713	Ref	TELESCOPE CYLINDER ASSEMBLY - 450AJ	E
2	70004957	1	Seal Kit - 1001161713 Cylinder (Part of Item 4)	
3	70004956	1	Barrel	
4	70004955	1	Rod Assembly (Includes Seal Kit and Bushings)	
4	0962292	2	Bushing	
5	2220237	3	Plug #6	
6	2220886	1	Plug #8	
7	4640771	2	Cartridge, Valve	
7	2900770	2	Seal Kit - 4640771 Valve	

SECTION 7 - HYDRAULIC

FIGURE 7-1. 2WD HYDRAULIC SYSTEM INSTALLATION - 450A

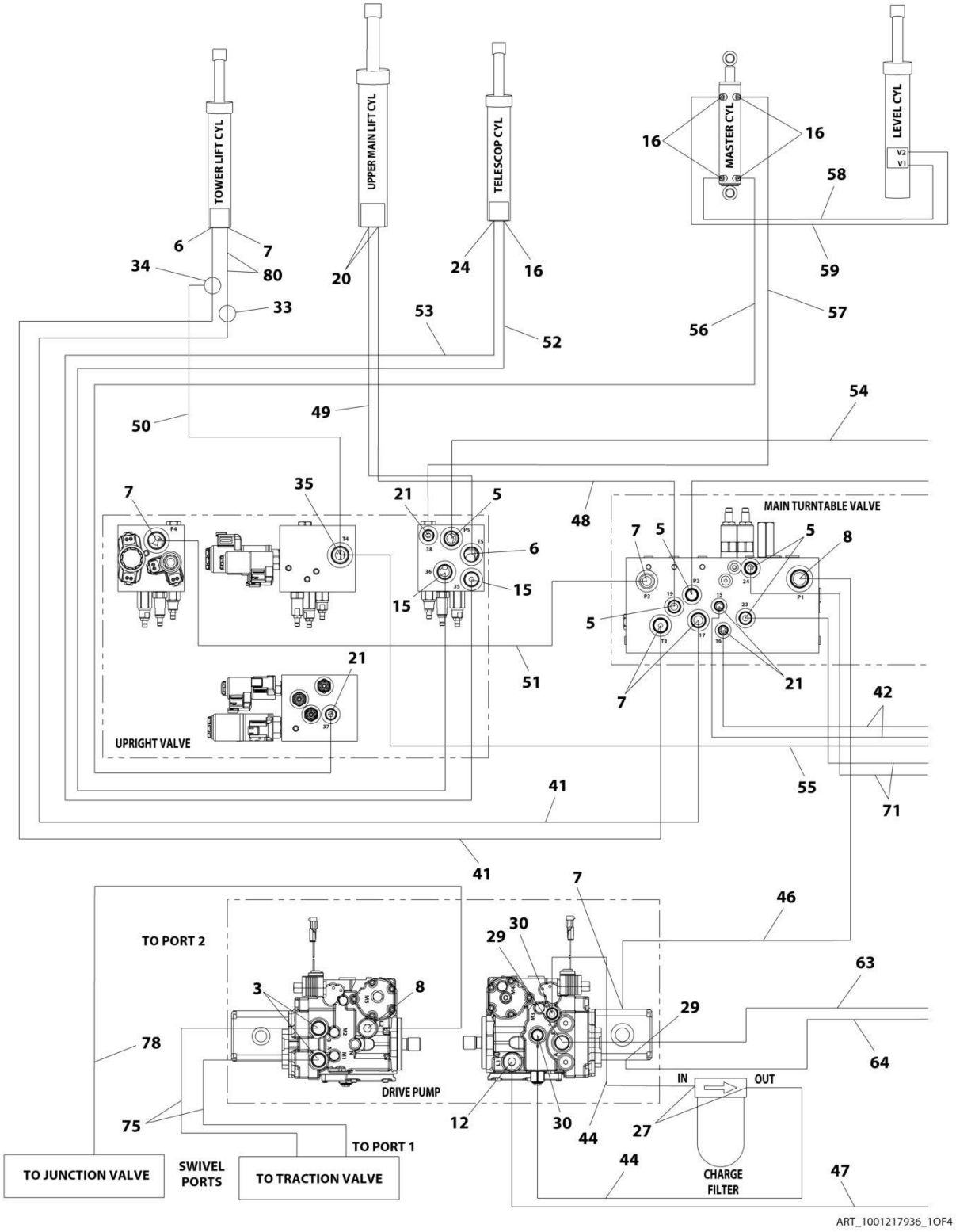

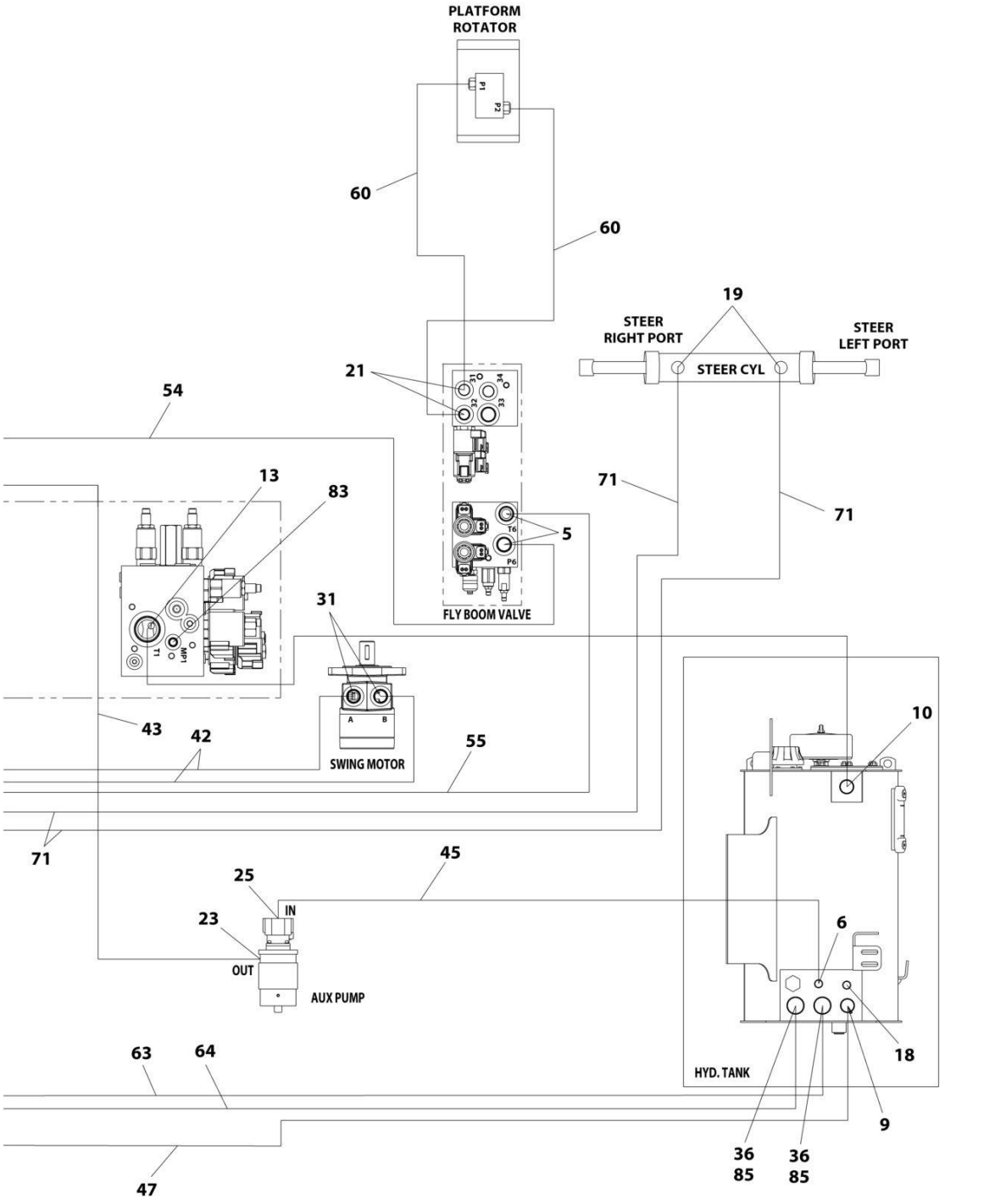

ART_1001217936_2OF4

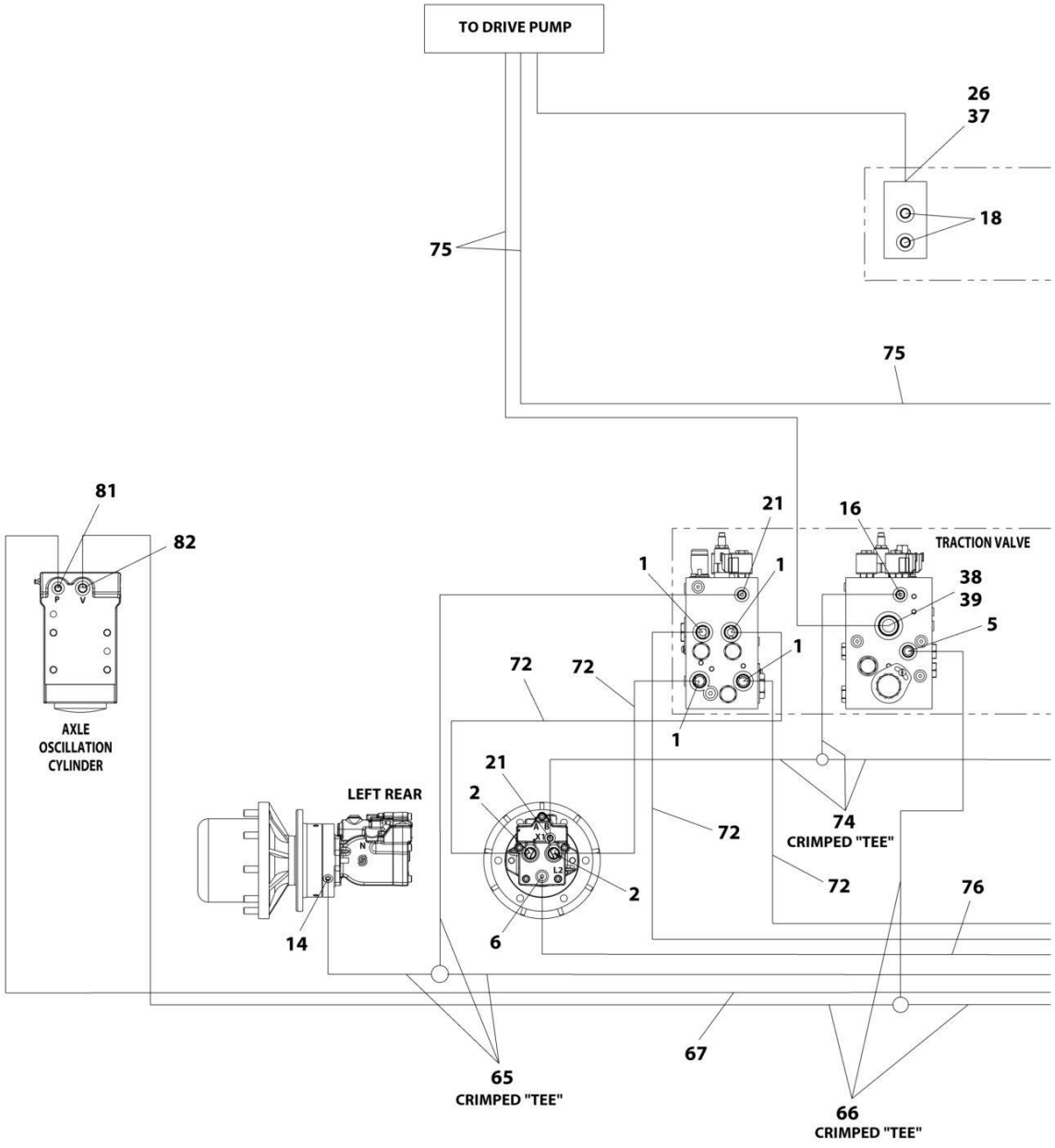

ART_1001217936_3OF4

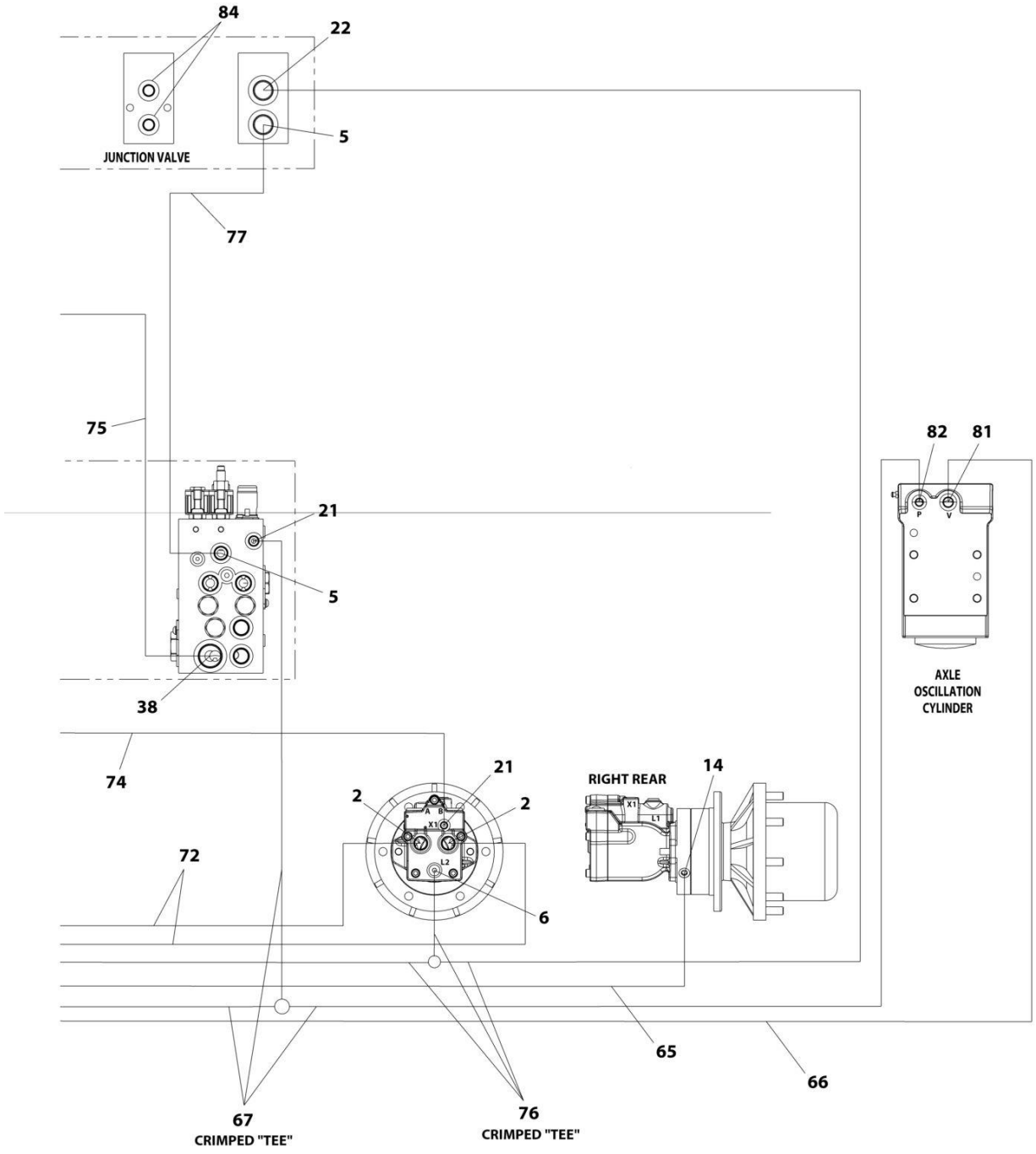

ART_1001217936_4OF4

FIGURE 7-1. 2WD HYDRAULIC SYSTEM INSTALLATION - 450A

ITEM	PART NUMBER	QTY	DESCRIPTION	REV
	1001217936	Ref	2WD HYDRAULIC SYSTEM INSTALLATION - 450A	F
1	2110810	4	Fitting, Straight ORFS/ORB	
2	2110812	4	Fitting, Straight ORFS/ORB	
3	2151212	2	Fitting, 45 ORFS/ORB	
5	2220372	9	Fitting, Straight JIC/ORB	
6	2220373	3	Fitting, Straight JIC/ORB	
7	2220374	4	Fitting, Straight JIC/ORB	
8	2220375	2	Fitting, Straight JIC/ORB	
9	2220377	1	Fitting, Straight JIC/ORB	
10	2220435	1	Fitting, Straight JIC/ORB	
12	2220451	1	Fitting, Straight JIC/ORB	
13	2220465	1	Fitting, 90 JIC/ORB	
14	2220466	2	Fitting, 90 JIC/ORB	
15	2220468	2	Fitting, Straight JIC/ORB	
16	2220472	5	Fitting, 90 JIC/ORB	
18	2220238	3	Plug	
19	2220501	2	Fitting, 45 JIC/ORB	
20	2220577	2	Fitting, Straight JIC/ORB **(SN 0300201991 through 0300235624)**	
20	2220497	2	Fitting, Straight JIC/ORB **(SN 0300235625 through 0300272317, Except SN 0300272185 through 0300272190)**	
21	2220582	8	Fitting, Straight JIC/ORB	
22	2220596	1	Fitting, 90 JIC/ORB	
23	2220603	1	Fitting, Straight JIC/ORB	
24	2220628	1	Fitting, 90 JIC/ORB	
25	2220600	1	Fitting, Straight JIC/ORB	
26	2220811	1	Fitting, Straight FORB/ORB	
27	2220906	2	Fitting, 90 JIC/ORB	
29	2220946	2	Fitting, Straight JIC/ORB	
30	2220947	2	Fitting, Straight JIC/ORB	
31	2221033	2	Fitting, Straight JIC/ORB	
33	2230025	1	Fitting, Straight JIC/JIC	
34	8760477	1	Fitting, Tee JIC/JIC/JIC	
35	8770289	1	Fitting, Tee JIC/ORB/JIC	
36	80633030	2	Clamp, Hose	
37	1001119627	1	Fitting, Straight JIC/ORB	
38	1001142679	2	Fitting, Straight ORFS/ORB	
39	1001143936	1	Fitting, 90 FORB/ORB	
41	1001173006	2	Hose	
42	1001173027	1	Hose	
43	1001173028	1	Hose	
44	1001173029	1	Hose	
45	2752503	1	Hose **(SN 0300201991 through 0300222765)**	
45	2752519	1	Hose **(SN 0300222766 through 0300272317, Except SN 0300272185 through 0300272190)**	
46	1001173031	1	Hose **(SN 0300201991 through 0300222765)**	
46	2752504	1	Hose **(SN 0300222766 through 0300272317, Except SN 0300272185 through 0300272190)**	
47	1001207336	1	Hose	
48	1001173034	1	Hose	
49	1001173035	1	Hose	

ITEM	PART NUMBER	QTY	DESCRIPTION	REV
50	1001173036	1	Hose	
51	1001173037	1	Hose	
52	1001173038	1	Hose	
53	1001173039	1	Hose	
54	1001176299	1	Hose	
55	1001176300	1	Hose	
56	1001173042	1	Hose	
57	1001173043	1	Hose	
58	1001176301	1	Hose	
59	1001176302	1	Hose	
60	1001215227	2	Hose	
63	1001207335	1	Hose	
64	1001207334	1	Hose **(SN 0300201991 through 0300222765)**	
64	1001207335	1	Hose **(SN 0300222766 through 0300272317, Except SN 0300272185 through 0300272190)**	
65	1001173052	1	Hose	
66	1001173053	1	Hose	
67	1001173054	1	Hose	
71	1001173058	1	Hose	
72	1001173059	1	Hose	
74	1001173061	1	Hose	
75	1001173062	1	Hose	
76	1001173063	1	Hose	
77	1001197039	1	Hose	
80	1001180035	2	Hose	
81	2220923	2	Fitting, Straight JIC/ORB	
82	2220998	2	Fitting, Straight JIC/ORB	
83	2221086	1	Fitting, Diagnostic	
84	2220883	2	Plug #4	
85	1001202910	2	Fitting, Straight MORB	

FIGURE 7-2. 2WD HYDRAULIC SYSTEM INSTALLATION - 450AJ

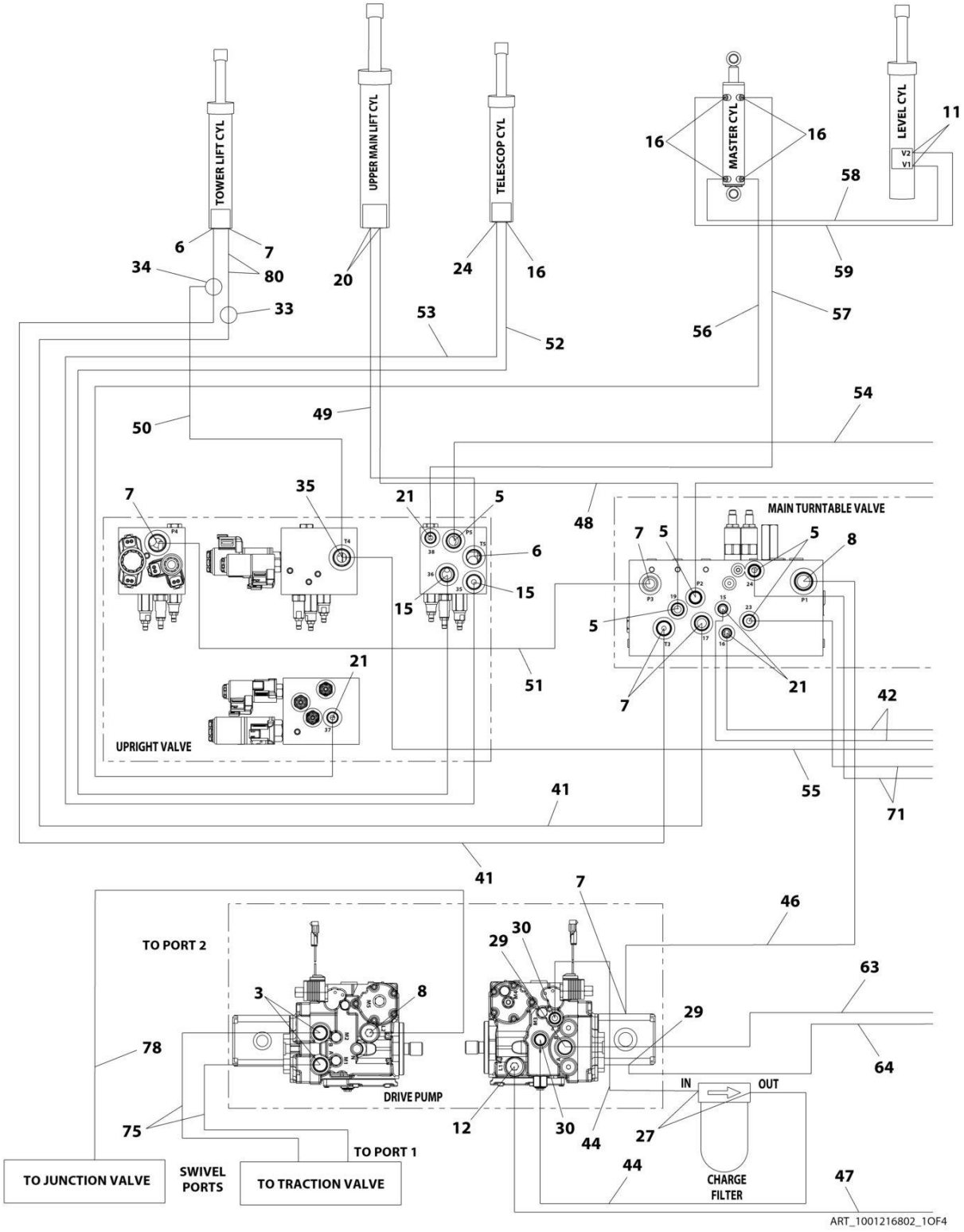

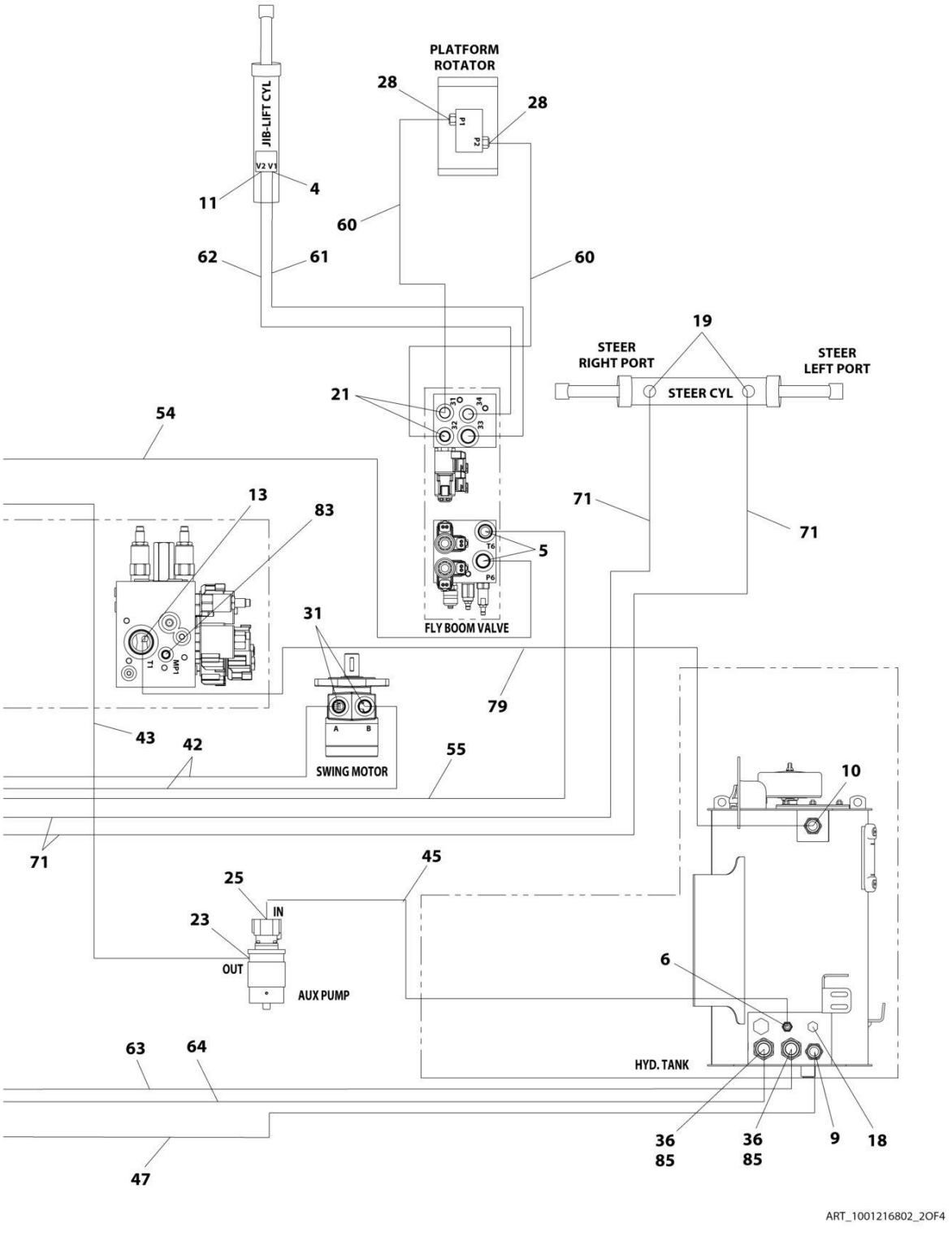

ART_1001216802_2OF4

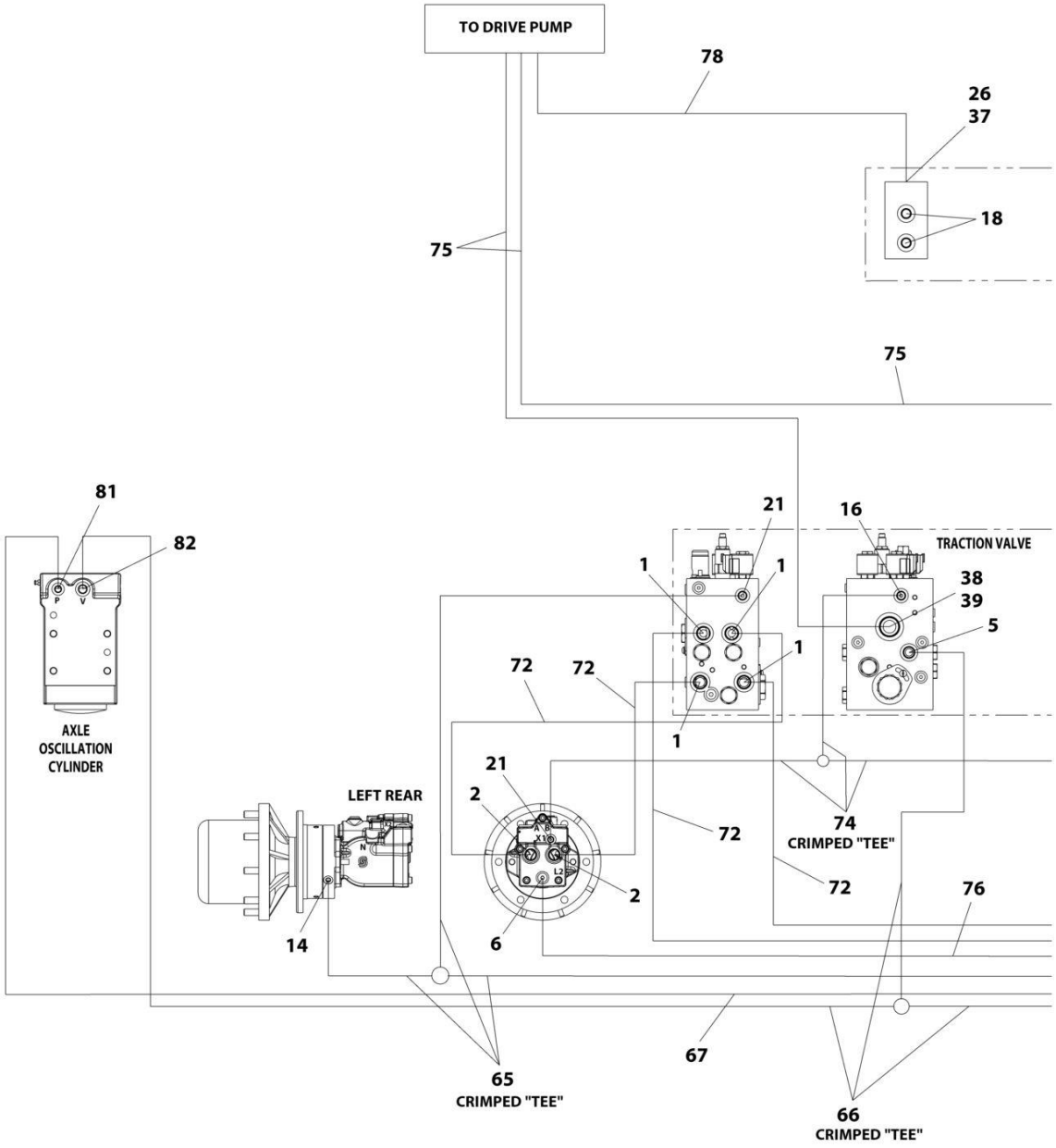

ART_1001216802_3OF4

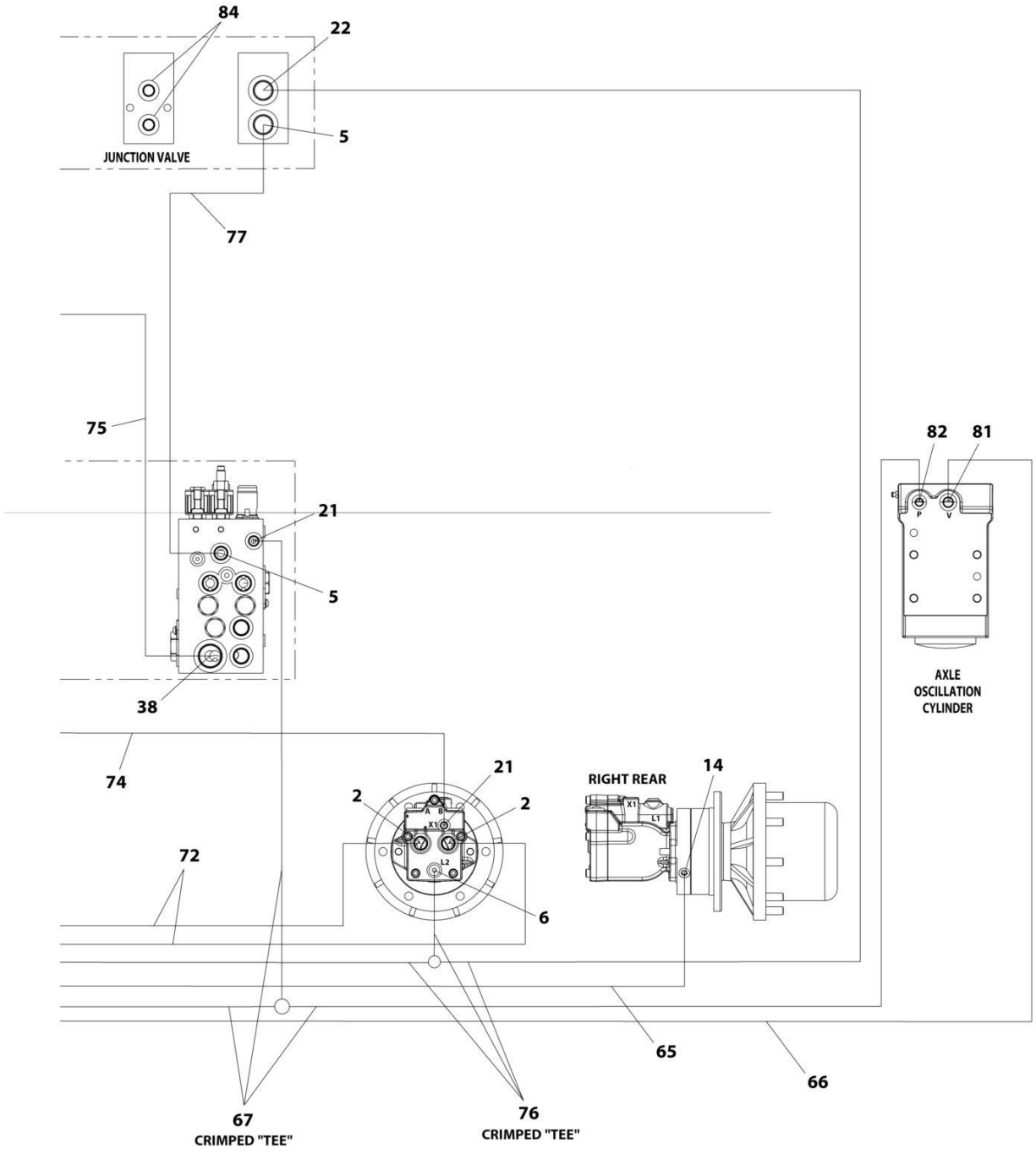

ART_1001216802_4OF4

FIGURE 7-2. 2WD HYDRAULIC SYSTEM INSTALLATION - 450AJ

ITEM	PART NUMBER	QTY	DESCRIPTION	REV
	1001216802	Ref	2WD HYDRAULIC SYSTEM INSTALLATION - 450AJ	C
1	2110810	4	Fitting, Straight ORFS/ORB	
2	2110812	4	Fitting, Straight ORFS/ORB	
3	2151212	2	Fitting, 45 ORFS/ORB	
4	2220371	1	Fitting, Straight JIC/ORB	
5	2220372	11	Fitting, Straight JIC/ORB	
6	2220373	5	Fitting, Straight JIC/ORB	
7	2220374	6	Fitting, Straight JIC/ORB	
8	2220375	2	Fitting, Straight JIC/ORB	
9	2220377	1	Fitting, Straight JIC/ORB	
10	2220435	1	Fitting, Straight JIC/ORB	
11	2220415	3	Fitting, Straight JIC/ORB	
12	2220451	1	Fitting, Straight JIC/ORB	
13	2220465	1	Fitting, 90 JIC/ORB	
14	2220466	2	Fitting, 90 JIC/ORB	
15	2220468	2	Fitting, Straight JIC/ORB	
16	2220472	6	Fitting, 90 JIC/ORB	
18	2220238	3	Plug	
19	2220501	2	Fitting, 45 JIC/ORB	
20	2220577	2	Fitting, Straight JIC/ORB **(SN 0300201991 through 0300226834)**	
20	2220497	2	Fitting, Straight JIC/ORB **(SN 0300226835 through 0300272317, Except SN 0300272185 through 0300272190)**	
21	2220582	11	Fitting, Straight JIC/ORB	
22	2220596	1	Fitting, 90 JIC/ORB	
23	2220603	1	Fitting, Straight JIC/ORB	
24	2220628	1	Fitting, 90 JIC/ORB	
25	2220600	1	Fitting, Straight JIC/ORB	
26	2220811	1	Fitting, Straight FORB/ORB	
27	2220906	2	Fitting, 90 JIC/ORB	
28	2220940	2	Fitting, Elbow	
29	2220946	2	Fitting, Straight JIC/ORB	
30	2220947	2	Fitting, Straight JIC/ORB	
31	2221033	2	Fitting, Straight JIC/ORB	
33	2230025	1	Fitting, Straight JIC/JIC	
34	8760477	1	Fitting, Tee JIC/JIC/JIC	
35	8770289	1	Fitting, Tee JIC/ORB/JIC	
36	80633030	2	Clamp, Hose	
37	1001119627	1	Fitting, Straight JIC/ORB	
38	1001142679	2	Fitting, Straight ORFS/ORB	
39	1001143936	1	Fitting, 90 FORB/ORB	
41	1001173006	2	Hose	
42	1001173027	2	Hose	
43	1001173028	1	Hose	
44	1001173029	2	Hose	
45	2752503	1	Hose **(SN 0300201991 through 0300222765)**	
45	2752519	1	Hose **(SN 0300222766 through 0300272317, Except SN 0300272185 through 0300272190)**	
46	1001173031	1	Hose **(SN 0300201991 through 0300222765)**	
46	2752504	1	Hose **(SN 0300222766 through 0300272317, Except SN 0300272185 through 0300272190)**	

ITEM	PART NUMBER	QTY	DESCRIPTION	REV
47	1001207336	1	Hose	
48	1001173034	1	Hose	
49	1001173035	1	Hose	
50	1001173036	1	Hose	
51	1001173037	1	Hose	
52	1001173038	1	Hose	
53	1001173039	1	Hose	
54	1001173040	1	Hose	
55	1001173041	1	Hose	
56	1001173042	1	Hose	
57	1001173043	1	Hose	
58	1001173044	1	Hose	
59	1001173045	1	Hose	
60	1001173046	2	Hose	
61	1001173048	1	Hose	
62	1001173049	1	Hose	
63	1001207335	1	Hose	
64	1001207334	1	Hose **(SN 0300201991 through 0300222765)**	
64	1001207335	1	Hose **(SN 0300222766 through 0300272317, Except SN 0300272185 through 0300272190)**	
65	1001173052	1	Hose	
66	1001173053	1	Hose	
67	1001173054	1	Hose	
71	1001173058	2	Hose	
72	1001173059	4	Hose	
74	1001173061	1	Hose	
75	1001173062	2	Hose	
76	1001173063	1	Hose	
77	1001197039	1	Hose	
78	1001173066	1	Hose	
79	1001210356	1	Tube	
80	1001180035	2	Hose	
81	2220923	2	Fitting, Straight JIC/ORB	
82	2220998	2	Fitting, Straight JIC/ORB	
83	2221086	1	Fitting, Diagnostic	
84	2220883	2	Plug #4	
85	1001202910	2	Fitting, Straight MORB	

FIGURE 7-3. 4WD HYDRAULIC SYSTEM INSTALLATION - 450A

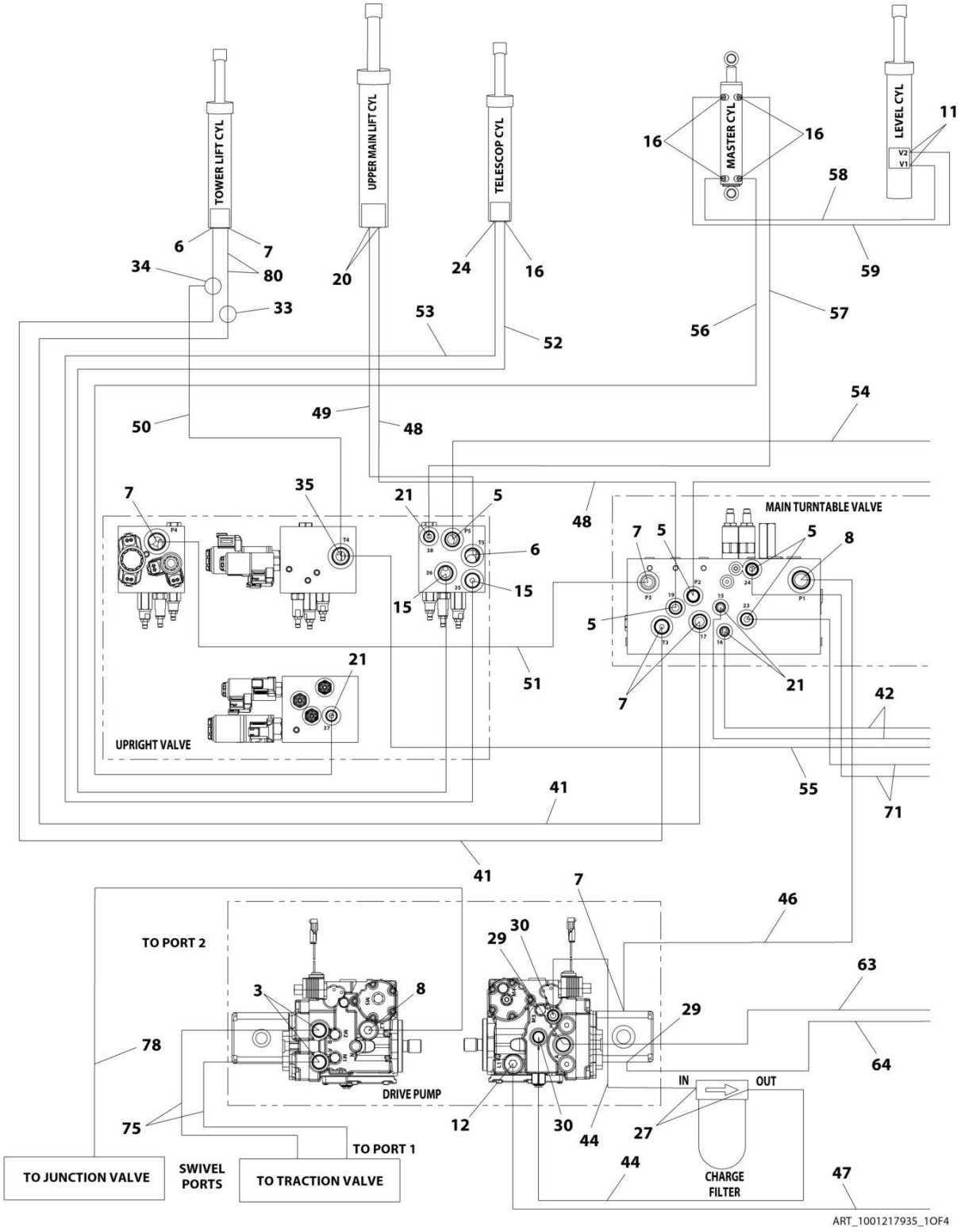

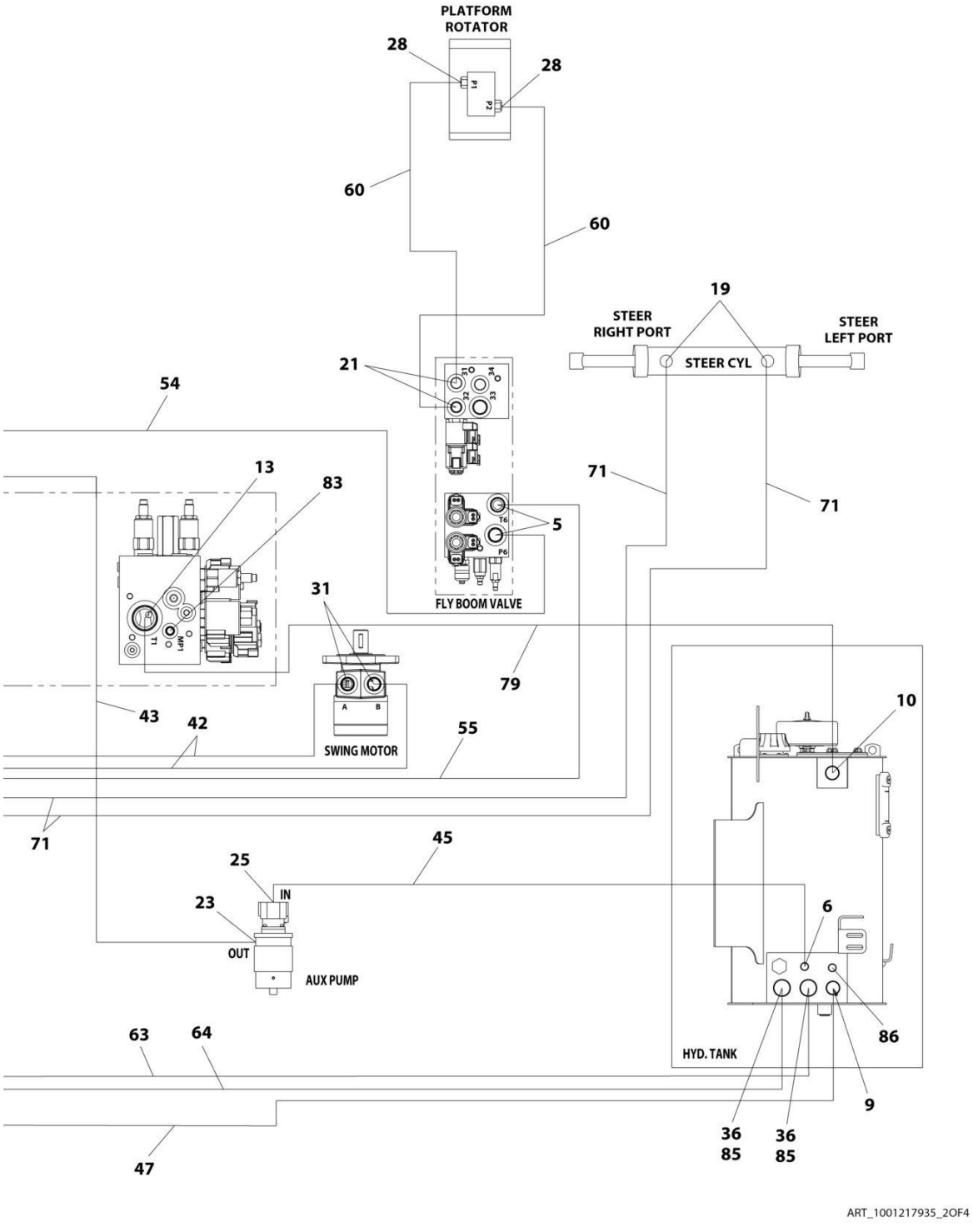
PLATFORM
ROTATOR
28
28
P1
P2
60
60
19
STEER
RIGHT PORT
STEER
LEFT PORT
STEER CYL
21
31
34
32
33
54
13
83
71
71
T6
5
P6
FLY BOOM VALVE
31
T1
MP1
79
A
B
SWING MOTOR
43
42
55
10
71
45
25
IN
23
OUT
AUX PUMP
6
86
HYD. TANK
63
64
9
36
85
36
85
47
ART_1001217935_2OF4

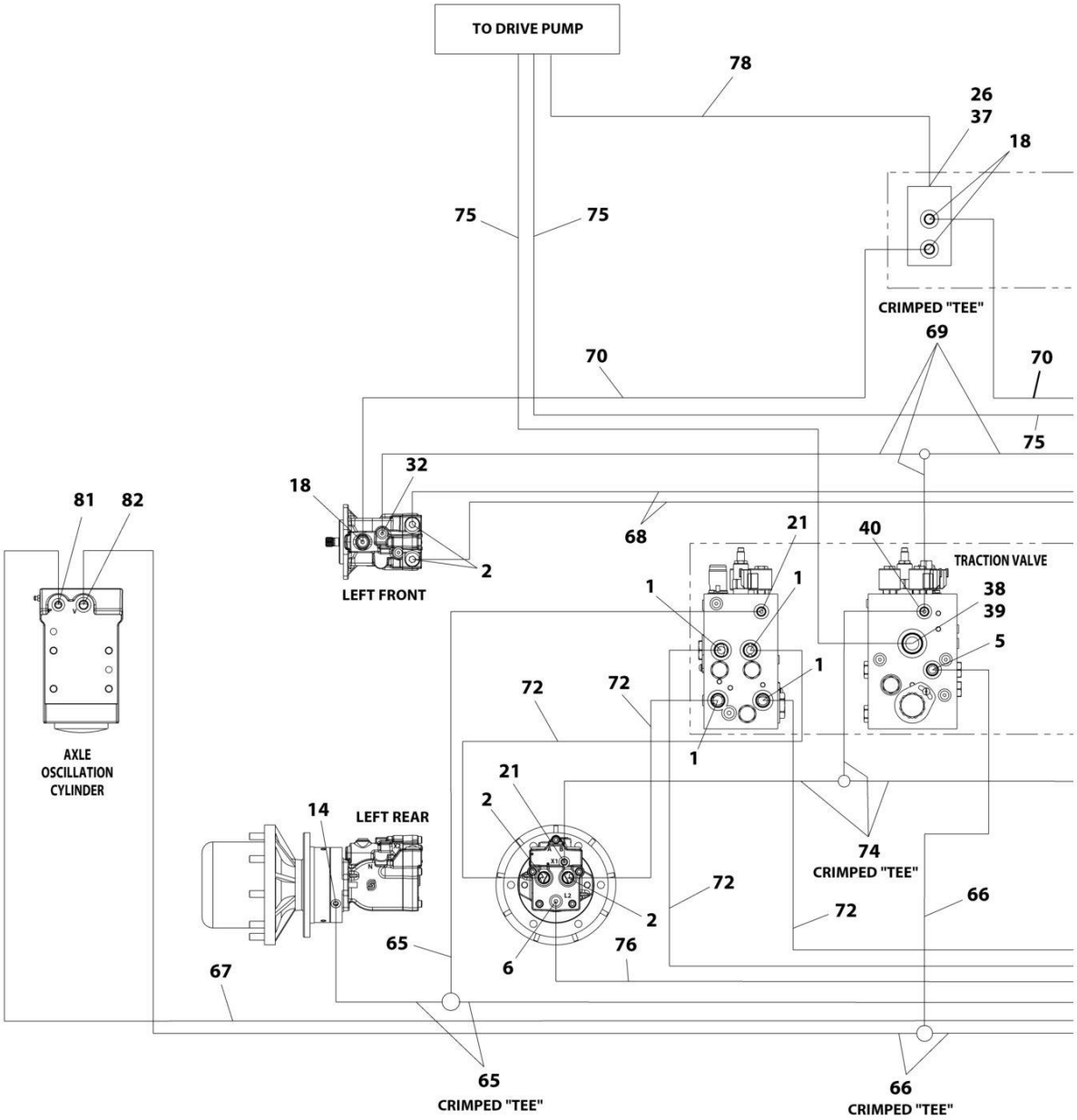

ART_1001217935_3OF4

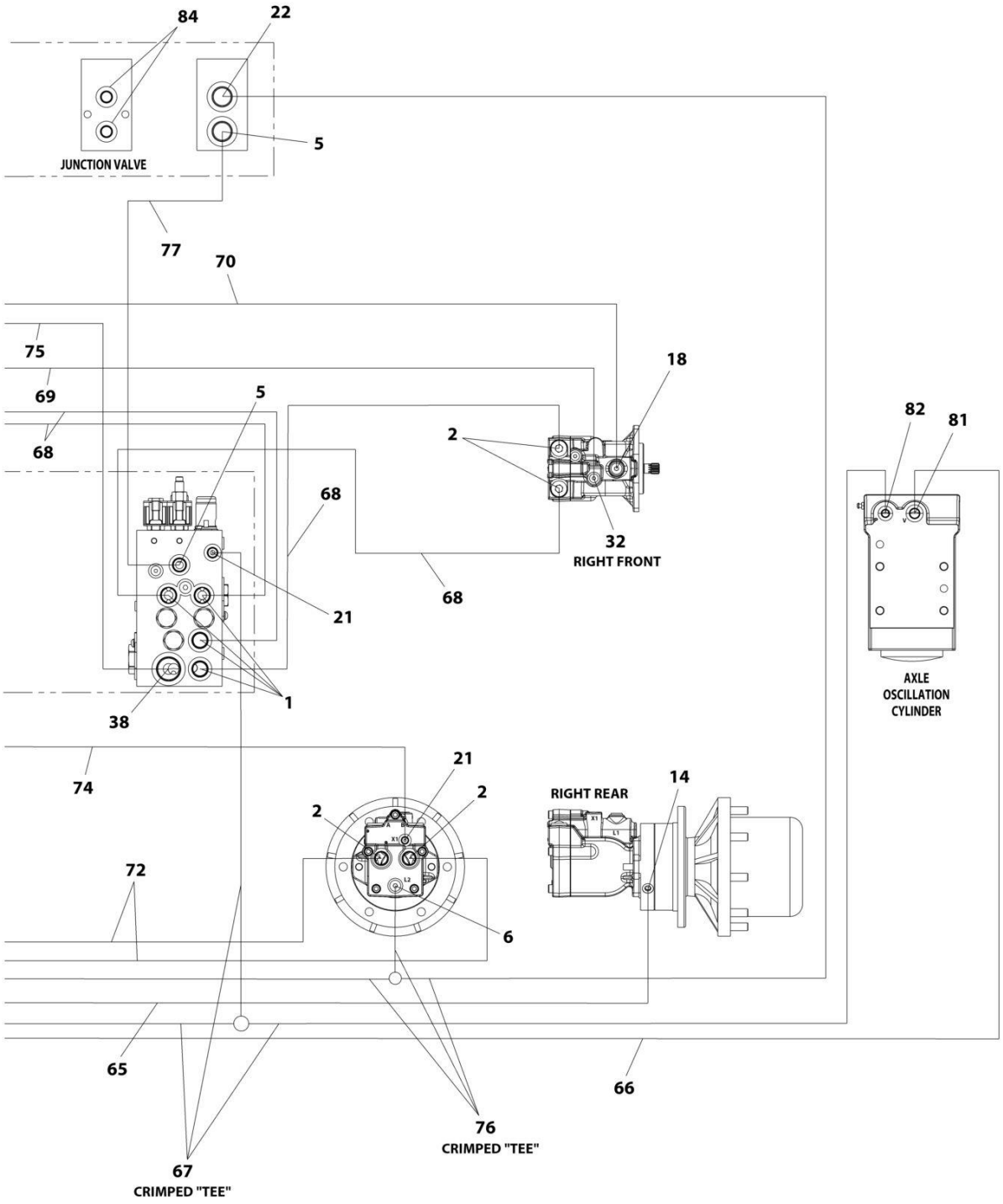
84
22
5
JUNCTION VALVE
77
70
75
69
68
5
18
2
82
81
68
32
RIGHT FRONT
68
21
1
38
AXLE
OSCILLATION
CYLINDER
74
21
2
2
RIGHT REAR
14
72
6
65
66
76
CRIMPED "TEE"
67
CRIMPED "TEE"
ART_1001217935_4OF4

FIGURE 7-3. 4WD HYDRAULIC SYSTEM INSTALLATION - 450A

ITEM	PART NUMBER	QTY	DESCRIPTION	REV
	1001217935	Ref	4WD HYDRAULIC SYSTEM INSTALLATION - 450A	F
1	2110810	8	Fitting, Straight ORFS/ORB	
2	2110812	8	Fitting, Straight ORFS/ORB	
3	2151212	2	Fitting, 45 ORFS/ORB	
5	2220372	9	Fitting, Straight JIC/ORB	
6	2220373	3	Fitting, Straight JIC/ORB	
7	2220374	4	Fitting, Straight JIC/ORB	
8	2220375	2	Fitting, Straight JIC/ORB	
9	2220377	1	Fitting, Straight JIC/ORB	
10	2220435	1	Fitting, Straight JIC/ORB	
11	2220415	2	Fitting, Straight JIC/ORB	
12	2220451	1	Fitting, Straight JIC/ORB	
13	2220465	1	Fitting, 90 JIC/ORB	
14	2220466	2	Fitting, 90 JIC/ORB	
15	2220468	2	Fitting, Straight JIC/ORB	
16	2220472	5	Fitting, 90 JIC/ORB	
18	2220500	4	Fitting, 45 JIC/ORB	
19	2220501	2	Fitting, 45 JIC/ORB	
20	2220577	2	Fitting, Straight JIC/ORB **(SN 0300201991 through 0300235624)**	
20	2220497	2	Fitting, Straight JIC/ORB **(SN 0300235625 through 0300272317, Except SN 0300272185 through 0300272190)**	
21	2220582	8	Fitting, Straight JIC/ORB	
22	2220596	1	Fitting, 90 JIC/ORB	
23	2220603	1	Fitting, Straight JIC/ORB	
24	2220628	1	Fitting, 90 JIC/ORB	
25	2220600	1	Fitting, Straight JIC/ORB	
26	2220811	1	Fitting, Straight FORB/ORB	
27	2220906	2	Fitting, 90 JIC/ORB	
28	2220940	2	Fitting, Elbow	
29	2220946	2	Fitting, Straight JIC/ORB	
30	2220947	2	Fitting, Straight JIC/ORB	
31	2221033	2	Fitting, Straight JIC/ORB	
32	2221040	2	Fitting, 45 JIC/ORB	
33	2230025	1	Fitting, Straight JIC/JIC	
34	8760477	1	Fitting, Tee JIC/JIC/JIC	
35	8770289	1	Fitting, Tee JIC/ORB/JIC	
36	80633030	2	Clamp, Hose	
37	1001119627	1	Fitting, Straight JIC/ORB	
38	1001142679	2	Fitting, Straight ORFS/ORB	
39	1001143936	1	Fitting, 90 FORB/ORB	
40	1001175024	1	Fitting, Tee JIC/JIC/ORB	
41	1001173006	2	Hose	
42	1001173027	2	Hose	
43	1001173028	1	Hose	
44	1001173029	2	Hose	
45	2752503	1	Hose **(SN 0300201991 through 0300222765)**	
45	2752519	1	Hose **(SN 0300222766 through 0300272317, Except SN 0300272185 through 0300272190)**	
46	1001173031	1	Hose **(SN 0300201991 through 0300222765)**	
46	2752504	1	Hose **(SN 0300222766 through 0300272317, Except SN**	

ITEM	PART NUMBER	QTY	DESCRIPTION	REV
			0300272185 through 0300272190)	
47	1001207336	1	Hose	
48	1001173034	1	Hose	
49	1001173035	1	Hose	
50	1001173036	1	Hose	
51	1001173037	1	Hose	
52	1001173038	1	Hose	
53	1001173039	1	Hose	
54	1001176299	1	Hose	
55	1001176300	1	Hose	
56	1001173042	1	Hose	
57	1001173043	1	Hose	
58	1001176301	1	Hose	
59	1001176302	1	Hose	
60	1001215227	2	Hose	
63	1001207335	1	Hose	
64	1001207334	1	Hose **(SN 0300201991 through 0300222765)**	
64	1001207335	1	Hose **(SN 0300222766 through 0300272317, Except SN 0300272185 through 0300272190)**	
65	1001173052	1	Hose	
66	1001173053	1	Hose	
67	1001173054	1	Hose	
68	1001173055	4	Hose	
69	1001173056	1	Hose	
70	1001173057	2	Hose	
71	1001173058	2	Hose	
72	1001173059	4	Hose	
74	1001173061	1	Hose	
75	1001173062	2	Hose	
76	1001173063	1	Hose	
77	1001197039	1	Hose	
78	1001173066	1	Hose	
79	1001210356	1	Tube Assembly	
80	1001180035	2	Hose	
81	2220923	2	Fitting, Straight JIC/ORB	
82	2220998	2	Fitting, Straight JIC/ORB	
83	2221086	1	Fitting, Diagnostic	
84	2220883	2	Plug #4	
85	1001202910	2	Fitting, Straight MORB	
86	2220238	1	Plug	

FIGURE 7-4. 4WD HYDRAULIC SYSTEM INSTALLATION - 450AJ (SN 0300201991 through 0300225480, SN E300002833 through E300004226)

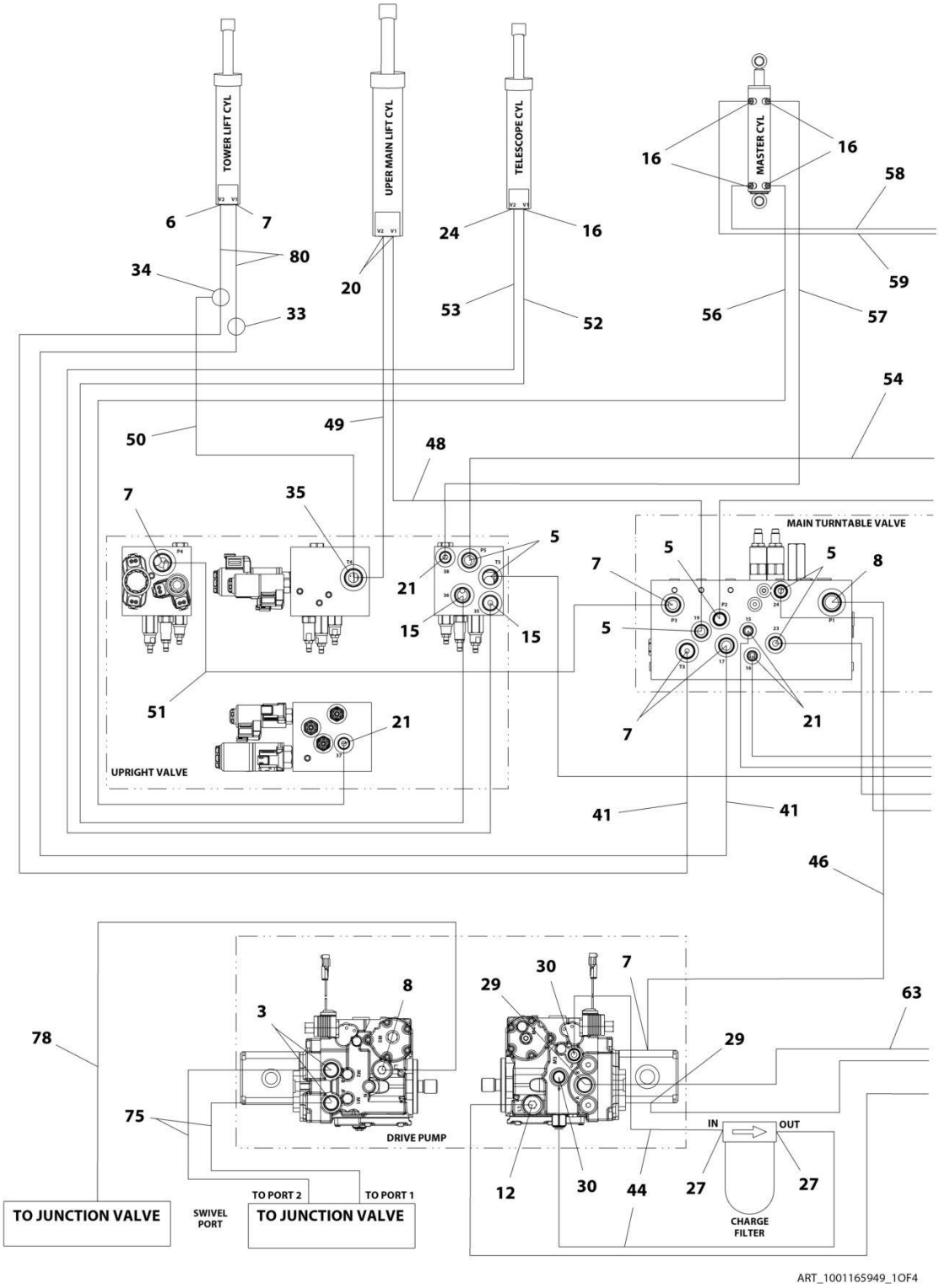

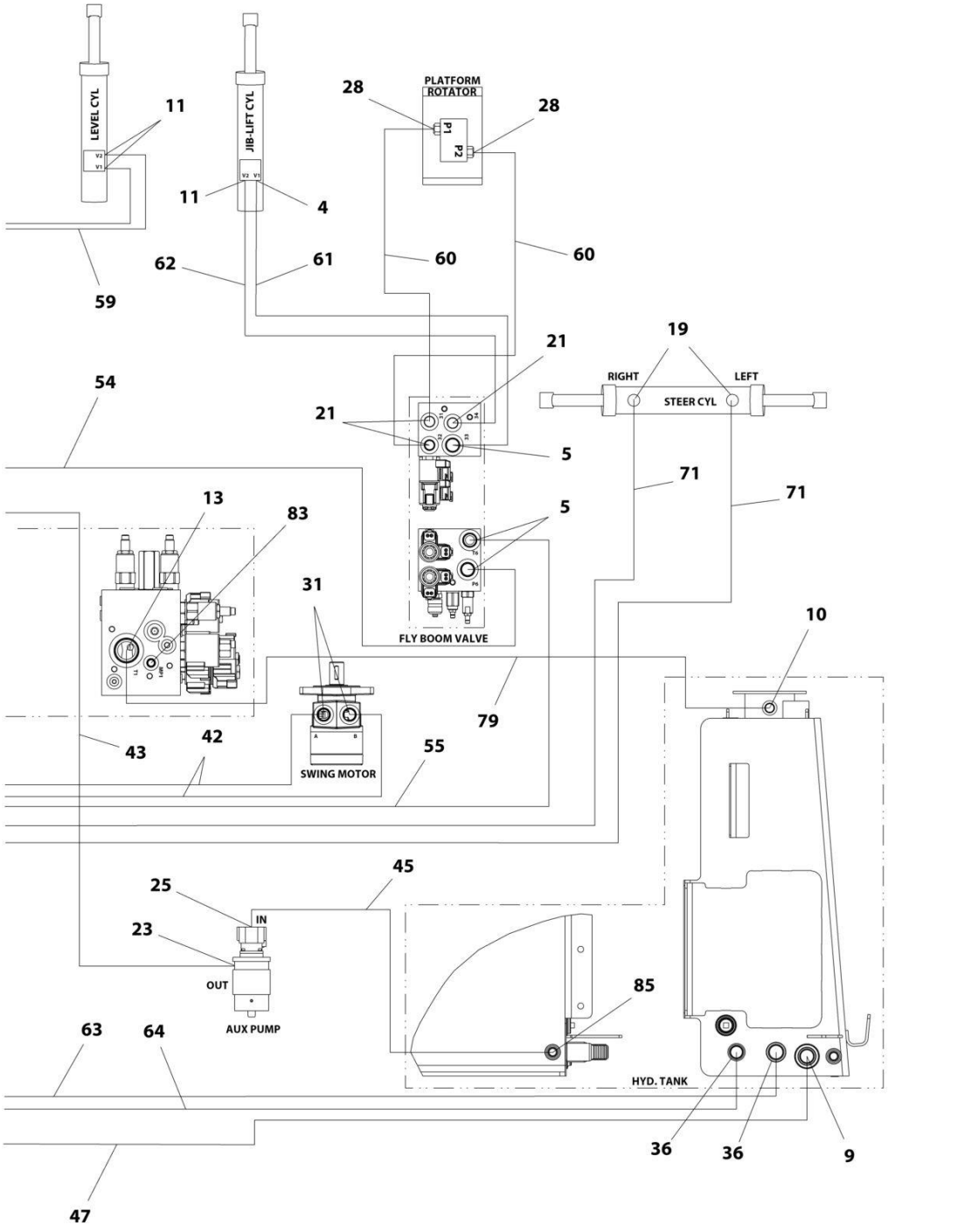

ART_1001165949_2OF4

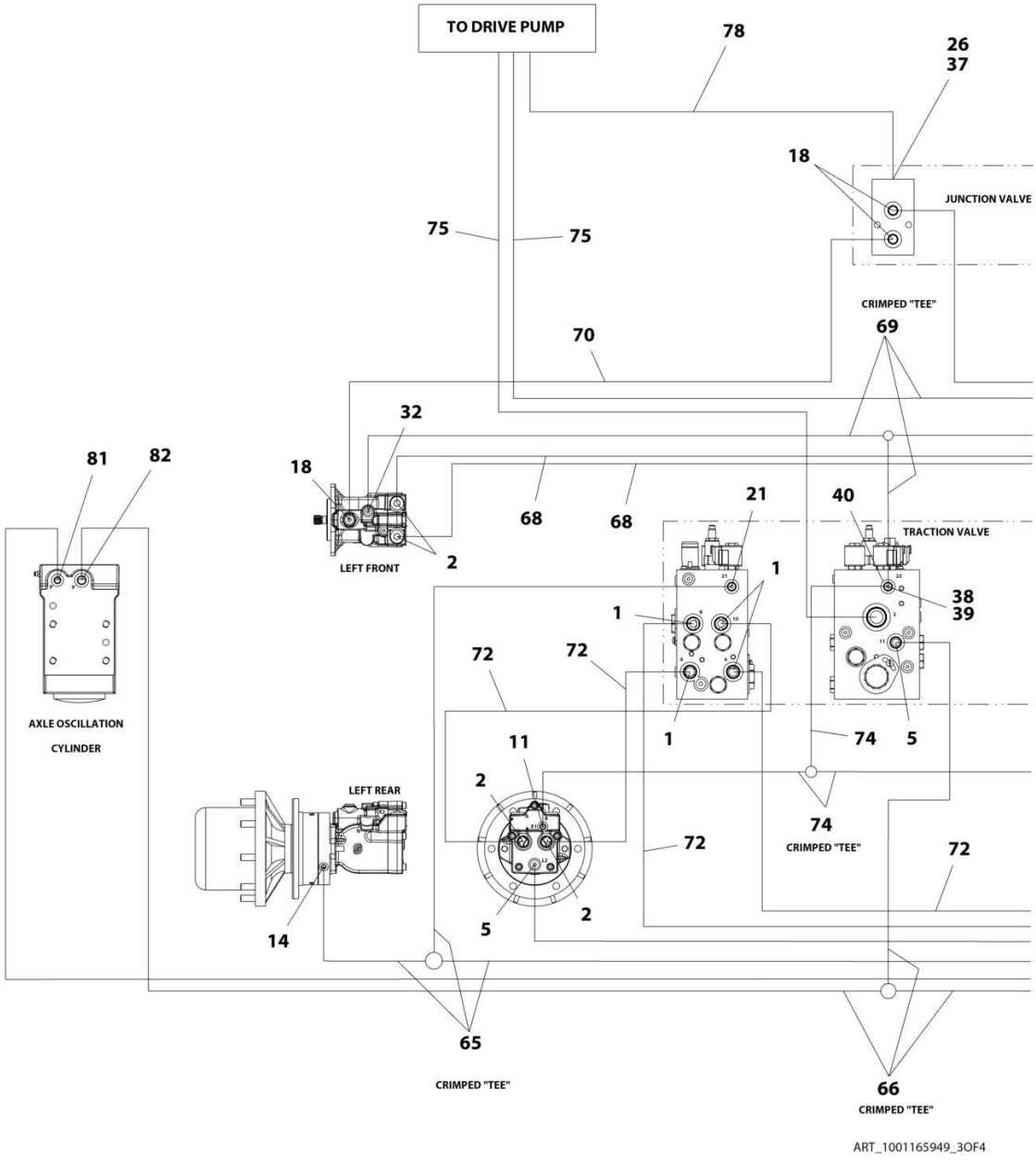
TO DRIVE PUMP
78
26
37
18
JUNCTION VALVE
75
75
CRIMPED "TEE"
70
69
32
81
82
18
68
68
21
40
TRACTION VALVE
LEFT FRONT
2
1
1
38
39
72
72
AXLE OSCILLATION
CYLINDER
1
74
5
11
LEFT REAR
2
74
CRIMPED "TEE"
72
72
14
5
2
65
CRIMPED "TEE"
66
CRIMPED "TEE"
ART_1001165949_3OF4

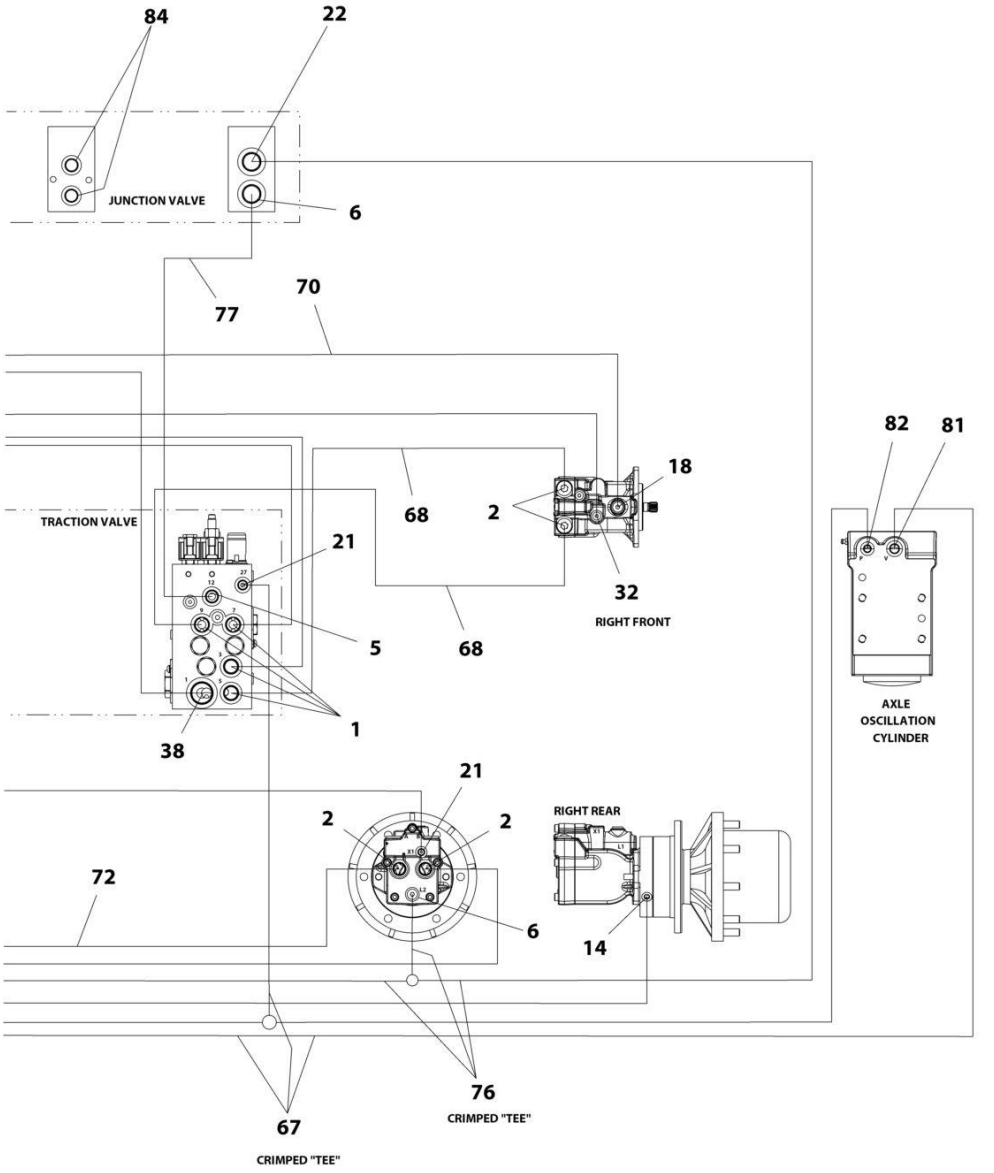

ART_1001165949_4OF4

FIGURE 7-4. 4WD HYDRAULIC SYSTEM INSTALLATION - 450AJ (SN 0300201991 through 0300225480, SN E300002833 through E300004226)

ITEM	PART NUMBER	QTY	DESCRIPTION	REV
	1001165949	Ref	4WD HYDRAULIC SYSTEM INSTALLATION - 450AJ **(SN 0300201991 through 0300225480, SN E300002833 through E300004226)**	H
1	2110810	8	Fitting, Straight ORFS/ORB	
2	2110812	8	Fitting, Straight ORFS/ORB	
3	2151212	2	Fitting, 45 ORFS/ORB	
4	2220371	1	Fitting, Straight JIC/ORB	
5	2220372	11	Fitting, Straight JIC/ORB	
6	2220373	5	Fitting, Straight JIC/ORB	
7	2220374	6	Fitting, Straight JIC/ORB	
8	2220375	2	Fitting, Straight JIC/ORB	
9	2220377	1	Fitting, Straight JIC/ORB	
10	2220408	1	Fitting, Straight JIC/ORB	
11	2220415	5	Fitting, Straight JIC/ORB	
12	2220451	1	Fitting, Straight JIC/ORB	
13	2220465	1	Fitting, 90 JIC/ORB	
14	2220466	2	Fitting, 90 JIC/ORB	
15	2220468	2	Fitting, Straight JIC/ORB	
16	2220472	5	Fitting, 90 JIC/ORB	
18	2220500	4	Fitting, 45 JIC/ORB	
19	2220501	2	Fitting, 45 JIC/ORB	
20	2220577	2	Fitting, Straight JIC/ORB	
21	2220582	11	Fitting, Straight JIC/ORB	
22	2220596	1	Fitting, 90 JIC/ORB	
23	2220603	1	Fitting, Straight JIC/ORB	
24	2220628	1	Fitting, 90 JIC/ORB	
25	2220726	1	Fitting, 90 JIC/ORB	
26	2220811	1	Fitting, Straight FORB/ORB	
27	2220906	2	Fitting, 90 JIC/ORB	
28	2220940	2	Fitting, Elbow	
29	2220946	2	Fitting, Straight JIC/ORB	
30	2220947	2	Fitting, Straight JIC/ORB	
31	2221033	2	Fitting, Straight JIC/ORB	
32	2221040	2	Fitting, 45 JIC/ORB	
33	2230025	1	Fitting, Straight JIC/JIC	
34	8760477	1	Fitting, Tee JIC/JIC/JIC	
35	8770289	1	Fitting, Tee JIC/ORB/JIC	
36	80633030	2	Clamp, Hose	
37	1001119627	1	Fitting, Straight JIC/ORB	
38	1001142679	2	Fitting, Straight ORFS/ORB	
39	1001143936	1	Fitting, 90 FORB/ORB	
40	1001175024	1	Fitting, Tee JIC/JIC/ORB	
41	1001173006	2	Hose	
42	1001173027	2	Hose	
43	1001173028	1	Hose	
44	1001173029	2	Hose	
45	1001173030	1	Hose	
46	1001173031	1	Hose	
47	1001173032	1	Hose	

ITEM	PART NUMBER	QTY	DESCRIPTION	REV
48	1001173034	1	Hose	
49	1001173035	1	Hose	
50	1001173036	1	Hose	
51	1001173037	1	Hose	
52	1001173038	1	Hose	
53	1001173039	1	Hose	
54	1001173040	1	Hose	
55	1001173041	1	Hose	
56	1001173042	1	Hose	
57	1001173043	1	Hose	
58	1001173044	1	Hose	
59	1001173045	1	Hose	
60	1001173046	2	Hose	
61	1001173048	1	Hose	
62	1001173049	1	Hose	
63	1001173050	1	Hose	
64	1001173051	1	Hose	
65	1001173052	1	Hose	
66	1001173053	1	Hose	
67	1001173054	1	Hose	
68	1001173055	4	Hose	
69	1001173056	1	Hose	
70	1001173057	2	Hose	
71	1001173058	2	Hose	
72	1001173059	4	Hose	
74	1001173061	1	Hose	
75	1001173062	2	Hose	
76	1001173063	1	Hose	
77	1001197039	1	Hose	
78	1001173066	1	Hose	
79	1001173631	1	Tube Assembly	
80	1001180035	2	Hose	
81	2220923	2	Fitting, Straight JIC/ORB	
82	2220998	2	Fitting, Straight JIC/ORB	
83	2221086	1	Fitting, Diagnostic	
84	2220883	2	Plug #4	
85	8765204	1	Fitting, 90 JIC/FSJIC	

FIGURE 7-5. 4WD HYDRAULIC SYSTEM INSTALLATION - 450AJ (SN 0300225481 through 0300272317, SN B300003516 through B300005760, SN E300004227 through E300007990, SN 1300007279 through 1300007373)

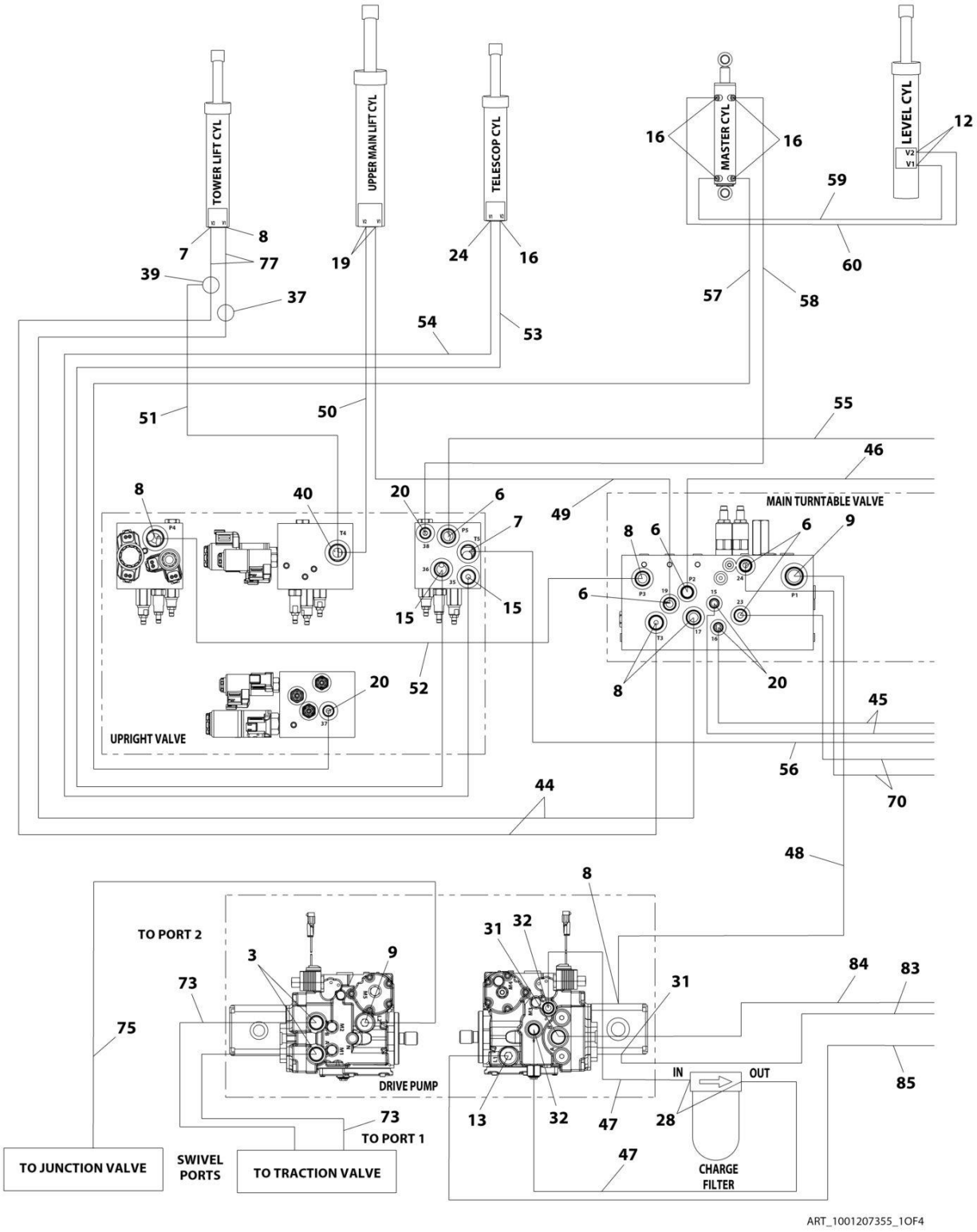

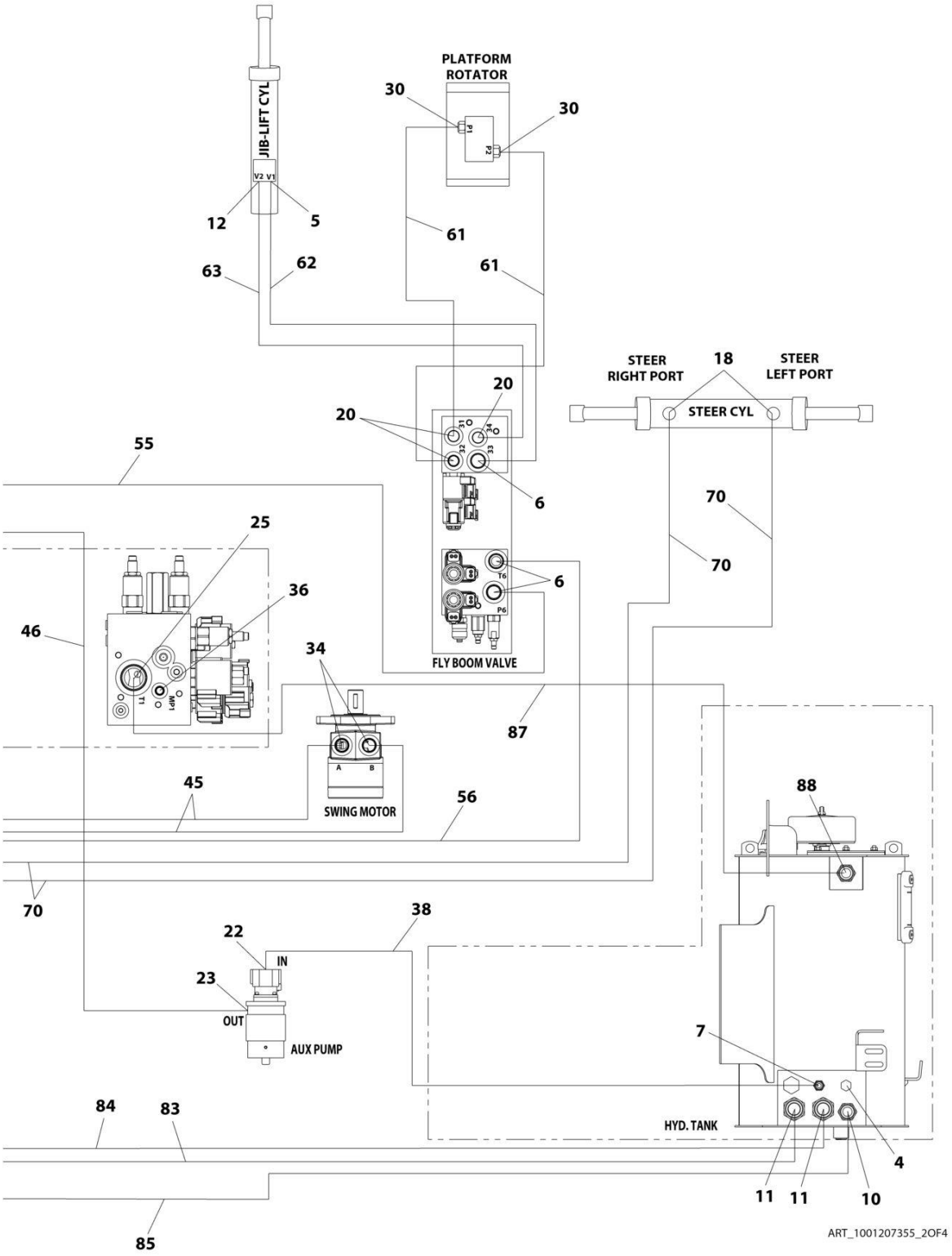
PLATFORM ROTATOR
JIB-LIFT CYL
V2 V1
P1
P2
30
30
12
5
61
61
63
62
STEER RIGHT PORT
18
STEER LEFT PORT
STEER CYL
20
20
31
34
32
33
6
55
70
70
25
36
6
T6
P6
46
34
FLY BOOM VALVE
T1
MP1
87
A
B
SWING MOTOR
45
56
88
70
38
22
IN
23
OUT
AUX PUMP
7
84
83
HYD. TANK
4
11
11
10
85
ART_1001207355_2OF4

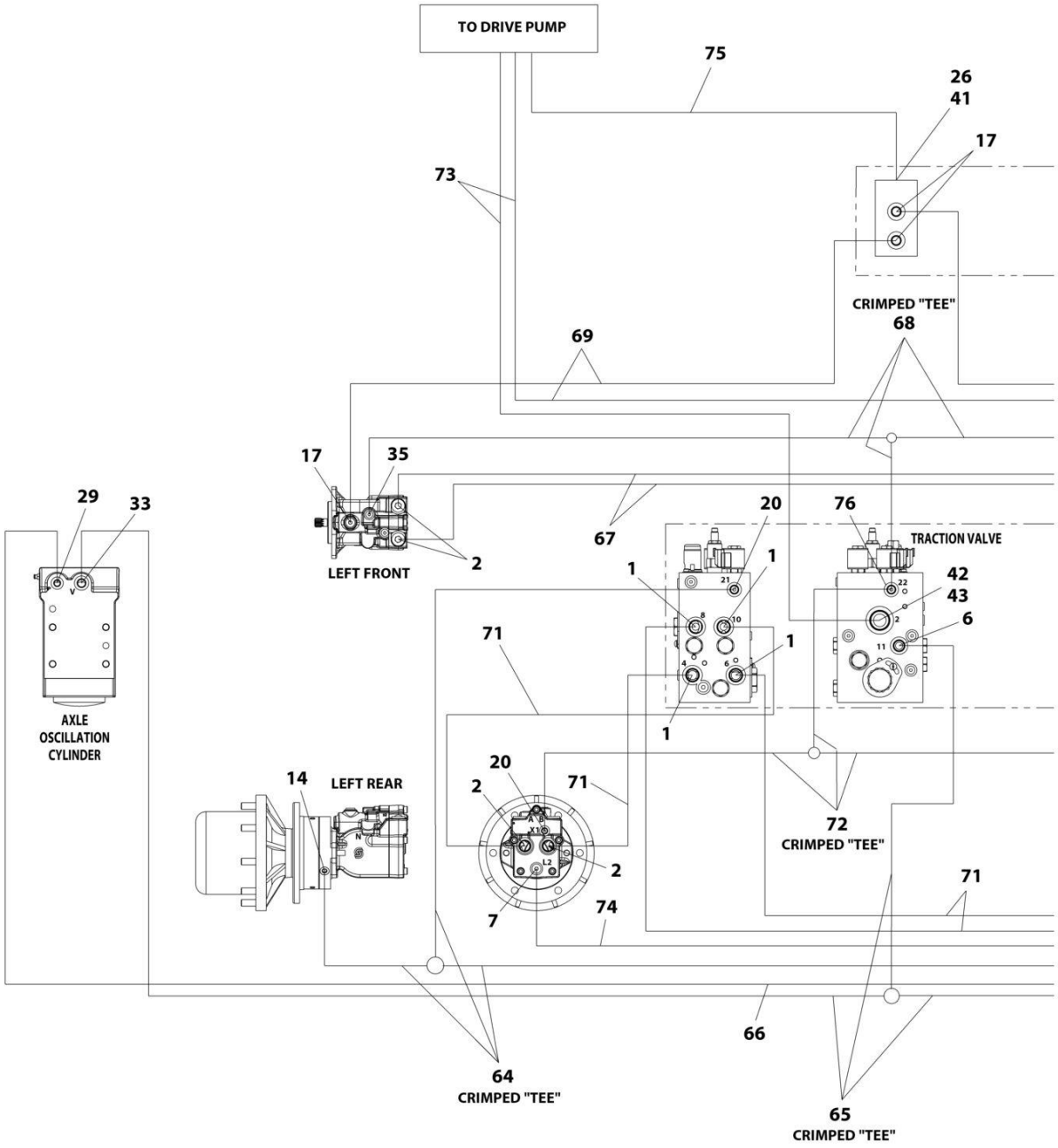

ART_1001207355_3OF4

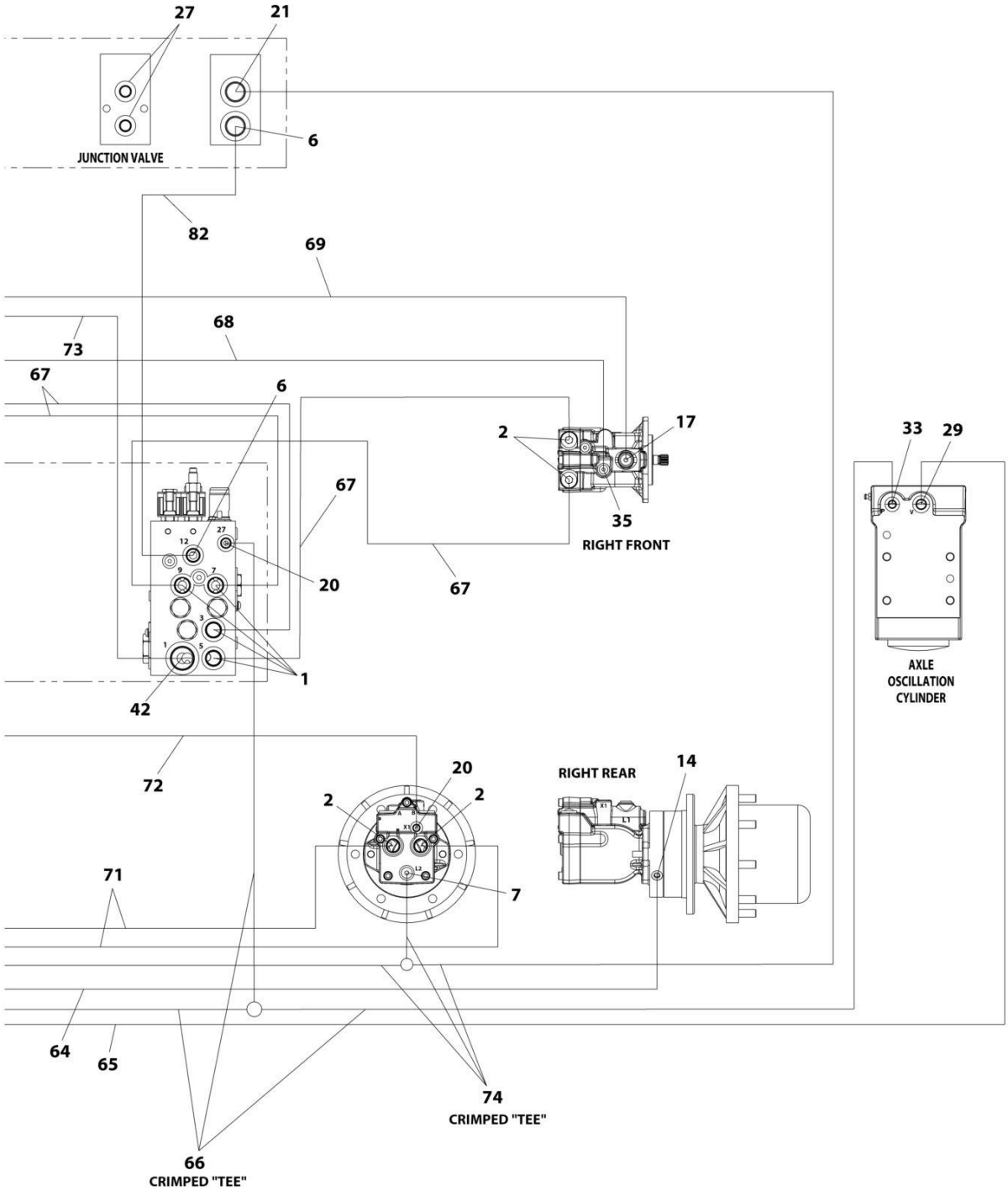
27
21
JUNCTION VALVE
6
82
69
73
68
67
6
2
17
35
RIGHT FRONT
67
20
67
1
42
33
29
AXLE
OSCILLATION
CYLINDER
72
20
2
2
RIGHT REAR
14
71
7
64
65
74
CRIMPED "TEE"
66
CRIMPED "TEE"
ART_1001207355_4OF4

FIGURE 7-5. 4WD HYDRAULIC SYSTEM INSTALLATION - 450AJ (SN 0300225481 through 0300272317, SN B300003516 through B300005760, SN E300004227 through E300007990, SN 1300007279 through 1300007373)

ITEM	PART NUMBER	QTY	DESCRIPTION	REV
	1001207355	Ref	4WD HYDRAULIC SYSTEM INSTALLATION - 450AJ	C
1	2110810	8	Fitting, Straight ORFS/ORB	
2	2110812	8	Fitting, Straight ORFS/ORB	
3	2151212	2	Fitting, 45 ORFS/ORB	
4	2220238	1	Plug	
5	2220371	1	Fitting, Straight JIC/ORB	
6	2220372	11	Fitting, Straight JIC/ORB	
7	2220373	5	Fitting, Straight JIC/ORB	
8	2220374	6	Fitting, Straight JIC/ORB	
9	2220375	2	Fitting, Straight JIC/ORB	
10	2220377	1	Fitting, Straight JIC/ORB	
11	1001202910	2	Fitting, Straight MORB	
12	2220415	3	Fitting, Straight JIC/ORB	
13	2220451	1	Fitting, Straight JIC/ORB	
14	2220466	2	Fitting, 90 JIC/ORB	
15	2220468	2	Fitting, Straight JIC/ORB	
16	2220472	5	Fitting, 90 JIC/ORB	
17	2220500	4	Fitting, 45 JIC/ORB	
18	2220501	2	Fitting, 45 JIC/ORB	
19	2220577	2	Fitting, Straight JIC/ORB **(SN 0300225481 through 0300226834, SN E300004227 through E300004380)**	
19	2220497	2	Fitting, Straight JIC/ORB **(SN 0300226835 through 0300272317, SN 1300007279 through 1300007373, SN B300003516 through B300005760, SN E300004381 through E300007990, Except SN 0300272185 through 0300272190, Excluding B300005569 and E300007814)**	
20	2220582	11	Fitting, Straight JIC/ORB	
21	2220596	1	Fitting, 90 JIC/ORB	
22	2220600	1	Fitting, Straight JIC/ORB	
23	2220603	1	Fitting, Straight JIC/ORB	
24	2220628	1	Fitting, 90 JIC/ORB	
25	2220465	1	Fitting, 90 JIC/ORB	
26	2220811	1	Fitting, Straight FORB/ORB	
27	2220883	2	Plug #4	
28	2220906	2	Fitting, 90 JIC/ORB	
29	2220923	2	Fitting, Straight JIC/ORB	
30	2220940	2	Fitting, Elbow	
31	2220946	2	Fitting, Straight JIC/ORB	
32	2220947	2	Fitting, Straight JIC/ORB	
33	2220998	2	Fitting, Straight JIC/ORB	
34	2221033	2	Fitting, Straight JIC/ORB	
35	2221040	2	Fitting, 45 JIC/ORB	
36	2221086	1	Fitting, Diagnostic	
37	2230025	1	Fitting, Straight JIC/JIC	
38	2752519	1	Hose	
39	8760477	1	Fitting, Tee JIC/JIC/JIC	
40	8770289	1	Fitting, Tee JIC/ORB/JIC	
41	1001119627	1	Fitting, Straight JIC/ORB	
42	1001142679	2	Fitting, Straight ORFS/ORB	

ITEM	PART NUMBER	QTY	DESCRIPTION	REV
43	1001143936	1	Fitting, 90 FORB/ORB	
44	1001173006	2	Hose	
45	1001173027	2	Hose	
46	1001173028	1	Hose	
47	1001173029	2	Hose	
48	2752504	1	Hose	
49	1001173034	1	Hose	
50	1001173035	1	Hose	
51	1001173036	1	Hose	
52	1001173037	1	Hose	
53	1001173038	1	Hose	
54	1001173039	1	Hose	
55	1001173040	1	Hose	
56	1001173041	1	Hose	
57	1001173042	1	Hose	
58	1001173043	1	Hose	
59	1001173044	1	Hose	
60	1001173045	1	Hose	
61	1001173046	2	Hose	
62	1001173048	1	Hose	
63	1001173049	1	Hose	
64	1001173052	1	Hose	
65	1001173053	1	Hose	
66	1001173054	1	Hose	
67	1001173055	4	Hose	
68	1001173056	1	Hose	
69	1001173057	2	Hose	
70	1001173058	2	Hose	
71	1001173059	4	Hose	
72	1001173061	1	Hose	
73	1001173062	2	Hose	
74	1001173063	1	Hose	
75	1001173066	1	Hose	
76	1001175024	1	Fitting, Tee JIC/JIC/ORB	
77	1001180035	2	Hose	
82	1001197039	1	Hose	
83	1001207335	1	Hose	
84	1001207335	1	Hose	
85	1001207336	1	Hose	
87	1001210356	1	Tube	
88	2220435	1	Fitting, Straight JIC/ORB	
89	80633030	2	Clamp, Hose	

FIGURE 7-6. HYDRAULIC DIAGRAM LIST

ITEM	PART NUMBER	QTY	DESCRIPTION	REV
		Ref	HYDRAULIC DIAGRAM LIST	
	1001217936	Ref	2WD HYDRAULIC SYSTEM INSTALLATION - 450A	F
	1001216802	Ref	2WD HYDRAULIC SYSTEM INSTALLATION - 450AJ	C
	1001217935	Ref	4WD HYDRAULIC SYSTEM INSTALLATION - 450A	F
	1001165949	Ref	4WD HYDRAULIC SYSTEM INSTALLATION - 450AJ **(SN 0300201991 through 0300225480, SN E300002833 through E300004226)**	G
	1001207355	Ref	4WD HYDRAULIC SYSTEM INSTALLATION - 450AJ **(SN 0300225481 through 0300272317, SN 1300007279 through 1300007373, SN B300003516 through B300005760, SN E300004227 through E300007990, Except SN 0300272185 through 0300272190, Excluding B300005569 and E300007814)**	C
	1001175260	Ref	HYDRAULIC SCHEMATIC (Not Shown - See Service Manual)	C

SECTION 8 - ELECTRICAL

FIGURE 8-1. ELECTRICAL DIAGRAM LIST

ITEM	PART NUMBER	QTY	DESCRIPTION	REV
		Ref	**Note: Diagrams not shown are available from the JLG Service Department. Schematics shown in the Service and Maintenance Manual.**	
		Ref	ELECTRICAL DIAGRAM LIST	
	1001157930	Ref	Electrical Schematic - 450AJ	
	1001188731	Ref	Generator Electrical Diagram - 2500W Generator - 60Hz	
	1001188732	Ref	Generator Electrical Diagram - 2500W Generator - 50Hz	
	1001175632	Ref	Generator Electrical Diagram - 4000W Generator - 50Hz (ANSI Export, CE and China Specs)	
	1001175634	Ref	Generator Electrical Diagram - 4000W Generator - 50Hz (Australian Specs)	
	1001175633	Ref	Generator Electrical Diagram - 4000W Generator - 50Hz (UK Specs)	
	1001175631	Ref	Generator Electrical Diagram - 4000W Generator - 60Hz (ANSI, ANSI Export and CSA Specs)	
	1001174675	Ref	Generator Electrical Diagram - 7500W SkyPower Generator	
	4933218	Ref	Soft Touch Electrical Diagram **(SN 0300201991 through 0300211835)**	

FIGURE 8-2. AC BOX AT PLATFORM - LOCALLY SUPPLIED COMPONENTS FOR ANSI EXPORT, AUSTRALIAN AND CE SPECS (SN 0300201991 through 0300220578, SN E300002833 through E300003512)

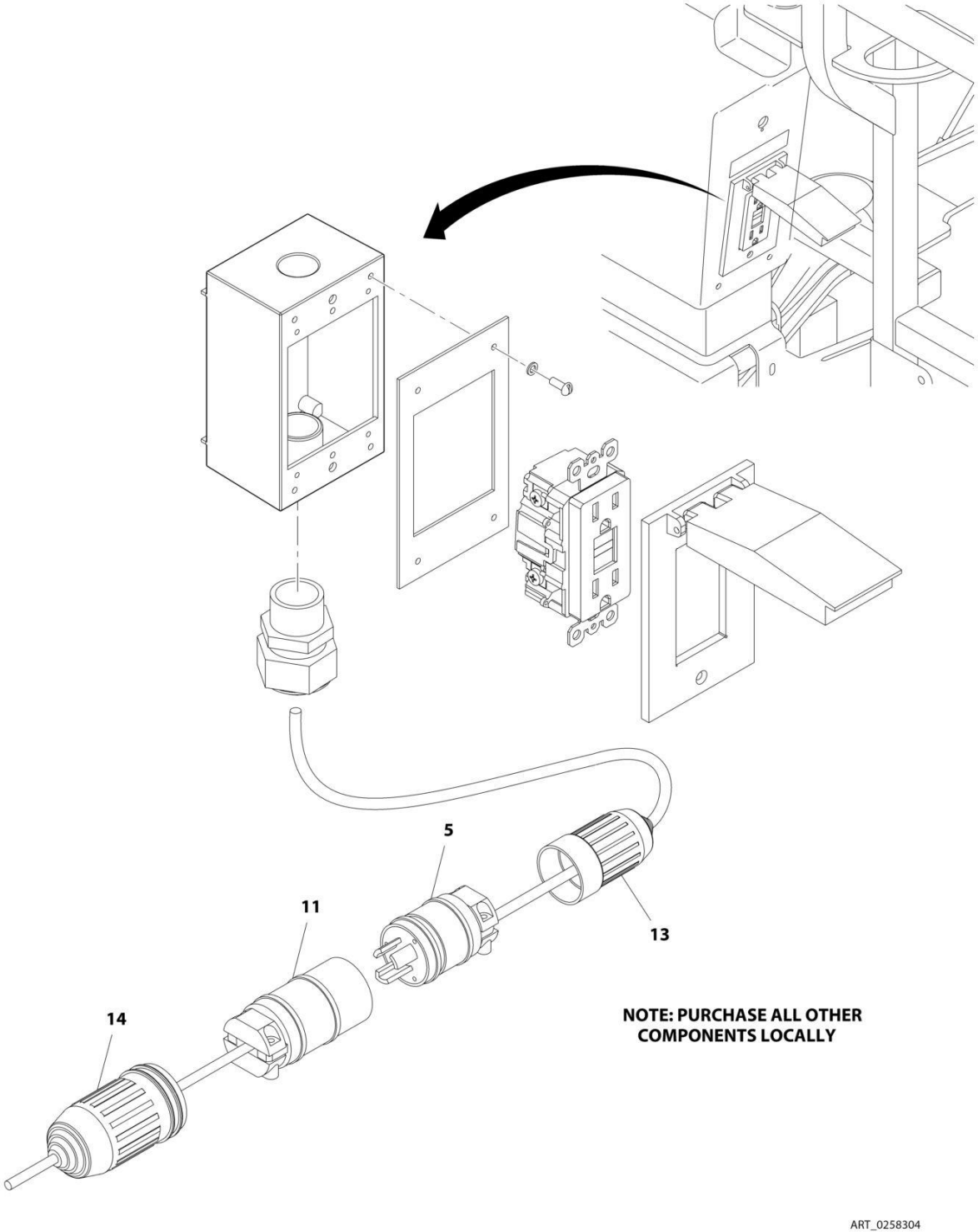

FIGURE 8-2. AC BOX AT PLATFORM - LOCALLY SUPPLIED COMPONENTS FOR ANSI EXPORT, AUSTRALIAN AND CE SPECS (SN 0300201991 through 0300220578, SN E300002833 through E300003512)

ITEM	PART NUMBER	QTY	DESCRIPTION	REV
	0258304	Ref	AC BOX AT PLATFORM - LOCALLY SUPPLIED COMPONENTS FOR ANSI EXPORT, AUSTRALIAN AND CE SPECS **(SN 0300201991 through 0300220578, SN E300002833 through E300003512)**	C
5	4460709	1	Plug	
11	4460710	1	Receptacle	
13	1001156351	1	Cover, Female Connector	
14	1001156352	1	Cover, Male Connector	

FIGURE 8-3. AC BOX AT PLATFORM INSTALLATION - 110V - ANSI, ANSI EXPORT AND CSA SPECS (SN 0300201991 through 0300220578)

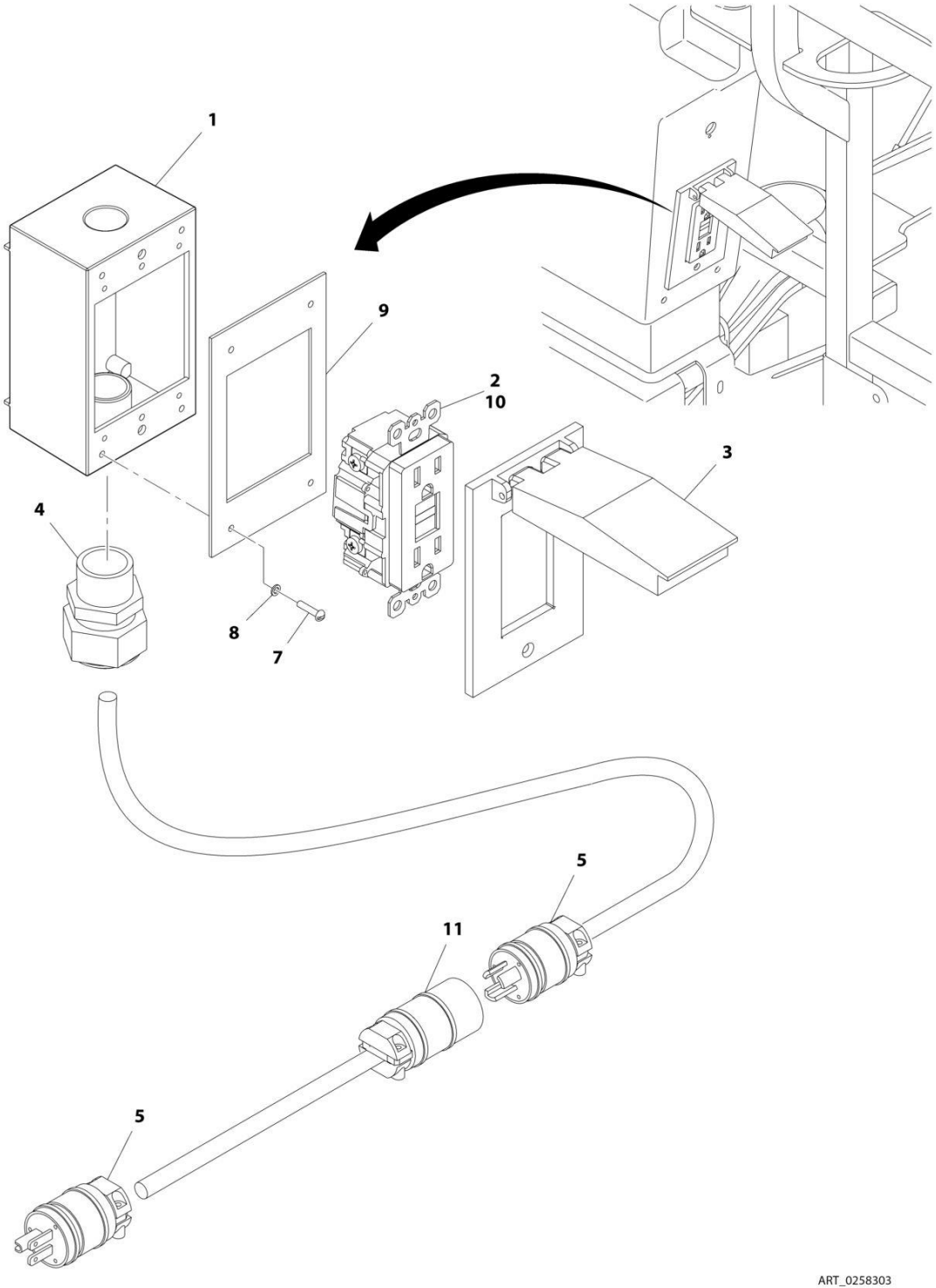

FIGURE 8-3. AC BOX AT PLATFORM INSTALLATION - 110V - ANSI, ANSI EXPORT AND CSA SPECS (SN 0300201991 through 0300220578)

ITEM	PART NUMBER	QTY	DESCRIPTION	REV
	0258303	Ref	AC BOX AT PLATFORM INSTALLATION - 110V - ANSI, ANSI EXPORT AND CSA SPECS **(SN 0300201991 through 0300220578)**	6
1	0860038	1	Box, Switch	
2	4460346	1	Receptacle	
3	1001110873	1	Shield, Cover	
4	4460071	1	Connector, Strain Relief	
5	4460205	1	Plug, Male	
7	3910610	4	Screw #6 x 5/8	
8	4760600	4	Washer #6	
9	3960422	1	Gasket	
10	4460315	3	Terminal, Spade	
11	4460134	1	Receptacle, Female	

FIGURE 8-4. AC BOX AT PLATFORM INSTALLATION - 110V - ANSI, ANSI EXPORT, CHINA, CSA AND JAPANESE SPECS (SN 0300220579 through 0300272317, SN B300003516 through B300005760)

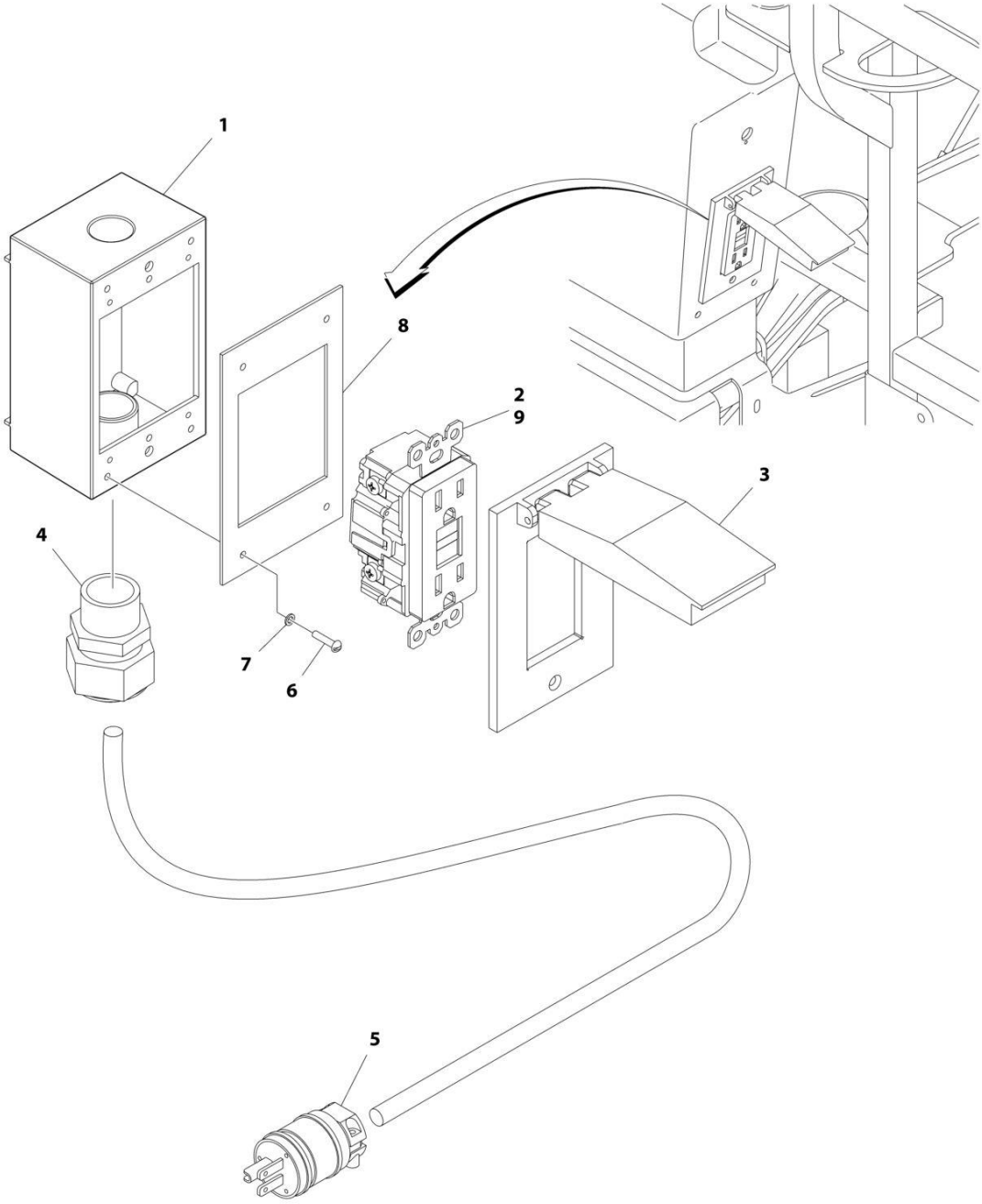

FIGURE 8-4. AC BOX AT PLATFORM INSTALLATION - 110V - ANSI, ANSI EXPORT, CHINA, CSA AND JAPANESE SPECS (SN 0300220579 through 0300272317, SN B300003516 through B300005760)

ITEM	PART NUMBER	QTY	DESCRIPTION	REV
	0270022	Ref	AC BOX AT PLATFORM INSTALLATION - 110V - ANSI, ANSI EXPORT, CHINA, CSA AND JAPANESE SPECS	4
1	0860038	1	Box, Switch	
2	4460346	1	Receptacle	
3	1001110873	1	Shield, Cover	
4	4460071	1	Connector, Strain Relief	
5	4460205	1	Plug, Male	
6	3910610	4	Screw #6 x 5/8	
7	4760600	4	Washer #6	
8	3960422	1	Gasket	
9	4460315	1	Terminal, Spade	

FIGURE 8-5. AC BOX AT PLATFORM INSTALLATION - 110V IEC YELLOW (CE SPEC) (SN 0300201991 through 0300220578, SN E300002833 through E300003512)

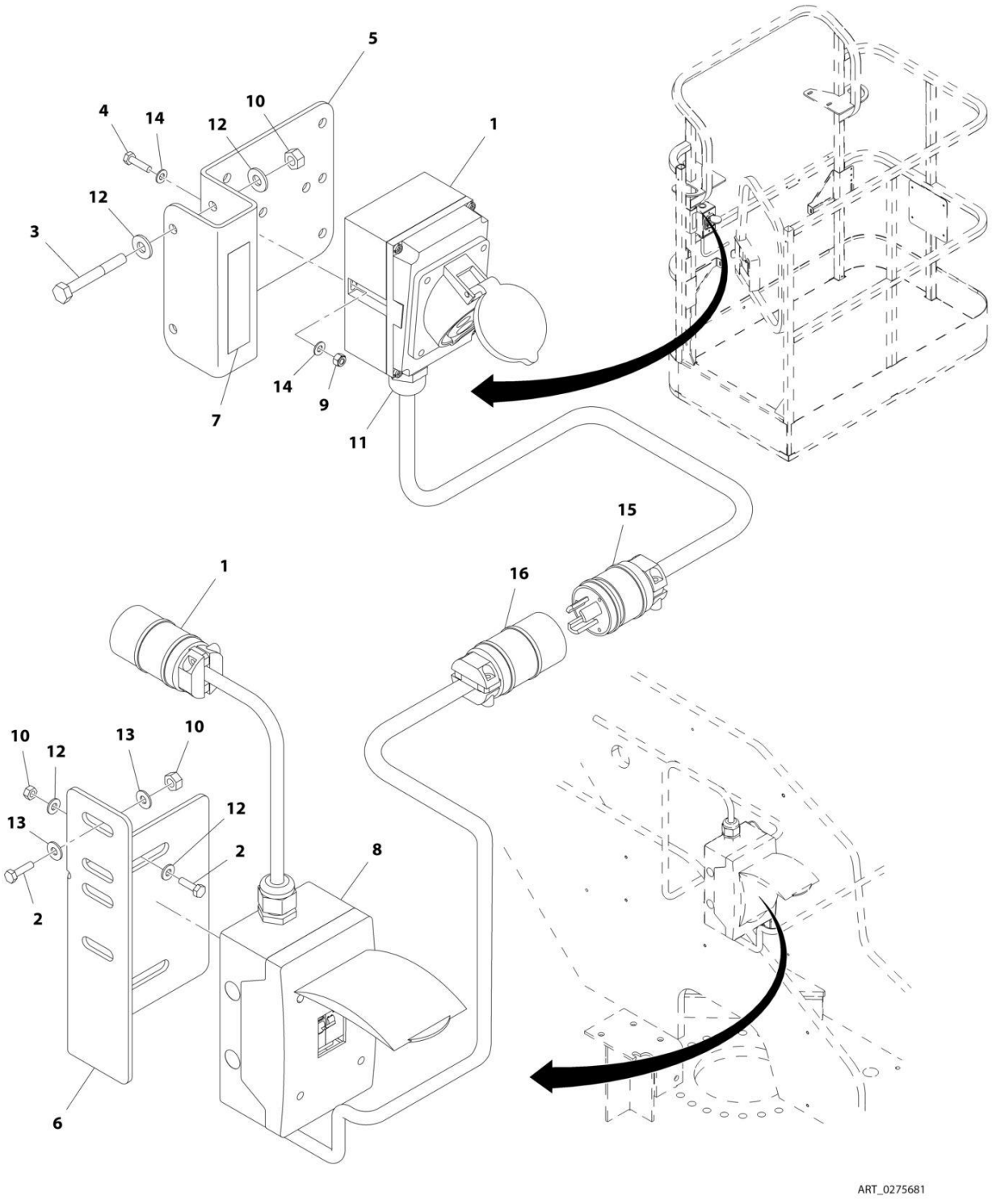

FIGURE 8-5. AC BOX AT PLATFORM INSTALLATION - 110V IEC YELLOW (CE SPEC) (SN 0300201991 through 0300220578, SN E300002833 through E300003512)

ITEM	PART NUMBER	QTY	DESCRIPTION	REV
	0275681	Ref	AC BOX AT PLATFORM INSTALLATION - 110V IEC YELLOW (CE SPEC) **(SN 0300201991 through 0300220578, SN E300002833 through E300003512)**	B
		Ref	Note: For Machines equipped with 4000W Generator, see SPECIAL OPTIONS SECTION.	
1	0275216	1	Receptacle Box Kit (See RECEPTACLE BOX KIT - 110V IEC YELLOW (CE SPEC) for Breakdown)	
2	0641407	4	Bolt, 1/4 x 7/8	
3	0641416	2	Bolt, 1/4 x 2	
4	0700408	2	Bolt, M4 x 16	
5	0903484	1	Bracket	
6	0903612	1	Bracket	
7	1705325	2	Decal - 120V - 50 Hz	
8	2902549	1	Breaker Box Kit - CE Spec (See BREAKER BOX KIT WITH TWO BREAKERS - CE SPEC for Breakdown)	
9	3290405	2	Nut M4	
10	3311405	6	Nut 1/4	
11	4460968	1	Connector, Strain Relief	
12	4711400	8	Washer 1/4	
13	4751400	4	Washer 1/4	
14	4811400	4	Washer M4	
15	4460709	1	Plug, Male	
16	4460710	1	Receptacle, Female	

FIGURE 8-6. AC BOX AT PLATFORM INSTALLATION - 110V IEC 60309 YELLOW WITHOUT 2500W GENERATOR (CE SPECS) (SN 0300220579 through 0300272317, SN E300003513 through E300007990, SN 1300007279 through 1300007373)

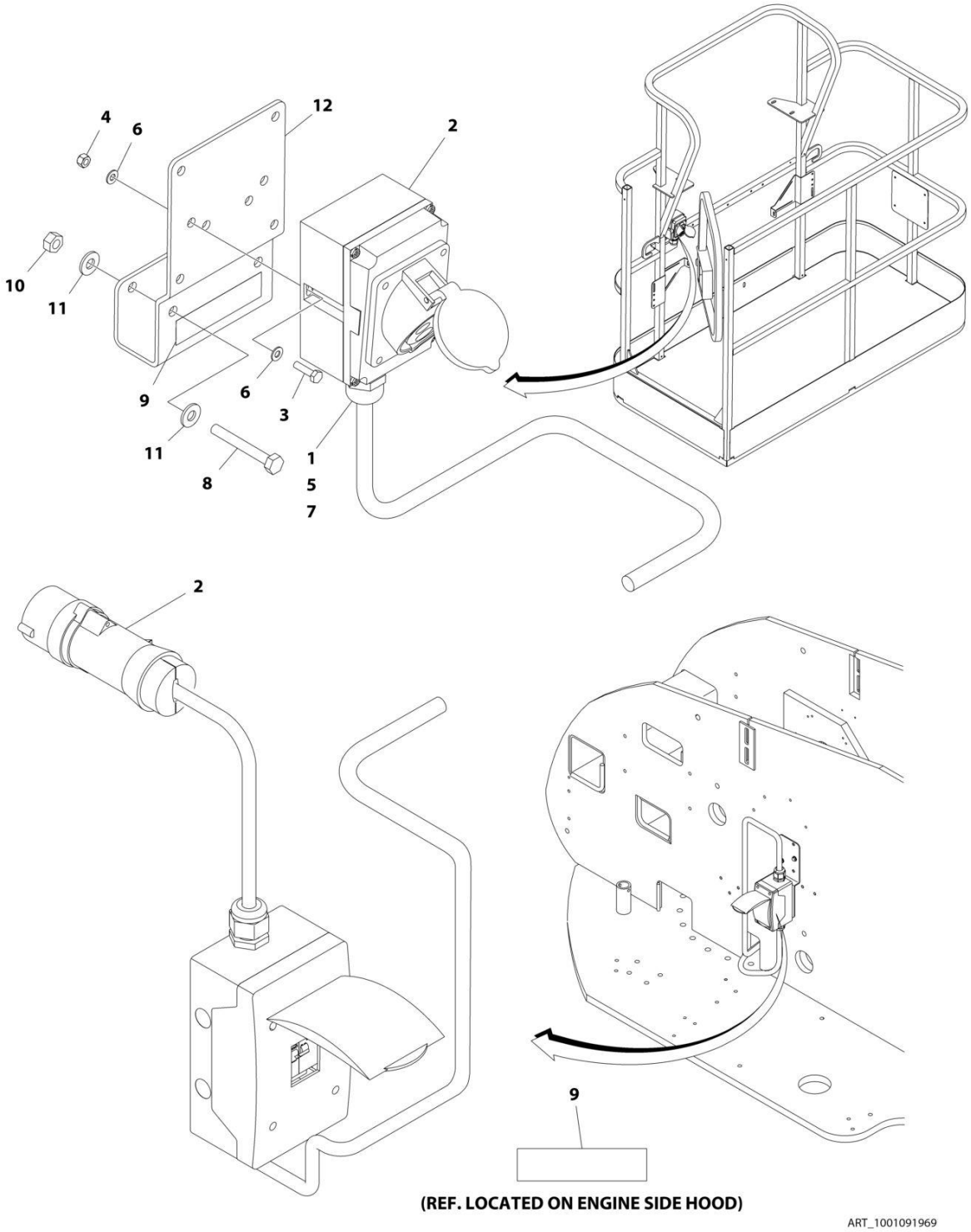

FIGURE 8-6. AC BOX AT PLATFORM INSTALLATION - 110V IEC 60309 YELLOW WITHOUT 2500W GENERATOR (CE SPECS) (SN 0300220579 through 0300272317, SN E300003513 through E300007990, SN 1300007279 through 1300007373)

ITEM	PART NUMBER	QTY	DESCRIPTION	REV
	1001091969	Ref	AC BOX AT PLATFORM INSTALLATION - 110V IEC 60309 YELLOW WITHOUT 2500W GENERATOR (CE SPECS)	D
		Ref	Note: For Machines equipped with 4000W Generator, see SPECIAL OPTIONS SECTION.	
1	0100020	AR	Sealant, Pipe	
2	0275216	1	Receptacle Box Kit (See RECEPTACLE BOX KIT - 110V IEC YELLOW WITHOUT 2500W GENERATOR (CE SPECS) for Breakdown)	
3	0700408	2	Bolt M4 x 16	
4	3290405	2	Nut M4	
5	1001101196	1	Adapter	
6	4811400	4	Washer M4	
7	1001101191	1	Connector, Strain Relief	
8	0641416	2	Bolt 1/4 x 2	
9	1705325	AR	Decal - 110V	
10	3311405	2	Nut 1/4	
11	4711400	4	Washer 1/4	
12	1001193018	1	Bracket	

FIGURE 8-7. AC BOX AT PLATFORM INSTALLATION - 220V - ANSI, ANSI EXPORT AND CSA SPECS (SN 0300201991 through 0300220578)

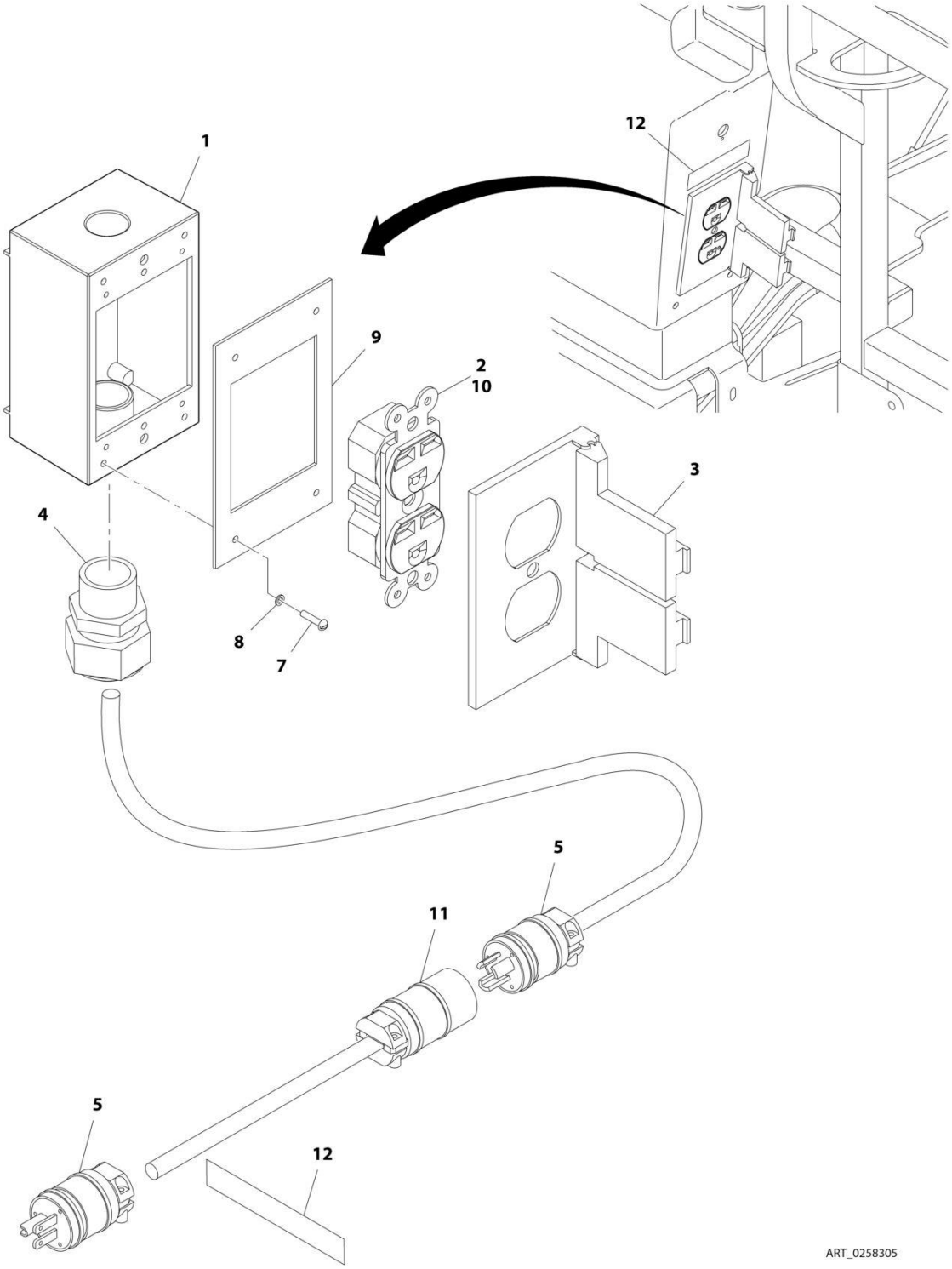

FIGURE 8-7. AC BOX AT PLATFORM INSTALLATION - 220V - ANSI, ANSI EXPORT AND CSA SPECS (SN 0300201991 through 0300220578)

ITEM	PART NUMBER	QTY	DESCRIPTION	REV
	0258305	Ref	AC BOX AT PLATFORM INSTALLATION - 220V - ANSI, ANSI EXPORT AND CSA SPECS **(SN 0300201991 through 0300220578)**	B
1	0860038	1	Box, Switch	
2	4460125	1	Receptacle	
3	4060092	1	Shield	
4	4460071	1	Connector, Strain Relief	
5	4460233	2	Plug, Male	
7	3910610	4	Screw #6 x 5/8	
8	4760600	4	Washer #6	
9	3960422	1	Gasket	
10	4460315	1	Terminal, Spade	
11	4460701	1	Receptacle, Female	
12	3252507	2	Decal - Voltage	

FIGURE 8-8. AC BOX AT PLATFORM INSTALLATION - 220V IEC BLUE (CE SPEC) (SN 0300201991 through 0300220578, SN E300002833 through E300003512)

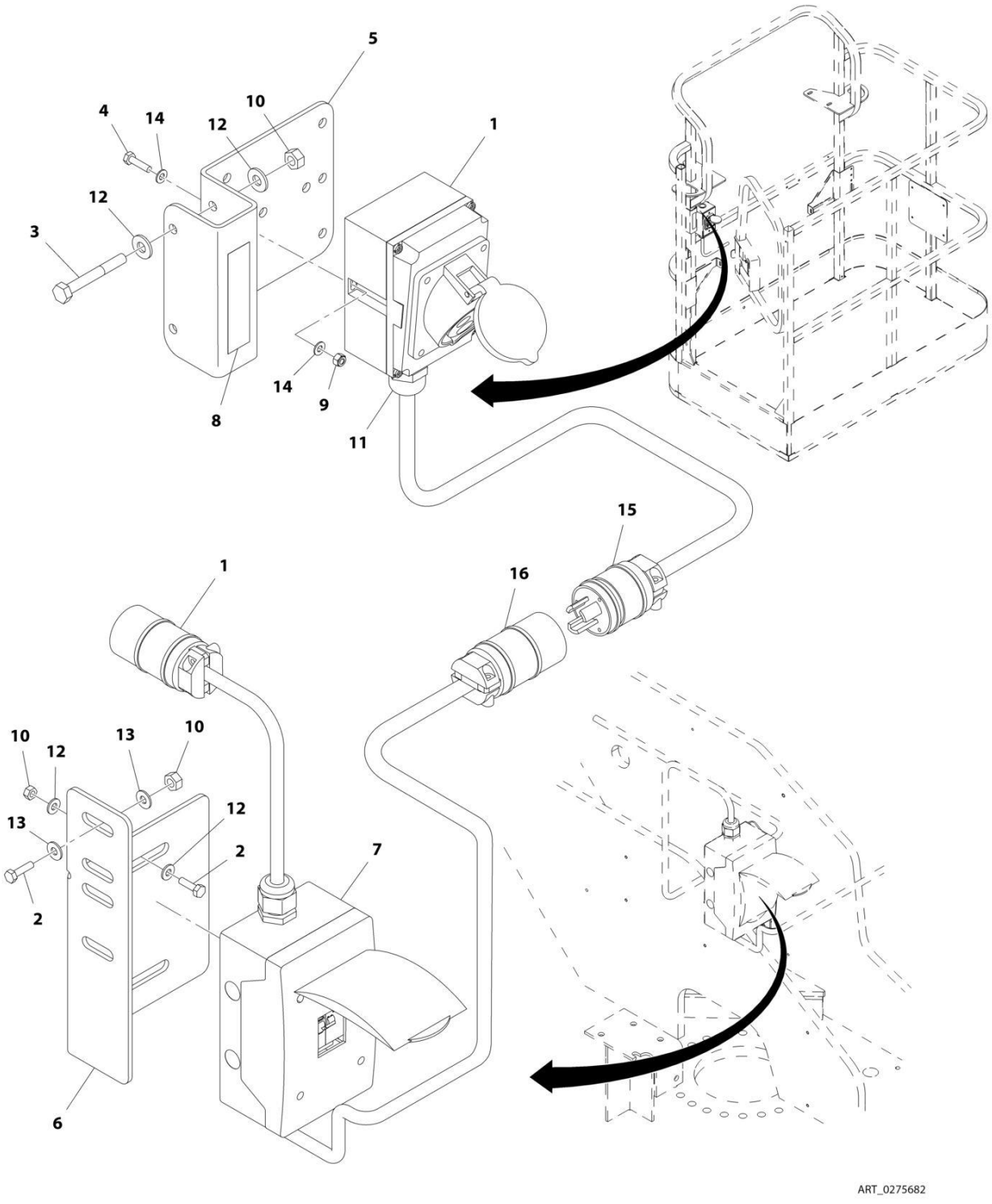

FIGURE 8-8. AC BOX AT PLATFORM INSTALLATION - 220V IEC BLUE (CE SPEC) (SN 0300201991 through 0300220578, SN E300002833 through E300003512)

ITEM	PART NUMBER	QTY	DESCRIPTION	REV
	0275682	Ref	AC BOX AT PLATFORM INSTALLATION - 220V IEC BLUE (CE SPEC) **(SN 0300201991 through 0300220578, SN E300002833 through E300003512)**	B
		Ref	Note: For Machines equipped with 4000W Generator, see SPECIAL OPTIONS SECTION.	
1	0275217	1	Receptacle Box Kit (See RECEPTACLE BOX KIT - 220V IEC BLUE (CE SPEC) for Breakdown)	
2	0641407	4	Bolt, 1/4 x 7/8	
3	0641416	2	Bolt, 1/4 x 2	
4	0700408	2	Bolt, M4 x 16	
5	0903484	1	Bracket	
6	0903612	1	Bracket	
7	3252507	2	Decal - Voltage	
8	2902549	1	Breaker Box Kit - CE Spec (See BREAKER BOX KIT WITH TWO BREAKERS - CE SPEC for Breakdown)	
9	3290405	2	Nut M4	
10	3311405	6	Nut 1/4	
11	4460968	1	Connector, Strain Relief	
12	4711400	8	Washer 1/4	
13	4751400	4	Washer 1/4	
14	4811400	4	Washer M4	
15	4460709	1	Plug, Male	
16	4460710	1	Receptacle, Female	

FIGURE 8-9. AC BOX AT PLATFORM INSTALLATION - 220V IEC 60309 BLUE WITHOUT 2500W GENERATOR (CE SPECS) (SN 0300220579 through 0300272317, SN E300003513 through E300007990, SN 1300007279 through 1300007373)

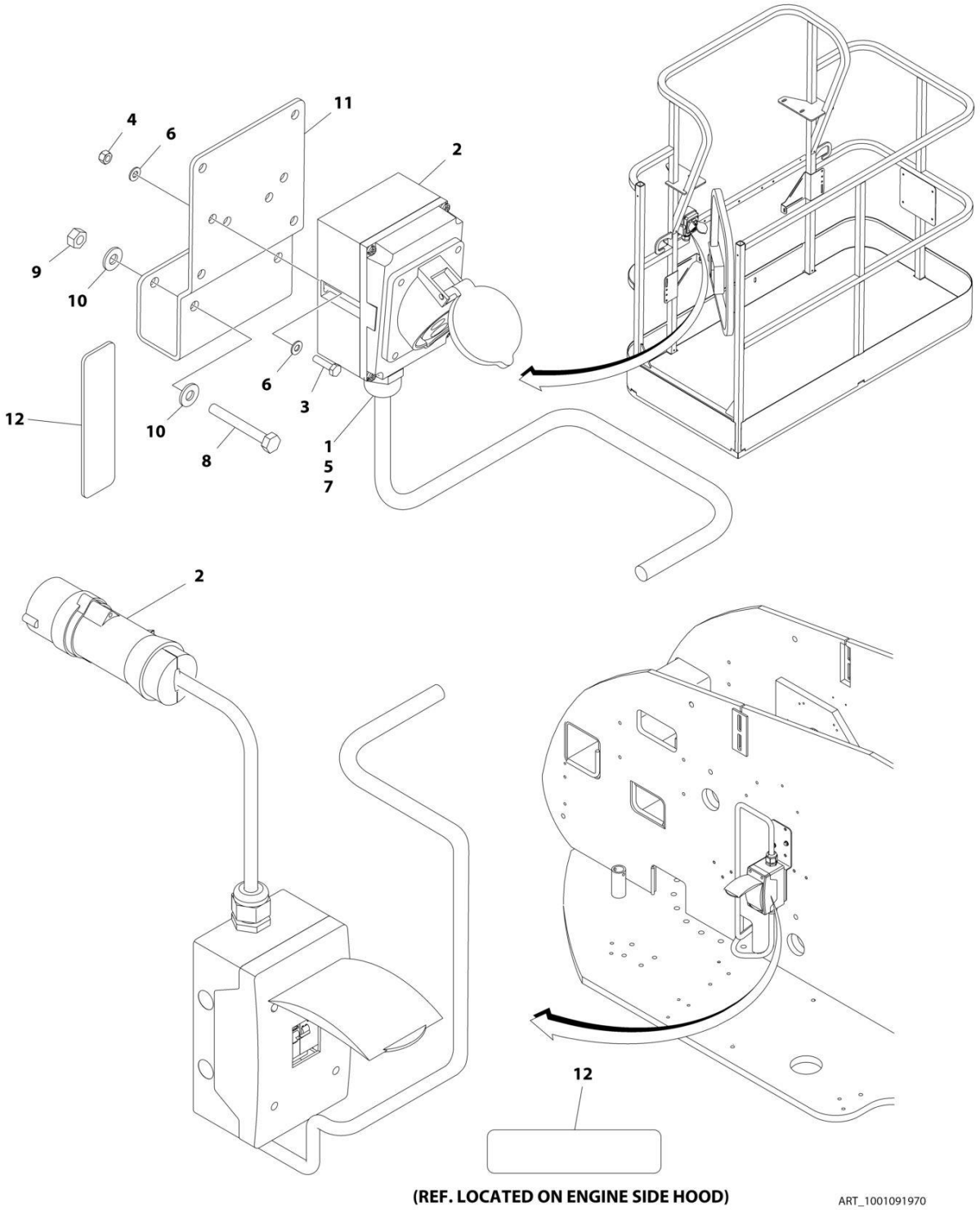

FIGURE 8-9. AC BOX AT PLATFORM INSTALLATION - 220V IEC 60309 BLUE WITHOUT 2500W GENERATOR (CE SPECS) (SN 0300220579 through 0300272317, SN E300003513 through E300007990, SN 1300007279 through 1300007373)

ITEM	PART NUMBER	QTY	DESCRIPTION	REV
	1001091970	Ref	AC BOX AT PLATFORM INSTALLATION - 220V IEC 60309 BLUE WITHOUT 2500W GENERATOR (CE SPECS)	D
		Ref	Note: For Machines equipped with 4000W Generator, see SPECIAL OPTIONS SECTION.	
1	0100020	AR	Sealant, Pipe	
2	0275217	1	Receptacle Box Kit (See RECEPTACLE BOX KIT - 220V IEC BLUE WITHOUT 2500W GENERATOR (CE SPECS) for Breakdown)	
3	0700408	2	Bolt M4 x 16	
4	3290405	2	Nut M4	
5	1001101196	1	Adapter	
6	4811400	4	Washer M4	
7	1001101191	1	Connector, Strain Relief	
8	0641416	2	Bolt 1/4 x 2	
9	3311405	2	Nut 1/4	
10	4711400	4	Washer 1/4	
11	1001193018	1	Bracket	
12	3251242	2	Decal - 240V/50Hz **(SN 0300235097 through 0300272317, SN 1300007279 through 1300007373, SN E300004872 through E300007990, Except SN 0300272185 through 0300272190, Excluding E300007814)**	

FIGURE 8-10. AC BOX AT PLATFORM INSTALLATION - 220V CEE7 POST GROUND WITH 70MM X 70MM BOX (CE SPEC) (SN 0300201991 through 0300210158, SN E300002833 through E300002763)

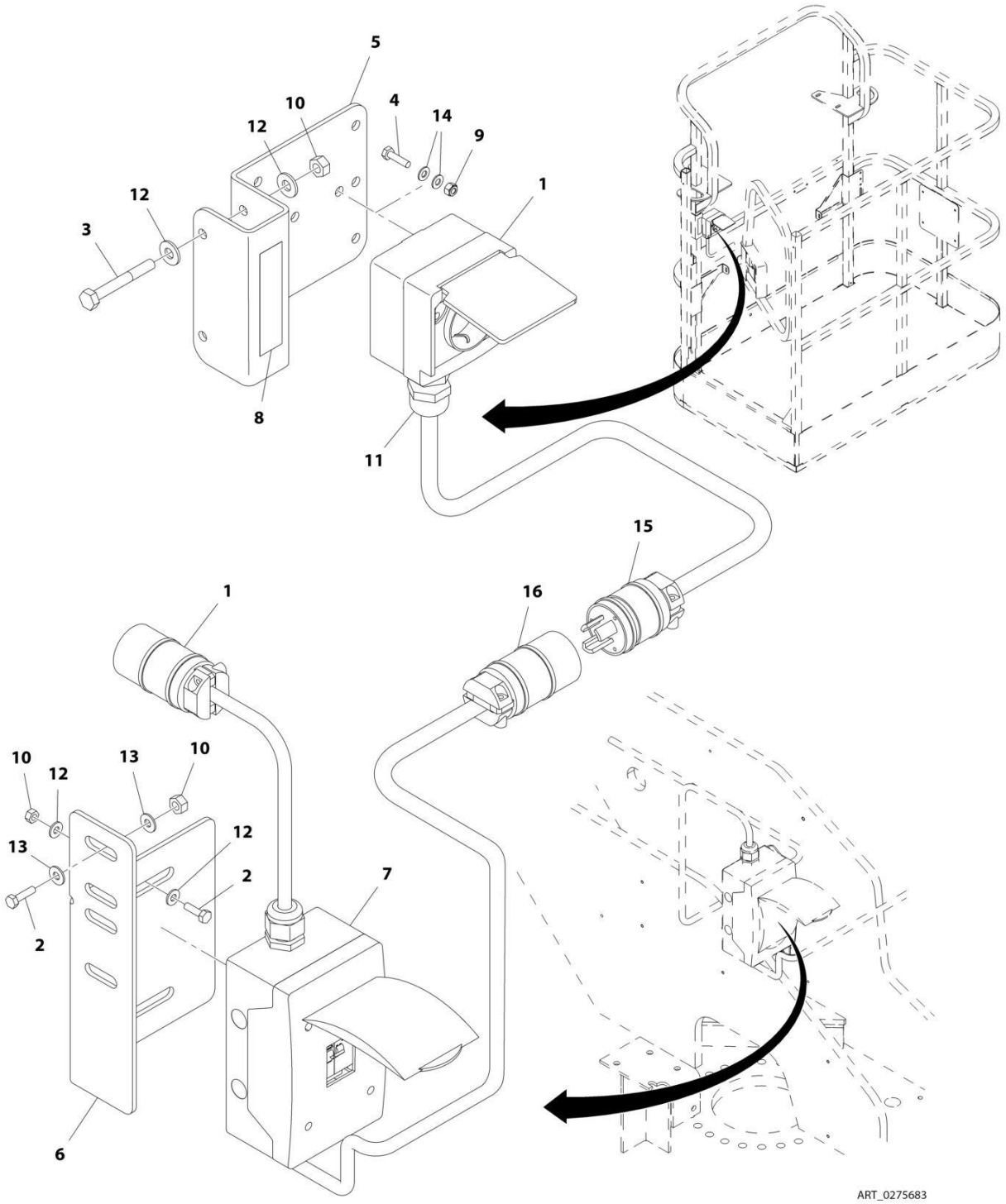

FIGURE 8-10. AC BOX AT PLATFORM INSTALLATION - 220V CEE7 POST GROUND WITH 70MM X 70MM BOX (CE SPEC) (SN 0300201991 through 0300210158, SN E300002833 through E300002763)

ITEM	PART NUMBER	QTY	DESCRIPTION	REV
	0275683	Ref	AC BOX AT PLATFORM INSTALLATION - 220V CEE7 POST GROUND WITH 70MM X 70MM BOX (CE SPEC) **(SN 0300201991 through 0300210158, SN E300002833 through E300002763)**	B
		Ref	Note: For Machines equipped with 4000W Generator, see SPECIAL OPTIONS SECTION.	
1	0275218	1	Receptacle Box Kit (See RECEPTACLE BOX KIT- 220V CEE7 POST GROUND WITH 70MM X 70MM BOX (CE SPEC) for Breakdown)	
2	0641407	4	Bolt, 1/4 x 7/8	
3	0641416	2	Bolt, 1/4 x 2	
4	0700408	2	Bolt, M4 x 16	
5	0903484	1	Bracket	
6	0903612	1	Bracket	
7	2902549	1	Breaker Box Kit - CE Spec (See BREAKER BOX KIT WITH TWO BREAKERS - CE SPEC for Breakdown)	
8	3252507	2	Decal - Voltage	
9	3290405	2	Nut M4	
10	3311405	6	Nut 1/4	
11	4460968	1	Connector, Strain Relief	
12	4711400	8	Washer 1/4	
13	4751400	4	Washer 1/4	
14	4811400	4	Washer M4	
15	4460709	1	Plug, Male	
16	4460710	1	Receptacle, Female	

FIGURE 8-11. AC BOX AT PLATFORM INSTALLATION - 220V CEE7 SIDE GROUND WITH 70MM X 70MM BOX (CE SPEC) (SN 0300201991 through 0300210158, SN E300002833 through E300002763)

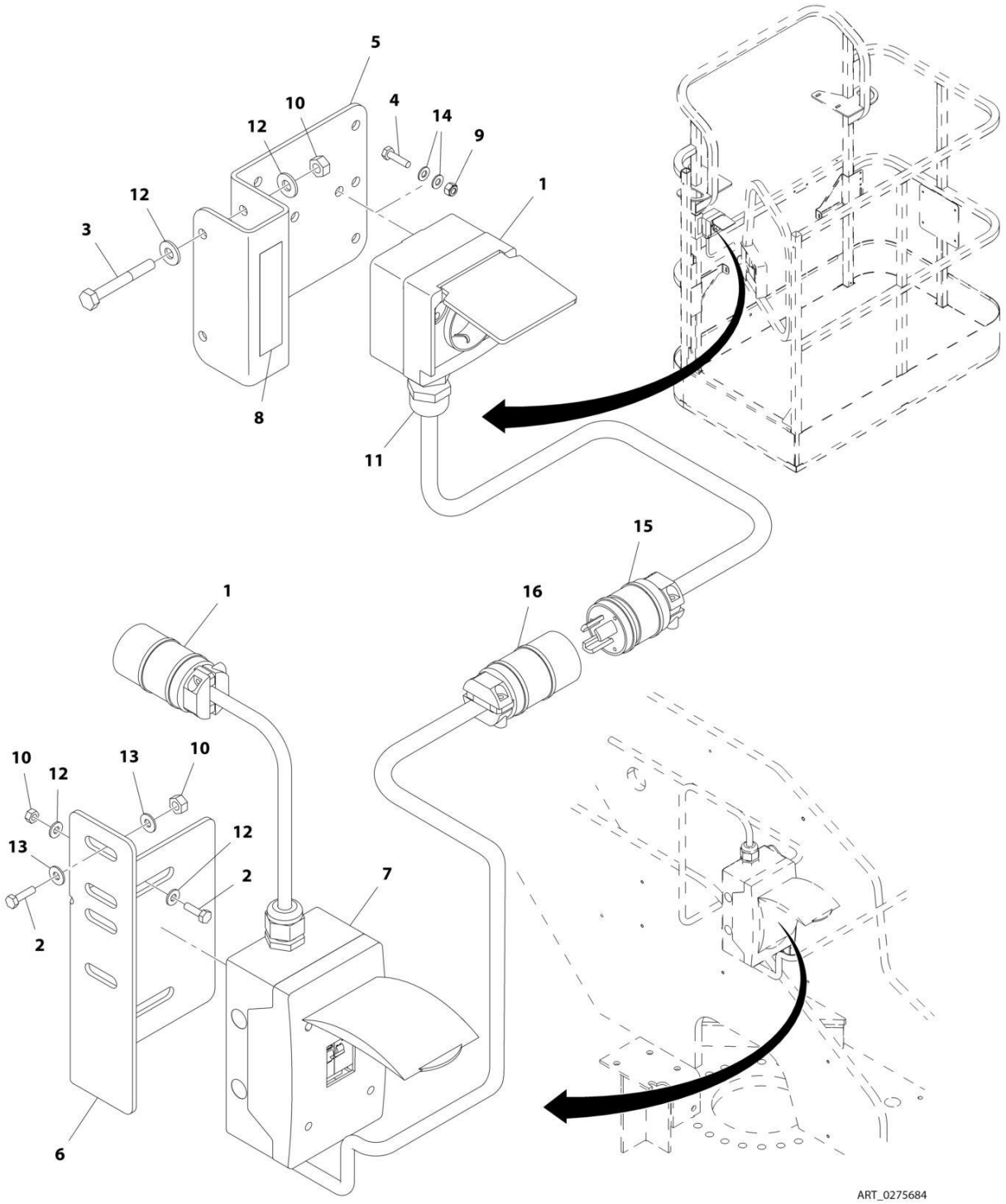

FIGURE 8-11. AC BOX AT PLATFORM INSTALLATION - 220V CEE7 SIDE GROUND WITH 70MM X 70MM BOX (CE SPEC) (SN 0300201991 through 0300210158, SN E300002833 through E300002763)

ITEM	PART NUMBER	QTY	DESCRIPTION	REV
	0275684	Ref	AC BOX AT PLATFORM INSTALLATION - 220V CEE7 SIDE GROUND WITH 70MM X 70MM BOX (CE SPEC) **(SN 0300201991 through 0300210158, SN E300002833 through E300002763)**	B
		Ref	Note: For Machines equipped with 4000W Generator, see SPECIAL OPTIONS SECTION.	
1	0275219	1	Receptacle Box Kit (See RECEPTACLE BOX KIT- 220V CEE7 SIDE GROUND WITH 70MM X 70MM BOX (CE SPEC) for Breakdown)	
2	0641407	4	Bolt, 1/4 x 7/8	
3	0641416	2	Bolt, 1/4 x 2	
4	0700408	2	Bolt, M4 x 16	
5	0903484	1	Bracket	
6	0903612	1	Bracket	
7	2902549	1	Breaker Box Kit - CE Spec (See BREAKER BOX KIT WITH TWO BREAKERS - CE SPEC for Breakdown)	
8	3252507	2	Decal - Voltage	
9	3290405	2	Nut M4	
10	3311405	6	Nut 1/4	
11	4460968	1	Connector, Strain Relief	
12	4711400	8	Washer 1/4	
13	4751400	4	Washer 1/4	
14	4811400	4	Washer M4	
15	4460709	1	Plug, Male	
16	4460710	1	Receptacle, Female	

FIGURE 8-12. AC BOX AT PLATFORM INSTALLATION - 220V CEE7 POST GROUND WITH 2IN X 4IN BOX (CE SPEC) (SN 0300201991 through 0300210158, SN E300002833 through E300002763)

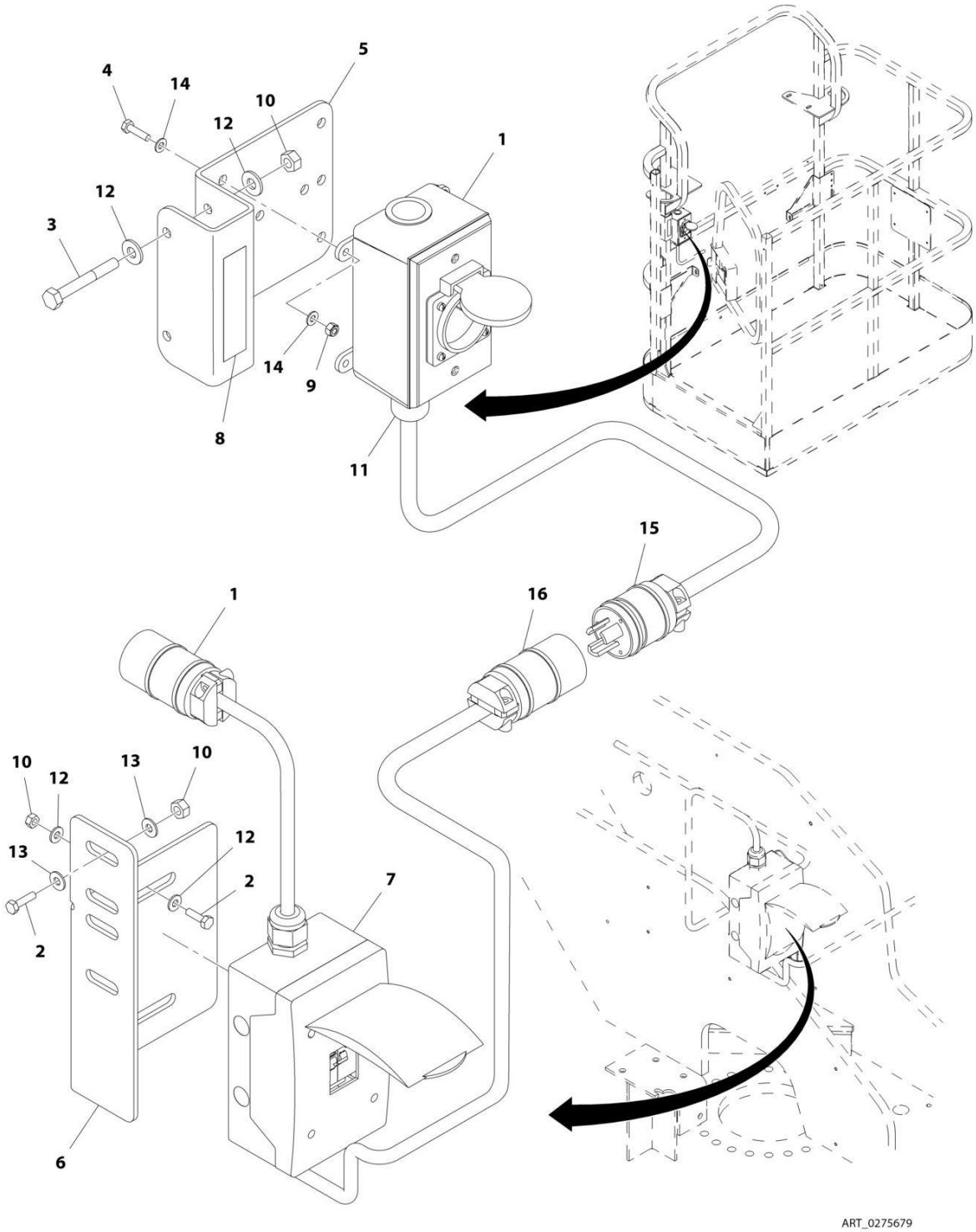

FIGURE 8-12. AC BOX AT PLATFORM INSTALLATION - 220V CEE7 POST GROUND WITH 2IN X 4IN BOX (CE SPEC) (SN 0300201991 through 0300210158, SN E300002833 through E300002763)

ITEM	PART NUMBER	QTY	DESCRIPTION	REV
	0275679	Ref	AC BOX AT PLATFORM INSTALLATION - 220V CEE7 POST GROUND WITH 2IN X 4IN BOX (CE SPEC) **(SN 0300201991 through 0300210158, SN E300002833 through E300002763)**	D
		Ref	Note: For Machines equipped with 4000W Generator, see SPECIAL OPTIONS SECTION.	
1	0275453	1	Receptacle Box Kit (See RECEPTACLE BOX KIT- 220V CEE7 POST GROUND WITH 2INX 4IN BOX (CE SPEC) for Breakdown)	
2	0641407	4	Bolt, 1/4 x 7/8	
3	0641416	2	Bolt, 1/4 x 2	
4	0700408	2	Bolt, M4 x 16	
5	0903484	1	Bracket	
6	0903612	1	Bracket	
7	2902549	1	Breaker Box Kit - CE Spec (See BREAKER BOX KIT WITH TWO BREAKERS - CE SPEC for Breakdown)	
8	3252507	2	Decal - Voltage	
9	3290405	2	Nut M4	
10	3311405	6	Nut 1/4	
11	4460968	1	Connector, Strain Relief	
11	4460662	1	Connector, Strain Relief	
12	4711400	8	Washer 1/4	
13	4751400	4	Washer 1/4	
14	4811400	4	Washer M4	
15	4460709	1	Plug, Male	
16	4460710	1	Receptacle, Female	

FIGURE 8-13. AC BOX AT PLATFORM INSTALLATION - 220V CEE7 POST GROUND WITH 2IN X 4IN BOX (CE SPEC) (SN 0300210159 through 0300220578, SN E300002764 through E300003512)

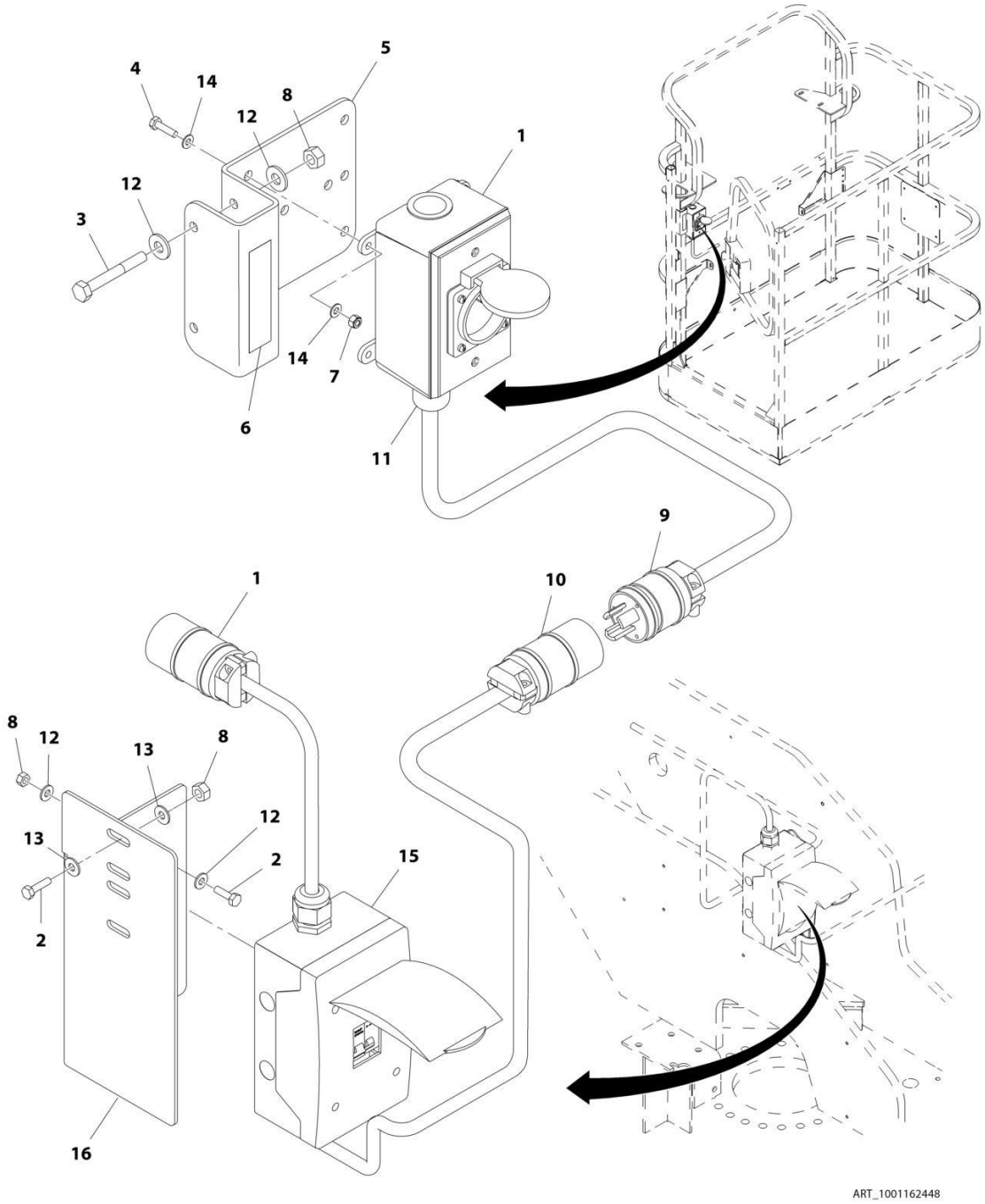

FIGURE 8-13. AC BOX AT PLATFORM INSTALLATION - 220V CEE7 POST GROUND WITH 2IN X 4IN BOX (CE SPEC) (SN 0300210159 through 0300220578, SN E300002764 through E300003512)

ITEM	PART NUMBER	QTY	DESCRIPTION	REV
	1001162448	Ref	AC BOX AT PLATFORM INSTALLATION - 220V CEE7 POST GROUND WITH 2IN X 4IN BOX (CE SPEC) **(SN 0300210159 through 0300220578, SN E300002764 through E300003512)**	B
		Ref	Note: For Machines equipped with 4000W Generator, see SPECIAL OPTIONS SECTION.	
1	0275452	1	Receptacle Box Kit (See RECEPTACLE BOX KIT- 220V CEE7 POST GROUND WITH 2INX 4IN BOX (CE SPEC) for Breakdown)	
2	0641407	4	Bolt, 1/4 x 7/8	
3	0641416	2	Bolt, 1/4 x 2	
4	0700408	4	Bolt, M4 x 16	
5	0903484	1	Bracket	
6	3252507	2	Decal - Voltage	
7	3290405	4	Nut M4	
8	3311405	6	Nut 1/4	
9	4460709	1	Plug, Male	
10	4460710	1	Receptacle, Female	
11	4460968	1	Connector, Strain Relief	
11	4460662	1	Connector, Strain Relief	
12	4711400	8	Washer 1/4	
13	4751400	4	Washer 1/4	
14	4811400	8	Washer M4	
15	1001152485	1	Breaker Box Kit - CE Spec (See BREAKER BOX KIT WITH THREE BREAKERS - CE SPEC for Breakdown)	
16	1001162445	1	Bracket	

FIGURE 8-14. AC BOX AT PLATFORM INSTALLATION - 220V CEE7 POST GROUND (2X4 BOX) WITHOUT 2500W GENERATOR (CE SPECS) (SN 0300220579 through 0300272317, SN E300003513 through E300007990, SN 1300007279 through 1300007373)

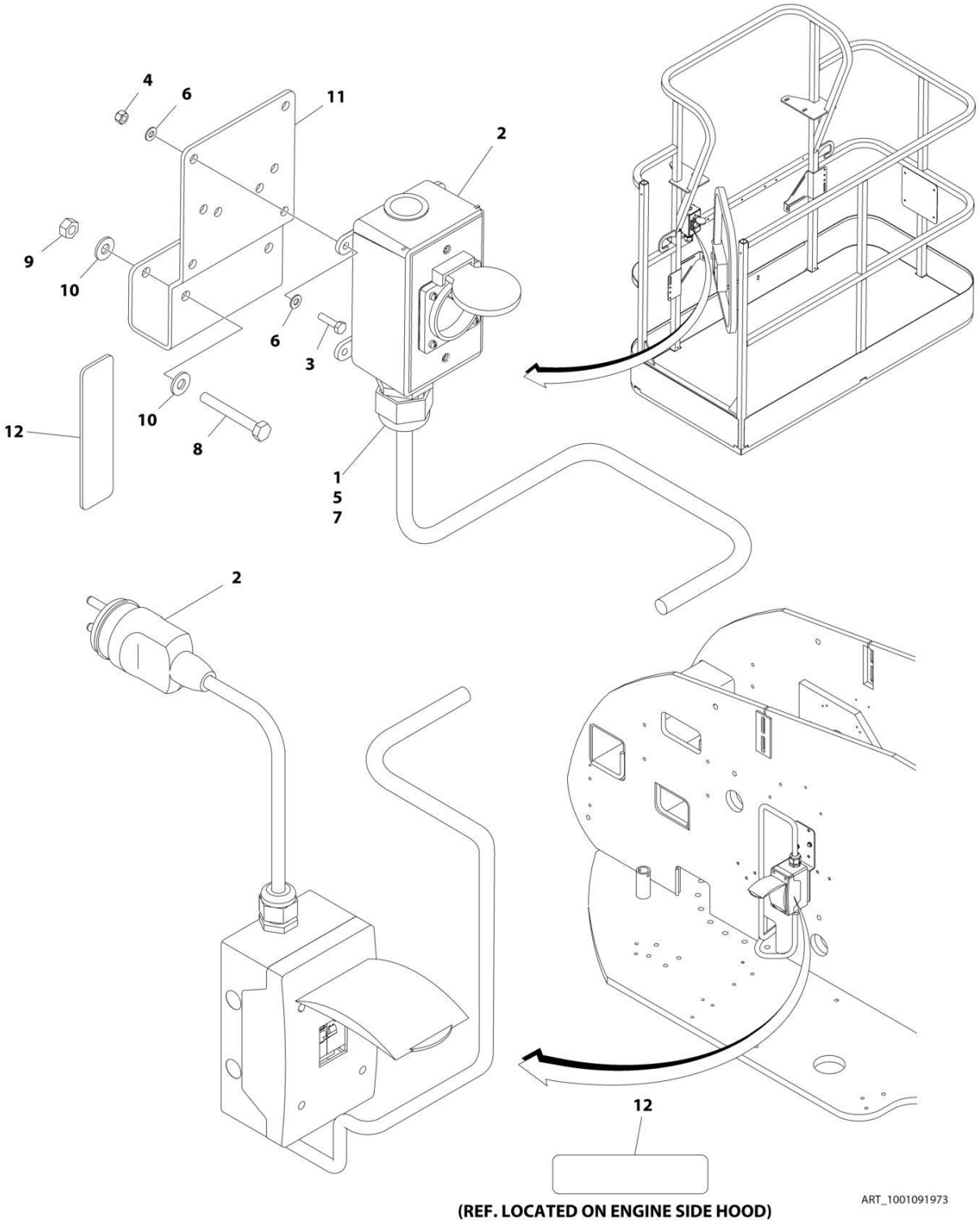

FIGURE 8-14. AC BOX AT PLATFORM INSTALLATION - 220V CEE7 POST GROUND (2X4 BOX) WITHOUT 2500W GENERATOR (CE SPECS) (SN 0300220579 through 0300272317, SN E300003513 through E300007990, SN 1300007279 through 1300007373)

ITEM	PART NUMBER	QTY	DESCRIPTION	REV
	1001091973	Ref	AC BOX AT PLATFORM INSTALLATION - 220V CEE7 POST GROUND (2X4 BOX) WITHOUT 2500W GENERATOR (CE SPECS)	F
1	0100020	AR	Sealant, Pipe	
2	0275452	1	Receptacle Box Kit (See RECEPTACLE BOX KIT - 220V CEE7 POST GROUND WITHOUT 2500W GENERATOR (2X4 BOX) (CE SPECS) for Breakdown)	
3	0700408	4	Bolt M4 x 16	
4	3290405	4	Nut M4	
5	1001101197	1	Adapter	
6	4811400	8	Washer M4	
7	1001101191	1	Connector, Strain Relief	
8	0641416	2	Bolt 1/4 x 2	
9	3311405	2	Nut 1/4	
10	4711400	4	Washer 1/4	
11	1001193018	1	Bracket	
12	3251242	2	Decal - 240V/50Hz **(SN 0300235097 through 0300272317, SN 1300007279 through 1300007373, SN E300004872 through E300007990, Except SN 0300272185 through 0300272190, Excluding E300007814)**	
13	4460806	2	Terminal, Fork (Not Shown – Located inside Receptacle Box)	
14	1001205958	1	Terminal (Not Shown – Located inside Receptacle Box)	

FIGURE 8-15. AC BOX AT PLATFORM INSTALLATION - 220V CEE7 SIDE GROUND WITH 2IN X 4IN BOX (CE SPEC) (SN 0300201991 through 0300210158, SN E300002833 through E300002763)

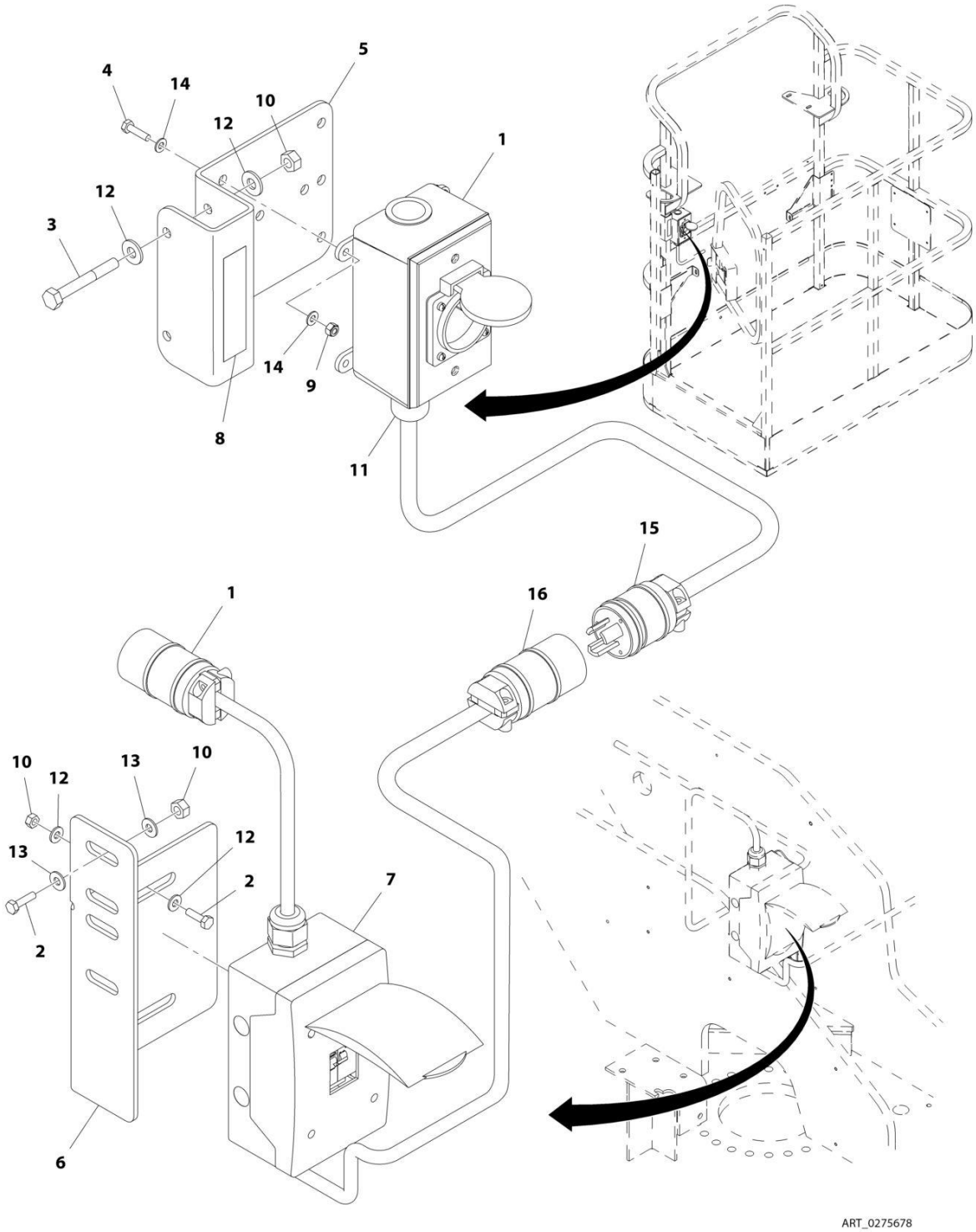

FIGURE 8-15. AC BOX AT PLATFORM INSTALLATION - 220V CEE7 SIDE GROUND WITH 2IN X 4IN BOX (CE SPEC) (SN 0300201991 through 0300210158, SN E300002833 through E300002763)

ITEM	PART NUMBER	QTY	DESCRIPTION	REV
	0275678	Ref	AC BOX AT PLATFORM INSTALLATION - 220V CEE7 SIDE GROUND WITH 2IN X 4IN BOX (CE SPEC) **(SN 0300201991 through 0300210158, SN E300002833 through E300002763)**	D
		Ref	Note: For Machines equipped with 4000W Generator, see SPECIAL OPTIONS SECTION.	
1	0275452	1	Receptacle Box Kit (See RECEPTACLE BOX KIT- 220V CEE7 SIDE GROUND WITH 2INX 4IN BOX (CE SPEC) for Breakdown)	
2	0641407	4	Bolt, 1/4 x 7/8	
3	0641416	2	Bolt, 1/4 x 2	
4	0700408	2	Bolt, M4 x 16	
5	0903484	1	Bracket	
6	0903612	1	Bracket	
7	2902549	1	Breaker Box Kit - CE Spec (See BREAKER BOX KIT WITH TWO BREAKERS - CE SPEC for Breakdown)	
8	3252507	2	Decal - Voltage	
9	3290405	2	Nut M4	
10	3311405	6	Nut 1/4	
11	4460968	1	Connector, Strain Relief	
11	4460662	1	Connector, Strain Relief	
12	4711400	8	Washer 1/4	
13	4751400	4	Washer 1/4	
14	4811400	4	Washer M4	
15	4460709	1	Plug, Male	
16	4460710	1	Receptacle, Female	

FIGURE 8-16. AC BOX AT PLATFORM INSTALLATION - 220V CEE7 SIDE GROUND WITH 2IN X 4IN BOX (CE SPEC) (SN 0300210159 through 0300220578, SN E300002764 through E300003512)

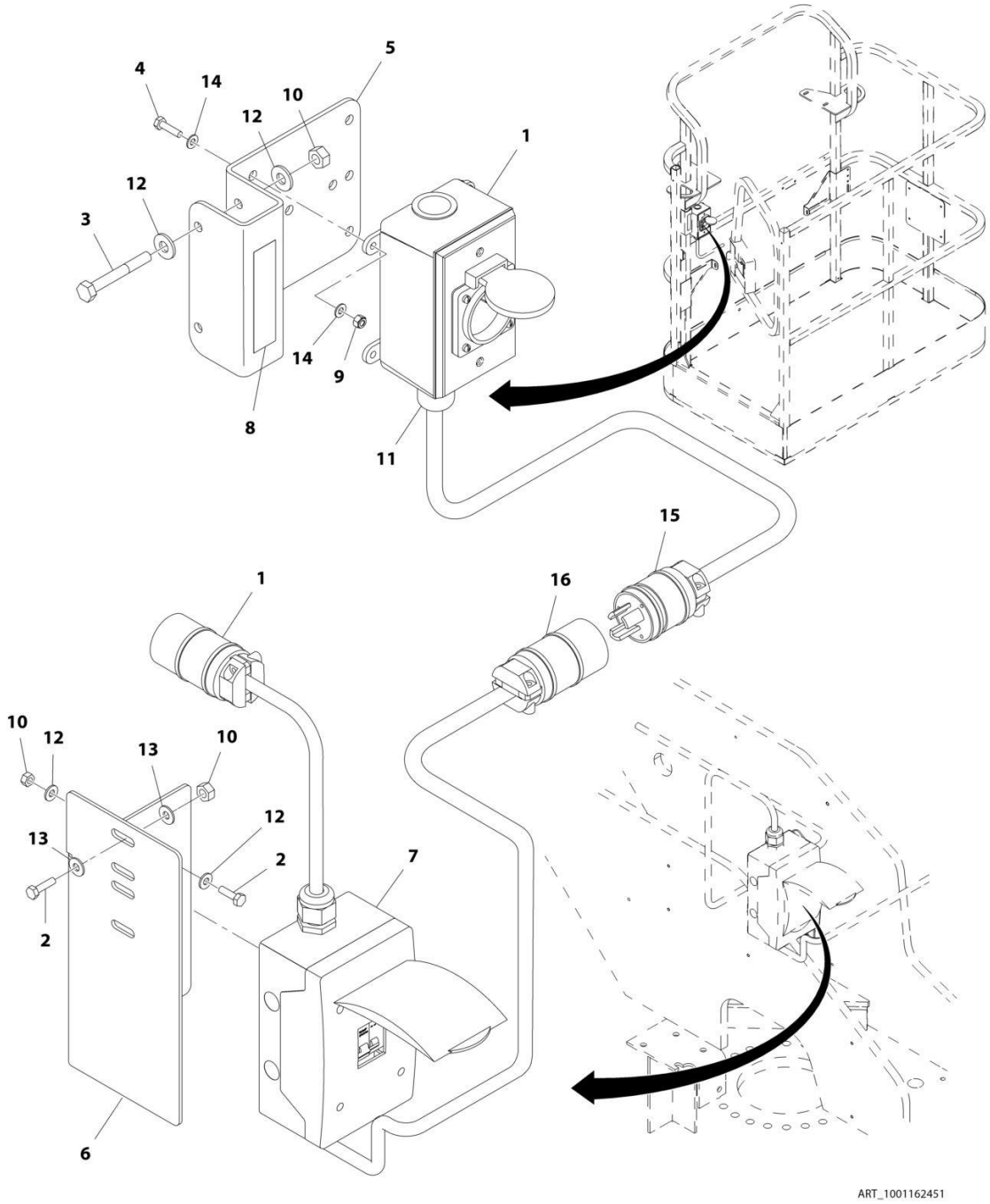

FIGURE 8-16. AC BOX AT PLATFORM INSTALLATION - 220V CEE7 SIDE GROUND WITH 2IN X 4IN BOX (CE SPEC) (SN 0300210159 through 0300220578, SN E300002764 through E300003512)

ITEM	PART NUMBER	QTY	DESCRIPTION	REV
	1001162451	Ref	AC BOX AT PLATFORM INSTALLATION - 220V CEE7 SIDE GROUND WITH 2IN X 4IN BOX (CE SPEC) **(SN 0300210159 through 0300220578, SN E300002764 through E300003512)**	B
		Ref	Note: For Machines equipped with 4000W Generator, see SPECIAL OPTIONS SECTION.	
1	0275453	1	Receptacle Box Kit (See RECEPTACLE BOX KIT- 220V CEE7 SIDE GROUND WITH 2INX 4IN BOX (CE SPEC) for Breakdown)	
2	0641407	4	Bolt, 1/4 x 7/8	
3	0641416	2	Bolt, 1/4 x 2	
4	0700408	4	Bolt, M4 x 16	
5	0903484	1	Bracket	
6	1001162445	1	Bracket	
7	1001152485	1	Breaker Box Kit - CE Spec (See BREAKER BOX KIT WITH THREE BREAKERS - CE SPEC for Breakdown)	
8	3252507	2	Decal - Voltage	
9	3290405	4	Nut M4	
10	3311405	6	Nut 1/4	
11	4460968	1	Connector, Strain Relief	
11	4460662	1	Connector, Strain Relief	
12	4711400	8	Washer 1/4	
13	4751400	4	Washer 1/4	
14	4811400	8	Washer M4	
15	4460709	1	Plug, Male	
16	4460710	1	Receptacle, Female	

FIGURE 8-17. AC BOX AT PLATFORM INSTALLATION - 220V CEE7 SIDE GROUND (2X4 BOX) WITHOUT 2500W GENERATOR (CE SPECS) (SN 0300220579 through 0300272317, SN E300003513 through E300007990, SN 1300007279 through 1300007373)

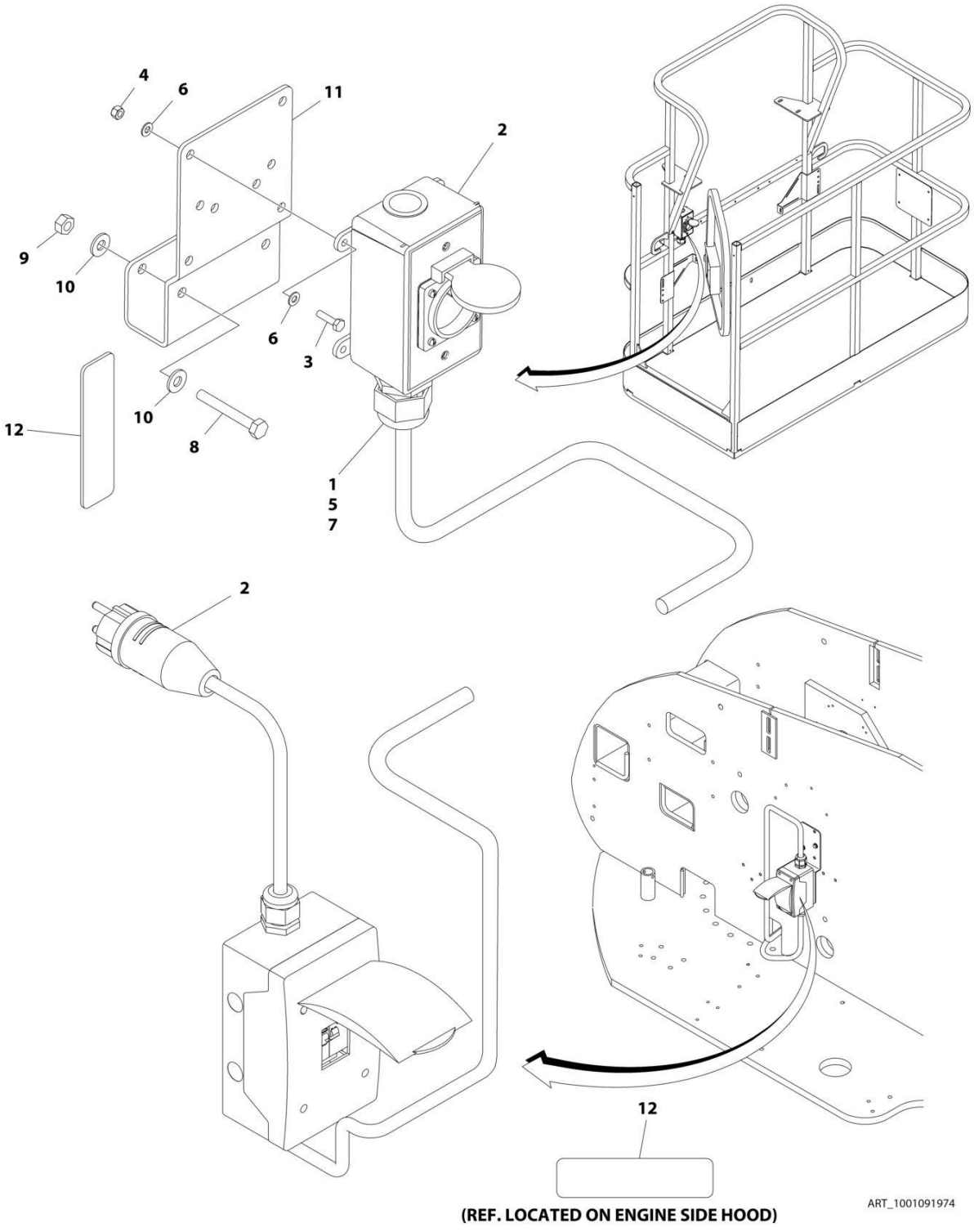

FIGURE 8-17. AC BOX AT PLATFORM INSTALLATION - 220V CEE7 SIDE GROUND (2X4 BOX) WITHOUT 2500W GENERATOR (CE SPECS) (SN 0300220579 through 0300272317, SN E300003513 through E300007990, SN 1300007279 through 1300007373)

ITEM	PART NUMBER	QTY	DESCRIPTION	REV
	1001091974	Ref	AC BOX AT PLATFORM INSTALLATION - 220V CEE7 SIDE GROUND (2X4 BOX) WITHOUT 2500W GENERATOR (CE SPECS)	F
1	0100020	AR	Sealant, Pipe	
2	0275453	1	Receptacle Box Kit (See RECEPTACLE BOX KIT - 220V CEE7 SIDE GROUND WITHOUT 2500W GENERATOR (2X4 BOX) (CE SPECS) for Breakdown)	
3	0700408	4	Bolt M4 x 16	
4	3290405	4	Nut M4	
5	1001101197	1	Adapter	
6	4811400	8	Washer M4	
7	1001101191	1	Connector, Strain Relief	
8	0641416	2	Bolt 1/4 x 2	
9	3311405	2	Nut 1/4	
10	4711400	4	Washer 1/4	
11	1001193018	1	Bracket	
12	3251242	2	Decal - 240V/50Hz **(SN 0300235097 through 0300272317, SN 1300007279 through 1300007373, SN E300004872 through E300007990, Except SN 0300272185 through 0300272190, Excluding E300007814)**	
13	4460806	2	Terminal, Fork (Not Shown – Located inside Receptacle Box)	
14	1001205958	1	Terminal (Not Shown – Located inside Receptacle Box)	

FIGURE 8-18. AC BOX AT PLATFORM INSTALLATION - 220V AFSINT 107 KEYED GROUND WITH 2IN X 4IN BOX (CE SPEC) (SN 0300201991 through 0300220578, SN E300002833 through E300003512)

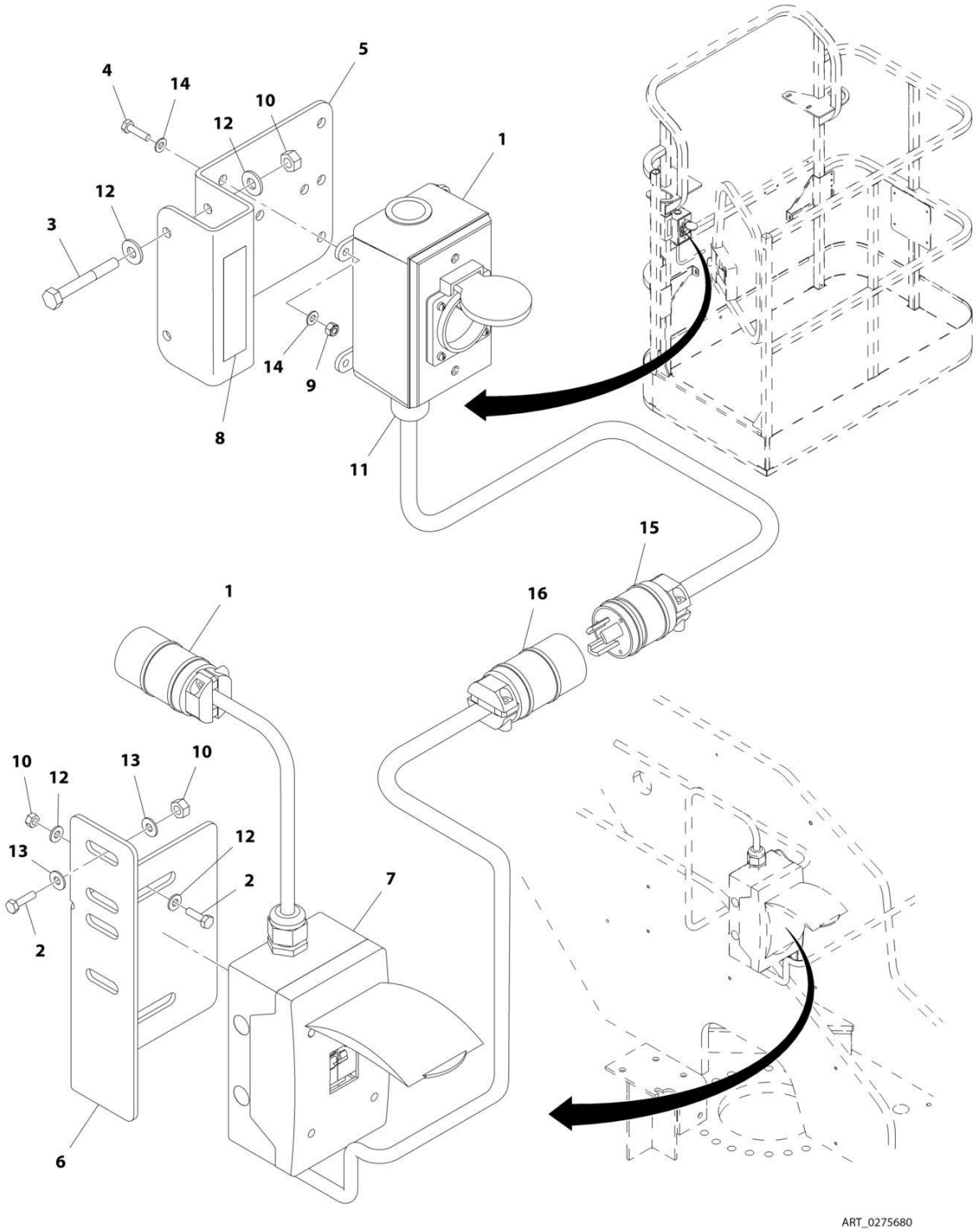

FIGURE 8-18. AC BOX AT PLATFORM INSTALLATION - 220V AFSINT 107 KEYED GROUND WITH 2IN X 4IN BOX (CE SPEC) (SN 0300201991 through 0300220578, SN E300002833 through E300003512)

ITEM	PART NUMBER	QTY	DESCRIPTION	REV
	0275680	Ref	AC BOX AT PLATFORM INSTALLATION - 220V AFSINT 107 KEYED GROUND WITH 2IN X 4IN BOX (CE SPEC) **(SN 0300201991 through 0300220578, SN E300002833 through E300003512)**	C
		Ref	Note: For Machines equipped with 4000W Generator, see SPECIAL OPTIONS SECTION.	
1	0275454	1	Receptacle Box Kit (See RECEPTACLE BOX KIT- 220V AFSINT 107 KEYED GROUND WITH 2IN X 4IN BOX (CE SPEC) for Breakdown)	
2	0641407	4	Bolt, 1/4 x 7/8	
3	0641416	2	Bolt, 1/4 x 2	
4	0700408	2	Bolt, M4 x 16	
5	0903484	1	Bracket	
6	0903612	1	Bracket	
7	2902549	1	Breaker Box Kit - CE Spec (See BREAKER BOX KIT WITH TWO BREAKERS - CE SPEC for Breakdown)	
8	3252507	2	Decal - Voltage	
9	3290405	2	Nut M4	
10	3311405	6	Nut 1/4	
11	4460968	1	Connector, Strain Relief	
11	4460662	1	Connector, Strain Relief	
12	4711400	8	Washer 1/4	
13	4751400	4	Washer 1/4	
14	4811400	4	Washer M4	
15	4460709	1	Plug, Male	
16	4460710	1	Receptacle, Female	

FIGURE 8-19. AC BOX AT PLATFORM INSTALLATION - 220V AFSINT 107 KEYED GROUND (2X4 BOX) WITHOUT 2500W GENERATOR (CE SPECS) (SN 0300220579 through 0300272317, SN E300003513 through E300007990, SN 1300007279 through 1300007373)

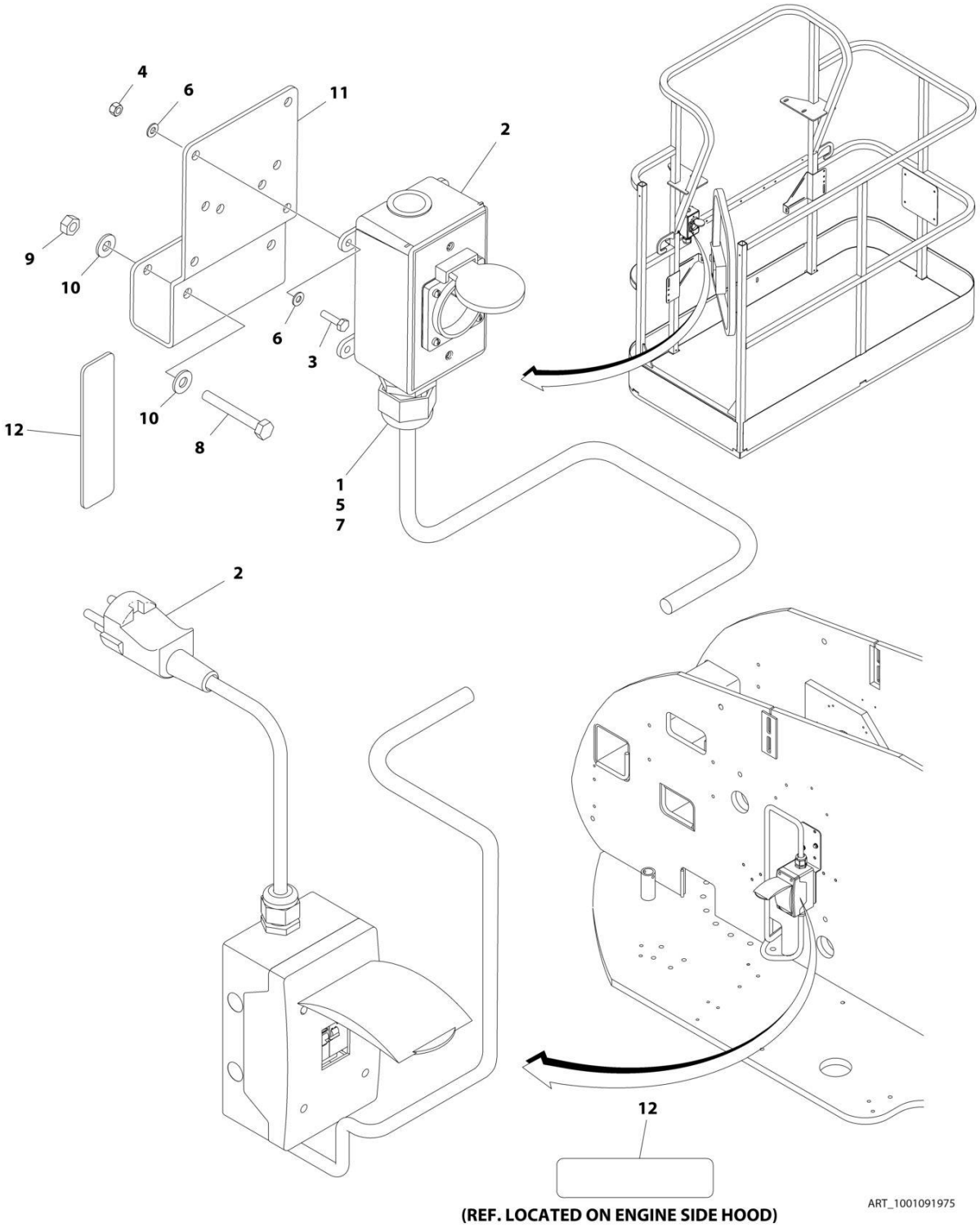

FIGURE 8-19. AC BOX AT PLATFORM INSTALLATION - 220V AFSINT 107 KEYED GROUND (2X4 BOX) WITHOUT 2500W GENERATOR (CE SPECS) (SN 0300220579 through 0300272317, SN E300003513 through E300007990, SN 1300007279 through 1300007373)

ITEM	PART NUMBER	QTY	DESCRIPTION	REV
	1001091975	Ref	AC BOX AT PLATFORM INSTALLATION - 220V AFSINT 107 KEYED GROUND (2X4 BOX) WITHOUT 2500W GENERATOR (CE SPECS)	F
		Ref	Note: For Machines equipped with 4000W Generator, see SPECIAL OPTIONS SECTION.	
1	0100020	AR	Sealant, Pipe	
2	0275454	1	Receptacle Box Kit (See RECEPTACLE BOX KIT - 220V AFSINT 107 KEYED GROUND WITHOUT 2500W GENERATOR (2X4 BOX) (CE SPECS) for Breakdown)	
3	0700408	4	Bolt M4 x 16	
4	3290405	4	Nut M4	
5	1001101197	1	Adapter	
6	4811400	8	Washer M4	
7	1001101191	1	Connector, Strain Relief	
8	0641416	2	Bolt 1/4 x 2	
9	3311405	2	Nut 1/4	
10	4711400	4	Washer 1/4	
11	1001193018	1	Bracket	
12	3251242	2	Decal - 240V/50Hz **(SN 0300235097 through 0300272317, SN 1300007279 through 1300007373, SN E300004872 through E300007990, Except SN 0300272185 through 0300272190, Excluding E300007814)**	
13	1001205958	3	Terminal (Not Shown – Located inside Receptacle Box)	

FIGURE 8-20. AC BOX AT PLATFORM INSTALLATION - 220V CUSTOMER SUPPLIED COMPONENTS (ANSI EXPORT, CE AND CHINA SPECS)

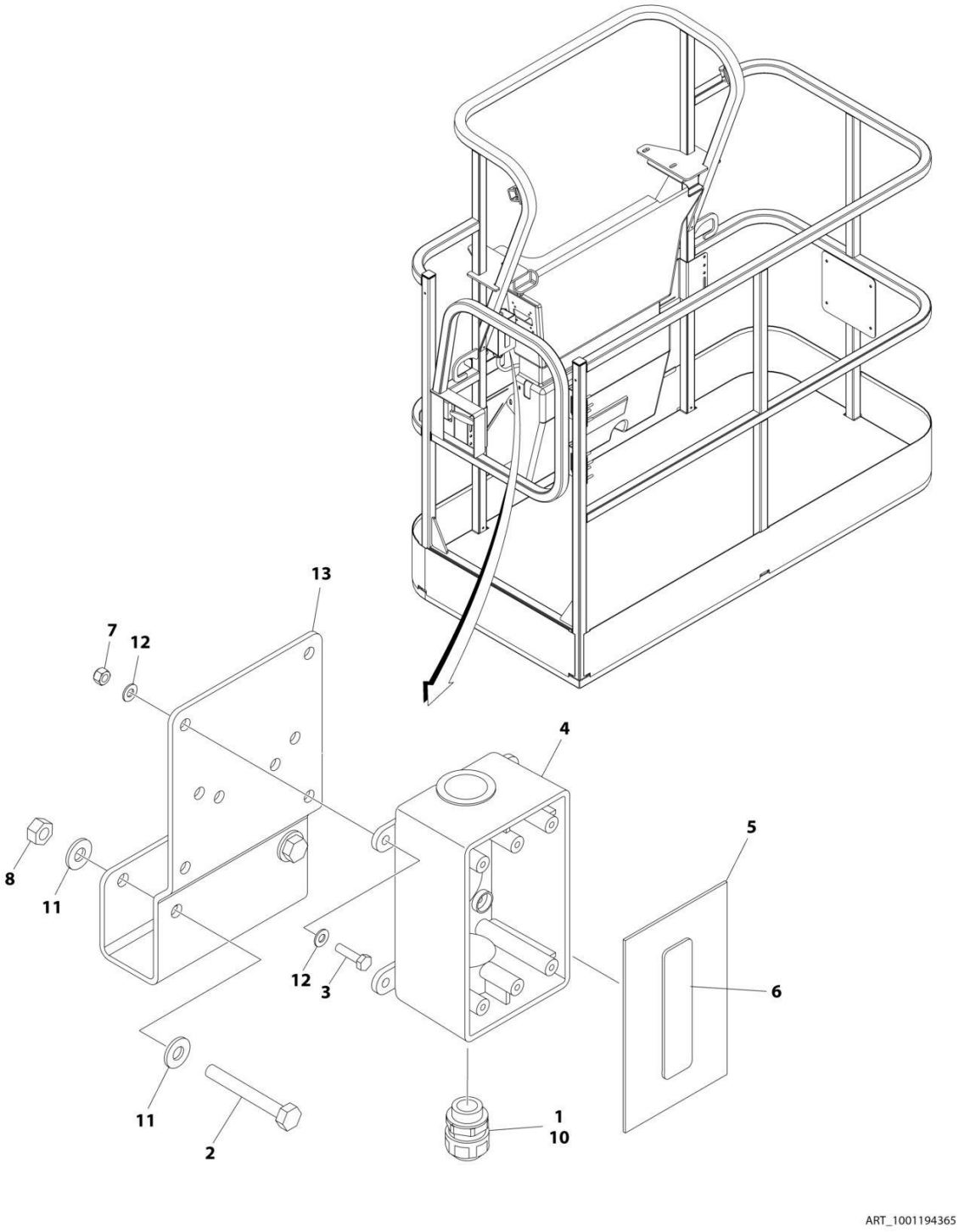

FIGURE 8-20. AC BOX AT PLATFORM INSTALLATION - 220V CUSTOMER SUPPLIED COMPONENTS (ANSI EXPORT, CE AND CHINA SPECS)

ITEM	PART NUMBER	QTY	DESCRIPTION	REV
	1001194365	Ref	AC BOX AT PLATFORM INSTALLATION - BOX WITH COVER (2X4 BOX)	A
1	0100020	AR	Sealant	
2	0641416	2	Bolt 1/4 x 2	
3	0700408	4	Bolt M4 x 16	
4	0861731	1	Box, Switch	
5	1670603	1	Cover	
6	3251242	1	Decal - 240V/50Hz	
7	3290405	4	Nut M4	
8	3311405	2	Nut 1/4	
9	4460384	3	Terminal (Not Shown)	
10	4460662	1	Connector, Strain Relief	
11	4711400	4	Washer 1/4	
12	4811400	8	Washer M4	
13	1001193018	1	Bracket, AC Receptacle	

FIGURE 8-21. AC CABLE INSTALLATION - WITH TWO BREAKERS (CE SPECS) (SN 0300220579 through 0300272317, SN E300003513 through E300007990, SN 1300007279 through 1300007373)

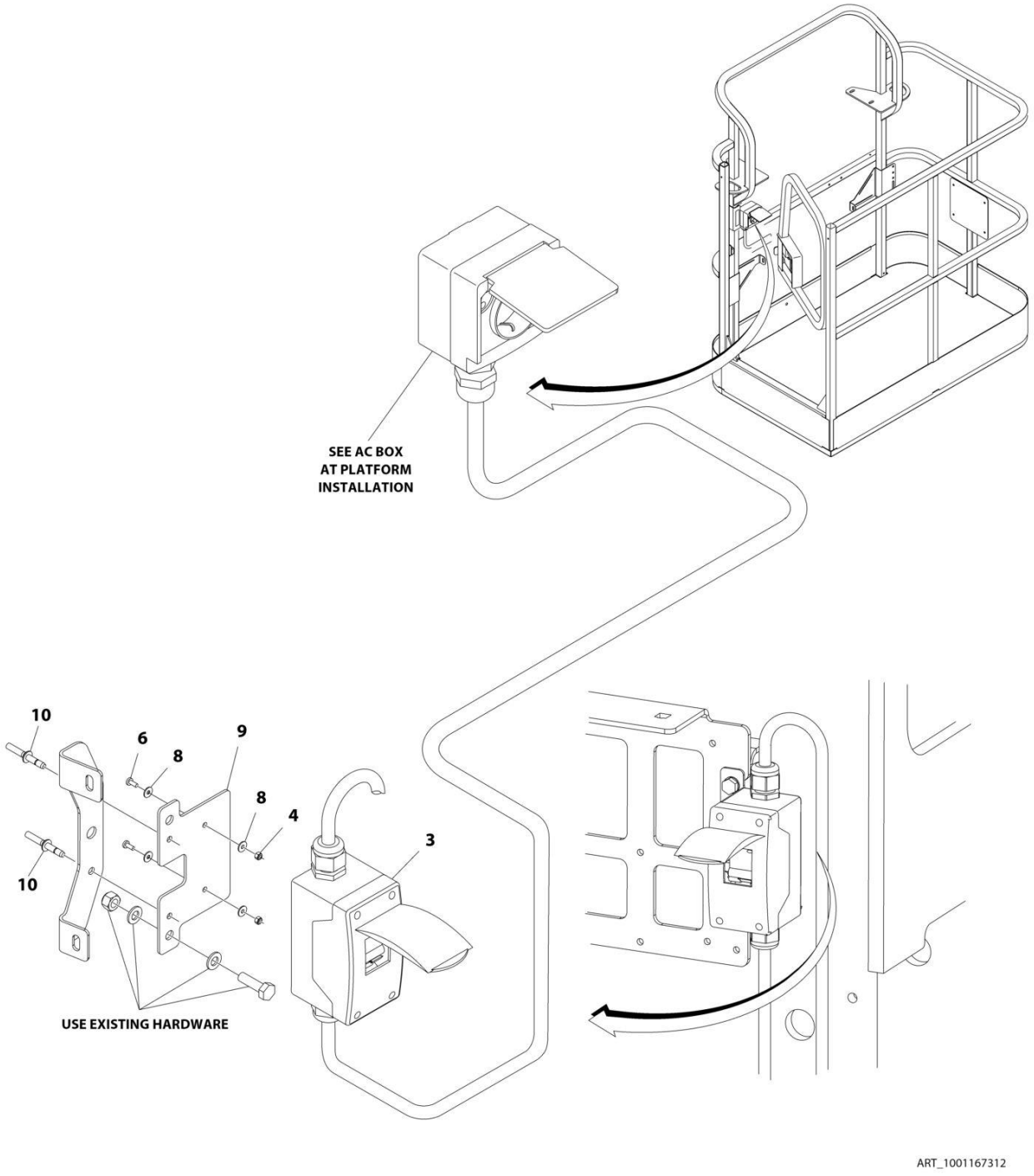

FIGURE 8-21. AC CABLE INSTALLATION - WITH TWO BREAKERS (CE SPECS) (SN 0300220579 through 0300272317, SN E300003513 through E300007990, SN 1300007279 through 1300007373)

ITEM	PART NUMBER	QTY	DESCRIPTION	REV
	1001167312	Ref	AC CABLE INSTALLATION - WITH TWO BREAKERS (CE SPECS)	F
3	2902549	1	Breaker Box Kit - CE Spec (See BREAKER BOX KIT WITH TWO BREAKERS - CE SPEC for Breakdown)	
4	3290405	2	Nut M4	
4	3290605	2	Nut M6	
6	4010405	2	Screw M4 x 10	
6	0760614	2	Screw M6 x 30	
8	1001091102	2	Washer M4	
8	4811700	4	Washer M6	
9	1001174158	1	Bracket	
10	2080040	2	Fastener, Huck	

FIGURE 8-22. AC CABLE INSTALLATION - WITH THREE BREAKERS (CE SPECS) (SN 0300220579 through 0300272317, SN E300003513 through E300007990, SN 1300007279 through 1300007373)

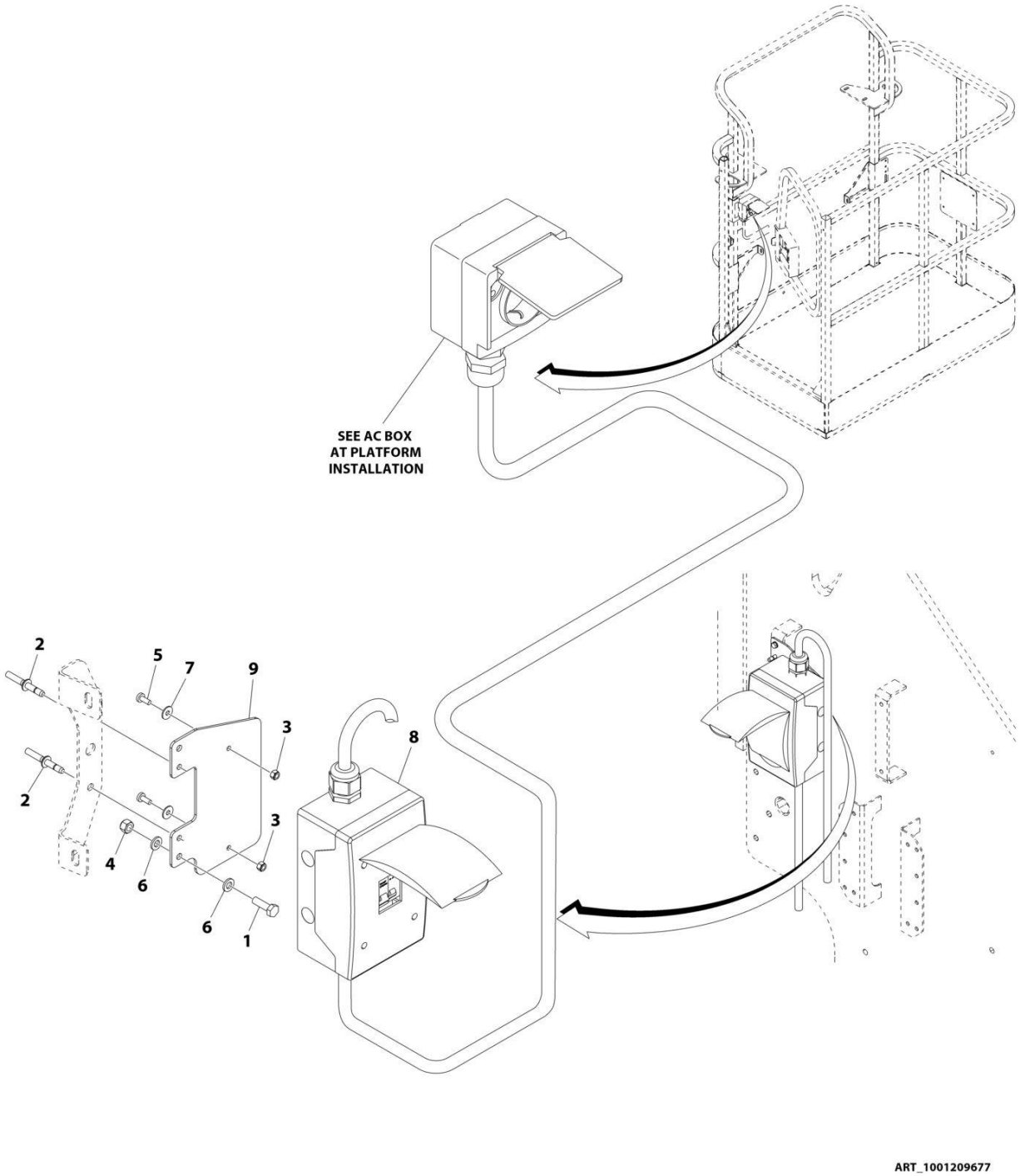

FIGURE 8-22. AC CABLE INSTALLATION - WITH THREE BREAKERS (CE SPECS) (SN 0300220579 through 0300272317, SN E300003513 through E300007990, SN 1300007279 through 1300007373)

ITEM	PART NUMBER	QTY	DESCRIPTION	REV
	1001209677	Ref	AC CABLE INSTALLATION - WITH THREE BREAKERS (CE SPECS)	A
1	0760610	2	Bolt M6 x 20	
2	2080040	2	Fastener, Huck	
3	3290405	2	Nut M4	
4	3290605	2	Nut M6	
5	4010405	2	Screw M4 x 10	
6	4811700	4	Washer M6	
7	1001091102	2	Washer M4	
8	1001152485	1	Breaker Box Kit - CE Spec (See BREAKER BOX KIT WITH THREE BREAKERS - CE SPEC for Breakdown)	
9	1001209832	1	Bracket	

FIGURE 8-23. BATTERY DISCONNECT SWITCH

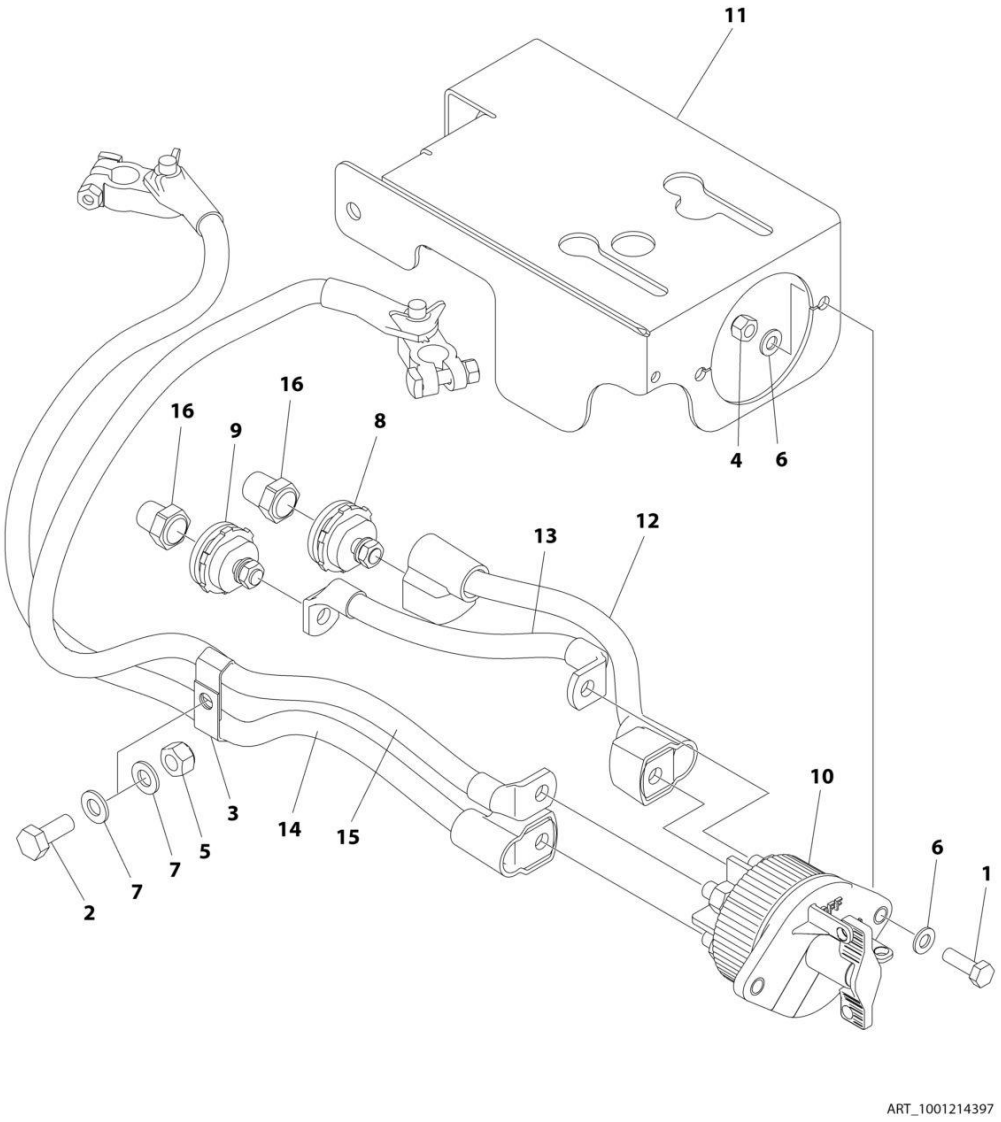

FIGURE 8-23. BATTERY DISCONNECT SWITCH

ITEM	PART NUMBER	QTY	DESCRIPTION	REV
	1001214397	Ref	BATTERY DISCONNECT SWITCH	A
1	0760812	2	Bolt M8 x 25	
2	0761012	1	Bolt M10 x 25	
3	1320223	2	Clamp	
4	3290805	2	Nut M8	
5	3291005	1	Nut M10	
6	4811900	4	Washer M8	
7	4812000	2	Washer M10	
8	1001214570	1	Connector (Red)	
9	1001214571	1	Connector (Black)	
10	1001225346	1	Switch	
11	1001226530	1	Mount	
12	1001237878	1	Cable, Battery Disconnect (Positive)	
13	1001237879	1	Cable, Battery Disconnect (Negative)	
14	1001237880	1	Cable (Positive)	
15	1001237881	1	Cable (Negative)	
16	1001206476	1	Connector	

FIGURE 8-24. BEACON LIGHT HARNESS (BLUE BEACON ONLY) (SN 0300201991 through 0300202578)

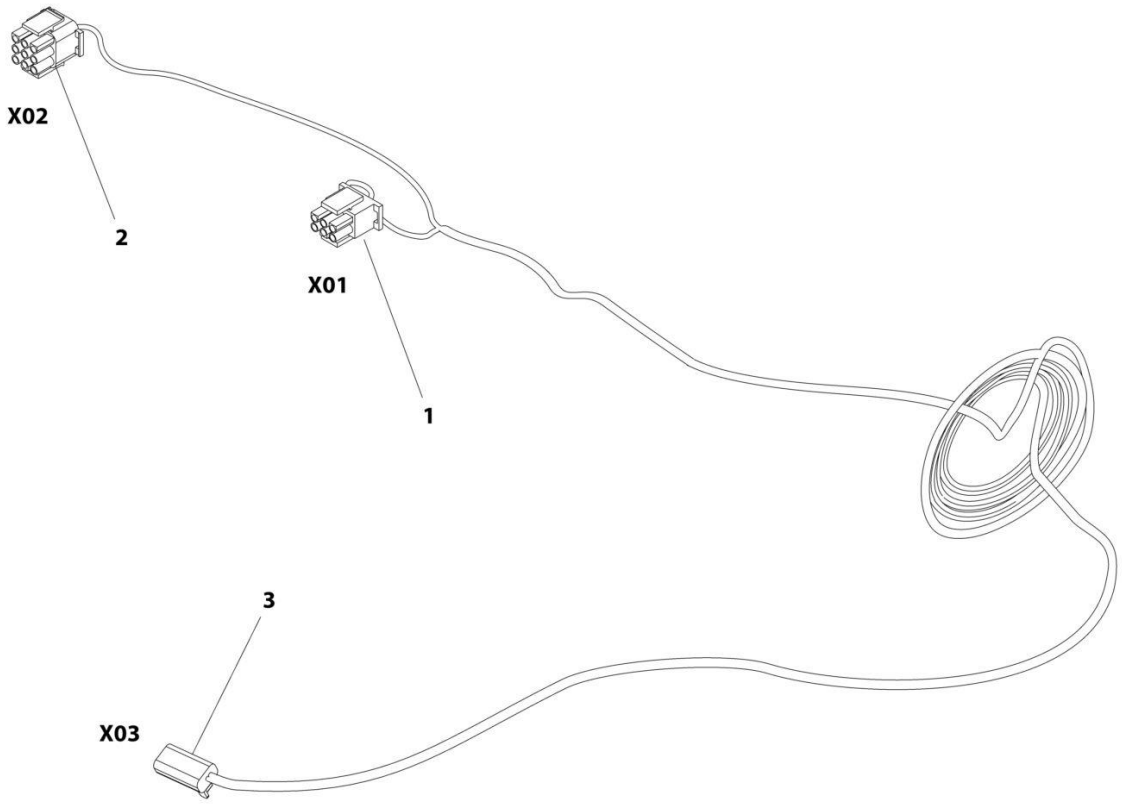

FIGURE 8-24. BEACON LIGHT HARNESS (BLUE BEACON ONLY) (SN 0300201991 through 0300202578)

ITEM	PART NUMBER	QTY	DESCRIPTION	REV
	1001149570	Ref	BEACON LIGHT HARNESS (BLUE BEACON ONLY) **(SN 0300201991 through 0300202579)**	C
1	4460225	1	Plug, Male - 6 Position	
1	4460268	1	Socket, Female	
2	4460265	1	Plug, Male - 9 Position	
2	4460267	1	Pin, Male	
3	4460891	1	Plug, Male - 2 Position	
3	4460465	2	Socket, Female	

FIGURE 8-25. BEACON LIGHT HARNESS (BLUE BEACON ONLY) (SN 0300202579 through 0300272317, SN B300003516 through B300005760, SN E300002833 through E300007990, SN 1300007279 through 1300007373)

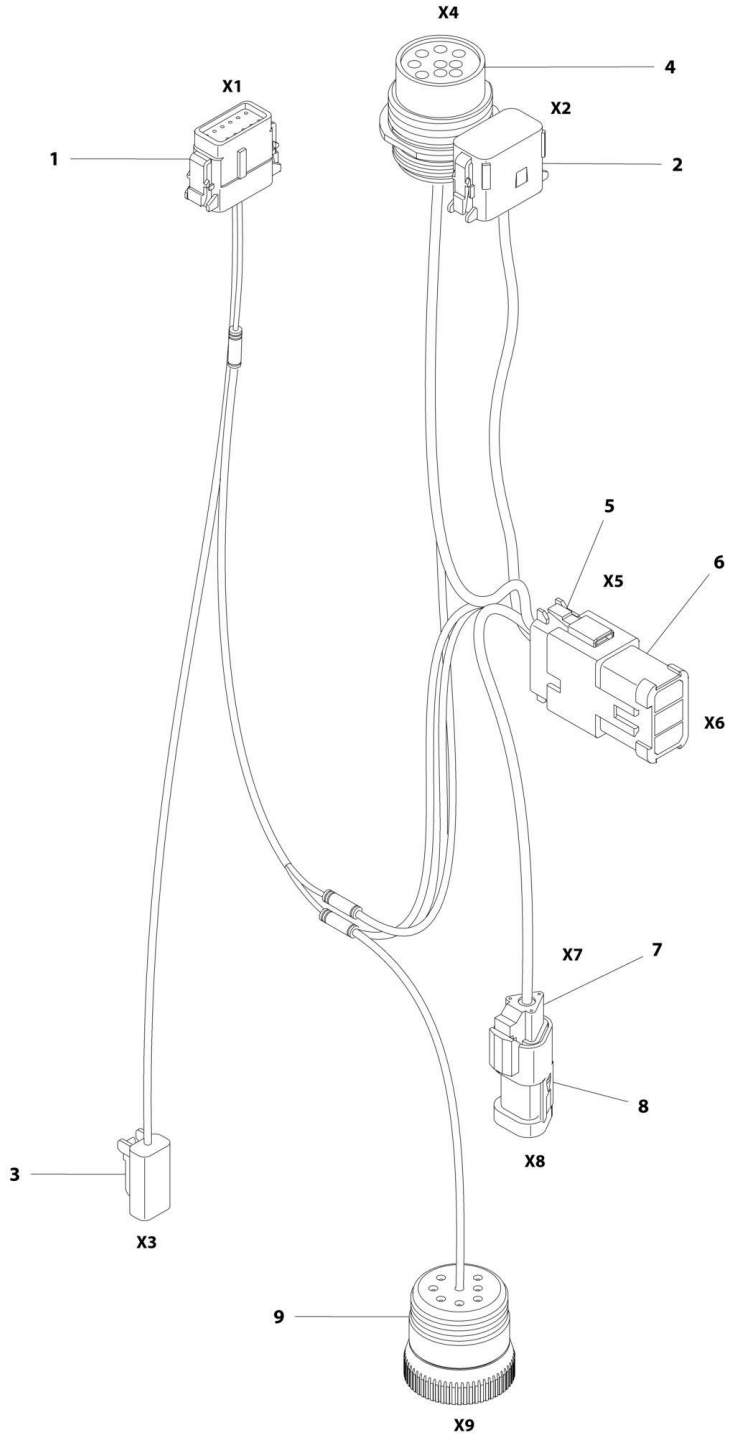

FIGURE 8-25. BEACON LIGHT HARNESS (BLUE BEACON ONLY) (SN 0300202579 through 0300272317, SN B300003516 through B300005760, SN E300002833 through E300007990, SN 1300007279 through 1300007373)

ITEM	PART NUMBER	QTY	DESCRIPTION	REV
	1001142736	Ref	BEACON HARNESS (BLUE BEACON LIGHT ONLY)	F
1	1001116808	1	Plug, Male - 12 Position	
1	4460928	3	Socket, Female	
1	4460518	9	Plug, Terminal	
2	1001116774	1	Plug, Male - 12 Position	
2	4460928	3	Socket, Female	
2	4460518	9	Plug, Terminal	
3	4460891	1	Plug, Male - 2 Position	
3	4460465	2	Socket, Female	
4	1001112612	1	Connector - 9 Position	
4	4460464	6	Pin, Male	
4	4460466	3	Plug, Terminal	
5	4460933	1	Plug, Male - 12 Position	
5	4460465	12	Socket, Female	
6	1001119020	1	Bussbar - 12 Position	
7	4461095	1	Plug, Male - 3 Position	
7	4460465	3	Socket, Female	
8	4461070	1	Bussbar - 3 Position	
9	1001112796	1	Connector - 9 Position	
9	4460465	6	Socket, Female	
9	4460466	3	Plug, Terminal	

FIGURE 8-26. BEACON EXTENSION HARNESS (SN 0300202579 through 0300221757, SN E300002833 through E300003881)

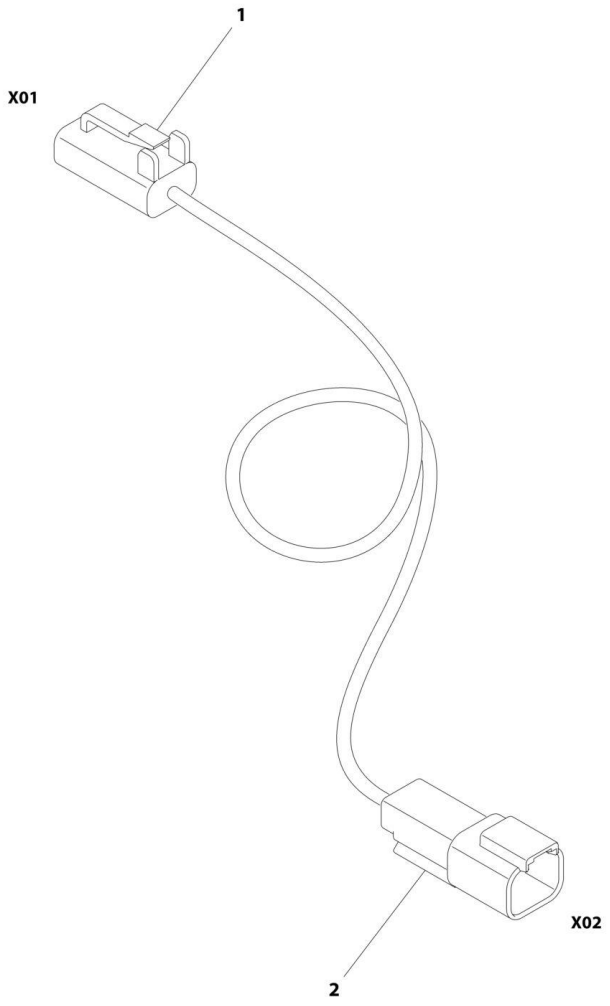

ART_1001196458

FIGURE 8-26. BEACON EXTENSION HARNESS (SN 0300202579 through 0300221757, SN E300002833 through E300003881)

ITEM	PART NUMBER	QTY	DESCRIPTION	REV
	1001196458	Ref	BEACON EXTENSION HARNESS **(SN 0300202579 through 0300221757, SN E300002833 through E300003881)**	A
1	4460891	1	Plug, Male -2 Position	
1	4460465	2	Socket, Female	
2	4460897	1	Receptacle, Female	
2	4460464	2	Pin, Male	

FIGURE 8-27. BOOM CABLES AND CLAMPS INSTALLATION - 450A (WITHOUT ARCTIC PACKAGE)

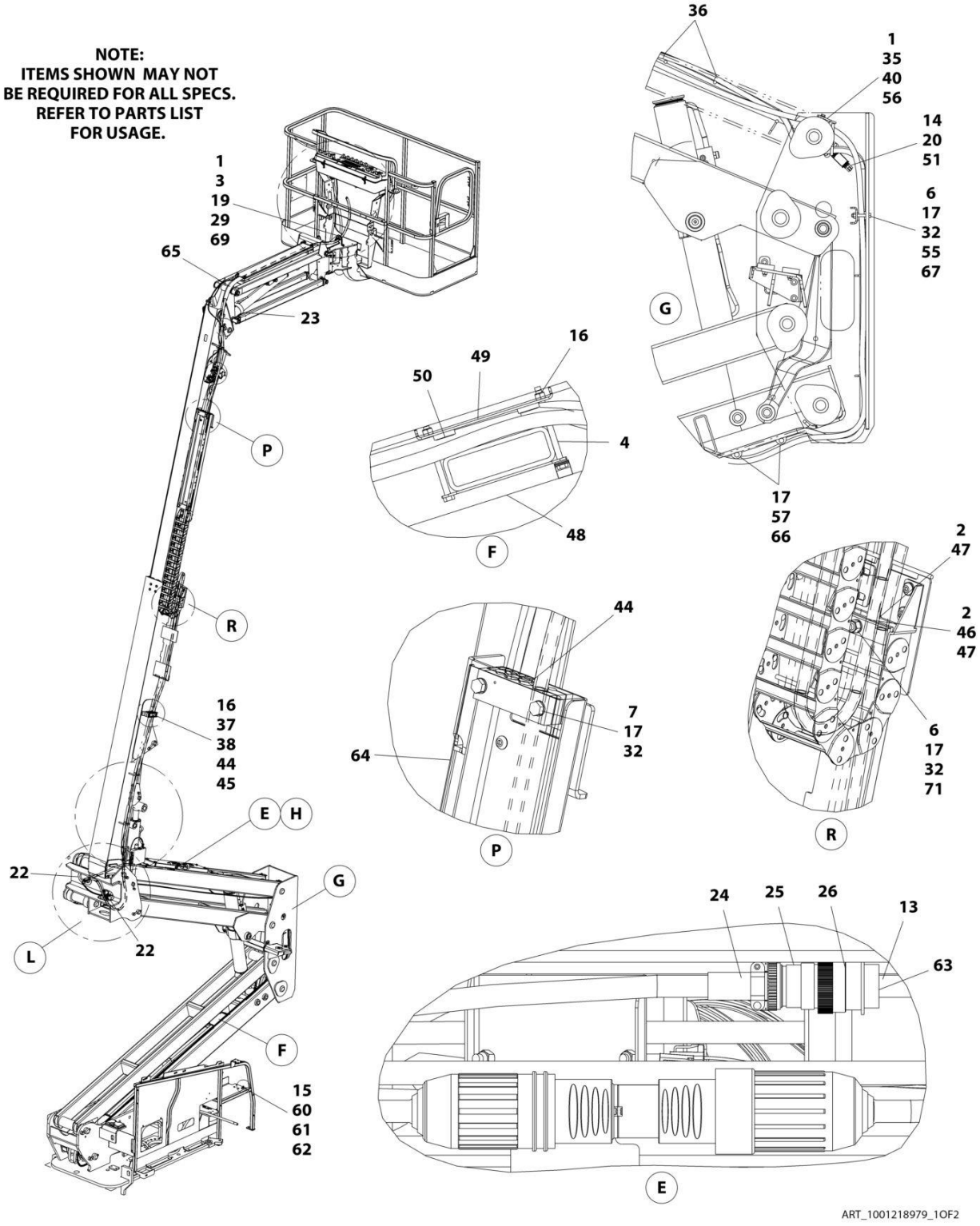

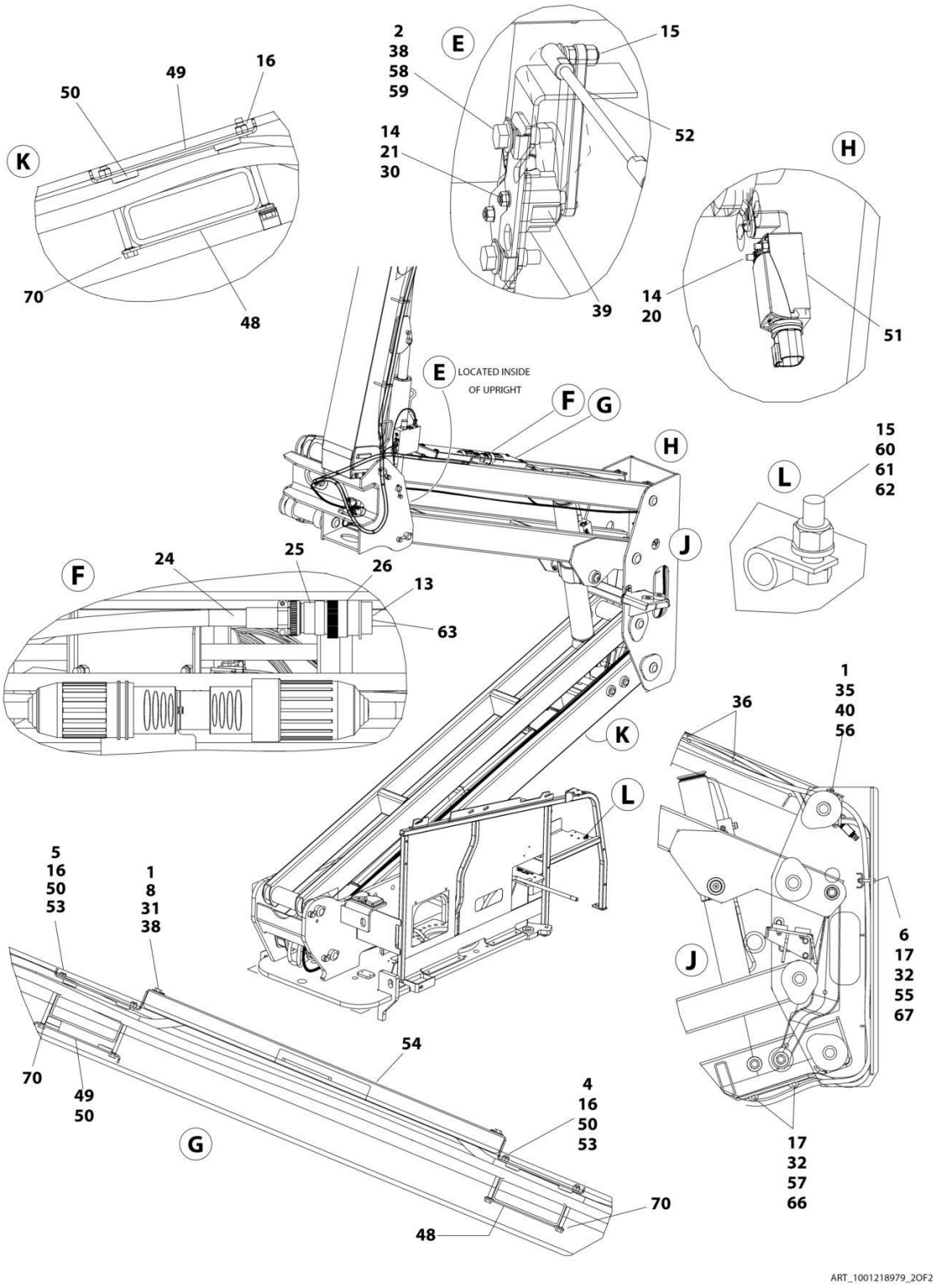
K
16
49
50
70
48
E
2
38
58
59
15
52
14
21
30
39
H
14
20
51
E LOCATED INSIDE OF UPRIGHT
F
G
H
15
60
61
62
L
J
F
24
25
26
13
63
K
L
1
35
40
56
36
5
16
50
53
1
8
31
38
J
6
17
32
55
67
54
70
49
50
4
16
50
53
G
17
32
57
66
70
48
ART_1001218979_2OF2

FIGURE 8-27. BOOM CABLES AND CLAMPS INSTALLATION - 450A (WITHOUT ARCTIC PACKAGE)

ITEM	PART NUMBER	QTY	DESCRIPTION	REV
	1001179228	Ref	BOOM CABLES AND CLAMPS INSTALLATION - REFERENCE CHART	N
	1001218979	Ref	BOOM CABLES AND CLAMPS INSTALLATION - 450A (WITHOUT ARCTIC PACKAGE)	A
	1001219001	Ref	BOOM CABLES AND CLAMPS INSTALLATION KIT - 450A (WITHOUT ARCTIC PACKAGE)	D
		Ref	Note: For Machines with Generator Option, See SPECIAL OPTIONS SECTION for Components.	
1	0100011	AR	Compound, Locking	
2	0100081	AR	Adhesive	
3	0641509	2	Bolt 5/16 x 1-1/8	
4	0700827	6	Bolt M8 x 100	
5	0700828	2	Bolt M8 x 110	
6	0701021	3	Bolt M10 x 65	
7	0701024	4	Bolt M10 x 80	
8	0760812	4	Bolt M8 x 25	
13	2820031	AR	Heat Shrink	
14	3290405	4	Nut M4	
15	3290605	3	Nut M6	
16	3290805	10	Nut M8	
17	3291005	9	Nut M10	
19	3841340	1	Loop, Hose	
20	4010417	2	Screw M4 x 45	
20	4010418	2	Screw M4 x 50	
21	4031511	2	Capscrew M4 x 35	
22	4060808	27.5 in /8.4m	Flex-Trim	
23	4240156	1	Strap, Clinch	
24	4460473	AR	Clamp, Cable	
25	4460865	1	Connector - 19 Position	
26	4460866	1	Connector - 19 Position	
29	4711500	1	Washer 5/16	
30	4811400	2	Washer M4	
31	4811902	4	Washer M8	
32	4812000	13	Washer M10	
33	1001176951	1	Harness, Tower Boom (Not Shown - See BOOM HARNESS - TOWER BOOM for Breakdown)	
34	1001174749	1	Harness, Tower Boom AC Cable (Not Shown - See BOOM HARNESS - TOWER BOOM AC CABLE for Breakdown)	
35	5251014	2	Bolt M10 x 30	
36	8881800	AR	Tie-Strap	
37	5281920	2	Screw M8 x 80	
38	1001118274	8	Nut M8	
39	1001118971	1	Sensor, Angle	
39	70005667	1	Arm	
40	1001118972	2	Nut M10	
41	1001172335	1	Harness, Main Boom (Not Shown - See BOOM HARNESS - 450A (MAIN BOOM) for Breakdown)	
42	1001172336	1	Harness, Main Boom AC Cable (Not Shown - See BOOM HARNESS - 450A (MAIN BOOM AC CABLE) for Breakdown)	
43	1001164738	1	Harness, Boom Valve (Not Shown - See BOOM VALVE HARNESS for Breakdown)	

ITEM	PART NUMBER	QTY	DESCRIPTION	REV
44	1001166656	3	Block, Clamping	
45	1001166662	1	Plate	
46	1001168472	1	Plate, Clamping	
47	1001168473	2	Clamp, Rubber	
48	1001171553	3	Plate, Clamping	
49	1001171555	3	Plate, Clamping	
50	1001171559	10	Pad	
51	1001172271	1	Switch, Limit	
52	1001172796	NLA	Link, Sensor (Use p/n 1001238466) (Note: Sold as Assembly Only) **(SN 0300201991 through 0300252886)**	
52	1001238466	1	Link, Sensor (Note: Sold as Assembly Only) **(SN 0300252887 through 0300272317, Except SN 0300272185 through 0300272190)**	
53	1001178448	2	Plate, Clamping	
54	1001178449	1	Cover	
55	1001178644	1	Plate	
56	1001178958	1	Bracket	
57	1001182561	2	Roller	
58	5250812	2	Bolt M8 x 25	
59	1001179266	1	Plate, Mounting	
60	0760610	1	Bolt M6 x 20	
61	1320043	1	Clamp	
62	4811700	1	Washer M6	
63	4460466	AR	Plug, Terminal	
64	1001181875	1	Cover	
65	1001181923	1	Shield, Hose	
66	1001119280	2	Bolt M10 x 260	
67	1001185747	2	Pad	
69	88521205	2	Nut 5/16	
70	1001119228	8	Nut M8	
71	8310070	1	Pushnut 3/8	

FIGURE 8-28. BOOM CABLES AND CLAMPS INSTALLATION - 450AJ (WITHOUT ARCTIC PACKAGE)

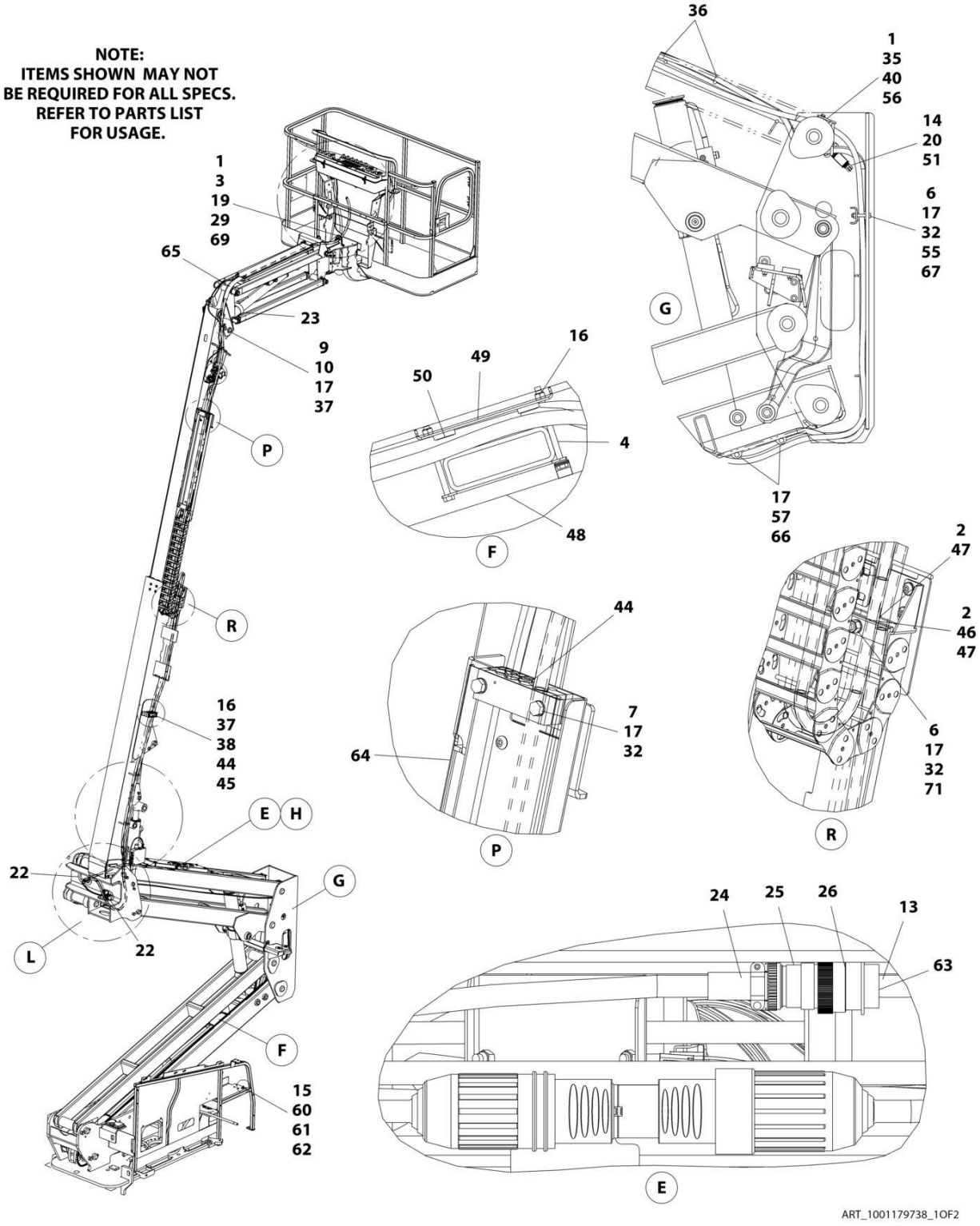

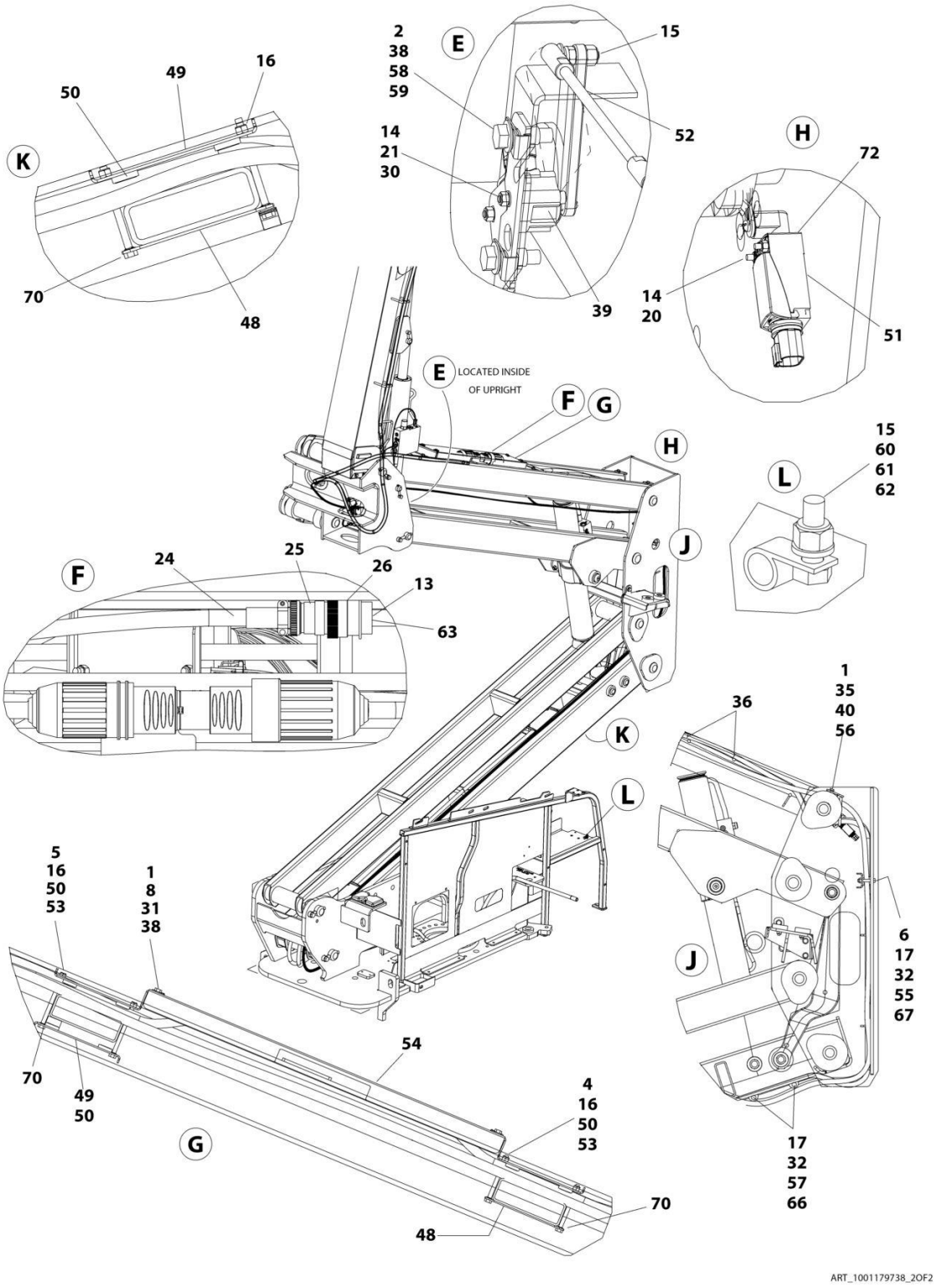
K
16
49
50
70
48
E
2
38
58
59
15
52
14
21
30
39
H
72
14
20
51
E LOCATED INSIDE OF UPRIGHT
F
G
H
15
60
61
62
L
J
F
24
25
26
13
63
K
L
1
35
40
56
36
6
17
32
55
67
J
5
16
50
53
1
8
31
38
54
70
49
50
G
4
16
50
53
70
48
17
32
57
66
ART_1001179738_2OF2

FIGURE 8-28. BOOM CABLES AND CLAMPS INSTALLATION - 450AJ (WITHOUT ARCTIC PACKAGE)

ITEM	PART NUMBER	QTY	DESCRIPTION	REV
	1001179228	Ref	BOOM CABLES AND CLAMPS INSTALLATION - REFERENCE CHART	N
	1001179738	Ref	BOOM CABLES AND CLAMPS INSTALLATION - 450AJ (WITHOUT ARCTIC PACKAGE)	K
		Ref	Note: For Machines with Generator Option, See SPECIAL OPTIONS SECTION for Components.	
1	0100011	AR	Compound, Locking	
2	0100081	AR	Adhesive	
3	0641509	2	Bolt 5/16 x 1-1/8	
4	0700827	6	Bolt M8 x 100	
5	0700828	2	Bolt M8 x 110	
6	0701021	3	Bolt M10 x 65	
7	0701024	4	Bolt M10 x 80	
8	0760812	4	Bolt M8 x 25	
9	0761012	1	Bolt M10 x 25	
10	1320130	1	Clamp	
13	2820031	AR	Heat Shrink	
14	3290405	4	Nut M4	
15	3290605	3	Nut M6	
16	3290805	10	Nut M8	
17	3291005	10	Nut M10	
19	3841340	1	Loop, Hose	
20	4010417	2	Screw M4 x 45	
20	4010418	2	Screw M4 x 50	
21	4031511	2	Capscrew M4 x 35	
22	4060808	27.5 in/ 8.38m	Flex-Trim	
23	4240156	2	Strap, Clinch	
24	4460473	AR	Clamp, Cable	
25	4460865	1	Connector - 19 Position	
26	4460866	1	Connector - 19 Position	
29	4711500	4	Washer 5/16	
30	4811400	2	Washer M4	
31	4811902	4	Washer M8	
32	4812000	13	Washer M10	
33	1001176951	1	Harness, Tower Boom (Not Shown - See BOOM HARNESS - TOWER BOOM for Breakdown)	
34	1001174749	1	Harness, Tower Boom AC Cable (Not Shown - See BOOM HARNESS - TOWER BOOM AC CABLE for Breakdown)	
35	5251014	2	Bolt M10 x 30	
36	8881800	AR	Tie-Strap	
37	5281920	2	Screw M8 x 80	
38	1001118274	8	Nut M8	
39	1001118971	1	Sensor, Angle	
39	70005667	1	Arm	
40	1001118972	2	Nut M10	
41	1001164730	1	Harness, Main Boom (Not Shown - See BOOM HARNESS - 450AJ (MAIN BOOM) for Breakdown)	
42	1001164731	1	Harness, Main Boom AC Cable (Not Shown - See BOOM HARNESS - 450AJ (MAIN BOOM AC CABLE) for Breakdown)	
43	1001164738	1	Harness, Boom Valve (Not Shown - See BOOM VALVE HARNESS for Breakdown)	

ITEM	PART NUMBER	QTY	DESCRIPTION	REV
44	1001166656	3	Block, Clamping	
45	1001166662	1	Plate	
46	1001168472	1	Plate, Clamping	
47	1001168473	2	Clamp, Rubber	
48	1001171553	3	Plate, Clamping	
49	1001171555	3	Plate, Clamping	
50	1001171559	10	Pad	
51	1001172271	1	Switch, Limit	
52	1001172796	NLA	Link, Sensor (Use p/n 1001238466) (Note: Sold as Assembly Only) **(SN 0300201991 through 0300252886, SN E300002833 through E300006260)**	
52	1001238466	1	Link, Sensor (Note: Sold as Assembly Only) **(SN 0300252887 through 0300272317, SN B300003516 through B300005760, SN E300006261 through E300007990, Except SN 0300272185 through 0300272190, Excluding B300005569 and E300007814)**	
53	1001178448	2	Plate, Clamping	
54	1001178449	1	Cover	
55	1001178644	1	Plate	
56	1001178958	1	Bracket	
57	1001182561	2	Roller	
58	5250812	2	Bolt M8 x 25	
59	1001179266	1	Plate, Mounting	
60	0760610	1	Bolt M6 x 20	
61	1320043	1	Clamp	
62	4811700	1	Washer M6	
63	4460466	AR	Plug, Terminal	
64	1001181621	1	Cover	
65	1001181923	1	Shield, Hose	
66	1001119280	2	Bolt M10 x 260	
67	1001185747	2	Pad	
69	88521205	2	Nut 5/16	
70	1001119228	8	Nut M8	
71	8310070	1	Pushnut 3/8	
72	4750800	AR	Washer #8 **(SN 0300223307 through 0300272317, SN 1300007279 through 1300007373, SN B300003516 through B300005760, SN E300003720 through E300007990, Except SN 0300272185 through 0300272190, Excluding B300005569 and E300007814)**	

FIGURE 8-29. BOOM CABLES AND CLAMPS INSTALLATION - 450A (WITH ARCTIC PACKAGE)

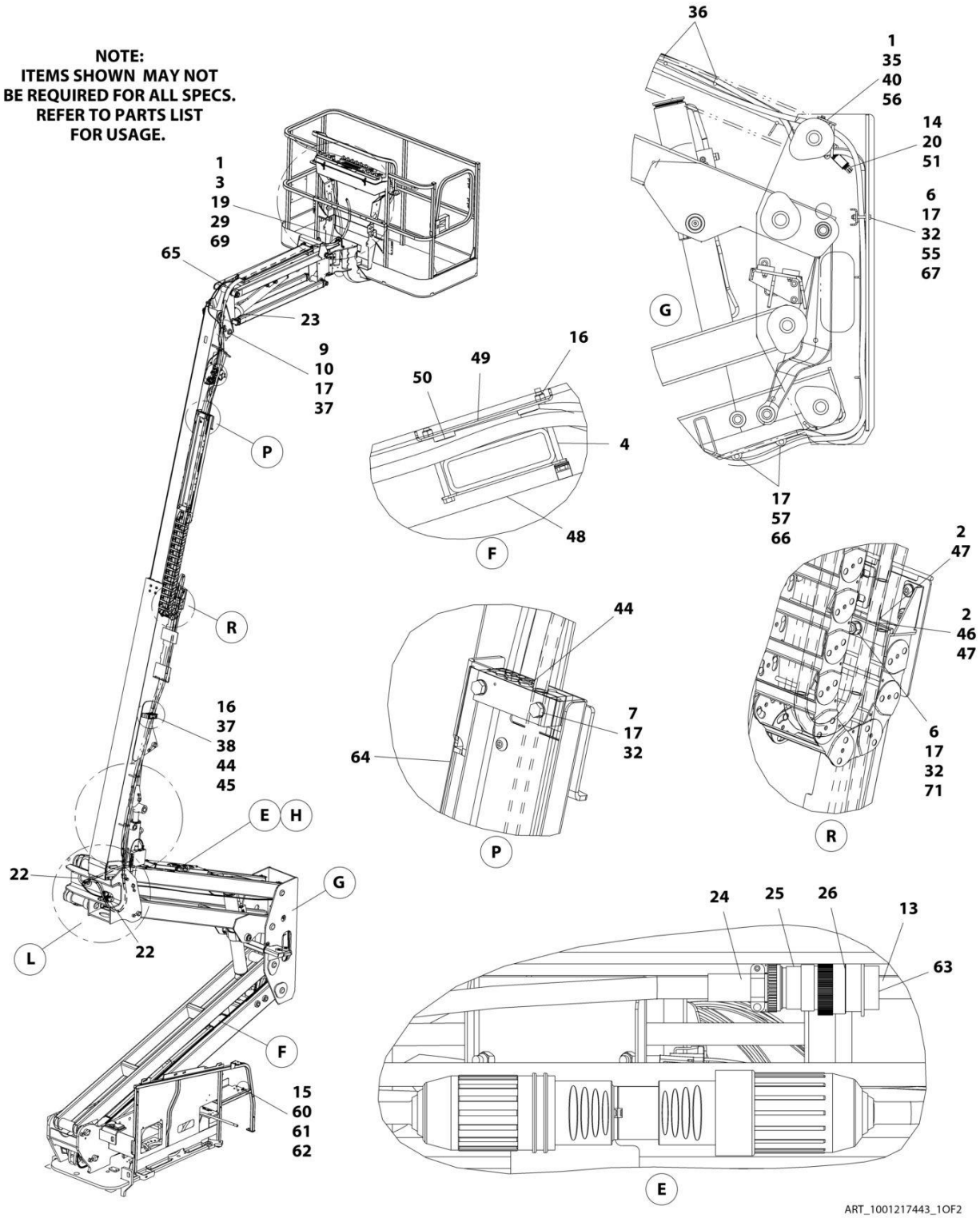

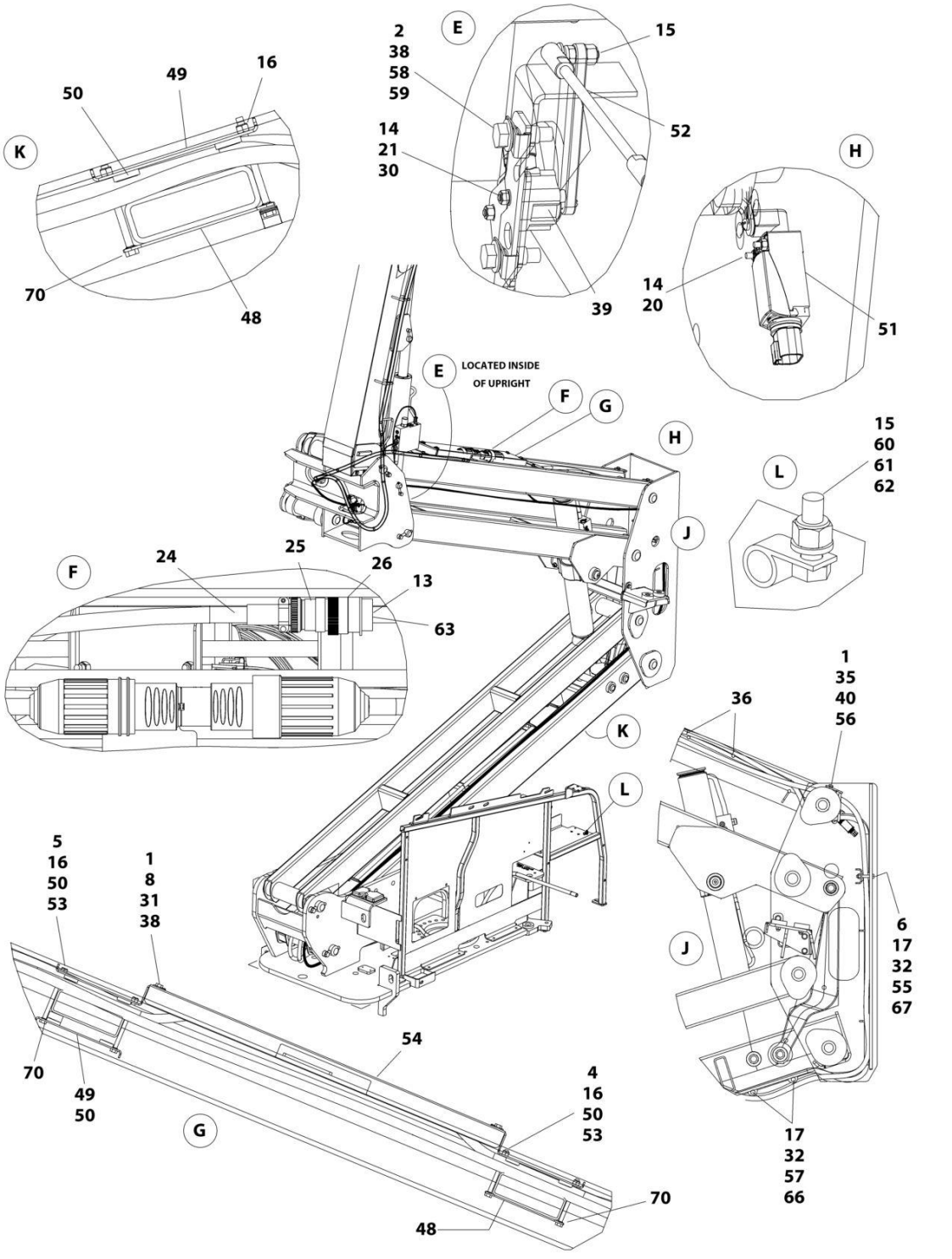

ART_1001217443_2OF2

FIGURE 8-29. BOOM CABLES AND CLAMPS INSTALLATION - 450A (WITH ARCTIC PACKAGE)

ITEM	PART NUMBER	QTY	DESCRIPTION	REV
	1001179228	Ref	BOOM CABLES AND CLAMPS INSTALLATION - REFERENCE CHART	N
	1001217443	Ref	BOOM CABLES AND CLAMPS INSTALLATION - 450A (WITH ARCTIC PACKAGE)	D
		Ref	Note: For Machines with Generator Option, See SPECIAL OPTIONS SECTION for Components.	
1	0100011	AR	Compound, Locking	
2	0100081	AR	Adhesive	
3	0641509	2	Bolt 5/16 x 1-1/8	
4	0700827	6	Bolt M8 x 100	
5	0700828	2	Bolt M8 x 110	
6	0701021	3	Bolt M10 x 65	
7	0701024	4	Bolt M10 x 80	
8	0760812	4	Bolt M8 x 25	
9	0761012	1	Bolt M10 x 25	
10	1320130	1	Clamp	
13	2820031	AR	Heat Shrink	
14	3290405	4	Nut M4	
15	3290605	3	Nut M6	
16	3290805	10	Nut M8	
17	3291005	10	Nut M10	
19	3841340	1	Loop, Hose	
20	4010417	2	Screw M4 x 45	
20	4010418	2	Screw M4 x 50	
21	4031511	2	Capscrew M4 x 35	
22	4060808	27.5 in /8.4m	Flex-Trim	
23	4240156	2	Strap, Clinch	
24	4460473	AR	Clamp, Cable	
25	4460865	1	Connector - 19 Position	
26	4460866	1	Connector - 19 Position	
29	4711500	4	Washer 5/16	
30	4811400	2	Washer M4	
31	4811902	4	Washer M8	
32	4812000	13	Washer M10	
33	1001179439	1	Harness, Tower Boom (Not Shown - See BOOM HARNESS - TOWER BOOM for Breakdown)	
34	1001174754	1	Harness, Tower Boom AC Cable (Not Shown - See BOOM HARNESS - TOWER BOOM AC CABLE for Breakdown)	
35	5251014	2	Bolt M10 x 30	
36	8881800	AR	Tie-Strap	
37	5281920	2	Screw M8 x 80	
38	1001118274	8	Nut M8	
39	1001118971	1	Sensor, Angle	
39	70005667	1	Arm	
40	1001118972	2	Nut M10	
41	1001217441	1	Harness, Main Boom (Not Shown - See BOOM HARNESS - 450A (MAIN BOOM) for Breakdown)	
42	1001217440	1	Harness, Main Boom AC Cable (Not Shown - See BOOM HARNESS - 450A (MAIN BOOM AC CABLE) for Breakdown)	
43	1001164738	1	Harness, Boom Valve (Not Shown - See BOOM VALVE HARNESS for Breakdown)	

ITEM	PART NUMBER	QTY	DESCRIPTION	REV
44	1001166678	3	Block, Clamping	
45	1001166662	1	Plate	
46	1001168472	1	Plate, Clamping	
47	1001168473	2	Clamp, Rubber	
48	1001171553	3	Plate, Clamping	
49	1001171555	3	Plate, Clamping	
50	1001171559	10	Pad	
51	1001172271	1	Switch, Limit	
52	1001172796	NLA	Link, Sensor (Use p/n 1001238466) (Note: Sold as Assembly Only) **(SN 0300201991 through 0300252886)**	
52	1001238466	1	Link, Sensor (Note: Sold as Assembly Only) **(SN 0300252887 through 0300272317, Except SN 0300272185 through 0300272190)**	
53	1001178448	2	Plate, Clamping	
54	1001178449	1	Cover	
55	1001178644	1	Plate	
56	1001178958	1	Bracket	
57	1001182561	2	Roller	
58	5250812	2	Bolt M8 x 25	
59	1001179266	1	Plate, Mounting	
60	0760610	1	Bolt M6 x 20	
61	1320043	1	Clamp	
62	4811700	1	Washer M6	
63	4460466	AR	Plug, Terminal	
64	1001181875	1	Cover	
65	1001181923	1	Shield, Hose	
66	1001119280	2	Bolt M10 x 260	
67	1001185747	2	Pad	
69	88521205	2	Nut 5/16	
70	1001119228	8	Nut M8	
71	8310070	1	Pushnut 3/8	

FIGURE 8-30. BOOM CABLES AND CLAMPS INSTALLATION - 450AJ (WITH ARCTIC PACKAGE)

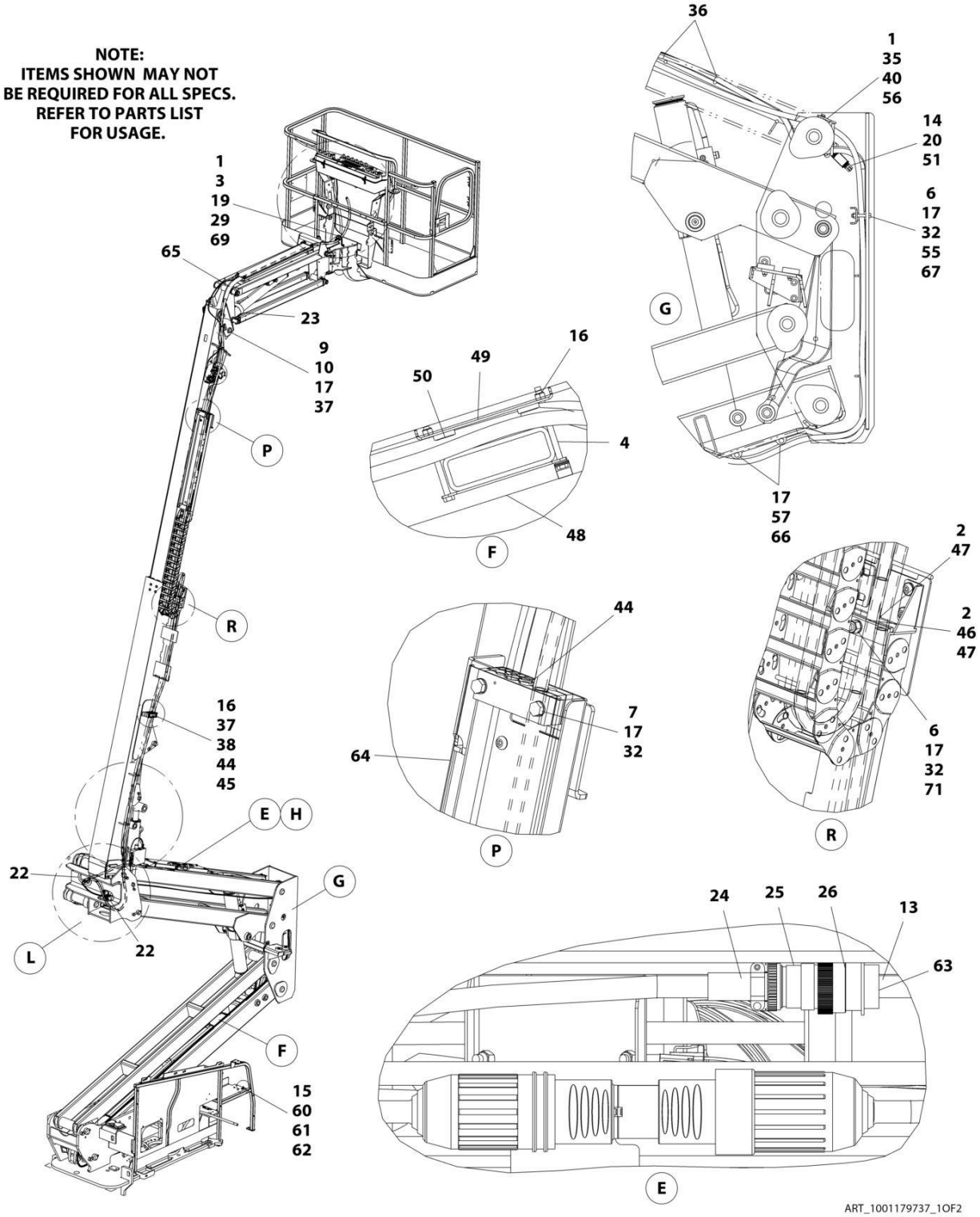

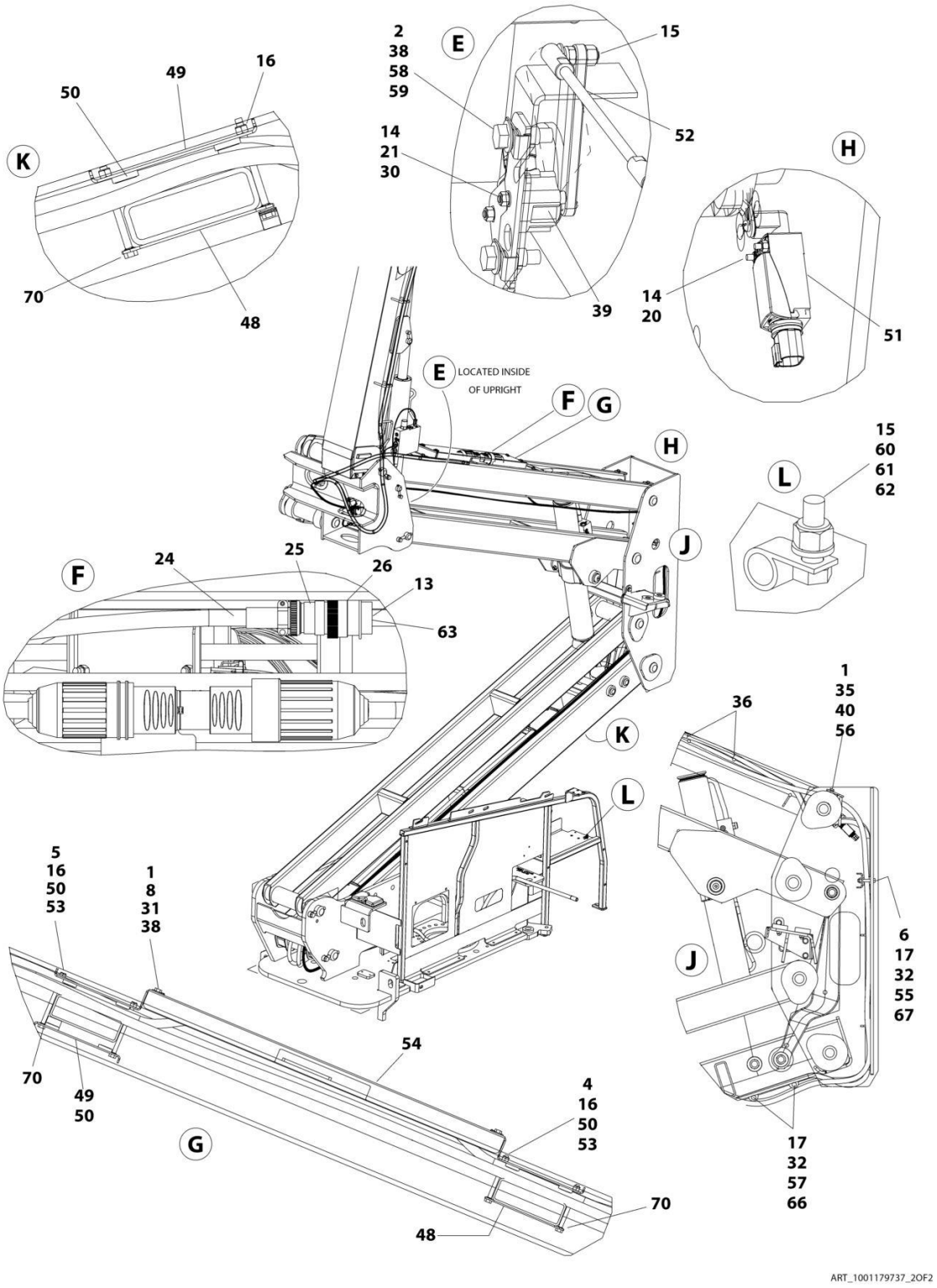
K
16
49
50
70
48
E
2
38
58
59
15
52
14
21
30
39
H
14
20
51
E LOCATED INSIDE OF UPRIGHT
F
G
H
15
60
61
62
L
J
F
24
25
26
13
63
K
L
1
35
40
56
36
5
16
50
53
1
8
31
38
J
6
17
32
55
67
54
70
49
50
4
16
50
53
G
17
32
57
66
70
48
ART_1001179737_2OF2

FIGURE 8-30. BOOM CABLES AND CLAMPS INSTALLATION - 450AJ (WITH ARCTIC PACKAGE)

ITEM	PART NUMBER	QTY	DESCRIPTION	REV
	1001179228	Ref	BOOM CABLES AND CLAMPS INSTALLATION - REFERENCE CHART	N
	1001179737	Ref	BOOM CABLES AND CLAMPS INSTALLATION - 450AJ (WITH ARCTIC PACKAGE)	J
		Ref	Note: For Machines with Generator Option, See SPECIAL OPTIONS SECTION for Components.	
1	0100011	AR	Compound, Locking	
2	0100081	AR	Adhesive	
3	0641509	2	Bolt 5/16 x 1-1/8	
4	0700827	6	Bolt M8 x 100	
5	0700828	2	Bolt M8 x 110	
6	0701021	3	Bolt M10 x 65	
7	0701024	4	Bolt M10 x 80	
8	0760812	4	Bolt M8 x 25	
9	0761012	1	Bolt M10 x 25	
10	1320130	1	Clamp	
13	2820031	AR	Heat Shrink	
14	3290405	4	Nut M4	
15	3290605	3	Nut M6	
16	3290805	10	Nut M8	
17	3291005	10	Nut M10	
19	3841340	1	Loop, Hose	
20	4010417	2	Screw M4 x 45	
20	4010418	2	Screw M4 x 50	
21	4031511	2	Capscrew M4 x 35	
22	4060808	27.5 in/ 8.38m	Flex-Trim	
23	4240156	2	Strap, Clinch	
24	4460473	AR	Clamp, Cable	
25	4460865	1	Connector - 19 Position	
26	4460866	1	Connector - 19 Position	
29	4711500	4	Washer 5/16	
30	4811400	2	Washer M4	
31	4811902	4	Washer M8	
32	4812000	13	Washer M10	
33	1001179439	1	Harness, Tower Boom (Not Shown - See BOOM HARNESS - TOWER BOOM for Breakdown)	
34	1001174754	1	Harness, Tower Boom AC Cable (Not Shown - See BOOM HARNESS - TOWER BOOM AC CABLE for Breakdown)	
35	5251014	2	Bolt M10 x 30	
36	8881800	AR	Tie-Strap	
37	5281920	2	Screw M8 x 80	
38	1001118274	8	Nut M8	
39	1001118971	1	Sensor, Angle	
39	70005667	1	Arm	
40	1001118972	2	Nut M10	
41	1001174748	1	Harness, Main Boom (Not Shown - See BOOM HARNESS - 450AJ (MAIN BOOM) for Breakdown)	
42	1001174750	1	Harness, Main Boom AC Cable (Not Shown - See BOOM HARNESS - 450AJ (MAIN BOOM AC CABLE) for Breakdown)	
43	1001164738	1	Harness, Boom Valve (Not Shown - See BOOM VALVE HARNESS for Breakdown)	

ITEM	PART NUMBER	QTY	DESCRIPTION	REV
44	1001166678	1	Block, Clamping	
45	1001166662	1	Plate	
46	1001168472	1	Plate, Clamping	
47	1001168473	2	Clamp, Rubber	
48	1001171553	3	Plate, Clamping	
49	1001171555	3	Plate, Clamping	
50	1001171559	10	Pad	
51	1001172271	1	Switch, Limit	
52	1001172796	NLA	Link, Sensor (Use p/n 1001238466) (Note: Sold as Assembly Only) **(SN 0300201991 through 0300252886)**	
52	1001238466	1	Link, Sensor (Note: Sold as Assembly Only) **(SN 0300252887 through 0300272317, SN B300003516 through B300005760, Except SN 0300272185 through 0300272190, Excluding B300005569)**	
53	1001178448	2	Plate, Clamping	
54	1001178449	1	Cover	
55	1001178644	1	Plate	
56	1001178958	1	Bracket	
57	1001182561	2	Roller	
58	5250812	2	Bolt M8 x 25	
59	1001179266	1	Plate, Mounting	
60	0760610	1	Bolt M6 x 20	
61	1320043	1	Clamp	
62	4811700	1	Washer M6	
63	4460466	AR	Plug, Terminal	
64	1001181621	1	Cover	
65	1001181923	1	Shield, Hose	
66	1001119280	2	Bolt M10 x 260	
67	1001185747	2	Pad	
69	88521205	2	Nut 5/16	
70	1001119228	8	Nut M8	
71	8310070	1	Pushnut 3/8	

FIGURE 8-31. BOOM HARNESS - 450A (MAIN BOOM) (WITHOUT ARCTIC PACKAGE)

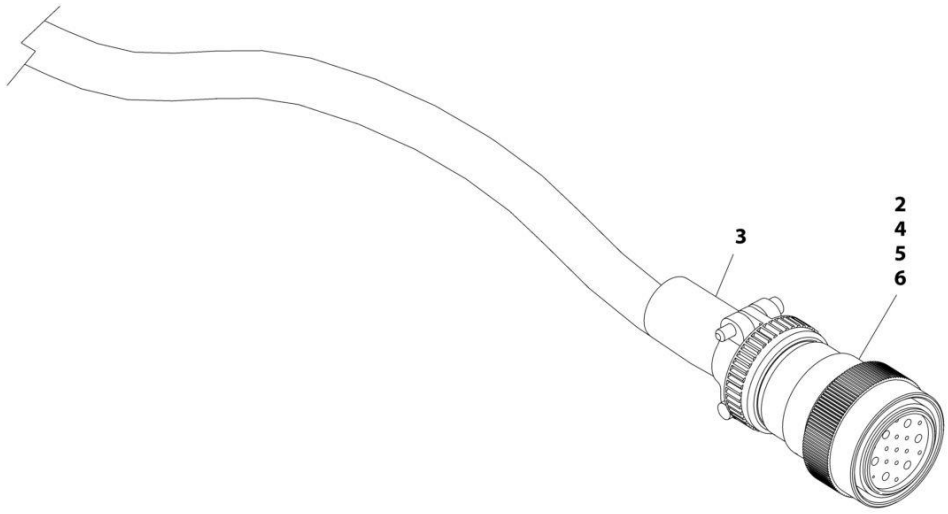

ART_1001172335

FIGURE 8-31. BOOM HARNESS - 450A (MAIN BOOM) (WITHOUT ARCTIC PACKAGE)

ITEM	PART NUMBER	QTY	DESCRIPTION	REV
	1001172335	Ref	BOOM HARNESS - 450A (MAIN BOOM) (WITHOUT ARCTIC PACKAGE)	E
2	4460865	1	Connector - 19 Position	
3	4460473	1	Clamp	
4	4460465	20	Socket, Female	
5	4460509	8	Socket, Female	
6	4460466	5	Plug, Socket	

FIGURE 8-32. BOOM HARNESS - 450AJ (MAIN BOOM) (WITHOUT ARCTIC PACKAGE)

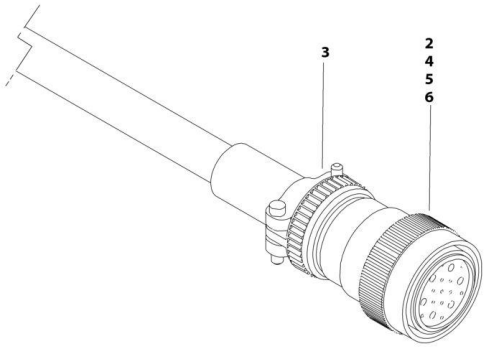

FIGURE 8-32. BOOM HARNESS - 450AJ (MAIN BOOM) (WITHOUT ARCTIC PACKAGE)

ITEM	PART NUMBER	QTY	DESCRIPTION	REV
	1001164730	Ref	BOOM HARNESS - 450AJ (MAIN BOOM) (WITHOUT ARCTIC PACKAGE)	D
2	4460865	1	Connector - 19 Position	
3	4460473	1	Clamp	
4	4460465	20	Socket, Female	
5	4460509	8	Socket, Female	
6	4460466	5	Plug, Socket	

FIGURE 8-33. BOOM HARNESS - 450A (MAIN BOOM) (WITH ARCTIC PACKAGE)

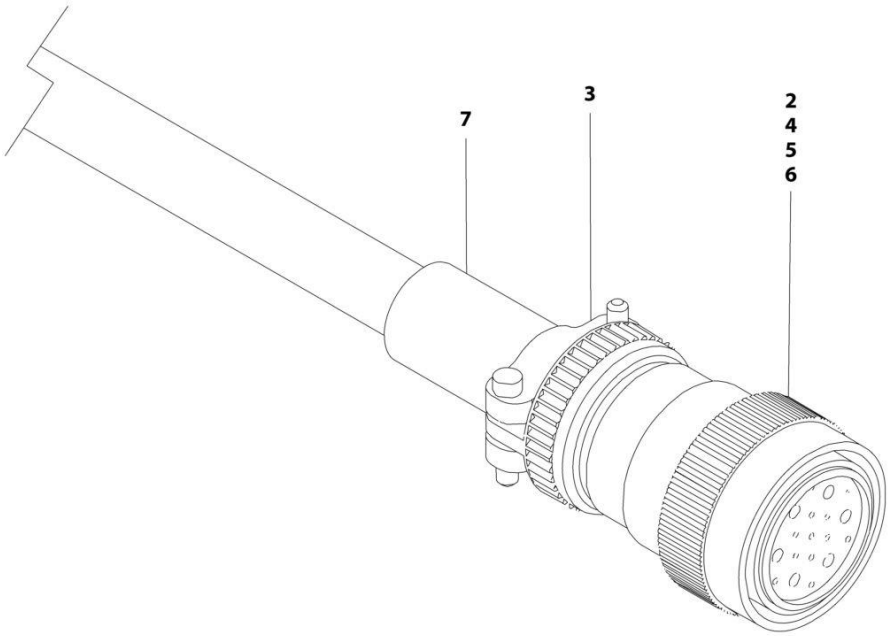

FIGURE 8-33. BOOM HARNESS - 450A (MAIN BOOM) (WITH ARCTIC PACKAGE)

ITEM	PART NUMBER	QTY	DESCRIPTION	REV
	1001217441	Ref	BOOM HARNESS - 450A (MAIN BOOM) (WITH ARCTIC PACKAGE)	A
2	4460865	1	Connector - 19 Position	
3	4460473	1	Clamp	
4	4460465	22	Socket, Female	
5	4460509	8	Socket, Female	
6	4460466	4	Plug, Socket	
7	2820118	AR	Heat Shrink	

FIGURE 8-34. BOOM HARNESS - 450AJ (MAIN BOOM) (WITH ARCTIC PACKAGE)

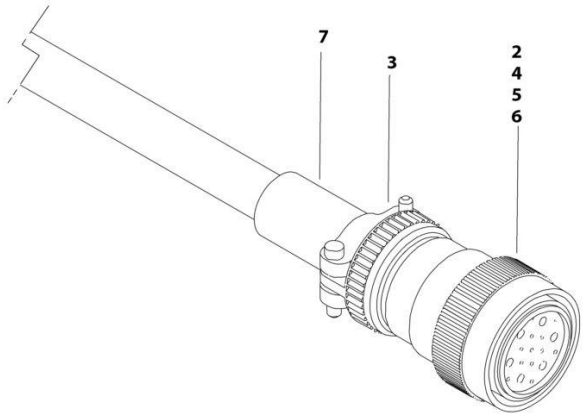

FIGURE 8-34. BOOM HARNESS - 450AJ (MAIN BOOM) (WITH ARCTIC PACKAGE)

ITEM	PART NUMBER	QTY	DESCRIPTION	REV
	1001174748	Ref	BOOM HARNESS - 450AJ (MAIN BOOM) (WITH ARCTIC PACKAGE)	C
2	4460865	1	Connector - 19 Position	
3	4460473	1	Clamp	
4	4460465	20	Socket, Female	
5	4460509	8	Socket, Female	
6	4460466	5	Plug, Socket	

FIGURE 8-35. BOOM HARNESS - 450A (MAIN BOOM AC CABLE) (WITHOUT ARCTIC PACKAGE)

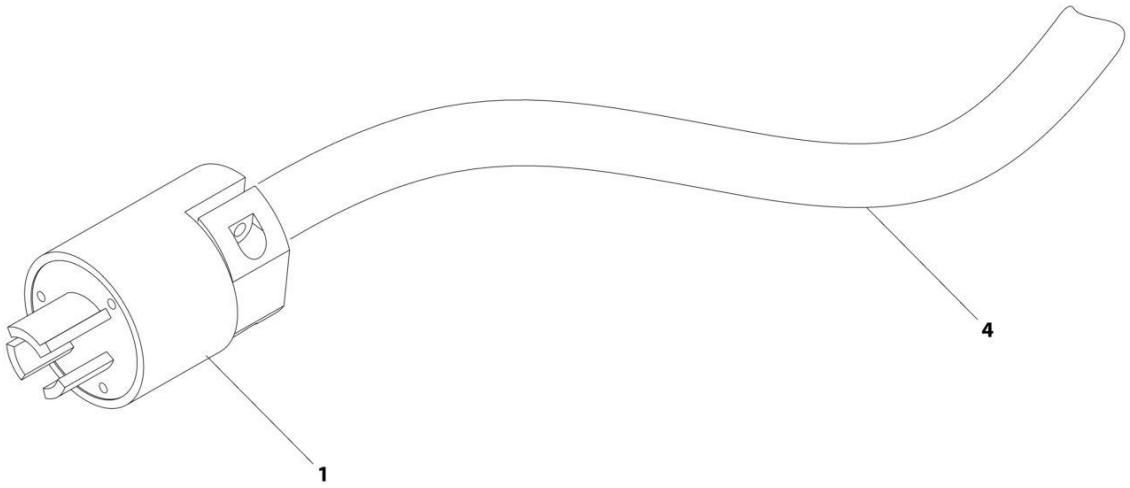

ART_1001172336

FIGURE 8-35. BOOM HARNESS - 450A (MAIN BOOM AC CABLE) (WITHOUT ARCTIC PACKAGE)

ITEM	PART NUMBER	QTY	DESCRIPTION	REV
	1001172336	Ref	BOOM HARNESS - 450A (MAIN BOOM AC CABLE) (WITHOUT ARCTIC PACKAGE)	C
1	1001120204	1	Plug, Male	
4	1060461	494 in /12.6m	Cable, Electrical - 12/3	

FIGURE 8-36. BOOM HARNESS - 450AJ (MAIN BOOM AC CABLE) (WITHOUT ARCTIC PACKAGE)

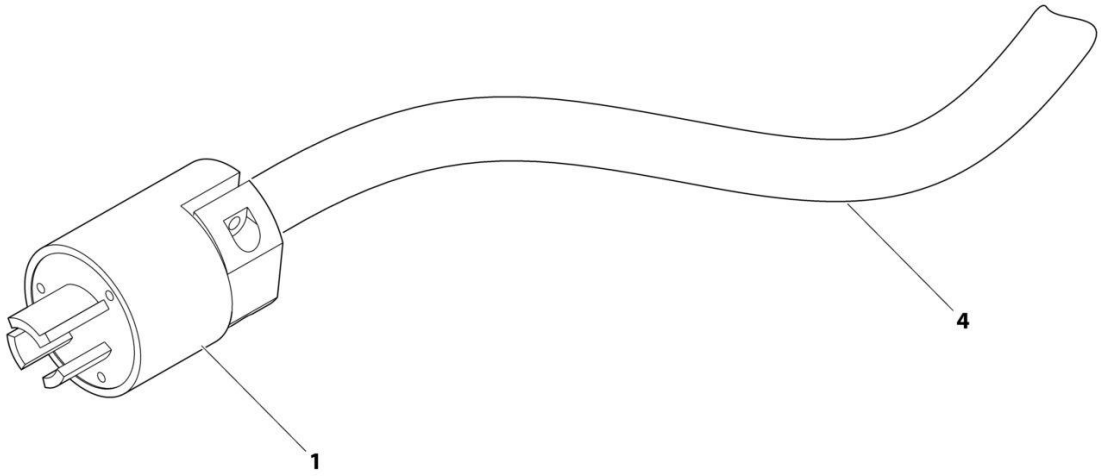

ART_1001164731

FIGURE 8-36. BOOM HARNESS - 450AJ (MAIN BOOM AC CABLE) (WITHOUT ARCTIC PACKAGE)

ITEM	PART NUMBER	QTY	DESCRIPTION	REV
	1001164731	Ref	BOOM HARNESS - 450AJ (MAIN BOOM AC CABLE) (WITHOUT ARCTIC PACKAGE)	C
1	1001120204	1	Plug, Male	
4	1060461	494 in/ 12.6m	Cable, Electrical - 12/3	

FIGURE 8-37. BOOM HARNESS - 450A (MAIN BOOM AC CABLE) (WITH ARCTIC PACKAGE)

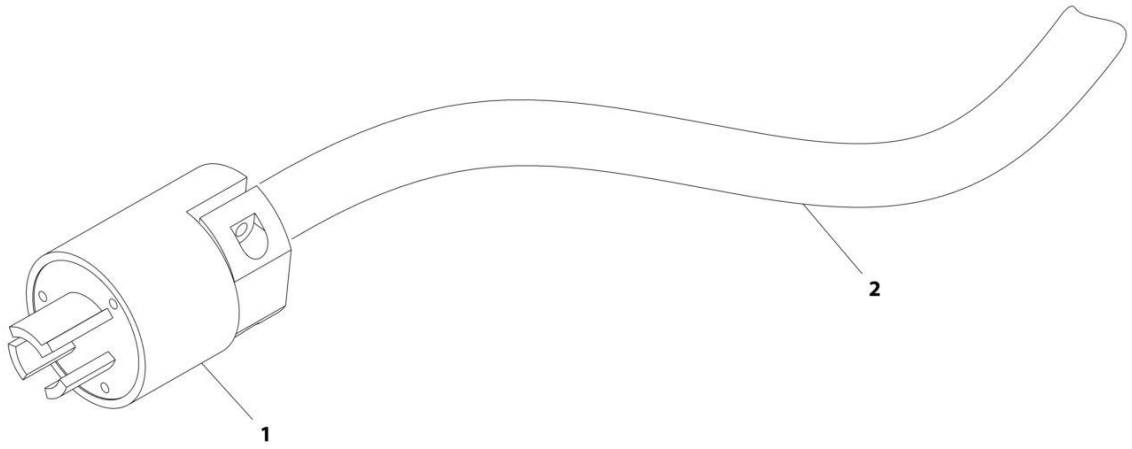

ART_1001217440

FIGURE 8-37. BOOM HARNESS - 450A (MAIN BOOM AC CABLE) (WITH ARCTIC PACKAGE)

ITEM	PART NUMBER	QTY	DESCRIPTION	REV
	1001217440	Ref	BOOM HARNESS - 450A (MAIN BOOM AC CABLE) (WITH ARCTIC PACKAGE)	A
1	1001120204	1	Plug, Male	
2	4923463	494 in /12.6m	Cable, Electrical - 12/3	

FIGURE 8-38. BOOM HARNESS - 450AJ (MAIN BOOM AC CABLE) (WITH ARCTIC PACKAGE)

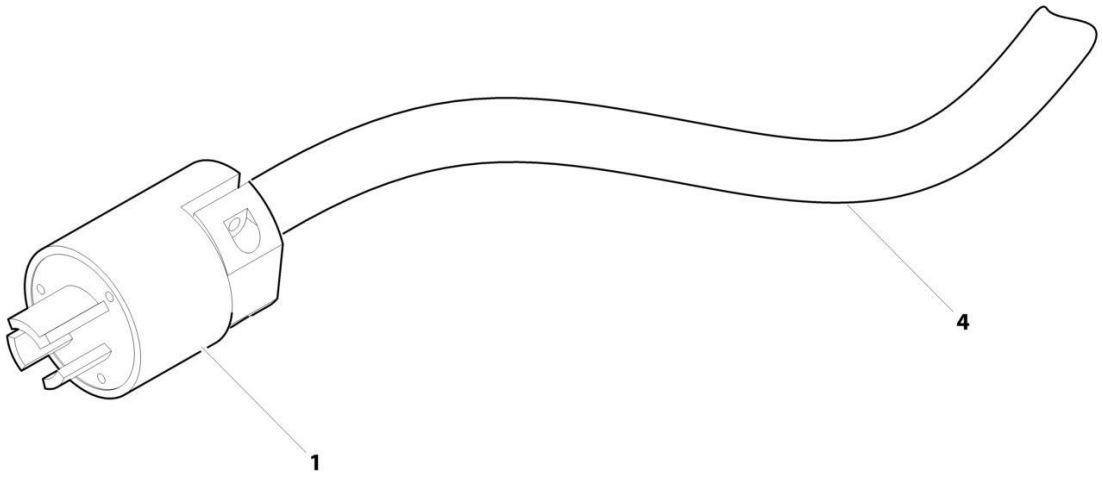

ART_1001174750

FIGURE 8-38. BOOM HARNESS - 450AJ (MAIN BOOM AC CABLE) (WITH ARCTIC PACKAGE)

ITEM	PART NUMBER	QTY	DESCRIPTION	REV
	1001174750	Ref	BOOM HARNESS - 450AJ (MAIN BOOM AC CABLE) (WITH ARCTIC PACKAGE)	B
1	1001120204	1	Plug, Male	
4	4923463	494 in/ 12.6m	Cable, Electrical - 12/3	

FIGURE 8-39. BOOM HARNESS - TOWER BOOM (WITHOUT ARCTIC PACKAGE)

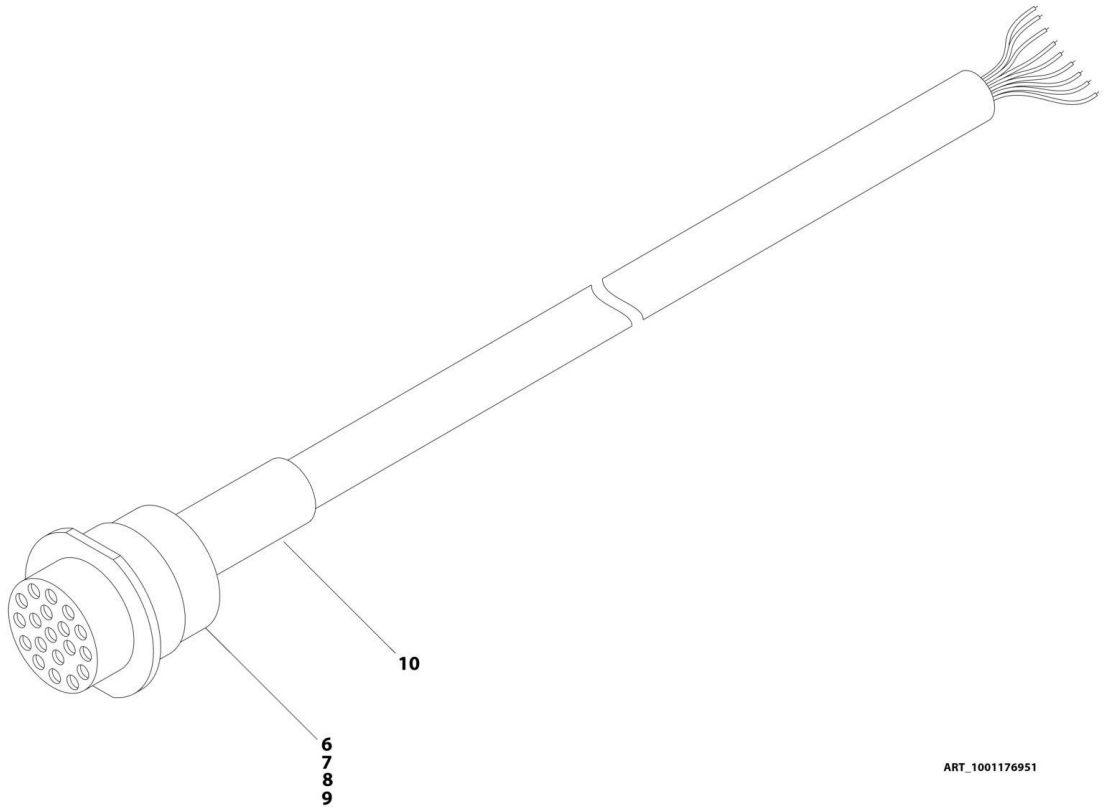

FIGURE 8-39. BOOM HARNESS - TOWER BOOM (WITHOUT ARCTIC PACKAGE)

ITEM	PART NUMBER	QTY	DESCRIPTION	REV
	1001176951	Ref	BOOM HARNESS - TOWER BOOM (WITHOUT ARCTIC PACKAGE)	E
6	4460466	5	Plug, Terminal	
7	4460464	20	Pin, Male	
8	4460508	8	Pin, Male	
9	4460866	1	Connector - 19 Position	
10	2820031	AR	Heat Shrink	

FIGURE 8-40. BOOM HARNESS - TOWER BOOM (WITH ARCTIC PACKAGE)

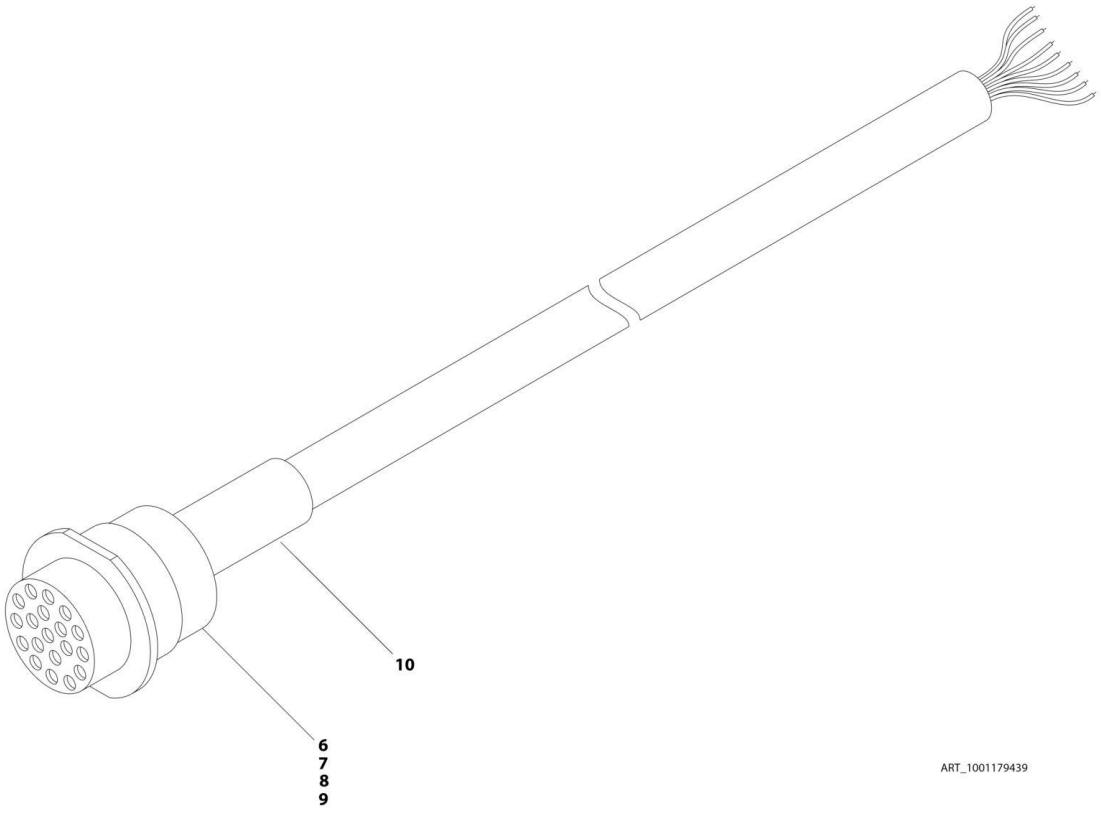

FIGURE 8-40. BOOM HARNESS - TOWER BOOM (WITH ARCTIC PACKAGE)

ITEM	PART NUMBER	QTY	DESCRIPTION	REV
	1001179439	Ref	BOOM HARNESS - TOWER BOOM (WITH ARCTIC PACKAGE)	D
6	4460466	4	Plug, Terminal	
7	4460464	22	Pin, Male	
8	4460508	8	Pin, Male	
9	4460866	1	Connector - 19 Position	
10	2820031	AR	Heat Shrink	

FIGURE 8-41. BOOM HARNESS - TOWER BOOM AC CABLE (WITHOUT ARCTIC PACKAGE)

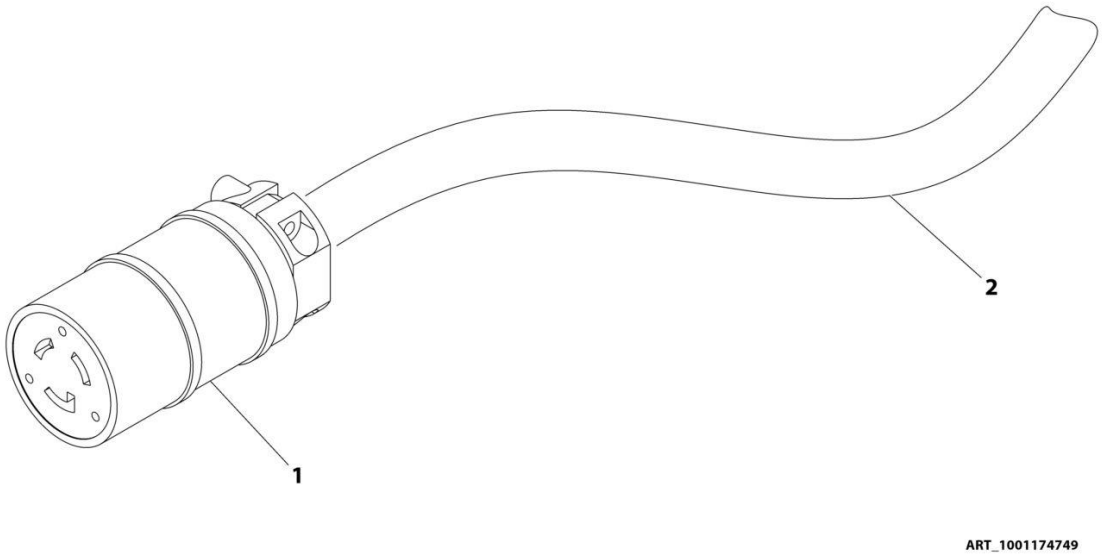

FIGURE 8-41. BOOM HARNESS - TOWER BOOM AC CABLE (WITHOUT ARCTIC PACKAGE)

ITEM	PART NUMBER	QTY	DESCRIPTION	REV
	1001174749	Ref	BOOM HARNESS - TOWER BOOM AC CABLE (WITHOUT ARCTIC PACKAGE)	C
1	1001120205	1	Connector, Female	
2	1060461	28 ft/ 8.5m	Electrical Cable, 12/3	

FIGURE 8-42. BOOM HARNESS - TOWER BOOM AC CABLE (WITH ARCTIC PACKAGE)

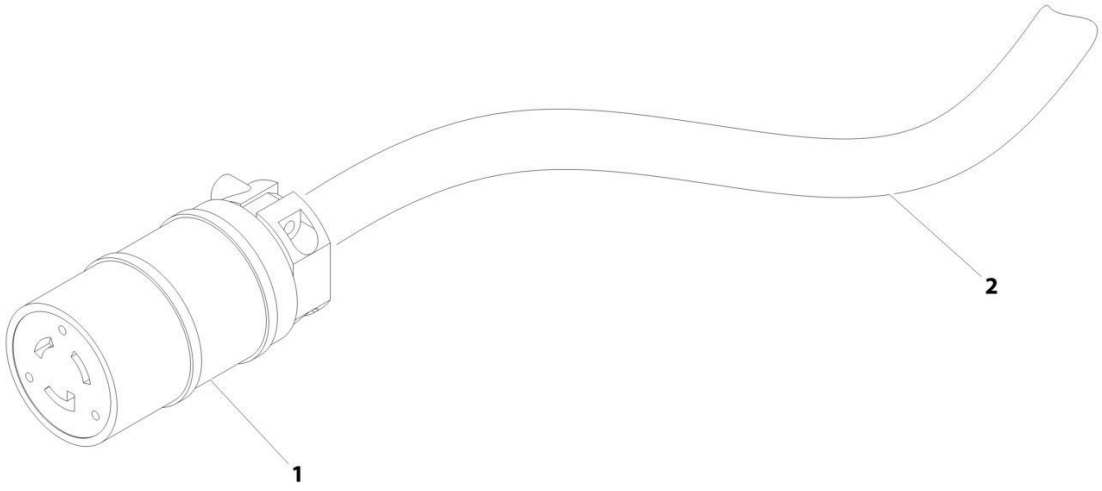

ART_1001174754

FIGURE 8-42. BOOM HARNESS - TOWER BOOM AC CABLE (WITH ARCTIC PACKAGE)

ITEM	PART NUMBER	QTY	DESCRIPTION	REV
	1001174754	Ref	BOOM HARNESS - TOWER BOOM AC CABLE (WITH ARCTIC PACKAGE)	B
1	1001120205	1	Connector, Female	
2	4920463	28 ft/ 8.5m	Cable, Electrical - 12/3	

FIGURE 8-43. BOOM VALVE HARNESS

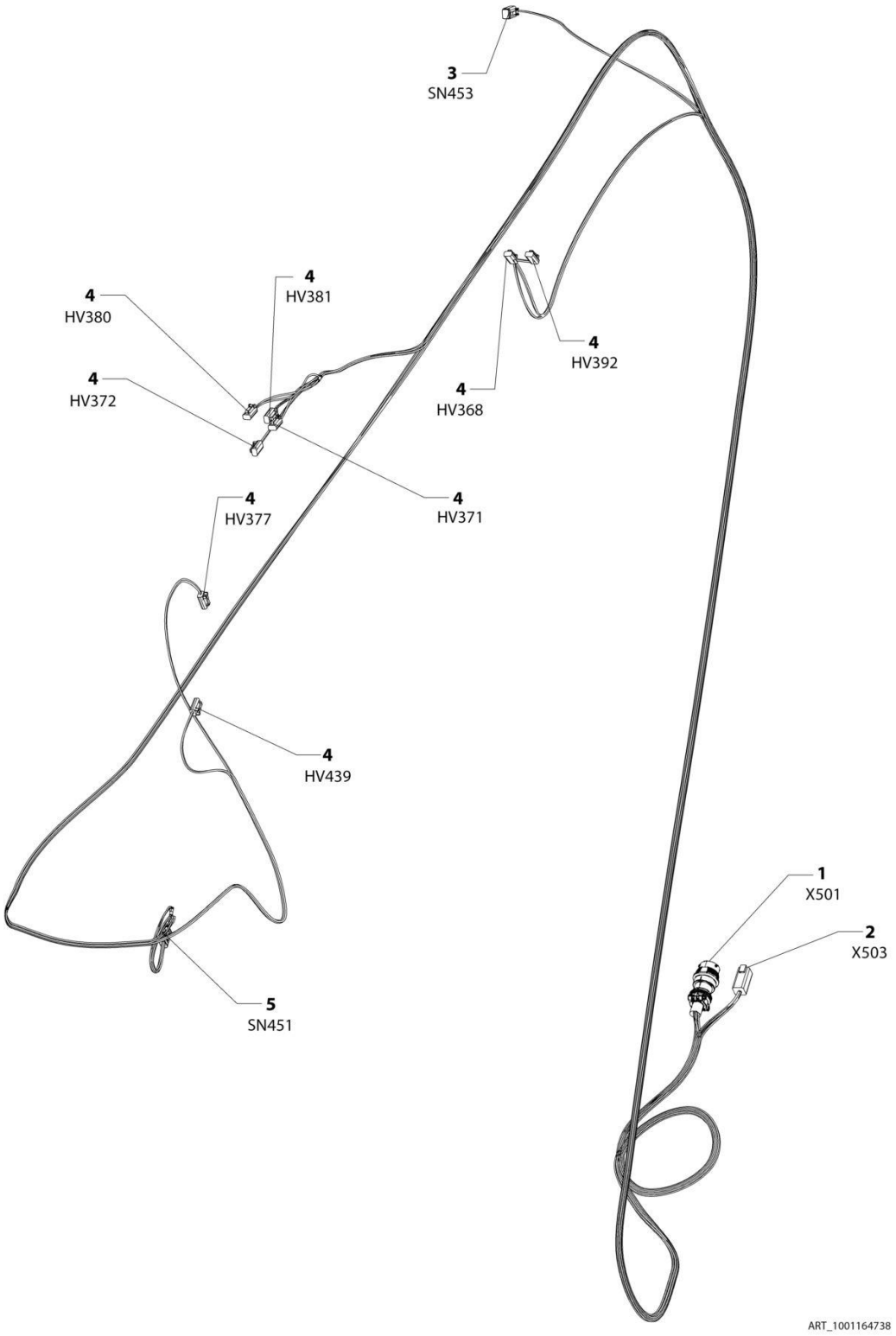

FIGURE 8-43. BOOM VALVE HARNESS

ITEM	PART NUMBER	QTY	DESCRIPTION	REV
	1001164738	Ref	BOOM VALVE HARNESS	H
1	1001156541	1	Connector - 19 Position	
1	4460464	13	Pin, Male	
1	4460466	1	Plug, Terminal	
2	4460899	1	Connector - 6 Position	
2	4460464	6	Pin, Male	
3	4460884	1	Plug, Male - 4 Position	
3	4460465	2	Socket, Female	
3	4460466	2	Plug, Terminal	
4	4460891	8	Plug, Male - 2 Position	
4	4460465	16	Socket, Female	
5	1001117064	1	Plug, Male - 6 Position **(SN 0300201991 through 0300237446, SN 1300007279 through 1300007373, SN E300002833 through E300004982)**	
5	91554014	6	Terminal **(SN 0300201991 through 0300237446, SN 1300007279 through 1300007373, SN E300002833 through E300004982)**	
5	1001230931	1	Plug, Male - 6 Position **(SN 0300237447 through 0300272317, SN B300003516 through B300005760, SN E300004983 through E300007990, Except SN 0300272185 through 0300272190, Excluding B300005569 and E300007814)**	
5	1001116748	6	Terminal **(SN 0300237447 through 0300272317, SN B300003516 through B300005760, SN E300004983 through E300007990, Except SN 0300272185 through 0300272190, Excluding B300005569 and E300007814)**	

FIGURE 8-44. BREAKER BOX KIT WITH TWO BREAKERS - CE SPEC

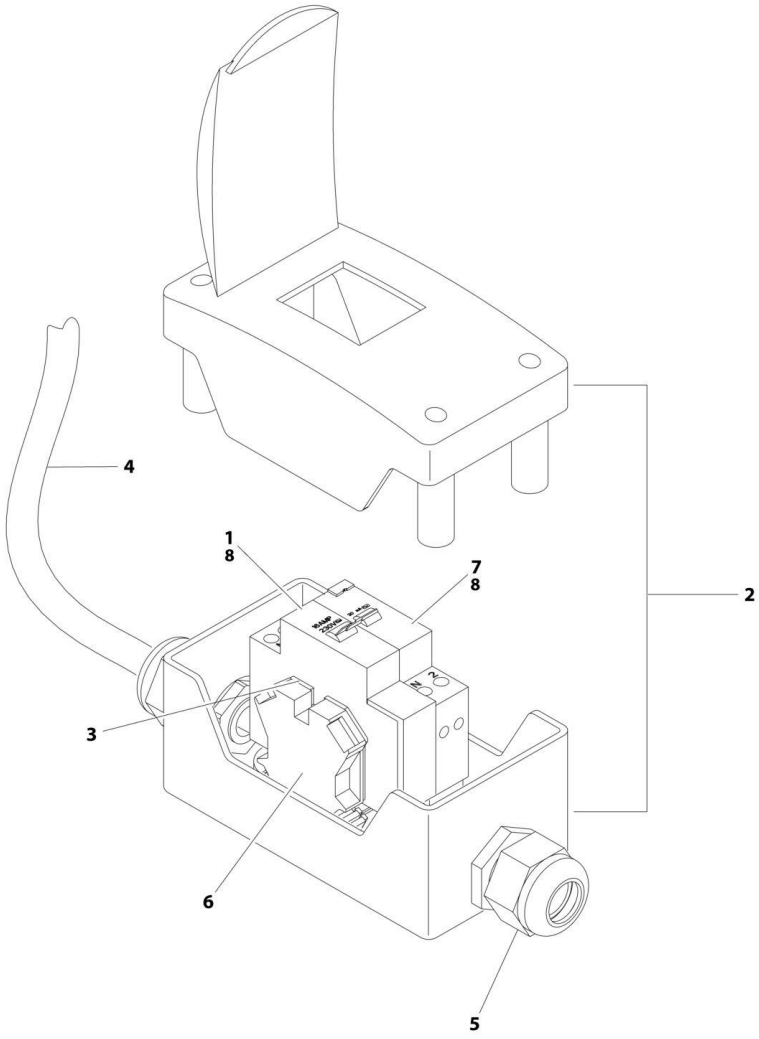

ART_2902549

FIGURE 8-44. BREAKER BOX KIT WITH TWO BREAKERS - CE SPEC

ITEM	PART NUMBER	QTY	DESCRIPTION	REV
	2902549	Ref	BREAKER BOX KIT WITH TWO BREAKERS - CE SPEC	E
1	1001109475	NLA	Breaker, 16 Amp (Use p/n 1001181045) **(SN 0300201991 through 0300203565)**	
2	0861880	1	Box	
3	4460956	1	Barrier, Terminal	
4	1060908	6 ft/1.8m	Cable, 12/3	
5	1001097150	2	Connector, Strain Relief	
6	4460957	1	Block, Terminal	
7	1001109482	NLA	Breaker, 30mA (Use p/n 1001181045) **(SN 0300201991 through 0300203565)**	
8	1001181045	1	Breaker, Double 30mAmp/16Amp **(SN 0300203566 through 0300272317, SN 1300007279 through 1300007373, SN E300002833 through E300007990, Except SN 0300272185 through 0300272190, Excluding E300007814)**	

FIGURE 8-45. BREAKER BOX KIT WITH THREE BREAKERS - CE SPEC

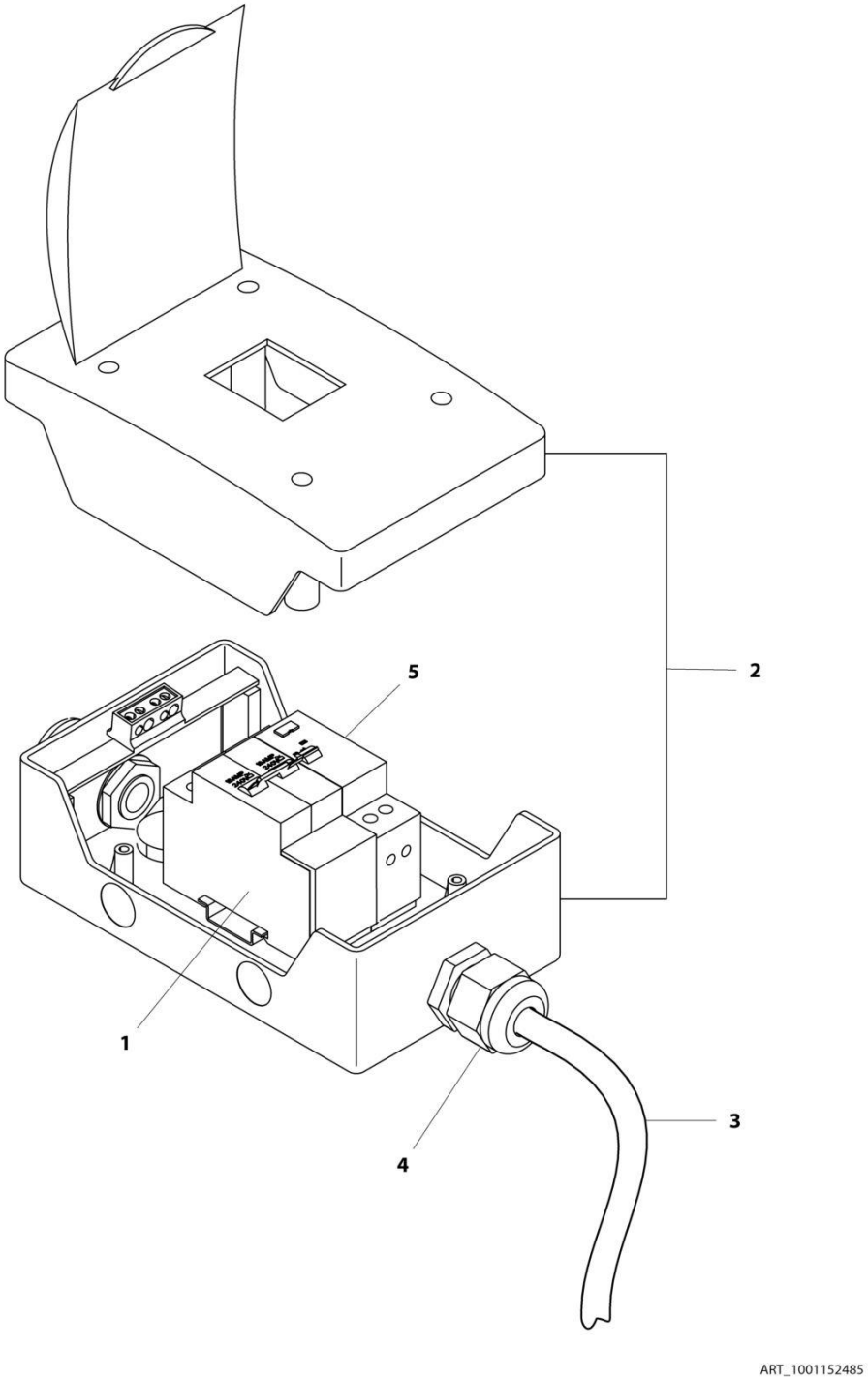

FIGURE 8-45. BREAKER BOX KIT WITH THREE BREAKERS - CE SPEC

ITEM	PART NUMBER	QTY	DESCRIPTION	REV
	1001152485	Ref	BREAKER BOX KIT WITH THREE BREAKERS - CE SPEC	A
1	1001152479	1	Breaker, 16 Amp, (Double)	
2	1001152483	1	Box	
3	1060908	6 ft/1.8m	Cable, 12/3	
4	1001097150	1	Connector, Strain Relief	
5	1001152482	1	Breaker, 30mA	

FIGURE 8-46. BREAKER BOX KIT - 30MA/16 AMP

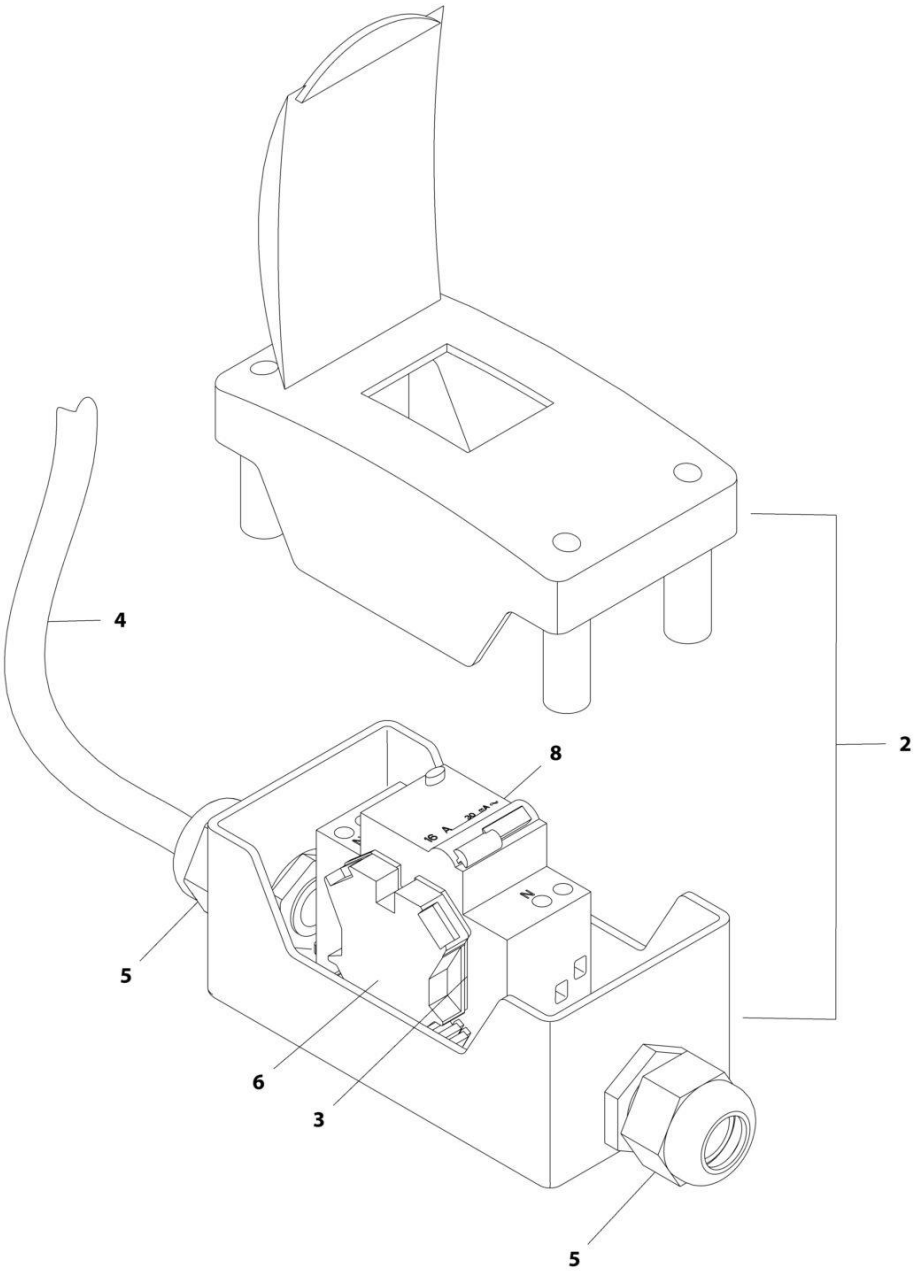

FIGURE 8-46. BREAKER BOX KIT - 30MA/16 AMP

ITEM	PART NUMBER	QTY	DESCRIPTION	REV
	1001096070	Ref	BREAKER BOX KIT - 30mA/16 AMP	E
2	0861880	1	Box, Breaker	
3	4460956	1	Barrier, Terminal Block End	
4	1060908	12 ft/3.6m	Cable, Electrical 12/3	
5	1001097150	2	Connector, Strain Relief	
6	4460957	1	Block, Terminal	
8	1001181045	1	Breaker, Double 30mA/16Amp	

FIGURE 8-47. CHASSIS SOLENOID HARNESS

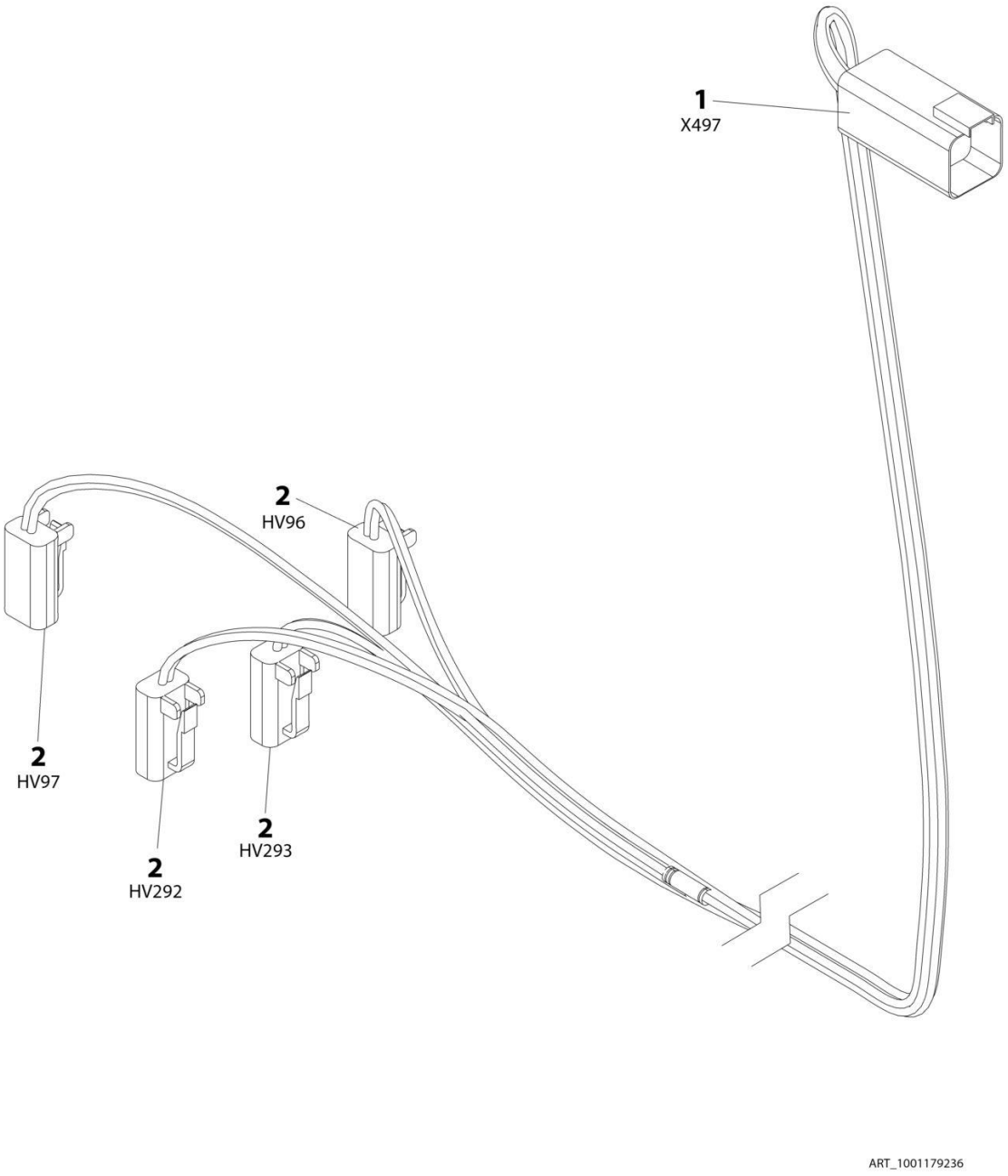

FIGURE 8-47. CHASSIS SOLENOID HARNESS

ITEM	PART NUMBER	QTY	DESCRIPTION	REV
	1001179236	Ref	CHASSIS SOLENOID HARNESS	A
1	4460899	1	Receptacle, Female - 6 Position	
1	4460464	6	Pin, Male	
2	4460891	4	Plug, Male - 2 Position	
2	4460465	8	Socket, Female	

FIGURE 8-48. ENGINE HARNESS - DEUTZ D2011

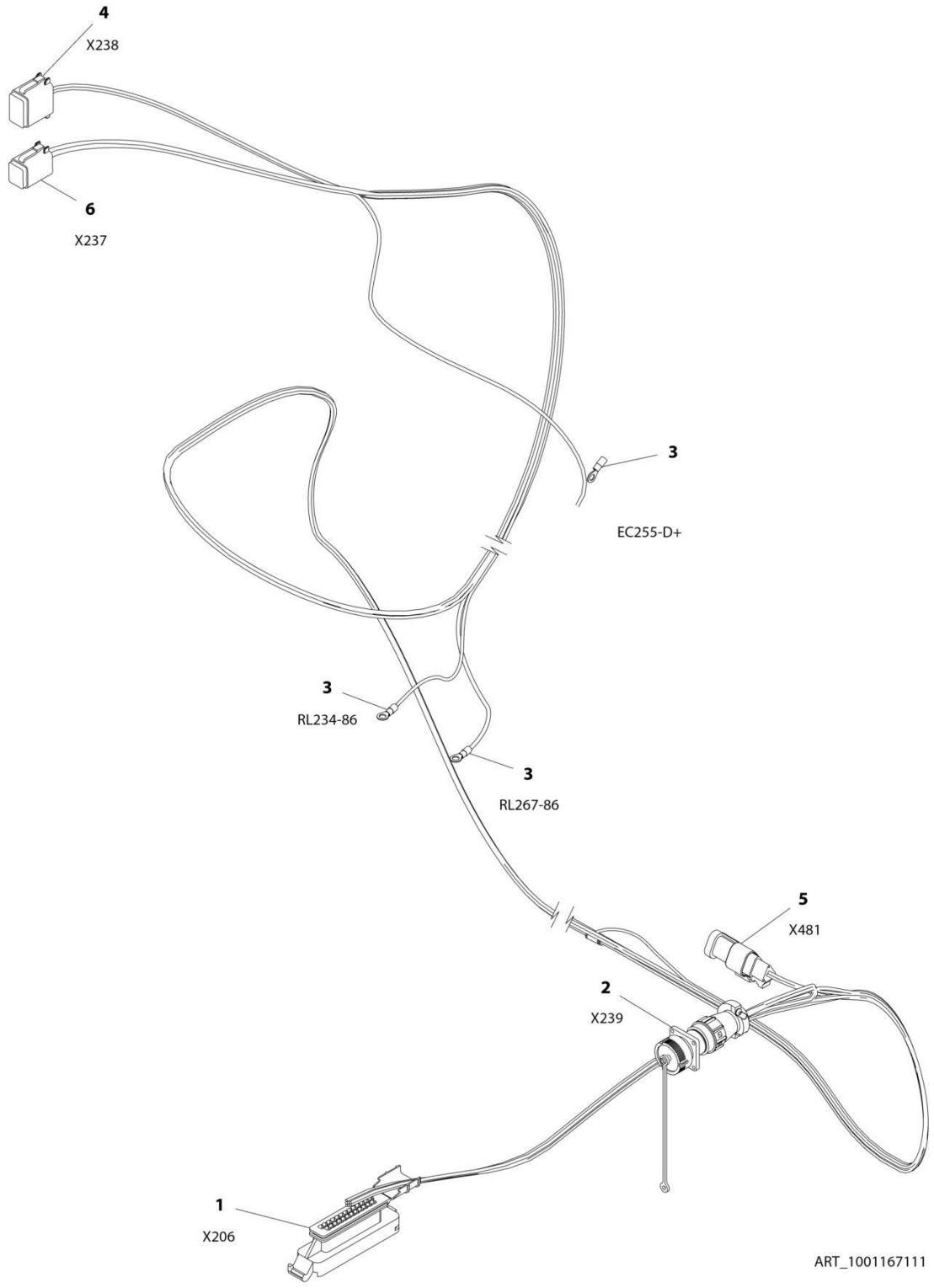

FIGURE 8-48. ENGINE HARNESS - DEUTZ D2011

ITEM	PART NUMBER	QTY	DESCRIPTION	REV
	1001167111	Ref	ENGINE HARNESS - DEUTZ D2011	B
1	4461052	1	Connector - 25 Position	
1	4461005	7	Terminal	
1	4461008	18	Plug, Terminal	
2	2902443	1	Receptacle Kit	
2	4461071	8	Socket, Female	
2	4461072	1	Receptacle with Flange - 8 Position	
2	4461073	1	Cap, Dust	
2	4461074	1	Shell, Black	
3	4460313	3	Terminal, Ring	
4	4460930	1	Plug, Male - 8 Position	
4	4460465	2	Socket, Female	
4	4460466	6	Seal, Terminal	
5	4461095	1	Plug, Male - 3 Position	
5	4460465	3	Socket, Female	
6	4460894	1	Plug, Mal e - 6 Position	
6	4460465	6	Socket, Female	

FIGURE 8-49. ENGINE HARNESS - DEUTZ D2.9L4

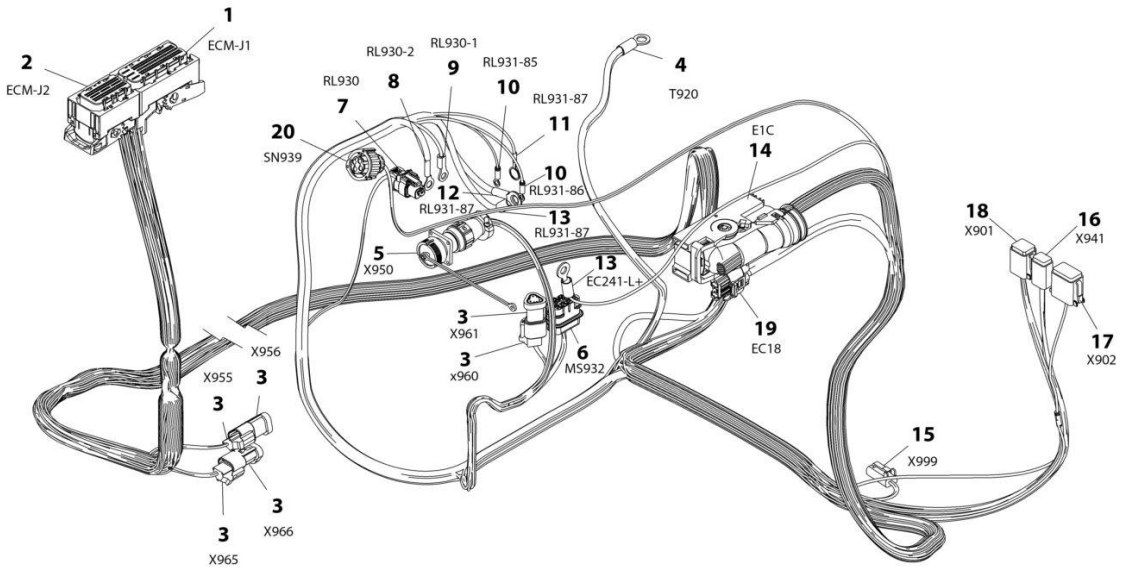

ART_1001167108

FIGURE 8-49. ENGINE HARNESS - DEUTZ D2.9L4

ITEM	PART NUMBER	QTY	DESCRIPTION	REV
	1001167108	Ref	ENGINE HARNESS - DEUTZ D2.9L4	I
1	1001133956	1	Connector, 94 Position	
1	1001126352	6	Terminal	
1	1001126357	2	Seal, Terminal	
1	1001126356	63	Seal, Terminal	
1	1001126384	21	Terminal	
1	1001126351	2	Terminal	
2	1001133957	1	Connector - 60 Position	
2	1001126357	11	Seal, Terminal	
2	1001126351	13	Terminal	
2	1001126356	19	Seal, Terminal	
2	1001126384	17	Terminal	
3	4461095	3	Plug, Male - 3 Position	
3	4460944	6	Socket, Female	
3	4460466	3	Plug, Terminal	
3	4461070	3	Connector, Female with Resistor 3 Position	
4	8220115	1	Terminal, Ring	
5	2902443	1	Receptacle Kit	
5	4461071	8	Socket, Female	
5	4461072	1	Receptacle with Flange - 8 Position	
5	4461073	1	Cap, Dust	
5	4461074	1	Shell, Black	
6	80484084	1	Connector - 8 Position	
6	1001116727	4	Plug, Terminal	
6	1001116728	4	Terminal	
6	8229242	1	Fuse - 5Amp	
6	80983191	1	Fuse - 10Amp	
6	1001147264	1	Cap	
7	1001116952	1	Plug, Male - 2 Position	
7	4460465	2	Socket, Female	
8	1001117106	1	Terminal, Ring	
9	4460043	1	Terminal, Ring	
10	4460247	2	Terminal, Ring	
11	4460703	1	Terminal, Ring	
12	8220164	1	Terminal, Ring	
13	1001117107	2	Terminal, Ring	
14	1001126362	1	Connector - 62 Position	
14	1001126363	33	Terminal	
14	1001126391	23	Seal, Terminal	
14	4461008	4	Seal, Terminal	
14	1001126365	2	Terminal	
15	4460891	1	Plug, Male - 2 Position	
15	4460465	2	Socket, Female	
15	1001171403	1	Resistor Assembly **(SN 0300214749 through 0300272317, Except SN 0300272185 through 0300272190)**	
16	4460884	1	Plug, Male - 4 Position **(SN 0300201991 through 0300224601)**	
16	1001220379	1	Plug, Male - 4 Position **(SN 0300224602 through 0300272317, Except SN 0300272185 through 0300272190)**	
16	4460465	4	Socket, Female	
16	4460932	1	Receptacle, Female - 4 Position **(SN 0300214749 through**	

ITEM	PART NUMBER	QTY	DESCRIPTION	REV
			0300272317, Except SN 0300272185 through 0300272190)	
16	4460466	4	Seal, Terminal **(SN 0300214749 through 0300272317, Except SN 0300272185 through 0300272190)**	
17	4460930	1	Plug, Male - 8 Position	
17	4460465	1	Socket, Female	
17	4460466	7	Seal, Terminal	
18	4460894	1	Plug, Mal e - 6 Position	
18	4460465	6	Socket, Female	
19	1001142938	1	Connector - 2 Position	
19	1001142940	2	Terminal	
20	1001133714	1	Plug, Male - 4 Position	
20	1001133715	3	Terminal	
20	1001135651	1	Plug, Terminal	

FIGURE 8-50. ENGINE HARNESS - GM

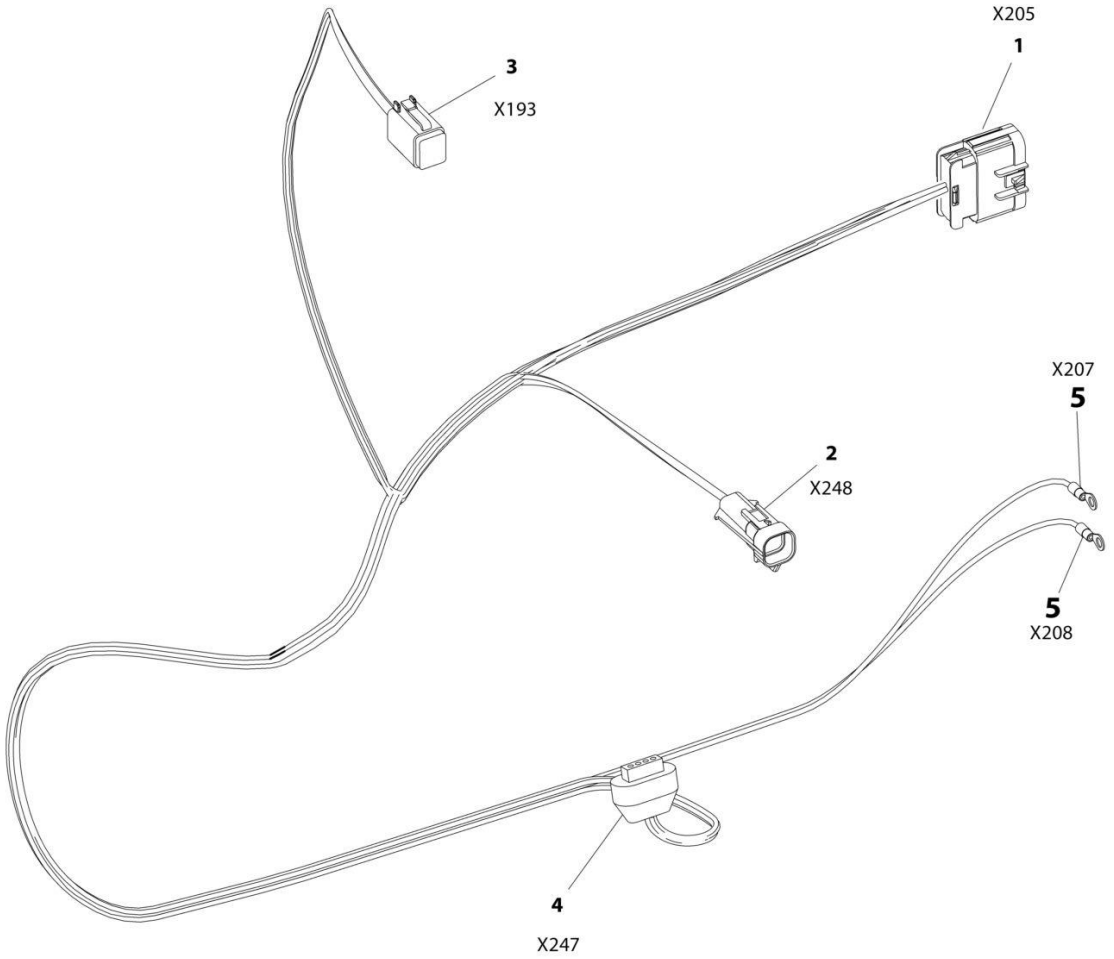

FIGURE 8-50. ENGINE HARNESS - GM

ITEM	PART NUMBER	QTY	DESCRIPTION	REV
	1001180017	Ref	ENGINE HARNESS - GM	A
1	4461109	1	Plug, Male - 16 Position	
1	4461111	7	Pin, Male	
2	4461124	1	Connector - 4 Position	
2	4460693	4	Terminal	
3	4460894	1	Plug, Male - 6 Position	
3	4460465	5	Socket, Female	
3	4460466	1	Plug, Terminal	
4	4461121	1	Plug, Male - 4 Position	
4	4461122	4	Terminal	
5	4460313	2	Terminal, Ring	

FIGURE 8-51. ENGINE HARNESS - KUBOTA

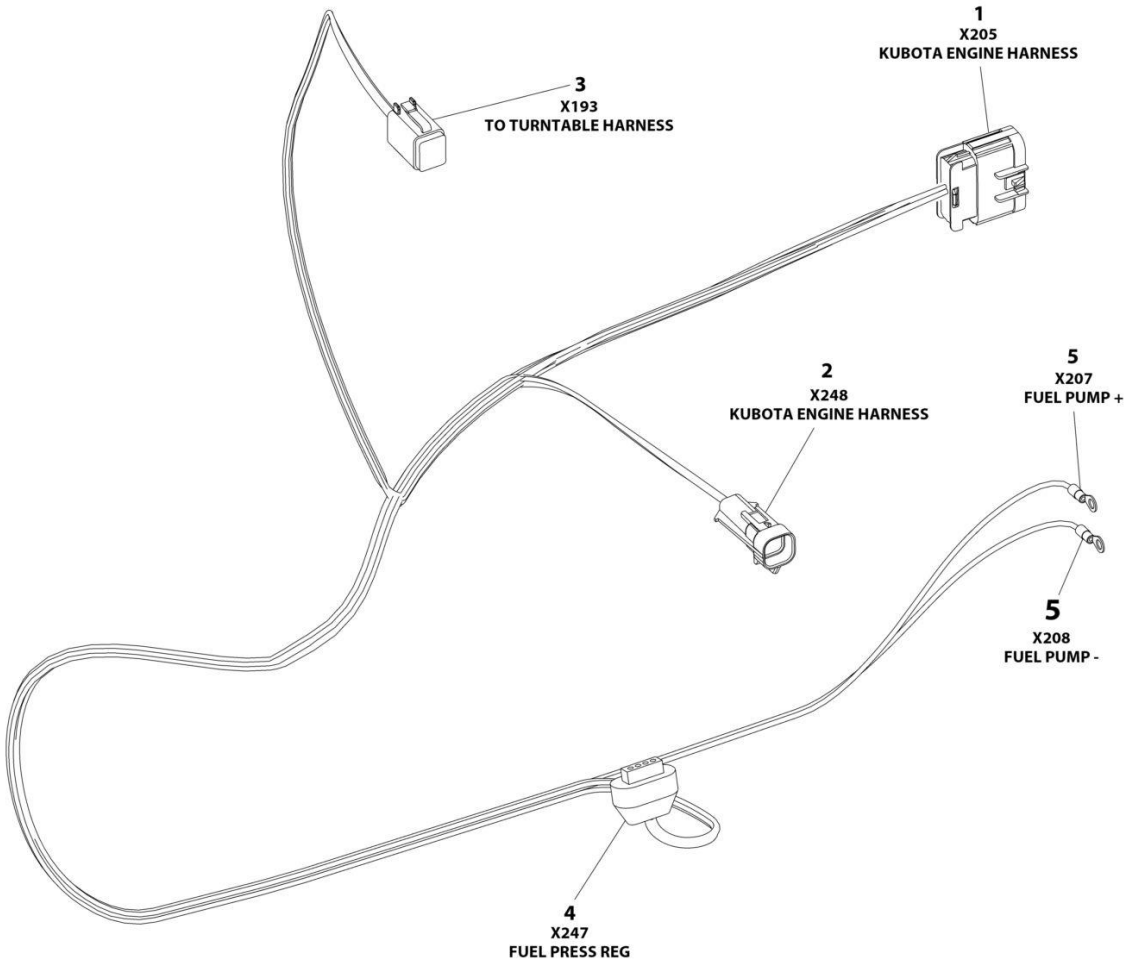

FIGURE 8-51. ENGINE HARNESS - KUBOTA

ITEM	PART NUMBER	QTY	DESCRIPTION	REV
	1001213706	Ref	ENGINE HARNESS - KUBOTA	D
1	4461109	1	Plug, Male - 16 Position	
1	4461111	AR	Pin, Male	
1	4461113	AR	Seal	
1	4461222	AR	Plug	
2	4461124	1	Connector - 4 Position	
2	4460693	4	Terminal	
2	4461123	4	Seal	
3	4460894	1	Plug, Male - 6 Position	
3	4460465	5	Socket, Female	
3	4460466	1	Plug, Terminal	
4	4461121	1	Plug, Male - 4 Position	
4	4461122	4	Terminal	
4	4461006	4	Seal	
5	4460042	2	Terminal, Ring	

FIGURE 8-52. FUEL HARNESS - DEUTZ D2.9L4 ENGINE

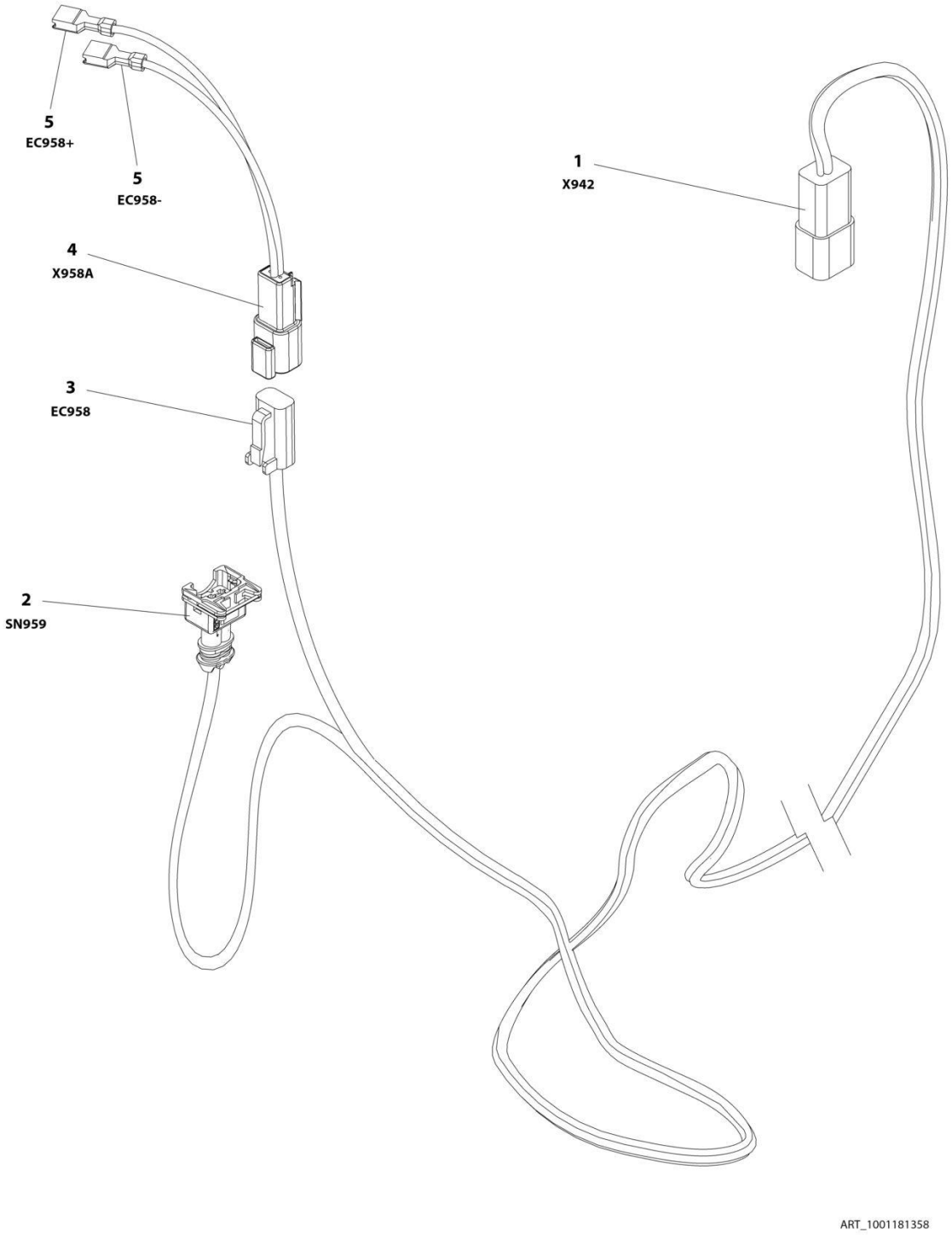

FIGURE 8-52. FUEL HARNESS - DEUTZ D2.9L4 ENGINE

ITEM	PART NUMBER	QTY	DESCRIPTION	REV
	1001181358	Ref	FUEL HARNESS - DEUTZ D2.9L4 ENGINE	D
1	4460932	1	Receptacle, Female - 4 Position	
1	4460464	2	Pin, Male	
1	4460941	2	Pin, Male	
2	1001116983	1	Plug, Male - 2 Position	
2	1001116710	2	Socket, Female **(SN 0300201991 through 0300240426, SN E300240427 through E300007990, Excluding E300007814)**	
2	4461060	2	Socket, Female **(SN 0300240427 through 0300272317, SN B300003516 through B300005760, Except SN 0300272185 through 0300272190, Excluding B300005569)**	
2	4461054	2	Seal **(SN 0300240427 through 0300272317, SN B300003516 through B300005760, Except SN 0300272185 through 0300272190, Excluding B300005569)**	
3	4460891	1	Plug, Male - 2 Position	
3	4460942	2	Socket, Female	
4	4460897	1	Receptacle, Female - 2 Position	
4	4460941	2	Pin, Male	
5	4460042	2	Terminal, Ring **(SN 0300201991 through 0300234431)**	
5	8220051	2	Coupler, Female **(SN 0300234432 through 0300272317, SN B300003516 through B300005760, Except SN 0300272185 through 0300272190, Excluding B300005569)**	

FIGURE 8-53. GENERATOR HARNESS - 2500W GENERATOR (60HZ)

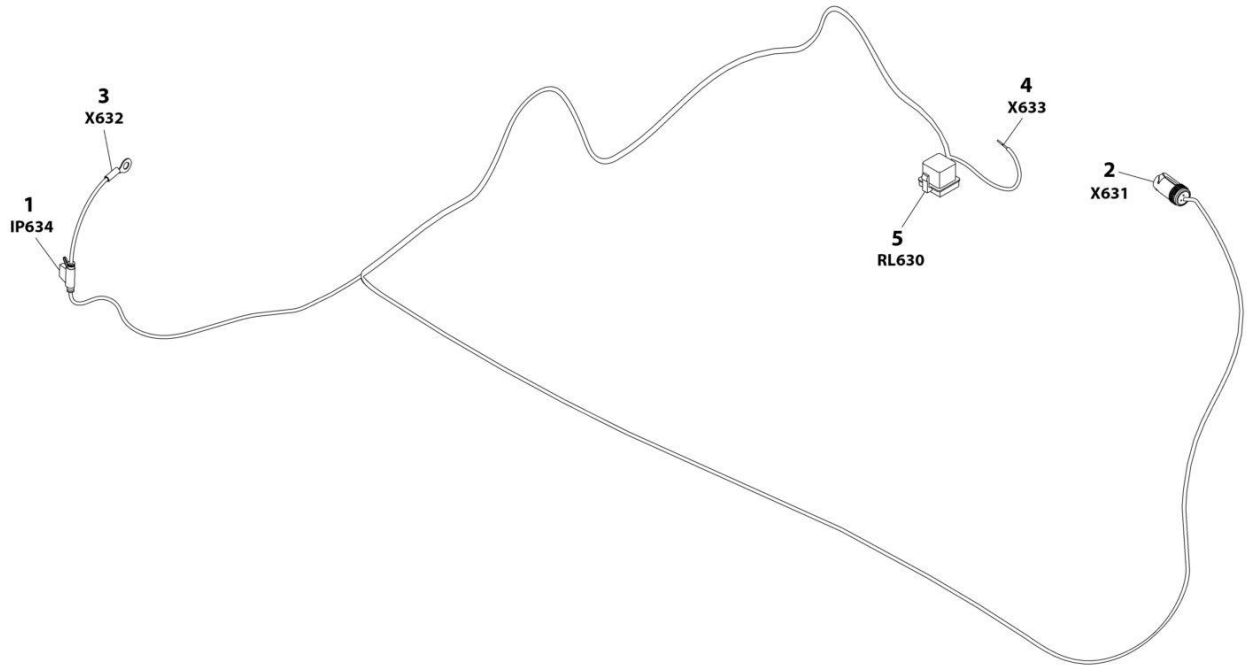

FIGURE 8-53. GENERATOR HARNESS - 2500W GENERATOR (60HZ)

ITEM	PART NUMBER	QTY	DESCRIPTION	REV
	1001187522	Ref	GENERATOR HARNESS - 2500W GENERATOR (60HZ)	B
1	2400060	1	Holder, Fuse **(SN 0300201991 through 0300243197)**	
1	2400066	1	Holder, Fuse **(SN 0300243198 through 0300272317, SN B300003516 through B300005760, Except SN 0300272185 through 0300272190, Excluding B300005569)**	
1	8229245	1	Fuse 30Amp	
2	1001154726	1	Connector - 3 Position	
2	4460464	2	Pin, Male	
2	4460466	1	Plug, Terminal	
3	8220045	1	Terminal, Ring	
4	4460906	1	Socket, Female	
5	1001117057	1	Plug, Relay	
5	1001116734	2	Terminal	
5	1001116732	2	Terminal	

FIGURE 8-54. GENERATOR HARNESS - 2500W GENERATOR (50HZ)

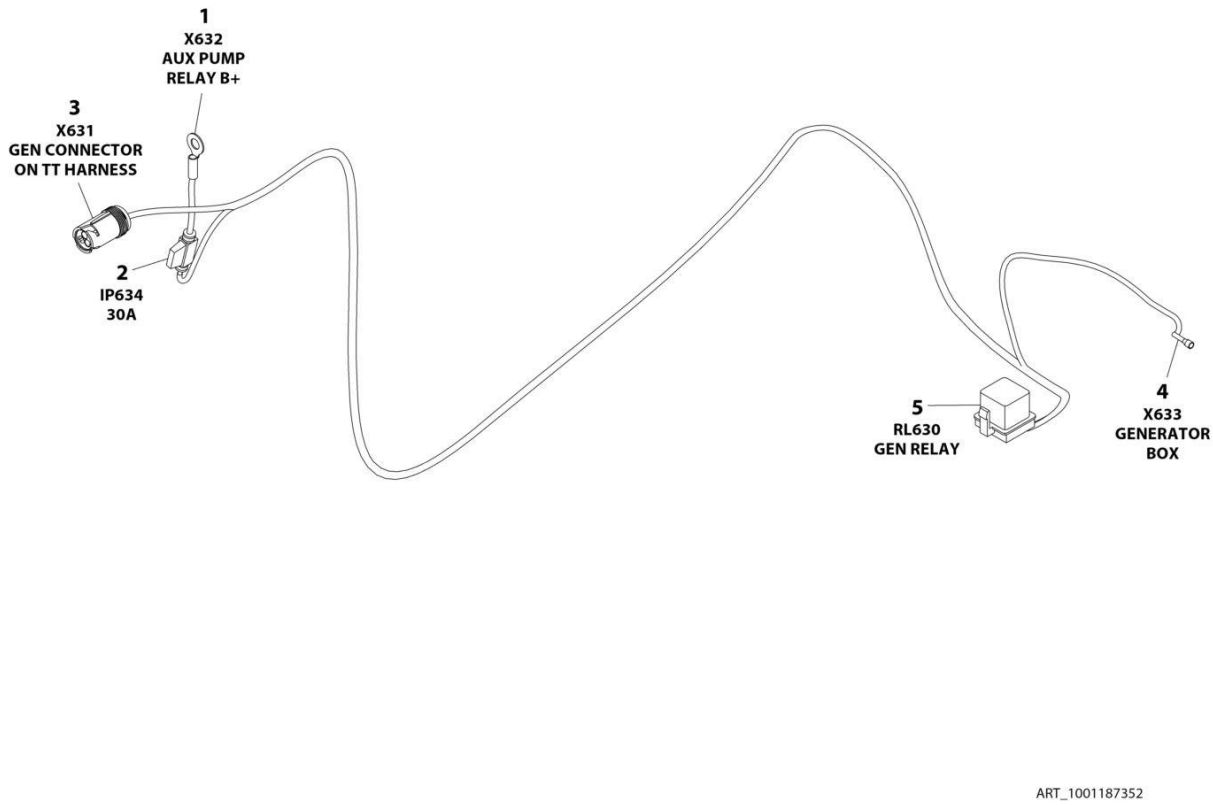

FIGURE 8-54. GENERATOR HARNESS - 2500W GENERATOR (50HZ)

ITEM	PART NUMBER	QTY	DESCRIPTION	REV
	1001187352	Ref	GENERATOR HARNESS - 2500W GENERATOR (50HZ)	A
1	8220045	1	Terminal, Ring	
2	2400060	1	Holder, Fuse	
2	8229245	1	Fuse 30Amp	
3	1001154726	1	Connector - 3 Position	
3	4460464	2	Pin, Male	
3	4460466	1	Plug, Terminal	
4	1001100231	1	Terminal	
5	1001117057	1	Plug, Relay	
5	1001116734	2	Terminal	
5	1001116732	2	Terminal	

FIGURE 8-55. GENERATOR HARNESS - 4000W GENERATOR

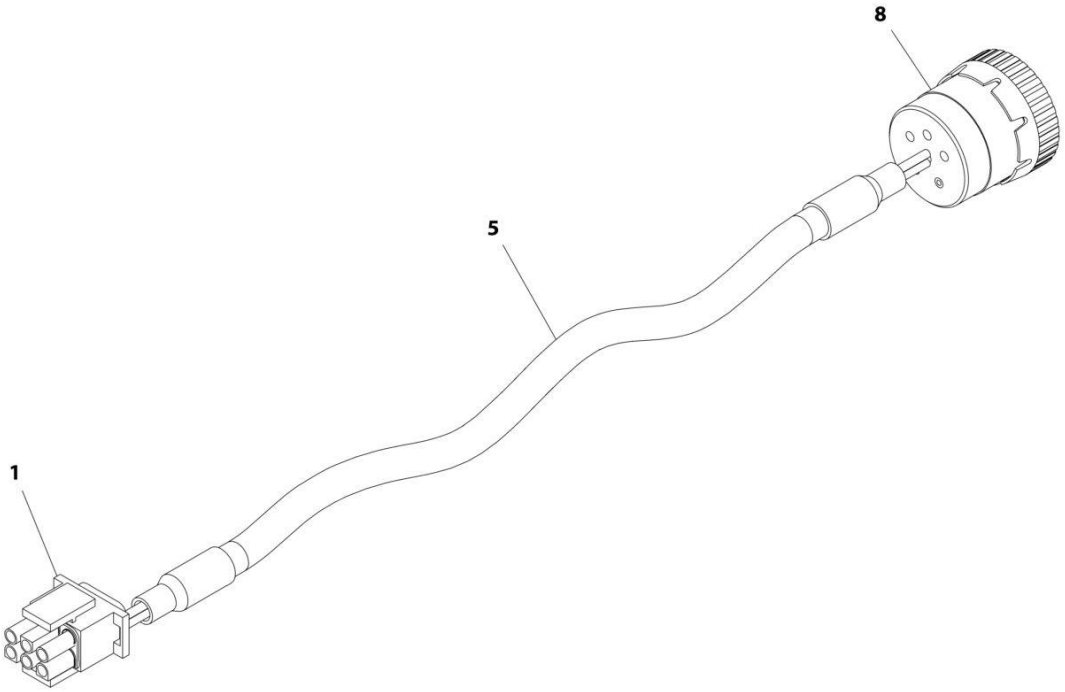

FIGURE 8-55. GENERATOR HARNESS - 4000W GENERATOR

ITEM	PART NUMBER	QTY	DESCRIPTION	REV
	1001152532	Ref	GENERATOR HARNESS - 4000W GENERATOR	A
1	4460225	1	Connector - 6 Position	
1	4460268	2	Socket, Female	
1	4460807	1	Seal, Plug	
1	4460808	1	Seal, Plug	
5	1060341	13 ft/4m	Cable, 16/2	
8	77363233	1	Connector - 6 Position	
8	4460465	2	Socket, Female	

FIGURE 8-56. GENERATOR ON/OFF SWITCH HARNESS

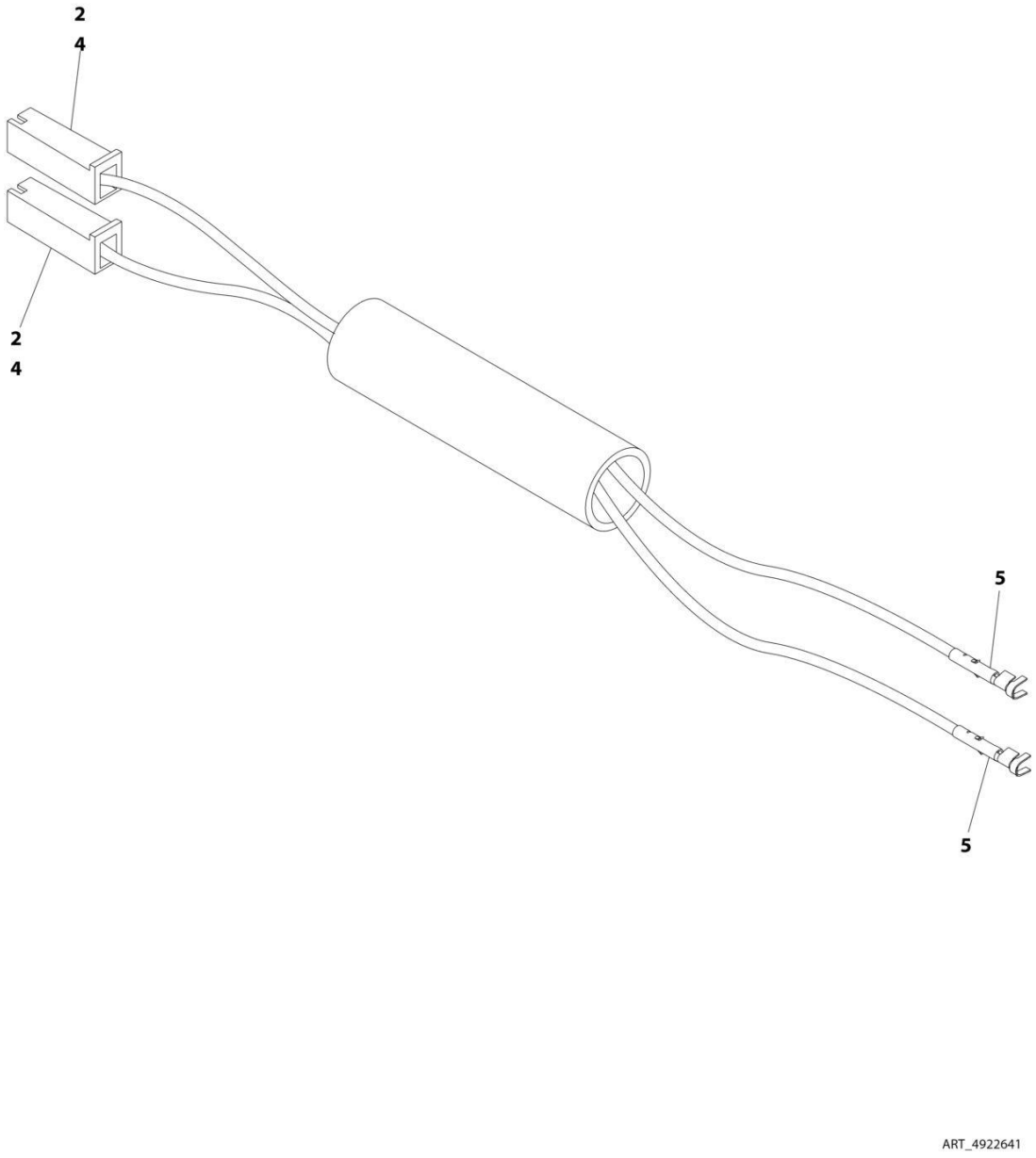

FIGURE 8-56. GENERATOR ON/OFF SWITCH HARNESS

ITEM	PART NUMBER	QTY	DESCRIPTION	REV
	4922641	Ref	GENERATOR ON/OFF SWITCH HARNESS	D
2	4460260	2	Terminal, Housing	
4	4460259	2	Terminal	
5	4460268	2	Socket, Female	

FIGURE 8-57. GROUND CONTROL PANEL HARNESS

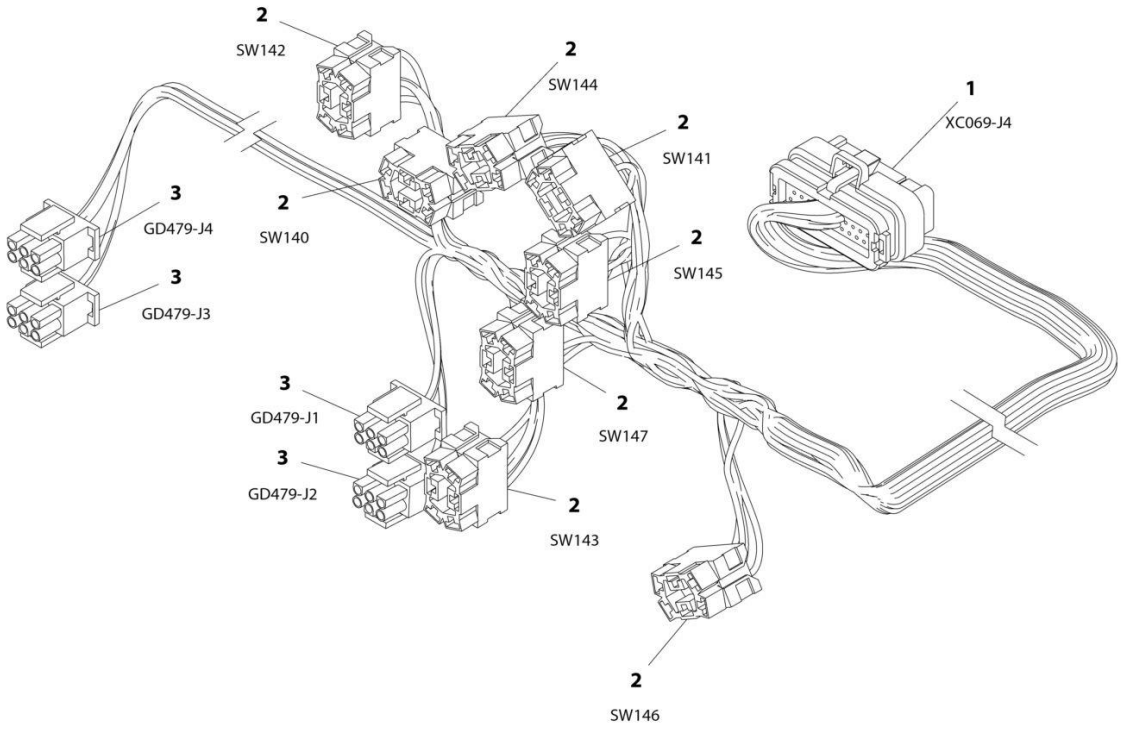

FIGURE 8-57. GROUND CONTROL PANEL HARNESS

ITEM	PART NUMBER	QTY	DESCRIPTION	REV
	1001164737	Ref	GROUND CONTROL PANEL HARNESS	D
1	4460876	1	Connector - 35 Position	
1	4460871	27	Socket, Female	
1	4460905	8	Plug, Terminal	
2	4460418	1	Connector - 6 Position	
2	4460419	14	Terminal	
2	1001159186	17	Terminal	
3	4460225	4	Connector - 6 Position	
3	4460226	10	Socket, Female	

FIGURE 8-58. KUBOTA D/F POWER HARNESS

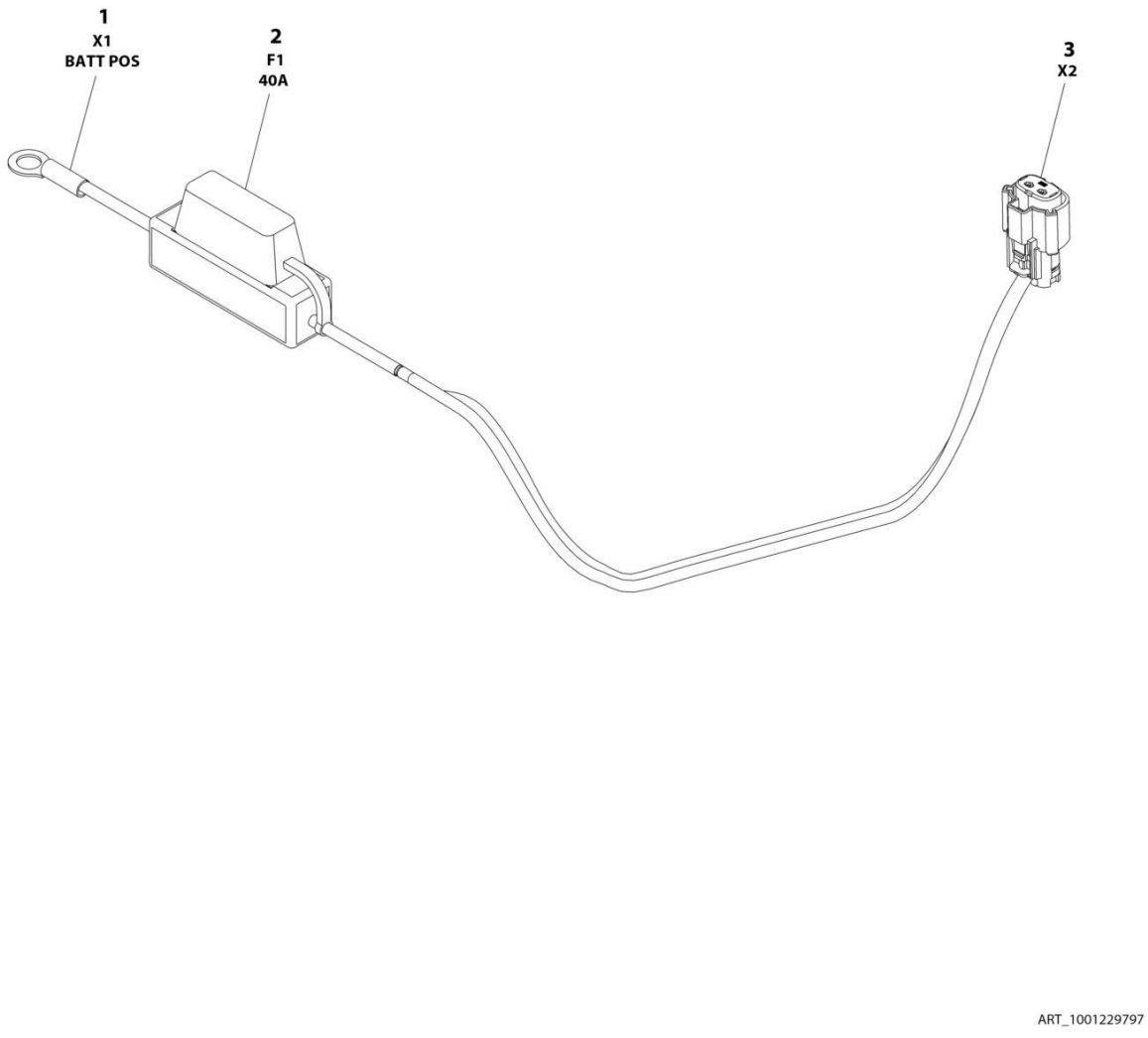

FIGURE 8-58. KUBOTA D/F POWER HARNESS

ITEM	PART NUMBER	QTY	DESCRIPTION	REV
	1001229797	Ref	KUBOTA D/F POWER HARNESS	A
1	4460977	1	Terminal, Ring	
2	2400082	1	Fuse 40Amp	
3	1001229795	1	Connector - 2 Position	
3	1001229796	2	Socket, Female	

FIGURE 8-59. LSS HARNESS

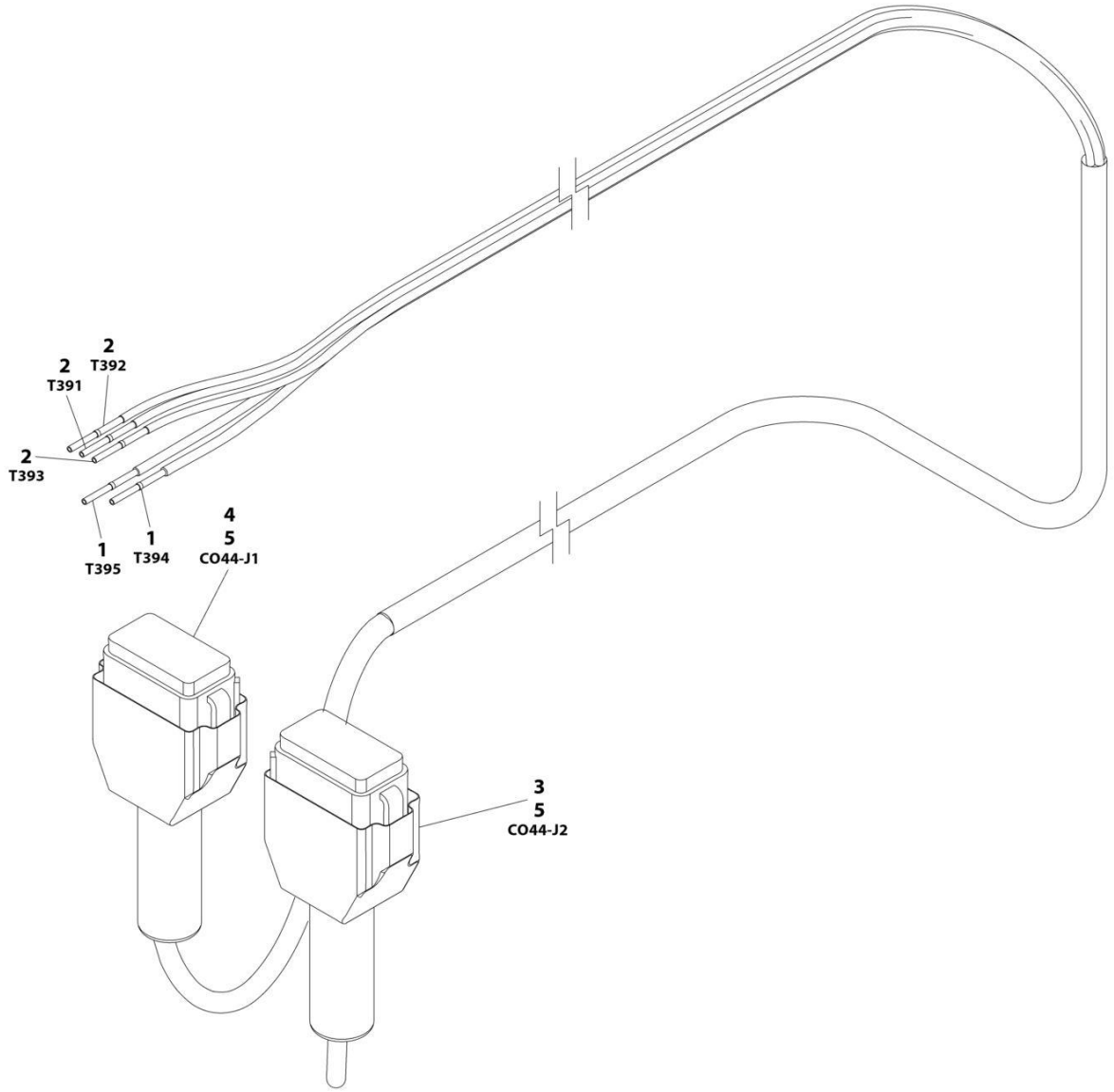

FIGURE 8-59. LSS HARNESS

ITEM	PART NUMBER	QTY	DESCRIPTION	REV
	1001120371	Ref	LSS HARNESS	B
1	4460465	2	Socket, Female	
2	4460944	3	Socket, Female	
3	4460836	1	Connector - 12 Position	
3	4460944	3	Socket, Female	
3	4460466	9	Plug, Terminal	
3	0840055	1	Boot	
4	4460933	1	Connector - 12 Position	
4	4460465	2	Socket, Female	
4	4460466	10	Plug, Terminal	
4	0840055	1	Boot	
5	2820030	AR	Heat Shrink	

FIGURE 8-60. PLATFORM CONSOLE BOX HARNESS (SN 0300201991 through 0300259091, SN B300003516 through B300005760, SN E300002833 through E300007540, SN 1300007279 through 1300007373)

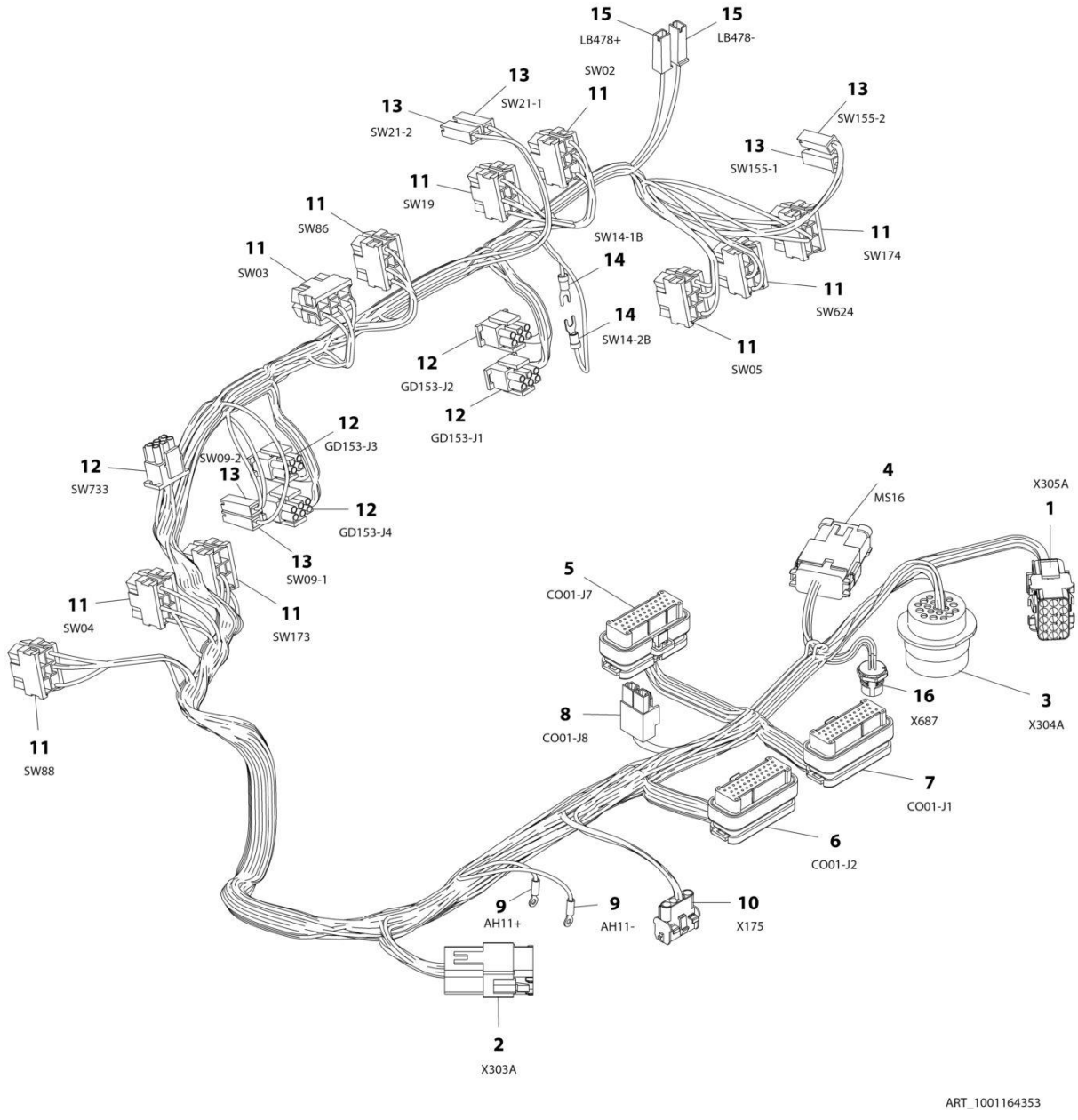

FIGURE 8-60. PLATFORM CONSOLE BOX HARNESS (SN 0300201991 through 0300259091, SN B300003516 through B300005760, SN E300002833 through E300007540, SN 1300007279 through 1300007373)

ITEM	PART NUMBER	QTY	DESCRIPTION	REV
	1001164353	Ref	PLATFORM CONSOLE BOX HARNESS	J
1	4460434	1	Connector - 15 Position	
1	4460267	12	Pin. Male	
2	4460970	1	Receptacle, Female - 12 Position	
2	1001116693	11	Pin, Male	
2	4460466	1	Plug, Terminal	
2	4460933	1	Plug, Male - 12 Position	
3	4460866	1	Connector - 19 Position	
3	4460464	7	Pin, Male	
3	4460466	12	Plug, Terminal	
4	4460933	1	Plug, Male - 12 Position	
4	4460465	6	Socket, Female	
4	4460466	6	Plug, Terminal	
4	1001119020	1	Bussbar - 12 Position **(SN 0300201991 through 0300222768, SN E300002833 through E300003749)**	
4	1001125677	1	Bussbar - 12 Position **(SN 0300223769 through 0300259091, SN 1300007279 through 1300007373, SN B300003516 through B300005760, SN E300003750 through E300007540, Excluding B300005569)**	
5	4460873	1	Connector - 35 Position	
5	4460871	21	Socket, Female	
5	4460905	14	Plug, Terminal	
6	4460875	1	Connector - 35 Position	
6	4460871	23	Socket, Female	
6	4460905	8	Plug, Terminal	
7	4460874	1	Connector - 35 Position	
7	4460871	25	Socket, Female	
7	4460905	10	Plug, Terminal	
8	4460879	1	Plug, Male - 2 Position	
8	4460887	2	Terminal	
9	1001098122	2	Terminal, Ring	
10	4460761	1	Receptacle, Female - 4 Position	
10	4460267	4	Pin, Male	
11	4460418	10	Connector - 6 Position	
11	4460419	35	Terminal	
11	4460259	6	Terminal (Note: Used only on Fuel Select)	
12	4460225	1	Plug, Male - 6 Position	
12	4460227	5	Pin, Male (Note: Used on Pump Potentiometer Connection Only)	
12	4460226	19	Socket, Female	
13	4460260	6	Housing, Terminal	
13	4460259	8	Terminal	
14	4460183	2	Terminal, Fork	
15	4460260	2	Housing, Terminal **(SN 03002011991 through 0300208916)**	
15	4460259	2	Terminal **(SN 03002011991 through 0300208916)**	
15	4460016	2	Terminal, Receptacle **(SN 0300208917 through 0300259091, SN B300003516 through B300005760, Excluding B300005569)**	
15	4460260	2	Housing, Terminal **(SN E300002833 through E300002846)**	
15	4460259	2	Terminal **(SN E300002833 through E300002846)**	
15	4460016	2	Terminal, Receptacle **(SN 1300007279 through 1300007373, SN**	

ITEM	PART NUMBER	QTY	DESCRIPTION	REV
16	1001213447	1	**E300002847 through E300007540)** Connector - 5 Position **(SN 0300223769 through 0300259091, SN 1300007279 through 1300007373, SN B300003516 through B300005760, SN E300003750 through E300007540, Excluding B300005569)**	

FIGURE 8-61. PLATFORM CONSOLE BOX HARNESS (SN 0300259091 through 0300272317, SN E300007541 through E300007990)

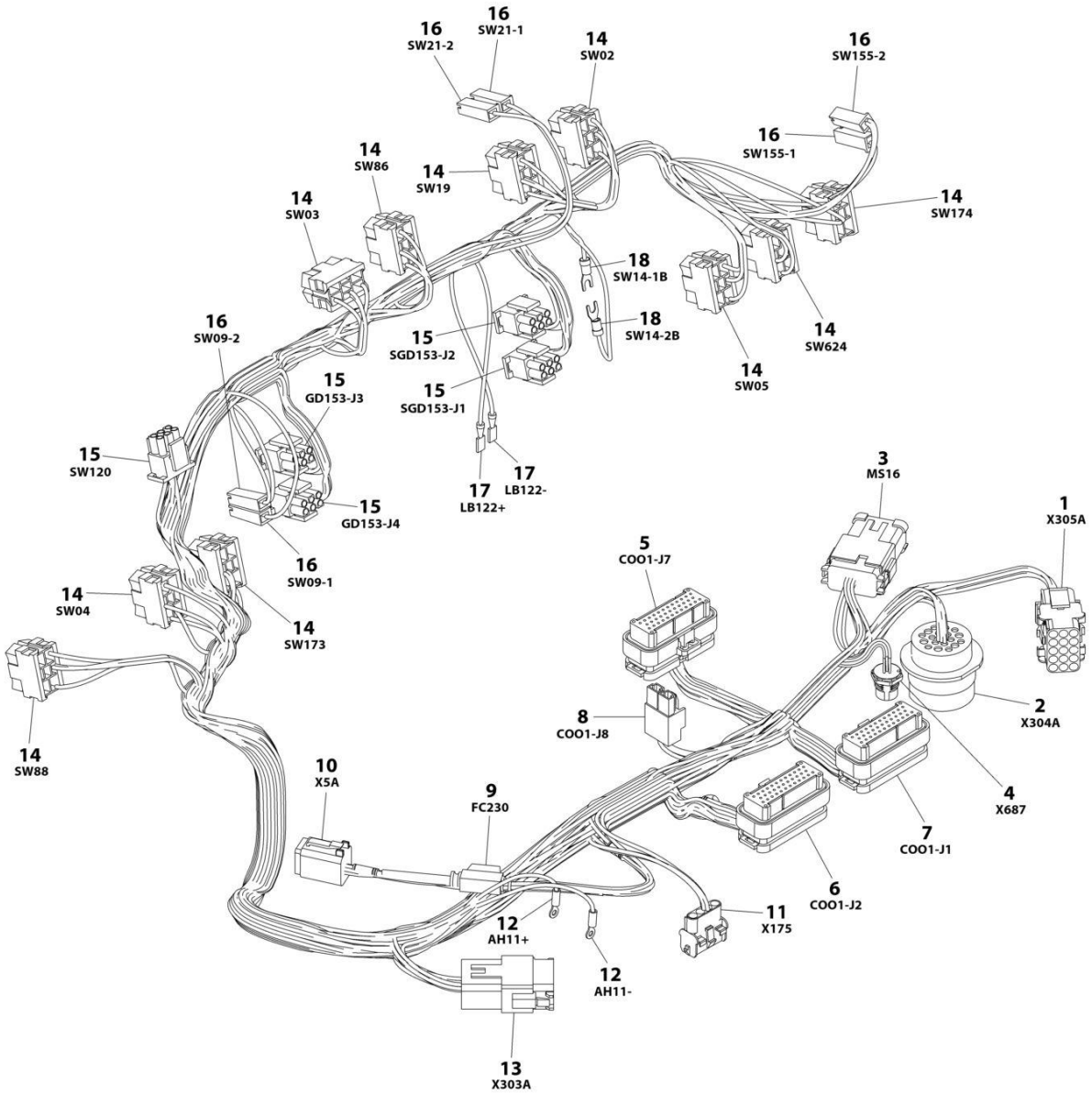

FIGURE 8-61. PLATFORM CONSOLE BOX HARNESS (SN 0300259091 through 0300272317, SN E300007541 through E300007990)

ITEM	PART NUMBER	QTY	DESCRIPTION	REV
	1001243168	Ref	PLATFORM CONSOLE BOX HARNESS	A
1	4460434	1	Connector - 15 Position	
1	4460267	8	Pin. Male	
1	4460708	1	Connector - 15 Position	
2	4460866	1	Connector - 19 Position	
2	4460464	7	Pin, Male	
2	4460466	12	Plug, Terminal	
3	4460933	1	Plug, Male - 12 Position	
3	4460465	8	Socket, Female	
3	4460466	4	Plug, Terminal	
3	1001125677	1	Bussbar - 12 Position	
4	1001213447	1	Connector - 5 Position	
5	4460873	1	Connector - 35 Position	
5	4460871	21	Socket, Female	
5	4460905	14	Plug, Terminal	
6	4460875	1	Connector - 35 Position	
6	4460871	23	Socket, Female	
6	4460905	8	Plug, Terminal	
7	4460874	1	Connector - 35 Position	
7	4460871	26	Socket, Female	
7	4460905	9	Plug, Terminal	
8	4460879	1	Plug, Male - 2 Position	
8	4460887	2	Terminal	
9	4460260	1	Housing, Terminal	
9	8229242	1	Fuse 5Amp	
10	4460894	1	Plug, Male - 6 Position	
10	4460465	6	Socket, Female	
11	4460761	1	Receptacle, Female - 4 Position	
11	4460267	4	Pin, Male	
12	1001098122	2	Terminal, Ring	
13	4460970	1	Receptacle, Female - 12 Position	
13	1001116693	11	Pin, Male	
13	4460466	1	Plug, Terminal	
13	4460933	1	Plug, Male - 12 Position	
14	4460418	6	Connector - 6 Position	
14	4460419	22	Terminal	
14	4460259	6	Terminal (Note: Used only on Fuel Select)	
15	4460225	3	Plug, Male - 6 Position	
15	4460227	4	Pin, Male (Note: Used on Pump Potentiometer Connection Only)	
15	4460226	11	Socket, Female	
16	4460260	5	Housing, Terminal	
16	4460259	7	Terminal	
17	4460016	2	Terminal, Receptacle	
18	4460183	2	Terminal, Fork	

FIGURE 8-62. PLATFORM INTERFACE HARNESS

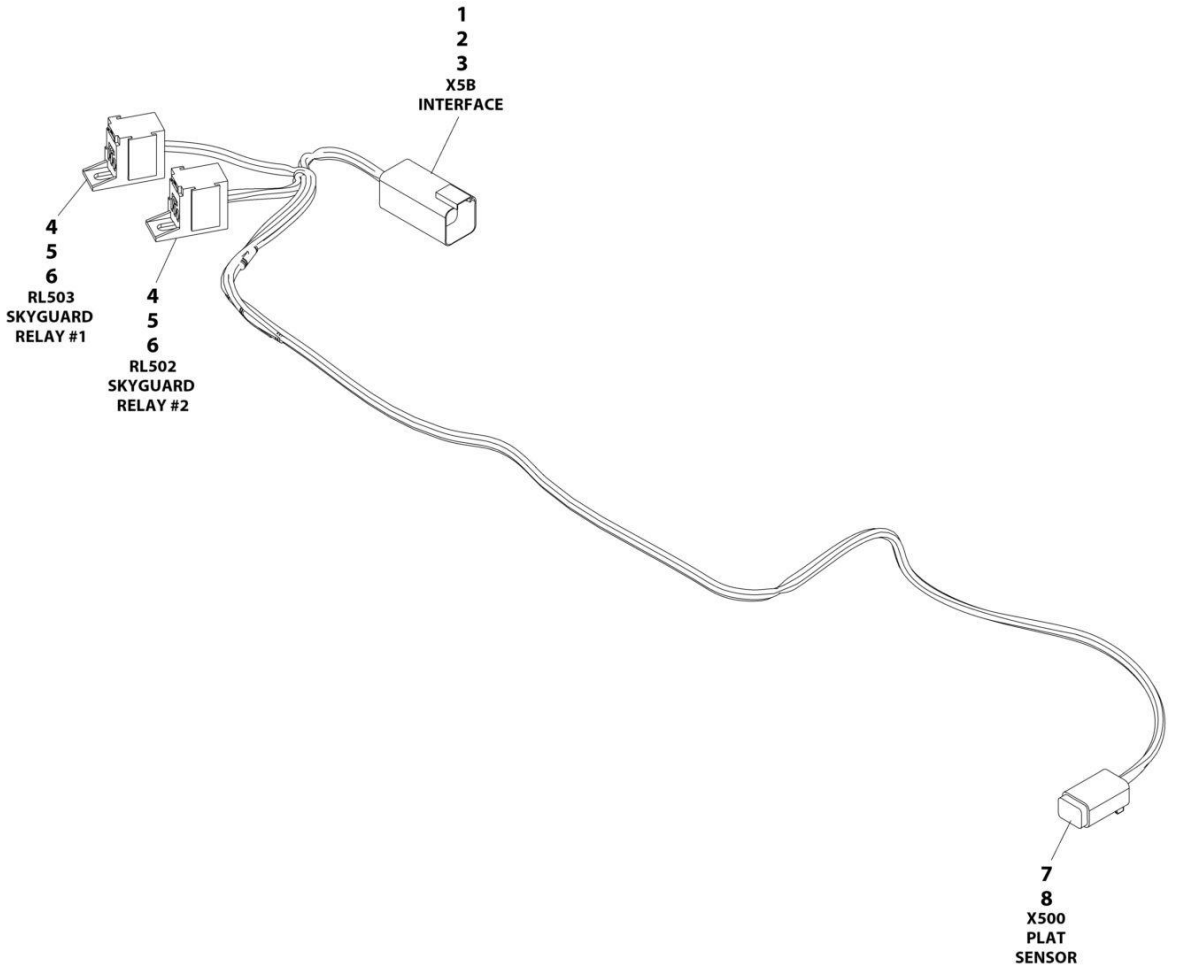

FIGURE 8-62. PLATFORM INTERFACE HARNESS

ITEM	PART NUMBER	QTY	DESCRIPTION	REV
	1001225580	Ref	INTERFACE HARNESS - WITH 1 CELL LSS	D
1	4460899	1	Connector	
2	4460464	4	Terminal	
3	4460466	2	Plug	
4	1001186432	2	Connector	
5	1001116720	4	Terminal	
6	1001118388	4	Terminal	
7	4460884	1	Connector	
8	4460465	4	Terminal	

FIGURE 8-63. RECEPTACLE BOX KIT - 110V IEC YELLOW (CE SPEC)

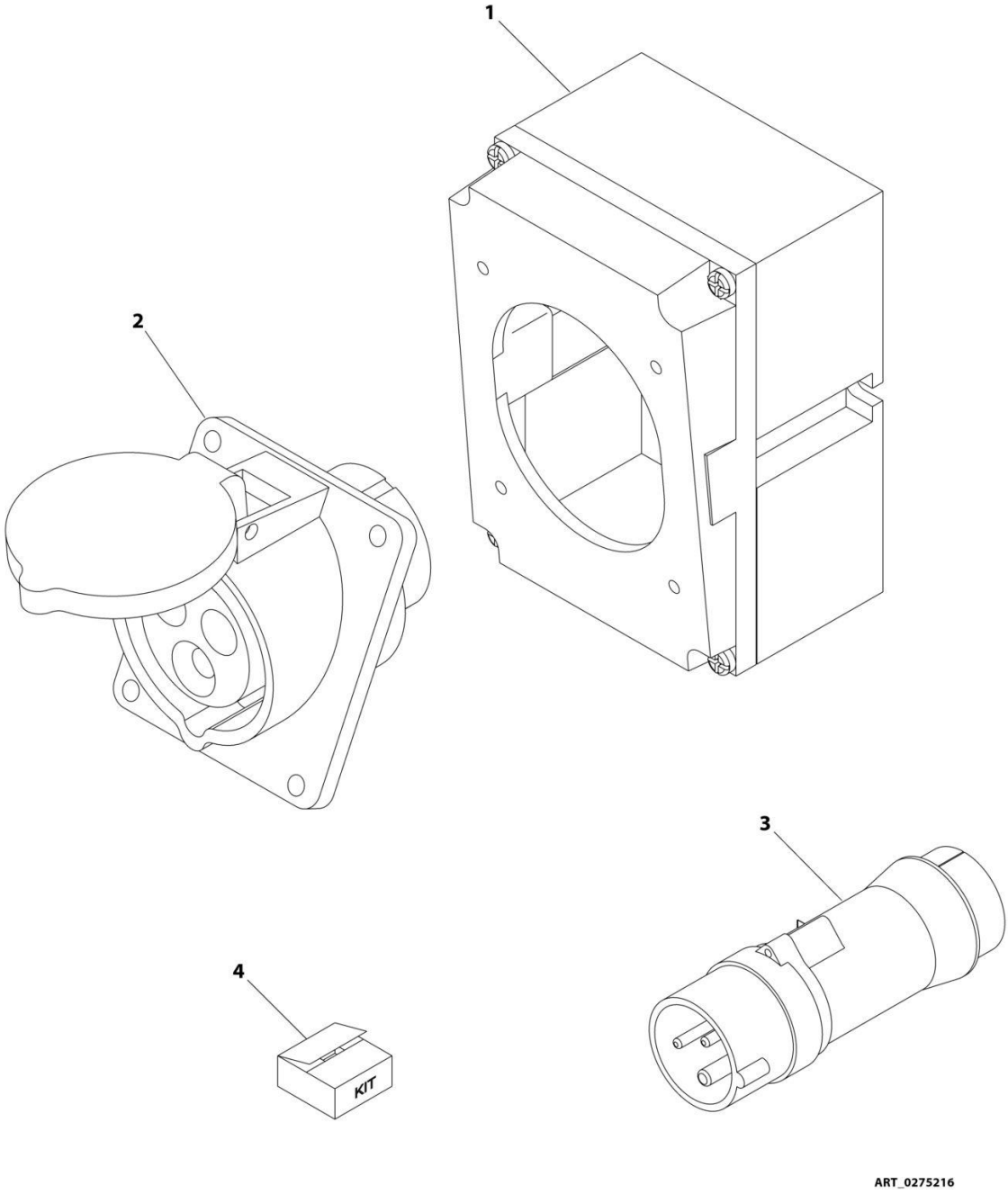

FIGURE 8-63. RECEPTACLE BOX KIT - 110V IEC YELLOW (CE SPEC)

ITEM	PART NUMBER	QTY	DESCRIPTION	REV
	0275216	Ref	RECEPTACLE BOX KIT - 110V IEC YELLOW (CE SPEC)	1
1	0861781	1	Box, Switch	
2	4461198	1	Receptacle	
3	4461196	1	Plug, Male	
4	1001100341	1	Plug and Socket Kit (Includes Items 1-3 and Female Plug p/n 4461197)	

FIGURE 8-64. RECEPTACLE BOX KIT - 220V IEC BLUE (CE SPEC)

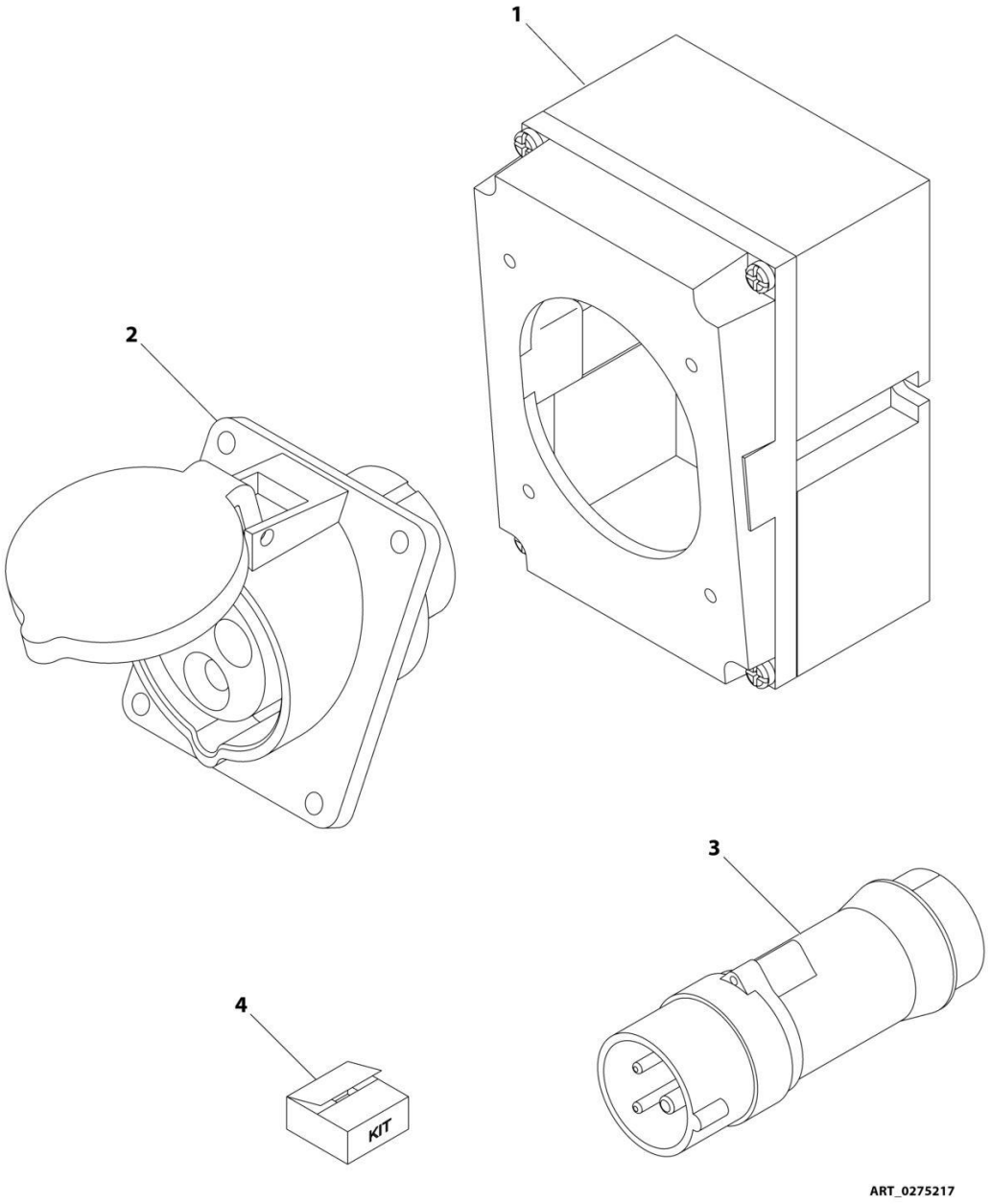

FIGURE 8-64. RECEPTACLE BOX KIT - 220V IEC BLUE (CE SPEC)

ITEM	PART NUMBER	QTY	DESCRIPTION	REV
	0275217	Ref	RECEPTACLE BOX KIT - 220V IEC BLUE (CE SPEC)	1
1	0861781	1	Box, Switch	
2	4461201	1	Receptacle	
3	4461199	1	Plug, Male	
4	1001100342	1	Plug and Socket Kit (Includes Items 1-3 and Female Plug p/n 4461200)	

FIGURE 8-65. RECEPTACLE BOX KIT - 220V CEE7 POST GROUND 2IN X 4IN BOX (CE SPEC)

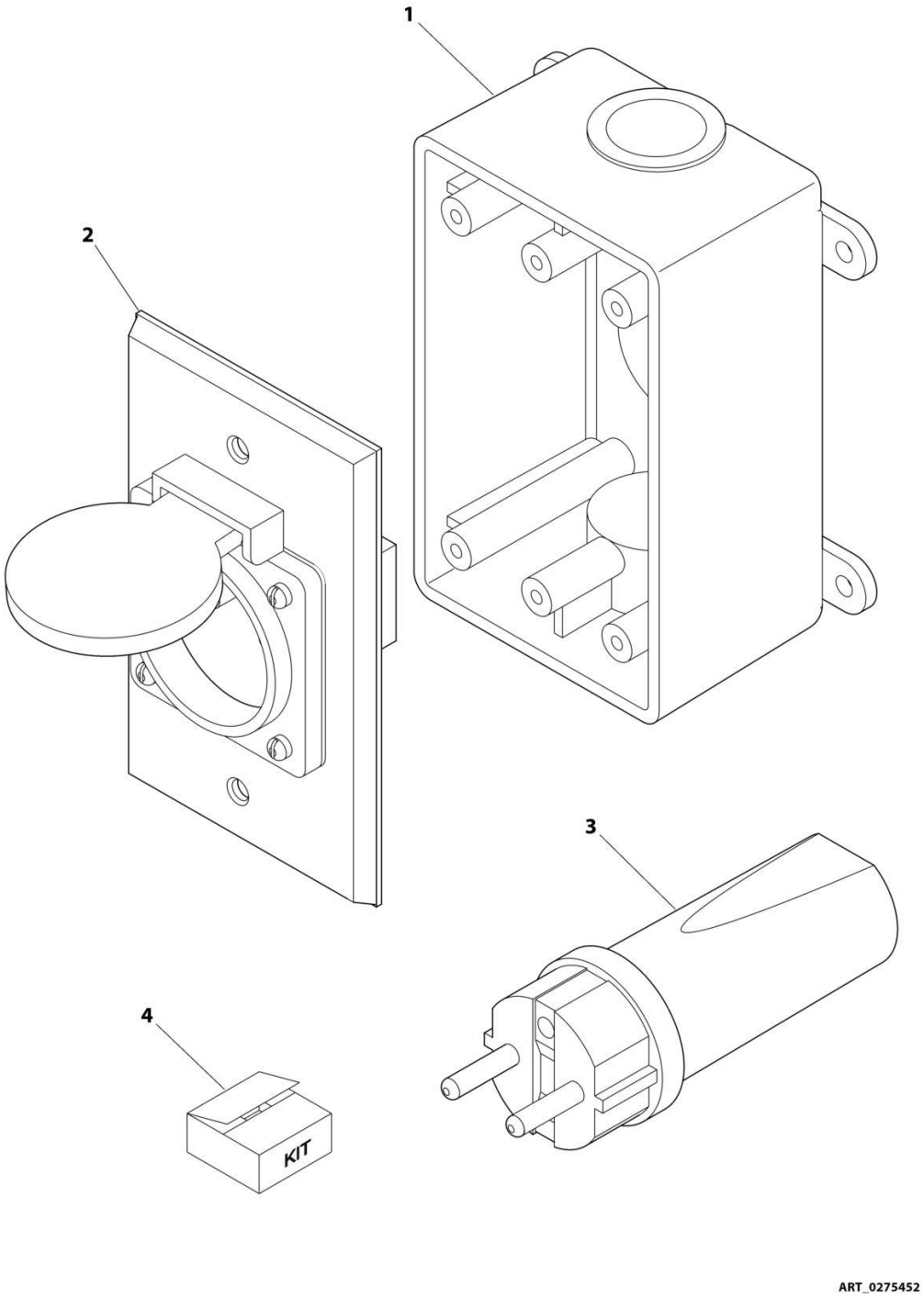

FIGURE 8-65. RECEPTACLE BOX KIT - 220V CEE7 POST GROUND 2IN X 4IN BOX (CE SPEC)

ITEM	PART NUMBER	QTY	DESCRIPTION	REV
	0275452	Ref	RECEPTACLE BOX KIT - 220V CEE7 POST GROUND 2IN X 4IN BOX (CE SPEC)	1
1	0861731	1	Box, Switch	
2	4461244	1	Receptacle	
3	4461202	1	Plug, Male	
4	1001100345	1	Plug and Socket Kit (Includes Items 1-3 and Female Plug p/n 4461206)	

FIGURE 8-66. RECEPTACLE BOX KIT - 220V CEE7 SIDE GROUND 2IN X 4IN BOX (CE SPEC)

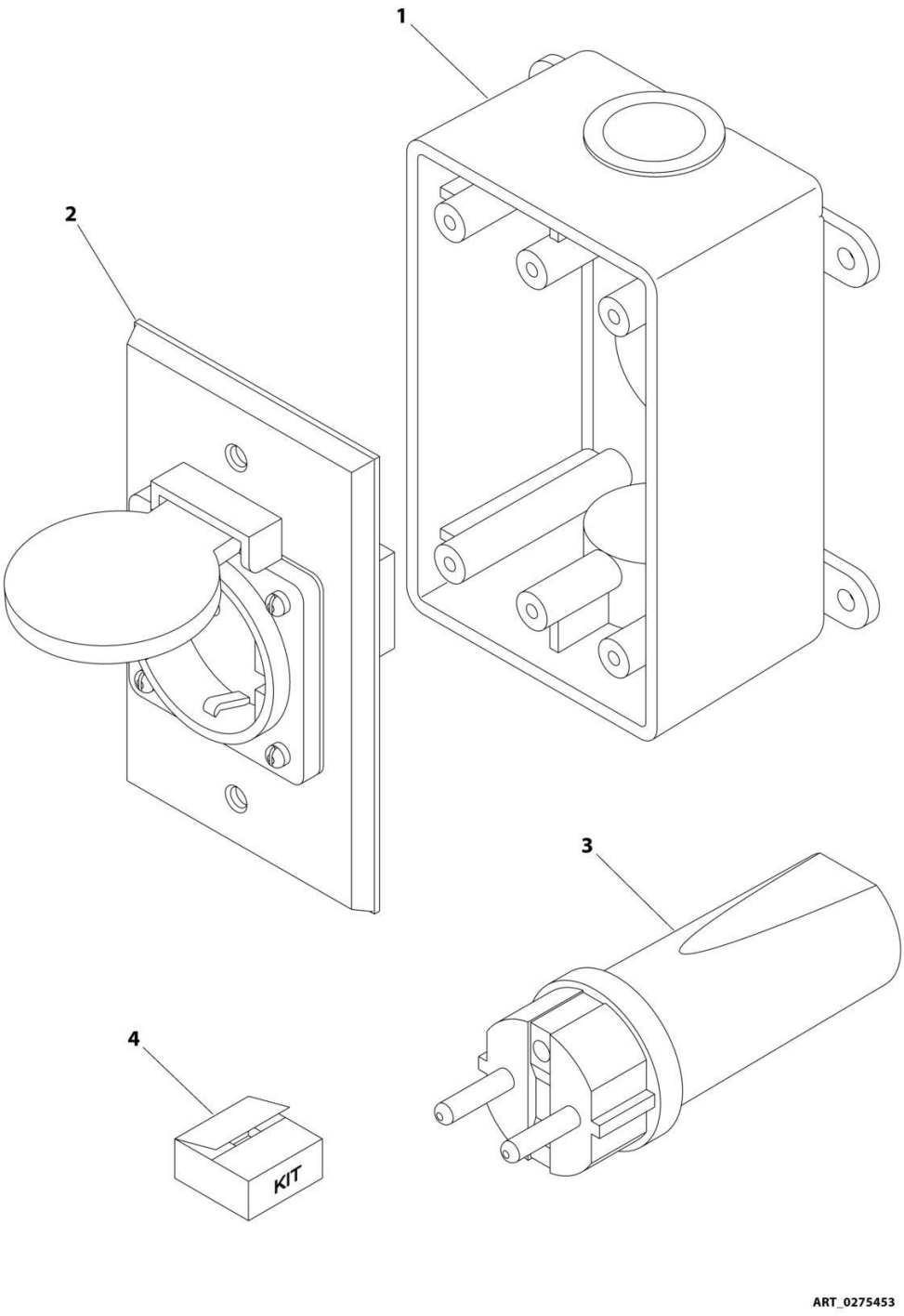

FIGURE 8-66. RECEPTACLE BOX KIT - 220V CEE7 SIDE GROUND 2IN X 4IN BOX (CE SPEC)

ITEM	PART NUMBER	QTY	DESCRIPTION	REV
	0275453	Ref	RECEPTACLE BOX KIT - 220V CEE7 SIDE GROUND 2IN X 4IN BOX (CE SPEC)	1
1	0861731	1	Box, Switch	
2	4461245	1	Receptacle	
3	4461205	1	Plug, Male	
4	1001100347	1	Plug and Socket Kit (Includes Items 1-3 and Female Plug p/n 4461206)	

FIGURE 8-67. RECEPTACLE BOX KIT - 220V CEE7 POST GROUND 70MM X 70MM BOX (CE SPEC)

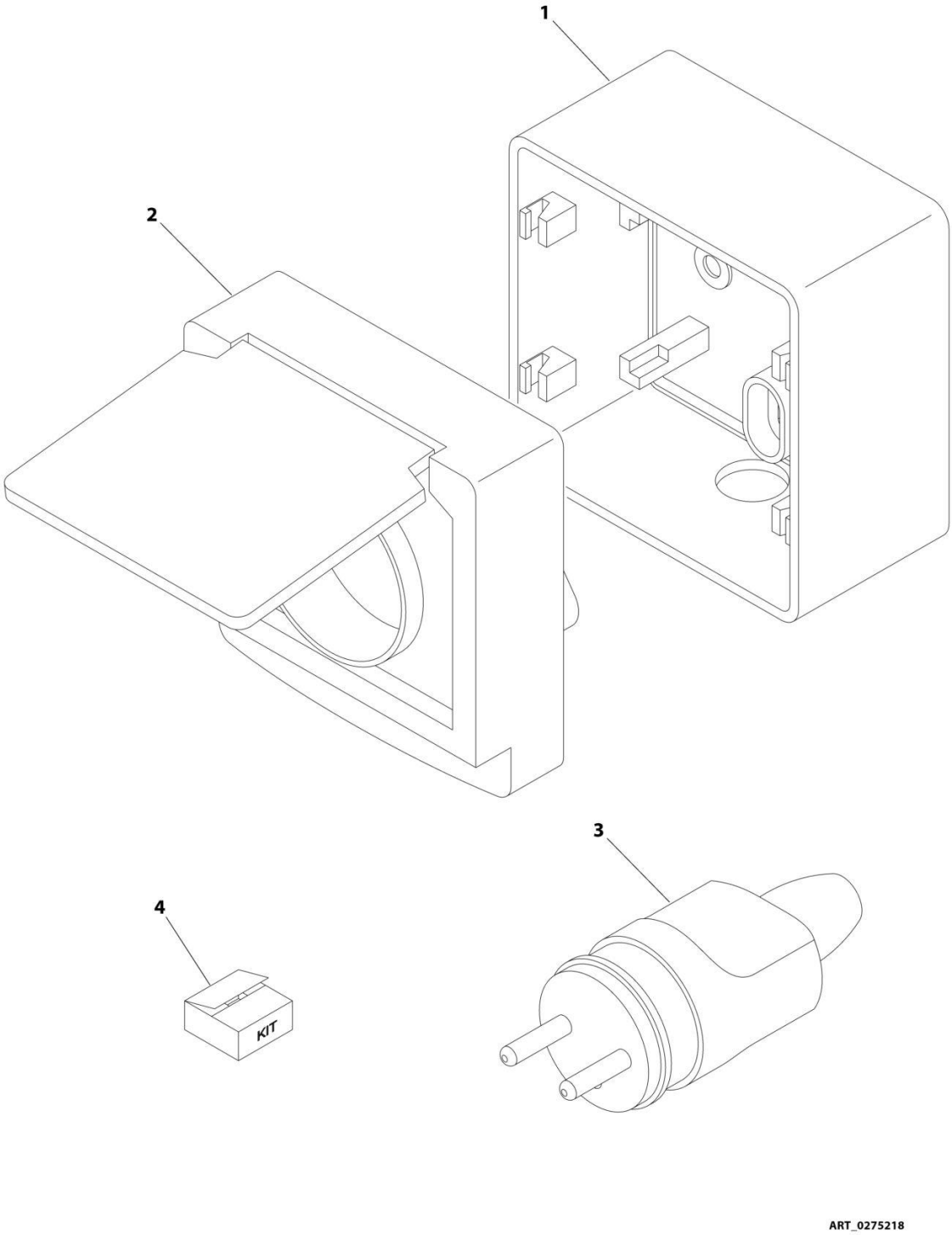

FIGURE 8-67. RECEPTACLE BOX KIT - 220V CEE7 POST GROUND 70MM X 70MM BOX (CE SPEC)

ITEM	PART NUMBER	QTY	DESCRIPTION	REV
	0275218	Ref	RECEPTACLE BOX KIT - 220V CEE7 POST GROUND 70MM X 70MM BOX (CE SPEC)	B
1	1001141967	1	Box, Switch	
2	1001141968	1	Receptacle	
3	4461202	1	Plug, Male	
4	1001141971	1	Plug and Socket Kit (Includes Items 1-3 and Female Plug p/n 4461206)	

FIGURE 8-68. RECEPTACLE BOX KIT - 220V CEE7 SIDE GROUND 70MM X 70MM BOX (CE SPEC)

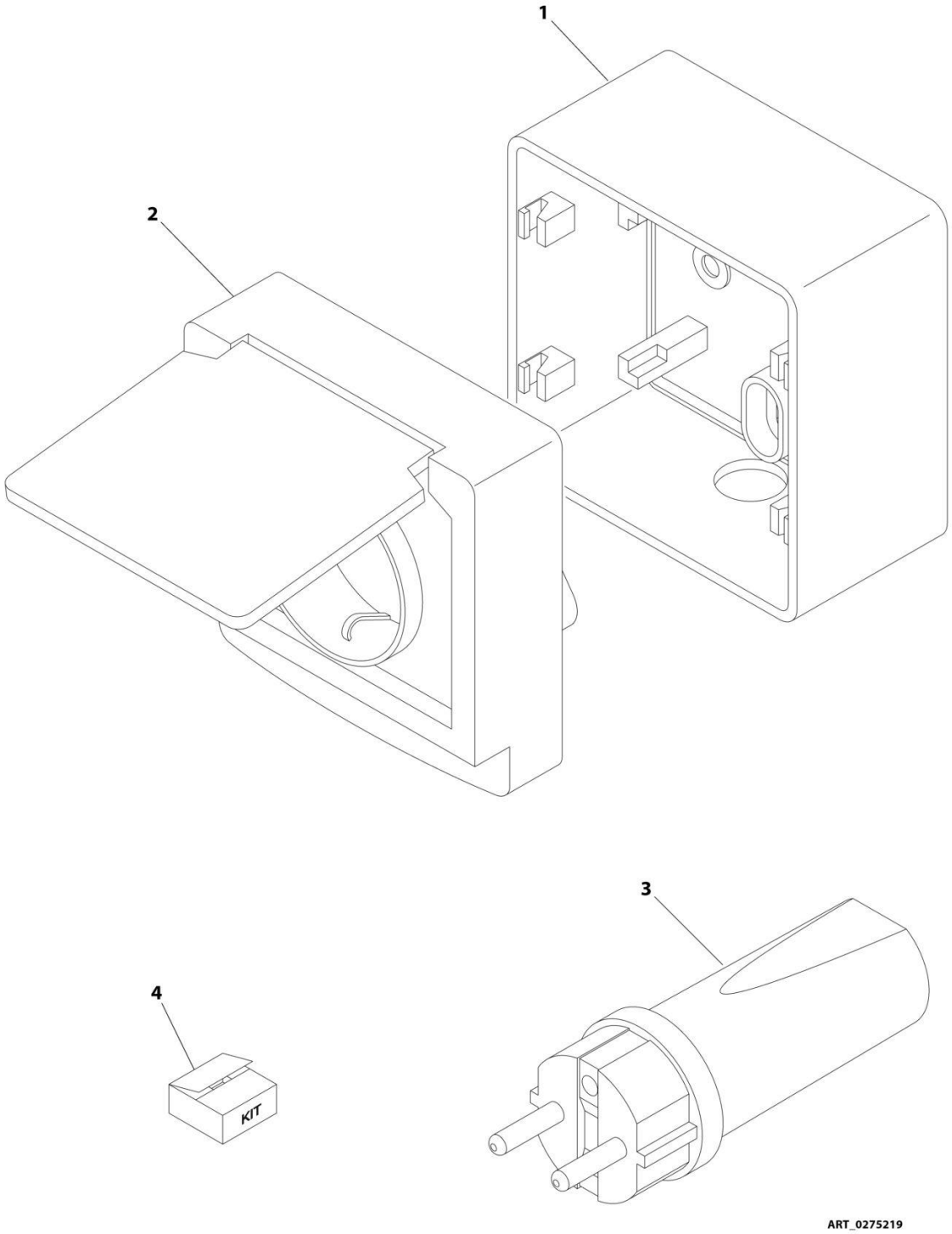

FIGURE 8-68. RECEPTACLE BOX KIT - 220V CEE7 SIDE GROUND 70MM X 70MM BOX (CE SPEC)

ITEM	PART NUMBER	QTY	DESCRIPTION	REV
	0275219	Ref	RECEPTACLE BOX KIT - 220V CEE7 SIDE GROUND 70MM X 70MM BOX (CE SPEC)	B
1	1001141967	1	Box, Switch	
2	1001141969	1	Receptacle	
3	4461205	1	Plug, Male	
4	1001141970	1	Plug and Socket Kit (Includes Items 1-3 and Female Plug p/n 4461206)	

FIGURE 8-69. RECEPTACLE BOX KIT - 220V AFSINT 107 (CE SPEC)

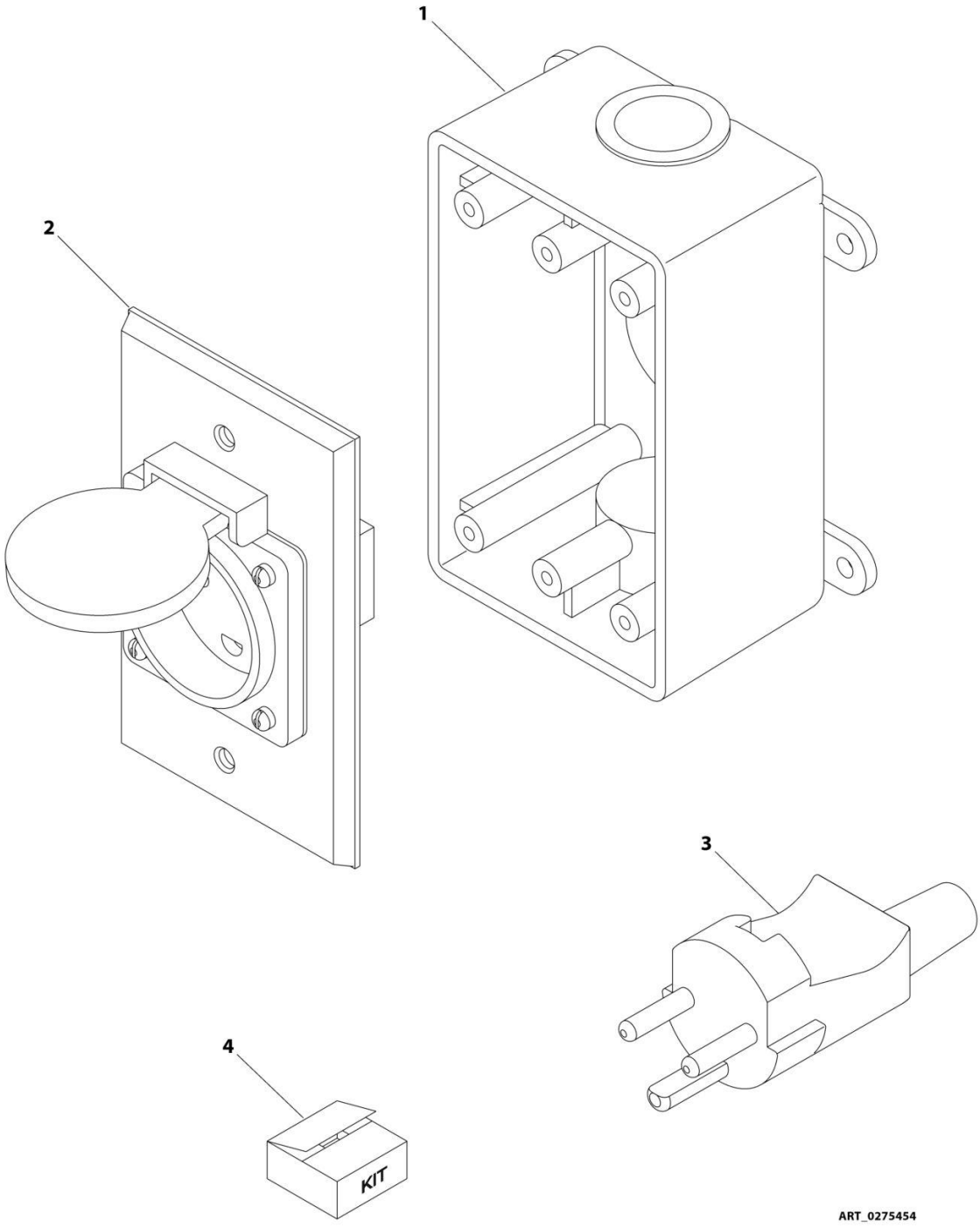

FIGURE 8-69. RECEPTACLE BOX KIT - 220V AFSINT 107 (CE SPEC)

ITEM	PART NUMBER	QTY	DESCRIPTION	REV
	0275454	Ref	RECEPTACLE BOX KIT - 220V AFSINT 107 (CE SPEC)	1
1	0861731	1	Box, Switch	
2	4461246	1	Receptacle	
3	4461249	1	Plug, Male	
4	1001100346	1	Plug and Socket Kit (Includes Items 1-3 and Female Plug p/n 4461250)	

FIGURE 8-70. SKYEYE INTERMEDIATE HARNESS

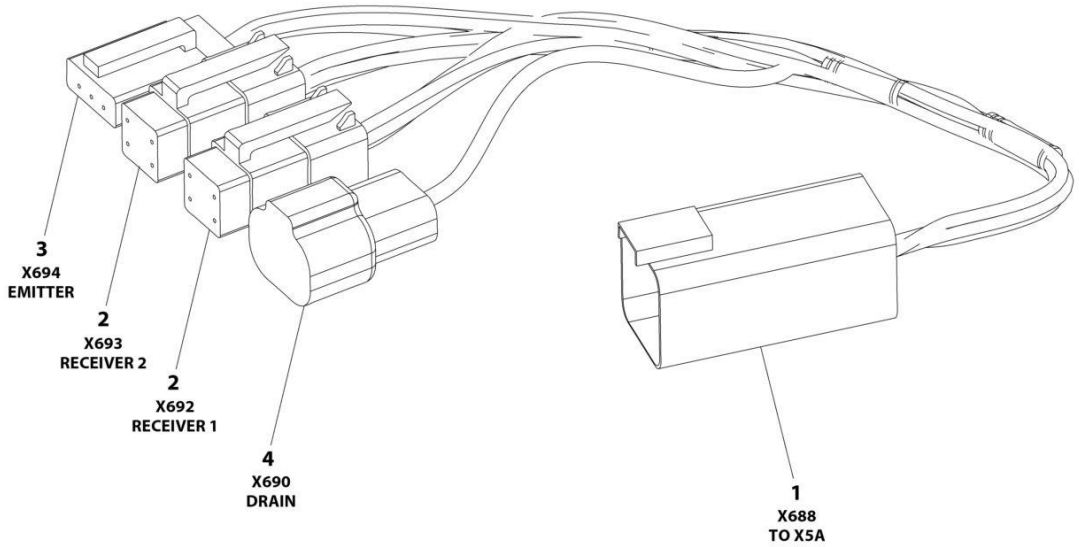

ART_1001237865

FIGURE 8-70. SKYEYE INTERMEDIATE HARNESS

ITEM	PART NUMBER	QTY	DESCRIPTION	REV
	1001237865	Ref	SKYEYE INTERMEDIATE HARNESS	A
1	4460899	1	Connector - 6 Position	
1	4460943	4	Pin, Male	
1	4460466	2	Plug, Terminal	
2	4461077	2	Connector - 4 Position	
2	1001119619	8	Socket, Female	
3	4460911	1	Connector - 3 Position	
3	1001119619	3	Socket, Female	
4	1001187681	1	Connector - 2 Position	
4	4460941	1	Pin, Male	
4	4460466	1	Plug, Terminal	

FIGURE 8-71. SKYEYE RECEIVER HARNESS

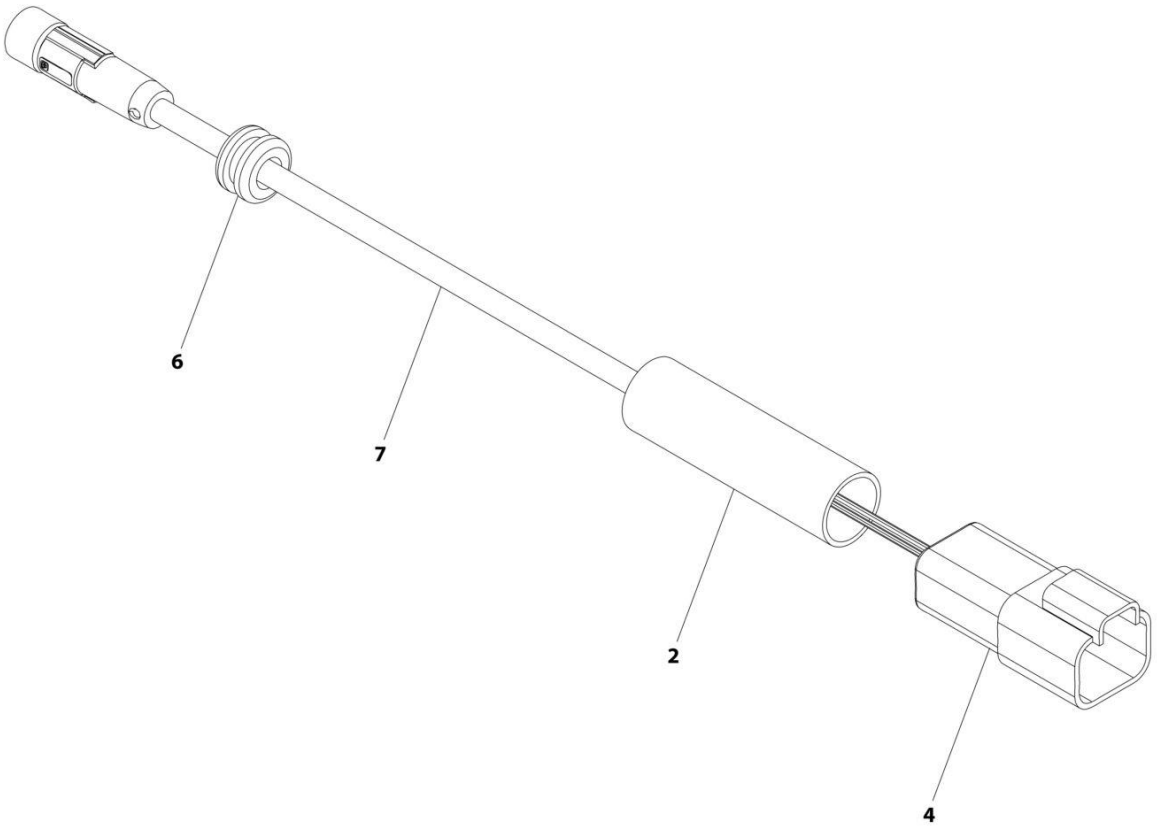

FIGURE 8-71. SKYEYE RECEIVER HARNESS

ITEM	PART NUMBER	QTY	DESCRIPTION	REV
	1001237863	Ref	SKYEYE RECEIVER HARNESS	A
2	2820247	AR	Tubing, Heat Shrink	
4	1001097051	1	Connector - 4 Position	
4	1001119620	4	Pin, Male	
6	1001227996	1	Grommet	
7	1001237862	1	Cable, M8 Female Cordset	

FIGURE 8-72. SKYEYE EMITTER HARNESS

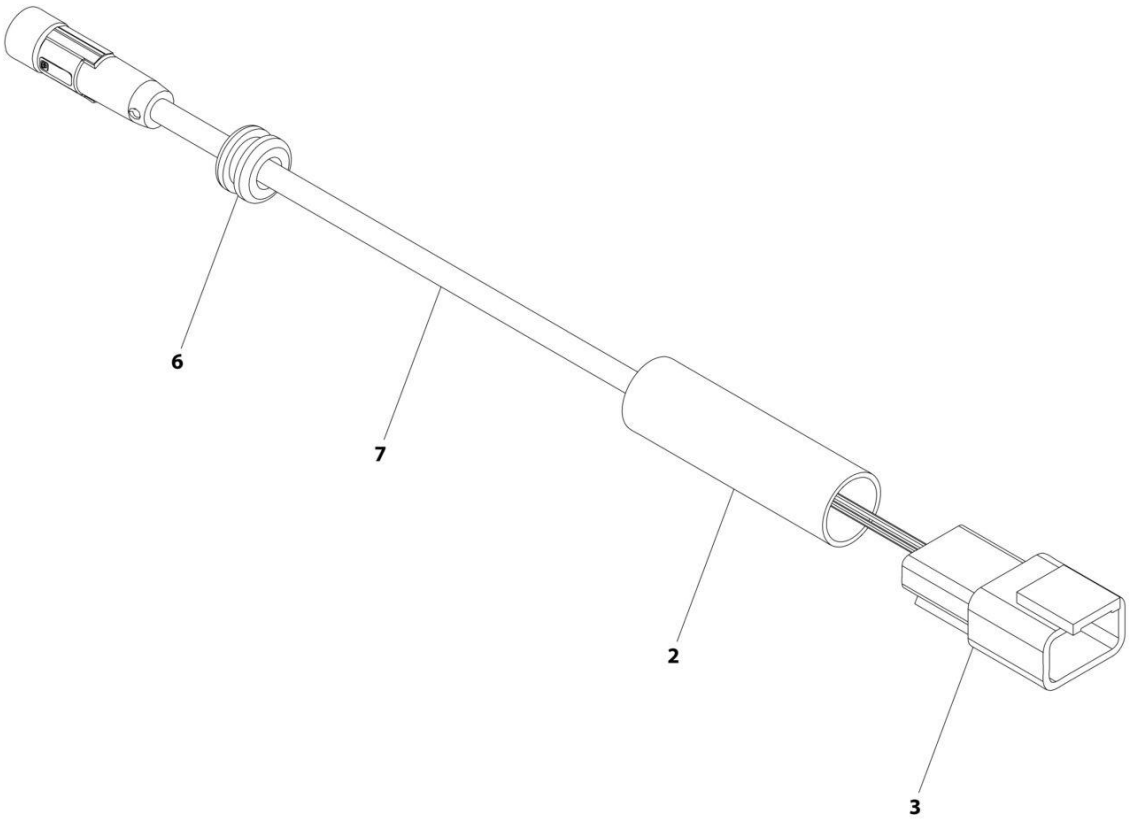

FIGURE 8-72. SKYEYE EMITTER HARNESS

ITEM	PART NUMBER	QTY	DESCRIPTION	REV
	1001237864	Ref	SKYEYE EMITTER HARNESS	A
2	2820247	AR	Tubing, Heat Shrink	
3	4460910	1	Connector - 3 Position	
3	1001119620	3	Pin, Male	
6	1001227996	1	Grommet	
7	1001237862	1	Cable, M8 Female Cordset	

FIGURE 8-73. SKYLINE HARNESS

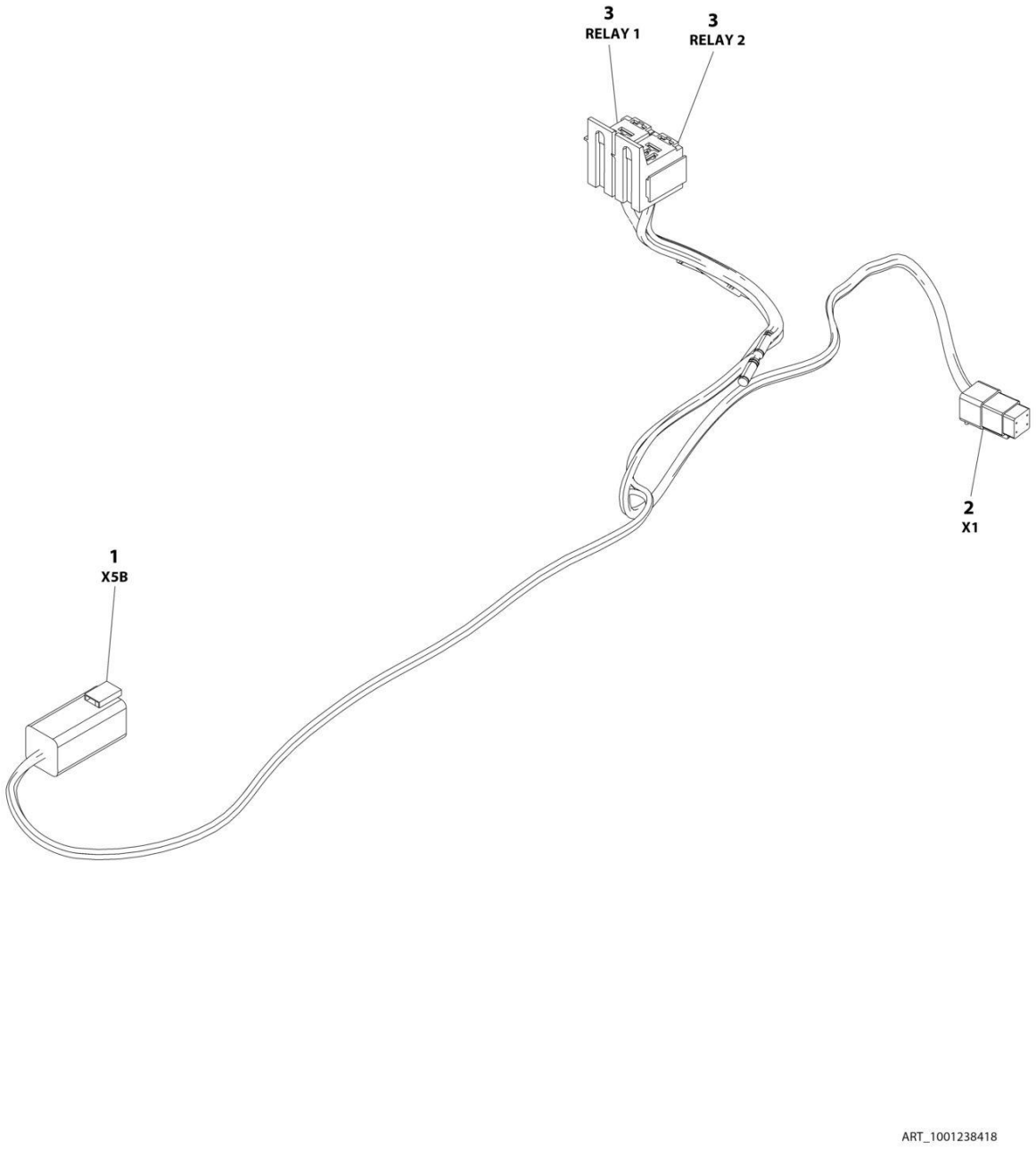

FIGURE 8-73. SKYLINE HARNESS

ITEM	PART NUMBER	QTY	DESCRIPTION	REV
	1001238418	Ref	SKYLINE HARNESS	B
1	4460899	1	Connector - 6 Position	
1	4460464	4	Pin, Male	
1	4460466	2	Plug, Terminal	
2	4461077	1	Connector - 4 Position	
2	1001126009	4	Socket, Female	
3	1001186432	2	Plug, Relay	
3	1001118388	5	Terminal	
3	1001118384	3	Terminal	
3	3740086	2	Relay	

FIGURE 8-74. SKYGUARD HARNESS

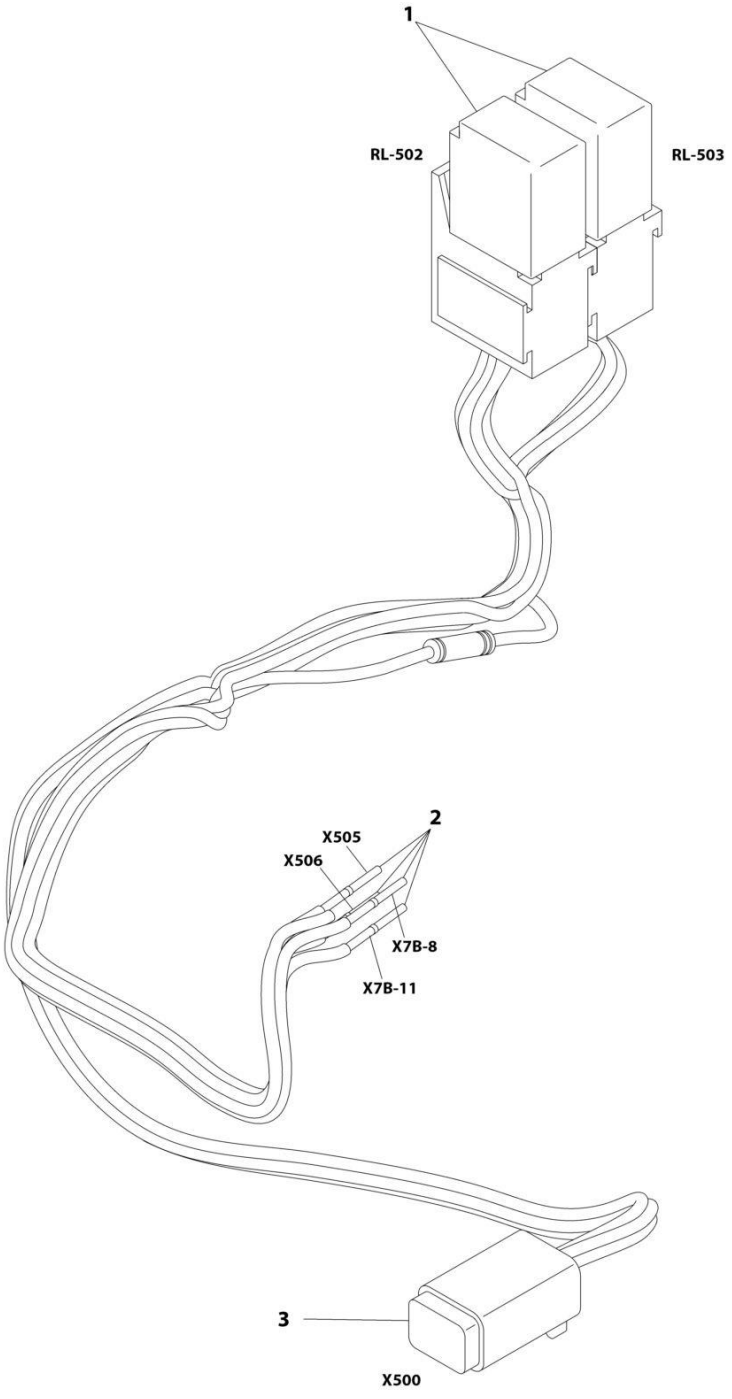

FIGURE 8-74. SKYGUARD HARNESS

ITEM	PART NUMBER	QTY	DESCRIPTION	REV
	1001192292	Ref	SKYGUARD HARNESS	B
1	1001186432	2	Holder, Micro Relay	
1	1001186431	2	Relay, Micro 35 Amp	
1	1001116720	11	Terminal	
2	4460226	4	Socket, Female	
3	4460884	1	Plug, Male - 4 Position	
3	4460465	2	Socket, Female	

FIGURE 8-75. TURNTABLE HARNESS

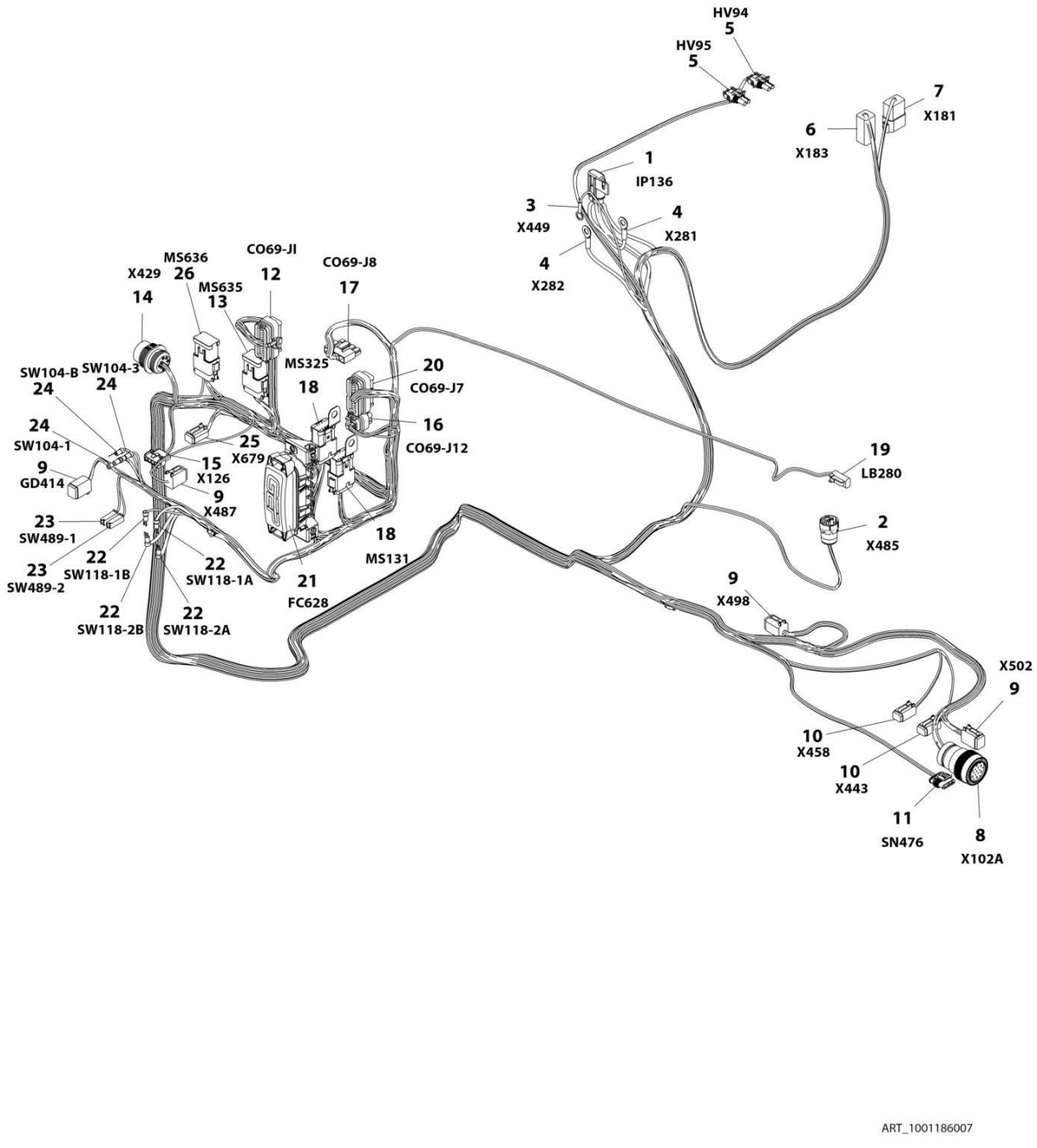

FIGURE 8-75. TURNTABLE HARNESS

ITEM	PART NUMBER	QTY	DESCRIPTION	REV
	1001186007	Ref	TURNTABLE HARNESS	H
1	1001117070	1	Fuseholder with 30Amp Fuse	
1	See Note	1	Fuse 30Amp (Note: Not Available - Purchase Locally)	
2	4460967	1	Connector - 3 Position	
2	4460465	3	Socket, Female	
3	4460247	1	Terminal, Ring	
4	8220045	2	Terminal, Ring	
5	4460742	2	Plug, Male - 2 Position	
5	4460743	4	Socket, Female	
5	4460458	4	Seal, Terminal	
6	4460899	1	Receptacle, Female - 6 Position	
6	4460464	3	Pin, Male	
6	4460943	2	Pin, Male	
6	4460466	1	Plug, Terminal	
7	4460931	1	Receptacle, Female	
7	4460464	3	Pin, Male	
7	4460466	5	Plug, Terminal	
8	4460865	1	Connector - 19 Position	
8	4460465	6	Socket, Female	
8	4460509	2	Socket, Female	
8	4460466	11	Plug, Terminal	
8	1321647	1	Clamp **(SN 0300213177 through 0300272317, SN 1300007279 through 1300007373, SN B300003516 through B300005760, SN E300003057 through E300007990, Except SN 0300272185 through 0300272190, Excluding B300005569 and E300007814)**	
9	4460894	4	Plug, Male - 6 Position	
9	4460465	15	Socket, Female	
9	4460944	2	Socket, Female (Gold)	
9	4460466	7	Plug, Terminal	
10	4460884	2	Plug, Male - 4 Position	
10	4460465	4	Socket, Female	
10	4460466	4	Plug, Terminal	
11	1001103012	1	Connector - 4 Position	
11	1001107854	4	Socket, Female	
11	1001116763	4	Seal, Terminal **(SN 0300201991 through 0300211573, SN E300002833 through E300003057)**	
11	1001104498	4	Seal, Terminal **(SN 0300211574 through 0300272317, SN 1300007279 through 1300007373, SN B300003516 through B300005760, SN E300003058 through E300007990, Except SN 0300272185 through 0300272190, Excluding B300005569 and E300007814)**	
12	4460874	1	Connector - 35 Position	
12	4460871	18	Socket, Female	
12	4460905	17	Plug, Terminal	
13	4460836	1	Connector - 12 Position	
13	4460465	7	Socket, Female	
13	4460466	5	Plug, Terminal	
13	4460837	2	Bussbar - 12 Position	
14	1001112612	1	Connector - 9 Position	
14	4460464	3	Pin, Male	
14	4460943	2	Pin, Male (Gold)	

ITEM	PART NUMBER	QTY	DESCRIPTION	REV
14	4460466	4	Plug, Terminal	
15	4460761	1	Receptacle, Female - 4 Position	
15	4460267	4	Pin, Male	
16	1001113961	1	Plug, Male - 8 Position	
16	4460871	5	Socket, Female	
16	4460905	3	Plug, Terminal	
17	4460878	1	Plug, Male - 4 Position	
17	4460887	4	Terminal	
18	4460933	2	Plug, Male - 12 Position	
18	4460465	14	Socket, Female	
18	4460466	10	Plug, Terminal	
18	1001119020	2	Bussbar - 12 Position	
18	1001120328	2	Clip, Mounting	
19	4460891	1	Plug, Male - 2 Position	
19	4460465	2	Socket, Female	
20	4460873	1	Connector - 35 Position	
20	4460871	22	Socket, Female	
20	4460905	13	Plug, Terminal	
21	1001185964	1	Fuse Box Assembly	
21	8229244	2	Fuse 15Amp	
21	8229242	4	Fuse 5Amp	
21	1001129285	2	Fuse with Diode	
21	1001095704	1	Relay	
22	4460806	4	Terminal, Fork	
23	4460260	2	Housing, Terminal	
23	4460259	2	Terminal	
24	4460042	3	Terminal, Ring	
25	4460884	1	Plug, Male - 4 Position **(SN 0300204894 through 0300272317, SN B300003516 through B300005760, SN E300002833 through E300007990, Except SN 0300272185 through 0300272190, Excluding B300005569 and E300007814)**	
25	4460465	4	Socket, Female **(SN 0300204894 through 0300272317, SN B300003516 through B300005760, SN E300002833 through E300007990, Except SN 0300272185 through 0300272190, Excluding B300005569 and E300007814)**	
26	4460836	1	Connector - 12 Position	
26	4460465	4	Socket, Female	
26	4460466	7	Plug, Terminal	
26	1001157890	1	Socket, Female	
26	4460837	1	Bussbar - 12 Position	

FIGURE 8-76. VALVE HARNESS - MAIN VALVE

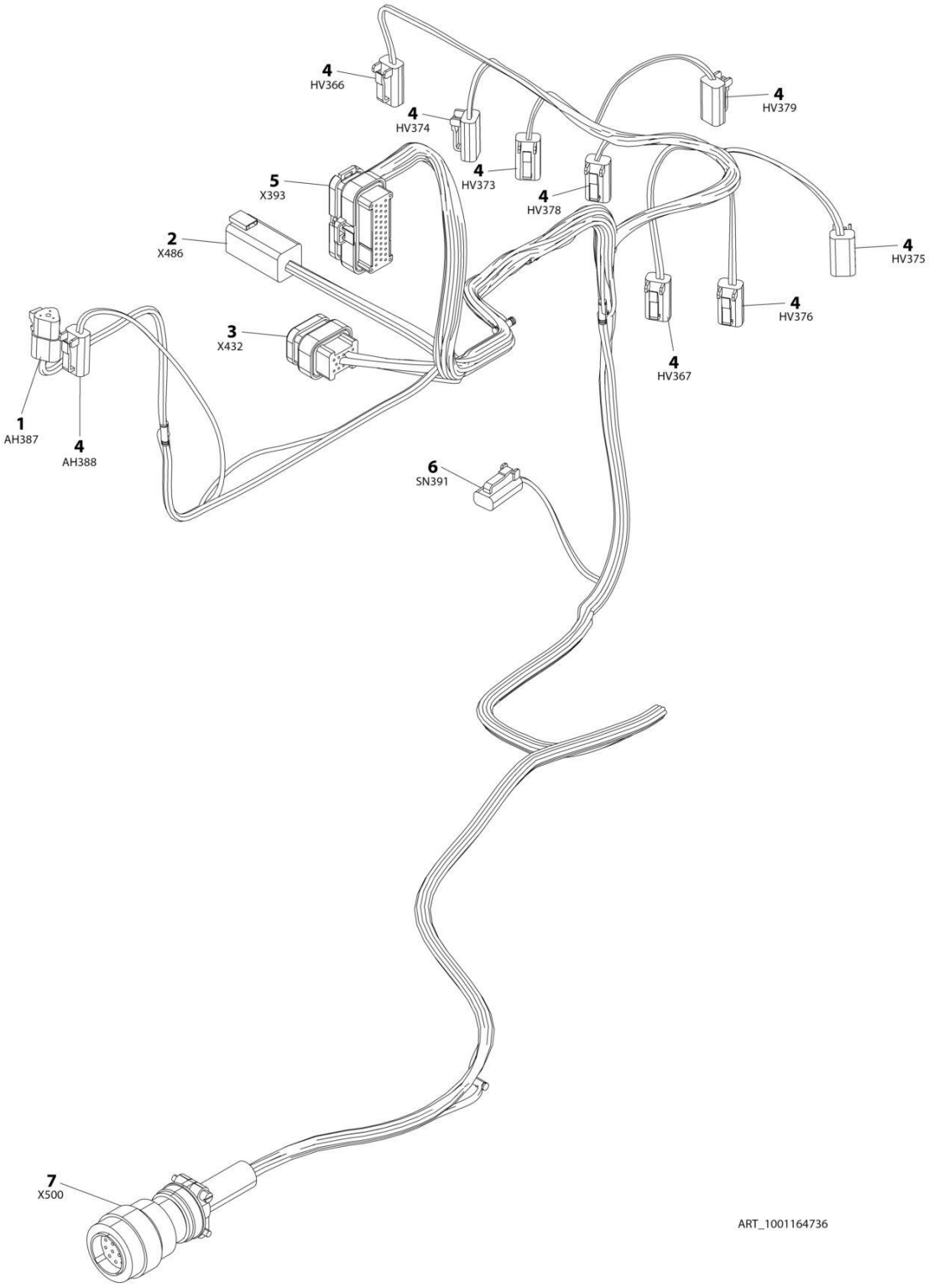

FIGURE 8-76. VALVE HARNESS - MAIN VALVE

ITEM	PART NUMBER	QTY	DESCRIPTION	REV
	1001164736	Ref	VALVE HARNESS - MAIN VALVE	E
1	4460539	1	Plug, Male - 3 Position	
1	4460465	3	Socket, Female	
2	4460899	1	Receptacle, Female - 6 Position	
2	4460464	5	Pin, Male	
2	4460466	1	Plug, Terminal	
3	4460872	1	Connector - 13 Position	
3	4460871	9	Socket, Female	
3	4460905	4	Plug, Terminal	
4	4460891	9	Plug, Male - 2 Position	
4	4460465	18	Socket, Female	
5	4460875	1	Connector - 35 Position	
5	4460871	25	Socket, Female	
5	4460905	10	Plug, Terminal	
6	4460424	1	Plug, Male - 2 Position	
6	4460268	2	Socket, Female	
7	4460754	1	Connector - 14 Position	
7	4460465	13	Socket, Female	
7	4460466	1	Plug, Terminal	

FIGURE 8-77. VALVE HARNESS - PLATFORM VALVE

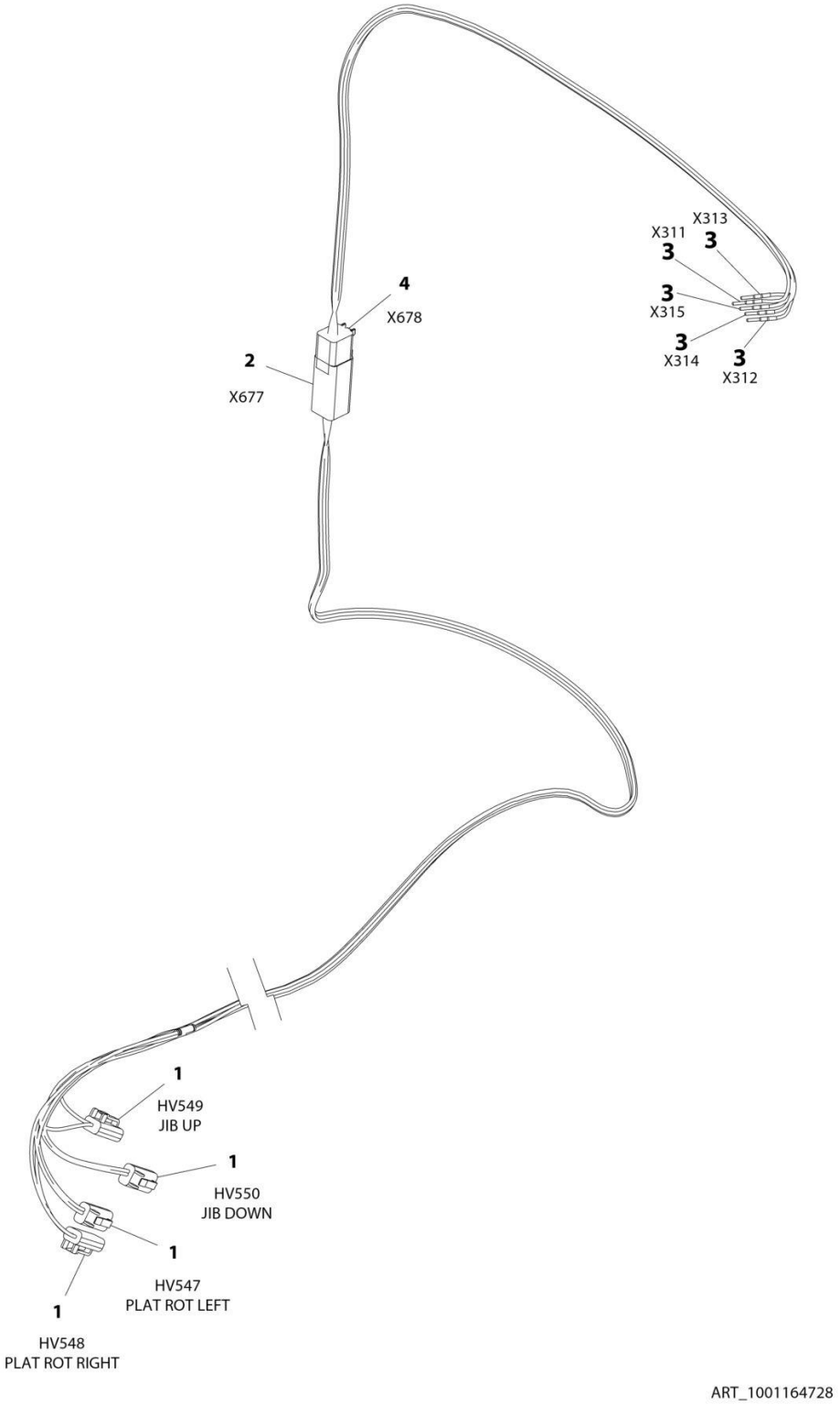

FIGURE 8-77. VALVE HARNESS - PLATFORM VALVE

ITEM	PART NUMBER	QTY	DESCRIPTION	REV
	1001164728	Ref	VALVE HARNESS - PLATFORM VALVE	D
1	4460891	4	Plug, Male - 2 Position	
1	4460465	8	Socket, Female	
2	4460899	1	Receptacle, Female - 6 Position	
2	4460464	5	Pin, Male	
2	4460466	1	Plug, Terminal	
3	4460465	5	Socket, Female	
4	4460894	1	Plug, Male - 6 Position	
4	4460465	5	Socket, Female	
4	4460466	1	Plug, Terminal	

SECTION 9 - DECAL

SECTION 9 - DECAL

FIGURE 9-1. DECAL INSTALLATION - ANSI, ANSI EXPORT AND CHINA SPECS (ENGLISH)

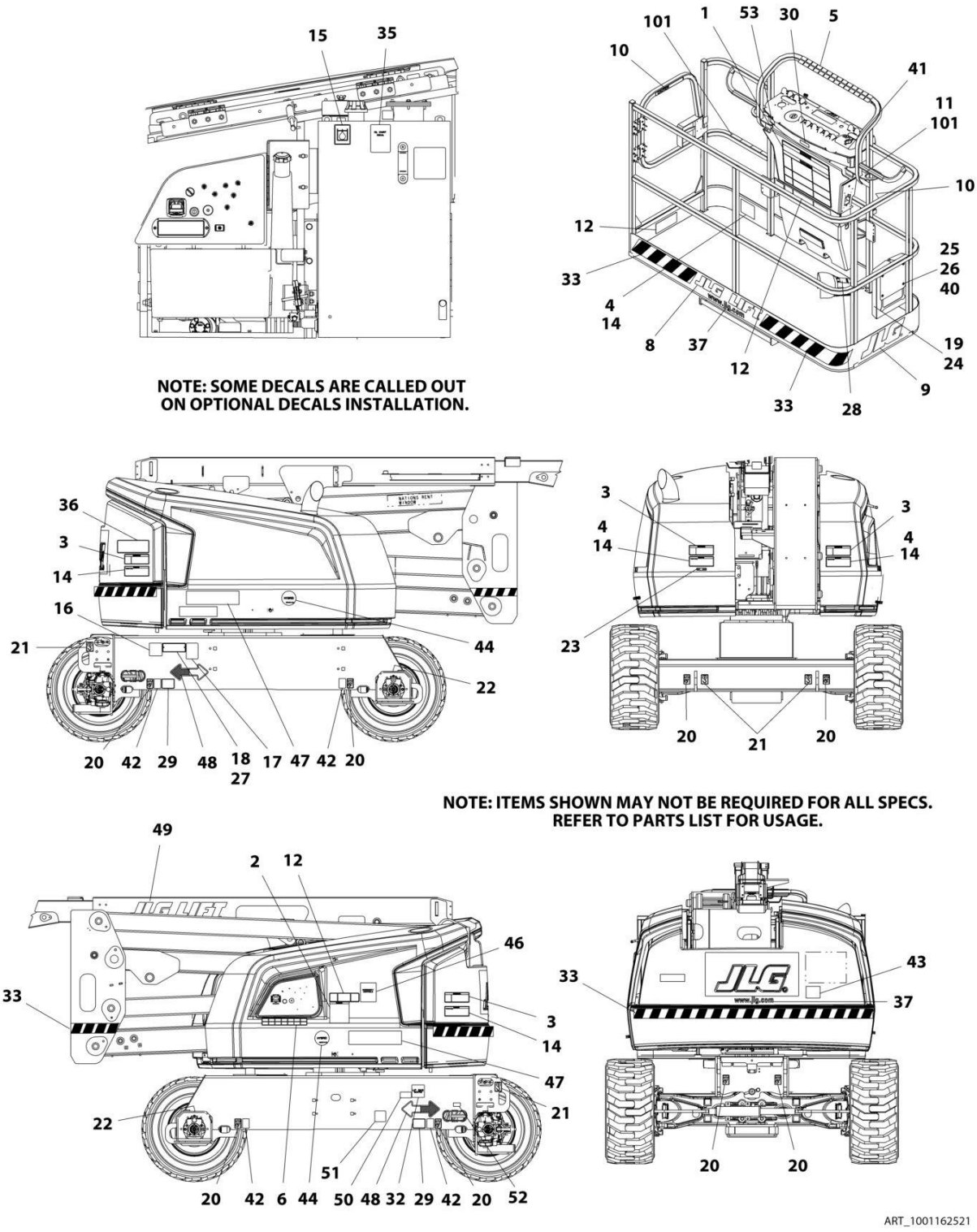

FIGURE 9-1. DECAL INSTALLATION - ANSI, ANSI EXPORT AND CHINA SPECS (ENGLISH)

ITEM	PART NUMBER	QTY	DESCRIPTION	REV
	1001169157	Ref	DECAL INSTALLATION - REFERENCE CHART	P
	1001162521	Ref	DECAL INSTALLATION - ANSI, ANSI EXPORT AND CHINA SPECS (ENGLISH)	I
1	1703797	1	Decal - Danger/Warning	
2	1705336	1	Decal - Danger/Warning	
3	1703805	4	Decal - Danger/Electrocution	
4	1703804	4	Decal - Warning/Crushing	
5	1001173262	1	Decal - Legend	
6	1706941	1	Decal - Legend **(SN 0300201991 through 0300218691)**	
6	1001174313	1	Decal - Legend **(SN 0300218692 through 0300272317, SN B300003516 through B300005760, Except SN 0300272185 through 0300272190, Excluding B300005569)**	
10	1702868	2	Decal - No Hands	
11	1704277	2	Decal - Attach Lanyard Here **(SN 0300201991 through 0300238976)**	
12	1001162416	3	Decal - Max Capacity	
14	1703953	2	Decal - Warning/Crushing	
15	1701504	1	Decal - Hydraulic Oil	
16	See Note	NSS	Decal - Bar Code (Note: Not Available for Purchase)	
17	1001131269	1	Decal - Patent	
19	1701509	1	Decal - Manual	
20	1702300	8	Decal - Tie Down /Lift	
21	1701500	4	Decal - Tie Down /Lift	
22	1703687	2	Decal - Arrow	
23	3251243	1	Nameplate 120V-60Hz	
24	0860520	1	Box, Manual Storage	
25	4751400	4	Washer, 1/4	
26	3311405	4	Nut, Lock 1/4-20	
27	3820001	2	Rivet	
28	3252347	1	Decal - Footswitch	
30	1705514	1	Decal - CSA	
35	1704412	1	Decal - Hydraulic Fluid	
36	1001172217	1	Decal - Lift Diagram (Without Turntable Lock)	
36	1001223118	1	Decal - Lift Diagram (With Turntable Lock)	
37	1704885	2	Decal - Website	
40	0641406	4	Bolt, 1/4-20 x 3/4	
41	1705351	1	Decal - Drive/Steer	
42	1701499	4	Decal - Tie Down /Lift	
43	3251813	1	Decal - USA	
48	1701529	2	Decal - Arrow	
51	1001223055	1	Decal - Yearly Inspection **(SN 0300233865 through 0300272317, SN B300003516 through B300005760, Except SN 0300272185 through 0300272190, Excluding B300005569)**	
52	1001223453	1	Decal - Ices (Canada) **(SN 0300243662 through 0300272317, SN B300003516 through B300005760, Except SN 0300272185 through 0300272190, Excluding B300005569)**	
53	1001231801	1	Decal - Warning **(SN 0300243662 through 0300272317, SN B300003516 through B300005760, Except SN 0300272185 through 0300272190, Excluding B300005569)**	
100	1001232026	1	Decal - Platform Lanyard Kit (Not Shown) **(SN 0300238977 through 0300272317, SN B300003516 through B300005760, Except SN 0300272185 through 0300272190, Excluding**	

SECTION 9 - DECAL

ITEM	PART NUMBER	QTY	DESCRIPTION	REV
			B300005569)	
101	1704277	3	Decal - Attach Lanyard Here	

SECTION 9 - DECAL

FIGURE 9-2. DECAL INSTALLATION - WITH KUBOTA ENGINE (ANSI SPECS) (ENGLISH)

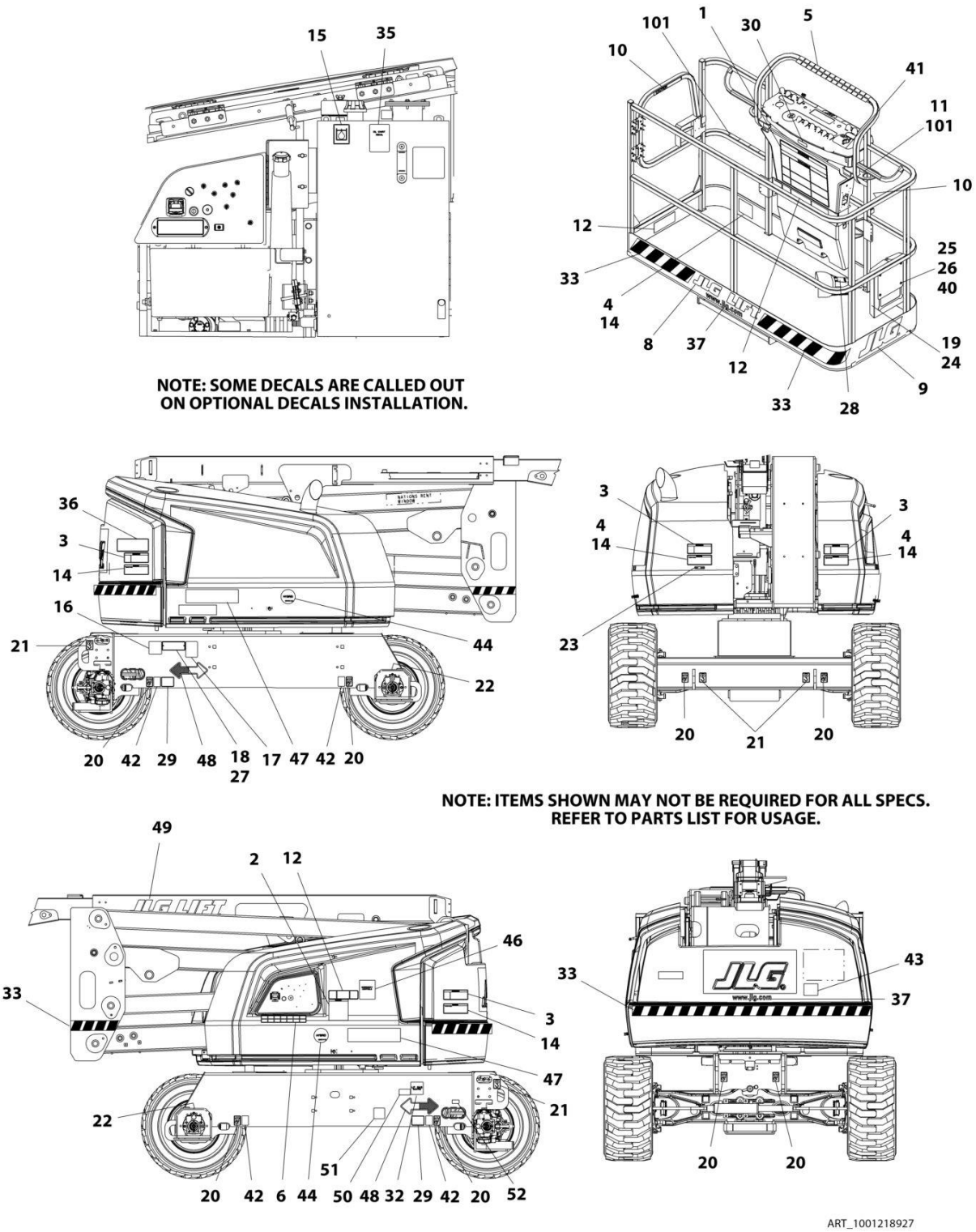

FIGURE 9-2. DECAL INSTALLATION - WITH KUBOTA ENGINE (ANSI SPECS) (ENGLISH)

ITEM	PART NUMBER	QTY	DESCRIPTION	REV
	1001169157	Ref	DECAL INSTALLATION - REFERENCE CHART	P
	1001218927	Ref	DECAL INSTALLATION - WITH KUBOTA ENGINE (ANSI SPECS) (ENGLISH)	D
1	1703797	1	Decal - Danger/Warning	
2	1705336	1	Decal - Danger/Warning	
3	1703805	4	Decal - Danger/Electrocution	
4	1703804	4	Decal - Warning/Crushing	
5	1001173262	1	Decal - Legend	
6	1001216408	1	Decal - Legend	
10	1702868	2	Decal - No Hands	
11	1704277	2	Decal - Attach Lanyard Here **(SN 0300201991 through 0300238976)**	
12	1001162416	3	Decal - Max Capacity	
14	1703953	2	Decal - Warning/Crushing	
15	1701504	1	Decal - Hydraulic Oil	
16	See Note	NSS	Decal - Bar Code (Note: Not Available for Purchase)	
17	1001131269	1	Decal - Patent	
19	1701509	1	Decal - Manual	
20	1702300	8	Decal - Tie Down /Lift	
21	1701500	4	Decal - Tie Down /Lift	
22	1703687	2	Decal - Arrow	
23	3251243	1	Nameplate 120V-60Hz	
24	0860520	1	Box, Manual Storage	
25	4751400	4	Washer, 1/4	
26	3311405	4	Nut, Lock 1/4-20	
27	3820001	2	Rivet	
28	3252347	1	Decal - Footswitch	
30	1705514	1	Decal - CSA	
35	1704412	1	Decal - Hydraulic Fluid	
36	1001172217	1	Decal - Lift Diagram (Without Turntable Lock)	
36	1001223118	1	Decal - Lift Diagram (With Turntable Lock)	
37	1704885	2	Decal - Website	
40	0641406	4	Bolt, 1/4-20 x 3/4	
41	1705351	1	Decal - Drive/Steer	
42	1701499	4	Decal - Tie Down /Lift	
43	3251813	1	Decal - USA	
48	1701529	2	Decal - Arrow	
51	1001223055	1	Decal - Yearly Inspection **(SN 0300233865 through 0300272317, Except SN 0300272185 through 0300272190)**	
52	1001223453	1	Decal - Ices (Canada) **(SN 0300243662 through 0300272317, Except SN 0300272185 through 0300272190)**	
100	1001232026	1	Decal - Platform Lanyard Kit (Not Shown) **(SN 0300238977 through 0300272317, Except SN 0300272185 through 0300272190)**	
101	1704277	3	Decal - Attach Lanyard Here	

FIGURE 9-3. DECAL INSTALLATION - AUSTRALIAN SPEC (ENGLISH)

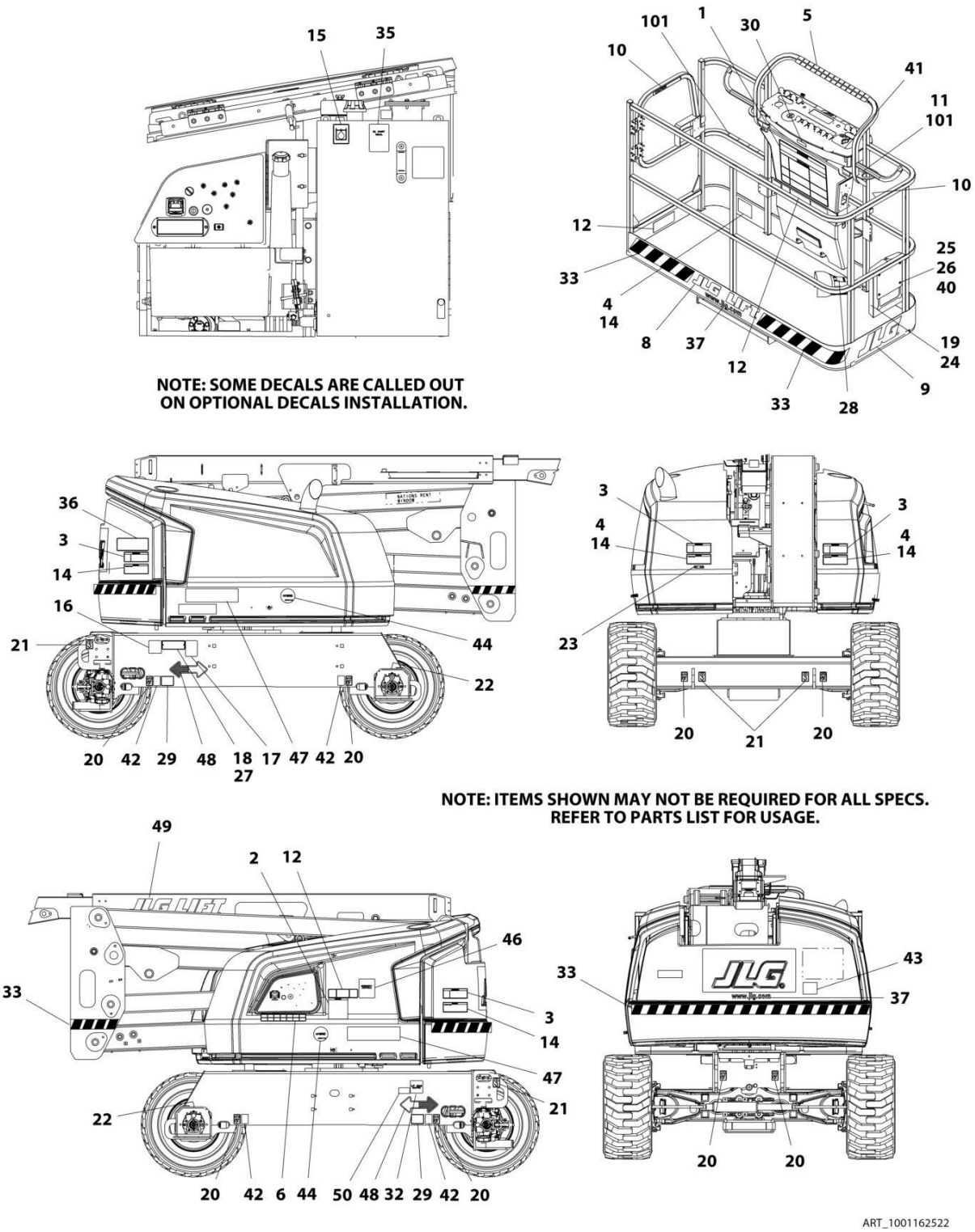

FIGURE 9-3. DECAL INSTALLATION - AUSTRALIAN SPEC (ENGLISH)

ITEM	PART NUMBER	QTY	DESCRIPTION	REV
	1001169157	Ref	DECAL INSTALLATION - REFERENCE CHART	P
	1001162522	Ref	DECAL INSTALLATION - AUSTRALIAN SPEC (ENGLISH)	G
1	1001162429	1	Decal - Tipping/Electrocution	
2	1705822	1	Decal - Electrocution/Safety Manual	
3	1705961	4	Decal - Danger Electrocution	
11	1704277	2	Decal - Attach Lanyard Here **(SN 0300201991 through 0300238976, SN E300002833 through E300005030)**	
12	1001190913	1	Decal - Max Capacity	
14	1701518	6	Decal - Warning/Crushing	
15	1701504	1	Decal - Hydraulic Oil	
16	See Note	NSS	Decal - Bar Code (Note: Not Available for Purchase)	
19	1701509	1	Decal - Manual	
20	1702300	8	Decal - Tie Down /Lift	
21	1701500	4	Decal - Tie Down /Lift	
22	1703687	2	Decal - Arrow	
23	3251242	1	Decal - 240V / 50Hz **(SN 0300201991 through 0300213428, SN E300002833 through E300003038)**	
24	0860520	1	Box, Manual Storage	
25	4751400	4	Washer, 1/4	
26	3311405	4	Nut, Lock 1/4-20	
27	3820001	4	Rivet	
28	1705828	1	Decal - Footswitch	
35	1704412	1	Decal - Hydraulic Fluid	
36	1001172217	1	Decal - Lift Diagram (Without Turntable Lock)	
36	1001223118	1	Decal - Lift Diagram (With Turntable Lock)	
37	1704885	2	Decal - Website	
40	0641406	4	Bolt, 1/4-20 x 3/4	
42	1701499	4	Decal - No Tie Down/Lift	
43	1001204510	1	Decal - Sound Power Level **(SN 0300231306 through 0300272317, SN 1300007279 through 1300007373, SN B300003516 through B300005760, SN E300004589 through E300007990, Except SN 0300272185 through 0300272190, Excluding B300005569 and E300007814)**	
46	1001112551	1	Decal - Emergency Controls	
48	1701529	2	Decal - Arrow	
100	1001232026	1	Decal - Platform Lanyard Kit (Not Shown) **(SN 0300238977 through 0300272317, SN B300003516 through B300005760, SN E300005031 through E300007990, Except SN 0300272185 through 0300272190, Excluding B300005569 and E300007814)**	
101	1704277	3	Decal - Attach Lanyard Here	

SECTION 9 - DECAL

FIGURE 9-4. DECAL INSTALLATION - BRAZIL SPEC (ENGLISH)

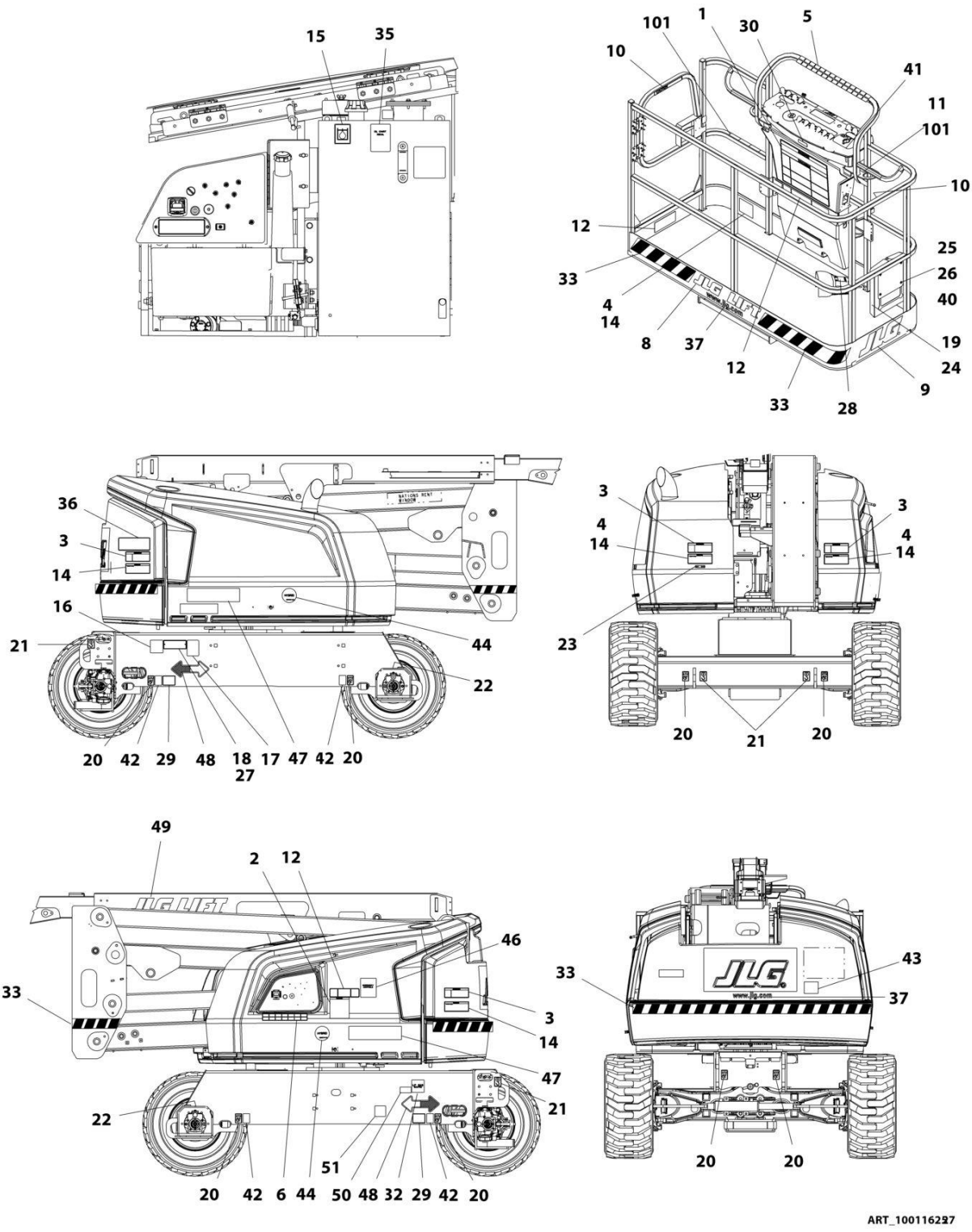

FIGURE 9-4. DECAL INSTALLATION - BRAZIL SPEC (ENGLISH)

ITEM	PART NUMBER	QTY	DESCRIPTION	REV
	1001169157	Ref	DECAL INSTALLATION - REFERENCE CHART	P
	1001162527	Ref	DECAL INSTALLATION - BRAZIL SPEC (ENGLISH)	G
1	1703928	1	Decal - Danger/Warning	
2	1705349	1	Decal - Warning Inspection	
3	1703940	4	Decal - Danger Electrocution	
4	1703952	4	Decal - Warning/Crushing	
10	1704002	2	Decal - No Hands	
11	1704277	2	Decal - Attach Lanyard **(SN 0300201991 through 0300238976)**	
12	1001162426	3	Decal - Max Capacity	
14	1705903	2	Decal - Warning/Crushing	
15	1701504	1	Decal - Hydraulic Oil	
16	See Note	NSS	Decal - Bar Code (Note: Not Available for Purchase)	
19	1701509	1	Decal - Manual	
20	1702300	8	Decal - Tie Down /Lift	
21	1701500	4	Decal - Tie Down /Lift	
22	1703687	2	Decal - Arrow	
23	3251243	1	Decal - 120V-60Hz	
24	0860520	1	Box, Manual Storage	
25	4751400	4	Washer, 1/4	
26	3311405	4	Nut, Lock 1/4-20	
27	3820001	4	Rivet	
28	1703985	1	Decal, Foot Switch	
35	1704412	1	Decal - Hydraulic Fluid	
36	1001172217	1	Decal - Lift Diagram (Without Turntable Lock)	
36	1001223118	1	Decal - Lift Diagram (With Turntable Lock)	
37	1704885	2	Decal - Website	
40	0641406	4	Bolt, 1/4-20 x 3/4	
41	1705905	1	Decal - Drive/Steer	
42	1701499	4	Decal - No Tie Down/Lift	
43	3251813	1	Decal - USA	
45	1704008	1	Decal - Inspection (Not Shown) **(SN 0300201991 through 0300218673)**	
48	1701529	2	Decal - Arrow	
51	1001224052	1	Decal - Yearly Inspection **(SN 0300233865 through 0300272317, Except SN 0300272185 through 0300272190)**	
100	1001232026	1	Decal - Platform Lanyard Kit (Not Shown) **(SN 0300238977 through 0300272317, Except SN 0300272185 through 0300272190)**	
101	1704277	3	Decal - Attach Lanyard Here	

SECTION 9 - DECAL

FIGURE 9-5. DECAL INSTALLATION - CE SPEC (ENGLISH)

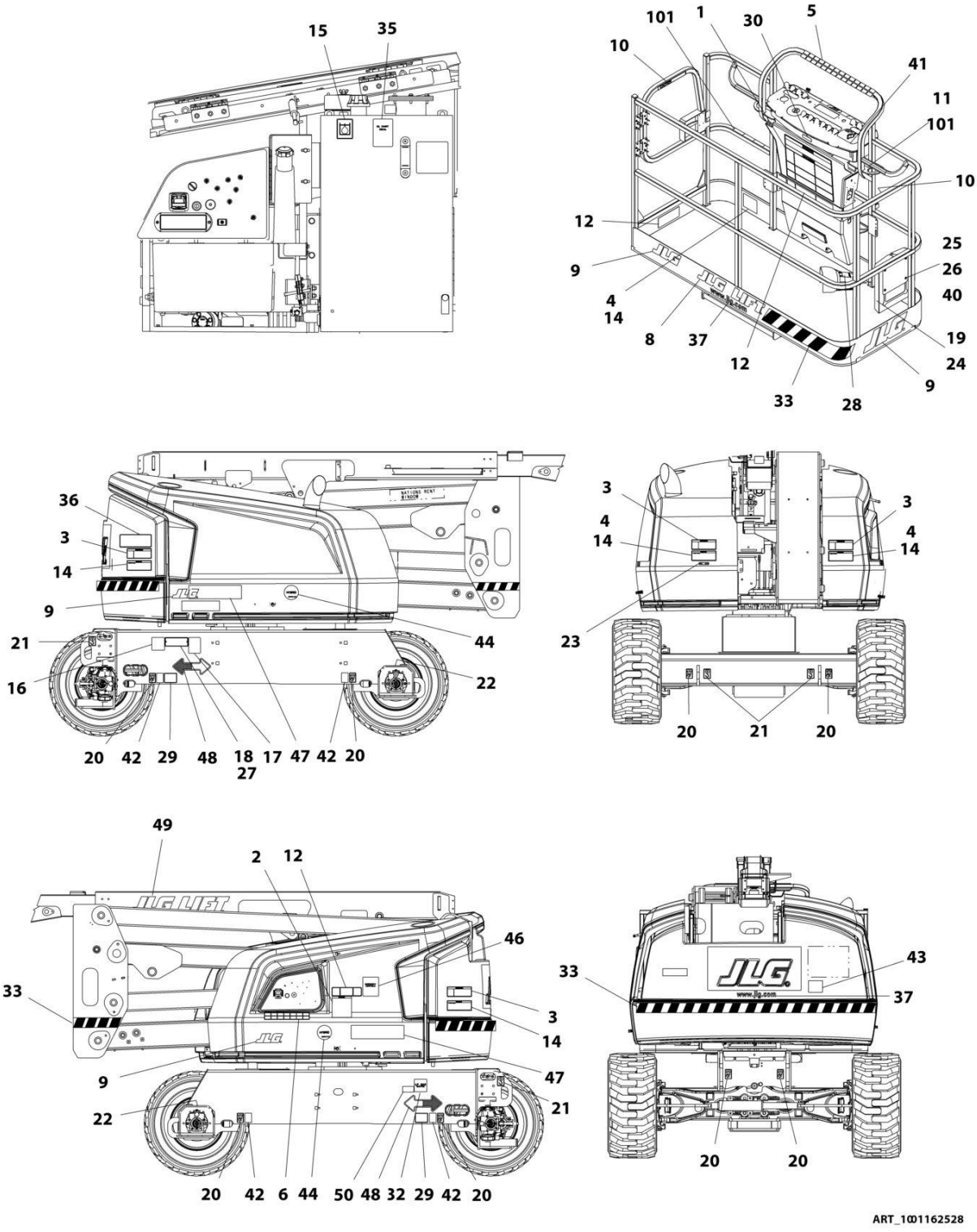

FIGURE 9-5. DECAL INSTALLATION - CE SPEC (ENGLISH)

ITEM	PART NUMBER	QTY	DESCRIPTION	REV
	1001169157	Ref	DECAL INSTALLATION - REFERENCE CHART **(SN 0300201991 through 0300222765, SN E300002833 through E300003608)**	N
	1001217904	Ref	DECAL INSTALLATION - REFERENCE CHART **(SN 0300222766 through 0300272317, SN 1300007279 through 1300007373, SN B300003516 through B300005760, SN E300003609 through E300007990, Except SN 0300272185 through 0300272190, Excluding B300005569 and E300007814)**	C
	1001162528	Ref	DECAL INSTALLATION - CE SPEC (ENGLISH)	H
1	1001162429	1	Decal - Tipping/Electrocution	
2	1705822	1	Decal - Electrocution/Safety Manual	
3	1705961	4	Decal - Danger Electrocution	
9	1702773	3	Decal - JLG **(SN 0300222766 through 0300272317, SN 1300007279 through 1300007373, SN B300003516 through B300005760, SN E300003609 through E300007990, Except SN 0300272185 through 0300272190, Excluding B300005569 and E300007814)**	
11	1704277	2	Decal - Attach Lanyard Here **(SN 0300201991 through 0300238976, SN 1300007279 through 1300007373, SN E300002833 through E300005030)**	
12	1001190913	1	Decal - Max Capacity	
14	1701518	6	Decal - Warning/Crushing	
15	1701504	1	Decal - Hydraulic Oil	
16	See Note	NSS	Decal - Bar Code (Note: Not Available for Purchase)	
19	1701509	1	Decal - Manual	
20	1702300	8	Decal - Tie Down /Lift	
21	1701500	4	Decal - Tie Down /Lift	
22	1703687	2	Decal - Arrow	
24	0860520	1	Box, Manual Storage	
25	4751400	4	Washer, 1/4	
26	3311405	4	Nut, Lock 1/4-20	
27	3820001	4	Rivet	
28	1705828	1	Decal - Footswitch	
35	1704412	1	Decal - Hydraulic Fluid	
36	1001172217	1	Decal - Lift Diagram (Without Turntable Lock)	
36	1001223118	1	Decal - Lift Diagram (With Turntable Lock)	
37	1704885	2	Decal - Website **(SN 0300201991 through 0300222766, SN E300002833 through E300003608)**	
40	0641406	4	Bolt, 1/4-20 x 3/4	
42	1701499	4	Decal - No Tie Down/Lift	
43	1705084	1	Decal - Sound Power Level **(SN 0300201991 through 0300211852, SN E300002833 through E300002973)**	
43	1001204510	1	Decal - Sound Power Level **(SN 0300211853 through 0300272317, SN 1300007279 through 1300007373, SN B300003516 through B300005760, SN E300002974 through E300007990, Except SN 0300272185 through 0300272190, Excluding B300005569 and E300007814)**	
46	1001189882	1	Decal - MSSO	
48	1701529	2	Decal - Arrow	
100	1001232026	1	Decal - Platform Lanyard Kit (Not Shown) **(SN 0300238977 through 0300272317, SN B300003516 through B300005760, SN E300005031 through E300007990, Except SN 0300272185 through 0300272190, Excluding B300005569 and E300007814)**	
101	1704277	3	Decal - Attach Lanyard Here	

SECTION 9 - DECAL

FIGURE 9-6. DECAL INSTALLATION - CSA SPEC (FRENCH/ENGLISH)

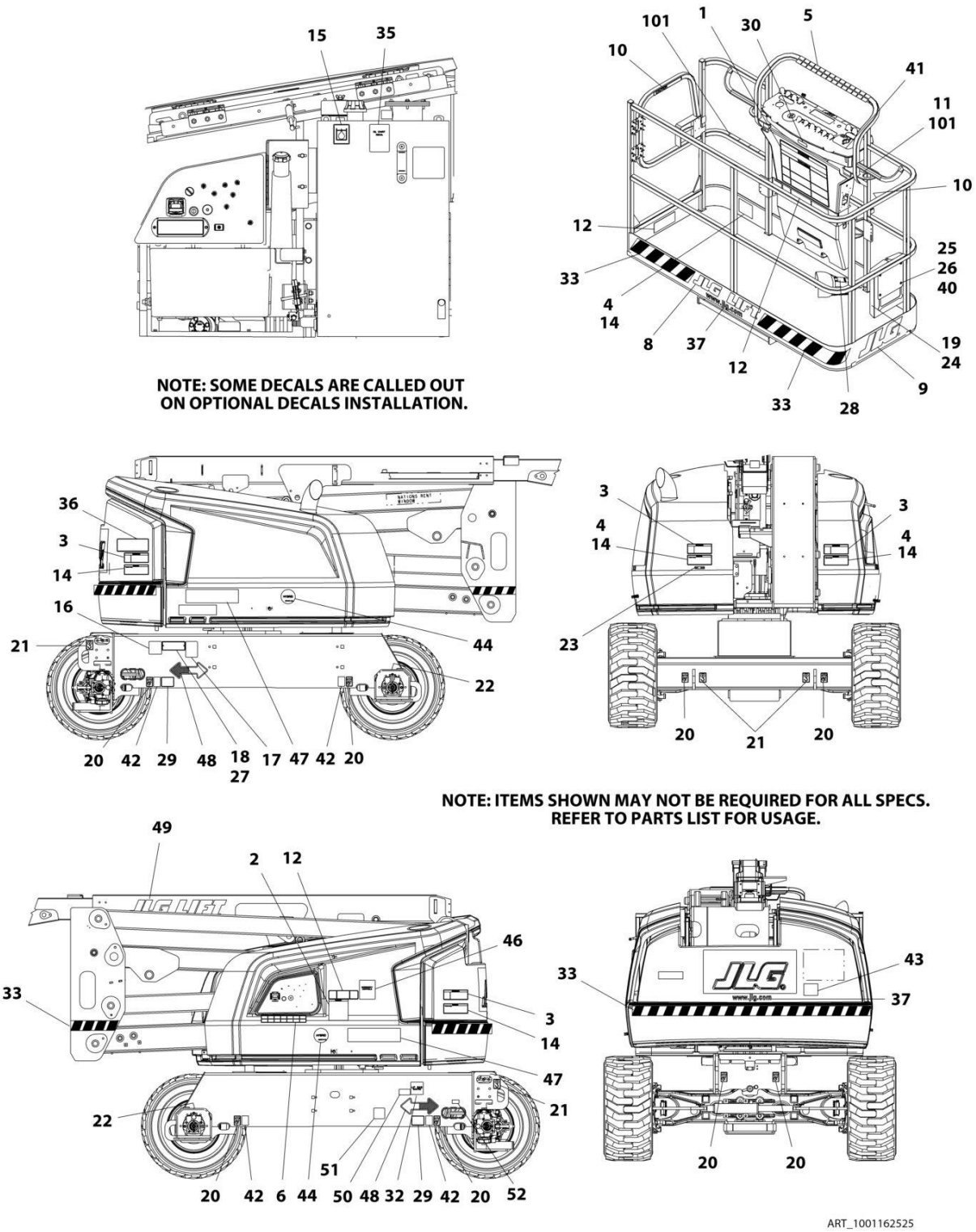

FIGURE 9-6. DECAL INSTALLATION - CSA SPEC (FRENCH/ENGLISH)

ITEM	PART NUMBER	QTY	DESCRIPTION	REV
	1001169157	Ref	DECAL INSTALLATION - REFERENCE CHART	P
	1001162525	Ref	DECAL INSTALLATION - CSA SPEC (FRENCH/ENGLISH)	F
1	1703924	1	Decal - Danger/Warning	
2	1705347	1	Decal - Warning Inspection	
3	1703936	4	Decal - Danger Electrocution	
4	1703948	4	Decal - Warning/Crushing	
5	1001173262	1	Decal - Legend	
6	1706941	1	Decal - Legend **(SN 0300201991 through 0300218691)**	
6	1001174313	1	Decal - Legend **(SN 0300218692 through 0300272317, Except SN 0300272185 through 0300272190)**	
10	1704000	2	Decal - No Hands	
11	1704277	2	Decal - Attach Lanyard **(SN 0300201991 through 0300238976)**	
12	1001162422	3	Decal - Max Capacity	
14	1703942	2	Decal - Warning/Crushing	
15	1701504	1	Decal - Hydraulic Oil	
16	See Note	NSS	Decal - Bar Code (Note: Not Available for Purchase)	
17	1001131269	1	Decal - Patent	
19	1701509	1	Decal - Manual	
20	1702300	8	Decal - Tie Down /Lift	
21	1701500	4	Decal - Tie Down /Lift	
22	1703687	2	Decal - Arrow	
23	3251243	1	Decal - 120V-60Hz	
24	0860520	1	Box, Manual Storage	
25	4751400	4	Washer, 1/4	
26	3311405	4	Nut, Lock 1/4-20	
27	3820001	4	Rivet	
28	1703984	1	Decal - Footswitch	
30	1705514	1	Decal - CSA	
35	1704412	1	Decal - Hydraulic Fluid	
36	1001172217	1	Decal - Lift Diagram (Without Turntable Lock)	
36	1001223118	1	Decal - Lift Diagram (With Turntable Lock)	
37	1704885	2	Decal - Website	
40	0641406	4	Bolt, 1/4-20 x 3/4	
41	1705429	1	Decal - Drive/Steer	
42	1701499	4	Decal - No Tie Down/Lift	
43	3251813	1	Decal - USA	
48	1701529	2	Decal - Arrow	
51	1001223971	1	Decal - Yearly Inspection **(SN 0300233865 through 0300272317, Except SN 0300272185 through 0300272190)**	
52	1001223453	1	Decal - Ices (Canada) **(SN 0300243662 through 0300272317, Except SN 0300272185 through 0300272190)**	
100	1001232026	1	Decal - Platform Lanyard Kit (Not Shown) **(SN 0300238977 through 0300272317, Except SN 0300272185 through 0300272190)**	
101	1704277	3	Decal - Attach Lanyard Here	

SECTION 9 - DECAL

FIGURE 9-7. DECAL INSTALLATION - WITH KUBOTA ENGINE (CSA SPEC) (FRENCH/ENGLISH)

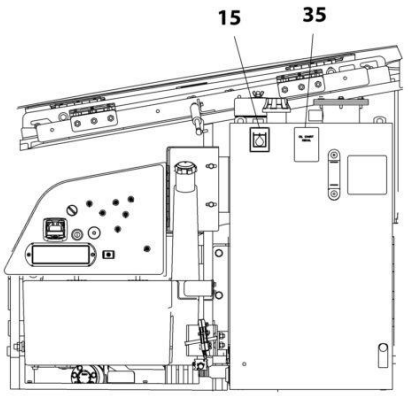

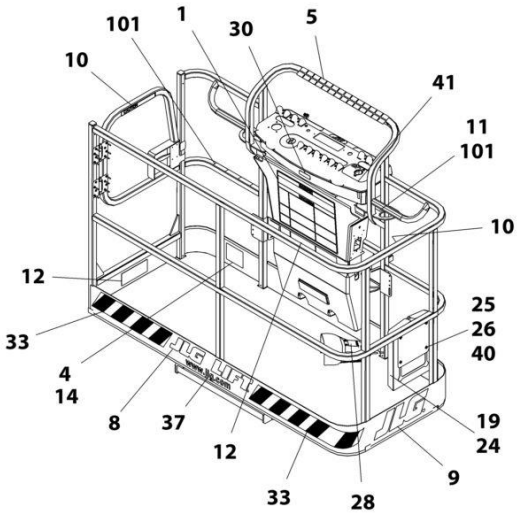

NOTE: SOME DECALS ARE CALLED OUT ON OPTIONAL DECALS INSTALLATION.

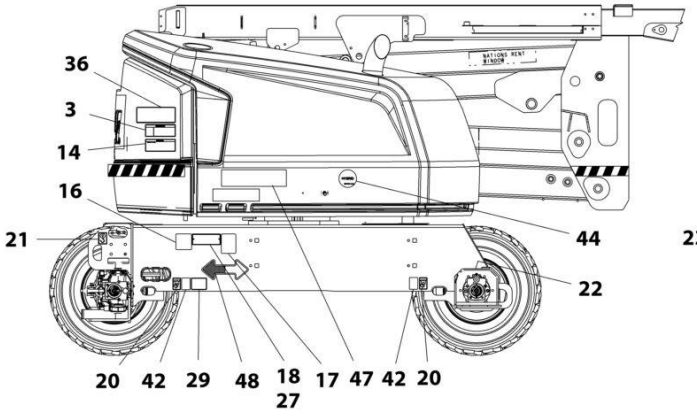

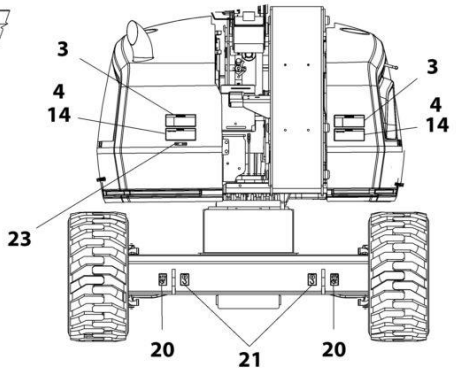

NOTE: ITEMS SHOWN MAY NOT BE REQUIRED FOR ALL SPECS. REFER TO PARTS LIST FOR USAGE.

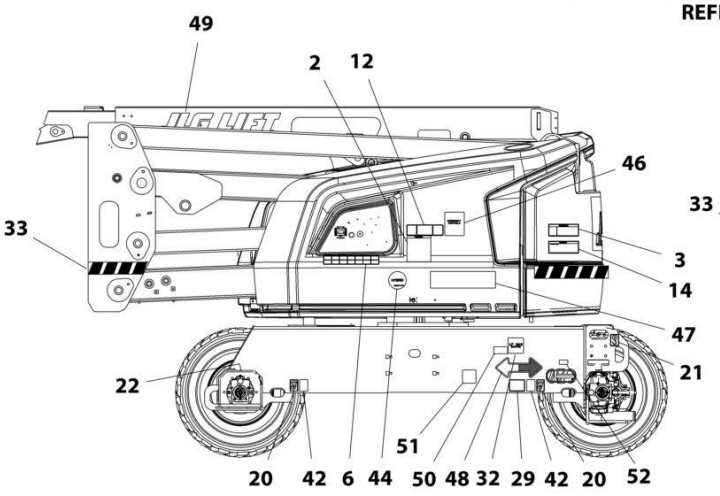

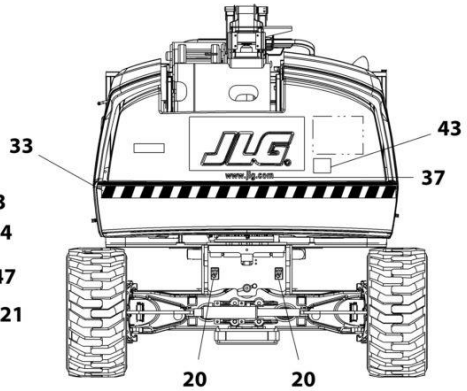

ART_1001218928

FIGURE 9-7. DECAL INSTALLATION - WITH KUBOTA ENGINE (CSA SPEC) (FRENCH/ENGLISH)

ITEM	PART NUMBER	QTY	DESCRIPTION	REV
	1001169157	Ref	DECAL INSTALLATION - REFERENCE CHART	P
	1001218928	Ref	DECAL INSTALLATION - WITH KUBOTA ENGINE (CSA SPEC) (FRENCH/ENGLISH)	D
1	1703924	1	Decal - Danger/Warning	
2	1705347	1	Decal - Warning Inspection	
3	1703936	4	Decal - Danger Electrocution	
4	1703948	4	Decal - Warning/Crushing	
5	1001173262	1	Decal - Legend	
6	1001216408	1	Decal - Legend	
10	1704000	2	Decal - No Hands	
11	1704277	2	Decal - Attach Lanyard **(SN 0300201991 through 0300238976)**	
12	1001162422	3	Decal - Max Capacity	
14	1703942	2	Decal - Warning/Crushing	
15	1701504	1	Decal - Hydraulic Oil	
16	See Note	NSS	Decal - Bar Code (Note: Not Available for Purchase)	
17	1001131269	1	Decal - Patent	
19	1701509	1	Decal - Manual	
20	1702300	8	Decal - Tie Down /Lift	
21	1701500	4	Decal - Tie Down /Lift	
22	1703687	2	Decal - Arrow	
23	3251243	1	Decal - 120V-60Hz	
24	0860520	1	Box, Manual Storage	
25	4751400	4	Washer, 1/4	
26	3311405	4	Nut, Lock 1/4-20	
27	3820001	4	Rivet	
28	1703984	1	Decal - Footswitch	
30	1705514	1	Decal - CSA	
35	1704412	1	Decal - Hydraulic Fluid	
36	1001172217	1	Decal - Lift Diagram (Without Turntable Lock)	
36	1001223118	1	Decal - Lift Diagram (With Turntable Lock)	
37	1704885	2	Decal - Website	
40	0641406	4	Bolt, 1/4-20 x 3/4	
41	1705429	1	Decal - Drive/Steer	
42	1701499	4	Decal - No Tie Down/Lift	
43	3251813	1	Decal - USA	
48	1701529	2	Decal - Arrow	
51	1001223971	1	Decal - Yearly Inspection **(SN 0300233865 through 0300272317, Except SN 0300272185 through 0300272190)**	
52	1001223453	1	Decal - Ices (Canada) **(SN 0300243662 through 0300272317, Except SN 0300272185 through 0300272190)**	
100	1001232026	1	Decal - Platform Lanyard Kit (Not Shown) **(SN 0300238977 through 0300272317, Except SN 0300272185 through 0300272190)**	
101	1704277	3	Decal - Attach Lanyard Here	

FIGURE 9-8. DECAL INSTALLATION - CHINESE SPEC (CHINESE/ENGLISH)

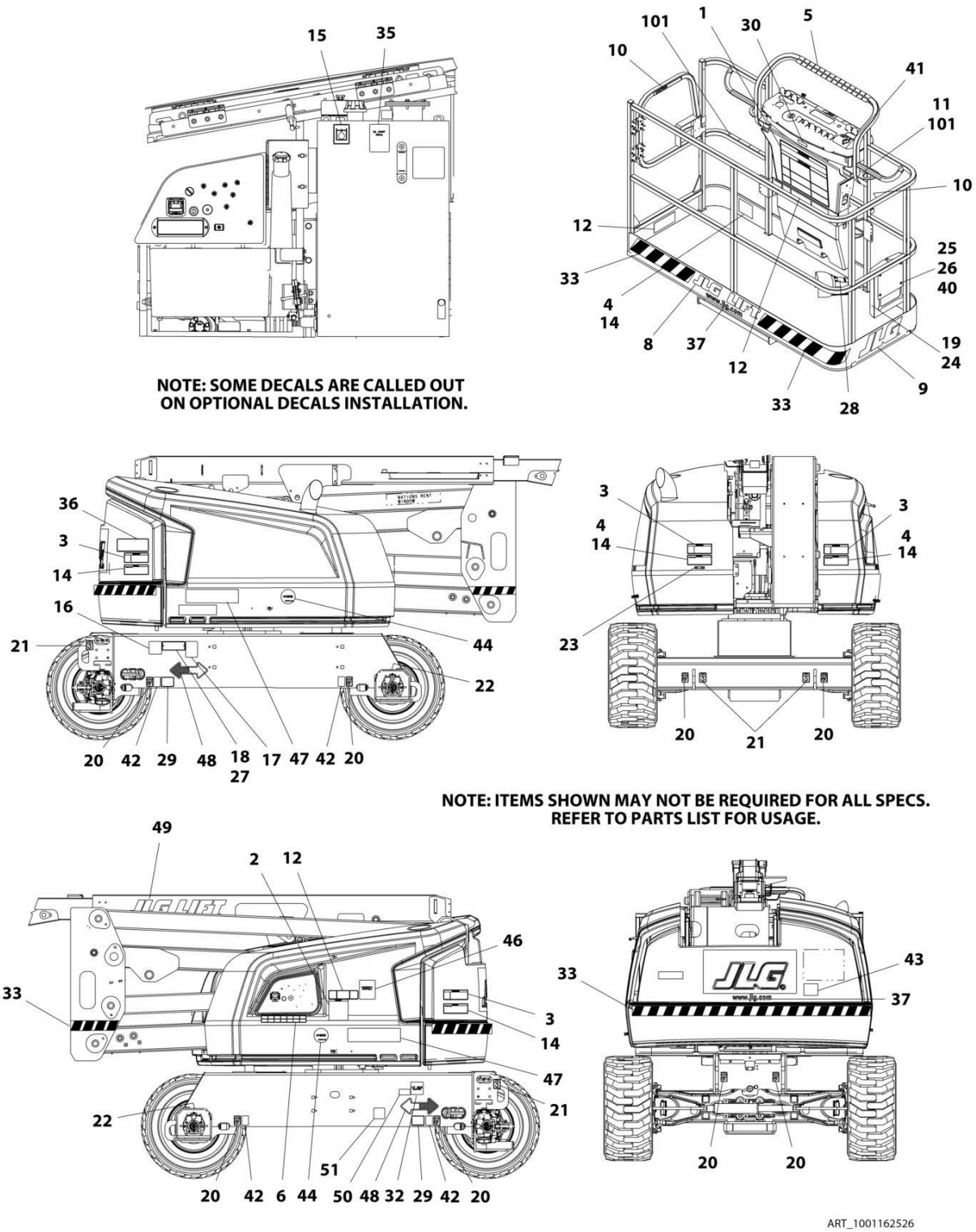

FIGURE 9-8. DECAL INSTALLATION - CHINESE SPEC (CHINESE/ENGLISH)

ITEM	PART NUMBER	QTY	DESCRIPTION	REV
	1001169157	Ref	DECAL INSTALLATION - REFERENCE CHART	P
	1001162526	Ref	DECAL INSTALLATION - CHINESE SPEC (CHINESE/ENGLISH)	E
1	1703925	1	Decal - Danger/Warning	
2	1001116849	1	Decal - Warning Inspection	
3	1703937	4	Decal - Danger Electrocution	
4	1703949	4	Decal - Warning/Crushing	
10	1705968	2	Decal - No Hands	
11	1704277	2	Decal - Attach Lanyard **(SN 0300201991 through 0300238976)**	
12	1001162424	3	Decal - Max Capacity	
14	1703943	2	Chinese Spec Decals (Chinese/English)	
15	1701504	1	Decal - Hydraulic Oil	
16	See Note	NSS	Decal - Bar Code (Note: Not Available for Purchase)	
19	1701509	1	Decal - Manual	
20	1702300	8	Decal - Tie Down /Lift	
21	1701500	4	Decal - Tie Down /Lift	
22	1703687	2	Decal - Arrow	
24	0860520	1	Box, Manual Storage	
25	4751400	4	Washer, 1/4	
26	3311405	4	Nut, Lock 1/4-20	
27	3820001	4	Rivet	
28	1703982	1	Decal - Footswitch	
35	1704412	1	Decal - Hydraulic Fluid	
36	1001172217	1	Decal - Lift Diagram (Without Turntable Lock)	
36	1001223118	1	Decal - Lift Diagram (With Turntable Lock)	
37	1704885	2	Decal - Website	
40	0641406	4	Bolt, 1/4-20 x 3/4	
41	1705430	1	Decal - Drive/Steer	
42	1701499	4	Decal - No Tie Down/Lift	
48	1701529	2	Decal - Arrow	
51	1001224050	1	Decal - Yearly Inspection **(SN 0300233865 through 0300272317, SN B300003516 through B300005760, Except SN 0300272185 through 0300272190, Excluding B300005569)**	
100	1001232026	1	Decal - Platform Lanyard Kit (Not Shown) **(SN 0300238977 through 0300272317, SN B300003516 through B300005760, Except SN 0300272185 through 0300272190, Excluding B300005569)**	
101	1704277	3	Decal - Attach Lanyard Here	

SECTION 9 - DECAL

FIGURE 9-9. DECAL INSTALLATION - JAPANESE SPEC (JAPANESE/ENGLISH)

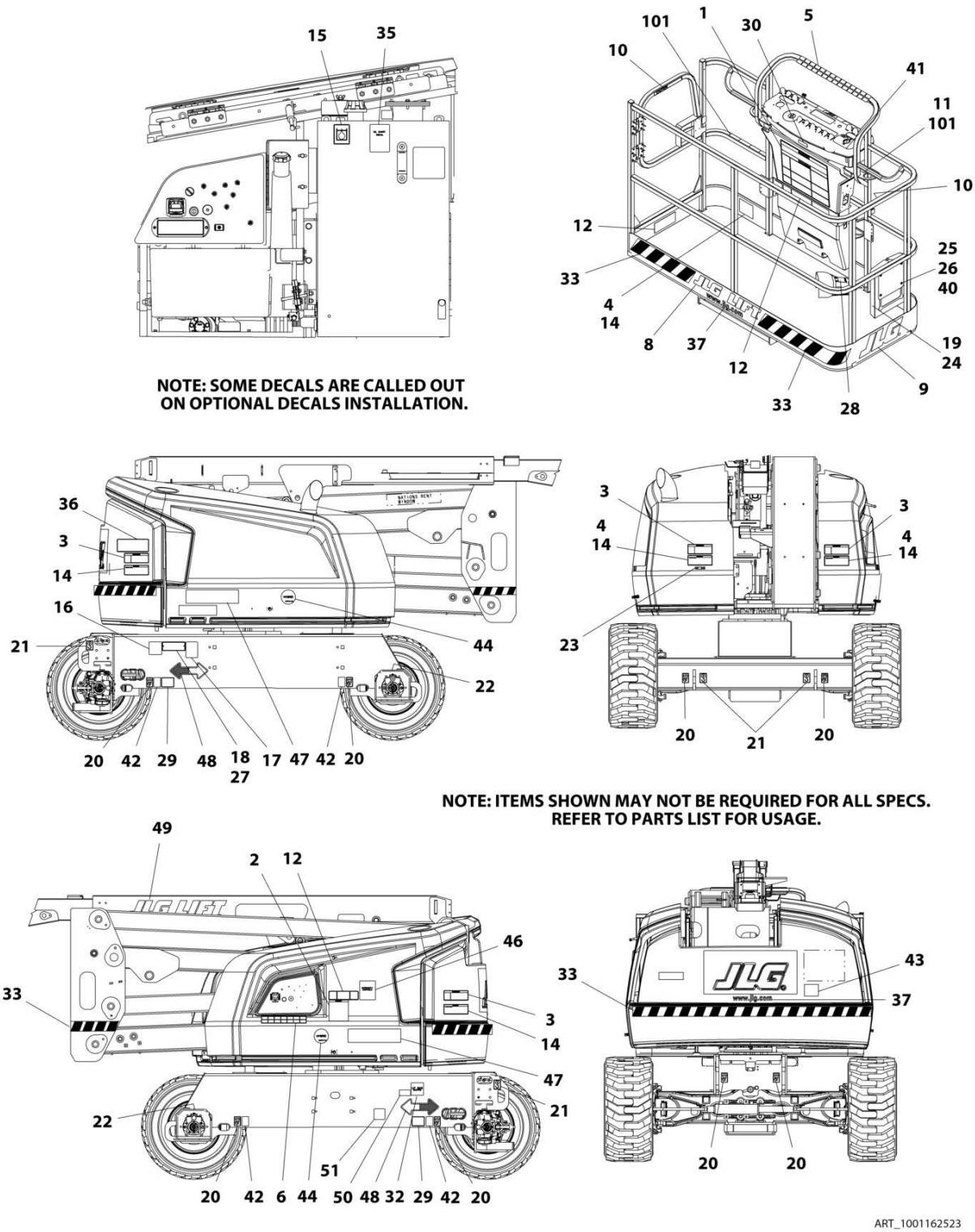

FIGURE 9-9. DECAL INSTALLATION - JAPANESE SPEC (JAPANESE/ENGLISH)

ITEM	PART NUMBER	QTY	DESCRIPTION	REV
	1001169157	Ref	DECAL INSTALLATION - REFERENCE CHART	P
	1001162523	Ref	DECAL INSTALLATION - JAPANESE SPEC (JAPANESE/ENGLISH)	D
1	1703926	1	Decal - Danger/Warning	
2	1705344	1	Decal - Warning Inspection	
3	1703938	4	Decal - Danger Electrocution	
4	1703950	4	Decal - Warning/Crushing	
11	1704277	2	Decal - Attach Lanyard **(SN 0300201991 through 0300238976)**	
12	1001162418	3	Decal - Max Capacity	
14	1703944	2	Decal - Warning/Crushing	
15	1701504	1	Decal - Hydraulic Oil	
16	See Note	NSS	Decal - Bar Code (Note: Not Available for Purchase)	
19	1701509	1	Decal - Manual	
20	1702300	8	Decal - Tie Down /Lift	
21	1701500	4	Decal - Tie Down /Lift	
22	1703687	2	Decal - Arrow	
24	0860520	1	Box, Manual Storage	
25	4751400	4	Washer, 1/4	
26	3311405	4	Nut, Lock 1/4-20	
27	3820001	4	Rivet	
28	1703980	1	Decal - Footswitch	
35	1704412	1	Decal - Hydraulic Fluid	
36	1001172217	1	Decal - Lift Diagram (Without Turntable Lock)	
36	1001223118	1	Decal - Lift Diagram (With Turntable Lock)	
37	1704885	2	Decal - Website	
40	0641406	4	Bolt, 1/4-20 x 3/4	
41	1705426	1	Japanese Spec Decals (Japanese/English)	
42	1701499	4	Decal - No Tie Down/Lift	
48	1701529	2	Decal - Arrow	
51	1001224053	1	Decal - Yearly Inspection **(SN 0300233865 through 0300272317, SN B300003516 through B300005760, Except SN 0300272185 through 0300272190, Excluding B300005569)**	
100	1001232026	1	Decal - Platform Lanyard Kit (Not Shown) **(SN 0300238977 through 0300272317, SN B300003516 through B300005760, Except SN 0300272185 through 0300272190, Excluding B300005569)**	
101	1704277	3	Decal - Attach Lanyard Here	

FIGURE 9-10. DECAL INSTALLATION - KOREAN SPEC (KOREAN/ENGLISH)

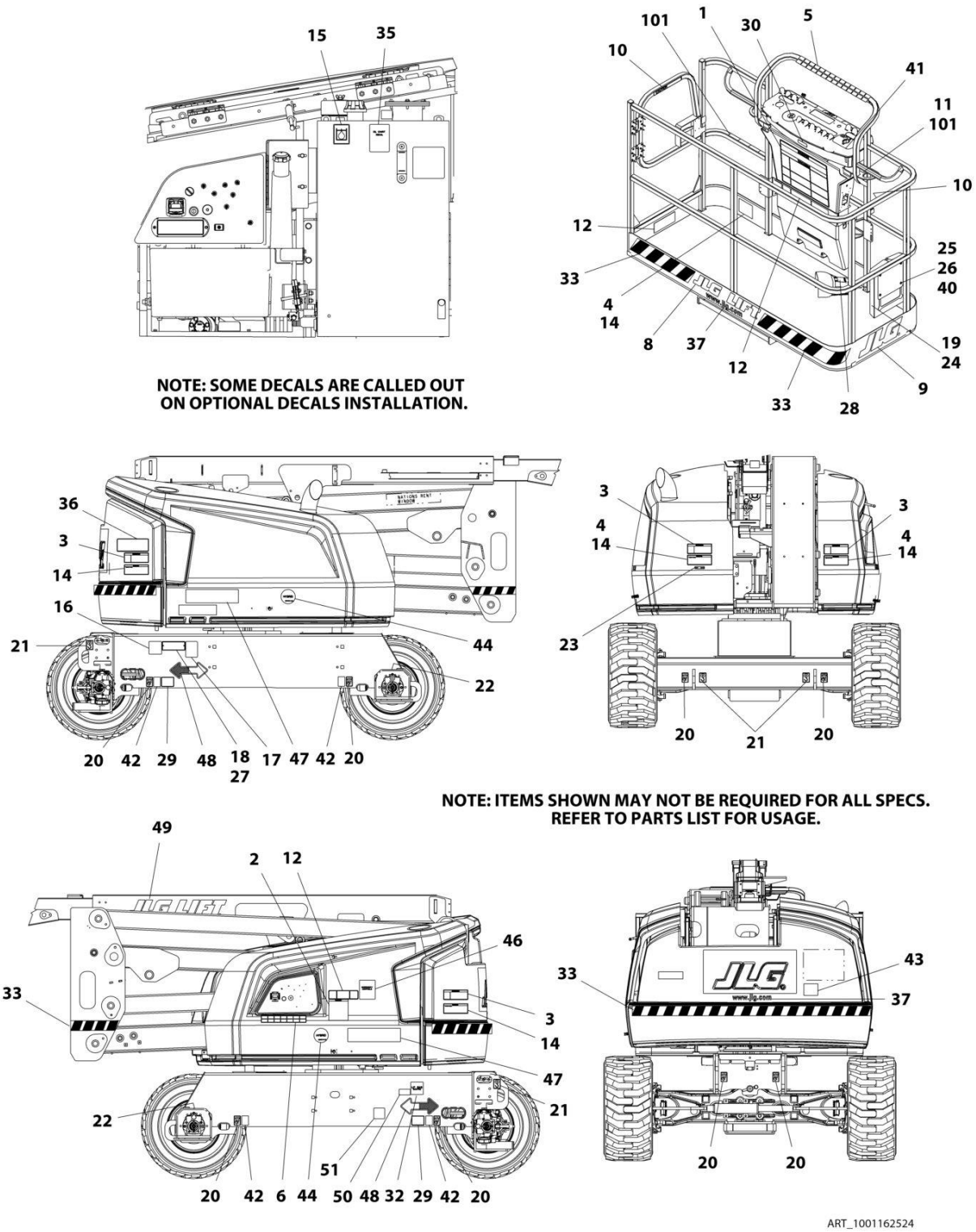

FIGURE 9-10. DECAL INSTALLATION - KOREAN SPEC (KOREAN/ENGLISH)

ITEM	PART NUMBER	QTY	DESCRIPTION	REV
	1001169157	Ref	DECAL INSTALLATION - REFERENCE CHART	P
	1001162524	Ref	DECAL INSTALLATION - KOREAN SPEC (KOREAN/ENGLISH)	D
1	1703927	1	Decal - Danger/Warning	
2	1705345	1	Decal - Warning Inspection	
3	1703939	4	Decal - Danger Electrocution	
4	1703951	4	Decal - Warning/Crushing	
10	1705969	2	Decal - No Hands	
11	1704277	2	Decal - Attach Lanyard **(SN 0300201991 through 0300238976)**	
12	1001162420	3	Decal - Max Capacity	
14	1703945	2	Decal - Warning/Crushing	
15	1701504	1	Decal - Hydraulic Oil	
16	See Note	NSS	Decal - Bar Code (Note: Not Available for Purchase)	
19	1701509	1	Decal - Manual	
20	1702300	8	Decal - Tie Down /Lift	
21	1701500	4	Decal - Tie Down /Lift	
22	1703687	2	Decal - Arrow	
24	0860520	1	Box, Manual Storage	
25	4751400	4	Washer, 1/4	
26	3311405	4	Nut, Lock 1/4-20	
27	3820001	4	Rivet	
28	1703981	1	Decal - Footswitch	
35	1704412	1	Decal - Hydraulic Fluid	
36	1001172217	1	Decal - Lift Diagram (Without Turntable Lock)	
36	1001223118	1	Decal - Lift Diagram (With Turntable Lock)	
37	1704885	2	Decal - Website	
40	0641406	4	Bolt, 1/4-20 x 3/4	
41	1705427	1	Decal - Drive/Steer	
42	1701499	4	Decal - No Tie Down/Lift	
48	1701529	2	Decal - Arrow	
51	1001224048	1	Decal - Yearly Inspection **(SN 0300233865 through 0300272317, Except SN 0300272185 through 0300272190)**	
100	1001232026	1	Decal - Platform Lanyard Kit (Not Shown) **(SN 0300238977 through 0300272317, Except SN 0300272185 through 0300272190)**	
101	1704277	3	Decal - Attach Lanyard Here	

SECTION 9 - DECAL

FIGURE 9-11. DECAL INSTALLATION - LATIN AMERICA SPEC (SPANISH/ENGLISH)

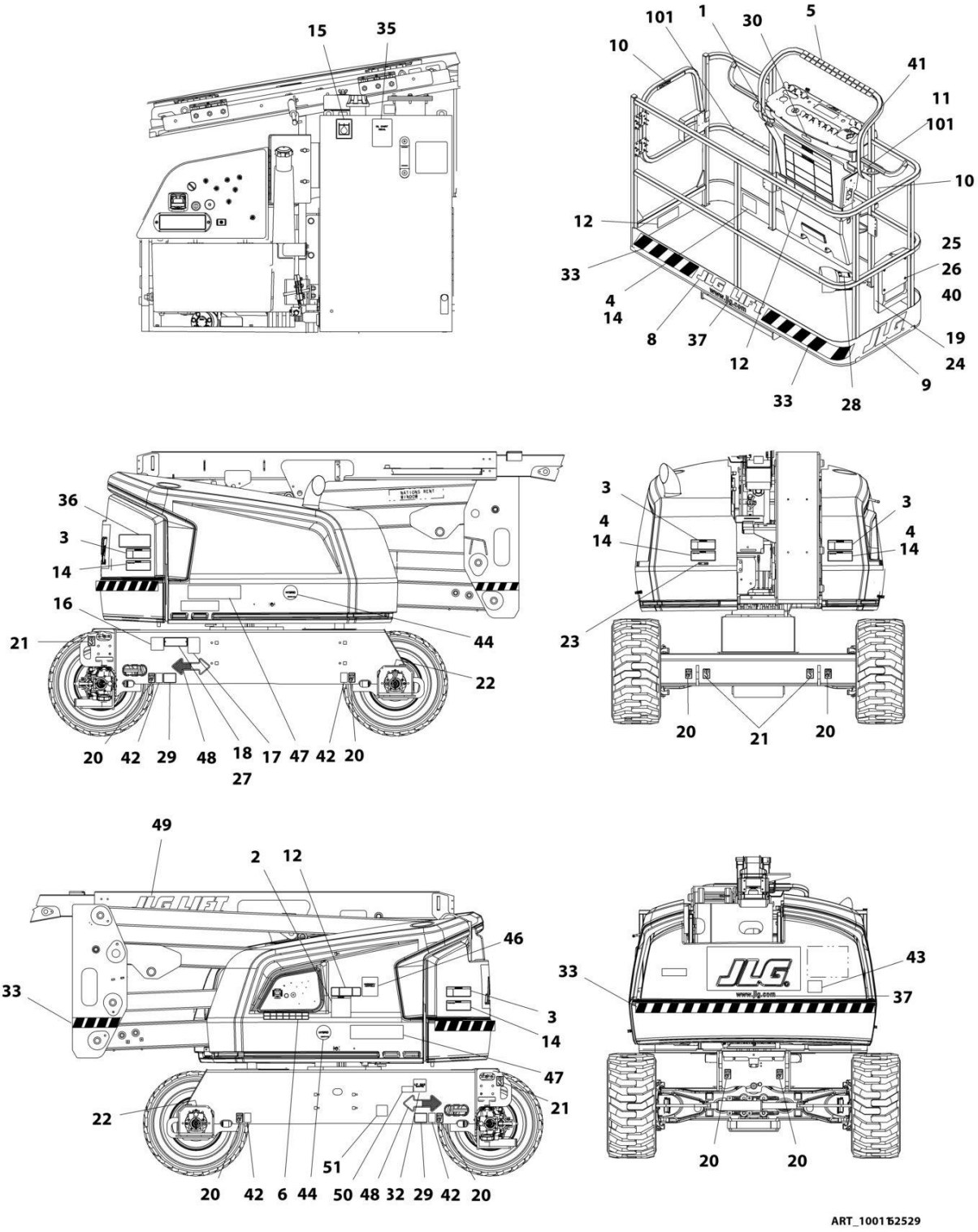

FIGURE 9-11. DECAL INSTALLATION - LATIN AMERICA SPEC (SPANISH/ENGLISH)

ITEM	PART NUMBER	QTY	DESCRIPTION	REV
	1001169157	Ref	DECAL INSTALLATION - REFERENCE CHART	P
	1001162529	Ref	DECAL INSTALLATION - LATIN AMERICA SPEC (SPANISH/ENGLISH)	G
1	1703923	1	Decal - Danger/Warning	
2	1705917	1	Decal - Warning Inspection	
3	1703935	4	Decal - Danger Electrocution	
4	1703947	4	Decal - Warning/Crushing	
5	1001173262	1	Decal - Legend	
6	1706941	1	Decal - Legend **(SN 0300201991 through 0300218672)**	
6	1001174313	1	Decal - Legend **(SN 0300218673 through 0300272317, Except SN 0300272185 through 0300272190)**	
10	1704001	2	Decal - No Hands	
11	1704277	2	Decal - Attach Lanyard **(SN 0300201991 through 0300238976)**	
12	1001162415	3	Decal - Max Capacity	
14	1703941	2	Decal - Warning/Crushing	
15	1701504	1	Decal - Hydraulic Oil	
16	See Note	NSS	Decal - Bar Code (Note: Not Available for Purchase)	
19	1701509	1	Decal - Manual	
20	1702300	8	Decal - Tie Down /Lift	
21	1701500	4	Decal - Tie Down /Lift	
22	1703687	2	Decal - Arrow	
23	3251243	1	Decal - 120V-60Hz	
24	0860520	1	Box, Manual Storage	
25	4751400	4	Washer, 1/4	
26	3311405	4	Nut, Lock 1/4-20	
27	3820001	8	Rivet	
28	1703983	1	Decal - Footswitch	
35	1704412	1	Decal - Hydraulic Fluid	
36	1001172217	1	Decal - Lift Diagram (Without Turntable Lock)	
36	1001223118	1	Decal - Lift Diagram (With Turntable Lock)	
37	1704885	2	Decal - Website	
40	0641406	4	Bolt, 1/4-20 x 3/4	
41	1705910	1	Decal - Drive/Steer	
42	1701499	4	Decal - No Tie Down/Lift	
43	3251813	1	Decal - USA	
45	1704007	1	Decal - Inspection (Not Shown) **(SN 0300201991 through 0300218673)**	
48	1701529	2	Decal - Arrow	
51	1001224049	1	Decal - Yearly Inspection **(SN 0300233865 through 0300272317, Except SN 0300272185 through 0300272190)**	
100	1001232026	1	Decal - Platform Lanyard Kit (Not Shown) **(SN 0300238977 through 0300272317, Except SN 0300272185 through 0300272190)**	
101	1704277	3	Decal - Attach Lanyard Here	

FIGURE 9-12. DECAL INSTALLATION - OPTIONS

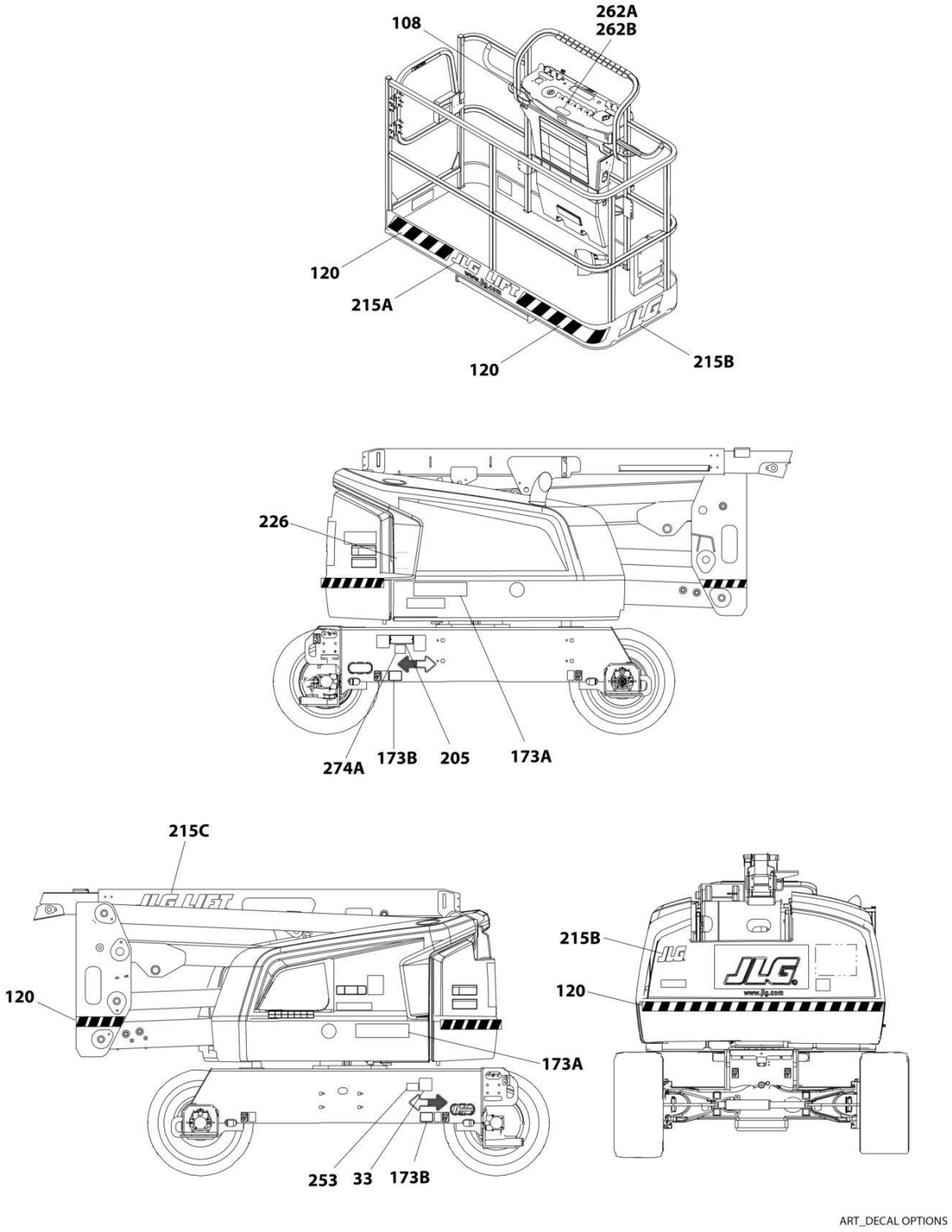

FIGURE 9-12. DECAL INSTALLATION - OPTIONS

ITEM	PART NUMBER	QTY	DESCRIPTION	REV
	1001169157	Ref	DECAL INSTALLATION - REFERENCE CHART	P
	1001166193	Ref	DECAL INSTALLATION - OPTIONS	
33	1700818	1	Decal - LP (ANSI and Latin America Specs)	
33	1704271	1	Decal - LP (CSA Specs)	
108	1001231801	1	Decal - Warning (Prop 65) (ANSI & CSA Specs)	
108	1001236338	NLA	Decal - Warning (Prop 65 Gas) (ANSI & CSA Specs) (Use p/n 1001231801)	
120	1001188883	Ref	Warning Stripes Installation	A
120	4420051	21.5 ft /6.55m	Tape, Safety	
173	1001215850	Ref	Model Decal Installation - 450A	A
173	1001166084	Ref	Model Decal Installation - 450AJ	C
173A	1001195746	2	Decal - 450A	
173A	1001172801	2	Decal - 450AJ	
173B	1703774	2	Decal - Max Tire Load (450A)	
173B	1704752	2	Decal - Max Tire Load (450AJ)	
205	See Note	1	Nameplate - Manufacturers Serial Number (Note: Not Available for Purchase)	
215	1001166085	Ref	JLG Logo Installation (All Specs) **(SN 0300201991 through 0300272317, SN B300003516 through B300005760, SN E300002833 through E300006670, Except SN 0300272185 through 0300272190, Excluding B300005569)**	C
215A	1702774	1	Decal - JLG Lift (3in)	
215B	1702773	1	Decal - JLG	
215C	1702860	1	Decal - JLG Lift (5in)	
215	1001243697	Ref	JLG Logo Installation (CE Specs) **(SN E300006671 through E300007990, Excluding E300007814)**	A
215B	1702773	1	Decal - JLG	
215	1001243698	Ref	JLG Logo Installation (Australian Specs) **(SN E300006671 through E300007990, Excluding E300007814)**	A
215A	1702774	1	Decal - JLG Lift (3in)	
215B	1702773	1	Decal - JLG	
215C	1702860	1	Decal - JLG Lift (5in)	
226	1704972	1	Decal - Warning Explosion/Fire (ANSI Spec)	
226	1706059	1	Decal - Warning Explosion/Fire (Brazil Spec)	
226	1706098	1	Decal - Warning Explosion/Fire (CE Spec)	
226	1706060	1	Decal - Warning Explosion/Fire (Chinese Spec)	
226	1706064	1	Decal - Warning Explosion/Fire (CSA Spec)	
226	1706062	1	Decal - Warning Explosion/Fire (Japanese Spec)	
226	1706061	1	Decal - Warning Explosion/Fire (Korean Spec)	
226	1706063	1	Decal - Warning Explosion/Fire (Latin America Spec)	
253	1001143852	1	Decal - Emissions Compliance (Deutz TD 2.9L4 Engines) (Stage V)	
262A	1001141300	1	Decal - SkyGuard Override	
262B	1001141302	1	Decal - SkyGuard/Soft Touch Override	
274	1001214029	1	Decal - EAC Installation (CIS and Russia Specs)	
274A	1001173703	1	Decal - EAC	

FIGURE 9-13. TOW BAR DECAL INSTALLATION - ENGLISH LANGUAGE (ANSI, ANSI EXPORT, CE, CHINA AND JAPANESE SPECS)

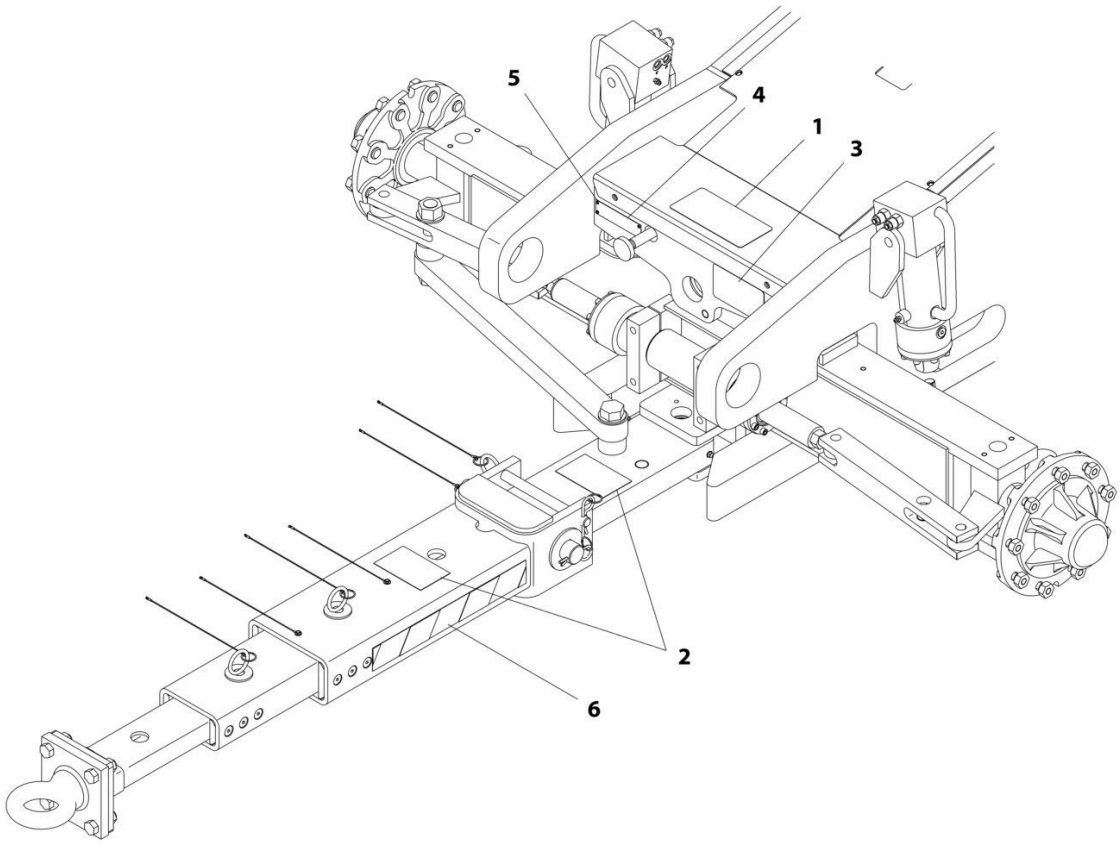

FIGURE 9-13. TOW BAR DECAL INSTALLATION - ENGLISH LANGUAGE (ANSI, ANSI EXPORT, CE, CHINA AND JAPANESE SPECS)

ITEM	PART NUMBER	QTY	DESCRIPTION	REV
	0270115	Ref	TOW BAR DECAL INSTALLATION - ENGLISH LANGUAGE (ANSI, ANSI EXPORT, CE, CHINA AND JAPANESE SPECS)	A
1	1704482	1	Decal - Tow Instructions	
2	1704578	3	Decal - Crushing	
3	1703450	1	Decal - Warning	
4	3250872	1	Nameplate - Steer/Tow Select Valve	
5	3820001	4	Rivet	
6	4420051	43 in /109.2cm	Tape, Safety	

FIGURE 9-14. TOW BAR DECAL INSTALLATION - ENGLISH/SPANISH LANGUAGE (ANSI EXPORT, CE AND CHINA SPECS)

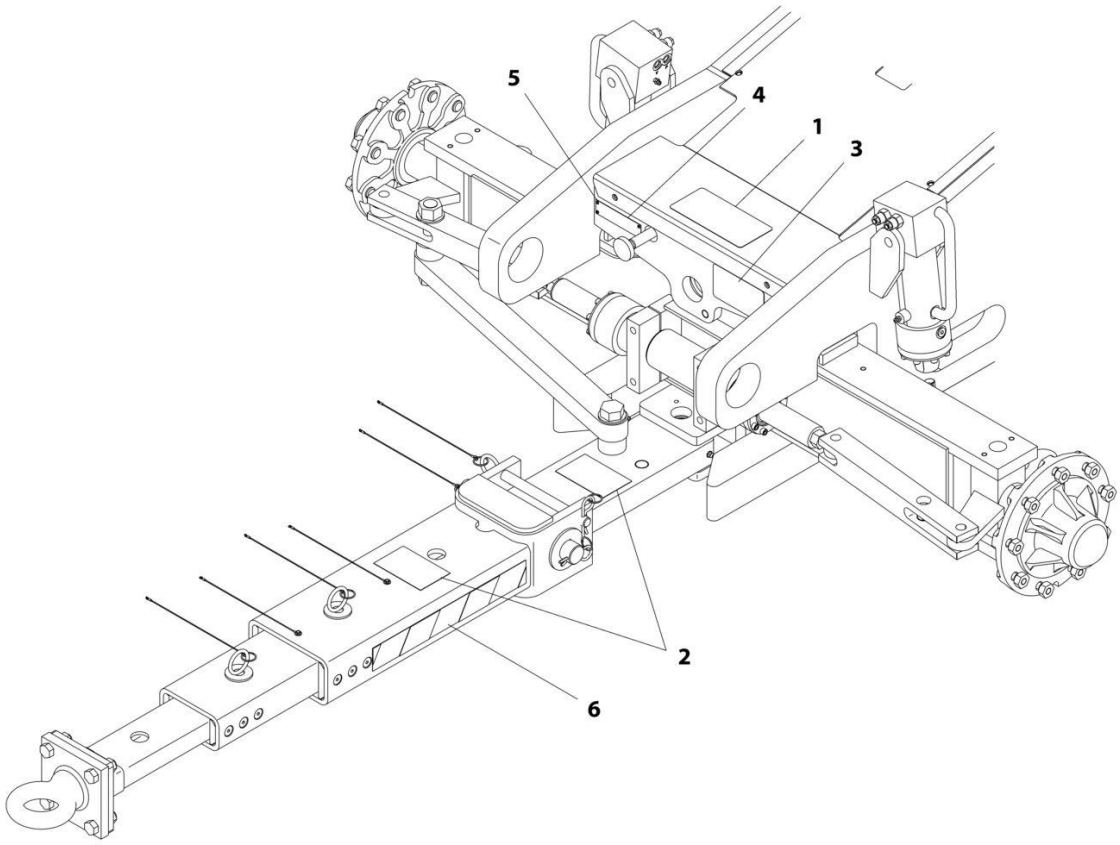

ART_0270119

FIGURE 9-14. TOW BAR DECAL INSTALLATION - ENGLISH/SPANISH LANGUAGE (ANSI EXPORT, CE AND CHINA SPECS)

ITEM	PART NUMBER	QTY	DESCRIPTION	REV
	0270119	Ref	TOW BAR DECAL INSTALLATION - ENGLISH/SPANISH LANGUAGE (ANSI EXPORT AND CE SPECS)	A
	0270119	1	TOW BAR DECAL INSTALLATION - ENGLISH/SPANISH LANGUAGE (CHINA SPECS) **(SN 0300201991 through 0300228360)**	
1	1704457	1	Decal - Tow Instructions	
2	1704577	3	Decal - Crushing	
3	1704576	1	Decal - Warning	
4	3252693	1	Nameplate - Steer/Tow Select Valve	
5	3820001	4	Rivet	
6	4420051	43 in /109.2cm	Tape, Safety	

FIGURE 9-15. TOW BAR DECAL INSTALLATION - SPANISH LANGUAGE (ANSI EXPORT AND CE SPECS)

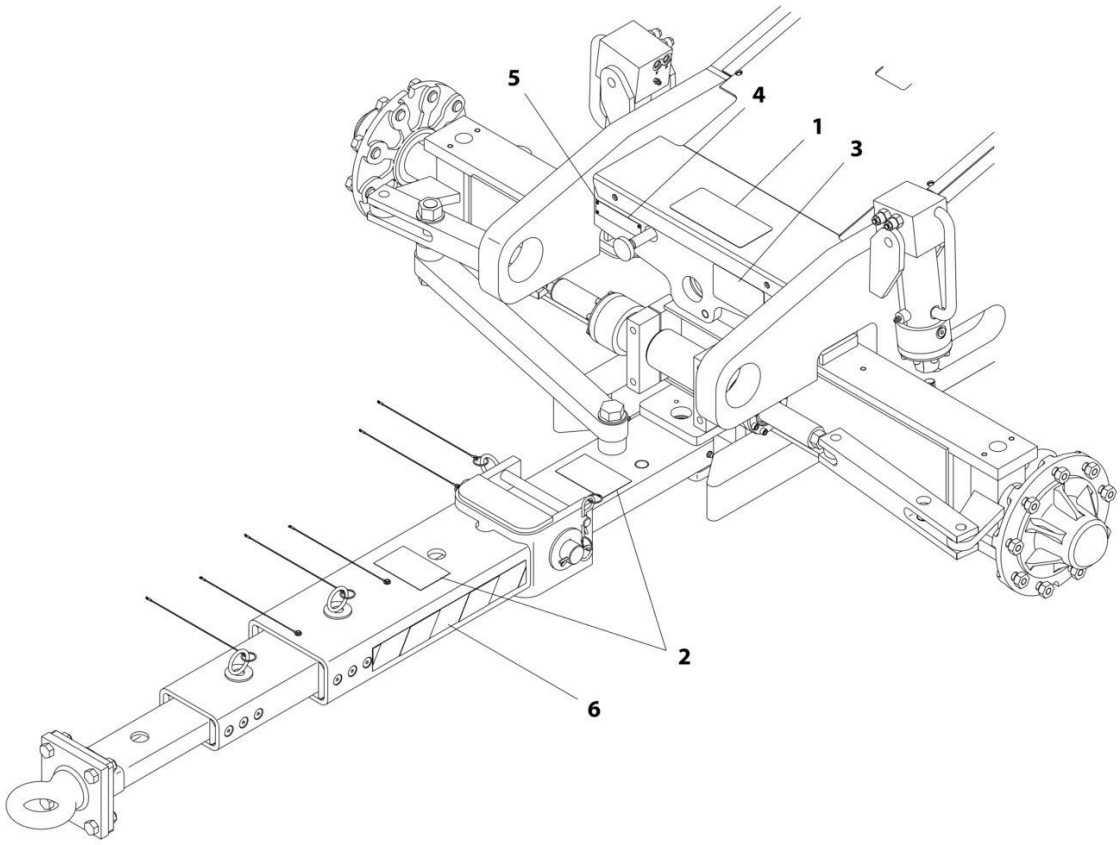

FIGURE 9-15. TOW BAR DECAL INSTALLATION - SPANISH LANGUAGE (ANSI EXPORT AND CE SPECS)

ITEM	PART NUMBER	QTY	DESCRIPTION	REV
	0270116	Ref	TOW BAR DECAL INSTALLATION - SPANISH LANGUAGE (ANSI EXPORT AND CE SPECS)	A
1	1704455	1	Decal - Tow Instructions	
2	1701518	3	Decal - Crushing	
3	1704456	1	Decal - Warning	
4	3252692	1	Nameplate - Steer/Tow Select Valve	
5	3820001	4	Rivet	
6	4420051	43 in /109.2cm	Tape, Safety	

SECTION 10 - RECOMMENDED SERVICE PARTS STOCK

SECTION 10 - RECOMMENDED SERVICE PARTS STOCK

FIGURE 10-1. RECOMMENDED SERVICE PARTS STOCK

ITEM	PART NUMBER	QTY	DESCRIPTION	REV
		Ref	Note: The following list will service one machine (built to current production per date on the front cover) with emergency repair parts which can be installed in the field. Parts from the list should be replaced when inventory is depleted to keep service parts stock supplied. For further information, contact your JLG dealer or the JLG Industries Parts Department.	
		Ref	STANDARD PARTS	
	7024885	1	Coil	
	70002386	1	Coil	
	70003788	1	Coil	
	70004897	1	Coil	
	70004871	1	Coil	
	7027628	1	Coil	
	1001212415	1	Controller Assembly (Drive and Steer)	
	1001129555	1	Controller Assembly (Lift and Swing)	
	70010383	1	Element, Filter Charge Pump (Includes O-Ring)	
	70002838	1	Fill Cap Assembly (Includes Cap, Chain and Fill Basket)	
	70003614	1	Filter Kit (Includes Hydraulic Element, Breather Element and Gasket)	
	3740067	1	Relay	
	3740140	1	Relay	
	3740086	1	Relay	
	1001095704	1	Relay	
	2860030	1	Key, Replacement	
	4360328	1	Switch, Toggle	
	4360387	1	Switch, Push Button	
	4360475	1	Switch, Emergency Stop	
	4360476	1	Switch, Contact Block	
	4360407	1	Switch, Potentiometer	
	1001155045	1	Switch, Toggle	
	1001159256	1	Switch, Toggle	
	1001161709	1	Switch, Toggle	
		Ref	VARIABLE PARTS	
	1001181045	1	Breaker, 30mA/16Amp (CE Spec with 2 Breaker Box)	
	70003783	12	Element, Air Cleaner (Deutz 2.9L4 and Deutz D2011 Engines)	
	70004020	12	Element, Air Cleaner (GM Engines)	
	7016331	12	Filter, Oil (Deutz Engines)	
	7027965	12	Filter, Oil (GM Engines)	
	70025153	12	Filter, Fuel (Deutz 2.9L4 Engines)	
	70025161	12	Filter, Fuel (Deutz 2.9L4 Engines)	
	7020023	12	Filter, Fuel (Deutz D2011 Engines)	
	70003463	12	Filter, Fuel - RME Resistant (Deutz D2011 Engines)	
	7027972	12	Filter, Fuel (GM Engines)	
	8229242	1	Fuse - 5Amp	
	80983191	1	Fuse - 10Amp	
	8229244	1	Fuse - 15Amp	
	2940074	1	Latch (Machines with Gate)	
	1001142683	1	Module, Beacon Light (With SkyGuard)	
	7027795	1	Module, ECU (Deutz 2011 Engines) (Stage V)	
	70025210	1	Module, ECU (Deutz 2.9L4 Engines)	

ITEM	PART NUMBER	QTY	DESCRIPTION	REV
	70002895	1	Module, ECU (GM Engines)	
	1001170094	1	Module, Ground Control	
	1001118412	1	Module, Platform Control	
	1600387	1	Module, LSS Control	
	1001138228	1	Module, Power Relay	
	1001119176	1	Switch, Limit (Drive Orientation)	
	1001161710	1	Switch, Toggle (Dual Fuel Machines - GM Engines)	
	4360057	1	Switch, Limit (Soft Touch Option)	
	4360387	1	Switch, Toggle (Soft Touch Option)	
	1001137673	1	Switch, SkyGuard Assembly (CE Specs Machines)	

SECTION 11 - SPECIAL OPTIONS

SECTION 11 - SPECIAL OPTIONS

FIGURE 11-1. SPECIAL OPTIONS

ITEM	PART NUMBER	QTY	DESCRIPTION	REV
	Note	Ref	Note: This list is to accommodate machines ordered with special equipment. Options may not be applicable to all models. For more specific parts information contact JLG Parts Department.	
		Ref	MISCELLANEOUS SPECIAL OPTIONS	
	1001101913	Ref	AC Box at Platform Installation - 110V IEC Yellow (CE Spec with 4000W Generator) **(SN 0300201991 through 0300210158, SN E300002833 through E300002763)**	
	1001194203	Ref	AC Box at Platform Installation - 110V IEC Yellow (CE Spec with 4000W Generator) **(SN 0300210159 through 0300272317, SN 1300007279 through 1300007373, SN E300002764 through E300007990, Except SN 0300272185 through 0300272190, Excluding E300007814)**	
	1001101914	Ref	AC Box at Platform Installation - 220V IEC Blue (CE Spec with 4000W Generator) **(SN 0300201991 through 0300210158, SN E300002833 through E300002763)**	
	1001194204	Ref	AC Box at Platform Installation - 220V IEC Blue (CE Spec with 4000W Generator) **(SN 0300210159 through 0300272317, SN 1300007279 through 1300007373, SN E300002764 through E300007990, Except SN 0300272185 through 0300272190, Excluding E300007814)**	
	1001101910	Ref	AC Box at Platform Installation - 220V CEE7 Post Ground 2in x 4in Box (CE Spec with 4000W Generator) **(SN 0300201991 through 0300210158, SN E300002833 through E300002763)**	
	1001194197	Ref	AC Box at Platform Installation - 220V CEE7 Post Ground 2in x 4in Box (CE Spec with 4000W Generator) **(SN 0300210159 through 0300272317, SN 1300007279 through 1300007373, SN E300002764 through E300007990, Except SN 0300272185 through 0300272190, Excluding E300007814)**	
	1001101911	Ref	AC Box at Platform Installation - 220V CEE7 Side Ground 2in x 4in Box (CE Spec with 4000W Generator) **(SN 0300201991 through 0300210158, SN E300002833 through E300002763)**	
	1001194198	Ref	AC Box at Platform Installation - 220V CEE7 Side Ground 2in x 4in Box (CE Spec with 4000W Generator) **(SN 0300210159 through 0300272317, SN 1300007279 through 1300007373, SN E300002764 through E300007990, Except SN 0300272185 through 0300272190, Excluding E300007814)**	
	1001101915	Ref	AC Box at Platform Installation - 220V CEE7 Post Ground 70mm x 70mm Box (CE Spec with 4000W Generator) **(SN 0300201991 through 0300210158, SN E300002833 through E300002763)**	
	1001101916	Ref	AC Box at Platform Installation - 220V CEE7 Side Ground 70mm x 70mm Box (CE Spec with 4000W Generator) **(SN 0300201991 through 0300210158, SN E300002833 through E300002763)**	
	1001101912	Ref	AC Box at Platform Installation - 220V AFSINT 107 (CE Spec with 4000W Generator) **(SN 0300201991 through 0300210158, SN E300002833 through E300002763)**	
	1001194200	Ref	AC Box at Platform Installation - 220V AFSINT 107 (CE Spec with 4000W Generator) **(SN 0300210159 through 0300272317, SN 1300007279 through 1300007373, SN E300002764 through E300007990, Except SN 0300272185 through 0300272190, Excluding E300007814)**	
	1001194365	Ref	AC Box at Platform Installation - 220V (Box W/Cover) (Australian Spec with 4000W Generator) **(SN 0300210159 through 0300272317, SN 1300007279 through 1300007373, SN B300003516 through B300005760, SN E300002764 through E300007990, Except SN 0300272185 through 0300272190, Excluding B300005569 and E300007814)**	
	1001218978	Ref	Airline Installation - 450A (Machines without Arctic Package)	

ITEM	PART NUMBER	QTY	DESCRIPTION	REV
	1001172057	Ref	Airline Installation - 450AJ (Machines without Arctic Package)	
	1001217461	Ref	Airline Installation - 450A (Machines with Arctic Package)	
	1001174654	Ref	Airline Installation - 450AJ (Machines with Arctic Package)	
	1001219000	Ref	Airline Installation Kit - 450A	
	1001209617	Ref	Alarm White Noise Installation	
	70006428	Ref	Bearing and Seal Kit (For Huh Assembly 2780267 & 2780268)	
	1001241254	Ref	Boom Angle Sensor Offset Link Kit – 450AJ	
	1001179776	Ref	Boom Cables and Clamps Installation - 450AJ for Machines with 60 Hz 4000W Generators	
	1001218980	Ref	Boom Cables and Clamps Installation - 450A for Machines with 7500W SkyPower Generator without Arctic Package	
	1001219002	Ref	Boom Cables and Clamps Installation Kit - 450A for Machines with 7500W SkyPower Generator without Arctic Package	
	1001179364	Ref	Boom Cables and Clamps Installation - 450AJ for Machines with 7500W SkyPower Generator without Arctic Package	
	1001217444	Ref	Boom Cables and Clamps Installation - 450A for Machines with 7500W SkyPower Generator with Arctic Package	
	1001179771	Ref	Boom Cables and Clamps Installation - 450AJ for Machines with 7500W SkyPower Generator with Arctic Package	
	1001206438	Ref	Boom Wear Pad Kit	
	1001236123	Ref	Boom Wiper Cover Installation	
	1001233047	Ref	Breather Heater Kit - Deutz D2.9L4 Engines)	
	1001172045	Ref	Cable Carrier Tray Installation	
		Ref	ClearSky (Telematics) Installations (Dealer Installed)	
	1001242639	Ref	ClearSky (Telematics) Access Control Installation Kit (Dealer Installed) (ANSI, ANSI Export, CSA and CE Specs)	
	1001243183	Ref	ClearSky (Telematics) Added-on Kit (Dealer Installed) (ANSI, ANSI Export, CSA and CE Specs)	
	1001234099	Ref	ClearSky (Telematics) Added-on Kit (Dealer Installed) (CE Specs)	
	1001243184	Ref	ClearSky (Telematics) Added-on Kit (Dealer Installed) (CE Specs)	
		Ref	ClearSky Telematics (Factory Installed)	
	1001174728	Ref	ClearSky (Telematics) Installation (Factory Installed) (ANSI and CSA Specs) Note: Refer to Manual Supplement p/n 3128499 for available replacement parts. **(SN 0300201991 through 0300234431)**	
	1001175029	Ref	ClearSky (Telematics) Installation (Factory Installed) (Australian Spec) Note: Refer to Manual Supplement p/n 3128499 for available replacement parts. **(SN 0300201991 through 0300234431, SN E300002833 through E300004911)**	
	1001175027	Ref	ClearSky (Telematics) Installation (Factory Installed) (Brazil and New Zealand Specs) Note: Refer to Manual Supplement p/n 3128499 for available replacement parts. **(SN 0300201991 through 0300234431, SN E300002833 through E300004911)**	
	1001227278	Ref	ClearSky (Telematics) Installation (Factory Installed) Canbus Connection (ANSI and CSA Specs) **(SN 0300234432 through 0300272317, Except SN 0300272185 through 0300272190)**	
	1001246433	Ref	ClearSky (Telematics) Installation (Factory Installed) Canbus Connection (Australian Specs)	
	1001228960	Ref	ClearSky (Telematics) Installation (Factory Installed) Canbus Connection (CE Specs) **(SN 0300234432 through 0300272317, SN 1300007279 through 1300007373, SN B300003516 through B300005760, SN E300004912 through E300007990, Except SN 0300272185 through 0300272190, Excluding B300005569 and E300007814)**	
	1001246434	Ref	ClearSky (Telematics) Installation (Factory Installed) Canbus	

ITEM	PART NUMBER	QTY	DESCRIPTION	REV
			Connection (China Specs)	
	1001229107	Ref	ClearSky (Telematics) Installation (Factory Installed) 3-Wire Connection (ANSI and CSA Specs) **(SN 0300234432 through 0300272317, Except SN 0300272185 through 0300272190)**	
	1001233237	Ref	ClearSky (Telematics) Installation (Factory Installed) 3-Wire Connection (CE Specs) **(SN 0300234432 through 0300272317, SN 1300007279 through 1300007373, SN B300003516 through B300005760, SN E300004912 through E300007990, Except SN 0300272185 through 0300272190, Excluding B300005569 and E300007814)**	
	1001174767	Ref	Cold Weather Package - Deutz D2011 Engines	
	1001174766	Ref	Cold Weather Package - Deutz D2.9L4 Engines	
	1001174768	Ref	Cold Weather Package - GM Engines	
	1001215181	Ref	Cold Weather Package - Kubota Engines	
	1001186976	Ref	Cold Weather Transformer Installation (Required with Deutz D2011 Engines)	
	1001148145	Ref	Container/Transport Wheels Installation - 12 x 16.5 Tires	
	0272031	Ref	Container/Transport Wheels Installation - 33/1550 x 16.5 Tires	
	1001176343	Ref	Cribbing Switch Installation (ANSI Only)	
	1001215865	Ref	Cylinder Bellows Installation - 450A	
	1001196012	Ref	Cylinder Bellows Installation - 450AJ	
	1001127096	Ref	Decal - ClearSky	
	1001241342	Ref	Decal Kit - Platform Console Box	
	1001241333	Ref	Decal Kit - Platform	
	1702868	Ref	Decal - No Hands (English Language) (Used with Mesh to Top Rail Platform)	
	1001200131	Ref	Decal - Quick Start Reference (Loxam Rental) (Danish Spec)	
	1001200129	Ref	Decal - Quick Start Reference (Loxam Rental) (Dutch Spec)	
	1001181145	Ref	Decal - Quick Start Reference (Loxam Rental) (English Spec)	
	1001200128	Ref	Decal - Quick Start Reference (Loxam Rental) (French Spec)	
	1001200130	Ref	Decal - Quick Start Reference (Loxam Rental) (German Spec)	
	1001200134	Ref	Decal - Quick Start Reference (Loxam Rental) (Norwegians Spec)	
	1001200133	Ref	Decal - Quick Start Reference (Loxam Rental) (Spanish Spec)	
	1001200132	Ref	Decal - Quick Start Reference (Loxam Rental) (Swedish Spec)	
	1705358	Ref	Decal - SkyGlazier	
	1001188883	Ref	Decal - Warning Stripes	
	1001148902	Ref	Electrical Connector Kit - Amp/Tyco Electrical Connectors	
	1001148903	Ref	Electrical Connector Kit - Deutsch DT Electrical Connectors	
	1001148904	Ref	Electrical Connector Kit - Deutsch HD Electrical Connectors	
	1001148905	Ref	Electrical Connector Kit - Packard Electrical Connectors	
	1001148906	Ref	Electrical Connector Kit - Various Electrical Connectors	
	0275055	Ref	Engine Block Heater Installation - GM Engines	
	1001214833	Ref	Engine Block Heater Installation - Kubota Engines	
	1001246867	Ref	Enhanced Detection System (EDS) Level 1 (2-Bar) Installation Kit	
	1001246860	Ref	Enhanced Detection System (EDS) Level 2 (3-Bar) Installation Kit	
	1001172751	Ref	Fan Cover Installation - Deutz D2.9L4 Engines	
	1001236429	Ref	Fan and Spacer Kit - Kubota Engines	
	1001236493	Ref	Engine Service Kit - Kubota Engines (Includes Fan, Spacer, Water Pump, Gasket and Hardware)	
	1001236494	Ref	Shroud Service Kit - Kubota Engines (Includes Shroud, Decal Adhesive and Hardware)	
	1001243331	Ref	Fan Guard Installation (CE Specs)	
		Ref	Filter Kits:	
	1001204481	Ref	Combined Filter Kit (Hydraulic/Air and Fuel/Engine Oil) (Deutz	

ITEM	PART NUMBER	QTY	DESCRIPTION	REV
			D2011 Engine Only)	
	1001225794	1	Combined Filter Kit (Hydraulic/Air and Fuel/Engine Oil) (Deutz D2011 Engine Only) (Stage V)	
	1001204482	1	Combined Filter Kit - Deutz D2.9L4 Engine (Air/Engine Oil/Fuel/Hydraulic/Air)	
	1001206434	1	Combined Filter Kit - GM Engine (Air/Engine Oil/Fuel/Hydraulic/Air)	
	1001242589	1	Combined Filter Kit (Hydraulic/Air and Fuel/Engine Oil) (Kobota Engine Only)	
	1001139099	Ref	Fire Extinguisher Installation	
	1001117294	Ref	Footswitch Shield Installation	
	1001191394	Ref	Fuel Cap Cover (Red)	
	1001191395	Ref	Fuel Cap Cover (Green)	
	1001202749	Ref	Fuel Cap Cover (Black)	
	1001220155	Ref	Generator Cable Kit (4000W Generator)	
	1001220003	Ref	Ground Control and UGM Covers Kit	
	1001215868	Ref	Hostile Environment Package - 450A (Includes Cylinder Bellows, Platform Console Cover and Boom Wiper)	
	1001169831	Ref	Hostile Environment Package - 450AJ (Includes Cylinder Bellows, Platform Console Cover and Boom Wiper)	
	1001241397	Ref	Hostile Environment Kit - 450AJ (Includes Cylinder Bellows, Platform Console Cover and Boom Wiper)	
		Ref	Hydraulic Fluids	
	2300014	Ref	Mobil 424	
	2300027	Ref	Mobil 224H Bio	
	2300029	Ref	Mobil EAL ISO 46 Bio	
	2300016	Ref	Mobil DTE 10 EXCEL 32	
	2300019	Ref	Quaker State Quintolubric 888-46 Fire Resistant	
	2300039	Ref	Exxon Univis HV126 (Arctic Package Only)	
	1001214616	Ref	Hydraulic Kit, Front - 2WD	
	1001194427	Ref	Hydraulic Kit, Front - 4WD	
	1001194424	Ref	Hydraulic Kit, Lower	
	1001194428	Ref	Hydraulic Kit, Rear	
	1001194426	Ref	Hydraulic Kit, Turntable - 4WD **(SN 0300201991 through 0300225480, SN E300002833 through E300004226)**	
	1001207941	Ref	Hydraulic Kit, Turntable - 4WD **(SN 0300225481 through 0300272317, SN 1300007279 through 1300007373, SN E300004227 through E300007990, Except SN 0300272185 through 0300272190, Excluding E300007814)**	
	1001194425	Ref	Hydraulic Kit, Upper	
	1001218999	Ref	Hydraulic System Installation Kit - 450A	
	1001148971	Ref	Lanyard (Bolt-On) Installation Kit	
	1001172001	Ref	Lights Installation - Headlights and Taillights	
	1001120466	Ref	Lights Installation - Platform Worklights	
		Ref	Load Valve Components (Deutz T4F Engines)	
	1001236223	Ref	Decal - Hydraulic Load Valve	
	1001235760	Ref	Harness, Hydraulic Load Valve	
	1001236224	Ref	Module, Control - Hydraulic Load Valve	
	1001183407	Ref	Low Temperature Cutout Installation (Russian Specs)	
	1001173664	Ref	Oil Cooler Installation - Deutz D2011 Engines	
	1001164493	Ref	Oil Cooler Installation - Deutz D2.9L4 Engines	
	1001173745	Ref	Oil Cooler Installation - GM Engines	
	1001216552	Ref	Oil Cooler Installation - Kubota Engines	
	1001236122	Ref	Platform Console Cover Installation (Plastic)	

SECTION 11 - SPECIAL OPTIONS

ITEM	PART NUMBER	QTY	DESCRIPTION	REV
	1001205175	Ref	Platform Console (Plastic Cover Add-On Kit)	
	1580013	Ref	Platform Corner Storage Tray	
	1001142505	Ref	Platform Entry Kit - Swing Gate (Replaces Drop Bar with Swing Gate)	
	1001142504	Ref	Platform Entry Kit - Drop Bar (Replaces Swing Gate with Drop Bar)	
	1001238421	Ref	Platform Leveling Kit	
	1001140318	Ref	Platform Mesh to Mid Rail Installation - 30in x 48in Platforms	
	1001140315	Ref	Platform Mesh to Mid Rail Installation - 30in x 60in Platforms	
	1001214478	Ref	Platform Mesh to Mid Rail Kit - 30in x 48in Platforms (Use on Platform p/n 1001186387)	
	1001214515	Ref	Platform Mesh to Mid Rail Kit - 30in x 60in Platforms (Use on Platform p/n 1001186386)	
	0273147	Ref	Platform Mesh to Top Rail Installation - 30in x 48in Platforms	
	0273146	Ref	Platform Mesh to Top Rail Installation - 30in x 60in Platforms	
	0273148	Ref	Platform Mesh to Top Rail Installation - 30in x 72in Platforms	
	1001214552	Ref	Platform Mesh to Top Rail Kit - 30in x 48in Platforms (Use on Platform p/n 1001186387)	
	1001214559	Ref	Platform Mesh to Top Rail Kit - 30in x 60in Platforms (Use on Platform p/n 1001186386)	
	1001214560	Ref	Platform Mesh to Top Rail Kit - 30in x 72in Platforms (Use on Platform p/n 1001186385)	
	0274095	Ref	Platform Rail Extension Installation - 30in x 72in Platforms	
	1001239575	Ref	Platform Valve Hose Kit - 450AJ	
	1001209059	Ref	Platform Work Surface Installation	
	1001233080	Ref	Pump Rotation Kit (Re-orient Gear Pump 90 Degrees)	
	1001247800	Ref	Quad Tracks Replacement Kit	
	1001171131	Ref	Receptacle with 240V GFI Installation - 4000W Generator	
	1001159121	Ref	Receptacle with 240V GFI Installation - 7500W Generator	
	70006429	Ref	Seal Kit (For Huh Assembly 2780267 & 2780268)	
	1001247073	Ref	SkyEye Retrofit Kit	
	1001203510	Ref	SkyGuard Platform Sensor Kit	
	1001203511	Ref	SkyGuard Beacon Kit (Blue Light)	
	1001210036	Ref	SkyGuard Beacon Kit (Red Light)	
	1001232643	Ref	SkyLine Kit	
	1001231235	Ref	SkyWelder Locking Bracket Installation	
	1001191315	Ref	Tire Sealant Installation	
	2901443	Ref	Tools - Analyzer Kit	
	1001137005	Ref	Tools - Cable Kit, Software (Not Shown)	
	7002821	Ref	Tools - Crimper, Wire	
	7002823	Ref	Tools - Pin Extractor - Universal (For Electrical Connectors with Pins and Sockets)	
	4460510	Ref	Tools - Pin Extractor - 12-14 Gauge (For Removal of Pin/Sockets from Deutsch Connectors)	
	4460467	Ref	Tools - Pin Extractor - 16-18 Gauge (For Removal of Pin/Sockets from Deutsch Connectors)	
	7016654	Ref	Tools - Screwdriver, Magnetic	
	7002822	Ref	Tools - Screwdriver, Potentiometer	
	7004275	Ref	Tools - Seal Tool 1in (For Cylinders)	
	7004276	Ref	Tools - Seal Tool 1-1/2in (For Cylinders)	
	7002828	Ref	Tools - Stripper, Wire	
	1001239573	Ref	Upper Power Track Hose Kit - 400A	
	1001239574	Ref	Upper Power Track Hose Kit - 400AJ	
	1001236496	Ref	Wet Stacking Prevention Kit (Deutz D2.9L4 Engines)	

PART NUMBER INDEX

SECTION 11 - SPECIAL OPTIONS

0080201....338, 344, 366, 372
0080231.....238, 250, 264
0100009....571, 575, 579, 583, 587, 591, 595, 599
0100011....17, 19, 21, 23, 25, 39, 59, 61, 63, 65, 71, 77, 79, 81, 83, 95, 97, 99, 101, 103, 105, 107, 109, 111, 113, 115, 117, 120, 135, 137, 140, 144, 148, 152, 156, 160, 163, 165, 167, 169, 171, 173, 175, 181, 185, 188, 195, 199, 202, 209, 214, 219, 233, 235, 238, 243, 247, 250, 259, 261, 264, 273, 279, 283, 285, 288, 292, 297, 303, 307, 309, 312, 316, 323, 329, 333, 335, 338, 344, 351, 357, 361, 363, 366, 372, 405, 409, 413, 417, 421, 425, 429, 433, 437, 441, 445, 449, 453, 457, 469, 471, 473, 475, 477, 479, 481, 487, 489, 491, 493, 495, 501, 503, 507, 509, 513, 515, 517, 519, 541, 543, 545, 547, 549, 551, 553, 555, 613, 615, 617, 619, 623, 625, 627, 635, 637, 639, 766, 770, 774, 778
0100019..23, 25, 89, 171, 173, 175, 413, 425, 429, 433, 441, 445, 449
0100020.....99, 101, 103, 105, 181, 188, 195, 202, 209, 214, 233, 238, 243, 250, 259, 264, 273, 279, 288, 292, 297, 303, 312, 316, 323, 329, 338, 344, 351, 357, 366, 372, 609, 723, 729, 739, 745, 749, 751
0100035....587, 599, 659, 661
0100048....123, 409, 413, 417, 421, 425, 429, 433, 437, 441, 445, 449, 453, 457, 503, 507, 571, 575, 579, 583, 587, 591, 595, 599
0100071.....629
0100079....425, 429, 433, 437, 441, 445, 449, 453, 457
0100081....188, 202, 214, 238, 250, 264, 288, 292, 312, 316, 571, 575, 579, 583, 591, 595, 631, 633, 766, 770, 774, 778
0140011... 571, 575, 579, 583, 587, 591, 595, 599
0140043..... 120
0181949... 273, 279, 297, 303, 323, 329, 351, 357
0200048... 613, 615, 617, 619
0257728..... 643
0257755..... 49
0257756..... 49
0258011..... 53
0258012..... 53
0258303..... 717
0258304..... 715
0258305..... 725
0270022..... 719
0270092..... 41
0270115..... 909
0270116..... 913
0270119..... 911
0270653..... 43
0272031..... 922
0272070..... 501
0272254..... 637
0272341..... 51
0272360..... 51
0272361..... 51
0272448..... 637
0272521..... 635
0272588..... 635
0272589..... 443
0272703..... 503
0273146..... 924
0273147..... 924
0273148..... 924
0273380... 447, 451, 455, 459
0274095..... 924
0274240..... 613
0274661..... 645
0275055..... 922
0275216.... 721, 723, 849
0275217.... 727, 729, 851
0275218..... 731, 857
0275219..... 733, 859
0275452... 737, 739, 741, 853
0275453... 735, 743, 745, 855
0275454.... 747, 749, 861
0275678..... 741
0275679..... 735
0275680..... 747
0275681..... 721
0275682..... 727
0275683..... 731
0275684..... 733
0360406..... 73
0361810..... 135
0363019..... 71, 73
0400075..... 135
0440162... 181, 195, 233, 243, 259, 273, 279, 297, 303, 323, 329, 351, 357
0440271..... 19, 21
0480100..... 643, 645
0480120..... 405
0480122..... 409
0480126..... 425, 441
0480128..... 429, 445
0480129..... 458
0480142.... 417, 437, 453
0630462... 613, 615, 617, 619
0630518.... 635, 637, 639
0630534..... 675
0630535..... 659, 661
0630568... 572, 575, 580, 584, 588, 592, 596, 600
0630613... 140, 144, 148, 152, 156, 160
0641404..... 575, 627
0641405... 503, 507, 571, 579, 583, 587, 591, 595, 599, 627
0641406... 559, 561, 563, 565, 567, 569, 611, 883, 887, 889, 891, 893, 895, 897, 899, 901, 903, 905
0641407... 503, 507, 721, 727, 731, 733, 735, 737, 741, 743, 747
0641408... 559, 561, 563, 565, 567, 569
0641410... 163, 165, 167, 169
0641414... 571, 575, 579, 583, 587, 591, 595, 599, 613, 615, 617, 619, 623, 625, 629
0641416... 503, 507, 721, 723, 727, 729, 731, 733, 735, 737, 739, 741, 743, 745, 747, 749, 751
0641418... 541, 543, 545, 547, 549, 551, 553, 555
0641420..... 545
0641504..... 71, 135, 137
0641507... 405, 409, 413, 421
0641509... 766, 770, 774, 778
0641510..... 417
0641514..... 643, 645
0641605.... 77, 79, 81, 83
0641606.... 635, 637, 639
0641610... 219, 559, 561, 563, 565, 567, 569
0641616... 425, 429, 433, 441, 445, 449
0641710..... 417
0641772... 405, 409, 413, 421
0641808..... 437, 453
0641812....185, 199, 209, 235, 247, 261, 283, 285, 307, 309, 333, 335, 361, 363, 501, 509
0641822.....503, 507
0642012.....631
0642024.....503, 507
0642026.....633
0642612.....125
0642684....501, 503, 507, 509
0681608....501, 503, 507, 509
0681810.....25
0681814.....557
0681822.....557
0682014.....23, 25
0682040.....73
0700408....721, 723, 727, 729, 731, 733, 735, 737, 739, 741, 743, 745, 747, 749, 751
0700619....273, 279, 297, 303
0700810....338, 344, 366, 372
0700814....338, 344, 366, 372
0700815....338, 344, 366, 372
0700816.....71, 340, 346, 368, 374
0700818....425, 429, 433, 437, 441, 445, 449, 453, 457
0700819.....457
0700820....417, 437, 453, 483, 485
0700827....766, 770, 774, 778
0700828....766, 770, 774, 778
0701012.....171, 173, 175
0701014.....71, 171, 173, 175
0701015.....491, 493, 495
0701016....340, 346, 368, 374, 417, 437, 453, 457
0701018....140, 144, 148, 152, 156, 160
0701019.....483, 485
0701020.....99, 101, 103, 105, 483, 485
0701021....766, 770, 774, 778
0701024....766, 770, 774, 778
0701027.....491, 493, 495
0701216....338, 344, 366, 372
0701217.....17
0701224....338, 344, 366, 372, 421, 457
0701616.....97, 491, 493, 495
0701617.....21

0711214 ... 188, 202, 214, 338, 366
0711220 ..... 19, 21
0711221 ... 288, 292, 312, 316, 417, 438, 454
0711224 ... 188, 202, 214, 238, 250, 264, 405, 409, 413, 421, 425, 429, 433, 441, 445, 449, 457
0711227 ... 417, 437, 453, 487, 489
0711628 89
0711629 21
0711631 89
0721005 ... 613, 615, 617, 619
0721006 219
0741606 .... 188, 202, 214
0741607 ... 425, 429, 433, 449
0741608 457
0760408 ... 273, 279, 297, 303, 323, 329, 351, 357
0760512 135
0760605 ... 338, 344, 366, 372
0760606 ... 289, 313, 338, 344, 366, 372, 425, 429, 433, 441, 445, 449
0760607 .... 190, 204, 216
0760608 ... 107, 135, 137, 338, 344, 366, 372, 405, 409, 413, 417, 421
0760610 ... 120, 135, 137, 163, 165, 167, 169, 181, 188, 196, 202, 209, 214, 233, 238, 243, 250, 259, 264, 274, 280, 289, 293, 298, 304, 312, 316, 323, 329, 338, 344, 351, 357, 366, 372, 401, 403, 425, 429, 433, 437, 441, 445, 449, 453, 457, 755, 767, 771, 775, 779
0760612 ... 135, 137, 338, 344, 366, 372
0760614 ... 127, 129, 131, 133, 181, 195, 209, 233, 239, 243, 251, 259, 265, 425, 753
0760615 ..... 163, 165
0760621 120
0760808 ... 188, 202, 214, 288, 292, 312, 316, 338, 344, 366, 372
0760810 ... 140, 144, 148, 152, 156, 160, 171, 173, 175, 190, 204, 216, 323, 329, 351, 357
0760812 ... 59, 61, 63, 65, 99, 101, 103, 105, 109, 111, 113, 115, 117, 140, 144, 148, 152, 156, 160, 171, 173, 175, 181, 188, 196, 202, 209, 214, 233, 243, 259, 273, 279, 288, 292, 297, 303, 312, 316, 323, 329, 338, 344, 351, 357, 366, 372, 401, 403, 405, 409, 413, 417, 426, 430, 434, 438, 442, 446, 451, 454, 487, 489, 757, 766, 770, 774, 778
0760814 ... 140, 144, 149, 152, 156, 160, 188, 202, 214, 238, 250, 264, 273, 279, 289, 293, 297, 303, 312, 316, 323, 329, 338, 344, 351, 357, 366, 372, 421, 457
0760815 ... 137, 171, 173, 175, 190, 204, 216, 238, 250, 264, 288, 292, 312, 316, 338, 340, 344, 366, 368, 372
0760816 ... 340, 346, 368, 374
0761009 ..... 405, 409
0761010 ... 77, 79, 81, 83, 107
0761011 19, 21, 324, 330, 352, 358
0761012 ... 135, 137, 469, 471, 473, 475, 477, 479, 481, 757, 770, 774, 778
0761014 ... 140, 144, 148, 152, 156, 160, 181, 188, 195, 202, 209, 214, 338, 344, 366, 372, 409, 413, 417, 509
0761015 ... 181, 188, 195, 202, 209, 214, 233, 238, 243, 250, 259, 264, 273, 279, 288, 292, 297, 303, 312, 316, 323, 329, 338, 344, 351, 357, 366, 372, 413, 421, 469, 471, 473, 475, 477, 479, 481
0761016 ... 188, 202, 214, 273, 279, 288, 292, 297, 303, 312, 316, 338, 344, 366, 372, 421
0761024 ... 469, 471, 473, 475
0761210 ... 181, 188, 195, 202, 209, 214
0761212 ... 188, 202, 214, 433, 449, 477, 479, 481, 491, 493, 495
0761214 ..... 99, 101, 103, 105, 140, 144, 148, 152, 156, 160, 413, 421, 425, 429, 441, 445, 457
0761215 .... 421, 457, 477, 479, 481
0761216 ..... 501, 509
0761227 ..... 491, 493, 495
0761615 ..... 17, 491, 493, 495
0762016 ..... 491, 493, 495
0762020 ..... 171, 173, 175
0771414 .... 188, 202, 214, 238, 250, 264, 405, 409, 413, 425, 429, 433, 441, 445, 449
0771416 .... 425, 429, 441, 445
0811608 ..... 417, 437, 453
0840055 ..... 503, 839
0860038 .... 429, 433, 437, 445, 449, 453, 457, 717, 719, 725
0860520 .... 883, 887, 889, 891, 893, 895, 897, 899, 901, 903, 905
0861538 .... 445, 449, 453, 457
0861572 441
0861731 .... 751, 853, 855, 861
0861781 ..... 849, 851
0861880 ..... 807, 811
0902733 71
0902734 71
0902751 ..... 575, 591
0902888 .... 425, 429, 433, 437, 441, 445, 449, 453, 457
0902919 ..... 503, 507
0902920 ..... 503, 507
0903484 .... 721, 727, 731, 733, 735, 737, 741, 743, 747
0903612 .... 721, 727, 731, 733, 735, 741, 747
0940048 ..... 491, 493, 495
0940049 .... 140, 144, 148, 152, 156, 160
0940071 .... 140, 144, 149, 152, 156, 160
0940167 ..... 613, 615
0940199 ..... 631, 633
0961845 .... 541, 543, 545, 547, 549, 551, 553, 555
0961896 ..... 659, 661
0961947 ..... 497, 499
0961948 19, 21, 487, 489, 491, 493, 495, 655, 657, 659, 661, 663, 665, 667
0961949 ..... 487, 489
0961950 17
0961951 .... 188, 202, 214, 238, 250, 264, 288, 292, 312, 316, 338, 344, 366, 372, 483, 485, 651, 669
0962185 675
0962257 ..... 497, 499
0962270 557
0962292 ..... 21, 483, 485, 675, 677
0962348 21
0962449 405
0962450 ..... 503, 507
0962520 ... 425, 429, 433, 437, 441, 445, 449, 453, 457
1001001939 ..... 340, 346
1001091102 ..... 753, 755
1001091794 ..... 288, 292, 312, 316
1001091892 ..... 288, 292, 313, 317
1001091969 723
1001091970 729
1001091973 739
1001091974 745
1001091975 749
1001094670 483
1001095704 ..... 874, 916
1001096070 ..... 425, 811
1001096653 ... 59, 61, 63, 65
1001097000 ..... 195, 243, 298
1001097051 865
1001097150 ..... 807, 809, 811
1001098122 ..... 609, 841, 845
1001098828 509
1001099869 405
1001100231 829
1001100233 405
1001100321 405
1001100341 849
1001100342 851
1001100345 853
1001100346 861
1001100347 855
1001100433 ..... 127, 129, 131, 133
1001101191 ..... 723, 729, 739, 745, 749
1001101196 ..... 723, 729
1001101197 ..... 739, 745, 749
1001101910 920
1001101911 920
1001101912 920
1001101913 920
1001101914 920
1001101915 920
1001101916 920
1001102987 ... 77, 79, 81, 83
1001103012 873
1001104029 ..... 425, 429, 433, 437, 442, 446, 450, 454, 458
1001104498 873
1001104850 ..... 89, 91
1001106736 120
1001107854 873
1001109475 807
1001109482 807

SECTION 11 - SPECIAL OPTIONS

1001110434.....571, 575, 579, 583, 587, 591, 595, 599
1001110873.....429, 433, 437, 446, 450, 454, 458, 717, 719
1001111424.....135, 137, 189, 203, 215, 238, 250, 264
1001112551.....889
1001112607.....477, 479, 481
1001112612.....761, 873
1001112796.....761
1001112943.....557
1001113483.....503, 507
1001113961.....874
1001115639.....617
1001115641.....617, 619
1001115848.....617, 619
1001115931.....313, 317
1001116550.....483, 485
1001116693.....841, 845
1001116710.....825
1001116720.....847, 871
1001116727.....817
1001116728.....817
1001116732.....827, 829
1001116734.....827, 829
1001116748.....805
1001116763.....873
1001116774.....761
1001116808.....761
1001116849.....899
1001116952.....817
1001116983.....825
1001117057.....827, 829
1001117064.....805
1001117070.....873
1001117106.....817
1001117107.....817
1001117172.....609
1001117174.....571, 575, 579, 583, 587, 591, 595, 599, 609
1001117240.....135, 137
1001117294.....923
1001117308.....189, 203, 215
1001117372.....649
1001118274 99, 101, 103, 105, 109, 111, 113, 115, 117, 140, 144, 149, 152, 156, 160, 273, 279, 298, 304, 323, 329, 340, 346, 351, 357, 487, 489, 513, 515, 517, 519, 766, 770, 774, 778
1001118384.....869
1001118388.....847, 869
1001118412.....571, 575, 579, 583, 587, 591, 595, 599, 917
1001118482.....483
1001118511.....17
1001118518.....17
1001118519..... 17
1001118878..... 189, 203, 215
1001118971..... 766, 770, 774, 778
1001118972 . 71, 99, 101, 103, 105, 766, 770, 774, 778
1001119020..... 761, 841, 874
1001119051..... 171, 173, 175
1001119057..... 171, 173, 175
1001119176..... 107, 917
1001119228 95, 767, 771, 775, 779
1001119278..... 135, 137, 195, 243, 298, 304, 352, 358
1001119280..... 135, 767, 771, 775, 779
1001119619..... 863
1001119620..... 865, 867
1001119627..... 684, 690, 696, 702, 708
1001120204..... 789, 791, 793, 795
1001120205..... 801, 803
1001120328..... 623, 625, 627, 874
1001120371..... 507, 839
1001120466..... 923
1001125137..... 659
1001125387..... 181, 195, 209
1001125677..... 841, 845
1001126009..... 869
1001126351..... 817
1001126352..... 817
1001126356..... 817
1001126357..... 817
1001126362..... 817
1001126363..... 817
1001126365..... 817
1001126384..... 817
1001126391..... 817
1001127096..... 922
1001128527..... 639
1001128556..... 639
1001129285..... 874
1001129407..... 107
1001129555..... 916
1001129858..... 430, 437
1001130220..... 120
1001131269..... 883, 887, 895, 897
1001132195..... 238, 250, 264
1001132196..... 238, 250, 264
1001133714..... 818
1001133715..... 818
1001133956..... 817
1001133957..... 817
1001133972..... 89, 93
1001134488..... 189, 203, 215
1001135196..... 181, 195, 233, 243, 259, 273, 279, 298, 304, 323, 329, 352, 358
1001135651..... 818
1001135679..... 413, 433, 450
1001136079..... 189, 215, 238
1001136172..... 203
1001136834..... 189, 203, 215
1001136988..... 450
1001137005..... 924
1001137336..... 340, 346, 368, 374
1001137673..... 623, 625, 917
1001138173..... 189, 203, 215, 238, 250, 264, 289, 293, 313, 317, 339, 345, 367, 373
1001138175..... 189, 203, 215, 239, 250, 264, 289, 293, 313, 317, 339, 345, 367, 373
1001138228..... 189, 203, 215, 917
1001138248..... 189, 203, 215, 239, 251, 264, 289, 293, 313, 317, 340, 346, 368, 374
1001138494..... 543, 545, 547, 551, 553, 555
1001138514..... 543, 545, 547, 551, 553, 555
1001138565..... 425
1001138566..... 426, 430, 434, 438
1001138827..... 189, 203, 215
1001139099..... 923
1001139240..... 189, 203, 215
1001139357..... 426, 430
1001139384..... 163, 165, 167, 169
1001139586..... 21
1001139819..... 239, 250, 265
1001140312..... 204
1001140315..... 924
1001140318..... 924
1001140346..... 434
1001140429..... 541, 543, 545, 547, 549, 551, 553, 555
1001140535..... 189, 203, 215
1001140564..... 189, 203, 215
1001141181..... 418, 438, 454
1001141300..... 907
1001141302..... 907
1001141304.....189, 203, 215
1001141694.....189, 203, 215, 239, 250, 265
1001141870.....219
1001141967.....857, 859
1001141968.....857
1001141969.....859
1001141970.....859
1001141971.....857
1001141995.....189, 203, 215, 239, 251, 265, 289, 293, 313, 317, 339, 345, 367, 373
1001142501.....181, 195, 209, 219
1001142504.....924
1001142505.....924
1001142643.....434, 450
1001142646.....434, 450
1001142679.....684, 690, 696, 702, 708
1001142683.....127, 129, 131, 133, 916
1001142694.....125
1001142736.....127, 129, 131, 133, 761
1001142938.....818
1001142940.....818
1001143390.....189, 203, 215, 239, 251, 265
1001143431.....125
1001143797.....189, 203, 215
1001143852.....907
1001143936.....684, 690, 696, 702, 709
1001144116.....189, 203, 215
1001144295.....559, 563, 565
1001144433.....583, 592, 595, 625
1001144629.....529, 531, 533, 535, 537, 539
1001145781.....535, 537, 539, 551, 553, 555
1001146220.....109, 111, 113, 115, 117, 571, 576, 579, 583, 587, 591, 595, 599
1001147233.....421, 458
1001147264.....817
1001147274.....41, 43
1001147812.....289, 293, 313, 317, 339, 345, 367, 373
1001147813.....289, 293, 313, 317, 340, 346, 368, 374
1001148138.....414, 421
1001148145.....922
1001148641.....406, 410, 413, 418, 426, 430, 434, 438, 442, 446, 451, 454
1001148648.....426

1001148865 41
1001148866 41
1001148869 43
1001148870 43
1001148902 922
1001148903 922
1001148904 922
1001148905 922
1001148906 922
1001148971 923
1001148972 ..... 465, 655, 663
1001149160 ..... 339, 345, 367, 373
1001149570 ..... 125, 759
1001149639 ..... 339, 345, 367, 373
1001149953 ..... 41, 43
1001150998 ..... 239, 251, 265
1001151026 47
1001151030 47
1001151393 ..... 109, 111, 113, 115, 117
1001152456 ..... 426, 430, 434, 438
1001152457 ..... 430, 434, 438
1001152458 426
1001152479 809
1001152482 809
1001152483 809
1001152485 ..... 737, 743, 755, 809
1001152489 ..... 189, 203, 215
1001152525 ..... 430, 434, 438, 443, 447, 451, 455, 459
1001152530 ..... 426, 430, 434, 438
1001152532 ..... 426, 430, 434, 438, 831
1001153260 ..... 430, 435, 438
1001154405 ..... 181, 195, 209, 219
1001154726 ..... 827, 829
1001155041 ..... 413, 421, 426, 434, 442, 446, 450, 458
1001155044 ..... 274, 280, 298, 304, 323, 329, 352, 358, 571, 575, 579, 583, 587, 591, 595, 599
1001155045 ..... 571, 575, 579, 583, 587, 591, 595, 599, 916
1001155813 426
1001155823 ..... 181, 195, 209
1001156351 715
1001156352 715
1001156541 805
1001156819 ..... 289, 293, 313, 317, 324, 330, 352, 358
1001156823 ..... 273, 279, 298, 304
1001157466 97
1001157520 ..... 443, 447, 451, 455, 459
1001157521 ..... 443, 447, 451, 455, 459
1001157525 442
1001157528 ..... 443, 447, 451, 455, 459
1001157592 ..... 446, 450, 451, 454, 458
1001157890 874
1001157930 712
1001158007 ..... 443, 447, 451, 455, 459
1001158008 ..... 426, 430, 435, 438, 443, 447, 451, 455, 459
1001158363 ..... 427, 430, 435, 438
1001159121 924
1001159186 835
1001159256 ..... 571, 576, 579, 583, 587, 591, 595, 599, 916
1001160859 ..... 491, 495
1001160872 ..... 491, 495
1001161709 ..... 571, 576, 579, 583, 587, 591, 595, 599, 916
1001161710 ..... 274, 280, 298, 304, 323, 329, 352, 358, 917
1001161713 ..... 465, 467, 677
1001161715 ..... 463, 465, 467, 667
1001161716 ..... 463, 465, 467, 651
1001161717 ..... 463, 465, 467, 669
1001161804 ..... 463, 673
1001162105 39
1001162106 107
1001162107 39
1001162335 ..... 182, 196, 209, 219
1001162415 905
1001162416 ..... 883, 887
1001162418 901
1001162420 903
1001162422 ..... 895, 897
1001162424 899
1001162426 891
1001162429 ..... 889, 893
1001162445 ..... 737, 743
1001162448 737
1001162451 743
1001162521 883
1001162522 889
1001162523 901
1001162524 903
1001162525 895
1001162526 899
1001162527 891
1001162528 893
1001162529 905
1001162534 ..... 77, 79, 81, 83, 85
1001162535 ..... 477, 513, 515, 517, 519, 521
1001162536 ..... 515, 519, 525
1001162539 ..... 63, 65, 69
1001162995 17
1001163061 ..... 99, 101
1001163062 ..... 103, 105
1001163178 ..... 19, 21, 671
1001163179 ..... 19, 21
1001163405 ..... 19, 21
1001163580 ..... 17, 649
1001163715 ..... 19, 21
1001163716 ..... 19, 21
1001163717 21
1001163722 21
1001163724 21
1001163726 21
1001163767 ..... 465, 467, 653
1001163856 465
1001163857 467
1001163937 ..... 483, 485
1001164016 ..... 479, 483
1001164017 ..... 481, 485
1001164092 19
1001164093 17
1001164095 21
1001164209 ..... 19, 21
1001164289 675
1001164295 675
1001164297 675
1001164298 675
1001164300 675
1001164353 ..... 571, 575, 579, 583, 591, 596, 841
1001164493 923
1001164523 ..... 465, 675
1001164552 17
1001164709 ..... 465, 655, 657, 663, 665, 667
1001164728 ..... 559, 561, 563, 565, 567, 569, 575, 591, 879
1001164730 ..... 770, 783
1001164731 ..... 770, 791
1001164736 ..... 120, 877
1001164737 ..... 120, 835
1001164738 ..... 766, 770, 774, 778, 805
1001164817 649
1001165035 ..... 181, 195, 209, 289, 293, 313, 317
1001165131 ..... 659, 663
1001165302 ..... 469, 471, 473, 483, 485, 497
1001165388 ..... 189, 203, 215, 239, 251, 265
1001165389 ..... 239, 251, 265
1001165405 ..... 189, 203, 215
1001165406 ..... 189, 203, 215
1001165622 148
1001165721 ..... 189, 203, 215
1001165722 ..... 189, 203, 215
1001165816 ..... 99, 103
1001165849 ..... 189, 203, 215
1001165942 99
1001165943 103
1001165944 171
1001165945 173
1001165946 89
1001165948 ..... 65, 83, 519
1001165949 ..... 702, 710
1001165968 39
1001166000 ..... 185, 188
1001166001 ..... 181, 185
1001166020 ..... 235, 238
1001166021 ..... 233, 235
1001166084 907
1001166085 907
1001166096 ..... 491, 493, 495
1001166142 561
1001166153 ..... 55, 57
1001166155 55
1001166156 55
1001166157 55
1001166193 907
1001166202 ..... 273, 283
1001166203 ..... 283, 288
1001166208 667
1001166232 71
1001166239 25
1001166304 181
1001166305 233
1001166307 273
1001166315 120
1001166316 135
1001166317 137
1001166538 ..... 572, 576, 579, 584, 587, 592, 596, 599, 603
1001166539 ..... 571, 576, 579, 583, 587, 592, 596, 599, 605
1001166646 489
1001166651 489
1001166656 ..... 469, 471, 473, 475, 767, 771
1001166662 ..... 767, 771, 775, 779
1001166678 ..... 775, 779
1001166717 ..... 239, 251, 265
1001166718 ..... 189, 203, 215, 239, 251, 265, 339, 345, 367, 373
1001166767 107
1001166768 107
1001166852 ..... 493, 495

1001166853.....491, 493, 495
1001166921.....189, 203, 215
1001166922.....189, 203, 215
1001166924.....190, 203, 215
1001166970.....280
1001167036.....185, 199, 235, 247, 261, 283, 285, 307, 309, 333, 335, 361, 363, 389
1001167108.....190, 203, 215, 817
1001167111.....239, 251, 265, 815
1001167149.....140, 144, 149, 152, 156, 160
1001167153.....148
1001167159.....140, 144, 148, 152, 156, 160
1001167163.....140, 144, 148, 152, 156, 160
1001167164.....210, 401, 403
1001167169.....140, 144, 148, 152, 156, 160
1001167193.....289, 293, 313, 317
1001167267.....561, 575
1001167312.....753
1001167382.....289, 293, 313, 317
1001167383.....289, 293, 313, 317
1001167384.....289, 293, 313, 317
1001167512.....181, 195, 209, 233, 243, 259, 274, 279, 298, 304, 323, 329, 352, 358
1001167520.....190, 204, 215, 239, 251, 265
1001167565.....509
1001167567.....509
1001167596.....509
1001167825.....171, 173, 175
1001167895.....289, 293, 313, 317
1001168018.....190, 204, 215, 239, 251, 265, 339, 345, 367, 373, 406, 410, 413, 418, 421, 426, 430, 434, 438, 442, 446, 450, 454, 458
1001168026.....190, 204, 215
1001168059.....239, 251, 265
1001168099.....190, 204, 215
1001168166.....190, 204, 215, 289, 293, 313, 317, 339, 345, 367, 373
1001168190..... 487
1001168207..... 413, 434, 450
1001168210..... 651
1001168402..... 509
1001168472..... 767, 771, 775, 779
1001168473..... 767, 771, 775, 779
1001168950..... 190, 204, 216
1001169046..... 140, 144, 148, 152, 156, 160
1001169054..... 190, 204, 216, 289, 293, 313, 317, 339, 345, 367, 373
1001169058..... 57
1001169062..... 45
1001169073..... 49
1001169074..... 51
1001169075..... 53
1001169138..... 190, 204, 216, 289, 293, 313, 317, 339, 345, 367, 373
1001169157..... 883, 887, 889, 891, 893, 895, 897, 899, 901, 903, 905, 907
1001169183..... 149, 161, 171, 173, 175
1001169240..... 491, 493, 495
1001169241..... 491, 493, 495
1001169242..... 491, 493, 495
1001169246..... 477, 479, 481
1001169247..... 477, 479, 481
1001169249..... 491, 493, 495
1001169295..... 491, 493, 495
1001169296..... 491, 493, 495
1001169297..... 491, 493, 495
1001169298..... 491, 493, 495
1001169299..... 491, 493, 495
1001169300..... 491, 493, 495
1001169301..... 491, 493, 495
1001169302..... 491, 493, 495
1001169304..... 487, 489
1001169305..... 487, 489
1001169402..... 487, 489
1001169403..... 487, 489
1001169525..... 395, 397
1001169823..... 181, 195, 209, 233, 243, 259, 274, 280, 298, 304
1001169831..... 923
1001169895..... 111
1001169896..... 109, 111, 113, 115, 117
1001169897..... 111, 117
1001169898 99, 101, 103, 105
1001169967..... 190, 204, 216, 289, 293, 313, 317, 339, 345, 367, 373
1001169974..... 313
1001170001..... 144, 148, 156, 160
1001170018..... 140, 144, 148, 152, 156, 160
1001170022..... 140, 144, 148, 152, 156, 160
1001170025..... 171, 173, 175
1001170035..... 190, 204, 216, 289, 293, 313, 317, 339, 345, 367, 373
1001170094..... 120, 917
1001170098..... 45
1001170099..... 45
1001170131..... 171, 173, 175
1001170224..... 397
1001170225..... 395
1001170226..... 487, 489
1001170334..... 487
1001170375..... 513, 515, 517, 519
1001170446..... 571, 576, 580, 583, 587, 592, 596, 599
1001170458..... 57
1001170459..... 57
1001170460..... 57
1001170475..... 165
1001170480 99, 101, 103, 105
1001170617..... 190, 204, 223
1001170663..... 210, 401
1001170664..... 210, 401, 403
1001170693..... 239, 251, 253
1001170719..... 274, 280, 298, 304
1001170759..... 659, 661
1001170838..... 109, 111, 113, 115, 117, 571, 576, 580, 584, 587, 592, 596, 599
1001170859..... 140, 144, 148, 152, 156, 160
1001170860..... 140, 144, 148
1001170981..... 289, 293, 313, 317
1001171131..... 924
1001171216..... 140, 144, 149, 152, 156, 160
1001171403..... 817
1001171482..... 109, 111, 113, 115, 117
1001171553.....767, 771, 775, 779
1001171555.....767, 771, 775, 779
1001171559.....767, 771, 775, 779
1001171678.....135, 137
1001171679.....135, 137
1001171680.....135, 137
1001171681.....233, 243, 259
1001171682.....233, 243, 259
1001171683.....181, 195, 209
1001171684.....181, 196, 209
1001171685.....274, 280, 298, 304
1001171686.....274, 298, 304
1001171953.....185, 199, 210, 235, 247, 261, 283, 285, 307, 309, 333, 335, 361, 363
1001171954.....185, 199, 210, 235, 247, 261, 283, 285, 307, 309, 333, 335, 361, 363
1001172001.....923
1001172003.....274, 280, 298, 304
1001172045.....921
1001172057.....921
1001172202.....233, 243, 259
1001172217.....883, 887, 889, 891, 893, 895, 897, 899, 901, 903, 905
1001172264.....210, 401
1001172265.....401
1001172271.....767, 771, 775, 779
1001172282.....140, 145, 148, 157, 161, 163
1001172335.....766, 781
1001172336.....766, 789
1001172663.....509
1001172736.....181, 196, 209
1001172737.....393
1001172751.....922
1001172760.....572, 575, 580, 584, 588, 591, 596, 600
1001172795.....274, 280, 298, 304
1001172796.....767, 771, 775, 779
1001172801.....907
1001172833.....140, 145, 148, 157, 161, 167
1001173006.....684, 690, 696, 702, 709
1001173027.....684, 690, 696, 702, 709

1001173028 ..... 684, 690, 696, 702, 709
1001173029 ..... 684, 690, 696, 702, 709
1001173030 702
1001173031 ..... 684, 690, 696, 702
1001173032 702
1001173034 ..... 684, 691, 697, 703, 709
1001173035 ..... 684, 691, 697, 703, 709
1001173036 ..... 685, 691, 697, 703, 709
1001173037 ..... 685, 691, 697, 703, 709
1001173038 ..... 685, 691, 697, 703, 709
1001173039 ..... 685, 691, 697, 703, 709
1001173040 ..... 691, 703, 709
1001173041 ..... 691, 703, 709
1001173042 ..... 685, 691, 697, 703, 709
1001173043 ..... 685, 691, 697, 703, 709
1001173044 ..... 691, 703, 709
1001173045 ..... 691, 703, 709
1001173046 ..... 691, 703, 709
1001173048 ..... 691, 703, 709
1001173049 ..... 691, 703, 709
1001173050 703
1001173051 703
1001173052 ..... 685, 691, 697, 703, 709
1001173053 ..... 685, 691, 697, 703, 709
1001173054 ..... 685, 691, 697, 703, 709
1001173055 ..... 697, 703, 709
1001173056 ..... 697, 703, 709
1001173057 ..... 697, 703, 709
1001173058 ..... 685, 691, 697, 703, 709
1001173059 ..... 685, 691, 697, 703, 709
1001173061 ..... 685, 691, 697, 703, 709
1001173062 ..... 685, 691, 697, 703, 709
1001173063 ..... 685, 691, 697, 703, 709
1001173066 ..... 691, 697, 703, 709
1001173262 ..... 883, 887, 895, 897, 905
1001173529 ..... 109, 111, 113
1001173535 ..... 339, 345, 367, 373
1001173631 703
1001173664 923
1001173703 907
1001173745 923
1001173810 445
1001173811 441
1001173812 453
1001173925 ..... 426, 430, 442, 446
1001173969 ..... 631, 633
1001173973 ..... 631, 633
1001173975 631
1001173983 429
1001173984 425
1001174065 491
1001174098 ..... 140, 144, 149, 156, 160
1001174158 ..... 426, 753
1001174313 ..... 883, 895, 905
1001174335 393
1001174367 449
1001174378 397
1001174379 395
1001174486 ..... 273, 279, 298, 303, 323, 329, 352, 358
1001174536 493
1001174537 493
1001174654 921
1001174675 ..... 442, 446, 451, 454, 458, 712
1001174728 921
1001174748 ..... 778, 787
1001174749 ..... 766, 770, 801
1001174750 ..... 778, 795
1001174754 ..... 774, 778, 803
1001174766 922
1001174767 922
1001174768 922
1001174777 ..... 199, 202
1001174778 ..... 196, 199
1001174779 195
1001174780 ..... 307, 312
1001174781 ..... 298, 307
1001174782 297
1001174783 ..... 247, 250
1001174784 ..... 243, 247
1001174785 243
1001174976 123
1001175024 ..... 696, 702, 709
1001175027 921
1001175029 921
1001175244 509
1001175260 710
1001175348 437
1001175542 433
1001175631 ..... 430, 434, 438, 712
1001175632 712
1001175633 712
1001175634 712
1001176299 ..... 685, 697
1001176300 ..... 685, 697
1001176301 ..... 685, 697
1001176302 ..... 685, 697
1001176330 ..... 339, 345, 367, 373
1001176343 922
1001176469 113
1001176848 ..... 19, 21
1001176951 ..... 766, 770, 797
1001177167 ..... 274, 280, 298, 304
1001177228 ..... 274, 280, 298, 304
1001177359 ..... 190, 204, 216
1001177541 113
1001177543 113
1001177820 97
1001177821 97
1001177834 97
1001177896 489
1001177897 489
1001178133 ..... 491, 493, 495
1001178135 ..... 491, 493, 495
1001178228 169
1001178448 ..... 767, 771, 775, 779
1001178449 ..... 767, 771, 775, 779
1001178554 487
1001178555 487
1001178636 ..... 479, 481, 489
1001178644 ..... 767, 771, 775, 779
1001178788 ..... 189, 203, 215
1001178859 ..... 239, 251, 265
1001178876 ..... 190, 204, 216
1001178958 ..... 767, 771, 775, 779
1001179154 ..... 430, 434, 438, 447, 451, 454, 458
1001179228 ..... 766, 770, 774, 778
1001179236 ..... 120, 813
1001179266 ..... 767, 771, 775, 779
1001179339 99, 101, 103, 105
1001179364 921
1001179439 ..... 774, 778, 799
1001179517 .... 59, 61, 63, 65
1001179626 ..... 477, 487
1001179737 778
1001179738 770
1001179771 921
1001179776 921
1001179836 ..... 413, 421
1001179837 ..... 413, 421
1001179893 ..... 414, 422
1001179903 ..... 190, 204, 216, 239, 251
1001179904 ..... 140, 144, 149, 152, 156, 160
1001180001 ..... 413, 421
1001180004 ..... 479, 493
1001180005 ..... 481, 495
1001180006 ..... 477, 491
1001180017 ..... 274, 280, 298, 304, 821
1001180035 ..... 685, 691, 697, 703, 709
1001180056 ..... 491, 493, 495
1001180540 489
1001180541 487
1001180620 ..... 190, 204, 216, 289, 293, 313, 317, 339, 345, 367, 373
1001180797 413
1001180798 409
1001180800 417
1001180872 479
1001180873 481
1001180916 39
1001181045 ..... 807, 811, 916
1001181145 922
1001181243 ..... 414, 422
1001181324 ..... 467, 663
1001181325 120
1001181358 ..... 181, 196, 209, 825
1001181405 123
1001181430 ..... 289, 313
1001181527 71
1001181621 ..... 771, 779
1001181705 ..... 465, 659
1001181706 ..... 463, 655
1001181875 ..... 767, 775
1001181895 204
1001181913 71
1001181923 ..... 767, 771, 775, 779
1001181995 659
1001182017 ..... 659, 661
1001182018 ..... 659, 661
1001182020 659
1001182021 659
1001182138 629
1001182150 ..... 274, 280, 298, 304
1001182169 ..... 140, 144, 148, 152, 156, 160
1001182296 ..... 410, 414, 418, 422
1001182404 ..... 274, 280, 298, 304
1001182405 ..... 273, 279, 298, 304
1001182561 ..... 767, 771, 775, 779

1001182875.....140, 144, 149, 152, 156, 160
1001182877.....140, 144, 149, 152
1001182879.....140, 144, 149, 152, 156, 160
1001182997 99, 101, 103, 105, 190, 204, 216
1001183171.....485
1001183407.....923
1001183477.....410, 414, 418
1001184324.....575
1001184618.....572, 575, 580, 584, 588, 592, 596, 600
1001184626.....572, 575, 580, 584, 588, 592, 596, 600
1001184637.....406, 410
1001184644.....406, 410
1001184645.....406, 410
1001185025.....405
1001185281.....584, 588, 592, 596, 600
1001185373.....175
1001185747.....767, 771, 775, 779
1001185821....77, 79, 81, 83, 87
1001185964.....874
1001186007.....120, 873
1001186375.....543
1001186377.....545
1001186378.....547
1001186385.....533
1001186386.....531
1001186387.....529
1001186388.....557
1001186431.....625, 871
1001186432.....847, 869, 871
1001186517.....623, 625
1001186976.....922
1001187352.....406, 829
1001187382.....509
1001187383.....509
1001187508.....623
1001187522.....410, 414, 418, 422, 827
1001187674.....621
1001187681.....863
1001188196.....99, 101
1001188197.....103
1001188311.....555
1001188312.....539
1001188314.....553
1001188315.....537
1001188318.....551
1001188319.....535
1001188622.....509
1001188731.....410, 414, 418, 422, 712
1001188732.....406, 712
1001188844.....509
1001188883.....907, 922
1001188889.....623
1001188972..... 195, 243, 297, 303, 352, 358
1001189001..... 509
1001189002..... 509
1001189194..... 125
1001189882..... 893
1001190368..... 19, 21
1001190633..... 493
1001190775..... 288, 292, 340, 346, 367, 373
1001190913..... 889, 893
1001190985..... 509
1001191315..... 924
1001191394..... 923
1001191395..... 923
1001191620..... 190, 204, 216
1001191708..... 629
1001191832..... 141, 145, 149, 152, 156, 160, 171, 173, 175, 181, 196, 209, 233, 244, 259, 274, 280, 298, 304
1001192292..... 584, 592, 596, 871
1001193018..... 723, 729, 739, 745, 749, 751
1001193061..... 127
1001193216..... 127
1001193336..... 101
1001193730..... 592
1001194197..... 920
1001194198..... 920
1001194200..... 920
1001194203..... 920
1001194204..... 920
1001194365..... 751, 920
1001194424..... 923
1001194425..... 923
1001194426..... 923
1001194427..... 923
1001194428..... 923
1001195039..... 324, 330, 352, 358
1001195444..... 567, 591
1001195446..... 567
1001195699..... 289, 293, 313, 317
1001195700..... 289, 293, 313, 317
1001195714..... 289, 293, 317
1001195746..... 907
1001196012..... 922
1001196376..... 274, 280, 298, 304, 323, 329, 352, 358
1001196382..... 426, 430, 434, 442, 446, 450
1001196458..... 127, 131, 763
1001196634..... 196, 221
1001196637..... 120
1001197017..... 615, 619
1001197036..... 507
1001197039..... 685, 691, 697, 703, 709
1001197221 ... 59, 61, 63, 65
1001199314..... 633
1001200086..... 145, 148, 156, 160
1001200088..... 171, 173, 175
1001200128..... 922
1001200129..... 922
1001200130..... 922
1001200131..... 922
1001200132..... 922
1001200133..... 922
1001200134..... 922
1001200458..... 163, 167
1001200491..... 509
1001200494..... 509
1001200575..... 575, 592
1001200910..... 127, 129
1001201351..... 509
1001201891..... 580, 596
1001202450..... 140
1001202451..... 149, 161
1001202611..... 567, 595
1001202612..... 561, 579
1001202744..... 615
1001202745..... 619
1001202749..... 923
1001202830..... 169
1001202910..... 685, 691, 697, 708
1001203322..... 165
1001203510..... 924
1001203511..... 924
1001203628..... 655, 659, 663
1001203654..... 557
1001204123..... 274, 280, 298, 304, 323, 329, 352, 358
1001204481..... 922
1001204482..... 923
1001204510..... 889, 893
1001204725..... 509
1001205175..... 924
1001205750..... 137
1001205752..... 137
1001205958..... 739, 745, 749
1001206434..... 923
1001206436..... 89
1001206438..... 921
1001206476..... 757
1001206625..... 465, 657, 665
1001206916..... 101, 105
1001207004..... 131, 133
1001207302..... 131
1001207315..... 131
1001207334..... 685, 691, 697
1001207335..... 685, 691, 697, 709
1001207336..... 684, 691, 697, 709
1001207347..... 101
1001207348..... 105
1001207355.....708, 710
1001207941.....923
1001208874....77, 79, 81, 83
1001209059.....924
1001209617.....921
1001209664.....623, 625
1001209677.....755
1001209832.....755
1001209844.....339, 345, 367, 373, 385
1001210036.....924
1001210356.....691, 697, 709
1001210421.....333, 338
1001210763.....339, 367, 377
1001210764.....323
1001210765.....323, 333
1001211336.....103, 105
1001211716.....140, 144, 148, 152, 156, 160
1001211717.....141, 145, 148, 152, 156, 161
1001211794.....339, 345, 367, 373
1001211797.....339, 345, 367, 373
1001212069.....465, 661
1001212071.....661
1001212073.....661
1001212075.....661
1001212223.....450, 458
1001212257.....324, 330, 352, 358
1001212415.....916
1001212447.....661
1001212728.....171, 173, 175
1001212989.....339, 345, 367, 373
1001212993.....339, 345, 367, 373
1001213029.....422, 458
1001213060.....324, 330, 352, 358
1001213061.....324, 330, 352, 358
1001213305.....339, 345, 367, 373
1001213357.....339, 367
1001213423.....339, 367
1001213425.....339, 345, 367, 373
1001213426.....339, 345, 367, 373
1001213447.....842, 845
1001213482.....339, 345, 367, 373
1001213706.....324, 330, 352, 358, 823
1001213824.....339, 345, 367, 373
1001213882.....572, 579, 584, 588, 595, 600
1001214029.....907
1001214038.....216, 227

1001214042 ..... 210, 214
1001214138 ..... 339, 345, 367, 373
1001214159 23
1001214163 .. 61, 79, 515
1001214174 ..... 23, 27
1001214205 ..... 339, 345, 367, 373
1001214207 ..... 185, 199, 235, 247, 261, 285, 309, 333, 335, 361, 363
1001214233 ..... 339, 345, 367, 373
1001214234 ..... 339, 345, 368, 373
1001214269 ..... 368, 373
1001214276 ..... 339, 345, 368, 373
1001214277 ..... 339, 345, 368, 373
1001214278 ..... 339, 345, 368, 373
1001214307 ..... 340, 345, 368, 373
1001214316 .... 59, 61, 67
1001214355 399
1001214397 757
1001214478 924
1001214503 ..... 324, 330, 352, 358
1001214508 ..... 340, 345, 368, 374
1001214515 924
1001214546 ..... 422, 458
1001214552 924
1001214553 ..... 340, 345, 368, 374
1001214555 ..... 340, 345, 368, 374
1001214556 ..... 340, 345, 368, 374
1001214558 ..... 340, 345, 368, 374
1001214559 924
1001214560 924
1001214570 757
1001214571 757
1001214598 ..... 340, 346, 368, 374
1001214599 ..... 340, 346, 368, 374
1001214616 923
1001214664 ..... 340, 346, 368, 374
1001214694 ..... 340, 346, 368, 374
1001214729 ..... 340, 368
1001214833 922
1001214836 399
1001214841 ..... 340, 346, 368, 374
1001214862 ..... 280, 304
1001214909 421
1001214910 457
1001214975 ..... 239, 251, 265
1001215058..... 469, 471, 473, 475
1001215105..... 513, 517, 523
1001215125..... 340, 346, 368, 374
1001215181..... 922
1001215225..... 463
1001215227..... 685, 697
1001215228..... 572, 580, 584, 588, 596, 600
1001215259..... 324, 330, 352, 358
1001215378... 63, 81, 517
1001215382..... 209
1001215394..... 157, 161
1001215503..... 23
1001215504..... 23
1001215523..... 458
1001215588..... 109, 115
1001215659... 59, 77, 513
1001215728..... 109
1001215813..... 324, 330, 352, 358
1001215850..... 907
1001215865..... 922
1001215868..... 923
1001215869..... 340, 346, 368, 374
1001215872..... 559, 571
1001215873..... 559
1001215874..... 563, 583
1001215875..... 563
1001216072..... 399
1001216219..... 280, 293, 304, 317
1001216222..... 285, 292
1001216223..... 309, 316
1001216224..... 279, 285
1001216225..... 304, 309
1001216228..... 279
1001216229..... 303
1001216308..... 324, 330, 352, 358
1001216400..... 324, 330, 352, 358
1001216401..... 324, 330, 352, 358
1001216405..... 324, 330, 352, 358
1001216407..... 115, 117
1001216408..... 887, 897
1001216415..... 403
1001216416..... 403
1001216512..... 403
1001216552..... 923
1001216599..... 160
1001216630..... 501, 504, 507, 509
1001216639..... 469, 471, 473, 475
1001216652..... 117
1001216677..... 157, 160
1001216802..... 690, 710
1001216805..... 422, 458
1001216825..... 340, 346, 368, 374
1001216826..... 361, 366
1001216827..... 352, 361
1001216840..... 422
1001216841..... 351
1001217342..... 421, 457
1001217343..... 338, 344, 366, 372
1001217344..... 421, 457
1001217345..... 324, 330, 352, 358, 421, 457
1001217440..... 774, 793
1001217441..... 774, 785
1001217443..... 774
1001217444..... 921
1001217461..... 921
1001217494..... 324, 330, 338, 344, 352, 358, 366, 372
1001217676..... 465, 467, 665
1001217681..... 463, 657
1001217779..... 469, 471, 473, 475, 483, 485, 499
1001217785..... 324, 330, 351, 357
1001217904..... 893
1001217935..... 696, 710
1001217936..... 684, 710
1001218533..... 95
1001218535..... 95
1001218537..... 95
1001218927..... 887
1001218928..... 897
1001218940..... 469
1001218941..... 471
1001218942..... 473
1001218943..... 469
1001218946..... 471
1001218947..... 473
1001218978..... 920
1001218979..... 766
1001218980..... 921
1001218999..... 923
1001219000..... 471, 473, 921
1001219001..... 469, 471, 766
1001219002..... 473, 475, 921
1001219003..... 469, 471, 473, 475, 477
1001219004..... 463, 477
1001219129..... 95
1001219201..... 144
1001219202..... 156
1001219203..... 145, 157
1001219601..... 120
1001219923..... 115
1001220003..... 923
1001220155..... 923
1001220379..... 817
1001223055..... 883, 887
1001223118 97, 883, 887, 889, 891, 893, 895, 897, 899, 901, 903, 905
1001223122 ..... 426, 430, 434, 438, 442, 446, 451, 454
1001223453 ..... 883, 887, 895, 897
1001223777 ..... 144, 148, 152
1001223971 ..... 895, 897
1001224048 903
1001224049 905
1001224050 899
1001224052 891
1001224053 901
1001224889 489
1001224894 487
1001225346 757
1001225580 ..... 625, 847
1001225794 923
1001226530 757
1001226872 ..... 541, 549
1001227278 921
1001227633 621
1001227634 621
1001227985 621
1001227987 621
1001227993 491
1001227996 ..... 865, 867
1001228215 ..... 541, 549
1001228224 621
1001228225 621
1001228960 921
1001228988 ..... 635, 637, 639
1001229107 922
1001229138 631
1001229341 621
1001229795 837
1001229796 837
1001229797 ..... 324, 330, 352, 358, 837
1001230635 ..... 189, 203
1001230931 805
1001231235 924
1001231801 ..... 883, 907
1001232026 ..... 883, 887, 889, 891, 893, 895, 897, 899, 901, 903, 905
1001232164 621
1001232165 621
1001232642 627
1001232643 924
1001232650 627
1001232667 627
1001232842 ..... 196, 221
1001233047 921
1001233080 924
1001233139 19
1001233153_NOT_RELEASED 495
1001233237 922
1001233763 ..... 196, 221
1001233899 ..... 149, 152
1001234099 921
1001234295 83
1001235011 627
1001235013 627
1001235053 475

SECTION 11 - SPECIAL OPTIONS

1001235055.....475
1001235455.....261, 267
1001235461.....259, 261
1001235462.....261, 264
1001235465.....259
1001235760.....923
1001236122.....923
1001236123.....921
1001236223.....923
1001236224.....923
1001236251.....329
1001236253.....357
1001236254.....329, 335
1001236256.....335, 344
1001236257.....345, 373
1001236258.....358, 363
1001236259.....363, 372
1001236338.....907
1001236393.....345, 373, 381
1001236429.....922
1001236493.....922
1001236494.....922
1001236496.....924
1001236552.....627
1001237862.....865, 867
1001237863.....621, 865
1001237864.....621, 867
1001237865.....621, 863
1001237878.....757
1001237879.....757
1001237880.....757
1001237881.....757
1001238319.....621
1001238418.....627, 869
1001238421.....509, 924
1001238466.....767, 771, 775, 779
1001238472.....627
1001238477.....627
1001238495.....625
1001238559.....627
1001238824.....627
1001239573.....924
1001239574.....924
1001239575.....924
1001241254.....921
1001241284.....152
1001241289.....152
1001241295.....152, 169
1001241296.....153, 165
1001241299.....153
1001241333.....922
1001241342.....922
1001241397.....923
1001241965.....627
1001242589.....923
1001242639.....921
1001242842.....569
1001242843.....565
1001242847.....569, 599
1001242848.....565, 587
1001242855.....129
1001242856.....133
1001243168.....588, 600, 845
1001243183.....921
1001243184.....921
1001243331.....922
1001243697.....907
1001243698.....907
1001243895.....221
1001246433.....921
1001246434.....921
1001246860.....922
1001246867.....922
1001247073.....924
1001247800.....924
1060341...613, 615, 617, 619, 831
1060343...446, 451, 454, 458
1060379.....643, 645
1060461....789, 791, 801
1060494...410, 414, 418, 422
1060625....195, 243, 297
1060626...196, 243, 298, 304, 351, 357
1060903...613, 615, 617, 619
1060908....807, 809, 811
1060918.....609
10702077.443, 447, 451, 455, 459
10702082.443, 447, 451, 455, 459
1120552.....51
1120555.....631, 633
1271538.....503, 507
1320016....238, 250, 264
1320022...182, 196, 210, 233, 244, 259
1320043...767, 771, 775, 779
1320061.....324, 352
1320130....770, 774, 778
1320136.....503, 507
1320176.....395, 397
1320218...273, 279, 297, 303, 323, 329, 351, 357
1320220...273, 279, 297, 303, 323, 329, 351, 357
1320223...135, 137, 195, 243, 297, 303, 351, 357, 757
1320224.....503, 507
1320302....635, 637, 639
1320323...273, 279, 297, 303
1321283...323, 329, 351, 357
1321293.....107
1321647.....873
1321716...181, 188, 196, 202, 209, 214, 233, 244, 259, 273, 279, 297, 303, 324, 352, 405, 409, 413, 417, 426, 430, 434, 438, 442, 446, 451, 454
1580011...288, 292, 312, 316, 338, 344, 366, 372
1580012.....611
1580013.....924
1600387....503, 507, 917
1670603.....751
1670829...109, 111, 113, 115, 117, 571, 575, 579, 583, 587, 591, 595, 599
1670836.....489
1671092...447, 451, 454, 458
1671093.....637
1684290.....649
1700818.....907
1701499...883, 887, 889, 891, 893, 895, 897, 899, 901, 903, 905
1701500...883, 887, 889, 891, 893, 895, 897, 899, 901, 903, 905
1701504...883, 887, 889, 891, 893, 895, 897, 899, 901, 903, 905
1701505...181, 195, 209, 233, 243, 259
1701509...631, 633, 883, 887, 889, 891, 893, 895, 897, 899, 901, 903, 905
1701518....889, 893, 913
1701529...883, 887, 889, 891, 893, 895, 897, 899, 901, 903, 905
1701542...273, 279, 297, 303, 323, 329, 351, 357
1701543...273, 279, 297, 303, 323, 329, 351, 357
1701691...140, 144, 149, 152, 156, 160
1702300...883, 887, 889, 891, 893, 895, 897, 899, 901, 903, 905
1702565...571, 575, 579, 583, 587, 591, 595, 599
1702566...571, 575, 579, 583, 587, 591, 595, 599
1702567...571, 575, 579, 583, 587, 591, 595, 599
1702740.....49, 51
1702773.....893, 907
1702774.....907
1702860.....907
1702868...637, 639, 883, 887, 922
1702938...613, 615, 617, 619
1702941...195, 243, 297, 303, 351, 357
1702942...195, 243, 297, 303, 351, 357
1702943...195, 243, 297, 303, 351, 357
1702944...195, 243, 297, 303, 351, 357
1703067.....47
1703162...188, 202, 214, 238, 250, 264, 288, 292, 312, 316, 338, 344, 366, 372
1703450.....909
1703683.....643
1703687....883, 887, 889, 891, 893, 895, 897, 899, 901, 903, 905
1703774.....907
1703797.....883, 887
1703804.....883, 887
1703805.....883, 887
1703923.....905
1703924.....895, 897
1703925.....899
1703926.....901
1703927.....903
1703928.....891
1703935.....905
1703936.....895, 897
1703937.....899
1703938.....901
1703939.....903
1703940.....891
1703941.....905
1703942.....895, 897
1703943.....899
1703944.....901
1703945.....903
1703947.....905
1703948.....895, 897
1703949.....899
1703950.....901
1703951.....903
1703952.....891
1703953.....883, 887
1703980.....901
1703981.....903
1703982.....899
1703983.....905
1703984.....895, 897
1703985.....891
1704000.....895, 897
1704001.....905
1704002.....891
1704007.....905
1704008.....891
1704260....571, 575, 579, 583, 587, 591, 595, 599
1704271.....907
1704277....883, 884, 887, 889, 891, 893, 895, 897, 899, 901, 903, 905
1704412....883, 887, 889, 891, 893, 895, 897, 899, 901, 903, 905
1704455.....913
1704456.....913
1704457.....911
1704482.....909
1704576.....911
1704577.....911
1704578.....909
1704752.....907
1704885....883, 887, 889, 891, 893, 895, 897, 899, 901, 903, 905

1704972 ... 195, 233, 243, 907
1705014 557
1705084 893
1705305 .... 635, 637, 639
1705325 ..... 721, 723
1705336 ..... 883, 887
1705344 901
1705345 903
1705347 ..... 895, 897
1705349 891
1705351 ..... 883, 887
1705355 ..... 635, 637
1705358 .... 631, 633, 922
1705363 51
1705364 51
1705374 .... 429, 433, 437
1705375 ... 447, 451, 455, 459, 637, 639
1705387 ... 429, 433, 437, 447, 451, 455, 459
1705426 901
1705427 903
1705429 ..... 895, 897
1705430 899
1705460 ... 443, 447, 451, 455, 459
1705461 443
1705466 .... 635, 637, 639
1705489 ..... 425, 443
1705514 ... 883, 887, 895, 897
1705822 ..... 889, 893
1705828 ..... 889, 893
1705903 891
1705905 891
1705910 905
1705917 905
1705961 ..... 889, 893
1705968 899
1705969 903
1706059 907
1706060 ..... 209, 907
1706061 907
1706062 907
1706063 907
1706064 907
1706098 907
1706385 557
1706510 645
1706941 .... 883, 895, 905
1787217 137
2030010 .... 635, 637, 639
2060025 ... 238, 250, 264, 289, 293, 313, 317
2080040 ... 425, 529, 531, 533, 535, 537, 539, 753, 755
2110810 ... 684, 690, 696, 702, 708
2110812 ... 684, 690, 696, 702, 708
2151212 ... 684, 690, 696, 702, 708
2160001 89
2180348 ... 233, 243, 259, 273, 279, 298, 303, 323, 329, 351, 357
2180387 ... 273, 279, 297, 303, 323, 329, 351, 357
2180389 ... 273, 279, 297, 303, 323, 329, 351, 357
2180504 ... 273, 279, 297, 303, 323, 329, 340, 346, 351, 357, 368, 374
2180736 ... 655, 657, 663, 665
2180832 .... 181, 195, 209
2180876 ... 181, 195, 209, 233, 243, 259
2180877 ... 288, 292, 312, 316
2220064 ... 340, 346, 368, 374
2220237 677
2220238 ..... 71, 684, 690, 697, 708
2220261 ... 338, 344, 366, 372
2220290 ... 273, 279, 297, 303, 323, 329, 351, 357
2220315 ... 188, 202, 214, 238, 250, 264, 288, 292, 312, 316, 338, 344, 366, 372
2220371 .... 690, 702, 708
2220372 ..... 71, 684, 690, 696, 702, 708
2220373 ... 684, 690, 696, 702, 708
2220374 ... 684, 690, 696, 702, 708
2220375 ... 684, 690, 696, 702, 708
2220377 ... 684, 690, 696, 702, 708
2220408 702
2220415 ... 690, 696, 702, 708
2220435 ... 684, 690, 696, 709
2220451 ... 238, 250, 264, 684, 690, 696, 702, 708
2220465 ... 684, 690, 696, 702, 708
2220466 ... 684, 690, 696, 702, 708
2220468 ... 684, 690, 696, 702, 708
2220472 ... 684, 690, 696, 702, 708
2220497 ... 684, 690, 696, 708
2220500 .... 696, 702, 708
2220501 ... 684, 690, 696, 702, 708
2220577 ... 684, 690, 696, 702, 708
2220579 71
2220582 ... 684, 690, 696, 702, 708
2220596 .... 684, 690, 696, 702, 708
2220600 .... 684, 690, 696, 708
2220603 .... 684, 690, 696, 702, 708
2220628 .... 684, 690, 696, 702, 708
2220726 702
2220811 .... 684, 690, 696, 702, 708
2220883 .... 35, 37, 67, 69, 649, 655, 657, 659, 661, 663, 665, 667, 675, 685, 691, 697, 703, 708
2220885 ..... 69, 673, 675
2220886 35, 37, 661, 667, 673, 677
2220887 661
2220888 37
2220906 .... 684, 690, 696, 702, 708
2220923 .... 685, 691, 697, 703, 708
2220940 .... 690, 696, 702, 708
2220946 .... 684, 690, 696, 702, 708
2220947 .... 684, 690, 696, 702, 708
2220998 .... 685, 691, 697, 703, 708
2221033 .... 684, 690, 696, 702, 708
2221040 ..... 696, 702, 708
2221052 71
2221086 ..... 69, 525, 685, 691, 697, 703, 708
2230025 .... 684, 690, 696, 702, 708
2300004 .... 188, 214, 288, 292, 340, 346
2300014 923
2300016 ..... 23, 25, 923
2300019 923
2300027 923
2300029 923
2300039 923
2300041 .... 202, 312, 316, 366, 372
2400060 .... 196, 221, 827, 829
2400066 827
2400082 837
2410014 557
2420202 ..... 503, 507
2420203 .... 409, 414, 417, 422
24431386 .. 324, 330, 352, 358
2460048 ..... 441, 445, 453
2460051 417
2460055 409
2540020 .... 127, 129, 131, 133
2540038 ..... 503, 507
2560136 ... 571, 575, 579, 583, 587, 591, 595, 599
2560187 ... 163, 165, 167, 169
2580024 ... 195, 243, 298, 303, 351, 357
2580050 .... 195, 243, 297
2580062 250
2580063 ..... 313, 317
2600281 ... 529, 531, 533, 535, 537, 539
2720015 .... 188, 202, 214
2720058 ... 181, 195, 209, 233, 243, 259, 340, 346, 368, 374
2720149 ... 273, 279, 297, 303
2720271 ... 288, 292, 312, 316, 340, 346, 368, 374
2720340 .... 188, 202, 214
2720398 .... 238, 251, 264
2720447 .... 238, 251, 264
2720615 ... 340, 346, 368, 374
2720644 ... 338, 344, 366, 372
2752503 .... 684, 690, 696
2752504 ... 684, 690, 696, 709
2752519 ... 684, 690, 696, 708
2780267 ..... 23, 25, 29
2780268 ..... 25, 33
2820030 839
2820031 ... 405, 409, 413, 417, 421, 425, 429, 433, 437, 441, 445, 449, 453, 457, 766, 770, 774, 778, 797, 799
2820035 221
2820118 785
2820247 ..... 865, 867
2860030 ... 109, 111, 113, 115, 117, 916
2900756 69
2900770 ... 651, 673, 675, 677
2900792 653
2901443 924
2902065 ... 188, 202, 214, 238, 251, 264, 319
2902217 ..... 635, 637
2902266 649
2902443 ..... 815, 817
2902549 ... 721, 727, 731, 733, 735, 741, 747, 753, 807
2920028 ... 583, 587, 592, 595, 599, 613, 615, 617, 619
2920029 ... 583, 587, 592, 595, 599, 613, 615, 617, 619
2920129 504
2940074 ... 529, 531, 533, 535, 537, 539, 916

SECTION 11 - SPECIAL OPTIONS

2940173....163, 165, 167, 169
3020008.....23, 25
3020021.....319
3020037....185, 199, 209, 235, 247, 261, 283, 285, 307, 309
3020043.....659, 675
3020044.....250
3160348.....25, 37
3160351.....23, 35
3200406....288, 292, 312, 316
3250872.....909
3251242....425, 729, 739, 745, 749, 751, 889
3251243....409, 413, 417, 421, 429, 433, 437, 883, 887, 891, 895, 897, 905
3251813....883, 887, 891, 895, 897, 905
3252347.....883, 887
3252507....725, 727, 731, 733, 735, 737, 741, 743, 747
3252692.....913
3252693.....911
3252764....441, 446, 449, 453, 457
3271805.....557
3272605.....503, 507
3290405....107, 273, 279, 297, 303, 323, 329, 351, 357, 721, 723, 727, 729, 731, 733, 735, 737, 739, 741, 743, 745, 747, 749, 751, 753, 755, 766, 770, 774, 778
3290501.....135
3290505....123, 127, 131, 135, 273, 279, 297, 303, 405, 425, 429, 433, 437, 442, 446, 449, 453, 457
3290601....120, 135, 137, 163, 165, 167, 169
3290605....59, 61, 63, 65, 107, 120, 127, 129, 131, 133, 135, 137, 181, 188, 195, 202, 209, 214, 233, 238, 243, 250, 259, 264, 273, 279, 297, 303, 323, 329, 351, 357, 401, 403, 405, 409, 413, 417, 421, 425, 429, 433, 437, 442, 446, 449, 453, 457, 753, 755, 766, 770,774, 778
3290606....543, 545, 547, 551, 553, 555
3290607....288, 292, 312, 316, 338, 344, 366, 372
3290801... 233, 243, 259, 323, 329, 338, 344, 351, 357, 366, 372
3290805... 59, 61, 63, 65, 71, 99, 101, 103, 105, 137, 140, 144, 148, 152, 156, 160, 171, 173, 175, 188, 202, 210, 214, 238, 250, 264, 273, 279, 288, 292, 297, 303, 312, 316, 323, 329, 338, 344, 351, 357, 366, 372, 401, 403, 405, 409, 413, 417, 421, 425, 429, 433, 437, 442, 446, 449, 454, 457, 483, 485, 757, 766, 770, 774, 778
3291001... 188, 202, 214, 288, 292, 312, 316, 338, 344, 366, 372, 509
3291005... 135, 137, 140, 144, 148, 152, 156, 160, 163, 165, 167, 169, 171, 173, 175, 181, 188, 195, 202, 209, 214, 233, 238, 243, 250, 259, 264, 273, 279, 288, 292, 297, 303, 312, 316, 323, 329, 338, 344, 351, 357, 366, 372, 409, 413, 417, 421, 469, 471, 473, 475, 477, 479, 481, 483, 485, 487, 489, 491, 493, 495, 509, 757, 766, 770, 774, 778
3291007... 273, 279, 297, 303
3291201... 338, 344, 366, 372, 413, 421, 425, 429, 433, 442, 446, 449, 457, 509
3291205... 469, 471, 473, 475, 477, 479, 481, 491, 493, 495, 501, 509
3300106..... 23, 25
3300151... 541, 543, 545, 547, 549, 551, 553, 555, 635, 637, 639
3300220... 135, 137, 189, 203, 215, 238, 250, 264
3300243..... 501, 509
3300353... 571, 575, 579, 583, 587, 591, 595, 599
3300396... 430, 434, 438, 442, 447, 451, 454, 458
3300408... 109, 111, 113, 115, 117, 571, 575, 579, 583, 587, 591, 595, 599
3300430.... 623, 625, 629
3310401.... 188, 202, 214
3311001... 219, 409, 413, 417, 421, 426, 430, 434, 438, 442, 447, 451, 454, 458
3311005... 125, 127, 129, 131, 133, 635, 637, 639
3311401..... 613, 615
3311405... 503, 507, 559, 561, 563, 565, 567, 569, 617, 619, 627, 721, 723, 727, 729, 731, 733, 735, 737, 739, 741, 743, 745, 747, 749, 751, 883, 887, 889, 891, 893, 895, 897, 899, 901, 903, 905
3311501... 140, 144, 148, 152, 156, 160, 613, 615, 617, 619
3311505..... 643, 645
3311601... 140, 144, 149, 152, 156, 160, 572, 575, 580, 584, 588, 592, 596, 600, 627
3311605... 219, 273, 297, 557, 559, 561, 563, 565, 567, 569, 635, 637, 639
3311705... 405, 409, 413, 421
3311801..... 23, 25
3311805... 501, 503, 507, 509
3312005..... 73, 503, 507, 631, 633
3321001... 135, 137, 189, 203, 215, 238, 250, 264
3331211... 288, 292, 312, 316, 405, 409, 413, 417, 425, 429, 433, 437, 442, 446, 449, 454, 457
3331215... 188, 202, 214, 238, 250, 264
3340860..... 483, 485
3340956..... 631, 633
3380434... 559, 561, 563, 565, 567, 569
3420352..... 73
3420372..... 73
3422532... 181, 196, 209, 233, 243, 259, 273, 279, 298, 304, 323, 329, 351, 357
3422661..... 643, 645
3422755... 469, 471, 473, 475, 479, 481
3422790... 469, 471, 473, 475
3422791..... 483, 485
3422792... 469, 471, 473, 475, 479, 481
3422793... 469, 471, 473, 475, 477, 479, 481
3422806.... 477, 479, 481
3422848..... 21
3423038.... 477, 479, 481
3423105....469, 471, 473, 475
3423304.....19, 21
3430616....572, 580, 584, 588, 596, 600
3460334.....631, 633
3470003....572, 575, 580, 584, 588, 592, 596, 600
3480227.....675
3520026.....571, 576, 579
3520027.....571, 576, 579
3520028....409, 414, 417, 422
3520033.....579, 595
3520035.....571, 579
3520054....190, 204, 216, 238, 250, 264, 571, 575, 579, 583, 587, 591, 595, 599
3520072....529, 531, 533, 541, 543, 545, 547, 549, 557
3520182.....629
3520189.....442
3520192.....426, 442
3520198....529, 531, 533, 541, 543, 545, 547, 549
3572551.....483, 485
3573400.....635, 637, 639
3573642.....635, 637, 639
3575705....613, 615, 617, 619
3577121.....635, 637, 639
3580158.....405, 409
3580276.....409
3580312.....417, 437, 454
3580314.....437, 454
3580317....425, 429, 433, 442, 446, 449, 457
3580318....429, 433, 446, 449, 457
3580319.....425, 442
3580320....413, 425, 429, 433, 442, 446, 449
3580324.....417
3580348.....417, 437, 454
3600242....185, 199, 235, 247, 283, 285, 307, 309, 333, 361, 387
3740067....135, 137, 238, 250, 264, 916
3740080....405, 410, 413, 417, 421
3740086.....869, 916
3740140....238, 250, 264, 916
3760115.....489
3760170.....73
3760351.....487
3790012....274, 280, 298, 304, 323, 329, 351, 357, 571, 575, 579, 583, 587, 591, 595, 599
3790152....185, 199, 235, 247, 261, 283, 285, 307, 309, 333, 335, 361, 363

3820001 ... 883, 887, 889, 891, 893, 895, 897, 899, 901, 903, 905, 909, 911, 913
3820020 ... 529, 531, 533, 535, 537, 539
3820032 ..... 135, 137
3841143 19, 21, 181, 195, 233, 243, 259, 273, 279, 297, 303, 323, 329, 351, 357, 469, 471, 473, 475, 477, 479, 481, 509
3841203 ... 469, 471, 473, 475, 477, 479, 481, 491, 493, 495
3841258 ..... 17, 491, 493, 495
3841287 .... 491, 493, 495
3841340 ... 766, 770, 774, 778
3900054 557
3900267 ... 426, 430, 435, 438
3900283 ..... 503, 507
3900295 21
3900300 ... 426, 430, 434, 438
3900349 ... 571, 580, 583, 587, 596, 599
3900351 ..... 487, 489
3910408 .... 188, 202, 214
3910606 ... 429, 433, 437, 446, 449, 454, 457
3910610 .... 717, 719, 725
3910804 ... 109, 111, 113, 115, 117
3911010 ... 127, 129, 131, 133
3911012 125
3911018 ... 109, 111, 113, 115, 117, 571, 575, 579, 583, 587, 591, 595, 599
3931408 ..... 623, 625
3931424 623
3931512 .... 188, 202, 214
3931618 ... 185, 199, 235, 247, 261, 285, 309, 333, 335, 361, 363
3931620 ... 185, 199, 235, 247, 283, 285, 307, 309, 333, 361
3931628 .... 413, 433, 449
3960407 .... 238, 250, 264
3960422 ... 429, 433, 437, 446, 449, 454, 457, 717, 719, 725
3960526 ..... 23, 25
4010405 ..... 753, 755
4010417 ... 766, 770, 774, 778
4010418 ... 766, 770, 774, 778
4010514 ..... 127, 131
4010618 ... 543, 545, 547, 551, 553, 555
4031505 621
4031511 ... 766, 770, 774, 778
4031512 107
4031516 627
4031607 405
4031711 ..... 338, 366
4031914 .... 188, 202, 214
4032013 .... 413, 433, 449
4032014 .... 413, 433, 449
4032015 ... 425, 429, 442, 446
4060092 725
4060802 ... 405, 410, 413, 417, 421, 425, 429, 433, 437, 442, 446, 449, 454, 457
4060805 ... 188, 202, 214, 238, 251, 264, 288, 292, 312, 316
4060806 95
4060808 ... 766, 770, 774, 778
4060906 ... 109, 111, 113, 115, 117
4061054 ..... 503, 507
4070450 73
4070560 73
4070561 73
4070897 ..... 487, 489
4070898 ..... 487, 489
4071101 17
4160182 ... 140, 144, 148, 152, 156, 160
4240032 ... 123, 127, 129, 131, 133
4240033 ... 503, 507, 621, 623, 625, 627
4240099 ... 188, 202, 214, 221, 238, 250, 264, 288, 292, 312, 316, 323, 329, 338, 344, 351, 357, 366, 372, 405, 410, 413, 418, 421, 425, 429, 433, 437, 442, 446, 449, 454, 457, 583, 587, 591, 595, 599, 613, 615, 635, 637
4240149 ..... 631, 633
4240156 ... 766, 770, 774, 778
4341415 ..... 631, 633
4360057 ... 613, 615, 617, 619, 917
4360070 ... 430, 434, 438, 442, 447, 451, 454, 458
4360328 ... 109, 111, 113, 115, 117, 916
4360336 ... 405, 410, 413, 418, 421, 425, 429, 433, 437, 442, 446, 449, 454, 457
4360387 ... 113, 571, 575, 579, 583, 587, 591, 595, 599, 613, 615, 617, 619, 916, 917
4360407 .... 571, 575, 579, 583, 587, 591, 595, 599, 916
4360436 ..... 99, 101, 103, 105
4360469 .... 109, 111, 113, 115, 117
4360475 .... 109, 111, 113, 115, 117, 571, 575, 579, 583, 587, 591, 595, 599, 916
4360476 .... 109, 111, 113, 115, 117, 571, 576, 579, 583, 587, 591, 595, 599, 916
4360542 .... 409, 414, 417, 422
4400275 .... 273, 279, 297, 303
4400420 .... 273, 279, 297, 303
4420014 ..... 631, 633
4420037 ..... 635, 637, 639
4420051 .... 907, 909, 911, 913
4420060 405
4420062 ..... 643, 645
4420066 ..... 631, 633
4420068 .... 613, 615, 617, 619
4460016 ..... 841, 845
4460027 .... 409, 414, 417, 422
4460042 ..... 823, 825, 874
4460043 ..... 221, 817
4460049 .... 613, 615, 617, 619
4460071 .... 429, 433, 437, 446, 449, 454, 457, 609, 717, 719, 725
4460125 725
4460134 .... 410, 414, 418, 422, 717
4460138 .... 410, 414, 418, 422
4460183 ..... 841, 845
4460190 .... 409, 414, 417, 422
4460205 ..... 717, 719
4460225 .... 442, 446, 449, 454, 457, 759, 831, 835, 841, 845
4460226 .... 503, 603, 606, 609, 615, 619, 835, 841, 845, 871
4460227 ..... 841, 845
4460233 725
4460234 .... 123, 571, 575, 579, 583, 587, 591, 595, 599, 613, 615
4460247 ..... 817, 873
4460259 .... 833, 841, 845, 874
4460260 .... 833, 841, 845, 874
4460265 ..... 603, 606, 759
4460267 ..... 99, 101, 103, 105, 759, 841, 845, 874
4460268 ... 409, 414, 417, 422, 759, 831, 833, 877
4460313 ..... 815, 821
4460315 .... 717, 719, 725
4460320 ..... 99, 101, 103, 105
4460321 ... 409, 414, 417, 422
4460346 ... 429, 433, 437, 446, 449, 454, 457, 717, 719
4460384 751
4460418 .... 835, 841, 845
4460419 .... 835, 841, 845
4460424 877
4460425 ... 426, 430, 434, 438, 443, 447, 451, 454, 458, 613, 615, 617, 619
4460426 ... 430, 434, 438, 443, 447, 451, 454, 458
4460428 ... 507, 509, 571, 575, 579, 583, 587, 591, 595, 599
4460434 ..... 841, 845
4460458 873
4460464 ... 107, 123, 609, 761, 763, 797, 799, 805, 813, 825, 827, 829, 841, 845, 847, 869, 873, 877, 879
4460465 ... 503, 759, 761, 763, 781, 783, 785, 787, 805, 813, 815, 817, 818, 821, 823, 831, 839, 841, 845, 847, 871, 873, 874, 877, 879
4460466 ... 274, 280, 298, 304, 324, 330, 352, 358, 503, 621, 761, 767, 771, 775, 779, 781, 783, 785, 787, 797, 799, 805, 815, 817, 818, 821, 823, 827, 829, 839, 841, 845, 847, 863, 869, 873, 874, 877, 879
4460467 924
4460470 ... 571, 575, 579, 583, 587, 591, 595, 599
4460471 ... 571, 575, 579, 583, 587, 591, 595, 599
4460473 ... 766, 770, 774, 778, 781, 783, 785, 787
4460488 ... 127, 129, 131, 133
4460496 120
4460497 120
4460508 .... 621, 797, 799
4460509 ... 781, 783, 785, 787, 873
4460510 924
4460518 761
4460536 120

4460539.....877
4460662....735, 737, 741, 743, 747, 751
4460693.....821, 823
4460701.....725
4460703.....817
4460705....409, 414, 417, 422
4460708.....845
4460709....715, 721, 727, 731, 733, 735, 737, 741, 743, 747
4460710....715, 721, 727, 731, 733, 735, 737, 741, 743, 747
4460722.....221
4460742.....873
4460743.....873
4460754.....877
4460761....503, 841, 845, 874
4460806.....739, 745, 874
4460807.....831
4460808.....831
4460836....503, 839, 873, 874
4460837.....873, 874
4460865....766, 770, 774, 778, 781, 783, 785, 787, 873
4460866....766, 770, 774, 778, 797, 799, 841, 845
4460871....835, 841, 845, 873, 874, 877
4460872.....877
4460873.....841, 845, 874
4460874.....841, 845, 873
4460875.....841, 845, 877
4460876.....835
4460878.....874
4460879.....841, 845
4460884....805, 817, 847, 871, 873, 874
4460887.....841, 845, 874
4460891....759, 761, 763, 805, 813, 817, 825, 874, 877, 879
4460894....815, 818, 821, 823, 845, 873, 879
4460897....123, 125, 127, 129, 131, 133, 763, 825
4460899....805, 813, 847, 863, 869, 873, 877, 879
4460905....835, 841, 845, 873, 874, 877
4460906.....827
4460910.....867
4460911.....863
4460928.....761
4460930....274, 280, 298, 304, 324, 330, 352, 358, 815, 818
4460931.....873
4460932.....817, 825
4460933....503, 761, 839, 841, 845, 874
4460941.....825, 863
4460942..... 621, 825
4460943... 120, 125, 127, 129, 131, 133, 863, 873
4460944.... 817, 839, 873
4460956..... 807, 811
4460957..... 807, 811
4460961... 409, 414, 417, 422
4460962..... 637
4460963... 447, 451, 454, 459
4460967..... 873
4460968... 405, 721, 727, 731, 733, 735, 737, 741, 743, 747
4460970..... 841, 845
4460977..... 837
4461005..... 815
4461006..... 823
4461008..... 815, 817
4461052..... 815
4461054..... 825
4461060..... 825
4461070..... 761, 817
4461071..... 815, 817
4461072..... 815, 817
4461073..... 815, 817
4461074..... 815, 817
4461077..... 863, 869
4461095.... 761, 815, 817
4461109..... 821, 823
4461111..... 821, 823
4461113..... 823
4461121..... 821, 823
4461122..... 821, 823
4461123..... 823
4461124..... 821, 823
4461196..... 849
4461198..... 849
4461199..... 851
4461201..... 851
4461202..... 853, 857
4461205..... 855, 859
4461222..... 823
4461244..... 853
4461245..... 855
4461246..... 861
4461249..... 861
4520216..... 41
4520217..... 49, 51, 53
4520240..... 43
4520262..... 47
4520608..... 55
4530028.... 635, 637, 641
4568735.... 418, 437, 454
4640113..... 47, 49, 51
4640261..... 71
4640509..... 653
4640751.... 188, 202, 214
4640771.... 673, 675, 677
4640858..... 649
4640952... 288, 292, 312, 316
4641122.... 41, 43, 55, 57
4641155.... 59, 61, 63, 65
4641390... 655, 657, 659, 661, 663, 665, 667
4710400.... 188, 202, 214
4711000... 125, 127, 129, 131, 133, 219, 426, 430, 434, 438, 443, 447, 451, 455, 459
4711400... 163, 165, 167, 169, 503, 507, 541, 543, 545, 547, 549, 551, 553, 555, 623, 625, 627, 629, 721, 723, 727, 729, 731, 733, 735, 737, 739, 741, 743, 745, 747, 749, 751
4711500..... 71, 135, 137, 140, 144, 148, 152, 156, 160, 188, 202, 214, 575, 592, 766, 770, 774, 778
4711600... 219, 425, 429, 433, 442, 446, 449, 503, 507, 572, 580, 584, 588, 596, 600
4711700... 405, 410, 413, 418, 421
4711800.... 437, 454, 557
4712000..... 631, 633
4712600..... 125
4740086..... 19, 21
4740155..... 21
4740158..... 17
4740229..... 17
4740274... 288, 292, 312, 316
4740362... 559, 561, 563, 565, 567, 569
4740491..... 21
4750800..... 771
4751000... 410, 413, 418, 421, 635, 637, 639
4751400... 503, 507, 565, 569, 571, 575, 579, 583, 587, 591, 595, 599, 611, 613, 615, 617, 619, 629, 635, 637, 639, 721, 727, 731, 733, 735, 737, 741, 743, 747, 883, 887, 889, 891, 893, 895, 897, 899, 901, 903, 905
4751500... 405, 410, 413, 418, 421, 613, 615, 617, 619, 643, 645
4751600... 559, 561, 563, 565, 567, 569, 635, 637, 639
4751800... 557, 613, 615, 617, 619
4752000..... 73
4760600.... 717, 719, 725
4761000... 135, 137, 189, 203, 215, 238, 250, 264
4761400..... 611
4811400... 107, 721, 723, 727, 729, 731, 733, 735, 737, 739, 741, 743, 745, 747, 749, 751, 766, 770, 774, 778
4811600....123, 135, 405, 425, 429, 433, 437, 442, 446, 449, 454, 457
4811602.....127, 131
4811700....107, 120, 127, 129, 131, 133, 135, 137, 163, 165, 167, 169, 181, 188, 195, 202, 209, 214, 233, 238, 243, 250, 259, 264, 273, 279, 288, 292, 297, 303, 312, 316, 323, 329, 338, 344, 351, 357, 366, 372, 405, 410, 413, 418, 421, 425, 429, 433, 437, 442, 446, 449, 454, 457, 543, 545, 547, 551, 553, 555, 753, 755, 767, 771, 775, 779
4811702....120, 135, 137, 161, 190, 204, 210, 216, 274, 280, 289, 298, 304, 313, 323, 329, 338, 344, 351, 357, 366, 372, 401
4811900....59, 61, 63, 65, 99, 101, 103, 105, 109, 111, 113, 115, 117, 137, 140, 144, 148, 152, 156, 160, 171, 173, 175, 181, 188, 196, 202, 209, 214, 233, 238, 244, 250, 259, 264, 273, 279, 288, 292, 297, 303, 312, 316, 323, 329, 338, 344, 351, 357, 366, 372, 405, 410, 413, 418, 421, 425, 429, 433, 437, 442, 446, 449, 454, 457, 757
4811902....156, 274, 280, 298, 304, 338, 344, 366, 372, 483, 485, 487, 489, 766, 770, 774, 778
4812000....77, 79, 81, 83, 107, 135, 137, 140, 144, 148, 152, 156, 160, 165, 169, 171, 173, 175, 181, 188, 195, 202, 209, 214, 233, 238, 243, 250, 259, 264, 273, 279, 288, 292, 297, 303, 312, 316, 323, 329, 338, 344, 351, 357, 366, 372, 405, 410, 413, 418, 421, 434,451, 469, 471, 473, 475, 477, 479, 481, 487, 489, 491, 493, 495,

509, 757, 766, 770, 774, 778
4812002 ..... 99, 101, 103, 105, 107, 140, 144, 148, 152, 156, 160, 274, 280, 298, 304, 323, 329, 351, 357
4812100 ... 140, 144, 148, 152, 156, 160, 181, 188, 195, 202, 209, 214, 324, 330, 351, 357, 425, 429, 442, 446, 491, 493, 495, 509
4812102 ..... 99, 101, 103, 105, 140, 144, 148, 152, 156, 160
4812200 ... 188, 202, 214, 238, 250, 264, 324, 330, 338, 352, 358, 366, 405, 410, 413, 422, 425, 429, 433, 442, 446, 449, 458
4812300 97
4845582 ..... 643, 645
4846370 ..... 613, 615
4846573 .... 501, 503, 507
4846627 .... 635, 637, 639
4846689 485
4860179 ..... 49, 51, 53
4860237 47
4871700 ... 425, 429, 433, 442, 446, 449
4891600 ... 185, 199, 235, 247, 261, 283, 285, 307, 309, 333, 335, 361, 363, 418, 437, 454, 501, 503, 507, 509
4891800 23, 25, 185, 199, 210, 235, 247, 261, 283, 285, 307, 309, 333, 335, 361, 363, 501, 503, 507, 509
4892000 23, 25, 503, 507
4892600 ... 501, 503, 507, 509
4920385 ... 288, 292, 312, 316
4920463 803
4922641 833
4922705 503
4922869 503
4922925 ... 442, 446, 449, 454, 457
4923451 .... 239, 250, 265
4923463 ..... 793, 795
4933218 .... 613, 617, 712
5240800 ... 156, 161, 273, 279, 297, 303, 323, 329, 338, 344, 351, 357, 366, 372
5241200 ... 17, 19, 21, 71, 89, 189, 202, 214, 238, 250, 264, 288, 292, 312, 316, 338, 344, 367, 372, 405, 410, 413, 418, 421, 425, 429, 433, 437, 442, 446, 450, 454, 458, 487, 489, 501, 509
5241400 ... 338, 344, 366, 372
5241600 ..... 21, 89
5250605 ... 289, 293, 313, 317, 338, 344, 367, 372
5250608 120
5250808 ... 426, 430, 434, 438, 442, 446, 451, 454
5250810 ... 109, 111, 113, 115, 117, 190, 204, 216, 426, 430, 434, 438, 442, 446, 451, 454, 513, 515, 517, 519
5250812 ..... 95, 767, 771, 775, 779
5251008 509
5251009 ..... 487, 489
5251010 ... 59, 61, 63, 65, 77, 79, 81, 83, 274, 280, 297, 303, 477, 487, 489, 513, 515, 517, 519
5251012 17, 39, 487, 489
5251014 ... 140, 144, 148, 152, 156, 160, 766, 770, 774, 778
5251016 509
5251215 ..... 23, 181, 195, 209, 233, 243, 259, 273, 279, 297, 303, 323, 329, 351, 357
5260800 ..... 95, 109, 111, 113, 115, 117, 426, 430, 434, 438, 442, 446, 451, 454
5261018 ... 274, 280, 298, 303
5261200 ... 181, 195, 209, 233, 243, 259, 273, 279, 297, 303, 323, 329, 351, 357
5271809 ... 288, 292, 312, 316, 339, 367
5272114 89
5281920 ... 766, 770, 774, 778
70000088 91
70000089 91
70000100 521
70000123 405
70000342 ..... 497, 499
70000345 . 225, 229, 254, 268
70000619 . 441, 445, 449, 453, 457
70000781 ..... 67, 69
70000787 ..... 254, 268
70000793 319
70000797 ..... 35, 37
70000800 ..... 253, 267
70000851 ..... 254, 268
70000863 . 441, 445, 450, 453, 458
70000865 93
70000912 ..... 253, 267
70000913 ..... 253, 267
70000914 ..... 253, 267
70000915 ..... 253, 267
70000916 ..... 253, 267
70000917 ..... 253, 267
70000918 ..... 253, 267
70000919 ..... 254, 268
70000931 ..... 254, 268
70001002 ..... 253, 267
70001100 .. 441, 445, 450, 453, 458
70001181 ..... 253, 267
70001349 ..... 29, 33
70001384 .. 441, 445, 450, 453, 458
70001423 ..... 253, 267
70001435 ..... 254, 268
70001498 ..... 254, 268
70001654 ..... 253, 267
70001655 ..... 253, 267
70001696 .. 441, 445, 450, 453
70001844 ..... 254, 268
70001850 ..... 253, 267
70001866 ..... 254, 268
70001868 ..... 254, 268
70001870 .. 223, 227, 253, 267
70001871 ..... 254, 268
70001872 ..... 254, 268
70001953 ... 441, 445, 453
70001966 .. 426, 430, 434, 437, 441, 445, 450, 453, 458
70001973 .. 441, 445, 450, 453, 458
70001974 .. 441, 445, 450, 453, 458
7000206 ..... 29, 33
70002063 69
70002088 ... 441, 445, 453
70002112 ..... 101, 105
70002206 91
70002207 91
70002209 69
70002234 ..... 254, 268
70002257 390
7000229 ..... 29, 33
70002291 ..... 450, 458
70002297 .. 441, 445, 450, 453, 458
7000230 ..... 29, 33
70002316 ..... 377, 381
70002318 ..... 377, 381
7000232 ..... 29, 33
70002326 ..... 377, 381
70002335 653
70002371 653
70002373 653
70002386 67, 69, 85, 465, 655, 657, 663, 665, 667, 916
70002390 67
70002401 ... 465, 655, 663
70002413 651
7000246 ..... 29, 33
70002460 . 441, 445, 450, 453, 458
7000248 ..... 29, 33
7000253 ..... 29, 33
7000257 ..... 29, 33
7000258 ..... 29, 33
7000261 ..... 29, 33
7000262 ..... 29, 33
7000263 ..... 29, 33
70002649 93
70002651 93
70002718 . 223, 227, 253, 267
70002838 ... 99, 101, 103, 105, 916
70002842 649
70002895 ..... 313, 917
70002902 609
70002903 609
70002904 609
70002905 609
70002962 69
70003463 .. 253, 267, 916
70003464 ..... 253, 267
70003468 ..... 254, 268
70003469 ..... 254, 268
70003472 ..... 253, 267
70003473 ..... 253, 267
70003475 ..... 253, 267
70003479 ..... 253, 267
70003480 ..... 253, 267
70003481 ..... 253, 267
70003612 87
70003614 ... 99, 101, 103, 105, 916
70003631 . 441, 445, 450, 453, 458
70003708 . 426, 430, 434, 437, 441, 445, 450, 453, 458
70003709 . 426, 430, 434, 437, 441, 445, 450, 453, 458
70003783 . 189, 203, 215, 239, 251, 265, 916
70003788 ... 85, 465, 655, 657, 663, 665, 916
70003837 ..... 651, 669
70003838 ..... 651, 669
70003931 ..... 254, 268
70003932 ..... 254, 268
70003975 69
70003977 85
70003978 67
70004000 87
70004013 87
70004014 87
70004017 69
70004020 . 289, 293, 313, 317, 340, 346, 368, 374, 916
70004056 ..... 254, 268
70004058 ..... 254, 268
70004059 ..... 254, 268
70004060 ..... 254, 268
70004062 ..... 254, 268

70004092..426, 430, 434, 437, 450, 458
70004093.....450
70004094.....450, 458
70004095.....450
70004096.....450
70004097.....450
70004098..430, 434, 438, 450, 458
70004099...434, 450, 458
70004102.....254, 268
70004103.....254, 268
70004169...441, 445, 453
70004171..426, 430, 437, 441, 445, 453
70004249.....93
70004250.....93
70004251.....93
70004252.....93
70004253.....93
70004254.....93
70004255.....93
70004256.....93
70004257.....93
70004258.....93
70004259.....93
70004260.....93
70004261.....93
70004262.....93
70004263.....93
70004267.....87
70004268.....253, 267
70004269.....253, 267
70004270.....254, 268
70004275.....223
70004280.....223, 227
70004281.....223, 227
70004282.....224, 228
70004283.....224, 228
70004284.....224, 228
70004504.....225, 229
70004505.....229
70004506.....229
70004507.....229
70004508.....229
70004509.....229
70004510.....229
70004513.....223, 227
70004577.....67, 69
70004676..426, 430, 434, 437
70004677.....426
70004678..426, 430, 434, 438
70004679..426, 430, 434, 438
70004680..426, 430, 434, 438
70004681.....426
70004682..426, 430, 434, 438
70004683.....426
70004684.....430, 438
70004685...430, 434, 438
70004687.....434
70004738.....603
70004739.....603
70004740..... 603
70004741..... 603
70004742..... 603
70004743..... 603
70004744..... 603
70004745..... 603
70004746..... 603
70004747..... 603
70004748..... 603
70004749..... 603
70004750..... 603
70004751..... 603
70004752..... 605
70004753..... 605
70004754..... 605
70004755..... 605
70004756..... 605
70004757..... 605
70004758..... 605
70004759..... 605
70004760..... 605
70004761..... 605
70004762..... 605
70004763..... 605
70004764..... 605
70004765..... 605
70004766..... 605
70004767..... 605
70004768..... 605
70004769..... 605
70004770..... 605
70004771..... 605
70004772..... 605
70004773..... 605
70004774..... 605
70004775..... 605
70004829..... 377, 381
70004864..... 521
70004865..... 521
70004866..... 521
70004867.. 521, 523, 525
70004868..... 521
70004869.. 521, 523, 525
70004870..... 521
70004871. 521, 523, 525, 916
70004873..... 523, 525
70004874..... 525
70004875..... 521
70004876..... 99, 101
70004877..... 103, 105
70004883..... 69
70004884..... 69
70004885..... 67, 69
70004886..... 69
70004887..... 67, 69
70004888..... 67, 69
70004889..... 389
70004890..... 389
70004891..... 389
70004892..... 389
70004893..... 389
70004894..... 389
70004895..... 389
70004896..... 389
70004897..... 389, 916
70004898..... 389
70004899..... 390
70004900..... 390
70004901..... 390
70004902..... 390
70004903..... 390
70004904..... 390
70004905..... 390
70004906..... 390
70004907..... 390
70004908..... 390
70004909..... 390
70004910..... 390
70004911..... 390
70004955..... 677
70004956..... 677
70004957..... 677
70004958..... 673
70004959..... 673
70004960..... 673
70004961..... 663, 665
70004962..... 663, 665
70004963..... 663, 665
70004964..... 667
70004965..... 667
70004966..... 667
70004967..... 655, 657
70004968..... 655
70004969..... 655, 657
70005010..... 651
70005011..... 651
70005012..... 651, 669
70005013..... 651, 669
70005014..... 651, 669
70005016..... 651, 669
70005017..... 669
70005018..... 669
70005065..... 87
70005066..... 87
70005067..... 87
70005068..... 87
70005069..... 85
70005071..... 85
70005076..... 85
70005080..... 85
70005082..... 85
70005084..... 85
70005085..... 85
70005087..... 85
70005088..... 85
70005089..... 85
70005090..... 85
70005092..... 85
70005094..... 85
70005095..... 85
70005096..... 85
70005097..... 85
70005098..... 85
70005099..... 85
70005100..... 85
70005102..... 489
70005103..... 489
70005104..... 487
70005105..... 487
70005139..... 87
70005143..... 653
70005150..... 671
70005151..... 671
70005152.....671
70005153.....671
70005154.....671
70005155.....653
70005156.....653
70005157.....653
70005158.....653
70005159.....653
70005160.....653
70005171.....223, 227
70005172.....223, 227
70005173.....223, 227
70005174.....223, 227
70005176.....224, 228
70005177.....224, 228
70005180.....224, 228
70005181.....224, 228
70005182.....224, 228
70005183.....224, 228
70005184.....224, 228
70005185.....224, 228
70005186.....224, 228
70005188.....224, 228
70005189.....224, 228
70005191.....225, 229
70005217.....85
70005218.....85
70005219.....85
70005230.....603
70005243.....523, 525
70005446.....225, 229
70005483.....30
70005527.....229
70005577.....667
70005578.....667
70005647.....228
70005648.....228
70005667..766, 770, 774, 778
70005726.....377, 381
70005727.....377, 381
70005737.....377, 381
70005745.....377, 381
70005746.....377, 381
70005747.....377, 381
70005751.....377, 381
70005827.....67
70005828.....67
70005829.....67
70005830.....67
70005831.....67
70005832.....67
70005929.....228
70005940.....229
70005941.....227
70005942.....227
70006000.....67
70006001.....67
70006002.....67
70006010.....385
70006011.....385
70006012.....385
70006013.....377, 381
70006014.....377, 381
70006015.....377, 381
70006016.....377, 381
70006017.....377, 381

70006018 ..... 377, 381
70006019 ..... 377, 381
70006020 ..... 377, 381
70006021 ..... 377, 381
70006022 ..... 377, 381
70006023 ..... 377, 381
70006024 ..... 377, 381
70006025 ..... 377, 381
70006026 ..... 377, 381
70006027 ..... 377, 381
70006028 ..... 377, 381
70006029 ..... 377, 381
70006030 ..... 377, 381
70006031 ..... 377, 381
70006032 ..... 377, 381
70006033 ..... 377, 381
70006034 ..... 377, 381
70006035 ..... 377, 381
70006036 ..... 377, 381
70006037 ..... 377, 381
70006038 ..... 377, 381
70006039 ..... 377, 381
70006040 ..... 377, 381
70006041 ..... 377, 381
70006042 ..... 377, 381
70006043 ..... 377, 381
70006044 ..... 377, 381
70006045 ..... 378, 382
70006046 ..... 378, 382
70006047 ..... 378, 382
70006048 ..... 378, 382
70006049 ..... 378, 382
70006050 ..... 378, 382
70006051 ..... 378, 382
70006052 ..... 378, 382
70006053 ..... 378, 382
70006054 ..... 378, 382
70006055 ..... 378, 382
70006056 ..... 378, 382
70006057 ..... 378, 382
70006058 ..... 378, 382
70006059 ..... 378, 382
70006060 ..... 378, 382
70006061 ..... 378, 382
70006062 ..... 378, 382
70006063 ..... 378, 382
70006064 ..... 378, 382
70006065 ..... 378, 382
70006066 ..... 378, 382
70006067 ..... 378, 382
70006068 ..... 378, 382
70006069 ..... 378, 382
70006070 ..... 378, 382
70006071 ..... 378, 382
70006072 ..... 378, 382
70006074 ..... 378, 382
70006075 ..... 378, 382
70006076 ..... 378, 382
70006077 ..... 378, 382
70006078 ..... 378, 382
70006079 ..... 378, 382
70006080 ..... 378, 382
70006093 ..... 450, 458
70006094 ..... 450, 458
70006095 ..... 450, 458
70006096 ..... 450, 458
70006097 ..... 450, 458
70006104 .. 465, 657, 665
70006105 .. 465, 657, 665
70006256 ..... 487, 489
70006271 489
70006272 487
70006356 . 185, 199, 235, 247, 261, 285, 309, 333, 335, 361, 363
70006379 ..... 378, 382
70006428 921
70006429 924
70006552 . 426, 430, 434, 438
70006553 . 426, 430, 434, 438
70006639 382
70006640 382
70006660 521
70006970 525
70010383 . 77, 79, 81, 83, 916
7001481 390
7001998 ..... 29, 33
70023370 653
70023592 .. 189, 203, 215
70023593 .. 189, 203, 215
70023606 ..... 67, 69
70024262 651
70024473 224
70024494 227
70024502 ..... 223, 227
70024503 225
70024504 . 223, 225, 227, 229
70024507 ..... 225, 229
70024512 225
70024513 ..... 223, 227
70024517 229
70024904 ..... 223, 227
70024905 ..... 223, 227
70024906 ..... 223, 227
70024910 ..... 224, 228
70024912 ..... 224, 228
70024913 ..... 224, 228
70024914 ..... 224, 228
70024915 ..... 224, 228
70024917 ..... 225, 229
70024918 ..... 225, 229
70024920 . 223, 225, 227, 229
70024924 229
70024925 ..... 223, 227
70024961 ..... 223, 227
70025076 ..... 223, 227
70025082 . 223, 227, 253, 267
70025084 . 224, 228, 253, 254, 267, 268
70025086 ..... 254, 268
70025088 .. 223, 253, 267
70025091 . 223, 227, 253, 267
70025101 ..... 224, 227
70025109 ..... 224, 228
70025111 ..... 224, 228
70025113 ..... 225, 229
70025115 ..... 224, 228
70025120 ..... 225, 229
70025121 ..... 254, 268
70025123 .. 253, 254, 267, 268
70025131 .. 224, 228, 254, 268
70025133 ..... 224, 228
70025135 ..... 223, 227
70025139 ..... 253, 267
70025140 ..... 223, 227
70025142 ..... 224, 228
70025144 ..... 223, 227
70025145 ..... 223, 227
70025146 ..... 223, 227
70025148 ..... 224, 228
70025149 ..... 224, 228
70025150 ..... 224, 228
70025151 ..... 223, 227
70025152 229
70025153 ... 223, 227, 916
70025154 ..... 223, 227
70025159 ..... 224, 228
70025160 ..... 223, 227
70025161 ... 223, 227, 916
70025164 ..... 224, 228
70025165 ..... 224, 228
70025166 ..... 225, 229
70025171 ..... 223, 227
70025176 ..... 223, 227
70025177 224
70025179 ..... 224, 228
70025180 ..... 224, 228
70025182 ..... 223, 227
70025183 ..... 223, 227
70025184 ..... 223, 227
70025185 ..... 223, 227
70025189 ..... 225, 229
70025191 ..... 224, 228
70025192 ..... 225, 229
70025195 223
70025198 ..... 223, 227
70025200 ..... 224, 228
70025201 ..... 224, 228
70025205 227
70025209 ..... 225, 229
70025210 ... 224, 228, 916
70025211 ..... 225, 229
70025213 ..... 225, 229
70025214 ..... 225, 229
70025215 ..... 224, 228
70025216 ..... 224, 228
70025217 ..... 225, 229
70025218 ..... 225, 229
70025219 ..... 225, 229
70025220 ..... 225, 229
70025221 .. 224, 225, 228, 229
70025222 ..... 225, 229
70025223 ..... 225, 229
70025224 ..... 225, 229
70025225 ..... 225, 229
70025226 ..... 225, 229
70025228 ..... 224, 229
70025231 ..... 224, 228
70025233 ..... 224, 228
70025235 ..... 223, 227
70025236 ..... 225, 229
70025237 ..... 225, 229
70025238 ..... 225, 229
70025239 ..... 223, 227
70025240 ..... 223, 227
70025241 225
70025242 ..... 225, 229
70025619 651
70025660 225
70025667 ..... 253, 267
70025693 ..... 254, 268
70025694 ..... 254, 268
70025779 ..... 224, 228
70025781 ..... 224, 228
70025877 ..... 225, 229
70025959 669
70026210 229
70026444 67
70026995 228
7002821 924
7002822 924
7002823 924
7002828 924
7004035 91
7004036 91
7004043 91
7004044 91
7004045 91
7004047 91
7004049 91
7004275 924
7004276 924
7007289 390
7007415 ..... 389, 390
7007419 389
7007420 ..... 389, 390
7007437 ..... 35, 37
7007438 ..... 35, 37
7007439 ..... 35, 37
7007446 ..... 35, 37
7007489 387
7007493 390
7007495 389
7007601 ..... 29, 33
7007640 ..... 29, 33
7010103 387
7010104 387
7010105 387
7010429 ..... 29, 33
70104570 225
7010543 ..... 67, 69
70124530 225
70124538 225
7012513 ... 405, 409, 414, 417, 421
7012514 ... 405, 409, 414, 417, 421
7012558 ..... 409, 417
7012925 .... 655, 659, 663
7012941 67
7012967 67, 69, 465, 657, 667
7012974 69
7012987 387
7012988 387
7012998 ... 655, 657, 663, 665, 667

SECTION 11 - SPECIAL OPTIONS

7016331....223, 227, 253, 267, 916
7016654.....924
7017059.....29, 33
7017067.....29, 33
7017070.....29, 33
7017080.....29, 33
7017142.....497, 499
7017159.....497, 499
7017162.....497, 499
7017163.....497, 499
7017164.....497, 499
7017172.....497, 499
7017192.....497, 499
7017195.....497, 499
7017410.....67, 69
7017467....465, 655, 663, 665, 667
701749667, 69, 465, 655, 657, 659, 661, 663, 665, 667
7017904.....377, 381
7017932.....377, 381
7017959.....378, 382
7017992.....378, 382
7019680....409, 414, 417, 422
7020023.....253, 267, 916
7020026.....253, 267
7020033.....27
7020035.....27
7020036.....27
7020037.....27
7020038.....27
7020039.....27
7020040.....27
7020041.....27
7020108....405, 409, 414, 417, 421
7020109....405, 409, 414, 417, 421
7020110....405, 409, 414, 417, 421
7020111....405, 409, 414, 417, 422
7020175....109, 111, 113, 115, 117, 571, 575, 579, 583, 587, 591, 595, 599
7020176....109, 111, 113, 115, 117, 571, 575, 579, 583, 587, 591, 595, 599
7020190....405, 409, 414, 417, 422
7020403.....253, 267
7020404.....223
7020430.....253, 267
7020460.....253, 267
7020465....223, 227, 253, 267
7020468.....253, 267
7020471.....254, 268
7020479.....254, 268
7020492....224, 228, 253, 254, 267, 268
7021237.....389
7021238..... 389
7021239..... 389
7021240..... 389
7021241..... 389
7021242..... 389
7021243..... 389
7021248..... 389
7021249..... 35, 37, 389
7021253..... 389
7021257..... 389
7021258..... 389
7021259..... 389
7021262..... 389
7021263..... 389
7021265..... 389
7021268..... 389
7021275..... 35, 37
7021276..... 35, 37, 390
7021277..... 35, 37, 390
7021278..... 390
7021281..... 389
7021290..... 390
7021293..... 389
7021299..... 390
7021625..... 69
7021639..... 69
7022300..... 389
7022302..... 35, 37
7022305..... 35, 37
7022310..... 37
7022311..... 35, 37
7022312..... 35, 37
7022314..... 35, 37
7022326..... 35, 37
7022328..... 35, 37
7022341..... 389
7022346..... 390
7022347..... 390
7022368..... 35, 37
7022371..... 35, 37
7022372..... 37
702239067, 85, 465, 657, 665
7022397..... 67, 69
7022399..... 67, 69, 85
7023154..... 377, 381
7023318..... 91
7023900..... 85
7023907..... 35, 37
7023908..... 35, 37
7023910..... 35, 37
7023936..... 85
7024182..... 29, 30
7024189..... 30
7024190..... 30
7024191..... 30
7024192..... 30
7024193..... 30
7024194..... 30
7024196..... 30
7024197..... 30
7024379..... 91
7024380..... 91
7024381..... 91
7024389..... 91
7024390..... 91
7024441..... 99, 101, 103, 105
7024453..... 91
7024462..... 641
7024463..... 641
7024467..... 641
7024469..... 641
7024470..... 641
7024471..... 641
7024472..... 641
7024473..... 641
7024474..... 641
7024475..... 641
7024478..... 641
7024485... 441, 445, 450, 453
7024488... 441, 445, 449, 453, 457
7024489... 441, 445, 449, 453, 457
7024565..... 254, 268
7024579... 223, 227, 253, 267
7024705..... 29
7024712..... 29, 33
7024713..... 29, 33
7024714..... 29, 33
7024715..... 29, 33
7024716..... 29, 33
7024717..... 29
7024718..... 30
7024800..... 389
7024810..... 67
7024853..... 35
7024854..... 35, 37
7024855..... 389
7024857..... 389
7024858..... 389
7024868..... 35, 37
7024881..... 67, 69
7024884..... 667
7024885..... 67, 69, 916
7026042..... 93
7026043..... 93
7026044..... 93
7026045..... 93
7026046..... 93
7026047..... 93
7026048..... 93
7026049..... 93
7026050..... 93
7026051..... 93
7026052..... 93
7026053..... 93
7026057..... 93
7026188.... 441, 445, 453
7026199... 409, 413, 417, 421
7026330..... 87
7026597... 441, 445, 450, 453
7026626... 441, 445, 450, 453, 458
7027236..... 253, 267
7027350..... 93
7027351..... 93
7027352..... 93
7027353..... 93
7027354..... 93
7027356..... 93
7027419..... 35
7027625..... 521
7027628..... 521, 916
7027773..... 641
7027774..... 641
7027775..... 641
7027776..... 641
7027777..... 641
7027778..... 641
7027779..... 641
7027780..... 641
7027790..... 254, 268
7027791..... 254, 268
7027792..... 254, 268
7027795..... 268, 916
7027796..... 254, 268
7027799....441, 445, 450, 453, 458
7027887....406, 409, 414, 417, 422
7027903..... 254, 268
7027965....280, 289, 293, 304, 313, 317, 916
7027972..... 313, 916
77363233..... 831
8008750..... 137
80484084..... 817
80633030..684, 690, 696, 702, 709
80983191..... 817, 916
82033995..340, 346, 368, 374
8220045.....827, 829, 873
8220051..... 825
8220115..... 817
8220164..... 817
8229242....817, 845, 874, 916
8229244..... 874, 916
8229245..... 827, 829
8305401....189, 202, 214, 238, 250, 264, 288, 292, 312, 316, 339, 344, 367, 372
8307109....189, 203, 214, 238, 250, 264, 288, 292, 312, 316, 339, 344, 367, 373
8310070....767, 771, 775, 779
8310548....189, 203, 214, 238, 250, 264, 288, 292, 312, 316, 339, 344, 367, 373
8310614..... 107
8310668..... 487, 489
8310686....140, 144, 149, 152, 156, 160
8405006....181, 195, 209, 219
8405007....189, 203, 215, 339, 367

8405009 ... 189, 203, 215, 288, 292, 312, 316, 339, 345, 367, 373
8405102 ... 339, 345, 367, 373
8405103 ... 288, 292, 312, 316
8405104 ... 189, 203, 215, 339, 345, 367, 373
8405201 ... 288, 292, 312, 316
8405202 ... 189, 203, 215, 339, 345, 367, 373
8405203 ... 288, 292, 312, 316, 339, 345, 367, 373
8405204 .... 189, 203, 215
8406109 ... 189, 203, 215, 239, 251, 265, 288, 292, 312, 316, 339, 345, 367, 373
8406110 ... 190, 204, 216, 289, 293, 313, 317, 339, 345, 367, 373
8406201 ... 190, 204, 216, 339, 345, 367, 373
8410001 ... 339, 345, 367, 373
8410009 .... 288, 292, 312, 316, 339, 345, 367, 373
8410011 ..... 340, 346
8410013 .... 181, 195, 209, 233, 243, 259, 312, 316
8430007 ..... 181, 195, 209
84521061 421
84521062 457
85841094 .. 324, 330, 352, 358
8760477 .... 684, 690, 696, 702, 708
8765204 703
8770289 ... 684, 690, 696, 702, 708
8786514 53
88521205 . 767, 771, 775, 779
88662523 . 140, 144, 149, 152, 156, 160
8881800 ... 107, 766, 770, 774, 778
91164057 85
91164059 85
91164079 85
91203039 509
91554014 805



3121660

JLG®

An Oshkosh Corporation Company

Corporate Office
JLG Industries, Inc.
1 JLG Drive
McConnellsburg, PA 17233-9533 USA
(717) 485-5161 (Corporate)
(877) 554-5438 (Customer Support)
(717) 485-6417

Visit our website for JLG Worldwide Locations.
www.jlg.com