Illustrated Parts Manual

Models
400S
460SJ

SN 0300096000
THROUGH
SN 0300203770*
*** See Revision Log Page for exceptions**

P/N
3121236

July 17, 2018 - Rev AB

ANSI

CE

An Oshkosh Corporation Company

REVISION LOG

NOTES:

List of SN exceptions:

For these SNs use Parts Manual 3121672 for:
0300184729, 0300200144, 0300200145,0300200476, 0300200477, 0300202448, 0300202449, 0300202450, 0300203261, 0300203262, 0300203307, 0300203308, 0300203351, 0300203352, 0300203394, 0300203395, 0300203439, 0300203440, 0300203580, 0300203581, 0300203582, 0300203583, 0300203584, 0300203628, 0300203629, 0300203630, 0300203631, 0300203632, 0300203677, 0300203678, 0300203679, 0300203680, 0300203681, 0300203724, 0300203725, 0300203727, 0300203728, 0300203771, 0300203772, 0300203773, 0300203774, 0300203775.

GROUND MODULE IDENTIFICATION

MODULE ON MACHINES "WITHOUT UGM" (UNIVERSAL GROUND MODULE)

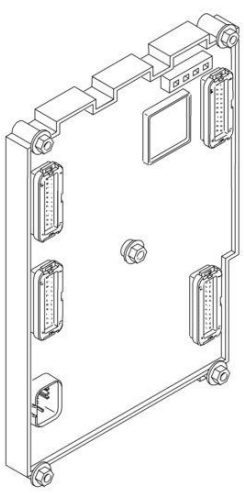

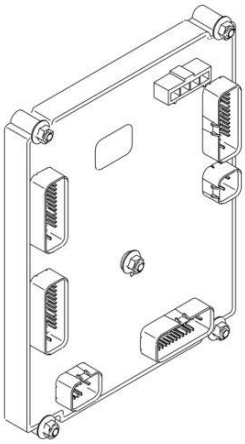

MODULE ON MACHINES "WITH UGM" (UNIVERSAL GROUND MODULE)

REVISION LOG:

April 30, 2006 - A - Original Issue Of Manual (Edited to B/M 0010579 Revision 67)
September 12, 2006 - B - Revised (Edited to B/M 0010579 Revision 69)
January 4, 2007 - C - Revised (Edited to B/M 0010579 Revision 70)
April 15, 2007 - D - Revised (Edited to B/M 0010579 Revision 75)
August 31, 2007 - E - Revised (Edited to B/M 0010579 Revision 80)

REVISION LOG

January 11, 2008 - F - Revised (Edited to B/M 0010579 Revision 83)

June 15, 2008 - G - Revised (Edited to B/M 0010579 Revision 83)

March1, 2009 - H - Revised (Edited to B/M 0010579 Revision 91)

January 8, 2010 - I - Revised (Edited to B/M 0010579 Revision 107)

July 26, 2010 - J - Revised (Edited to B/M 0010579 Revision 111)

January 27, 2011 - K - Revised (Edited to B/M 0010579 Revision 112)

May 16, 2011 - L - Revised (Edited to B/M 0010579 Revision 117)

August 12, 2011 - M - Revised (Edited to B/M 0010579 Revision 123)

December 8, 2011 - N - Revised (Edited to B/M 0010579 Revision 125)

March 30, 2012 - O - Revised (Edited to B/M 0010579 Revision 125)

July 19, 2012 - P - Revised (Edited to B/M 0010579 Revision F)

October 19, 2012 - Q - Revised (Edited to B/M 0010579 Revision F)

February 28, 2013 - R - Revised (Edited to B/M 0010579 Revision F)

May 13, 2013 - S - Revised (Edited to B/M 0010579 Revision F)

August 21, 2013 - T - Revised (Edited to B/M 0010579 Revision F)

November 27, 2013 - U - Revised (Edited to B/M 0010579 Revision Z & 1001160080 Revision C)

December 1, 2014 - V - Revised (Edited to B/M 0010579 Revision Z & 1001160080 Revision C)

March 15, 2015 - W - Revised (Edited to B/M 1001160080 Revision L)

June 1, 2015 - X - Revised (Edited to B/M 1001160080 Revision N)

November 20, 2015 - Y - Revised (Edited to B/M 1001160080 Revision N) (Revision 1)

July 15, 2016 - Z - Revised (Edited to B/M 1001160080 Revision Q) (Revision 1)

June 30, 2017 - AA - Revised (Edited to B/M 1001160080 Revision Q)

July 17, 2018 - AB - Revised (Edited to B/M 1001160080 Revision Q)

GENERAL INFORMATION

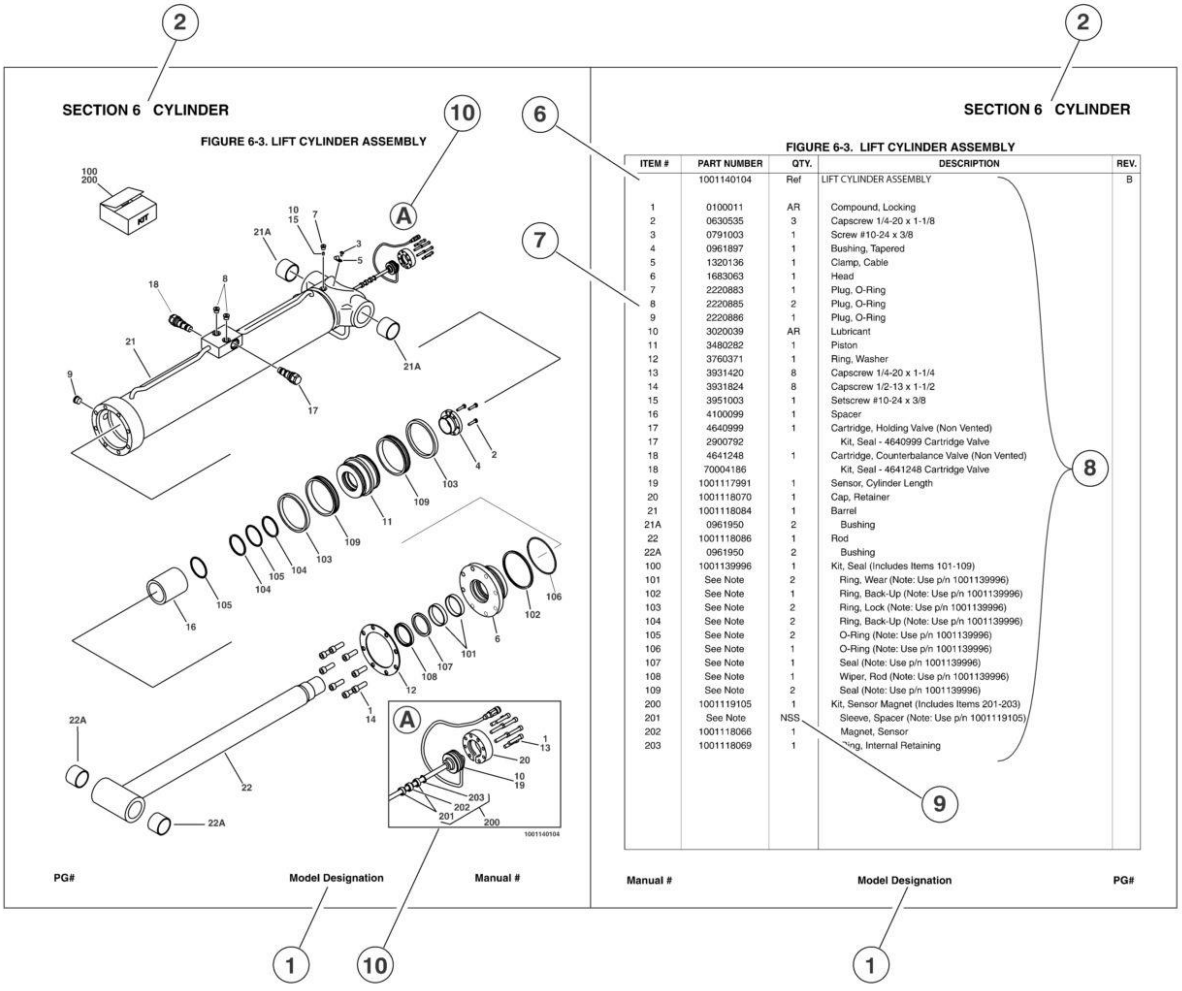

ITEM #	PART NUMBER	QTY.	DESCRIPTION	REV.
	1001140104	Ref	LIFT CYLINDER ASSEMBLY	B
1	0100011	AR	Compound, Locking	
2	0630535	3	Capscrew 1/4-20 x 1-1/8	
3	0791003	1	Screw #10-24 x 3/8	
4	0961897	1	Bushing, Tapered	
5	1320136	1	Clamp, Cable	
6	1683063	1	Head	
7	2220883	1	Plug, O-Ring	
8	2220885	2	Plug, O-Ring	
9	2220886	1	Plug, O-Ring	
10	3020039	AR	Lubricant	
11	3480282	1	Piston	
12	3760371	1	Ring, Washer	
13	3931420	8	Capscrew 1/4-20 x 1-1/4	
14	3931824	8	Capscrew 1/2-13 x 1-1/2	
15	3951003	1	Setscrew #10-24 x 3/8	
16	4100099	1	Spacer	
17	4640999	1	Cartridge, Holding Valve (Non Vented)	
17	2900792		Kit, Seal - 4640999 Cartridge Valve	
18	4641248	1	Cartridge, Counterbalance Valve (Non Vented)	
18	70004186		Kit, Seal - 4641248 Cartridge Valve	
19	1001117991	1	Sensor, Cylinder Length	
20	1001118070	1	Cap, Retainer	
21	1001118084	1	Barrel	
21A	0961950	2	Bushing	
22	1001118086	1	Rod	
22A	0961950	2	Bushing	
100	1001139996	1	Kit, Seal (Includes Items 101-109)	
101	See Note	2	Ring, Wear (Note: Use p/n 1001139996)	
102	See Note	1	Ring, Back-Up (Note: Use p/n 1001139996)	
103	See Note	2	Ring, Lock (Note: Use p/n 1001139996)	
104	See Note	2	Ring, Back-Up (Note: Use p/n 1001139996)	
105	See Note	2	O-Ring (Note: Use p/n 1001139996)	
106	See Note	1	O-Ring (Note: Use p/n 1001139996)	
107	See Note	1	Seal (Note: Use p/n 1001139996)	
108	See Note	1	Wiper, Rod (Note: Use p/n 1001139996)	
109	See Note	2	Seal (Note: Use p/n 1001139996)	
200	1001119105	1	Kit, Sensor Magnet (Includes Items 201-203)	
201	See Note	NSS	Sleeve, Spacer (Note: Use p/n 1001119105)	
202	1001118066	1	Magnet, Sensor	
203	1001118069	1	Ring, Internal Retaining	

1) MACHINE IDENTIFICATION
Machines are identified by model and in some cases a combination of models, serial number (SN) or redional standard (i.e ANSI, CE,CSA). Components may also be identified by SN or manufacturer. common components that may be identified by these characteristics are engines and hydraulic components.

2) PARTS MANUAL ORGANIZATION
Product informationin this manual is organized under section titles. Frame, Cylinder, Hydraulic and Electrical are a few examples. Each section is organized by figure and page number. The information within the Figure is then organized by item number, part number, description and corresponding illustration (s).

3) TABLE OF CONTENTS
A table of contents is found toward the beginning of the manual. Figure number, description and page number are provided for quick reference to the page containing the related information.

4) RECOMMENDED SPARE PARTS
The Recommended Spare Parts, located near the end of the manual, referance most frequently used maintenance parts.

5) PART NUMBER INDEX
A numerical index listing all part numbers and the corresponding page number(s) appears at the back of the manual.

GENERAL INFORMATION

6) NON-SERVICED PARTS

In sone instances, it is necessary to display non-serviced parts, assemblies or installations. In the case of assemblies and installations ther will be a Ref in the Qty column. In case of parts that are not available for service within assemblies or components, there will be a NSS (Not Sold Separately) or NLA (No Longer Available) listed in the Qty. column of the manual.

7) PARTS LIST ITEM NUMBERS

Numbers shown in the item# column correspond to numbers used in theassociated illustration (s). Item numbers which are mising from the sequence inthe parts list are not used on that page

8) INDENTED PARTS DESCRIPTION

An indented part description is included in the item under which it is indented.

9) ABB REVIATION AND SYMBOLS

AC ..... Alternating Current
ADE. ..... .Advanced Design Electronics
ANSI ..... .American National Standards Institute
AR.. ....As Required
ASSY ..... Assembly
AUX... ....Auxiliary
AWG ....American WireGauge
B/M. ..... Bill of Material
CE.. ....European Conformity
CCW ..... .Counter Clockwise
cm. ..... Centimeter
CW ..... .Clockwise
CSA. ....Canadian Standards Association
CYL... ....Cylinder
DIA. ..... .Diameter
DC ..... .Direct Current
EMS ..... Emergency Stop
ENG ..... .Engine
FT (ft).. ..... .Feet
GA (Ga).. ..... .Gauge
HYD ..... Hydraulic
Hz.. ..... Hertz
ID.. ..... .Inside Diameter
in... ..... .inches
ISO ....International Organization for Standards
JIC ..... .Joint Industry Council
KG ..... .Kilogram
L.. ....Liter
LB ....Pounds
LCD ..... Liquid Crystal Display
LED ..... Light Emitting Diodes
LH... ..... Left Hand
LSS ..... .Load Sensing System
M(m)... ..... Metric/Meter
MM (mm) ....Milimeter
mA. ..... Miliamps
NLA..... .....No Longer Available
NPT ..... National Pipe Threads
NSS ....Not Sold Separately
OD.. ....Outside Diameter
ORB ..... O-Ring Boss
ORFS ..... O-Ring Face Seal
OZ (oz). ..... .Ounces
PG ..... .Page
P/N. ....Part Number
qt. ....Quarts
QTY. ..... .Quantity
REF ..... .Reference
REV ....Revision Level
RH... ..... Right Hand
SAE..... ..... Society of Automotive Engineers
SN.. ....Serial Number
SPEC(S)..... .....Specifications
T/T. ....Turntable
UGM ....Universal Ground Module
V. ....Volts
W... ..... Watts
#... ..... Number

10) ILLUSTRATION REFERANCE LETTERS

When necessary, illustrations may contain referance letters that are intended to track information (i. e. hoses, harnesses) from one point to another or to track visual enlargement of components to show details that may be located in another area on the illustration.

Note: Due to continuous product improvements, JLG Industries, Inc. reserves the right to make specification changes without prior notification. Contact JLG Industries, Inc. for updated information.

TABLE OF CONTENTS

SECTION 1 - FRAME 11

FIGURE 1-1. AXLE AND STEERING INSTALLATION - 2WD WITHOUT TOW PACKAGE 12
FIGURE 1-2. AXLE AND STEERING INSTALLATION - 2WD WITH TOW PACKAGE 18
FIGURE 1-3. AXLE AND STEERING INSTALLATION - 4WD (SN 0300096000 through 0300161284) 24
FIGURE 1-4. AXLE AND STEERING INSTALLATION - 4WD (SN 0300161285 through 0300203770) 28
FIGURE 1-5. TIRE AND WHEEL DRIVE INSTALLATIONS 32
FIGURE 1-6. DRIVE HUB AND HUB WITH BRAKE ASSEMBLIES 36
FIGURE 1-7. DRIVE MOTOR ASSEMBLY - 4 BOLT (SN 0300096000 through 0300098501) 40
FIGURE 1-8. DRIVE MOTOR ASSEMBLY - 5 BOLT (SN 0300098502 through 0300203770) 44
FIGURE 1-9. FRAME VALVES AND SHIELDS INSTALLATION (SN 0300096000 through 0300115395) 48
FIGURE 1-10. FRAME VALVES AND SHIELDS INSTALLATION (SN 0300115396 through 0300203770) 50
FIGURE 1-11. SEMI-TRACK INSTALLATION 54
FIGURE 1-12. TOW PACKAGE INSTALLATION 58

SECTION 2 - TURNTABLE 61

FIGURE 2-1. VALVES INSTALLATIONS 62
FIGURE 2-2. MAIN CONTROL VALVE ASSEMBLY 64
FIGURE 2-3. ACCESSORY VALVE ASSEMBLY 68
FIGURE 2-4. TURNTABLE AND SWING DRIVE INSTALLATIONS 70
FIGURE 2-5. SWING HUB ASSEMBLY (SN 0300096000 through 0300137200) 74
FIGURE 2-6. SWING MOTOR ASSEMBLY (SN 0300096000 through 0300137200) 76
FIGURE 2-7. SWING MOTOR/BRAKE/HUB ASSEMBLY (SN 0300137201 through 0300203770) 78
FIGURE 2-8. CATERPILLAR ENGINE INSTALLATION - WITH ELECTRICAL DRIVEN COOLING FAN (WITHOUT UGM) 82
FIGURE 2-9. CATERPILLAR ENGINE INSTALLATION - WITH MECHANICAL DRIVEN COOLING FAN (WITHOUT UGM) 90
FIGURE 2-10. CATERPILLAR ENGINE INSTALLATION (WITH UGM) 98
FIGURE 2-11. DEUTZ D2011 ENGINE INSTALLATION 106
FIGURE 2-12. DEUTZ TD2.9L4 ENGINE INSTALLATION 116
FIGURE 2-13. GM ENGINE INSTALLATION (WITHOUT UGM) 128
FIGURE 2-14. GM ENGINE INSTALLATION (WITH UGM) 134
FIGURE 2-15. PERKINS ENGINE INSTALLATION - WITH ELECTRICAL DRIVEN COOLING FAN (WITHOUT UGM) 140
FIGURE 2-16. PERKINS ENGINE INSTALLATION - WITH MECHANICAL DRIVEN COOLING FAN (WITHOUT UGM) 150
FIGURE 2-17. PERKINS ENGINE INSTALLATION (WITH UGM) 158
FIGURE 2-18. PISTON PUMP ASSEMBLY 166
FIGURE 2-19. AUXILIARY PUMP ASSEMBLY 170
FIGURE 2-20. DUAL FUEL INSTALLATIONS (GM MACHINES ONLY) 174
FIGURE 2-21. TANK INSTALLATIONS 178
FIGURE 2-22. ROTARY COUPLING INSTALLATION (SN 0300096000 through 0300140364) 182
FIGURE 2-23. ROTARY COUPLING INSTALLATION (SN 0300140365 through 0300203770) 184
FIGURE 2-24. GROUND CONTROL BOX ASSEMBLY (WITHOUT UGM) 186
FIGURE 2-25. GROUND CONTROL BOX ASSEMBLY (WITH UGM) (SN 0300069000 through 0300177682) 190
FIGURE 2-26. GROUND CONTROL BOX ASSEMBLY (WITH UGM) (SN 0300177683 through 0300203770) 194
FIGURE 2-27. ELECTRICAL OPTIONS INSTALLATION (TURNTABLE MOUNTED) 198
FIGURE 2-28. HOODS INSTALLATION (SN 0300096000 through 0300126456) 202
FIGURE 2-29. HOODS INSTALLATION (SN 0300126457 through 0300203770) 206
FIGURE 2-30. 2500W GENERATOR INSTALLATION - CATERPILLAR ENGINE MACHINES (OPTIONAL) 212
FIGURE 2-31. 2500W GENERATOR INSTALLATION - DEUTZ D2011 ENGINE MACHINES (OPTIONAL) 216
FIGURE 2-32. 2500W GENERATOR INSTALLATION - DEUTZ TD2.9L4 ENGINE MACHINES (OPTIONAL) 220
FIGURE 2-33. 2500W GENERATOR INSTALLATION - GM ENGINES MACHINES (OPTIONAL) 224
FIGURE 2-34. 4000W GENERATOR INSTALLATION - DEUTZ D2011 ENGINE MACHINES (OPTIONAL) 228
FIGURE 2-35. 4000W GENERATOR INSTALLATION - DEUTZ TD2.9L4 ENGINE MACHINES (OPTIONAL) 232
FIGURE 2-36. 4000W GENERATOR INSTALLATION - GM ENGINES 236
FIGURE 2-37. 7500W SKYPOWER GENERATOR INSTALLATION - CATERPILLAR, DEUTZ D2011 AND PERKINS ENGINE MACHINES 240
FIGURE 2-38. 7500W SKYPOWER GENERATOR INSTALLATION - DEUTZ TD2.9L4 ENGINE MACHINES 246
FIGURE 2-39. 7500W SKYPOWER GENERATOR INSTALLATION - GM ENGINE MACHINES 250
FIGURE 2-40. SKYAIR AIR COMPRESSOR INSTALLATION 256
FIGURE 2-41. AIR COMPRESSOR ASSEMBLY 258

SECTION 3 - BOOM 261

FIGURE 3-1. BOOM INSTALLATIONS 262
FIGURE 3-2. BOOM ASSEMBLY - 400S 266
FIGURE 3-3. BOOM ASSEMBLY - 460SJ 270
FIGURE 3-4. ROTATOR ASSEMBLIES (SN 0300096000 through 0300200817) 274

TABLE OF CONTENTS

FIGURE 3-5. ROTATOR ASSEMBLIES (SN 0300200818 through 0300203770) 276
FIGURE 3-6. PLATFORM SUPPORT INSTALLATION - WITH LSS 278
FIGURE 3-7. PLATFORM AND GLAZIER SUPPORT INSTALLATION - WITH LSS (400S ONLY) 282

SECTION 4 - PLATFORM 285

FIGURE 4-1. PLATFORM INSTALLATION....286
FIGURE 4-2. PLATFORM COMPONENTS INSTALLATION (FALL ARREST PLATFORM) 292
FIGURE 4-3. SOFT TOUCH INSTALLATION (OPTIONAL) 294
FIGURE 4-4. PLATFORM CONSOLE ASSEMBLY 296
FIGURE 4-5. CONTROLLER ASSEMBLY (LIFT AND SWING) 302
FIGURE 4-6. CONTROLLER ASSEMBLY (LIFT AND SWING) 304
FIGURE 4-7. CONTROLLER ASSEMBLY (SWING AND LIFT) 306
FIGURE 4-8. CONTROLLER ASSEMBLY (DRIVE AND STEER) 310
FIGURE 4-9. CONTROLLER ASSEMBLY (DRIVE AND STEER) 312
FIGURE 4-10. CONTROLLER ASSEMBLY (DRIVE AND STEER) 314
FIGURE 4-11. SKYGUARD SYSTEM INSTALLATION 316
FIGURE 4-12. CROSS RAIL INSTALLATION 318
FIGURE 4-13. SKYGLAZIER INSTALLATION....320
FIGURE 4-14. SKYWELDER/SKYCUTTER COMBO INSTALLATION (60HZ) 324
FIGURE 4-15. SKYWELDER INSTALLATION (50HZ)....328
FIGURE 4-16. SKYWELDER INSTALLATION (60HZ)....330
FIGURE 4-17. SKYWELDER PREP PACKAGE (60HZ) 332
FIGURE 4-18. WELDER ASSEMBLY....334
FIGURE 4-19. SKYCUTTER INSTALLATION 336
FIGURE 4-20. PLASMA CUTTER ASSEMBLY 338
FIGURE 4-21. PIPE RACKS INSTALLATION....340

SECTION 5 - CYLINDER....343

FIGURE 5-1. AXLE LOCKOUT CYLINDER ASSEMBLY (SN 0300096000 through 0300115395)....344
FIGURE 5-2. AXLE LOCKOUT CYLINDER ASSEMBLY (SN 0300115396 through 0300203770)....346
FIGURE 5-3. LEVEL (PLATFORM SLAVE) CYLINDER ASSEMBLY....348
FIGURE 5-4. LEVEL (PLATFORM SLAVE) CYLINDER ASSEMBLY - 400S 350
FIGURE 5-5. LIFT CYLINDER ASSEMBLY - JIB (460SJ) (ORIGINAL EQUIPMENT) 352
FIGURE 5-6. LIFT CYLINDER ASSEMBLY - JIB (460SJ) (USAGE MAY VARY) (SERVICE REPLACEMENT)....354
FIGURE 5-7. LIFT CYLINDER ASSEMBLY - JIB (460SJ) (USAGE MAY VARY) (SERVICE REPLACEMENT)....356
FIGURE 5-8. LIFT CYLINDER ASSEMBLY - MAIN....358
FIGURE 5-9. MASTER CYLINDER ASSEMBLY (ORIGINAL EQUIPMENT FOR) (SN 0300096000 through 0300165144)....360
FIGURE 5-10. MASTER CYLINDER ASSEMBLY (SERVICE REPLACEMENT FOR SN 0300096000 THROUGH SN 0300165144 AND ORIGINAL EQUIPMENT FOR SN 0300165145 THROUGH 0300203770)....362
FIGURE 5-11. STEER CYLINDER ASSEMBLY (SN 0300096000 through 0300161284) 364
FIGURE 5-12. STEER CYLINDER ASSEMBLY (SN 0300161285 through 0300203770) 366
FIGURE 5-13. TELESCOPE CYLINDER ASSEMBLY....368

SECTION 6 - HYDRAULIC 371

FIGURE 6-1. AXLE LOCKOUT HYDRAULIC DIAGRAM (SN 0300096000 through 0300115395)....372
FIGURE 6-2. AXLE LOCKOUT HYDRAULIC DIAGRAM (ANSI SPEC) (SN 0300115396 through 0300140364) 374
FIGURE 6-3. AXLE LOCKOUT HYDRAULIC DIAGRAM (CE SPEC) (SN 0300115396 through 0300140364)....376
FIGURE 6-4. AXLE LOCKOUT HYDRAULIC DIAGRAM (ANSI AND CE SPEC) (SN 0300140365 through 0300203770)....378
FIGURE 6-5. DRIVE HYDRAULIC DIAGRAM - 2WD (SN 0300096000 through 0300115395) 380
FIGURE 6-6. DRIVE HYDRAULIC DIAGRAM - 2WD (SN 0300115396 through 0300140364) 382
FIGURE 6-7. DRIVE HYDRAULIC DIAGRAM - 2WD (SN 0300140365 through 0300203770) 384
FIGURE 6-8. DRIVE HYDRAULIC DIAGRAM - 4WD (SN 0300096000 through 0300115395) 386
FIGURE 6-9. DRIVE HYDRAULIC DIAGRAM - 4WD (SN 0300115396 through 0300140364) 390
FIGURE 6-10. DRIVE HYDRAULIC DIAGRAM - 4WD (SN 0300140365 through 0300203770) 392
FIGURE 6-11. STANDARD HYDRAULIC DIAGRAM....394
FIGURE 6-12. STANDARD HYDRAULIC DIAGRAM....398
FIGURE 6-13. STANDARD HYDRAULIC DIAGRAM....402
FIGURE 6-14. STANDARD HYDRAULIC DIAGRAM....406
FIGURE 6-15. HYDRAULIC DIAGRAM LIST....410

SECTION 7 - ELECTRICAL....413

FIGURE 7-1. ELECTRICAL DIAGRAM LIST 414
FIGURE 7-2. HARNESS COMPONENTS INSTALLATION (MACHINES WITHOUT UGM) 416

FIGURE 7-3. HARNESS COMPONENTS INSTALLATION (MACHINES WITH UGM) (SN 0300069000 through 0300177682) . 432
FIGURE 7-4. HARNESS COMPONENTS INSTALLATION (MACHINES WITH UGM) (SN 0300177683 through 0300203770) . 448

SECTION 8 - DECALS 465

FIGURE 8-1. DECAL INSTALLATION (ANSI SPEC) 466
FIGURE 8-2. DECAL INSTALLATION (ANSI EXPORT SPECS) 470
FIGURE 8-3. DECAL INSTALLATION (AUSTRALIAN AND CE SPECS) 478

SECTION 9 - RECOMMENDED SERVICE PARTS STOCK 481

FIGURE 9-1. MODEL 400S/460SJ STANDARD PARTS 482
FIGURE 9-2. MODEL 400S/460SJ VARIABLE PARTS 484

SECTION 10 - SPECIAL OPTIONS 485

FIGURE 10-1. SPECIAL OPTIONS LIST 486

PART NUMBER INDEX 493

SECTION 1 - FRAME

FIGURE 1-1. AXLE AND STEERING INSTALLATION - 2WD WITHOUT TOW PACKAGE

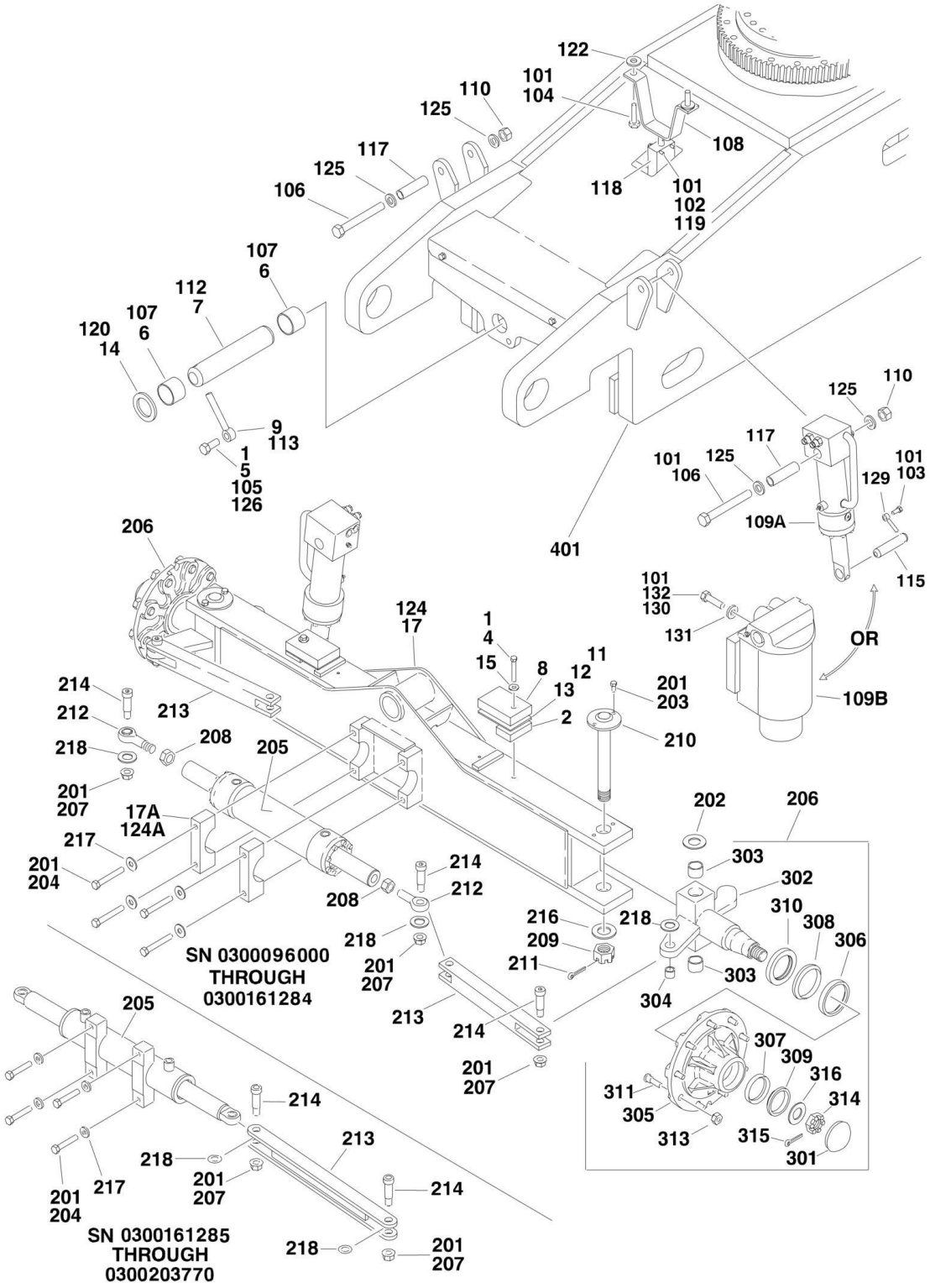

FIGURE 1-1. AXLE AND STEERING INSTALLATION - 2WD WITHOUT TOW PACKAGE

ITEM	PART NUMBER	QTY	DESCRIPTION	REV
		Ref	**FIXED AXLE INSTALLATION**	
	0272902	Ref	**Fixed Axle Installation (SN 0300096000 through 0300115395)**	B
	1001093844	Ref	**Fixed Axle Installation (SN 0300115396 through 0300161284)**	D
	1001139700	Ref	**Fixed Axle Installation (SN 0300161285 through 0300203770)**	B
1	0100011	AR	Locking, Compound	
2		Ref	Block, Stop Plate Options:	
2	0362932	2	Block, Stop Plate **(SN 0300096000 through 0300115395)**	
2	1001093846	2	Block, Stop Plate **(SN 0300115396 through 0300203770)**	
4		Ref	Bolt 3/8in-16NC Options:	
4	0641626	2	Bolt 3/8in-16NC **(SN 0300096000 through 0300115395)**	
4	0641616	2	Bolt 3/8in-16NC **(SN 0300115396 through 0300203770)**	
5	0642012	1	Bolt 5/8in-11NC x 1-1/2in	
6	0961950	2	Bushing	
7	3422592	1	Pin, Axle Pivot	
8		Ref	Plate, Stop Options:	
8	0362954	2	Plate, Stop **(SN 0300096000 through 0300115395)**	
8	1001093851	2	Plate, Stop **(SN 0300115396 through 0300203770)**	
9	3841258	1	Keeper, Pin	
11	4071002	4	Shim, 20 - Gauge **(SN 0300096000 through 0300115396)**	
12	4070973	2	Shim 1/8in **(SN 0300096000 through 0300115396)**	
13	4071121	2	Shim.063in **(SN 0300161285 through 0300203770)**	
14	4740158	1	Thrustwasher	
15	4751600	2	Flatwasher 3/8in Regular	
17		Ref	Axle Weldment Options:	
17	4846551	1	Axle Weldment **(SN 0300096000 through 0300115395)**	
17	1001093381	1	Axle Weldment **(SN 0300115396 through 0300161284)**	
17	1001139704	1	Axle Weldment **(SN 0300161285 through 0300203770)**	
17A		Ref	Steer Cylinder Mounting Block Assembly Options:	
17A	0561300	2	Steer Cylinder Mounting Block Assembly **(SN 0300096000 through 0300115395)**	
17A	1001100424	2	Steer Cylinder Mounting Block Assembly **(SN 0300115396 through 0300161284)**	
17A	See Note	2	Steer Cylinder Mounting Block Assembly (Note: Part of Steer Cylinder - Not Available for Purchase) **(SN 0300161285 through 0300203770)**	
		Ref	**OSCILLATING AXLE INSTALLATION**	
		Ref	**All Specs Except CE Spec**	
	0272900	Ref	**Oscillating Axle Installation (SN 0300096000 through 0300115395)**	B
	1001093845	Ref	**Oscillating Axle Installation (SN 0300115396 through 0300140364)**	C
	1001106910	Ref	**Oscillating Axle Installation (SN 0300140365 through 0300161284)**	C
	1001139699	Ref	**Oscillating Axle Installation (SN 0300161285 through 0300203770)**	B
		Ref	**CE Spec**	
	0272904	Ref	**Oscillating Axle Installation (SN 0300096000 through 0300115395)**	B
	1001093973	Ref	**Oscillating Axle Installation (SN 0300115396 through 0300140364)**	D
	1001106910	Ref	**Oscillating Axle Installation (SN 0300140365 through 0300161284)**	C

SECTION 1 - FRAME

ITEM	PART NUMBER	QTY	DESCRIPTION	REV
	1001139699	Ref	**Oscillating Axle Installation (SN 0300161285 through 0300203770)**	B
101	0100011	AR	Locking, Compound	
102		Ref	Bolt Options:	
102	0641414	4	Bolt 1/4in-20NC x 1-3/4in (All Specs Except CE Spec) **(SN 0300096000 through 0300140365)**	
102	0641424	4	Bolt 1/4in-20NC x 3in (CE Spec) **(SN 0300096000 through 0300140365)**	
103	0641607	2	Bolt 3/8in-16NC x 7/8in **(SN 0300096000 through 0300115396)**	
104	0642010	2	Bolt 5/8in-11NC x 1-1/4in	
105	0642012	1	Bolt 5/8in-11NC x 1-1/2in	
106	0682248	2	Bolt 3/4in-10NC x 6in (Grade 8) **(SN 0300096000 through 0300115395)**	
107	0961950	2	Bushing	
108		Ref	Cam, Lockout	
108	1100118	1	All Specs Except CE Spec	
108		Ref	CE Spec (Not Shown)	
108	1100123	1	Cam, Lockout **(SN 0300096000 through 0300115395)**	
108	1100118	1	Cam, Lockout **(SN 0300115396 through 0300140365)**	
109		Ref	Lockout Cylinder Assembly Options (See CYLINDER SECTION for Breakdown):	
109A	1684139	2	Lockout Cylinder Assembly **(SN 0300096000 through 0300115395)**	
109B	1684465	2	Lockout Cylinder Assembly **(SN 0300115396 through 0300203770)**	
110	3272201	2	Nut 3/4in-10NC **(SN 0300096000 through 0300115396)**	
112	3422592	1	Pin, Axle Pivot	
113	3841258	1	Keeper, Pin	
115	3422936	2	Pin **(SN 0300096000 through 0300115396)**	
117	4567462	2	Tube, Mounting **(SN 0300096000 through 0300115395)**	
118	4640871	AR	Lockout Valve Assembly **(SN 0300096000 through 0300140365)**	
118		Ref	All Specs Except CE Spec	
118		Ref	CE Spec	
118	7012693	1	Seal Kit - 4640871 Valve	
118	7002840	1	Anti-Rotation Pin Removal Tool	
119	4711400	4	Flatwasher 1/4in Thin **(SN 0300096000 through 0300140365)**	
120	4740158	1	Thrustwasher	
122	4752000	AR	Flatwasher 5/8in Regular **(SN 0300096000 through 0300140365)**	
124		Ref	Axle Weldment Options:	
124	4846551	1	Axle Weldment **(SN 0300096000 through 0300115395)**	
124	1001093381	1	Axle Weldment **(SN 0300115396 through 0300161284)**	
124	1001139704	1	Axle Weldment **(SN 0300161285 through 0300203770)**	
124A		Ref	Steer Cylinder Mounting Block Assembly Options:	
124A	0561300	2	Steer Cylinder Mounting Block Assembly **(SN 0300096000 through 0300131322)**	
124A	1001100424	2	Steer Cylinder Mounting Block Assembly **(SN 0300131323 through 0300161284)**	
124A	See Note	2	Steer Cylinder Mounting Block Assembly (Note: Part of Steer Cylinder - Not Available for Purchase) **(SN 0300161285 through 0300203770)**	
125	4892200	4	Flatwasher 3/4in Hardened **(SN 0300096000 through 0300115396)**	

ITEM	PART NUMBER	QTY	DESCRIPTION	REV
126	0100019	AR	Locking, Compound **(SN 0300096000 through 0300140365)**	
129	3841520	2	Keeper, Pin **(SN 0300096000 through 0300115395)**	
130	0641814	8	Bolt 1/2in-13NC x 1-3/4in **(SN 0300115396 through 0300203770)**	
131	4891800	8	Flatwasher 1/2in Hardened **(SN 0300115396 through 0300203770)**	
132	0100038	AR	Primer, Locking	
		Ref	**STEERING INSTALLATION**	
	0259148	Ref	**Steering Installation (SN 0300096000 through 0300161284)**	I
	1001139697	Ref	**Steering Installation (SN 0300161285 through 0300203770)**	B
201	0100011	AR	Locking, Compound	
202	0440162	2	Thrustwasher	
203	0641606	4	Bolt 3/8in-16NC x 3/4in	
204		Ref	Bolt 1/2in-13NC (Grade 8) Options:	
204	0681828	4	Bolt 1/2in-13NC x 3-1/2in	
204	0681822	4	Bolt 1/2in-13NC x 2-3/4in	
205		Ref	Steer Cylinder Assembly Options (See CYLINDER SECTION for Breakdown):	
205	1684412	1	Steer Cylinder Assembly **(SN 0300096000 through 0300161284)**	
205	1001143434	1	Steer Cylinder Assembly **(SN 0300161285 through 0300203770)**	
206	2780230	2	Hub/Spindle Assembly (See 301 to 316 for Breakdown)	
207	3312008	4	Nut 5/8in-11NC	
208	3322201	2	Nut 3/4in-16NF **(SN 0300096000 through 0300161285)**	
209	3323003	2	Nut 1-1/4in-12NF	
210	3422692	2	Kingpin	
211	3450808	2	Pin, Cotter 1/4in x 2in	
212		Ref	Rod-End Options:	
212	3841367	NLA	Rod-End (Use p/n 3841517 Rod-End and p/n 7020180 Grease Fitting) **(SN 0300096000 through 0300110479)**	
212	3841517	2	Rod-End **(SN 0300110480 through 0300161284)**	
212	Not Required	0	Rod-End **(SN 0300161285 through 0300203770)**	
213		Ref	Tie-Rod Options:	
213	3841442	2	Tie-Rod **(SN 0300096000 through 0300161284)**	
213	1001140570	2	Tie-Rod **(SN 0300161285 through 0300203770)**	
214	3900109	4	Screw, Shoulder	
216	4713000	2	Flatwasher 1-1/4in Thin	
217	4751800	4	Flatwasher 1/2in Regular	
218	4740086	4	Thrustwasher	
	2780230	Ref	**HUB ASSEMBLY**	A
301	7020033	2	Cap, Dust (1 per Assembly)	
302	7020034	2	Spindle Assembly (1 per Assembly)	
303	0961951	4	Bushing (2 Per Assembly)	
304	0962140	2	Bearing (1 per Assembly)	
305	7020035	2	Hub (1 per Assembly) (Includes Items 306 & 307)	
306	7020036	2	Cup, Bearing - Inner(1 per Assembly)	
307	7020038	2	Cup, Bearing - Outer (1 per Assembly)	
308	7020037	2	Cone, Bearing - Inner (1 per Assembly)	
309	7020039	2	Cone, Bearing - Outer (1 per Assembly)	
310	7020040	2	Seal (1 Per Assembly)	
311	7020041	18	Stud, Wheel (9 Per Assembly)	
313	7020042	18	Lugnut (9 per Assembly)	

SECTION 1 - FRAME

ITEM	PART NUMBER	QTY	DESCRIPTION	REV
314	7020054	2	Nut, Castle (1 per Assembly)	
315	3450608	2	Pin, Cotter (1 Per Assembly)	
316	7020055	2	Washer, Spindle (1 Per Assembly)	
401		Ref	**FRAME WELDMENTS**	
401		Ref	Frame Weldments 400S with 500lbs Capacity	
401	2360650	Ref	Frame Weldments **(SN 0300096000 through 0300115395)**	
401	2360756	Ref	Frame Weldments **(SN 0300115396 through 0300140364)**	
401	1001106761	Ref	Frame Weldments **(SN 0300140365 through 0300161284)**	
401	1001141045	Ref	Frame Weldments (All Specs except CE Specs with Foam-Filled Tires) **(SN 0300161285 through 0300203770)**	
401	1001141065	Ref	Frame Weldments (All Specs except CE Specs with Pneumatic Tires) **(SN 0300161285 through 0300203770)**	
401	1001141065	Ref	Frame Weldments (CE Specs) **(SN 0300161285 through 0300203770)**	
401		Ref	Frame Weldments 400S with 750lbs Capacity	
401	2360651	Ref	Frame Weldments **(SN 0300096000 through 0300115395)**	
401	2360794	Ref	Frame Weldments **(SN 0300115396 through 0300140364)**	
401	1001106762	Ref	Frame Weldments **(SN 0300140365 through 0300161284)**	
401	1001143571	Ref	Frame Weldments **(SN 0300161285 through 0300203770)**	
401		Ref	Frame Weldments 460SJ (All Specs Except CE Spec)	
401	2360652	Ref	Frame Weldments **(SN 0300096000 through 0300115395)**	
401	2360795	Ref	Frame Weldments **(SN 0300115396 through 0300140364)**	
401	1001106763	Ref	Frame Weldments **(SN 0300140365 through 0300161284)**	
401	1001143571	Ref	Frame Weldments (With Foam-Filled Tires) **(SN 0300161285 through 0300203770)**	
401	1001141058	Ref	Frame Weldments (With Pneumatic Tires) **(SN 0300161285 through 0300203770)**	
401		Ref	Frame Weldments 460SJ (CE Spec with Pneumatic Tires)	
401	2360653	Ref	Frame Weldments **(SN 0300096000 through 0300115395)**	
401	2360796	Ref	Frame Weldments **(SN 0300115396 through 0300140364)**	
401	1001106764	Ref	Frame Weldments **(SN 0300140365 through 0300161284)**	
401	1001141058	Ref	Frame Weldments **(SN 0300161285 through 0300203770)**	
401		Ref	Frame Weldments 460SJ (CE Spec with Foam-Filled Tires)	
401	2360652	Ref	Frame Weldments **(SN 0300096000 through 0300115395)**	
401	2360795	Ref	Frame Weldments **(SN 0300115396 through 0300140364)**	
401	1001106763	Ref	Frame Weldments **(SN 0300140365 through 0300161284)**	
401	1001141058	Ref	Frame Weldments **(SN 0300161285 through 0300203770)**	

FIGURE 1-2. AXLE AND STEERING INSTALLATION - 2WD WITH TOW PACKAGE

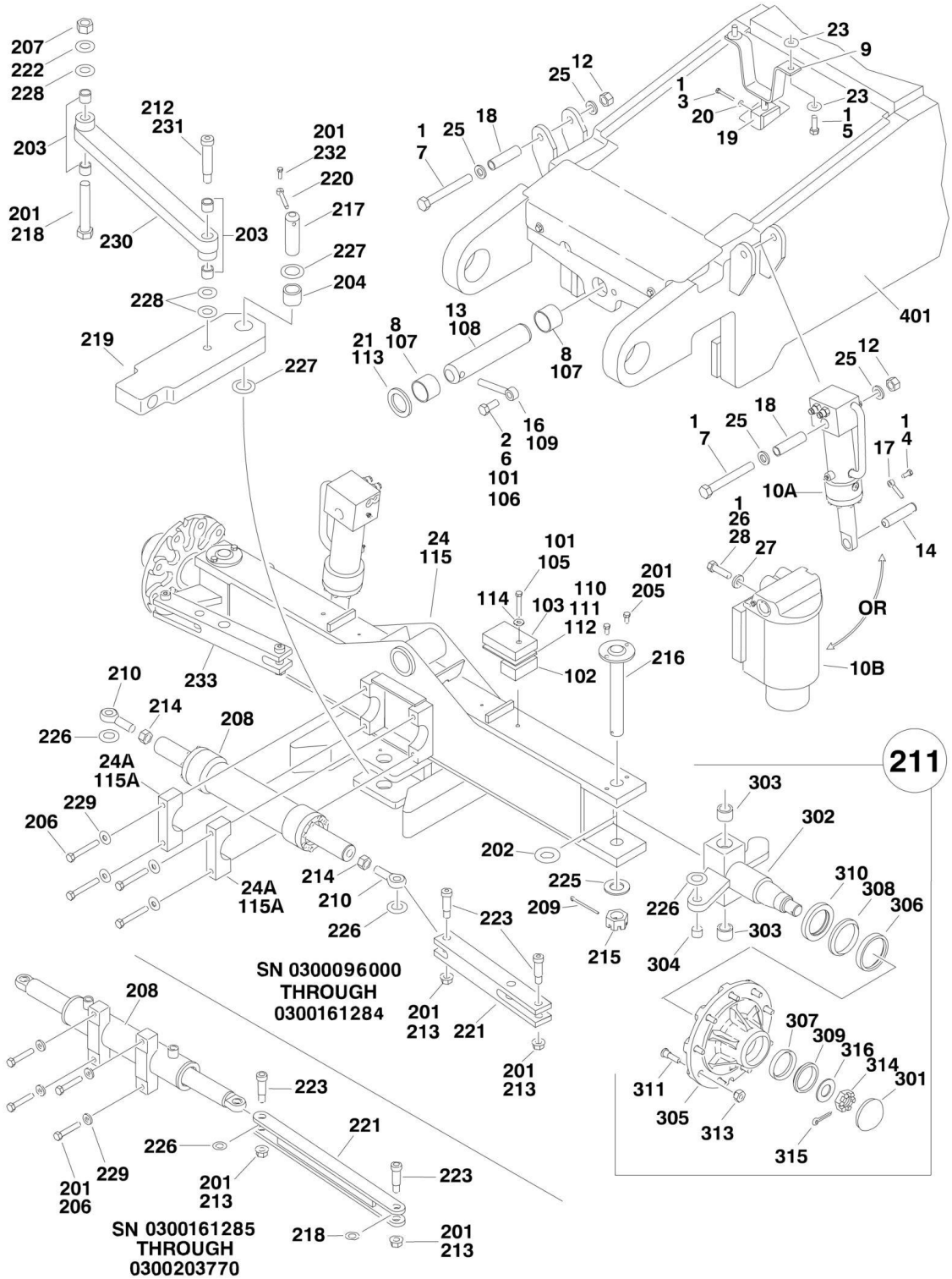

FIGURE 1-2. AXLE AND STEERING INSTALLATION - 2WD WITH TOW PACKAGE

ITEM	PART NUMBER	QTY	DESCRIPTION	REV
		Ref	**OSCILLATING AXLE INSTALLATION**	
	0273473	Ref	**Oscillating Axle Installation (SN 0300096000 through 0300115395)**	C
	1001093929	Ref	**Oscillating Axle Installation (SN 0300115396 through 0300140364)**	D
	1001108382	Ref	**Oscillating Axle Installation (SN 0300140365 through 0300161284)**	B
	1001139743	Ref	**Oscillating Axle Installation (SN 0300161285 through 0300203770)**	B
1	0100011	AR	Locking, Compound	
2	0100019	AR	Locking, Compound	
3	0641424	4	Bolt 1/4in-20NC x 3in **(SN 0300096000 through 0300140365)**	
4	0641607	2	Bolt 3/8in-16NC x 7/8in **(SN 0300096000 through 0300115396)**	
5	0642010	2	Bolt 5/8in-11NC x 1-1/4in **(SN 0300096000 through 0300140365)**	
6	0642012	1	Bolt 5/8in-11NC x 1-1/2in	
7	0682248	2	Bolt 3/4in-10NC x 6in Grade 8 **(SN 0300096000 through 0300115396)**	
8	0961950	2	Bushing	
9		Ref	Cam, Lockout Options:	
9	1100123	1	Cam, Lockout **(SN 0300096000 through 0300115395)**	
9	1100118	1	Cam, Lockout **(SN 0300115396 through 0300140365)**	
10		Ref	Lockout Cylinder Assembly Options (See CYLINDER SECTION for Breakdown):	
10A	1684139	2	Lockout Cylinder Assembly **(SN 0300096000 through 0300115395)**	
10B	1684465	2	Lockout Cylinder Assembly **(SN 0300115396 through 0300203770)**	
12	3272201	2	Nut 3/4in-10NC **(SN 0300096000 through 0300115396)**	
13	3422592	1	Pin, Axle Pivot	
14	3422936	2	Pin Only **(SN 0300096000 through 0300115396)**	
16	3841258	1	Keeper, Pin	
17	3841520	2	Keeper, Pin **(SN 0300096000 through 0300115396)**	
18	4567462	2	Tube, Mounting **(SN 0300096000 through 0300115396)**	
19	4640871	1	Lockout Valve Assembly **(SN 0300096000 through 0300140365)**	
19	7012693	1	Seal Kit - 4640871 Valve	
19	7002840	1	Anti-Rotation Pin Removal Tool	
20	4711400	4	Flatwasher 1/4in Thin **(SN 0300096000 through 0300140365)**	
21	4740158	1	Thrustwasher	
23	4752000	AR	Flatwasher 5/8in Regular **(SN 0300096000 through 0300140365)**	
24		Ref	Axle Weldment Options:	
24	4846801	1	Axle Weldment **(SN 0300096000 through 0300115395)**	
24	1001093879	1	Axle Weldment **(SN 0300115396 through 0300161284)**	
24	1001139705	1	Axle Weldment **(SN 0300161285 through 0300203770)**	
24A		Ref	Steer Cylinder Mounting Block Assembly Options:	
24A	0561300	2	Steer Cylinder Mounting Block Assembly **(SN 0300096000 through 0300131323)**	
24A	1001100424	2	Steer Cylinder Mounting Block Assembly **(SN 0300115396 through 0300161284)**	
24A	See Note	2	Steer Cylinder Mounting Block Assembly (Note: Part of Steer Cylinder - Not Available for Purchase) **(SN 0300161285 through 0300203770)**	

ITEM	PART NUMBER	QTY	DESCRIPTION	REV
25	4892200	4	Flatwasher 3/4in Hardened **(SN 0300096000 through 0300115395)**	
26	0641814	8	Bolt 1/2in-13NC x 1-3/4in **(SN 0300115396 through 0300203770)**	
27	4891800	8	Flatwasher 1/2in Hardened **(SN 0300115396 through 0300203770)**	
28	0100038	AR	Primer, Locking	
		Ref	**FIXED AXLE INSTALLATION**	
	0272906	Ref	**Fixed Axle Installation (SN 0300096000 through 0300115395)**	C
	1001093928	Ref	**Fixed Axle Installation (SN 0300115396 through 0300161284)**	E
	1001139742	Ref	**Fixed Axle Installation (SN 0300161285 through 0300203770)**	B
101	0100011	AR	Locking, Compound	
102		Ref	Block, Stop Plate Options:	
102	0362932	2	Block, Stop Plate **(SN 0300096000 through 0300115395)**	
102	1001093846	2	Block, Stop Plate **(SN 0300115396 through 0300203770)**	
103		Ref	Plate, Stop Options:	
103	0362954	2	Plate, Stop **(SN 0300096000 through 0300115395)**	
103	1001093851	2	Plate, Stop **(SN 0300115396 through 0300203770)**	
105		Ref	Bolt 3/8in-16NC Options:	
105	0641626	2	Bolt 3/8in-16NC **(SN 0300096000 through 0300115395)**	
105	0641616	2	Bolt 3/8in-16NC **(SN 0300115396 through 0300203770)**	
106	0642012	1	Bolt 5/8in-11NC x 1-1/2in	
107	0961950	2	Bushing	
108	3422592	1	Pin, Axle Pivot	
109	3841258	1	Keeper, Pin	
110	4071121	2	Shim.063in **(SN 0300161285 through 0300203770)**	
111	4070973	2	Shim 11Ga **(SN 0300096000 through 0300115396)**	
112	4071002	4	Shim 20Ga **(SN 0300096000 through 0300115396)**	
113	4740158	1	Thrustwasher	
114	4751600	2	Flatwasher 3/8in Regular	
115		Ref	Axle Weldment Options:	
115	4846426	1	Axle Weldment **(SN 0300096000 through 0300115395)**	
115	1001093879	1	Axle Weldment **(SN 0300115396 through 0300161284)**	
115	1001139705	1	Axle Weldment **(SN 0300161285 through 0300203770)**	
115A		Ref	Steer Cylinder Mounting Block Assembly Options:	
115A	0561300	2	Steer Cylinder Mounting Block Assembly **(SN 0300096000 through 0300131322)**	
115A	1001100424	2	Steer Cylinder Mounting Block Assembly **(SN 0300131323 through 0300161284)**	
115A	See Note	2	Steer Cylinder Mounting Block Assembly (Note: Part of Steer Cylinder - Not Available for Purchase) **(SN 0300161285 through 0300203770)**	
		Ref	**STEERING INSTALLATION**	
	0272804	Ref	**Steering Installation (SN 0300096000 through 0300161284)**	H
	1001139901	Ref	**Steering Installation (SN 0300161285 through 0300203770)**	C
201	0100011	AR	Locking, Compound	
202	0440162	2	Thrustwasher	
203	0962292	4	Bushing	
204	0962348	1	Bushing	
205	0641606	4	Bolt 3/8in-16NC x 3/4in	
206		Ref	Bolt 1/2in-13NC (Grade 8) Options:	
206	0681824	4	Bolt 1/2in-13NC x 3in	
206	0681822	4	Bolt 1/2in-13NC x 2-3/4in	

ITEM	PART NUMBER	QTY	DESCRIPTION	REV
207	3272205	2	Locknut 3/4in-16NF	
208		Ref	Steer Cylinder Assembly Options (See CYLINDER SECTION for Breakdown):	
208	1684412	1	Steer Cylinder Assembly **(SN 0300096000 through 0300161284)**	
208	1001143434	1	Steer Cylinder Assembly **(SN 0300161285 through 0300203770)**	
209	3450808	2	Pin, Cotter 1/4in x 2in	
210		Ref	Rod-End Options:	
210	3841367	NLA	Rod-End (Use p/n 3841517Rod-End and p/n 7020180 Grease Fitting) **(SN 0300096000 through 0300110479)**	
210	3841517	2	Rod-End **(SN 0300110480 through 0300161284)**	
210	Not Required	0	Rod-End **(SN 0300161285 through 0300203770)**	
211	2780230	2	Hub/Spindle Assembly (See 301 to 316 for Breakdown)	
212	3900295	1	Bolt, Shoulder 1in x 3in	
213	3312008	4	Nut 5/8in-11NC	
214	3322201	2	Nut 3/4in-16NF **(SN 0300096000 through 0300161285)**	
215	3323003	2	Nut 1-1/4in-12NF	
216	3422692	2	Kingpin	
217	3422848	1	Pin, Hitch	
218	3900296	1	Bolt, Shoulder 1in x 4-1/2in	
219	3574235	1	Plate, Tow Bar Pivot	
220	3841143	1	Keeper	
221		Ref	Tie-Rod Options:	
221	3841619	1	Tie-Rod **(SN 0300096000 through 0300161284)**	
221	1001139877	NLA	Tie-Rod (Use p/n 1001150314) **(SN 0300161285 through 0300203770)**	
222	4712400	1	Flatwasher 7/8in Thin	
223		Ref	Bolt, Shoulder Options:	
223	3900109	AR	Bolt, Shoulder 3/4in x 1-3/4in	
223	3900327	AR	Bolt, Shoulder 3/4in x 2in	
225	4713000	2	Flatwasher 1-1/4in Thin	
226	4740086	4	Thrustwasher	
227	4740155	2	Thrustwasher	
228	4740491	3	Thrustwasher	
229	4751800	4	Flatwasher 1/2in Regular	
230	4846802	NLA	Weldment, Link (Use p/n 1001150315)	
231	0100019	AR	Locking, Compound	
232	0641508	1	Bolt 5/16in-18NC x 1in	
233		Ref	Tie-Rod Options:	
233	3841619	1	Tie-Rod **(SN 0300096000 through 0300161284)**	
233	1001140570	1	Tie-Rod **(SN 0300161285 through 0300203770)**	
	2780230	Ref	**HUB ASSEMBLY**	A
301	7020033	2	Cap, Dust (1 per Assembly)	
302	7020034	2	Spindle Assembly (1 per Assembly)	
303	0961951	4	Bushing (2 Per Assembly)	
304	0962140	2	Bearing (1 per Assembly)	
305	7020035	2	Hub (1 per Assembly) (Includes Items 306 & 307)	
306	7020036	2	Cup, Bearing - Inner(1 per Assembly)	
307	7020038	2	Cup, Bearing - Outer (1 per Assembly)	
308	7020037	2	Cone, Bearing - Inner (1 per Assembly)	
309	7020039	2	Cone, Bearing - Outer (1 per Assembly)	

SECTION 1 - FRAME

ITEM	PART NUMBER	QTY	DESCRIPTION	REV
310	7020040	2	Seal (1 Per Assembly)	
311	7020041	18	Stud, Wheel (9 Per Assembly)	
313	7020042	18	Lugnut (9 per Assembly)	
314	7020054	2	Nut, Castle (1 per Assembly)	
315	3450608	2	Pin, Cotter (1 Per Assembly)	
316	7020055	2	Washer, Spindle (1 Per Assembly)	
401		Ref	**FRAME WELDMENTS**	
401		Ref	Frame Weldments 400S with 500lbs Capacity	
401	2360650	Ref	Frame Weldments **(SN 0300096000 through 0300115395)**	
401	2360756	Ref	Frame Weldments **(SN 0300115396 through 0300140364)**	
401	1001106761	Ref	Frame Weldments **(SN 0300140365 through 0300161284)**	
401	1001141045	Ref	Frame Weldments (All Specs except CE Specs with Foam-Filled Tires) **(SN 0300161285 through 0300203770)**	
401	1001141065	Ref	Frame Weldments (All Specs except CE Specs with Pneumatic Tires) **(SN 0300161285 through 0300203770)**	
401	1001141065	Ref	Frame Weldments (CE Specs) **(SN 0300161285 through 0300203770)**	
401		Ref	Frame Weldments 400S with 750lbs Capacity	
401	2360651	Ref	Frame Weldments **(SN 0300096000 through 0300115395)**	
401	2360794	Ref	Frame Weldments **(SN 0300115396 through 0300140364)**	
401	1001106762	Ref	Frame Weldments **(SN 0300140365 through 0300161284)**	
401	1001143571	Ref	Frame Weldments **(SN 0300161285 through 0300203770)**	
401		Ref	Frame Weldments 460SJ (All Specs Except CE Spec)	
401	2360652	Ref	Frame Weldments **(SN 0300096000 through 0300115395)**	
401	2360795	Ref	Frame Weldments **(SN 0300115396 through 0300140364)**	
401	1001106763	Ref	Frame Weldments **(SN 0300140365 through 0300161284)**	
401	1001143571	Ref	Frame Weldments (With Foam-Filled Tires) **(SN 0300161285 through 0300203770)**	
401	1001141058	Ref	Frame Weldments (With Pneumatic Tires) **(SN 0300161285 through 0300203770)**	
401		Ref	Frame Weldments 460SJ (CE Spec with Pneumatic Tires)	
401	2360653	Ref	Frame Weldments **(SN 0300096000 through 0300115395)**	
401	2360796	Ref	Frame Weldments **(SN 0300115396 through 0300140364)**	
401	1001106764	Ref	Frame Weldments **(SN 0300140365 through 0300161284)**	
401	1001141058	Ref	Frame Weldments **(SN 0300161285 through 0300203770)**	
401		Ref	Frame Weldments 460SJ (CE Spec with Foam-Filled Tires)	
401	2360652	Ref	Frame Weldments **(SN 0300096000 through 0300115395)**	
401	2360795	Ref	Frame Weldments **(SN 0300115396 through 0300140364)**	
401	1001106763	Ref	Frame Weldments **(SN 0300140365 through 0300161284)**	
401	1001141058	Ref	Frame Weldments **(SN 0300161285 through 0300203770)**	

FIGURE 1-3. AXLE AND STEERING INSTALLATION - 4WD (SN 0300096000 through 0300161284)

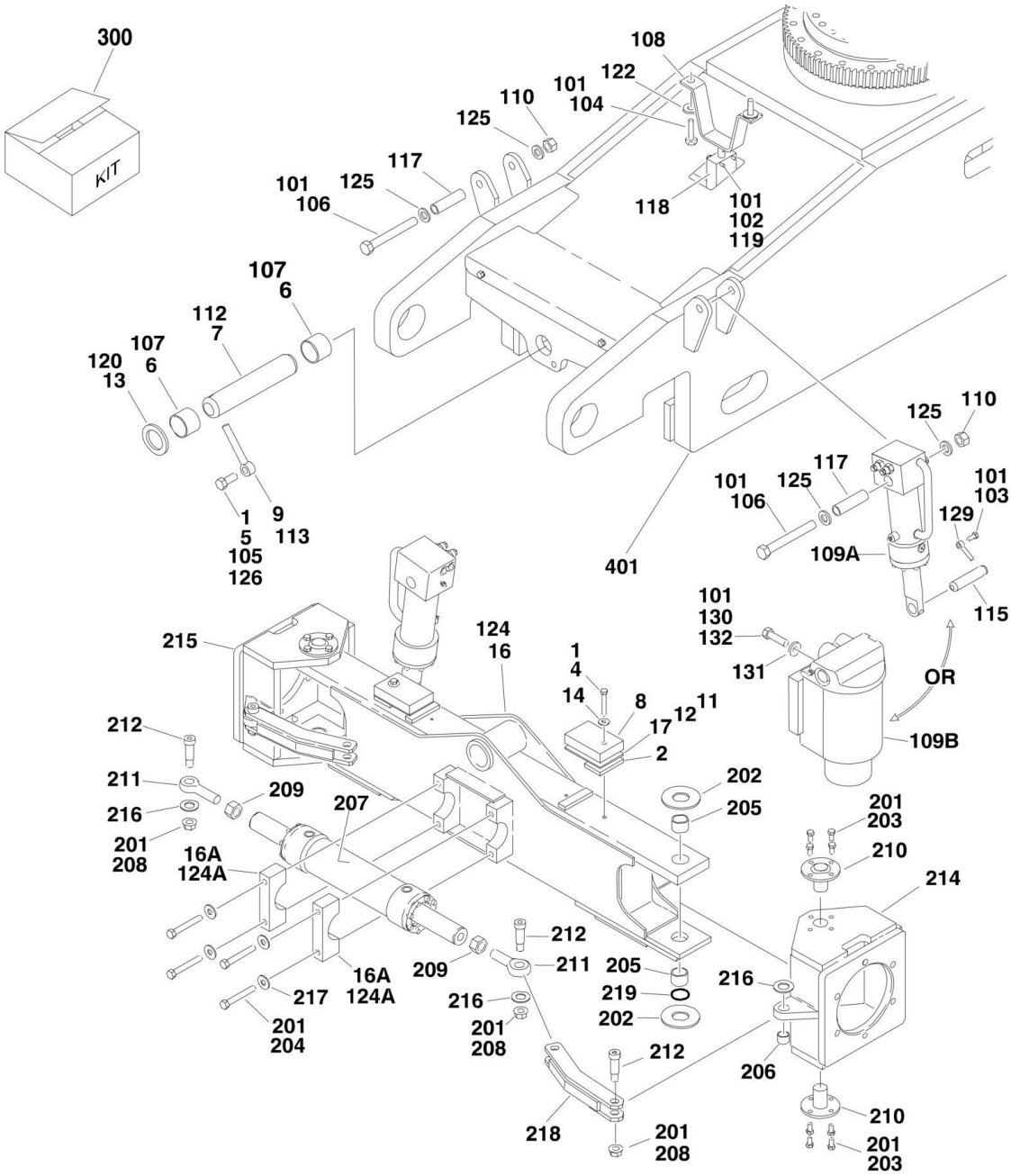

FIGURE 1-3. AXLE AND STEERING INSTALLATION - 4WD (SN 0300096000 through 0300161284)

ITEM	PART NUMBER	QTY	DESCRIPTION	REV
		Ref	**FIXED AXLE INSTALLATION**	
	0272903	Ref	**Fixed Axle Installation (SN 0300096000 through 0300115395)**	B
	0275112	Ref	**Fixed Axle Installation (SN 0300115396 through 0300161285)**	E
1	0100011	AR	Locking, Compound	
2	0362965	2	Bar, Stop Only **(SN 0300096000 through 0300115396)**	
4	0641620	2	Bolt 3/8in-16NC x 2-1/2in	
5	0642012	1	Bolt 5/8in-11NC x 1-1/2in	
6	0961950	2	Bushing	
7	3422592	1	Pin, Axle Pivot	
8		Ref	Plate, Stop Options:	
8	0362954	2	Plate, Stop **(SN 0300096000 through 0300115395)**	
8	4071119	2	Plate, Stop **(SN 0300115396 through 03001154778)**	
8	1001093851	2	Plate, Stop **(SN 03001154779 through 0300161285)**	
9	3841258	1	Keeper, Pin	
11	4070973	AR	Shim 1/8in Only **(SN 0300096000 through 0300115396)**	
12		Ref	Shim Options:	
12	4070972	AR	Shim **(SN 0300096000 through 0300115395)**	
12	4071121	2	Shim **(SN 0300115396 through 0300161285)**	
13	4740158	1	Thrustwasher	
14	4751600	2	Flatwasher 3/8in Regular	
16		Ref	Axle Weldment Options:	
16	4846550	1	Axle Weldment **(SN 0300096000 through 0300115395)**	
16	1001093380	1	Axle Weldment **(SN 0300115396 through 0300161285)**	
16A		Ref	Steer Cylinder Mounting Block Assembly Options:	
16A	0561300	2	Steer Cylinder Mounting Block Assembly **(SN 0300096000 through 0300131322)**	
16A	1001100424	2	Steer Cylinder Mounting Block Assembly **(SN 0300131323 through 0300161285)**	
17	4071002	AR	Shim 20 - Gauge **(SN 0300096000 through 0300115396)**	
		Ref	**OSCILLATING AXLE INSTALLATION**	
		Ref	**All Specs Except CE Spec**	
	0272901	Ref	**Oscillating Axle Installation (SN 0300096000 through 0300115395)**	B
	0275113	Ref	**Oscillating Axle Installation (SN 0300115396 through 0300140364)**	C
	1001106911	Ref	**Oscillating Axle Installation (SN 0300140365 through 0300161285)**	C
		Ref	**CE Spec**	
	0272905	Ref	**Oscillating Axle Installation (SN 0300096000 through 0300115395)**	B
	1001093972	Ref	**Oscillating Axle Installation (SN 0300115396 through 0300140364)**	D
	1001106911	Ref	**Oscillating Axle Installation (SN 0300140365 through 0300161285)**	C
101	0100011	AR	Locking, Compound	
102		Ref	Bolt Options: **(SN 0300096000 through 0300140365)**	
102	0641414	4	Bolt 1/4in-20NC x 1-3/4in (All Specs Except CE Spec)	
102	0641424	4	Bolt 1/4in-20NC x 3in (CE Spec)	
103	0641607	2	Bolt 3/8in-16NC x 7/8in **(SN 0300096000 through 0300115396)**	
104	0642010	2	Bolt 5/8in-11NC x 1-1/4in	
105	0642012	1	Bolt 5/8in-11NC x 1-1/2in	

SECTION 1 - FRAME

ITEM	PART NUMBER	QTY	DESCRIPTION	REV
106	0682248	2	Bolt 3/4in-10NC x 6in (Grade 8) **(SN 0300096000 through 0300115396)**	
107	0961950	2	Bushing	
108		Ref	Cam, Lockout Options: **(SN 0300096000 through 0300140365)**	
108	1100118	1	All Specs Except CE Spec	
108		Ref	CE Spec (Not Shown)	
108	1100123	1	Cam, Lockout **(SN 0300096000 through 0300115395)**	
108	1100118	1	Cam, Lockout **(SN 0300115396 through 0300140365)**	
109		Ref	Lockout Cylinder Assembly Options (See CYLINDER SECTION for Breakdown):	
109A	1684139	2	Lockout Cylinder Assembly **(SN 0300096000 through 0300115395)**	
109B	1684465	2	Lockout Cylinder Assembly **(SN 0300115396 through 0300161285)**	
110	3272201	2	Nut 3/4in-10NC **(SN 0300096000 through 0300115396)**	
112	3422592	1	Pin, Axle Pivot	
113	3841258	1	Keeper, Pin	
115	3422936	2	Pin Only **(SN 0300096000 through 0300115396)**	
117	4567462	2	Tube, Mounting **(SN 0300096000 through 0300115396)**	
118	4640871	AR	Lockout Valve Assembly **(SN 0300096000 through 0300140365)**	
118		Ref	All Specs Except CE Spec	
118		Ref	CE Spec	
118	7012693	1	Seal Kit - 4640871 Valve	
118	7002840	1	Anti-Rotation Pin Removal Tool	
119	4711400	4	Flatwasher 1/4in Thin	
120	4740158	1	Thrustwasher	
122	4752000	4	Flatwasher 5/8in Regular	
124		Ref	Axle Weldment Options:	
124	4846550	1	Axle Weldment **(SN 0300096000 through 0300115395)**	
124	1001093380	1	Axle Weldment **(SN 0300115396 through 0300161285)**	
124A		Ref	Steer Cylinder Mounting Block Assembly Options:	
124A	0561300	2	Steer Cylinder Mounting Block Assembly **(SN 0300096000 through 0300131322)**	
124A	1001100424	2	Steer Cylinder Mounting Block Assembly **(SN 0300131323 through 0300161285)**	
125	4892200	4	Flatwasher 3/4in Hardened **(SN 0300096000 through 0300115396)**	
126	0100019	AR	Locking, Compound	
129	3841520	2	Keeper, Pin **(SN 0300096000 through 0300115395)**	
130	0641814	8	Bolt 1/2in-13NC x 1-3/4in **(SN 0300115396 through 0300161285)**	
131	4891800	8	Flatwasher 1/2in Hardened **(SN 0300115396 through 0300161285)**	
132	0100038	AR	Primer, Locking	
	0272927	Ref	**STEERING INSTALLATION**	H
201	0100011	AR	Locking, Compound	
202		Ref	Thrustwasher Options:	
202	4740537	AR	Thrustwasher (.0625) (Top Kingpin Location)	
202	4740538	AR	Thrustwasher (.125) (Top Kingpin Location)	
202	4740539	AR	Thrustwasher (.188) (Top Kingpin Location)	
202	4740540	AR	Thrustwasher (.250) (Top Kingpin Location)	
202	0440271	2	Thrustwasher (Bottom Kingpin Location)	
203	0641606	16	Bolt 3/8in-16NC x 3/4in	

ITEM	PART NUMBER	QTY	DESCRIPTION	REV
204	0681828	4	Bolt 1/2in-13NC x 3-1/2in (Grade 8) Options:	
205		Ref	Bushing Options:	
205	0440291	2	Bushing (Top Kingpin Location)	
205	0440274	2	Bushing (Bottom Kingpin Location)	
206	0962140	2	Bearing	
207	1684412	1	Steer Cylinder Assembly (See CYLINDER SECTION for Breakdown)	
208	3312008	AR	Nut 5/8in-11NC	
209	3322201	2	Nut 3/4in-16NF	
210	3423081	4	Kingpin	
211		Ref	Rod-End Options:	
211	3841367	NLA	Rod-End (Use p/n 3841517Rod-End and p/n 7020180 Grease Fitting) **(SN 0300096000 through 0300110479)**	
211	3841517	2	Rod-End **(SN 0300110480 through 0300161285)**	
212	3900109	4	Screw, Shoulder	
214	4130405	1	Spindle (Left Side)	
215	4130406	1	Spindle (Right Side)	
216	4740086	4	Thrustwasher	
217	4751800	4	Flatwasher 1/2in Regular	
218	4846070	2	Tie-Rod	
219	3780182	2	O-Ring (Bottom Kingpin Location Only)	
224	3020029	AR	Grease, Bearing	
300	2902400	1	Kingpin and Bushings Rebuild Kit (Includes Items 202, 203, 205, 210 & 219)	
401		Ref	**FRAME WELDMENTS**	
401		Ref	Frame Weldments 400S with 500lbs Capacity	
401	2360650	Ref	Frame Weldments **(SN 0300096000 through 0300115395)**	
401	2360756	Ref	Frame Weldments **(SN 0300115396 through 0300140364)**	
401	1001106761	Ref	Frame Weldments **(SN 0300140365 through 0300161285)**	
401		Ref	Frame Weldments 400S with 750lbs Capacity	
401	2360651	Ref	Frame Weldments **(SN 0300096000 through 0300115395)**	
401	2360794	Ref	Frame Weldments **(SN 0300115396 through 0300140364)**	
401	1001106762	Ref	Frame Weldments **(SN 0300140365 through 0300161285)**	
401		Ref	Frame Weldments 460SJ (All Specs Except CE Spec)	
401	2360652	Ref	Frame Weldments **(SN 0300096000 through 0300115395)**	
401	2360795	Ref	Frame Weldments **(SN 0300115396 through 0300140364)**	
401	1001106763	Ref	Frame Weldments **(SN 0300140365 through 0300161285)**	
401		Ref	Frame Weldments 460SJ (CE Spec with Pneumatic Tires)	
401	2360653	Ref	Frame Weldments **(SN 0300096000 through 0300115395)**	
401	2360796	Ref	Frame Weldments **(SN 0300115396 through 0300140364)**	
401	1001106764	Ref	Frame Weldments **(SN 0300140365 through 0300161285)**	
401		Ref	Frame Weldments 460SJ (CE Spec with Foam-Filled Tires)	
401	2360652	Ref	Frame Weldments **(SN 0300096000 through 0300115395)**	
401	2360795	Ref	Frame Weldments **(SN 0300115396 through 0300140364)**	
401	1001106763	Ref	Frame Weldments **(SN 0300140365 through 0300161285)**	

FIGURE 1-4. AXLE AND STEERING INSTALLATION - 4WD (SN 0300161285 through 0300203770)

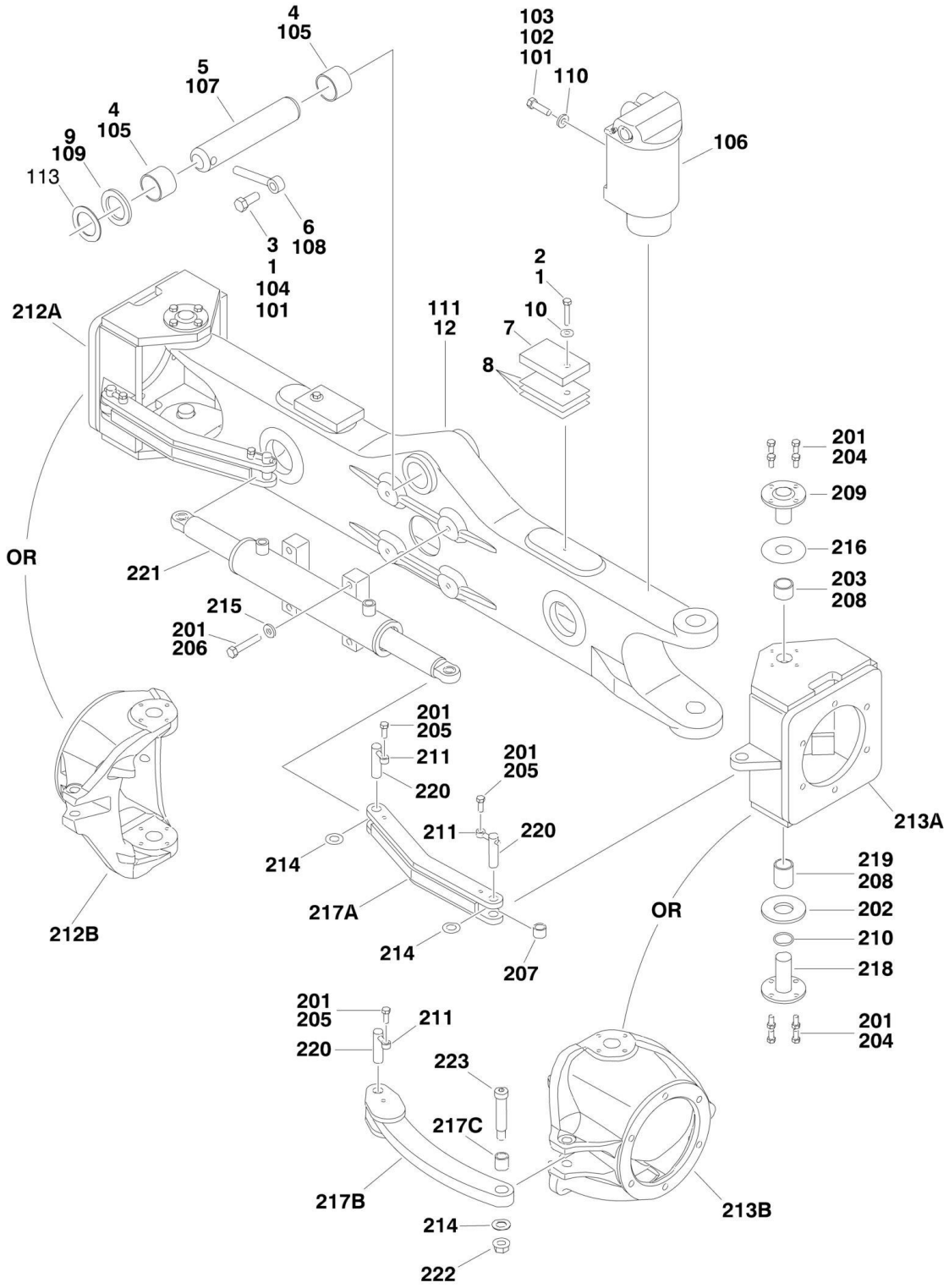

FIGURE 1-4. AXLE AND STEERING INSTALLATION - 4WD (SN 0300161285 through 0300203770)

ITEM	PART NUMBER	QTY	DESCRIPTION	REV
	1001139617	Ref	**FIXED AXLE INSTALLATION**	B
1	0100011	AR	Locking, Compound	
2	0641612	2	Bolt 3/8in-16NC x 1-1/2in	
3	0642012	1	Bolt 5/8in-11NC x 1-1/2in	
4	0961950	2	Bushing	
5	3422592	1	Pin, Axle Pivot	
6	3841258	1	Keeper, Pin	
7	1001093851	2	Plate	
8	4071121	2	Shim Options	
9	4740158	1	Thrustwasher	
10	4751600	2	Flatwasher 3/8in Regular	
12	1001098130	1	Axle Weldment	
	1001139616	Ref	**OSCILLATING AXLE INSTALLATION**	C
101	0100011	AR	Locking, Compound	
102	0100038	AR	Primer, Locking	
103	0641814	8	Bolt 1/2in-13NC x 1-3/4in	
104	0642012	1	Bolt 5/8in-11NC x 1-1/2in	
105	0961950	2	Bushing	
106	1684465	2	Lockout Cylinder Assembly (See CYLINDER SECTION for Breakdown)	
107	3422592	1	Pin, Axle Pivot	
108	3841258	1	Keeper, Pin	
109		Ref	Thrustwasher Options:	
109	4740158	1	Thrustwasher **(SN 0300096000 through 0300167045)**	
109	4740229	1	Thrustwasher **(SN 0300167046 through 0300203770)**	
110	4891800	8	Flatwasher 1/2in Hardened	
111	1001098130	1	Axle	
113	4071101	AR	Shim **(SN 0300167046 through 0300203770)**	
		Ref	**STEERING INSTALLATION**	
	1001139049	Ref	**Steering Installation (SN 0300161285 through 0300164033)**	C
	1001139935	Ref	**Steering Installation (SN 0300164034 through 0300203770)**	D
201	0100011	AR	Locking, Compound	
202	0440271	2	Thrustwasher	
203	0440291	2	Bearing	
204	0641606	16	Bolt 3/8in-16NC x 3/4in	
204	0641607	16	Bolt 3/8in-16NC x 7/8in	
205		Ref	Bolt 3/8in-16NC Options:	
205	0681608	4	Bolt 1in Grade 8 **(SN 0300161285 through 0300164033)**	
205	0641607	2	Bolt 7/8in Grade 5 **(SN 0300164034 through 0300203770)**	
206	0681820	4	Bolt 1/2in-13NC x 2-1/2in	
207	0962140	2	Bearing Only **(SN 0300161285 through 0300164034)**	
208	3020029	AR	Grease, Bearing	
209		Ref	Kingpin Options:	
209	3423081	2	Kingpin **(SN 0300161285 through 0300164033)**	
209	1001139141	2	Kingpin **(SN 0300164034 through 0300203770)**	
210	3780182	2	O-Ring	
211	3841520	AR	Keeper	
212		Ref	Spindle (Left Side) Options:	
212A	4130405	1	Spindle **(SN 0300161285 through 0300164033)**	
212B	1001139645	1	Spindle **(SN 0300164034 through 0300203770)**	

SECTION 1 - FRAME

ITEM	PART NUMBER	QTY	DESCRIPTION	REV
213		Ref	Spindle (Right Side) Options:	
213A	4130406	1	Spindle **(SN 0300161285 through 0300164033)**	
213B	1001139645	1	Spindle **(SN 0300164034 through 0300203770)**	
214	4740086	4	Thrustwasher	
215	4891800	4	Flatwasher 1/2in Hardened	
216	1001138780	AR	Shim **(SN 0300161285 through 0300164034)**	
217		Ref	Tie-Rod Options:	
217A	1001139048	2	Tie-Rod **(SN 0300161285 through 0300164033)**	
217B	1001139892	2	Tie-Rod **(SN 0300164034 through 0300203770)**	
217C	1001139943	2	Bushing for 1001139892 Tie-Rod (1 Per Tie-Rod)	
218	1001139141	2	Kingpin	
219	1001139476	2	Bearing	
220		Ref	Pin Options:	
220	1001139586	4	Pin **(SN 0300161285 through 0300164033)**	
220	1001116867	2	Pin **(SN 0300164034 through 0300203770)**	
221	1001143434	1	Steer Cylinder Assembly (See CYLINDER SECTION for Breakdown)	
222	3312008	AR	Nut, Flanged 5/8in-11NC **(SN 0300164034 through 0300203770)**	
223	3900255	2	Screw, Shoulder **(SN 0300164034 through 0300203770)**	
		Ref	**FRAME WELDMENTS**	
		Ref	Frame Weldments 400S with 500lbs Capacity	
	1001141045	Ref	All Specs except CE Specs with Foam-Filled Tires and Australian Specs	
	1001141065	Ref	All Specs except CE Specs with Pneumatic Tires and Australian Specs	
	1001141065	Ref	CE Specs	
	Not Available		Australian Spec	
		Ref	Frame Weldments 400S with 750lbs Capacity	
	1001143571	Ref	All Specs Except Australian Spec	
	Not Available		Australian Spec	
		Ref	Frame Weldments 460SJ	
	1001143571	Ref	All Specs Except CE Spec with Foam-Filled Tires	
	1001141058	Ref	All Specs Except CE Spec with Pneumatic Tires	
	1001141058	Ref	CE Spec with Pneumatic Tires	
	1001141058	Ref	CE Spec with Foam-Filled Tires	

FIGURE 1-5. TIRE AND WHEEL DRIVE INSTALLATIONS

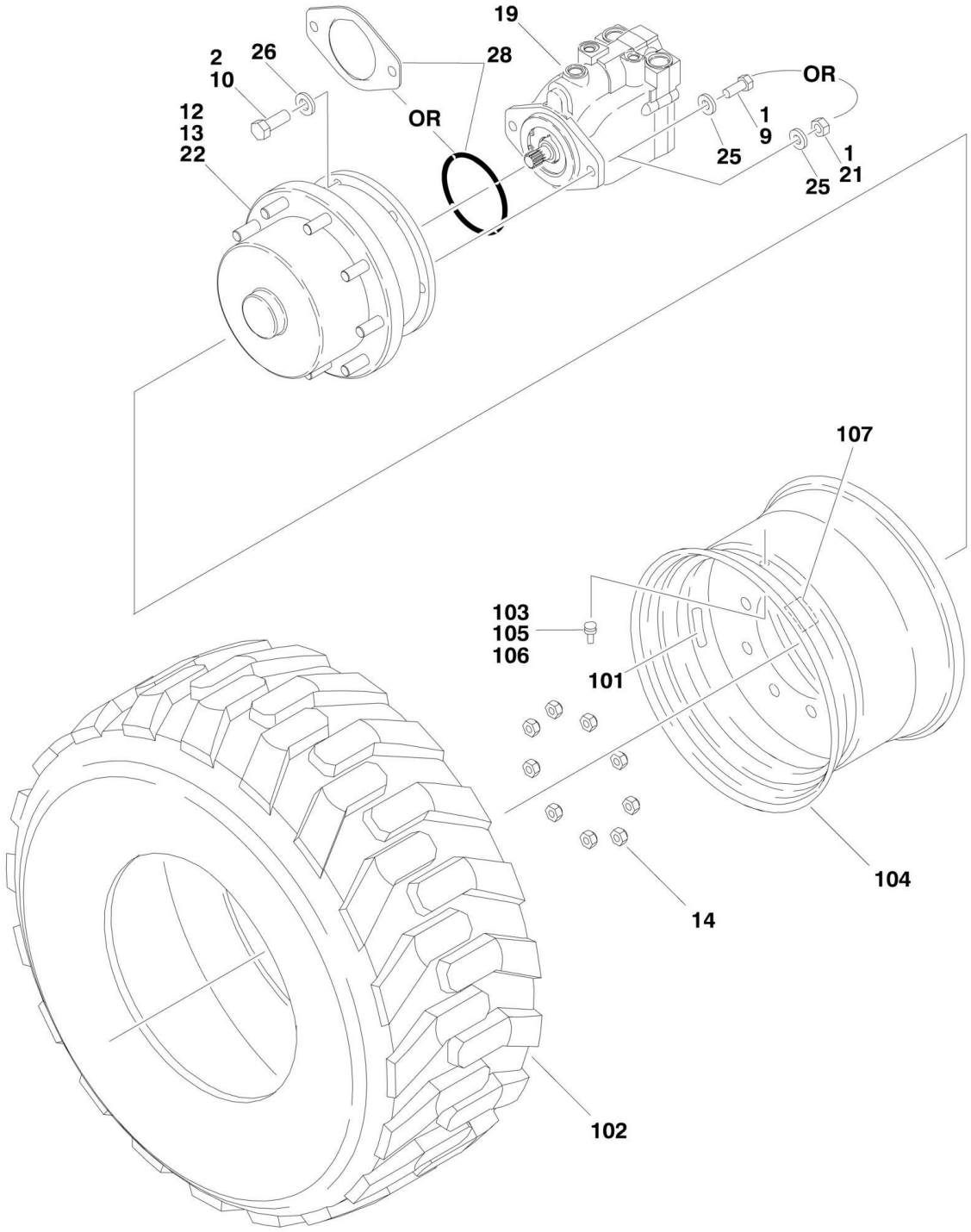

FIGURE 1-5. TIRE AND WHEEL DRIVE INSTALLATIONS

ITEM	PART NUMBER	QTY	DESCRIPTION	REV
		Ref	**WHEEL DRIVE INSTALLATIONS**	
		Ref	**2WD**	
	0272926	Ref	**Wheel Drive Installations (SN 0300096000 through 0300115395)**	E
	1001093749	Ref	**Wheel Drive Installations (SN 0300115396 through 0300203770)**	F
		Ref	**4WD**	
	0272925	Ref	**Wheel Drive Installations (SN 0300096000 through 0300115395)**	G
	1001093747	Ref	**Wheel Drive Installations (SN 0300115396 through 0300203770)**	D
1	0100011	AR	Locking, Compound	
2	0100019	AR	Locking, Compound	
9	0681810	4	Bolt 1/2in-13NC x 1-1/4in (Grade 8) (4WD Front Axle Only)	
10	0682014	AR	Bolt 5/8in-11NC x 1-3/4in (Grade 8)	
11	2300016	AR	Fluid, Hydraulic (Not Shown - Use with Brake)	
12	2780267	2	Drive Hub/Brake Assembly (Rear) (See DRIVE HUB AND HUB WITH BRAKE ASSEMBLIES for Breakdown)	
13		Ref	Drive Hub Assembly Options (Front):	
13	Not Required	0	2WD	
13	2780268	2	4WD (See DRIVE HUB AND HUB WITH BRAKE ASSEMBLIES for Breakdown)	
14	3300106	AR	Lugnut (9 Per Hub)	
19		Ref	Drive Motor Assembly Options:	
19		Ref	2WD Rear Options:	
19	3160298	NLA	Drive Motor Assembly (See DRIVE MOTOR ASSEMBLY (4 BOLT) for Breakdown) (See DRIVE MOTOR ASSEMBLY (5 BOLT) for Breakdown) **(SN 0300096000 through 0300098501)**	
19	3160351	2	Drive Motor Assembly (See DRIVE MOTOR ASSEMBLY (5 BOLT) for Breakdown) **(SN 0300098502 through 0300203770)**	
19		Ref	4WD Front and Rear Options:	
19	3160266	NLA	Drive Motor Assembly (See DRIVE MOTOR ASSEMBLY (4 BOLT) for Breakdown) (See DRIVE MOTOR ASSEMBLY (5 BOLT) for Breakdown) **(SN 0300096000 through 0300098501)**	
19	3160348	4	Drive Motor Assembly (See DRIVE MOTOR ASSEMBLY (5 BOLT) for Breakdown) **(SN 0300098502 through 0300203770)**	
21	3311801	4	Nut 1/2in-13NC (All Rear Axles)	
22	3020008	AR	Lube, Gear 80W-90	
25	4891800	AR	Flatwasher 1/2in Hardened	
26	4892000	AR	Flatwasher 5/8in Hardened	
28		Ref	Hardware Options:	
28	3790045	AR	O-Ring (1 Per Motor) **(SN 0300096000 through 0300103380)**	
28	3960526	AR	Gasket (1 Per Motor) **(SN 0300103381 through 0300203770)**	
		Ref	**TIRE AND WHEEL INSTALLATIONS**	
	0270091	Ref	**12 x 16.5 Pneumatic (ANSI and ANSI Export Specs)**	C
	0270650	Ref	**12 x 16.5 Pneumatic (Non-Marking) (ANSI and ANSI Export Specs)**	B
	0272924	Ref	**12 x 16.5 Pneumatic LT (ANSI Spec Only)**	A
	0272310	Ref	**12 x 16.5 Pneumatic TS (ANSI and ANSI Export Specs)**	B

SECTION 1 - FRAME

ITEM	PART NUMBER	QTY	DESCRIPTION	REV
	0270092	Ref	**12 x 16.5 Foam-Filled (All Specs)**	C
	0270653	Ref	**12 x 16.5 Foam-Filled (Non-Marking) (All Specs)**	B
	0271995	Ref	**14 x 17.5 Pneumatic (ANSI and ANSI Export Specs)**	B
	0272311	Ref	**14 x 17.5 Pneumatic TS (ANSI and ANSI Export Specs)**	B
	0271998	Ref	**14 x 17.5 Foam-Filled (All Specs)**	B
	0270093	Ref	**33/16LL x 16.1 Pneumatic (ANSI and ANSI Export Specs)**	A
	1001103479	Ref	**33/16LL x 16.1 Pneumatic TS (ANSI and ANSI Export Specs)**	A
	0270094	Ref	**33/16LL x 16.1 Foam-Filled (All Specs)**	A
	1001113366	Ref	**33 x 6 x 11 Solidflex (460SJ Only) (ANSI Spec Only)**	A
	0270074	NLA	12 x 16.5 Pneumatic Right Side (Use p/n 1001148863)	B-B
	0270075	NLA	12 x 16.5 Pneumatic Left Side (Use p/n 1001148864)	B-B
	0272923	4	12 x 16.5 Pneumatic (LT)	A
	0272336	NLA	12 x 16.5 Pneumatic Right Side (TS) (Use p/n 1001148871)	B-B
	0272337	NLA	12 x 16.5 Pneumatic Left Side (TS) (Use p/n 1001148872)	B-B
	0270651	NLA	12 x 16.5 Pneumatic Right Side (See Note) (Use p/n 1001148867)	B-B
	0270652	NLA	12 x 16.5 Pneumatic Left Side (See Note) (Use p/n 1001148868)	B-B
	0270076	NLA	12 x 16.5 Foam-Filled Right Side (See Note) (Use p/n 1001148865)	C-C
	0270077	NLA	12 x 16.5 Foam-Filled Left Side (See Note) (Use p/n 1001148866)	C-C
	0270654	NLA	12 x 16.5 Foam-Filled Right Side (Non-Marking) (See Note) (Use p/n 1001148869)	C-C
	0270655	NLA	12 x 16.5 Foam-Filled Left Side (Non-Marking) (See Note) (Use p/n 1001148870)	C-C
	0271993	NLA	14 x 17.5 Pneumatic Right Side (Use p/n 1001148873)	B-B
	0271994	NLA	14 x 17.5 Pneumatic Left Side (Use p/n 1001148874)	B-B
	0272352	NLA	14 x 17.5 Pneumatic Right Side (TS) (Use p/n 1001148877)	B-B
	0272353	NLA	14 x 17.5 Pneumatic Left Side (TS) (Use p/n 1001148878)	B-B
	0271997	NLA	14 x 17.5 Foam-Filled Right Side (See Note) (Use p/n 1001148875)	B-B
	0271996	2	14 x 17.5 Foam-Filled Left Side (See Note) (Use p/n 1001148876)	B-B
	0270078	4	33/16LL x 16.1 Pneumatic	A
	1001103478	4	33/16LL x 16.1 Pneumatic (TS)	A
	0270079	4	33/16LL x 16.1 Foam-Filled (See Note)	C
	1001113307	2	33 x 6 x 11 Solidflex Left Side	A
	1001113308	2	33 x 6 x 11 Solidflex Right Side	A
		Ref	**Note: Assemblies may require ballast/foam filling to manufacturer's specifications prior to installing on a machine. Refer to Operation and Safety or Service and Maintenance Manuals. Purchase individual tire and/or rim only if able to foam fill tire and wheel assembly, otherwise, purchase complete assembly.**	
101		Ref	Decal Options (Pneumatic Only):	
101	1702740	1	Decal - 90PSI	
101	1702738	1	Decal - 45PSI	
101	1703067	1	Decal - 40PSI	
102		Ref	Tire Options:	
102	4520216	1	12 x 16.5 NHS	
102	4520240	1	12 x 16.5 NHS (Non-Marking)	
102	4520266	1	12 x 16.5 LT	
102	4520212	1	14 x 16.1	
102	4520259	1	14 x 17.5 NHS	

ITEM	PART NUMBER	QTY	DESCRIPTION	REV
102	4520212	1	33/16LL x 16.1	
103	4640113	1	Valve, Air (Pneumatic Only)	
103	4641122	1	Valve, Air-Liquid Tire (Foam Filled Only)	
103	1001149953	1	Cap, Valve Stem (Foam Filled Only)	
104		Ref	Rim, Wheel	
104	4860214	1	16.1 x 14 (Use with 33/16LL x 16.1 & 14 x 16.1Tires)	
104	4860213	NLA	16.5 x 9.75 (Use with 12 x 16.5 Tires) (Use p/n 1001147274)	
104	4860198	NLA	17.5 x 10.50 (Use with 14 x 17.5 Tires) (Use p/n 1001146397)	
105	1120552	1	Cap, Valve Stem (Green) (Pneumatic TS Tires Only)	
106	1300019	AR	Chemical, Tire Sealant (Pneumatic TS Tires Only)	
107	1705364	1	Decal - Tire Sealant (Pneumatic TS Tires Only)	

FIGURE 1-6. DRIVE HUB AND HUB WITH BRAKE ASSEMBLIES

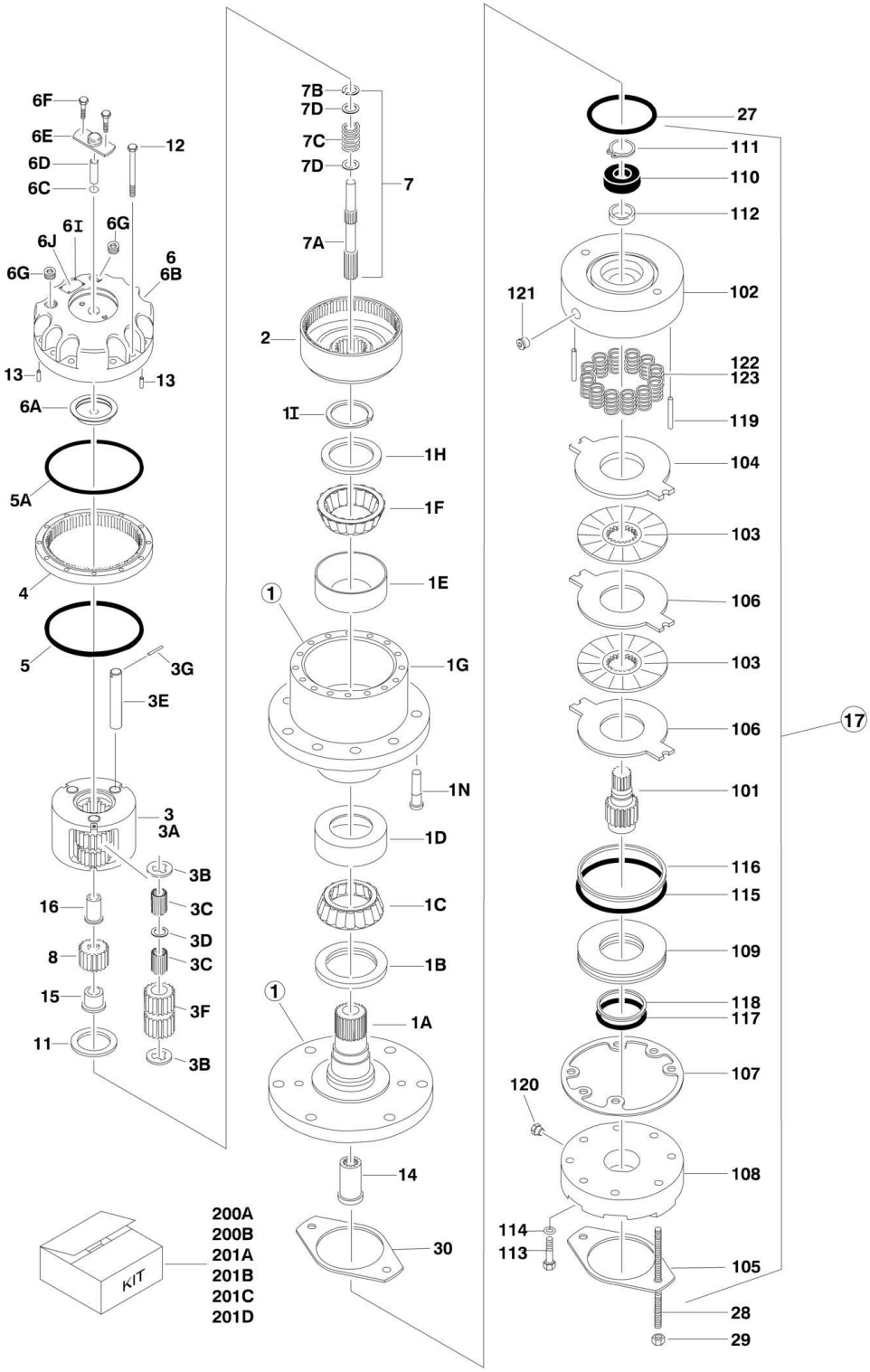

FIGURE 1-6. DRIVE HUB AND HUB WITH BRAKE ASSEMBLIES

ITEM	PART NUMBER	QTY	DESCRIPTION	REV
		Ref	**DRIVE HUB ASSEMBLIES**	
	2780268	Ref	**Drive Hub without Brake Assembly (4WD Front) (Includes Items 1-16)**	D
	2780267	Ref	**Drive Hub with Brake Assembly (2WD and 4WD Rear) (Includes Items 1-123)**	F
1	See Note	1	Spindle/Housing Assembly (Note: Not Available - Purchase Complete Drive Hub Assembly)	
1A	7017059	1	Spindle	
1B	7001998	1	Seal	
1C	7010429	1	Cone, Bearing (Includes Item 1D)	
1D	7010429	1	Cup, Bearing (Includes Item 1C)	
1E	7000257	1	Cup, Bearing	
1F	7000258	1	Cone, Bearing	
1G	7007601	1	Housing/Ring Gear	
1H	7000232	1	Thrustwasher	
1I	7000229	1	Ring, Retaining	
1N	7007640	9	Stud, Wheel	
2	7000246	1	Gear, Internal	
3	7024712	1	Carrier Assembly (Purchase p/n 7024712 for items 3A-3G)	
3A	See Note	NSS	Carrier (Note: Use Item 3)	
3B	See Note	NSS	Ring, Retaining (Note: Use Item 3)	
3C	See Note	NSS	Bearing, Needle (Note: Use Item 3)	
3D	See Note	NSS	Thrustwasher (Note: Use Item 3)	
3E	See Note	NSS	Shaft, Planet (Note: Use Item 3)	
3F	See Note	NSS	Gear, Planet (Note: Use Item 3)	
3G	See Note	NSS	Roll Pin (Note: Use Item 3)	
4	7000248	1	Ring Gear	
5	7000230	1	O-Ring	
5A	7017070	1	O-Ring	
6	7017090	NLA	Cover Assembly (Use p/n 70001349 Kit - Includes Items 6A-6J)	
6A	7017097	NLA	Spacer, Thrust	
6B	7017091	NLA	Plate, Cover	
6C	7017095	NLA	O-Ring	
6D	7017092	NLA	Rod, Disconnect	
6E	7017093	NLA	Cap, Disengage	
6F	0641404	2	Bolt 1/2in-20NC x 1/2in	
6G	7017094	NLA	Plug, Pipe	
6I	See Note	NSS	Rivet (Note: Not Available for Purchase)	
6J	See Note	NSS	Plate, ID (Note: Not Available for Purchase)	
7		Ref	Input Shaft Assembly	
7A	7024714	1	Shaft	
7B	7000261	1	Ring, Retaining	
7C	7000262	1	Spring	
7D	7000263	2	Spacer, Thrust	
8	7024713	1	Gear, Sun	
11	7000253	1	Thrustwasher	
12	7017067	12	Bolt	
13	7017080	4	Pin, Dowell	
14	7000206	1	Coupling	
15	7024715	1	Spacer, Input	

SECTION 1 - FRAME

ITEM	PART NUMBER	QTY	DESCRIPTION	REV
16	7024716	1	Spacer, Input	
17	7024182	1	Brake Assembly (See Items 101-123 for Breakdown)	
27	7024705	1	O-Ring	
28	7024717	2	Rod, Threaded	
29	7024718	2	Nut 1/2in-13NC	
30	70005483	1	Gasket	
	7024182	Ref	**BRAKE ASSEMBLY**	
101	7024189	1	Shaft	
102	7024182	1	Housing (Note: Not Available - Purchase Complete Brake Assembly)	
103	See Note	NSS	Plate, Friction (Note: Use Item 201C)	
104	See Note	NSS	Plate, Pressure (Note: Use Item 201C)	
105	7000731	1	Gasket	
106	See Note	NSS	Plate, Outer (Note: Use Item 201C)	
107	See Note	NSS	Gasket (Note: Use Item 200A, 201C or 201D)	
108	7024191	1	Cylinder	
109	7024192	1	Piston	
110	See Note	NSS	Bearing, Ball (Note: Use Item 201D)	
111	See Note	NSS	Ring, Retaining (Note: Use Item 201D)	
112	See Note	NSS	Seal, Shaft (Note: Use Item 201D)	
113	See Note	6	Capscrew (Note: Not Available - Purchase Locally)	
114	See Note	6	Lockwasher (Note: Not Available - Purchase Locally)	
115	See Note	NSS	O-Ring (Note: Use Item 200B)	
116	See Note	NSS	Ring, Back-up (Note: Use Item 200B)	
117	See Note	NSS	O-Ring (Note: Use Item 200B)	
118	See Note	NSS	Ring, Back-up (Note: Use Item 200B)	
119	7024190	2	Pin, Dowel	
120	See Note	1	Plug (Note: Not Available - Purchase Locally)	
121	See Note	2	Plug (Note: Not Available - Purchase Locally)	
122	See Note	NSS	Spring Kit (Natural) (Note: Use Item 201B)	
123	See Note	NSS	Spring Kit (Blue) (Note: Use Item 201B)	
200		Ref	Seal Kit Options:	
200A	See Note	1	Hub Seal Kit (Note: Not Available - Purchase Individual Components)	
200B	7024194	1	Brake Seal Kit (Includes Items 105, 107 & 115-118)	
201		Ref	Repair Kit Options:	
201A	7024195	NLA	Spring Kit - 7024182 Brake (Includes 12 Natural Colored Springs) (Use p/n 7024196)	
201B	7024196	1	Brake Spring Kit (Includes 12 Natural and 2 Blue Colored Springs)	
201C	7024193	1	Brake Friction Disc Kit (Includes Items 103, 104, 106 & 107)	
201D	7024197	1	Brake Bearing Kit (Includes Items 107 & 110-112)	

FIGURE 1-7. DRIVE MOTOR ASSEMBLY - 4 BOLT (SN 0300096000 through 0300098501)

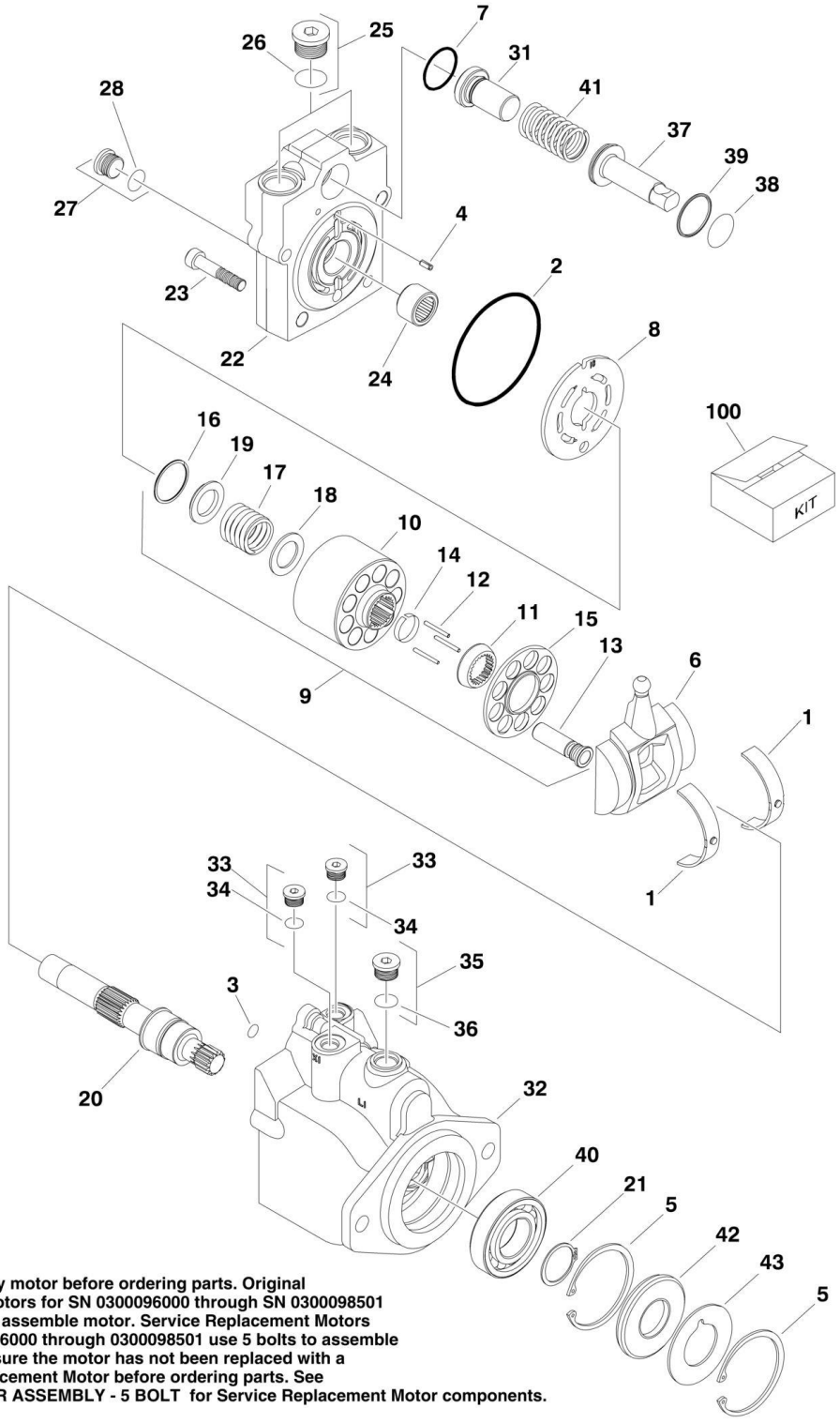

NOTE: Identify motor before ordering parts. Original Equipment Motors for SN 0300096000 through SN 0300098501 use 4 bolts to assemble motor. Service Replacement Motors for SN 0300096000 through 0300098501 use 5 bolts to assemble motor. Make sure the motor has not been replaced with a Service Replacement Motor before ordering parts. See DRIVE MOTOR ASSEMBLY - 5 BOLT for Service Replacement Motor components.

FIGURE 1-7. DRIVE MOTOR ASSEMBLY - 4 BOLT (SN 0300096000 through 0300098501)

ITEM	PART NUMBER	QTY	DESCRIPTION	REV
		Ref	**DRIVE MOTOR ASSEMBLY**	
	3160298	Ref	**2WD Rear**	C
	3160266	Ref	**4WD Front and Rear**	D
		Ref	**NOTE: Identify motor before ordering parts. Original Equipment Motors for SN 0300096000 through SN 0300098501 use 4 bolts to assemble motor. Service Replacement Motors for SN 0300096000 through SN 0300098501 use 5 bolts to assemble motor. Make sure the motor has not been replaced with a Service Replacement Motor before ordering parts. See DRIVE MOTOR ASSEMBLY - 5 BOLT for Service Replacement Motor components.**	
1	7022302	2	Bearing, Journal	
2	See Note	NSS	O-Ring (Note: Use Item 100)	
3	See Note	NSS	O-Ring (Note: Use Item 100)	
4	7007446	1	Pin	
5	7007438	2	Ring, Retaining	
6	7022305	1	Swash Plate	
7	See Note	NSS	O-Ring (Note: Use Item 100)	
8	7023908	1	Plate, Valve	
9	7023907	1	Cylinder Block Assembly (Includes Items 10-19)	
10	7023907	1	Block, Cylinder (Note: Not Available - Purchase Complete Cylinder Block Assembly)	
11	7021277	1	Guide, Slipper Retainer	
12	7021275	3	Pin, Slipper Hold Down	
13	7023907	9	Piston Assembly (Note: Not Available - Purchase Complete Cylinder Block Assembly)	
14	7021276	1	Retainer, Hold Down Pin	
15	7022310	1	Retainer, Slipper	
16	7022311	1	Ring, Retaining	
17	7022312	1	Spring	
18	7024868	1	Washer	
19	7022314	1	Retainer, Spring	
20	7023910	1	Shaft	
21	7007439	1	Ring, Retaining	
22		Ref	Cap, End - Axial Options:	
22	7022367	1	3160266 Motors	
22	7024852	1	3160298 Motor	
23	7022368	4	Screw	
24	7021249	1	Bearing, Needle	
25	7022321	2	Plug (Includes Item 26)	
26	See Note	NSS	O-Ring (Note: Use Item 25 or 100)	
27	7022318	1	Plug (Includes Item 28)	
28	See Note	NSS	O-Ring (Note: Use Item 27 or 100)	
29	7027419	1	Plug (Includes Item 30) (Not Shown)	
30	See Note	NSS	O-Ring (Not Shown) (Note: Use Item 29 or 100)	
31		Ref	Seat, Spring Options:	
31	7022372	1	3160266 Motors	
31	7024853	1	3160298 Motor	
32	7022370	1	Housing	
33	7022318	2	Plug (Includes Item 34)	
34	See Note	NSS	O-Ring (Note: Use Item 33 or 100)	
35	7022321	1	Plug (Includes Item 36)	

SECTION 1 - FRAME

ITEM	PART NUMBER	QTY	DESCRIPTION	REV
36	See Note	NSS	O-Ring (Note: Use Item 35 or 100)	
37		Ref	Piston, Servo Options:	
37	7022326	1	3160266 Motors	
37	7024854	1	3160298 Motor	
38	See Note	NSS	O-Ring (Note: Use Item 100)	
39	See Note	NSS	Ring, Seal (Note: Use Item 100)	
40	7007437	1	Bearing	
41	7022326	1	Spring	
42	See Note	NSS	Seal, Lip (Note: Use Item 100)	
43	7022371	1	Washer, Support	
100	7022328	1	Seal Kit (Includes Items 2, 3, 7, 26, 28, 30, 34, 36, 38, 39 & 42)	

FIGURE 1-8. DRIVE MOTOR ASSEMBLY - 5 BOLT (SN 0300098502 through 0300203770)

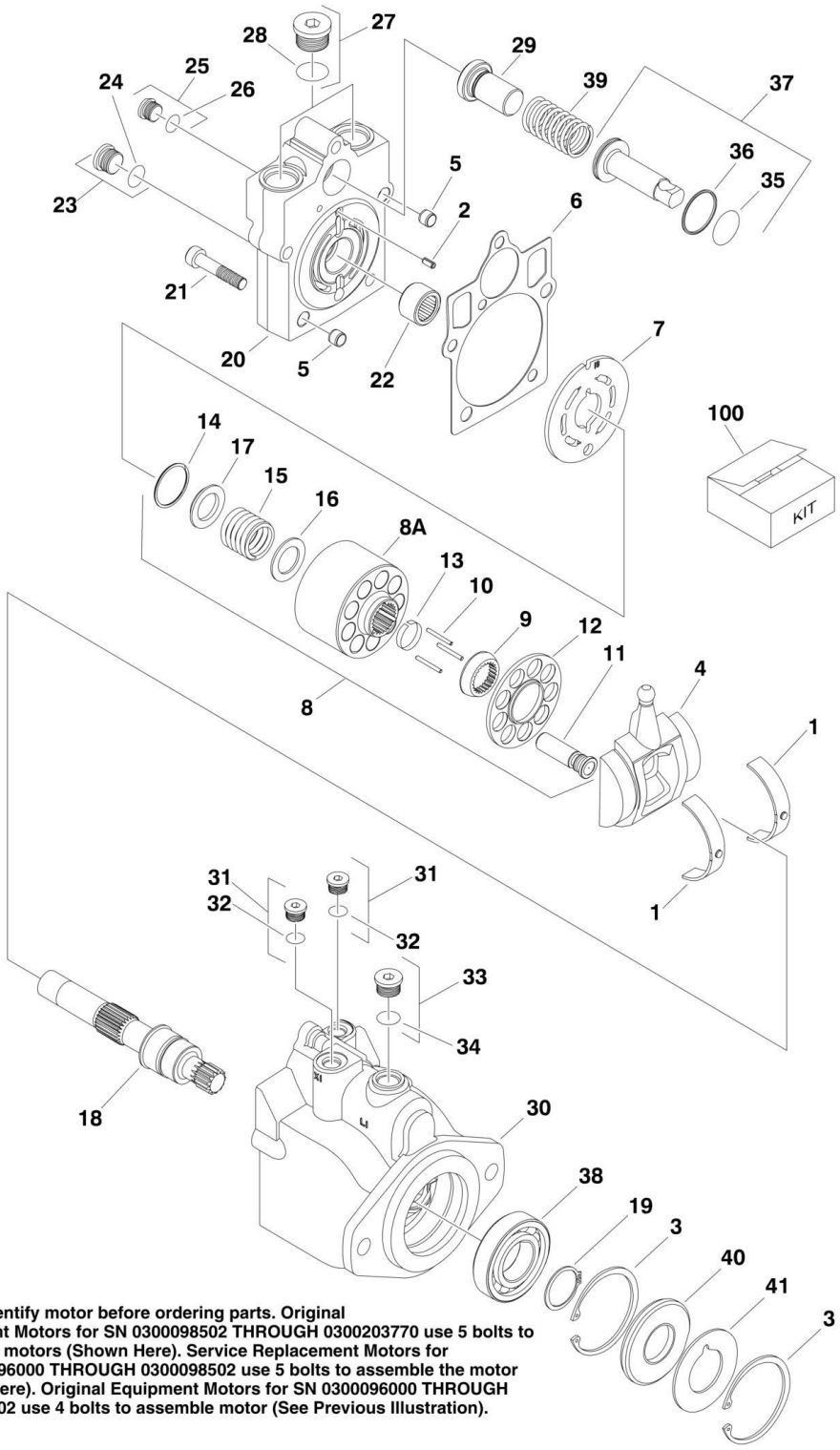

NOTE: Identify motor before ordering parts. Original Equipment Motors for SN 0300098502 THROUGH 0300203770 use 5 bolts to assemble motors (Shown Here). Service Replacement Motors for SN 0300096000 THROUGH 0300098502 use 5 bolts to assemble the motor (Shown Here). Original Equipment Motors for SN 0300096000 THROUGH 0300098502 use 4 bolts to assemble motor (See Previous Illustration).

FIGURE 1-8. DRIVE MOTOR ASSEMBLY - 5 BOLT (SN 0300098502 through 0300203770)

ITEM	PART NUMBER	QTY	DESCRIPTION	REV
		Ref	**DRIVE MOTOR ASSEMBLIES:**	
	3160351	Ref	**2WD Original Equipment (SN 0300098502 through 0300203770)**	B
	3160351	Ref	**2WD Service Replacement (SN 0300096000 through 0300098501)**	B
	3160348	Ref	**4WD Original Equipment (SN 0300098502 through 0300203770)**	B
	3160348	Ref	**4WD Service Replacement (SN 0300096000 through 0300098501)**	B
		Ref	**NOTE: Identify motor before ordering parts. Original Equipment Motors for SN 0300098502 through SN 0300203770 use 5 bolts to assemble motor. Service Replacement Motors for SN 0300096000 to SN 0300098502 use 5 bolts to assemble the motor also. Original Equipment Motors for SN 0300096000 to SN 0300098502 use 4 bolts to assemble motor. See DRIVE MOTOR ASSEMBLY - 4 BOLT for Original Equipment Motor components.**	
1	7022302	2	Bearing, Journal	
2	7007446	1	Pin	
3	7007438	2	Ring, Retaining	
4	7022305	1	Swashplate	
5	See Note	2	Pin (Note: Not Available for Purchase)	
6	See Note	NSS	Gasket (Note: Use Item 100)	
7	7023908	1	Plate, Valve	
8	7023907	1	Cylinder Block Kit (Includes Items 8A & 9-17)	
8A	7023907	1	Block, Cylinder (Note: Not Available - Purchase Complete Cylinder Block Assembly)	
9	7021277	1	Guide, Slipper Retainer	
10	7021275	3	Pin, Slipper Hold Down	
11	7023907	9	Piston Assembly (Note: Not Available - Purchase Complete Cylinder Block Assembly)	
12	7022310	1	Retainer, Slipper	
13	7021276	1	Retainer, Hold Down Pin	
14	7022311	1	Ring, Retaining	
15	7022312	1	Spring	
16	7024868	1	Washer	
17	7022314	1	Retainer, Spring	
18	7023910	1	Shaft	
19	7007439	1	Ring, Retaining	
20	70000797	1	Cap, End - Axial	
21	7022368	5	Screw	
22	7021249	1	Bearing, Needle	
23	2220886	1	Plug (Includes Item 24)	
24	See Note	NSS	O-Ring (Note: Use Item 23 or 100)	
25	2220883	1	Plug (Includes Item 26)	
26	See Note	NSS	O-Ring (Note: Use Item 25 or 100)	
27		Ref	Plug (Includes Item 28) Options:	
27	7027419	2	2WD	
27	2220888	2	4WD	
28	See Note	NSS	O-Ring (Note: Use Item 27 or 100)	
29		Ref	Seat, Spring Options:	
29	7024853	1	2WD	

SECTION 1 - FRAME

ITEM	PART NUMBER	QTY	DESCRIPTION	REV
29	7022372	1	4WD	
30	See Note	1	Housing (Note: Not Available - Purchase Complete Drive Motor Assembly)	
31	2220883	2	Plug (Includes Item 32)	
32	See Note	NSS	O-Ring (Note: Use Item 31 or 100)	
33	2220886	1	Plug (Includes Item 34)	
34	See Note	NSS	O-Ring (Note: Use Item 33 or 100)	
35	See Note	NSS	O-Ring (Note: Use Item 37 or 100)	
36	See Note	NSS	Ring, Seal (Note: Use Item 37 or 100)	
37	7024854	1	Piston, Servo (Includes Items 35 & 36)	
38	7007437	1	Bearing	
39	7022326	1	Spring	
40	See Note	NSS	Seal, Lip (Note: Use Item 100)	
41	7022371	1	Washer, Support	
100	7022328	1	Seal Kit (Includes Items 6, 24, 26, 28, 32, 34, 35, 36 & 40)	

FIGURE 1-9. FRAME VALVES AND SHIELDS INSTALLATION (SN 0300096000 through 0300115395)

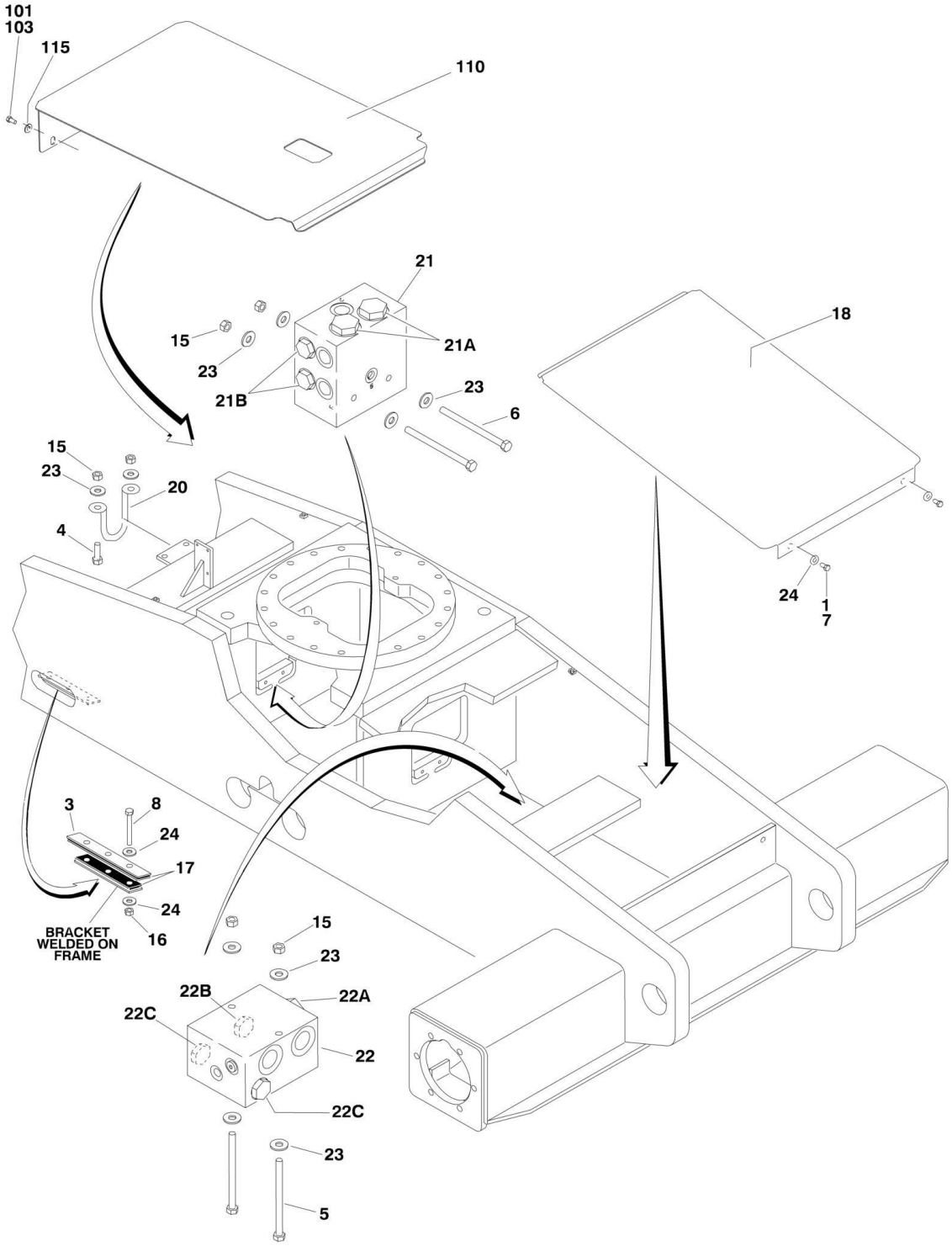

FIGURE 1-9. FRAME VALVES AND SHIELDS INSTALLATION (SN 0300096000 through 0300115395)

ITEM	PART NUMBER	QTY	DESCRIPTION	REV
		Ref	**VALVES AND REAR SHIELD INSTALLATION**	
	0272926	Ref	**2WD**	E
	0272925	Ref	**4WD**	G
		Ref	**Note: See AXLE AND STEERING INSTALLATIONS for Oscillating Axle Lockout Valve.**	
1	0100011	AR	Locking, Compound	
3	0362936	2	Bar, Hose Clamp (4WD Only)	
4	0641508	2	Bolt 5/16in-18NC x 1/2in (4WD Only)	
5	0641530	2	Bolt 5/16in-18NC x 3-3/4in	
6	0641538	2	Bolt 5/16in-18NC x 4-3/4in (4WD Only)	
7	0641607	6	Bolt 3/8in-16NC x 7/8in	
8	0641618	8	Bolt 3/8in-16NC x 2-1/4in (4WD Only)	
15	3311505	AR	Locknut 5/16in-18NC	
16	3311605	6	Nut 3/8in-16NC (4WD Only)	
17	3340898	4	Pad, Rubber (4WD Only)	
18	3574210	1	Shield, Frame - Rear Top	
20	3841340	1	Loop, Hose (4WD Only)	
21		Ref	Flow Divider Valve Assembly Options:	
21	Not Required	0	2WD Machines	
21	4641208	1	4WD Machines	A
21A	7023934	2	Valve, Cartridge (Flow Divider)	
21A	7021655	2	Seal Kit - 7023934 Cartridge	
21B	7023935	4	Valve, Cartridge (Check)	
21B	7023936		Seal Kit - 7023935 Cartridge	
22	4641207	1	Flow Divider Valve Assembly	A
22A	7023917	1	Valve, Cartridge (Flow Divider)	
22A	7021625	1	Seal Kit - 7023917Cartridges	
22B	7022397	1	Valve, Cartridge (Check)	
22B	7022399	1	Seal Kit - 7022397Cartridges	
22C	7010542	2	Valve, Cartridge (Load Shuttle)	
22C	7010543	2	Seal Kit - 7010542 Cartridge	
23	4751500	AR	Flatwasher 5/16in Regular	
24	4751600	AR	Flatwasher 3/8in Regular	
		Ref	**FRONT SHIELD INSTALLATION**	
		Ref	**With Fixed Axle**	
	0272902	Ref	**2WD without Tow Package**	B
	0272906	Ref	**2WD with Tow Package**	B
	0272903	Ref	**4WD**	B
		Ref	**With Oscillating Axle**	
	0272900	Ref	**2WD without Tow Package (except CE Spec)**	B
	0272904	Ref	**2WD without Tow Package (CE Spec)**	B
	0273473	Ref	**2WD with Tow Package**	B
	0272901	Ref	**4WD (except CE Spec)**	B
	0272905	Ref	**4WD (CE Spec)**	B
101	0100011	AR	Locking, Compound	
103	0641607	2	Bolt 3/8in-16NC x 7/8in	
110	3574254	1	Shield, Frame	
115	4751600	2	Flatwasher 3/8in Regular	

FIGURE 1-10. FRAME VALVES AND SHIELDS INSTALLATION (SN 0300115396 through 0300203770)

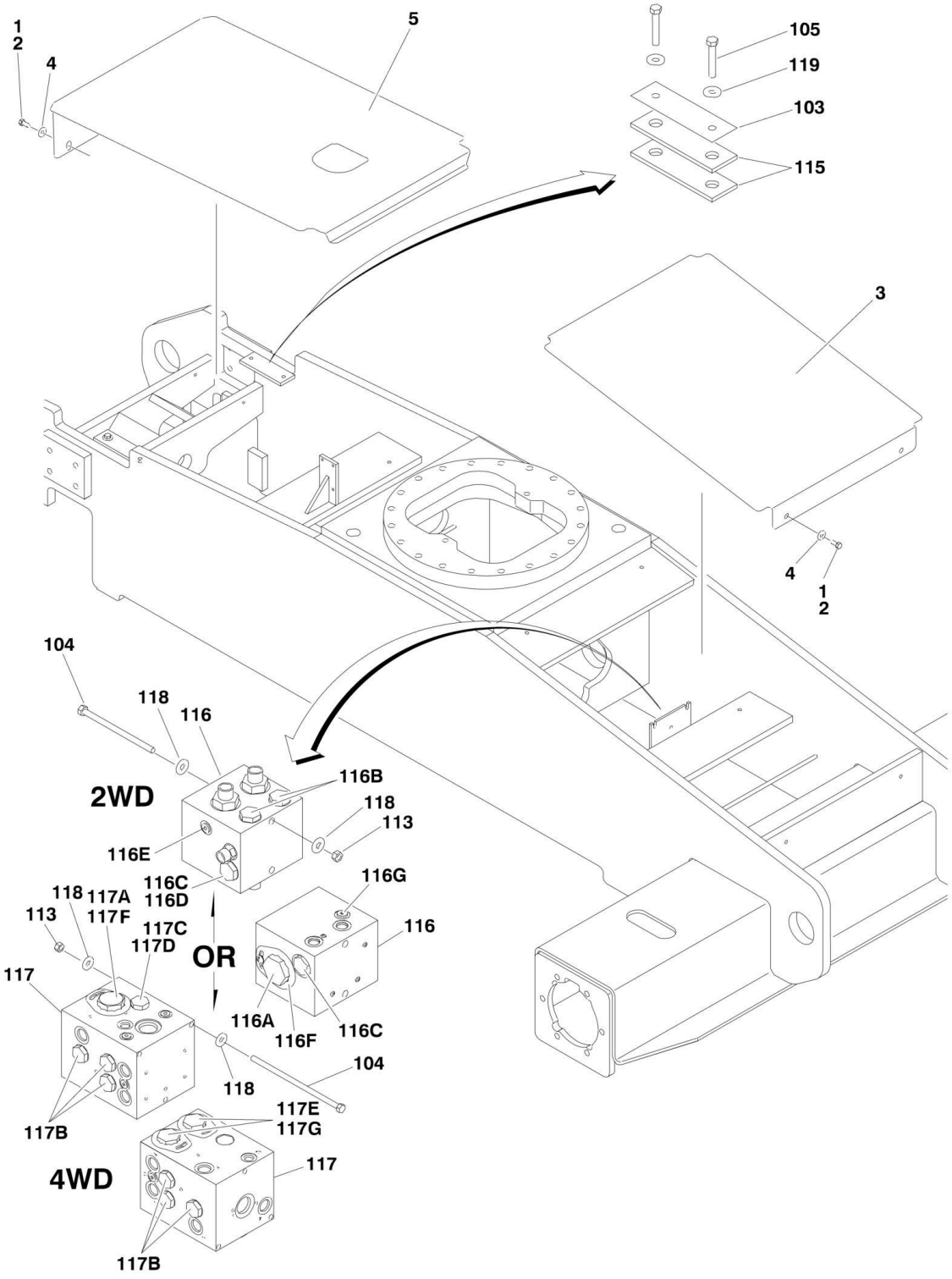

FIGURE 1-10. FRAME VALVES AND SHIELDS INSTALLATION (SN 0300115396 through 0300203770)

ITEM	PART NUMBER	QTY	DESCRIPTION	REV
		Ref	**FRAME SHIELDS INSTALLATION**	
		Ref	**Machines without Tow Package**	
	1001093856	Ref	**Frame Shields Installation (SN 0300115396 through 0300161284)**	C
	1001142456	Ref	**Frame Shields Installation (SN 0300161285 through 0300203770)**	A
		Ref	**Machines with Tow Package**	
	1001093890	Ref	**Frame Shields Installation (SN 0300115396 through 0300161284)**	C
	1001142964	Ref	**Frame Shields Installation (SN 0300161285 through 0300203770)**	A
1	0100011	AR	Locking, Compound	
2	0641606	4	Bolt 3/8in-16NC x 3/4in	
3		Ref	Shield, Rear Frame Options:	
3	3574210	1	Shield, Rear Frame **(SN 0300096000 through 0300161284)**	
3	1001142455	1	Shield, Rear Frame **(SN 0300161285 through 0300203770)**	
4	4751600	4	Flatwasher 3/8in Regular	
5		Ref	Shield, Front Frame Options:	
5		Ref	Machines without Tow Package Options:	
5	1001093861	1	Shield, Front Frame **(SN 0300096000 through 0300143461)**	
5	1001125957	1	Shield, Front Frame **(SN 0300143462 through 0300161284)**	
5	1001142454	1	Shield, Front Frame **(SN 0300161285 through 0300203770)**	
5		Ref	Machines with Tow Package Options:	
5	1001093889	1	Shield, Front Frame **(SN 0300096000 through 0300143461)**	
5	1001125958	1	Shield, Front Frame **(SN 0300143462 through 0300161284)**	
5	1001142963	1	Shield, Front Frame **(SN 0300161285 through 0300203770)**	
		Ref	**FRAME VALVES INSTALLATION**	
	1001093749	Ref	**2WD**	F
	1001093747	Ref	**4WD**	D
		Ref	**Note: See AXLE AND STEERING INSTALLATIONS for Oscillating Axle Lockout Valve used on SN 0300115396 to SN 0300140365.**	
103	0363012	2	Bar, Hose Clamping (4WD Only)	
104		Ref	Bolt 5/16in-18NC Options:	
104	0641542	2	2WD	
104	0641560	3	4WD	
105	0641618	4	Bolt 3/8in-16NC x 2-1/4in (4WD Only)	
113	3311505	AR	Locknut 5/16in-18NC	
115	3340911	4	Pad, Hose Clamping (4WD Only)	
116	4641509	1	Valve, Flow Divider (2WD) (Use p/n 1001099390)	
116A	7023917	1	Valve, Cartridge	
116A	7021625	1	Seal Kit - 7023917 Cartridge	
116B	7022397	2	Valve, Cartridge	
116B	7022399	AR	Seal Kit - 7022397 Cartridge	
116C	7021639	2	Valve, Cartridge (Valve 4641509 Only)	
116C	2900756	AR	Seal Kit - 7021639 Cartridge	
116C	70002390	2	Valve, Cartridge (Valve 1001099390 Only)	
116C	7022399	AR	Seal Kit - 70002390 Cartridge	
116D	7024881	1	Piston	
116E	7024844	1	Plug	
116F	70000781	1	Lockdown Kit	

SECTION 1 - FRAME

ITEM	PART NUMBER	QTY	DESCRIPTION	REV
116G	7017406	1	Plug (Valve 1001099390 Only)	
117	4641510	1	Valve, Flow Divider (4WD)	
117A	7023917	1	Valve, Cartridge	
117A	7021625	1	Seal Kit - 7023917 Cartridge	
117B	7022397	6	Valve, Cartridge	
117B	7022399	AR	Seal Kit - 7022399 Cartridge	
117C	7021639	2	Valve, Cartridge	
117C	2900756	AR	Seal Kit - 7021639 Cartridge	
117D	7024881	1	Piston	
117E	7023934	2	Valve, Cartridge	
117E	7021655	AR	Seal Kit - 7023934 Cartridge	
117F	70000781	1	Plate, Locking (FD1)	
117G	70002962	2	Plate, Locking (FD2 and FD3)	
118	4751500	AR	Flatwasher 5/16in Regular	
119	4751600	4	Flatwasher 3/8in Regular (4WD Only)	

FIGURE 1-11. SEMI-TRACK INSTALLATION

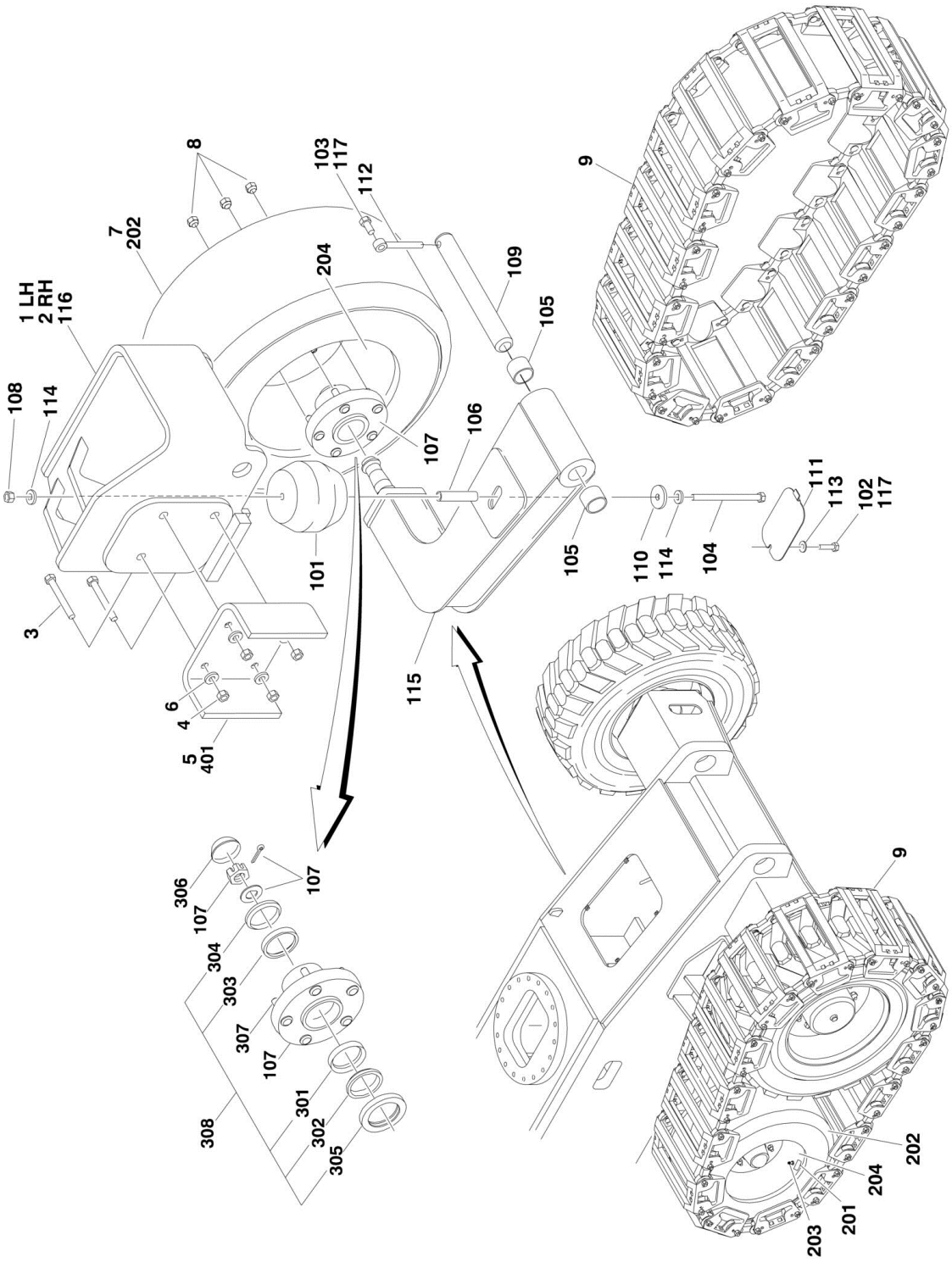

FIGURE 1-11. SEMI-TRACK INSTALLATION

ITEM	PART NUMBER	QTY	DESCRIPTION	REV
		Ref	**SEMI-TRACK INSTALLATIONS**	
	0270193	Ref	**IDLER INSTALLATION**	3
1	0271212	1	Mount, Idler (Left) (See Items 101-117 for Breakdown)	
2	0271211	1	Mount, Idler (Right) (See Items 101-117 for Breakdown)	
3	0681822	8	Bolt 1/2in-13NC x 2-3/4in (Grade 8)	
4	3271805	8	Locknut 1/2in-13NC (Grade 8)	
5	3572032	2	Plate, Spacer	
6	4891800	8	Flatwasher 1/2in Hardened	
		Ref	**TRACK INSTALLATIONS**	
	0271218	Ref	**12in Steel Track**	1
	0270192	Ref	**14in Steel Track**	3
7		Ref	Wheel Assembly Options (See Items 201-204 for Breakdown):	
7	0270029	2	12in Track	
7	0270030	2	14in Track	
8	3300255	10	Nut	
9		Ref	Track Options:	
9	0271213	1	12in Steel Track	
9	0271215	1	14in Steel Track	
		Ref	**IDLER MOUNT ASSEMBLIES**	
	0271212	Ref	**Left Side**	A
	0271211	Ref	**Right Side**	A
		Ref	**Note: Qty shown is for one side.**	
101	0020006	1	Absorber, Rubber Spring	
102	0641408	1	Bolt 1/4in-20NC x 1in	
103	0641808	1	Bolt 1/2in-13NC x 1in	
104		Ref	Bolt Options:	
104	0681856	1	Bolt 1/2in-13NC x 7in (Grade 8)	
104	0681872	1	Bolt 1/2in-13NC x 9in (Grade 8)	
105	0961948	2	Bearing	
106	0962293	1	Bushing, Track Spring	
107	2780221	1	Hub Assembly (See Items 301-307 for Breakdown)	
108	3271805	1	Locknut 1/2in-13NC (Grade 8)	
109	3422786	1	Pin	
110	3571818	1	Plate	
111	3571833	1	Cover, Bottom	
112	3841203	1	Keeper, Pin	
113	4711400	1	Flatwasher 1/4in Thin	
114	4891800	2	Flatwasher 1/2in Hardened	
115		Ref	Arm Weldment Options:	
115	4846113	1	Left Side	
115	4846112	1	Right Side	
116		Ref	Bracket Weldment Options:	
116	4846394	1	Left Side	
116	4846393	1	Right Side	
117	0100011	AR	Locking, Compound	
		Ref	**WHEEL ASSEMBLIES**	
	0270029	Ref	**12in Track**	B
	0270030	Ref	**14in Track**	A
		Ref	**Note: Qty shown is for one side.**	
201	1704586	1	Decal, Tire Pressure	

SECTION 1 - FRAME

ITEM	PART NUMBER	QTY	DESCRIPTION	REV
202		Ref	Tire Options:	
202	4520224	1	12in Track	
202	4520234	1	14in Track	
203	4640113	1	Valve, Air	
204		Ref	Rim, Wheel Options:	
204	4860218	1	12in Track	
204	4860215	1	14in Track	
	2780221	Ref	**HUB ASSEMBLY**	-
		Ref	**Note: Qty shown is for one side.**	
301	7012519	1	Cup, Inner Bearing	
302	7012520	1	Cone, Inner Bearing	
303	7012521	1	Cup, Outer Bearing	
304	7012522	1	Cone, Outer Bearing	
305	7012523	1	Seal	
306	1001102354	1	Cap, Dust (was p/n 7012524)	
307	7016360	5	Stud, Wheel 1/2in-20NF	
308	2900804		Bearing Kit (Includes Qty 1 of Items 301-305)	
	0270193	Ref	**SEMI-TRACK INSTALLATIONS**	A
401	3572032	2	Plate, Spacer (Welded to Frame)	
		Ref	**TREAD ACCESSORIES (NOT SHOWN)**	
	0270180	Ref	**Soft Puck**	C
	0240049	64	Puck, Soft (Mounts on Both Sides of Track Pad) **(SN 0300096000 through 0300100069)**	
	0240152	32	Puck, Soft (Mounts Across Center of Track Pad) **(SN 0300100070 through 0300203770)**	
	3576939	32	Plate, Puck Mounting (Mounts Across Center of Track Pad) **(SN 0300100070 through 0300203770)**	
	0270186	Ref	**Flotation Plate**	A
	0240050	64	Plate, Flotation	
	0270187	Ref	**Ice Pick**	A
	0240047	32	Plate, Flotation	

FIGURE 1-12. TOW PACKAGE INSTALLATION

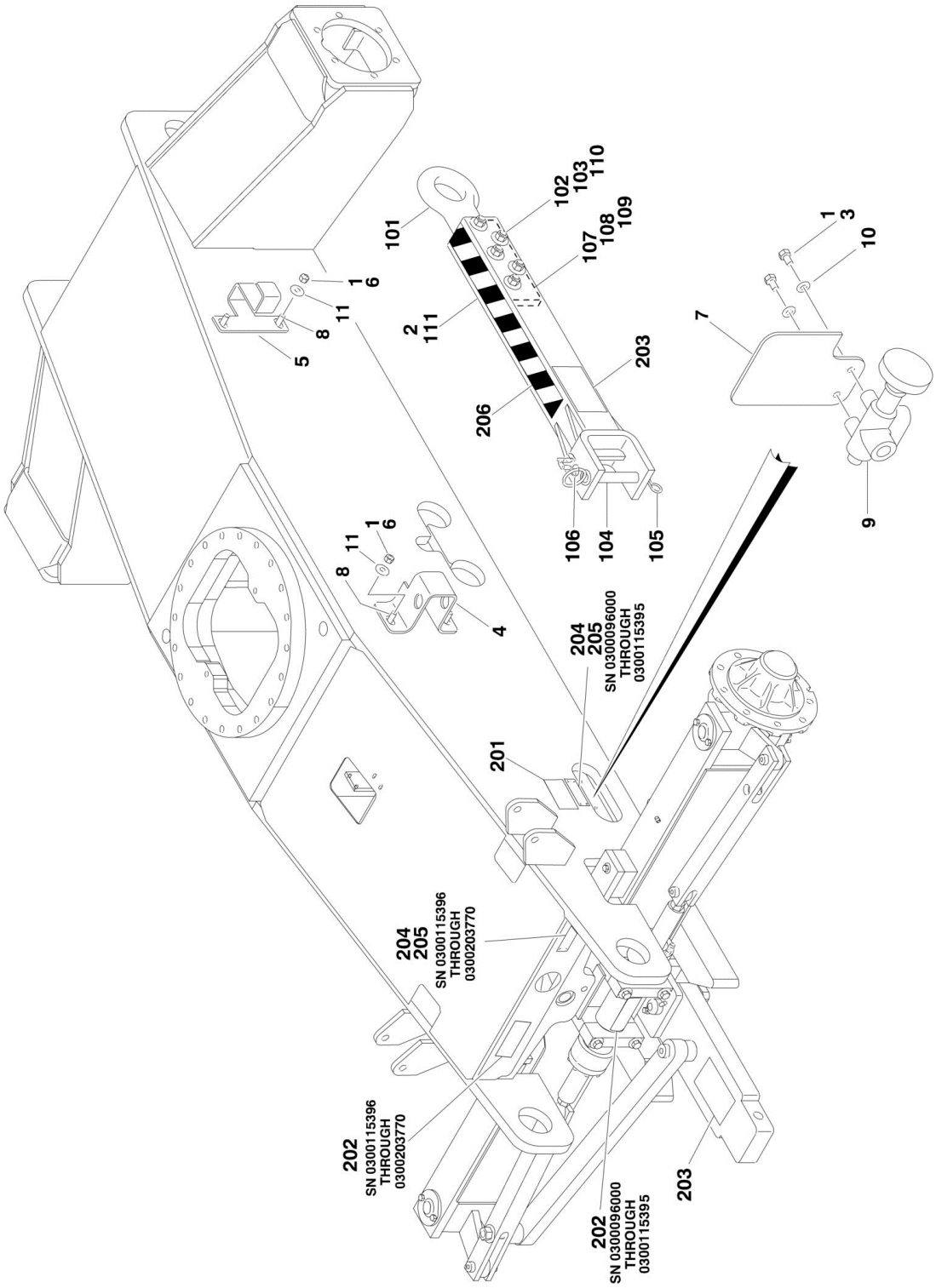

FIGURE 1-12. TOW PACKAGE INSTALLATION

ITEM	PART NUMBER	QTY	DESCRIPTION	REV
		Ref	**TOW BAR INSTALLATION - 2WD**	
	0272805	Ref	**Tow Bar Installation – 2WD (SN 0300096000 through 0300115395)**	B
	1001093876	Ref	**Tow Bar Installation – 2WD (SN 0300115396 through 0300203770)**	D
1	0100011	AR	Locking, Compound	
2	0363019	1	Tow Bar Assembly	
3	0641504	2	Bolt 5/16in-18NC x 1/2in	
4	0902733	1	Bracket, Storage (Front)	
5	0902734	1	Bracket, Storage (Rear)	
6	3311801	4	Nut 1/2in-13NC	
7		Ref	Plate, Valve Mounting Options (Welded on Plate):	
7	3572506	1	Plate, Valve Mounting **(SN 0300096000 through 0300115395)**	
7	3539662	1	Plate, Valve Mounting **(SN 0300115396 through 0300203770)**	
8	4300048	4	Stud (Welded on Plate)	
9	4640261	1	Steer/Tow Select Valve	
10	4711500	2	Flatwasher 5/16in Thin	
11	4751800	4	Flatwasher 1/2in Regular	
	0363019	Ref	**TOW BAR ASSEMBLY**	B
101	0360406	1	Pintle, Draw Eye	
102	0682040	5	Bolt 5/8in-11NC x 5in	
103	3312005	5	Locknut 5/8in-11NC	
104	3420352	1	Pin, Towing	
105	3420372	1	Hairpin	
106	3760170	1	Ring, Split	
107	4070450	2	Shim (.07)	
108	4070560	2	Shim (.88)	
109	4070561	2	Shim (.12)	
110	4752000	10	Flatwasher 5/8in Regular	
111	0363019	1	Tow Bar Weldment	
		Ref	**TOW BAR DECAL INSTALLATION**	
	0272828	Ref	**Tow Bar Decal Installation (SN 0300096000 through 0300115395)**	C
	1001094003	Ref	**Tow Bar Decal Installation (SN 0300115396 through 0300203770)**	B
201	1703450	1	Decal - Warning Only **(SN 0300096000 through 0300115396)**	
202	1702968	1	Decal - Tow Instructions	
203	1704578	AR	Decal - Crushing	
204	3250872	1	Nameplate - Steer/Tow Select Valve	
205	3820001	4	Rivet	
206	4420051	56 in/1.4m	Tape	

SECTION 2 - TURNTABLE

FIGURE 2-1. VALVES INSTALLATIONS

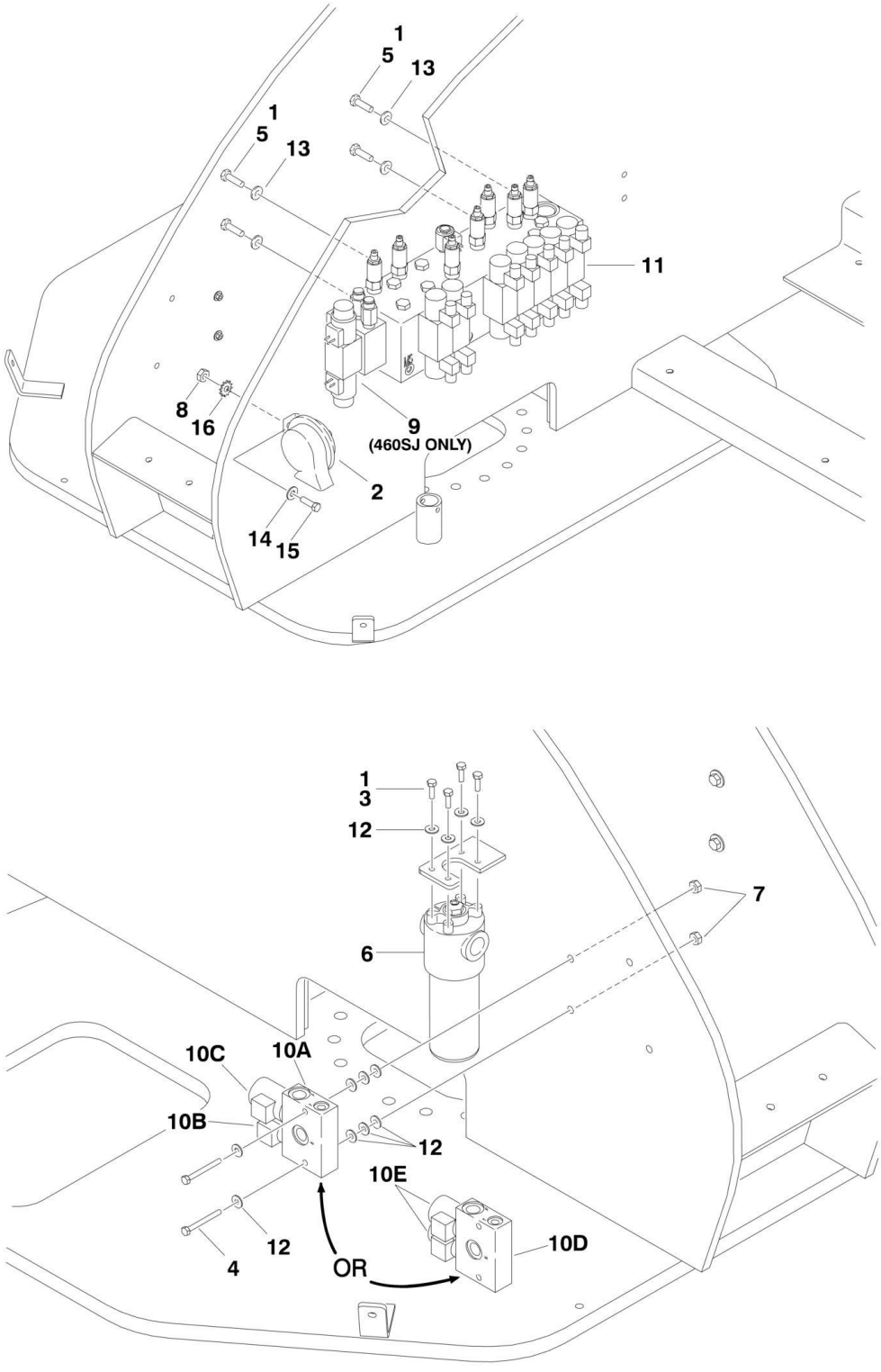

FIGURE 2-1. VALVES INSTALLATIONS

ITEM	PART NUMBER	QTY	DESCRIPTION	REV
		Ref	**VALVES INSTALLATIONS**	
		Ref	**Valves Installations 400S**	
	0274600	Ref	**Valves Installations 400S (SN 0300096000 through 0300115395)**	C
	1001093434	Ref	**Valves Installations 400S (SN 0300115396 through 0300203770)**	B
		Ref	**Valves Installations 460SJ**	
	0274601	Ref	**Valves Installations 460SJ (SN 0300096000 through 0300115395)**	C
	1001093435	Ref	**Valves Installations 460SJ (SN 0300115396 through 0300203770)**	B
1	0100011	AR	Locking, Compound	
2	0140001	1	Horn	
3	0651406	AR	Bolt 1/4in-28NF x 3/4in	
4	0641420	2	Bolt 1/4in-20NC x 2-1/2in	
5	0641610	4	Bolt 3/8in-16NC x 1-1/4in	
6	2120209	1	Pressure Filter Assembly	
6	2120210	1	Element, Filter - p/n 2120209	
6	7020020	1	Manual Indicator - p/n 2120209	
7	3311405	2	Locknut 1/4in-20NC	
8	3311505	1	Locknut 5/16in-18NC	
9		Ref	Valve Assembly - Jib	
9	Not Required	0	Valve Assembly - Jib 400S	
9	4640921	1	Valve Assembly - Jib 460SJ (See ACESSORY VALVE ASSEMBLY for Breakdown)	
10		Ref	Dual Select Valve Assembly Options:	
10A	4641108	NLA	Valve (Use p/n 1001099391) **(SN 0300096000 through 0300136445)**	
10B	7012944	1	Coil	
10B	7012941	1	Cartridge without Coil (was p/n 7012974)	
10B	7010543	1	Seal Kit - 7012974 & 7012941 Cartridges	
10C	7012943	1	Coil	
10C	7012995	1	Cartridge without Coil	
10C	7012518	1	Seal Kit - 7012995 Cartridge	
10D	4641317	1	Valve **(SN 0300115396 through 0300203770)**	
10E	7012944	2	Coil	
10E	7012941	2	Cartridge without Coil (was p/n 7012974)	
10E	7010543	2	Seal Kit - 7012941 Cartridge	
11	4641499	1	Main Control Valve Assembly (See MAIN CONTROL VALVE ASSEMBLY for Breakdown)	
12	4751400	AR	Flatwasher 1/4in Regular	
13	4751600	AR	Flatwasher 3/8in Regular	
14	4751500	2	Flatwasher 5/16in Regular	
15	0641510	1	Bolt 5/16in-18NC x 1-1/4in	
16	4791500	1	Washer, Star 5/16in	
17	4921927	1	Harness, Sub (See ELECTRICAL SECTION for Breakdown) (Not Shown) (460SJ Only)	

FIGURE 2-2. MAIN CONTROL VALVE ASSEMBLY

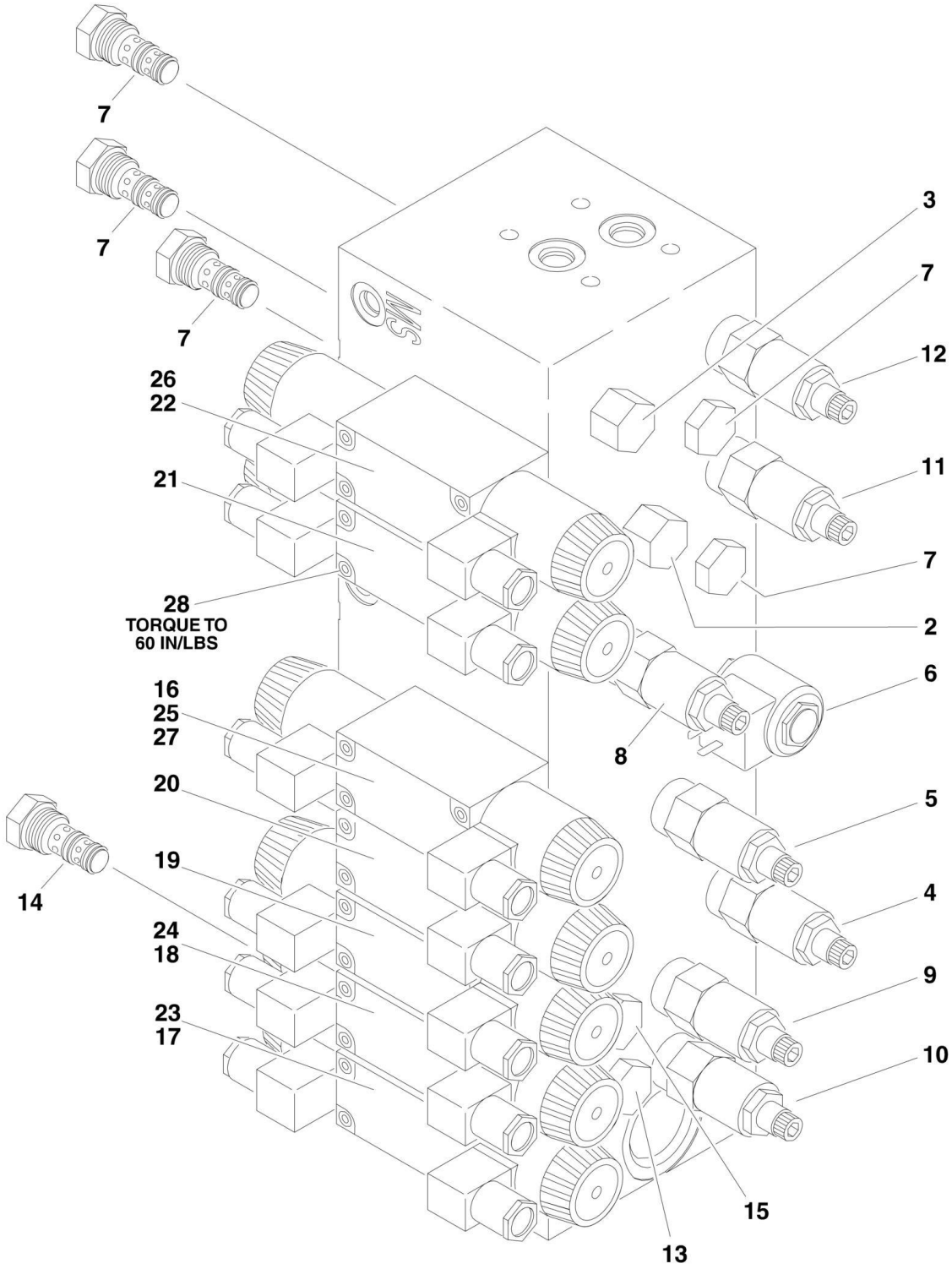

FIGURE 2-2. MAIN CONTROL VALVE ASSEMBLY

ITEM	PART NUMBER	QTY	DESCRIPTION	REV
	4641499	Ref	**MAIN CONTROL VALVE ASSEMBLY**	A
2	7017411	1	Cartridge, Pilot Valve (Bang-Bang Controls)	
2	7012518	1	Seal Kit - 7017411 Cartridge	
3	7017411	1	Cartridge, Pilot Valve (Proportional Controls)	
3	7012518	1	Seal Kit - 7017411 Cartridge	
4	7021647	1	Cartridge, Relief Valve (Bang-Bang Main)	
4	7012998	1	Seal Kit - 7021647 Cartridge	
5	7017422	1	Cartridge, Relief Valve (Proportional Main)	
5	7012998	1	Seal Kit - 7017422 Cartridge	
6	7017410	1	Cartridge without Coil (Proportional Dump)	
6	7012967	1	Seal Kit - 7017410 Cartridge	
6	7012944	1	Coil	
7	7010542	5	Cartridge, Load Shuttle Valve	
7	7010543	5	Seal Kit - 7010542 Cartridge	
8	7017422	1	Cartridge, Relief Valve (Steer)	
8	7012998	1	Seal Kit - 7017422 Cartridge	
9	7017427	1	Cartridge, Relief Valve (Platform)	
9	7012998	1	Seal Kit - 7017427 Cartridge	
10	7017428	1	Cartridge, Relief Valve (Platform Level)	
10	7012998	1	Seal Kit - 7017428 Cartridge	
11	7021648	1	Cartridge, Relief Valve (Lift Down)	
11	7012998	1	Seal Kit - 7021648 Cartridge	
12	7017428	1	Cartridge, Relief Valve (Swing)	
12	7012998	1	Seal Kit - 7017428 Cartridge	
13	7012914	1	Cartridge, Pilot Check Valve (Platform Level)	
13	7012918	1	Seal Kit - 7012914 Cartridge	
14	7012914	1	Cartridge, Pilot Check Valve (Platform Level)	
14	7012918	1	Seal Kit - 7012914 Cartridge	
15	7012975	1	Cartridge, Check Valve (Platform Rotate)	
15	7012540	1	Seal Kit - 7012975 Cartridge	
16	70001256	1	Control Valve Assembly (Steer)	
16	70001256	1	Seal Kit (Note: Not Available for Purchase)	
16	70001256	2	Nut (Note: Not Available for Purchase)	
16	70001256	2	Coil (Note: Not Available for Purchase)	
17	70001976	1	Control Valve Assembly (Platform Level) (was p/n 7012770)	
17	7012773	1	Seal Kit	
17	7021375	2	Nut	
17	7018991	2	Coil	
18	70001976	1	Control Valve Assembly (Platform Rotate) (was p/n 7012770)	
18	7012773	1	Seal Kit	
18	7021375	2	Nut	
18	7018991	2	Coil	
19	70001976	1	Control Valve Assembly (Telescope) (was p/n 7012770)	
19	7012773	1	Seal Kit	
19	7021375	2	Nut	
19	7018991	2	Coil	
20	7021374	1	Control Valve Assembly (Flow Control)	
20	7012773	1	Seal Kit - 7021374 Valve	
20	7021375	1	Nut	
20	7018991	1	Coil	

SECTION 2 - TURNTABLE

ITEM	PART NUMBER	QTY	DESCRIPTION	REV
21	7012775	1	Control Valve Assembly (Upper Lift)	
21	7012773	1	Seal Kit - 7012775 Valve	
21	7018912	2	Nut	
21	7012772	2	Coil	
22	7012775	1	Control Valve Assembly (Swing)	
22	7012773	1	Seal Kit - 7012775 Valve	
22	7018912	2	Nut	
22	7018991	2	Coil	
23	7018900	2	Orifice (Platform Level)	
24	7023821	1	Orifice (Platform Rotate)	
25	7023822	1	Orifice (Steer)	
26	7023823	1	Orifice (Swing)	
27	7023824	2	Orifice (Steer)	
28	7018942	28	Capscrew, Socket #10-24NC x 2in	

FIGURE 2-3. ACCESSORY VALVE ASSEMBLY

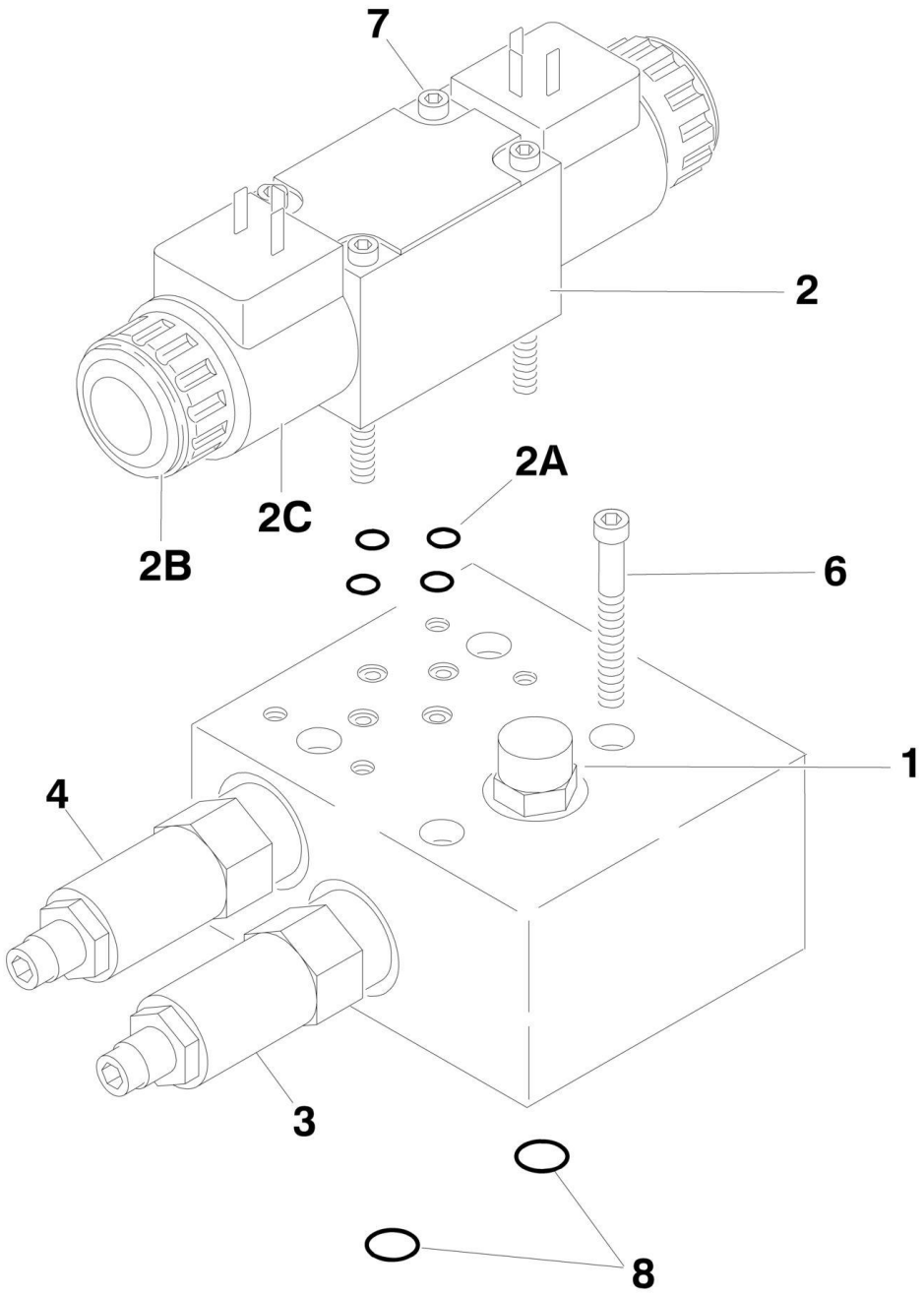

NOTE: TORQUE ITEMS 6 & 7 TO 60 IN/LBS.

FIGURE 2-3. ACCESSORY VALVE ASSEMBLY

ITEM	PART NUMBER	QTY	DESCRIPTION	REV
	4640921	Ref	**ARTICULATING JIB VALVE ASSEMBLY**	D
1	7012965	1	Cartridge, Flow Control	
1	7012953	1	Seal Kit - 7012965 Cartridge	
2	7012770	1	Directional Control Valve Assembly	
2	7012773	1	Seal Kit	
2A	7018945	4	O-Ring	
2B	7018912	2	Nut	
2C	7012772	2	Coil	
3	7017421	1	Cartridge, Relief	
3	7012998	1	Seal Kit - 7017421 Cartridge	
4	7017422	1	Cartridge, Relief	
4	7012998	1	Seal Kit - 7017422 Cartridge	
5	4460499	2	Connector, DIN with Diode (Not Shown - Part of Valve Harness)	
6	7012777	4	Capscrew, Socket Head 5/16in-18NC x 2-1/4in (Used to Mount Valve Assembly)	
7	7018942	4	Capscrew, Socket Head #10-24NC x 2in	
8	7012776	2	O-Ring (Used to Mount Main Valve)	

FIGURE 2-4. TURNTABLE AND SWING DRIVE INSTALLATIONS

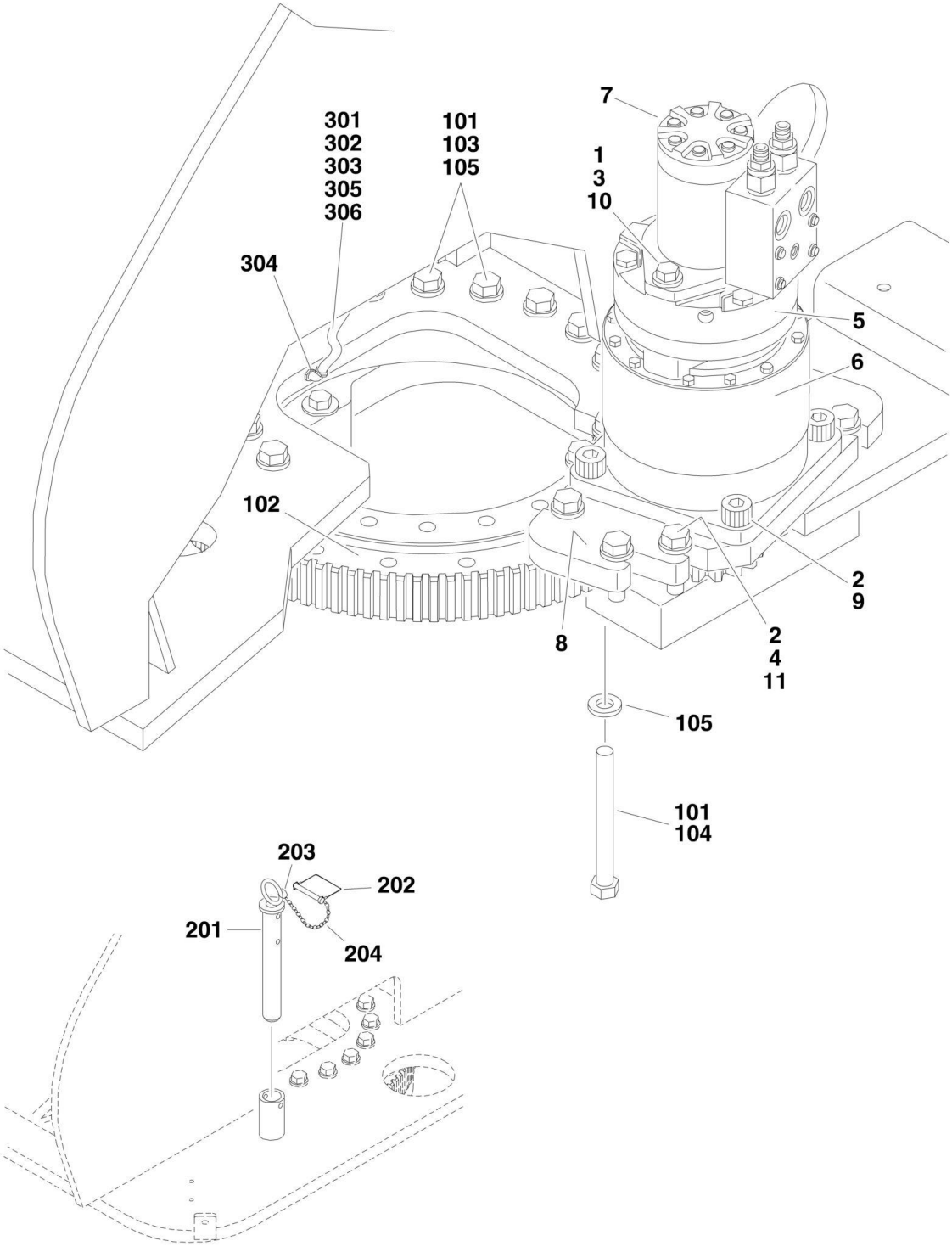

FIGURE 2-4. TURNTABLE AND SWING DRIVE INSTALLATIONS

ITEM	PART NUMBER	QTY	DESCRIPTION	REV
		Ref	**SWING DRIVE INSTALLATION**	
	0270326	Ref	**Swing Drive Installation (SN 0300096000 through 0300137200)**	C
	1001095198	Ref	**Swing Drive Installation (SN 0300137201 through 0300203770)**	D
1	0100011	AR	Locking, Compound	
2	0100019	AR	Locking, Compound	
3		Ref	Bolt Options:	
3	0681832	2	Bolt 1/2in-13NC x 4in (Grade 8) **(SN 0300096000 through 0300137200)**	
3	See Note	2	Bolt (Note: See SWING MOTOR/BRAKE HUB/HUB ASSEMBLY for bolt) **(SN 0300137201 through 0300203770)**	
4	0682018	8	Bolt 5/8in-11NC x 2-1/4in (Grade 8)	
5		Ref	Swing Brake Assembly Options:	
5	0920119	1	Brake **(SN 0300096000 through 0300137200)**	
5	7007933	1	Gasket, Mounting Face (0920119 Brake)	
5	7007990	1	O-Ring, Mounting Face (0920119 Brake)	
5	7018612	1	Repair Kit (0920119 Brake)	
		Ref	**Note: Mounting Face Gasket, Mounting Face O-Ring and Repair Kit are the only parts available for 0920119 Brake.**	
5	1001101062	1	Brake (See SWING MOTOR/BRAKE HUB/HUB ASSEMBLY for Breakdown) **(SN 0300137201 through 0300203770)**	
6		Ref	Swing Hub Assembly Options:	
6	2780247	1	Hub (See SWING MOTOR ASSEMBLY for Breakdown) **(SN 0300096000 through 0300137200)**	
6	1001101062	1	Hub (See SWING MOTOR/BRAKE HUB/HUB ASSEMBLY for Breakdown) **(SN 0300137201 through 0300203770)**	
7		Ref	Swing Motor Assembly Options	
7	3160280	1	Motor (See SWING MOTOR ASSEMBLY for Breakdown) **(SN 0300096000 through 0300137200)**	
7	1001101062	1	Motor (See SWING MOTOR/BRAKE HUB/HUB ASSEMBLY for Breakdown) **(SN 0300137201 through 0300203770)**	
8	3572041		Plate, Mount	
9	3932224	4	Capscrew, Socket Head 3/4in-1NC x 1-1/2in	
10		Ref	Flatwasher Options:	
10	4891800	2	Flatwasher 1/2in Hardened **(SN 0300096000 through 0300137200)**	
10	See Note	2	Flatwasher (Note: See SWING MOTOR/BRAKE HUB/HUB ASSEMBLY for flatwasher) **(SN 0300137201 through 0300203770)**	
11	4892000	6	Flatwasher 5/8in Hardened	
12	4071009	1	Shim, Drive Gear (Not Shown)	
		Ref	**SWING BEARING AND ROTATION BOX ASSEMBLY**	
	0259156	Ref	**Swing Bearing and Rotation Box Assembly (SN 0300096000 through 0300161284)**	D
	1001143234	Ref	**Swing Bearing and Rotation Box Assembly (SN 0300161285 through 0300203770)**	A
101	0100019	AR	Locking, Compound	
102	0440240	NLA	Bearing, Turntable (Use p/n 2915078) **(SN 0300096000 through 0300161284)**	
102	0440240	NLA	Bearing, Turntable (Use p/n 1001169827) **(SN 0300161285 through 0300203770)**	
103	0682026	20	Bolt 5/8in-11NC x 3-1/4in (Grade 8)	
104		Ref	Bolt 5/8in-11NC Options:	
104	0682048	20	Bolt 5/8in-11NC x 6in (Grade 8)	

SECTION 2 - TURNTABLE

ITEM	PART NUMBER	QTY	DESCRIPTION	REV
104	0682034	20	Bolt 5/8in-11NC x 4-1/4in (Grade 8)	
105	4892000	40	Flatwasher 5/8in Hardened	
	0259147	Ref	**TURNTABLE LOCK INSTALLATION**	B
201	4844958	1	Pin Weldment	
202	3421565	1	Pin, Snap	
203	3760170	2	Ring, Quick Release	
204	1260017	9 in/23cm	Chain	
	0259158	Ref	**REMOTE BEARING LUBE INSTALLATION**	B
301	2160002	1	Fitting, Grease	
302	2180344	1	Fitting, Bulkhead	
303	2220001	1	Fitting, Straight	
304	2220124	1	Fitting, Elbow	
305	2751095	1	Hose	
306	2220273	1	Fitting, Reducer	

FIGURE 2-5. SWING HUB ASSEMBLY (SN 0300096000 through 0300137200)

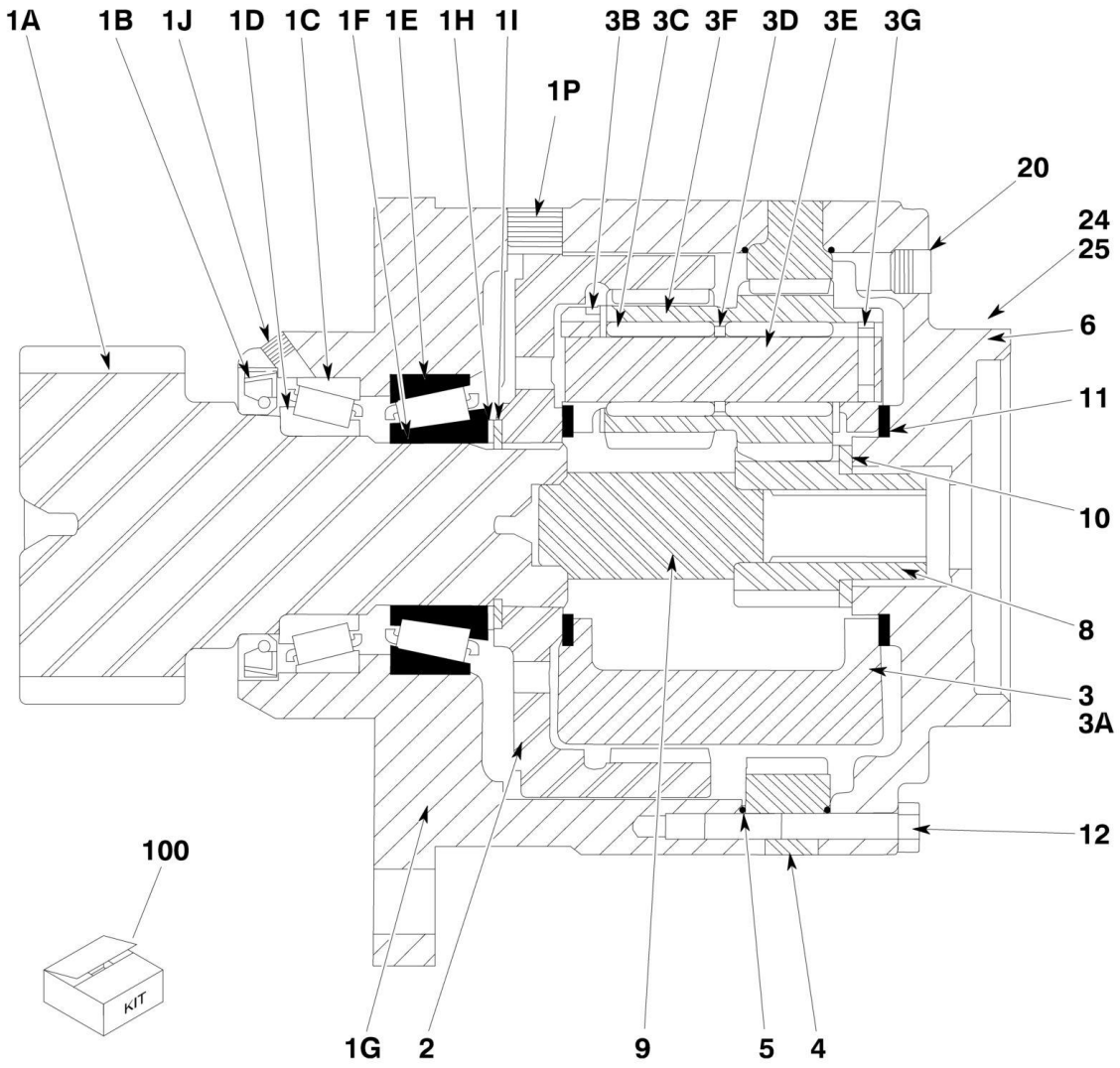

FIGURE 2-5. SWING HUB ASSEMBLY (SN 0300096000 through 0300137200)

ITEM	PART NUMBER	QTY	DESCRIPTION	REV
	2780247	Ref	**SWING HUB ASSEMBLY**	A
1	2780247	1	Housing and Shaft Assembly (Note: Not Available - Purchase Complete Swing Hub Assembly)	
1A	7017064	1	Shaft, Output	
1B	7000228	1	Seal, Lip	
1C	7000255	1	Cup, Bearing	
1D	7000256	1	Cone, Bearing	
1E	7000257	1	Cup, Bearing	
1F	7000258	1	Cone, Bearing	
1G	7017065	1	Housing	
1H	7007633	1	Thrustwasher	
1I	7000229	1	Ring, Retaining	
1J	7010494	1	Plug, Pipe	
1P	See Note	2	Plug, Pipe (Note: Not Available - Purchase Locally)	
2	7000246	1	Gear, Internal	
3	7017066	1	Carrier Assembly (Includes Items 3A-3G)	
3A	See Note	1	Housing, Carrier (Note: Use p/n 7017066)	
3B	See Note	6	Washer, Special (Note: Use p/n 7017066)	
3C	See Note	AR	Bearing, Needle (Note: Use p/n 7017066)	
3D	See Note	3	Thrustwasher (Note: Use p/n 7017066)	
3E	See Note	3	Pin (Note: Use p/n 7017066)	
3F	See Note	3	Gear (Note: Use p/n 7017066)	
3G	See Note	3	Pin, Retaining (Note: Use p/n 7017066)	
4	7001988	1	Gear, Ring	
5	7000230	2	O-Ring	
6	7000209	1	Cover, Input	
8	7010488	1	Gear, Sun	
9	7000269	1	Spacer, Input	
10	7000270	1	Thrustwasher	
11	7000253	2	Thrustwasher	
12	7000217	8	Bolt	
20	2200222	1	Plug, Pipe	
24	See Note	1	Plate, ID (Note: Not Available for Purchase)	
25	7000281	2	Screw, Drive	
100	7024100	1	Seal Kit	

FIGURE 2-6. SWING MOTOR ASSEMBLY (SN 0300096000 through 0300137200)

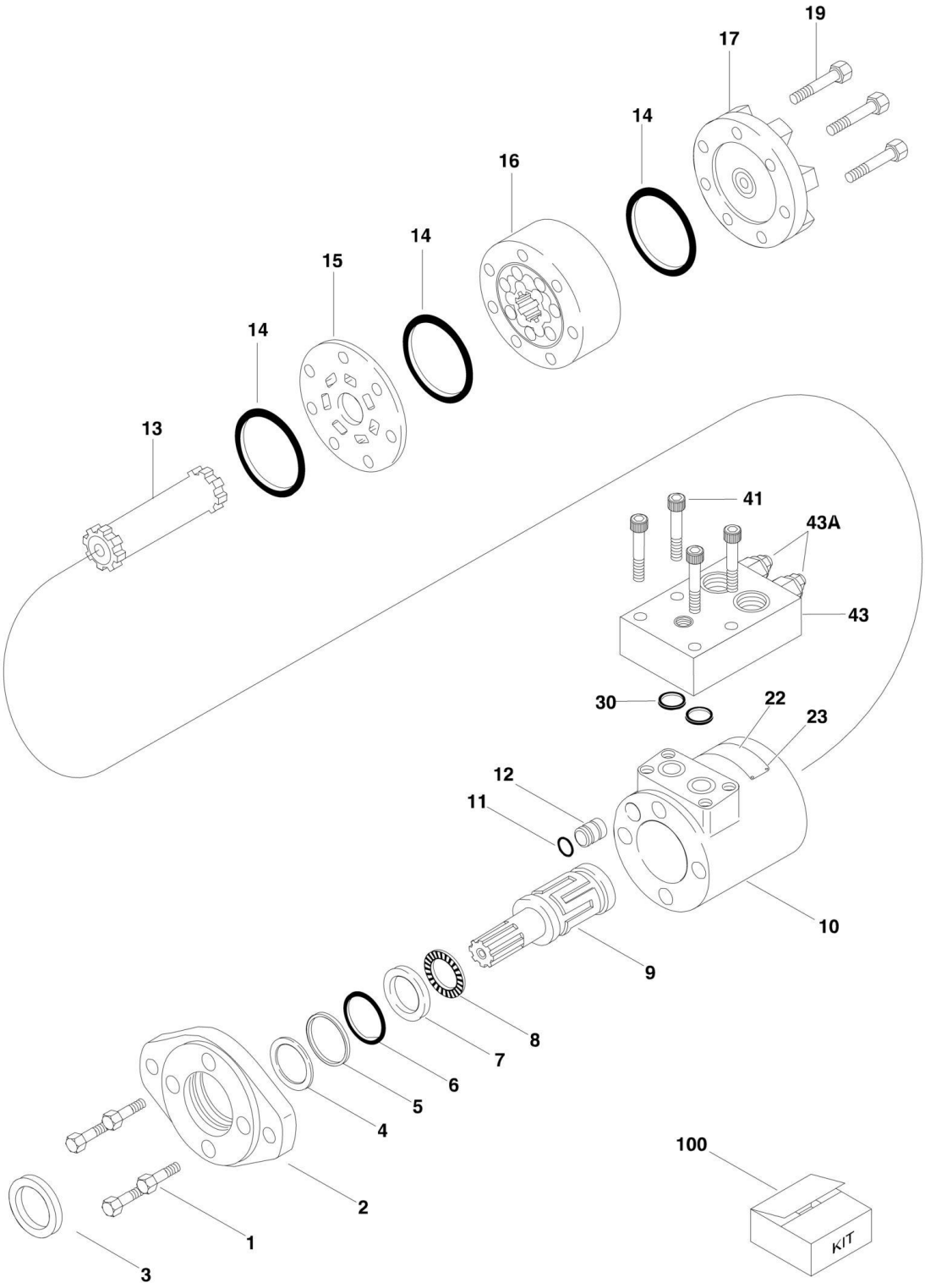

FIGURE 2-6. SWING MOTOR ASSEMBLY (SN 0300096000 through 0300137200)

ITEM	PART NUMBER	QTY	DESCRIPTION	REV
	3160280	Ref	**SWING MOTOR ASSEMBLY**	B
1	7020357	4	Capscrew	
2	7009996	1	Flange, Mounting	
3	See Note	NSS	Seal, Exclusion (Note: Use Item 100)	
4	See Note	NSS	Washer, Back-up (Note: Use Item 100)	
5	See Note	NSS	Seal, Pressure (Note: Use Item 100)	
6	See Note	NSS	Seal (Note: Use Item 100)	
7	7002117	1	Race, Bearing	
8	7002111	1	Bearing, Thrust Needle	
9	7009998	1	Shaft, Output	
10	7020352	1	Housing	
11	See Note	NSS	O-Ring (Note: Use Item 100)	
12	7009992	1	Plug, Housing	
13	7002112	1	Drive	
14	See Note	NSS	Seal (Note: Use Item 100)	
15	7002110	1	Plate, Spacer	
16	7002125	1	Gerotor Sub-Assembly	
17	7002107	1	Cap, End	
19	7014900	7	Capscrew	
22	See Note	1	Nameplate (Note: Not Available for Purchase)	
23	See Note	2	Rivet (Note: Not Available for Purchase)	
30	See Note	NSS	O-Ring (Note: Use Item 100)	
41	7020353	4	Capscrew	
43	7020359	1	Cartridge, Counterbalance Valve	
43A	7020362	2	Cartridge	
100	2900733	1	Seal Kit - Includes Items 3-6, 11, 14 & 30	

FIGURE 2-7. SWING MOTOR/BRAKE/HUB ASSEMBLY (SN 0300137201 through 0300203770)

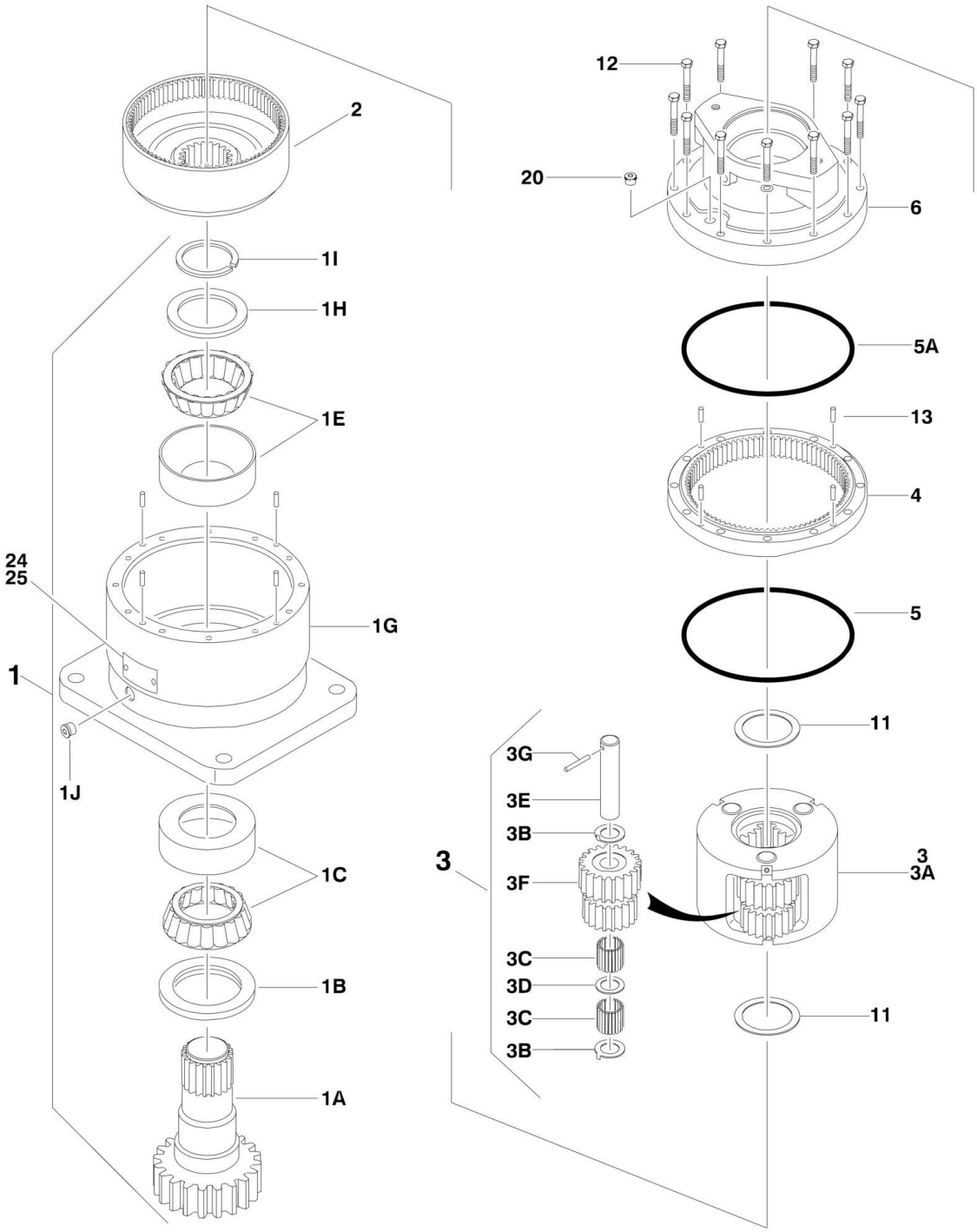

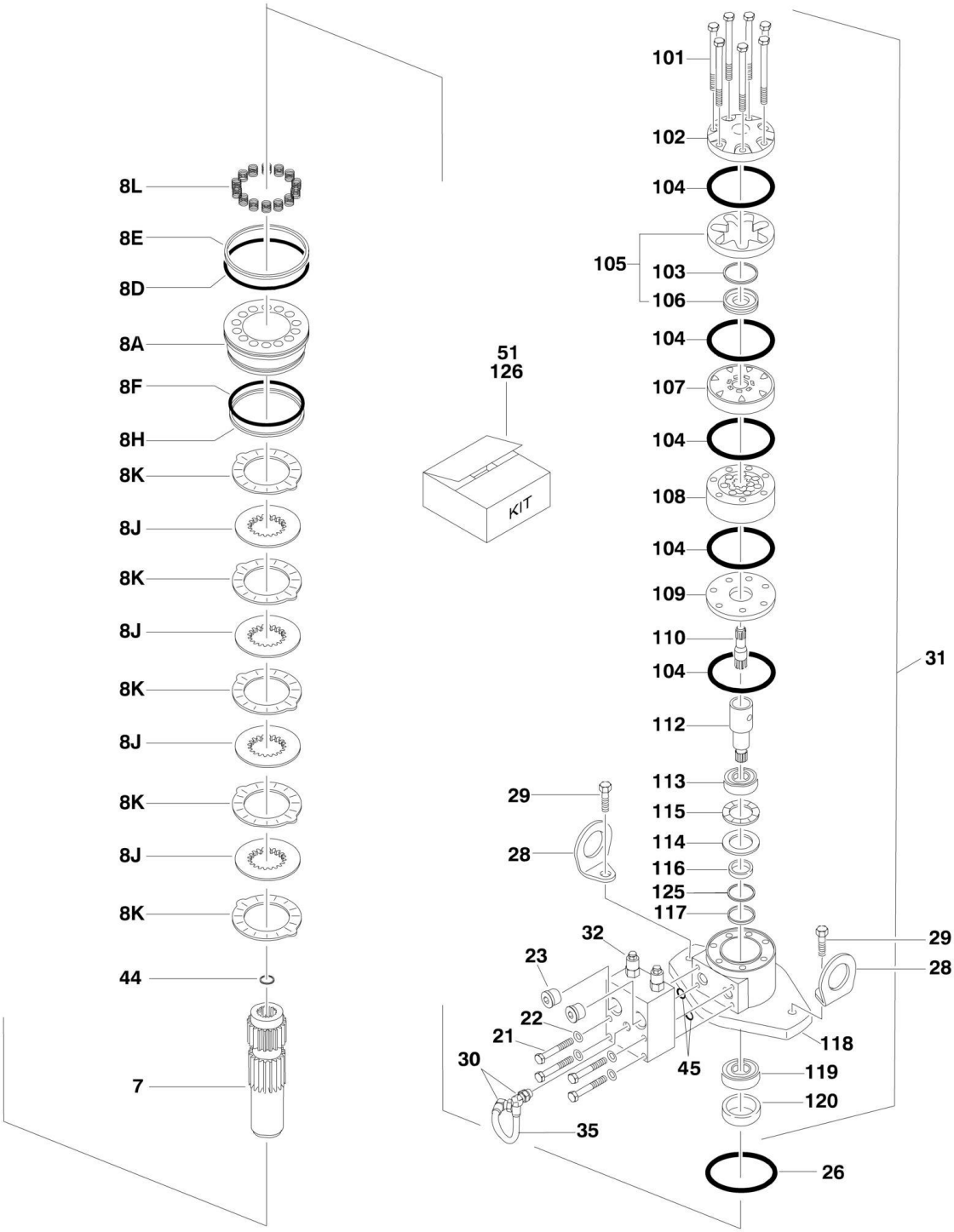
8L
8E
8D
8A
8F
8H
8K
8J
8K
8J
8K
8J
8K
8J
8K
44
7
51
126
KIT
101
102
104
105
103
106
104
107
104
108
104
109
110
104
112
113
115
114
116
125
117
29
28
32
23
22
21
30
35
45
118
119
120
26
31
29
28

FIGURE 2-7. SWING MOTOR/BRAKE/HUB ASSEMBLY (SN 0300137201 through 0300203770)

ITEM	PART NUMBER	QTY	DESCRIPTION	REV
	1001101062	Ref	**SWING MOTOR/HUB ASSEMBLY**	A
1	1001101062	1	Housing/Shaft Assembly (Note: Not Available - Purchase Complete Swing Motor/Hub Assembly)	
1A	7017064	1	Shaft, Output	
1B	7000228	1	Seal, Lip	
1C	7000255	1	Bearing Kit (Includes Cup and Cone)	
1E	7000257	1	Bearing Kit (Includes Cup and Cone)	
1G	1001101062	1	Housing (Note: Not Available for Purchase)	
1H	7007633	1	Thrustwasher	
1I	7000229	1	Ring, Retaining	
1J	7017072	1	Plug, Pipe	
2	7000246	1	Gear, Internal	
3	80424002	1	Carrier Assembly	
3A	7001931	1	Carrier	
3B	7001985	6	Washer, Tanged	
3C	7001909	96	Bearing, Needle	
3D	7000263	3	Thrustwasher	
3E	7001911	3	Shaft, Planet	
3F	7001912	3	Gear, Cluster	
3G	7010474	3	Roll Pin	
4	7000248	1	Gear, Ring	
5	7000230	1	O-Ring (Black)	
5A	7017070	1	O-Ring (White)	
6	1001101062	1	Housing, Brake (Note: Not Available for Purchase)	
7	70002065	1	Gear, Sun	
8		Ref	Brake Components	
8A	70000782	1	Piston, Brake	
8D	70002070	1	O-Ring	
8E	70002071	1	Ring, Back-up	
8F	70002073	1	O-Ring	
8H	70002072	1	Ring, Back-up	
8J	70002067	4	Rotor, Brake	
8K	70002068	5	Stator, Brake	
8L	70002066	14	Spring, Brake	
11	7000253	2	Thrustwasher	
12	7000217	12	Bolt 5/16in-18NC x 2-1/4in (Grade 8)	
13	7017080	4	Pin, Dowel	
20	7017072	1	Plug, Pipe	
21	7024704	4	Bolt 5/16in-18NC x 2in (Grade 8)	
22	See Note	4	Lockwasher (Note: Not Available - Purchase Locally)	
23	7017023	2	Plug, Pipe	
24	See Note	1	Plate, ID (Note: Not Available for Purchase)	
25	7000281	2	Screw, Drive	
26	7024763	1	O-Ring	
28	See Note	2	Lug, Lifting (Note: Not Available for Purchase)	
29	7017081	2	Bolt 1/2in-13NC x 1-1/2in (Grade 8)	
30	7017085	2	Elbow	
31	70002075	1	Motor Assembly (See Items 101-126 for Breakdown)	
32	7024784	1	Valve (No Serviceable Parts)	
33	7017082	1	Plug, Pipe (Not Shown)	

ITEM	PART NUMBER	QTY	DESCRIPTION	REV
35	70002074	1	Tube	
44	7017028	1	Ring, Retainer	
45	7000213	2	O-Ring	
51	7024100	1	Seal Kit - Swing Hub (Includes Items 1B, 1I, 5, 5A & 11)	
	70002075	Ref	**MOTOR ASSEMBLY**	
101	7024454	6	Bolt	
102	7004035	1	Cover, End	
103	See Note	NSS	Seal, Commutator (Note: Use Item 126)	
104	See Note	NSS	Seal, Ring (Note: Use Item 126)	
105	7024453	1	Commutator and Ring Assembly	
106	7024453	1	Ring	
107	7024379	1	Manifold	
108	7024455	1	Rotor Set	
109	7024380	1	Plate, Wear	
110	7024456	1	Link, Drive	
112	7024458	1	Shaft, Coupling	
113	7024381	1	Bushing, Bronze	
114	7004043	1	Thrustwasher	
115	7004044	1	Bearing, Thrust	
116	See Note	NSS	Seal, Inner (Note: Use Item 126)	
117	See Note	NSS	Washer, Back-up (Note: Use Item 126)	
118	1001101062	1	Housing (Note: Not Available for Purchase)	
119	7024390	1	Bearing	
120	See Note	NSS	Seal (Note: Use Item 126)	
125	See Note	NSS	Washer, Back-up (Note: Use Item 126)	
126	7024396	1	Seal Kit, Motor (Includes Items 103, 104, 116, 117, 120 & 125)	

FIGURE 2-8. CATERPILLAR ENGINE INSTALLATION - WITH ELECTRICAL DRIVEN COOLING FAN (WITHOUT UGM)

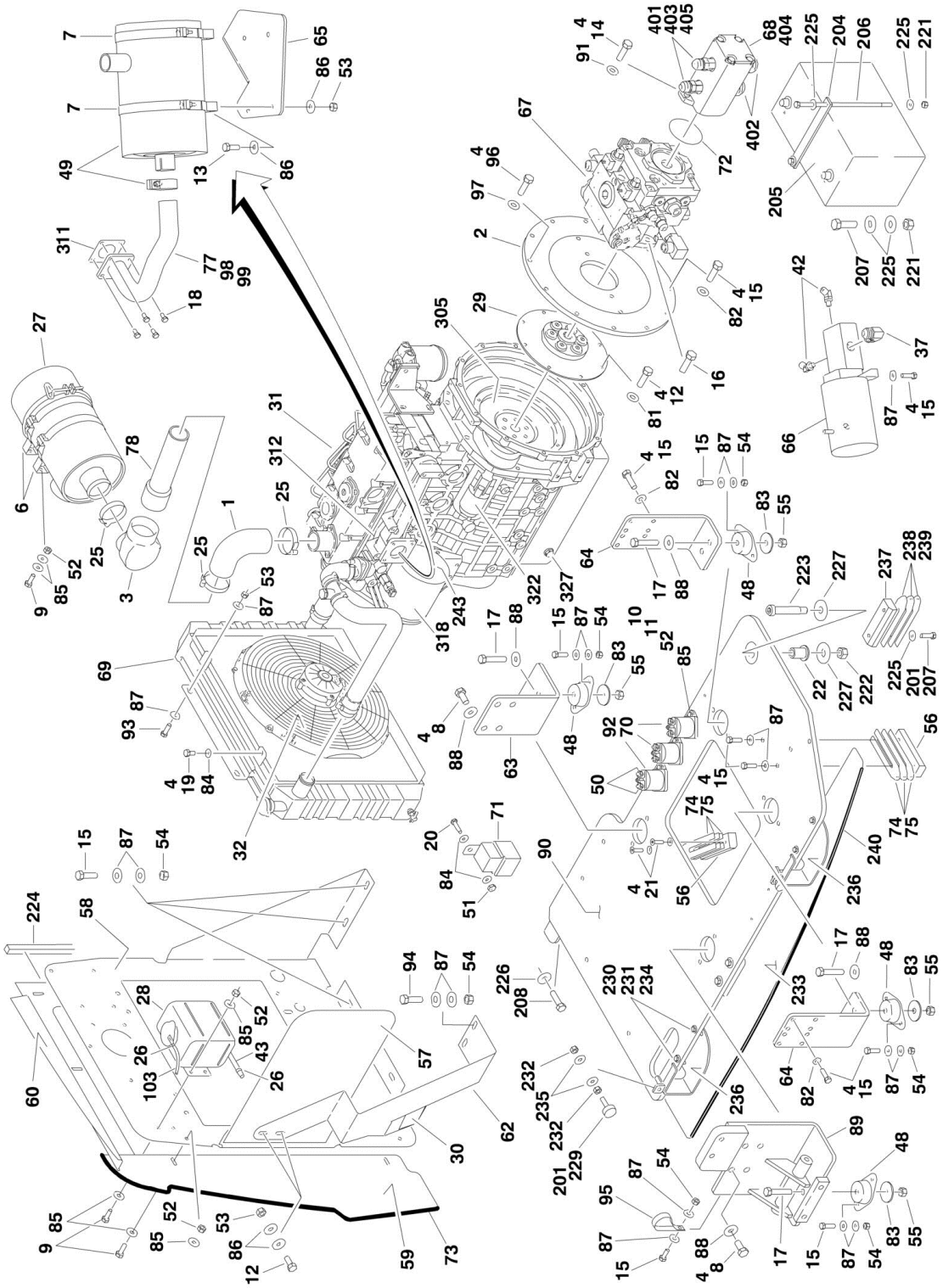

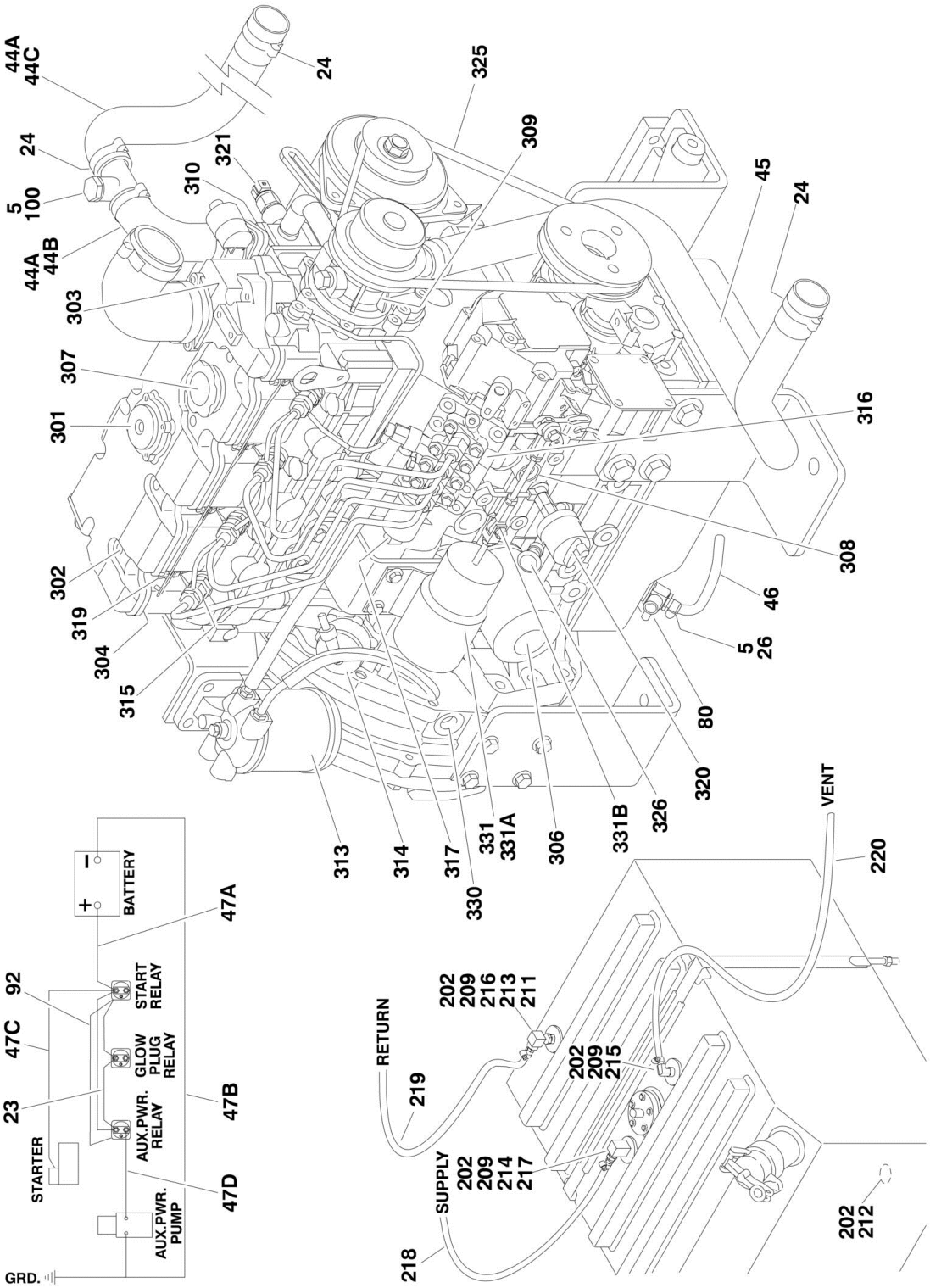
44A
44C
24
325
24
321
309
5
100
310
45
24
44A
44B
303
307
301
316
302
308
319
46
304
5
26
315
80
313
314
317
331
331A
306
331B
326
320
330
VENT
220
202
209
216
213
211
RETURN
219
202
209
215
SUPPLY
202
209
214
217
218
202
212
BATTERY
47A
92
START
RELAY
47C
GLOW
PLUG
RELAY
23
AUX.PWR.
RELAY
47B
STARTER
47D
AUX.PWR.
PUMP
GRD.

FIGURE 2-8. CATERPILLAR ENGINE INSTALLATION - WITH ELECTRICAL DRIVEN COOLING FAN (WITHOUT UGM)

ITEM	PART NUMBER	QTY	DESCRIPTION	REV
		Ref	**NOTE: FOR MODULE IDENTIFICATION, REFER TO REVISION LOG PAGE A.**	
		Ref	**NOTE: TO CONVERT ELECTRIC FAN TO MECHANICAL FAN, SEE SPECIAL OPTION SECTION.**	
		Ref	**CATERPILLAR ENGINE ASSEMBLY**	
	2000313	Ref	**Without Arctic Package**	I
	1001093898	Ref	**With Arctic Package**	G
1	2180482	1	Elbow, Rubber	
2	0080181	1	Adaptor, Pump Mounting Plate	
3	0080201	1	Elbow, Rubber	
4	0100011	AR	Locking, Compound	
5	0100020	AR	Sealant	
6	0340041	2	Band, Air Cleaner Mounting	
7	0340046	2	Band, Muffler Mounting	
8	0630569	8	Bolt M14 x 30mm	
9	0641406	13	Bolt 1/4in-20NC x 3/4in	
10	0641408	5	Bolt 1/4in-20NC x 1in	
11	0641410	1	Bolt 1/4in-20NC x 1-1/4in	
12	0641506	10	Bolt 5/16in-18NC x 3/4in	
13	0641507	4	Bolt 5/16in-18NC x 7/8in	
14	0641608	2	Bolt 3/8in-16NC x 1in	
15	0641610	AR	Bolt 3/8in-16NC x 1-1/4in	
16	0641812	2	Bolt 1/2in13NC x 1-1/2in	
17	0641820	4	Bolt 1/2in-13NC x 2-1/2in	
18	0700808	4	Bolt M8 x 16mm	
19	0721004	4	Screw #10-24NC x 1/2in	
20	0721006	1	Screw #10-24NC x 3/4in	
21	0741610	2	Screw, Countersunk 3/8in-16NC x 1-1/4in	
22	0962172	1	Bushing, Flanged	
23	1060904	1	Cable, Jumper	
24	1320012	6	Clamp	
25	1320016	4	Clamp	
26	1320022	3	Clamp	
27	1340060	1	Air Cleaner Assembly	
27	7012664	1	Element, Air Cleaner	
28	1580011	1	Container, Overflow	
29	1660255	1	Pump, Coupling	
30	1703162	2	Decal - Fan Blade	
31	2000195	NLA	Caterpillar Engine Assembly (Use p/n 1001104689)	
32	2060032	1	Fan, Electric	
37	2220567	1	Fitting, Elbow	
42	2221045	2	Fitting	
43	2720058	4 in/10cm	Hose	
44		Ref	Hose, Radiator (Top) Options:	
44A	2720507	NLA	Hose (Use p/n 1001102308. 1001102308 Service Kit - Includes Qty 1 of Items 44B, 44C, 100 and Qty 2 of Item 24) **(SN 0300096000 through 0300130133)**	
44B	1001101232	1	Hose for (Block to Adapter) **(SN 0300130134 through 0300203770)**	
44C	1001101233	1	Hose for (Adapter to Radiator) **(SN 0300130134 through**	

ITEM	PART NUMBER	QTY	DESCRIPTION	REV
			0300203770)	
45	2720508	1	Hose, Radiator (Bottom)	
46	2750532	6 in/25cm	Hose	
47	2901880	1	Battery Cable Kit	D
47A	7016843	1	Cable - Battery to Starter Relay	
47B	7016835	1	Cable - Battery and Auxiliary Pump to Ground	
47C	7016834	1	Cable - Starter Relay to Starter	
47D	7016820	1	Cable - Auxiliary Relay to Auxiliary Pump	
48	3200378	4	Mount, Motor	
49		Ref	Muffler Options:	
49	3220113	1	Spark Arresting Muffler	
49	70001017	1	Clamp	
49	3220154	NLA	Catalytic Muffler (Use p/n 1001107116)	
49	70002705	1	Clamp	
49	70002706	1	Plug, Brass	
50	3300220	6	Nut, Washer	
51	3311005	1	Locknut #10-24NC	
52	3311405	19	Locknut 1/4in-20NC	
53	3311505	6	Locknut 5/16in-18NC	
54	3311605	AR	Locknut 3/8in-16NC	
55	3311805	4	Locknut 1/2in-13NC	
56	3340399	2	Pad, Wear	
57	3571019	1	Plate, Air Panel	
58	3571692	1	Plate, Radiator Mounting	
59	3572502	1	Plate, Air Flow (Side)	
60	3572503	1	Plate, Air Flow (Top)	
62	3573667	1	Plate, Radiator Support	
63	3574253	1	Plate, Engine Mounting (Front)	
64	3574259	2	Plate, Engine Mounting (Rear)	
65		Ref	Plate, Muffler Support Options:	
65	3574264	1	Plate, Muffler Support **(SN 0300096000 through 0300118774)**	
65	1001098525	1	Plate, Muffler Support **(SN 0300118775 through 0300203770)**	
66		Ref	Auxiliary Power Pump Assembly Options (See AUXILIARY POWER PUMP ASSEMBLY for Breakdown):	
66	3600279	NLA	Auxiliary Power Pump Assembly **(SN 0300096000 through 0300105248)**	
66	3600423	1	Auxiliary Power Pump Assembly **(SN 0300105249 through 0300203770)**	
67	3600404	1	Piston Pump Assembly (See PISTON PUMP ASSEMBLY for Breakdown)	
68	3600405	1	Gear Pump Assembly with Fittings (See Items 401-405 for Breakdown)	
69	3620046	1	Radiator	
69	8180311	1	Cap, Radiator (Use p/n 8180311)	
70	3740067	3	Relay	
71	3740080	1	Relay	
72	3790152	1	O-Ring	
73	3960389	AR	Seal	
73		Ref	Seal **(SN 0300096000 through 0300110479)**	
73		Ref	Seal **(SN 0300110480 through 0300203770)**	
74	4070497	4	Shim	
75	4070498	2	Shim	

ITEM	PART NUMBER	QTY	DESCRIPTION	REV
77	4568743	1	Pipe, Exhaust	
78	4569176	1	Tube, Air Intake	
80	4641272	1	Valve, Oil Drain	
81	4711500	8	Flatwasher 5/16in Thin	
82	4711600	18	Flatwasher 3/8in Thin	
83	4740274	4	Washer, Snubbing	
84	4751000	6	Flatwasher #10 Regular	
85	4751400	38	Flatwasher 1/4in Regular	
86	4751500	12	Flatwasher 5/16in Regular	
87	4751600	AR	Flatwasher 3/8in Regular	
88	4751800	11	Flatwasher 1/2in Regular	
89	4846821	1	Mount, Motor/Generator	
90	4846852	1	Tray	
91	4891600	2	Flatwasher 3/8in Hardened	
92	4922737	1	Harness, Engine Grounding	
93	0641609	4	Bolt 3/8in-16NC x 1-1/8in	
94	0941611	2	Bolt 3/8in-16NC x 1-3/8in	
95	1001097588	1	Clamp, Tubing	
96		Ref	Bolt Options:	
96	0641610	2	Bolt 3/8in-16NC x 1-1/4in **(SN 0300096000 through 0300118774)**	
96	0641612	2	Bolt 3/8in-16NC x 1-1/2in **(SN 0300118775 through 0300203770)**	
97		Ref	Flatwasher Options:	
97	4751600	2	Flatwasher 3/8in Regular **(SN 0300096000 through 0300118774)**	
97	4891600	2	Flatwasher 3/8in Hardened **(SN 0300118775 through 0300203770)**	
98	4100025	19 in/48cm	Sleeve, Fiberglass Only **(SN 0300130134 through 0300203770)**	
99	1001100825	2	Tie-Strap Only **(SN 0300130134 through 0300203770)**	
100	1001101228	1	Adapter Only **(SN 0300130134 through 0300203770)**	
103	2720271	18 in/46cm	Hose **(SN 0300135381 through 0300203770)**	
		Ref	**Note: Following Items (Not Shown) Used on Arctic Package Machines Only.**	
	1702942	1	Decal, Engine Block Heater (Located at End of Heater Cord)	
	2580054	1	Heater, Engine Block	
	2300041	AR	Fluid, Antifreeze 60/40 Arctic Antifreeze	
	3020044	AR	Oil, Motor 0W-40	
		Ref	**CATERPILLAR ENGINE INSTALLATION**	
	0274605	Ref	**Without Arctic Package**	F
	1001093899	Ref	**With Arctic Package**	E
201	0100011	AR	Locking, Compound	
202	0100020	AR	Sealant	
204	0361810	1	Bar, Battery Hold-Down	
205	0400075	1	Battery	
206	0630541	2	Bolt, Battery	
207	0641616	3	Bolt 3/8in-16NC x 2in	
208	0642010	1	Bolt 5/8in-11NC x 1-1/4in	
209	1320022	5	Clamp	
210	1320223	1	J-Clip	
211	2180536	1	Fitting, Straight Barbed	

ITEM	PART NUMBER	QTY	DESCRIPTION	REV
212	2200222	1	Plug	
213	2220250	1	Fitting, Reducer	
214	2220273	1	Fitting, Reducer	
215	2220313	1	Fitting, Elbow Barbed	
216	2220459	1	Fitting, Elbow	
217	2220794	1	Fitting, Straight Barbed	
218	2720058	12 ft/3.7m	Hose	
219	2720271	12 ft/3.7m	Hose	
220	2750532	5 ft/1.5m	Hose	
221	3311605	3	Locknut 3/8in-16NC	
222	3312005	1	Locknut 5/8in-11NC	
223	3900255	1	Screw, Shoulder	
224	3960469	1	Seal, Foam Gasket	
225	4751600	8	Flatwasher 3/8in Regular	
226	4752000	1	Flatwasher 5/8in-11NC	
227	4752200	2	Flatwasher 3/4in	
228	1701505	1	Decal - Diesel Fuel (Not Shown - See DECAL SECTION)	
229	0940049	2	Bumper, Hood	
230	0641410	4	Bolt 1/4in-20NC x 1-1/4in	
231	3311405	4	Locknut 1/4in-20NC	
232	3311501	4	Nut 5/16in-18NC	
233	3572504	1	Plate	
234	4751400	8	Flatwasher 1/4in Regular	
235	4751500	4	Flatwasher 5/16in Regular	
236		Ref	Latch, Hood Options:	
236	4846096	NLA	Latch, Hood **(SN 0300096000 through 0300121155)**	
236	1001094608	2	Latch, Hood **(SN 0300121156 through 0300203770)**	
237	3340399	1	Pad, Wear	
238	4070498	1	Shim (16Ga)	
239	4070497	2	Shim (11Ga)	
240	3960389	4 ft/1.2m	Seal, Bulb	
241		Ref	Coolant, Anti-Freeze Options (Not Shown):	
241	2300004	2.7 Gal	Without Arctic Package	
241	2300041	2.7 Gal	With Arctic Package	
243	3290601	1	Nut M6 x 1 **(SN 0300121156 through 0300203770)**	
244	3290501	1	Nut M5 x 0.8 **(SN 0300121156 through 0300203770)**	
		Ref	**Note: Following Items (Not Shown) Used on Arctic Package Machines Only.**	
	1702944	1	Decal - Heater Cord	
	1060626	1	Cord, 3-Way Extension (Located on Left Front of Engine)	
	1702941	1	Decal - Battery Heater	
	2580024	1	Heater, Battery (Located on Battery)	
	1702943	1	Decal - Hydraulic Tank Heater	
	2580050	1	Heater, Hydraulic Tank	
	3980007	1	Seat, Battery (Located Under Battery)	
		Ref	**CATERPILLAR ENGINE COMPONENTS**	
	1001104689	NLA	**Engine p/n 2000195 no longer available. Use p/n 1001104689 for Service Replacement.**	E
	1001104689	Ref	**Service Replacement**	B
301	7026848	1	Breather, Valve	
301	7026846	1	Gauze, Breather Valve	
302	7026847	4	Seal, Valve Cover Nut	

ITEM	PART NUMBER	QTY	DESCRIPTION	REV
303	7026849	1	Gasket, Air Intake	
304	7026850	1	Seal, Valve Cover	
305	7026852	1	Flywheel with Starter Gear Set	
305	7026853	1	Gear, Flywheel	
306	70001403	1	Filter, Oil (was p/n 7026855)	
307	7026860	1	Cap, Oil Fill	
307	7026856	1	Seal, Oil Fill Cap	
308	7026858	1	Valve, Relief	
308	7026857	1	Seal	
309	7026864	1	Pump, Water	
309	7026863	1	Gasket, Water Pump (Fits Between Pump and Pump Rear Plate)	
309	7026865	1	Gasket, Water Pump (Fits Between Pump Rear Plate and Engine Block)	
310	7026867	1	Thermostat	
310	See Note	1	Regulator, Water (Note: Not Available for Purchase)	
310	7026866	1	Gasket (Fits Between Regulator and Engine Block)	
310	7026868	1	Gasket, Thermostat (Fits Between Regulator and Hose Adapter)	
311	7026869	1	Gasket, Exhaust	
312	7026870	1	Gasket, Exhaust Manifold	
313	70001695	1	Filter Assembly	
313	7026871	1	Element, Fuel Filter	
313	7026872	2	Gasket, Fuel Filter Element	
314	7026873	1	Pump, Fuel Transfer	
314	7026874	1	Seal,	
315	7026875	4	Injector, Fuel	
316	See Note	1	Pump, Fuel Injection (Note: Not Available for Purchase)	
317	70001990	1	Solenoid, Fuel Shut-Off (was p/n 7026876) (Note: P/N 70001990 includes adapter harness if required.)	
318	70000544	1	Alternator (Note: Not Available for Purchase)	
318	70000544	1	Alternator Conversion Kit (Includes Alternator, Adapter Harness, Alternator Bracket, Lever and Mounting Hardware)	
318	70001180	1	Bolt, Lower Pivot	
318	70001257	1	Bracket, Adjusting (Not Shown):	
319	7026878	4	Glowplug	
320	1001097554	1	Switch, Oil Pressure (was p/n 7026844)	
321	7026840	1	Switch, Water Temperature	
321	7026882	1	Seal, Sensor	
322	7026879	1	Starter	
323	7026854	1	Seal, Front Main (Not Shown - Located on Front of Engine Block)	
324	7026851	1	Seal, Rear Main (Not Shown - Located on Rear of Engine Block)	
325	7026880	1	Belt	
326	7026885	1	Dipstick Oil Level	
326	7026886	1	Tube, Dipstick	
326	7026881	1	O-Ring, Dipstick Tube	
327	7026861	1	Plug, Drain	
328	7026862	1	Gasket, Valve Bracket (Not Shown - Located on Between Valve Bracket and Head)	
329	7026859	1	Gasket, Oil Pan (Not Shown)	
330	7026883	1	Speed Sensor Kit	
330	7026836	1	Connector, Speed Sensor	
331	See Note	1	Actuator/Linkage Assembly - Throttle (was p/n 1600351 which is	

ITEM	PART NUMBER	QTY	DESCRIPTION	REV
			not available as a service part. Use service replacement parts below.) (Note: Not Available for Purchase)	
331A	7026884	1	Actuator and Electrical Connector Kit	
331A	7026835	1	Connector, Actuator	
331B	7026843	1	Linkage Kit	
	3600405	Ref	**GEAR PUMP ASSEMBLY WITH FITTINGS**	A
401	2220385	2	Fitting, Tee	
402	2220479	2	Fitting, Straight	
403	2220810	2	Fitting, Reducer	
404	3600368	1	Gear Pump Assembly Less Fittings	
404	7024962	1	Seal Kit - 3600368 Pump (Includes Soft Seals)	
		Ref	**Note: Seal Kit is the only service part available.**	
405	4640744	2	Valve, Check	

FIGURE 2-9. CATERPILLAR ENGINE INSTALLATION - WITH MECHANICAL DRIVEN COOLING FAN (WITHOUT UGM)

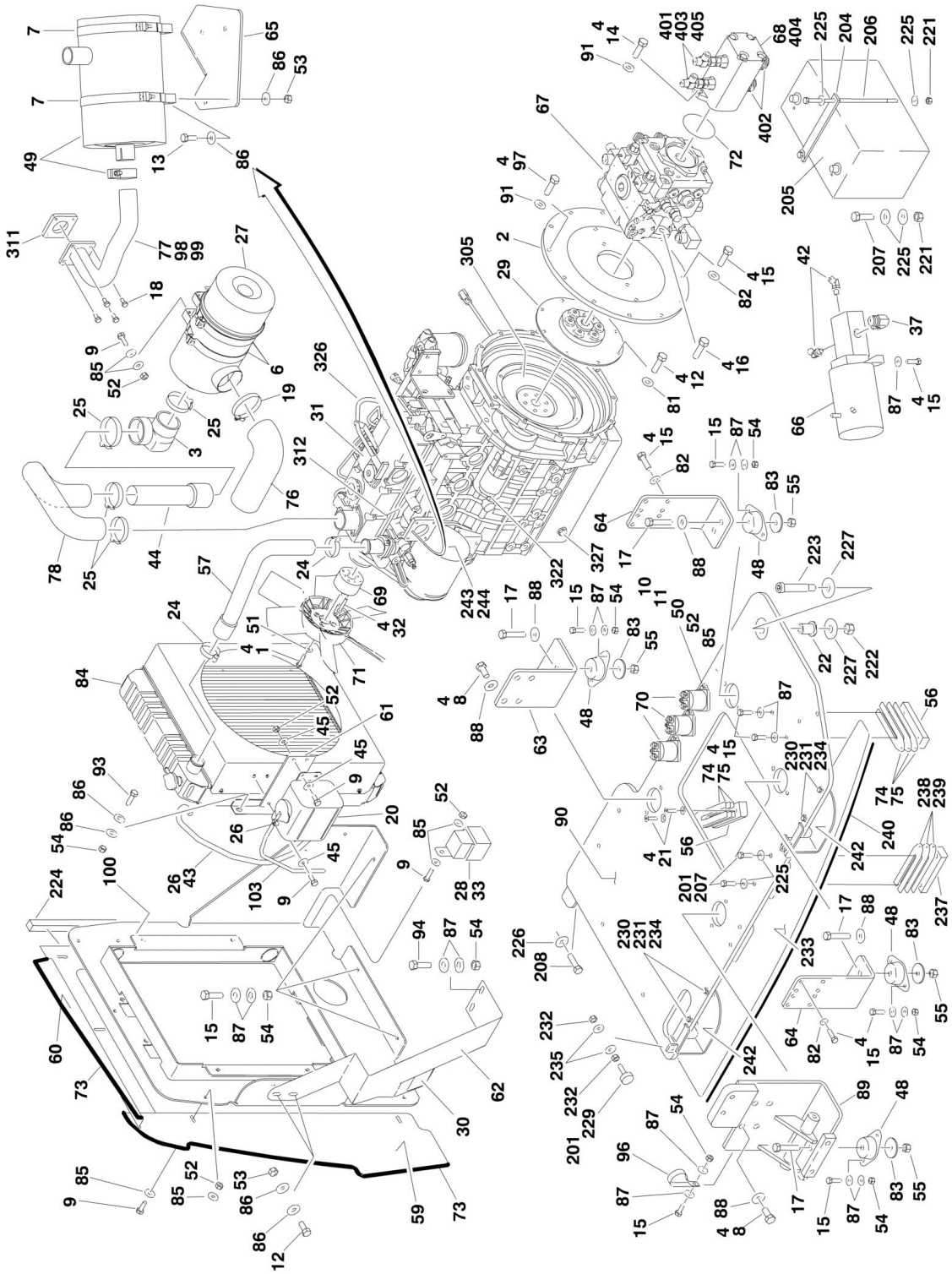

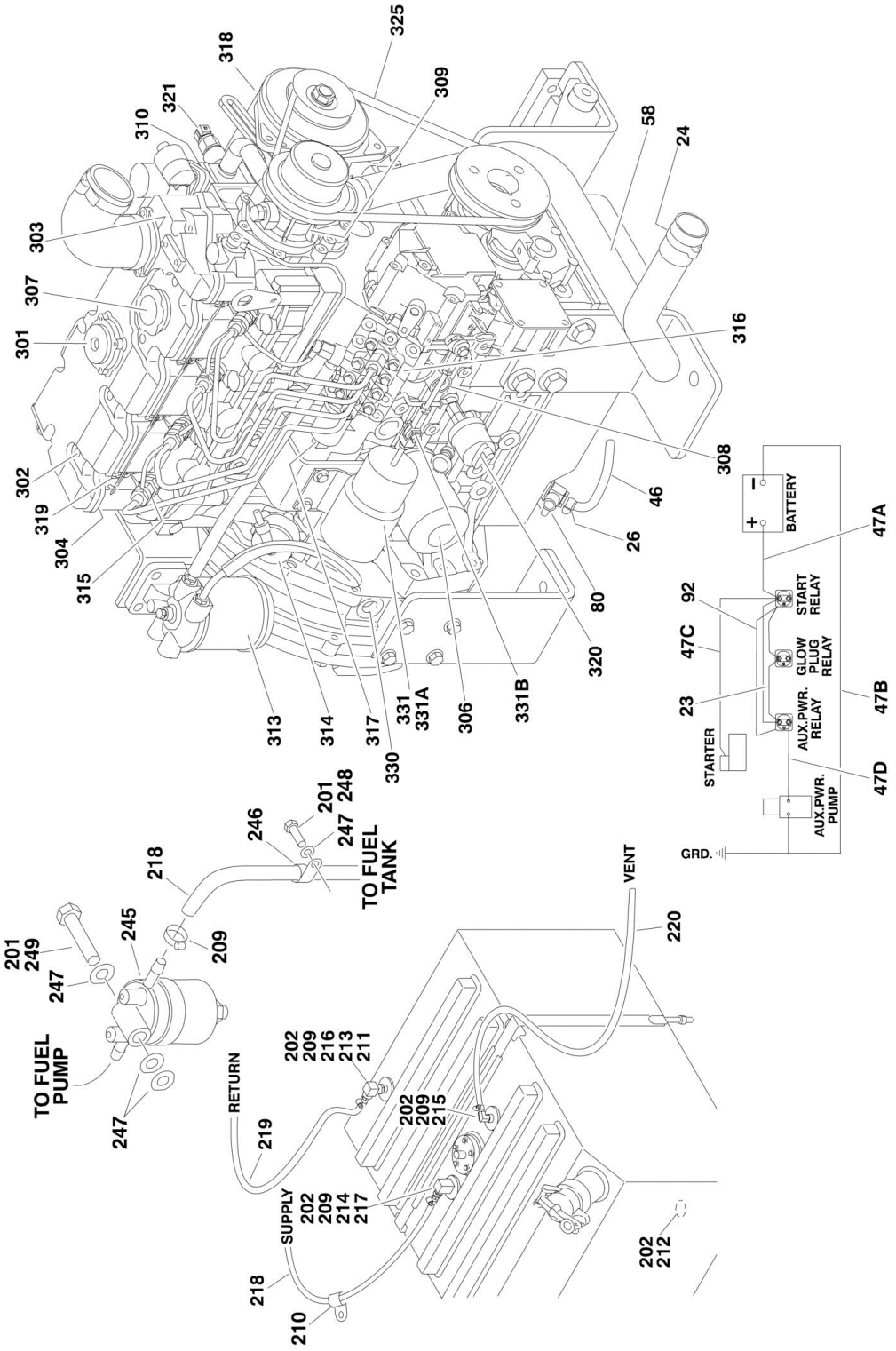
325
318
321
310
309
58
24
303
307
301
316
308
302
319
304
315
46
26
80
320
313
314
317
330
331
331A
306
331B
BATTERY
47A
92
START RELAY
47C
GLOW PLUG RELAY
23
AUX.PWR. RELAY
47B
STARTER
47D
AUX.PWR. PUMP
GRD.
201
248
246
247
TO FUEL TANK
218
VENT
220
201
249
245
209
247
TO FUEL PUMP
247
RETURN
219
202
209
216
213
211
202
209
215
SUPPLY
202
209
214
217
218
210
202
212

FIGURE 2-9. CATERPILLAR ENGINE INSTALLATION - WITH MECHANICAL DRIVEN COOLING FAN (WITHOUT UGM)

ITEM	PART NUMBER	QTY	DESCRIPTION	REV
		Ref	**NOTE: FOR MODULE IDENTIFICATION, REFER TO REVISION LOG PAGE A.**	
		Ref	**CATERPILLAR ENGINE ASSEMBLY**	
	1001130447	Ref	**Without Arctic Package**	B
	1001130446	Ref	**With Arctic Package**	B
1	0760815	4	Bolt M8 x 35mm	
2	0080181	1	Adaptor, Pump Mounting Plate	
3	0080201	1	Elbow, Rubber	
4	0100011	AR	Locking, Compound	
5	0100020	AR	Sealant	
6	0340041	2	Band, Air Cleaner Mounting	
7	0340046	2	Band, Muffler Mounting	
8	0630569	8	Bolt M14 x 30mm	
9	0641406	13	Bolt 1/4in-20NC x 3/4in	
10	0641408	5	Bolt 1/4in-20NC x 1in	
11	0641410	1	Bolt 1/4in-20NC x 1-1/4in	
12	0641506	10	Bolt 5/16in-18NC x 3/4in	
13	0641507	4	Bolt 5/16in-18NC x 7/8in	
14	0641608	2	Bolt 3/8in-16NC x 1in	
15	0641610	34	Bolt 3/8in-16NC x 1-1/4in	
16	0641812	2	Bolt 1/2in13NC x 1-1/2in	
17	0641820	4	Bolt 1/2in-13NC x 2-1/2in	
18	0700808	4	Bolt M8 x 16mm	
19	1320058	1	Clamp	
20	1580011	1	Container, Overflow	
21	0741610	2	Screw, Countersunk 3/8in-16NC x 1-1/4in	
22	0962172	1	Bushing, Flanged	
23	1060904	1	Cable, Jumper	
24	1320012	4	Clamp	
25	1320016	4	Clamp	
26	1320022	4	Clamp	
27	1340060	1	Air Cleaner Assembly	
27	7012664	1	Element, Air Cleaner	
28	3740080	1	Relay	
29	1660255	1	Pump, Coupling	
30	1703162	2	Decal - Fan Blade	
31	1001104689	1	Caterpillar Engine Assembly	
32	4031711	4	Bolt M6 x 35mm	
33	4460121	2	Terminal	
37	2220567	1	Fitting, Elbow	
42	2221045	2	Fitting	
43	2720058	4 in/10cm	Hose	
44	4569176	1	Tube, Air Intake	
45	4711400	AR	Flatwasher 1/4in Thin	
46	2750532	6 in/25cm	Hose	
47	2901880	1	Battery Cable Kit	E
47A	7016843	1	Cable - Battery to Starter Relay	
47B	7016835	1	Cable - Battery and Auxiliary Pump to Ground	
47C	7016834	1	Cable - Starter Relay to Starter	

ITEM	PART NUMBER	QTY	DESCRIPTION	REV
47D	7016820	1	Cable - Auxiliary Relay to Auxiliary Pump	
48	3200378	4	Mount, Motor	
49		Ref	Muffler Options:	
49	3220113	1	Spark Arresting Muffler	
49	70001017	1	Clamp	
49	1001107116	1	Catalytic Muffler	
49	70002705	1	Clamp	
49	70002706	1	Plug, Brass	
50	3300220	6	Nut, Washer	
51	4891500	4	Flatwasher 5/16in Hardened	
52	3311405	17	Locknut 1/4in-20NC	
53	3311505	6	Locknut 5/16in-18NC	
54	3311605	18	Locknut 3/8in-16NC	
55	3311805	4	Locknut 1/2in-13NC	
56	3340399	2	Pad, Wear	
57	1001100577	1	Hose, Radiator (Top)	
58	1001100818	1	Hose, Radiator (Bottom)	
59	3572502	1	Plate, Air Flow (Side)	
60	3572503	1	Plate, Air Flow (Top)	
61	1001100837	1	Bracket, Bottle	
62	3573667	1	Plate, Radiator Support	
63	3574253	1	Plate, Engine Mounting (Front)	
64	3574259	2	Plate, Engine Mounting (Rear)	
65	1001098525	1	Plate, Muffler Support	
66	3600423	1	Auxiliary Power Pump Assembly (See AUXILIARY PUMP ASSEMBLY for Breakdown)	
67	3600404	1	Piston Pump Assembly (See PISTON PUMP ASSEMBLY for Breakdown)	
68	3600405	1	Gear Pump Assembly with Fittings (See Items 401-405 for Breakdown)	
69	1001101201	1	Adapter, Fan Spacer	
70	3740067	3	Relay	
71	1001101408	1	Fan	
72	3790152	1	O-Ring	
73	3960389	6 ft/2m	Seal	
74	4070497	4	Shim	
75	4070498	2	Shim	
76	1001101681	1	Elbow, Rubber	
77	4568743	1	Pipe, Exhaust	
78	1001101950	1	Tube, Air Intake	
80	4641272	1	Valve, Oil Drain	
81	4711500	8	Flatwasher 5/16in Thin	
82	4711600	18	Flatwasher 3/8in Thin	
83	4740274	4	Washer, Snubbing	
84	1001102706	1	Radiator	
84	7027412	1	Cap, Radiator	
84	70023056	1	Valve, Drain	
84	70004091	1	Shroud	
85	4751400	30	Flatwasher 1/4in Regular	
86	4751500	20	Flatwasher 5/16in Regular	
87	4751600	33	Flatwasher 3/8in Regular	
88	4751800	11	Flatwasher 1/2in Regular	

ITEM	PART NUMBER	QTY	DESCRIPTION	REV
89	4846821	1	Mount, Motor/Generator	
90	4846852	1	Tray	
91	4891600	4	Flatwasher 3/8in Hardened	
92	4922737	1	Harness, Engine Grounding	
93	0641609	4	Bolt 3/8in-16NC x 1-1/8in	
94	0941611	2	Bolt 3/8in-16NC x 1-3/8in	
96	1001097588	1	Clamp, Tubing	
97	0641612	2	Bolt 3/8in-16NC x 1-1/2in	
98	4100025	19 in/48cm	Sleeve, Fiberglass	
99	1001100825	2	Tie-Strap	
100	1001128125	1	Plate, Radiator Mount	
103	2720271	18 in/46cm	Hose	
		Ref	**Note: Following Items (Not Shown) Used on Arctic Package Machines Only.**	
	1702942	1	Decal, Engine Block Heater (Located at End of Heater Cord)	
	2580054	1	Heater, Engine Block	
	2300041	AR	Fluid, Antifreeze 60/40 Arctic Antifreeze	
	3020044	AR	Oil, Motor 0W-40	
		Ref	**CATERPILLAR ENGINE INSTALLATION**	
	1001130547	Ref	**Without Arctic Package**	A
	1001130546	Ref	**With Arctic Package**	A
201	0100011	AR	Locking, Compound	
202	0100020	AR	Sealant	
204	0361810	1	Bar, Battery Hold-Down	
205	0400075	1	Battery	
206	0630541	2	Bolt, Battery	
207	0641616	3	Bolt 3/8in-16NC x 2in	
208	0642010	1	Bolt 5/8in-11NC x 1-1/4in	
209	1320022	7	Clamp	
210	1320223	1	J-Clip	
211	2180536	1	Fitting, Straight Barbed	
212	2200222	1	Plug	
213	2220250	1	Fitting, Reducer	
214	2220273	1	Fitting, Reducer	
215	2220313	1	Fitting, Elbow Barbed	
216	2220459	1	Fitting, Elbow	
217	2220794	1	Fitting, Straight Barbed	
218	2720058	14 ft/4.3m	Hose	
219	2720271	12 ft/3.7m	Hose	
220	2750532	5 ft/1.5m	Hose	
221	3311605	3	Locknut 3/8in-16NC	
222	3312005	1	Locknut 5/8in-11NC	
223	3900255	1	Screw, Shoulder	
224	3960469	1	Seal, Foam Gasket	
225	4751600	8	Flatwasher 3/8in Regular	
226	4752000	1	Flatwasher 5/8in Regular	
227	4752200	2	Flatwasher 3/4in Regular	
228	1701505	1	Decal - Diesel Fuel (Not Shown - See DECAL SECTION)	
229	0940049	2	Bumper, Hood	
230	0641410	4	Bolt 1/4in-20NC x 1-1/4in	

ITEM	PART NUMBER	QTY	DESCRIPTION	REV
231	3311405	4	Locknut 1/4in-20NC	
232	3311501	4	Nut 5/16in-18NC	
233	3572504	1	Plate	
234	4751400	8	Flatwasher 1/4in Regular	
235	4751500	4	Flatwasher 5/16in Regular	
237	3340399	1	Pad, Wear	
238	4070497	2	Shim (11Ga)	
239	4070498	1	Shim (16Ga)	
240	3960389	4 ft/1.2m	Seal, Bulb	
241		Ref	Coolant, Anti-Freeze Options (Not Shown):	
241	2300004	2.7 Gal	Without Arctic Package	
241	2300041	2.7 Gal	With Arctic Package	
242	1001094608	2	Latch, Hood	
243	3290601	1	Nut M6 x 1	
244	3290501	1	Nut M5 x 0.8	
245	1001100857	1	Separator, Fuel/Water	
245	70002378	1	O-Ring	
245	70002377	1	Filter, Fuel	
246	1320318	2	Clamp	
247	4711400	5	Flatwasher 1/4in Thin	
248	0641405	2	Bolt 1/4in-20NC x 5/8in	
249	0641418	1	Bolt 1/4in-20NC x 2-1/4in	
		Ref	**Note: Following Items (Not Shown) Used on Arctic Package Machines Only.**	
	1702944	1	Decal - Heater Cord	
	1060626	1	Cord, 3-Way Extension (Located on Left Front of Engine)	
	1702941	1	Decal - Battery Heater	
	2580024	1	Heater, Battery (Located on Battery)	
	1702943	1	Decal - Hydraulic Tank Heater	
	2580050	1	Heater, Hydraulic Tank	
	3980007	1	Seat, Battery (Located Under Battery)	
	1001104689	Ref	**CATERPILLAR ENGINE COMPONENTS**	B
301	7026848	1	Breather, Valve	
301	7026846	1	Gauze, Breather Valve	
302	7026847	4	Seal, Valve Cover Nut	
303	7026849	1	Gasket, Air Intake	
304	7026850	1	Seal, Valve Cover	
305	7026852	1	Flywheel with Starter Gear Set	
305	7026853	1	Gear, Flywheel	
306	70001403	1	Filter, Oil	
307	7026860	1	Cap, Oil Fill	
307	7026856	1	Seal, Oil Fill Cap	
308	7026858	1	Valve, Relief	
308	7026857	1	Seal	
309	7026864	1	Pump, Water	
309	7026863	1	Gasket, Water Pump (Fits Between Pump and Pump Rear Plate)	
309	7026865	1	Gasket, Water Pump (Fits Between Pump Rear Plate and Engine Block)	
310	7026867	1	Thermostat	
310	See Note	1	Regulator, Water (Note: Not Available for Purchase)	
310	7026866	1	Gasket (Fits Between Regulator and Engine Block)	
310	7026868	1	Gasket, Thermostat (Fits Between Regulator and Hose Adapter)	

ITEM	PART NUMBER	QTY	DESCRIPTION	REV
311	7026869	1	Gasket, Exhaust	
312	7026870	1	Gasket, Exhaust Manifold	
313	70001695	1	Filter Assembly	
313	7026871	1	Element, Fuel Filter	
313	7026872	2	Gasket, Fuel Filter Element	
314	7026873	1	Pump, Fuel Transfer	
314	7026874	1	Seal,	
315	7026875	4	Injector, Fuel	
316	See Note	1	Pump, Fuel Injection (Note: Not Available for Purchase)	
317	70001990	1	Solenoid, Fuel Shut-Off (Note: P/N 70001990 includes adapter harness if required.)	
318	70000544	1	Alternator (Note: Not Available for Purchase)	
318	70000544	1	Alternator Conversion Kit (Includes Alternator, Adapter Harness, Alternator Bracket, Lever and Mounting Hardware)	
318	70001180	1	Bolt, Lower Pivot	
318	70001257	1	BRACKET, ADJUSTING (NOT SHOWN)	
319	7026878	4	Glowplug	
320	1001097554	1	Switch, Oil Pressure	
321	7026840	1	Switch, Water Temperature	
321	7026882	1	Seal, Sensor	
322	7026879	1	Starter	
323	7026854	1	Seal, Front Main (Not Shown - Located on Front of Engine Block)	
324	7026851	1	Seal, Rear Main (Not Shown - Located on Rear of Engine Block)	
325	7026880	1	Belt	
326	7026885	1	Dipstick Oil Level	
326	7026886	1	Tube, Dipstick	
326	7026881	1	O-Ring, Dipstick Tube	
327	7026861	1	Plug, Drain	
328	7026862	1	Gasket, Valve Bracket (Not Shown - Located on Between Valve Bracket and Head)	
329	7026859	1	Gasket, Oil Pan (Not Shown)	
330	7026883	1	Speed Sensor Kit	
330	7026836	1	Connector, Speed Sensor	
331	See Note	1	Actuator/Linkage Assembly - Throttle (was p/n 1600351 which is not available as a service part. Use service replacement parts below.) (Note: Not Available for Purchase)	
331A	7026884	1	Actuator and Electrical Connector Kit	
331A	7026835	1	Connector, Actuator	
331B	7026843	1	Linkage Kit	
	3600405	Ref	**GEAR PUMP ASSEMBLY WITH FITTINGS**	A
401	2220385	2	Fitting, Tee	
402	2220479	2	Fitting, Straight	
403	2220810	2	Fitting, Reducer	
404	3600368	1	Gear Pump Assembly Less Fittings	
404	7024962	1	Seal Kit - 3600368 Pump (Includes Soft Seals)	
		Ref	**Note: Seal Kit is only service part available.**	
405	4640744	2	Valve, Check	

FIGURE 2-10. CATERPILLAR ENGINE INSTALLATION (WITH UGM)

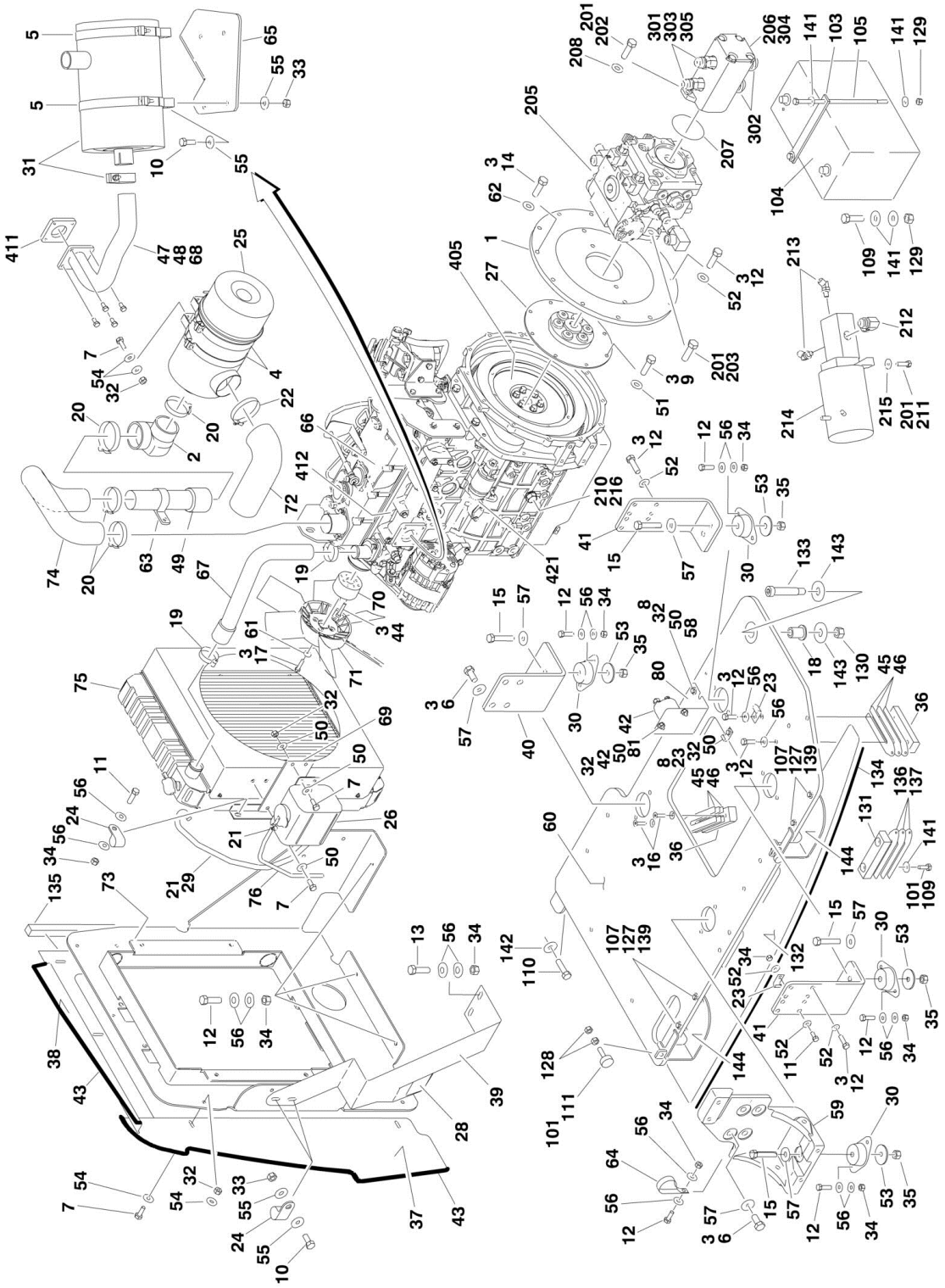

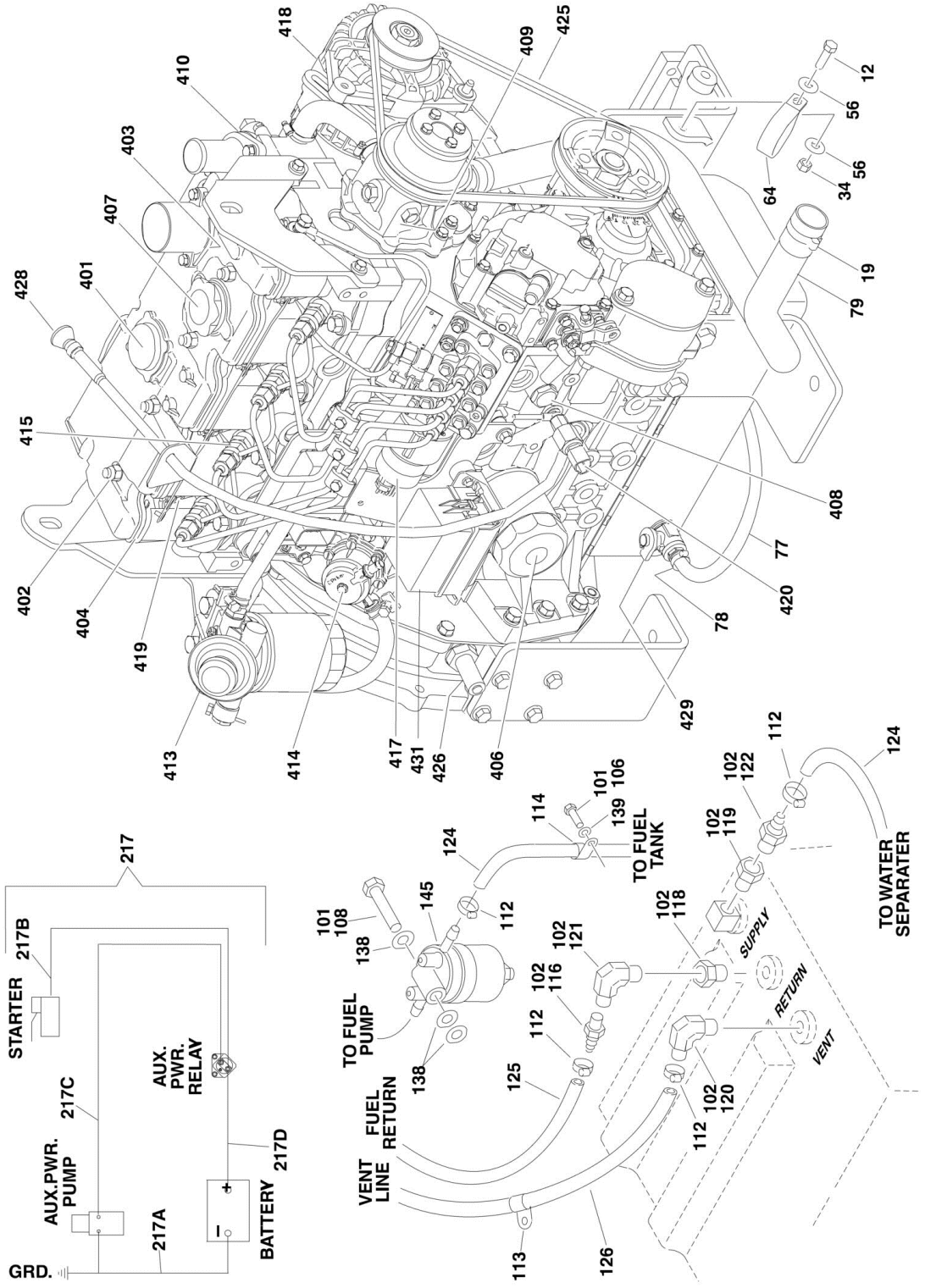
418
410
403
407
401
428
415
402
404
419
413
414
417
431
426
406
409
425
12
56
56
34
64
19
79
408
77
420
78
429
217
217B
STARTER
AUX.
PWR.
RELAY
217C
AUX.PWR.
PUMP
217A
217D
BATTERY
GRD.
124
114
101
106
139
TO FUEL
TANK
112
102
122
124
102
119
TO WATER
SEPARATER
101
108
138
145
112
102
121
102
118
SUPPLY
RETURN
VENT
TO FUEL
PUMP
102
116
112
138
125
FUEL
RETURN
VENT
LINE
102
120
112
113
126

FIGURE 2-10. CATERPILLAR ENGINE INSTALLATION (WITH UGM)

ITEM	PART NUMBER	QTY	DESCRIPTION	REV
		Ref	**NOTE: FOR MODULE IDENTIFICATION, REFER TO REVISION LOG PAGE A.**	
	1001106467	Ref	**CATERPILLAR ENGINE ASSEMBLY**	E
1	0080181	1	Adaptor, Pump Mounting Plate	
2	0080201	1	Elbow, Rubber	
3	0100011	AR	Locking, Compound	
4	0340041	2	Band, Air Cleaner Mounting	
5	0340046	2	Band, Muffler Mounting	
6	0630569	8	Bolt M14 x 30mm	
7	0641406	13	Bolt 1/4in-20NC x 3/4in	
8	0641408	5	Bolt 1/4in-20NC x 1in	
9	0641506	8	Bolt 5/16in-18NC x 3/4in	
10	0641507	6	Bolt 5/16in-18NC x 7/8in	
11	0641609	5	Bolt 3/8in-16NC x 1-1/8in	
12	0641610	32	Bolt 3/8in-16NC x 1-1/4in	
13	0641611	2	Bolt 3/8in-16NC x 1-3/8in	
14	0641614	2	Bolt 3/8in-16NC x 1-3/4in	
15	0641820	4	Bolt 1/2in-13NC x 2-1/2in	
16	0741610	2	Screw, Countersunk 3/8in-16NC x 1-1/4in	
17	0760815	4	Bolt M8 x 35mm	
18	0962172	1	Bushing, Flanged	
19	1320012	4	Clamp	
20	1320016	4	Clamp	
21	1320022	3	Clamp	
22	1320058	1	Clamp	
23	1320223	5	J-Clip	
24	1320318	2	Clamp	
25	1340060	1	Air Cleaner Assembly	
25	7012664	1	Element, Air Cleaner	
26	1580011	1	Container, Overflow	
27	1660255	1	Pump, Coupling	
28	1703162	2	Decal - Fan Blade	
29	2720058	3 ft/0.9m	Hose	
30	3200378	4	Mount, Motor	
31		Ref	Muffler Options:	
31	3220113	1	Spark Arresting Muffler	
31	70001017	1	Clamp	
31	1001107116	1	Catalytic Muffler	
31	70002705	1	Clamp	
31	70002706	1	Plug, Brass	
32	3311405	AR	Locknut 1/4in-20NC	
33	3311505	6	Locknut 5/16in-18NC	
34	3311605	19	Locknut 3/8in-16NC	
35	3311805	4	Locknut 1/2in-13NC	
36	3340399	2	Pad, Wear	
37	3572502	1	Plate, Air Flow (Side)	
38	3572503	1	Plate, Air Flow (Top)	
39	3573667	1	Plate, Radiator Support	
40	3574253	1	Plate, Engine Mounting (Front)	
41	3574259	2	Plate, Engine Mounting (Rear)	

ITEM	PART NUMBER	QTY	DESCRIPTION	REV
42	3740067	1	Relay	
43	3960438	6 ft/1.8m	Seal, Self Gripping	
44	4031711	4	Bolt M6 x 35mm	
45	4070497	4	Shim	
46	4070498	2	Shim	
47	4100025	19 in/48cm	Sleeve, Fiberglass	
48	4568743	1	Pipe, Exhaust	
49	4569176	1	Tube, Air Intake	
50	4711400	AR	Flatwasher 1/4in Thin	
51	4711500	8	Flatwasher 5/16in Thin	
52	4711600	20	Flatwasher 3/8in Thin	
53	4740274	4	Washer, Snubbing	
54	4751400	18	Flatwasher 1/4in Regular	
55	4751500	12	Flatwasher 5/16in Regular	
56	4751600	38	Flatwasher 3/8in Regular	
57	4751800	12	Flatwasher 1/2in Regular	
58	4791400	2	Starwasher 1/4in **(Prior to SN 0300143951)**	
59		Ref	Mount, Motor/Generator Options:	
59	4846821	1	Mount, Motor/Generator **(Prior to SN 0300151953)**	
59	1001102585	1	Mount, Motor/Generator **(SN 0300151953 through 0300203770)**	
60	4846852	1	Weldment, Engine Tray	
61	4891500	4	Flatwasher 5/16in Hardened	
62	4891600	2	Flatwasher 3/8in Hardened	
63	85941018	1	Clamp	
64	1001097588	1	Clip, Tube	
65	1001098525		Plate, Muffler Support	
66	1001106426	1	Engine, Caterpillar C2.2	
67	1001100577	1	Hose, Radiator (Top)	
68	1001100825	2	Tie-Strap	
69	1001100837	1	Bracket, Bottle	
70	1001101201	1	Adapter, Fan Spacer	
71	1001101408	1	Fan	
72	1001101681	1	Elbow, Rubber	
73	1001101733	1	Mount, Radiator	
74	1001101950	1	Tube, Air Intake	
75	1001102706	1	Radiator	
75	7027412	1	Cap, Radiator	
75	70023056	1	Valve, Drain	
75	70004091	1	Shroud	
76	2720271	18 in/46cm	Hose	
77	2720615	6 in/15cm	Hose	
78	8405006	1	Clamp	
79	1001100818	1	Hose, Radiator (Bottom)	
80	1001121115	1	Mount, Relay **(SN 0300143951 through 0300203770)**	
81	0641405	2	Bolt 1/4in-20NC X 5/8in **(SN 0300143951 through 0300203770)**	
		Ref	**CATERPILLAR ENGINE INSTALLATION**	
	1001106469	Ref	**Without Arctic Package**	D
	1001106471	Ref	**With Arctic Package**	B
101	0100011	AR	Locking, Compound	
102	0100020	AR	Sealant	

SECTION 2 - TURNTABLE

ITEM	PART NUMBER	QTY	DESCRIPTION	REV
103	0361810	1	Bar, Battery Hold-Down	
104	0400075	1	Battery	
105	0630541	2	Bolt, Battery	
106	0641405	2	Bolt 1/4in-20NC x 5/8in	
107	0641410	4	Bolt 1/4in-20NC x 1-1/4in	
108	0641418	1	Bolt 1/4in-20NC x 2-1/4in	
109	0641616	3	Bolt 3/8in-16NC x 2in	
110	0642010	1	Bolt 5/8in-11NC x 1-1/4in	
111	0940049	2	Bumper, Hood	
112	1320022	7	Clamp	
113	1320223	1	J-Clip	
114	1320318	2	Clamp	
115	1701505	1	Decal - Diesel Fuel (Not Shown - See DECAL SECTION)	
116	2180536	1	Fitting, Straight Barbed	
117	2200222	1	Plug, Pipe (Not Shown - Located on Bottom of Fuel Tank)	
118	2220250	1	Fitting, Reducer	
119	2220273	1	Fitting, Reducer	
120	2220313	1	Fitting, Elbow Barbed	
121	2220459	1	Fitting, Elbow	
122	2220794	1	Fitting, Straight Barbed	
123		Ref	Coolant, Anti-Freeze Options (Not Shown):	
123	2300004	2.7 Gal	Without Arctic Package	
123	2300041	2.7 Gal	With Arctic Package	
124	2720058	14 ft/4.3m	Hose	
125	2720271	12 ft/3.7m	Hose	
126	2750532	5 ft/1.5m	Hose	
127	3311405	4	Locknut 1/4in-20NC	
128	3311501	4	Nut 5/16in-18NC	
129	3311605	3	Locknut 3/8in-16NC	
130	3312005	1	Locknut 5/8in-11NC	
131	3340399	1	Pad, Wear	
132	3572504	1	Plate	
133	3900255	1	Screw, Shoulder	
134	3960389	4 ft/1.2m	Seal, Bulb	
135	3960469	1	Seal, Foam Gasket	
136	4070497	2	Shim (11Ga)	
137	4070498	1	Shim (16Ga)	
138	4711400	3	Flatwasher 1/4in Thin	
139	4751400	10	Flatwasher 1/4in Regular	
141	4751600	8	Flatwasher 3/8in Regular	
142	4752000	1	Flatwasher 5/8in Regular	
143	4752200	2	Flatwasher 3/4in Regular	
144	1001094608	2	Latch, Hood	
145	1001100857	1	Separator, Fuel/Water	
145	70002378	1	O-Ring	
145	70002377	1	Filter, Fuel	
		Ref	**Note: Following Items 147 & 153 (Not Shown) Used on Arctic Package Machines Only.**	
147	1060626	1	Cord, 3-Way Extension (Located on Left Front of Engine)	
148	1702941	1	Decal - Battery Heater	
149	1702943	1	Decal - Hydraulic Tank Heater	
150	1702944	1	Decal - Heater Cord	

ITEM	PART NUMBER	QTY	DESCRIPTION	REV
151	2580024	1	Heater, Battery (Located on Battery)	
152	2580050	1	Heater, Hydraulic Tank	
153	3980007	1	Seat, Battery (Located Under Battery)	
		Ref	**ENGINE AND PUMPS SUB-ASSEMBLY**	
	1001106468	Ref	**Without Arctic Package**	A
	1001106470	Ref	**With Arctic Package**	A
201	0100011	AR	Locking, Compound	
202	0641608	2	Bolt 3/8in-16NC x 1in	
203	0641812	2	Bolt 1/2in13NC x 1-1/2in	
204		Ref	Oil, Engine Options (Not Shown):	
204	3020016	2.5 Gal	Without Arctic Package (15W-40)	
204	3020044	2.5 Gal	With Arctic Package (0W-40)	
205	3600404	1	Piston Pump Assembly (See PISTON PUMP ASSEMBLY for Breakdown)	
206	3600405	1	Gear Pump Assembly With Fittings (See Items 301-305 for Breakdown)	
207	3790152	1	O-Ring	
208	4891600	2	Flatwasher 3/8in Hardened	
210	0630569	1	Bolt M14 x 30mm	
211	0641610	2	Bolt 3/8in-16NC x 1-1/4in	
212	2220567	1	Fitting, Elbow	
213	2221045	2	Fitting	
214	3600423	1	Auxiliary Power Pump Assembly (See AUXILIARY PUMP ASSEMBLY for Breakdown)	
215	4751600	2	Flatwasher 3/8in Regular	
216	4751800	1	Flatwasher 1/2in Regular	
217	1001102859	1	Battery Cable Kit	B
217A	7027022	1	Cable - Battery and Auxiliary Pump to Ground	
217B	7027024	1	Cable - Auxiliary Power Relay to Starter	
217C	7027023	1	Cable - Auxiliary Power Relay to Auxiliary Pump	
217D	7027021	1	Cable - Battery to Relays	
		Ref	**Note: Following Items 218 & 219 (Not Shown) Used on Arctic Package Machines Only.**	
218	1702942	1	Decal - Engine Block Heater (Located on Right Side of Engine)	
219	2580054	1	Heater, Engine Block (Located on Right Side of Engine)	
	3600405	Ref	**GEAR PUMP ASSEMBLY WITH FITTINGS**	A
301	2220385	2	Fitting, Tee	
302	2220479	2	Fitting, Straight	
303	2220810	2	Fitting, Reducer	
304	3600368	1	Gear Pump Assembly Less Fittings	
304	7024962	1	Seal Kit - 3600368 Pump (Includes Soft Seals)	
		Ref	**Note: Seal Kit is only service part available.**	
305	4640744	2	Valve, Check	
	1001106426	Ref	**CATERPILLAR ENGINE COMPONENTS**	C
401	7026848	1	Valve, Breather	
401	7026846	1	Gauze, Breather Valve	
402	7026847	4	Seal, Valve Cover Nut	
403	7026849	1	Gasket, Air Intake	
404	7026850	1	Seal, Valve Cover	
405	7026852	1	Flywheel with Starter Gear Set	
405	7026853	1	Gear, Rim	
405	7026851	1	Seal, Rear Main (Not Shown)	

ITEM	PART NUMBER	QTY	DESCRIPTION	REV
406	70001403	1	Filter, Oil (was p/n 7026855)	
407	7026860	1	Cap, Oil Fill	
407	7026856	1	Seal, Oil Fill Cap	
408	7026858	1	Valve, Relief	
408	7026857	1	Seal	
409	7026864	1	Pump, Water	
409	7026863	1	Gasket, Water Pump (Fits Between Pump and Pump Rear Plate)	
409	7026865	1	Gasket, Water Pump (Fits Between Pump Rear Plate and Engine Block)	
410	7026867	1	Thermostat	
410	7026866	1	Gasket (Fits Between Regulator and Engine Block)	
410	7026868	1	Gasket (Fits Between Regulator and Hose Adapter)	
411	7026869	1	Gasket, Exhaust	
412	7026870	1	Gasket, Exhaust Manifold	
413	70003758	1	Filter Assembly	
413	70003791	2	Element, Fuel Filter (was p/n 7026871)	
413	7026872	2	Gasket, Fuel Filter Element	
414	7026873	1	Pump, Fuel Transfer	
414	7026874	1	Seal	
415	7026875	4	Injector, Fuel	
417	70003541	1	Actuator	
418	70003768	1	Alternator	
419	7026878	4	Glowplug	
420	70003759	1	Switch, Oil Pressure	
420	70003760	1	Adapter, Oil Pressure Switch	
421	70003769	1	Starter	
422	7026854	1	Seal, Front Main (Not Shown)	
423	7026859	1	Gasket, Oil Pan (Not Shown)	
424	7026862	1	Gasket, Valve Bracket (Not Shown - Located Between Valve Bracket and Cylinder Head)	
425	70003761	1	Belt	
426	70003766	1	Sensor, Speed	
427	70003765	1	Sensor, Temperature (Not Shown)	
428	70003763	1	Dipstick	
428	70003764	1	Tube, Dipstick	
429	4641272	1	Valve, Oil Drain	
429	7026861	1	Seal, Oil Drain Valve	
430	70003767	1	Harness, Engine (Not Shown)	
431	70003770	1	ECM	

FIGURE 2-11. DEUTZ D2011 ENGINE INSTALLATION

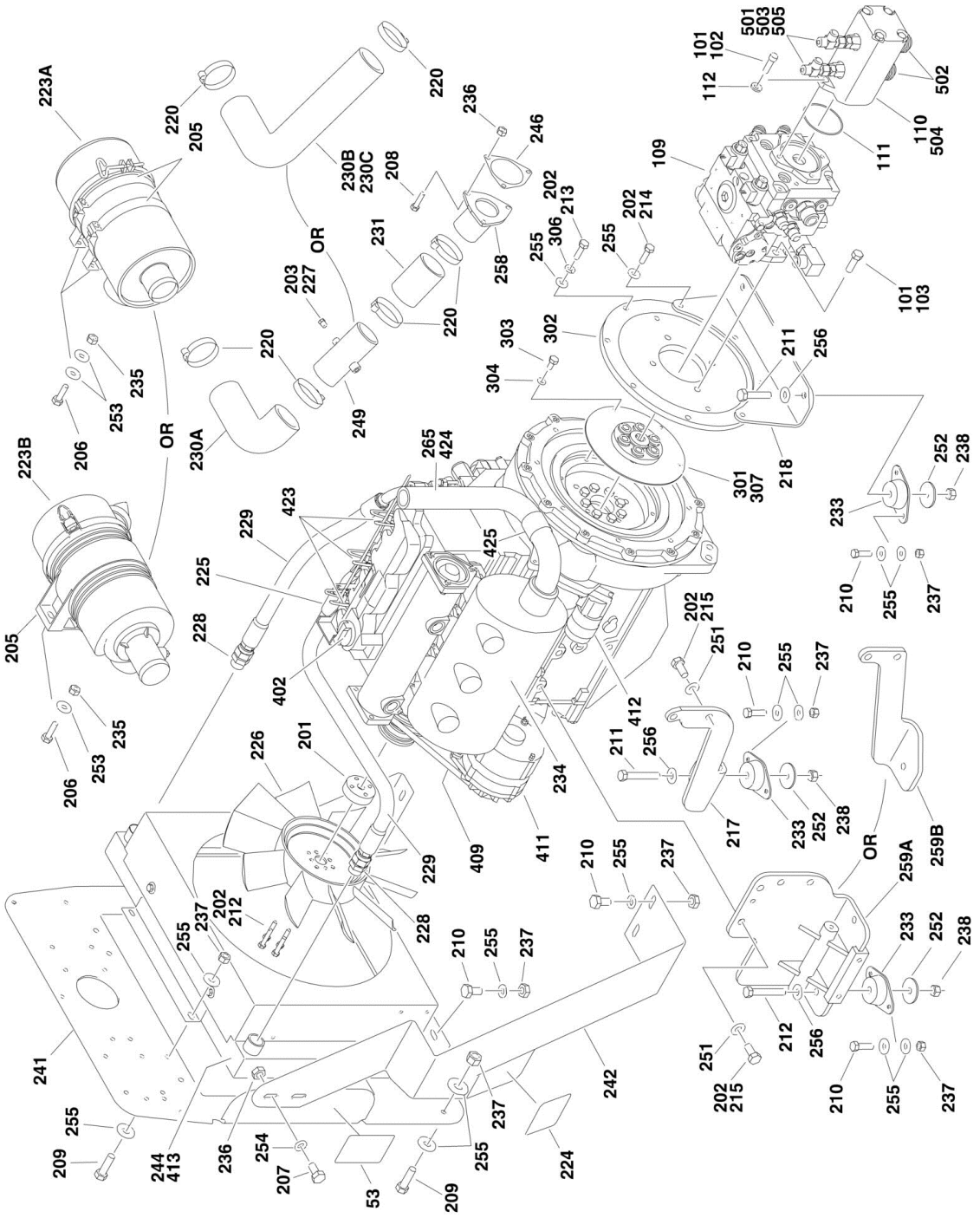

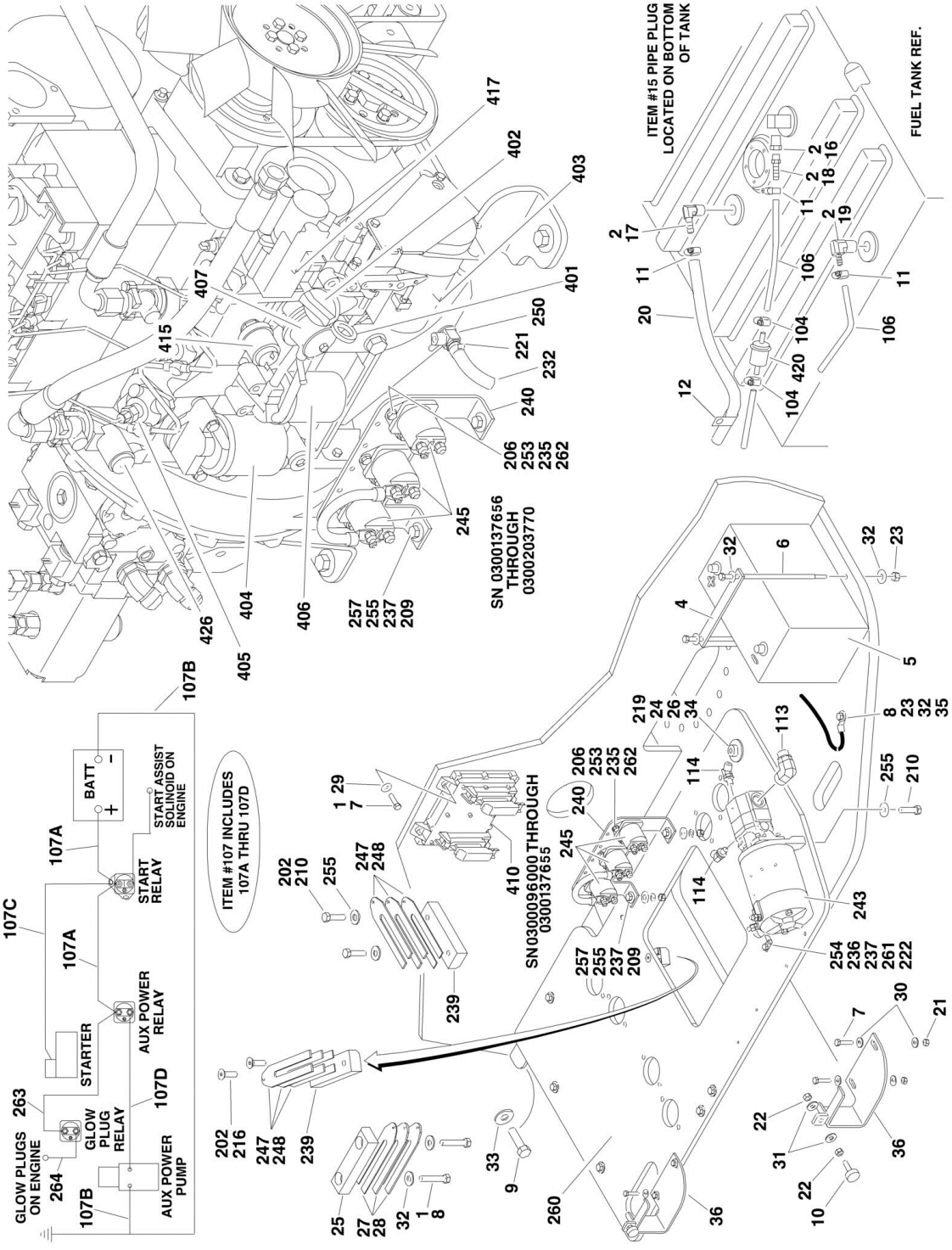
ITEM #15 PIPE PLUG LOCATED ON BOTTOM OF TANK
FUEL TANK REF.
SN 0300137656 THROUGH 0300203770
SN 0300096000 THROUGH 0300137655
ITEM #107 INCLUDES 107A THRU 107D
BATT
START ASSIST SOLINOID ON ENGINE
START RELAY
AUX POWER RELAY
STARTER
GLOW PLUG RELAY
AUX POWER PUMP
GLOW PLUGS ON ENGINE

FIGURE 2-11. DEUTZ D2011 ENGINE INSTALLATION

ITEM	PART NUMBER	QTY	DESCRIPTION	REV
		Ref	**DEUTZ ENGINE INSTALLATIONS**	
		Ref	**Without Arctic Package**	
	0274334	Ref	**ANSI Export, CE, Australian and Japanese Specs**	J
	0274334	Ref	**ANSI and CSA Specs (Prior to SN 0300169776)**	J
	1001137831	Ref	**ANSI and CSA Specs (SN 0300169776 through 0300186709)**	C
		Ref	**With Arctic Package**	
	1001093894	Ref	**ANSI Export, CE, Australian and Japanese Specs**	H
	1001093894	Ref	**ANSI and CSA Specs (Prior to SN 0300169776)**	H
	1001137834	Ref	**ANSI and CSA Specs (SN 0300169776 through 0300186709)**	C
1	0100011	AR	Locking, Compound	
2	0100020	AR	Sealant, Pipe	
4	0361810	1	Bar, Battery Hold-Down	
5	0400075	1	Battery	
6	0630541	2	Bolt, Battery	
7	0641410	4	Bolt 1/4in-20NC x 1-1/4in	
8	0641616	3	Bolt 3/8in-16NC x 2in	
9	0642010	1	Bolt 5/8in-11NC x 1-1/4in	
10	0940049	2	Bumper, Hood	
11	1320022	3	Clamp	
12	1320223	1	J-Clip (Not Shown - Located on Fuel Vent Line)	
13	1701505	1	Decal - Diesel Fuel (Not Shown - See DECAL SECTION for Location)	
15	2200222	1	Plug, Pipe (Not Shown - Located on Bottom of Fuel Tank)	
16		Ref	Fitting Options:	
16	2220273	1	Fitting, Reducer **(Prior to SN 0300171436)**	
16	2180348	1	Fitting, Straight Barbed **(SN 0300171436 through 0300203770)**	
17	2220313	1	Fitting, Elbow Barbed	
18	2220794	1	Fitting, Straight Barbed **(Prior to SN 0300171436)**	
19	2221176	1	Fitting, Elbow	
20	2750532	5 ft/1.5m	Hose	
21	3311405	4	Locknut 1/4in-20NC	
22	3311501	4	Nut 5/16in-18NC	
23	3311605	3	Locknut 3/8in-16NC	
24	3312005	1	Locknut 5/8in-11NC	
25	3340399	1	Pad, Wear	
26	3900255	1	Bolt, Shoulder	
27	4070498	1	Shim (16Ga.)	
28	4070497	2	Shim (11 Ga.)	
29	4711400	4	Flatwasher 1/4in Thin	
30	4751400	8	Flatwasher 1/4in Regular	
31	4751500	4	Flatwasher 5/16in Regular Only **(SN 0300096000 through 0300137656)**	
32	4751600	8	Flatwasher 3/8in Regular	
33	4752000	1	Flatwasher 5/8in Regular	
34	4752200	2	Flatwasher 3/4in Regular	
35	4791600	1	Starwasher 3/8in	
36		Ref	Latch, Hood Options:	
36	4846096	NLA	Latch, Hood **(SN 0300096000 through 0300133982)**	
36	1001094608	2	Latch, Hood **(SN 0300133983 through 0300203770)**	

ITEM	PART NUMBER	QTY	DESCRIPTION	REV
53		Ref	Decal - Warning Explosion/Fire Options:	
53	1704972	1	ANSI English	
53	1706098	1	Australian and CE	
53	1706064	1	CSA	
53	1706060	1	English/Chinese	
53	1706061	1	English/Korean	
53	1706062	1	English/Japanese	
53	1706059	1	English/Portuguese	
53	1706063	1	English/Spanish	
		Ref	**Note: Following Items (Not Shown) Used on Arctic Package Machines Only.**	
53	1060626	1	Cord, 3 Way Extension	
53	2580024	1	Heater, Battery (Located on Battery)	
53	2580050	1	Heater, Hydraulic Tank (Located on bottom of Hydraulic Oil Tank)	
53	3980007	1	Seat, Battery (Located Under Battery)	
53	1702941	1	Decal - Battery Heater (Located on Battery Heater)	
53	1702942	1	Decal - Engine Block Heater (Located on Right Side of Engine)	
53	1702943	1	Decal - Hydraulic Tank Heater (Located on bottom of Hydraulic Oil Tank)	
53	1702944	1	Decal - Heater Cord	
		Ref	**ENGINE AND PUMPS SUB-ASSEMBLY**	
		Ref	**Without Arctic Package**	
	2000286	Ref	**All Specs (SN 0300096000 through 0300161284)**	I
	1001143873	Ref	**ANSI Export, CE, Australian and Japanese Specs (SN 0300161285 through 0300203770)**	B
	1001143873	Ref	**ANSI and CSA Specs (SN 0300161285 through 0300169775)**	B
	1001137830	Ref	**ANSI and CSA Specs (SN 0300169776 through 0300203770)**	B
		Ref	**With Arctic Package**	
	1001093895	Ref	**All Specs (SN 0300096000 through 0300161284)**	G
	1001143875	Ref	**ANSI Export, CE, Australian and Japanese Specs (SN 0300161285 through 0300203770)**	B
	1001143875	Ref	**ANSI and CSA Specs (SN 0300161285 through 0300169775)**	B
	1001137833	Ref	**ANSI and CSA Specs (SN 0300169776 through 0300203770)**	B
101	0100011	AR	Locking, Compound	
102	3931616	2	Bolt 3/8in-16NC x 1in	
103	0641812	2	Bolt 1/2in-13NC x 1-1/2in	
104	1320022	2	Clamp	
106	2720058	20 ft/6m	Hose	
107	2901880	1	Battery Cable Kit	E
107A	7016843	1	Cable - Battery to Starter and Auxiliary Relays	
107B	7016835	1	Cable - Battery and Auxiliary Pump to Ground	
107C	7016834	1	Cable - Starter Relay to Starter	
107D	7016820	1	Cable - Auxiliary Relay to Auxiliary Pump	
109	3600404	1	Piston Pump Assembly with Fittings (See PISTON PUMP ASSEMBLY for Breakdown)	
110	3600405	1	Gear Pump Assembly with Fittings (See Items 501-505 for Breakdown)	
111	3790152	1	O-Ring	
112	4891600	2	Flatwasher 3/8in Hardened	
113	2220567	1	Fitting, Elbow	
114	2221045	2	Fitting, Elbow	
		Ref	**ENGINE ASSEMBLY**	

SECTION 2 - TURNTABLE

ITEM	PART NUMBER	QTY	DESCRIPTION	REV
		Ref	**Without Arctic Package**	
	2000347	Ref	**All Specs (SN 0300096000 through 0300161284)**	N
	1001143872	Ref	**ANSI Export, CE, Australian and Japanese Specs (SN 0300161285 through 0300203770)**	F
	1001143872	Ref	**ANSI and CSA Specs (SN 0300161285 through 0300169775)**	F
	1001137829	Ref	**ANSI and CSA Specs (SN 0300169776 through 0300203770)**	D
		Ref	**With Arctic Package**	
	1001093896	Ref	**All Specs (SN 0300096000 through 0300161284)**	G
	1001143874	Ref	**ANSI Export, CE, Australian and Japanese Specs (SN 0300161285 through 0300203770)**	E
	1001143874	Ref	**ANSI and CSA Specs (SN 0300161285 through 0300169775)**	E
	1001137832	Ref	**ANSI and CSA Specs (SN 0300169776 through 0300203770)**	C
201	0080231	1	Adapter, Fan Spacer	
202	0100011	AR	Locking, Compound	
203	0100020	AR	Sealant, Pipe **(SN 0300096000 through 0300161285)**	
205		Ref	Hardware, Air Cleaner	
205	0340041	2	Band, Air Cleaner **(SN 0300096000 through 0300161284)**	
205	1001141694	1	Clamp, Air Cleaner **(SN 0300161285 through 0300203770)**	
206	0641406	AR	Bolt 1/4in-20NC x 3/4in	
206	0641409	AR	Bolt 1/4in-20NC x 1 1/8in	
207	0641507	2	Bolt 5/16in-18NC x 7/8in	
208	0641510	AR	Bolt 5/16in-18NC x 1-1/4in	
208	0641512	AR	Bolt 5/16in-18NC x 1-1/2in	
208	0641511	AR	Bolt 5/16in-18NC x 1-3/8in	
209	0641609	AR	Bolt 3/8in-16NC x 1-1/8in	
209	0641610	AR	Bolt 3/8in-16NC x 1-1/4in	
210	0641611	AR	Bolt 3/8in-16NC x 1-3/8in	
210	0641610	AR	Bolt 3/8in-16NC x 1-1/4in	
211	0641820	4	Bolt 1/2in-13NC x 2-1/2in	
212	0700816	4	Bolt 8mm x 40mm	
213	0771012	4	Bolt 10mm x 25mm	
214	0711014	4	Bolt 10mm x 30mm	
215	0711414	AR	Bolt 14mm x 30mm	
216	0741610	2	Screw, Countersunk 3/8in-16NC x 1-1/4in	
217	0902740	1	Bracket, Engine Mounting (Right Side)	
218	0903063	1	Plate, Engine, Mounting	
219	0962172	1	Bushing, Flanged	
220	1320016	AR	Clamp, Hose	
221	1320022	1	Clamp, Hose Only **(SN 0300096000 through 0300161285)**	
222	1320223	1	J-Clip	
223		Ref	Air Cleaner Assembly Filter Element Options:	
223A	1340060	1	Air Cleaner Assembly **(SN 0300096000 through 0300161284)**	
223A	7012664	1	Element, Filter (Not Shown)	
223B	1001141693	1	Air Cleaner Assembly **(SN 0300161285 through 0300203770)**	
223B	70003783	1	Element, FIlter (Not Shown)	
224	1703162	2	Decal - Caution Fan Blade	
225		Ref	Engine, Deutz Options:	
225	2000338	1	All Specs (F3M2011) **(SN 0300096000 through 0300106862)**	
225	1001092723	1	All Specs (D2011L03) **(SN 0300106863 through 0300161284)**	

ITEM	PART NUMBER	QTY	DESCRIPTION	REV
225	1001144476	1	ANSI Export, CE, Australian and Japanese Specs (D2011L03) **(SN 0300161285 through 0300203770)**	
225	1001144476	1	ANSI and CSA Specs (D2011L03) **(SN 0300161285 through 0300169775)**	
225	1001137828	1	ANSI and CSA Specs (D2011L03) **(SN 0300169776 through 0300203770)**	
226	2060025	1	Fan	
227	2200221	1	Plug Only **(SN 0300096000 through 0300106863)**	
228	2220451	2	Fitting, Straight	
229	2720398	2	Hose, Oil Cooler	
230		Ref	Elbow, Rubber Options:	
230A	2720434	1	Elbow, Rubber **(SN 0300096000 through 0300106862)**	
230B	1001091179	1	Elbow, Rubber **(SN 0300106863 through 0300161284)**	
230C	1001140334	1	Elbow, Rubber **(SN 0300161285 through 0300203770)**	
231	2720449	1	Hose, Air Cleaner Only **(SN 0300096000 through 0300106863)**	
232		Ref	Hose, Oil Drain Options:	
232	2750532	1 ft/30cm	Hose, Oil Drain **(SN 0300096000 through 0300140523)**	
232	1001091892	6 in/15cm	Hose, Oil Drain **(SN 0300140524 through 0300141404)**	
232	2750532	1 ft/30cm	Hose, Oil Drain **(SN 0300141405 through 0300161284)**	
232	Not Required	0	Hose, Oil Drain **(SN 0300161285 through 0300203770)**	
233	3200406	4	Mount, Motor	
234		Ref	Muffler Options:	
234	3220110	1	Standard Muffler **(SN 0300096000 through 0300106862)**	
234	1001141708	1	Standard Muffler **(SN 0300106863 through 0300161284)**	
234	7020455	1	Standard Muffler **(SN 0300161285 through 0300203770)**	
234	70001844	1	Clamp	
234	3220112	1	Optional Catalytic Muffler	
234	1320176	1	Clamp	
235	3311405	AR	Locknut 1/4in-20NC	
236	3311505	5	Locknut 5/16in-18NC	
237	3311605	AR	Locknut 3/8in-16NC	
238	3311805	4	Locknut 1/2in-13NC	
239	3340399	2	Pad, Wear	
240	3570808	1	Plate, Relay Mounting	
241		Ref	Plate, Radiator Mounting Options:	
241	3571692	1	Plate, Radiator Mounting **(SN 0300096000 through 0300161284)**	
241	1001142826	1	Plate, Radiator Mounting **(SN 0300161285 through 0300203770)**	
242	3573667	1	Support, Radiator	
243		Ref	Auxiliary Power Pump Assembly Options (See AUXILIARY PUMP ASSEMBLY for Breakdown)	
243	3600279	NLA	Auxiliary Power Pump Assembly **(SN 0300096000 through 0300105248)**	
243	3600423	1	Auxiliary Power Pump Assembly **(SN 0300105249 through 0300203770)**	
244		Ref	Radiator	
244	3620033	1	Radiator **(Prior to SN 0300171436)**	
244	1001150998	1	Radiator **(SN 0300171436 through 0300203770)**	
245	3740067	3	Relay	
246	3960407	1	Gasket, Air Intake	
247	4070497	4	Shim (11 Ga.)	
248	4070498	2	Shim (16 Ga.)	

ITEM	PART NUMBER	QTY	DESCRIPTION	REV
249	4567495	1	Tube, Tee Only **(SN 0300096000 through 0300106863)**	
250		Ref	Valve, Oil Drain Options:	
250	4640751	1	Valve, Oil Drain **(SN 0300096000 through 0300140523)**	
250	1001104308	1	Valve, Oil Drain **(SN 0300140524 through 0300141404)**	
250	4640751	1	Valve, Oil Drain **(SN 0300141405 through 0300161284)**	
250	Not Required	0	Valve, Oil Drain **(SN 0300161285 through 0300203770)**	
251	4812200	AR	Flatwasher 14mm	
252	4740274	4	Washer, Snubbing	
253	4751400	8	Flatwasher 1/4in Regular	
253	4711400	6	Flatwasher 1/4in Thin	
254	4751500	5	Flatwasher 5/16in Regular	
255	4751600	44	Flatwasher 3/8in Regular	
256	4751800	4	Flatwasher 1/2in Regular	
257	4791600	2	Starwasher 3/8in	
258		Ref	Plate, Adapter Options:	
258	4845395	1	Plate, Adapter **(SN 0300096000 through 0300161284)**	
258	1001139819	1	Plate, Adapter **(SN 0300161285 through 0300203770)**	
259		Ref	Bracket, Engine Mounting (Left Side) Options:	
259A	4846567	1	All Machines **(SN 0300096000 through 0300161285)**	
		Ref	**Note: Bracket p/n 1001138135 may be used as an optional service replacement if no generator mounting capability is required.**	
259A	4846567	1	Machines with Generator	
259B	1001138135	1	Machines without Generator	
260	4846809	1	Tray	
261	0641510	AR	Bolt 5/16in-18NC x 1-1/4in	
261	0641608	AR	Bolt 3/8in-16NC x 1in	
262	4791400	6	Starwasher 1/4in	
263	1060904	1	Cable, Jumper	
264	4923451	1	Harness, Glow Plug	
265	1001141748	1	Pipe, Exhaust Pipe **(SN 0300161285 through 0300203770)**	
		Ref	**Note: Following Items (Not Shown) Used on Arctic Package Machines Only.**	
	2580062	1	Heater, Engine Block	
	3020044	AR	Oil, Motor 0W-40	
	0256847	Ref	**PUMP COUPLING INSTALLATION**	2
301	1660234	1	Coupling, Hayes	
302	0080163	1	Plate, Pump Adapter	
303	0700810	6	Bolt Metric 8mm x 20mm	
304	4831900	6	Lockwasher 8mm	
307	3020021	AR	Grease, Coupling	
		Ref	**ENGINE COMPONENTS**	
	2000338	Ref	**All Specs (F3M2011) (SN 0300096000 through 0300106862)**	B
	1001092723	Ref	**All Specs (D2011L03) (SN 0300106863 through 0300161284)**	F
	1001144476	Ref	**ANSI Export, CE, Australian and Japanese Specs (D2011L03) (SN 0300161285 through 0300203770)**	C
	1001144476	Ref	**ANSI and CSA Specs (D2011L03) (SN 0300161285 through 0300169775)**	C
	1001137828	Ref	**ANSI and CSA Specs (D2011L03) (SN 0300169776 through 0300203770)**	C
401	7020026	1	Dipstick	
401	70001002	1	Tube, Dipstick	
402	7020465	2	Cap, Filler	

ITEM	PART NUMBER	QTY	DESCRIPTION	REV
403		Ref	Pump, Oil Lube Options:	
403	7020495	1	Engines 2000338 & 1001092723	
403	70001850	1	Engines 1001144476 & 1001137828	
403	7020468	1	Seal Between Oil Pump and Engine Block (Not Shown)	
404	7016331	1	Filter, Oil	
404	70003472	1	Bracket, Oil Filter (Engines 1001144476 & 1001137828)	
404	70003473	1	Gasket, Oil Filter Bracket (Engines 1001144476 & 1001137828) (Not Shown - Located Between Oil Filter Bracket and Engine Block)	
404	7027236	1	Sensor, Oil Temperature (Not Shown - Located in Rear Of Filter Mount)	
405		Ref	Pump, Injector Options:	
405	70000912	3	Series A Pump (was p/n 7027246)	
405	70000913	3	Series B Pump (was p/n 7027608)	
405	70000914	3	Series C Pump (was p/n 7027609)	
405	70000915	3	Series D Pump (was p/n 7027610)	
405	7020447	3	Gasket, Injector Pump (Engines 2000338 & 1001092723)	
405	70003464	3	O-Ring, Injector Pump (Engines 1001144476 & 1001137828)	
406		Ref	Filter, Fuel Options:	
406	7020023	1	Standard	
406	70003463	1	RME Resistant (Note: Use with European Bio-Diesel Fuels)	
406	70001423	1	Bracket, Fuel Filter	
407	70000916	1	Pump Fuel Supply (was p/n 7027238)	
407	70001435	1	Repair Kit - Pump	
407		Ref	O-Seal Between Fuel Pump and Engine Block Options (Not Shown):	
407	7020411	1	Engines 2000338 & 1001092723	
407	70000917	1	Engines 1001144476 & 1001137828	
407	70000918	1	Seal Between Fuel Pump and Hand Pump (Engines 1001144476 & 1001137828) (Not Shown)	
407	70000919	AR	Pump, Hand (Engines 1001144476 & 1001137828) (Not Shown)	
408		Ref	Seal and Gasket Options (Not Shown):	
408	70002718	1	Seal, Rear Main Crankshaft (Engines 1001144476 & 1001137828 Only)	
408	7020430	1	Gasket, Valve Cover	
408		Ref	Gasket, Cylinder Head Options:	
408	70003479	1	Gasket (1 Notch)	
408	70003480	1	Gasket (2 Notch)	
408	70003481	1	Gasket (3 Notch)	
408	70001871	3	Gasket, Intake Manifold (Not Shown) (was p/n 7020449)	
408	7020471	3	Gasket, Exhaust Manifold (Not Shown)	
408	70002200	6	Stud, Exhaust (Not Shown)	
409		Ref	V-Belt Options:	
409	7020408	1	Engines 2000338 & 1001092723	
409	70004102	1	Engines 1001144476 & 1001137828	
410	7027795	1	Control, EMR2	
410		Ref	Plug, Connector Options (Not Shown):	
410	7027793	1	Engines 2000338 & 1001092723	
410	70004060	1	Engines 1001144476 & 1001137828	
410	70004059	1	Plug, Analyzer (Not Shown)	
410	7027796	1	Cable, Interconnection (Not Shown)	
411		Ref	Alternator Options:	
411		Ref	Engines 2000338 & 1001092723	

ITEM	PART NUMBER	QTY	DESCRIPTION	REV
411	7000663	1	Alternator (was p/n 7020410)	
411	7020464	1	Regulator, Voltage (Not Shown)	
411		Ref	Engines 1001144476 & 1001137828	
411	70004056	1	Alternator	
411	70001868	1	Regulator, Voltage (Not Shown)	
411	70001866	1	Gasket Set for Regulator (Not Shown)	
411	70004103	1	Cable, Alternator Interconnection (Not Shown)	
412		Ref	Starter Options:	
412		Ref	Engines 2000338 & 1001092723	
412	7020479	1	Starter	
412	7026608	1	Relay, Starter	
412		Ref	Engines 1001144476 & 1001137828	
412	70004057	1	Starter	
412	70004058	1	Relay, Starter	
412	70004062	1	Cable, Starter Interconnection (Not Shown)	
413	7027769	1	Radiator Connector Kit (Engines 2000338 & 1001092723)	
414	7027791	1	Sender, Oil Temperature (Not Shown)	
415	7027790	1	Sensor, Oil Pressure	
416	7024565	1	Sensor, Speed (Not Shown)	
416	70003932	1	Spacer, Sleeve (Not Shown)	
417	7027792	1	Actuator, Throttle	
417	7027276	2	Spring for Actuator	
418	70003475	1	Thermostat (was p/n 7020459)	
418	7020460	1	Spring, Compression	
419	70000264	1	Flywheel (Not Shown) (Note: Not available for purchase)	
419	7024579	1	Rim, Gear (Not Shown)	
420	7027245	1	Filter, Fuel (In-Line) (Engines 2000338 & 1001092723)	
421	7027239	1	Solenoid, Start (Not Shown - Located near Throttle Actuator) (Engines 2000338 & 1001092723)	
422	70001872	1	Engine Harness (was p/n 7027794)	
423	70003478	3	Injector, Fuel	
423	70003136	3	O-Ring, Fuel Injector	
423	70000345	3	Plug, Glow	
424	7020169	1	Pipe, Exhaust Pipe **(SN 0300096000 through 0300161285)**	
425	1320176	1	Clamp, Exhaust	
426	70000800	1	Repair Kit for Timing Belt Tensioner (Not Shown)	
	3600405	Ref	**GEAR PUMP ASSEMBLY WITH FITTINGS**	A
501	2220385	2	Fitting, Tee	
502	2220479	2	Fitting, Straight	
503	2220810	2	Fitting, Reducer	
504	3600368	1	Gear Pump Assembly Less Fittings	
504	7024962	1	Seal Kit - 3600368 Pump (Includes Soft Seals) (Note: Seal Kit is only service part are available.)	
505	4640744	2	Valve, Check	

FIGURE 2-12. DEUTZ TD2.9L4 ENGINE INSTALLATION

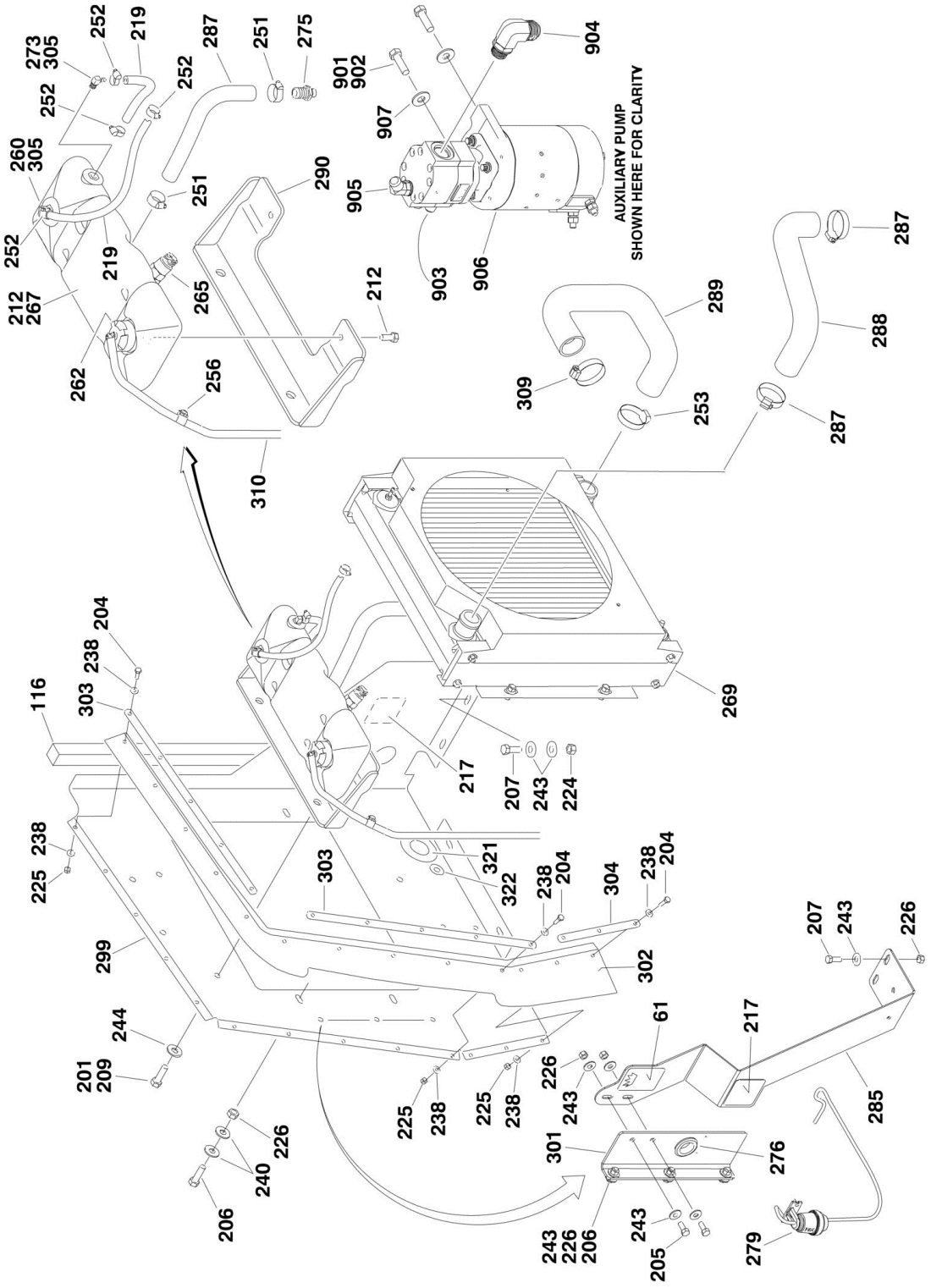

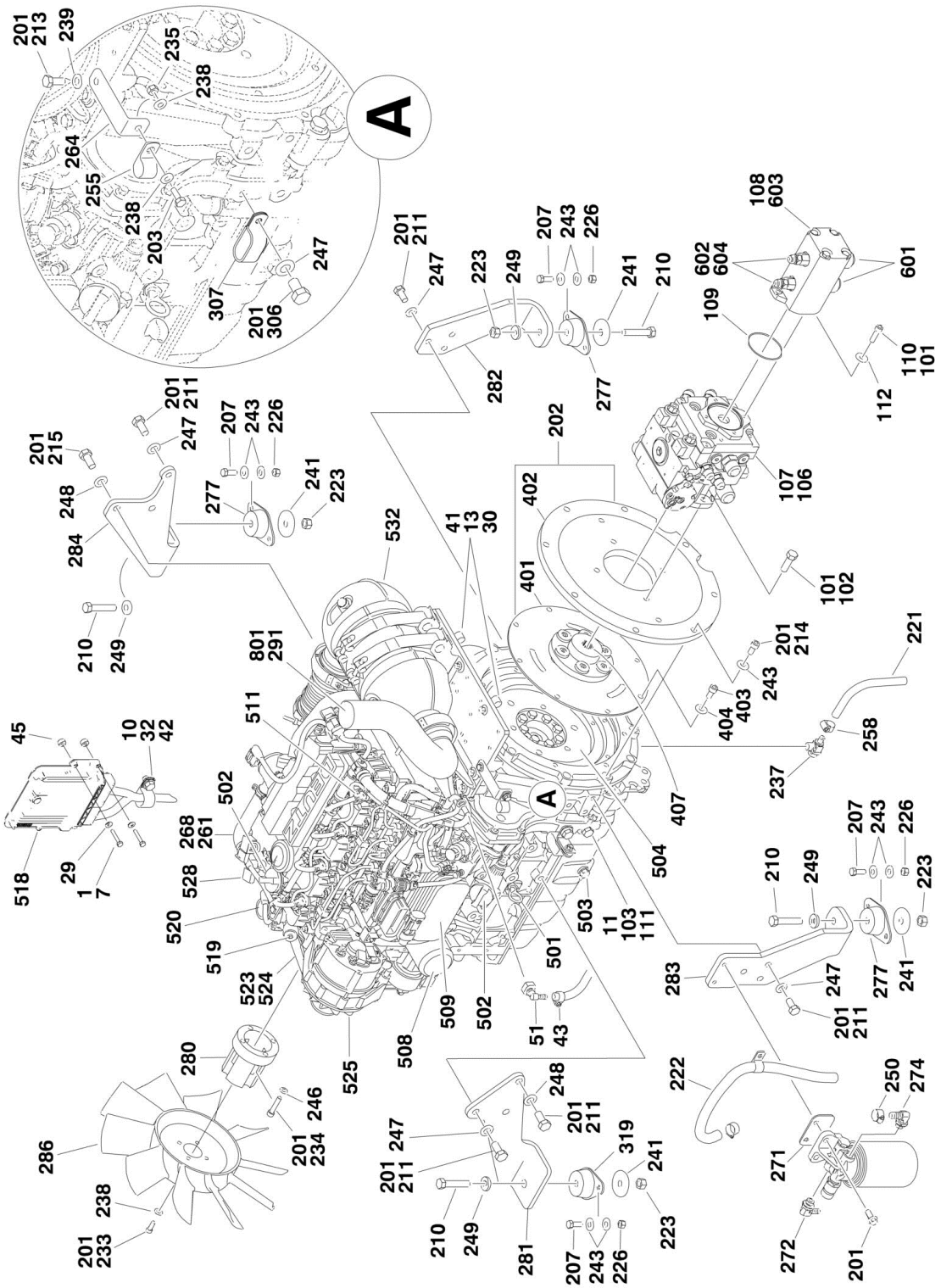
A
A
201
213
239
235
238
264
255
238
203
247
307
201
306
201
211
247
223
249
207
243
226
241
210
282
277
108
603
602
604
601
109
110
101
112
107
106
202
402
401
41
13
30
532
801
291
511
502
268
261
528
520
519
523
524
525
508
509
502
501
51
43
503
11
103
111
504
407
101
102
201
214
243
403
404
221
258
237
45
10
32
42
518
29
1
7
201
215
248
284
210
249
201
211
247
207
243
226
277
241
223
280
246
201
234
286
238
201
233
248
201
211
247
201
211
210
249
281
319
241
223
207
243
226
222
250
274
271
272
201
283
247
277
241
201
211
210
249
207
243
226
223

SECTION 2 - TURNTABLE

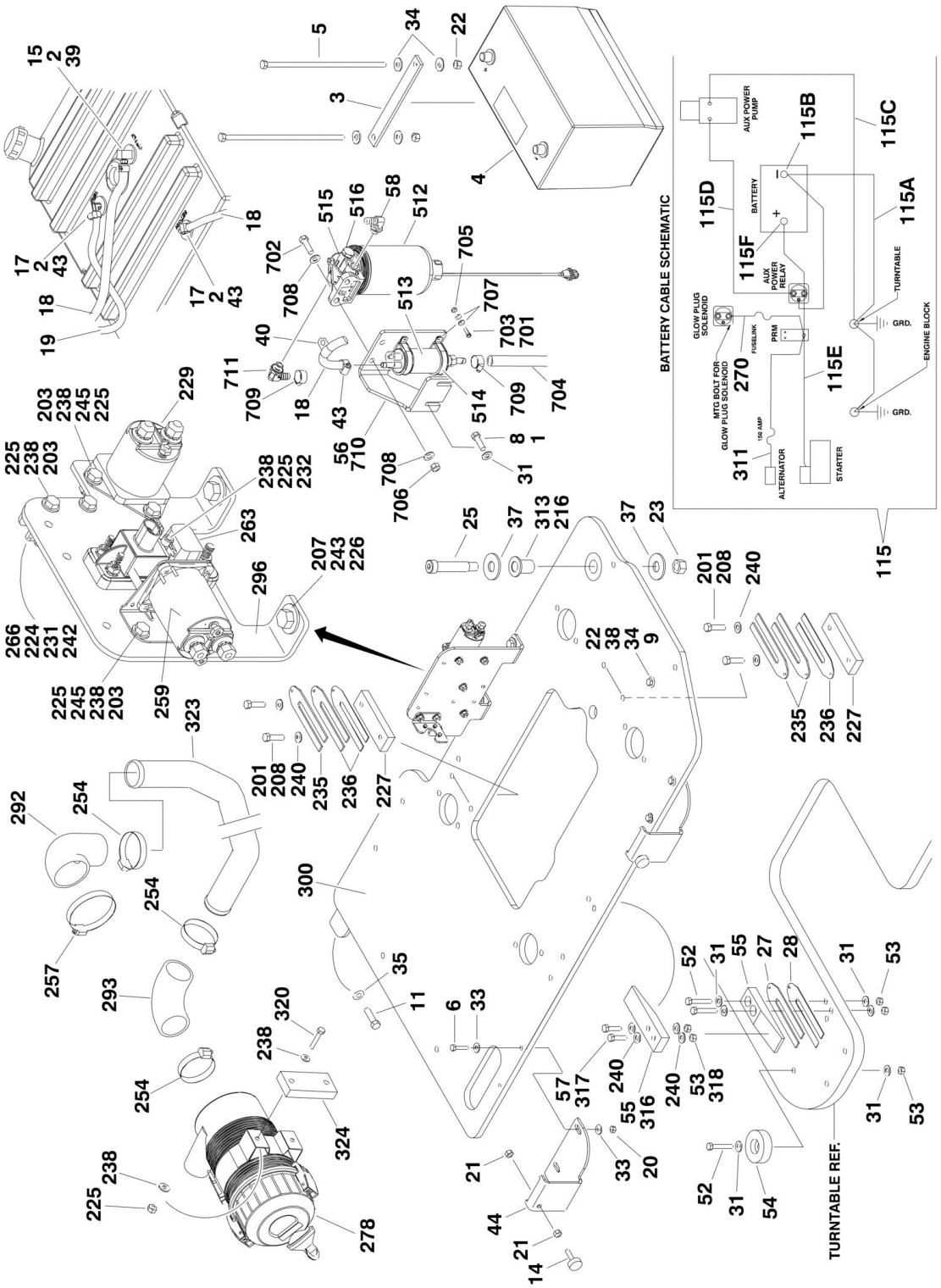

FIGURE 2-12. DEUTZ TD2.9L4 ENGINE INSTALLATION

ITEM	PART NUMBER	QTY	DESCRIPTION	REV
		Ref	**DEUTZ ENGINE INSTALLATIONS**	
	1001146496	Ref	**Without Arctic Package**	H
	1001146499	Ref	**With Arctic Package**	H
1	0100011	AR	Locking, Compound	
2	0100020	AR	Sealant, Pipe	
3	0361810	1	Bar, Battery Hold-Down	
4	0400075	1	Battery	
5	0630541	2	Bolt, Battery	
6	0641410	4	Bolt 1/4in-20NC x 1-1/4in	
7	0641412	4	Bolt 1/4in-20NC x 1-1/2in	
8	0641608	2	Bolt 3/8in-16NC x 1in	
9	0641616	1	Bolt 3/8in-16NC x 2in	
10	0641806	1	Bolt 1/2in-13NC x 3/4in	
11	0642010	1	Bolt 5/8in-11NC x 1-1/4in	
13	0760808	1	Capscrew M8 x 16mm	
14	0940049	2	Bumper, Hood	
15	2180832	1	Fitting, Barbed	
16	2200222	1	Plug, Pipe (Not Shown - Located on Bottom of Fuel Tank)	
17	2220313	1	Fitting, Elbow Barbed	
18	1001165035	26.5 ft/8m	Hose	
19	1001154405	2 ft/0.6m	Hose	
20	3311405	4	Locknut 1/4in-20NC	
21	3311501	4	Nut 5/16in-18NC	
22	3311605	3	Locknut 3/8in-16NC	
23	3312005	1	Locknut 5/8in-11NC	
25	3900255	1	Bolt, Shoulder	
27	4070497	AR	Shim (11 Ga.)	
28	4070498	AR	Shim (16Ga.)	
29	4711400	4	Flatwasher 1/4in Thin	
30	4711500	2	Flatwasher 5/16in Thin	
31	4711600	AR	Flatwasher 3/8in Thin	
32	4711800	1	Flatwasher 1/2in Thin	
33	4751400	8	Flatwasher 1/4in Regular	
34	4751600	6	Flatwasher 3/8in Regular	
35	4752000	1	Flatwasher 5/8in Regular	
36	1701505	1	Decal - Diesel Fuel (Not Shown - See DECAL SECTION for Location)	
37	4752200	2	Flatwasher 3/4in Regular	
38	4791600	1	Starwasher 3/8in	
39	8405006	2	Clamp	
40	8406101	2	Clip	
41	8406112	2	Clip	
42	8406302	1	Clamp	
43	8410013	5	Clamp	
44	1001094608	2	Latch, Hood	
45	1001110425	4	Spacer	
46	1001138491	1	Harness, Fuel (Not Shown - See ELECTRICAL SECTION for Breakdown)	
51	1001155823	1	Fitting, 90 Quick Disconnect	
52	0641516	3	Bolt 5/16in-18NC x 2in	

ITEM	PART NUMBER	QTY	DESCRIPTION	REV
53	3311505	5	Locknut 5/16in-18NC	
54	1001112607	1	Block	
55	1001163579	2	Pad	
56	1001162335	1	Bracket, Fuel Pump/Filter Assembly (See Items 701 - 711 for Breakdown)	
57	0641510	2	Bolt 5/16-18NC x 1 ¼ **(SN 0300195785 through 0300203770)**	
58	1001142501	1	Fitting, Barbed 90 Degree **(SN 0300199614 through 0300203770)**	
61		Ref	Decal - Warning Explosion/Fire Options:	
61	1704972	1	ANSI English	
61	1706098	1	Australian and CE	
61	1706064	1	CSA	
61	1706060	1	English/Chinese	
61	1706061	1	English/Korean	
61	1706062	1	English/Japanese	
61	1706059	1	English/Portuguese	
61	1706063	1	English/Spanish	
		Ref	**Note: Arctic Package Items 75 - 84 (Used on Arctic Machines Only) Not Shown.**	
75	1060625	1	Cable, Immersion Heater	
76	1060626	1	Plug, 3 Way	
77	1702941	1	Decal - Battery Heater	
78	1702942	1	Decal - Engine Block Heater	
79	1702943	1	Decal - Hydraulic Tank Heater	
80	1702944	1	Decal - Heater Cord	
81	2580024	1	Heater, Battery	
82	2580050	1	Heater, Hydraulic Tank	
83	3980007	1	Seat, Battery	
84	0641610	1	Bolt 3/8in-16NC x 1-1/4in	
		Ref	**ENGINE AND PUMPS SUB-ASSEMBLY**	
	1001146495	Ref	**Without Arctic Package**	B
	1001146498	Ref	**With Arctic Package**	B
101	0100011	AR	Locking, Compound	
102	0641812	2	Bolt 1/2in-13NC x 1-1/2in	
103	0761210	1	Bolt M12 x 20mm	
106	3020037	AR	Grease, Pump Coupling	
107	3600404	1	Pump Assembly (See PISTON PUMP ASSEMBLY for Breakdown)	
108	1001155024	1	Gear Pump Assembly with Fittings (See Items 601-604 for Breakdown)	
109	3790152	1	O-Ring	
110	3931616	2	Bolt 3/8in-16NC x 1in	
111	4812100	1	Flatwasher M12	
112	4891600	2	Flatwasher 3/8in Hardened	
115	1001147701	1	Battery Cable Kit	D
115A	7027061	1	Cable, Battery (Black) (Battery - to Tray Pivot Grd, Engine Block Grd and Relay Grounds)	
115B	4461266	1	Terminal, Battery	
115B	See Note	NSS	Boot, Black (Note: Not Available for Purchase)	
115C	7027062	1	Cable, Battery (Black) (Aux Pump to Engine to Tray Pivot Grd)	
115C	See Note	NSS	Boot, Black (Note: Not Available for Purchase)	
115D	7027060	1	Cable (Red) (Aux Relay to Aux Pump)	
115D	70003952	NSS	Boot, Red	

ITEM	PART NUMBER	QTY	DESCRIPTION	REV
115E	7027059]	1	Cable (Red) (Battery + to Aux Relay/Power Module/Starter)	
115E	70003952	NSS	Boot, Red (Starter)	
115F	4461265	1	Terminal, Battery Boot, Red (Battery)	
115F	See Note	NSS	Boot, Red (Note: Not Available for Purchase)	
116	1001147454	1	Seal	
		Ref	**ENGINE ASSEMBLY**	
	1001146494	Ref	**Without Arctic Package**	U
	1001146497	Ref	**With Arctic Package**	T
201	0100011	AR	Locking, Compound	
202	0256847	1	Pump Coupling Kit (See Items 401-407 for Breakdown)	
203	0641406	7	Bolt 1/4in-20NC x 3/4in	
204	0641407	13	Bolt 1/4in-20NC x 7/8in	
205	0641607	2	Bolt 3/8in-16NC x 7/8in	
206	0641608	7	Bolt 3/8in-16NC x 1in	
207	0641610	16	Bolt 3/8in-16NC x 1-1/4in	
208	0641611	4	Bolt 3/8in-16NC x 1-3/8in	
209	0641707	2	Bolt 7/16in-14NC x 7/8in	
210	0681822	4	Bolt 1/2in-13NC x 2-3/4in Grade 8	
211	0711214	8	Bolt M12 x 30mm Grade 10.9	
212	0741606	2	Screw, Flathead 3/8in-16NC x 3/4in	
213	0760810	1	Capscrew M8 x 20mm	
214	0771012	8	Bolt 10mm x 25mm Grade 10.9	
215	0771414	4	Bolt 14mm x 30mm Grade 10.9	
216	0962172	1	Bushing, Flanged	
217	1703162	2	Decal - Caution Fan Blade	
218		Ref	Anti-Freeze Options (Not Shown):	
218	2300004	3.6 Gal	Without Arctic Package	
218	2300041	3.6 Gal	With Arctic Package	
219	2720015	2.25 ft/0.7m	Hose	
221	2720340	1 ft/30cm	Hose	
222	1001154405	1.5 ft/0.4m	Hose	
223	3271801	4	Nut 1/2in-13NC Grade 8	
224	3310401	3	Nut #4-40NC	
225	3311405	21	Locknut 1/4in-20NC	
226	3311605	25	Locknut 3/8in-16NC	
227	3340399	2	Pad, Wear	
229	3740067	1	Relay	
231	3910408	3	Screw #4-40NC x 1/2in	
232	3931432	1	Capscrew, Socket Head 1/4in-20NC x 2in	
233	3931512	4	Capscrew, Socket Head 5/16in-18NC x 3/4in	
234	4031914	4	Bolt M8 x 50mm	
235	4070497	4	Shim (11 Ga.)	
236	4070498	2	Shim (16 Ga.)	
237	4640751	1	Valve, Oil Drain	
238	4711400	AR	Flatwasher 1/4in Thin	
239	4711500	AR	Flatwasher 5/16in Thin	
240	4711600	AR	Flatwasher 3/8in Thin	
241	1001139409	4	Washer, Snubbing	
242	4750400	AR	Flatwasher #4	
243	4751600	AR	Flatwasher 3/8in Regular	

ITEM	PART NUMBER	QTY	DESCRIPTION	REV
244	4751700	AR	Flatwasher 7/16in Regular	
245	4791400	4	Starwasher 1/4in	
246	4811900	AR	Flatwasher 8mm	
247	4812100	AR	Flatwasher 12mm	
248	4812200	AR	Flatwasher 14mm	
249	4891800	AR	Flatwasher 1/2in Hardened	
250	8405006	2	Clamp	
251	8405007	2	Clamp	
252	8405009	4	Clamp	
253	8405104	3	Clamp	
254	8405202	3	Clamp	
255	8406102	1	Clip	
256	8406110	2	Clip	
257		Ref	Clamp Options:	
257	8410011	1	Clamp **(Prior to SN 0300187624)**	
257	8405204	1	Clamp **(SN 0300187624 through 0300203770)**	
258	8410013	1	Clamp	
259	1001117308	1	Relay	
260	1001134488	1	Fitting, Elbow Barbed	
261		Ref	Oil, Motor Options:	
261	1001136079	2.4 gal/9L	Without Arctic Package	
261	1001136172	2.4 gal/9L	With Arctic Package	
262	1001136834	1	Cap, Tank	
263	1001138228	1	Relay, Power Module	
264	1001138717	1	Bracket	
265	1001138827	1	Sensor, Coolant Level	
266	1001139240	1	Bracket	
267	1001140535	1	Tank	
268	1001140609	1	Engine, Deutz TD2.9L4 (See Items 501-532 for Serviced Components)	
269	1001155339	1	Radiator	
270	1001141304	1	Harness, Glow Fuse (See ELECTRICAL SECTION for Breakdown)	
271	1001141546	1	Shim	
272	1001152489	1	Fitting, Elbow Barbed	
273	1001140564	1	Fitting, Elbow Barbed	
274	1001142501	1	Fitting, Elbow Barbed	
275	1001143797	1	Fitting, Straight Barbed	
276	1001144089	1	Grommet	
277	1001144112	3	Mount, Motor	
278	1001144113	1	Air Cleaner Assembly Filter Element	
278	70003937	1	Element, Filter (Not Shown)	
279	1001144115	1	Indicator, Service	
280	1001144116	1	Adapter	
281	1001144534	1	Mount, Front Engine	
282	1001144535	1	Mount, Rear Engine	
283	1001144536	1	Mount, Rear Engine	
284	1001144537	1	Mount, Front Engine	
285	1001144569	1	Bracket	
286	1001144664	1	Fan	
287	1001144687	1	Hose, Coolant	
288	1001155554	1	Hose, Radiator - Upper	

ITEM	PART NUMBER	QTY	DESCRIPTION	REV
289	1001155555	1	Hose, Radiator - Lower	
290	1001155367	1	Bracket	
291		Ref	Pipe, Exhaust Options:	
291	1001167172	NLA	Without Arctic Package (Use p/n 1001167170) **(Prior to SN 0300187624)**	
	1001167170	1	Without Arctic Package **(SN 0300187624 through 0300203770)**	
291	1001167170	1	With Arctic Package	
292		Ref	Elbow Options:	
292	1001167302	1	Elbow **(Prior to SN 0300187624)**	
292	1001145006	1	Elbow **(SN 0300187624 through 0300203770)**	
293	1001145007	1	Elbow	
294	1001170435	1	Pipe, Intake	
296	1001145016	1	Plate, Relay Mounting	
298	1001146268	1	Harness, Engine (Not Shown - See ELECTRICAL SECTION for Breakdown)	
299	1001155375	1	Plate, Radiator Mounting	
300	1001146870	1	Tray	
301	1001147073	1	Bracket	
302	1001147424	1	Baffle, Rubber	
303	1001147437	2	Plate	
304	1001147438	1	Plate	
305	0100020	AR	Sealant, Pipe	
306	0761210	1	Bolt M12 x 20mm	
307		Ref	Clamp Options:	
307	1321716	NLA	Clamp (Use p/n 1001181899) **(Prior to SN 0300195785)**	
307	1001181899	1	Clamp **(SN 0300195785 through 0300203770)**	
308	4240099	AR	Tie-Strap (Not Shown)	
309	8405201	1	Clamp	
310	1001138248	3.5 ft/1.1m	Hose	
311	1001143907	1	Cable, Alternator Power (See ELECTRICAL SECTION for Breakdown)	
312	1001148641	1	Bracket (Not Shown) **(Prior to SN 0300195785)**	
313	0100062	AR	Retaining Compound #680	
316	1001163579	1	Pad **(Prior to SN 0300195785)**	
317	0641510	2	Bolt 5/16in-18NC x 1-1/4in **(Prior to SN 0300195785)**	
318	3311505	2	Locknut 5/16in-18NC **(Prior to SN 0300195785)**	
319	1001170571	1	Mount, Engine	
320	0791512	2	Screw, 5/16-18NC	
321	4060804	1 ft/0.3m	Trim	
322	1001111341	1	Grommet	
323	1001170435	1	Pipe, Intake	
324	1001144568	1	Shim	
325	3271501	2	Nut 5/16-18NC Grade 8	
326	4751500	AR	Flatwasher 5/16in Wide	
327	1001181895	AR	Locking, Compound (Not Shown)	
		Ref	**Note: Following Items (Not Shown) Used on Arctic Package Machines Only.**	
324	1001140312	1	Heater, Engine Block	
	0256847	Ref	**PUMP COUPLING INSTALLATION**	2
401	1660234	1	Coupling, Hayes	
402	0080163	1	Plate, Pump Adapter	

ITEM	PART NUMBER	QTY	DESCRIPTION	REV
403	0700810	6	Bolt Metric 8mm x 20mm	
404	4831900	6	Lockwasher 8mm	
407	3020021	AR	Grease, Coupling	
	1001140609	Ref	**ENGINE COMPONENTS**	
501	70004274	1	Dipstick	
501	70024905	1	Seal	
502	7020465	2	Cap, Oil Fill	
503	70025088	1	Plug	
503	7020404	1	Seal	
504	7000264	1	Flywheel with Ring Gear	
504	7024579	1	Gear, Ring	
505		Ref	Gasket and Seal Options (Not Shown):	
505	70024906	1	Gasket, Head	
505	70025206	1	Gasket, Small Valve Cover	
505	70025207	1	Gasket, Large Valve Cover	
505	7002508	1	Gasket, Valve Cover to Air Charge Elbow	
505	70002718	1	Seal, Rear Main	
505	70024907	1	Gasket, Front Cover	
505	70024912	1	Gasket, Exhaust Manifold	
505	70025164	1	Gasket, Exhaust Manifold to Head	
505	70025179	1	Gasket, Pipe/Line/Lead to EGR Module	
505	70025180	1	Gasket, Pipe/Line/Lead to EGR Module	
505	70004279	1	Gasket Kit	
506	70025091	1	Plug (Not Shown - Located On Side Left Front)	
506	70025082	1	Seal	
506	70025176	1	Spring	
506	70025076	1	Valve	
507	70025202	1	Pump, Oil Lube (Not Shown - Located at Front of Engine)	
507	70025135	1	O-Ring	
507	70025136	1	Seal	
508	7016331	1	Filter, Oil	
509	70004275	1	Cooler, Oil	
509	70024925	1	Gasket	
510	70024924	1	Pump, High Pressure (Not Shown - Located Front Left Side)	
510	70025152	1	O-Ring (Between Pump and Spacer)	
510	70024488	1	Spacer	
510	70025152	1	O-Ring (Between Spacer and Engine Block)	
511	70004281	4	Injector, Fuel	
511	70025140	4	Washer, Sealing	
511	70025146	4	Clamp (Top of Injector)	
511	70025416	4	O-Seal	
511	70025154	4	Shoe, Clamping	
511	70000345	4	Plug, Glow	
511	70025231	1	Harness, Glow Plug (Not Shown)	
512	70025153	1	Filter, Fuel	
512	70024513	1	Cable, Sensor	
512	70025239	1	Seal	
513	70024486	1	Pump, Fuel	
514	70025144	2	Clamp	
515	70025160	1	Filter with Head	
515	70025161	1	Filter, Fuel	

ITEM	PART NUMBER	QTY	DESCRIPTION	REV
516	70024919	1	Sensor, Pressure	
516	70024920	1	Seal	
517	70025151	1	Rail, Fuel (Not Shown)	
517	70025235	1	Repair Kit	
518	70025210	1	ECU (Engine Control Unit)	
519	70024910	1	Pump, Water	
519	70025200	1	Seal	
519	70025084	2	Plug	
519	7020492	2	Seal	
520	70024473	1	Thermostat	
520	70025143	1	O-SEAL	
520	70025142	1	Cover, Thermostat	
521	70025177	1	Pipe (Not Shown - Located On Left Side)	
521	70025179	2	Gasket	
522	70004283	1	Module, EGR (Not Shown - Located on Left Side)	
523	70025477	1	Tensioner, Belt	
524	70004277	1	Belt, Drive	
525	70024914	1	Alternator	
525	70025149	1	Regulator, Voltage	
526	70024915	1	Starter (Not Shown - Located on Left Side)	
527	70004284	1	Harness, Engine (Not Shown)	
528	70024921	1	Sensor, Pressure	
528	70025120	1	Seal	
529	70024503	2	Sensor, Speed (Not Shown - Located Left Side Front and Flywheel Housing)	
529	70024917	2	Seal	
530	70024918	1	Sender, Temperature (Not Shown - Located Top Front)	
531	70024504	1	Sensor, Pressure (Not Shown - Located Left Side Front)	
531	70024920	1	Seal	
532	See Note	1	Muffler (Note: Not Available at Time of Printing)	
532	70004286	1	Outlet, Muffler	
	1001155024	Ref	**GEAR PUMP ASSEMBLY WITH FITTINGS**	A
601	2220479	2	Fitting, Straight	
602	2220810	2	Fitting, Reducer	
603	3600368	1	Gear Pump Assembly Less Fittings	
603	7024962	1	Seal Kit - 3600368 Pump (Includes Soft Seals)	
		Ref	**Note: Seal Kit is only service part are available.**	
604	4640744	2	Valve, Check	
	1001162335	Ref	**BRACKET ASSEMBLY (LESS FUEL PUMP AND FILTER)**	D
701	0100011	AR	Locking, Compound	
702	0641610	2	Bolt 3/8in-16NC x 1-1/4in	
703	0721006	4	Bolt #10-24NC x 3/4in	
704	1001154405	1.5 ft/0.4m	Hose	
705	3311001	4	Nut #10-20NC	
706	3311605	2	Locknut 3/8in-16NC	
707	4711000	8	Flatwasher #10 Thin	
708	4711600	4	Flatwasher 3/8in Thin	
709	8405006	2	Clamp	
710	1001141870	1	Plate, Fuel Pump Mount	
711	1001142501	1	Fitting, Elbow Barbed	
	1001146715	Ref	**SPARK ARRESTER INSTALLATION (OPTIONAL)**	A

ITEM	PART NUMBER	QTY	DESCRIPTION	REV
801	1001146714	1	Arrester, Spark	
	1001154852	Ref	**AUXILIARY PUMP INSTALLATION**	A
901	0100011	AR	Locking, Compound	
902	0641610	2	Bolt 3/8in-16NC x 1-1/4in	
903	2220371	1	Fitting, Straight	
904	2220567	1	Fitting, Elbow	
905	2221045	1	Fitting, Elbow	
906	3600423	1	Auxiliary Power Pump Assembly (See AUXILIARY PUMP ASSEMBLY for Breakdown)	
907	4751600	2	Flatwasher 3/8in Regular	

FIGURE 2-13. GM ENGINE INSTALLATION (WITHOUT UGM)

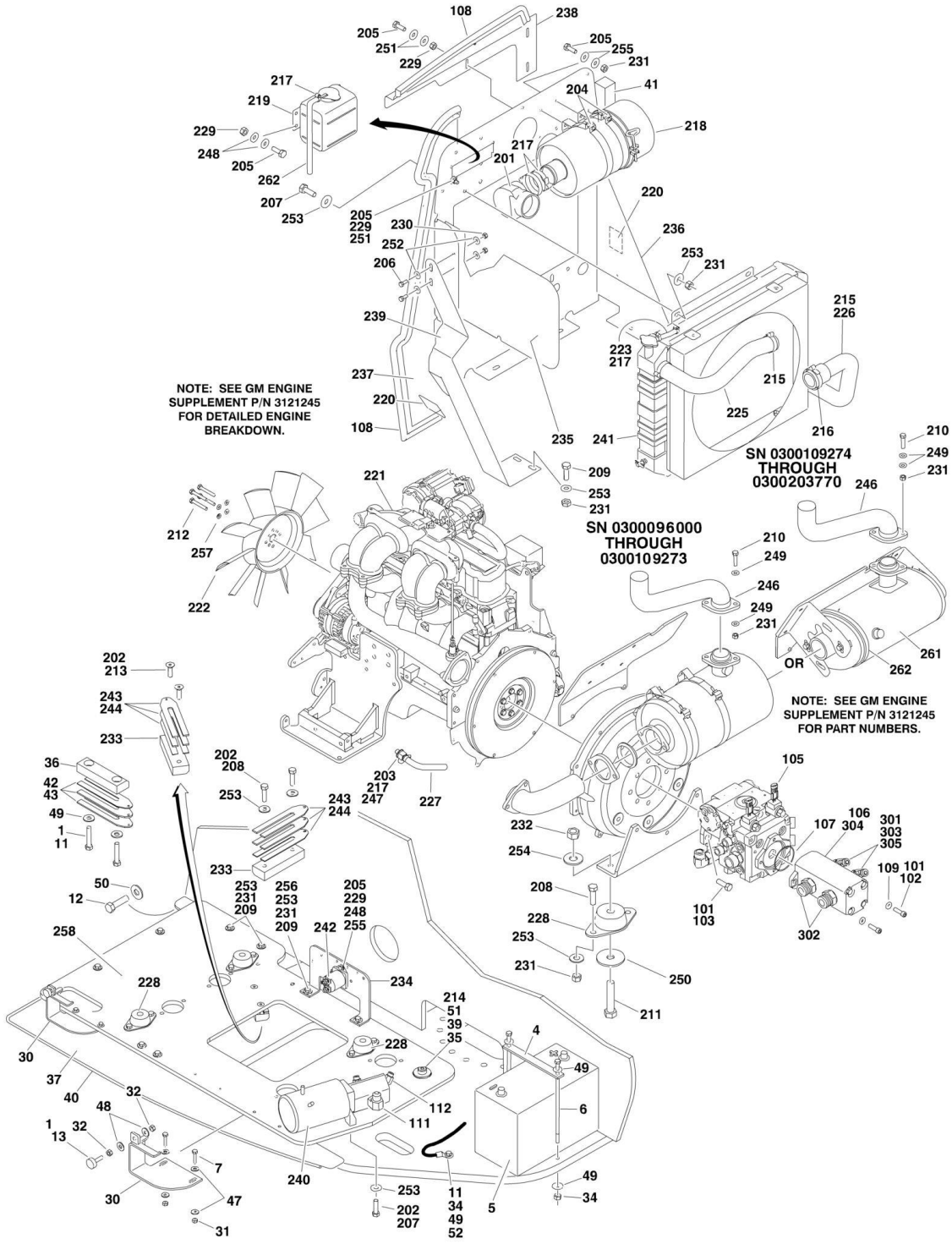

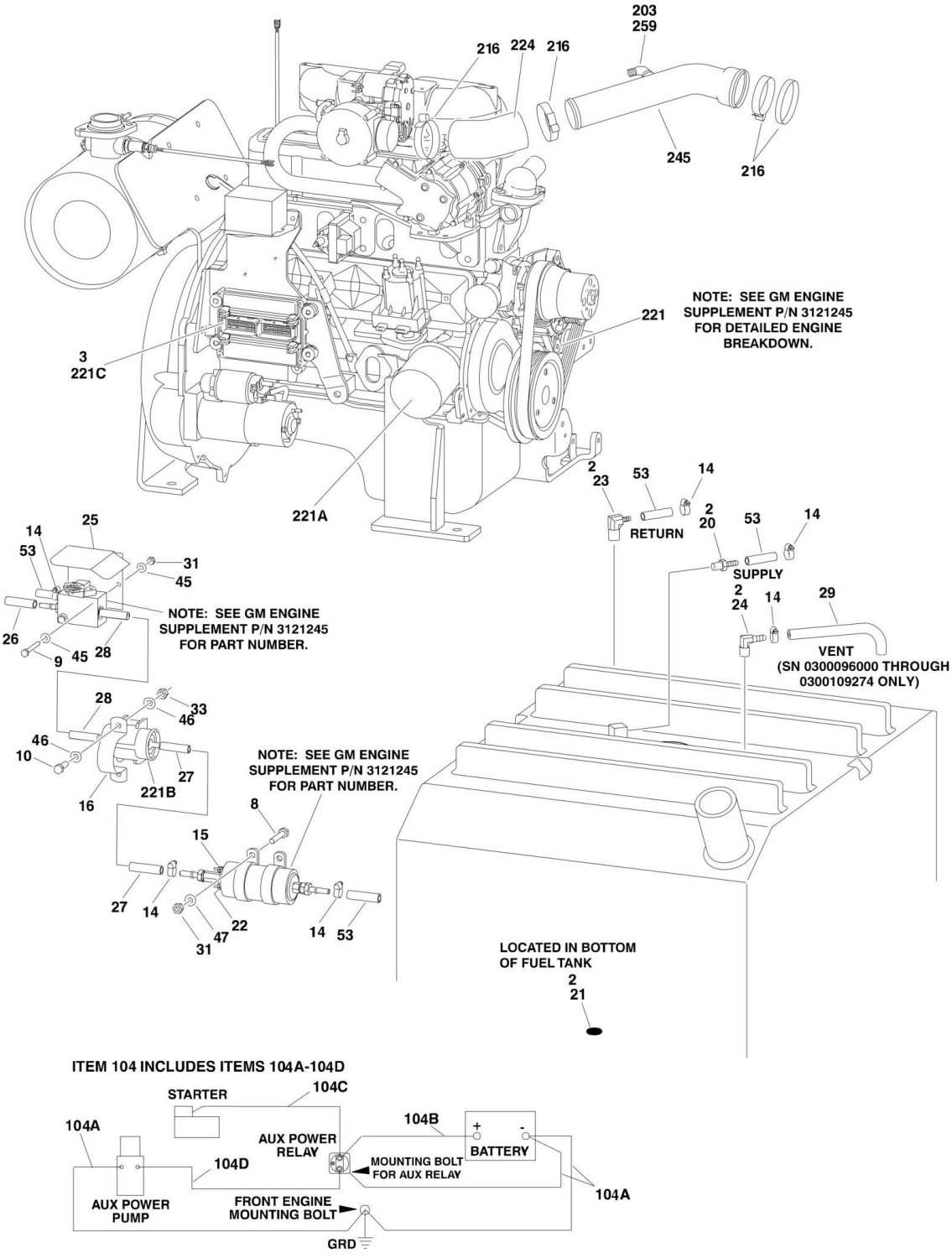
203
259
216
224
216
245
216
NOTE: SEE GM ENGINE SUPPLEMENT P/N 3121245 FOR DETAILED ENGINE BREAKDOWN.
221
3
221C
221A
2
23
53
14
RETURN
2
20
53
14
SUPPLY
2
24
14
29
VENT
(SN 0300096000 THROUGH 0300109274 ONLY)
14
53
25
31
45
NOTE: SEE GM ENGINE SUPPLEMENT P/N 3121245 FOR PART NUMBER.
26
9
45
28
28
46
33
46
10
27
221B
16
NOTE: SEE GM ENGINE SUPPLEMENT P/N 3121245 FOR PART NUMBER.
8
15
27
14
22
47
31
14
53
LOCATED IN BOTTOM OF FUEL TANK
2
21
ITEM 104 INCLUDES ITEMS 104A-104D
STARTER
104C
104A
104B
+
-
AUX POWER RELAY
BATTERY
104D
MOUNTING BOLT FOR AUX RELAY
104A
AUX POWER PUMP
FRONT ENGINE MOUNTING BOLT
GRD

FIGURE 2-13. GM ENGINE INSTALLATION (WITHOUT UGM)

ITEM	PART NUMBER	QTY	DESCRIPTION	REV
		Ref	**GM ENGINE INSTALLATION**	
	0275032	Ref	**GM Engine Installation (SN 0300096000 through 0300109273)**	G
	1001091629	Ref	**GM Engine Installation (SN 0300109274 through 0300203770)**	G
1	0100011	AR	Locking, Compound	
2	0100020	AR	Sealant, Pipe	
3	0100048	AR	Grease, Dielectric	
4	0361810	1	Bar, Battery Hold Down	
5	0400075	1	Battery (Wet)	
6	0630541	2	Bolt, Battery Hold Down	
7	0641410	4	Bolt 1/4in-20NC x 1-1/4in	
8	0641412	2	Bolt 1/4in-20NC x 1-1/2in (Not Shown)	
9	0641422	2	Bolt 1/4in-20NC x 2-3/4in	
10	0641511	2	Bolt 5/16in-18NC x 1-3/8in	
11	0641616	3	Bolt 3/8in-16NC x 2in	
12	0642010	1	Bolt 5/8in-11NC x 1-1/4in	
13	0940049	2	Stopper, Hood	
14	1320022	AR	Clamp, Fuel Line	
15	3290405	1	Locknut M4	
16	1320323	1	Clamp	
17	1701542	1	Decal, Gas (Not Shown)	
18	1701543	1	Decal, LPG (Not Shown)	
20	2180348	1	Fitting, Barbed	
21	2200222	1	Plug, Pipe	
22	3290505	1	Locknut M5	
23	2221176	1	Fitting, Elbow	
24	2220313	1	Fitting, Elbow Barbed Only **(SN 0300096000 through 0300109274)**	
25	3380741	1	Shield, Cover	
26	2720565	1	Hose (78in/2m Length)	
27	2720566	1	Hose (6in/15cm Length)	
28	2720567	1	Hose (48in/122cm Length)	
29	2720474	1	Hose Only **(SN 0300096000 through 0300109274)**	
29	1320223	1	Clamp (Not Shown - Located on Fuel Line Vent Hose Only) **(SN 0300096000 through 0300109274)**	
30		Ref	Weldment, Hood Latch Options:	
30	4846096	NLA	Weldment, Hood Latch **(SN 0300096000 through 0300121155)**	
30	1001094608	2	Weldment, Hood Latch **(SN 0300121156 through 0300203770)**	
31	3311405	8	Locknut 1/4in-20NC	
32	3311501	4	Nut 5/16in-18NC	
33	3311505	2	Locknut 5/16in-18NC	
34	3311605	2	Locknut 3/8in-16NC	
35	3312005	1	Locknut 5/8in-11NC	
36	3340399	1	Pad, Wear	
37	3572504	1	Plate	
38	3790012	1	O-Ring (Not Shown - Located in Console Box)	
39	3900255	1	Screw, Shoulder	
40	3960389	10 ft/30m	Seal, Self Gripping	
41	3960469	1	Seal, Foam Gasket	
42	4070497	2	Shim	
43	4070498	1	Shim	

ITEM	PART NUMBER	QTY	DESCRIPTION	REV
44	4360336	1	Switch, Toggle (Not Shown - Located in Console Box)	
45	4711400	4	Flatwasher 1/4in Thin	
46	4711500	4	Flatwasher 5/16in Thin	
47	4751400	10	Flatwasher 1/4in Regular	
48	4751500	4	Flatwasher 5/16in Regular Only **(SN 0300096000 through 0300137656)**	
49	4751600	7	Flatwasher 3/8in Regular	
50	4752000	1	Flatwasher 5/8in Regular	
51	4752200	2	Flatwasher 3/4in Regular	
52	4791600	1	Starwasher 3/8in	
53		Ref	Hose Options:	
53	2720058	11 ft/3.4m	Hose **(SN 0300096000 through 0300109273)**	
53	1001091587	11 ft/3.4m	Hose **(SN 0300109274 through 0300203770)**	
		Ref	**GM ENGINE AND PUMP SUB-ASSEMBLY**	
	2000359	Ref	**GM Engine and Pump Sub-Assembly (SN 0300096000 through 0300109273)**	B
	1001091628	Ref	**GM Engine and Pump Sub-Assembly (SN 0300109274 through 0300203770)**	E
101	0100011	AR	Locking, Compound	
102	0641608	2	Bolt 3/8in-16NC x 1in	
103	0641812	2	Bolt 1/2in-13NC x 1-1/2in	
104	2902511	1	Battery Cable Kit	C
104A	7027013	1	Cable (Battery - to Ground)	
104B	7027012	1	Cable (Battery + to Auxiliary Relay)	
104C	7016808	1	Cable (Auxiliary Relay to Starter)	
104D	7016820	1	Cable (Auxiliary Relay to Auxiliary Pump)	
105	3600404	1	Pump Assembly (See PISTON PUMP ASSEMBLY for Breakdown)	
106	3600405	1	Gear Pump Assembly With Fittings (See Items 301-305 for Breakdown)	
107	3790152	1	O-Ring	
108	3960389	10 ft/3m	Seal	
109	4891600	2	Flatwasher 3/8in Hardened	
111	2220567	1	Fitting, Elbow	
112	2221045	2	Fitting, Elbow	
		Ref	**GM ENGINE ASSEMBLY**	
	2000358	Ref	**GM Engine Assembly (SN 0300096000 through 0300109273)**	E
	1001091627	Ref	**GM Engine Assembly (SN 0300109274 through 0300203770)**	E
201	0080201	1	Fitting, Elbow	
202	0100011	AR	Locking, Compound	
203	0100020	AR	Sealant Only **(SN 0300096000 through 0300136281)**	
204	0340041	2	Band, Mounting	
205	0641406	15	Bolt 1/4in-20NC x 3/4in	
206	0641507	2	Bolt 5/16in-18NC x 7/8in	
207	0641609	6	Bolt 3/8in-16NC x 1-1/8in	
208	0641610	10	Bolt 3/8in-16NC x 1-1/4in	
209	0641611	6	Bolt 3/8in-16NC x 1-3/8in	
210	0641612	2	Bolt 3/8in-16NC x 1-1/2in	
211	0641820	4	Bolt 1/2in-13NC x 2-1/2in	
212	0700810	4	Bolt M8 x 20mm	
213	0741610	2	Screw, Flat Head 3/8in-16NC x 1-1/4in	
214	0962172	1	Bushing, Flanged	

ITEM	PART NUMBER	QTY	DESCRIPTION	REV
215	1320012	3	Clamp	
216	1320016	5	Clamp	
217	1320022	3	Clamp	
218	1340060	1	Air Cleaner Assembly	
218	7012664	1	Element, Air Cleaner	
219	1580011	1	Container, Coolant Overflow	
220	1703162	2	Decal - Caution Fan	
221		Ref	Engine, GM 3.0L Options (See GM Engine Supplement p/n 3121245 for Breakdown of Additional Components):	
221	2000354	1	Engine, GM 3.0L **(SN 0300096000 through 0300109273)**	
221	1001091583	1	Engine, GM 3.0L **(SN 0300109274 through 0300203770)**	
221	7027996	4	Plug, Spark (Not Shown)	
221A	7027965	1	Filter, Oil	
221B	7027972	1	Filter, Fuel	
221C	7027994	1	Module, Control (ECU)	
222	2060025	1	Fan	
223	2720058	4 in/10cm	Hose	
224	2720514	1	Hose	
225	2720563	1	Hose, Radiator (Top)	
226	2720564	1	Hose, Radiator (Bottom)	
227		Ref	Hose Options:	
227	2750532	8 in/20cm	Hose **(SN 0300096000 through 0300136280)**	
227	1001091892	1 ft/30cm	Hose **(SN 0300136281 through 0300203770)**	
228	3200406	4	Mount, Motor	
229	3311405	15	Locknut 1/4in-20NC	
230	3311505	2	Locknut 5/16in-18NC	
231	3311605	20	Locknut 3/8in-16NC	
232	3311805	4	Locknut 1/2in-13NC	
233	3340399	2	Pad, Wear	
234	3570808	1	Plate, Relay Mount	
235	3571019	1	Plate, Air Panel	
236	3571692	1	Plate, Radiator Mounting	
237	3572502	1	Plate, Air Flow Control (Side)	
238	3572503	1	Plate, Air Flow Control (Top)	
239	3573667	1	Plate, Radiator Support	
240		Ref	Auxiliary Power Pump Assembly Options (See AUXILIARY PUMP ASSEMBLY for Breakdown):	
240	3600279	NLA	Auxiliary Power Pump Assembly **(SN 0300096000 through 0300105248)**	
240	3600423	1	Auxiliary Power Pump Assembly **(SN 0300105249 through 0300203770)**	
241	3620040	1	Radiator	
241	8180311	1	Cap, Radiator (was p/n 7019656)	
242	3740067	1	Relay	
243	4070497	4	Shim (11 Gauge)	
244	4070498	2	Shim (16 Gauge)	
245	4569342	1	Tube, Air Intake	
246	4569345	1	Pipe, Exhaust	
247		Ref	Valve, Oil Drain Options:	
247	4640952	1	Valve, Oil Drain **(SN 0300096000 through 0300136280)**	
247	1001105872	1	Valve, Oil Drain **(SN 0300136281 through 0300203770)**	
248	4711400	12	Flatwasher 1/4in Thin	

ITEM	PART NUMBER	QTY	DESCRIPTION	REV
249	4711600	4	Flatwasher 3/8in Thin	
250	4740274	4	Flatwasher, Snubbing	
251	4751400	18	Flatwasher 1/4in Regular	
252	4751500	4	Flatwasher 5/16in Regular	
253	4751600	32	Flatwasher 3/8in Regular	
254	4751800	4	Flatwasher 1/2in Regular	
255	4791400	2	Starwasher 1/4in	
256	4791600	2	Starwasher 3/8in	
257	4831900	4	Lockwasher 8mm	
258	4846809	1	Tray, Engine	
259	2180877	1	Fitting, Elbow	
261	1001091794	1	Insulation, Muffler	
262	4920385	AR	Wire, Safety	
263	2720271	18 in/46cm	Hose Only **(SN 0300136281 through 0300203770)**	
	3600405	Ref	**GEAR PUMP ASSEMBLY WITH FITTINGS**	A
301	2220385	2	Fitting, Tee	
302	2220479	2	Fitting, Straight	
303	2220810	2	Fitting, Reducer	
304	3600368	1	Gear Pump Assembly Less Fittings	
304	7024962	1	Seal Kit - 3600368 Pump (Includes Soft Seals) Note: Seal Kit is only service part are available.	
305	4640744	2	Valve, Check	

FIGURE 2-14. GM ENGINE INSTALLATION (WITH UGM)

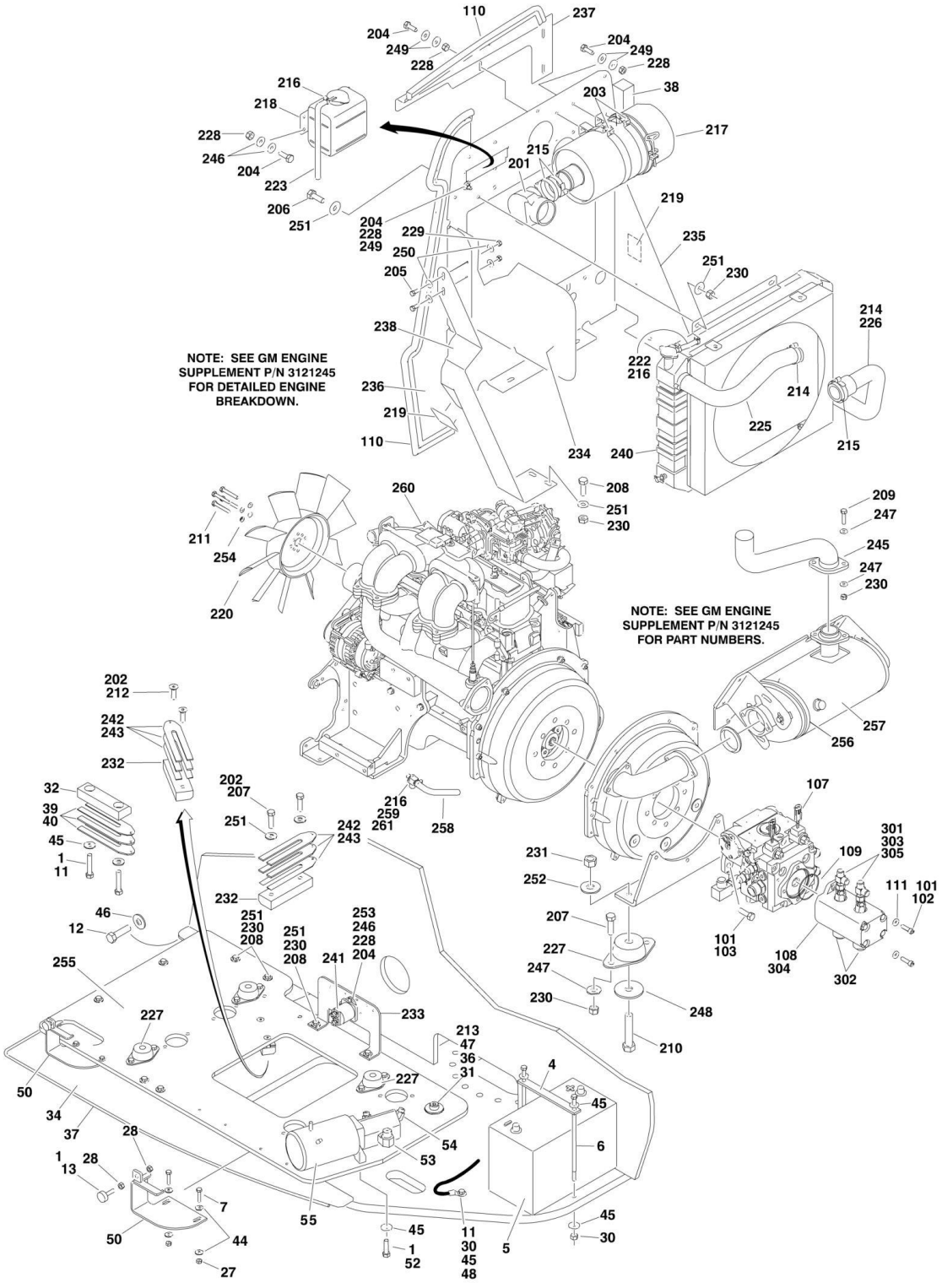

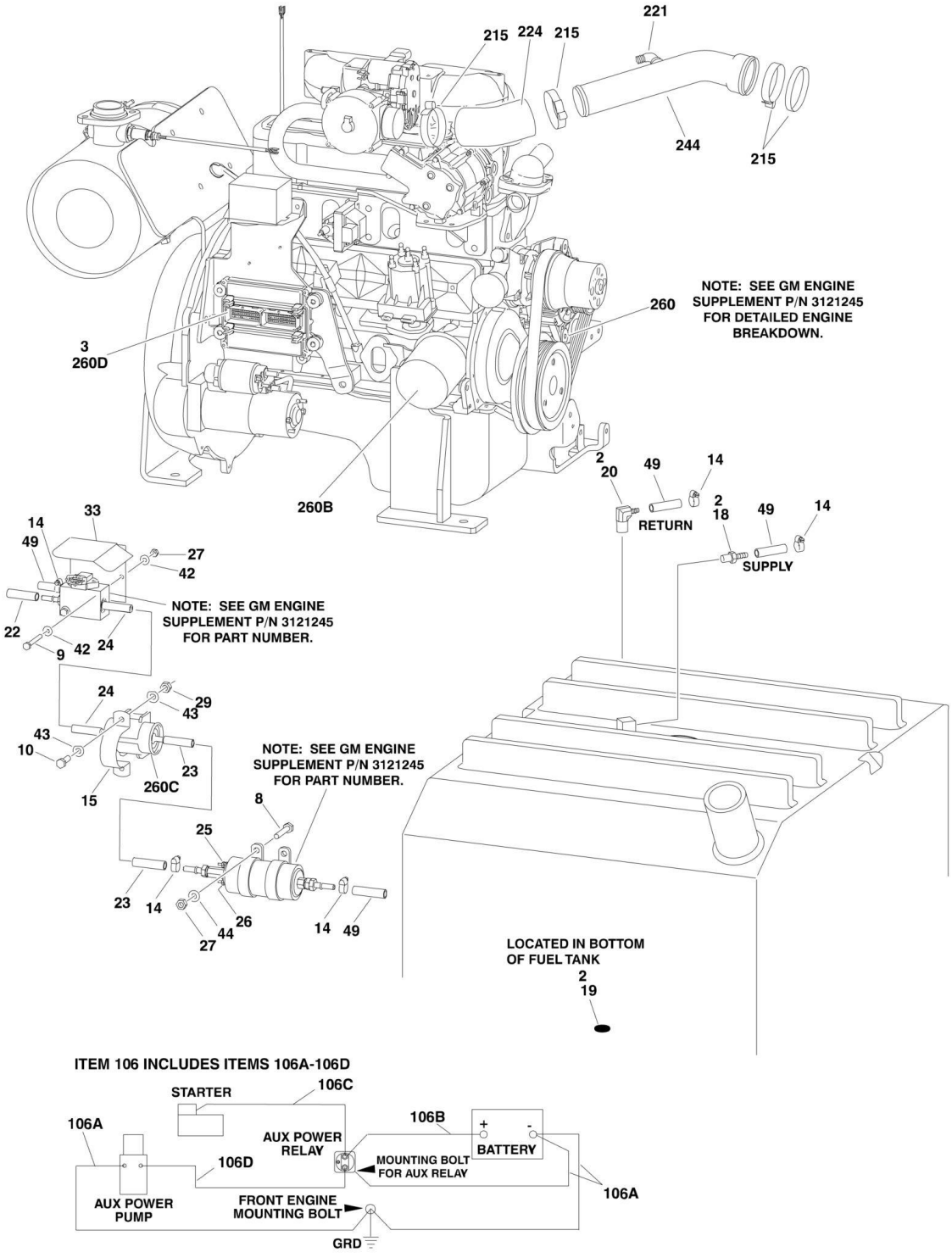
221
215
224
215
244
215
260
NOTE: SEE GM ENGINE SUPPLEMENT P/N 3121245 FOR DETAILED ENGINE BREAKDOWN.
3
260D
260B
2
20
49
14
RETURN
2
18
49
14
SUPPLY
33
14
49
27
42
NOTE: SEE GM ENGINE SUPPLEMENT P/N 3121245 FOR PART NUMBER.
22
9
42
24
24
29
43
43
10
23
260C
15
NOTE: SEE GM ENGINE SUPPLEMENT P/N 3121245 FOR PART NUMBER.
8
25
23
14
26
44
27
14
49
LOCATED IN BOTTOM OF FUEL TANK
2
19
ITEM 106 INCLUDES ITEMS 106A-106D
STARTER
106C
106A
AUX POWER RELAY
106B
+
-
BATTERY
106D
MOUNTING BOLT FOR AUX RELAY
106A
AUX POWER PUMP
FRONT ENGINE MOUNTING BOLT
GRD

FIGURE 2-14. GM ENGINE INSTALLATION (WITH UGM)

ITEM	PART NUMBER	QTY	DESCRIPTION	REV
	1001114607	Ref	**GM ENGINE INSTALLATION**	F
1	0100011	AR	Locking, Compound	
2	0100020	AR	Sealant, Pipe	
3	0100048	AR	Grease, Dielectric	
4	0361810	1	Bar, Battery Hold Down	
5	0400075	1	Battery (Wet)	
6	0630541	2	Bolt, Battery Hold Down	
7	0641410	4	Bolt 1/4in-20NC x 1-1/4in	
8	0641412	2	Bolt 1/4in-20NC x 1-1/2in (Not Shown)	
9	0641422	2	Bolt 1/4in-20NC x 2-3/4in	
10	0641511	2	Bolt 5/16in-18NC x 1-3/8in	
11	0641616	3	Bolt 3/8in-16NC x 2in	
12	0642010	1	Bolt 5/8in-11NC x 1-1/4in	
13	0940049	2	Stopper, Hood	
14	1001174486	4	Clamp, Fuel Line	
15	1320323	1	Clamp	
16	1701542	1	Decal, Gas (Not Shown)	
17	1701543	1	Decal, LPG (Not Shown)	
18	2180348	1	Fitting, Barbed	
19	2200222	1	Plug, Pipe	
20	2221176	1	Fitting, Elbow	
21	2300004	2.7 Gal	Coolant, Anti-Freeze (Not Shown)	
22		Ref	Hose Options:	
22	2720565	NLA	Hose **(Prior to SN 0300181781)**	
22	1001156822	1	Hose **(SN 0300181781 through 0300203770)**	
23		Ref	Hose Options:	
23	2720566	NLA	Hose **(Prior to SN 0300181781)**	
23	1001156823	1	Hose **(SN 0300181781 through 0300203770)**	
24		Ref	Hose Options:	
24	2720567	NLA	Hose **(Prior to SN 0300181781)**	
24	1001156824	1	Hose **(SN 0300181781 through 0300203770)**	
25	3290405	1	Locknut M4	
26	3290505	1	Locknut M5	
27	3311405	8	Locknut 1/4in-20NC	
28	3311501	4	Nut 5/16in-18NC	
29	3311505	2	Locknut 5/16in-18NC	
30	3311605	2	Locknut 3/8in-16NC	
31	3312005	1	Locknut 5/8in-11NC	
32	3340399	1	Pad, Wear	
33	3380741	1	Shield, Cover	
34	3572504	1	Plate	
35	3790012	1	O-Ring (Not Shown - Located in Console Box)	
36	3900255	1	Screw, Shoulder	
37	3960389	4 ft/1.2m	Seal, Self Gripping	
38	3960469	1	Seal, Foam Gasket	
39	4070497	2	Shim	
40	4070498	1	Shim	
41	4360336	1	Switch, Toggle (Not Shown - Located in Console Box)	
42	4711400	4	Flatwasher 1/4in Thin	
43	4711500	4	Flatwasher 5/16in Thin	

ITEM	PART NUMBER	QTY	DESCRIPTION	REV
44	4751400	10	Flatwasher 1/4in Regular	
45	4751600	9	Flatwasher 3/8in Regular	
46	4752000	1	Flatwasher 5/8in Regular	
47	4752200	2	Flatwasher 3/4in Regular	
48	4791600	1	Starwasher 3/8in	
49		Ref	Hose Options:	
49	1001091587	17.5 ft/5.3m	Hose **(Prior to SN 0300181781)**	
49	1001156819	17.5 ft/5.3m	Hose **(SN 0300181781 through 0300203770)**	
50	1001094608	2	Weldment, Hood Latch	
52	0641609	2	Bolt 3/8in-16NC x 1-1/8in	
53	2220567	1	Fitting, Elbow	
54	2221045	2	Fitting, Elbow	
55	3600423	1	Auxiliary Power Pump Assembly (See AUXILIARY PUMP ASSEMBLY for Breakdown)	
56	1001174093	2	Coupling, Quick Connect	
	1001114606	Ref	**GM ENGINE AND PUMP SUB-ASSEMBLY**	E
101	0100011	AR	Locking, Compound	
102	0641608	2	Bolt 3/8in-16NC x 1in	
103	0641812	2	Bolt 1/2in-13NC x 1-1/2in	
106	2902511	1	Battery Cable Kit	C
106A	7027013	1	Cable (Battery - to Ground)	
106B	7027012	1	Cable (Battery + to Auxiliary Relay)	
106C	7016808	1	Cable (Auxiliary Relay to Starter)	
106D	7016820	1	Cable (Auxiliary Relay to Auxiliary Pump)	
107	3600404	1	Pump Assembly (See PISTON PUMP ASSEMBLY for Breakdown)	
108	3600405	1	Gear Pump Assembly With Fittings (See Items 301-305 for Breakdown)	
109	3790152	1	O-Ring	
110	3960389	6 ft/1.8m	Seal	
111	4891600	2	Flatwasher 3/8in Hardened	
113	1001115930	1	Engine Oil, (10W-30) (Not Shown)	
	1001114605	Ref	**GM ENGINE ASSEMBLY**	D
201	0080201	1	Fitting, Elbow	
202	0100011	AR	Locking, Compound	
203	0340041	2	Band, Mounting	
204	0641406	15	Bolt 1/4in-20NC x 3/4in	
205	0641507	2	Bolt 5/16in-18NC x 7/8in	
206	0641609	4	Bolt 3/8in-16NC x 1-1/8in	
207	0641610	10	Bolt 3/8in-16NC x 1-1/4in	
208	0641611	6	Bolt 3/8in-16NC x 1-3/8in	
209	0641612	2	Bolt 3/8in-16NC x 1-1/2in	
210	0641820	4	Bolt 1/2in-13NC x 2-1/2in	
211	0700810	4	Bolt M8 x 20mm	
212	0741610	2	Screw, Flat Head 3/8in-16NC x 1-1/4in	
213	0962172	1	Bushing, Flanged	
214	1320012	3	Clamp	
215	1320016	5	Clamp	
216	1320022	AR	Clamp	
217	1340060	1	Air Cleaner Assembly	
217	7012664	1	Element, Air Cleaner	

ITEM	PART NUMBER	QTY	DESCRIPTION	REV
218	1580011	1	Container, Coolant Overflow	
219	1703162	2	Decal - Caution Fan	
220	2060025	1	Fan	
221	2180877	1	Fitting, Elbow	
222	2720058	4 in/10cm	Hose	
223	2720271	18 in/46cm	Hose	
224	2720514	1	Hose	
225	2720563	1	Hose, Radiator (Top)	
226	2720564	1	Hose, Radiator (Bottom)	
227	3200406	4	Mount, Motor	
228	3311405	15	Locknut 1/4in-20NC	
229	3311505	2	Locknut 5/16in-18NC	
230	3311605	20	Locknut 3/8in-16NC	
231	3311805	4	Locknut 1/2in-13NC	
232	3340399	2	Pad, Wear	
233	3570808	1	Plate, Relay Mount	
234	3571019	1	Plate, Air Panel	
235	3571692	1	Plate, Radiator Mounting	
236	3572502	1	Plate, Air Flow Control (Side)	
237	3572503	1	Plate, Air Flow Control (Top)	
238	3573667	1	Plate, Radiator Support	
240	3620040	1	Radiator	
240	8180311	1	Cap, Radiator (was p/n 7019656)	
241	3740067	1	Relay	
242	4070497	4	Shim (11 Gauge)	
243	4070498	2	Shim (16 Gauge)	
244	4569342	1	Tube, Air Intake	
245	4569345	1	Pipe, Exhaust	
246	4711400	12	Flatwasher 1/4in Thin	
247	4711600	12	Flatwasher 3/8in Thin	
248	4740274	4	Flatwasher, Snubbing	
249	4751400	18	Flatwasher 1/4in Regular	
250	4751500	4	Flatwasher 5/16in Regular	
251	4751600	22	Flatwasher 3/8in Regular	
252	4751800	4	Flatwasher 1/2in Regular	
253	4791600	2	Starwasher 3/8in	
254	4831900	4	Lockwasher 8mm	
255	4846809	1	Tray, Engine	
256	4920385	10 ft/3.0m	Wire, Safety	
257	1001091794	1	Insulation, Muffler	
258	2750532	1 ft/0.3m	Hose Only **(SN 0300096000 through 0300161285)**	
259	4640952	1	Valve, Oil Drain Only **(SN 0300096000 through 0300161285)**	
260		Ref	Engine, GM 3.0L Options (See GM Engine Supplement p/n 3121245 for Breakdown of Additional Components):	
260	1001114595	1	Engine, GM 3.0L **(SN 0300096000 through 0300161284)**	
260	1001141139	1	Engine, GM 3.0L **(SN 0300161285 through 0300203770)**	
260A	70000164	4	Plug, Spark (Not Shown)	
260B	7027965	1	Filter, Oil	
260C	7027972	1	Filter, Fuel	
260D	70002895	1	Module, Control (ECU)	
261	0100020	AR	Sealant, Pipe Only **(SN 0300096000 through 0300161285)**	

ITEM	PART NUMBER	QTY	DESCRIPTION	REV
	3600405	Ref	**GEAR PUMP ASSEMBLY WITH FITTINGS**	A
301	2220385	2	Fitting, Tee	
302	2220479	2	Fitting, Straight	
303	2220810	2	Fitting, Reducer	
304	3600368	1	Gear Pump Assembly Less Fittings	
304	7024962	1	Seal Kit - 3600368 Pump (Includes Soft Seals) Note: Seal Kit is only service part are available.	
305	4640744	2	Valve, Check	

FIGURE 2-15. PERKINS ENGINE INSTALLATION - WITH ELECTRICAL DRIVEN COOLING FAN (WITHOUT UGM)

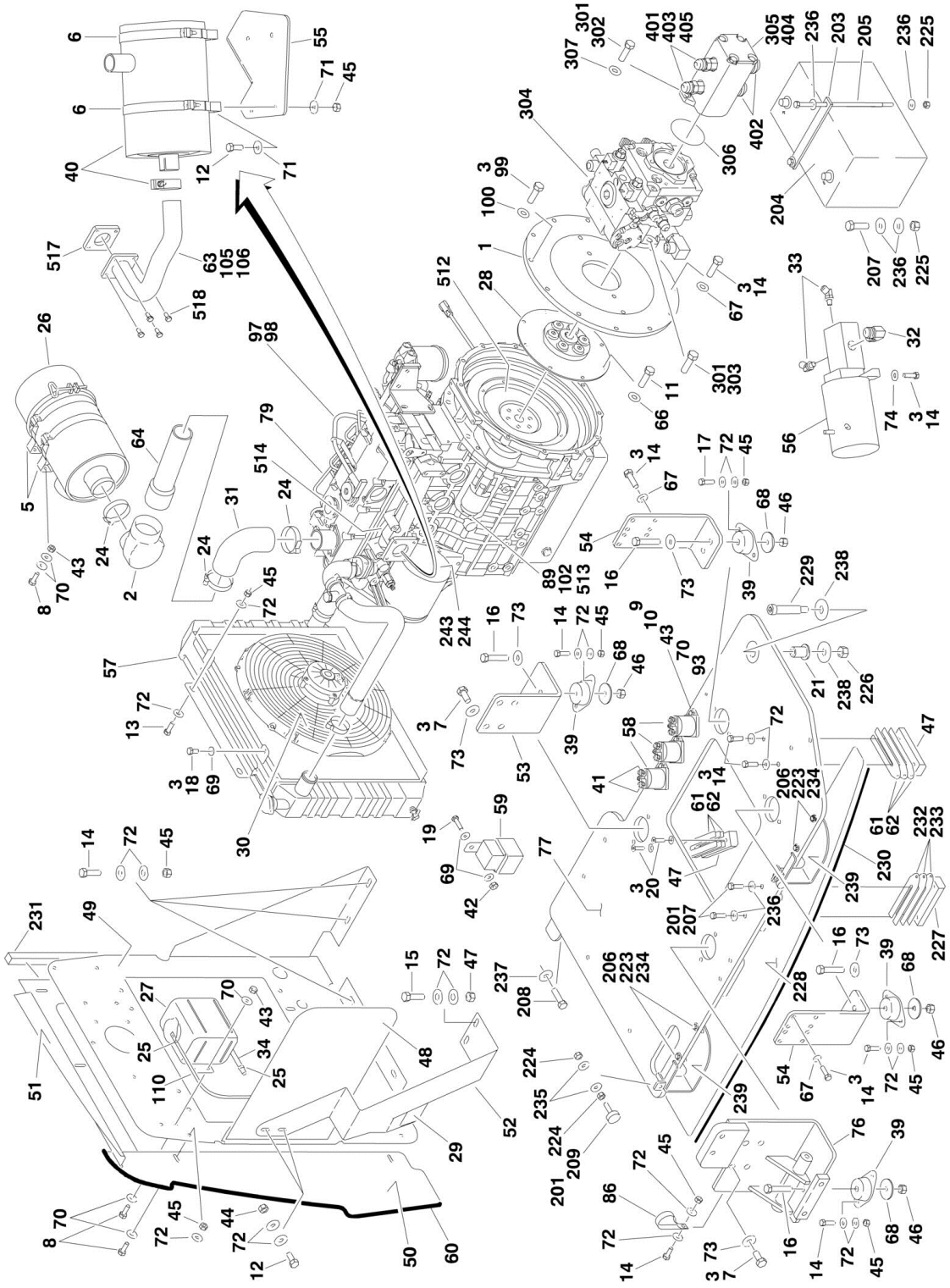

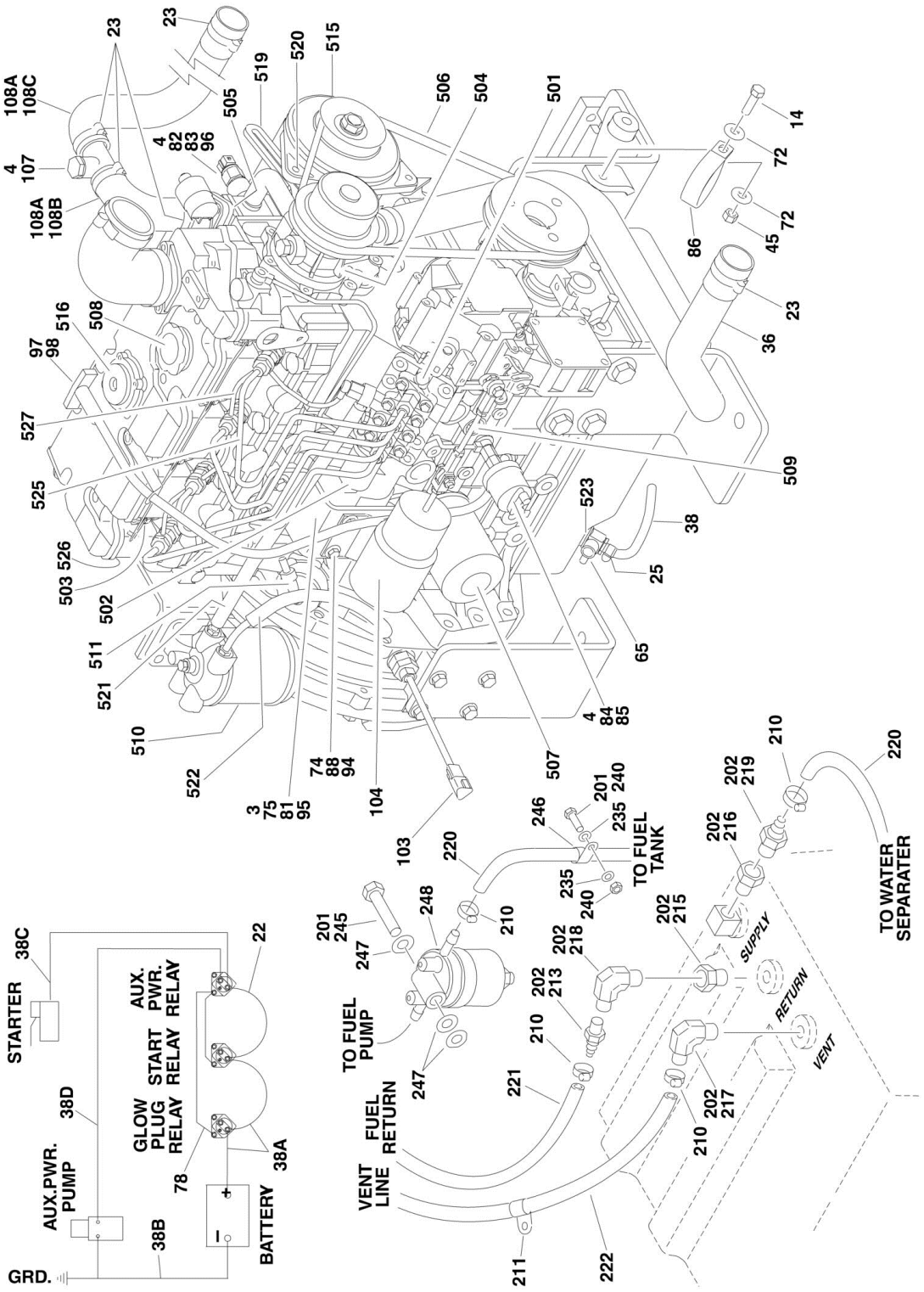
STARTER
38C
AUX.PWR. PUMP
38D
GLOW PLUG RELAY
START RELAY
AUX. PWR. RELAY
22
78
38A
38B
BATTERY
GRD.
TO FUEL PUMP
FUEL RETURN
VENT LINE
TO FUEL TANK
TO WATER SEPARATER
SUPPLY
RETURN
VENT

FIGURE 2-15. PERKINS ENGINE INSTALLATION - WITH ELECTRICAL DRIVEN COOLING FAN (WITHOUT UGM)

ITEM	PART NUMBER	QTY	DESCRIPTION	REV
		Ref	**NOTE: FOR MODULE IDENTIFICATION, REFER TO REVISION LOG PAGE A.**	
		Ref	**NOTE: TO CONVERT ELECTRIC FAN TO MECHANICAL FAN, SEE SPECIAL OPTION SECTION.**	
		Ref	**PERKINS ENGINE ASSEMBLY**	
	1001095204	Ref	**Without Arctic Package (All Specs except CE Spec)**	J
	1001102991	Ref	**Without Arctic Package (CE Spec Only)**	E
	1001095207	Ref	**With Arctic Package**	J
1	0080181	1	Adapter, Pump Mounting Plate	
2	0080201	1	Adapter, Elbow Air Intake	
3	0100011	AR	Locking, Compound	
4	0100020	AR	Sealant	
5	0340041	2	Band, Air Cleaner Mounting	
6	0340046	2	Band, Muffler Mounting	
7	0630569	8	Bolt M14 x 30mm	
8	0641406	13	Bolt 1/4in-20NC x 3/4in	
9	0641408	5	Bolt 1/4in-20NC x 1in	
10	0641410	1	Bolt 1/4in-20NC x 1-1/4in	
11	0641506	8	Bolt 5/16in-18NC x 3/4in	
12	0641507	6	Bolt 5/16in-18NC x 7/8in	
13	0641609	4	Bolt 3/8in-16NC x 1-1/8in	
14	0641610	35	Bolt 3/8in-16NC x 1-1/4in	
15	0641611	2	Bolt 3/8in-16NC x 1-3/8in	
16	0641820	4	Bolt 1/2in-13NC x 2-1/2in	
18	0721004	4	Capscrew #10-24NC x 1/2in	
19	0721006	1	Capscrew #10-24NC x 3/4in	
20	0741610	2	Screw, Flat Head 3/8in-16NC x 1-1/4in	
21	0962172	1	Bushing, Flanged	
22	1060904	1	Cable, Jumper	
23	1320012	6	Clamp	
24	1320016	4	Clamp	
25	1320022	AR	Clamp	
26	1340060	1	Air Cleaner Assembly	
26	7012664	1	Element, Air Cleaner	
27	1580011	1	Container, Coolant Overflow	
28	1660255	1	Coupling, Pump	
29	1703162	2	Decal - Caution Fan	
30	2060032	1	Fan, Electric	
31	2180482	1	Elbow, Rubber	
32	2220567	1	Fitting, Elbow Adapter	
33	2221045	2	Fitting, Elbow Adapter	
34	2720058	4 in/10cm	Hose	
36	2720508	1	Hose, Radiator (Bottom)	
37	2750532	6 in/15cm	Hose	
38	2901880	1	Battery Cable Kit	D
38A	7016843	1	Cable - Battery to Relays	
38B	7016835	1	Cable - Battery and Auxiliary Pump to Ground	
38C	7016834	1	Cable - Starter Relay to Starter	
38D	7016820	1	Cable - Auxiliary Relay to Auxiliary Pump	

ITEM	PART NUMBER	QTY	DESCRIPTION	REV
39	3200378	4	Mount, Motor	
40		Ref	Muffler Options:	
40	3220113	1	Spark Arresting Muffler	
40	70001017	1	Clamp	
40	3220154	NLA	Catalytic Muffler (Use p/n 1001107116)	
40	70002705	1	Clamp	
40	70002706	1	Plug, Brass	
41	3300220	6	Nut, Washer Only **(SN 0300096000 through 0300131588)**	
42	3311005	1	Locknut #10-24NC	
43	3311405	19	Locknut 1/4in-20NC	
44	3311505	6	Locknut 5/16in-18NC	
45	3311605	19	Locknut 3/8in-16NC	
46	3311805	4	Locknut 1/2in-13NC	
47	3340399	2	Pad, Wear	
48	3571019	1	Plate, Air Panel	
49	3571692	1	Plate, Radiator Mount	
50	3572502	1	Plate, Air Control Side	
51	3572503	1	Plate, Air Control Top	
52	3573667	1	Plate, Radiator Support	
53	3574253	1	Plate, Engine Mounting (Front)	
54	3574259	2	Plate, Engine Mounting (Rear)	
55		Ref	Plate, Muffler Support Options:	
55	3574264	1	Plate, Muffler Support **(SN 0300096000 through 0300118774)**	
55	1001098525	1	Plate, Muffler Support **(SN 0300118775 through 0300145000)**	
56	3600423	1	Auxiliary Pump Assembly (See AUXILIARY PUMP ASSEMBLY for Breakdown)	
57	3620046	1	Radiator	
57	8180311	1	Cap, Radiator (was p/n 7019656)	
58	3740067	3	Relay	
59	3740080	1	Relay	
60	3960389	6 ft/1.8m	Seal, Self Gripping	
61	4070497	4	Shim	
62	4070498	2	Shim	
63	4568743	1	Pipe, Exhaust	
64	4569176	1	Tube, Air Intake	
65	4641272	1	Valve, Oil Drain	
66	4711500	8	Flatwasher 5/16in Thin	
67	4711600	18	Flatwasher 3/8in Thin	
68	4740274	4	Washer, Snubbing	
69	4751000	6	Flatwasher #10	
70	4751400	38	Flatwasher 1/4in Regular	
71	4751500	12	Flatwasher 5/16in Regular	
72	4751600	42	Flatwasher 3/8in Regular	
73	4751800	11	Flatwasher 1/2in Regular	
74	0760612	4	Capscrew M6 x 25mm	
75	0760810	2	Capscrew M8 x 20mm	
76	4846821	1	Mount, Motor/Generator	
77	4846852	1	Weldment, Engine Tray	
78	4922737	1	Harness, Engine Grounding	
79		Ref	Engine, Perkins 404C-22 Options:	
79		Ref	All Specs Except CE Spec	
79	1001095205	1	Engine, Perkins 404C-22 **(SN 0300096000 through**	

ITEM	PART NUMBER	QTY	DESCRIPTION	REV
			0300135380)	
79	1001102131	1	Engine, Perkins 404C-22 **(SN 0300135381 through 0300203770)**	
79		Ref	CE Spec Only	
79	1001095205	1	Engine, Perkins 404C-22 **(SN 0300096000 through 0300203770)**	
81	3574282	1	Plate, Actuator Mounting	
82	1001097551	NLA	Sensor, Coolant (Use p/n 1001125978)	
82	1001097552	NLA	Adapter, Coolant Sensor (Use p/n 1001125978)	
84	1001097554	1	Sensor, Oil Pressure	
85		Ref	Adapter, Oil Pressure Sensor Options:	
85	1001097555	1	Adapter (Closest to Block)	
85	70002107	1	Adapter (Closest to Sensor)	
86	1001097588	1	Clip, Tube	
88	3290605	4	Locknut M6	
89		Ref	Nut Options:	
89	3311501	1	Nut 5/16in-18NC **(SN 0300096000 through 0300122763)**	
89	3290801	1	M8 x 1.25 **(SN 0300122764 through 0300203770)**	
93	4791400	6	Starwasher 1/4in	
94	5240600	8	Flatwasher M6 Hardened	
95	5240800	2	Flatwasher M8 Hardened	
96	1001097553	1	Washer, Coolant Sensor	
97	1001097588	1	Clip, Dipstick Tube	
98	1001097893	1	Dipstick Assembly	
98	7026885	1	Dipstick	
98	7026886	1	Tube, Dipstick	
98	7026847	2	Washer	
98	7026881	1	O-Ring	
99		Ref	Bolt Options:	
99	0641610	2	Bolt 3/8in-16NC x 1-1/4in **(SN 0300096000 through 0300118774)**	
99	0641612	2	Bolt 3/8in-16NC x 1-1/2in **(SN 0300118775 through 0300203770)**	
100		Ref	Flatwasher Options:	
100	4751600	2	Flatwasher 3/8in Regular	
100	4891600	2	Flatwasher 3/8in Hardened	
102	4831900	1	Lockwasher 8mm Only **(SN 0300125679 through 0300203770)**	
103	1001099926	1	Speed Sensor Kit (Includes Speed Sensor and Connectors)	
104	1001099927	1	Actuator Kit (Includes Actuator, Linkage and Connectors)	
104A	7026843	1	Linkage	
105	4100025	19 in/48cm	Sleeve, Fiberglass Only **(SN 0300130134 through 0300203770)**	
106	1001100825	2	Tie-Strap Only **(SN 0300130134 through 0300203770)**	
107	1001101228	1	Adapter Only **(SN 0300130134 through 0300203770)**	
108		Ref	Hose, Radiator (Top) Options:	
108A	2720507	NLA	Hose (Use p/n 1001102308. 1001102308 Service Kit - Includes Qty 1 of Items 44B, 44C, 107 and Qty 2 of Item 23) **(SN 0300096000 through 0300130133)**	
108B	1001101232	1	Hose (Block to Adapter) **(SN 0300130134 through 0300203770)**	
108C	1001101233	1	Hose (Adapter to Radiator) **(SN 0300130134 through 0300203770)**	
110	2720271	18 in/46cm	Hose	

ITEM	PART NUMBER	QTY	DESCRIPTION	REV
		Ref	**Note: Arctic Package Items 111 - 112 Not Shown - Used on Arctic Machines Only**	
111	1702942	1	Decal - Engine Block Heater	
112	2580054	1	Heater, Engine Block	
		Ref	**PERKINS ENGINE INSTALLATION**	
	1001095203	Ref	**Without Arctic Package (All Specs except CE Spec)**	E
	1001102993	Ref	**Without Arctic Package (CE Spec Only)**	B
	1001095206	Ref	**With Arctic Package**	G
201	0100011	AR	Locking, Compound	
202	0100020	AR	Sealant, Pipe	
203	0361810	1	Bar, Battery Hold-Down	
204	0400075	1	Battery	
205	0630541	2	Bolt, Battery Hold-Down	
206	0641410	4	Bolt 1/4in-20NC x 1-1/4in	
207	0641616	3	Bolt 3/8in-16NC x 2in	
208	0642010	1	Bolt 5/8in-11NC x 1-1/4in	
209	0940049	2	Bumper, Hood	
210	1320022	7	Clamp, Fuel Line	
211	1320223	1	Clamp	
212	1701505	1	Decal, Diesel (Not Shown - See DECAL SECTION for Decal Location)	
213	2180536	1	Fitting, Barbed	
214	2200222	1	Plug, Pipe (Not Shown - Located in Bottom of Fuel Tank)	
215	2220250	1	Fitting, Reducer	
216	2220273	1	Fitting, Reducer	
217	2220313	1	Fitting, Elbow Barbed	
218	2220459	1	Fitting, Elbow	
219	2220794	1	Fitting, Straight Barbed	
220	2720058	14 ft/4.2m	Hose	
221	2720271	12 ft/3.7m	Hose	
222	2750532	5 ft/1.6m	Hose	
223	3311405	4	Locknut 1/4in-20NC	
224	3311501	4	Nut 5/16in-18NC	
225	3311605	3	Locknut 3/8in-16NC	
226	3312005	1	Locknut 5/8in-11NC	
227	3340399	1	Pad, Wear	
228	3572504	1	Plate, Air Control Bottom	
229	3900255	1	Screw, Shoulder	
230	3960389	4 ft/1.2m	Seal, Self Gripping	
231	3960469	1	Seal, Foam	
232	4070497	2	Shim	
233	4070498	1	Shim	
234	4751400	8	Flatwasher 1/4in Regular	
235	4751500	9	Flatwasher 5/16in Regular	
236	4751600	8	Flatwasher 3/8in Regular	
237	4752000	1	Flatwasher 5/8in Regular	
238	4752200	2	Flatwasher 3/4in Regular	
239		Ref	Bracket, Hood Latch Options:	
239	4846096	NLA	Bracket, Hood Latch **(SN 0300096000 through 0300121155)**	
239	1001094608	2	Bracket, Hood Latch **(SN 0300121156 through 0300203770)**	
240	0641408	5	Bolt 1/4in-20NC x 1in	
241		Ref	Coolant, Anti-Freeze Options (Not Shown):	

ITEM	PART NUMBER	QTY	DESCRIPTION	REV
241	2300004	2.7 Gal	Without Arctic Package	
241	2300041	2.7 Gal	With Arctic Package	
243	3290501	1	Nut M5 x 0.8 **(SN 0300121156 through 0300203770)**	
244	3290601	1	Nut M6 x 1 **(SN 0300121156 through 0300203770)**	
245	0641420	1	Bolt 1/4in-20NC x 2-1/2in	
246	1320318	1	Clamp	
247	4711400	3	Flatwasher 1/4in Thin	
248	1001100857	1	Separator, Fuel/Water	
248	70002378	1	O-Ring	
248	70002377	1	Filter, Fuel	
		Ref	**Note: Arctic Package Items 251-257 Not Shown - Used on Arctic Machines Only**	
251	1060626	1	Cord, 3 Way Extension	
252	1320318	1	Clamp (Located on Between Battery and Engine)	
253	1702941	1	Decal - Battery Heater	
253	1702943	1	Decal - Hydraulic Tank Heater (Located on bottom of Hydraulic Oil Tank)	
254	1702944	1	Decal - Heater Cord (Located on Between Battery and Engine)	
255	2580024	1	Heater, Battery (Located on Battery)	
256	2580050	1	Heater, Hydraulic Tank (Located on bottom of Hydraulic Oil Tank)	
257	3980007	1	Seat, Battery	
		Ref	**PERKINS ENGINE AND PUMP SUB-ASSEMBLY**	
	1001095879	Ref	**Without Arctic Package (All Specs except CE Spec)**	D
	1001102992	Ref	**Without Arctic Package (CE Spec Only)**	C
	1001095880	Ref	**With Arctic Package**	D
301	0100011	AR	Locking, Compound	
302	0641608	2	Bolt 3/8in-16NC x 1in	
303	0641812	2	Bolt 1/2in-13NC x 1-1/2in	
304	3600404	1	Piston Pump Assembly (See PISTON PUMP ASSEMBLY for Breakdown)	
305	3600405	1	Gear Pump Assembly (See Items 401-405 for Breakdown)	
306	3790152	1	O-Ring	
307	4891600	2	Flatwasher 3/8in Hardened	
309		Ref	Oil, Engine Options (Not Shown):	
309	3020016	2.5 Gal	Without Arctic Package (15W-40)	
309	3020044	2.5 Gal	With Arctic Package (0W-40)	
	3600405	Ref	**GEAR PUMP ASSEMBLY WITH FITTINGS**	A
401	2220385	2	Fitting, Tee	
402	2220479	2	Fitting, Straight	
403	2220810	2	Fitting, Reducer	
404	3600368	1	Gear Pump Assembly Less Fittings	
404	7024962	1	Seal Kit - 3600368 Pump (Includes Soft Seals)	
		Ref	**Note: Seal Kit is only service part are available.**	
405	4640744	2	Valve, Check	
		Ref	**ENGINE COMPONENTS**	
		Ref	**All Specs Except CE Spec**	
	1001095205	Ref	**Engine Components (SN 0300096000 through 0300135380)**	
	1001102131	Ref	**Engine Components (SN 0300135381 through 0300203770)**	
	1001095205	Ref	**CE Spec Only**	
501	70001386	1	Pump, Fuel Injection	
501	70001388	AR	Shim 0.2mm	

ITEM	PART NUMBER	QTY	DESCRIPTION	REV
501	70001389	AR	Shim 0.25mm	
501	70001390	AR	Shim 0.3mm	
501	70001391	AR	Shim 0.35mm	
501	70001392	AR	Shim 0.4mm	
501	70001393	AR	Shim 0.5mm	
501	70001394	AR	Shim 0.5mm Flat	
502	70001387	1	Solenoid, Fuel Injection	
503	70001395	4	Glowplug	
504	70001396	1	Pump, Water (Includes p/n 70001397 Only)	
504	70001397	1	Gasket, Water Pump to Plate	
504	70001398	1	Gasket, Plate to Engine Block	
505	70001400	1	Thermostat	
505	70001399	1	Gasket, Thermostat Neck to Thermostat Housing	
505	70001401	1	Gasket, Thermostat Housing to Engine Block	
505	70002105	1	Housing, Thermostat	
505	70002106	1	Hose, Thermostat Housing to Water Pump	
506	70001402	1	Belt	
507	70001403	1	Filter, Oil	
508	70001404	1	Cap, Oil Fill	
508	70001405	1	Seal, Oil Fill Cap	
509	70001406	1	Valve, Relief	
509	70001407	1	Seal, O-Ring	
510	70001408	1	Fuel Bowl and Filter Assembly	
510	70001409	1	Fuel Filter Kit (Includes 1 Filter Element and 4 Seals)	
511	70001410	1	Pump, Lift	
511	70001411	1	Seal, O-Ring	
512	70001412	1	Flywheel	
512	70001413	1	Ring, Starter	
513	70001414	1	Starter	
513	70001415	1	Solenoid, Start	
514	70001416	1	Gasket, Exhaust Manifold to Engine Block	
515	70001417	1	Alternator	
515	70002234	1	Bracket, Adjusting	
516	70001418	1	Valve, Breather	
517	70001419	1	Gasket, Exhaust Manifold to Exhaust Tube	
518	0700808	4	Bolt M8 x 16mm	
519	70001792	1	Arm, Alternator Adjusting	
520	70001793	2	Screw	
520	70001794	1	Washer (Located at Arm Pivot Bolt)	
520	70001796	1	Washer (Located at Alternator Adjustment Bolt)	
521	70002109	1	Pipe, Fuel	
522	70002098	1	Hose, Fuel	
523	70002108	1	Washer, Drain Plug Sealing	
524	70002104	1	PIPE, OIL SUMP (NOT SHOWN - LOCATED INSIDE OIL PAN)	
525	70002100	1	Pipe, Fuel Injector (#1 Cylinder)	
525	70002101	1	Pipe, Fuel Injector (#2 Cylinder)	
525	70002102	1	Pipe, Fuel Injector (#3 Cylinder)	
525	70002103	1	Pipe, Fuel Injector (#4 Cylinder)	
526	70002099	1	Gasket, Head Cover	
527	70002433	1	Pipe, Fuel Injector Return	
528	70002461	1	Piston and Ring Kit (Engine p/n 1001102131 Only) (Not Shown)	

ITEM	PART NUMBER	QTY	DESCRIPTION	REV
529	70002462	4	Pin (Engine p/n 1001102131 Only) (Not Shown)	
530	70002463	8	Circlip (Engine p/n 1001102131 Only) (Not Shown)	
531	70002704	1	Gasket, Oil Pan (Not Shown)	
532		Ref	Gasket, Head Options (Not Shown):	
532	70003033	1	Gasket, Head - 0.5mm	
532	70003033	1	Gasket, Head - 0.4mm (was p/n 70003034)	

FIGURE 2-16. PERKINS ENGINE INSTALLATION - WITH MECHANICAL DRIVEN COOLING FAN (WITHOUT UGM)

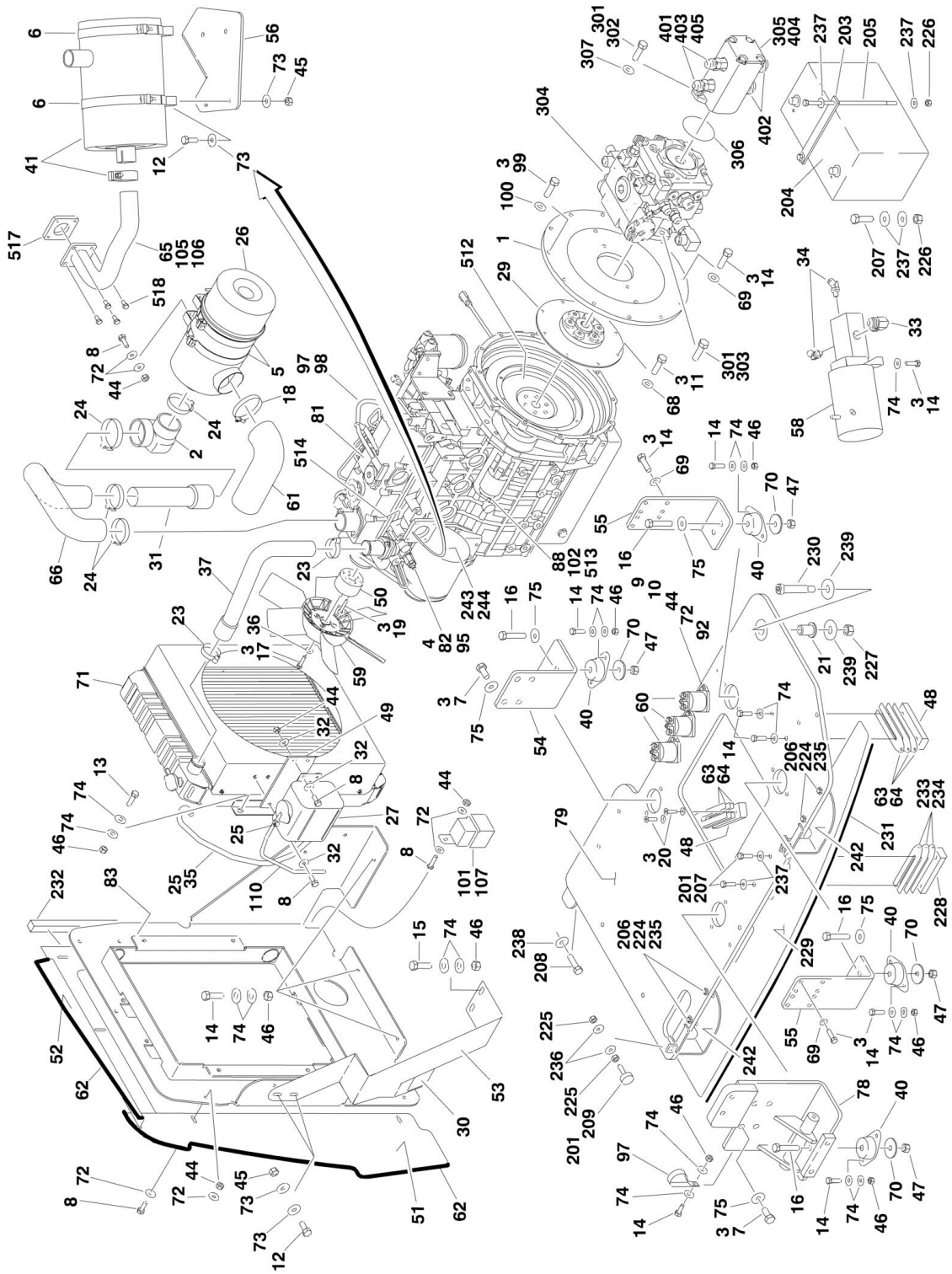

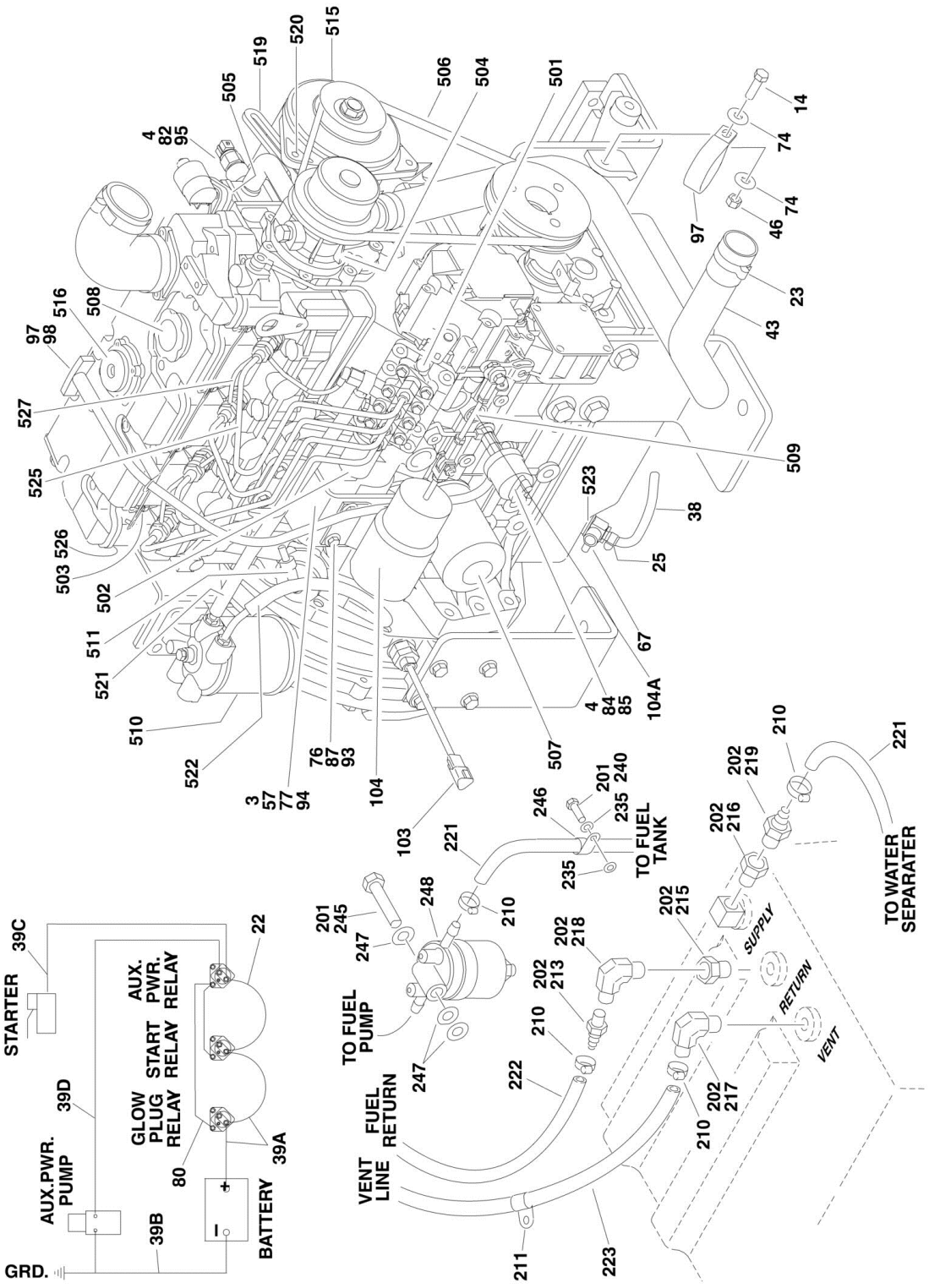
STARTER
39C
AUX.PWR. PUMP
39D
GLOW PLUG RELAY
START RELAY
AUX. PWR. RELAY
22
80
39A
39B
GRD.
BATTERY
+
–
TO FUEL PUMP
FUEL RETURN
VENT LINE
TO FUEL TANK
TO WATER SEPARATER
SUPPLY
RETURN
VENT

FIGURE 2-16. PERKINS ENGINE INSTALLATION - WITH MECHANICAL DRIVEN COOLING FAN (WITHOUT UGM)

ITEM	PART NUMBER	QTY	DESCRIPTION	REV
		Ref	**NOTE: FOR MODULE IDENTIFICATION, REFER TO REVISION LOG PAGE A.**	
		Ref	**PERKINS ENGINE ASSEMBLY**	
	1001130296	Ref	**Without Arctic Package (All Specs except CE Spec)**	B
	1001130294	Ref	**Without Arctic Package (CE Spec Only)**	B
	1001130295	Ref	**With Arctic Package**	B
1	0080181	1	Adapter, Pump Mounting Plate	
2	0080201	1	Adapter, Elbow Air Intake	
3	0100011	AR	Locking, Compound	
4	0100020	AR	Sealant	
5	0340041	2	Band, Air Cleaner Mounting	
6	0340046	2	Band, Muffler Mounting	
7	0630569	8	Bolt M14 x 30mm	
8	0641406	13	Bolt 1/4in-20NC x 3/4in	
9	0641408	5	Bolt 1/4in-20NC x 1in	
10	0641410	1	Bolt 1/4in-20NC x 1-1/4in	
11	0641506	8	Bolt 5/16in-18NC x 3/4in	
12	0641507	6	Bolt 5/16in-18NC x 7/8in	
13	0641609	4	Bolt 3/8in-16NC x 1-1/8in	
14	0641610	34	Bolt 3/8in-16NC x 1-1/4in	
15	0641611	2	Bolt 3/8in-16NC x 1-3/8in	
16	0641820	4	Bolt 1/2in-13NC x 2-1/2in	
17	0760815	4	Bolt M8 x 35mm	
18	1320058	1	Clamp	
19	4031711	4	Bolt M6 x 35mm	
20	0741610	2	Screw, Flat Head 3/8in-16NC x 1-1/4in	
21	0962172	1	Bushing, Flanged	
22	1060904	1	Cable, Jumper	
23	1320012	4	Clamp	
24	1320016	4	Clamp	
25	1320022	AR	Clamp	
26	1340060	1	Air Cleaner Assembly	
26	7012664	1	Element, Air Cleaner	
27	1580011	1	Container, Coolant Overflow	
29	1660255	1	Coupling, Pump	
30	1703162	2	Decal - Caution Fan	
31	4569176	1	Tube, Air Intake	
32	4711400	6	Flatwasher 1/4in Thin	
33	2220567	1	Fitting, Elbow Adapter	
34	2221045	2	Fitting, Elbow Adapter	
35	2720058	4 in/10cm	Hose	
36	4891500	4	Flatwasher 5/16in Hardened	
37	1001100577	1	Hose, Radiator (Top)	
38	2750532	6 in/15cm	Hose	
39	2901880	1	Battery Cable Kit	E
39A	7016843	1	Cable - Battery to Relays	
39B	7016835	1	Cable - Battery and Auxiliary Pump to Ground	
39C	7016834	1	Cable - Starter Relay to Starter	
39D	7016820	1	Cable - Auxiliary Relay to Auxiliary Pump	

ITEM	PART NUMBER	QTY	DESCRIPTION	REV
40	3200378	4	Mount, Motor	
41		Ref	Muffler Options:	
41	3220113	1	Spark Arresting Muffler	
41	70001017	1	Clamp	
41	1001107116	1	Catalytic Muffler	
41	70002705	1	Clamp	
41	70002706	1	Plug, Brass	
43	1001100818	1	Hose, Radiator (Bottom)	
44	3311405	17	Locknut 1/4in-20NC	
45	3311505	6	Locknut 5/16in-18NC	
46	3311605	18	Locknut 3/8in-16NC	
47	3311805	4	Locknut 1/2in-13NC	
48	3340399	2	Pad, Wear	
49	1001100837	1	Bracket, Bottle	
50	1001101201	1	Adapter, Fan Spacer	
51	3572502	1	Plate, Air Control Side	
52	3572503	1	Plate, Air Control Top	
53	3573667	1	Plate, Radiator Support	
54	3574253	1	Plate, Engine Mounting (Front)	
55	3574259	2	Plate, Engine Mounting (Rear)	
56	1001098525	1	Plate, Muffler Support	
57	3574282	1	Plate, Actuator Mounting	
58	3600423	1	Auxiliary Pump Assembly (See AUXILIARY PUMP ASSEMBLY for Breakdown)	
59	1001101408	1	Fan	
60	3740067	3	Relay	
61	1001101681	1	Elbow, Rubber	
62	3960389	1	Seal, Self Gripping	
63	4070497	4	Shim	
64	4070498	2	Shim	
65	4568743	1	Pipe, Exhaust	
66	1001101950	1	Tube, Air Intake	
67		Ref	Valve, Oil Drain Options:	
67	4640751	1	Without Arctic Package (All Specs except CE Spec)	
67	4641272	1	Without Arctic Package (CE Spec Only)	
67	4641272	1	With Arctic Package	
68	4711500	8	Flatwasher 5/16in Thin	
69	4711600	18	Flatwasher 3/8in Thin	
70	4740274	4	Washer, Snubbing	
71	1001102706	1	Radiator	
71	7027412	1	Cap, Radiator	
71	70023056	1	Valve, Drain	
71	70004091	1	Shroud	
72	4751400	30	Flatwasher 1/4in Regular	
73	4751500	12	Flatwasher 5/16in Regular	
74	4751600	40	Flatwasher 3/8in Regular	
75	4751800	11	Flatwasher 1/2in Regular	
76	0760612	4	Capscrew M6 x 25mm	
77	0760810	2	Capscrew M8 x 20mm	
78	4846821	1	Mount, Motor/Generator	
79	4846852	1	Weldment, Engine Tray	
80	4922737	1	Harness, Engine Grounding	

ITEM	PART NUMBER	QTY	DESCRIPTION	REV
81		Ref	Engine, Perkins 404C-22 Options:	
81	1001102131	1	All Specs except CE Spec	
81	1001102270	1	CE Spec Only	
82	1001125978	1	Sensor, Temperature	
83	1001128125	1	Plate, Radiator Mount	
84	1001097554	1	Sensor, Oil Pressure	
85	1001097555	1	Adapter, Oil Pressure Sensor	
87	3290605	4	Locknut M6	
88	3290801	1	Nut m8 x 1.25	
92	4791400	6	Starwasher 1/4in	
93	5240600	8	Flatwasher M6 Hardened	
94	5240800	2	Flatwasher M8 Hardened	
95	1001097553	1	Washer, Coolant Sensor	
97	1001097588	1	Clip, Tube	
98	1001097893	1	Dipstick Assembly	
98	7026885	1	Dipstick	
98	7026886	1	Tube, Dipstick	
98	7026847	2	Washer	
98	7026881	1	O-Ring	
99	0641612	2	Bolt 3/8in-16NC x 1-1/2in	
100	4891600	2	Flatwasher 3/8in Hardened	
101	3740080	1	Relay	
102	4831900	1	Lockwasher 8mm	
103	1001099926	1	Speed Sensor Kit (Includes Speed Sensor and Connectors)	
104	1001099927	1	Actuator Kit (Includes Actuator, Linkage and Connectors)	
104A	7026843	1	Linkage	
105	4100025	19 in/48cm	Sleeve, Fiberglass	
106	1001100825	2	Tie-Strap	
107	4460121	2	Terminal	
110	2720271	18 in/46cm	Hose	
		Ref	**Note: Arctic Package Items 111 - 112 Not Shown - Used on Arctic Machines Only**	
111	1702942	1	Decal - Engine Block Heater	
112	2580054	1	Heater, Engine Block	
		Ref	**PERKINS ENGINE INSTALLATION**	
	1001130549	Ref	**Without Arctic Package (All Specs except CE Spec)**	A
	1001130550	Ref	**Without Arctic Package (CE Spec Only)**	A
	1001130548	Ref	**With Arctic Package**	A
201	0100011	AR	Locking, Compound	
202	0100020	AR	Sealant, Pipe	
203	0361810	1	Bar, Battery Hold-Down	
204	0400075	1	Battery	
205	0630541	2	Bolt, Battery Hold-Down	
206	0641410	4	Bolt 1/4in-20NC x 1-1/4in	
207	0641616	3	Bolt 3/8in-16NC x 2in	
208	0642010	1	Bolt 5/8in-11NC x 1-1/4in	
209	0940049	2	Bumper, Hood	
210	1320022	7	Clamp, Fuel Line	
211	1320223	1	Clamp	
212	1701505	1	Decal, Diesel (Not Shown - See DECAL SECTION for Decal	

ITEM	PART NUMBER	QTY	DESCRIPTION	REV
			Location)	
213	2180536	1	Fitting, Barbed	
214	2200222	1	Plug, Pipe (Not Shown - Located in Bottom of Fuel Tank)	
215	2220250	1	Fitting, Reducer	
216	2220273	1	Fitting, Reducer	
217	2220313	1	Fitting, Elbow Barbed	
218	2220459	1	Fitting, Elbow	
219	2220794	1	Fitting, Straight Barbed	
220		Ref	Coolant, Anti-Freeze Options (Not Shown):	
220	2300004	2.7 Gal	Without Arctic Package	
220	2300041	2.7 Gal	With Arctic Package	
221	2720058	14 ft/4.2m	Hose	
222	2720271	12 ft/3.7m	Hose	
223	2750532	5 ft/1.6m	Hose	
224	3311405	4	Locknut 1/4in-20NC	
225	3311501	4	Nut 5/16in-18NC	
226	3311605	3	Locknut 3/8in-16NC	
227	3312005	1	Locknut 5/8in-11NC	
228	3340399	1	Pad, Wear	
229	3572504	1	Plate, Air Control Bottom	
230	3900255	1	Screw, Shoulder	
231	3960389	4 ft/1.2m	Seal, Self Gripping	
232	3960469	1	Seal, Foam	
233	4070497	2	Shim	
234	4070498	1	Shim	
235	4751400	9	Flatwasher 1/4in Regular	
236	4751500	4	Flatwasher 5/16in Regular	
237	4751600	8	Flatwasher 3/8in Regular	
238	4752000	1	Flatwasher 5/8in Regular	
239	4752200	2	Flatwasher 3/4in Regular	
240	0641408	1	Bolt 1/4in-20NC x 1in	
242	1001094608	2	Bracket, Hood Latch	
243	3290501	1	Nut M5 x 0.8	
244	3290601	1	Nut M6 x 1	
245	0641420	1	Bolt 1/4in-20NC x 2-1/2in	
246	1320318	1	Clamp	
247	4711400	3	Flatwasher 1/4in Thin	
248	1001100857	1	Separator, Fuel/Water	
248	70002378	1	O-Ring	
248	70002377	1	Filter, Fuel	
		Ref	**Note: Arctic Package Items 251-257 Not Shown - Used on Arctic Machines Only**	
251	1060626	1	Cord, 3 Way Extension	
252	1320318	1	Clamp (Located on Between Battery and Engine)	
253	1702941	1	Decal - Battery Heater	
253	1702943	1	Decal - Hydraulic Tank Heater (Located on bottom of Hydraulic Oil Tank)	
254	1702944	1	Decal - Heater Cord (Located on Between Battery and Engine)	
255	2580024	1	Heater, Battery (Located on Battery)	
256	2580050	1	Heater, Hydraulic Tank (Located on bottom of Hydraulic Oil Tank)	
257	3980007	1	Seat, Battery	

ITEM	PART NUMBER	QTY	DESCRIPTION	REV
		Ref	**PERKINS ENGINE AND PUMP SUB-ASSEMBLY**	
	1001130544	Ref	**Without Arctic Package (All Specs except CE Spec)**	A
	1001130543	Ref	**Without Arctic Package (CE Spec Only)**	A
	1001130545	Ref	**With Arctic Package**	A
301	0100011	AR	Locking, Compound	
302	0641608	2	Bolt 3/8in-16NC x 1in	
303	0641812	2	Bolt 1/2in-13NC x 1-1/2in	
304	3600404	1	Piston Pump Assembly (See PISTON PUMP ASSEMBLY for Breakdown)	
305	3600405	1	Gear Pump Assembly (See Items 401-405 for Breakdown)	
306	3790152	1	O-Ring	
307	4891600	2	Flatwasher 3/8in Hardened	
308		Ref	Oil, Engine Options (Not Shown):	
308	3020016	2.5 Gal	Without Arctic Package (15W-40)	
308	3020044	2.5 Gal	With Arctic Package (0W-40)	
	3600405	Ref	**GEAR PUMP ASSEMBLY WITH FITTINGS**	A
401	2220385	2	Fitting, Tee	
402	2220479	2	Fitting, Straight	
403	2220810	2	Fitting, Reducer	
404	3600368	1	Gear Pump Assembly Less Fittings	
404	7024962	1	Seal Kit - 3600368 Pump (Includes Soft Seals)	
		Ref	**Note: Seal Kit is only service part are available.**	
405	4640744	2	Valve, Check	
		Ref	**ENGINE COMPONENTS**	
	1001102131	Ref	**All Specs except CE Spec**	
	1001102270	Ref	**CE Spec Only**	
501	70001386	1	Pump, Fuel Injection	
501	70001388	AR	Shim 0.2mm	
501	70001389	AR	Shim 0.25mm	
501	70001390	AR	Shim 0.3mm	
501	70001391	AR	Shim 0.35mm	
501	70001392	AR	Shim 0.4mm	
501	70001393	AR	Shim 0.5mm	
501	70001394	AR	Shim 0.5mm Flat	
502	70001387	1	Solenoid, Fuel Injection	
503	70001395	4	Glowplug	
504	70001396	1	Pump, Water (Includes p/n 70001397 Only)	
504	70001397	1	Gasket, Water Pump to Plate	
504	70001398	1	Gasket, Plate to Engine Block	
505	70001400	1	Thermostat	
505	70001399	1	Gasket, Thermostat Neck to Thermostat Housing	
505	70001401	1	Gasket, Thermostat Housing to Engine Block	
505	70002105	1	Housing, Thermostat	
505	70002106	1	Hose, Thermostat Housing to Water Pump	
506	70001402	1	Belt	
507	70001403	1	Filter, Oil	
508	70001404	1	Cap, Oil Fill	
508	70001405	1	Seal, Oil Fill Cap	
509	70001406	1	Valve, Relief	
509	70001407	1	Seal, O-Ring	
510	70001408	1	Fuel Bowl and Filter Assembly	
510	70001409	1	Fuel Filter Kit (Includes 1 Filter Element and 4 Seals)	

ITEM	PART NUMBER	QTY	DESCRIPTION	REV
511	70001410	1	Pump, Lift	
511	70001411	1	Seal, O-Ring	
512	70001412	1	Flywheel	
512	70001413	1	Ring, Starter	
513	70001414	1	Starter	
513	70001415	1	Solenoid, Start	
514	70001416	1	Gasket, Exhaust Manifold to Engine Block	
515	70001417	1	Alternator	
515	70002234	1	Bracket, Adjusting	
516	70001418	1	Valve, Breather	
517	70001419	1	Gasket, Exhaust Manifold to Exhaust Tube	
518	0700808	4	Bolt M8 x 16mm	
519	70001792	1	Arm, Alternator Adjusting	
520	70001793	2	Screw	
520	70001794	1	Washer (Located at Arm Pivot Bolt)	
520	70001796	1	Washer (Located at Alternator Adjustment Bolt)	
521	70002109	1	Pipe, Fuel	
522	70002098	1	Hose, Fuel	
523	70002108	1	Washer, Drain Plug Sealing	
524	70002104	1	Pipe, Oil Sump (Not Shown – Located Inside Oil Pan)	
525	70002100	1	Pipe, Fuel Injector (#1 Cylinder)	
525	70002101	1	Pipe, Fuel Injector (#2 Cylinder)	
525	70002102	1	Pipe, Fuel Injector (#3 Cylinder)	
525	70002103	1	Pipe, Fuel Injector (#4 Cylinder)	
526	70002099	1	Gasket, Head Cover	
527	70002433	1	Pipe, Fuel Injector Return (Engine p/n 1001102131 Only)	
527	70005771	4	Injector, Fuel (Includes Top Seal) (1001102270 Engine Only)	
527	70005772	4	Seal, Bottom Injector (1001102270 Engine Only)	
528	70002461	1	Piston and Ring Kit (Engine p/n 1001102131 Only) (Not Shown)	
529	70002462	4	Pin (Engine p/n 1001102131 Only) (Not Shown)	
530	70002463	8	Circlip (Engine p/n 1001102131 Only) (Not Shown)	
531	70002704	1	Gasket, Oil Pan (Not Shown)	
532		Ref	Gasket, Head Options (Engine p/n 1001102131 Only) (Not Shown):	
532	70003033	1	Gasket, Head - 0.5mm	
532	70003034	1	Gasket, Head - 0.4mm	

FIGURE 2-17. PERKINS ENGINE INSTALLATION (WITH UGM)

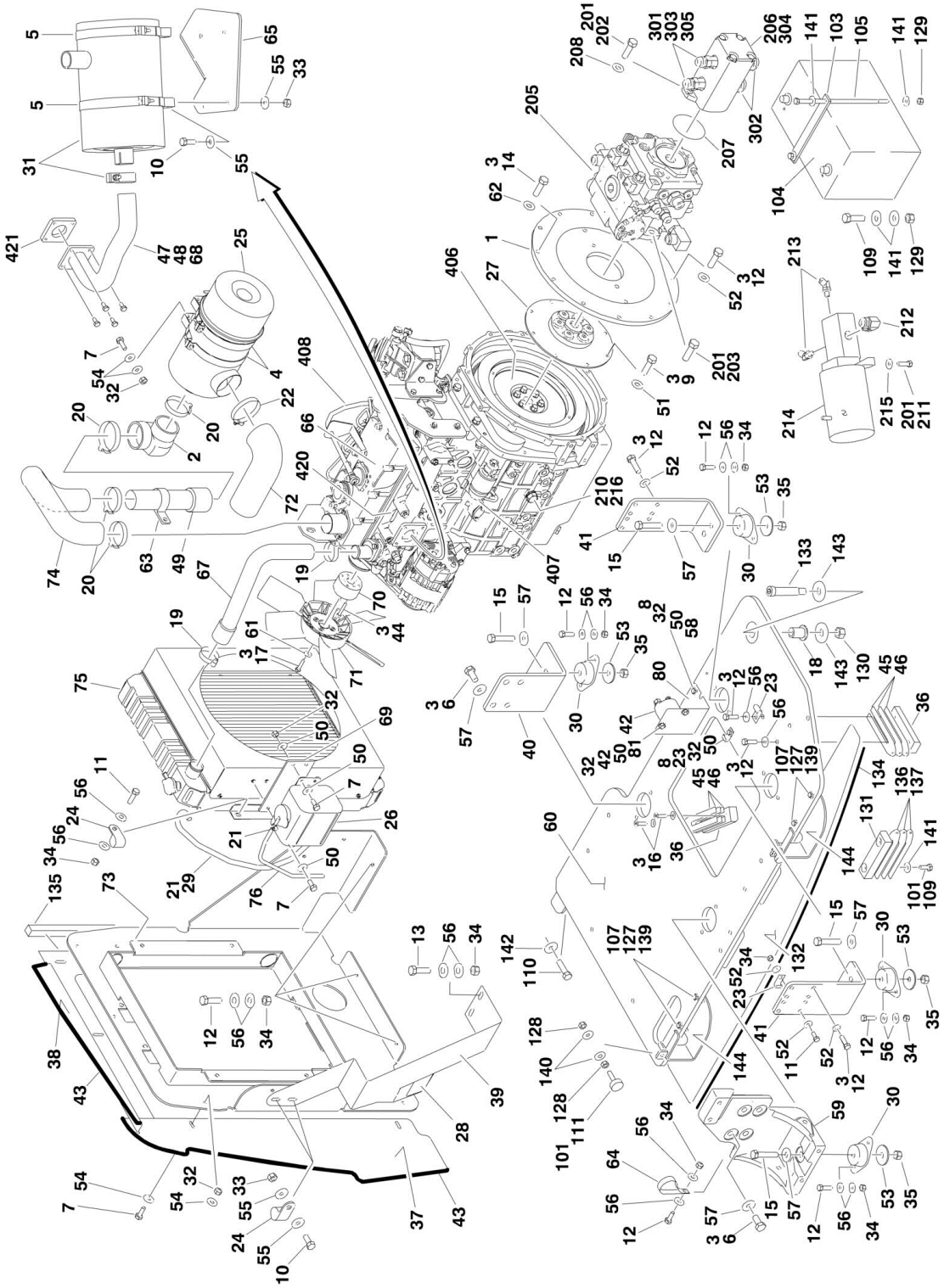

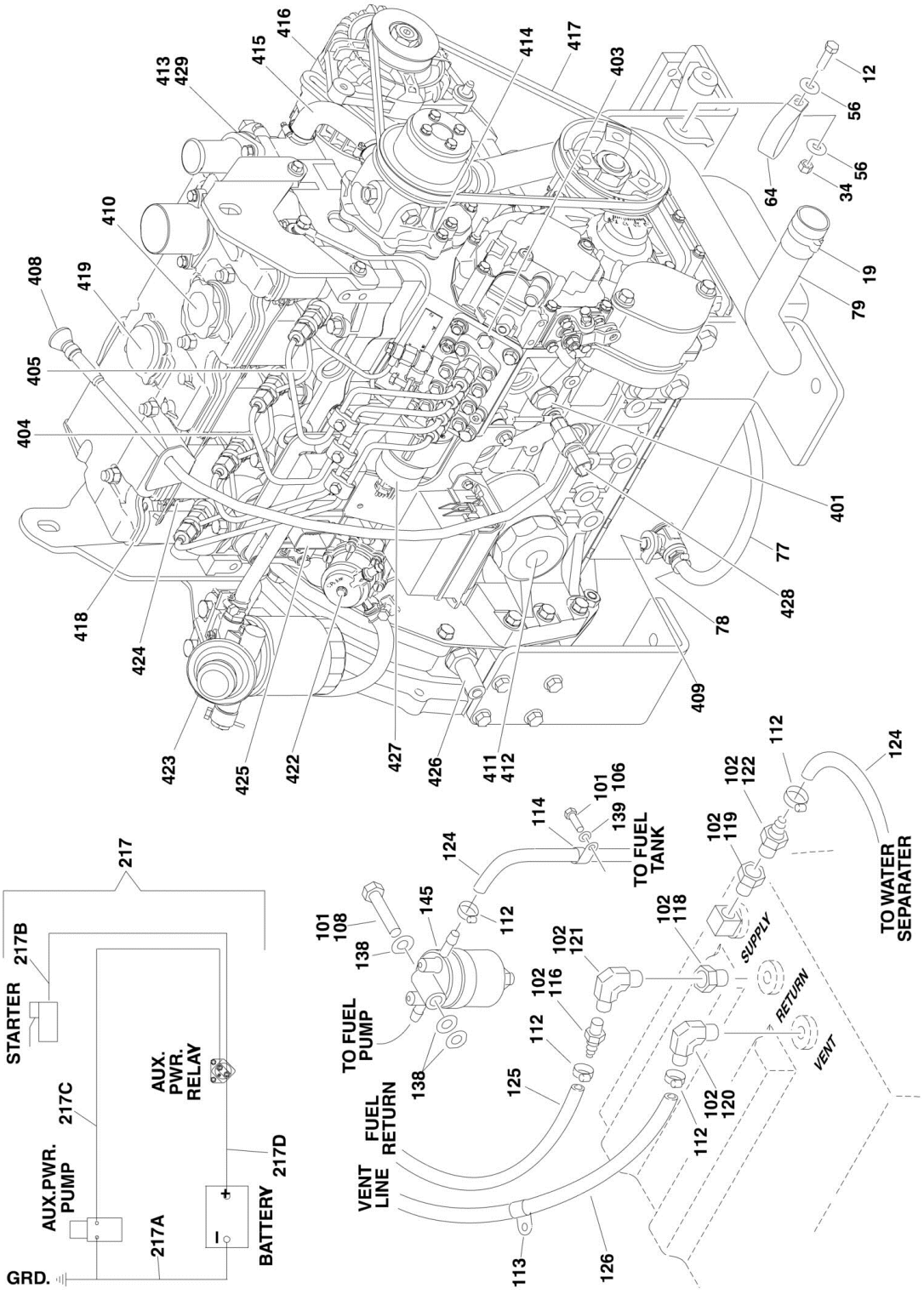
STARTER
217B
217
AUX.PWR. PUMP
217C
AUX. PWR. RELAY
217D
217A
BATTERY
GRD.
TO FUEL PUMP
FUEL RETURN
VENT LINE
TO FUEL TANK
TO WATER SEPARATER
SUPPLY
RETURN
VENT

FIGURE 2-17. PERKINS ENGINE INSTALLATION (WITH UGM)

ITEM	PART NUMBER	QTY	DESCRIPTION	REV
		Ref	**NOTE: FOR MODULE IDENTIFICATION, REFER TO REVISION LOG PAGE A.**	
	1001100469	Ref	**PERKINS ENGINE ASSEMBLY**	E
1	0080181	1	Adapter, Pump Mounting Plate	
2	0080201	1	Adapter, Elbow Air Intake	
3	0100011	AR	Locking, Compound	
4	0340041	2	Band, Air Cleaner Mounting	
5	0340046	2	Band, Muffler Mounting	
6	0630569	8	Bolt M14 x 30mm	
7	0641406	13	Bolt 1/4in-20NC x 3/4in	
8	0641408	5	Bolt 1/4in-20NC x 1in	
9	0641506	8	Bolt 5/16in-18NC x 3/4in	
10	0641507	6	Bolt 5/16in-18NC x 7/8in	
11	0641609	5	Bolt 3/8in-16NC x 1-1/8in	
12	0641610	32	Bolt 3/8in-16NC x 1-1/4in	
13	0641611	2	Bolt 3/8in-16NC x 1-3/8in	
14	0641614	2	Bolt 3/8in-16NC x 1-3/4in	
15	0641820	4	Bolt 1/2in-13NC x 2-1/2in	
16	0741610	2	Screw, Flat Head 3/8in-16NC x 1-1/4in	
17	0760815	4	Bolt M8 x 35mm	
18	0962172	1	Bushing, Flanged	
19	1320012	4	Clamp	
20	1320016	4	Clamp	
21	1320022	3	Clamp	
22	1320058	1	Clamp	
23	1320223	5	Clamp	
24	1320318	2	Clamp	
25	1340060	1	Air Cleaner Assembly	
25	7012664	1	Element, Air Cleaner	
26	1580011	1	Container, Coolant Overflow	
27	1660255	1	Coupling, Pump	
28	1703162	2	Decal - Caution Fan	
29	2720058	3 ft/0.9m	Hose	
30	3200378	4	Mount, Motor	
31		Ref	Muffler Options:	
31	3220113	1	Spark Arresting Muffler	
31	70001017	1	Clamp	
31	3220154	NLA	Catalytic Muffler (Use p/n 1001107116)	
31	70002705	1	Clamp	
31	70002706	1	Plug, Brass	
32	3311405	AR	Locknut 1/4in-20NC	
33	3311505	6	Locknut 5/16in-18NC	
34	3311605	19	Locknut 3/8in-16NC	
35	3311805	4	Locknut 1/2in-13NC	
36	3340399	2	Pad, Wear	
37	3572502	1	Plate, Air Control Side	
38	3572503	1	Plate, Air Control Top	
39	3573667	1	Plate, Radiator Support	
40	3574253	1	Plate, Engine Mounting (Front)	
41	3574259	2	Plate, Engine Mounting (Rear)	

ITEM	PART NUMBER	QTY	DESCRIPTION	REV
42	3740067	1	Relay, Assy	
43	3960438	6 ft/1.8m	Seal, Self Gripping	
44	4031711	4	Bolt M6 x 35mm	
45	4070497	4	Shim	
46	4070498	2	Shim	
47	4100025	19 in/48cm	Sleeve, Fiberglass	
48	4568743	1	Pipe, Exhaust	
49	4569176	1	Tube, Air Intake	
50	4711400	AR	Flatwasher 1/4in Thin	
51	4711500	8	Flatwasher 5/16in Thin	
52	4711600	20	Flatwasher 3/8in Thin	
53	4740274	4	Washer, Snubbing	
54	4751400	18	Flatwasher 1/4in Regular	
55	4751500	12	Flatwasher 5/16in Regular	
56	4751600	38	Flatwasher 3/8in Regular	
57	4751800	12	Flatwasher 1/2in Regular	
58	4791400	2	Starwasher 1/4in **(Prior to SN 0300151953)**	
59		Ref	Mount, Motor/Generator Options:	
59	4846821	1	Mount, Motor/Generator **(Prior to SN 0300151953)**	
59	1001102585	1	Mount, Motor/Generator **(SN 0300151953 through 0300203770)**	
60	4846852	1	Weldment, Engine Tray	
61	4891500	4	Flatwasher 5/16in Hardened	
62	4891600	2	Flatwasher 3/8in Hardened	
63	85941018	1	Clamp	
64	1001097588	1	Clip, Tube	
65	1001098525		Plate, Muffler Support	
66	1001099370	1	Engine, Perkins 404C-22	
67	1001100577	1	Hose, Radiator (Top)	
68	1001100825	2	Tie-Strap	
69	1001100837	1	Bracket, Bottle	
70	1001101201	1	Adapter, Fan Spacer	
71	1001101408	1	Fan	
72	1001101681	1	Elbow, Rubber	
73	1001101733	1	Mount, Radiator	
74	1001101950	1	Tube, Air Intake	
75	1001102706	1	Radiator	
75	7027412	1	Cap, Radiator	
75	70023056	1	Valve, Drain	
75	70004091	1	Shroud	
76	2720271	18 in/46cm	Hose	
77	2720615	6 in/15cm	Hose	
78	8405006	1	Clamp	
79	1001100818	1	Hose, Radiator (Bottom)	
80	1001121115	1	Mount, Relay **(SN 0300151953 through 0300203770)**	
81	0641405	2	Bolt 1/4in-20NC X 5/8in **(SN 0300151953 through 0300203770)**	
		Ref	**PERKINS ENGINE INSTALLATION**	
	1001103770	Ref	**Without Arctic Package**	B
	1001106461	Ref	**With Arctic Package**	A
101	0100011	AR	Locking, Compound	
102	0100020	AR	Sealant, Pipe	

SECTION 2 - TURNTABLE

ITEM	PART NUMBER	QTY	DESCRIPTION	REV
103	0361810	1	Bar, Battery Hold-Down	
104	0400075	1	Battery	
105	0630541	2	Bolt, Battery Hold-Down	
106	0641405	2	Bolt 1/4in-20NC x 5/8in	
107	0641410	4	Bolt 1/4in-20NC x 1-1/4in	
108	0641418	1	Bolt 1/4in-20NC x 2-1/4in	
109	0641616	3	Bolt 3/8in-16NC x 2in	
110	0642010	1	Bolt 5/8in-11NC x 1-1/4in	
111	0940049	2	Bumper, Hood	
112	1320022	7	Clamp, Fuel Line	
113	1320223	1	Clamp	
114	1320318	2	Clamp	
115	1701505	1	Decal, Diesel (Not Shown - See DECAL SECTION for Decal Location)	
116	2180536	1	Fitting, Barbed	
117	2200222	1	Plug, Pipe (Not Shown - Located in Bottom of Fuel Tank)	
118	2220250	1	Fitting, Reducer	
119	2220273	1	Fitting, Reducer	
120	2220313	1	Fitting, Elbow Barbed	
121	2220459	1	Fitting, Elbow	
122	2220794	1	Fitting, Straight Barbed	
123		Ref	Coolant, Anti-Freeze Options (Not Shown):	
123	2300004	2.7 Gal	Without Arctic Package	
123	2300041	2.7 Gal	With Arctic Package	
124	2720058	14 ft/4.2m	Hose	
125	2720271	12 ft/3.7m	Hose	
126	2750532	5 ft/1.6m	Hose	
127	3311405	4	Locknut 1/4in-20NC	
128	3311501	4	Nut 5/16in-18NC	
129	3311605	3	Locknut 3/8in-16NC	
130	3312005	1	Locknut 5/8in-11NC	
131	3340399	1	Pad, Wear	
132	3572504	1	Plate, Air Control Bottom	
133	3900255	1	Screw, Shoulder	
134	3960389	4 ft/1.2m	Seal, Self Gripping	
135	3960469	1	Seal, Foam	
136	4070497	2	Shim	
137	4070498	1	Shim	
138	4711400	3	Flatwasher 1/4in Thin	
139	4751400	10	Flatwasher 1/4in Regular	
140	4751500	4	Flatwasher 5/16in Regular	
141	4751600	8	Flatwasher 3/8in Regular	
142	4752000	1	Flatwasher 5/8in Regular	
143	4752200	2	Flatwasher 3/4in Regular	
144	1001094608	2	Bracket, Hood Latch	
145	1001100857	1	Separator, Fuel/Water	
145	70002378	1	O-Ring	
145	70002377	1	Filter, Fuel	
		Ref	**Note: Arctic Package Items 147-153 Not Shown - Used on Arctic Machines Only.**	
147	1060626	1	Cord, 3 Way Extension	
148	1702941	1	Decal - Battery Heater	

ITEM	PART NUMBER	QTY	DESCRIPTION	REV
149	1702943	1	Decal - Hydraulic Tank Heater (Located on bottom of Hydraulic Oil Tank)	
150	1702944	1	Decal - Heater Cord (Located on Between Battery and Engine)	
151	2580024	1	Heater, Battery (Located on Battery)	
152	2580050	1	Heater, Hydraulic Tank (Located on bottom of Hydraulic Oil Tank)	
153	3980007	1	Seat, Battery	
		Ref	**PERKINS ENGINE AND PUMP SUB-ASSEMBLY**	
	1001103769	Ref	**Without Arctic Package**	B
	1001106460	Ref	**With Arctic Package**	A
201	0100011	AR	Locking, Compound	
202	0641608	2	Bolt 3/8in-16NC x 1in	
203	0641812	2	Bolt 1/2in-13NC x 1-1/2in	
204		Ref	Oil, Engine Options (Not Shown):	
204	3020016	2.5 Gal	Without Arctic Package (15W-40)	
204	3020044	2.5 Gal	With Arctic Package (0W-40)	
205	3600404	1	Piston Pump Assembly (See PISTON PUMP ASSEMBLY for Breakdown)	
206	3600405	1	Gear Pump Assembly (See Items 301-305 for Breakdown)	
207	3790152	1	O-Ring	
208	4891600	2	Flatwasher 3/8in Hardened	
210	0630569	1	Bolt M14 x 1.5 x 30mm	
211	0641610	2	Bolt 3/8in-16NC x 1-1/4in	
212	2220567	1	Fitting, Elbow	
213	2221045	2	Fitting, Straight	
214	3600423	1	Auxiliary Pump Assembly (See AUXILIARY PUMP ASSEMBLY for Breakdown)	
215	4751600	2	Flatwasher 3/8in Wide	
216	4751800	2	Flatwasher 1/2in Wide	
217	1001102859	1	Battery Cable Kit	B
217A	7027022	1	Cable - Battery and Auxiliary Pump to Ground	
217B	7027024	1	Cable - Auxiliary Power Relay to Starter	
217C	7027023	1	Cable - Auxiliary Power Relay to Auxiliary Pump	
217D	7027021	1	Cable - Battery to Relays	
		Ref	**Note: Arctic Package Items 218-219 Not Shown - Used on Arctic Machines Only.**	
218	1702942	1	Decal - Engine Block Heater	
219	2580054	1	Heater, Engine Block	
	3600405	Ref	**GEAR PUMP ASSEMBLY WITH FITTINGS**	A
301	2220385	2	Fitting, Tee	
302	2220479	2	Fitting, Straight	
303	2220810	2	Fitting, Reducer	
304	3600368	1	Gear Pump Assembly Less Fittings	
304	7024962	1	Seal Kit - 3600368 Pump (Includes Soft Seals)	
		Ref	**Note: Seal Kit is only service part are available.**	
305	4640744	2	Valve, Check	
	1001099370	Ref	**ENGINE COMPONENTS**	
401	70001406	1	Valve, Relief	
401	70001407	1	Seal, O-Ring	
402	70002459	1	Sensor, Speed (Not Shown)	
403	70002436	1	Pump, Fuel Injection	
403	70001388	1	Shim 0.2MM	

ITEM	PART NUMBER	QTY	DESCRIPTION	REV
403	70001389	1	Shim 0.25mm	
403	70001390	1	Shim 0.3MM	
403	70001391	1	Shim 0.35mm	
403	70001392	1	Shim 0.4MM	
403	70001393	1	Shim 0.5MM	
403	70001394	1	Shim 0.5MM Flat	
404	70002100	1	Pipe, Fuel Injector (#1 Cylinder)	
404	70002101	1	Pipe, Fuel Injector (#2 Cylinder)	
404	70002102	1	Pipe, Fuel Injector (#3 Cylinder)	
404	70002103	1	Pipe, Fuel Injector (#4 Cylinder)	
405	70002437	1	Pipe, Fuel Injector Return	
406	70001412	1	Flywheel	
406	70001413	1	Ring, Starter	
407	70001414	1	Starter	
408	70002438	1	Dipstick	
408	70002439	1	Tube, Dipstick	
408	70002440	3	O-Ring	
409	70002441	1	Washer, Drain Plug Sealing	
410	70001404	1	Cap, Oil Fill	
410	70001405	1	Seal, Oil Fill Cap	
411	70001403	1	Filter, Oil	
412	70002442	1	Connector, Oil Filter	
413	70002443	1	Thermostat	
413	70001399	1	Gasket, Thermostat Neck to Thermostat Housing	
413	70001401	1	Gasket, Thermostat Housing to Engine Block	
414	70002444	1	Pump, Water (Includes p/n 70002445 Only)	
414	70002445	1	Gasket, Water Pump to Plate	
415	70002446	1	Hose, Water Pump to Engine Head	
416	70001417	1	Alternator	
417	70002447	1	Belt	
418	70002099	1	Gasket, Head Cover	
419	70001418	1	Valve, Breather	
420	70001416	1	Gasket, Exhaust Manifold to Engine Block	
421	70001419	1	Gasket, Exhaust Manifold to Exhaust Tube	
422	70002448	1	Pump, Lift	
422	70001411	1	Seal, O-Ring	
423	70002449	1	Fuel Filter Head Assembly	
423	70002450	1	Fuel Filter	
424	70001395	4	Glowplug	
425	70002451	1	Module, Engine Control	
425	70002452	1	Harness, Wiring	
425	70002453	1	Bracket	
425	70002454	1	Isolator	
426	70002455	1	Sensor, Speed	
427	70002456	1	Actuator	
427	70002108	1	Washer	
428	70002457	1	Switch, Oil Pressure	
429	70002458	1	Switch, Water Temperature	

FIGURE 2-18. PISTON PUMP ASSEMBLY

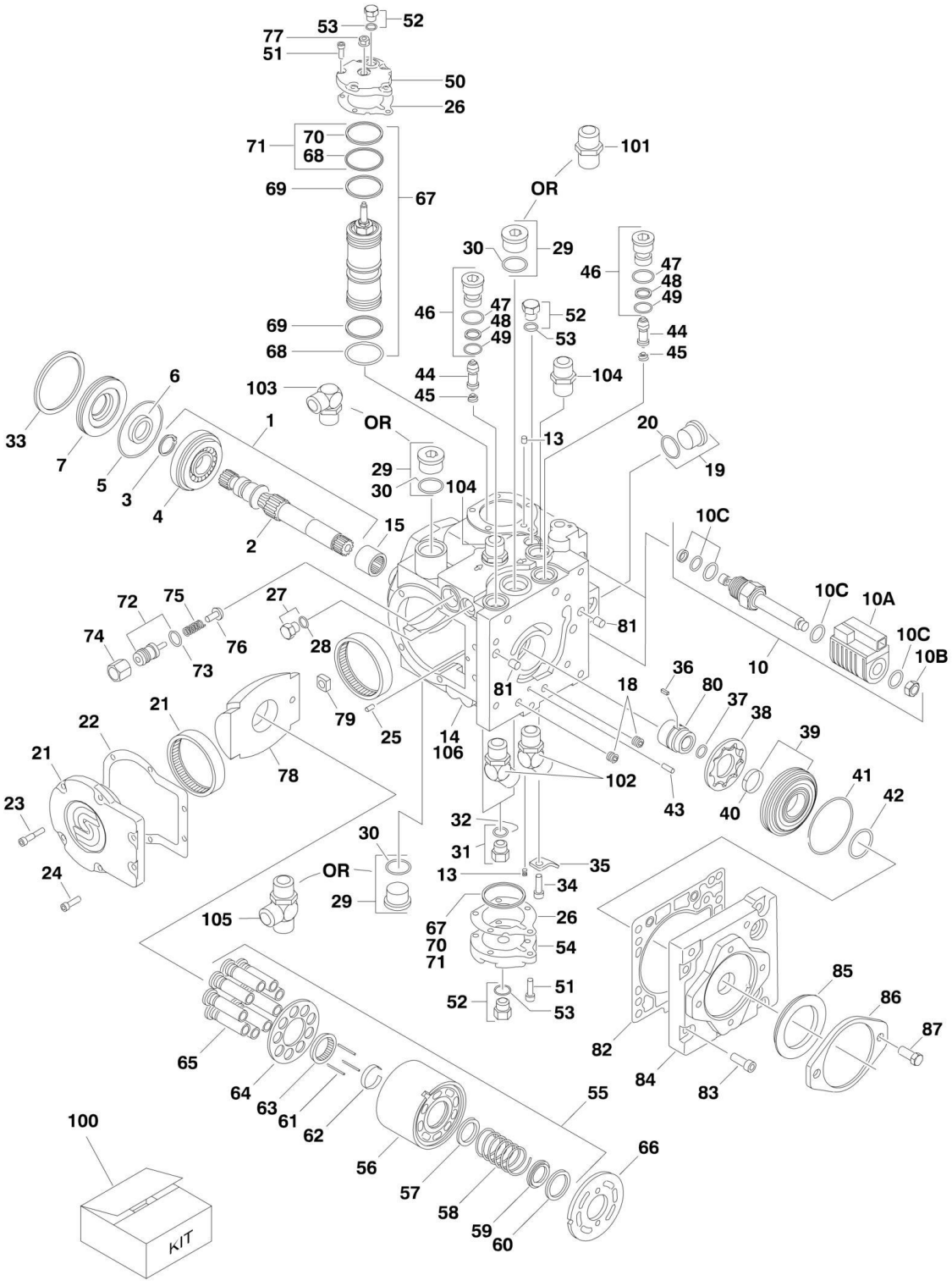

FIGURE 2-18. PISTON PUMP ASSEMBLY

ITEM	PART NUMBER	QTY	DESCRIPTION	REV
	3600385	Ref	**PISTON PUMP ASSEMBLY**	B
1	7021240	1	Shaft Assembly (Includes Items 2-4)	
2	7021237	1	Shaft	
3	7021238	1	Ring, Retaining	
4	7021239	1	Bearing, Roller	
5	See Note	NSS	O-Ring (Note: Use Item 100)	
6	7021242	1	Seal, Lip	
7	7021243	1	Carrier, Seal Shaft	
10	7024855	1	Solenoid Assembly (Includes Items 10A-10C)	
10A	7024856	2	Coil	
10B	7024857	2	Nut	
10C	7024858	2	Seal Kit - 7024855 Cartridge	
13	7022377	2	Orifice	
14	7022378	1	Housing Assembly (Includes Items 15-20)	
15	7021249	1	Bearing, Needle	
18	7001485	2	Plug	
19	7022380	1	Plug (Includes Item 20)	
20	7022381	1	O-Ring	
21	7021248	1	Side Cover Assembly (Includes Item 22)	
22	See Note	NSS	Gasket (Note: Use Item 21 or 100)	
23	7021255	4	Screw	
24	7021251	2	Screw	
25	7021250	1	Pin	
26	See Note	NSS	Gasket (Note: Use Item 100)	
29	7007419	2	Plug Assembly	
30	See Note	NSS	O-Ring (Note: Use Item 29 or 100)	
31	7007470	2	Plug Assembly	
32	See Note	NSS	O-Ring (Note: Use Item 31 or 100)	
33	7021257	1	Ring, Retaining	
34	7021251	1	Screw	
35	7022340	1	Bracket, Lifting	
36	7022342	1	Key	
37	7022341	1	Ring, Retaining	
38	7021258	1	Gerotor	
39	7021260	1	Gerotor Cover Assembly	
40	7021259	1	Bearing, Journal	
42	7021280	1	O-Ring	
43	See Note	1	Pin (Note: Not Available for Purchase.)	
44	7021263	2	SCR Valve	
45	7024800	2	Spring	
46	7021265	2	Bypass Valve Assembly (Includes Items 47-49)	
47	See Note	NSS	O-Ring (Note: Use Item 46 or 100)	
48	See Note	NSS	Ring, Back Up (Note: Use Item 46 or 100)	
49	See Note	NSS	O-Ring (Note: Use Item 46 or 100)	
50	7022382	1	Cover, Servo	
51	7021255	10	Screw	
52	7007470	1	Plug Assembly	
53	See Note	NSS	O-Ring (Note: Use Item 52 or 100)	
54	7021268	1	Cover, Servo	
55	7021269	1	Cylinder Block Assembly (Includes Items 56-65)	

ITEM	PART NUMBER	QTY	DESCRIPTION	REV
56	7021270	1	Cylinder Block	
57	7021271	1	Washer	
58	7021272	1	Spring	
59	7021273	1	Washer	
60	7021274	1	Ring, Retaining	
61	7021275	3	Pin, Slipper Hold Down	
62	7021276	1	Retainer, Hold Down Pin	
63	7021277	1	Guide, Slipper Retainer	
64	7021278	1	Retainer, Slipper	
65	7021279	9	Piston Assembly	
66	7021281	1	Plate, Valve	
67	7022385	1	Servo Piston Assembly (Includes Items 68-70)	
68	See Note	2	O-Ring (Note: Use Items 67, 71 or 100)	
69	See Note	2	Ring, Bearing (Note: Use items 67, 71 or 100)	
70	See Note	2	Ring, Piston (Note: Use Items 67, 71 or 100)	
71	7007412	1	Servo Piston Ring Kit (Includes Items 68 & 70 Only)	
72	7022346	1	Plug Assembly	
73	7021280	1	O-Ring	
74	7021290	1	Nut	
75	7022347	1	Spring	
76	7024804	1	Poppet	
77	7021280	1	Nut, Seal	
78	7022386	1	Swash Plate	
79	7022387	1	Slider, Block	
80	7021294	1	Coupling	
81	7001481	2	Pin	
82	70002257	1	Gasket	
83	7021296	7	Screw	
84	7021297	1	Cover, Charge Pump	
85	7021298	1	Seal	
86	7021299	1	Plate, Cover	
87	7007289	2	Screw	
100	7021280	1	Seal Kit (Includes Items 5-6, 22, 26, 30, 32, 42, 47-49, 53, 68-70, 73, 77 & 82)	
	3600404	Ref	**PISTON PUMP SUB-ASSEMBLY**	B
101	2220376	1	Fitting, Straight	
102	2220498	2	Fitting, Elbow	
103	2220578	1	Fitting, Elbow	
104	2220947	2	Fitting, Straight	
105		Ref	Fitting Options:	
105	2221041	1	Fitting **(SN 0300096000 through 0300115395)**	
105	2220375	1	Fitting **(SN 0300115396 through 0300203770)**	
106	3600385	1	Pump Assembly (Includes Items 1-87)	

FIGURE 2-19. AUXILIARY PUMP ASSEMBLY

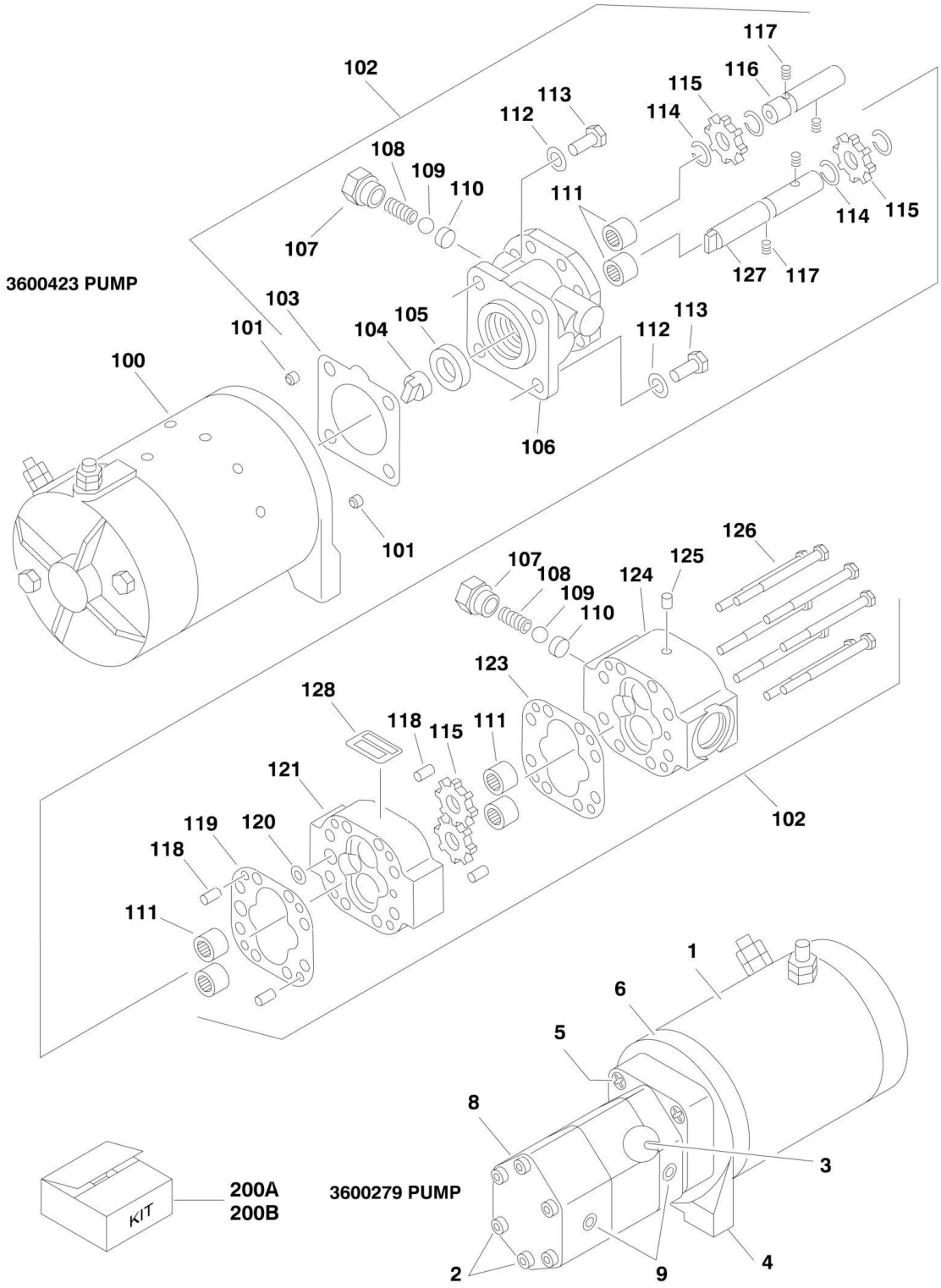

FIGURE 2-19. AUXILIARY PUMP ASSEMBLY

ITEM	PART NUMBER	QTY	DESCRIPTION	REV
		Ref	**AUXILIARY PUMP ASSEMBLIES**	
		Ref	**Usage:**	
	3600279	Ref	**Auxiliary Pump Assemblies (Original Equipment) (SN 0300096000 through 0300105248)**	
	3600423	Ref	**Auxiliary Pump Assemblies (Service Replacement) (SN 0300096000 through 0300105248)**	
	3600423	Ref	**Auxiliary Pump Assemblies (SN 0300105249 through 0300203770)**	
		Ref	**Note: Original Equipment pump may have been replaced with Service Replacement pump. Identify Pump by p/n before ordering replacement parts.**	
	3600279	Ref	**AUXILIARY PUMP ASSEMBLY**	B
1	7016768	1	Motor, Replacement	
1	7013757	1	Brush Kit	
2	7016745	4	Capscrew, Socket Head 5/16in-24NF x 4-3/4in	
3	7013711	1	Coupling, Drive	
4	7016769	1	Bracket, Mounting	
5	7016744	2	Screw 5/16in-18NC x 1in	
6	7016746	1	Adapter, Mounting	
7	7013766	2	Pin (Not Shown)	
8	7013771	1	Pump, Replacement	
9	See Note	2	Valve, Check (Note: Not Available for Purchase)	
	3600423	Ref	**AUXILIARY PUMP ASSEMBLY**	A
100	7011067	1	Motor and Adapter	
101	See Note	2	Setscrew (Note: Not Available - Purchase Locally.)	
102	70000978	1	Pump Assembly (Includes Items 103-127)	
103	7011044	1	Gasket, Mounting	
104	7011016	1	Coupling	
105	70000969	1	Seal, Shaft	
106	See Note	1	Stator (Note: Use Item 102)	
107	See Note	2	Cap Assembly (Note: Use Item 102)	
108	See Note	2	Spring (Note: Use Item 102)	
109	See Note	2	Ball (Note: Use Item 102)	
110	See Note	2	Seat (Note: Use Item 102)	
111	70000976	6	Bearing, Needle	
112	See Note	4	Washer (Note: Use Item 102)	
113	See Note	4	Screw (Note: Use Item 102)	
114	70000970	4	Ring, Retaining	
115	70000971	4	Gear	
116	70000972	1	Shaft, Idler	
117	70000978	4	Pin, Drive	
118	70000978	4	Pin, Dowel	
119	70000973	1	Gasket	
120	See Note	1	O-Ring (Note: Use Item 200C)	
121	See Note	1	Housing, Gear (Note: Use Item 102)	
122	See Note	1	Label (Note: Not Available for Purchase)	
123	7000974	1	Gasket	
124	See Note	1	Housing, Gear (Note: Use Item 102)	
125	See Note	1	Plug (Note: Use Item 102)	
126	See Note	8	Screw (Note: Use Item 102)	
127	70000975	1	Shaft, Drive	

SECTION 2 - TURNTABLE

ITEM	PART NUMBER	QTY	DESCRIPTION	REV
128	See Note	1	Label (Note: Not Available for Purchase)	
200		Ref	**SEAL KIT OPTIONS**	
200A	7016701	4	O-Rings - 3600279 Pump	
200B	7000754	1	Seal, Shaft	
200C	70000977	1	Seal Kit - 3600423 Assembly (Includes Items 103, 105, 120 and Qty 2 O-Rings for Item 107)	

FIGURE 2-20. DUAL FUEL INSTALLATIONS (GM MACHINES ONLY)

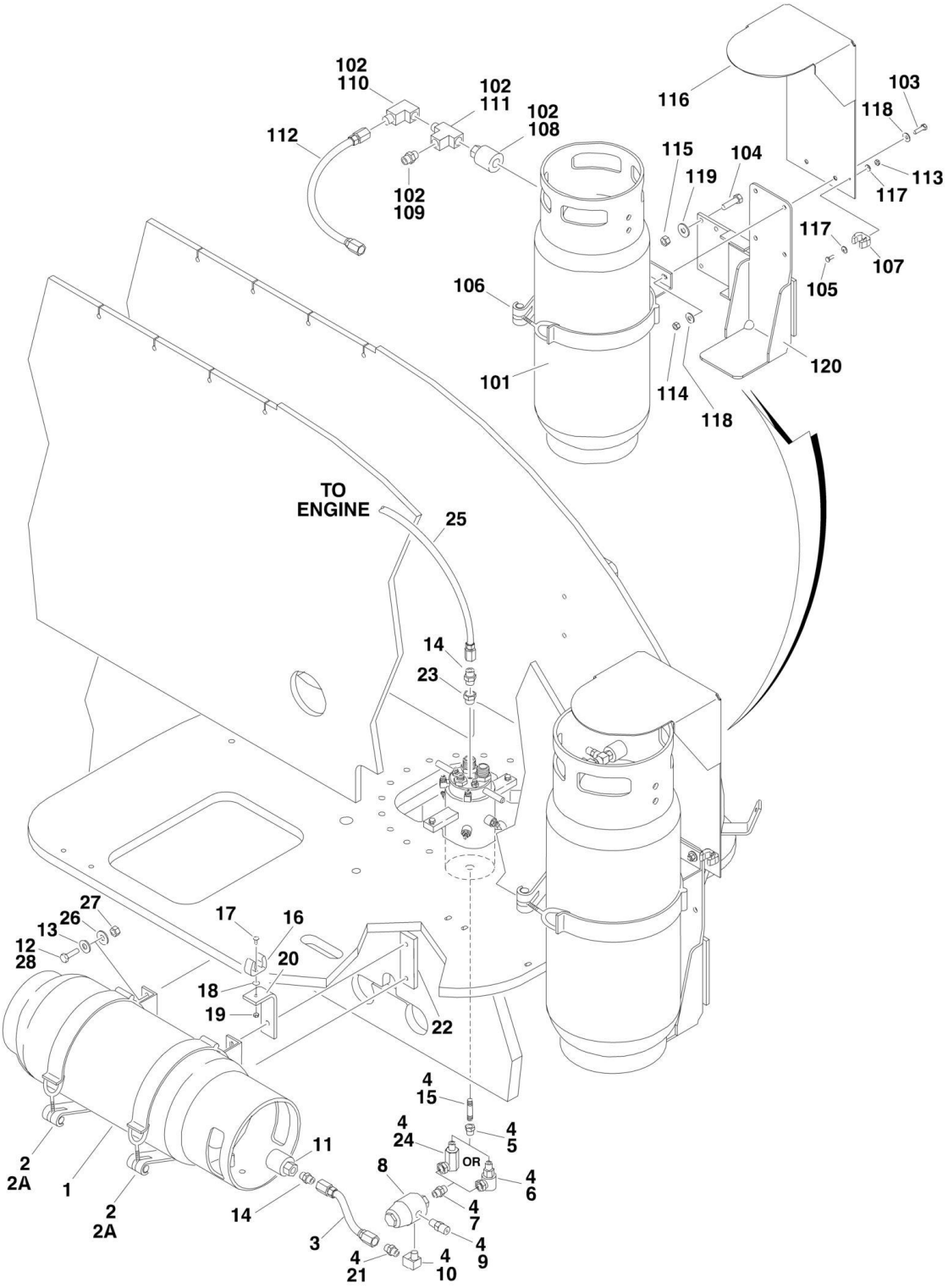

FIGURE 2-20. DUAL FUEL INSTALLATIONS (GM MACHINES ONLY)

ITEM	PART NUMBER	QTY	DESCRIPTION	REV
		Ref	**LP TANK AND BRACKETS INSTALLATION - FRAME MOUNTED**	
	0259144	Ref	**LP Tank and Brackets Installation (SN 0300096000 through 0300161284)**	4-D
	1001143393	Ref	**LP Tank and Brackets Installation (SN 0300161285 through 0300203770)**	B
1		Ref	Tank, LP Options:	
1	4400275	1	Aluminum	
1	4400420	1	Steel	
2	1320220	1	Clamp Kit	
2A	1320127	1	Toggle	
3	2720144	1	Hose	
4	0100020	AR	Sealant, Pipe	
5	2221019	1	Fitting, Reducer	
6	2180125	1	Fitting, Elbow	
7	2220261	1	Fitting, Nipple	
8	2180388	1	Filter, Bulkhead	
9	2180389	1	Valve, Relief	
10	2220648	1	Fitting, Elbow	
11	2180387	1	Fitting, LP	
12		Ref	Bolt 3/8in-16NC Options:	
12	0641606	4	Bolt 3/8in-16NC x 3/4in	
12	0641615	4	Bolt 3/8in-16NC x 1-7/8in	
13	4751600	4	Flatwasher 3/8in Regular	
14	2180418	2	Fitting, Straight	
15	2221018	1	Fitting, Nipple	
16	1320218	1	Clamp, Spring	
17	3910808	1	Screw #8-32NC x 1in	
18	4750800	2	Flatwasher #8 Regular	
19	3310805	1	Locknut #8-32NC	
20	0181949	1	Angle, Support	
21	2221024	1	Fitting, Union	
22	0362519	2	Bar, Mounting (Part of Frame Only) **(SN 0300096000 through 0300161285)**	
23	2220005	1	Fitting, Reducer	
24	2220082	1	Fitting Only **(SN 0300096000 through 0300109274)**	
25	2720392	1	Hose	
26	4891600	4	Flatwasher 3/8in Hardened	
27	3311601	1	Nut 3/8in-16NC	
28	0100011	AR	Compound, Locking	
	0270659	Ref	**LP TANK AND BRACKETS INSTALLATION - TURNTABLE MOUNTED ONLY (SN 0300096000 through 0300161285)**	A
101	4400275	1	Tank, LP	
102	0100020	AR	Sealant, Pipe	
103	0641610	2	Bolt 3/8in-16NC x 1-1/4in	
104	0641814	3	Bolt 1/2in-13NC x 1-3/4in	
105	0721005	1	Screw	
106	1320126	1	Clamp, Tank	
107	1320218	1	Clamp, Spring	
108	2180387	1	Fitting	
109	2180389	1	Fitting, Relief Valve	

SECTION 2 - TURNTABLE

ITEM	PART NUMBER	QTY	DESCRIPTION	REV
110	2180504	1	Fitting, Elbow	
111	2220290	1	Fitting, Tee	
112	2720149	1	Hose	
113	3311005	1	Locknut #10-24NC	
114	3311605	2	Locknut 3/8in-16NC	
115	3311805	3	Locknut 1/2in-13NC	
116	4061012	1	Shield, LP Tank	
117	4751000	2	Flatwasher #10 Regular	
118	4751600	4	Flatwasher 3/8in Regular	
119	4751800	3	Flatwasher 1/2in Regular	
120	4846310	1	Mount, Tank	

FIGURE 2-21. TANK INSTALLATIONS

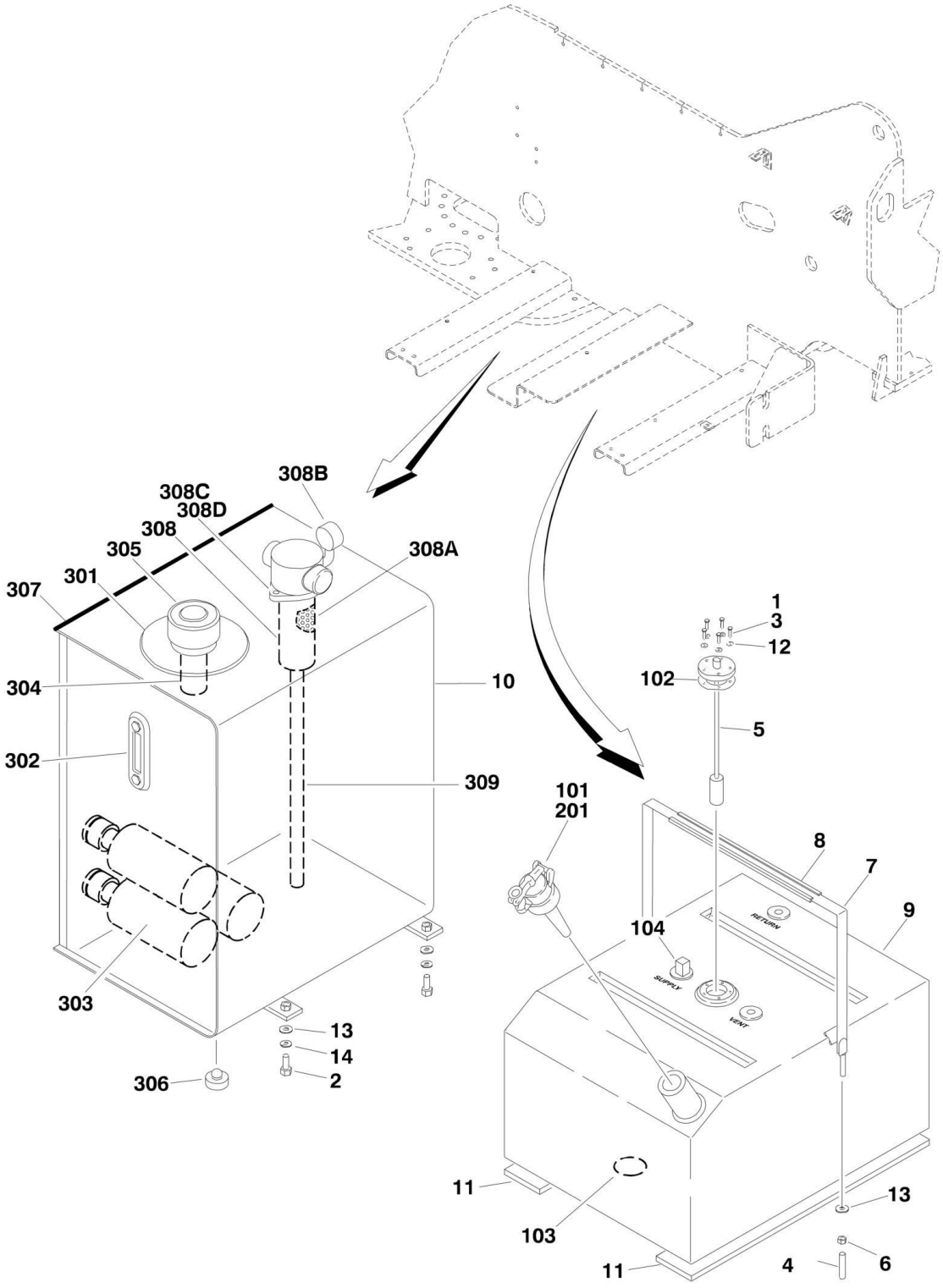

FIGURE 2-21. TANK INSTALLATIONS

ITEM	PART NUMBER	QTY	DESCRIPTION	REV
		Ref	**TANKS INSTALLATION**	
	0272731	Ref	**All Machines (SN 0300096000 through 0300109273)**	C
		Ref	**Diesel Machines**	
	0272731	Ref	**Diesel Machines (SN 0300109274 through 0300178757)**	D
	1001143604	Ref	**Diesel Machines (SN 0300178758 through 0300203770)**	C
		Ref	**Gas Machines**	
	1001091566	Ref	**Gas Machines (SN 0300109274 through 0300178757)**	B
	1001143605	Ref	**Gas Machines (SN 0300178758 through 0300203770)**	B
1	0100011	AR	Locking, Compound	
2	0641608	4	Bolt 3/8in-16NC x 1in	
3		Ref	Screw, Indented Options:	
3	0731007	NLA	Screw, Indented #10-24NC (Use p/n 0731005) **(Prior to SN 0300189454)**	
3	0731005	5	Screw, Indented #10-32NC x .625 **(SN 0300189454 through 0300203770)**	
4	1120532	2	Cap, Protector	
5		Ref	Gauge, Fuel Level Options:	
5	2420191	1	Gauge, Fuel Level **(SN 0300109274 through 0300178757)**	
5	1001148607	1	Gauge, Fuel Level **(SN 0300178758 through 0300203770)**	
5	3960525	1	Gasket, Sender	
6	3311601	2	Nut 3/8in-16NC	
7	4240135	1	Strap, Tank Mount	
8	4280295	2.2 ft/0.7m	Strip, Bumper	
9		Ref	Tank, Fuel Options (See Items 101-104 for Breakdown):	
9	4400429	NLA	All Machines **(SN 0300096000 through 0300109273)**	
9		Ref	Diesel Machines Options:	
9	4400429	NLA	Diesel Machines **(SN 0300109274 through 0300189453)**	
9	1001160571	1	Diesel Machines **(SN 0300189454 through 0300203770)**	
9		Ref	Gas Machines Options:	
9	1001091559	NLA	Gas Machines **(SN 0300109274 through 0300185525)**	
9	1001160560	1	Gas Machines **(SN 0300185526 through 0300203770)**	
10		Ref	Hydraulic Tank Assembly (See Items 301-309 for Breakdown)	
10	4400450	NLA	Hydraulic Tank Assembly **(SN 0300069000 through 0300178757)**	
10	1001147118	1	Hydraulic Tank Assembly **(SN 0300178758 through 0300203770)**	
11	4420038	6 ft/1.8m	Tape, Rubber	
12	4751000	5	Flatwasher #10 Regular	
13	4751600	6	Flatwasher 3/8in Regular	
14	4761600	6	Lockwasher 3/8in	
		Ref	**FUEL TANK ASSEMBLY**	
	4400429	Ref	**All Machines (SN 0300096000 through 0300109273)**	D
	4400429	Ref	**Diesel Machines (SN 0300109274 through 0300189453)**	D
	1001160571	Ref	**Diesel Machines (SN 0300189454 through 0300203770)**	C
	1001091559	Ref	**Gas Machines (SN 0300109274 through 0300203770)**	A
	1001160560	Ref	**Gas Machines (SN 0300185526 through 0300203770)**	B
101	See Note	1	Cap, Fill (Note: Tank Includes Non-Locking Cap) (Note: See Item 201)	
102	7016680	1	Gasket, Cover Plate	
103	See Note	1	Plug (Note: Not Available - Purchase Locally.)	

SECTION 2 - TURNTABLE

ITEM	PART NUMBER	QTY	DESCRIPTION	REV
104	7020043	1	Tube	
201		Ref	**FUEL CAP OPTIONS:**	
201	1120484	1	Locking Cap (Red - Gas Machines Only) **(SN 0300096000 through 0300109274)**	
201		Ref	Standard Non-Locking Cap Options:	
201	7016314	1	All Machines **(SN 0300096000 through 0300109273)**	
201	7016314	1	Diesel Machines **(SN 0300109274 through 0300189453)**	
201	70004414	1	Diesel Machines **(SN 0300189454 through 0300203770)**	
201	70001103	1	Gas Machines **(SN 0300109274 through 0300203770)**	
		Ref	**HYDRAULIC TANK ASSEMBLY**	
	4400450	Ref	Hydraulic Tank Assembly **(SN 0300069000 through 0300178757)**	G
	1001147118	Ref	**Hydraulic Tank Assembly (SN 0300178758 through 0300203770)**	B
301	7024439	1	Cover	
301	7024440		Gasket	
302	7024441	1	Gauge, Sight	
303	7024442	3	Strainer	
304	7024443	1	Filler Neck Assembly	
304	7024445	1	Strainer	
305	7024444	1	Cap, Fill	
306	7024446	1	Plug, Magnetic	
307	4060803	22 in/56cm	Flex-Trim	
308	70001959	1	Filter (was p/n 7020226)	
308A	7023205	1	Element (Filter p/n 7020226)	
308A	70001960	1	Element (Filter p/n 70001959)	
308B	See Note	1	Gauge, Pressure (Note: Not Available for Purchase)	
308C	7023306	1	Seal	
308D	70002768	1	Spring	
309	70001863	1	Pipe	

FIGURE 2-22. ROTARY COUPLING INSTALLATION (SN 0300096000 through 0300140364)

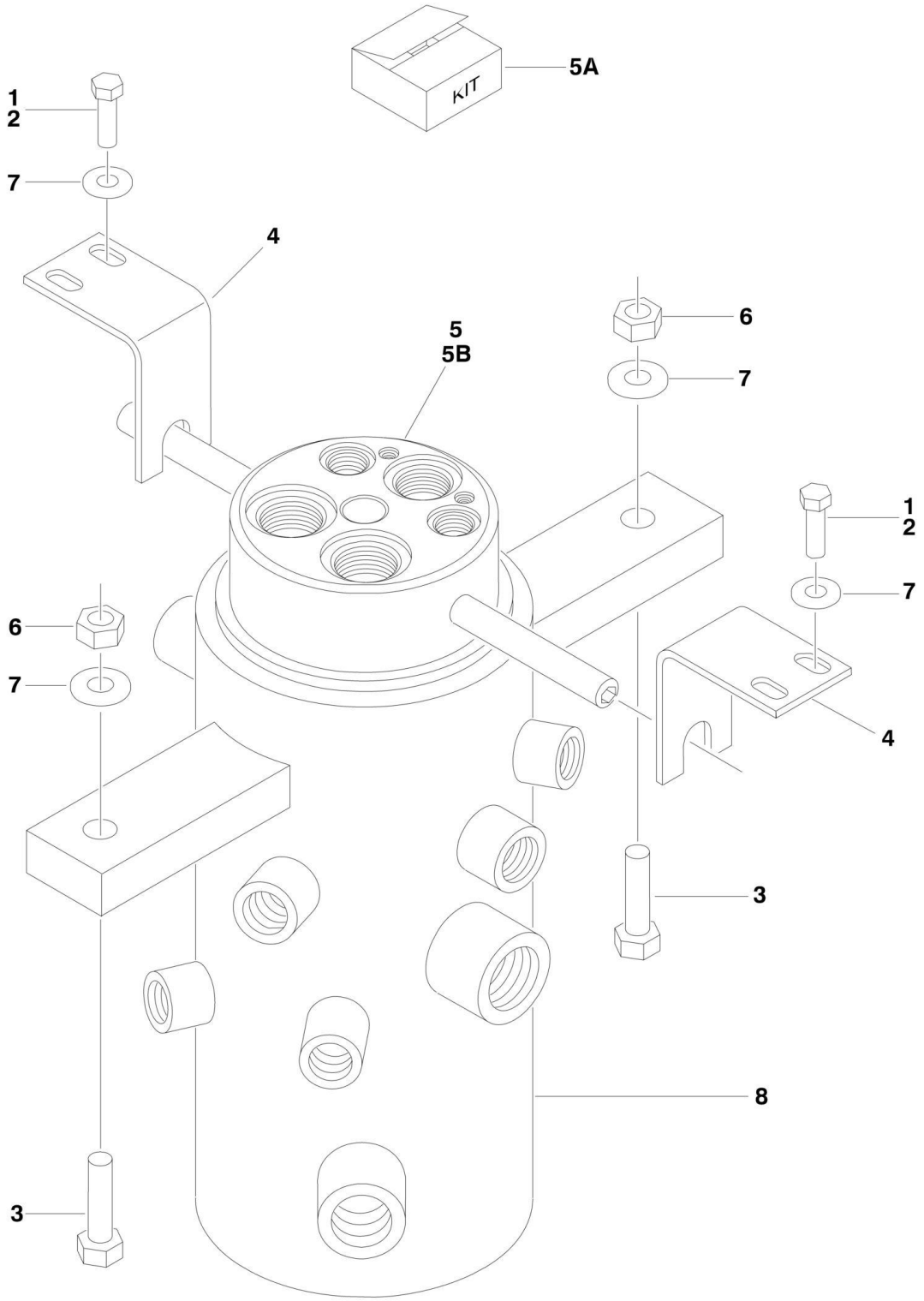

FIGURE 2-22. ROTARY COUPLING INSTALLATION (SN 0300096000 through 0300140364)

ITEM	PART NUMBER	QTY	DESCRIPTION	REV
	0259155	Ref	**ROTARY COUPLING INSTALLATION**	D
1	0100011	AR	Locking, Compound	
2	0641810	4	Bolt 1/2in-13NC x 1-1/4in	
3	0641826	2	Bolt 1/2in-13NC x 3-1/4in	
4	0902556	2	Bracket	
5	1660219	1	Coupling, Rotary	
5A	7013187	1	Seal Kit	
5B	1660219RR	1	Rebuilt Coupling	
6	3311801	2	Nut 1/2in-13NC	
7	4751800	8	Flatwasher 1/2in Regular	

FIGURE 2-23. ROTARY COUPLING INSTALLATION (SN 0300140365 through 0300203770)

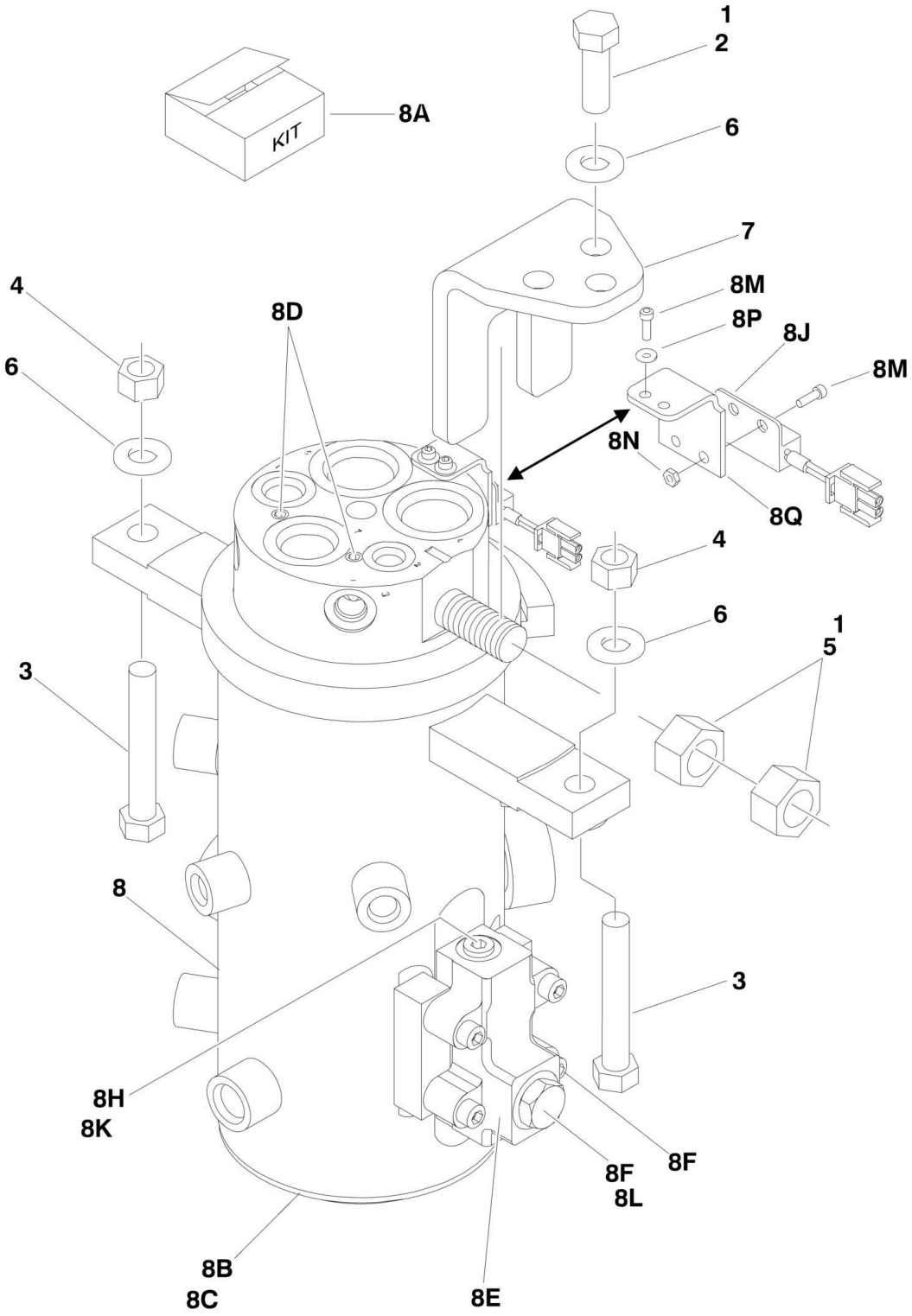

FIGURE 2-23. ROTARY COUPLING INSTALLATION (SN 0300140365 through 0300203770)

ITEM	PART NUMBER	QTY	DESCRIPTION	REV
	1001109542	Ref	**ROTARY COUPLING INSTALLATION**	C
1	0100011	AR	Locking, Compound	
2	0641812	3	Bolt 1/2in-13NC x 1-1/2in	
3		Ref	Bolt 1/2in-13NC Options:	
3	0641826	2	Bolt 1/2in-13NC x 3-1/4in	
3	0641828	2	Bolt 1/2in-13NC x 3-1/2in	
4	3311805	2	Locknut 1/2in-13NC	
5	3322201	2	Nut 3/4in-16NC	
6	4711800	7	Flatwasher 1/2in Thin	
7	1001106837	1	Mount, Swivel	
8	1001106974	1	Coupling, Rotary	
8A	70001248	1	Seal Kit	
8B	7026503	2	Ring, Thrust	
8C	7026504	1	Ring, Retaining	
8D	80934561	2	Plug	
8E	7024404	1	Valve Assembly	
8F	7026197	4	Bolt 5/16in-18 NC x 1-1/4in	
8G	7026507	1	Plug, W/O-ring	
8H	7026505	1	Plug	
8J	4360517	1	Switch, Proximity	
8K	7026506	1	Valve, Check	
8L	7026509	1	Spring, Compression	
8M	See Note	4	Screw, Socket Head #10-24NC x 1/2in (Note: Not Available - Purchase Locally)	
8N	See Note	2	Locknut #10-24NC (Note: Not Available - Purchase Locally)	
8P	See Note	2	Flatwasher #10 (Note: Not Available - Purchase Locally)	
8Q	70003454	1	Bracket, Switch Mounting	

FIGURE 2-24. GROUND CONTROL BOX ASSEMBLY (WITHOUT UGM)

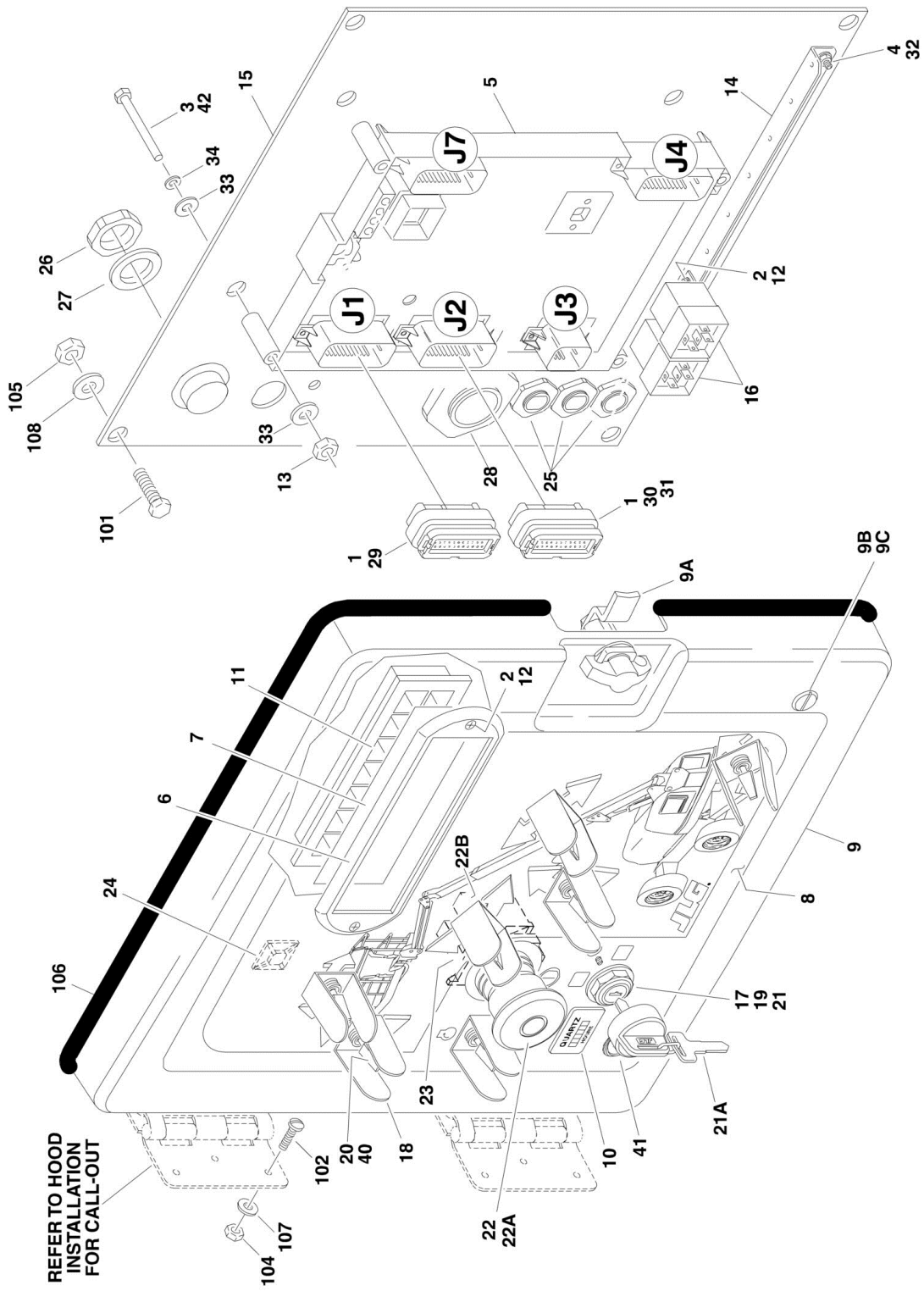

FIGURE 2-24. GROUND CONTROL BOX ASSEMBLY (WITHOUT UGM)

ITEM	PART NUMBER	QTY	DESCRIPTION	REV
		Ref	**NOTE: FOR MODULE IDENTIFICATION, REFER TO REVISION LOG PAGE A.**	
		Ref	**GROUND CONTROL BOX ASSEMBLIES**	
		Ref	**Ground Control Box Assemblies 400S: (SN 0300096000 through 0300099083)**	
	0861706	Ref	**Caterpillar Engine (ANSI and ANSI Export Specs)**	E
	0861708	Ref	**Caterpillar Engine (Australian and CE Specs)**	E
	0861736	Ref	**Deutz Engine (ANSI and ANSI Export Specs)**	C
	0861737	Ref	**Deutz Engine (Australian and CE Specs)**	C
	0861774	Ref	**GM Engine (ANSI and ANSI Export Specs)**	C
		Ref	**Ground Control Box Assemblies 460SJ: (SN 0300096000 through 0300099083)**	
	0861707	Ref	**Caterpillar Engine (ANSI and ANSI Export Specs)**	E
	0861709	Ref	**Caterpillar Engine (Australian and CE Specs)**	E
	0861739	Ref	**Deutz Engine (ANSI and ANSI Export Specs)**	D
	0861738	Ref	**Deutz Engine (Australian and CE Specs)**	C
	0861773	Ref	**GM Engine (ANSI and ANSI Export Specs)**	C
		Ref	**Ground Control Box Assemblies 400S: (SN 0300099084 through 0300203770)**	
	1810111	Ref	**Caterpillar and Perkins Engine (ANSI and ANSI Export Specs)**	D
	1810112	Ref	**Caterpillar and Perkins Engine (Australian and CE Specs)**	D
	1810109	Ref	**Deutz Engine (ANSI and ANSI Export Specs)**	D
	1810110	Ref	**Deutz Engine (Australian and CE Specs)**	D
	1810108	Ref	**GM Engine (ANSI and ANSI Export Specs)**	D
		Ref	**Ground Control Box Assemblies 460SJ: (SN 0300099084 through 0300203770)**	
	1810116	Ref	**Caterpillar and Perkins Engine (ANSI and ANSI Export Specs)**	D
	1810117	Ref	**Caterpillar and Perkins Engine (Australian and CE Specs)**	D
	1810114	Ref	**Deutz Engine (ANSI and ANSI Export Specs)**	D
	1810115	Ref	**Deutz Engine (Australian and CE Specs)**	D
	1810113	Ref	**GM Engine (ANSI and ANSI Export Specs)**	E
1	0100048	AR	Grease, Dielectric	
2	0630518	AR	Capscrew, Button Head	
3	0630548	5	Tap Bolt, 2-1/2in	
4	0721004	2	Screw #10-24NC x 1/2in	
5	1600411	1	Module, Ground Control (Re-calibration Required when Replaced)	
6	1670829	1	Bezel	
7	1706712	1	Decal - Ground Control Display	
8		Ref	Decal - Faceplate Options:	
8	1704465	1	Decal 400S **(SN 0300096000 through 0300099083)**	
8	1706946	1	Decal 400S **(SN 0300099084 through 0300135380)**	
8	1001102595	1	Decal 400S **(SN 0300135381 through 0300203770)**	
8	1704466	1	Decal 460SJ **(SN 0300096000 through 0300099083)**	
8	1706945	1	Decal 460SJ **(SN 0300099084 through 0300135380)**	
8	1001102596	1	Decal 460SJ **(SN 0300135381 through 0300203770)**	
9		Ref	Lid Assembly Options:	
9	1780307	1	Lid Assembly With Item 9A	
9	1001109545	1	Lid Assembly Without Item 9A	

ITEM	PART NUMBER	QTY	DESCRIPTION	REV
9A	2940073	1	Latch	
9B	7024319	2	Screw	
9C	7024320	2	Retainer	
10	2420172	1	Gauge, Hourmeter	
11	2760105	1	Housing, Display Light	
12	3300408	AR	Locknut, Plastic Insert	
13	3311401	AR	Nut 1/4in-20NC	
14	3539275	1	Bracket, Relay Mounting	
15	3572827	1	Plate	
16	3740049	AR	Relay	
17	3910804	6	Screw #8-32NC x 1/4in	
18	4060906	AR	Shield, Toggle Switch	
19	4070987	1	Shim.015	
20	4360328	AR	Switch, Toggle	
21		Ref	Switch, Key Options:	
21	4360469	1	ANSI and ANSI Export Specs	
21	4360470	1	Australian and CE Specs	
21A	2860030	1	Key	
22	4360475	1	Switch, Emergency Stop	
22A	7020175	1	Cap, Mushroom Head	
22B	7020176	1	Block, Contact	
23	4360476	1	Switch, Contact Block	
24	4460234	AR	Base, Tie-Strap	
25	4460428	3	Connector, Strain Relief	
26	4460470	1	Nut, Terminal	
27	4460471	1	Washer, Terminal	
28	4460526	1	Connector, Strain Relief	
29	4460874	1	Connector, Natural	
30	4460875	1	Connector, Gray	
31	4460905	4	Connector, Amp Seal Plug	
32	4751000	2	Flatwasher #10 Regular	
33	4751400	AR	Flatwasher 1/4in Regular	
34	4761400	AR	Lockwasher 1/4in	
35		Ref	Engine Harness Assembly (Not Shown - See ELECTRICAL SECTION for Breakdown)	
35	4923356	1	Caterpillar and Perkins Engine Machines **(SN 0300096000 through 0300099083)**	
35	4923580	1	Caterpillar and Perkins Engine Machines **(SN 0300099084 through 0300119200)**	
35	1001098839	1	Caterpillar and Perkins Engine Machines **(SN 0300119201 through 0300203770)**	
35	4923260	1	Deutz Engine Machines	
35	4923419	1	GM Engine Machines	
36	4922538	1	Valve Harness Assembly (Not Shown - See ELECTRICAL SECTION for Breakdown)	
37		Ref	Ground Control Box Harness Assembly (Not Shown - See ELECTRICAL SECTION for Breakdown)	
37	4923456	1	Caterpillar Engine Machines **(SN 0300096000 through 0300099083)**	
37	4923261	1	Deutz and GM Engine Machines **(SN 0300096000 through 0300099083)**	
37	4923583	1	Caterpillar, Perkins and GM Engine Machines **(SN 0300099084 through 0300203770)**	

ITEM	PART NUMBER	QTY	DESCRIPTION	REV
37	4923583	1	Deutz Engine Machines **(SN 0300099084 through 0300203770)**	
40	3790012	AR	O-Ring	
41	1705132	1	Decal - ADE Control **(SN 0300096000 through 0300099084)**	
42	0100011	AR	Locking, Compound	
		Ref	**GROUND CONTROL BOX INSTALLATIONS**	
		Ref	**Ground Control Box Installations 400S:**	
	0274415	Ref	**Caterpillar and Perkins Engine (ANSI and ANSI Export Specs)**	3
	0274417	Ref	**Caterpillar and Perkins Engine (Australian and CE Specs)**	3
	0271657	Ref	**Deutz Engine (ANSI and ANSI Export Specs)**	8
	0271660	Ref	**Deutz Engine (Australian and CE Specs)**	8
	0275059	Ref	**GM Engine (ANSI and ANSI Export Specs)**	3
		Ref	**Ground Control Box Installations 460SJ:**	
	0274416	Ref	**Caterpillar and Perkins Engine (ANSI and ANSI Export Specs)**	3
	0274418	Ref	**Caterpillar and Perkins Engine (Australian and CE Specs)**	3
	0271661	Ref	**Deutz Engine (ANSI and ANSI Export Specs)**	8
	0271658	Ref	**Deutz Engine (Australian and CE Specs)**	8
	0275060	Ref	**GM Engine (ANSI and ANSI Export Specs)**	3
101	0641406	4	Bolt 1/4in-20NC x 3/4in	
102	0720805	6	Screw, Machine #8-32NC	
104	3310805	6	Locknut #8-32NC	
105	3311405	4	Locknut 1/4in-20NC	
106	3960438	AR	Seal	
107	4750800	6	Flatwasher #8 Regular	
108	4751400	8	Flatwasher 1/4in Regular	

FIGURE 2-25. GROUND CONTROL BOX ASSEMBLY (WITH UGM) (SN 0300069000 through 0300177682)

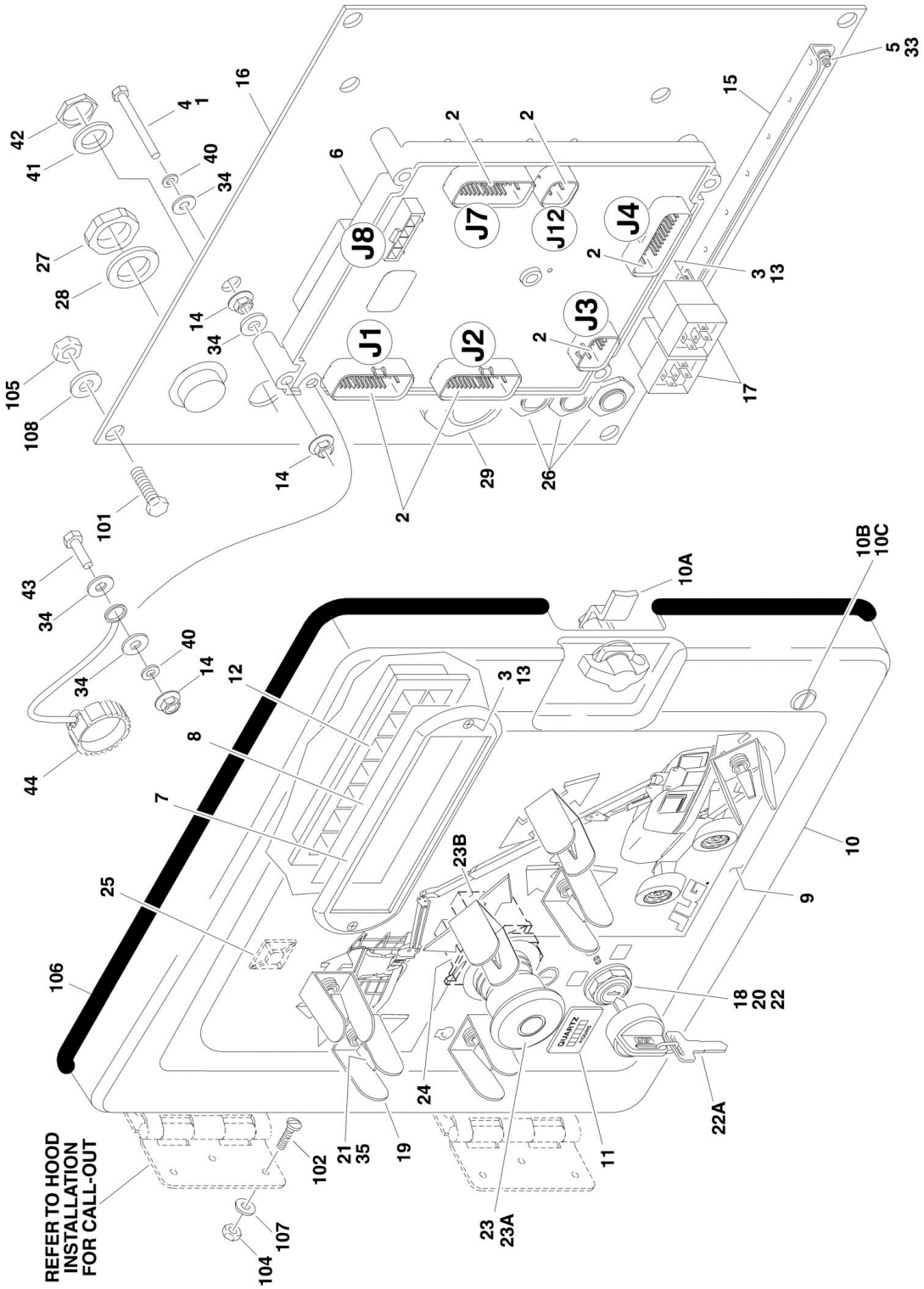

FIGURE 2-25. GROUND CONTROL BOX ASSEMBLY (WITH UGM) (SN 0300069000 through 0300177682)

ITEM	PART NUMBER	QTY	DESCRIPTION	REV
		Ref	**NOTE: FOR MODULE IDENTIFICATION, REFER TO REVISION LOG PAGE A.**	
		Ref	**GROUND CONTROL BOX ASSEMBLIES**	
		Ref	**Ground Control Box Assemblies 400S:**	
		Ref	**Caterpillar and Perkins Engine**	
	1001102896	Ref	**ANSI and ANSI Export Specs**	F
	1001102898	Ref	**Australian and CE Specs**	F
		Ref	**Deutz Engine**	
	1001108979	Ref	**ANSI and ANSI Export Specs**	B
	1001108980	Ref	**Australian and CE Specs**	B
	1001108978	Ref	**GM Engine (ANSI and ANSI Export Specs)**	B
		Ref	**Ground Control Box Assemblies 460SJ:**	
		Ref	**Caterpillar and Perkins Engine**	
	1001102897	Ref	**ANSI and ANSI Export Specs**	F
	1001102899	Ref	**Australian Specs (SN 0300096000 through 0300149521)**	F
	1001102897	Ref	**Australian Specs (SN 0300149522 through 0300177682)**	F
	1001102899	Ref	**CE Specs**	F
		Ref	**Deutz Engine**	
	1001108982	Ref	**ANSI and ANSI Export Specs**	B
	1001108983	Ref	**Australian Specs (SN 0300096000 through 0300149521)**	B
	1001108982	Ref	**Australian Specs (SN 0300149522 through 0300177682)**	B
	1001108983	Ref	**CE Specs**	B
	1001108981	Ref	**GM Engine (ANSI and ANSI Export Specs)**	B
1	0100011	AR	Locking, Compound	
2	0100048	AR	Grease, Dielectric	
3	0630518	4	Capscrew, Button Head	
4	0630548	5	Tap Bolt, 2-1/2in	
5	0721004	2	Screw #10-24NC x 1/2in	
6	1001103667	1	Module, Ground Control (Re-Calibration required when replaced)	
7	1670829	1	Bezel	
8	1706712	1	Decal - Ground Control Display	
9		Ref	Decal - Faceplate Options:	
9	1001102595	1	Decal 400S	
9	1001102596	1	Decal 460SJ	
10	1001109545	1	Lid Assembly	
10A	2940073	1	Latch	
10B	7024319	2	Screw	
10C	7024320	2	Retainer	
11	2420172	1	Gauge, Hourmeter	
12	2760105	1	Housing, Display Light	
13	3300408	4	Locknut, Plastic Insert	
14	77143013	11	Locknut 1/4in-20NC	
15	3539275	1	Bracket, Relay Mounting	
16	1001107107	1	Plate	
17	3740049	2	Relay	
18	3910804	6	Screw #8-32NC x 1/4in	
19	4060906	1	Shield, Toggle Switch	
20	4070987	1	Shim.015	

ITEM	PART NUMBER	QTY	DESCRIPTION	REV
21	4360328	6	Switch, Toggle	
22		Ref	Switch, Key Options:	
22	4360469	1	ANSI and ANSI Export Specs	
22	4360470	1	Australian Specs **(SN 0300096000 through 0300149521)**	
22	4360469	1	Australian Specs **(SN 0300149522 through 0300177682)**	
22	4360470	1	CE Specs	
22A	2860030	1	Key	
23	4360475	1	Switch, Emergency Stop	
23A	7020175	1	Cap, Mushroom Head	
23B	7020176	1	Block, Contact	
24	4360476	1	Switch, Contact Block	
25	4460234	4	Base, Tie-Strap	
26	4460428	3	Connector, Strain Relief	
27	4460470	1	Nut, Terminal	
28	4460471	1	Washer, Terminal	
29	4460526	1	Connector, Strain Relief	
33	4751000	2	Flatwasher #10 Regular	
34	4751400	12	Flatwasher 1/4in Regular	
35	3790012	6	O-Ring	
36	4922538	1	Valve Harness Assembly (Not Shown - See ELECTRICAL SECTION for Breakdown)	
37		Ref	Engine Harness Assembly (Not Shown - See ELECTRICAL SECTION for Breakdown)	
37	1001102798	1	Caterpillar and Perkins Engine Machines	
37	1001109114	1	Deutz Engine Machines	
37	1001109089	1	GM Engine Machines	
38	1001106999	1	Ground Control Box Harness Assembly (Not Shown - See ELECTRICAL SECTION for Breakdown)	
40	4761400	6	Lockwasher 1/4in	
41	4460496	1	Lockwasher, Terminal	
42	4460497	1	Nut, Terminal	
43	0641407	1	Bolt 1/4in-20NC x 7/8in	
44	1001106736	1	Cap, Dust	
		Ref	**GROUND CONTROL BOX INSTALLATIONS**	
		Ref	**Ground Control Box Installations 400S:**	
		Ref	**Caterpillar and Perkins Engine**	
	1001107626	Ref	**ANSI and ANSI Export Specs**	C
	1001107628	Ref	**Australian and CE Specs**	C
		Ref	**Deutz Engine**	
	1001109041	Ref	**ANSI and ANSI Export Specs**	B
	1001109043	Ref	**Australian and CE Specs**	B
	1001109039	Ref	**GM Engine (ANSI and ANSI Export Specs)**	B
		Ref	**Ground Control Box Installations 460SJ:**	
		Ref	**Caterpillar and Perkins Engine**	
	1001107627	Ref	**ANSI and ANSI Export Specs**	C
	1001107629	Ref	**Australian Specs (SN 0300096000 through 0300149521)**	C
	1001107627	Ref	**Australian Specs (SN 0300149522 through 0300177682)**	C
	1001107629	Ref	**CE Specs**	C
		Ref	**Deutz Engine**	
	1001109042	Ref	**ANSI and ANSI Export Specs**	B
	1001109044	Ref	**Australian Specs (SN 0300096000 through 0300149521)**	B
	1001109042	Ref	**Australian Specs (SN 0300149522 through 0300177682)**	B

ITEM	PART NUMBER	QTY	DESCRIPTION	REV
	1001109044	Ref	**CE Specs**	B
	1001109040	Ref	**GM Engine (ANSI and ANSI Export Specs)**	B
101	0641406	4	Bolt 1/4in-20NC x 3/4in	
102	0720805	6	Screw, Machine #8-32NC	
104	3310805	6	Locknut #8-32NC	
105	3311405	4	Locknut 1/4in-20NC	
106	3960438	AR	Seal	
107	4750800	6	Flatwasher #8 Regular	
108	4751400	8	Flatwasher 1/4in Regular	

FIGURE 2-26. GROUND CONTROL BOX ASSEMBLY (WITH UGM) (SN 0300177683 through 0300203770)

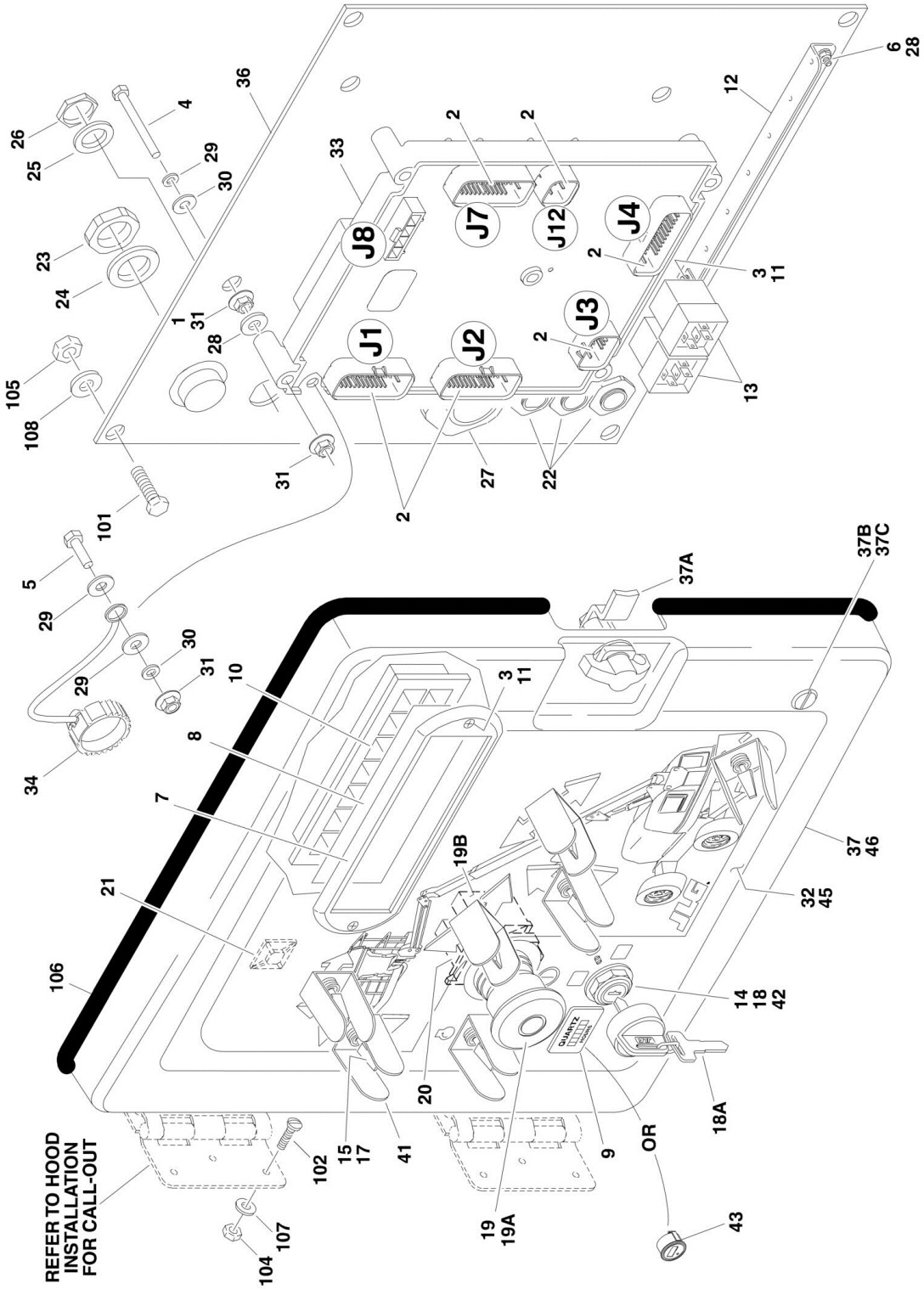

FIGURE 2-26. GROUND CONTROL BOX ASSEMBLY (WITH UGM) (SN 0300177683 through 0300203770)

ITEM	PART NUMBER	QTY	DESCRIPTION	REV
		Ref	**NOTE: FOR MODULE IDENTIFICATION, REFER TO REVISION LOG PAGE A.**	
		Ref	**GROUND CONTROL BOX ASSEMBLIES**	
		Ref	**Ground Control Box Assemblies 400S:**	
		Ref	**Deutz D2011 Engine**	
	1001142926	Ref	**ANSI and ANSI Export Specs**	D
		Ref	**Australian and CE Specs**	
	1001142929	Ref	**Australian and CE Specs (Use p/n 1001188033) (Prior to SN 0300200773)**	D
	1001188033	Ref	**Australian and CE Specs (SN 0300200773 through 0300203770)**	A
	1001188052	Ref	**CE Specs**	A
	1001147011	Ref	**Deutz TD2.9L4 Engine**	C
	1001142924	Ref	**GM Engine (ANSI and ANSI Export Specs)**	D
		Ref	**Ground Control Box Assemblies 460SJ:**	
		Ref	**Deutz D2011 Engine**	
	1001142927	Ref	**ANSI, ANSI Export and Australian Specs**	D
		Ref	**CE Specs**	
	1001142930	Ref	**CE Specs (Use p/n 1001188034) (Prior to SN 0300200773)**	D
	1001188034	Ref	**CE Specs (SN 0300200773 through 0300203770)**	A
		Ref	**CAT Engine**	
	1001142932	Ref	**CE Specs (Use p/n 1001188035) (Prior to SN 0300200773)**	A
	1001188035	Ref	**CE Specs (SN 0300200773 through 0300203770)**	A
	1001147011	Ref	**Deutz TD2.9L4 Engine**	C
	1001142925	Ref	**GM Engine (ANSI and ANSI Export Specs)**	D
1	0100011	AR	Locking, Compound	
2	0100048	AR	Grease, Dielectric	
3	0630518	4	Capscrew, Button Head	
4	0630548	5	Tap Bolt, 2-1/2in	
5	0641407	1	Bolt 1/4in-20NC x 7/8in	
6	0721004	2	Screw #10-24NC x 1/2in	
7	1670829	1	Bezel	
8	1706712	1	Decal - Ground Control Display	
9	2420172	1	Gauge, Hourmeter	
10	2760105	1	Housing, Display Light	
11	3300408	4	Locknut, Plastic Insert	
12	3539275	1	Bracket, Relay Mounting	
13	3740049	2	Relay	
14	3910804	6	Screw #8-32NC x 1/4in	
15	4060906	1	Shield, Toggle Switch	
17	4360328	6	Switch, Toggle	
18		Ref	Switch, Key Options:	
18	4360469	1	ANSI, ANSI Export and Australian Specs	
18	4360470	1	CE Specs	
18A	2860030	1	Key	
19	4360475	1	Switch, Emergency Stop	
19A	7020175	1	Cap, Mushroom Head	
19B	7020176	1	Block, Contact	
20	4360476	1	Switch, Contact Block	

ITEM	PART NUMBER	QTY	DESCRIPTION	REV
21	4460234	4	Base, Tie-Strap	
22	4460428	3	Connector, Strain Relief	
23	4460470	1	Nut, Terminal	
24	4460471	1	Washer, Terminal	
25	4460496	1	Lockwasher, Terminal	
26	4460497	1	Nut, Terminal	
27	4460526	1	Connector, Strain Relief	
28	4751000	2	Flatwasher #10 Regular	
29	4751400	12	Flatwasher 1/4in Regular	
30	4761400	6	Lockwasher 1/4in	
31	77143013	11	Locknut 1/4in-20NC	
32		Ref	Decal - Faceplate Options:	
32	1001102595	1	Decal 400S	
32	1001102596	1	Decal 460SJ	
33	1001103667	1	Module, Ground Control (Re-Calibration Required when Replaced)	
34	1001106736	1	Cap, Dust	
35		Ref	Ground Control Box Harness Assembly (Not Shown - See ELECTRICAL SECTION for Breakdown)	
35	1001106999	1	Deutz D2011 and GM Engine Machines	
35	1001147013	1	Deutz TD2.9L4 Engine Machines	
35	1001187856	1	Deutz D2011 and CAT Engine Machines **(SN 0300200773 through 0300203770)**	
36	1001107107	1	Plate	
37	1001109545	1	Lid Assembly	
37A	2940073	1	Latch	
37B	7024319	2	Screw	
37C	7024320	2	Retainer	
38	1001142939	1	Valve Harness Assembly Options (Not Shown - See ELECTRICAL SECTION for Breakdown):	
40		Ref	Engine Harness Assembly (Not Shown - See ELECTRICAL SECTION for Breakdown)	
40	1001151211	1	Deutz D2011 Engine Machines	
40	1001147012	1	Deutz TD2.9L4 Engine Machines	
40	1001151210	1	CAT Engine Machines **(SN 0300200773 through 0300203770)**	
40	1001151212	1	GM Engine Machines	
41	3790012	6	O-Ring	
42	1001151393	1	Shim, Nylon (Deutz TD2.9L4 Engine Machines Only)	
43	1001109503	1	Gauge, Indicator **(SN 0300200773 through 0300203770)**	
44	1001176469	1	Shroud, Push Button Switch (Not Shown) **(SN 0300200773 through 0300203770)**	
45		Ref	Decal, MTB Options: **(SN 0300200773 through 0300203770)**	
	1001180561	1	Decal, MTB 400S	
	1001180568	1	Decal, MTB 460SJ	
46	1001188043	1	Door Main Terminal Box **(SN 0300200773 through 0300203770)**	
		Ref	**GROUND CONTROL BOX INSTALLATIONS**	
		Ref	**Ground Control Box Installations 400S:**	
		Ref	**Deutz D2011 Engine**	
	1001142915	Ref	**ANSI and ANSI Export Specs**	A
		Ref	**Australian and CE Specs**	
	1001142917	Ref	**Australian and CE Specs (SN 0300096000 through**	A

ITEM	PART NUMBER	QTY	DESCRIPTION	REV
			0300200772)	
	1001188020	Ref	**Australian and CE Specs (SN 0300200773 through 0300203770)**	A
	1001188022	Ref	**CE Specs**	A
	1001147007	Ref	**Deutz TD2.9L4 Engine**	A
	1001142903	Ref	**GM Engine (ANSI and ANSI Export Specs)**	A
		Ref	**Ground Control Box Installations 460SJ:**	
		Ref	**Deutz D2011 Engine**	
	1001142916	Ref	**ANSI, ANSI Export and Australian Specs**	A
	1001142918	Ref	**CE Specs (SN 0300096000 through 0300200772)**	A
	1001188021	Ref	**CE Specs (SN 0300200773 through 0300203770)**	A
		Ref	**CAT Engine**	
	1001142920	Ref	**CE Specs (SN 0300096000 through 0300200772)**	A
	1001188023	Ref	**CE Specs (SN 0300200773 through 0300203770)**	A
	1001147008	Ref	**Deutz TD2.9L4 Engine**	A
	1001142904	Ref	**GM Engine (ANSI and ANSI Export Specs)**	A
101	0641406	4	Bolt 1/4in-20NC x 3/4in	
102	0720805	6	Screw, Machine #8-32NC	
104	3310805	6	Locknut #8-32NC	
105	3311405	4	Locknut 1/4in-20NC	
106	3960438	AR	Seal	
107	4750800	6	Flatwasher #8 Regular	
108	4751400	8	Flatwasher 1/4in Regular	

FIGURE 2-27. ELECTRICAL OPTIONS INSTALLATION (TURNTABLE MOUNTED)

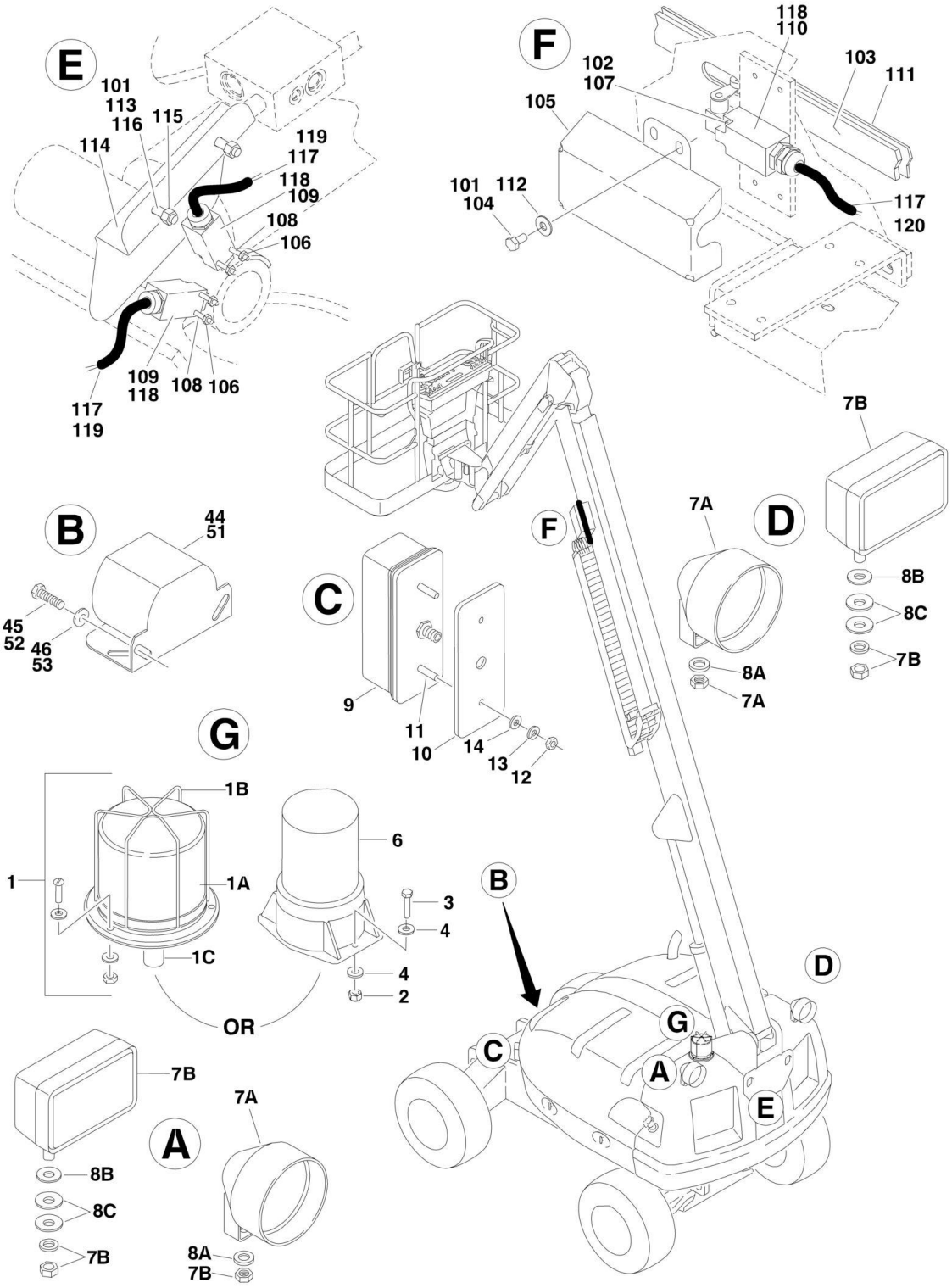

FIGURE 2-27. ELECTRICAL OPTIONS INSTALLATION (TURNTABLE MOUNTED)

ITEM	PART NUMBER	QTY	DESCRIPTION	REV
	0271342	Ref	**STROBE LIGHT INSTALLATIONS (AMBER) (OPTIONAL) (SN 0300069000 through 0300177682)**	E
		Ref	**Note: If machine is equipped with BLUE Strobe Light, See SPECIAL OPTIONS SECTION for SkyGuard Kit.**	
1	0255917	1	Strobe Light Assemblies	2-C
1A	2920130	1	Strobe Light - ECCO Model 6640 (Use p/n 0255917)	
1A	2920214	1	Strobe Light - ECCO Model 6650 (Use p/n 0255917)	
1A		Ref	Bulb, Replacement Options:	
1A	7016380	1	Bulb for ECCO Model 6640	
1A	70001941	1	Bulb for ECCO Model 6650	
1B		Ref	Guard Options:	
1B	4060907	1	Used with ECCO Model 6640	
1B	2920215	1	Used with ECCO Model 6650	
1C		Ref	Adapter Options:	
1C	0630491	1	Used with ECCO Model 6640	
1C	0080241	1	Used with ECCO Model 6650	
2	0100048	AR	Sealant, Silicone (Not Shown)	
	1001151344	Ref	**STROBE LIGHT INSTALLATIONS (AMBER) (OPTIONAL) (SN 0300177683 through 0300203770)**	A
		Ref	**Note: If machine is equipped with BLUE Strobe Light, See SPECIAL OPTIONS SECTION for SkyGuard Kit.**	
3	0760410	2	Bolt (Metric) M4 x 20mm	
4	3290405	2	Locknut (Metric) M4	
5	1001091102	4	Flatwasher (Metric) M4	
6	2920161	1	Strobe Light Assembly	
6	7016319	1	Bulb, Replacement	
6	7016372	1	Len, Amber, Replacement	
		Ref	**LIGHTS INSTALLATIONS (OPTIONAL)**	
	0272018	Ref	**Headlights and Taillights**	C
	0274574	Ref	**Chassis Illumination Lights**	C
7		Ref	Light Options:	
7A	2920110	2	Headlight Assembly (Round) (Includes Mounting Hardware)	
7A	7016628	2	Bulb, Replacement (1 Per Assembly)	
7B	2920157	2	Chassis Illumination Light Assembly (Rectangular) (Includes Mounting Hardware)	
7B	7024452	2	Bulb, Replacement (1 Per Assembly)	
8		Ref	Washer Options:	
8A	4740076	2	Washer, Fender (Use with Headlights and Taillights)	
8B	4740274	2	Washer, Snubbing (Use with Illumination Lights)	
8C	4740546	4	Washer, Rubber Cushioning (Use with Illumination Lights)	
9	2920113	2	Taillight Assembly	
10	3960461	2	Gasket	
11	3911040	4	Screw, Machine #10-24NC x 2-1/2in	
12	3311005	4	Nut #10-24NC	
13	4751000	4	Flatwasher #10 Regular	
14	4740362	4	Washer, Fender	
15	4460234	14	Mount, Tie-Strap (Not Shown)	
16	4240032	14	Tie-Strap (Not Shown)	
18		Ref	Switch Options (Not Shown - Located on Console):	
18	4360336	1	Switch, Toggle Used **(SN 0300096000 through 0300137200)**	
18	4360522	1	Switch, Toggle Used **(SN 0300137201 through 0300203770)**	

ITEM	PART NUMBER	QTY	DESCRIPTION	REV
19	3790012	1	O-Ring (Not Shown - Located on Console Only) **(SN 0300096000 through 0300137201)**	
	0258308	Ref	**ALARMS INSTALLATIONS (SN 0300069000 through 0300177682)**	A
44	See Note	1	Alarm/Harness Assembly (was p/n 0257887) (Note: Not Available - Purchase individual parts)	
44	0140032	1	Alarm	
44	2820035	6 in/15cm	Loom	
44	4460424	1	Plug, Male - 2 Position	
44	4460268	2	Socket, Female	
45	0641406	2	Bolt 1/4in-20NC x 3/4in	
46	4711400	2	Flatwasher 1/4in Thin	
47	0100048	AR	Sealant, Silicone (Not Shown)	
	1001152327	Ref	**ALARMS INSTALLATIONS (SN 0300177683 through 0300203770)**	A
51	0140044	1	Alarm/Harness Assembly	
51	4460536	1	Connector - 3 Position	
51	4460464	2	Pin, Male Deutsch 16 Ga	
52	0641406	2	Bolt 1/4in-20NC x 3/4in	
53	4711400	2	Flatwasher 1/4in Thin	
54	0100048	AR	Sealant, Silicone (Not Shown)	
		Ref	**LIMIT SWITCHES INSTALLATIONS**	
	0271164	Ref	**Limit Switches Installations 400S with 500/1000lb Capacity (All Specs Except CE Spec)**	G
	1001093910	Ref	**Limit Switches Installations 400S with 500/1000lb Capacity and Arctic Package (All Specs Except CE Spec)**	B
	0271165	Ref	**Limit Switches Installations 400S with 750/1000lb Capacity (All Specs Except CE Spec)**	G
	1001093912	Ref	**Limit Switches Installations 400S with 750/1000lb Capacity and Arctic Package (All Specs Except CE Spec)**	B
	0271163	Ref	**Limit Switches Installations 400S (CE Specs)**	G
	0271166	Ref	**Limit Switches Installations 460SJ (All Specs Except CE Spec)**	D
	1001093913	Ref	**Limit Switches Installations 460SJ with Arctic Package (All Specs Except CE Spec)**	A
	0271163	Ref	**Limit Switches Installations 460SJ (CE Specs)**	G
101	0100011	AR	Locking, Compound	
102	0100035	AR	Locking, Compound	
103		Ref	Bar, Fiberglass Options:	
103	0362528	1	Bar, Fiberglass 400S with 500/1000lb Cap. (All Specs Except CE Spec) (Use p/n 1001106479)	
103	0362909	1	Bar, Fiberglass 400S with 750/1000lb Cap. (All Specs Except CE Spec) (Use p/n 1001106478)	
103	0362610	1	Bar, Fiberglass 400S (CE Specs) (Use p/n 1001106482)	
103	Not Required	0	Bar, Fiberglass 460SJ (All Specs Except CE Spec)	
103	0362610	1	Bar, Fiberglass 460SJ (CE Specs) (Use p/n 1001106482)	
104	0641404	4	Bolt #8-32NC x 1/2in (400S Only)	
105		Ref	Cover, Limit Switch Options:	
105	1670824	1	Cover, Limit Switch 400S (All Specs Except CE Spec)	
105	1670824	1	Cover, Limit Switch 460SJ (CE Specs)	
105	Not Required	0	Cover, Limit Switch 460SJ (All Specs Except CE Spec)	
105	1670824	1	Cover, Limit Switch 460SJ (CE Specs)	
106	3311005	4	Locknut #10-24NC	
107	3930816	2	Capscrew, Socket Head #8-32NC x 1in (400S Only)	

ITEM	PART NUMBER	QTY	DESCRIPTION	REV
108	3931028	4	Capscrew, Socket Head #10-24NC x 1-3/4in	
109	4360548	2	Switch, Limit (Part of Item 119)	
110		Ref	Switch, Limit Options:	
110	4360578	1	Switch, Limit 400S (All Specs Except CE Spec)	
110	4360578	1	Switch, Limit 400S (CE Specs)	
110	Not Required	0	Switch, Limit 460SJ (All Specs Except CE Spec)	
110	4360578	1	Switch, Limit 460SJ (CE Specs)	
100	4460968	AR	Connector, Strain Relief	
111	4420060	9 ft/2.7m	Tape, Double Sided	
112	4751400	4	Flatwasher 1/4in Regular	
113	0641610	2	Bolt 3/8in-16NC x 1-1/4in	
114	1670956	1	Cover, Limit Switch	
115	3311601	2	Nut 3/8in-16NC	
116	4711600	4	Flatwasher 3/8in Narrow	
117		Ref	Cable, Electrical Options:	
117	See Note	AR	Cable, Electrical 400S (Note: Refer to Items 119 & 120)	
117	See Note	AR	Cable, Electrical 460SJ (Note: Refer to Item 119)	
118	4460968	AR	Connector, Strain Relief	
119		Ref	Cable, Electrical - 18/2 Options:	
119	4922714	2	Cable, Electrical - 18/2 400S (Includes Items 8.5ft/2.6m of p/n 1060902 18/2 Electrical Cable and Items 109 & 118) (All Specs Except CE Spec)	B
119	1001093914	2	Cable, Electrical - 18/2 400S with Arctic Package (Includes Items 8.5ft/2.6m of p/n 4923466 18/2 Polar Electrical Cable and Items 109 & 118) (All Specs Except CE Spec)	A
119	4922714	1	Cable, Electrical - 18/2 400S (Includes Items 8.5ft/2.6m of p/n 1060902 18/2 Electrical Cable and Items 109 & 118) (CE Spec Only)	B
119	4922714	1	Cable, Electrical - 18/2 460SJ (Includes Items 8.5ft/2.6m of p/n 1060902 18/2 Electrical Cable and Items 109 & 118) (All Specs Except CE Spec)	B
119	1001093914	1	Cable, Electrical - 18/2 460SJ with Arctic Package (Includes Items 8.5ft/2.6m of p/n 4923466 18/2 Polar Electrical Cable and Items 109 & 118) (All Specs Except CE Spec)	A
119	4922714	1	Cable, Electrical - 18/2 460SJ (Includes Items 8.5ft/2.6m of p/n 1060902 18/2 Electrical Cable and Items 109 & 118) (CE Spec Only)	B
120		Ref	Cable, Electrical - 18/2	
120	4922769	1	Cable, Electrical - 18/2 400S (Includes Items 26.5ft/8.1m of p/n 1060680 18/2 Electrical Cable and 2 Sockets)	B
120	1001093915	1	Cable, Electrical - 18/2 400S with Arctic Package (Includes Items 26.5ft/8.1m of p/n 4923466 18/2 Polar Electrical Cable and 2 Sockets)	A
120	Not Required	0	Cable, Electrical - 18/2 460SJ	

FIGURE 2-28. HOODS INSTALLATION (SN 0300096000 through 0300126456)

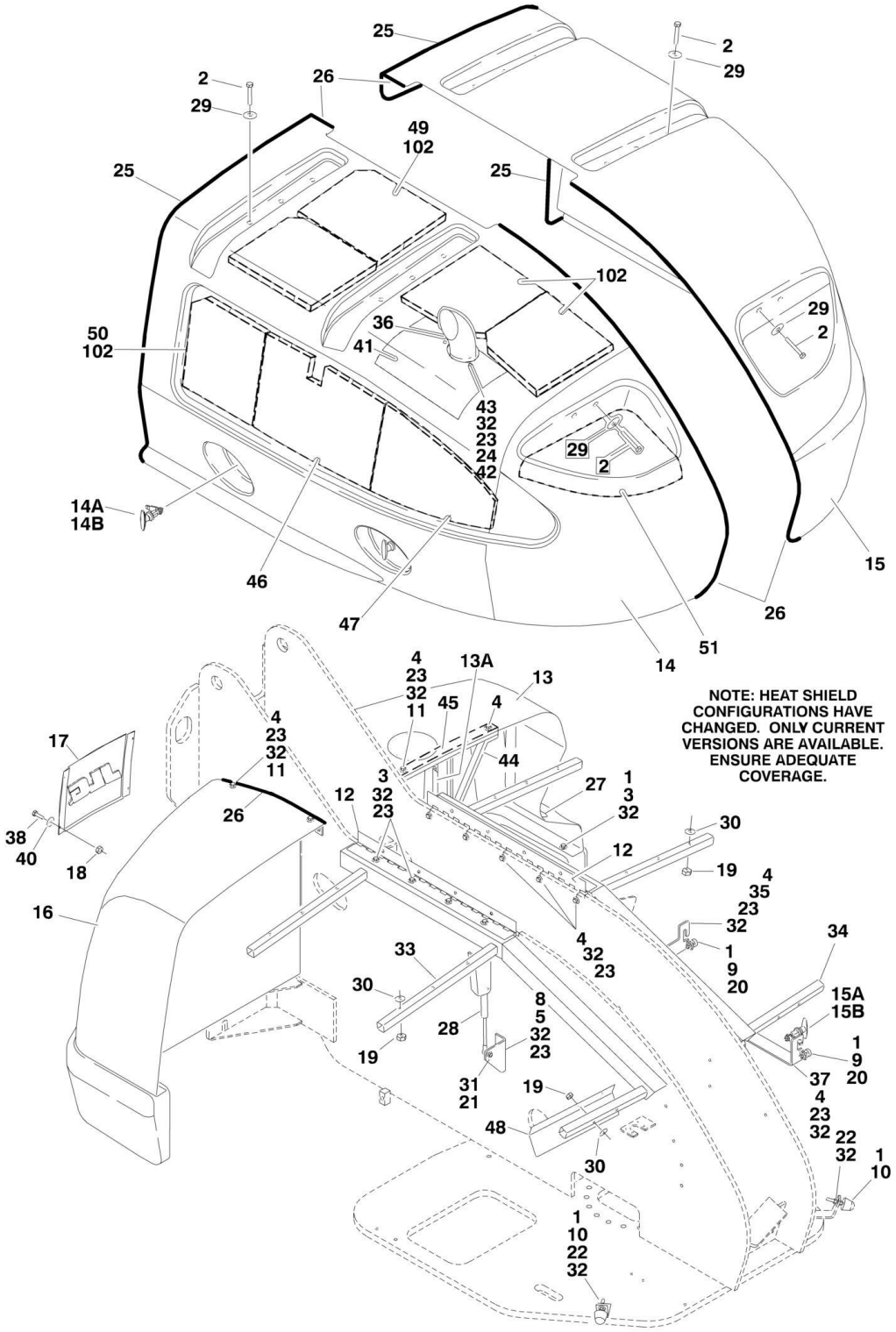

FIGURE 2-28. HOODS INSTALLATION (SN 0300096000 through 0300126456)

ITEM	PART NUMBER	QTY	DESCRIPTION	REV
		Ref	**HOODS INSTALLATIONS**	
	0259141	Ref	**Caterpillar, Deutz and Perkins Machines**	J
	0274016	Ref	**GM Machines**	B
1	0100011	AR	Locking, Compound	
2	0641416	16	Bolt 1/4in-20NC x 2in	
3	0641608	13	Bolt 3/8in-16NC x 1in	
4	0641610	18	Bolt 3/8in-16NC x 1-1/4in	
5	0641612	5	Bolt 3/8in-16NC x 1-3/4in	
8	0902669	2	Angle, Mounting	
9	0940049	2	Stopper, Hood	
10	0940071	2	Bumper	
11	2540035	5	Grommet	
12	2600209	2	Hinge, Hood	
13	2680463	1	Cover, Hood (Front Right Side)	G
13A	2600258	2	Hinge, Ground Control Lid	
14		Ref	Hood (Engine Side) Options:	
		Ref	**Note: Replacement decals must be ordered separately.**	
14	2680464	NLA	Hood Kit for Caterpillar, Deutz and Perkins Machines (Use p/n 1001097963) (Includes Non-Lockable Hood with Current Heat Shields)	
14	1671170	NLA	Hood Kit for GM Machines (Includes Non-Lockable Hood and with Current Heat Shields) (Use p/n 1001097962)	
14A		Ref	Latch Options:	
14A	2940117	2	Non-Lockable	
14A	7027858	2	Lockable	
14B	0902668	2	Catch, Hood Latch	
15	2680465	1	Hood (Tank Side)	G
		Ref	**Note: Replacement decals must be ordered separately.**	
15A		Ref	Latch Options:	
15A	2940117	2	Non-Lockable	
15A	7027858	2	Lockable	
15B	0902668	2	Catch, Hood Latch	
16	2680516	1	Cover, Hood (Front Left Side)	
17	2680471	1	Cover, Hood (Front Center)	D
18	3300441	4	Nut, Tinnerman	
19	3311405	16	Locknut 1/4in-20NC	
20	3311501	4	Nut 5/16in-18NC	
21	3311505	4	Locknut 5/16in-18NC	
22	3311601	4	Nut 3/8in-16NC	
23	3311605	34	Locknut 3/8in-16NC	
24	3900232	3	Capscrew, Button Head 3/8in-16NC 1-1/4in	
26	3960389	27 ft/8.2m	Seal, Hood	
27	4060805	1 ft/30cm	Flex-Trim	
28	4160182	2	Spring, Gas	
29	4740362	16	Washer, Fender	
30	4751400	16	Flatwasher 1/4in Regular	
31	4751500	4	Flatwasher 5/16in Regular	
32	4751600	74	Flatwasher 3/8in Regular	
33	4846092	1	Hood Mounting Weldment (Engine Side)	
34	4846095	1	Hood Mounting Weldment (Tank Side)	

ITEM	PART NUMBER	QTY	DESCRIPTION	REV
35	4846100	1	Latch, Hood	
36		Ref	Exhaust Tube Weldment Options:	
36	4846110	1	Caterpillar, Deutz and Perkins Machines	F
36	3460375	1	GM Machines	A
37	4846111	1	Latch, Hood	
38	0750808	4	Screw	
40	4740120	4	Washer, Nylon	
41		Ref	Insulation, Heat Shield Options:	
41	2820129	NLA	Caterpillar/Deutz/Perkins Engines (Use p/n 2820181)	
41	2820181	1	GM Engine	
		Ref	**Note: Customer required to cut hole for exhaust stack on replacement heat shield p/n 2820181.**	
42	4061010	1	Shield, Heat Gasket	
43	4740500	3	Shoulder Washer, Nylon	
44	0902673	1	Bracket, Front Cover Support	
45	0902674	1	Bracket, Front Cover Support	
46	2820128	NLA	Insulation, Heat Shield (Silver) (Use p/n 1001101835)	
47	2820182	NLA	Insulation, Heat Shield (Silver) (Use p/n 1001101835)	
48	3380569	1	Shield, Heat (GM Engine Only)	
		Ref	**Note: Items 49-51 are part of Item 14 Ford and GM Hood Kit p/n 1001097962. Item 51 is part of Item 14 Deutz, Caterpillar and Perkins Hood Kit p/n 1001097963.**	
49	1001109402	1	Insulation, Heat Shield (Silver) (GM Engine Only)	
50	1001109403	1	Insulation, Heat Shield (Silver) (GM Engine Only)	
51	1001101836	1	Insulation, Heat Shield (Silver)	
	0270354	Ref	**NOISE REDUCTION INSTALLATION (DEUTZ MACHINES)**	C
102	2820099	9	Insulation, Foam	
	6000394	NLA	Insulation Kit (Use p/n 1001146992)	

FIGURE 2-29. HOODS INSTALLATION (SN 0300126457 through 0300203770)

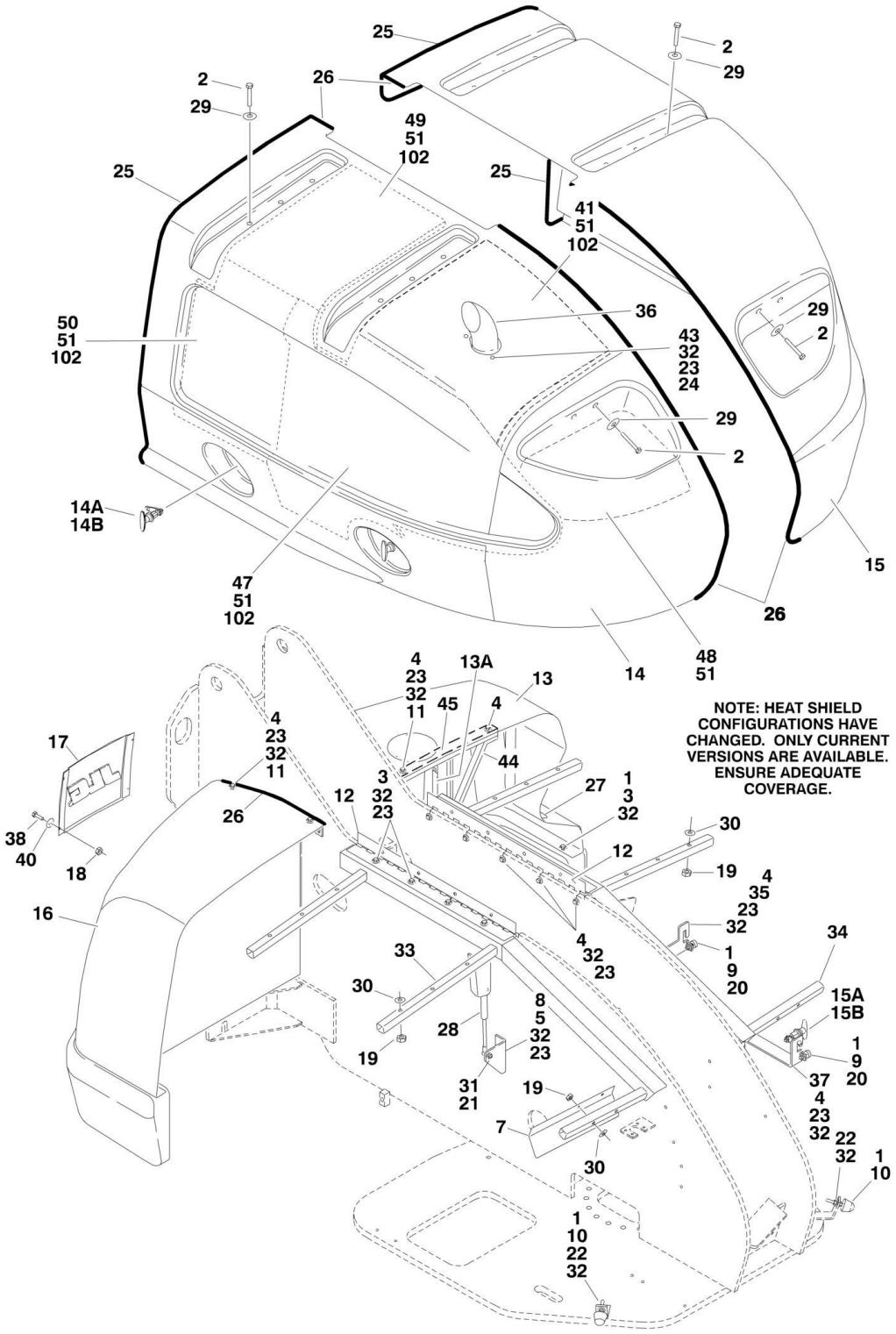

FIGURE 2-29. HOODS INSTALLATION (SN 0300126457 through 0300203770)

ITEM	PART NUMBER	QTY	DESCRIPTION	REV
		Ref	**HOODS INSTALLATIONS**	
	0259141	Ref	**Caterpillar, Deutz D2011 and Perkins Machines (All Specs except Australian/CE Specs)**	M
	1001149540	Ref	**Caterpillar, Deutz D2011 and Perkins Machines (Australian/CE Specs)**	A
	1001146886	Ref	**Deutz TD2.9L4 Machines (ANSI and CSA Specs)**	D
	0274016	Ref	**GM Machines**	H
1	0100011	AR	Locking, Compound	
2	0641416	16	Bolt 1/4in-20NC x 2in	
3	0641608	13	Bolt 3/8in-16NC x 1in	
4	0641610	18	Bolt 3/8in-16NC x 1-1/4in	
5	0641612	5	Bolt 3/8in-16NC x 1-3/4in	
7	3380569	1	Insulation, Heat Shield (GM Engine Only)	
8	0902669	2	Angle, Mounting (Caterpillar, Deutz D2011, GM and Perkins Engines)	
8	0902669	1	Angle, Mounting (Deutz TD2.9L4) **(SN 0300096000 through 0300192503)**	
8	1001178708	1	Angle, Mounting (Deutz TD2.9L4) **(SN 0300192504 through 0300203770)**	
9	0940049	2	Stopper, Hood	
10	0940071	2	Bumper	
11	2540035	5	Grommet	
12	2600209	2	Hinge, Hood	
13	2680463	1	Cover, Hood (Front Right Side)	G
13A	2600258	2	Hinge, Ground Control Lid	
14		Ref	Hood (Engine Side) Options:	
		Ref	**Note: Replacement Decals Must be Ordered Separately - See DECAL SECTION.**	
14	2680464	NLA	Hood for Caterpillar, Deutz D2011 and Perkins Engines (ANSI and ANSI Export Specs) (Use Kit p/n 1001146956 - Kit Includes Non-Lockable Hood, Current Heat Shields and Item 36 Installed) **(SN 0300096000 through 0300161618)**	H
14	2680464	NLA	Hood for Caterpillar, Deutz D2011 and Perkins Engines (ANSI and ANSI Export Specs) (Use Kit p/n 1001097963 - Kit Includes Non-Lockable Hood and Current Heat Shields. Purchase Item 36 Separately) **(SN 0300096000 through 0300161618)**	H
14	1001146956	1	Hood for Caterpillar, Deutz D2011 and Perkins Engines (ANSI and ANSI Export Specs) (Includes Non-Lockable Hood, Current Heat Shields and Item 36 Installed) **(SN 0300161619 through 0300203770)**	E
14	1001146956	1	Hood for Caterpillar, Deutz D2011 and Perkins Engines (ANSI and ANSI Export Specs) (Use Kit p/n 1001097963 - Kit Includes Non-Lockable Hood and Current Heat Shields. Purchase Item 36 Separately) **(SN 0300161619 through 0300203770)**	E
14	1001146992	1	Hood for Caterpillar, Deutz D2011 and Perkins Engines (Australian and CE Specs) (Includes Non-Lockable Hood, Current Heat Shields and Items 36 & 102 Installed)	E
14	1001146885	1	Hood for Deutz TD2.9L4 Engines (Includes Non-Lockable Hood, Current Heat Shields and Item 36 Installed)	C
14	1671170	NLA	Hood for GM Engines (Use Kit p/n 1001117041 - Kit Includes Non-Lockable Hood, Current Heat Shields and Item 36 Installed) **(SN 0300096000 through 0300146618)**	B
14	1671170	NLA	Hood for GM Engines (Use Kit p/n 1001097962 - Kit Includes Non-Lockable Hood and Current Heat Shields. Purchase Item 36 Separately) **(SN 0300096000 through 0300146618)**	B

ITEM	PART NUMBER	QTY	DESCRIPTION	REV
14	1001117041	1	Hood for GM Engines (Includes Non-Lockable Hood, Current Heat Shields and Item 36 Installed) **(SN 0300146619 through 0300203770)**	A
14A		Ref	Latch Options:	
14A	2940117	2	Non-Lockable	
14A	7027858	2	Lockable	
14B	0902668	2	Catch, Hood Latch	
15	2680465	1	Hood (Tank Side)	H
		Ref	**Note: Replacement Decals Must be Ordered Separately - See DECAL SECTION.**	
15A		Ref	Latch Options:	
15A	2940117	2	Non-Lockable	
15A	7027858	2	Lockable	
15B	0902668	2	Catch, Hood Latch	
16	2680516	1	Cover, Hood (Front Left Side)	
17	2680471	1	Cover, Hood (Front Center)	D
18	3300441	4	Nut, Tinnerman	
19	3311405	16	Locknut 1/4in-20NC	
20	3311501	4	Nut 5/16in-18NC	
21	3311505	4	Locknut 5/16in-18NC	
22	3311601	4	Nut 3/8in-16NC	
23	3311605	AR	Locknut 3/8in-16NC	
24	3900232	3	Capscrew, Button Head 3/8in-16NC 1-1/4in	
26	3960389	27 ft/8.2m	Seal, Hood Only **(SN 0300126457 through 0300161619)**	
27	4060805	1 ft/30cm	Flex-Trim Only **(SN 0300126457 through 0300161619)**	
28	4160182	2	Spring, Gas (Caterpillar, Deutz D2011, GM and Perkins Engines)	
28	4160182	1	Spring, Gas (Deutz TD2.9L4) **(SN 0300096000 through 0300190966)**	
28	4160143	1	Spring, Gas (Deutz TD2.9L4) **(SN 0300190967 through 0300203770)**	
29	4740362	16	Washer, Fender	
30	4751400	16	Flatwasher 1/4in Regular	
31	4751500	4	Flatwasher 5/16in Regular	
32	4751600	AR	Flatwasher 3/8in Regular	
33		Ref	Hood Mounting Weldment (Engine Side) Options:	
33	4846092	1	Caterpillar, Deutz D2011, GM and Perkins Machines	
33	1001146884	1	Deutz TD2.9L4 Machines	
34	4846095	1	Hood Mounting Weldment (Tank Side)	
35	4846100	1	Latch, Hood	
36		Ref	Exhaust Tube Weldment Options:	
36	4846110	1	Caterpillar, Deutz D2011 and Perkins Machines	F
36	1001147045	1	Deutz TD2.9L4 Machines	A
36	3460375	1	GM Machines **(SN 0300126457 through 0300146955)**	A
36	1001117037	1	GM Machines **(SN 0300146956 through 0300203770)**	A
37	4846111	1	Latch, Hood	
38	0750808	4	Screw	
40	4740120	4	Washer, Nylon	
41		Ref	Insulation, Heat Shield Options:	
41		Ref	Caterpillar/Perkins Engines	
41	2820129	NLA	1001146956 Hood (Use p/n 1001152836) **(SN 0300096000 through 0300179056)**	
41	2820129	NLA	1001146992 Hood (Use p/n 1001152836)	
41	2820129	NLA	1001097963 Hood (Use p/n 1001152836)	

ITEM	PART NUMBER	QTY	DESCRIPTION	REV
41		Ref	Deutz D2011 Engines	
41	2820129	NLA	1001146956 Hood (Use p/n 1001152836) **(SN 0300096000 through 0300179055)**	
41	1001152836	1	1001146956 Hood **(SN 0300179056 through 0300203770)**	
41	2820129	NLA	1001146992 Hood (Use p/n 1001152836)	
41	2820129	NLA	1001097963 Hood (Use p/n 1001152836)	
41		Ref	Deutz TD2.9L4 Engines	
41	1001152566	AR	Insulation, Heat Shield	
41		Ref	GM Engines	
41	2820181	NLA	Insulation, Heat Shield (Use p/n 1001117139) **(SN 0300126457 through 0300146955)**	
41	1001117139	1	Insulation, Heat Shield **(SN 0300146956 through 0300203770)**	
		Ref	**Note: Customer required to cut hole for exhaust stack on replacement heat shield p/n**	
43	4740500	3	Shoulder Washer, Nylon	
44	0902673	1	Bracket, Front Cover Support	
45	0902674	1	Bracket, Front Cover Support	
47		Ref	Insulation, Heat Shield (Silver) (Engine Side) Options:	
47		Ref	Caterpillar/Perkins Engines	
47	2820182	NLA	1001146956 Hood (Use p/n 1001152837) **(SN 0300096000 through 0300179056)**	
47	2820182	NLA	1001146992 Hood (Use p/n 1001152837)	
47	2820182	NLA	1001097963 Hood (Use p/n 1001152837)	
47		Ref	Deutz D2011 Engines	
47	2820182	NLA	1001146956 Hood (Use p/n 1001152837) **(SN 0300096000 through 0300179055)**	
47	1001152837	1	1001146956 Hood **(SN 0300179056 through 0300203770)**	
47	2820182	NLA	1001146992 Hood (Use p/n 1001152837)	
47	2820182	NLA	1001097963 Hood (Use p/n 1001152837)	
47		Ref	Deutz TD2.9L4 Engines	
47	1001152566	AR	Insulation, Heat Shield	
47		Ref	GM Engines	
47	2820182	NLA	Insulation, Heat Shield (Silver) (Engine Side) (Use p/n 1001117139) **(SN 0300126457 through 0300146955)**	
47	1001101835	NLA	Insulation, Heat Shield (Silver) (Engine Side) (Use p/n 1001117139) **(SN 0300126457 through 0300146955)**	
47	1001117139	1	Insulation, Heat Shield (Silver) (Engine Side) **(SN 0300146956 through 0300203770)**	
48		Ref	Insulation, Heat Shield (Silver) (Engine Side) Options:	
48		Ref	Caterpillar/Perkins Engines	
48	1001101836	NLA	1001146956 Hood (Use p/n 1001152838) **(SN 0300096000 through 0300179055)**	
48	1001101836	NLA	1001146992 Hood (Use p/n 1001152838)	
48	1001101836	NLA	1001097963 Hood (Use p/n 1001152838)	
48		Ref	Deutz D2011 Engines	
48	1001101836	NLA	1001146956 Hood (Use p/n 1001152838) **(SN 0300096000 through 0300179055)**	
48	1001152838	1	1001146956 Hood **(SN 0300179056 through 0300203770)**	
48	1001101836	NLA	1001146992 Hood (Use p/n 1001152838)	
48	1001101836	NLA	1001097963 Hood (Use p/n 1001152838)	
48		Ref	Deutz TD2.9L4 Engines	
48	1001152566	AR	Insulation, Heat Shield	
48		Ref	GM Engines	

ITEM	PART NUMBER	QTY	DESCRIPTION	REV
48	1001101836	NLA	Insulation, Heat Shield (Silver) (Engine Side) (Use p/n 1001117139) **(SN 0300126457 through 0300146955)**	
48	1001117139	1	Insulation, Heat Shield (Silver) (Engine Side) **(SN 0300146956 through 0300203770)**	
49		Ref	Insulation, Heat Shield (Silver) (Engine Side) Options:	
49		Ref	Caterpillar/Perkins Engines	
49	1001109402	NLA	1001146956 Hood (Use p/n 1001152839) **(SN 0300096000 through 0300179055)**	
49	1001109402	NLA	1001146992 Hood (Use p/n 1001152839)	
49	1001109402	NLA	1001097963 Hood (Use p/n 1001152839)	
49		Ref	Deutz D2011 Engines	
49	1001109402	NLA	1001146956 Hood (Use p/n 1001152839) **(SN 0300096000 through 0300179055)**	
49	1001152839	1	1001146956 Hood **(SN 0300179056 through 0300203770)**	
49	1001109402	NLA	1001146992 Hood (Use p/n 1001152839)	
49	1001109402	NLA	1001097963 Hood (Use p/n 1001152839)	
49		Ref	Deutz TD2.9L4 Engines	
49	1001152566	1	Insulation, Heat Shield	
49		Ref	GM Engines	
49	1001109402	NLA	Insulation, Heat Shield (Silver) (Engine Side) (Use p/n 1001117139) **(SN 0300126457 through 0300146955)**	
49	1001117139	1	Insulation, Heat Shield (Silver) (Engine Side) **(SN 0300146956 through 0300203770)**	
50		Ref	Insulation, Heat Shield (Silver) (Engine Side) Options:	
50		Ref	Caterpillar/Perkins Engines	
50	1001109403	NLA	1001146956 Hood (Use p/n 1001152840) **(SN 0300096000 through 0300179055)**	
50	1001109403	NLA	1001146992 Hood (Use p/n 1001152840)	
50	1001109403	NLA	1001097963 Hood (Use p/n 1001152840)	
50		Ref	Deutz D2011 Engines	
50	1001109403	NLA	1001146956 Hood (Use p/n 1001152840) **(SN 0300096000 through 0300179055)**	
50	1001152840	1	1001146956 Hood **(SN 0300179056 through 0300203770)**	
50	1001109403	NLA	1001146992 Hood (Use p/n 1001152840)	
50	1001109403	NLA	1001097963 Hood (Use p/n 1001152840)	
50		Ref	GM Engines	
50	1001109403	NLA	Insulation, Heat Shield (Silver) (Engine Side) (Use p/n 1001117139) **(SN 0300126457 through 0300146955)**	
50	1001117139	1	Insulation, Heat Shield (Silver) (Engine Side) **(SN 0300146956 through 0300203770)**	
51	1001117140	1	Tape, Aluminized (GM and Deutz TD2.9L4 Engines) **(SN 0300146956 through 0300203770)**	
	0270354	Ref	**NOISE REDUCTION INSTALLATION (DEUTZ MACHINES) (OPTIONAL ON ANSI AND ANSI EXPORT SPECS / STANDARD ON AUSTRALIAN AND CE SPECS) (SN 0300126547 through 0300166185)**	C
102	2820099	9	Insulation, Foam (Black)	
	6000394	NLA	Insulation Kit (Use p/n 1001146992 Kit - Kit Includes Non-Lockable Hood, Current Heat Shields and Item 36 Installed)	

FIGURE 2-30. 2500W GENERATOR INSTALLATION - CATERPILLAR ENGINE MACHINES (OPTIONAL)

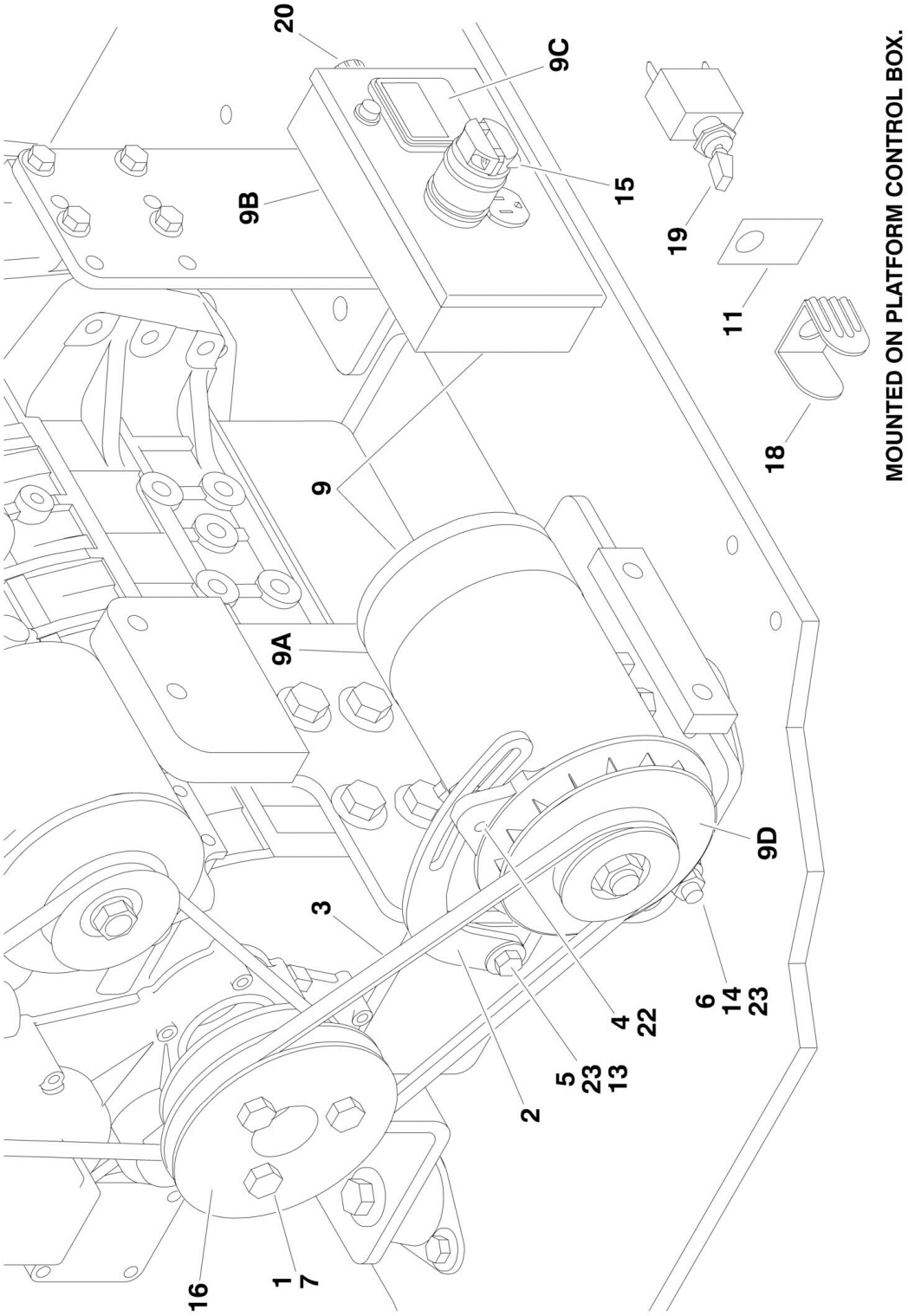

FIGURE 2-30. 2500W GENERATOR INSTALLATION - CATERPILLAR ENGINE MACHINES (OPTIONAL)

ITEM	PART NUMBER	QTY	DESCRIPTION	REV
		Ref	**2500W GENERATOR INSTALLATION - CATERPILLAR ENGINE MACHINES (OPTIONAL)**	
	1001111285	Ref	**110V/60Hz Generator (With UGM)**	A
	0274084	Ref	**110V/60Hz Generator (Without UGM)**	C
	0274088	Ref	**220V/50Hz Generator**	A
1	0100011	AR	Compound, Locking	
2	0200742	1	Arm, Adjusting	
3		Ref	V-Belt Options:	
3	0480121	1	110V	
3	0480120	1	220V	
4	0641508	1	Bolt 5/16in-18NC x 1in	
5	0641610	1	Bolt 3/8in-16NC x 1-1/4in	
6	0641772	1	Bolt 7/16in-14NC x 9in	
7	0701217	3	Bolt, Metric 12mm x 45mm	
8	0721008	2	Bolt #10-24NC x 1in (Not Shown)	
9		Ref	Generator and Control Box Assembly Options:	
9	2460055	1	110V/60Hz Assembly	
9	2460056	1	220V/50Hz Assembly	
9A	7012558	1	Generator Only - 110V/60Hz	
9A	1001100321	1	Generator Only - 220V/50Hz	
		Ref	**Note: Replacement Generators come standard with p/n 3580134 pulley. This pulley may not be correct for all applications. Refer to pulley options below.**	
9A		Ref	Armature with Slip Rings Options:	
9A	7026199	1	Armature with Slip Rings - 110V/60Hz	
9A	70000123	1	Armature with Slip Rings - 220V/50Hz	
9A	7012513	4	Cap, Brush Holder	
9A	7020108	4	Brush	
9A	7020109	4	Holder, Brush	
9A	7012514	1	Fan	
9A	7020110	1	Bell, Front	
9A	7020111	1	Bell, Rear	
9A	7020190	2	Bearing	
9A	7020193	1	Cord, Power	
9B	7019680	1	Box, Control - 110V/60Hz	
9B	70000127	1	Box, Control - 220V/50Hz	
9B		Ref	Receptacle Options:	
9B	4460190	1	Receptacle, Standard (110V Only)	
9B	4460027	1	Receptacle, Twistlock (110V Only)	
9B	70000124	1	Receptacle, Double (220V/50Hz Only)	
9B	70000125	1	Receptacle, Single (220V/50Hz Only)	
9B		Ref	Breaker, Circuit Options:	
9B	4360542	1	Breaker 110V/60Hz	
9B	70000126	1	Breaker 220V/50Hz	
9B	3520028	1	Plug, Hole	
9C		Ref	Voltmeter Options:	
9C	2420203	1	Voltmeter - 110V	
9C	7020192	1	Voltmeter - 220V	
9D		Ref	Pulley Options:	

SECTION 2 - TURNTABLE

ITEM	PART NUMBER	QTY	DESCRIPTION	REV
9D	3580276	1	Pulley - 60Hz	
9D	3580134	1	Pulley - 50Hz	
9D	7027887	1	Key, Woodruff	
10	2820031	1	Heat Shrink (Not Shown - Located at Platform)	
11	3251102	1	Decal (Located at Platform)	
12	3311005	2	Locknut #10-24NC (Not Shown)	
13	3311605	1	Locknut 3/8in-16NC	
14	3311705	1	Locknut 7/16in-14NC	
15	3520028	1	Plug, Hole	
16	3580315	1	Pulley	
17	3740080	1	Relay (Not Shown - Located Back Side of Engine Tray with Existing Relays)	
18	4060802	1	Guard, Switch (Located at Platform)	
19	4360336	1	Switch, Toggle - SPST (Located at Platform)	
20	4460023	1	Connector, Strain Relief	
21	4751000	8	Flatwasher #10 Regular (Not Shown)	
22	4751500	1	Flatwasher 5/16in Regular	
23	4751600	AR	Flatwasher 3/8in Regular	
23	4751700	AR	Flatwasher 7/16in	

FIGURE 2-31. 2500W GENERATOR INSTALLATION - DEUTZ D2011 ENGINE MACHINES (OPTIONAL)

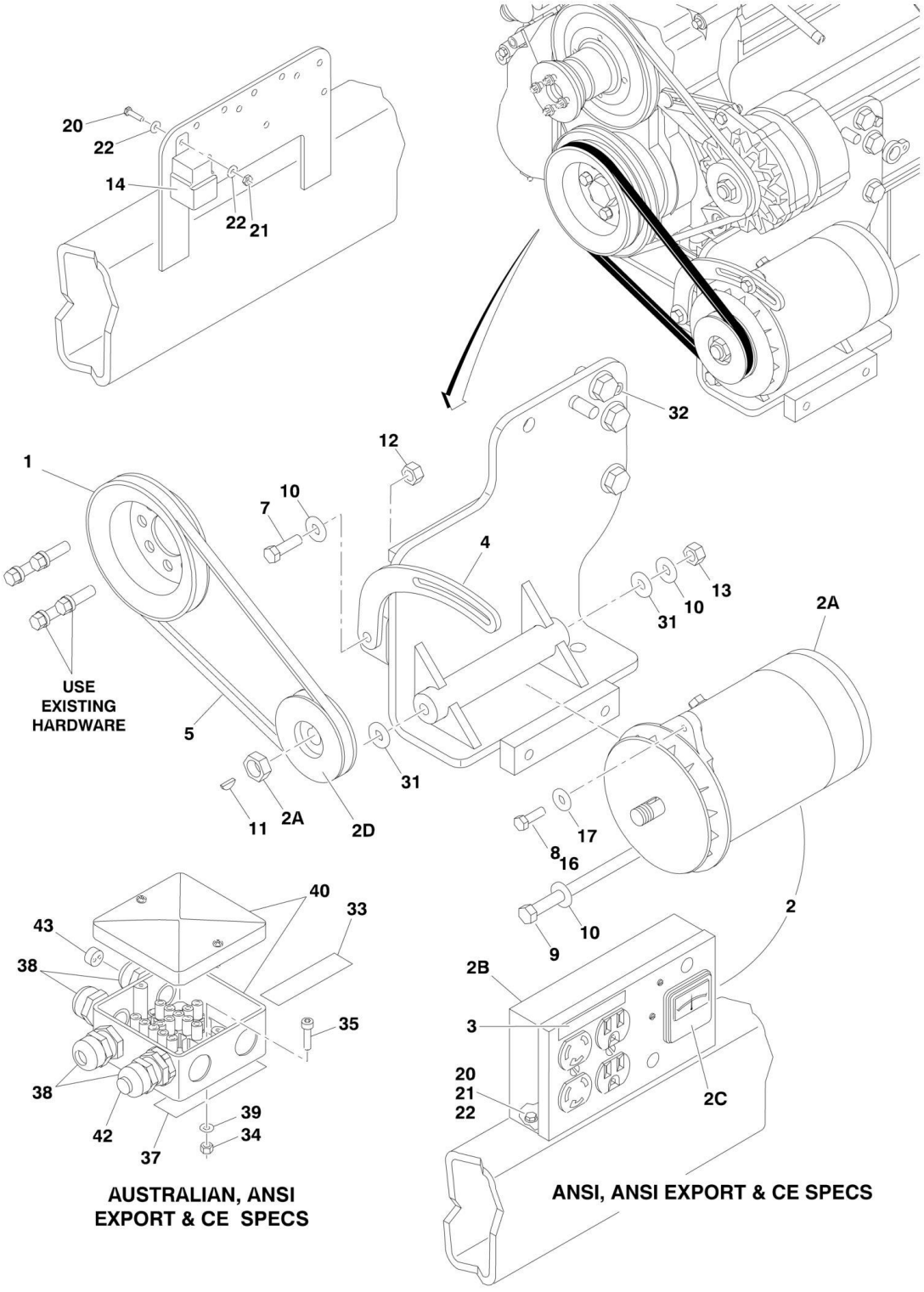

FIGURE 2-31. 2500W GENERATOR INSTALLATION - DEUTZ D2011 ENGINE MACHINES (OPTIONAL)

ITEM	PART NUMBER	QTY	DESCRIPTION	REV
		Ref	**2500W GENERATOR INSTALLATION - DEUTZ D2011 ENGINE MACHINES (OPTIONAL)**	
	0274079	Ref	**110V-60Hz (ANSI, ANSI Export and CSA Specs) (SN 0300096000 through 0300169775)**	2-B
	1001115403	Ref	**110V-60Hz (ANSI, ANSI Export and CSA Specs) (SN 0300169776 through 0300203770)**	B
	0274089	Ref	**110V-50Hz (CE Specs) (SN 0300069000 through 0300131126)**	2-B
	1001100732	Ref	**110V-50Hz (CE Specs) (SN 0300131127 through 0300203770)**	C
	0274085	Ref	**220V-50Hz (ANSI Export, Australian and CE Specs) (SN 0300069000 through 0300131126)**	2-B
	1001100749	Ref	**220V-50Hz (ANSI Export, Australian and CE Specs) (SN 0300131127 through 0300169775)**	C
	1001115412	Ref	**220V-50Hz (ANSI Export, Australian and CE Specs) (SN 0300169776 through 0300203770)**	A
1	3580158	1	Pulley	
2		Ref	Generator and Control Box Assembly Options:	
2	2460055	1	110V/60Hz (ANSI and ANSI Export Specs)	
2	2460057	1	110V/50Hz (CE Specs) **(SN 0300069000 through 0300131126)**	
2	2460049	1	110V/50Hz (CE Specs) **(SN 0300131127 through 0300203770)**	
2	2460056	1	220V/50Hz (Australian and CE Specs) **(SN 0300069000 through 0300131126)**	
2	1001100321	1	220V/50Hz (Australian and CE Specs) **(SN 0300131127 through 0300203770)**	
2A	7012558	1	Generator Only - 110V/60Hz	
2A	2460049	1	Generator Only - 110V/50Hz	
2A	1001100321	1	Generator Only - 220V/50Hz	
2A		Ref	**Note: Replacement Generators come standard with p/n 3580134 pulley. This pulley may not be correct for all applications. Refer to pulley options below.**	
2A		Ref	Armature with Slip Rings Options:	
2A	7026199	1	Armature with Slip Rings - 110V/60Hz	
2A	70000122	1	Armature with Slip Rings - 110V/50Hz	
2A	70000123	1	Armature with Slip Rings - 220V/50Hz	
2A	7012513	4	Cap, Brush Holder	
2A	7020108	4	Brush	
2A	7020109	4	Holder, Brush	
2A	7012514	1	Fan	
2A	7020110	1	Bell, Front	
2A	7020111	1	Bell, Rear	
2A	7020190	2	Bearing	
2B	7019680	1	Box, Control - 110V/60Hz & 110V/50Hz	
2B	Not Required	0	Box, Control - 220V/50Hz	
2B		Ref	Receptacle Options:	
2B	4460190	1	Receptacle, Standard (110V Only)	
2B	4460027	1	Receptacle, Twistlock (110V Only)	
2B	70000124	1	Receptacle, Double (220V/50Hz Only)	
2B	70000125	1	Receptacle, Single (220V/50Hz Only)	
2B		Ref	Breaker, Circuit Options:	
2B	4360542	1	Breaker 110V/60Hz & 110V/50Hz	
2B	70000126	1	Breaker 220V/50Hz	

SECTION 2 - TURNTABLE

ITEM	PART NUMBER	QTY	DESCRIPTION	REV
2B	3520028	1	Plug, Hole	
2C		Ref	Voltmeter Options:	
2C	2420203	1	Voltmeter - 110V	
2C	7020192	1	Voltmeter - 220V	
2D		Ref	Pulley Options:	
2D	3580276	1	Pulley - 60Hz	
2D	3580134	1	Pulley - 50Hz	
2D	7027887	1	Key, Woodruff	
3		Ref	Decal Options:	
3	3251243	1	110V/60Hz	
3	1705325	1	110V/50Hz	
3	Not Required	0	220V/50Hz	
4	0200742	1	Arm, Adjusting	
5		Ref	Belt Options:	
5	0480122	1	Belt (110V-60Hz)	
5	0480120	1	Belt (110V-50Hz)	
5	0480120	1	Belt (220V-50Hz)	
7	0641610	1	Bolt 3/8in-16NC x 1-1/4in	
8	0100011	AR	Compound, Locking	
9	0641772	1	Bolt 7/16in-14NC x 9in	
10	4751600	6	Flatwasher 3/8in Regular	
11	2860012	1	Key, Woodruff	
12	3311605	1	Locknut 3/8in-16NC	
13	3311705	1	Locknut 7/16in-14NC	
14	3740080	1	Relay	
16	0641508	1	Bolt 5/16in-18NC x 1in	
17	4751500	AR	Flatwasher 5/16in Regular	
20	0721006	AR	Bolt #10-24NC x 3/4in	
21	3311005	AR	Locknut #10-24NC	
22	4751000	AR	Flatwasher #10 Regular	
25	4360336	1	Switch, Toggle (Not Shown - Located at Platform)	
26	4740397	1	Bushing (Not Shown - Located at Platform)	
27	4060802	1	Guard, Switch (Not Shown - Located at Platform)	
28	3252507	1	Decal - 220V - 50/60Hz (Not Shown - Located on Turntable)	
29	2820031	4 in/10cm	Heat Shrink (Not Shown - Located at Platform)	
30	3251102	1	Decal (Not Shown - Located at Platform)	
32	0641404	1	Bolt 1/4in-20NC x 1/2	
33	3252507	2	Decal - 220V - 50Hz	
		Ref	**Note: One Decal Not Shown - Located on the Inside of Platform Rail.**	
34	3290505	1	Locknut M5 x 0.8mm	
35	4031608	1	Bolt M5 x 20mm	
36	4240018	1	Tie-Strap (Not Shown)	
37	4420060	1	Tape, Double Coated Acrylic Foam	
38	4460968	3	Connector, Strain Relief	
39	4811600	1	Flatwasher M5	
40	1001099869	1	Box, Junction	
42		Ref	Light Red Options:	
42	1001100233	1	125V	
42	1001100234	1	250V	
43	0962449	1	Bushing	
50	2902085	1	Kit, Powermite Generator Mounting (Not Shown)	

FIGURE 2-32. 2500W GENERATOR INSTALLATION - DEUTZ TD2.9L4 ENGINE MACHINES (OPTIONAL)

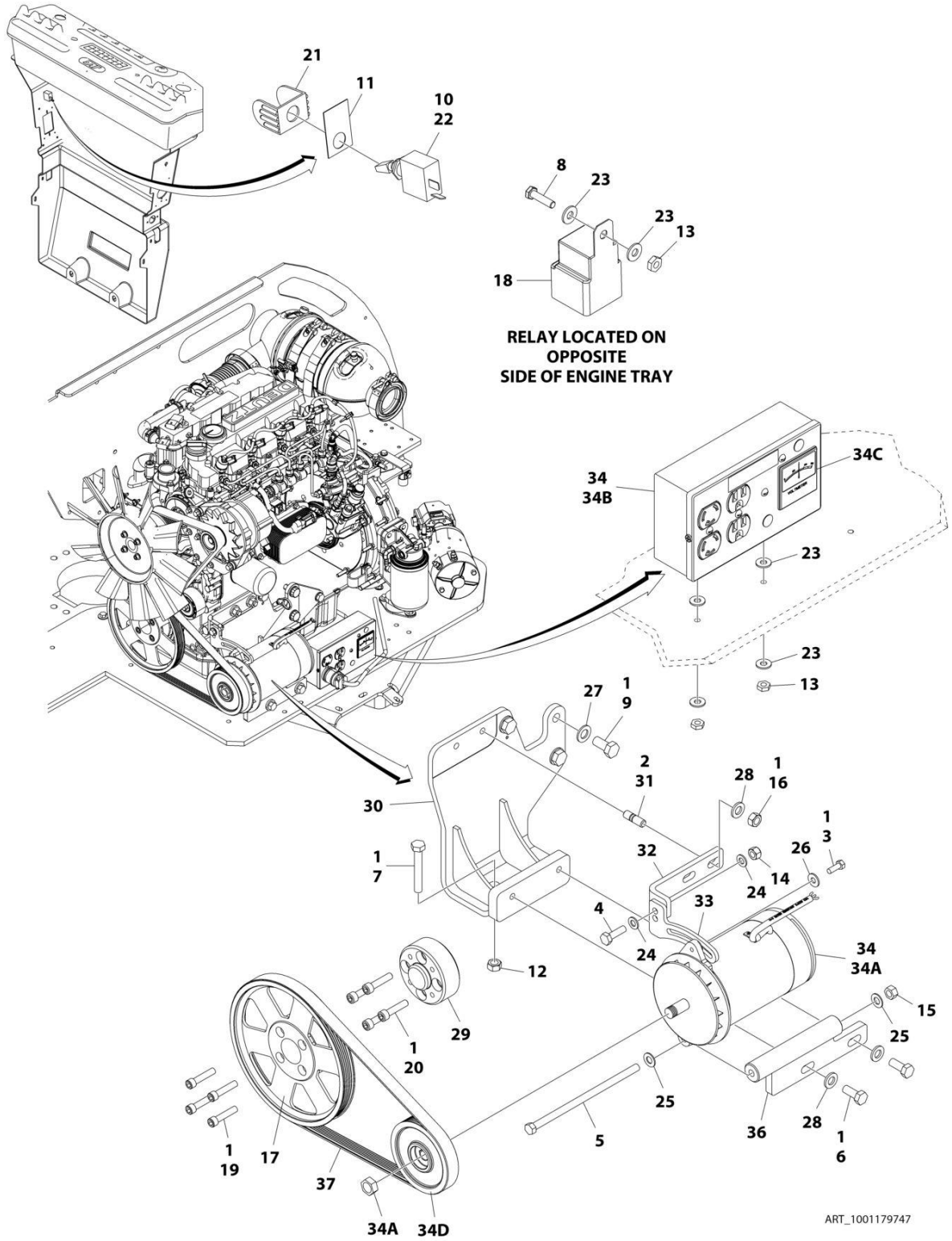

FIGURE 2-32. 2500W GENERATOR INSTALLATION - DEUTZ TD2.9L4 ENGINE MACHINES (OPTIONAL)

ITEM	PART NUMBER	QTY	DESCRIPTION	REV
	1001179747	Ref	**2500W GENERATOR INSTALLATION - DEUTZ TD2.9L4 ENGINE MACHINES (OPTIONAL)**	A
1	0100011	AR	Compound, Locking	
2	0100019	AR	Compound, Locking	
3	0641508	1	Bolt 5/16 x 1	
4	0641610	1	Bolt 3/8 x 1-1/4	
5	0641772	1	Bolt 7/16 x 9	
6	0641812	2	Bolt 1/2 x 1-1/2	
7	0681822	1	Bolt 1/2 x 2-3/4	
8	0721006	1	Screw #10 x 3/4	
9	0771414	3	Bolt M14 x 30 Grade 10.9	
10	2820031	0.33ft /0.1m	Heatshrink	
11	3251102	1	Nameplate - Generator	
12	3271801	1	Nut 1/2	
13	3311005	3	Nut #10	
14	3311605	1	Nut 3/8	
15	3311705	1	Nut 7/16	
16	3311801	2	Nut 1/2	
17	3580320	1	Pulley	
18	3740080	1	Relay	
19	3931628	4	Capscrew 3/8 x 1-3/4	
20	4032014	4	Capscrew M10 x 50	
21	4060802	1	Guard, Switch	
22	4360336	1	Switch, Toggle	
23	4711000	6	Washer #10	
24	4711600	2	Washer 3/8	
25	4711700	2	Washer 7/16	
26	4751500	1	Washer 5/16	
27	4812200	3	Washer M14	
28	4891800	4	Washer 1/2	
29	1001135679	1	Adapter, Pulley	
30	1001146670	1	Mount	
31	1001163599	2	Stud	
32	1001179836	1	Mount	
33	1001179837	1	Arm, Adjustment	
34	1001180001	1	Generator and Control Box Assembly - 110V/60Hz	
34A	7012558	1	Generator Only - 110V/60Hz	
34A		Ref	**Note: Replacement Generators come standard with p/n 3580134 pulley. This pulley may not be correct for all applications. Refer to pulley options below.**	
34A	7026199	1	Armature with Slip Rings	
34A	7012513	4	Cap, Brush Holder	
34A	7020108	4	Brush	
34A	7020109	4	Holder, Brush	
34A	7012514	1	Fan	
34A	7020110	1	Bell, Front	
34A	7020111	1	Bell, Rear	
34A	7020190	2	Bearing	
34B	7019680	1	Box, Control - 110V/60Hz	

SECTION 2 - TURNTABLE

ITEM	PART NUMBER	QTY	DESCRIPTION	REV
34B		Ref	Receptacle Options:	
34B	4460190	1	Receptacle, Standard (110V Only)	
34B	4460027	1	Receptacle, Twistlock (110V Only)	
34B	4360542	1	Breaker, Circuit	
34B	3520028	1	Plug, Hole	
34C	2420203	1	Voltmeter - 110V	
34D	1001179893	1	Pulley	
36	1001181243	1	Mount	
37	1001148138	1	Belt	

FIGURE 2-33. 2500W GENERATOR INSTALLATION - GM ENGINES MACHINES (OPTIONAL)

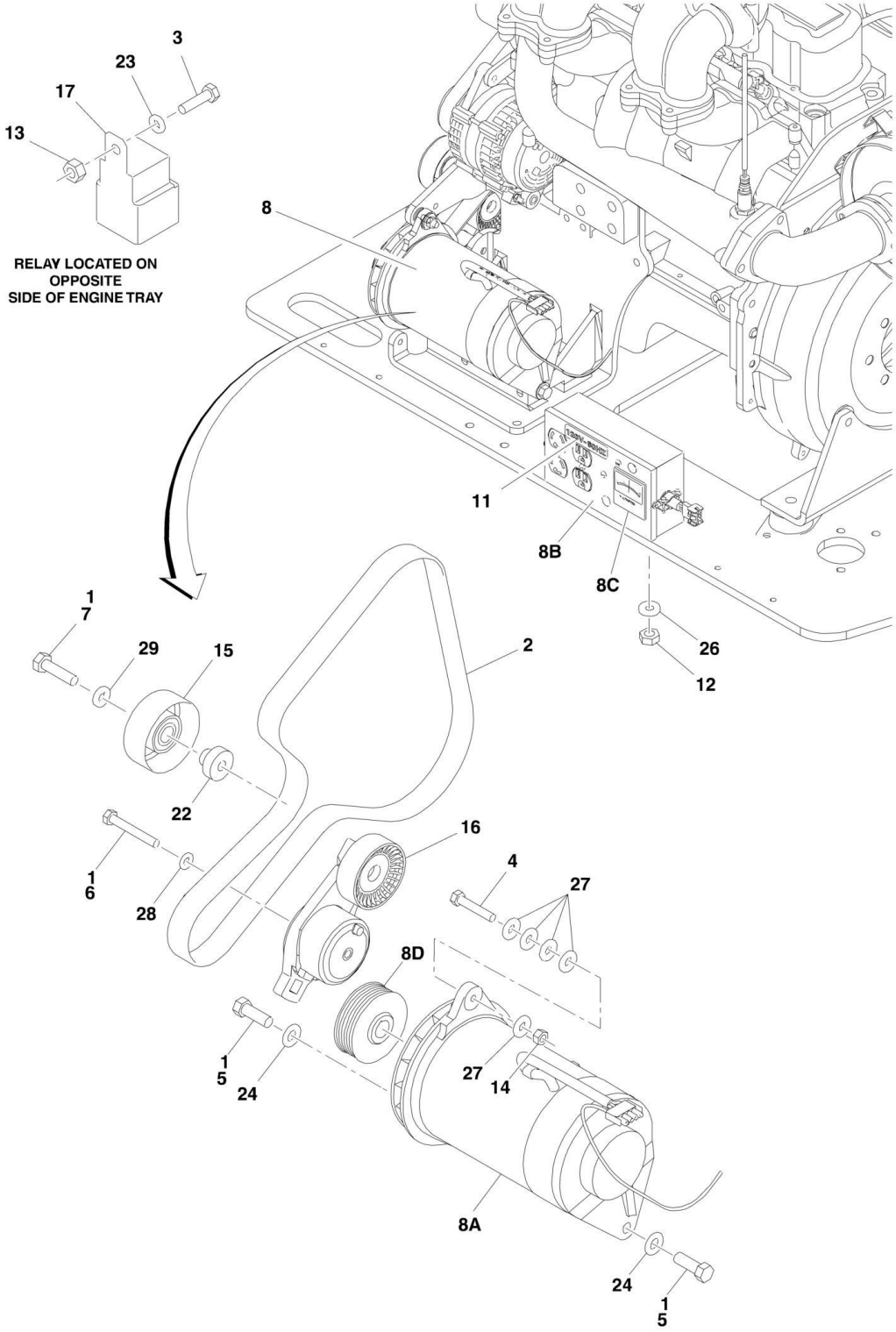

FIGURE 2-33. 2500W GENERATOR INSTALLATION - GM ENGINES MACHINES (OPTIONAL)

ITEM	PART NUMBER	QTY	DESCRIPTION	REV
		Ref	**2500W GENERATOR INSTALLATION - GM ENGINES MACHINES (OPTIONAL)**	
	0275039	Ref	**110V Generator (SN 0300069000 through 0300161284)**	E
	1001141445	Ref	**110V Generator (SN 0300161285 through 0300203770)**	A
1	0100011	AR	Compound, Locking	
2	0480142	1	V-Belt	
3	0641405	1	Bolt 1/4in-20NC x 5/8in	
4		Ref	Bolt Options:	
4	0641514	1	Bolt 5/16in-18NC x 1-3/4in	
4	0641510	1	Bolt 5/16in-18NC x 1-1/4in	
5	0641710	2	Bolt 7/16in-14NC x 1-1/4in	
6	0700820	1	Bolt M8 x 60mm	
7	0701016	1	Bolt M10 x 340mm	
8	2460051	1	Generator and Control Box Assembly	
8A	7012558	1	Generator Only - 110V/60Hz	
		Ref	**Note: Replacement Generators come standard with p/n 3580134 pulley. This pulley may not be correct for all applications. Refer to pulley options below.**	
8A		Ref	Armature with Slip Rings Options:	
8A	7026199	1	Armature with Slip Rings - 110V/60Hz	
8A	70000123	1	Armature with Slip Rings - 220V/50Hz	
8A	7012513	4	Cap, Brush Holder	
8A	7020108	4	Brush	
8A	7020109	4	Holder, Brush	
8A	7012514	1	Fan	
8A	7020110	1	Bell, Front	
8A	7020111	1	Bell, Rear	
8A	7020190	2	Bearing	
8B	7019680	1	Box, Control - 110V/60Hz	
8B		Ref	Receptacle Options:	
8B	4460190	1	Receptacle, Standard (110V Only)	
8B	4460027	1	Receptacle, Twistlock (110V Only)	
8B	4360542	1	Breaker, Circuit	
8B	3520028	1	Plug, Hole	
8C	2420203	1	Voltmeter	
8D	3580324	1	Pulley	
8D	7027887	1	Key, Woodruff	
9	2820031	AR	Heat Shrink (Not Shown - Located at Platform)	
10	3251102	1	Nameplate - Generator (Not Shown - Located at Platform)	
11	3251243	1	Decal - 110 Volt	
12	3311005	2	Locknut # 10-24NC	
13	3311405	1	Locknut 1/4in-20NC	
14	3311505	1	Locknut 5/16in-18NC	
15	3580312	1	Pulley, Idler	
16	3580348	1	Tensioner, Belt	
17	3740080	1	Relay, Bosch	
18	4060802	1	Guard, Switch (Not Shown - Located at Platform)	
19	4240018	AR	Tie-Strap (Not Shown)	
20	4360336	1	Switch, Toggle (Not Shown - Located at Platform)	
21	4460906	3	Terminal (Not Shown)	

SECTION 2 - TURNTABLE

ITEM	PART NUMBER	QTY	DESCRIPTION	REV
22	4568735	1	Spacer, Tube (Idler Pulley Grooved)	
23	4711400	1	Flatwasher 1/4in Thin	
24	4711700	2	Flatwasher 7/16in Thin	
25	4740397	1	Spacer (Not Shown - Located at Platform)	
26	4751000	2	Flatwasher #10 Regular	
27	4751500	AR	Flatwasher 5/16in Regular	
28	4811900	1	Flatwasher M8	
29	4891600	1	Flatwasher 3/8in Hardened	

FIGURE 2-34. 4000W GENERATOR INSTALLATION - DEUTZ D2011 ENGINE MACHINES (OPTIONAL)

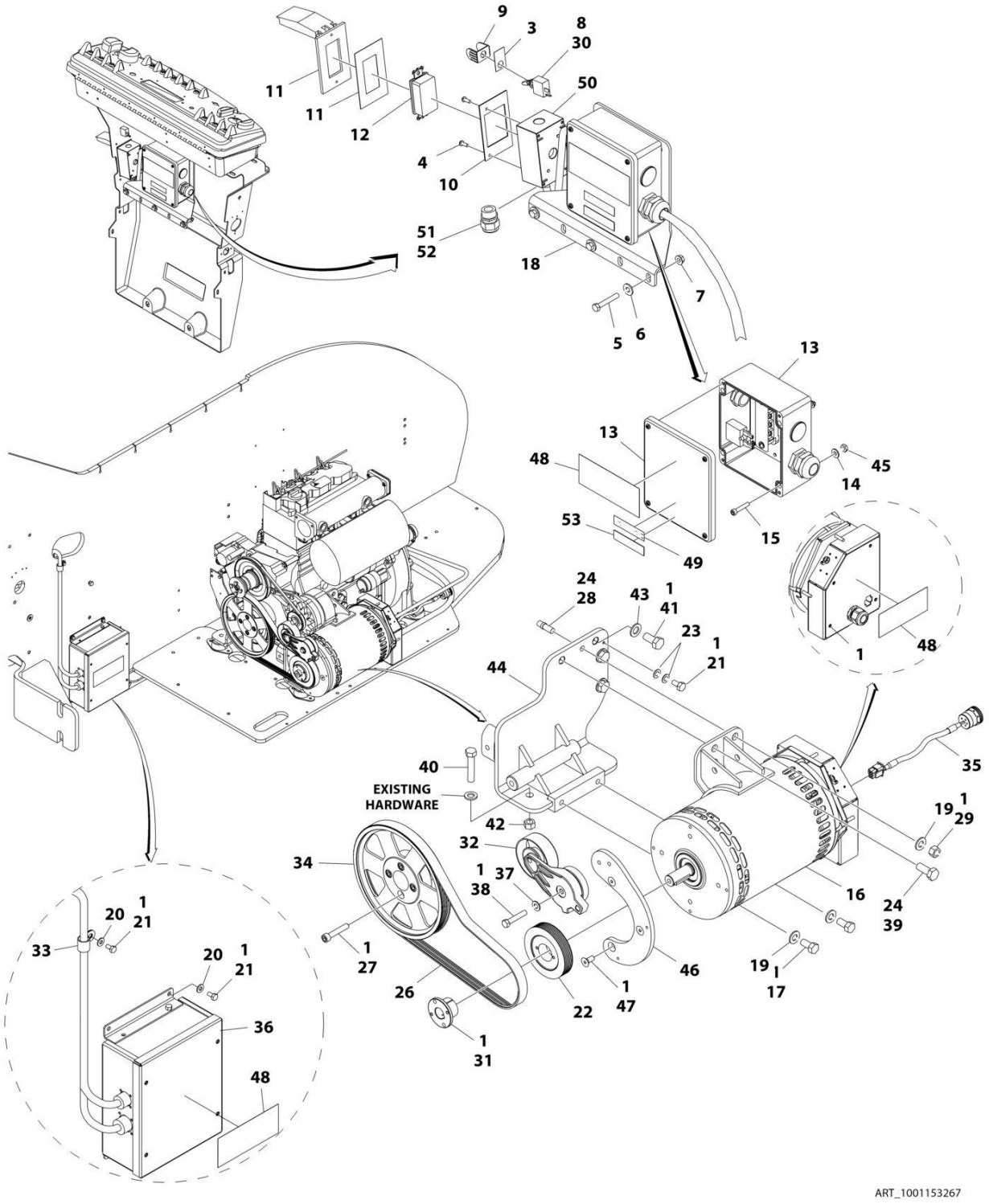

FIGURE 2-34. 4000W GENERATOR INSTALLATION - DEUTZ D2011 ENGINE MACHINES (OPTIONAL)

ITEM	PART NUMBER	QTY	DESCRIPTION	REV
		Ref	**4000W GENERATOR INSTALLATION - DEUTZ D2011 ENGINE MACHINES (OPTIONAL)**	
	1001153267	Ref	**60Hz Generator**	A
	1001153268	Ref	**50Hz Generator**	D
1	0100011	AR	Compound, Locking	
3	3251102	1	Nameplate - Generator	
4	3910606	4	Screw #6 x 3/8	
5	0641516	3	Bolt 5/16 x 2	
6	4711500	3	Washer 5/16	
7	3311508	3	Nut 5/16	
8	4360336	1	Switch, Toggle	
9	4060802	1	Guard, Switch	
10	3960422	1	Gasket (60Hz Only)	
11	1001110873	1	Cover, Receptacle (60Hz Only)	
12	4460346	1	Receptacle (60Hz Only)	
13	1001152457	1	Junction Box Assembly (60Hz Only)	
13	3300396	1	Cover, Breaker	
13	4360070	1	Breaker, Circuit - 15Amp	
13	4460425	1	Connector, Strain Relief (LH Side)	
13	4460426	1	Connector, Strain Relief (RH Side)	
14	4751000	4	Washer #10	
15	3931016	4	Capscrew #10 x 1	
16	1001129858	1	Generator Assembly (60Hz)	
16	1001138565	1	Generator Assembly (50Hz)	
16	70003709	1	Ring, Retaining (External)	
16	70003708	1	Ring, Retaining (Internal)	
16	70001966	1	Bearing	
16	70004092	1	Endbell (Shaft End)	
16	70004171	1	Key	
16	70004676	1	Rotor	
16	70004684	1	Stator (60Hz)	
16	70004677	1	Stator (50Hz)	
16	70004678	1	Endbell (Rear)	
16	70004679	1	Cover, Endbell (Rear)	
16	70004680	1	Enclosure, Wiring	
16	70004685	1	Cover, Enclosure (60Hz)	
16	70004681	1	Cover, Enclosure (50Hz)	
16	70004682	1	Switch, Reset (Located on Enclosure Cover)	
16	70004098	1	Connector, Strain Relief (60Hz) (Located on Enclosure Cover)	
16	70004683	1	Connector, Strain Relief (50Hz) (Located on Enclosure Cover)	
17	0641808	2	Bolt 1/2 x 1	
18	0902888	1	Bracket (60Hz Only)	
19	4711800	3	Washer 1/2	
20	4711400	5	Washer 1/4	
21	0641404	6	Bolt 1/4 x 1/2	
22	3580318	1	Pulley (60Hz)	
22	3580319	1	Pulley (50Hz)	
23	4791400	2	Washer 1/4	
24	0100019	AR	Compound, Locking	
25	4240018	AR	Tie-Strap (Not Shown)	

SECTION 2 - TURNTABLE

ITEM	PART NUMBER	QTY	DESCRIPTION	REV
26	0480128	1	Belt (60Hz)	
26	0480129	1	Belt (50Hz)	
27	4032015	4	Capscrew M10 x 55	
28	4300157	1	Stud	
29	3311801	1	Nut 1/2	
30	2820031	0.33 ft /0.10m	Heat Shrink	
31	0962520	1	Bushing, Split	
32	3580317	1	Tensioner, Belt	
33	1320318	1	Clamp	
34	3580320	1	Pulley	
35	1001152532	1	Harness, Generator	
36	1001138566	1	Box, Control	
37	4711600	1	Washer 3/8	
38	0641616	1	Bolt 3/8 x 2	
39	0771415	1	Bolt M14 x 35	
40	0641820	1	Bolt 1/2 x 2-1/2	
41	0711414	3	Bolt M14 x 30	
42	3311805	1	Nut 1/2	
43	4812200	1	Washer M14	
44	4846567	1	Mount, Motor	
45	3311005	4	Nut #10	
46	1001139357	1	Mount, Tensioner	
47	0741607	3	Screw 3/8 x 7/8	
48	1705387	3	Decal - Hazardous Voltage (60Hz)	
48	1705389	2	Decal - Hazardous Voltage (50Hz)	
49	3251243	1	Decal - 120V-60Hz (60Hz Only)	
50	0860038	1	Box, Switch (60Hz Only)	
51	4460071	1	Connector, Strain Relief (60Hz Only)	
52	0100020	AR	Sealant	
53	1705374	1	Decal - 240V-60Hz (60Hz Only)	
60	1001096070	1	Breaker Box Kit (50Hz Only) (Not Shown - See ELECTRICAL SECTION for Breakdown)	
61	0903566	1	Bracket (50Hz Only) (Not Shown - Attaches Item 60)	

FIGURE 2-35. 4000W GENERATOR INSTALLATION - DEUTZ TD2.9L4 ENGINE MACHINES (OPTIONAL)

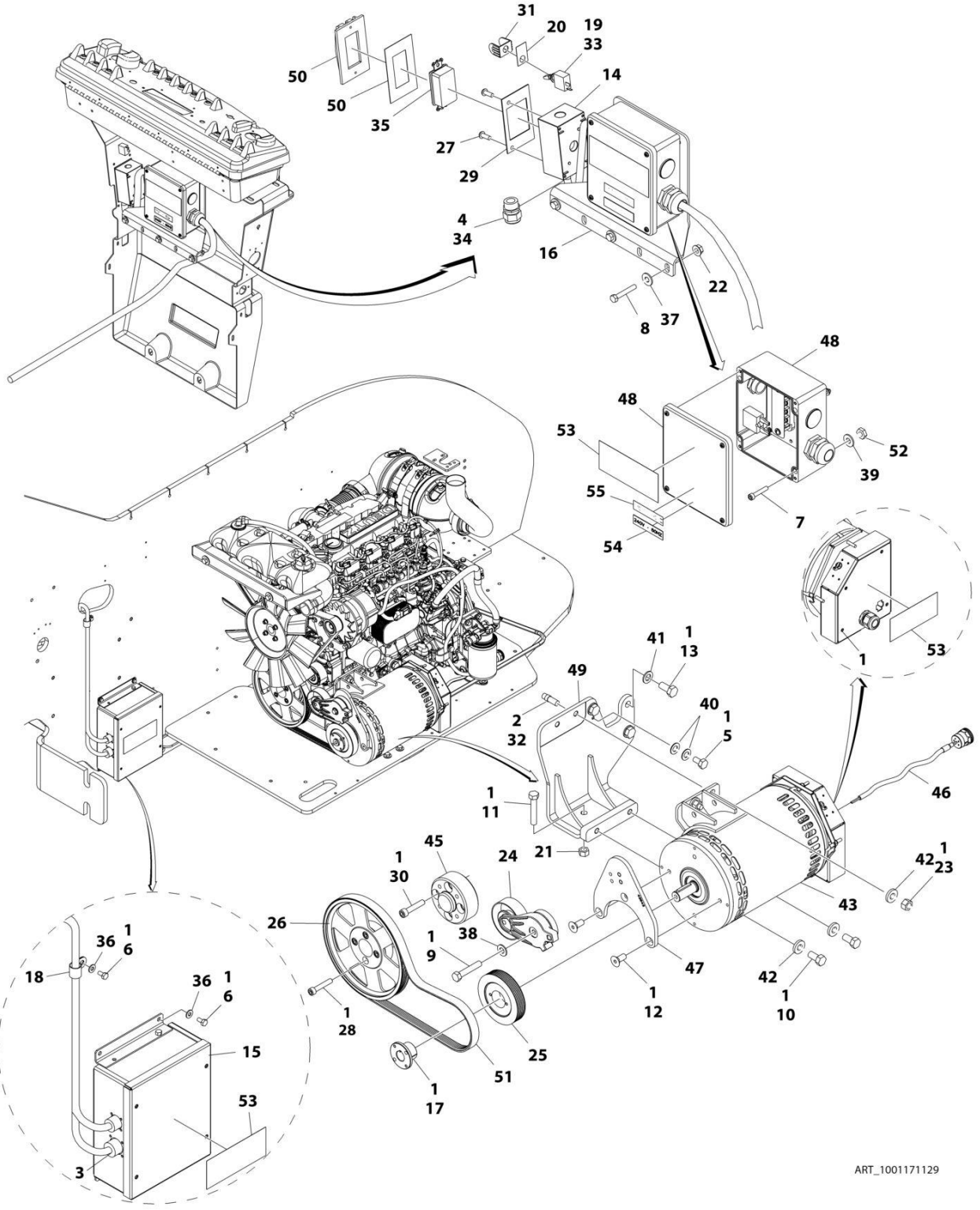

FIGURE 2-35. 4000W GENERATOR INSTALLATION - DEUTZ TD2.9L4 ENGINE MACHINES (OPTIONAL)

ITEM	PART NUMBER	QTY	DESCRIPTION	REV
		Ref	**4000W GENERATOR INSTALLATION - DEUTZ TD2.9L4 ENGINE MACHINES (OPTIONAL)**	
	1001171129	Ref	**4000W/60Hz Generator Installation - Deutz TD2.9L4 Engines**	A
1	0100011	AR	Compound, Locking	
2	0100019	AR	Compound, Locking	
3	0100048	AR	Grease Dielectric	
4	0100079	AR	Sealant	
5	0641404	1	Bolt 1/4 x 1/2	
6	0641406	5	Bolt 1/4 x 3/4	
7	3931016	4	Capscrew #10 x 1	
8	0641516	3	Bolt 5/16 x 2	
9	0641616	1	Bolt 3/8 x 2	
10	0641808	2	Bolt 1/2 x 1	
11	0681822	1	Bolt 1/2 x 2-3/4 Grade 8	
12	0741607	3	Screw 3/8 x 7/8	
13	0771414	3	Bolt M14 x 13	
14	0860038	1	Box, Switch (60Hz)	
15	1001138566	1	Control Box Assembly	
16	0902888	1	Bracket, Junction Box (60Hz)	
17	0962520	1	Bushing, Split	
18	1320318	1	Clamp	
19	2820031	0.33 ft /0.1m	Heat Shrink	
20	3251102	1	Nameplate, Generator	
21	3271801	1	Nut 1/2 Grade 8	
22	3311508	3	Nut 5/16	
23	3311801	2	Nut 1/2	
24	3580317	1	Tensioner, Belt with Pulley	
25	3580318	1	Pulley, Generator (60Hz)	
26	3580320	1	Pulley	
27	3910606	4	Screw 6 x 3/8	
28	3931628	4	Capscrew 3/8 x 1-3/4	
29	3960422	1	Gasket, AC Receptacle (60Hz)	
30	4032014	4	Capscrew M10 x 50	
31	4060802	1	Guard, Switch	
32	1001163599	2	Stud	
33	4360336	1	Switch, Toggle	
34	4460071	1	Connector, Strain Relief (60Hz)	
35	4460346	1	Receptacle (60Hz)	
36	4711400	5	Washer 1/4	
37	4751500	3	Washer 5/16	
38	4711600	1	Washer 3/8	
39	4751000	4	Washer #10	
40	4791400	2	Washer 1/4	
41	4812200	3	Washer M14	
42	4891800	4	Washer 1/2	
43	1001140346	1	Generator Assembly (60Hz)	
43	70003709	1	Ring, Retaining (External)	
43	70003708	1	Ring, Retaining (Internal)	

SECTION 2 - TURNTABLE

ITEM	PART NUMBER	QTY	DESCRIPTION	REV
43	70001966	1	Bearing	
43	70004092	1	Endbell (Shaft End)	
43	70004099	1	Key	
43	70004676	1	Rotor	
43	70004687	1	Stator	
43	70004678	1	Endbell (Rear)	
43	70004679	1	Cover, Endbell (Rear)	
43	70004680	1	Enclosure, Wiring	
43	70004685	1	Cover, Enclosure	
43	70004682	1	Switch, Reset (Located on Enclosure Cover)	
43	70004098	1	Connector, Strain Relief (Located on Enclosure Cover)	
45	1001135679	1	Adapter, Pulley	
46	1001152532	1	Harness, Generator	
47	1001142643	1	Support, Tensioner	
48	1001152457	1	Junction Box Assembly	
48	3300396	1	Cover, Breaker	
48	4360070	1	Breaker, Circuit - 15Amp	
48	4460425	1	Connector, Strain Relief (LH Side)	
48	4460426	1	Connector, Strain Relief (RH Side)	
49	1001146670	1	Mount, Motor	
50	1001110873	1	Cover, Receptacle (60Hz)	
51	1001142646	1	Belt, Generator	
52	3311005	4	Nut #10	
53	1705387	3	Decal - Hazardous Voltage (60Hz)	
54	1705374	1	Decal - 240V (60Hz)	
55	3251243	1	Decal - 120V (60Hz)	

FIGURE 2-36. 4000W GENERATOR INSTALLATION - GM ENGINES

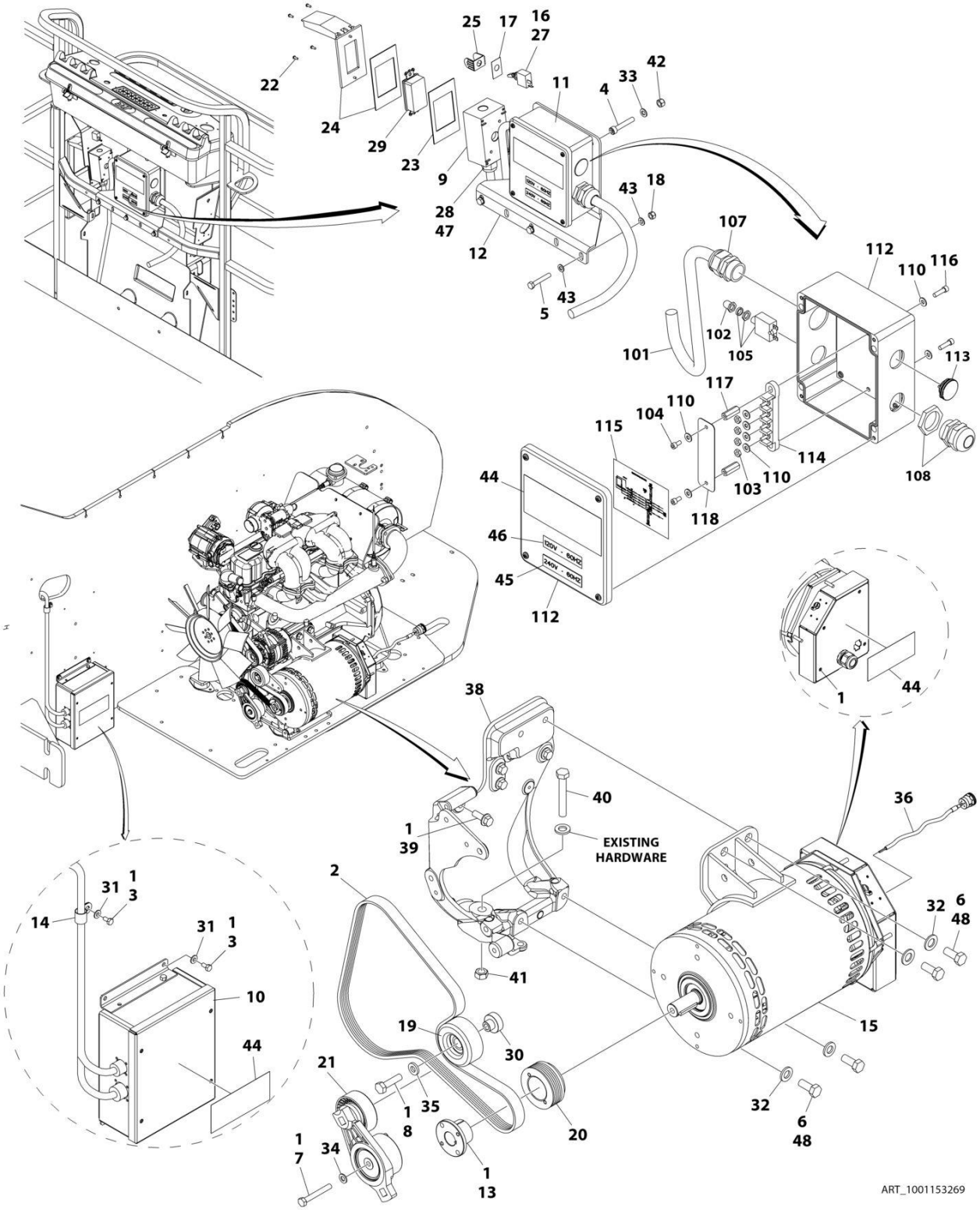

FIGURE 2-36. 4000W GENERATOR INSTALLATION - GM ENGINES

ITEM	PART NUMBER	QTY	DESCRIPTION	REV
	1001153269	Ref	**4000W GENERATOR INSTALLATION - GM ENGINES**	B
1	0100011	AR	Compound, Locking	
2	0480142	1	Belt	
3	0641404	5	Bolt 1/4 x 1/2	
4	3931016	4	Capscrew #10 x 1	
5	0641516	3	Bolt 5/16 x 2	
6	0641808	4	Bolt 1/2 x 1	
7	0700820	1	Bolt M8 x 60	
8	0701016	1	Bolt M10 x 40	
9	0860038	1	Box, Switch	
10	1001138566	1	Box, Control	
11	1001152457	1	Generator Junction Box Assembly (See Item 101-118 for Breakdown)	
12	0902888	1	Bracket	
13	0962520	1	Bushing, Split	
14	1320318	1	Clamp	
15	1001129858	1	Generator Assembly	
15	70003709	1	Ring, Retaining (External)	
15	70003708	1	Ring, Retaining (Internal)	
15	70001966	1	Bearing	
15	70004092	1	Endbell (Shaft End)	
15	70004171	1	Key	
15	70004676	1	Rotor	
15	70004684	1	Stator	
15	70004678	1	Endbell (Rear)	
15	70004679	1	Cover, Endbell (Rear)	
15	70004680	1	Enclosure, Wiring	
15	70004685	1	Cover, Enclosure	
15	70004682	1	Switch, Reset (Located on Enclosure Cover)	
15	70004098	1	Connector, Strain Relief (Located on Enclosure Cover)	
16	2820031	0.33 ft /0.1m	Heat Shrink	
17	3251102	1	Nameplate - Generator	
18	3311508	3	Nut 5/16	
19	3580312	1	Pulley, Idler	
20	3580314	1	Pulley, Drive	
21	3580348	1	Tensioner, Belt	
22	3910606	4	Screw #6 x 3/8	
23	3960422	1	Gasket	
24	1001110873	1	Cover, Receptacle	
25	4060802	1	Guard, Switch	
26	4240018	1	Tie-Strap (Not Shown)	
27	4360336	1	Switch, Toggle	
28	4460071	1	Connector, Strain Relief	
29	4460346	1	Terminal, Electrical	
30	4568735	1	Tube, Spacer	
31	4711400	5	Washer 1/4	
32	4711800	4	Washer 1/2	
33	4751000	4	Washer #10	
34	4811900	1	Washer M8	

SECTION 2 - TURNTABLE

ITEM	PART NUMBER	QTY	DESCRIPTION	REV
35	4891600	1	Washer 3/8	
36	1001152532	1	Harness, Generator	
38	1001141181	1	Mount, Motor	
39	0811608	4	Screw 3/8 x 1	
40	0641832	1	Bolt 1/2 x 4	
41	3311805	1	Nut 1/2	
42	3311005	4	Nut #10	
43	4751500	3	Washer 5/16	
44	1705387	3	Decal - Hazardous Voltage	
45	1705374	1	Decal - 240V-60Hz	
46	3251243	1	Decal - 120V-60Hz	
47	0100020	AR	Sealant	
48	0100019	AR	Compound, Locking	
	1001152457	Ref	**GENERATOR JUNCTION BOX ASSEMBLY**	B
101	1001179154	2.5 ft /0.8m	Cable, Electrical - 12/3	
102	3300396	1	Cover, Breaker	
103	3311001	4	Nut #10	
104	3900300	2	Screw	
105	4360070	1	Breaker, Circuit - 15Amp	
107	4460425	1	Connector, Strain Relief (LH Side)	
108	4460426	1	Connector, Strain Relief (RH Side)	
110	4711000	8	Washer #10	
112	1001152456	1	Box Junction	
113	1001152525	1	Plug	
114	1001152530	1	Terminal, Block	
115	1001153260	1	Decal - Wiring Diagram	
116	3900267	2	Screw	
117	1001158008	2	Stand-Off	
118	1001158363	1	Cover, Terminal Block	

FIGURE 2-37. 7500W SKYPOWER GENERATOR INSTALLATION - CATERPILLAR, DEUTZ D2011 AND PERKINS ENGINE MACHINES

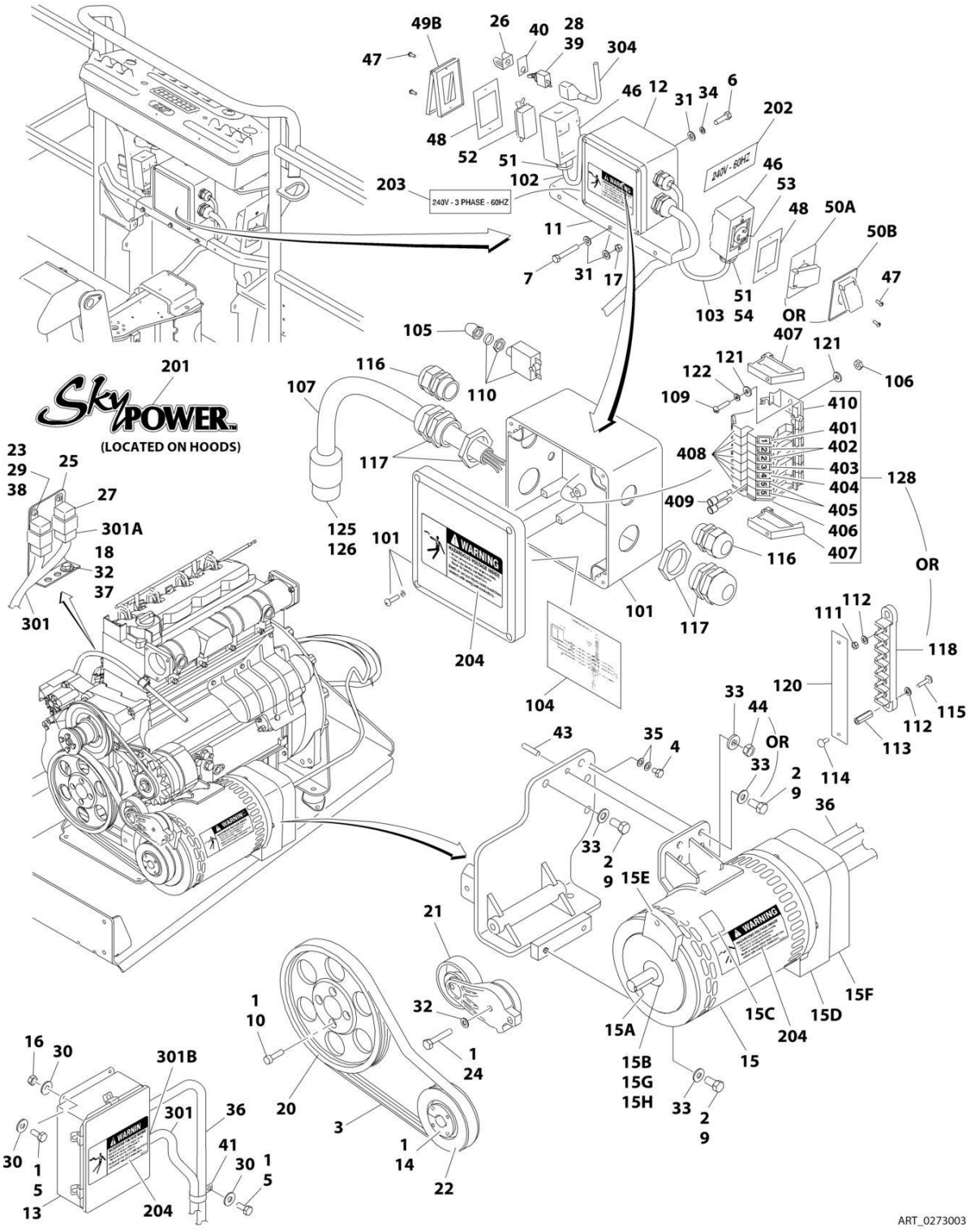

FIGURE 2-37. 7500W SKYPOWER GENERATOR INSTALLATION - CATERPILLAR, DEUTZ D2011 AND PERKINS ENGINE MACHINES

ITEM	PART NUMBER	QTY	DESCRIPTION	REV
		Ref	**7500W SKYPOWER GENERATOR INSTALLATION - CATERPILLAR, DEUTZ D2011 AND PERKINS ENGINE MACHINES**	
		Ref	**Machines without UGM:**	
	0273003	Ref	**60Hz Specs (Caterpillar Engines)**	K
	0273004	Ref	**50Hz Specs (Caterpillar Engines)**	G
	0272597	Ref	**60Hz Specs (Deutz D2011 Engines)**	L
	0272596	Ref	**50Hz Specs (Deutz D2011 Engines)**	J
	1001097331	Ref	**60Hz Specs (Perkins Engines)**	D
	1001097332	Ref	**50Hz Specs (Perkins Engines)**	C
		Ref	**Machines with UGM:**	
	1001112101	Ref	**60Hz Specs (Caterpillar Engines)**	B
	1001112408	Ref	**50Hz Specs (Caterpillar Engines)**	A
	1001115390	Ref	**60Hz Specs (Deutz D2011 Engines)**	A
	1001115721	Ref	**50Hz Specs (Deutz D2011 Engines)**	A
	1001112101	Ref	**60Hz Specs (Perkins Engines)**	A
	1001112408	Ref	**50Hz Specs (Perkins Engines)**	A
1	0100011	AR	Locking, Compound	
2	0100019	AR	Locking, Compound	
3		Ref	Belt, Drive Options:	
3	0480129	1	60Hz Generator (Caterpillar and Perkins Engines)	
3	0480128	1	60Hz Generator (Deutz Engine)	
3	0480126	1	50Hz Generator	
4	0641403	1	Bolt 1/4in-20NC x 3/8in	
5		Ref	Bolt Options:	
5	0641404	4	Bolt 1/4in-20NC x 1/2in	
5	0641407	4	Bolt 1/4in-20NC x 7/8in	
5	0641408	4	Bolt 1/4in-20NC x 1in	
6		Ref	Bolt Options:	
6	0641505	4	Bolt 5/16in-18NC x 5/8in	
6	0641508	4	Bolt 5/16in-18NC x 1in	
7	0641516	3	Bolt 5/16in-18NC x 2in	
8	0641614	2	Bolt 3/8in-16NC x 1-3/4in (Not Shown)	
9	0641808	AR	Bolt 1/2in-13NC x 1in	
9	0771415	AR	Bolt M14 x 35	
10	0701217	3	Bolt M12 x 45mm (Caterpillar and Perkins Engines)	
10	4032015	4	Bolt M10 x 55 (Deutz Engine)	
11	0902888	1	Bracket, Junction Box Mounting	
12		Ref	Junction Box Assembly Options (See Item 101-128 for Breakdown):	
12	0861542	1	60Hz **(SN 0300069000 through 0300182752)**	
12	1001157592	1	60Hz **(SN 0300182753 through 0300203770)**	
12	0861567	1	50Hz **(SN 0300069000 through 0300182752)**	
12	1001157525	1	50Hz **(SN 0300182753 through 0300203770)**	
13		Ref	Control Box Assembly Options:	
13	0861538	1	60Hz Generator	
13	0861572	1	50Hz Generator	
13	7024488	1	Card, Circuit - Generator Power	
13	Not Available	1	Fuse (Purchase Locally)	

SECTION 2 - TURNTABLE

ITEM	PART NUMBER	QTY	DESCRIPTION	REV
13	7024489	1	Card, Circuit	
13		Ref	**Note: Same Circuit Card (P/N 7024489) is used for both 60Hz & 50Hz. When replacing card, rocker switch on card must be set for required application.**	
13	70000619	1	Harness, Circuit Card	
14	0962520	1	Bushing, Split Taper	
15	2460048	1	Generator Assembly	
15	70003631	1	Brushholder Assembly (Not Shown) (was p/n 7024484)	
15	7024485	1	Breaker, Circuit 30Amp (Not Shown)	
15	70001696	1	Boot, Breaker (was p/n 7024486 - Not Shown)	
15	7027799	1	Block, Connector - 6 Position (Not Shown)	
15	70002460	6	Nut, Brass (Attaches p/n 7027799 to Cover) (Not Shown)	
15	7026597	1	Connector with Leads (Not Shown)	
15	7026188	1	Connector, Clamp (Not Shown)	
15	70002255	NLA	Panel, End (Not Shown) (Use p/n 70004170 Kit)	
15	70002088	1	Stator (Not Shown)	
15	70001974	1	Decal - Terminal Connections (Not Shown)	
15	70000863	1	Fan (Not Shown)	
15	70002297	4	Stud (Not Shown)	
15	70001100	1	Armature, Generator (Includes Radial Ball Bearing on End with Brushes and Fan)	
15	70001384	1	Bearing, Ball Radial	
15A	70004171	1	Key (was p/n 7024561)	
15B	70001966	1	Bearing, Radial Ball	
15C	70001973	1	Decal - Warning Moving Parts	
15D	70001385	NLA	Endbell, Brush Block (Use p/n 70004170 Kit)	
15E	70001953	1	Endbell, Belt Tensioner	
15F	70002290	NLA	Endbell, Shroud Assembly (Use p/n 70004170 Kit)	
15G	70003708	1	Ring, Retaining (Internal)	
15H	70003709	1	Ring, Retaining (External)	
16	3311405	4	Locknut 1/4in-20NC	
17	3311505	3	Locknut 5/16-18NC	
18	3311605	AR	Locknut 3/8in-18NC	
19	3574523	2	Bracket, Control Box Mounting (Not Shown)	
20	3580316	1	Pulley, Crankshaft (Caterpillar and Perkins Engines)	
20	3580320	1	Pulley, Crankshaft (Deutz Engines)	
21	3580317	1	Tensioner, Belt	
22		Ref	Pulley, Generator Options:	
22	3580318	1	60Hz Generator	
22	3580319	1	50Hz Generator	
23	3311005	2	Locknut #10-24NC	
24	0641618	1	Bolt 3/8in-16NC x 2-1/4in	
25	3574163	1	Bracket, Relay Mounting	
26	4060802	1	Guard, Switch	
27	3740080	2	Relay	
28	4360336	1	Switch, Toggle	
28	4740397	1	Spacer (Not Shown)	
29	4751000	4	Flatwasher #10	
30	4711400	AR	Flatwasher 1/4in Narrow	
31	4711500	10	Flatwasher 5/16in Narrow	
32	4711600	AR	Flatwasher 3/8in Narrow	
33	4711800	4	Flatwasher 1/2in Narrow	

ITEM	PART NUMBER	QTY	DESCRIPTION	REV
34	4761500	4	Lockwasher 5/16in	
35	4791400	AR	Starwasher 1/4in	
36	4922925	1	Harness, Generator	
37	0641610	1	Bolt 3/8in-16NC x 1-1/4in	
38	0721004	2	Screw #10-24NC x 1/2in	
39	2820031	AR	Heat Shrink	
40	3252764	1	Nameplate	
41	1320318	AR	Clamp, Hose	
42	4240018	AR	Strap, Tie (Not Shown)	
43	4300157	AR	Stud (Deutz Engines)	
44	3311805	AR	Nut 1/2	
46	0860038	2	Box, Switch (60Hz)	
46	See Note	NLA	Box, Switch (50Hz) (Note: Purchase Locally)	
47	3910606	8	Screw #6-32NC x 3/8in	
48	3960422	2	Gasket (60Hz)	
48	See Note	NLA	Gasket (50Hz) (Note: Purchase Locally)	
49		Ref	Cover, Receptacle Options:	
49A	4060700	1	Cover, Side Hinged (60Hz)	
49B	1001110873	1	Cover, Top Hinged (60Hz)	
49C	See Note	NLA	Cover, Top Hinged (50Hz) (Not Shown) (Note: Purchase Locally)	
50		Ref	Cover, Receptacle Options:	
50A	4061043	1	Cover, Side Hinged (60Hz)	
50B	1001110872	1	Cover, Top Hinged (60Hz)	
50C	See Note	NLA	Cover, Top Hinged (50Hz) (Not Shown) (Note: Purchase Locally)	
51	4460071	AR	Connector, Strain Relief	
52	4460346	1	Receptacle, Female (110-120V) (60Hz)	
52	See Note	NLA	Receptacle, Female (110-120V) (50Hz) (Note: Purchase Locally)	
53	4460958	1	Receptacle, Female Twist-Lock (220-240V Single) (60Hz)	
53	See Note	NLA	Receptacle, Female Twist-Lock (220-240V Single) (50Hz) (Note: Purchase Locally)	
54	4460051	AR	Connector, Strain Relief	
		Ref	**JUNCTION BOX ASSEMBLY**	
	0861542	Ref	**60Hz (SN 0300096000 through 0300182752)**	E
	1001157592	Ref	**60Hz (SN 0300182753 through 0300203770)**	C
	0861567	Ref	**50Hz (SN 0300096000 through 0300182752)**	B
	1001157525	Ref	**50Hz (SN 0300182753 through 0300203770)**	B
		Ref	Box, Junction Options:	
101	0861541	1	Box **(SN 0300096000 through 0300182752)**	
101	1001157521	1	Box **(SN 0300182753 through 0300203770)**	
102		Ref	Cable, Electrical 12/3 Options:	
102	1060494	2 ft /.6m	60Hz **(SN 0300096000 through 0300203770)**	
102	See Note	2 ft /.6m	50Hz (Note: Not Available - Purchase Locally)	
103		Ref	Cable, Electrical 10/3 Options:	
103	1060708	2.5 ft /.76m	Cable **(SN 0300096000 through 0300182752)**	
103	Not Required	0	60Hz **(SN 0300182753 through 0300203770)**	
103	See Note	NLA	50Hz (ANSI Export, Australian and CE Specs) (Note: Not Available - Purchase Locally)	
104	1705376	1	Decal - Wiring Schematic	
105	3300396	1	Cover, Fuse	

ITEM	PART NUMBER	QTY	DESCRIPTION	REV
106	3310601	2	Nut #6-32NC	
107	1060343	AR	Cable, Electrical 10/4 (60Hz Spec Only)	
109	3910610	2	Bolt #6-32NC x 5/8in	
110	4360070	1	Circuit Breaker - 15Amp	
111	3311001	6	Nut #10-24NC	
112	4711000	10	Flatwasher #10 Thin	
113	1001158008	2	Stand-off	
114	10702077	2	Screw #10-32NF x 3/8in	
115	10702082	2	Screw #10-32NF x 3/4in	
116	4460425	AR	Strain Relief, Terminal (60Hz)	
116	3520192	AR	Plug (50Hz)	
117	4460426	AR	Connector, Strain Relief (60Hz Only)	
117	3520189	AR	Plug (50Hz Only)	
118	1001157520	1	Block, Terminal - 6 Pole	
120	1001158007	1	Cover, PVC	
121	4750600	4	Flatwasher #6 Regular	
122	4760600	2	Lockwasher #6	
125	1671092	1	Cover (60Hz Only)	
126	4460963	1	Connector (60Hz Only)	
128	1001121340	1	Terminal Block Assembly (Deutz D2011 Engines) (See Items 401-410 for Breakdown) **(SN 0300096000 through 0300182752)**	
		Ref	**DECAL INSTALLATION**	
	0272435	Ref	**60Hz Specs**	C
	0272589	Ref	**50Hz Specs**	A
201	1705460	2	Decal - SkyPower	
202	1705374	1	Decal - 240V - 60Hz (60Hz Spec Only) **(SN 0300096000 through 0300201771)**	
203		Ref	Decal - 240V - 3 Phase Options:	
203	1705375	1	60Hz Spec	
203	1705461	1	50Hz Spec	
204		Ref	Decal - Hazardous Voltage Options:	
204	1705387	3	60Hz Spec	
204	1705489	3	50Hz Spec	
		Ref	**ELECTRICAL DIAGRAM COMPONENTS**	
	4933264	Ref	**Machines without UGM**	C
	1001112586	Ref	**Machines with UGM**	A
301		Ref	Generator Harness Options:	
301	4922757	1	Machines without UGM	3/C
301	1001112587	1	Machines with UGM	A
301A	4460374	2	Plug, Sealed Relay	
301A	4460375	7	Terminal	
301B	4460967	1	Plug, Male - 3 Position	
301B	4460465	3	Socket, Female	
301C	2400060	1	Fuseholder (Not Shown)	
301C	2400064	1	Fuse - 5Amp (Not Shown)	
301D	4460742	1	Plug, Male - 2 Position (With UGM Only) (Not Shown)	
301D	4460743	2	Terminal, Female (With UGM Only) (Not Shown)	
301D	4460458	2	Seal (With UGM Only) (Not Shown)	
304	4922641	1	Switch Harness	
		Ref	**TERMINAL BLOCK ASSEMBLY (SN 0300096000 through 0300182752)**	
	NPN	Ref	**Gray Terminal Block Assembly (Complete Assembly Not**	

ITEM	PART NUMBER	QTY	DESCRIPTION	REV
			Available - Purchase Individual Components)	
	1001121340	Ref	**Tan Terminal Block Assembly**	A
401		Ref	Marker Strip #1 Options:	
401	4460411	2	Gray Terminal Block Assembly	
401	70002818	2	Tan Terminal Block Assembly	
402		Ref	Marker Strip #2 Options:	
402	4460412	4	Gray Terminal Block Assembly	
402	70002819	4	Tan Terminal Block Assembly	
403		Ref	Marker Strip #3 Options:	
403	4460413	2	Gray Terminal Block Assembly	
403	70002820	2	Tan Terminal Block Assembly	
404		Ref	Marker Strip #4 Options:	
404	4460414	2	Gray Terminal Block Assembly	
404	70002821	2	Tan Terminal Block Assembly	
405		Ref	Marker Strip #5 Options:	
405	4460415	4	Gray Terminal Block Assembly	
405	70002822	4	Tan Terminal Block Assembly	
406		Ref	Terminal, End Barrier Options:	
406	4460956	1	Gray Terminal Block Assembly	
406	70002823	1	Tan Terminal Block Assembly	
407		Ref	Terminal, End Block Options:	
407	4460607	2	Gray Terminal Block Assembly	
407	70002824	2	Tan Terminal Block Assembly	
408		Ref	Terminal, Block Options:	
408	4460957	7	Gray Terminal Block Assembly	
408	70002825	7	Tan Terminal Block Assembly	
409		Ref	Terminal, Cross Connector Jumper Options:	
409	4461001	2	Gray Terminal Block Assembly	
409	70002826	2	Tan Terminal Block Assembly	
410	3641533	1	Rail, Relay	

FIGURE 2-38. 7500W SKYPOWER GENERATOR INSTALLATION - DEUTZ TD2.9L4 ENGINE MACHINES

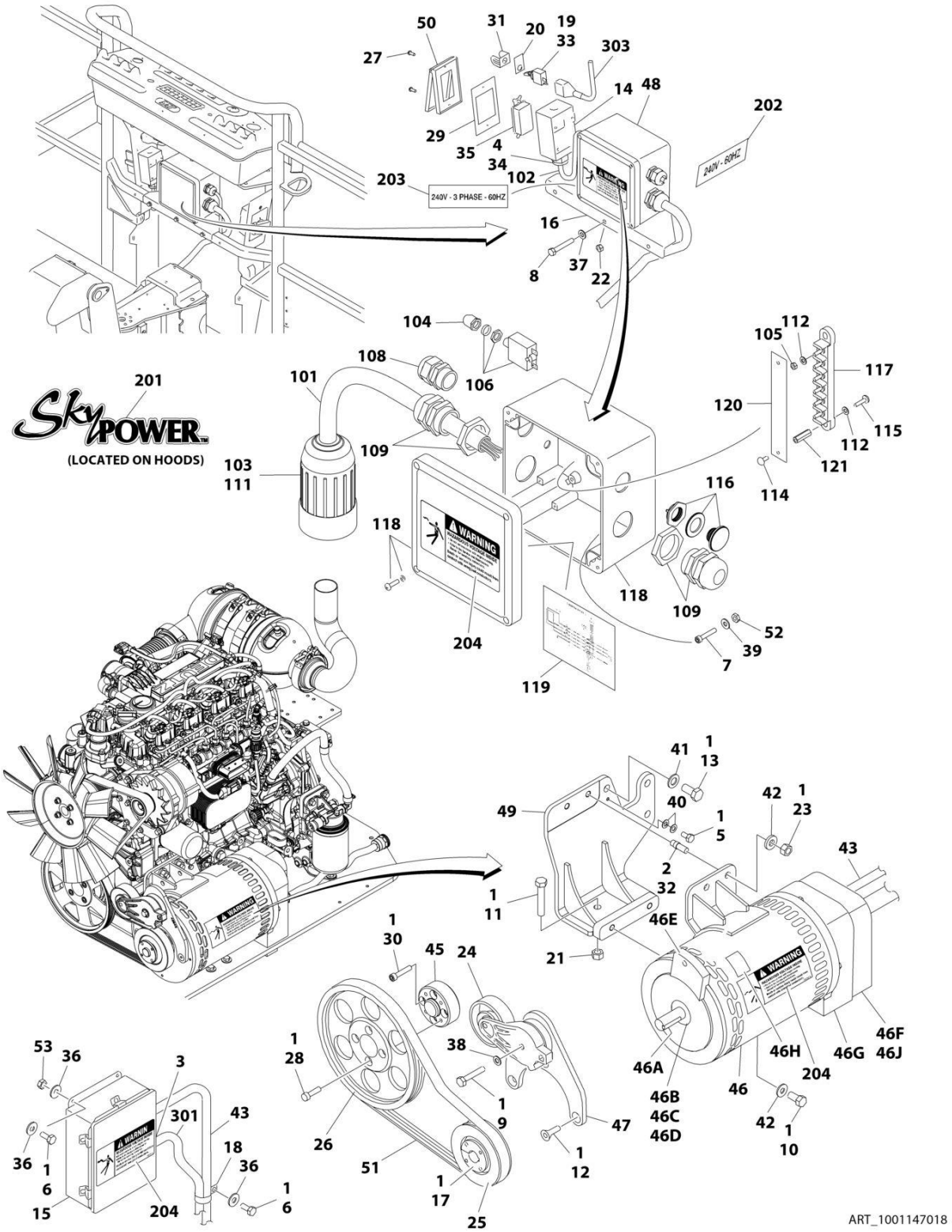

FIGURE 2-38. 7500W SKYPOWER GENERATOR INSTALLATION - DEUTZ TD2.9L4 ENGINE MACHINES

ITEM	PART NUMBER	QTY	DESCRIPTION	REV
	1001147018	Ref	**7500W SKYPOWER GENERATOR INSTALLATION - DEUTZ TD2.9L4 ENGINE MACHINES**	C
1	0100011	AR	Locking, Compound	
2	0100019	AR	Locking, Compound	
3	0100048	AR	Grease, Dielectric	
4	0100079	AR	Sealant, Pipe	
5	0641404	AR	Bolt 1/4in-20NC x 1/2in	
6		Ref	Bolt Options:	
6	0641404	AR	Bolt 1/4in-20NC x 1/2in	
6	0641406	AR	Bolt 1/4in-20NC x 3/4in	
7	3931016	4	Screw #10-24 x 1	
8	0641516	3	Bolt 5/16in-18NC x 2in	
9		Ref	Bolt Options:	
9	0641616	1	Bolt 3/8in-16NC x 2in	
9	0641618	1	Bolt 3/8in-16NC x 2-1/4in	
10		Ref	Bolt Options:	
10	0641808	2	Bolt 1/2in-13 x 1in	
10	0641810	2	Bolt 1/2in-13 x 1-1/4in	
11	0681822	1	Bolt 1/2in-13 x 2-3/4in	
12	0741607	3	Screw, Flat Head 3/8in-16NC x 7/8in	
13	0771414	3	Bolt 14mm x 30mm Grade 10.9	
14	0860038	1	Box, Switch	
15	0861538	1	Control Box Assembly	
15	7024488	1	Card, Circuit - Generator Power	
15	Not Available	1	Fuse (Purchase Locally)	
15	7024489	1	Card, Circuit - Control	
15		Ref	**Note: Same Circuit Card (P/N 7024489) is used for both 60Hz & 50Hz. When replacing card, rocker switch on card must be set for required application.**	
15	70000619	1	Harness, Circuit Card	
16	0902888	1	Bracket, Box Mounting	
17	0962520	1	Bushing, Split Taper	
18	1320318	1	Clamp	
19	2820031	1	Insulator	
20	3252764	1	Nameplate	
21	3271801	1	Nut 1/2in-13NC (Grade 8)	
22		Ref	Nut Options:	
22	3311505	3	Nut 5/16in-18NC (Locking)	
22	3311508	3	Nut 5/16in-18NC (Serrated Flange)	
23	3311801	2	Nut 1/2in-13NC	
24	3580317	1	Tensioner, Belt	
25	3580318	1	Pulley	
26	3580320	1	Pulley	
27	3910606	4	Screw #6-32NC x 3/8in	
28	3931628	4	Screw 3/8in-16NC x 1-3/4in	
29	3960422	1	Gasket	
30	4032014	4	Bolt M10 x 50mm	
31	4060802	1	Guard, Switch	
32	1001163599	2	Stud	

ITEM	PART NUMBER	QTY	DESCRIPTION	REV
33	4360336	1	Switch, Toggle	
34	4460071	1	Connector, Strain Relief	
35	4460346	1	Receptacle	
36	4711400	AR	Flatwasher 1/4in Narrow	
37		Ref	Flatwasher Options:	
37	4711500	AR	Flatwasher 5/16in Narrow	
37	4751500	AR	Flatwasher 5/16in Wide	
38	4711600	1	Flatwasher 3/8in Narrow	
39	4751000	4	Flatwasher #10	
40	4791400	2	Starwasher 1/4in	
41	4812200	3	Flatwasher 14mm	
42	4891800	4	Flatwasher 1/2in Hardened	
43	4922925	1	Harness, Generator	
45	1001135679	1	Adapter	
46	1001136988	1	Generator Assembly	
46	70001100	1	Armature, Generator (Includes Radial Ball Bearing on End with Brushes and Fan) (Not Shown)	
46	70003631	1	Brushholder Assembly (Not Shown)	
46	7024485	1	Breaker, Circuit 30Amp (Not Shown)	
46	70001696	1	Boot, Breaker (was p/n 7024486 - Not Shown)	
46	7027799	1	Block, Connector - 6 Position (Not Shown)	
46	7026597	1	Connector, With Leads (Not Shown)	
46	70004098	1	Connector, Clamp (Not Shown)	
46	70001974	1	Decal - Terminal Connections (Not Shown)	
46	70004095	1	Panel, End (Not Shown)	
46	70004093	1	Stator (Not Shown)	
46	70002297	4	Stud (Not Shown)	
46	70001384	1	Bearing, Ball Radial	
46A	70004099	1	Key	
46B	70003708	1	Ring, Retaining (Internal)	
46C	70003709	1	Ring, Retaining (External)	
46D	70001966	1	Bearing, Radial Ball	
46E	70001953	1	Endbell, Belt Tensioner	
46F	70004094	1	Endbell, Shroud Assembly	
46G	70004096	1	Endbell, Brush Block	
46H	70001973	1	Decal - Warning Moving Parts	
46J	2820031	1	Insulator, Endbell	
47	1001142643	1	Bracket, Support	
48	1001157592	1	Junction Box Assembly (See Items 101-122 for Breakdown)	
49	1001146670	1	Generator/Engine Mount	
50	1001110873	1	Cover, Receptacle	
51	1001142646	1	Belt	
52	3311005	4	Locknut #10-24NC	
53	3311405	4	Locknut 1/4in-20NC	
55	4240018	AR	Tie-Strap (Not Shown)	
	1001157592	Ref	**JUNCTION BOX ASSEMBLY**	A
101	1060343	1.5 ft /.46m	Cable, Electrical 10/4	
102	1060494	2 ft /.6m	Cable, Electrical 12/3	
103	1671092	1	Cover	
104	3300396	1	Cover, Fuse	
105	3311001	6	Nut 10-24NC	

ITEM	PART NUMBER	QTY	DESCRIPTION	REV
106	4360070	1	Circuit Breaker - 15Amp	
108	4460425	1	Strain Relief, Terminal	
109	4460426	2	Connector, Strain Relief	
111	4460963	1	Connector	
112	4711000	10	Flatwasher #10 Narrow	
114	10702077	2	Screw 10-32NC x 3/8in	
115	10702082	2	Screw 10-32NC x 3/4in	
116	1001152525	1	Plug	
117	1001157520	1	Block, Terminal	
118	1001157521	1	Box, Junction	
119	1001157528	1	Decal - Wiring Schematic	
120	1001158007	1	Plate, Cover	
121	1001158008	2	Stand-off, Threaded	
	0272435	Ref	**DECAL INSTALLATION**	C
201	1705460	2	Decal - SkyPower	
202	1705374	1	Decal - 240V-60Hz **(SN 0300096000 through 0300201771)**	
203	1705375	1	Decal - 240V-3 Phase	
204	1705387	3	Decal - Hazardous Voltage	
	1001157770	Ref	**ELECTRICAL DIAGRAM COMPONENTS**	A
301	1001119968	1	Generator Harness Options:	
301	1001117078	1	Fuseholder (Not Shown)	
301	2400064	1	Fuse - 5Amp (Not Shown)	
301	4460967	1	Plug, Male - 3 Position	
301	4460465	3	Socket, Female	
303	4922641	1	Switch Harness	

FIGURE 2-39. 7500W SKYPOWER GENERATOR INSTALLATION - GM ENGINE MACHINES

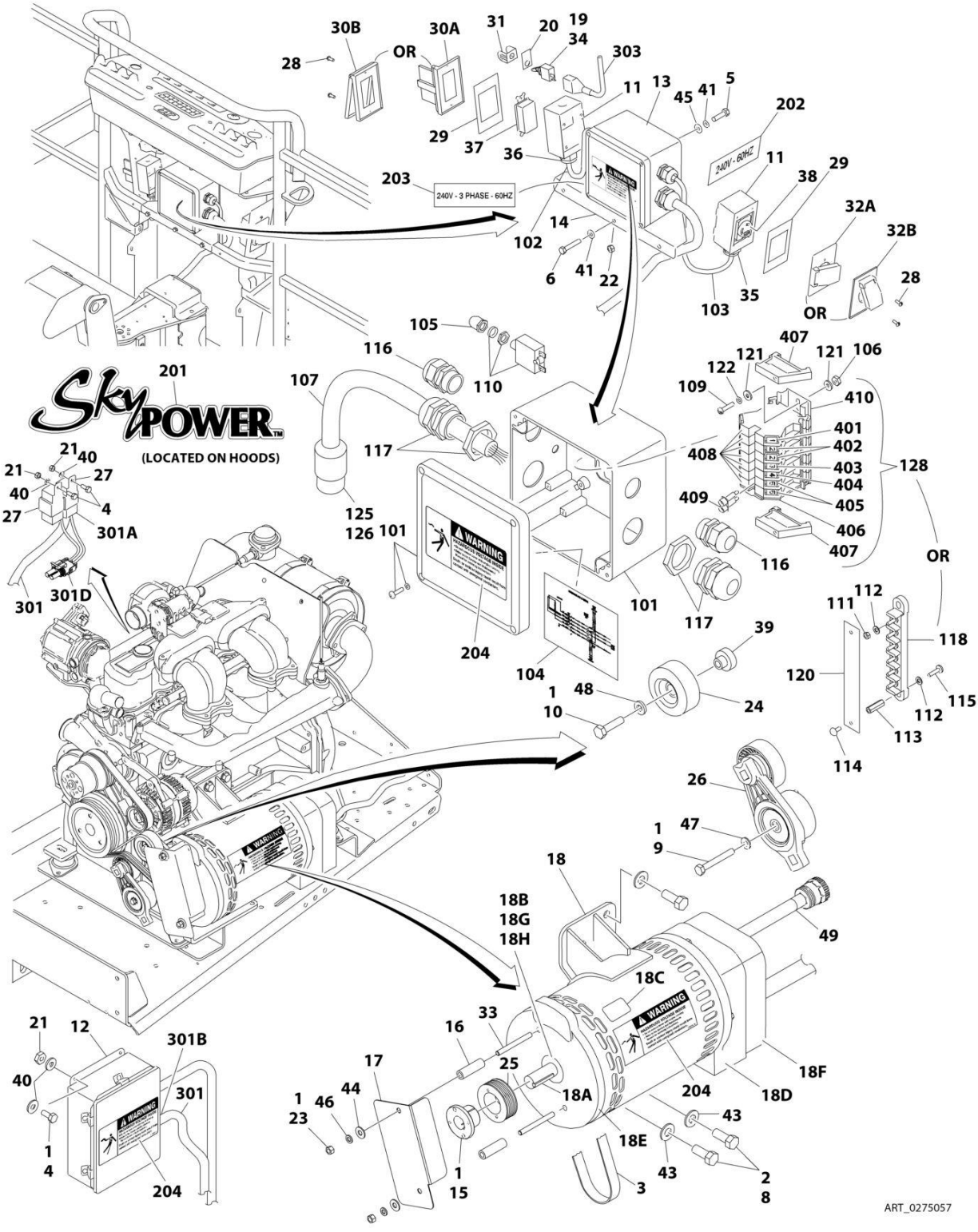

FIGURE 2-39. 7500W SKYPOWER GENERATOR INSTALLATION - GM ENGINE MACHINES

ITEM	PART NUMBER	QTY	DESCRIPTION	REV
	0275057	Ref	**7500W SKYPOWER GENERATOR INSTALLATION - GM ENGINE MACHINES**	G
1	0100011	AR	Locking, Compound	
2	0100019	AR	Locking, Compound	
3	0480142	1	Belt, Generator	
4	0641404	5	Bolt 1/4in-20NC x 1/2in	
5	0641505	4	Bolt 5/16in-18NC x 5/8in	
6	0641516	3	Bolt 5/16in-18NC x 2in	
8	0641808	4	Bolt 1/2in-13NC x 1-1/4in	
9	0700820	1	Bolt M8 x 60mm	
10	0701016	1	Bolt M10 x 40mm	
11	0860038	2	Box, Switch	
12	0861538	1	Control Box Assembly	
12	7024488	1	Card, Circuit - Generator Power	
12	Not Available	1	Fuse (Purchase Locally)	
12	7024489	1	Card, Circuit - Control	
12	70000619	1	Harness, Circuit Card	
13		Ref	Junction Box Assembly Options (See Items 101-128 for Breakdown):	
13	0861542	1	Junction Box Assembly **(SN 0300096000 through 0300182752)**	
13	1001157592	1	Junction Box Assembly **(SN 0300182753 through 0300203770)**	
14	0902888	1	Bracket, Box Mounting	
15	0962520	1	Bushing, Split Taper	
16	0962521	2	Spacer, Tube **(SN 0300096000 through 0300168212)**	
17	1671311	1	Cover, Generator Belt **(SN 0300096000 through 0300168212)**	
18	2460048	1	Generator Assembly	
18	70003631	1	Brushholder Assembly (Not Shown)	
18	7024485	1	Breaker, Circuit 30Amp (Not Shown)	
18	70001696	1	Boot, Breaker (Not Shown)	
18	7027799	1	Block, Connector - 6 Position (Not Shown)	
18	70002460	6	Nut, Brass (Attaches p/n 7027799 to Cover) (Not Shown)	
18	7026597	1	Connector, With Leads (Not Shown)	
18	7026188	1	Connector, Clamp (Not Shown)	
18	70002255	NLA	Panel, End (Not Shown) (Use p/n 70004169 Kit)	
18	70002088	1	Stator (Not Shown)	
18	70001974	1	Decal - Terminal Connections (Not Shown)	
18	70000863	1	Fan (Not Shown)	
18	70002297	4	Stud (Not Shown)	
18	70001100	1	Armature, Generator (Includes Radial Ball Bearing on End with Brushes and Fan)	
18	70001384	1	Bearing, Ball Radial	
18A	70004171	1	Key	
18B	70001966	1	Bearing, Radial Ball	
18C	70001973	1	Decal - Warning Moving Parts	
18D	70001385	1	Endbell, Brush Block (Use p/n 70004169 Kit)	
18E	70001953	1	Endbell, Belt Tensioner	
18F	70002290	1	Endbell, Shroud Assembly (Use p/n 70004169 Kit)	
18G	70003708	1	Ring, Retaining (Internal)	
18H	70003709	1	Ring, Retaining (External)	
19	2820031	1	Insulator	

SECTION 2 - TURNTABLE

ITEM	PART NUMBER	QTY	DESCRIPTION	REV
20	3252764	1	Nameplate	
21	3311405	6	Locknut 1/4in-20NC	
22	3311505	3	Locknut 5/16in-18NC	
23	3311601	2	Nut 3/8-16NC	
24	3580312	2	Pulley, Idler	
25	3580314	1	Pulley, Drive Grooved	
26	3580348	1	Pulley, Belt Tensioner	
27	3740080	2	Relay	
28	3910606	8	Screw #6-32NC x 3/8in	
29	3960422	2	Gasket	
30		Ref	Cover, Receptacle Options:	
30A	4060700	1	Cover, Side Hinged	
30B	1001110873	1	Cover, Top Hinged	
31	4060802	1	Guard, Switch	
32		Ref	Cover, Receptacle Options:	
32A	4061043	1	Cover, Receptacle **(SN 0300096000 through 0300137765)**	
32B	1001110872	1	Cover, Receptacle **(SN 0300137766 through 0300203770)**	
33	4300111	2	Stud **(SN 0300096000 through 0300168212)**	
34	4360336	1	Switch, Toggle	
35	4460051	1	Connector, Strain Relief	
36	4460071	1	Connector, Strain Relief	
37	4460346	1	Receptacle	
38	4460958	1	Receptacle, Female Twist-Lock	
39	4568735	1	Tube, Spacer	
40	4711400	10	Flatwasher 1/4in Narrow	
41	4711500	10	Flatwasher 5/16in Narrow	
43	4711800	4	Flatwasher 1/2in Narrow	
44	4751600	2	Flatwasher 3/8in Wide	
45	4761500	4	Lockwasher 5/16in	
46	4761600	2	Lockwasher 3/8in	
47	4811900	1	Flatwasher 8mm	
48	4891600	1	Washer, Hardened 3/8in	
49	4922925	1	Harness, Generator	
54	0641614	2	Bolt 3/8in-16NC x 1-3/4in (Not Shown)	
55	3574523	2	Bracket, Control Box Mounting (Not Shown)	
56	1320318	1	Clamp (Not Shown)	
57	4240018	1	Tie-Strap (Not Shown)	
		Ref	**JUNCTION BOX ASSEMBLY**	
	0861542	Ref	**Junction Box Assembly (SN 0300096000 through 03000182752)**	E
	1001157525	Ref	**Junction Box Assembly (SN 0300182753 through 0300203770)**	C
101	0861541	1	Box Junction **(SN 0300096000 through 0300182752)**	
101	1001157521	1	Box Junction **(SN 0300182753 through 0300203770)**	
102	1060494	2 ft /.6m	Cable, Electrical 12/3	
103	1060708	2.5 ft /.76m	Cable, Electrical 10/3 **(SN 0300096000 through 0300182752)**	
104	1705376	1	Decal - Wiring Schematic	
105	3300396	1	Cover, Fuse	
106	3310601	2	Nut #6-32NC	
107	1060343	1.5 ft /.46m	Cable, Electrical 10/4	
109	3910610	2	Bolt #6-32NC x 5/8	

ITEM	PART NUMBER	QTY	DESCRIPTION	REV
110	4360070	1	Circuit Breaker - 15Amp	
111	3311001	6	Nut #10-24NC	
112	4711000	10	Flatwasher #10 Thin	
113	1001158008	2	Stand-off	
114	10702077	2	Screw #10-32NF x 3/8in	
115	10702082	2	Screw #10-32NF x 3/4in	
116	4460425	2	Strain Relief, Terminal	
117	4460426	2	Connector, Strain Relief	
118	1001157520	1	Block, Terminal - 6 Pole	
120	1001158007	1	Cover	
121	4750600	1	Flatwasher #6 Wide	
122	4760600	1	Lockwasher #6	
125	1671092	1	Cover	
126	4460963	1	Connector	
128		Ref	Terminal Block Assembly (See Items 401-410 for Breakdown) **(SN 0300096000 through 0300182752)**	
128	NPN	1	Gray Terminal Block Assembly	
128	1001121340	1	Tan Terminal Block Assembly	
	0272435	Ref	**DECAL INSTALLATION**	C
201	1705460	2	Decal - SkyPower	
202	1705374	1	Decal - 240V-60Hz **(SN 0300096000 through 0300201771)**	
203	1705375	1	Decal - 240V-3 Phase	
204	1705387	3	Decal - Hazardous Voltage	
	4933349	Ref	**ELECTRICAL DIAGRAM COMPONENTS**	B
301	4923420	1	Generator Harness	A
301A	4460374	2	Plug, Sealed Relay	
301A	4460375	8	Terminal	
301B	4460967	1	Plug, Male - 3 Position	
301B	4460465	3	Socket, Female	
301C	2400060	2	Fuseholder (Not Shown)	
301C	2400064	2	Fuse- 5Amp (Not Shown)	
301D	4460742	1	Connector - 2 Position	
301D	4460743	2	Socket, Female	
301D	4460458	2	Seal	
303	4922641	1	Switch Harness	
		Ref	**TERMINAL BLOCK ASSEMBLY (SN 0300096000 through 0300182752)**	
	NPN	Ref	**Gray Terminal Block Assembly (Complete Assembly Not Available - Purchase Individual Components)**	
	1001121340	Ref	**Tan Terminal Block Assembly**	A
401		Ref	Marker Strip #1 Options:	
401	4460411	2	Gray Terminal Block Assembly	
401	70002818	2	Tan Terminal Block Assembly	
402		Ref	Marker Strip #2 Options:	
402	4460412	4	Gray Terminal Block Assembly	
402	70002819	4	Tan Terminal Block Assembly	
403		Ref	Marker Strip #3 Options:	
403	4460413	2	Gray Terminal Block Assembly	
403	70002820	2	Tan Terminal Block Assembly	
404		Ref	Marker Strip #4 Options:	
404	4460414	2	Gray Terminal Block Assembly	
404	70002821	2	Tan Terminal Block Assembly	

SECTION 2 - TURNTABLE

ITEM	PART NUMBER	QTY	DESCRIPTION	REV
405		Ref	Marker Strip #5 Options:	
405	4460415	4	Gray Terminal Block Assembly	
405	70002822	4	Tan Terminal Block Assembly	
406		Ref	Terminal, End Barrier Options:	
406	4460956	1	Gray Terminal Block Assembly	
406	70002823	1	Tan Terminal Block Assembly	
407		Ref	Terminal, End Block Options:	
407	4460607	2	Gray Terminal Block Assembly	
407	70002824	2	Tan Terminal Block Assembly	
408		Ref	Terminal, Block Options:	
408	4460957	7	Gray Terminal Block Assembly	
408	70002825	7	Tan Terminal Block Assembly	
409		Ref	Terminal, Cross Connector Jumper Options:	
409	4461001	2	Gray Terminal Block Assembly	
409	70002826	2	Tan Terminal Block Assembly	
410	3641533	1	Rail, Relay	

FIGURE 2-40. SKYAIR AIR COMPRESSOR INSTALLATION

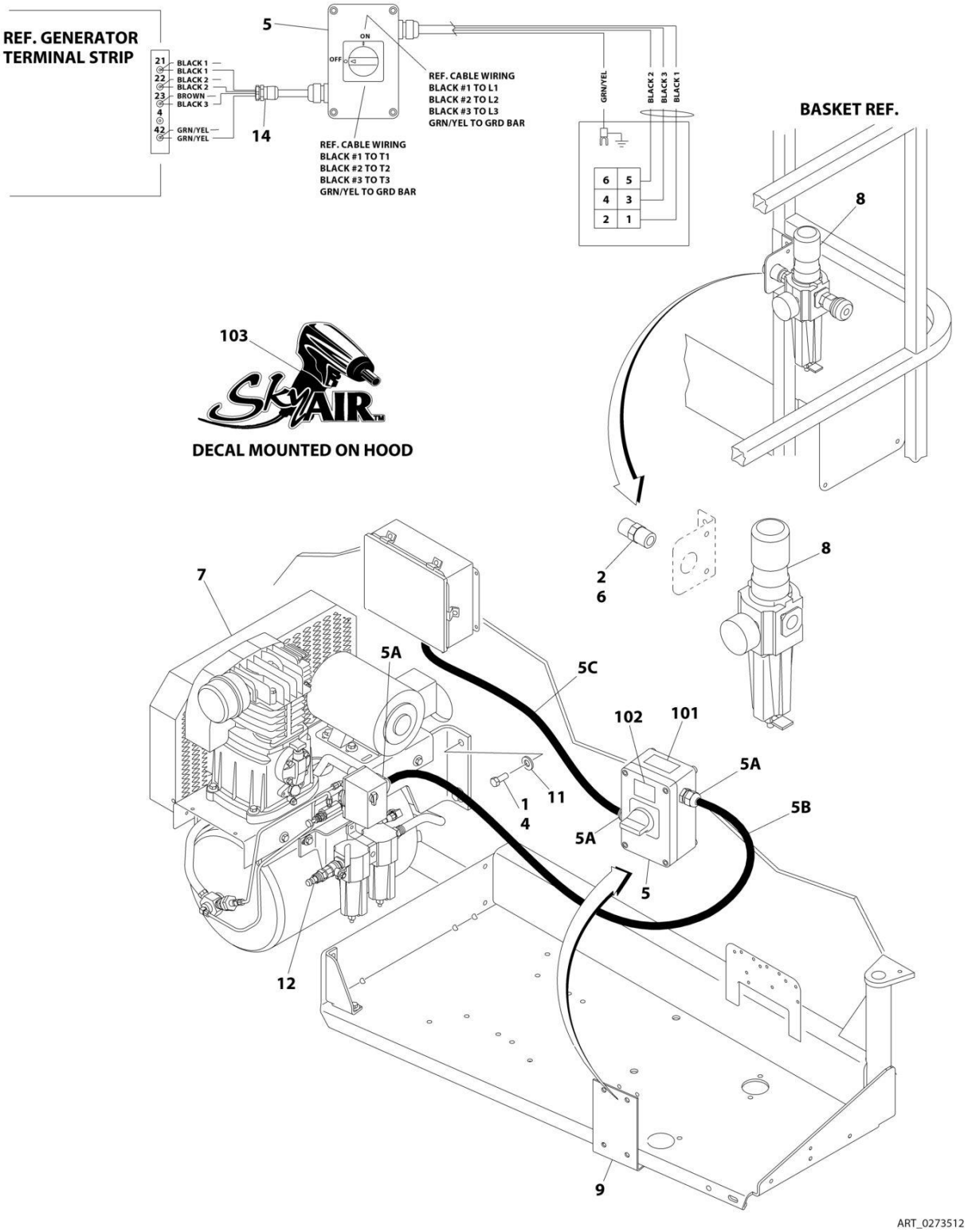

FIGURE 2-40. SKYAIR AIR COMPRESSOR INSTALLATION

ITEM	PART NUMBER	QTY	DESCRIPTION	REV
	0273512	Ref	**SKYAIR AIR COMPRESSOR INSTALLATION**	B
		Ref	**Note: ANSI Export Specs Only.**	
1	0100019	AR	Compound, Locking	
2	0100020	AR	Sealant	
4	0641810	4	Bolt 1/2 x 1-1/4	
5	0861642	1	Control Box Assembly	
5A	4460633	3	Connector, Strain Relief	
5B	70002948	AR	Cable, Electrical - 12/4 (13ft/4m)	
5C	70002948	AR	Cable, Electrical - 12/4 (30in/76cm)	
6	2220252	1	Fitting, Adapter	
7	3600399	1	Compressor Assembly (See AIR COMPRESSOR ASSEMBLY for Breakdown)	
8	3720021	1	Filter/Regulator Assembly	
8	7027781	1	Service Kit (Includes Gaskets and Seals)	
8	7027782	1	Filter	
8	7027784	1	Gauge	
8	7027783	1	Valve, Drain	
9	4340749	1	Bracket, Control Box	
11	4751800	4	Washer 1/2	
12	2220750	1	Fitting	
14	4460428	1	Connector, Strain Relief	
	0273710	Ref	**DECAL INSTALLATION**	A
101	1705836	1	Decal - Hazard Voltage	
102	1705837	1	Decal - Air Compressor	
103	1705886	2	Decal - SkyAir	

FIGURE 2-41. AIR COMPRESSOR ASSEMBLY

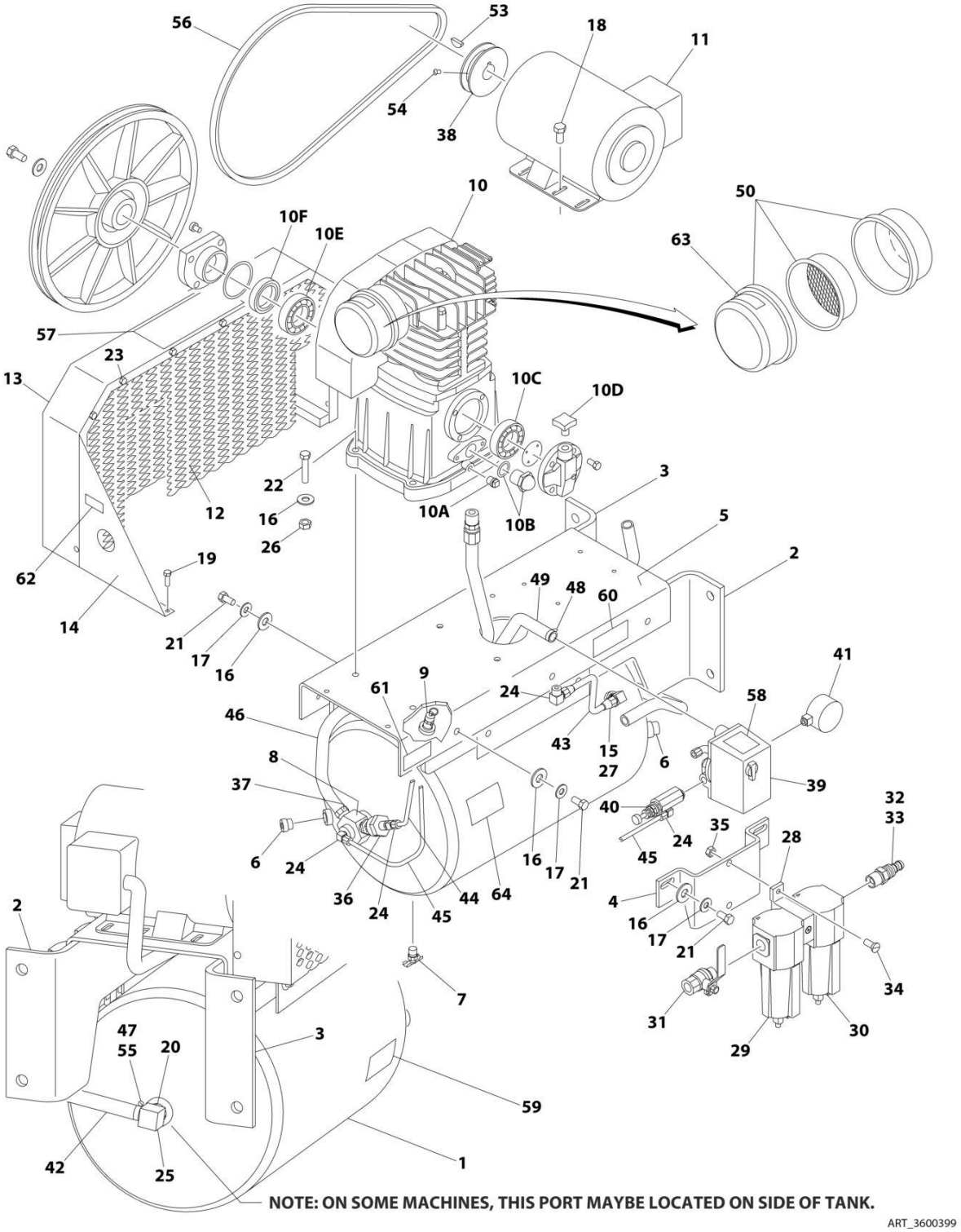

ART_3600399

FIGURE 2-41. AIR COMPRESSOR ASSEMBLY

ITEM	PART NUMBER	QTY	DESCRIPTION	REV
	3600399	Ref	**AIR COMPRESSOR ASSEMBLY**	A
1	7026632	1	Tank	
2	See Note	1	Bracket, Mounting (Note: Not Available for Purchase)	
3	See Note	1	Bracket, Mounting (Note: Not Available for Purchase)	
4	See Note	1	Bracket, Regulator Mounting (Note: Not Available for Purchase)	
5	See Note	1	Deck (Note: Not Available for Purchase)	
6	See Note	2	Plug (Note: Not Available for Purchase)	
7	7026633	1	Valve, Drain	
8	7026634	1	Valve, Check	
9	7026635	1	Valve, Safety	
10	7026636	1	Pump Assembly	
10	7026659	1	Gasket and Seal Kit	
10A	7026651	1	Plug, Oil Drain	
10B	7026652	1	Gauge, Oil Sight	
10C	7026653	1	Bearing	
10D	7026654	1	Cap, Oil Fill	
10E	7026655	1	Bearing	
10F	7026656	1	Seal	
11	7026637	1	Motor Assembly	
11	See Note	1	Brush Kit (Note: Not Available for Purchase)	
12	See Note	1	Screen, Inner (Note: Not Available for Purchase)	
13	See Note	1	Guard, Belt (Note: Not Available for Purchase)	
14	See Note	2	Support (Note: Not Available for Purchase)	
15	See Note	1	Bushing (Note: Not Available for Purchase)	
16	4751600	18	Washer 3/8	
17	4761600	10	Washer 3/8	
18	0641506	4	Bolt 5/16 x 3/4	
19	0641406	8	Bolt 1/4 x 3/4	
20	See Note	1	Bushing (Note: Not Available for Purchase)	
21	0641610	10	Bolt 3/8 x 1-1/4	
22	0641616	4	Bolt 3/8 x 2	
23	See Note	10	Bolt 1/4 x 1/2 (Note: Not Available for Purchase)	
24	See Note	4	Fitting (Note: Not Available for Purchase)	
25	See Note	1	Fitting, Barbed (Note: Not Available for Purchase)	
26	3311605	4	Nut 3/8	
27	See Note	1	Fitting, Compression (Note: Not Available for Purchase)	
28	See Note	1	Bracket, Mounting (Note: Not Available for Purchase)	
29	7026660	1	Filter, Oil Removal	
30	7026661	1	Filter, Water Removal	
31	70001663	1	Valve, Ball Shut-Off	
32	See Note	1	Bushing (Note: Not Available for Purchase)	
33	See Note	1	Fitting, Barbed (Note: Not Available for Purchase)	
34	See Note	2	Screw 1/4 x 1 (Note: Not Available for Purchase)	
35	3311405	2	Nut 1/4	
36	See Note	1	Unloader (Note: Not Available for Purchase)	
37	See Note	1	Fitting (Note: Not Available for Purchase)	
38	See Note	1	Pulley (Note: Not Available for Purchase)	
39	7026638	1	Switch, Pressure	
40	7026639	1	Valve, Pilot	
41	7026640	1	Gauge	

SECTION 2 - TURNTABLE

ITEM	PART NUMBER	QTY	DESCRIPTION	REV
42	See Note	1	Hose (Note: Not Available for Purchase)	
43	See Note	1	Tube, Feed (Note: Not Available for Purchase)	
44	See Note	1	Tube (Note: Not Available for Purchase)	
45	See Note	1	Tube (Note: Not Available for Purchase)	
46	See Note	1	Aftercooler (Note: Not Available for Purchase)	
47	See Note	2	Clamp (Note: Not Available for Purchase)	
48	See Note	2	Clamp (Note: Not Available for Purchase)	
49	See Note	1	Harness, Wiring (Note: Not Available for Purchase)	
50	7026658	1	Filter Assembly	
50	7026641	1	Element, Filter	
51	See Note	23 oz	Oil, Compressor (Note: Not Available for Purchase) (Not Shown)	
52	0100020	AR	Sealant (Not Shown)	
53	See Note	1	Key (Note: Not Available for Purchase)	
54	See Note	2	Setscrew (Note: Not Available for Purchase)	
55	See Note	2	Cover, Clamp End (Note: Not Available for Purchase)	
56	7026642	1	Belt	
57	7026643	1	Decal - Unit Warning	
58	7026644	1	Decal - Pressure Switch Warning	
59	7026645	1	Decal - Drain Tank Warning	
60	7026646	1	Decal - Compressor Maintenance	
61	7026647	1	Decal - Initial Oil Fill	
62	7026648	1	Decal - Hot Surfaces Warning	
63	7026649	1	Decal - Paper Element Cleaning	
64	7026650	1	Decal - Dual Control	

SECTION 3 - BOOM

FIGURE 3-1. BOOM INSTALLATIONS

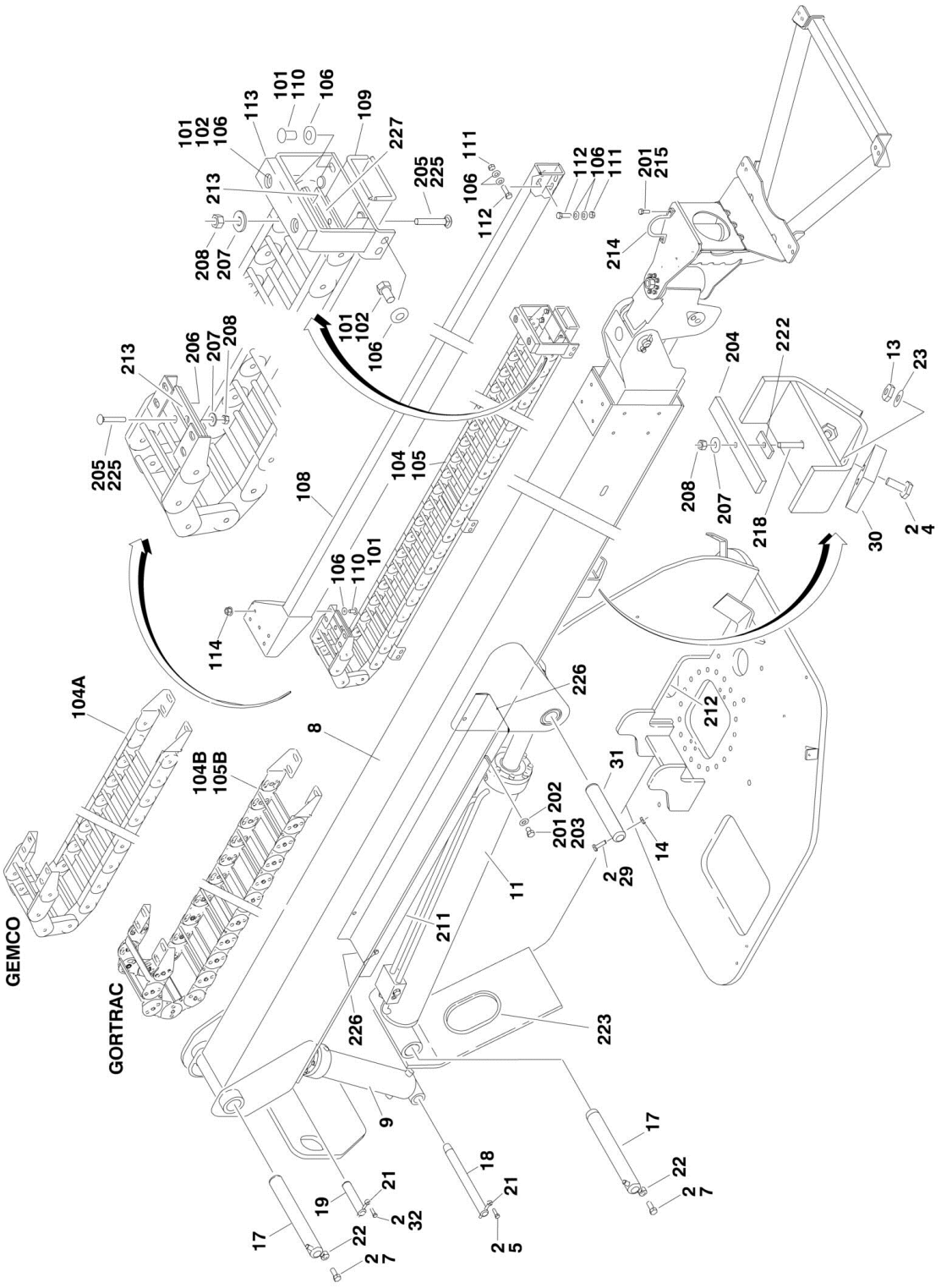

FIGURE 3-1. BOOM INSTALLATIONS

ITEM	PART NUMBER	QTY	DESCRIPTION	REV
		Ref	**BOOM AND CYLINDERS INSTALLATION**	
	0273065	Ref	**Boom and Cylinders Installation 400S**	D
	0272999	Ref	**Boom and Cylinders Installation 460SJ**	E
2	0100011	AR	Locking, Compound	
4	0641610	4	Bolt 3/8in-16NC x 1-1/4in	
5	0641608	1	Bolt 3/8in-16NC x 1in	
7	0642012	2	Bolt 5/8in-11NC x 1-1/2in	
8		Ref	Boom Assembly Options:	
8	0801359	1	Boom Assembly 400S (See BOOM ASSEMBLY - 400S for Breakdown)	
8	0801360	1	Boom Assembly 460SJ (See BOOM ASSEMBLY- 460SJ for Breakdown)	
9		Ref	Master Cylinder Assembly Options (See CYLINDER SECTION for Breakdown):	
9	1684284	NLA	Master Cylinder Assembly **(SN 0300096000 through 0300165144)**	
9	1001140587	1	Master Cylinder Assembly **(SN 0300165145 through 0300203770)**	
11	1683776	1	Lift Cylinder Assembly (See CYLINDER SECTION for Breakdown)	
13	3311601	4	Nut 3/8in-16NC	
14	3311605	AR	Locknut 3/8in-16NC	
17	3422564	2	Pin, Pivot	
18	3422566	1	Pin, Pivot	
19	3422561	1	Pin, Pivot	
21	3841143	AR	Keeper, Pin - 3/8in	
22	3841258	2	Keeper, Pin - 5/8in	
23	4711600	8	Flatwasher 3/8in Thin	
29	0681632	1	Bolt 3/8in-16NC x 4in (Grade 8)	
30	3340853	2	Pad, Boom Rest	
31	3422851	1	Pin, Boom Lift	
32	0641606	1	Bolt 3/8in-16NC x 3/4in	
		Ref	**POWERTRACK INSTALLATION**	
	0270213	Ref	**Standard Powertrack**	D
	0272897	Ref	**Inverted Powertrack**	B
101	0100011	AR	Locking, Compound	
102	0641605	10	Bolt 3/8in-16NC x 5/8in	
104		Ref	Power Track Assembly Options:	
		Ref	**Note: Original Power Track may have been replaced with a Service Replacement. Visually identify the power track before ordering parts.**	
104	1180336	NLA	Standard Power Track Assembly (Original Equipment) (Use p/n 1001225901)	
104	1001099830	NLA	Standard Power Track Assembly (Service Replacement) (Use p/n 1001225901)	
104	1001225901	1	Standard Power Track Assembly (Service Replacement)	
104A		Ref	Gemco Brand Replacement Parts:	
104A	7006140	AR	Repair Section for p/n 1180336 Power Track (Includes 10 Link Pins, 4 Radius Links, 8 Carrier Links, 4 Rod Carrier, 8 Screws, 10 Slugs and 20 Bearing Plates)	
104A	7006151	2 pr.	Feet, Mounting for p/n 1180336 Power Track (Includes 2 Round Spacers, Left and Right Mounting Feet)	

ITEM	PART NUMBER	QTY	DESCRIPTION	REV
104A	7006152	AR	Pin Kit for p/n 1180336 Power Track (Includes 1 Pin, 1 Retaining Ring and Set of 4 Washers (Different Sizes)	
104B		Ref	Gortrac Brand Replacement Parts:	
104B	70001994	AR	Repair Section - 4 Links for 1001099830 Power Track	
104B	70001995	1	Mounting Bracket Kit for 1001099830 Power Track	
104B	70006268	AR	Repair Section - 1001225901 Power Track	
104B	70006277	1	Mounting Bracket Kit for 1001225901 Power Track	
105	1180379	1	Inverted Power Track Assembly	
105B	7016505	AR	Repair Section for 1180379 Power Track (Includes extra pin assemblies for each end but no mounting feet)	
105B	7016524	2 pr.	Feet, Mounting for 1180379 Power Track (Includes 1 each of Left and Right Mounting Feet)	
105B	7006137	AR	Pin Kit for 1180379 Power Track (Includes 1 Pin, 1 Retaining Ring and Set of 4 Washers (Different Sizes)	
106	4711600	26	Flatwasher 3/8in Thin	
108	4846216	1	Tube, Push	
109	4846186	1	Tube, Carrier	
110	3900283	8	Screw, Button Head 3/8in-16NC x 3/4in	
111	3311601	4	Nut 3/8in-16NC	
112	0641609	4	Bolt 3/8in-16NC x 1/8in	
113	3340453	1	Pad, Wear	
114	3311608	4	Nut, Flanged 3/8in-16NC	
		Ref	**BOOM CABLE CLAMPS INSTALLATION**	
	0271160	Ref	**Boom Cable Clamps Installation 400S (ANSI and ANSI Export Specs)**	A
	1001093916	Ref	**Boom Cable Clamps Installation 400S with Arctic Package (ANSI and ANSI Export Specs)**	D
	0271162	Ref	**Boom Cable Clamps Installation 400S (Australian and CE Specs)**	A
	0272612	Ref	**Boom Cable Clamps Installation 400S with 7500w SkyPower Generator**	A
	1001093922	Ref	**Boom Cable Clamps Installation 400S with 7500w SkyPower Generator and Arctic Package**	E
	0271159	Ref	**Boom Cable Clamps Installation 460SJ (ANSI and ANSI Export Specs)**	A
	1001093919	Ref	**Boom Cable Clamps Installation 460SJ with Arctic Package (ANSI and ANSI Export Specs)**	C
	0271161	Ref	**Boom Cable Clamps Installation 460SJ (Australian and CE Specs)**	A
	0272613	Ref	**Boom Cable Clamps Installation 460SJ with 7500w SkyPower Generator**	A
	1001093924	Ref	**Boom Cable Clamps Installation 460SJ with 7500w SkyPower Generator and Arctic Package**	D
201	0100011	AR	Locking, Compound	
202	4711600	4	Flatwasher 3/8in Thin	
203	0641604	4	Bolt 3/8in-16NC x 1/2in	
204	3572200	1	Clamp, Block	
205	0630566	2	Bolt, Carriage 5/16in-18NC x 2-1/4in	
206	3572345	3	Clamp, Block	
207	4751500	3	Flatwasher 5/16in Regular	
208	3311505	3	Locknut 5/16in-18NC	
211	3572165		Cover	
212	4060919	6 ft/1.8m	Trim, Protection	
213		Ref	Pad Options:	

ITEM	PART NUMBER	QTY	DESCRIPTION	REV
213	3340897	2	Pad **(SN 0300096000 through 0300104748)**	
213	3340942	2	Pad **(SN 0300104749 through 0300203770)**	
214	3841340	1	Rod, Hose Loop	
215	0641605	2	Bolt 3/8in-16NC x 5/8in	
218	0641516	1	Bolt 5/16in-18NC x 2in	
222	3340861	1	Pad **(SN 0300181744 through 0300203770)**	
223	4060808	5 ft/1.5m	Trim, Protection	
225	0100081	AR	Adhesive #454	
226	4060805	1.5 ft/ 0.5m	Trim, Protection	
227		Ref	Clamp Options:	
227	3572345	1	Clamp **(SN 0300096000 through 0300179055)**	
227	3340942	1	Clamp **(SN 0300179056 through 0300203770)**	

FIGURE 3-2. BOOM ASSEMBLY - 400S

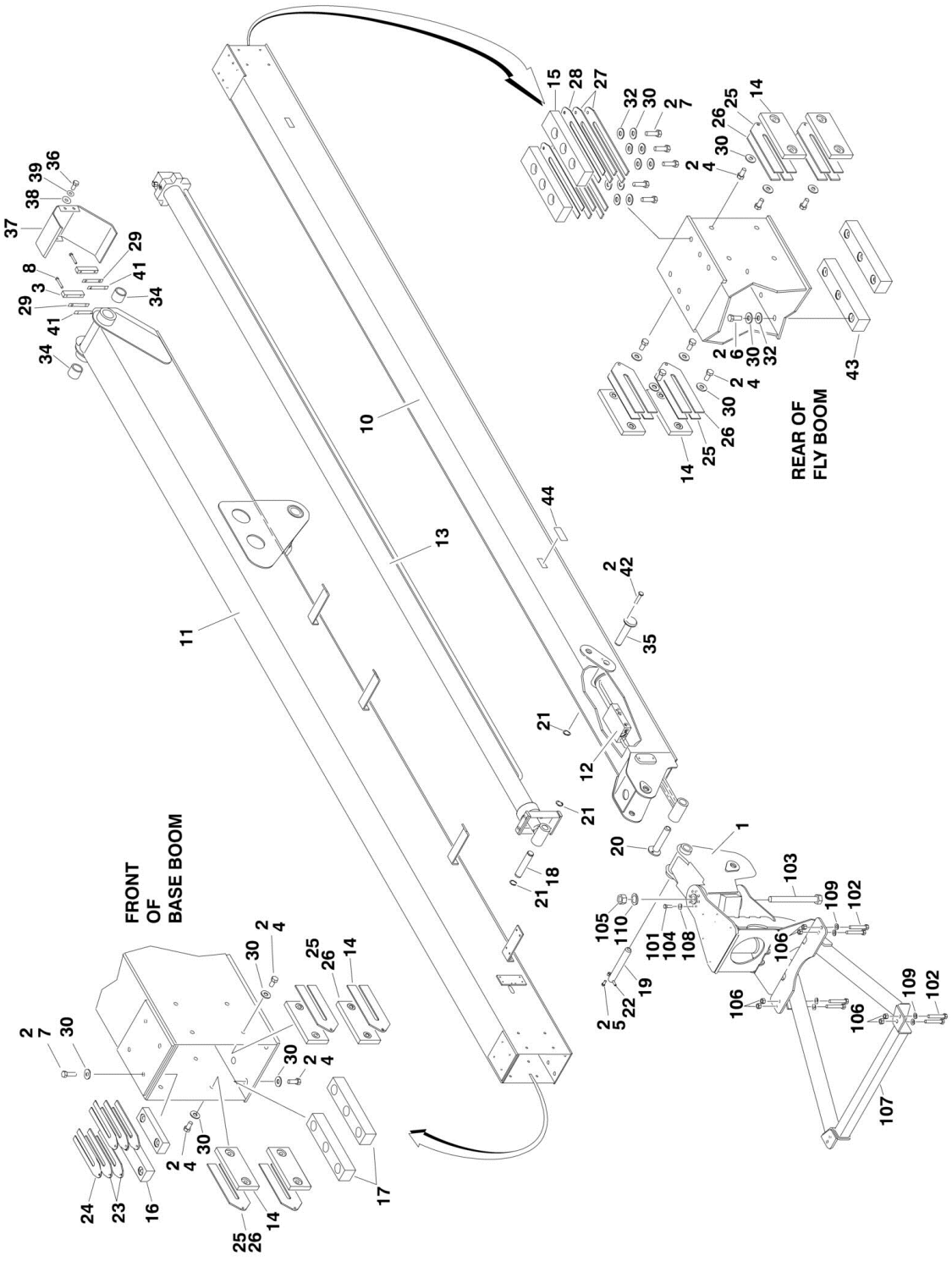

FIGURE 3-2. BOOM ASSEMBLY - 400S

ITEM	PART NUMBER	QTY	DESCRIPTION	REV
	0801359	Ref	**BOOM ASSEMBLIES - 400S**	F
1	0060059	1	Rotator Assembly (See ROTATOR ASSEMBLIES for Breakdown) **(SN 0300096000 through 0300200817)**	
1	1001181050	1	Rotator Assembly (See ROTATOR ASSEMBLIES for Breakdown) **(SN 0300200818 through 0300203770)**	
2	0100011	AR	Locking, Compound	
3	0561185	2	Block, Telescope Cylinder Attach	
4	0641606	16	Bolt 3/8in-16NC x 3/4in	
5	0641605	1	Bolt 3/8in-16NC x 5/8in	
6	0641608	6	Bolt 3/8in-16NC x 1in	
7	0641610	10	Bolt 3/8in-16NC x 1-1/4in	
8	0641616	2	Bolt 3/8in-16NC x 2in	
10	0801213	1	Boom, Fly	
11	0801215	1	Boom, Base	
12		Ref	Level (Platform Slave) Cylinder Assembly (See CYLINDER SECTION for Breakdown)	
12	1683778	NLA	Level (Platform Slave) Cylinder Assembly **(SN 0300096000 through 0300165144)**	
12	1001140586	1	Level (Platform Slave) Cylinder Assembly **(SN 0300165145 through 0300203770)**	
13	1684194	1	Telescope Cylinder Assembly (See CYLINDER SECTION for Breakdown)	
14		Ref	Pad, Wear Options (Fly Rear Sides and Base Front Sides):	
14	3340867	8	Pad, Wear **(SN 0300096000 through 0300168821)**	
14	1001149036	8	Pad, Wear **(SN 0300168822 through 0300203770)**	
15	3340868	2	Pad, Wear (Fly Rear Top)	
16		Ref	Pad, Wear Options (Base Front Top):	
16	3340869	2	Pad, Wear **(SN 0300096000 through 0300168821)**	
16	1001149038	2	Pad, Wear **(SN 0300168822 through 0300203770)**	
17	3340870	2	Pad, Wear (Base Front Bottom)	
18	3422457	1	Pin, Telescope Cylinder	
19	3422582	1	Pin, Pivot	
20	3422865	1	Pin, Pivot	
21	3760133	3	Ring, Retaining	
22	3841143	1	Keeper, Pin	
23	4070497	4	Shim 1/8in	
24	4070498	2	Shim 1/16in	
25	4070501	8	Shim 1/8in	
26	4070502	2	Shim 1/16in	
27	4070503	4	Shim 1/8in	
28	4070504	2	Shim 1/16in	
29	4070929	2	Shim 1/8in	
30	4751600	26	Flatwasher 3/8in Regular	
32	4711600	20	Flatwasher 3/8in Thin	
33	0961951	2	Bushing	
34	0961950	2	Bushing	
35	3422859	1	Pin	
36	0641406	4	Bolt 1/4in-20NC x 3/4in	
37	4060995	1	Shield, Rear	
38	4751400	4	Flatwasher 1/4in Regular	
39	4761400	4	Lockwasher 1/4in	

ITEM	PART NUMBER	QTY	DESCRIPTION	REV
41	4071007	2	Shim, 20 Gauge	
42	0741605	AR	Screw, Flathead Socket 3/8in-16NC x 5/8in	
43		Ref	Pad, Wear Options (Fly Rear Bottom):	
43	3340870	2	Pad, Wear **(SN 0300096000 through 0300168821)**	
43	1001149039	2	Pad, Wear **(SN 0300168822 through 0300203770)**	
44	1670836	6	Cover Only **(SN 0300096000 through 0300128256)**	
		Ref	**PLATFORM SUPPORT INSTALLATION**	
	0272070	Ref	**Machines without Load Sensing and without SkyGlazier**	E
	See Note	Ref	**Machines without Load Sensing and with SkyGlazier (Note: For Replacement Parts, Contact JLG Customer Service and Request Manual p/n 3124242)**	
	See Note	Ref	**Machines with Load Sensing and without SkyGlazier (Note: For Replacement Parts, Contact JLG Customer Service and Request Manual p/n 3124287)**	
	See Note	Ref	**Machines with Load Sensing and with SkyGlazier (Note: For Replacement Parts, Contact JLG Customer Service and Request Manual p/n 3124287)**	
101	0100011	AR	Locking, Compound	
102	0641812	8	Bolt 1/2in-13NC x 1-1/2in	
103	0642684	1	Bolt 1in-8NC x 10-1/2in	
104	0681608	8	Bolt 3/8in-16NC x 1in	
105	3300243	1	Locknut 1in-8NC	
106	3311805	8	Locknut 1/2in-13NC	
107	4846573	1	Support Weldment	
108	4891600	8	Flatwasher 3/8in Hardened	
109	4891800	8	Flatwasher 1/2in Hardened	
110	4892600	1	Flatwasher 1in Hardened	

FIGURE 3-3. BOOM ASSEMBLY - 460SJ

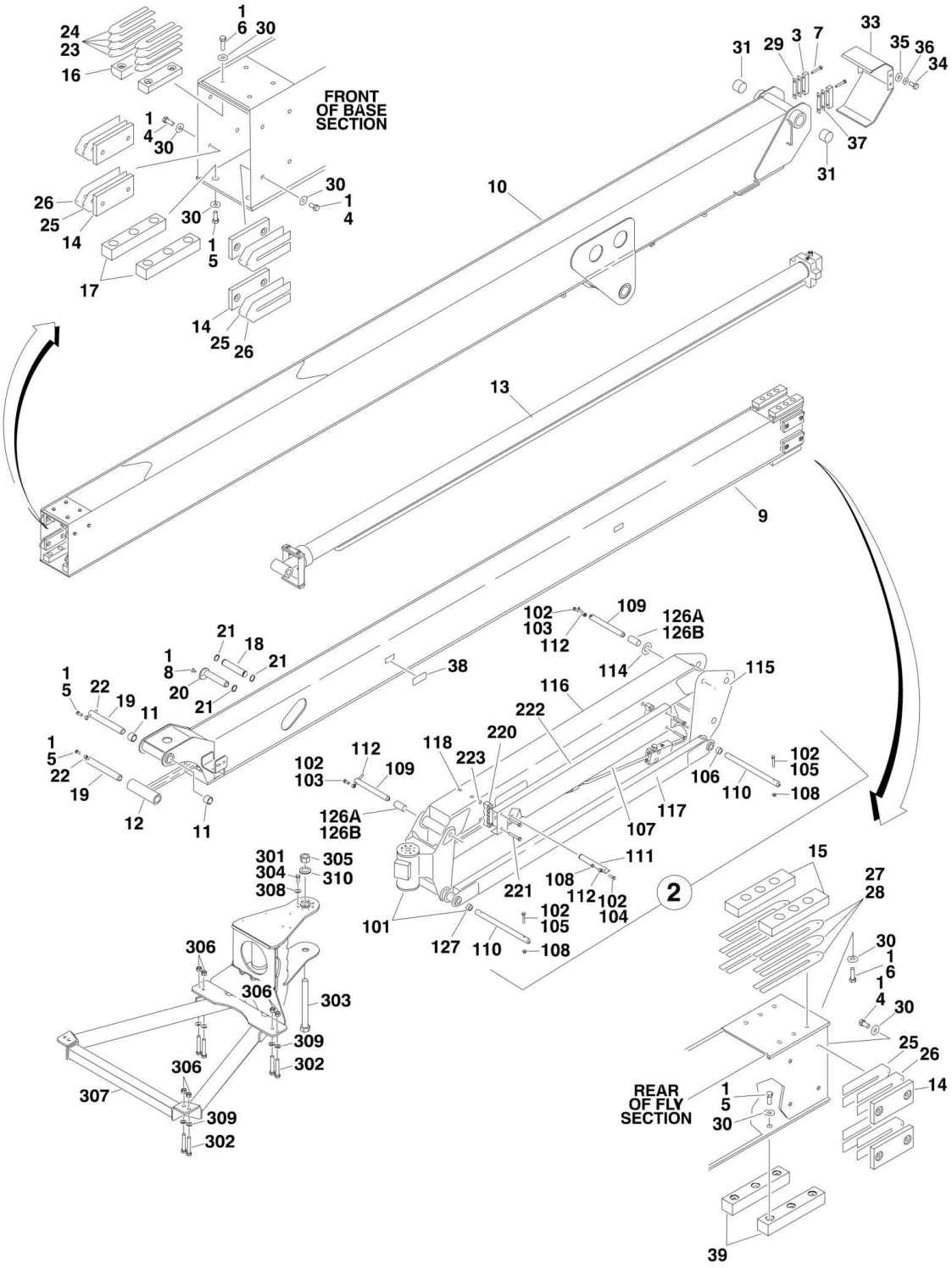

FIGURE 3-3. BOOM ASSEMBLY - 460SJ

ITEM	PART NUMBER	QTY	DESCRIPTION	REV
	0801360	Ref	**BOOM ASSEMBLIES - 460SJ**	F
1	0100011	AR	Locking, Compound	
2	0272593	1	Jib Assembly (See Items 101-127 for Breakdown)	
3	0561185	2	Block, Telescope Cylinder Attach	
4	0641606	16	Bolt 3/8in-16NC x 3/4in	
5	0641608	14	Bolt 3/8in-16NC x 1in	
6	0641610	10	Bolt 3/8in-16NC x 1-1/4in	
7	0641616	2	Bolt 3/8in-16NC x 2in	
8	0741605	1	Screw, Flathead Socket 3/8in-16NC x 5/8in	
9	0801214	1	Boom, Fly	
10	0801216	1	Boom, Base	
11	0961951	2	Bushing	
12	1684013	1	Platform Level Cylinder Assembly (See CYLINDER SECTION for Breakdown)	
13	1684194	1	Telescope Cylinder Assembly (See CYLINDER SECTION for Breakdown)	
14		Ref	Pad, Wear Options (Fly Rear Sides and Base Front Sides):	
14	3340867	8	Pad, Wear **(SN 0300096000 through 0300168821)**	
14	1001149036	8	Pad, Wear **(SN 0300168822 through 0300203770)**	
15	3340868	2	Pad, Wear (Fly Rear Top)	
16		Ref	Pad, Wear Options (Base Front Top):	
16	3340869	2	Pad, Wear **(SN 0300096000 through 0300168821)**	
16	1001149038	2	Pad, Wear **(SN 0300168822 through 0300203770)**	
17	3340870	2	Pad, Wear (Base Front Bottom)	
18	3422457	1	Pin, Telescope Cylinder	
19	3422561	2	Pin, Pivot	
20	3422859	1	Pin, Pivot	
21	3760133	3	Ring, Retaining	
22	3841143	2	Keeper, Pin	
23	4070497	4	Shim 1/8in	
24	4070498	4	Shim 1/16in	
25	4070501	8	Shim 1/8in	
26	4070502	8	Shim 1/16in	
27	4070503	2	Shim 1/8in	
28	4070504	4	Shim 1/16in	
29	4070929	2	Shim 1/8in	
30	4751600	26	Flatwasher 3/8in Regular	
31	0961950	2	Bearing	
33	4060995	1	Cover, Rear	
34	0641406	4	Bolt 1/4in-20NC x 3/4in	
35	4751400	4	Flatwasher 1/4in Regular	
36	4761400	4	Lockwasher 1/4in	
37	4071007	2	Shim, 20 Gauge	
38	1670836	6	Cover Only **(SN 0300096000 through 0300128256)**	
39		Ref	Pad, Wear Options (Fly Rear Bottom):	
39	3340870	2	Pad, Wear **(SN 0300096000 through 0300168821)**	
39	1001149039	2	Pad, Wear **(SN 0300168822 through 0300203770)**	
	0272593	Ref	**JIB ASSEMBLIES**	F
101	0060048	1	Rotator Assembly (See ROTATOR ASSEMBLIES for Breakdown) **(SN 0300096000 through 0300200817)**	

SECTION 3 - BOOM

ITEM	PART NUMBER	QTY	DESCRIPTION	REV
101	1001181051	1	Rotator Assembly (See ROTATOR ASSEMBLIES for Breakdown) **(SN 0300200818 through 0300203770)**	
102	0100011	AR	Locking, Compound	
103	0641608	AR	Bolt 3/8in-16NC x 1in	
104	0641610	1	Bolt 3/8in-16NC x 1-1/4in	
105	0641618	4	Bolt 3/8in-16NC x 2-1/4in	
106	0961947	Ref	Bushing Options:	
106	0961947	2	Bushing **(SN 0300096000 through 0300129071)**	
106	0961947	4	Bushing **(SN 0300129072 through 0300203770)**	
		Ref	**Note: For machines SN 0300096000 to SN 0300129071, when replacing 106, recommend using qty 4 instead of qty 2.**	
107	1683609	NLA	Jib Lift Cylinder Assembly (Use p/n 1001248012) (Original Equipment) (See CYLINDER SECTION for Breakdown)	
107	1001228012	NLA	Jib Lift Cylinder Assembly (Use p/n 1001248012) (Service Replacement) (See CYLINDER SECTION for Breakdown)	
107	1001248012	1	Jib Lift Cylinder Assembly (Service Replacement) (See CYLINDER SECTION for Breakdown)	
108	3311605	5	Locknut 3/8in-16NC	
109	3422860	2	Pin, Pivot	
110	3422861	2	Pin, Pivot	
111	3422867	1	Pin, Pivot	
112	3841143	3	Keeper, Pin - 3/8in	
114	4740439	2	Thrustwasher	
115	4844815	1	Pivot Weldment **(SN 0300096000 through 0300200817)**	
115	1001169384	1	Pivot Weldment **(SN 0300200818 through 0300203770)**	
116	4844816	1	Tube (Top) (Includes Item 126B)	
117	4844817	2	Tube (Bottom)	
118	3520034	4	Plug, Hole **(SN 0300103508 through 0300203770)**	
126		Ref	Bushing Options:	
126A	0961947	NLA	Bushing (Use p/n 0962335) **(SN 0300096000 through 0300097070)**	
126B	0962335	4	Bushing (Part of Item 116) **(SN 0300097071 through 0300203770)**	
127	0961947	2	Bushing (Part of Item 101) **(SN 0300129072 through 0300203770)**	
		Ref	**BOOM CABLES INSTALLATION**	
	0271159	Ref	**Boom Cables Installation 460SJ (ANSI and ANSI Export Specs)**	A
	1001093919	Ref	**Boom Cables Installation 460SJ with Arctic Package (ANSI and ANSI Export Specs)**	B
	0271161	Ref	**Boom Cables Installation 460SJ (Australian and CE Specs)**	A
	0272613	Ref	**Boom Cables Installation 460SJ with 7500w SkyPower Generator**	A
	1001093924	Ref	**Boom Cables Installation 460SJ with 7500w SkyPower Generator and Arctic Package**	C
220	0561237	2	Clamp, Block	
221	0641416	4	Bolt 1/4in-20NC x 2in	
222	1670769	1	Cover	
223	2080044	4	Fastener, Rivnut	
		Ref	**PLATFORM SUPPORT INSTALLATION**	
	0272070	Ref	**Machines without Load Sensing and without SkyGlazier**	E
	See Note	Ref	**Machines without Load Sensing and with SkyGlazier (Note: For Replacement Parts, Contact JLG Customer Service and Request Manual p/n 3124242)**	

ITEM	PART NUMBER	QTY	DESCRIPTION	REV
	See Note	Ref	**Machines with Load Sensing and without SkyGlazier (Note: For Replacement Parts, Contact JLG Customer Service and Request Manual p/n 3124287)**	
	See Note	Ref	**Machines with Load Sensing and with SkyGlazier (Note: For Replacement Parts, Contact JLG Customer Service and Request Manual p/n 3124287)**	
301	0100011	AR	Locking, Compound	
302	0641812	8	Bolt 1/2in-13NC x 1-1/2in	
303	0642684	1	Bolt 1in-8NC x 10-1/2in	
304	0681608	8	Bolt 3/8in-16NC x 1in	
305	3300243	1	Locknut 1in-8NC	
306	3311805	8	Locknut 1/2in-13NC	
307	4846573	1	Support Weldment	
308	4891600	8	Flatwasher 3/8in Hardened	
309	4891800	8	Flatwasher 1/2in Hardened	
310	4892600	1	Flatwasher 1in Hardened	

FIGURE 3-4. ROTATOR ASSEMBLIES (SN 0300096000 through 0300200817)

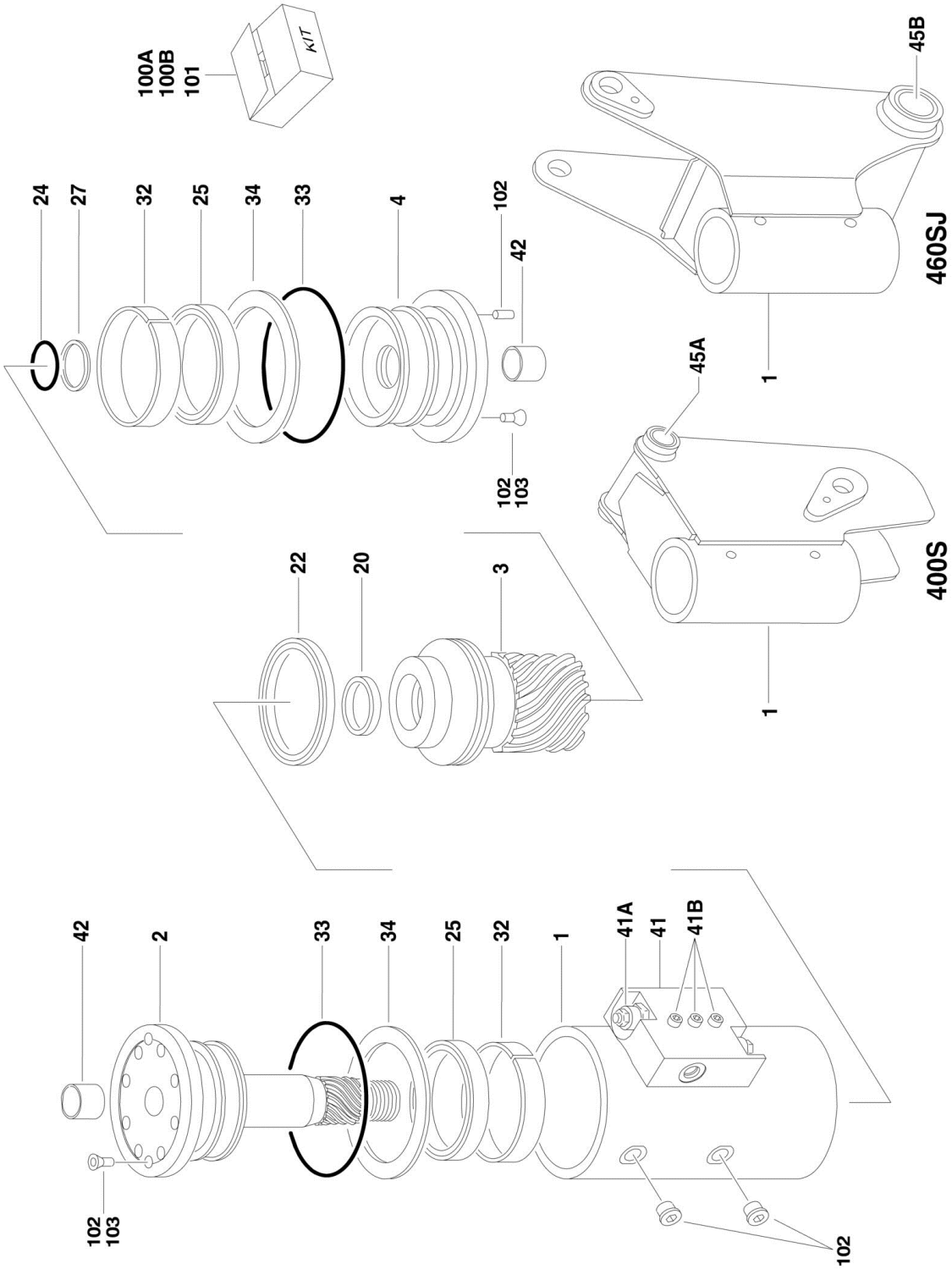

FIGURE 3-4. ROTATOR ASSEMBLIES (SN 0300096000 through 0300200817)

ITEM	PART NUMBER	QTY	DESCRIPTION	REV
		Ref	**ROTATOR ASSEMBLIES**	
	0060059	Ref	**Rotator Assemblies 400S**	F
	0060048	Ref	**Rotator Assemblies 460SJ**	J
1	See Note	1	Housing/Ring Gear Assembly (Note: Not Available - Purchase Complete Rotator Assembly)	
2	7017162	1	Shaft Weldment	
3	7017163	1	Piston/Sleeve Assembly	
4	7017164	1	Cap, End	
20	See Note	1	T-Seal (Note: Use Item 100A or 100B)	
22	See Note	1	T-Seal (Note: Use Item 100A or 100B)	
24	See Note	1	O-Ring (Note: Use Item 100A or 100B)	
25	See Note	2	Seal (Note: Use Item 100A or 100B)	
27	See Note	1	Ring, Back-up (Note: Use Item 100A or 100B)	
32	See Note	NSS	Ring, Wear (Note: Use Item 101)	
33	See Note	2	Ring, Wiper (Note: Use Item 100A or 100B)	
34	See Note	NSS	Thrustwasher (Note: Use Item 101)	
41	7017172	AR	Valve Assembly	
41A	7017192	2	Cartridge, Valve	
41A	7017192	2	Seal Kit - 7017192 Valve (Note: Not Available for Purchase)	
41B	See Note	3	Bolt 1/4 x 1-1/2 (Grade 8) (Note: Not Available - Purchase Locally)	
42	7017195	2	Bushing	
45		Ref	Bushing Options:	
45A	0961951	2	Bushing 400S	
45B	0961947	2	Bushing 460SJ	
100		Ref	Seal Kit Options (Includes Items 20, 22, 24, 25, 27 & 33):	
100A	7017158	1	Standard	
100B	70000342	1	Low Temperature	
101	7017159	1	Bearing Kit (Includes Items 32 & 34)	
102		Ref	Hardware Kit	
102	7017142	1	Platform Rotate Actuator	
103	70001697	4	Screw, Countersunk 1/4in-20NC x 3/8in (Grade 8)	

FIGURE 3-5. ROTATOR ASSEMBLIES (SN 0300200818 through 0300203770)

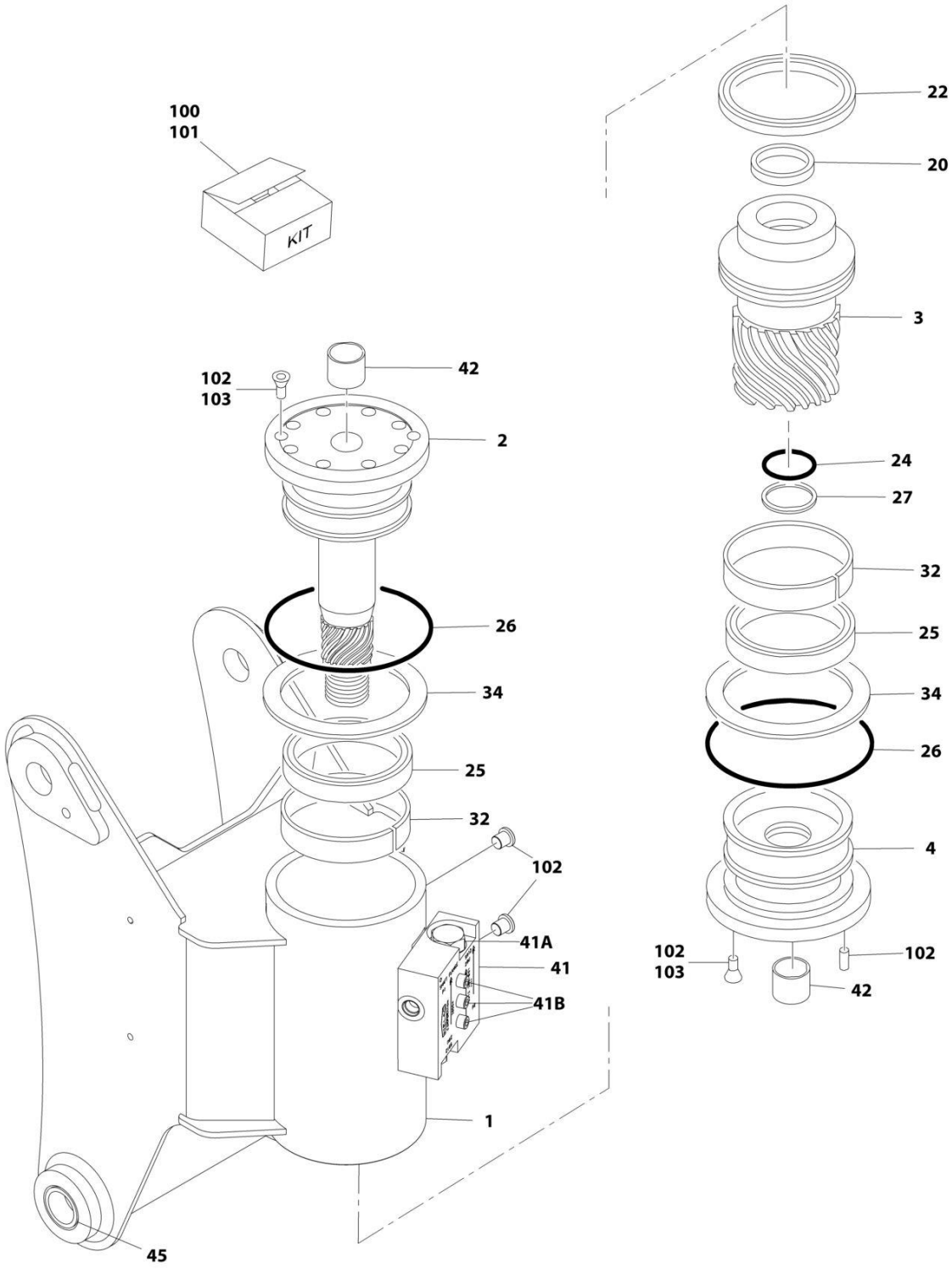

FIGURE 3-5. ROTATOR ASSEMBLIES (SN 0300200818 through 0300203770)

ITEM	PART NUMBER	QTY	DESCRIPTION	REV
		Ref	**ROTATOR ASSEMBLIES**	
	1001181050	Ref	**Rotator Assemblies - 400SJ**	A
	1001181051	Ref	**Rotator Assemblies - 460SJ**	A
1	See Note	NSS	Housing/ring Gear Assembly (Note: Not Available - Purchase Complete Rotator Assembly)	
2	7017162	1	Shaft Weldment	
3	7017163	1	Piston/Sleeve Assembly	
4	7017164	1	Cap, End	
20	See Note	NSS	T-Seal (Note: Use Item 100)	
22	See Note	NSS	T-Seal (Note: Use Item 100)	
24	See Note	NSS	O-Ring (Note: Use Item 100)	
25	See Note	NSS	Seal (Note: Use Item 100)	
26	See Note	NSS	O-Ring (Note: Use Item 100)	
27	See Note	NSS	Ring, Back-up (Note: Use Item 100)	
32	See Note	NSS	Ring, Wear (Note: Use Item 101)	
34	See Note	NSS	Thrustwasher (Note: Use Item 101)	
41	7017172	AR	Valve Assembly	
41A	7017192	2	Cartridge, Valve	
41A	See Note	NSS	Seal Kit - 7017192 Valve (Note: Not Available for Purchase)	
41B	See Note	3	Bolt 1/4 x 1-1/2 (Grade 8) (Note: Not Available - Purchase Locally)	
42	7017195	2	Bushing	
45	7017150	2	Bushing	
100	70000342	1	Seal Kit - Low Temperature (Includes Items 20, 22, 24, 25, 27 & 33)	
101	7017159	1	Bearing Kit (Includes Items 32 & 34)	
102	7017142	1	Hardware Kit	
103	70001697	4	Screw, Countersunk 1/4-20 x 3/8 (Grade 8)	

FIGURE 3-6. PLATFORM SUPPORT INSTALLATION - WITH LSS

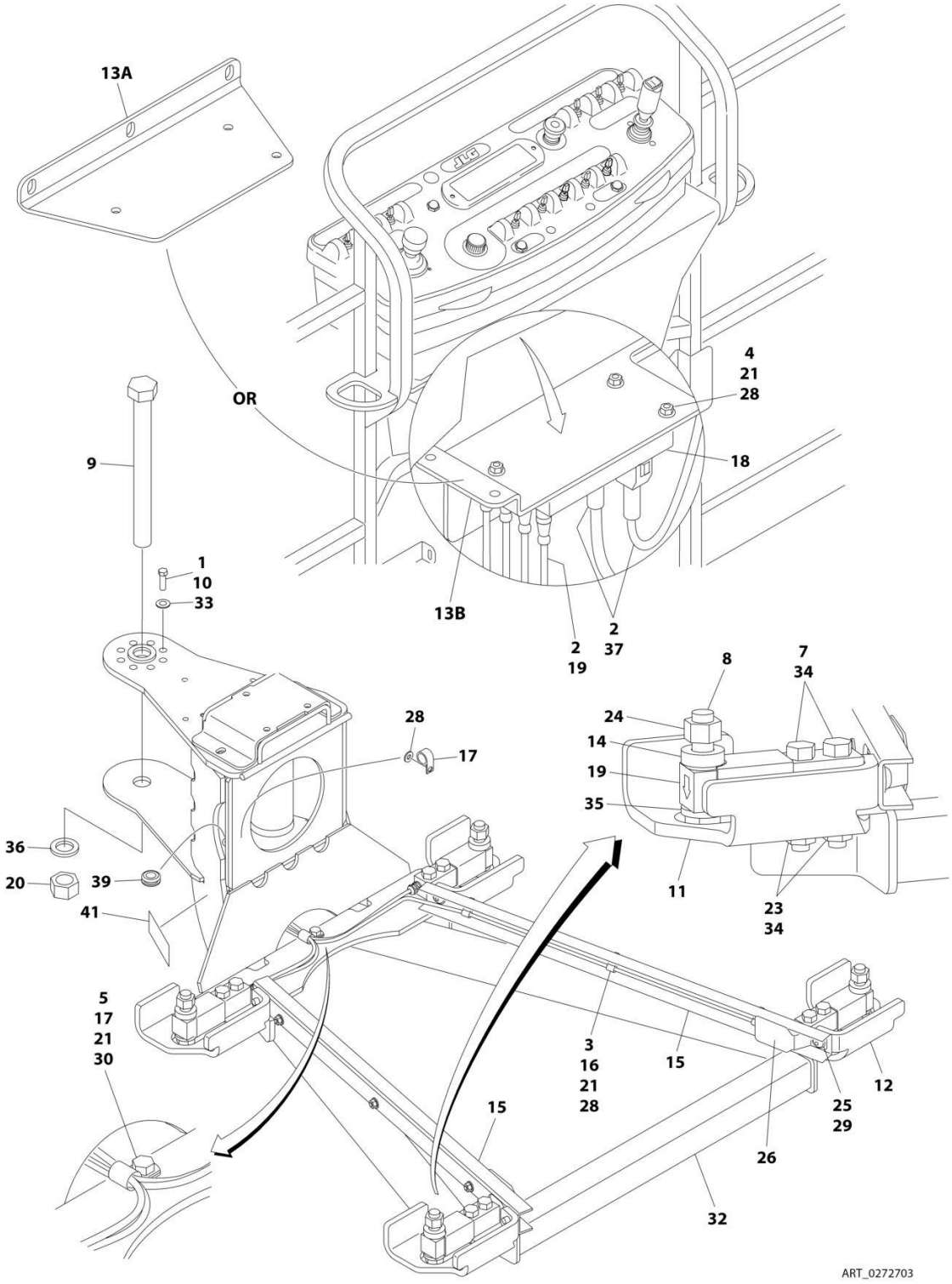

FIGURE 3-6. PLATFORM SUPPORT INSTALLATION - WITH LSS

ITEM	PART NUMBER	QTY	DESCRIPTION	REV
	0272703	Ref	**PLATFORM SUPPORT INSTALLATION - WITH LSS**	Q
1	0100011	AR	Compound, Locking	
2	0100048	AR	Grease, Dielectric	
3	0641405	6	Bolt 1/4 x 5/8	
4	0641416	3	Bolt 1/4 x 2	
5	0641407	1	Bolt 1/4 x 7/8	
7	0641822	8	Bolt 1/2 x 2-3/4	
8	0642024	4	Bolt 5/8 x 3	
9	0642684	1	Bolt 1 x 10-1/2	
10	0681608	8	Bolt 3/8 x 1 Grade 8	
11	0902919	2	Bracket, Cell Guard	
12	0902920	2	Bracket, Cell Guard	
13		Ref	Bracket, Module Mount Options:	
13A	0902894	1	Bracket, Module Mount **(SN 0300096000 through 0300138470)**	
13B	1001113483	1	Bracket, Module Mount **(SN 0300138471 to Present)**	
14	0962450	4	Bushing, Spacer	
15	1271538	2	Channel	
16	1320136	6	Clamp	
17	1320224	2	Clamp	
18	1600387	1	Module, Control - LSS (Note: Re-calibration Required when Replaced)	
19	2420202	4	Cell, Load (Includes Cable)	
20	3272605	1	Nut 1 Grade 8	
21	3311405	10	Nut 1/4	
23	3311805	8	Nut 1/2	
24	3312005	4	Nut 5/8	
25	3900283	4	Screw 3/8 x 3/4	
26	4061054	2	Shield	
27	4240033	AR	Tie-Strap (Not Shown)	
28	4711400	10	Washer 1/4	
29	4711600	4	Washer 3/8	
30	4751400	1	Washer 1/4	
32	4846573	1	Support, Platform	
33	4891600	8	Washer 3/8	
34	4891800	8	Washer 1/2	
35	4892000	4	Washer 5/8	
36	4892600	1	Washer 1	
37	4922869	1	LSS Harness	
37	4922705	1	Analyzer Harness (Not Shown)	
37	4460761	1	Receptacle, Female - 4 Position (Not Shown)	
37	4460226	1	Socket, Female	
37	4460836	1	Connector - 12 Position (Black) (J2)	
37	4460465	1	Socket, Female	
37	4460466	1	Plug, Terminal	
37	0840055	1	Boot	
37	4460933	1	Connector - 12 Position (Grey) (J1)	
37	4460465	1	Socket, Female	
37	4460466	1	Plug, Terminal	
37	0840055	1	Boot	
39	2540038	1	Grommet	

SECTION 3 - BOOM

ITEM	PART NUMBER	QTY	DESCRIPTION	REV
40	2920129	1	Bulb, Light (Not Shown - Located on Ground Control Box)	
41	1001216630	2	Decal - Tie Down/No Lift	

FIGURE 3-7. PLATFORM AND GLAZIER SUPPORT INSTALLATION - WITH LSS (400S ONLY)

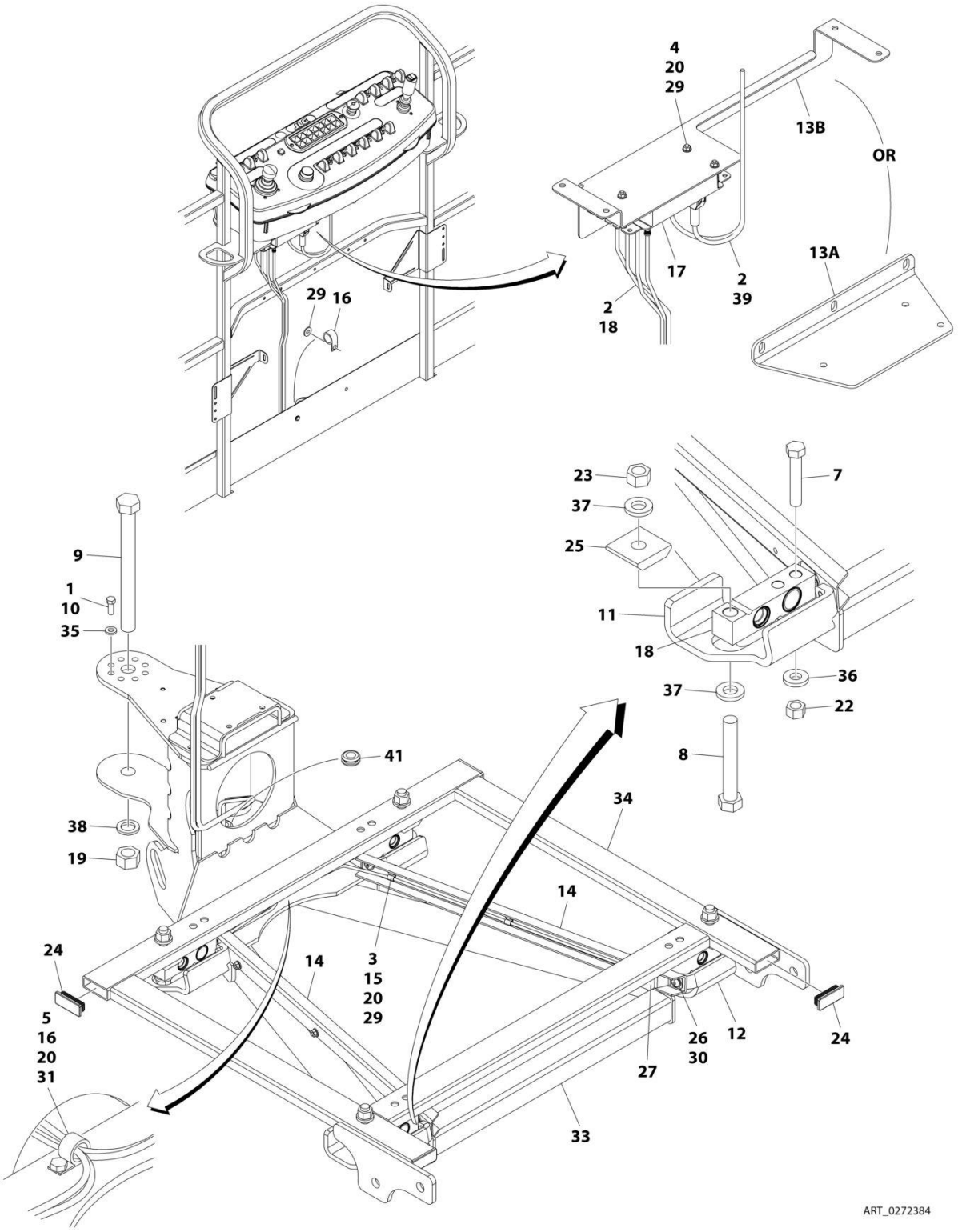

FIGURE 3-7. PLATFORM AND GLAZIER SUPPORT INSTALLATION - WITH LSS (400S ONLY)

ITEM	PART NUMBER	QTY	DESCRIPTION	REV
	0272384	Ref	**PLATFORM AND GLAZIER SUPPORT INSTALLATION - WITH LSS (400S ONLY)**	I
1	0100011	AR	Compound, Locking	
2	0100048	AR	Grease, Dielectric	
3	0641405	6	Bolt 1/4 x 5/8	
4	0641416	3	Bolt 1/4 x 2	
5	0641407	1	Bolt 1/4 x 7/8	
7	0641822	8	Bolt 1/2 x 2-3/4	
8	0642034	4	Bolt 5/8 x 4-1/4	
9	0642684	1	Bolt 1 x 10-1/2	
10	0681608	8	Bolt 3/8 x 1 Grade 8	
11	0902919	2	Bracket, Cell Guard	
12	0902920	2	Bracket, Cell Guard	
13		Ref	Bracket, Module Mount Options:	
13A	0902894	1	Bracket, Module Mount **(SN 0300096000 through 0300138470)**	
13B	1001113483	1	Bracket, Module Mount **(SN 0300138471 to Present)**	
14	1271538	2	Channel	
15	1320136	6	Clamp	
16	1320224	2	Clamp	
17	1600387	1	Module, Control - LSS (Note: Re-calibration Required when Replaced)	
18	2420202	4	Cell, Load (Includes Cable)	
19	3272605	1	Nut 1 Grade 8	
20	3311405	10	Nut 1/4	
22	3311805	8	Nut 1/2	
23	3312005	4	Nut 5/8	
24	3520190	4	Plug	
25	3573785	4	Spacer	
26	3900283	4	Screw 3/8 x 3/4	
27	4061054	2	Shield	
28	4240033	AR	Tie-Strap (Not Shown)	
29	4711400	13	Washer 1/4	
30	4711600	4	Washer 3/8	
31	4751400	1	Washer 1/4	
33	4846573	1	Support, Platform	
34	4846651	1	Base, Glazier	
35	4891600	8	Washer 3/8	
36	4891800	8	Washer 1/2	
37	4892000	8	Washer 5/8	
38	4892600	1	Washer 1	
39	4922869	1	LSS Harness	
39	4922705	1	Analyzer Harness (Not Shown)	
39	4460761	1	Receptacle, Female - 4 Position (Not Shown)	
39	4460226	1	Socket, Female	
39	4460836	1	Connector - 12 Position (Black) (J2)	
39	4460465	1	Socket, Female	
39	4460466	1	Plug, Terminal	
39	0840055	1	Boot	
39	4460933	1	Connector - 12 Position (Grey) (J1)	
39	4460465	1	Socket, Female	

ITEM	PART NUMBER	QTY	DESCRIPTION	REV
39	4460466	1	Plug, Terminal	
39	0840055	1	Boot	
41	2540038	1	Grommet	
42	2920129	1	Bulb, Light (Not Shown - Located on Ground Control Box)	

SECTION 4 - PLATFORM

FIGURE 4-1. PLATFORM INSTALLATION

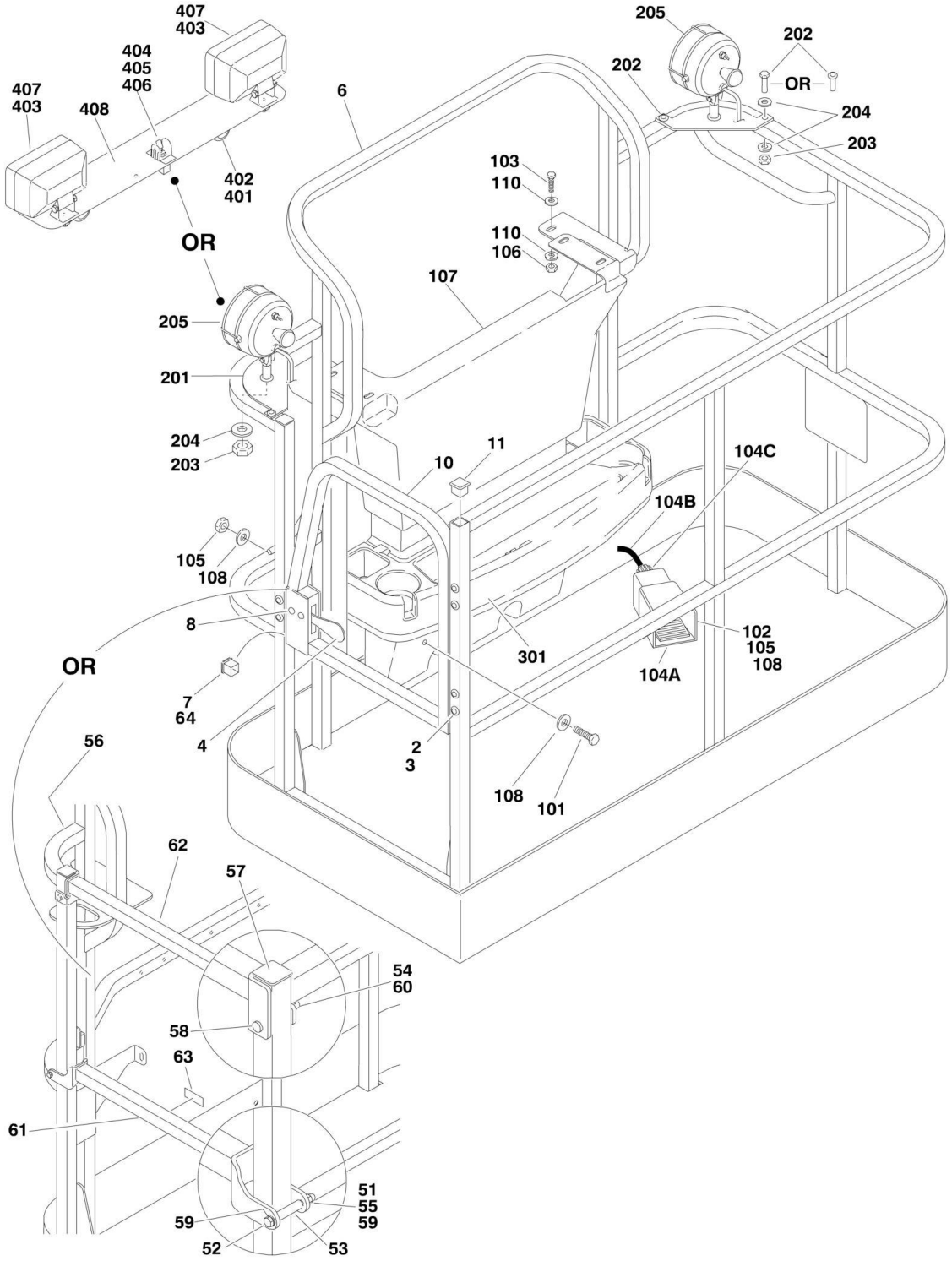

FIGURE 4-1. PLATFORM INSTALLATION

ITEM	PART NUMBER	QTY	DESCRIPTION	REV
		Ref	**PLATFORM ASSEMBLIES WITH GATE**	
	3510822	Ref	**Platform 36in x 8ft (91.5cm x 2.44m) with No Mesh (SN 0300096000 through 0300162322)**	B-J
	1001144023	Ref	**Platform 36in x 8ft (91.5cm x 2.44m) with No Mesh (SN 0300162323 through 0300200772)**	D
	1001186383	Ref	**Platform 36in x 8ft (91.5cm x 2.44m) with No Mesh (SN 0300200773 through 0300203770)**	C
	3510833	Ref	**Platform 36in x 6ft (91.5cm x 1.83m) with No Mesh (SN 0300096000 through 0300162322)**	B-I
	1001144024	Ref	**Platform 36in x 6ft (91.5cm x 1.83m) with No Mesh (SN 0300162323 through 0300200772)**	D
	1001186384	Ref	**Platform 36in x 6ft (91.5cm x 1.83m) with No Mesh (SN 0300200773 through 0300203770)**	B
	3510831	Ref	**Platform 30in x 5ft (76cm x 1.52m) with No Mesh (SN 0300096000 through 0300162322)**	B-L
	1001144026	Ref	**Platform 30in x 5ft (76cm x 1.52m) with No Mesh (SN 0300162323 through 0300200772)**	D
	1001186386	Ref	**Platform 30in x 5ft (76cm x 1.52m) with No Mesh (SN 0300200773 through 0300203770)**	B
	3510830	Ref	**Platform 30in x 4ft (76cm x 1.22m) (SN 0300096000 through 0300162322)**	B-M
	1001144027	Ref	**Platform 30in x 4ft (76cm x 1.22m) (SN 0300162323 through 0300200772)**	D
	1001186387	Ref	**Platform 30in x 4ft (76cm x 1.22m) (SN 0300200773 through 0300203770)**	B
		Ref	**Note: Original Equipment platform may have been replaced with Service Replacement platform. Identify platform before ordering parts.**	
		Ref	**Note: Platform and Mesh must be ordered separately for Platforms with Mesh. See SPECIAL OPTION SECTION for Mesh Installations.**	
		Ref	**Note: Replacement Decals Must be purchased separately - See DECAL SECTION for Breakdown.**	
2	2080040	16	Fastener, Huck	
3	2600281	2	Hinge, Self-Closing	
4	2940074	1	Latch	
6	See Note	1	Platform Weldment (Note: Purchase Platform Assembly)	
7	3520198	2	Cap-Plug	
8	3820020	4	Rivet	
10		Ref	Gate Weldment Options:	
10	4846452	1	Gate for Platform p/ns 3510822, 3510830, 3510831 & 3510833	
10	1001144629	1	Gate for Platform p/ns 1001144023, 1001144024, 1001144025, 1001144026 & 1001144027	
10	1001144629	1	Gate for Platform p/ns 1001186383, 1001186384, 1001186386 & 1001186387	
11	3520072	3	Cap-Plug	
		Ref	**PLATFORM ASSEMBLIES WITH DROP BAR**	
	1001138430	Ref	**Platform 36in x 8ft (91.5cm x 2.44m) with No Mesh (SN 0300096000 through 0300162322)**	B-B
	1001144022	Ref	**Platform 36in x 8ft (91.5cm x 2.44m) with No Mesh (SN 0300162323 through 0300200772)**	D
	1001186382	Ref	**Platform 36in x 8ft (91.5cm x 2.44m) with No Mesh (SN 0300200773 through 0300203770)**	C
	1001138431	Ref	**Platform 30in x 4ft (76cm x 1.22m) with No Mesh (SN 0300096000 through 0300162322)**	B-B

SECTION 4 - PLATFORM

ITEM	PART NUMBER	QTY	DESCRIPTION	REV
	1001144018	Ref	**Platform 30in x 4ft (76cm x 1.22m) (SN 0300162323 through 0300200772)**	D
	1001186375	Ref	**Platform 30in x 4ft (76cm x 1.22m) (SN 0300200773 through 0300203770)**	B
	1001144019	Ref	**Platform 30in x 5ft (76.5cm x 1.52m) with No Mesh (SN 0300096000 through 0300162322)**	D
	1001186377	Ref	**Platform 30in x 5ft (76.5cm x 1.52m) with No Mesh (SN 0300162323 through 0300200773)**	B
	1001144021	Ref	**Platform 30in x 6ft (76.5cm x 1.83m) with No Mesh (SN 0300096000 through 0300162322)**	D
	1001186379	Ref	**Platform 30in x 6ft (76.5cm x 1.83m) with No Mesh (SN 0300200773 through 0300203770)**	B
		Ref	**Note: Platform and Mesh must be ordered separately for Platforms with Mesh. See SPECIAL OPTION SECTION for Mesh Installations.**	
		Ref	**Note: Replacement Decals Must be purchased separately - See DECAL SECTION for Breakdown.**	
51	0100011	AR	Compound, Locking	
52	0641418	2	Bolt 1/4in-20NC x 2-1/4in	
53	0961845	2	Bushing	
54	3290606	2	Nut M6	
55	3300151	2	Nut, Acorn	
56	See Note	1	Platform Weldment (Note: Not Available - Purchase Platform Assembly)	
57	3520198	2	Cap-Plug	
58	4010618	2	Screw M6 x 50mm	
59	4711400	4	Flatwasher 1/4in	
60	4811700	2	Flatwasher M6	
61	1001138494	1	Bar, Drop	
62	1001138514	1	Rail (Top)	
63	1001140429	1	Decal - Drop-Bar	
64	3520072	2	Cap-Plug	
		Ref	**CONSOLE BOX INSTALLATIONS OPTIONS:**	
	0272609	Ref	**Deutz/Caterpillar/Perkins/GM (SN 0300096000 through 0300162322)**	B
	1001108881	Ref	**Deutz (SN 0300162323 through 0300200772)**	B-C
	1001145875	Ref	**Deutz (Without SkyGuard) (SN 0300200773 through 0300203770)**	A
	1001190083	Ref	**Deutz (With SkyGuard) (SN 0300200773 through 0300203770)**	A
	1001108878	Ref	**Caterpillar/GM (SN 0300140365 through 0300146031)**	B
	1001108881	Ref	**Caterpillar/GM (SN 0300146032 through 0300200772)**	B-C
	1001145875	Ref	**Caterpillar/GM (Without SkyGuard) (SN 0300200773 through 0300203770)**	A
	1001190083	Ref	**Caterpillar/GM (With SkyGuard) (SN 0300200773 through 0300203770)**	A
	1001108878	Ref	**Perkins (SN 0300140365 through 0300188640)**	B
101	0641406	4	Bolt 1/4in-20NC x 3/4in	
102	0641408	3	Bolt 1/4in-20NC x 1in	
103	0641610	4	Bolt 3/8in-16NC x 1-1/4in	
104		Ref	Platform Console Box Assembly Options (Not Shown) (See PLATFORM CONSOLE ASSEMBLY for Breakdown):	
104	0861571	1	Deutz/Caterpillar/Perkins/GM **(SN 0300096000 through 0300140364)**	
104	1001145877	NLA	Deutz **(SN 0300140365 through 0300188639)**	
	1001166668	1	Deutz (Without SkyGuard) **(SN 0300188640 through**	

ITEM	PART NUMBER	QTY	DESCRIPTION	REV
			0300203770)	
	1001190082	1	Deutz (With SkyGuard) **(SN 0300200773 through 0300203770)**	
104	1001108877	1	Caterpillar/GM **(SN 0300140365 through 0300146031)**	
104	1001145877	NLA	Caterpillar/GM **(SN 0300146032 through 0300167708)**	
	1001166668	1	Caterpillar/GM (Without SkyGuard) **(SN 0300188640 through 0300203770)**	
	1001190082	1	Caterpillar/GM (With SkyGuard) **(SN 0300200773 through 0300203770)**	
104	1001108877	1	Perkins **(SN 0300140365 through 0300188640)**	
104A		Ref	Footswitch Assembly Options (Includes Footswitch and Items 104B-104E):	B
104A	0272970	1	Footswitch Assembly **(SN 0300096000 through 0300167707)**	B
104A	1001117174	1	Footswitch Assembly **(SN 0300167708 through 0300203770)**	B
		Ref	**Note: Assembly p/n 0272970 may use either p/n 4360031 or p/n 1001117320. If Original Equipment on machines SN 0300096000 to SN 0300143951 was replaced as an "assembly," p/n 1001117320 may have been used as part of the Service Replacement. Identify component before ordering parts.**	
104A		Ref	Footswitch Options:	
104A	4360031	1	Footswitch **(SN 0300096000 through 0300143950)**	
104A	7000625	2	Contact Block for 4360031 Footswitch	
104A	1001117320	1	Footswitch **(SN 0300143951 through 0300167707)**	
104A	70003483	1	Contact Block for 1001117320 Footswitch	
104A	1001117172	1	Footswitch **(SN 0300167708 through 0300203770)**	
104A	70002902	1	Block, Contact for 1001117172 Footswitch	
104A	70002903	1	Gasket for 1001117172 Footswitch	
104A	70002905	1	Cover for 1001117172 Footswitch	
104A	70002904	1	Bolt Replacement Kit for 1001117172 Footswitch	
104B	1060918	7.5 ft /2.3m	Cable, Electrical - 18/3	
104C	4460071	1	Connector, Strain Relief	
104D	4460464	1	Pin, Male (Not Shown)	
104E	4460226	2	Socket, Female (Not Shown)	
105	3311405	7	Locknut 1/4in-20NC	
106	3311605	4	Locknut 3/8in-16NC	
107	3380434	1	Panel, Decal Mount	
108	4740362	7	Washer, Fender 1/4in	
109	4751400	4	Flatwasher 1/4in Regular	
110	4751600	8	Flatwasher 3/8in Regular	
		Ref	**WORKLIGHTS INSTALLATIONS (optional)**	
	0273493	Ref	**Worklights Installations 400S**	B
	0273494	Ref	**Worklights Installations 460SJ**	C
201	3536089	2	Plate, Mounting	
202		Ref	Fastener Options:	
202	0641414	4	Bolt 1/4in-20NC x 1-3/4in	
202	2080040	4	Rivet 1/4in	
203	3311405	AR	Locknut 1/4in-20NC	
204	4711400	AR	Flatwasher 1/4in Thin	
205	2920140	2	Worklight	
205	7016399	2	Bulb, Replacement (1 Per Worklight)	

SECTION 4 - PLATFORM

ITEM	PART NUMBER	QTY	DESCRIPTION	REV
206	4240099	10	Tie-Strap (Not Shown)	
207	2820035	9	Loom, Vinyl (Not Shown)	
209	4460598	1	Connector, Strain Relief (Not Shown - Located at Console Box)	
		Ref	**TRAY INSTALLATIONS (OPTIONAL)**	
301	1580012	1	Tray, Storage (Center)	
302	1580013	1	Tray, Storage (Rail Mounted - Not Shown)	
		Ref	**FLOODLIGHT INSTALLATION**	
	0274570	Ref	**Floodlight Installation 400S**	A
	0274584	Ref	**Floodlight Installation 460SJ**	A
401	0641518	2	Bolt 5/16in-18NC x 2-1/4in	
402	2560173	2	Handle	
403	2920157	2	Lamp, Work Light	
404	3250585	1	Nameplate - Light On	
405	4060802	1	Guard, Switch	
406	4360336	1	Switch, Toggle	
407	4751800	2	Flatwasher 1/2in Regular	
408	4846561	1	Mount, Light	
409		Ref	Harness 12/3 (Not Shown)	
409	1060983	63 ft /19.2m	Harness 12/3 400S	
409	4922965	1	Harness 12/3 460SJ	
411	4420037	1	Tape, Insulation (Not Shown)	

FIGURE 4-2. PLATFORM COMPONENTS INSTALLATION (FALL ARREST PLATFORM)

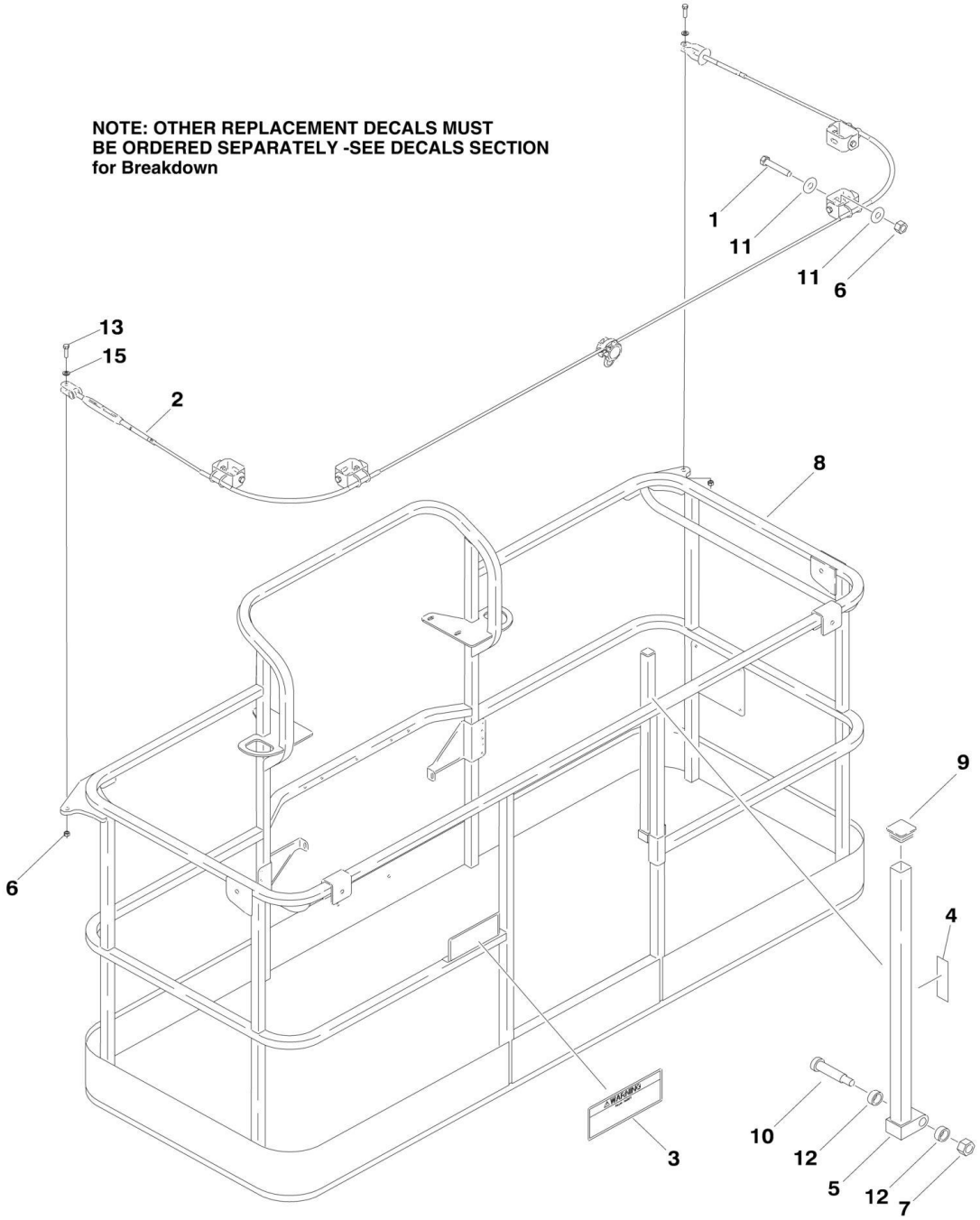

FIGURE 4-2. PLATFORM COMPONENTS INSTALLATION (FALL ARREST PLATFORM)

ITEM	PART NUMBER	QTY	DESCRIPTION	REV
		Ref	**PLATFORM ASSEMBLY (FALL ARREST)**	
	3510884	Ref	**3ft x 6ft (0.9m x 1.83m) (Prior to SN 0300185919)**	E
	1001144597	Ref	**3ft x 6ft (0.9m x 1.83m) (SN 0300185919 through 0300200772)**	D
	1001186333	Ref	**3ft x 6ft (0.9m x 1.83m) (SN 0300200773 through 0300203770)**	A
		Ref	**Note: Fall Arrest Not Available on CE Spec Platform.**	
1	0681822	4	Bolt 1/2in-13NC x 2-3/4in (Grade 8)	
2	1060919	1	Cable, Fall Arrest	
3	1705014	1	Decal - Safety	
4	1706385	1	Decal - Drop Bar	
5	2410014	1	Gate Weldment	
6	3271805	6	Locknut 1/2in-13NC (Grade 8)	
7	3311605	1	Locknut 3/8in-16NC	
8	See Note	1	Platform Weldment (Note: Purchase Platform Assembly)	
9	3520072	1	Cap-Plug	
10	3900054	1	Bolt 1/2in-13NC x 1-3/4in	
11	4751800	AR	Flatwasher 1/2in Regular	
12	0962270	2	Bearing, Oilite	
13	0681814	2	Bolt 1/2-13NC x 1 3/4	
14	1702773	1	Decal - JLG (Not Shown)	
15	4711800	2	Washer, 1/2in Narrow	

FIGURE 4-3. SOFT TOUCH INSTALLATION (OPTIONAL)

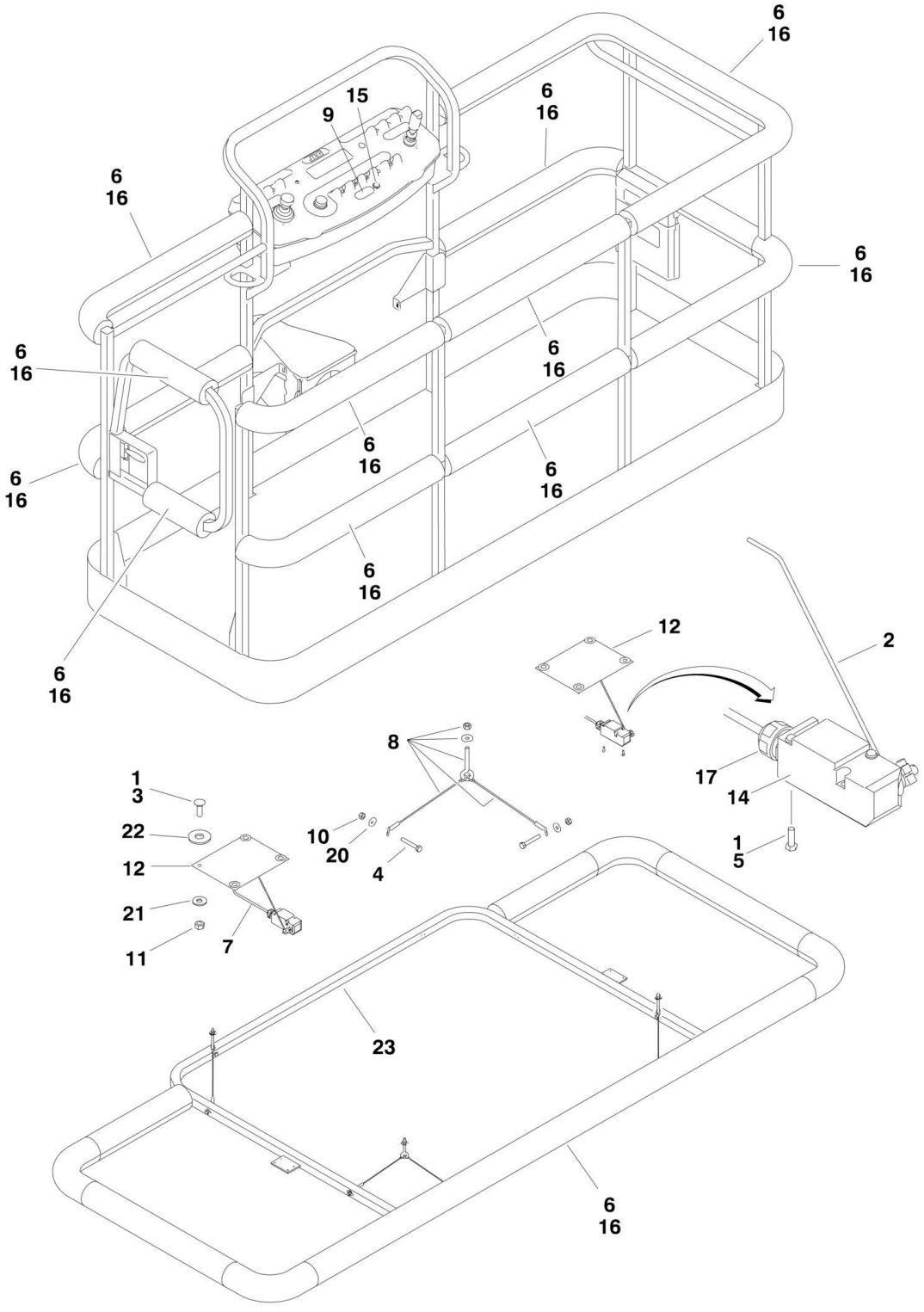

FIGURE 4-3. SOFT TOUCH INSTALLATION (OPTIONAL)

ITEM	PART NUMBER	QTY	DESCRIPTION	REV
		Ref	**SOFT TOUCH SYSTEM INSTALLATIONS OPTIONS:**	
	1001108256	Ref	**6ft/1.8m Platforms (ANSI, ANSI Export and CSA Specs Only)**	A
	0272427	Ref	**8ft/2.4m Platforms (All Specs)**	E
		Ref	**Note: For Soft Touch Add-on Kit, See SPECIAL OPTION SECTION for Breakdown.**	
1	0100011	AR	Locking, Compound	
2	0200048	2	Arm, Switch Activator	
3	0630462	8	Bolt, Carriage	
4	0641414	8	Bolt 1/4in-20NC x 1-3/4in	
5	0731005	NLA	Screw, Machine #10-32 x 5/8in (Use p/n 0721005)	
6		Ref	Bumper Kit Options:	
6	0940177	1	6ft Platform	
6	0940103	1	8ft Platform	
7	1060341		Cable, Electrical - 16/2 Options:	
7		Ref	6ft Platform	
7		Ref	8ft Platform	
8	1060903	4	Wire Rope and Eyebolt Assembly	
9	1702938	1	Decal - Soft Touch Override	
10	3311401	8	Nut 1/4in-20NC	
11	3311501	8	Nut 5/16in-18NC	
12		Ref	Plate, Striker Options:	
12	3575359	2	6ft Platform	
12	3574091	2	8ft Platform	
13	4240099	7	Tie-Strap (Not Shown)	
14	4360057	2	Switch, Limit	
15	4360387	1	Switch, Push Button	
16	4420068	1	Tape, Yellow Adhesive	
17	4460049	2	Connector, Strain Relief	
18	4460234	7	Base, Tie-Strap Mounting (Not Shown)	
19	4460425	1	Connector, Strain Relief (Not Shown - Located on Bottom of Platform)	
20	4751400	8	Flatwasher 1/4in Regular	
21	4751500	12	Flatwasher 5/16in Regular	
22	4751800	8	Flatwasher 1/2in Regular	
23		Ref	Rail, Soft-Touch Options:	
23	3641569	1	6ft Platform	
23	4846673	1	8ft Platform	
100		Ref	Soft-Touch Add-On Kit Options (Includes required components to add option to existing machines) (Not Shown):	
		Ref	**Note: May not be available for all machines depending on existing options. Contact JLG Parts Dept before ordering.**	
100	1001121592	1	3ft x 6ft (.9m x 1.83m) Platform	
100	1001121593	1	3ft x 6ft (.9m x 2.44m) Platform	
	0272444	Ref	**SOFT TOUCH COUNTERWEIGHT INSTALLATION (NOT SHOWN)**	C
	4821397	1	Counterweight (Located in Frame)	

FIGURE 4-4. PLATFORM CONSOLE ASSEMBLY

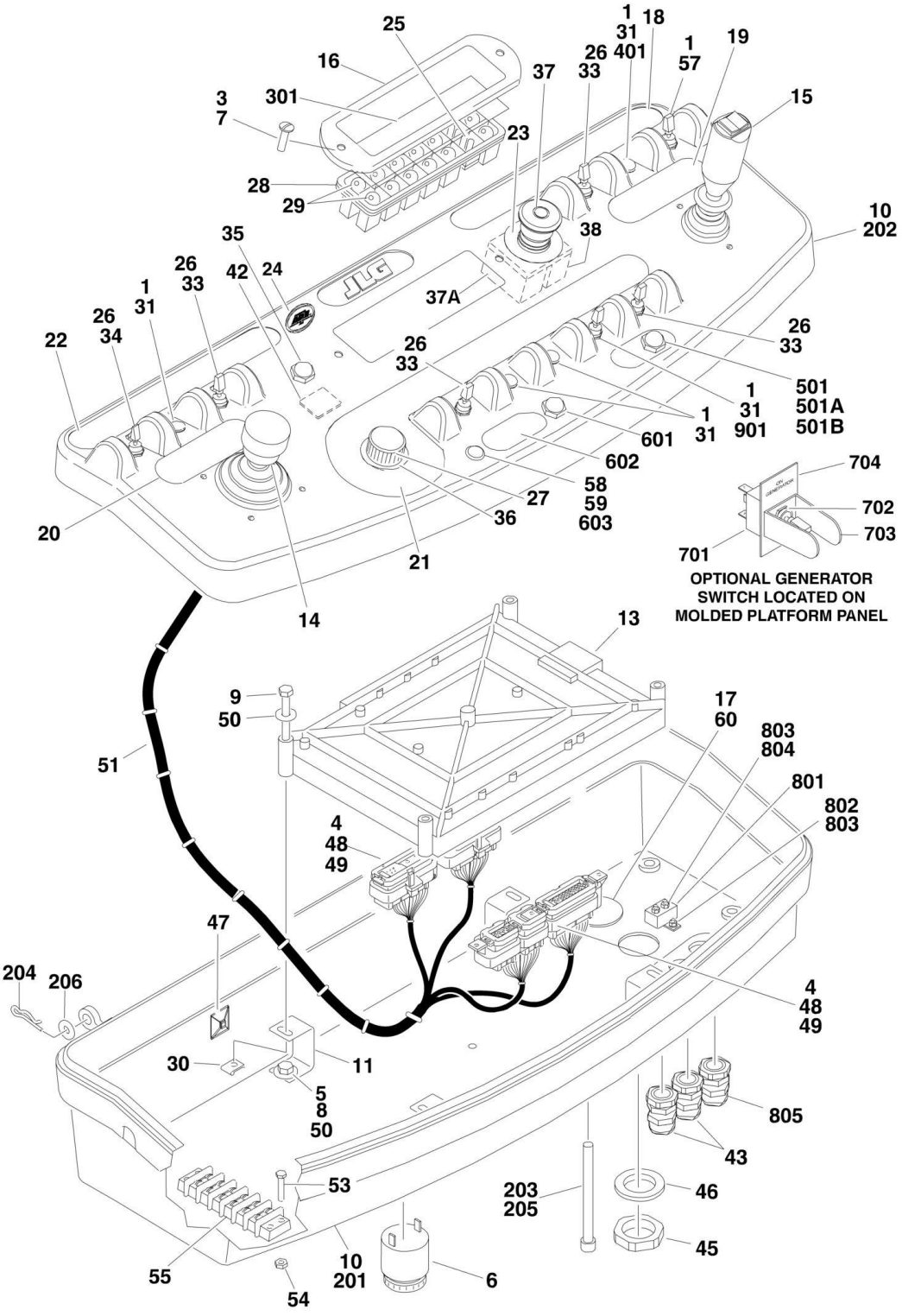

FIGURE 4-4. PLATFORM CONSOLE ASSEMBLY

ITEM	PART NUMBER	QTY	DESCRIPTION	REV
		Ref	**PLATFORM CONSOLE ASSEMBLY**	
	0861571	Ref	**Deutz/Caterpillar/Perkins/GM (SN 0300096000 through 0300140364)**	G
	1001145877	Ref	**Deutz (SN 0300140365 through 0300188639)**	C-F
	1001166668	Ref	**Deutz (Without SkyGuard) (SN 0300188640 through 0300203770)**	A
	1001190082	Ref	**Deutz (With SkyGuard) (SN 0300200773 through 0300203770)**	A
	1001108877	Ref	**Caterpillar/GM (SN 0300140365 through 0300146031)**	B
	1001145877	Ref	**Caterpillar/GM (SN 0300146032 through 0300188639)**	C-F
	1001166668	Ref	**Caterpillar/GM (Without SkyGuard) (SN 0300188640 through 0300203770)**	A
	1001190082	Ref	**Caterpillar/GM (With SkyGuard) (SN 0300200773 through 0300203770)**	A
	1001108877	Ref	**Perkins (SN 0300140365 through 0300188640)**	B
1	0100009	AR	Sealant	
3	0100035	AR	Locking, Compound	
4	0100048	AR	Grease, Dielectric	
5	0100081	AR	Loctite #454	
6	0140011	1	Alarm	
7	0630464	2	Screw, Button Head #10-24NC x 1/2in	
8	0641404	4	Bolt 1/4in-20NC x 1/2in	
9	0641414	4	Bolt 1/4in-20NC x 1-3/4in	
10		Ref	Box, Console Options: (See Items 201-206 for Breakdown)	
10	0861537	1	Box, Console (Without SkyGuard) **(SN 0300188640 through 0300203770)**	
10	1001189116	1	Box, Console (With SkyGuard) **(SN 0300200773 through 0300203770)**	
11		Ref	Bracket, Support Options:	
11	0902751	4	Bracket, Support **(Prior to SN 0300188640)**	
11	1001172760	4	Bracket, Support **(SN 0300188640 through 0300203770)**	
13		Ref	Controller, Module Options:	
13	1600375	1	Perkins	
13	1600375	1	Caterpillar/GM Deutz **(SN 0300096000 through 0300146031, SN 0300096000 through 0300140364)**	
13	1001106355	1	Caterpillar/GM Deutz **(SN 0300146032 through 0300203770, SN 0300140365 through 0300203770)**	
14		Ref	Controller Assembly (Lift and Swing) Options: (See CONTROLLER ASSEMBLY (LIFT AND SWING) for Breakdown)	
14	1600317	NLA	Controller Assembly (Lift and Swing) (Use p/n 1001129555) **(SN 0300096000 through 0300146172)**	
14	1001118417	NLA	Controller Assembly (Use p/n 1001129555) **(SN 0300146173 through 0300188639)**	
14	1001166539	NLA	Controller Assembly (Lift and Swing) (Use p/n 1001129555) **(SN 0300188640 through 0300203770)**	
15		Ref	Controller Assembly (Drive and Steer) Options (See CONTROLLER ASSEMBLY (DRIVE AND STEER) for Breakdown):	
15	1600318	NLA	Controller Assembly (Use p/n 1001166538) **(SN 0300096000 through 0300146172)**	
15	1001118416	NLA	Controller Assembly (Use p/n 1001166538) **(SN 0300146173 through 0300188639)**	
15	1001166538	1	Controller Assembly **(SN 0300188640 through 0300203770)**	
16	1670829	1	Bezel	

ITEM	PART NUMBER	QTY	DESCRIPTION	REV
17		Ref	Cover Options:	
17	1671037	NLA	Cover **(SN 0300096000 through 0300140364)**	
17	1001110434	1	Cover **(SN 0300140365 through 0300203770)**	
18		Ref	Decal (Stop) Options:	
18	1704997	NLA	Caterpillar/Deutz/Perkins/GM **(SN 0300096000 through 0300137200)**	
18	1001107527	1	Caterpillar/Deutz/Perkins/GM **(SN 0300137201 through 0300140364)**	
18	1001107677	1	Caterpillar/Deutz/Perkins/GM (Use p/n 1001131168) **(SN 0300140365 through 0300203770)**	
19	1702565	1	Decal (Drive and Steer)	
20	1702566	1	Decal (Lift and Swing)	
21	1702567	1	Decal (Function Speed)	
22	1702676	1	Decal (Horn)	
23	1704260	1	Decal - EMS	
24	1705132	1	Decal - ADE **(Prior to SN 0300188640)**	
25	2420197	1	Gauge, Fuel	
26	3790012	AR	O-Ring	
27	2560136	1	Handle, Knob	
28	2760109	1	Housing, Display Light	
29	2920129	10	Bulb, Light	
30	3300353	4	Nut, Tinnerman	
31	3520054	AR	Plug, Hole	
33		Ref	Switch, Toggle Options:	
33	4360328	4	Switch, Toggle **(Prior to SN 0300188640)**	
33	1001155045	4	Switch, Toggle **(SN 0300188640 through 0300203770)**	
34		Ref	Switch, Toggle Options:	
34	4360331	1	Switch, Toggle **(Prior to SN 0300188640)**	
34	1001161709	1	Switch, Toggle **(SN 0300188640 through 0300203770)**	
35	4360387	1	Switch, Pushbutton	
36	4360407	1	Controller, Speed	
36	See Note	1	Gasket, "Top Hat" (Included with Switch) (Note: Not Available - Purchase Complete Controller)	
36	70003784		Seal	
37	4360475	1	Switch, Emergency Stop	
37	7020175	1	Cap, Red	
37A	7020176	1	Contact Block	
38	4360476	1	Block, Contact	
42	4460234	3	Mount, Tie-Strap	
43	4460428	2	Connector, Strain Relief	
45	4460470	1	Nut, Terminal	
46	4460471	1	Lockwasher, Terminal	
47	4460488	1	Base, Mounting	
48	4460708	2	Receptacle - 15 Position	
49	4460905	5	Seal, Plug **(Prior to SN 0300188640)**	
50	4751400	8	Flatwasher 1/4in Regular	
51		Ref	Harness, Platform Box Options (See ELECTRICAL SECTION for Breakdown):	
51	4922665	1	Harness, Platform Box **(SN 0300096000 through 0300137200)**	
51		Ref	Harness, Platform Box Options:	
	1001107440	1	Harness, Platform Box (Without SkyGuard) **(SN 0300188640 through 0300203770)**	
	1001187752	1	Harness, Platform Box (With SkyGuard) **(SN 0300200773**	

ITEM	PART NUMBER	QTY	DESCRIPTION	REV
			through 0300203770)	
52	4922666	1	Harness, Analyzer Cable (Not Shown - See ELECTRICAL SECTION for Breakdown)	
53	0721008	1	Screw #10-24NC x 1in	
54	3311001	1	Nut #10-24	
55	4460007	1	Strip, Terminal	
57		Ref	Switch, Toggle Options:	
57	4360330	1	Switch, Toggle **(Prior to SN 0300188640)**	
57	1001159256	1	Switch, Toggle **(SN 0300188640 through 0300203770)**	
58	2920028	1	Light, Indicator (With SkyGuard)	
59	2920029	1	Lamp, Bulb (With SkyGuard)	
60	1001185281	1	Plug, Bushing (With SkyGuard)	
		Ref	**CONSOLE BOX COMPONENTS**	
201	0861537	Ref	Console Box (Without SkyGuard)	E
201	1001189116	Ref	Console Box (With SkyGuard)	A
201		Ref	Console Bottom Options:	
201	0861537	1	Console Bottom (Without SkyGuard) (Note: Not Available - Purchase Complete Console Box)	
201	1001189116	1	Console Bottom (With SkyGuard) (Note: Not Available - Purchase Complete Console Box)	
202		Ref	Console Top Options:	
202	0861537	1	Console Top (Without SkyGuard) (Note: Not Available - Purchase Complete Console Box)	
202	1001189116	1	Console Top (With SkyGuard) (Note: Not Available - Purchase Complete Console Box)	
203	3311601	1	Nut 3/8in-16NC	
204	3470003	2	Hairpin	
205	0630568	1	Screw 3/8in-16NC x 4-1/2in	
206	4711500	2	Flatwasher 5/16in Thin	
		Ref	**LIGHT PANEL DECAL INSTALLATIONS**	
		Ref	**Light Panel Decal Installations (SN 0300096000 through 0300140364)**	
	0259962	Ref	**400S with 500LB Capacity (ANSI Spec)**	2
	0259965	Ref	**400S with 750LB Capacity (ANSI Spec)**	2
	0259964	Ref	**400S with 230KG Capacity (ANSI Export, Australian, CSA and Japanese Specs)**	2
	0259968	Ref	**400S with 340KG Capacity (ANSI Export, Australian, CSA and Japanese Specs)**	2
	0259963	Ref	**400S (No Dual Capacity) (Australian and CE Specs)**	2
	0259963	Ref	**460SJ (No Dual Capacity) (All Specs)**	2
		Ref	**Light Panel Decal Installations (SN 0300140365 through 0300203770)**	
	1001108995	Ref	**400S with 500LB Capacity (ANSI Spec)**	A
	1001108996	Ref	**400S with 750LB Capacity (ANSI Spec)**	A
	1001108995	Ref	**400S with 230KG Capacity (ANSI Export, Australian, CSA and Japanese Specs)**	A
	1001108996	Ref	**400S with 340KG Capacity (ANSI Export, Australian, CSA and Japanese Specs)**	A
	1001108997	Ref	**400S (No Dual Capacity) (Australian and CE Specs)**	A
	1001108997	Ref	**460SJ (No Dual Capacity) (All Specs)**	A
301		Ref	Decal Options:	
301		Ref	Decal **(SN 0300096000 through 0300140364)**	
301	1704484	1	400S with 500LB Capacity (ANSI Spec)	
301	1704487	1	400S with 750LB Capacity (ANSI Spec)	

SECTION 4 - PLATFORM

ITEM	PART NUMBER	QTY	DESCRIPTION	REV
301	1704486	1	400S with 230KG Capacity (ANSI Export, Australian, CSA and Japanese Specs)	
301	1704514	1	400S with 340KG Capacity (ANSI Export, Australian, CSA and Japanese Specs)	
301	1704485	1	400S (No Dual Capacity) (CE Specs)	
301	1704485	1	460SJ (No Dual Capacity) (All Specs)	
301		Ref	Decal **(SN 0300140365 through 0300203770)**	
301	1001107849	1	400S with 500LB Capacity (ANSI Spec)	
301	1001107850	1	400S with 750LB Capacity (ANSI Spec)	
301	1001107849	1	400S with 230KG Capacity (ANSI Export, Australian, CSA and Japanese Specs)	
301	1001107850	1	400S with 340KG Capacity (ANSI Export, Australian, CSA and Japanese Specs)	
301	1001107851	1	400S (No Dual Capacity) (CE Specs)	
301	1001107851	1	460SJ (No Dual Capacity) (All Specs)	
	0271246	Ref	**DUAL FUEL SWITCH INSTALLATION**	3-C
401	4360336	1	Switch, Toggle	
401	3790012	1	O-Ring	
		Ref	**LIGHTS INSTALLATION (OPTIONAL)**	
	0272018	Ref	**Headlights and Taillights**	C
	0274574	Ref	**Chassis Illumination Lights**	C
501	4360522	1	Switch, Push Button	
501A	3790012	1	O-Ring	
501B	1705170	1	Decal - Lights	
		Ref	**SOFT TOUCH SYSTEM INSTALLATION (OPTIONAL)**	
601	4360387	1	Switch, Pushbutton	
602	1702938	1	Decal - Soft Touch Override	
603	2920028	1	Light, Indicator	
603	2920029	1	Bulb	
		Ref	**GENERATOR INSTALLATION (OPTIONAL)**	
701	4360336	1	Switch, Toggle	
702	4740397	1	Bushing	
703	4060802	1	Guard, Switch	
704	3251102	1	Decal - Generator ON/OFF	
	0270814	Ref	**PLATFORM WORKLIGHT INSTALLATION (OPTIONAL)**	3
801	4360232	1	Breaker, Circuit - 15Amp	
802	0721003	2	Bolt #10-24NC x 3/8in	
803	4761000	4	Lockwasher #10	
804	3311001	2	Nut #10-24NC	
805	4460598	1	Connector, Strain Relief	
	0271340	Ref	**JIB SWITCH INSTALLATION (460SJ ONLY)**	1-A
901	4360328	1	Switch, Toggle	
901	3790012	1	O-Ring	
		Ref	**SKYGUARD/EN280 DECALS (NOT SHOWN)**	
	1001141300	1	Decal - SkyGuard Override	
	1001141302	1	Decal - SkyGuard/Soft Touch Override	
	1001189882	NLA	Decal - MSSO (Use p/n 1001197408)	

FIGURE 4-5. CONTROLLER ASSEMBLY (LIFT AND SWING)

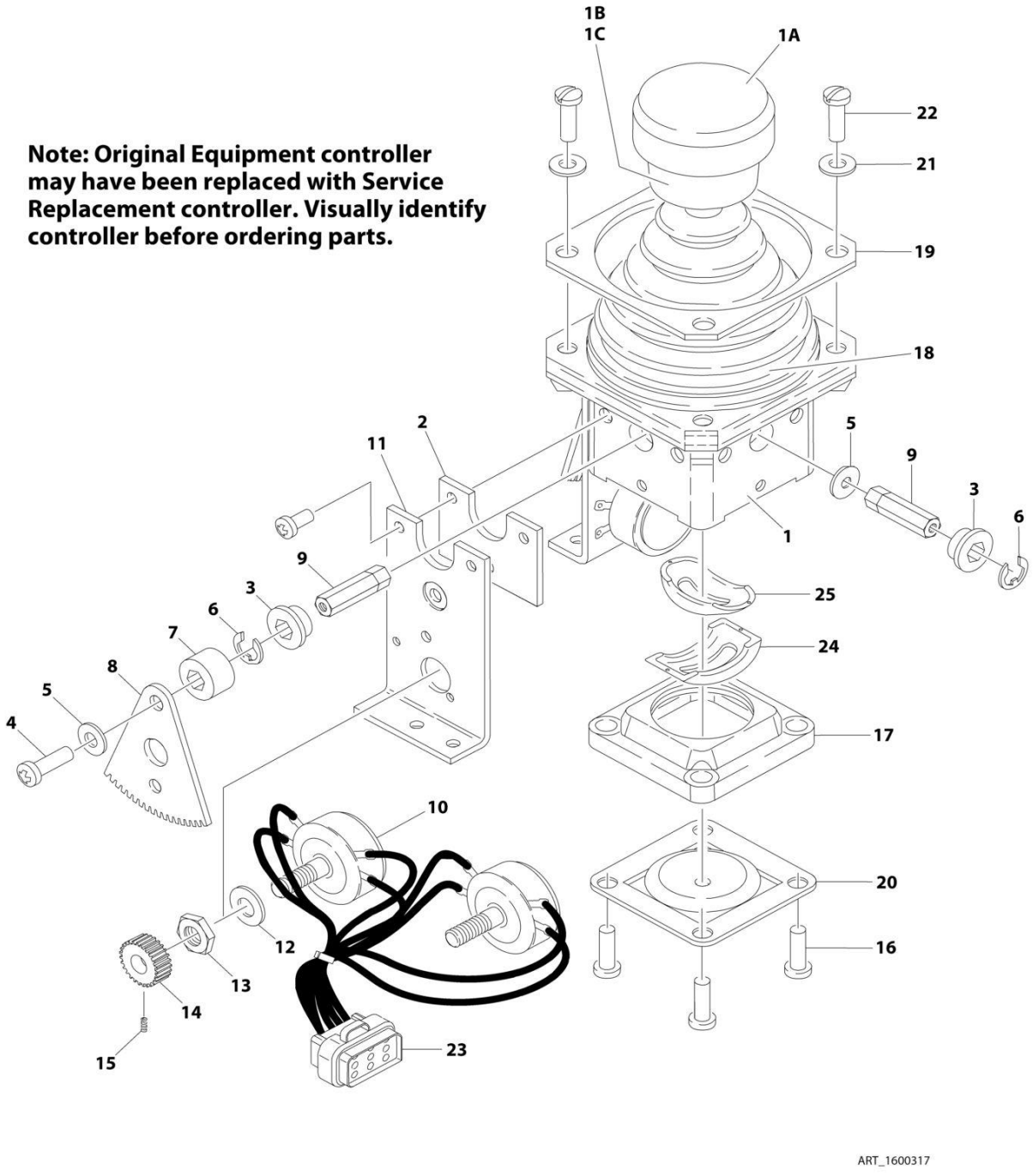

FIGURE 4-5. CONTROLLER ASSEMBLY (LIFT AND SWING)

ITEM	PART NUMBER	QTY	DESCRIPTION	REV
		Ref	**Note: Original Equipment controller may have been replaced with Service Replacement controller. Visually identify controller before ordering parts.**	
	1600317	Ref	**CONTROLLER ASSEMBLY (SN 0300096000 through 0300173146)**	C
		Ref	**Note: Use p/n 1001129555 Kit as Replacement.**	
1	7019141	1	Mechanical Assembly (Includes Base, Handle Stem and Items 1A, 1B, 1C & 18)	
1A	7019197	1	Handle Cap and Rod	
1B	7003928	1	Spring	
1C	7022808	1	Cap, Lift	
2	7019171	2	Plate	
3	7019111	4	Bearing, Gear	
4	7019143	2	Screw	
5	7019144	2	Spacer, Cam	
6	7019145	4	E-Clip	
7	7019174	2	Spacer	
8	7003977	2	Gear, Drive	
9		Ref	Shaft Options:	
9	7019147	2	Shaft, Short	
9	7019177	2	Shaft, Long	
10	7022818	2	Potentiometer	
11	7019142	2	Plate	
12	7003992	2	Washer	
13	7003993	2	Nut	
14	7003976	2	Gear, Slave	
15	7019149	2	Setscrew	
16	7022816	4	Screw	
17	7019150	1	Gate	
18	7022814	1	Boot	
19	7022815	1	Bezel	
20	See Note	NSS	Center, Detent (Note: Not Available for Purchase)	
21	7003953	4	Washer	
22	7022817	4	Screw	
23	7022819	1	Plug, Male 8 Position (Natural)	
23	4460871	8	Socket, Female	
24	7019122	1	Gimble, Outer	
25	7019123	1	Gimble, Inner	

FIGURE 4-6. CONTROLLER ASSEMBLY (LIFT AND SWING)

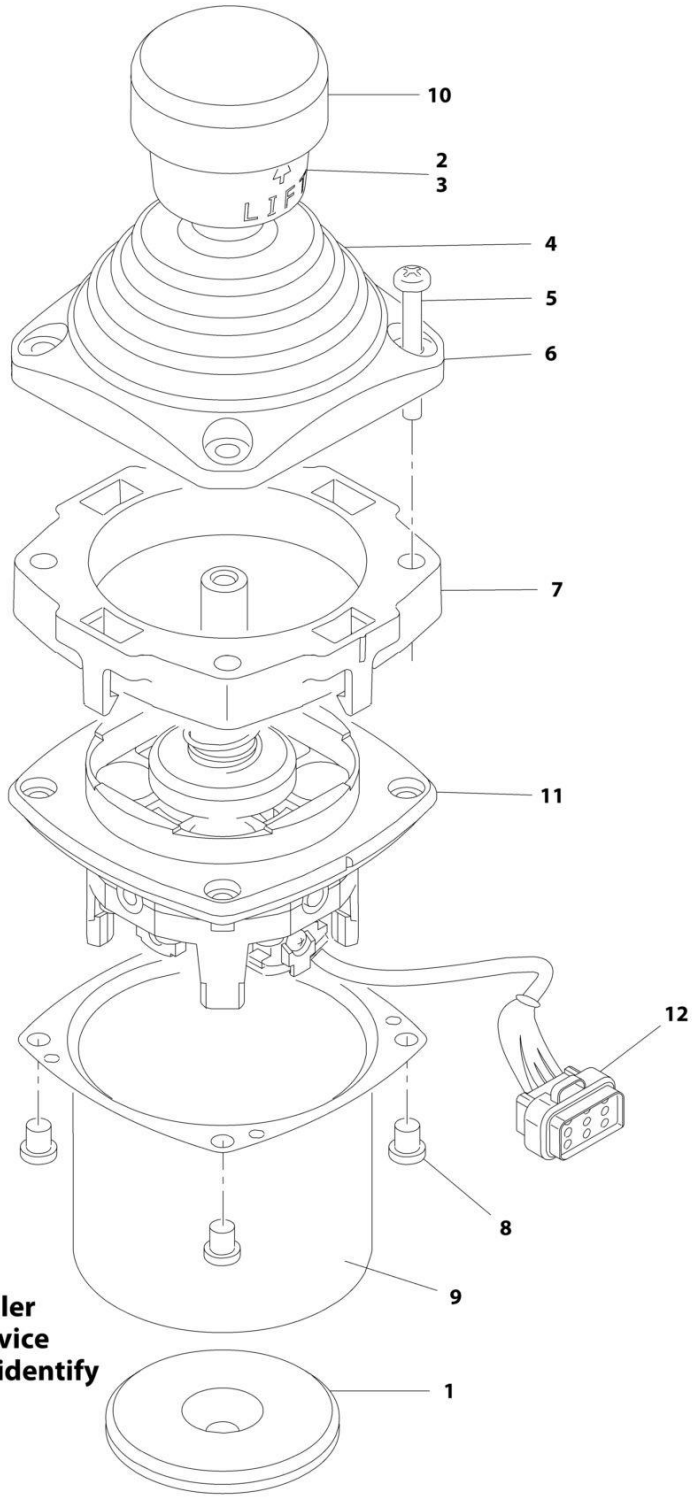

Note: Original Equipment controller may have been replaced with Service Replacement controller. Visually identify controller before ordering parts.

FIGURE 4-6. CONTROLLER ASSEMBLY (LIFT AND SWING)

ITEM	PART NUMBER	QTY	DESCRIPTION	REV
		Ref	**Note: Original Equipment controller may have been replaced with Service Replacement controller. Visually identify controller before ordering parts.**	
	1001118417	Ref	**CONTROLLER ASSEMBLY (LIFT AND SWING) (SN 0300146173 through 0300203770)**	E
		Ref	**Note: Use p/n 1001129555 as Replacement.**	
1	70002730	1	Gasket	
2	7003928	1	Spring	
3	7022808	1	Cap, Lift	
4	70002731	1	Boot	
5	70002732	4	Screw	
6	7022815	1	Bezel	
7	70002733	1	Adapter	
8	70002734	4	Screw	
9	70002735	1	Can, Enclosure	
10	70002906	1	Cap	
11	See Note	NSS	Mechanical Assembly (Note: Use p/n 1001129555)	
12	7022819	1	Connector - 9 Position	
12	4460871	6	Socket, Female	

FIGURE 4-7. CONTROLLER ASSEMBLY (SWING AND LIFT)

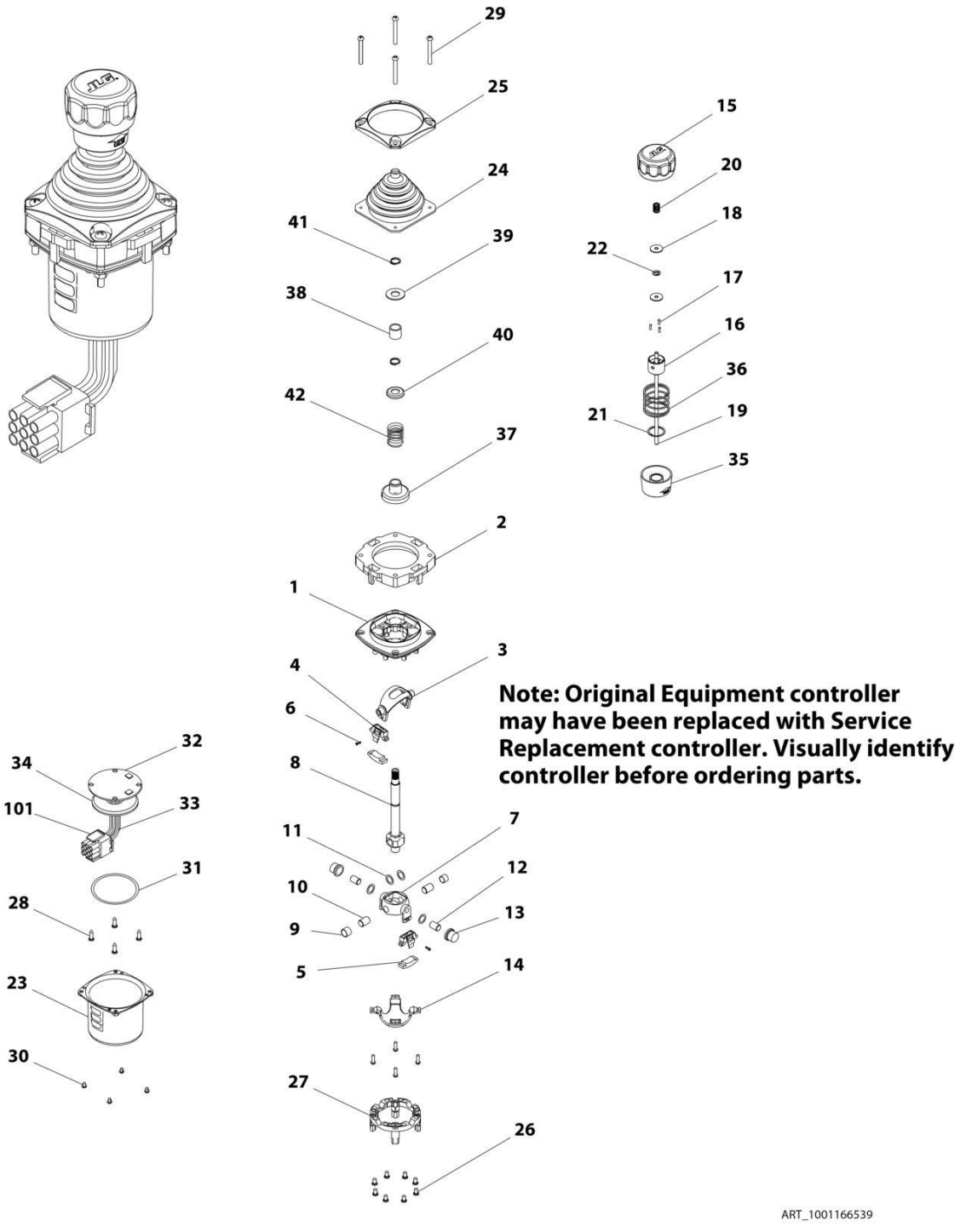

FIGURE 4-7. CONTROLLER ASSEMBLY (SWING AND LIFT)

ITEM	PART NUMBER	QTY	DESCRIPTION	REV
		Ref	**Note: Original Equipment controller may have been replaced with Service Replacement controller. Visually identify controller before ordering parts.**	
	1001166539	Ref	**CONTROLLER ASSEMBLY - LIFT AND SWING**	A
		Ref	**Note: Use p/n 1001129555 as replacement.**	
1	See Note	1	Main Cast Body (Note: Not Available - Purchase Complete Assembly)	
2	70004752	1	Adapter	
3	See Note	1	Pivot Arm, Plastic (Note: Not Available - Purchase Complete Assembly)	
4	See Note	2	Holder, Magnet (Note: Not Available - Purchase Complete Assembly)	
5	See Note	2	Arc, Magnet (Note: Not Available - Purchase Complete Assembly)	
6	See Note	2	Screw (Note: Not Available for Purchase)	
7	See Note	1	Pivot Arm, Cast (Note: Not Available - Purchase Complete Assembly)	
8	See Note	1	Shaft, Main (Note: Not Available - Purchase Complete Assembly)	
9	See Note	2	Bearing (Note: Not Available - Purchase Complete Assembly)	
10	See Note	2	Pin (Note: Not Available - Purchase Complete Assembly)	
11	See Note	4	Shim (Note: Not Available - Purchase Complete Assembly)	
12	See Note	2	Pin (Note: Not Available - Purchase Complete Assembly)	
13	See Note	2	Bearing (Note: Not Available - Purchase Complete Assembly)	
14	See Note	1	Dome, Centering (Note: Not Available - Purchase Complete Assembly)	
15	70004753	1	Cap	
16	70004754	1	Insert, Cap	
17	70004755	3	Pin	
18	70004756	2	Washer	
19	70004757	1	Pin, Centering	
20	70004758	1	Spring	
21	70004759	1	Ring, Retaining	
22	70004760	1	E-Ring	
23	70004761	1	Can, Enclosure	
24	70004762	1	Boot	
25	70004763	1	Bezel	
26	See Note	8	Screw (Note: Not Available for Purchase)	
27	See Note	1	Base Mounting (Note: Not Available - Purchase Complete Assembly)	
28	See Note	4	Screw (Note: Not Available for Purchase)	
29	70004764	4	Screw	
30	70004765	4	Screw	
31	70004766	1	O-Ring	
32	See Note	1	Plate (Note: Not Available - Purchase Complete Assembly)	
33	See Note	1	Harness (Note: Not Available - Purchase Complete Assembly)	
34	70004767	1	Grommet, Rubber	
35	70004768	1	Housing	
36	70004769	1	Spring	
37	70004770	1	Stopper	
38	70004771	1	Spacer	
39	70004772	1	Washer	
40	70004773	1	Disc	

SECTION 4 - PLATFORM

ITEM	PART NUMBER	QTY	DESCRIPTION	REV
41	70004774	2	Ring, Retaining	
42	70004775	1	Spring	
101	4460265	1	Connector - 9 Position	
101	4460226	6	Socket, Female	

FIGURE 4-8. CONTROLLER ASSEMBLY (DRIVE AND STEER)

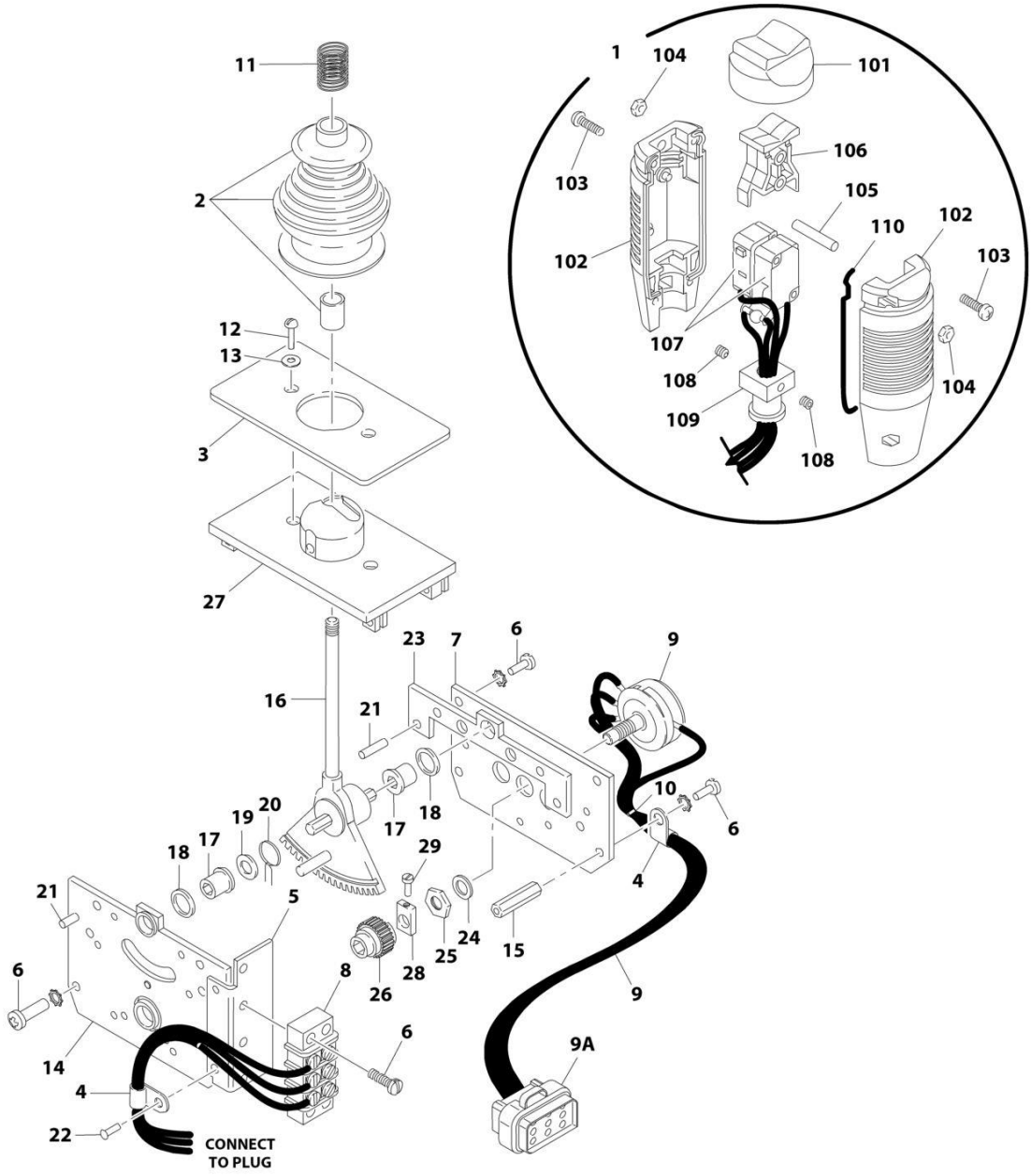

Note: Original Equipment controller may have been replaced with Service Replacement controller. Visually identify controller before ordering parts.

ART_1600318

FIGURE 4-8. CONTROLLER ASSEMBLY (DRIVE AND STEER)

ITEM	PART NUMBER	QTY	DESCRIPTION	REV
		Ref	**Note: Original Equipment controller may have been replaced with Service Replacement controller. Visually identify controller before ordering parts.**	
	1600318	Ref	**CONTROLLER ASSEMBLY (SN 0300096000 through 0300146172)**	C
		Ref	**Note: Use p/n 1001166538 for Replacement.**	
1	7022812	1	Handle Assembly (See Items 101-110 for Breakdown)	
2	7019161	1	Boot and Sleeve	
3	7003933	1	Gasket	
4	7019154	2	Clamp, Wire	
5	7022823	1	Bracket, Mounting	
6	7003994	1	Screw	
7	7022822	1	Plate, Pot Mounting	
8	7003986	1	Strip, Terminal - 3 Position	
9	7022824	1	Electric Assembly	
9A	1001113961	1	Plug, Male - 8 Position (Black) (was p/n 7022825)	
9A	4460871	7	Socket, Female	
10	7019151	AR	Tie-Strap	
11	7019162	1	Spring	
12	7003969	2	Screw	
13	7003941	2	Washer	
14	See Note	NSS	Plate, Mounting (Left Side) (Note: Not Available for Purchase)	
15	7019115	2	Stand-Off	
16	7019155	1	Shaft 8mm	
17	7019111	2	Bearing	
18	7019110	2	Spacer, Head Gear	
19	7019112	1	Washer	
20	7003946	1	Spring, Return	
21	7019103	4	Pin	
22	See Note	NSS	Rivet (Note: Not Available - Purchase Locally)	
23	7019168	1	Plate, Mounting (Right Side)	
24	7003992	1	Washer	
25	7003993	1	Nut	
26	7003935	1	Gear, Slave	
27	7019160	1	Plate, Base	
28	7019114	1	Coupling, Potentiometer	
29	See Note	NSS	Cup Point Screw (Note: Not Available for Purchase)	
	7022812	Ref	**HANDLE ASSEMBLY**	
101	7003972	1	Boot, Switch	
102	7003973	2	Half, Handle	
103	7003980	4	Screw	
104	7019167	4	Nut	
105	7019164	1	Axle	
106	7019165	1	Rocker	
107	See Note	NSS	Wiring for Controller Assembly p/n 1600318 (Note: Use p/n 1001166538)	
107	7019166	2	Switch, Micro	
108	7003983	2	Setscrew	
109	7019194	1	Coupling	
110	7003989	2	Gasket	

FIGURE 4-9. CONTROLLER ASSEMBLY (DRIVE AND STEER)

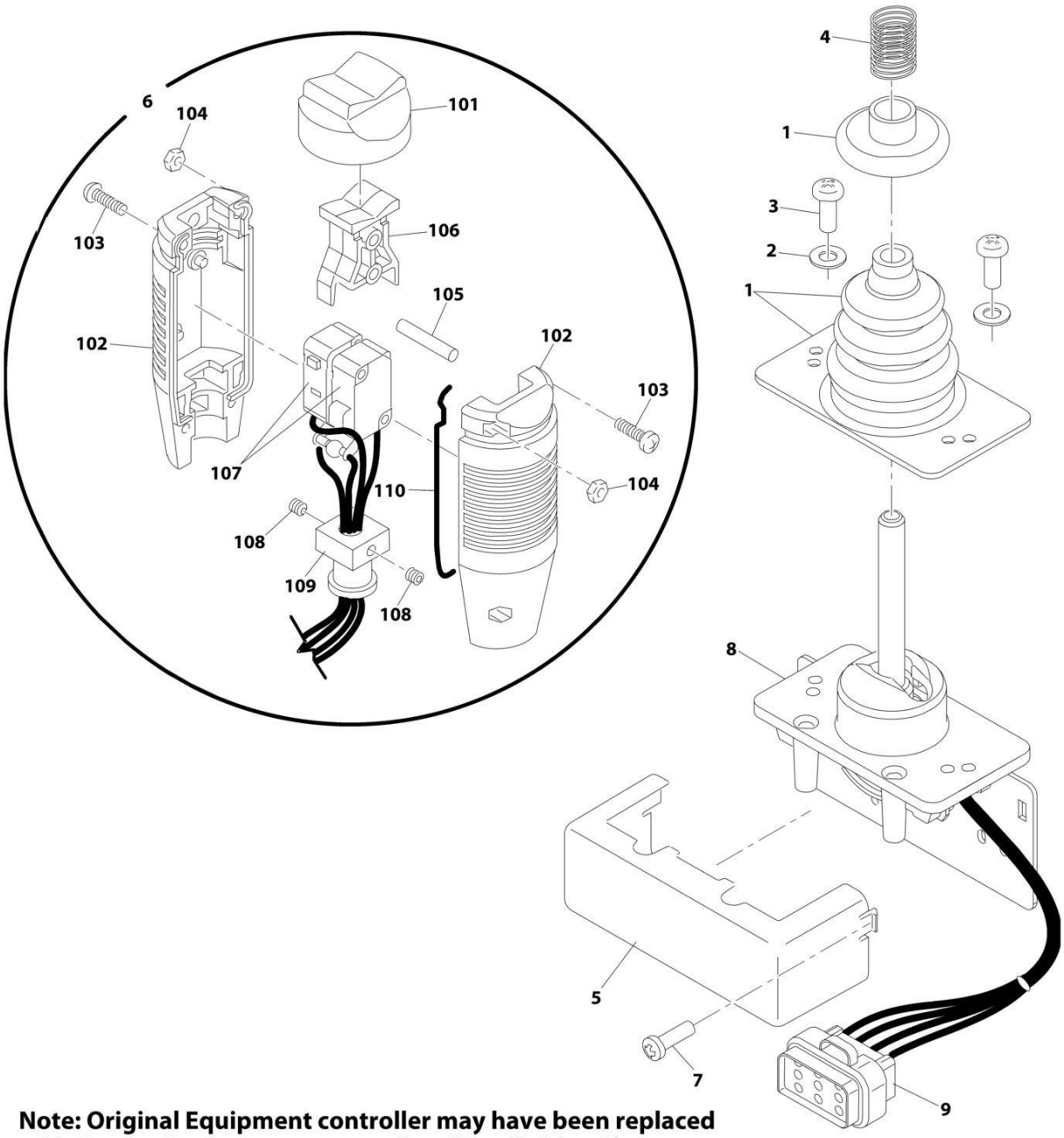

Note: Original Equipment controller may have been replaced with Service Replacement controller. Visually identify controller before ordering parts.

FIGURE 4-9. CONTROLLER ASSEMBLY (DRIVE AND STEER)

ITEM	PART NUMBER	QTY	DESCRIPTION	REV
		Ref	**Note: Original Equipment controller may have been replaced with Service Replacement controller. Visually identify controller before ordering parts.**	
	1001118416	Ref	**CONTROLLER ASSEMBLY (DRIVE AND STEER) (SN 0300146173 through 0300188639)**	D
		Ref	**Note: Use p/n 1001166538 as Replacement.**	
1	70002724	1	Boot and Control Lock Assembly	
2	7003941	2	Washer	
3	70002725	2	Screw	
4	7019162	1	Spring	
5	70002726	1	Enclosure	
6	70002727	1	Handle Assembly (See Items 101-110 for Breakdown)	
7	70002728	1	Screw	
8	See Note	NSS	Mechanical Assembly (Note: Use p/n 1001166538)	
9	1001113961	1	Plug, Male - 8 Position (Black) (was p/n 7022825)	
9	4460871	7	Socket, Female	
	70002727	Ref	**HANDLE ASSEMBLY**	
101	7003972	1	Boot, Switch	
102	7003973	2	Half, Handle	
103	7003980	4	Screw	
104	7019167	4	Nut	
105	7019164	1	Axle	
106	7019165	1	Rocker	
107	70002729	1	Wiring Assembly	
107	7003982	2	Switch, Micro	
108	7003983	2	Set Screw	
109	7019194	1	Coupling	
110	7003989	2	Gasket	

FIGURE 4-10. CONTROLLER ASSEMBLY (DRIVE AND STEER)

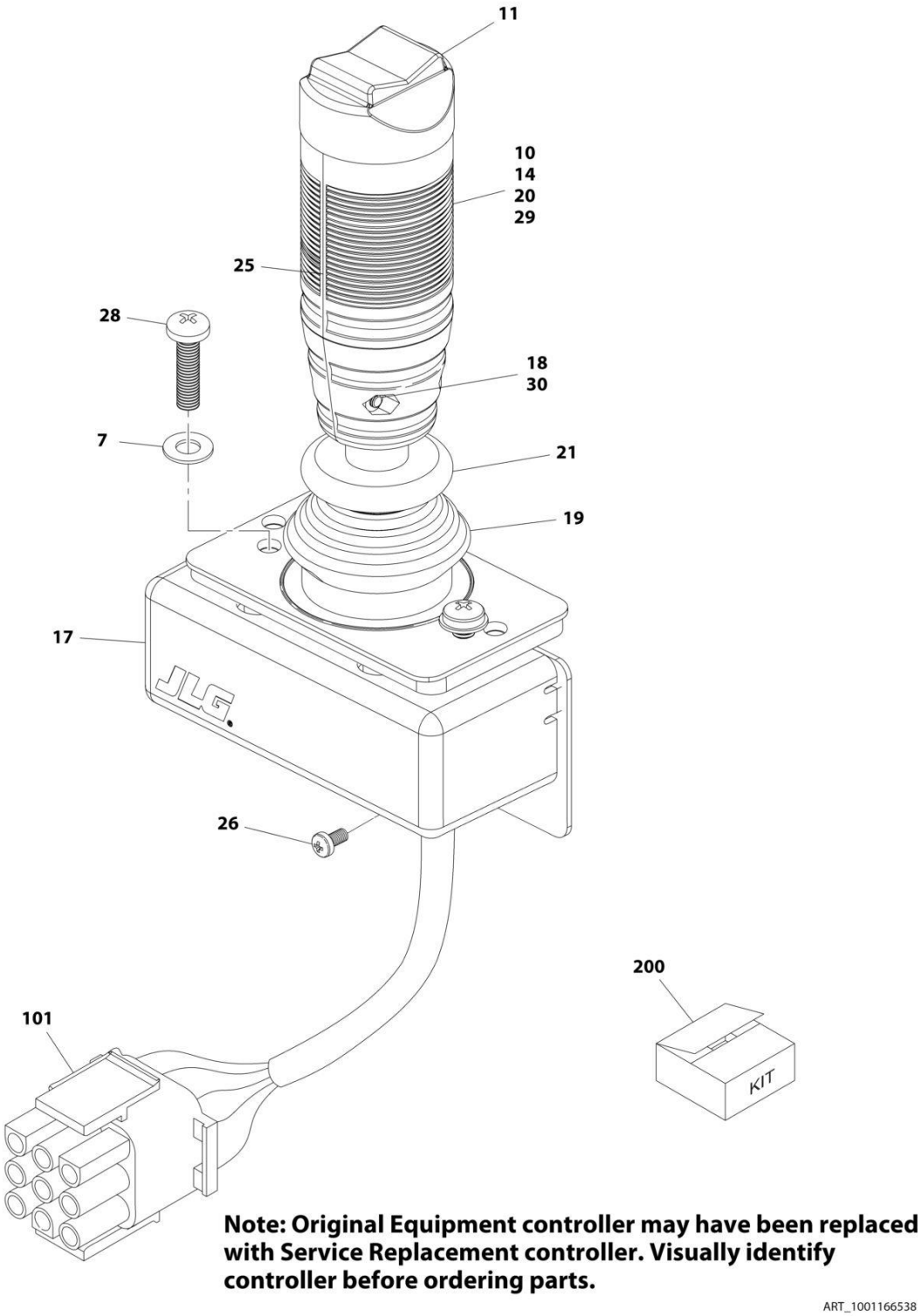

FIGURE 4-10. CONTROLLER ASSEMBLY (DRIVE AND STEER)

ITEM	PART NUMBER	QTY	DESCRIPTION	REV
		Ref	**Note: Original Equipment controller may have been replaced with Service Replacement controller. Visually identify controller before ordering parts.**	
	1001166538	Ref	**CONTROLLER ASSEMBLY - DRIVE AND STEER**	A
7	70004738	2	Washer	
10	70004739	1	Roller	
11	70004740	1	Boot, Switch	
14	70004741	2	Half, Handle	
17	70004742	1	Enclosure	
18	70004743	4	Nut	
19	70004744	NSS	Boot, Controller (Note: Use Item 102)	
20	70004745	NSS	Tube, Locking (Note: Use Item 102)	
21	70004746	NSS	Disc, Locking (Note: Use Item 102)	
25	70004747	2	Seal, Rope	
26	70004748	1	Screw, M3 x 6mm	
28	70004749	2	Screw, M5 x 20mm	
29	70004750	1	Pin, Dowel	
30	70004751	4	Screw, M3 x 16mm	
101	4460265	1	Connector - 9 Position	
101	4460226	7	Socket, Female	
102	70005230	1	Boot Kit (Includes Items 19-21)	

FIGURE 4-11. SKYGUARD SYSTEM INSTALLATION

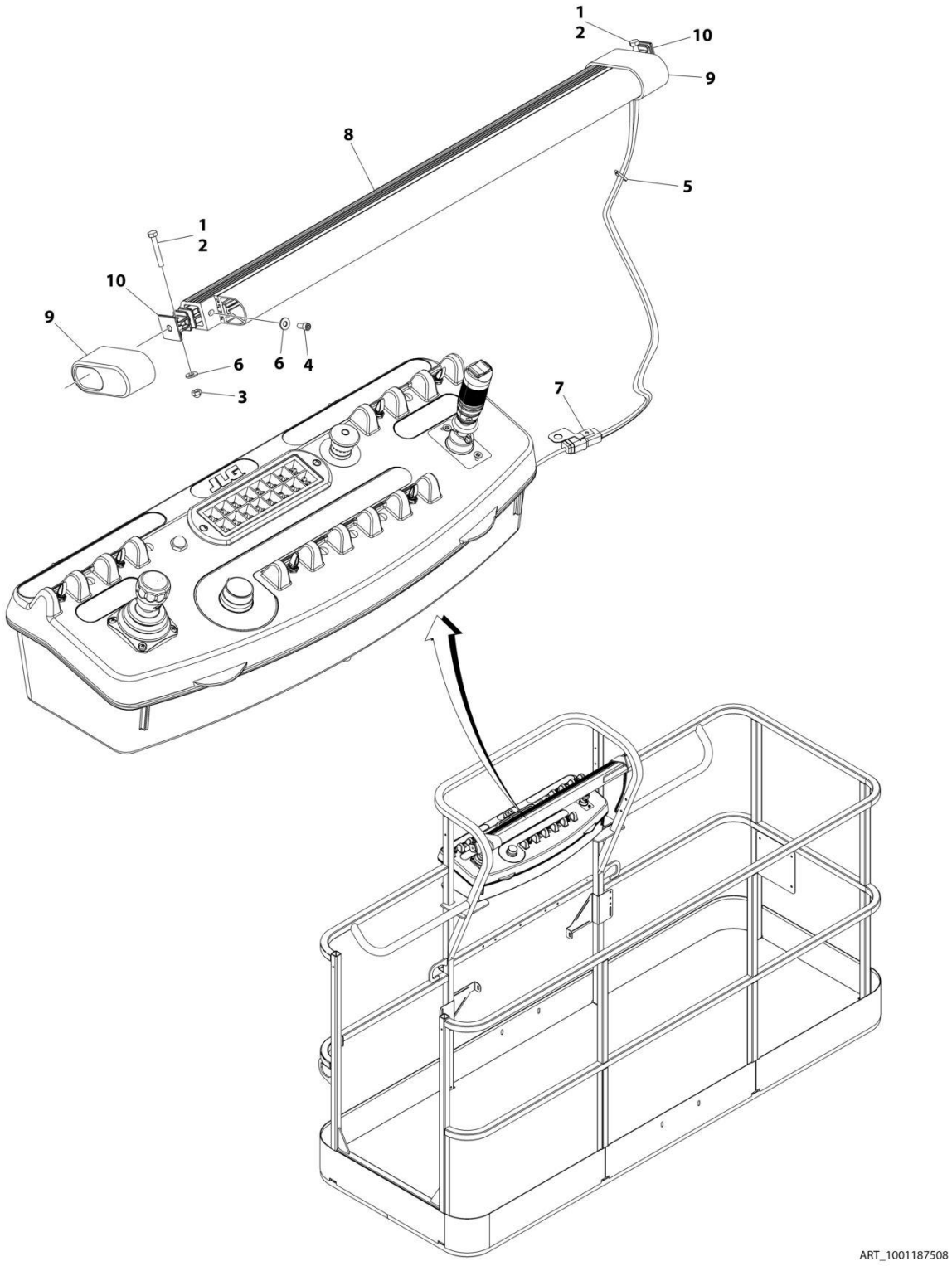

FIGURE 4-11. SKYGUARD SYSTEM INSTALLATION

ITEM	PART NUMBER	QTY	DESCRIPTION	REV
	1001187508	Ref	**SKYGUARD SYSTEM INSTALLATION (SN 0300200773 through 0300203770)**	A
		Ref	**Note: For machines with SkyGuard SN 0300096000 through 0300200772, See SPECIAL OPTIONS SECTION.**	
1	0100011	AR	Compound, Locking	
2	0641414	2	Bolt, 1/4-20 x 1-3/4	
3	3300430	2	Nut, Acorn 1/4-20	
4	3931424	2	Capscrew, 1/4-20 x 1-1/2	
5	4240033	1	Tie-Strap	
6	4711400	6	Washer, 1/4	
7	1001120328	1	Mount	
8	1001137673	1	Switch, SkyGuard Assembly	
9	1001186517	2	Cover, Platform Sensor	
10	1001188889	2	Support, Block	

FIGURE 4-12. CROSS RAIL INSTALLATION

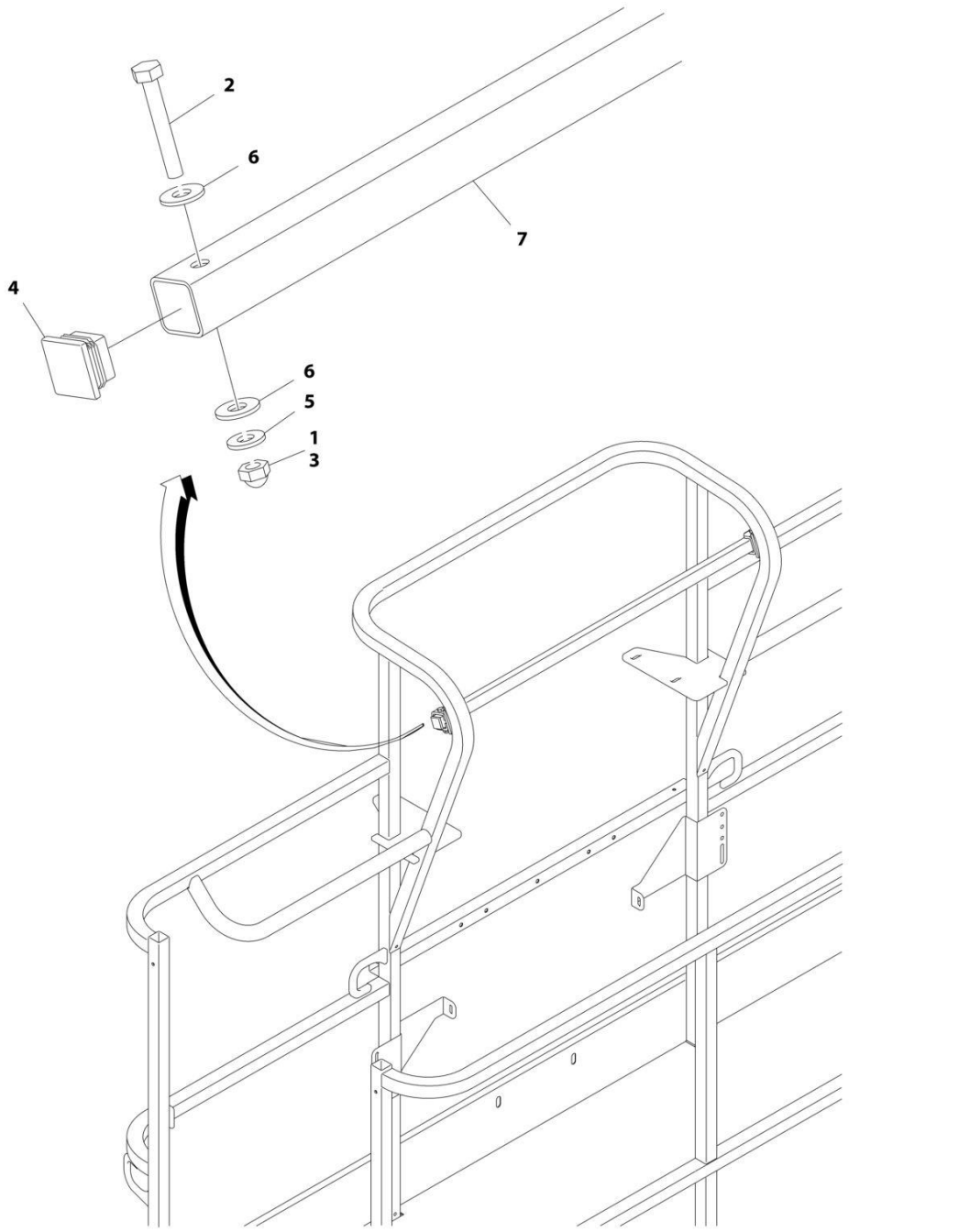

FIGURE 4-12. CROSS RAIL INSTALLATION

ITEM	PART NUMBER	QTY	DESCRIPTION	REV
	1001182138	Ref	**CROSS RAIL INSTALLATION**	A
1	0100071	AR	Compound, Locking	
2	0641414	2	Bolt 1/4 x 1-3/4	
3	3300430	2	Nut 1/4	
4	3520182	2	Plug	
5	4711400	2	Washer 1/4	
6	4751400	4	Washer 1/4	
7	1001191708	1	Bar	

FIGURE 4-13. SKYGLAZIER INSTALLATION

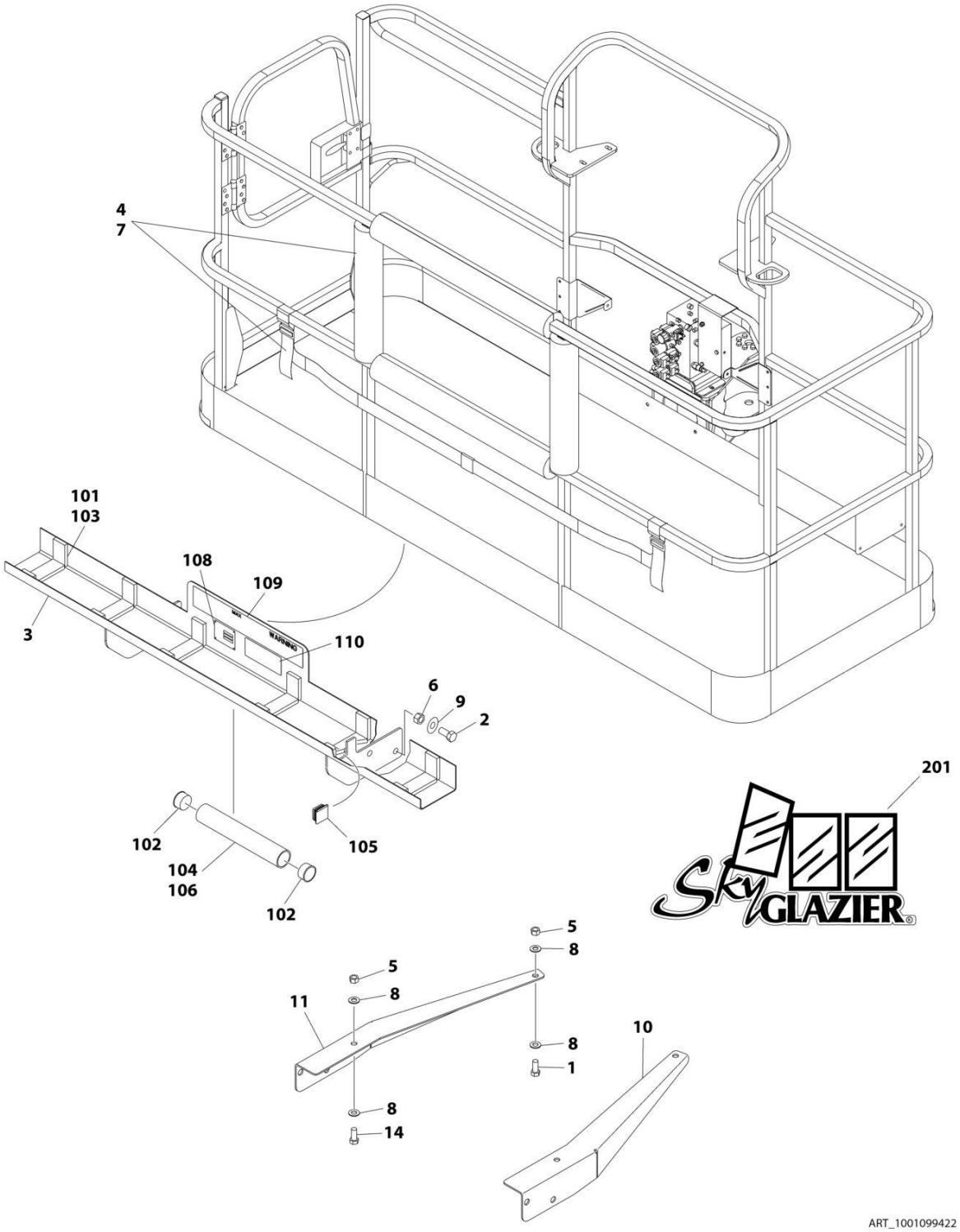

FIGURE 4-13. SKYGLAZIER INSTALLATION

ITEM	PART NUMBER	QTY	DESCRIPTION	REV
		Ref	**SKYGLAZIER INSTALLATION**	
	1001101422	Ref	**ANSI and CSA Specs (400S & 460SJ)**	C
	1001102647	Ref	**Australian Specs (With LSS) (460SJ Only)**	C
	1001099422	Ref	**Brazil (Portuguese Language) Specs (400S Only)**	C
	1001099421	Ref	**Latin American (Spanish Language) Specs (400S Only)**	C
	1001099436	Ref	**CE French Specs (With LSS) (400S Only)**	C
	1001099437	Ref	**CE German Specs (With LSS) (400S Only)**	C
	1001099439	Ref	**CE Italian Specs (With LSS) (400S Only)**	C
	1001099422	Ref	**CE Portugal (Portuguese Language) Specs (With LSS) (400S Only)**	C
	1001099421	Ref	**CE Spain (Spanish Language) Specs (With LSS) (400S Only)**	C
	1001099376	Ref	**CE UK (English Language) Specs (With LSS) (400S Only)**	B
1	0642012	1	Bolt 5/8 x 1-1/2	
1	0642026	1	Bolt 5/8 x 3-1/4	
2	0642212	1	Bolt 3/4 x 1-1/2	
3		Ref	Glazier Tray Assembly (See Items 101-110 for Breakdown)	
3	1001101421	1	ANSI, Australian, CE, UK and CSA Specs	
3	0272951	1	Brazil (Portuguese Language) Spec	
3	0272948	1	Latin American (Spanish Language) Spec	
3	0272949	1	CE French Spec	
3	0272950	1	CE German Spec	
3	0272952	1	CE Italian Spec	
3	0272951	1	CE Portugal (Portuguese Language) Spec	
3	0272948	1	CE Spain (Spanish Language) Spec	
4	2902212	1	Bumpers and Strap Kit	
4	0940102	1	Bumper Only	
4	4240149	1	Strap Only	
5	3312005	4	Nut 5/8	
5	1001149924	AR	Nut, Plastic 5/8	
6	3312205	4	Nut 3/4	
7	4420014	AR	Tape	
8	4712000	6	Washer 5/8	
9	4712200	8	Washer 3/4	
10	1001099366	1	Support	
11	1001099367	1	Support	
14	8310129	2	Bolt 5/8 x 2-1/2	
14	0642026	2	Bolt 5/8 x 3-1/4	
14	8310230	2	Bolt 5/8 x 4	
		Ref	**GLAZIER TRAY ASSEMBLY**	
	1001101421	Ref	**ANSI, Australian, CE, UK and CSA Specs**	E
	0272951	Ref	**Brazil (Portuguese Language) Spec**	E
	0272948	Ref	**Latin American (Spanish Language) Spec**	E
	0272949	Ref	**CE French Spec**	D
	0272950	Ref	**CE German Spec**	D
	0272952	Ref	**CE Italian Spec**	D
	0272951	Ref	**CE Portugal (Portuguese Language) Spec**	E
	0272948	Ref	**CE Spain (Spanish Language) Spec**	E
101	0100081	AR	Adhesive	
102	1120555	2	Cap, Tube	
103	3340956	1	Pad Kit	

SECTION 4 - PLATFORM

ITEM	PART NUMBER	QTY	DESCRIPTION	REV
104	3460334	1	Tube	
105	3520071	2	Plug	
106	4420066	AR	Tape, Double Sided	
108	See Note	NSS	Nameplate - Serial Number (Note: Not Available for Purchase)	
109	1001163131	1	Decal - Glazier Capacity (English Language)	
109	1001163293	1	Decal - Glazier Capacity (French Language)	
109	1001163298	1	Decal - Glazier Capacity (German Language)	
109	1001163287	1	Decal - Glazier Capacity (Italian Language)	
109	1001163297	2	Decal - Glazier Capacity (Portuguese Language)	
109	1001163296	2	Decal - Glazier Capacity (Spanish Language)	
110	1701509	2	Decal - Manual	
	0272418	Ref	**SKYGLAZIER DECAL INSTALLATION**	4
201	1705358	2	Decal - SkyGlazier	

FIGURE 4-14. SKYWELDER/SKYCUTTER COMBO INSTALLATION (60HZ)

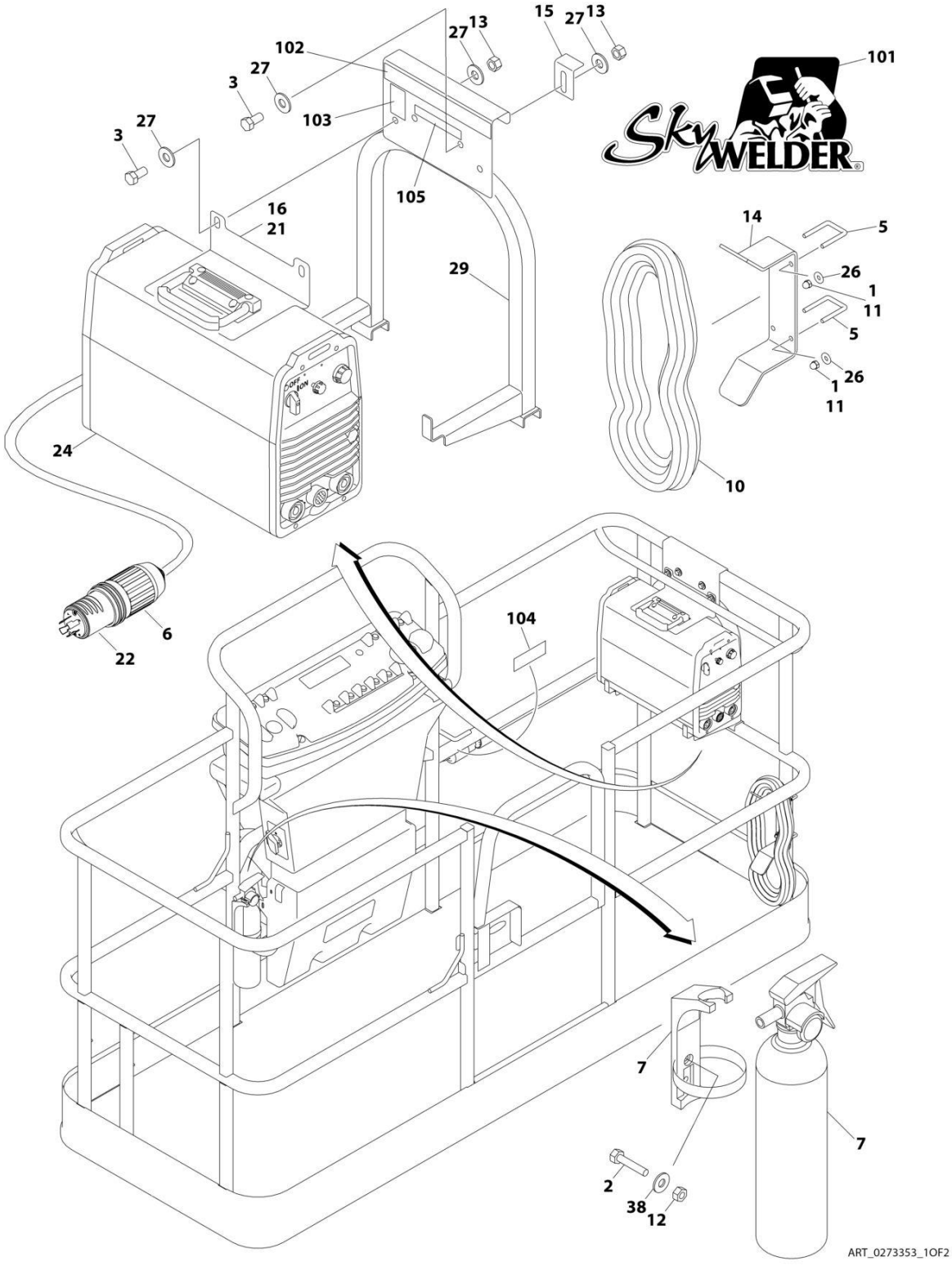

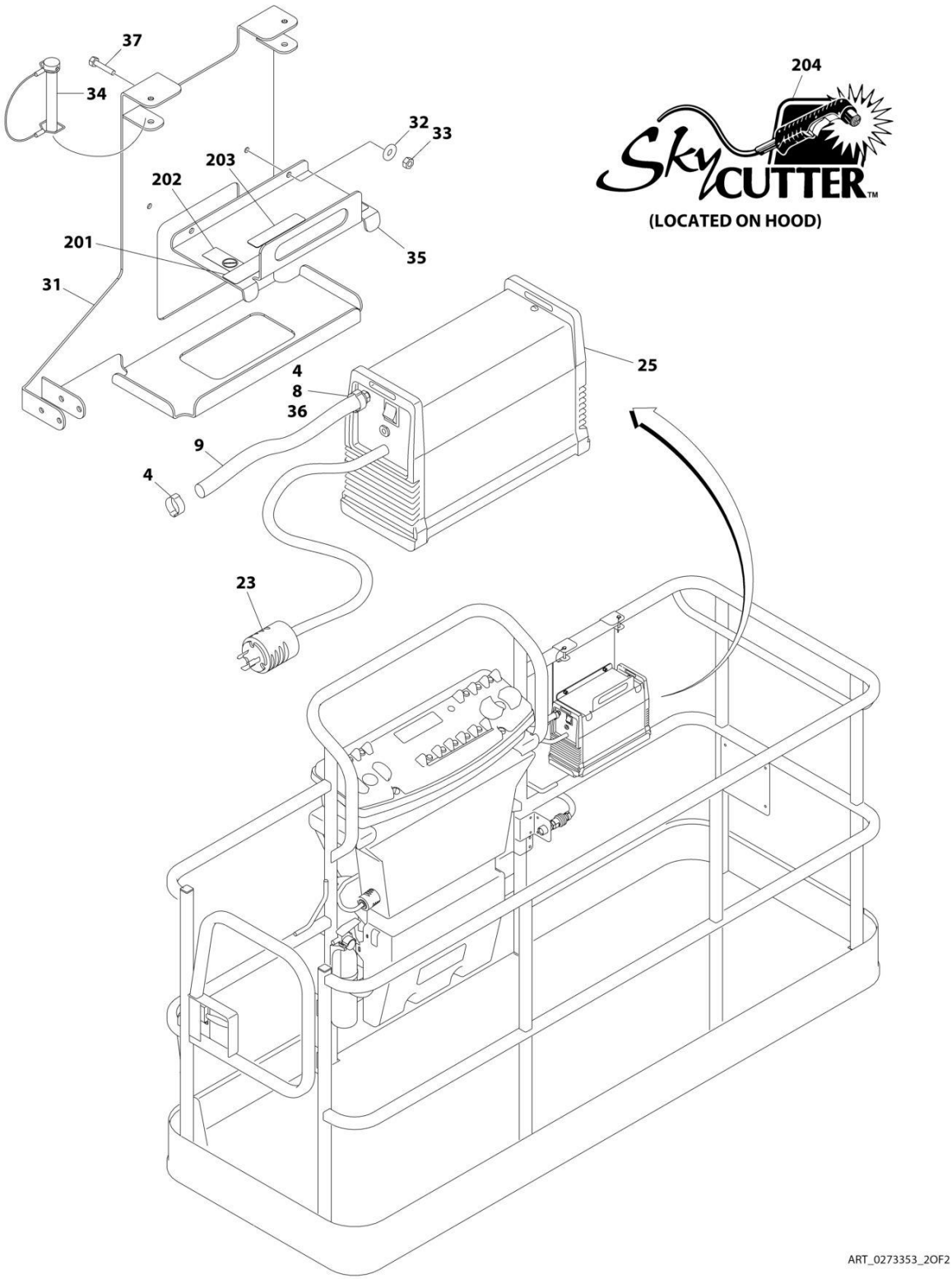
37
34
32
33
203
202
201
35
31
204
SkyCUTTER™
(LOCATED ON HOOD)
25
4
8
36
9
4
23
ART_0273353_2OF2

FIGURE 4-14. SKYWELDER/SKYCUTTER COMBO INSTALLATION (60HZ)

ITEM	PART NUMBER	QTY	DESCRIPTION	REV
	0273353	Ref	**SKYWELDER/SKYCUTTER COMBO INSTALLATION (60HZ)**	G
		Ref	**Note: ANSI Export Specs Only.**	
1	0100011	AR	Compound, Locking	
2	0630518	2	Screw #10 x 3/4	
3	0641606	4	Bolt 3/8 x 3/4	
4	1320177	2	Clamp	
5	1320302	2	Clamp	
6	1671093	1	Cover, Plug	
7	2030010	1	Extinguisher, Fire	
8	2180832	1	Fitting, Barbed/NPT	
9	2720160	4.5 ft /1.37m	Hose	
10	2902217	1	Weld Leads Kit	
11	3300151	4	Nut 1/4	
12	3311005	2	Nut #10	
13	3311605	4	Nut 3/8	
14	3573400	1	Bracket	
15	3577121	2	Angle	
16	3573642	1	Plate	
20	4240099	AR	Tie-Strap (Not Shown)	
21	4420037	2.36 ft /0.71m	Tape	
22	4460962	1	Plug, Twist Lock	
23	4460971	1	Plug, Twist Lock	
24	4530028	1	Welder Assembly (See WELDER ASSEMBLY for Breakdown)	
25	1001098012	1	Plasma Cutter Assembly (See PLASMA CUTTER ASSEMBLY for Breakdown)	
26	4751400	4	Washer 1/4	
27	4751600	8	Washer 3/8	
29	4846627	1	Support	
31	1001145405	1	Bracket	
32	4811700	2	Washer M6	
33	3290605	2	Nut M6	
34	3421453	3	Pin	
35	3576799	1	Plate, Hold-Down	
36	0100020	1	Sealant	
37	4010608	2	Screw M6 x 16	
38	4751000	2	Washer #10	
	0272448	Ref	**SKYWELDER DECAL INSTALLATION**	A
101	1705355	2	Decal - SkyWelder	
102	1702868	1	Decal - No Hands	
103	1705305	1	Decal - Weld Leads	
104	1705375	1	Decal - 240V - 3 Phase - 60Hz	
105	1705466	1	Decal - Weight	
	0272599	Ref	**SKYCUTTER DECAL INSTALLATION**	A
201	1702868	1	Decal - No Hands	
202	1705305	1	Decal - Weld Leads	
203	1705466	1	Decal - Weight	
204	1705490	2	Decal - SkyCutter	

FIGURE 4-15. SKYWELDER INSTALLATION (50HZ)

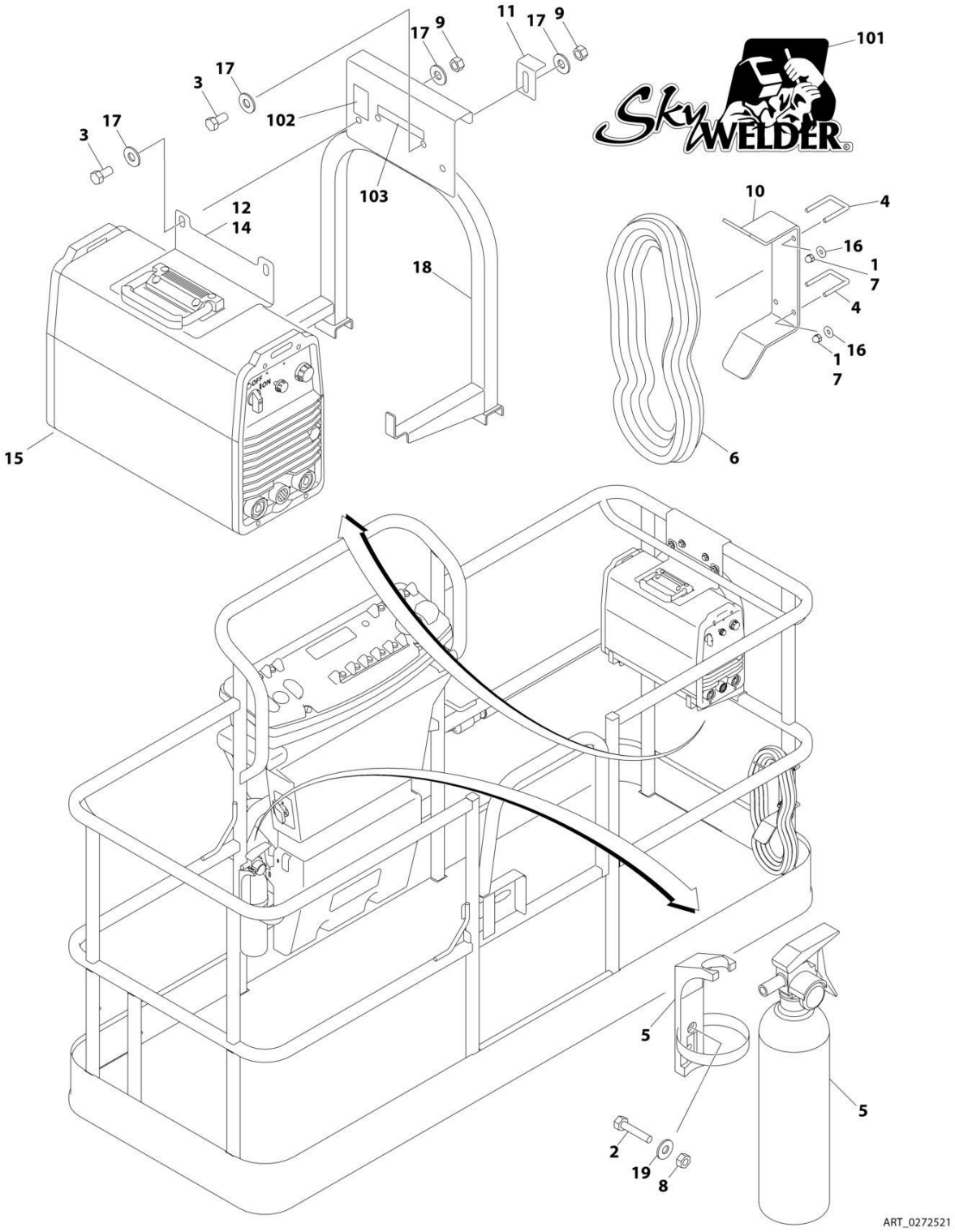

FIGURE 4-15. SKYWELDER INSTALLATION (50HZ)

ITEM	PART NUMBER	QTY	DESCRIPTION	REV
	0272521	Ref	**SKYWELDER INSTALLATION (50HZ)**	F
		Ref	**Note: Australian, CE and Japanese Specs Only.**	
1	0100011	AR	Compound, Locking	
2	0630518	2	Screw #10 x 3/4	
3	0641606	4	Bolt 3/8 x 3/4	
4	1320302	2	U-Clamp	
5	2030010	1	Extinguisher, Fire	
6	2902217	1	Weld Leads Kit	
7	3300151	4	Nut 1/4	
8	3311005	2	Nut #10	
9	3311605	4	Nut 3/8	
10	3573400	1	Bracket	
11	3577121	2	Angle	
12	3573642	1	Plate	
13	4240099	AR	Tie-Strap (Not Shown)	
14	4420037	AR	Tape	
15	4530028	1	Welder Assembly (See WELDER ASSEMBLY for Breakdown)	
16	4751400	4	Washer 1/4	
17	4751600	8	Washer 3/8	
18	4846627	1	Support	
19	4751000	2	Washer #10	
	0272588	Ref	**SKYWELDER DECAL INSTALLATION**	A
101	1705355	2	Decal - SkyWelder	
102	1705305	1	Decal - Weld Lead	
103	1705466	1	Decal - Weight	

FIGURE 4-16. SKYWELDER INSTALLATION (60HZ)

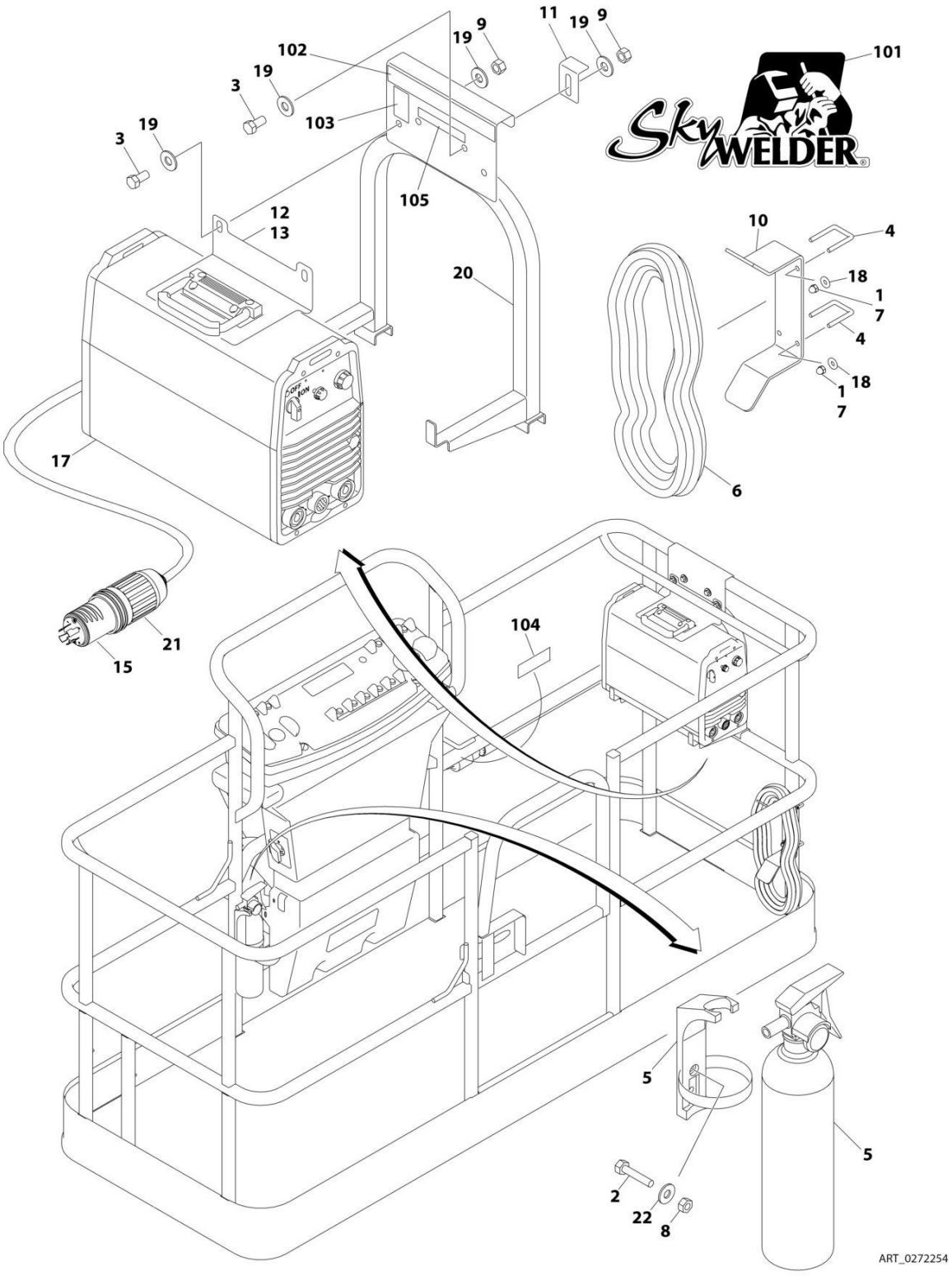

FIGURE 4-16. SKYWELDER INSTALLATION (60HZ)

ITEM	PART NUMBER	QTY	DESCRIPTION	REV
	0272254	Ref	**SKYWELDER INSTALLATION (60HZ)**	I
		Ref	**Note: ANSI, ANSI Export and CSA Specs Only.**	
1	0100011	AR	Compound, Locking	
2	0630518	2	Screw #10 x 3/4	
3	0641606	4	Bolt 3/8 x 3/4	
4	1320302	2	U-Clamp	
5	2030010	1	Extinguisher, Fire	
6	2902217	1	Weld Leads Kit	
7	3300151	4	Nut 1/4	
8	3311005	2	Nut #10	
9	3311605	4	Nut 3/8	
10	3573400	1	Bracket	
11	3577121	2	Angle	
12	3573642	1	Plate	
13	4420037	AR	Tape	
14	4240099	AR	Tie-Strap (Not Shown)	
15	4460962	1	Plug, Male Twistlock	
17	4530028	1	Welder Assembly (See WELDER ASSEMBLY for Breakdown)	
18	4751400	4	Washer 1/4	
19	4751600	8	Washer 3/8	
20	4846627	1	Support	
21	1671093	1	Cover, Plug	
22	4751000	2	Washer #10	
	0272448	Ref	**SKYWELDER DECAL INSTALLATION**	A
101	1705355	2	Decal - SkyWelder	
102	1702868	1	Decal - No Hands	
103	1705305	1	Decal - Weld Lead	
104	1705375	1	Decal - 240V - 3 Phase - 60Hz	
105	1705466	1	Decal - Weight	

FIGURE 4-17. SKYWELDER PREP PACKAGE (60HZ)

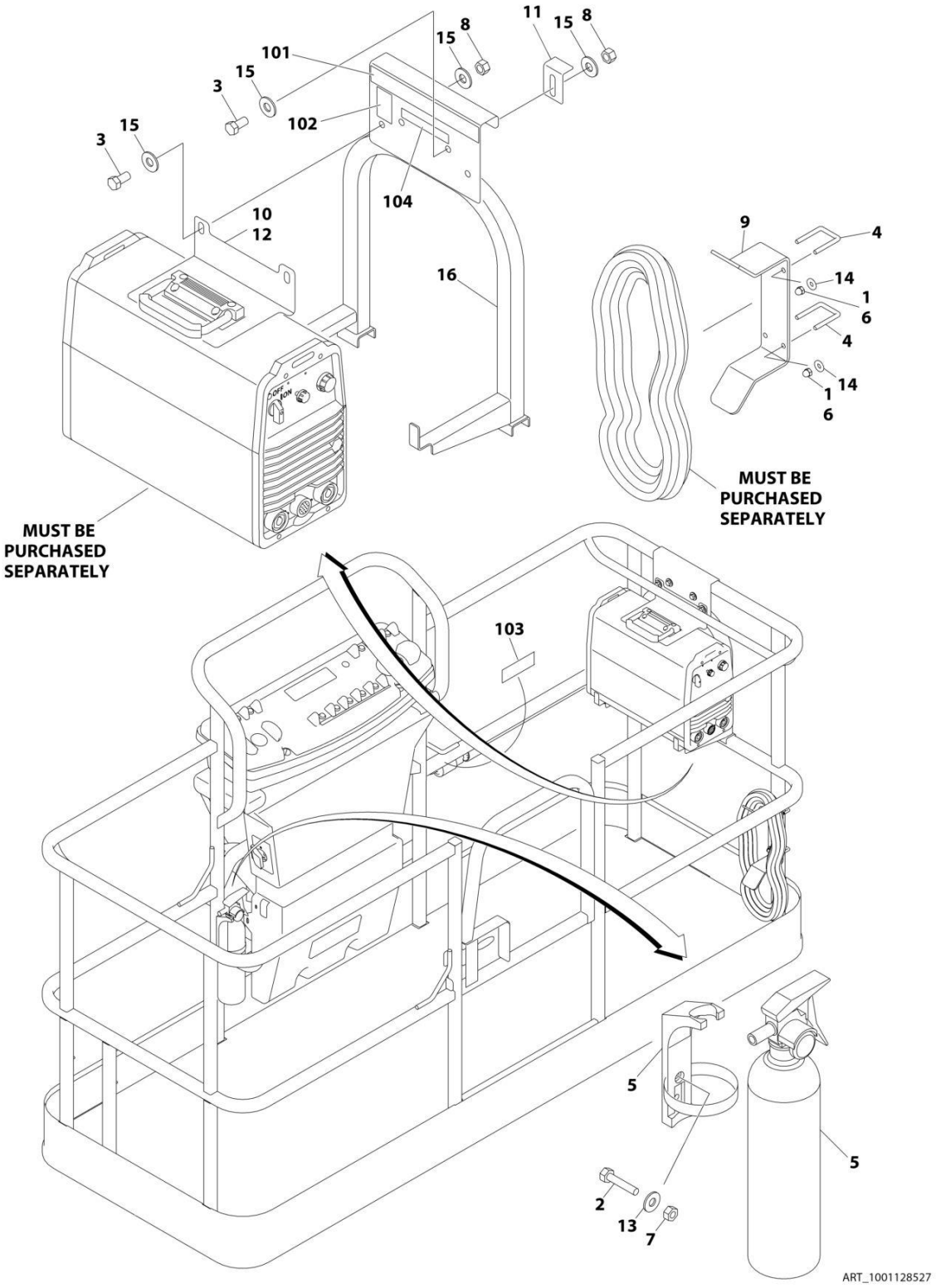

FIGURE 4-17. SKYWELDER PREP PACKAGE (60HZ)

ITEM	PART NUMBER	QTY	DESCRIPTION	REV
	1001128527	Ref	**SKYWELDER PREP PACKAGE (60HZ)**	B
		Ref	**Note: ANSI, ANSI Export and CSA Specs Only.**	
1	0100011	AR	Compound, Locking	
2	0630518	2	Screw #10 x 3/4	
3	0641606	4	Bolt 3/8 x 3/4	
4	1320302	2	U-Clamp	
5	2030010	1	Extinguisher, Fire	
6	3300151	4	Nut 1/4	
7	3311005	2	Nut #10	
8	3311605	4	Nut 3/8	
9	3573400	1	Bracket	
10	3573642	1	Plate	
11	3577121	2	Angle	
12	4420037	AR	Tape	
13	4751000	2	Washer #10	
14	4751400	4	Washer 1/4	
15	4751600	8	Washer 3/8	
16	4846627	1	Support	
	1001128556	Ref	**SKYWELDER DECAL INSTALLATION**	A
101	1702868	1	Decal - No Hands	
102	1705305	1	Decal - Weld Lead	
103	1705375	1	Decal - 240V - 3 Phase - 60Hz	
104	1705466	1	Decal - Weight	

FIGURE 4-18. WELDER ASSEMBLY

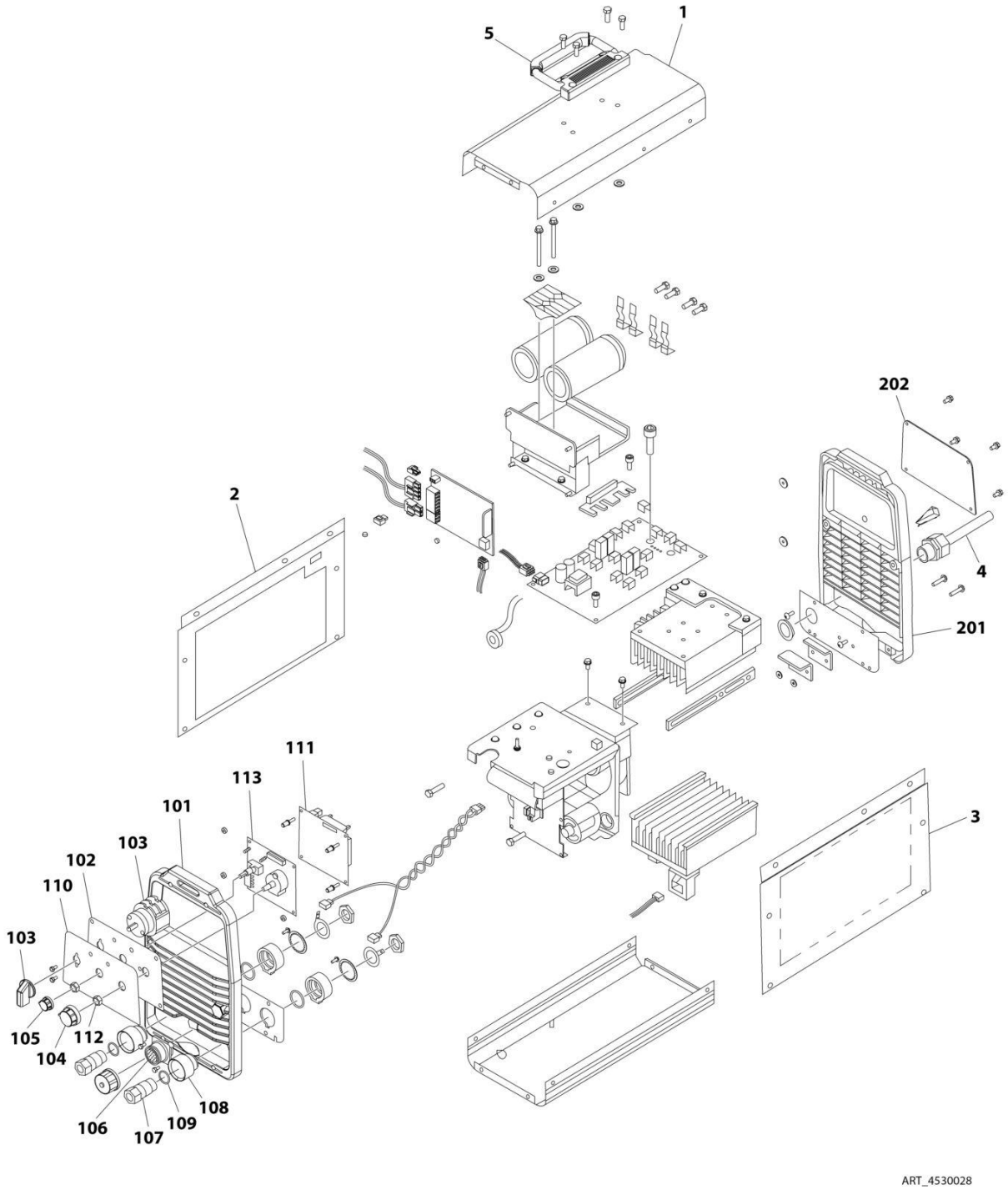

FIGURE 4-18. WELDER ASSEMBLY

ITEM	PART NUMBER	QTY	DESCRIPTION	REV
	4530028	Ref	**WELDER ASSEMBLY**	A
		Ref	**Note: For Other Components, contact your Miller Welder Dealer.**	
1	7027773	1	Cover, Top	
1	7027774	1	Decal - Static Precautionary Warning	
2	See Note	NSS	Panel, LH Side (Note: Part of Item 1. Purchase Item 1)	
3	See Note	NSS	Panel, RH Side (Note: Part of Item 1. Purchase Item 1)	
4	7024467	1	Cable, Power	
4	7027775	1	Decal - Electrical Shock Warning (Not Shown)	
5	7027776	1	Handle, Carrying	
101	7024462	1	Panel, Front	
102	7024463	1	Panel, Console	
103	7024469	1	Switch with Lead	
104	7024470	1	Knob	
105	7024471	1	Knob	
106	7024472	1	Receptacle with Leads and Plugs	
107	7024473	2	Receptacle, Twistlock Female	
108	7024474	2	Insulator	
109	7024475	2	O-Ring	
110	7027777	1	Nameplate	
111	7027779	1	Circuit Card Assembly (Process Control)	
112	7024478	2	Nut	
113	7027778	1	Circuit Card Assembly (Operator Interface)	
201	7024462	1	Panel, Rear	
202	7027780	1	Panel, Cover	

FIGURE 4-19. SKYCUTTER INSTALLATION

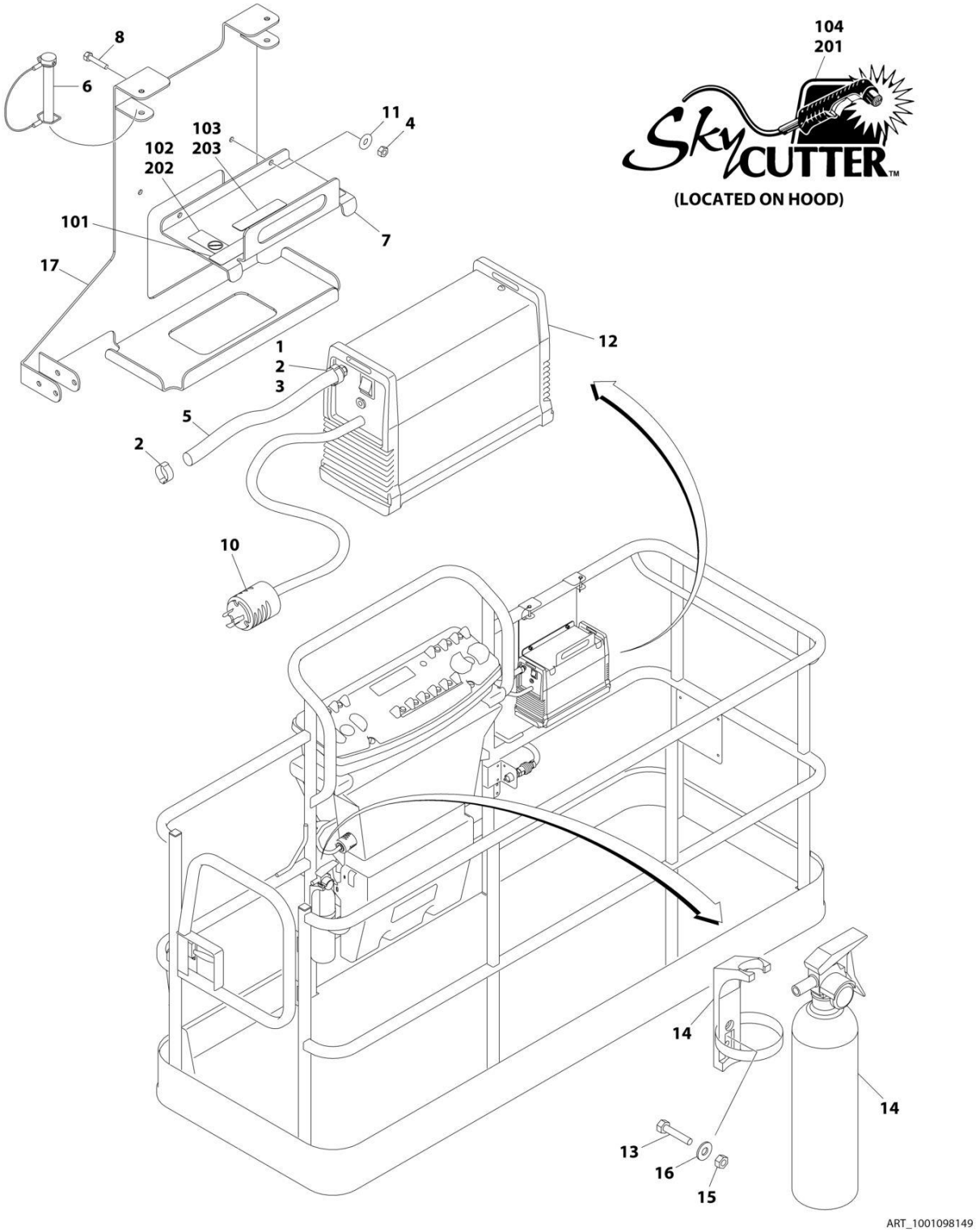

FIGURE 4-19. SKYCUTTER INSTALLATION

ITEM	PART NUMBER	QTY	DESCRIPTION	REV
	1001098149	Ref	**SKYCUTTER INSTALLATION**	D
		Ref	**Note: ANSI, ANSI Export, CSA and Japanese Specs Only.**	
		Ref	**Note: When replacing platform on machines with SkyCutter option, new bracket p/n 1001145405 must be purchased to accommodate SkyCutter components.**	
1	0100020	AR	Sealant	
2	1320177	2	Clamp, Hose	
3	2180832	1	Fitting, NPT/Barbed	
4	3290605	2	Nut M6	
5	2720160	3 ft/0.9m	Hose	
6	3421453	3	Pin	
7	3576799	1	Plate, Hold-Down	
8	4010608	2	Screw M6 x 16	
10	4460971	1	Plug, Twistlock	
11	4811700	2	Washer M6	
12	1001098012	1	Plasma Cutter Assembly (See PLASMA CUTTER ASSEMBLY for Breakdown)	
13	0630518	2	Screw #10 x 3/4	
14	2030010	1	Extinguisher, Fire	
15	3311005	2	Nut #10	
16	4751000	2	Washer #10	
17	1001145405	1	Support	
	0272599	Ref	**SKYCUTTER DECAL INSTALLATION (ANSI, ANSI EXPORT AND CSA SPECS)**	A
101	1702868	1	Decal - No Hands	
102	1705305	1	Decal - Weld Lead	
103	1705466	1	Decal - Weight	
104	1705490	2	Decal - SkyCutter	
	0272607	Ref	**SKYCUTTER DECAL INSTALLATION (JAPANESE SPECS)**	A
201	1705490	2	Decal - SkyCutter	
202	1705305	1	Decal - Weld Lead	
203	1705466	1	Decal - Weight	

FIGURE 4-20. PLASMA CUTTER ASSEMBLY

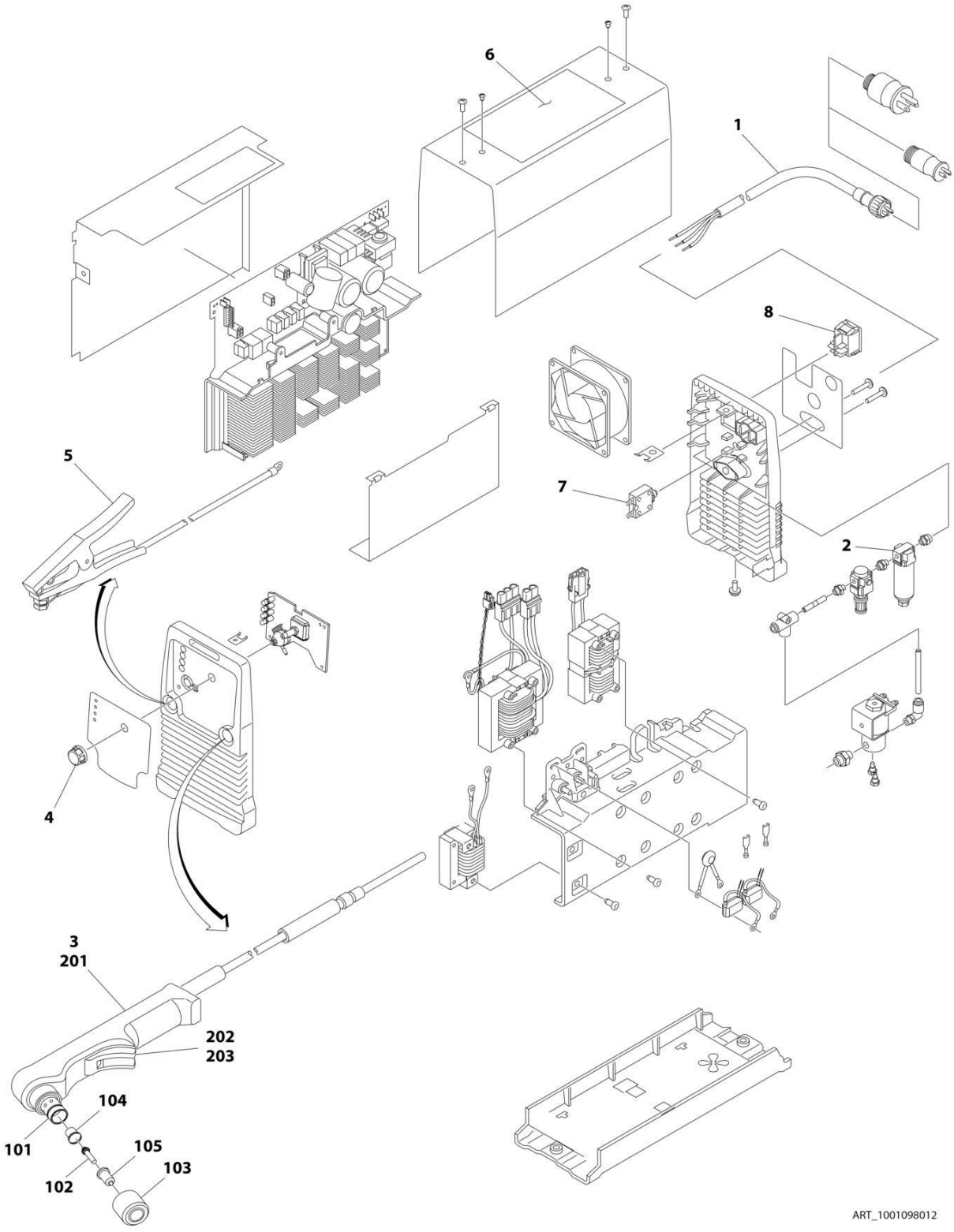

FIGURE 4-20. PLASMA CUTTER ASSEMBLY

ITEM	PART NUMBER	QTY	DESCRIPTION	REV
	1001098012	Ref	**PLASMA CUTTER ASSEMBLY**	A
		Ref	**Note: For Other Components, contact your Miller Welder Dealer.**	
1	70001424	1	Cable, Power	
1	70001425	1	Decal - Voltage Warning	
2	70001427	1	Filter, Regulator	
3	70001428	1	Torch Assembly (See Items 101-203 for Breakdown)	
4	7024471	1	Knob	
5	70001429	1	Clamp with Cable	
6	70001430	1	Decal - Caution	
7	70001431	1	Breaker, Circuit	
8	70001432	1	Switch, Rocker	
	70001428	Ref	**TORCH ASSEMBLY**	
101	7024530	1	O-Ring	
102	7024531	1	Electrode	
103	7024532	1	Cup, Retaining	
104	7024533	1	Swirl Ring	
105	7024534	1	Tip	
201	7024535	1	Handle, Torch	
202	7024536	1	Switch	
203	7024537	1	Trigger	

FIGURE 4-21. PIPE RACKS INSTALLATION

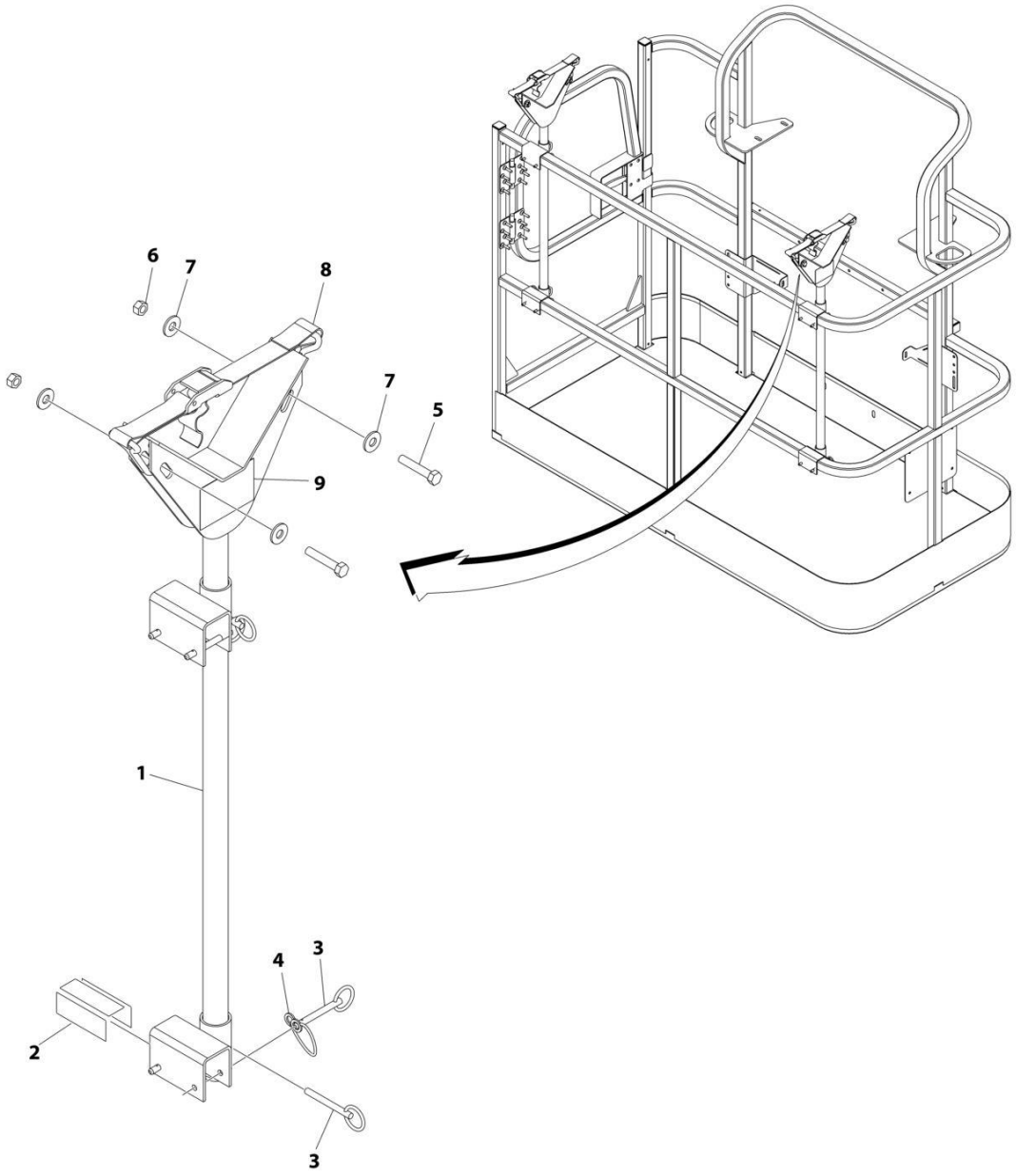

FIGURE 4-21. PIPE RACKS INSTALLATION

ITEM	PART NUMBER	QTY	DESCRIPTION	REV
	0257728	Ref	**PIPE RACK INSTALLATION (ALL SPECS EXCEPT AUSTRALIAN SPECS)**	2/C
	0274661	Ref	**PIPE RACK INSTALLATION (AUSTRALIAN SPECS)**	1/A
1	4845582	2	Rack, Pipe	
2	4420062	AR	Tape	
3	3422661	10	Pin	
4	1060379	4	Lanyard	
5	0641514	4	Bolt 5/16 x 1-3/4	
6	3311505	4	Nut 5/16	
7	4751500	8	Washer 5/16	
8	0480100	2	Tie-Down	
9	1703683	2	Decal - Capacity (All Specs except Australian Specs)	
9	1706510	2	Decal - Capacity (Australian Specs)	

SECTION 5 - CYLINDER

FIGURE 5-1. AXLE LOCKOUT CYLINDER ASSEMBLY (SN 0300096000 through 0300115395)

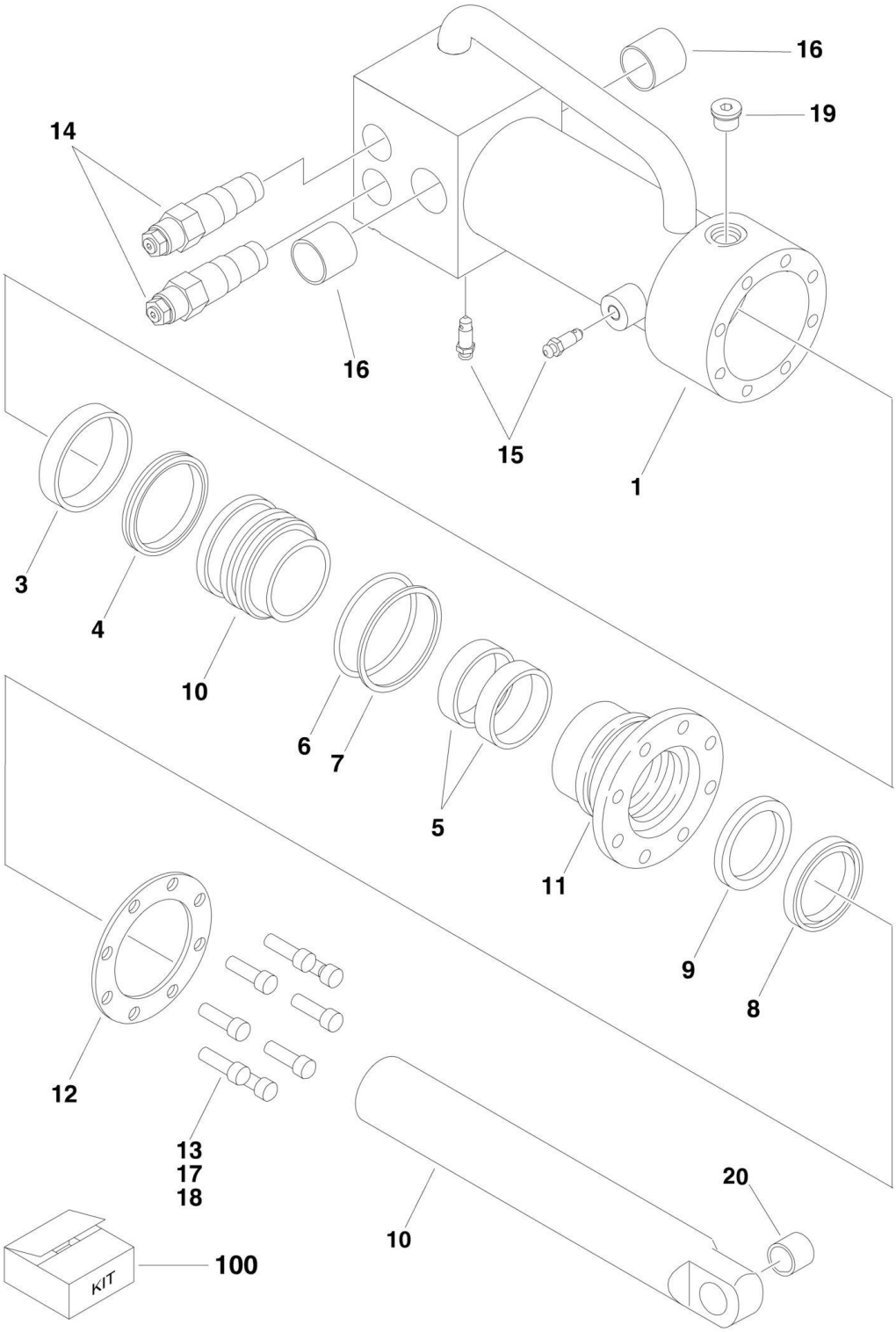

FIGURE 5-1. AXLE LOCKOUT CYLINDER ASSEMBLY (SN 0300096000 through 0300115395)

ITEM	PART NUMBER	QTY	DESCRIPTION	REV
	1684139	Ref	**AXLE LOCKOUT CYLINDER ASSEMBLY**	D
1	1683572	1	Barrel Weldment	
3	See Note	NSS	Ring, Wear (Note: Use Item 100)	
4	See Note	NSS	T-Seal (Note: Use Item 100)	
5	See Note	NSS	Ring, Wear (Note: Use Item 100)	
6	See Note	NSS	O-Ring (Note: Use Item 100)	
7	See Note	NSS	Ring, Back-up (Note: Use Item 100)	
8	See Note	NSS	Wiper (Note: Use Item 100)	
9	See Note	NSS	Seal (Note: Use Item 100)	
10	1684138	1	Rod Weldment	
11	1683076	1	Cap	
12	3760367	1	Ring, Washer	
13	3931516	8	Bolt, Socket Head 5/16in-18NC x 2in	
14	4641162	2	Cartridge, Valve (Counterbalance)	
14	2900770	2	Seal Kit - 4641162 Valve (1 Per Assembly)	
15	4640858	2	Valve, Bleeder	
16	0962474	2	Bushing	
17	0100011	AR	Locking, Compound	
18	0100038	AR	Primer, Locking	
19	2220885	1	Plug, O-Ring	
20	0962140	1	Bushing	
100	2901548	1	Seal Kit (Includes Items 3-9)	

FIGURE 5-2. AXLE LOCKOUT CYLINDER ASSEMBLY (SN 0300115396 through 0300203770)

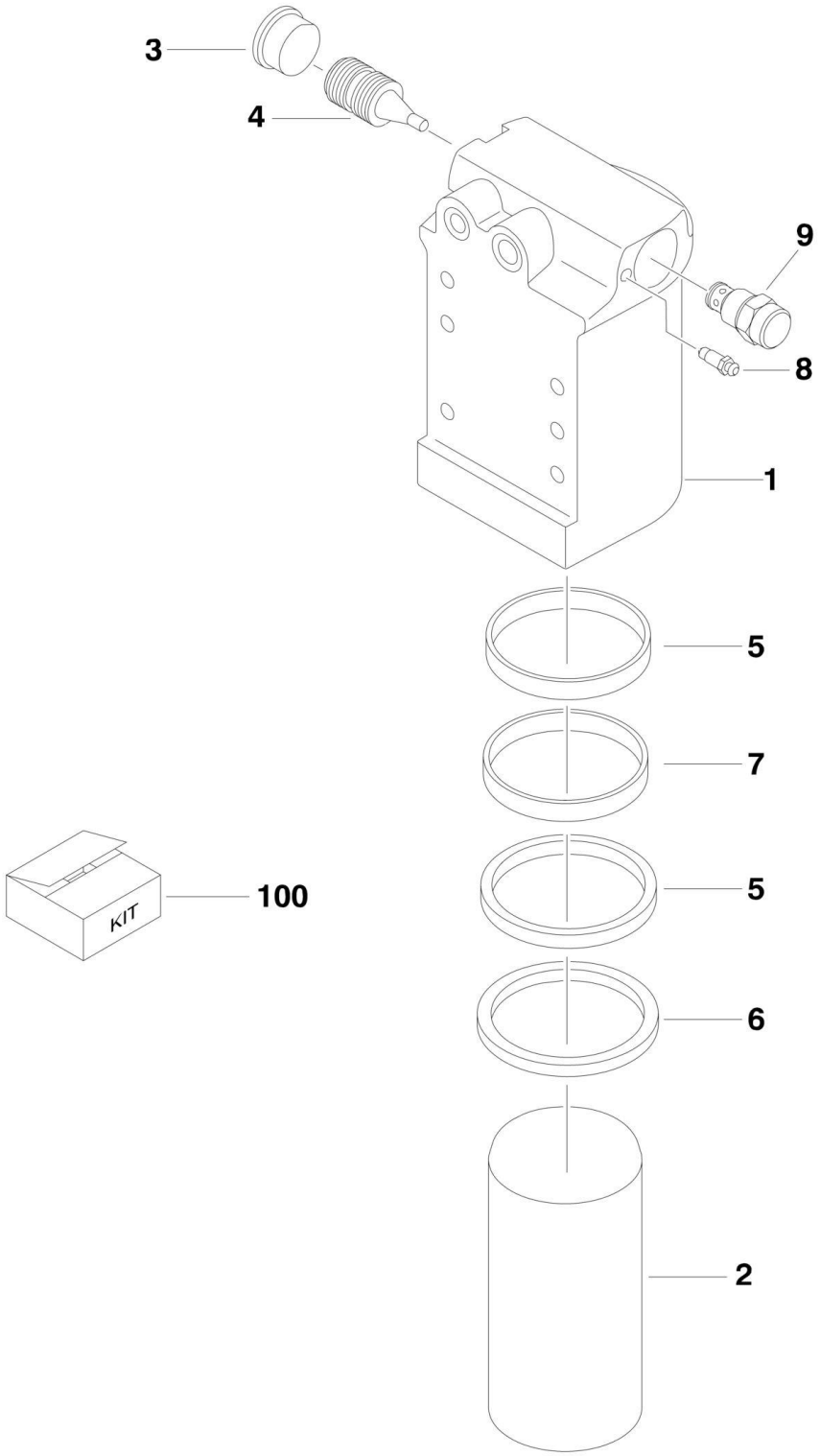

FIGURE 5-2. AXLE LOCKOUT CYLINDER ASSEMBLY (SN 0300115396 through 0300203770)

ITEM	PART NUMBER	QTY	DESCRIPTION	REV
	1684465	Ref	**AXLE LOCKOUT CYLINDER ASSEMBLY**	I
1	0370026	1	Barrel	
2	1684290	1	Rod	
3	2220890	1	Plug	
4	3480288	1	Piston, Pilot	
5	See Note	NSS	Ring, Wear (Note: Use Item 100)	
6	See Note	NSS	Wiper (Note: Use Item 100)	
7	See Note	NSS	Seal, Rod (Note: Use Item 100)	
8	4640858	1	Bleeder	
9	4641390	1	Cartridge, Valve	
9	7017496	1	Seal Kit - 4641390 Cartridge	
100	2902266	1	Seal Kit (Includes Items 5-7)	

FIGURE 5-3. LEVEL (PLATFORM SLAVE) CYLINDER ASSEMBLY

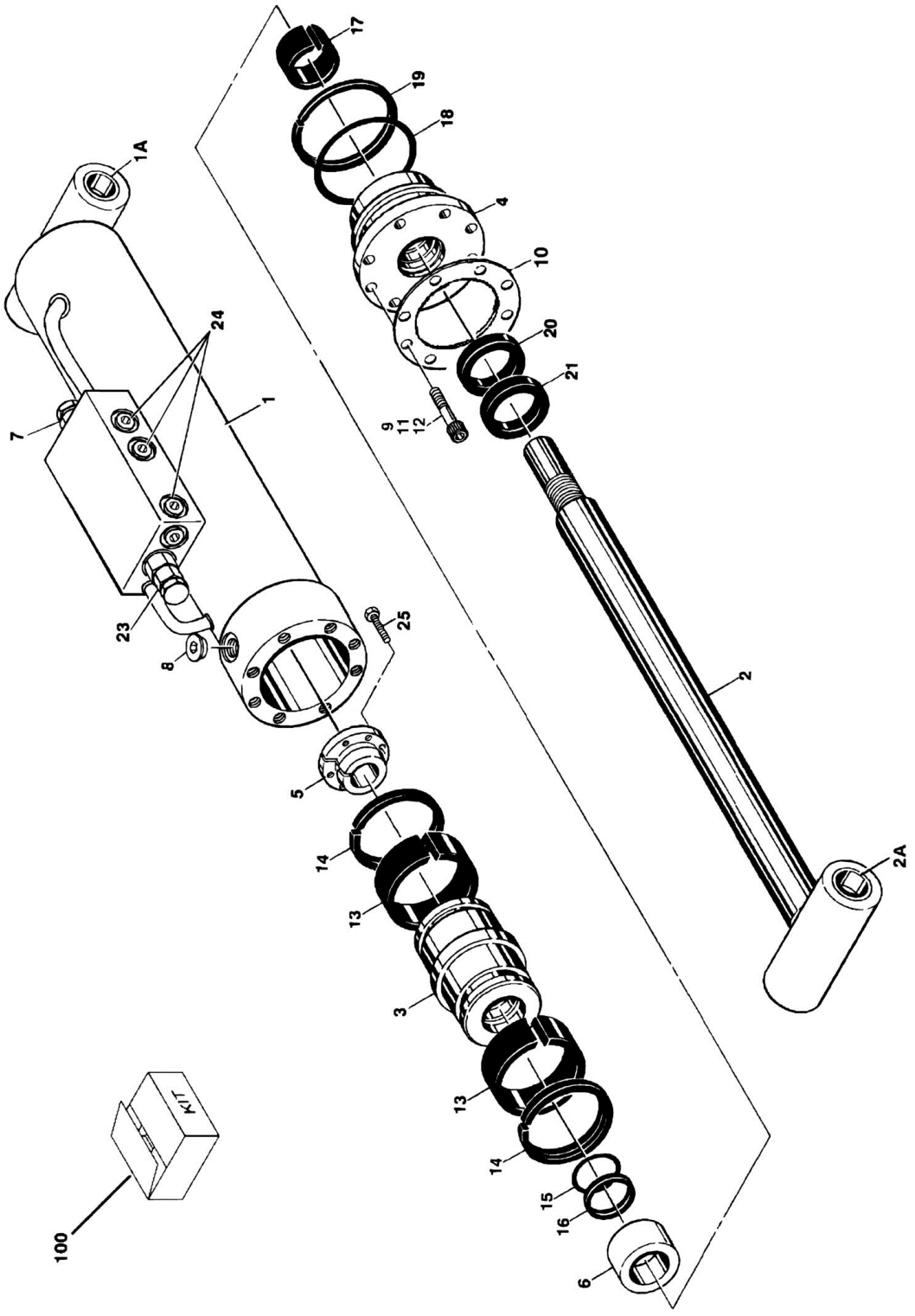

FIGURE 5-3. LEVEL (PLATFORM SLAVE) CYLINDER ASSEMBLY

ITEM	PART NUMBER	QTY	DESCRIPTION	REV
		Ref	**Note: Original Equipment Cylinder may have been replaced with Service Replacement Cylinder. Identify p/n stamped on cylinder before ordering parts.**	
		Ref	**PLATFORM LEVEL CYLINDER ASSEMBLIES**	
	1683778	Ref	**Platform Level Cylinder Assembly 400S (Original Equipment for) (SN 0300096000 through 0300165145)**	D
	1684013	Ref	**Platform Level Cylinder Assembly 460SJ Original Equipment for (SN 0300096000 through 0300203770)**	C
1	1683952	1	Barrel Weldment (Note: Does not Include Item 1A - Purchase Separately)	
1A	0961951	2	Bushing	
2		Ref	Rod Weldment Options: (Note: Does not Include Item 2A - Purchase Separately)	
2	1683861	1	Rod Weldment 400S	
2	1684012	1	Rod Weldment 460SJ	
2A	0961951	2	Bushing	
3	3480188	1	Piston	
4	1683055	1	Head	
5	0961894	1	Bushing, Tapered	
6	4566468	1	Spacer	
7	4640509	1	Cartridge, Valve	
7	2900792	1	Seal Kit - 4640509 Valve	
8	2220885	1	Plug, O-Ring	
9	3931620	8	Capscrew, Socket Head 3/8in-16NC x 1-1/4in	
10	3760369	1	Ring, Washer	
11	0100011	AR	Locking, Compound	
12	0100038	AR	Primer, Locking	
13	See Note	NSS	Seal (Note: Use Item 100)	
14	See Note	NSS	Ring, Lock (Note: Use Item 100)	
15	See Note	NSS	O-Ring (Note: Use Item 100)	
16	See Note	NSS	Ring, Back-up (Note: Use Item 100)	
17	See Note	NSS	Ring, Wear (Note: Use Item 100)	
18	See Note	NSS	O-Ring (Note: Use Item 100)	
19	See Note	NSS	Ring, Back-up (Note: Use Item 100)	
20	See Note	NSS	Seal, Rod (Note: Use Item 100)	
21	See Note	NSS	Wiper (Note: Use Item 100)	
23	4640932	1	Cartridge, Valve	
23	7011112	1	Seal Kit - 4640932 Valve	
24	2220883	8	Plug, O-Ring	
25	0630535	3	Screw, Socket Head 1/4in-20NC x 1-1/8in	
100	2901301	1	Seal Kit (Includes Items 13-21)	

FIGURE 5-4. LEVEL (PLATFORM SLAVE) CYLINDER ASSEMBLY - 400S

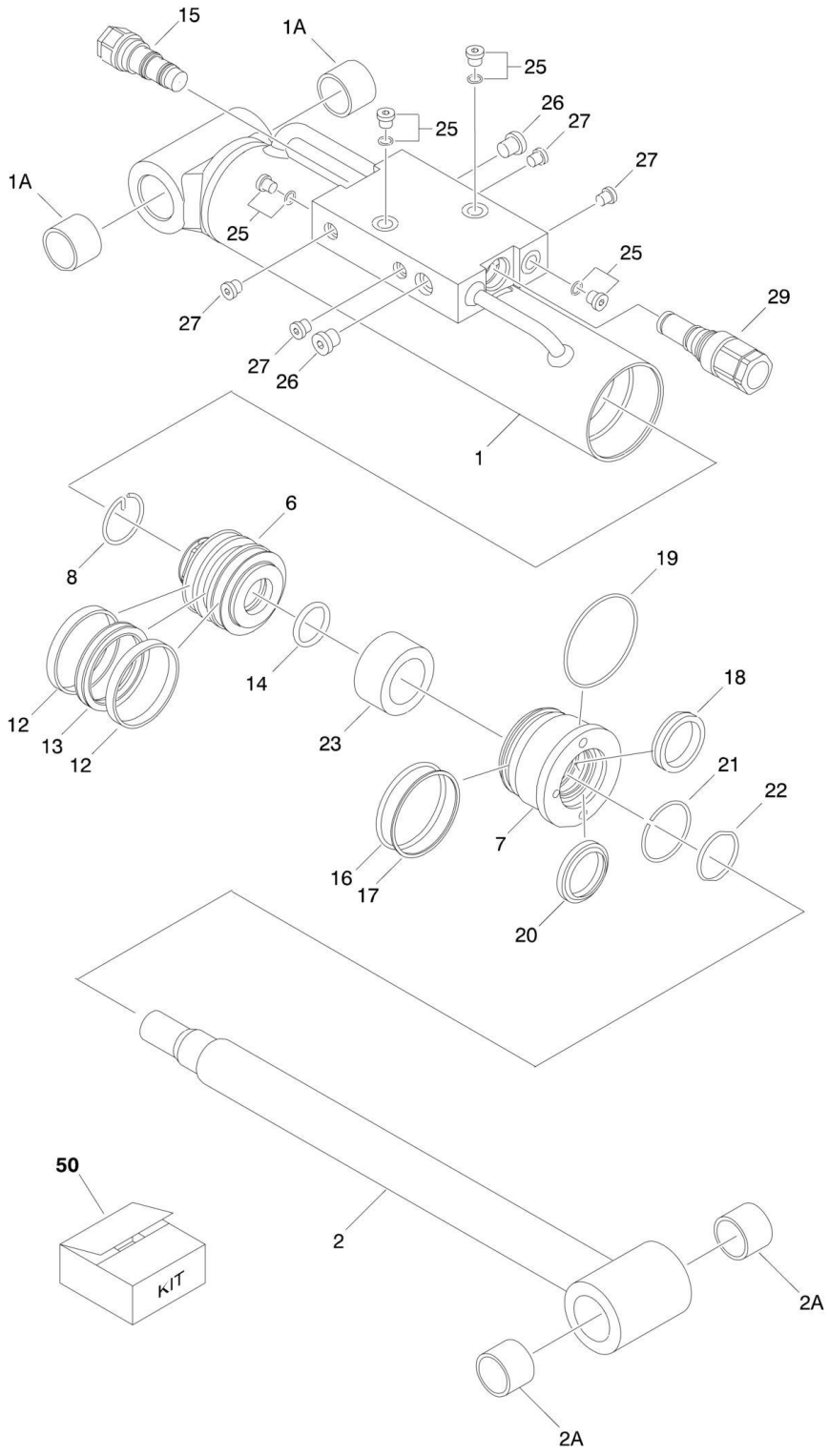

FIGURE 5-4. LEVEL (PLATFORM SLAVE) CYLINDER ASSEMBLY - 400S

ITEM	PART NUMBER	QTY	DESCRIPTION	REV
		Ref	**Note: Original Equipment Cylinder may have been replaced with Service Replacement Cylinder. Identify p/n stamped on cylinder before ordering parts.**	
		Ref	**PLATFORM LEVEL CYLINDER ASSEMBLY**	
	1001140586	Ref	**Platform Level Cylinder Assembly 400S (Service Replacement for Machines Prior to SN 0300165145 and Original Equipment for Machines SN 0300165145 through SN 0300203770)**	B
1	70004137	1	Barrel	
1A	0961951	2	Bushing	
2	70004138	1	Rod	
2A	0961951	2	Bushing	
6	70003848	1	Head	
7	70004136	1	Piston	
8	70002224	1	Retainer	
12	See Note	NSS	Ring, Wear (Note: Use Item 50)	
13	See Note	NSS	Seal (Note: Use Item 50)	
14	See Note	NSS	O-Ring (Note: Use Item 50)	
15	4640509	1	Cartridge, Counterbalance Valve	
15	2900792	1	Seal Kit - 4640509 Valve	
16	See Note	NSS	O-Ring (Note: Use Item 50)	
17	See Note	NSS	Ring, Back-up (Note: Use Item 50)	
18	See Note	NSS	Seal (Note: Use Item 50)	
19	See Note	NSS	O-Ring (Note: Use Item 50)	
20	See Note	NSS	Wiper (Note: Use Item 50)	
21	70003838	1	Ring, Retaining	
22	70003856	1	O-Ring	
23	70003839	1	Spacer	
25	See Note	2	Plug (Note: Not Available for Purchase)	
26	See Note	2	Plug (Note: Not Available for Purchase)	
27	See Note	4	Plug (Note: Not Available for Purchase)	
29	4640932	1	Cartridge, Counterbalance Valve	
29	7011112	1	Seal Kit - 4640932 Valve	
50	70004128	1	Seal Kit - 1001140596 Cylinder (Includes Items 12-14 & 16-20)	

FIGURE 5-5. LIFT CYLINDER ASSEMBLY - JIB (460SJ) (ORIGINAL EQUIPMENT)

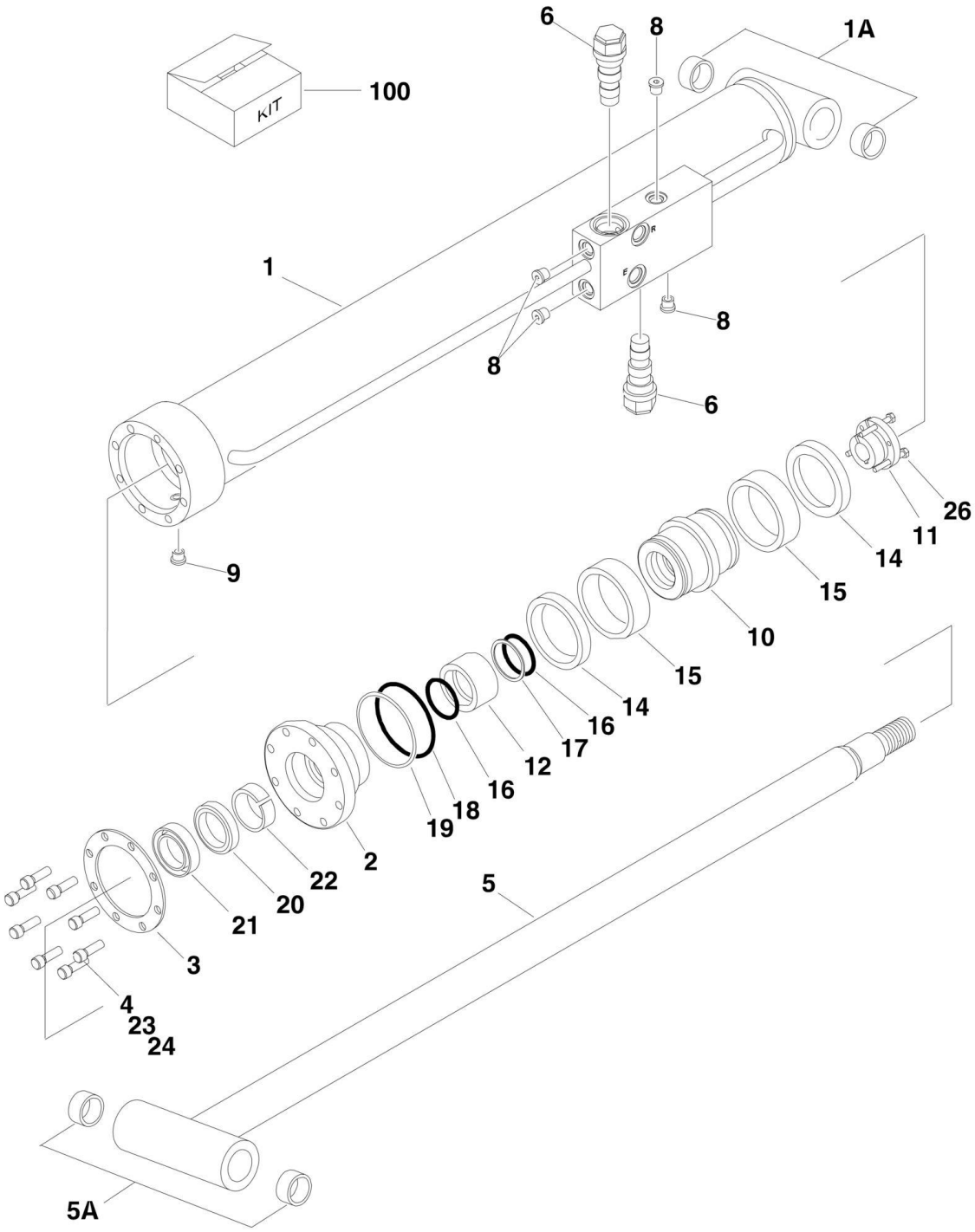

FIGURE 5-5. LIFT CYLINDER ASSEMBLY - JIB (460SJ) (ORIGINAL EQUIPMENT)

ITEM	PART NUMBER	QTY	DESCRIPTION	REV
	1683609	Ref	**JIB LIFT CYLINDER ASSEMBLY (460SJ)**	G
		Ref	**Note: Original Cylinder May Have Been Replaced with Service Replacement. Identify PN Stamped on Cylinder Before Ordering Parts.**	
1	1683687	1	Barrel Weldment	
1A	0962336	2	Bushing	
2	1683053	1	Head	
3	3760368	1	Washer, Ring	
4	3931516	8	Bolt, Socket Head 5/16in-18NC x 2in	
5	1683261	1	Rod Weldment	
5A	0962336	2	Bushing	
6	4640509	2	Cartridge, Valve (Counterbalance Non-Vented)	
6	2900792	2	Seal Kit - 4640509 Valve	
8	2220883	4	Plug, O-Ring	
9	2220885	1	Plug, O-Ring	
10	3480210	1	Piston	
11	0961893	1	Bushing, Tapered	
12	4100100	1	Spacer, Tube	
14	See Note	NSS	Ring, Lock (Note: Use Item 100)	
15	See Note	NSS	Seal, Piston (Note: Use Item 100)	
16	See Note	NSS	O-Ring (Note: Use Item 100)	
17	See Note	NSS	Ring, Back-up (Note: Use Item 100)	
18	See Note	NSS	O-Ring (Note: Use Item 100)	
19	See Note	NSS	Ring, Back-up (Note: Use Item 100)	
20	See Note	NSS	Seal (Note: Use Item 100)	
21	See Note	NSS	Wiper (Note: Use Item 100)	
22	See Note	NSS	Ring, Wear (Note: Use Item 100)	
23	0100011	AR	Locking, Compound	
24	0100038	AR	Primer, Locking	
26	0630534	3	Capscrew, Socket Head #10-24NC x 1in	
100	2901303	1	Seal Kit (Includes Items 14-22)	

FIGURE 5-6. LIFT CYLINDER ASSEMBLY - JIB (460SJ) (USAGE MAY VARY) (SERVICE REPLACEMENT)

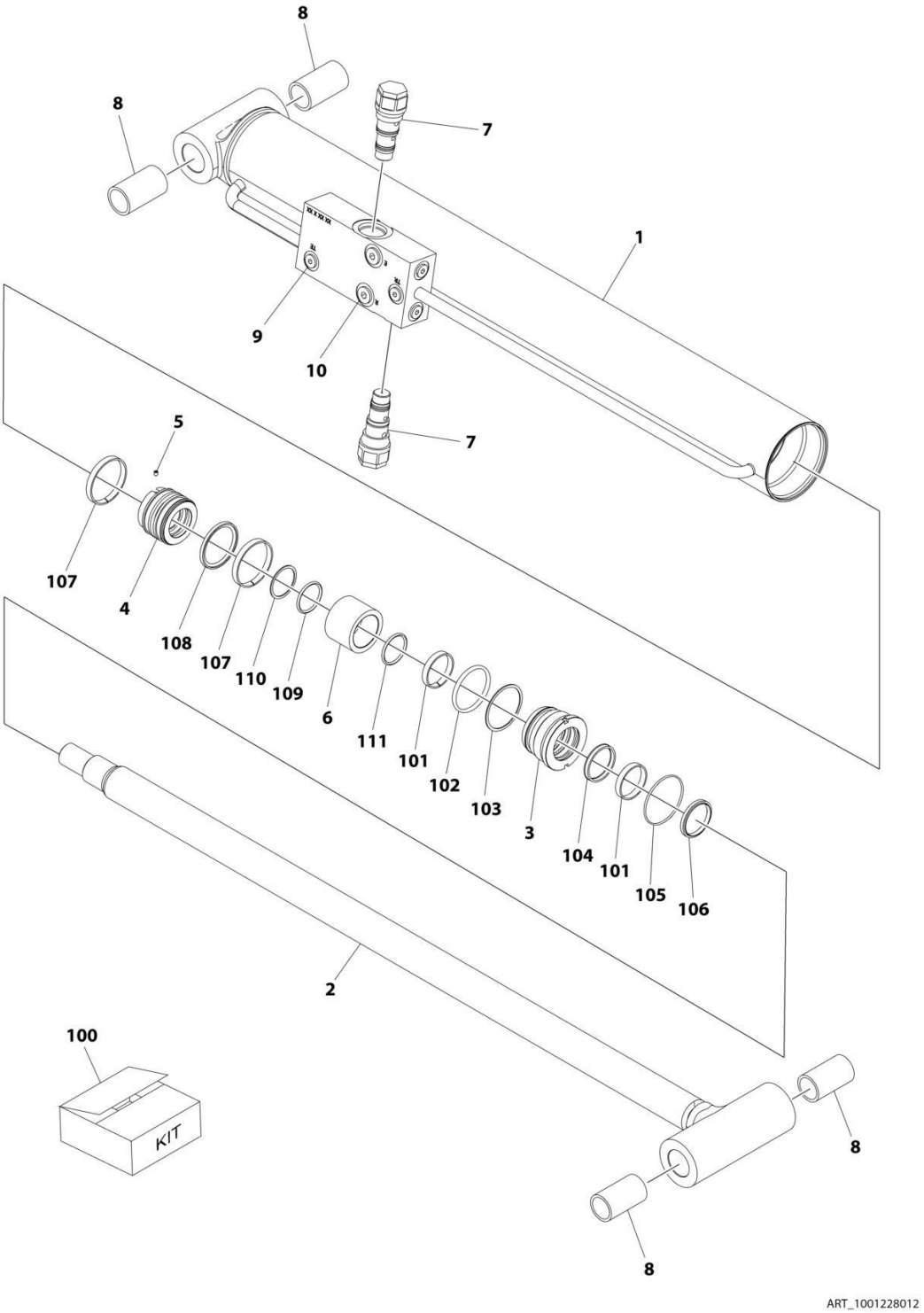

FIGURE 5-6. LIFT CYLINDER ASSEMBLY - JIB (460SJ) (USAGE MAY VARY) (SERVICE REPLACEMENT)

ITEM	PART NUMBER	QTY	DESCRIPTION	REV
	1001228012	Ref	LIFT CYLINDER ASSEMBLY - JIB	C
		Ref	Note: Original Cylinder May Have Been Replaced with Service Replacement. Identify PN Stamped on Cylinder Before Ordering Parts.	
1	See Note	NSS	Barrel (Note: Not Available for Purchase)	
2	70006572	1	Rod	
3	70006571	1	Head	
4	70006570	1	Piston	
5	70023915	1	Screw	
6	70006569	1	Spacer	
7	4640509	2	Cartridge, Valve	
7	2900792	2	Seal Kit - 4640509 Valve	
8	0962336	4	Bushing	
9	2220883	6	Plug, O-Ring	
10	2220885	2	Plug, O-Ring	
100	70006568	1	Seal Kit (Includes Items 101-111)	
101	See Note	NSS	Ring, Wear (Note: Use Item 100)	
102	See Note	NSS	O-Ring (Note: Use Item 100)	
103	See Note	NSS	Ring, Back-up (Note: Use Item 100)	
104	See Note	NSS	Seal, Rod (Note: Use Item 100)	
105	See Note	NSS	O-Ring (Note: Use Item 100)	
106	See Note	NSS	Wiper (Note: Use Item 100)	
107	See Note	NSS	Ring, Wear (Note: Use Item 100)	
108	See Note	NSS	Seal (Note: Use Item 100)	
109	See Note	NSS	O-Ring (Note: Use Item 100)	
110	See Note	NSS	Ring, Back-up (Note: Use Item 100)	
111	See Note	NSS	O-Ring (Note: Use Item 100)	

FIGURE 5-7. LIFT CYLINDER ASSEMBLY - JIB (460SJ) (USAGE MAY VARY) (SERVICE REPLACEMENT)

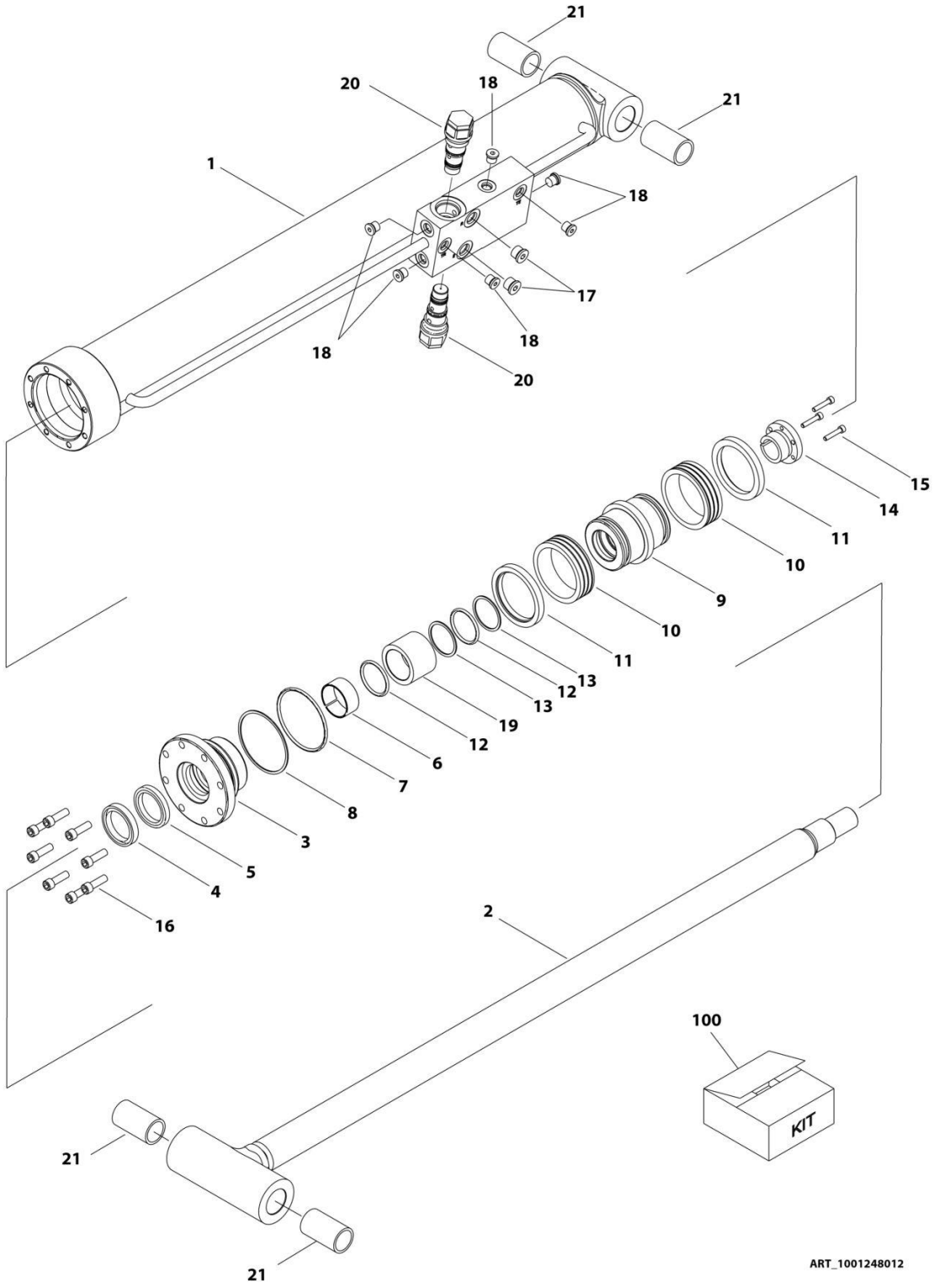

FIGURE 5-7. LIFT CYLINDER ASSEMBLY - JIB (460SJ) (USAGE MAY VARY) (SERVICE REPLACEMENT)

ITEM	PART NUMBER	QTY	DESCRIPTION	REV
	1001248012	Ref	LIFT CYLINDER ASSEMBLY - JIB	B
		Ref	Note: Original Cylinder May Have Been Replaced with Service Replacement. Identify PN Stamped on Cylinder Before Ordering Parts.	
1	See Note	NSS	Barrel (Note: Not Available for Purchase)	
2	70006734	1	Rod	
3	70006649	1	Head	
4	See Note	NSS	Wiper (Note: Use Item 100)	
5	See Note	NSS	Seal, Rod (Note: Use Item 100)	
6	See Note	NSS	Ring, Wear (Note: Use Item 100)	
7	See Note	NSS	O-Ring (Note: Use Item 100)	
8	See Note	NSS	Ring, Back-up (Note: Use Item 100)	
9	70006650	1	Piston	
10	See Note	NSS	Seal (Note: Use Item 100)	
11	See Note	NSS	Ring, Lock (Note: Use Item 100)	
12	See Note	NSS	O-Ring (Note: Use Item 100)	
13	See Note	NSS	Ring, Back-up (Note: Use Item 100)	
14	0961893	1	Bushing, Tapered	
15	0630534	3	Capscrew, Socket Head #10 x 1	
16	70006735	8	Capscrew 5/16	
17	2220885	2	Plug, O-Ring	
18	2220883	6	Plug, O-Ring	
19	70006736	1	Spacer	
20	4640509	2	Cartridge, Valve	
20	2900792	2	Seal Kit - 4640509 Valve	
21	0962336	4	Bushing	
100	1001138795	1	Seal Kit (Includes Items 4-8 & 10-13)	

FIGURE 5-8. LIFT CYLINDER ASSEMBLY - MAIN

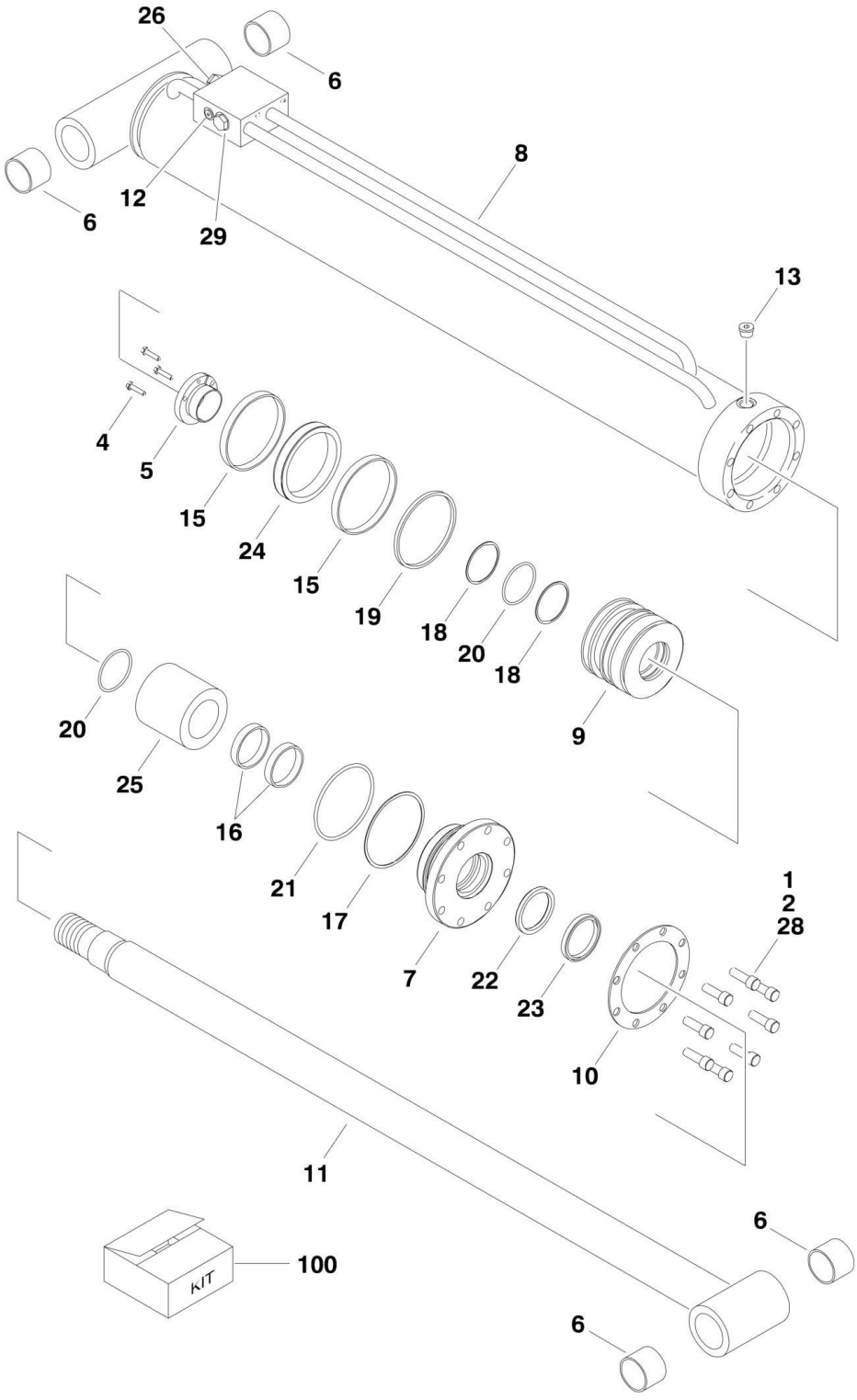

FIGURE 5-8. LIFT CYLINDER ASSEMBLY - MAIN

ITEM	PART NUMBER	QTY	DESCRIPTION	REV
	1683776	Ref	**LIFT CYLINDER ASSEMBLY**	F
1	0100011	AR	Locking, Compound	
2	0100038	AR	Primer, Locking	
4	0630535	3	Bolt, Socket Head #10-24NC x 1-1/8in	
5	0961897	1	Bushing, Tapered	
6	0961950	4	Bushing	
7	1683063	1	Head	
8	1683844	1	Barrel Weldment	
9	3480253	1	Piston	
10	3760371	1	Ring, Wear	
11	1683846	1	Rod Weldment	
12	2220883	1	Plug, O-Ring #4	
13	2220886	1	Plug, O-Ring #8	
15	See Note	NSS	Ring, Wear (Note: Use Item 100)	
16	See Note	NSS	Ring, Wear (Note: Use Item 100)	
17	See Note	NSS	Ring, Back-up (Note: Use Item 100)	
18	See Note	NSS	Ring, Back-up (Note: Use Item 100)	
19	See Note	NSS	Seal (Note: Use Item 100)	
20	See Note	NSS	O-Ring (Note: Use Item 100)	
21	See Note	NSS	O-Ring (Note: Use Item 100)	
22	See Note	NSS	Seal, Poly (Note: Use Item 100)	
23	See Note	NSS	Wiper (Note: Use Item 100)	
24	See Note	NSS	T-Seal (Note: Use Item 100)	
25	4100099	1	Spacer, Tube	
26	4640509	1	Valve, Counterbalance	
26	2900792	1	Seal Kit - 4640509 Valve	
28	3931824	8	Capscrew 1/2in-18NC x 1-1/2in	
29	4641144	1	Cartridge, Valve	
29	7012967	1	Seal Kit - 4641144 Valve	
100	2901841	1	Seal Kit (Includes Items 15-24)	

FIGURE 5-9. MASTER CYLINDER ASSEMBLY (ORIGINAL EQUIPMENT FOR) (SN 0300096000 through 0300165144)

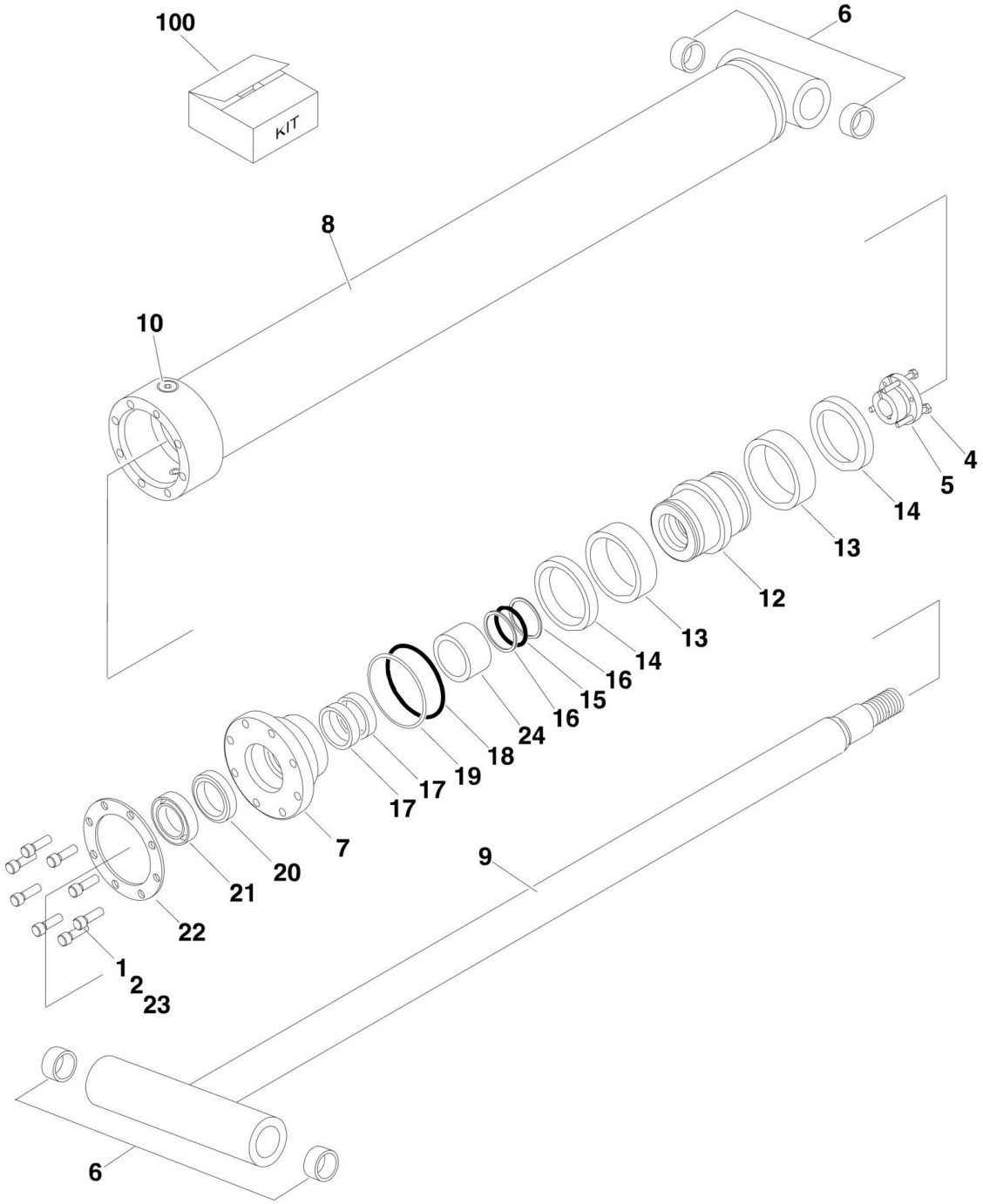

FIGURE 5-9. MASTER CYLINDER ASSEMBLY (ORIGINAL EQUIPMENT FOR) (SN 0300096000 through 0300165144)

ITEM	PART NUMBER	QTY	DESCRIPTION	REV
		Ref	**Note: Original Equipment Cylinder may have been replaced with Service Replacement Cylinder. Identify p/n stamped on cylinder before ordering parts.**	
	1684284	Ref	**MASTER CYLINDER ASSEMBLY**	C
1	0100011	AR	Locking, Compound	
2	0100038	AR	Primer, Locking	
4	0630535	3	Bolt, Socket Head #10-24NC x 1-1/8in	
5	0961894	1	Bushing, Tapered	
6	0961951	4	Bushing	
7	1683055	1	Head	
8	1684283	1	Barrel Weldment	
9	1683950	1	Rod Weldment	
10	2220885	1	Plug, O-Ring #6	
12	3480188	1	Piston	
13	See Note	NSS	Ring, Hydrolock (Note: Use Item 100)	
14	See Note	NSS	Ring, Guidelock (Note: Use Item 100)	
15	See Note	NSS	O-Ring (Note: Use Item 100)	
16	See Note	NSS	Ring, Back-up (Note: Use Item 100)	
17	See Note	NSS	Ring, Wear (Note: Use Item 100)	
18	See Note	NSS	O-Ring (Note: Use Item 100)	
19	See Note	NSS	Ring, Back-up (Note: Use Item 100)	
20	See Note	NSS	Seal, Poly (Note: Use Item 100)	
21	See Note	NSS	Wiper (Note: Use Item 100)	
22	3760369	1	Ring, Washer	
23	3931620	8	Capscrew 3/8in-16NC x 1-1/4in	
24	4566468	1	Spacer, Tube	
100	2901301	1	Seal Kit (Includes Items 13-21)	

FIGURE 5-10. MASTER CYLINDER ASSEMBLY (SERVICE REPLACEMENT FOR SN 0300096000 THROUGH SN 0300165144 AND ORIGINAL EQUIPMENT FOR SN 0300165145 THROUGH 0300203770)

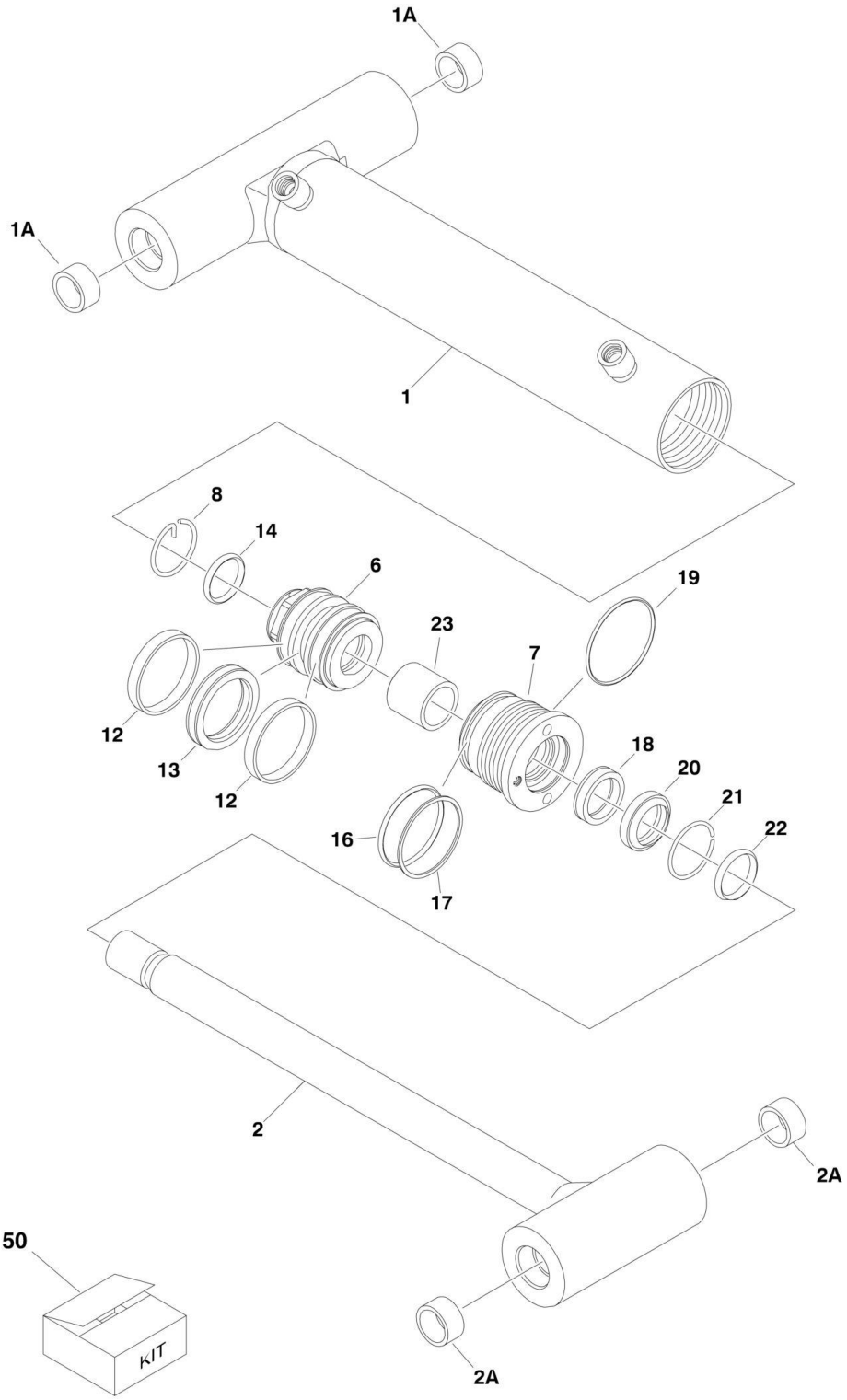

FIGURE 5-10. MASTER CYLINDER ASSEMBLY (SERVICE REPLACEMENT FOR SN 0300096000 THROUGH SN 0300165144 AND ORIGINAL EQUIPMENT FOR SN 0300165145 THROUGH 0300203770)

ITEM	PART NUMBER	QTY	DESCRIPTION	REV
		Ref	**Note: Original Equipment Cylinder may have been replaced with Service Replacement Cylinder. Identify p/n stamped on cylinder before ordering parts.**	
	1001140587	Ref	**MASTER CYLINDER ASSEMBLY**	A
1	70004139	1	Barrel	
1A	0961951	2	Bushing	
2	70004140	1	Rod	
2A	0961951	2	Bushing	
6	70003848	1	Piston	
7	70004136	1	Head	
8	70002224	1	Retainer	
12	See Note	NSS	Ring, Wear (Note: Use Item 50)	
13	See Note	NSS	Seal (Note: Use Item 50)	
14	7026113	1	O-Ring	
16	See Note	NSS	O-Ring (Note: Use Item 50)	
17	See Note	NSS	Ring, Back-up (Note: Use Item 50)	
18	See Note	NSS	Seal (Note: Use Item 50)	
19	See Note	NSS	O-Ring (Note: Use Item 50)	
20	See Note	NSS	Wiper (Note: Use Item 50)	
21	70003838	1	Ring, Retaining	
22	70003856	1	O-Ring	
23	70003839	1	Spacer	
50	70004129	1	Seal Kit (Includes Items 9-16)	

FIGURE 5-11. STEER CYLINDER ASSEMBLY (SN 0300096000 through 0300161284)

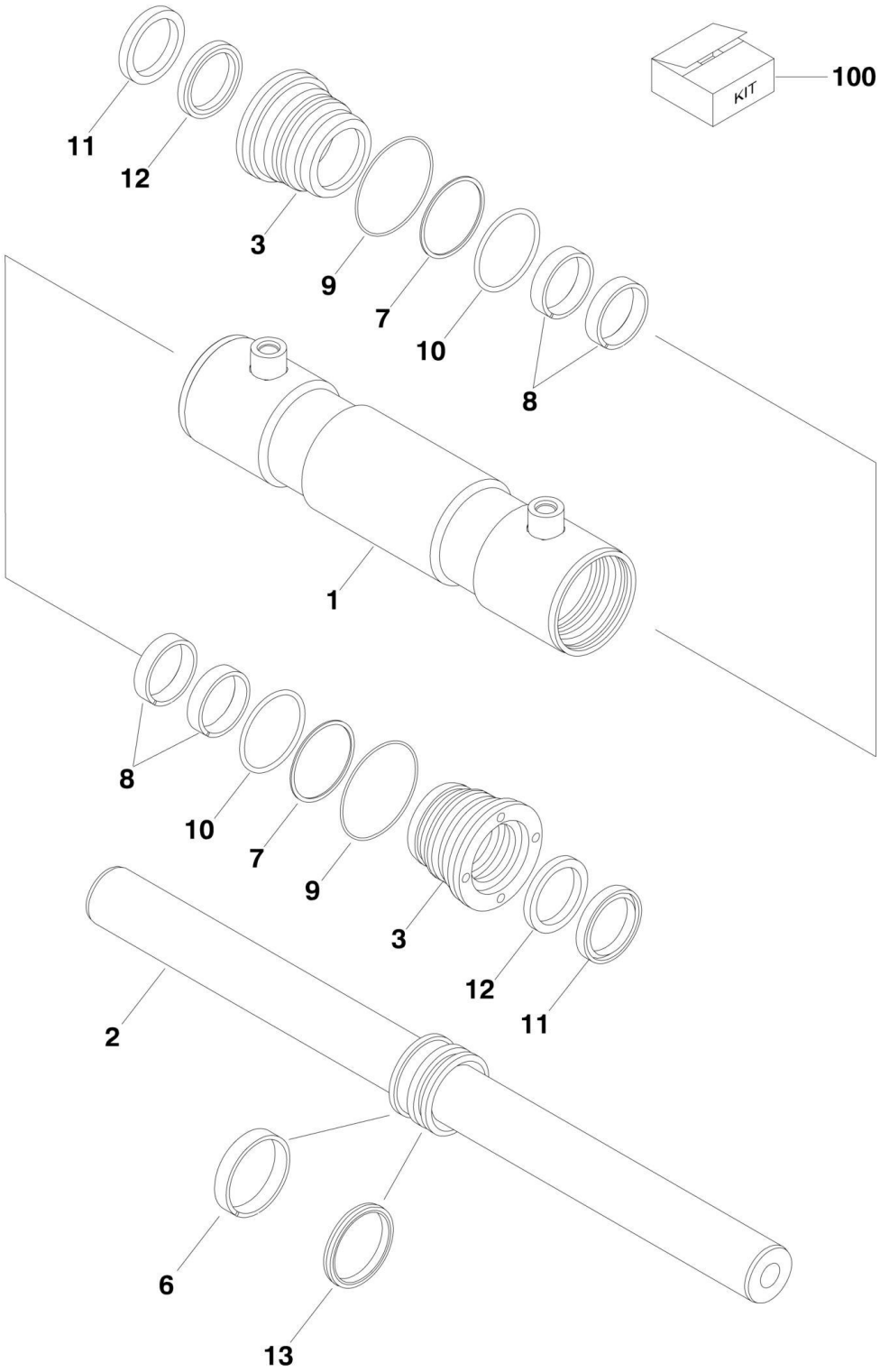

FIGURE 5-11. STEER CYLINDER ASSEMBLY (SN 0300096000 through 0300161284)

ITEM	PART NUMBER	QTY	DESCRIPTION	REV
	1684412	Ref	**STEER CYLINDER ASSEMBLY**	D
1	0370024	1	Barrel Weldment	
2	1683658	1	Rod Weldment	
3	2570008	2	Head, Cylinder	
4	3020043	1	Lube, Anti-Seize (Not Shown - Apply Only to Threads on Item 3)	
6	See Note	NSS	Ring, Wear (Note: Use Item 100)	
7	See Note	NSS	Ring, Back-up (Note: Use Item 100)	
8	See Note	NSS	Ring, Wear (Note: Use Item 100)	
9	See Note	NSS	O-Ring (Note: Use Item 100)	
10	See Note	NSS	O-Ring (Note: Use Item 100)	
11	See Note	NSS	Wiper (Note: Use Item 100)	
12	See Note	NSS	Seal (Note: Use Item 100)	
13	See Note	NSS	T-Seal (Note: Use Item 100)	
100	2902409	1	Seal Kit (Includes Items 6-13)	

FIGURE 5-12. STEER CYLINDER ASSEMBLY (SN 0300161285 through 0300203770)

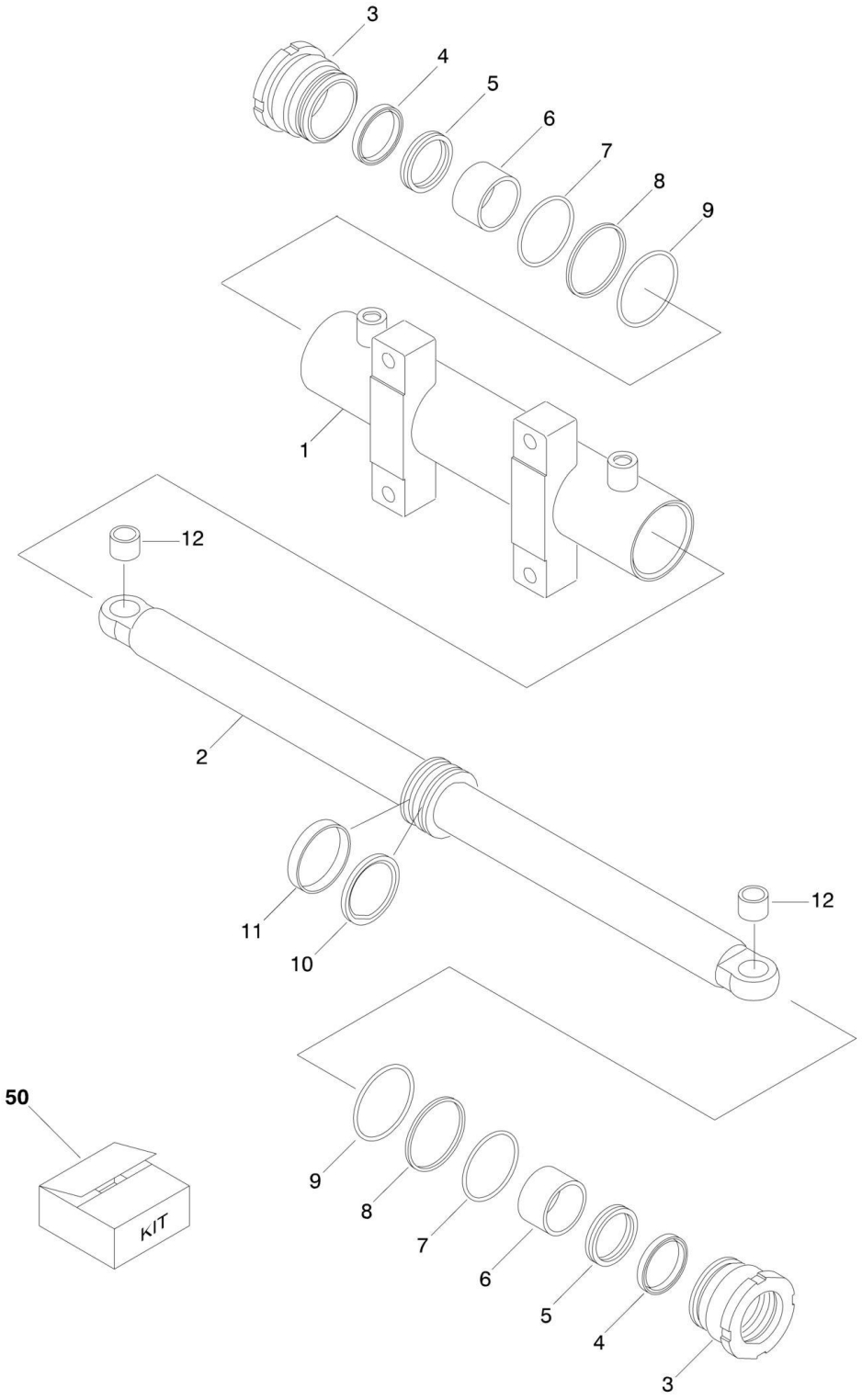

FIGURE 5-12. STEER CYLINDER ASSEMBLY (SN 0300161285 through 0300203770)

ITEM	PART NUMBER	QTY	DESCRIPTION	REV
	1001143434	Ref	**STEER CYLINDER ASSEMBLY**	E
1	70003933	1	Barrel	
2	70003934	1	Rod	
3	70003098	2	Head	
4	See Note	NSS	Wiper (Note: Use Item 50)	
5	See Note	NSS	Seal, Rod (Note: Use Item 50)	
6	See Note	NSS	Bearing (Note: Use Item 50)	
7	See Note	NSS	O-Ring (Note: Use Item 50)	
8	See Note	NSS	Ring, Back-up (Note: Use Item 50)	
9	See Note	NSS	O-Ring (Note: Use Item 50)	
10	See Note	NSS	Seal, Piston (Note: Use Item 50)	
11	See Note	NSS	Ring, Wear (Note: Use Item 50)	
12	See Note	NSS	Bearing (Note: Use Item 50)	
50	70003099	1	Seal Kit - 1001143434 Cylinder (includes Items 4-12)	

FIGURE 5-13. TELESCOPE CYLINDER ASSEMBLY

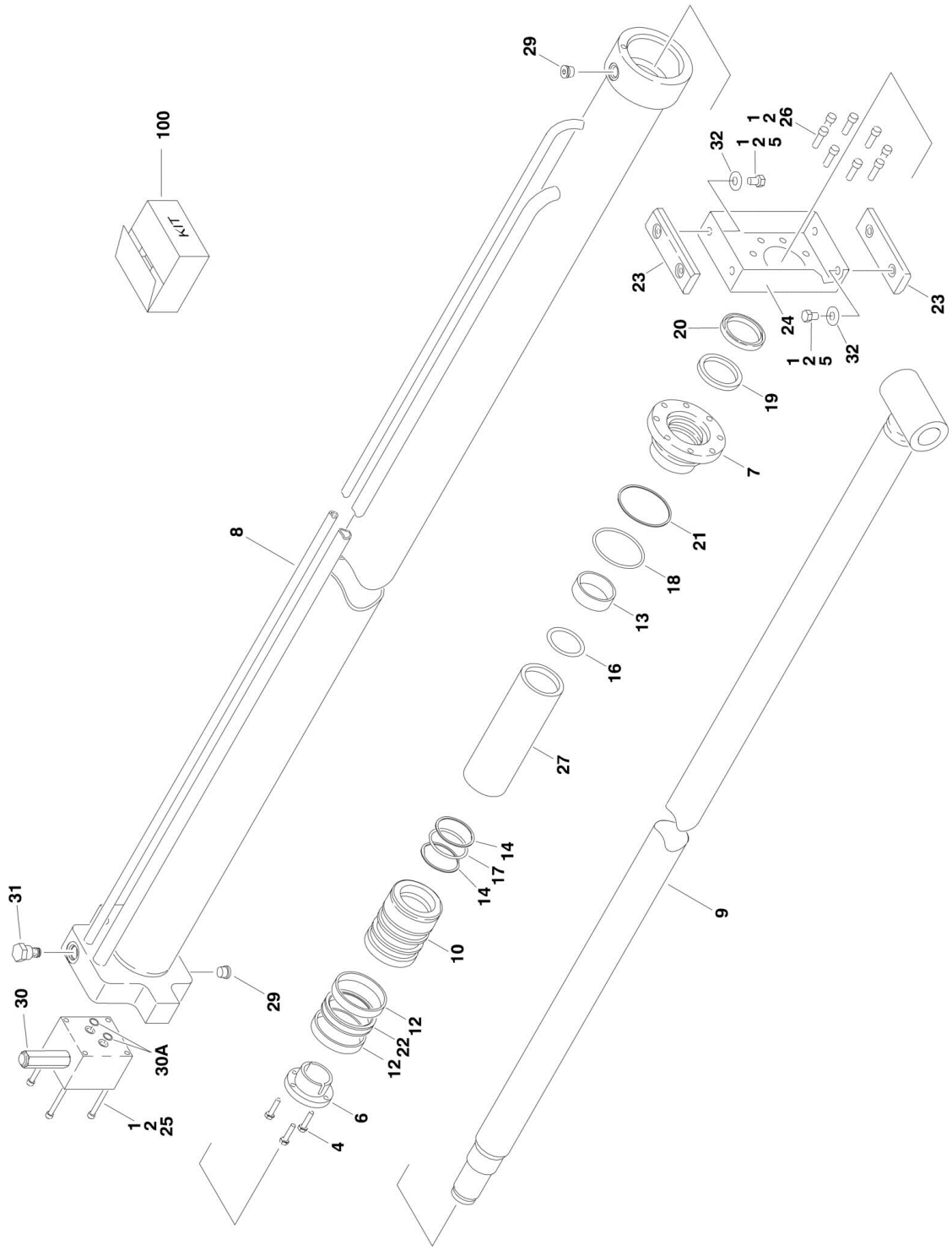

FIGURE 5-13. TELESCOPE CYLINDER ASSEMBLY

ITEM	PART NUMBER	QTY	DESCRIPTION	REV
	1684194	Ref	**TELESCOPE CYLINDER ASSEMBLY**	D
1	0100011	AR	Locking, Compound	
2	0100038	AR	Primer, Locking	
3	0100063	AR	Adhesive **(SN 0300096000 through 0300138219)**	
4	0630535	3	Bolt, Socket Head 1/4in-20NC x 1-1/8in	
5	0641604	4	Bolt 3/8in-16NC x 1/2in	
6	0961896	1	Bushing, Tapered	
7	1683054	1	Head	
8	1684193	1	Barrel Weldment	
9	1684312	1	Rod Weldment	
10	3480274	1	Piston	
12	See Note	NSS	Ring, Wear (Note: Use Item 100)	
13	See Note	NSS	Ring, Wear (Note: Use Item 100)	
14	See Note	NSS	Ring, Back-up (Note: Use Item 100)	
16	See Note	NSS	O-Ring (Note: Use Item 100)	
17	See Note	NSS	O-Ring (Note: Use Item 100)	
18	See Note	NSS	O-Ring (Note: Use Item 100)	
19	See Note	NSS	Seal, Rod (Note: Use Item 100)	
20	See Note	NSS	Wiper (Note: Use Item 100)	
21	See Note	NSS	Ring, Back-up (Note: Use Item 100)	
22	See Note	NSS	Seal (Note: Use Item 100)	
23	3340608	2	Pad, Wear	
24	3571795	1	Plate, Wear Pad Mounting	
25	3931448	4	Capscrew 1/4in-20NC x 3in	
26	3931516	8	Capscrew 5/16in-18NC x 1in	
27	4566425	1	Spacer, Tube	
29	2220885	2	Plug, O-Ring #6	
30	4641033	1	Valve, Counterbalance	
30A	7024508	2	O-Ring	
31	2220886	1	Plug, O-Ring #8	
32	4751600	4	Flatwasher 3/8in Regular	
100	2901861	1	Seal Kit (Includes Items 12-14 & 16-22)	

SECTION 6 - HYDRAULIC

FIGURE 6-1. AXLE LOCKOUT HYDRAULIC DIAGRAM (SN 0300096000 through 0300115395)

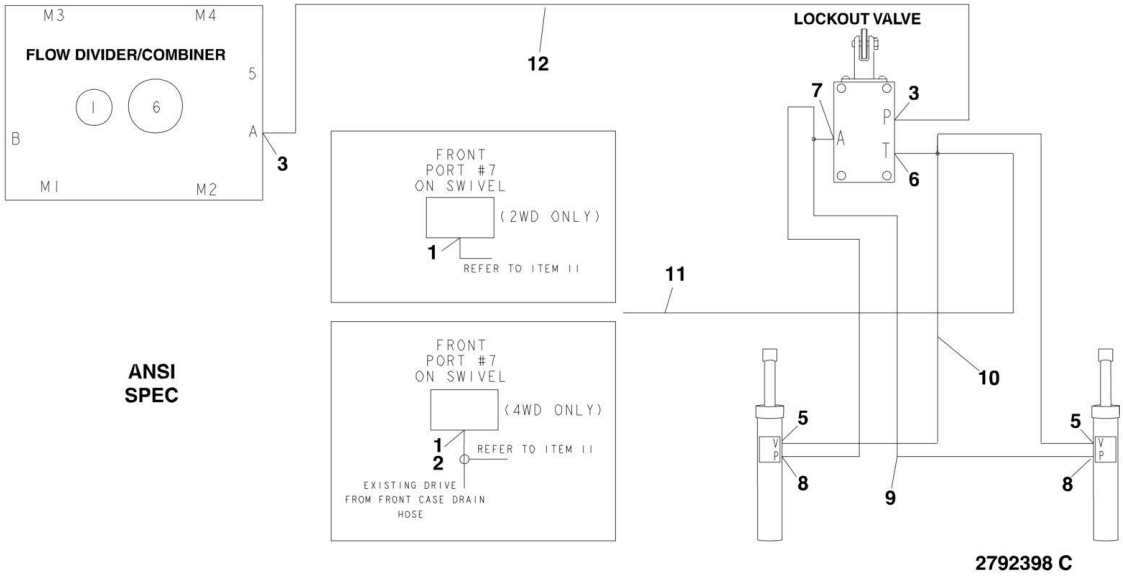

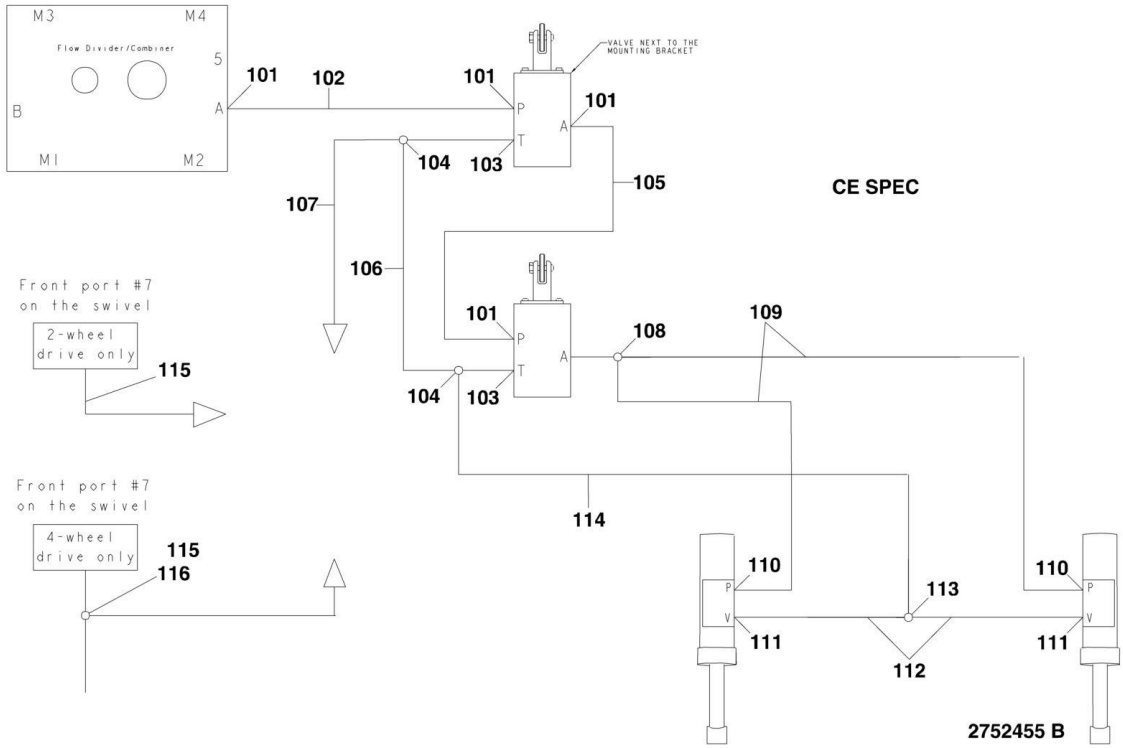

FIGURE 6-1. AXLE LOCKOUT HYDRAULIC DIAGRAM (SN 0300096000 through 0300115395)

ITEM	PART NUMBER	QTY	DESCRIPTION	REV
	2792398	Ref	**AXLE LOCKOUT HYDRAULIC DIAGRAM (ANSI SPEC)**	3-C
1	2220375	1	Fitting, Straight	
2	2220385	1	Fitting, Tee	
3	2220415	2	Fitting, Straight	
5	2220501	2	Fitting, Elbow	
6	2221043	1	Fitting, Tee	
7	2220711	1	Fitting, Tee	
8	2221040	2	Fitting, Elbow	
9	2753035	2	Hose	
10	2752632	2	Hose	
11	2753342	1	Hose	
12	2753339	1	Hose	
	2792455	Ref	**AXLE LOCKOUT HYDRAULIC DIAGRAM (CE SPEC)**	2-B
101	2220415	4	Fitting, Straight	
102	2753339	1	Hose	
103	2220603	2	Fitting	
104	2220635	2	Fitting	
105	2751013	1	Hose	
106	2752471	1	Hose	
107	2753342	1	Hose	
108	2221034	1	Fitting, Tee	
109	2753035	2	Hose	
110	2221040	2	Fitting, Elbow	
111	2220501	2	Fitting, Elbow	
112	2753118	2	Hose	
113	2220490	1	Fitting, Tee	
114	2752469	1	Hose	
115	2220375	1	Fitting	
116	2220385	1	Fitting, Tee	

FIGURE 6-2. AXLE LOCKOUT HYDRAULIC DIAGRAM (ANSI SPEC) (SN 0300115396 through 0300140364)

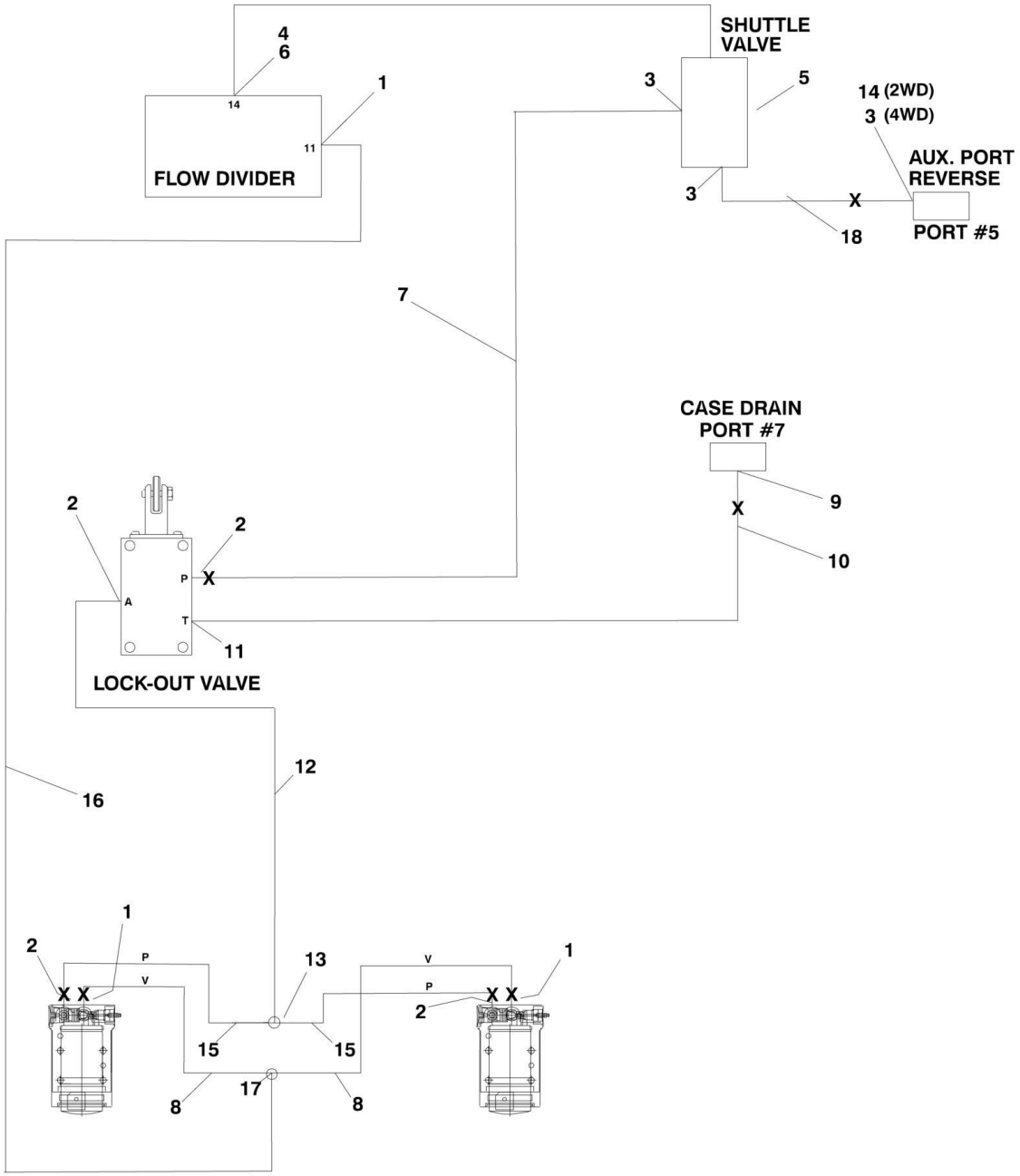

FIGURE 6-2. AXLE LOCKOUT HYDRAULIC DIAGRAM (ANSI SPEC) (SN 0300115396 through 0300140364)

ITEM	PART NUMBER	QTY	DESCRIPTION	REV
		Ref	**AXLE LOCKOUT HYDRAULIC DIAGRAM (ANSI SPEC)**	
	1001091926	Ref	**2WD**	4-D
	1001091729	Ref	**4WD**	4-C
1	2220371	3	Fitting, Straight	
2	2220415	4	Fitting, Straight	
3	2220582	AR	Fitting, Straight	
3		Ref	2WD	
3		Ref	4WD	
4	2220775	1	Fitting, Elbow	
5	8902175	1	Valve, Shuttle	
6	2220919	1	Fitting, Swivel	
7	2752445	1	Hose	
8	1001096193	2	Hose	
9	2220385	1	Fitting, Tee	
10	1001096557	1	Hose	
11	2220603	1	Fitting, Straight	
12	1001096192	1	Hose	
13	2220504	1	Fitting, Tee	
14	2220605	1	Fitting, Tee (2WD Only)	
15	1001096191	2	Hose	
16	2752487	1	Hose	
17	2220490	1	Fitting, Tee	
18	2750888	1	Hose	

FIGURE 6-3. AXLE LOCKOUT HYDRAULIC DIAGRAM (CE SPEC) (SN 0300115396 through 0300140364)

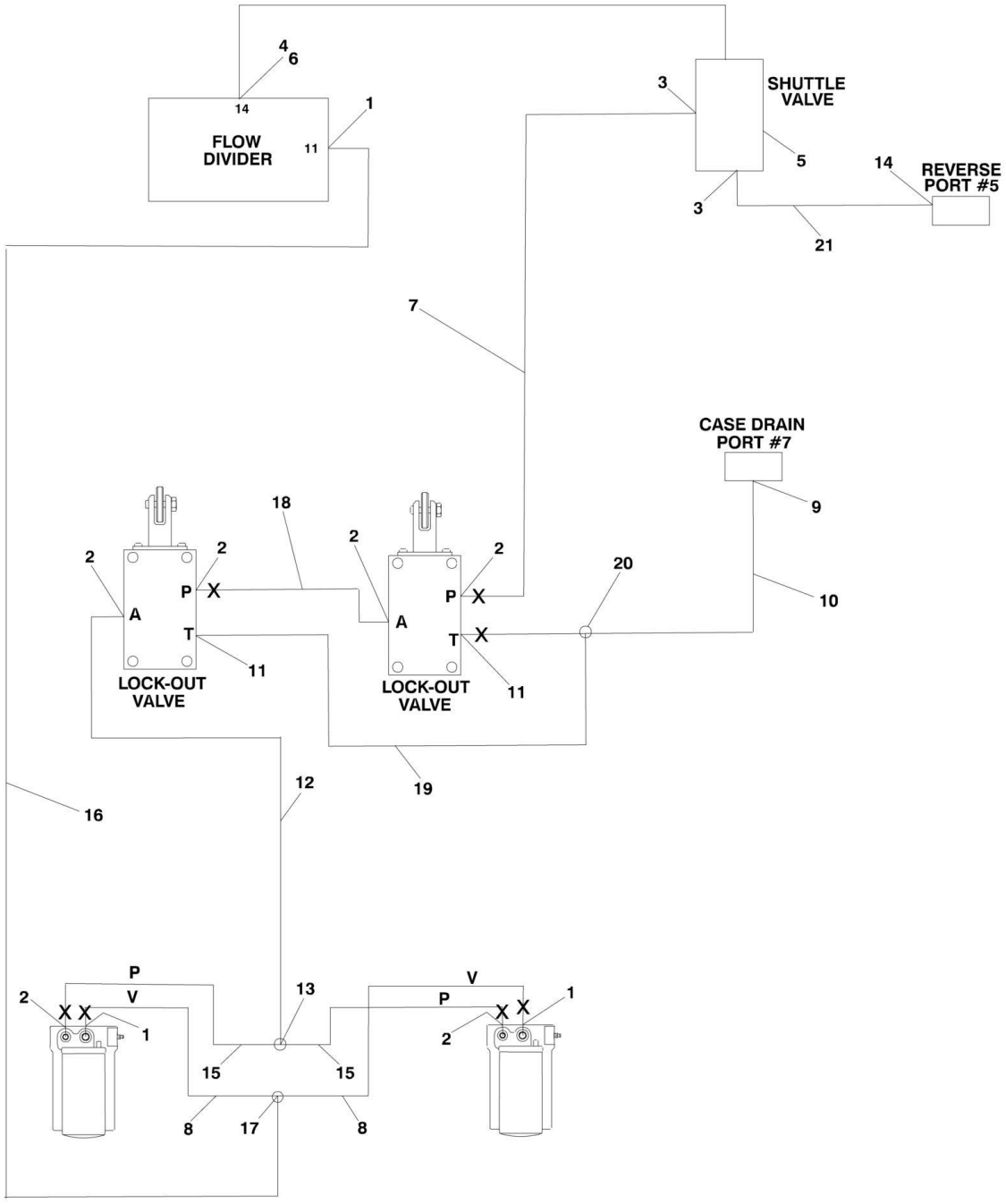

FIGURE 6-3. AXLE LOCKOUT HYDRAULIC DIAGRAM (CE SPEC) (SN 0300115396 through 0300140364)

ITEM	PART NUMBER	QTY	DESCRIPTION	REV
		Ref	**AXLE LOCKOUT HYDRAULIC DIAGRAM (CE SPEC)**	
	1001091927	Ref	**2WD**	4-D
	1001091730	Ref	**4WD**	4-C
1	2220371	3	Fitting, Straight	
2	2220415	6	Fitting, Straight	
3	2220582	AR	Fitting, Straight	
3		Ref	2WD	
3		Ref	4WD	
4	2220775	1	Fitting, Elbow	
5	8902175	1	Valve, Shuttle	
6	2220919	1	Fitting, Swivel	
7	2752445	1	Hose	
8	1001096193	2	Hose	
9	2220385	1	Fitting, Tee	
10	1001096557	1	Hose	
11	2220603	2	Fitting, Straight	
12	1001096192	1	Hose	
13	2220504	1	Fitting, Tee	
14	2220605	1	Fitting, Tee (2WD Only)	
15	1001096191	2	Hose	
16	2752487	1	Hose	
17	2220490	1	Fitting, Tee	
18		Ref	Hose Options:	
18	2751013	1	2WD	
18	2751015	1	4WD	
19	2752471	1	Hose	
20	2220635	1	Fitting, Tee	
21	2750888	1	Hose	

FIGURE 6-4. AXLE LOCKOUT HYDRAULIC DIAGRAM (ANSI AND CE SPEC) (SN 0300140365 through 0300203770)

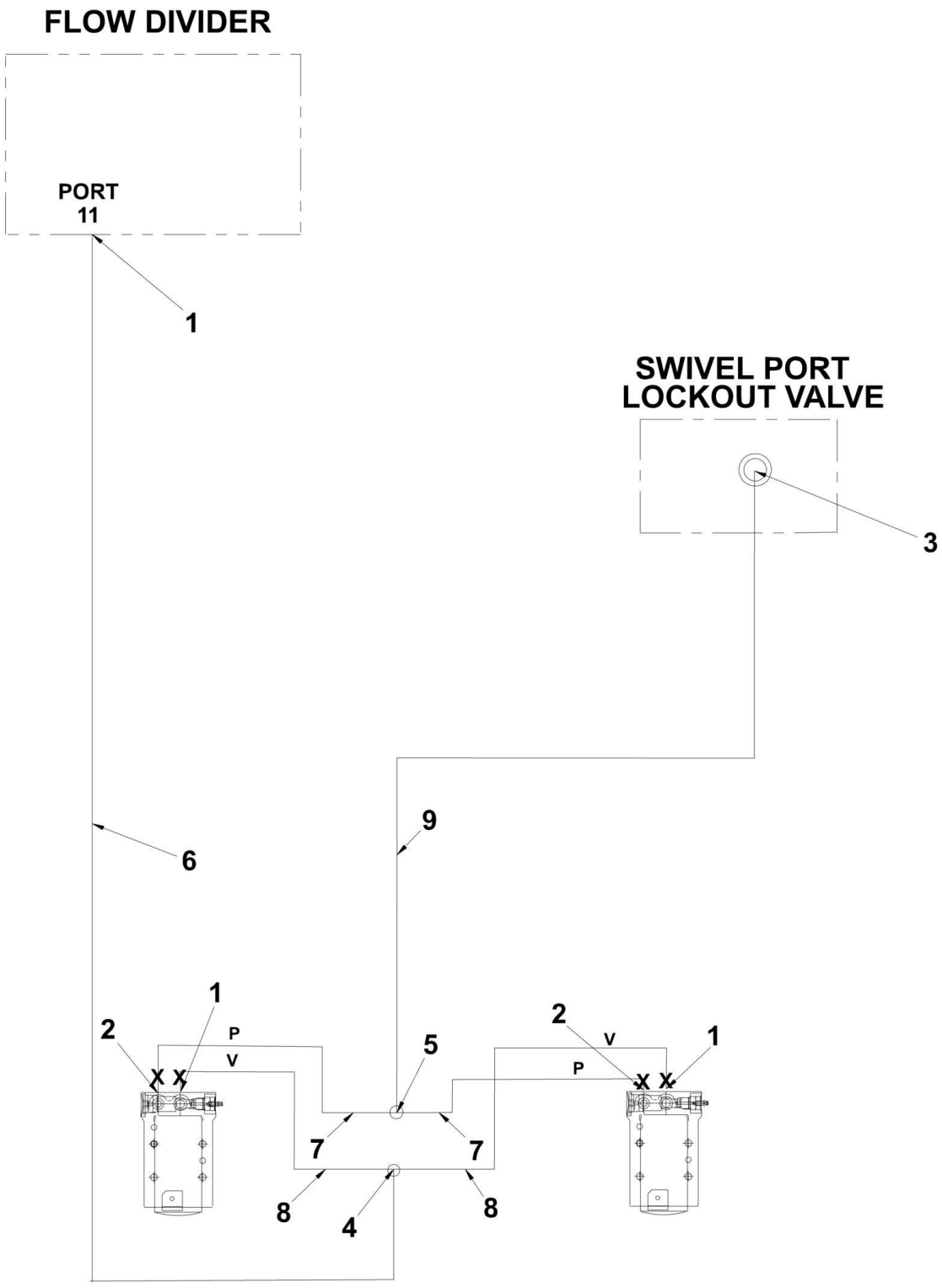

FIGURE 6-4. AXLE LOCKOUT HYDRAULIC DIAGRAM (ANSI AND CE SPEC) (SN 0300140365 through 0300203770)

ITEM	PART NUMBER	QTY	DESCRIPTION	REV
	1001106966	Ref	**AXLE LOCKOUT HYDRAULIC DIAGRAM (ANSI SPEC)**	A
1	2220371	3	Fitting, Straight	
2	2220415	2	Fitting, Straight	
3	2220468	1	Fitting, Straight	
4	2220490	1	Fitting, Tee	
5	2220504	1	Fitting, Tee	
6	2752487	1	Hose	
7	1001096191	2	Hose	
8	1001096193	2	Hose	
9	1001108482	1	Hose	

FIGURE 6-5. DRIVE HYDRAULIC DIAGRAM - 2WD (SN 0300096000 through 0300115395)

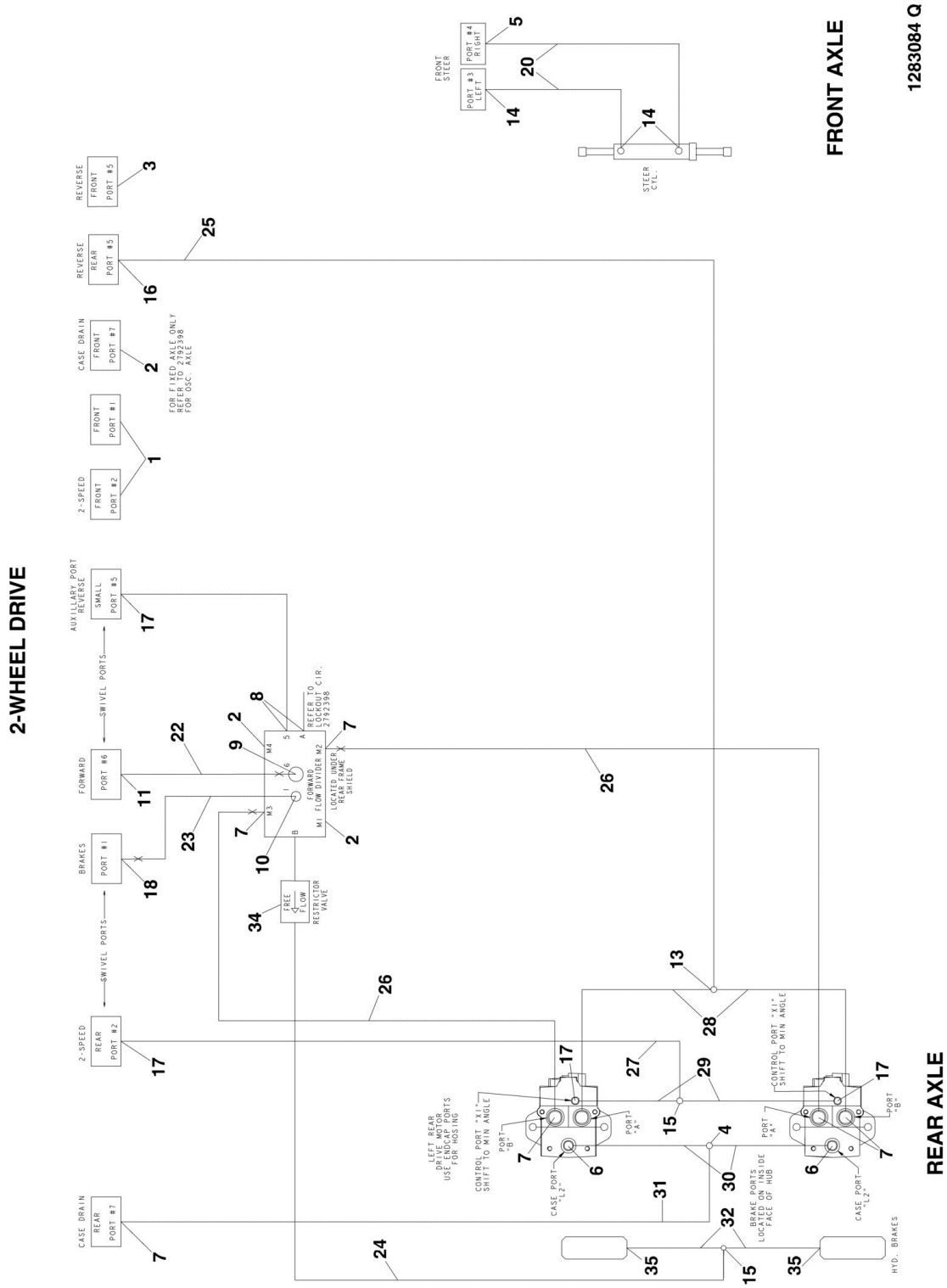

FIGURE 6-5. DRIVE HYDRAULIC DIAGRAM - 2WD (SN 0300096000 through 0300115395)

ITEM	PART NUMBER	QTY	DESCRIPTION	REV
	2792385	Ref	**DRIVE HYDRAULIC DIAGRAM - 2WD**	9
	1283084	Ref	**DRIVE HYDRAULIC DIAGRAM - 2WD**	R
1	2220237	2	Fitting, Plug	
2	2220240	3	Fitting, Plug	
3	2220242	1	Fitting, Plug	
4	2220362	1	Fitting, Tee	
5	2220371	1	Fitting, Straight	
6	2220373	2	Fitting, Straight (Fittings moved to Pump Assembly)	
7	2220375	AR	Fitting, Straight	
7		Ref	Pump Assy without Fittings	
7		Ref	Pump Assy with Fittings	
8	2220415	2	Fitting, Straight	
9	2220435	1	Fitting, Straight	
10	2220596	2	Fitting, Elbow	
11	2220465	1	Fitting, Elbow	
13	2220481	1	Fitting, Tee	
14	2220501	3	Fitting, Elbow	
15	2220504	2	Fitting, Tee	
16	2220568	1	Fitting, Elbow	
17	2220582	2	Fitting, Straight	
17		Ref	Pump Assy without Fittings	
17		Ref	Pump Assy with Fittings	
18	2220600	1	Fitting, Straight	
20	2752466	2	Hose	
22	2753346	1	Hose	
23	2752495	1	Hose	
24	2752442	1	Hose	
25	2753347	1	Hose	
26	2753343	2	Hose	
27	2752977	1	Hose	
28	2753344	2	Hose	
29	2752908	2	Hose	
30	2752496	2	Hose	
31	2752506	1	Hose	
32	2754229	2	Hose	
34	4641282	1	Valve, Restrictor (.020)	
35	2220466	2	Fitting, Elbow	

FIGURE 6-6. DRIVE HYDRAULIC DIAGRAM - 2WD (SN 0300115396 through 0300140364)

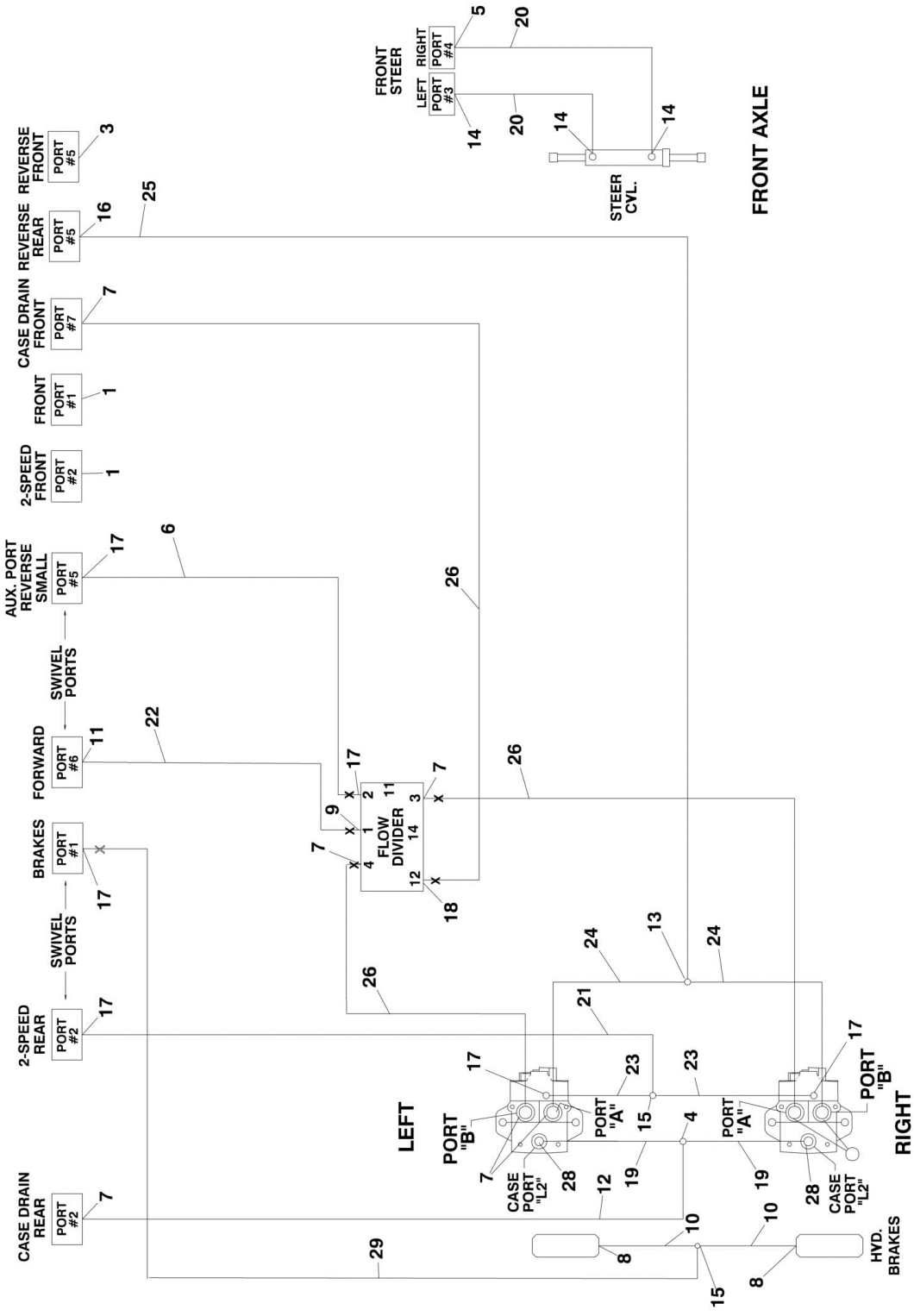

FIGURE 6-6. DRIVE HYDRAULIC DIAGRAM - 2WD (SN 0300115396 through 0300140364)

ITEM	PART NUMBER	QTY	DESCRIPTION	REV
	1001092120	Ref	**DRIVE HYDRAULIC DIAGRAM - 2WD**	5
	1001091687	Ref	**DRIVE HYDRAULIC DIAGRAM - 2WD**	F
1	2220237	2	Fitting, Plug	
3	2220242	1	Fitting, Plug	
4	2220362	1	Fitting, Tee	
5	2220371	1	Fitting, Straight	
6	2752437	1	Hose	
7	2220375	8	Fitting, Straight	
8	2220466	2	Fitting, Elbow	
9	2220435	1	Fitting, Straight	
10	2754229	2	Hose	
11	2220465	1	Fitting, Elbow	
12	2752506	1	Hose	
13	2220481	1	Fitting, Tee	
14	2220501	3	Fitting, Elbow	
15	2220504	2	Fitting, Tee	
16	2220568	1	Fitting, Elbow	
17	2220582	6	Fitting, Straight	
18	2220600	1	Fitting, Straight	
19	2752492	2	Hose	
20	2752466	2	Hose	
21		Ref	Hose Option:	
21	2752437	1	Hose **(SN 0300096000 through 0300122763)**	
21	2752977	1	Hose **(SN 0300122764 through 0300140365)**	
22	1001096556	1	Hose	
23	2752908	2	Hose	
24	2753344	2	Hose	
25	2753347	1	Hose	
26	2753343	3	Hose	
28	2220373	2	Fitting, Straight	
29	2752594	1	Hose	

FIGURE 6-7. DRIVE HYDRAULIC DIAGRAM - 2WD (SN 0300140365 through 0300203770)

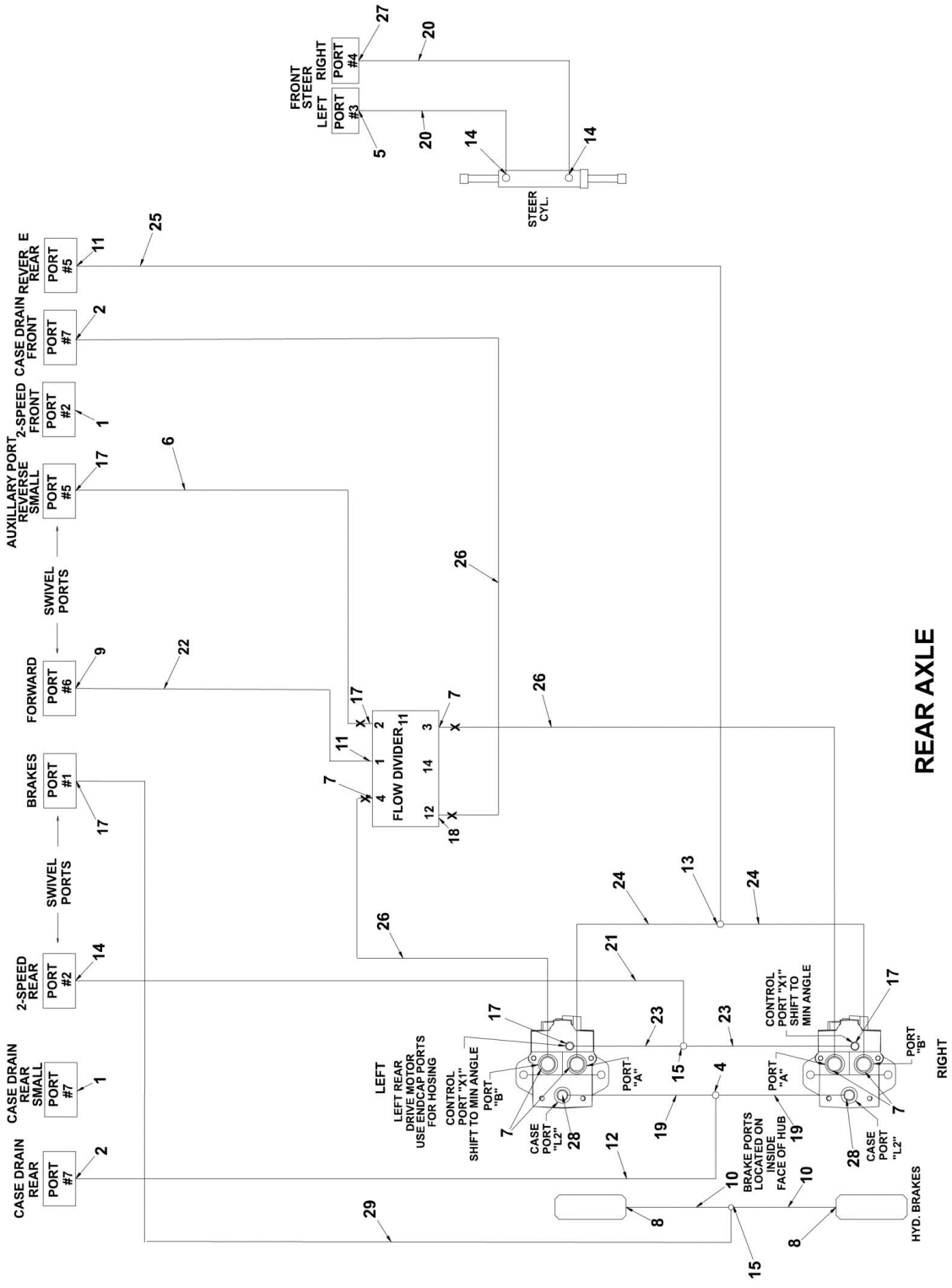

FIGURE 6-7. DRIVE HYDRAULIC DIAGRAM - 2WD (SN 0300140365 through 0300203770)

ITEM	PART NUMBER	QTY	DESCRIPTION	REV
	1001108466	Ref	**DRIVE HYDRAULIC DIAGRAM - 2WD**	A
1	2220237	2	Fitting, Plug	
2	2220596	2	Fitting, Elbow	
4	2220362	1	Fitting, Tee	
5	2220371	1	Fitting, Straight	
6	2752437	1	Hose	
7	2220375	6	Fitting, Straight	
8	2220466	2	Fitting, Elbow	
9	2220435	1	Fitting, Straight	
10	2754229	2	Hose	
11	2220465	2	Fitting, Elbow	
12	2753416	1	Hose	
13	2220481	1	Fitting, Tee	
14	2220501	3	Fitting, Elbow	
15	2220504	2	Fitting, Tee	
17	2220582	5	Fitting, Straight	
18	2220600	1	Fitting, Straight	
19	2752492	2	Hose	
20	2752466	2	Hose	
21	1001108478	1	Hose	
22	1001096556	1	Hose	
23	2752908	2	Hose	
24	2753344	2	Hose	
25	2753347	1	Hose	
26	2753343	3	Hose	
27	2220473	1	Fitting, Elbow	
28	2220373	2	Fitting, Straight	
29	1001108477	1	Hose	

FIGURE 6-8. DRIVE HYDRAULIC DIAGRAM - 4WD (SN 0300096000 through 0300115395)

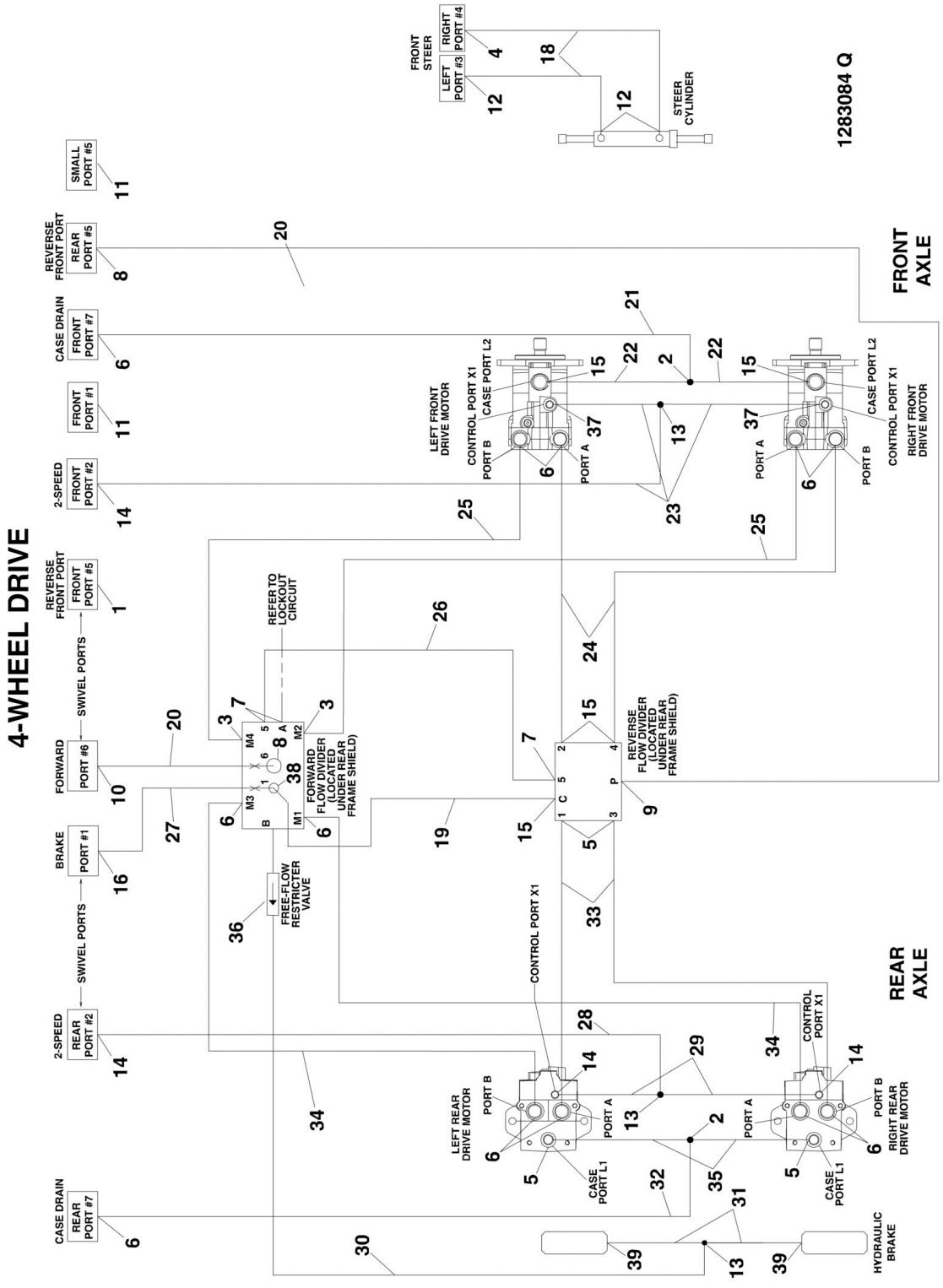

FIGURE 6-8. DRIVE HYDRAULIC DIAGRAM - 4WD (SN 0300096000 through 0300115395)

ITEM	PART NUMBER	QTY	DESCRIPTION	REV
		Ref	**DRIVE HYDRAULIC DIAGRAM - 4WD**	
	2792386	Ref	**Without Arctic Package**	7
	1283084	Ref	**Without Arctic Package**	R
	1001093930	Ref	**With Arctic Package**	1-A
1	2220242	1	Fitting, Plug	
2	2220362	2	Fitting, Tee	
3	2220366	2	Fitting, Elbow	
4	2220371	1	Fitting, Straight	
5	2220373	Ref	Fitting, Straight Options:	
5	2220373	4	Pump Assy without Fittings	
5	2220373	2	Pump Assy with Fittings	
6	2220375	Ref	Fitting, Straight Options:	
6	2220375	12	Pump Assy without Fittings	
6	2220375	4	Pump Assy with Fittings	
7	2220415	3	Fitting, Straight	
8	2220435	2	Fitting, Straight	
9	2220578	1	Fitting, Elbow	
10	2220465	1	Fitting, Elbow	
11	2220237	2	Plug	
12	2220501	3	Fitting, Elbow	
13	2220504	3	Fitting, Tee	
14	2220582	Ref	Fitting, Straight Options:	
14	2220582	4	Pump Assy without Fittings	
14	2220582	2	Pump Assy with Fittings	
15	2220596	Ref	Fitting, Elbow Options:	
15	2220596	5	Pump Assy without Fittings	
15	2220596	3	Pump Assy with Fittings	
16	2220600	1	Fitting, Straight	
18	2752466	2	Hose	
19	2752502	2	Hose	
20	2753346	2	Hose	
21	2752944	1	Hose	
22		Ref	Hose Options:	
22	2753416	2	Without Arctic Package	
22	1001093932	2	With Arctic Package	
23		Ref	Hose Options:	
23	2752594	3	Without Arctic Package	
23	1001093933	3	With Arctic Package	
24		Ref	Hose Options:	
24	2753417	2	Without Arctic Package	
24	1001093934	2	With Arctic Package	
25		Ref	Hose Options:	
25	2753345	2	Without Arctic Package	
25	1001093935	2	With Arctic Package	
26	2753035	1	Hose	
27	2752495	1	Hose	
28	2752977	1	Hose	
29	2752908	2	Hose	
30	2752443	1	Hose	
31	2754229	2	Hose	

ITEM	PART NUMBER	QTY	DESCRIPTION	REV
32	2752506	1	Hose	
33	2753162	2	Hose	
34	2753343	2	Hose	
35	2752496	2	Hose	
36	4641282	1	Valve, Restrictor (.020)	
37	2220472	2	Fitting, Elbow (Fitting moved to Pump Assembly)	
38	2220602	1	Fitting, Tee	
39	2220466	2	Fitting, Elbow	

FIGURE 6-9. DRIVE HYDRAULIC DIAGRAM - 4WD (SN 0300115396 through 0300140364)

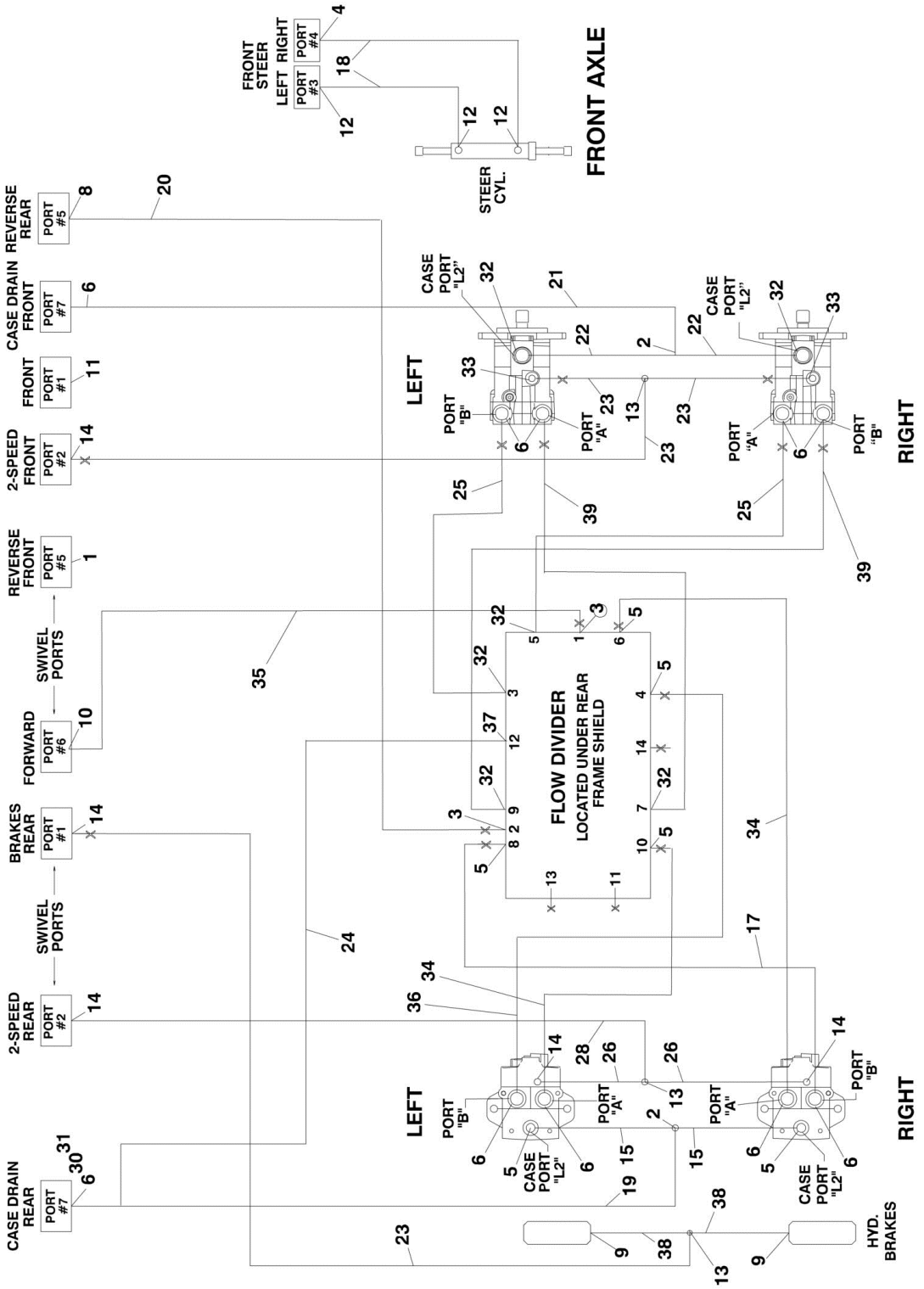

FIGURE 6-9. DRIVE HYDRAULIC DIAGRAM - 4WD (SN 0300115396 through 0300140364)

ITEM	PART NUMBER	QTY	DESCRIPTION	REV
		Ref	**DRIVE HYDRAULIC DIAGRAM - 4WD**	
	1001091986	Ref	**Without Arctic Package**	5
	1001091687	Ref	**Without Arctic Package**	F
	1001094684	Ref	**With Arctic Package**	4
	1001091687	Ref	**With Arctic Package**	F
1	2220242	1	Fitting, Plug	
2	2220362	2	Fitting, Tee	
3	2220451	2	Fitting, Straight	
4	2220371	1	Fitting, Straight	
5	2220373	6	Fitting, Straight	
6	2220375	10	Fitting, Straight	
8	2220568	1	Fitting, Elbow	
9	2220466	2	Fitting, Elbow	
10	2220465	1	Fitting, Elbow	
11	2220237	1	Plug	
12	2220501	3	Fitting, Elbow	
13	2220504	3	Fitting, Tee	
14	2220582	5	Fitting, Straight	
15	2752492	2	Hose	
17	2753343	1	Hose	
18	2752466	2	Hose	
19	2752506	1	Hose	
20	1001096160	1	Hose	
21	2752514	1	Hose	
22	2753416	2	Hose	
23		Ref	Hose Options:	
23	2752594	4	Without Arctic Package	
23	1001093933	4	With Arctic Package	
24	2752433	1	Hose	
25		Ref	Hose Options:	
25	2753345	2	Without Arctic Package	
25	1001093935	2	With Arctic Package	
26	2752908	2	Hose	
28	2752977	1	Hose	
30	2220385	1	Fitting, Tee	
31	2220618	1	Fitting, Reducer	
32	2220596	6	Fitting, Elbow	
33	2220472	2	Fitting, Elbow	
34	1001096168	2	Hose	
35	1001096161	1	Hose	
36	1001096167	1	Hose	
37	2220415	1	Fitting, Straight	
38	2754229	2	Hose	
39		Ref	Hose Options:	
39		Ref	Without Arctic Package:	
39	2753345	2	Hose **(SN 0300096000 through 0300119200)**	
39	1001099161	2	Hose **(SN 0300119201 through 0300140365)**	
39		Ref	With Arctic Package:	
39	1001093935	2	Hose **(SN 0300096000 through 0300119200)**	
39	1001099162	2	Hose **(SN 0300119201 through 0300140365)**	

FIGURE 6-10. DRIVE HYDRAULIC DIAGRAM - 4WD (SN 0300140365 through 0300203770)

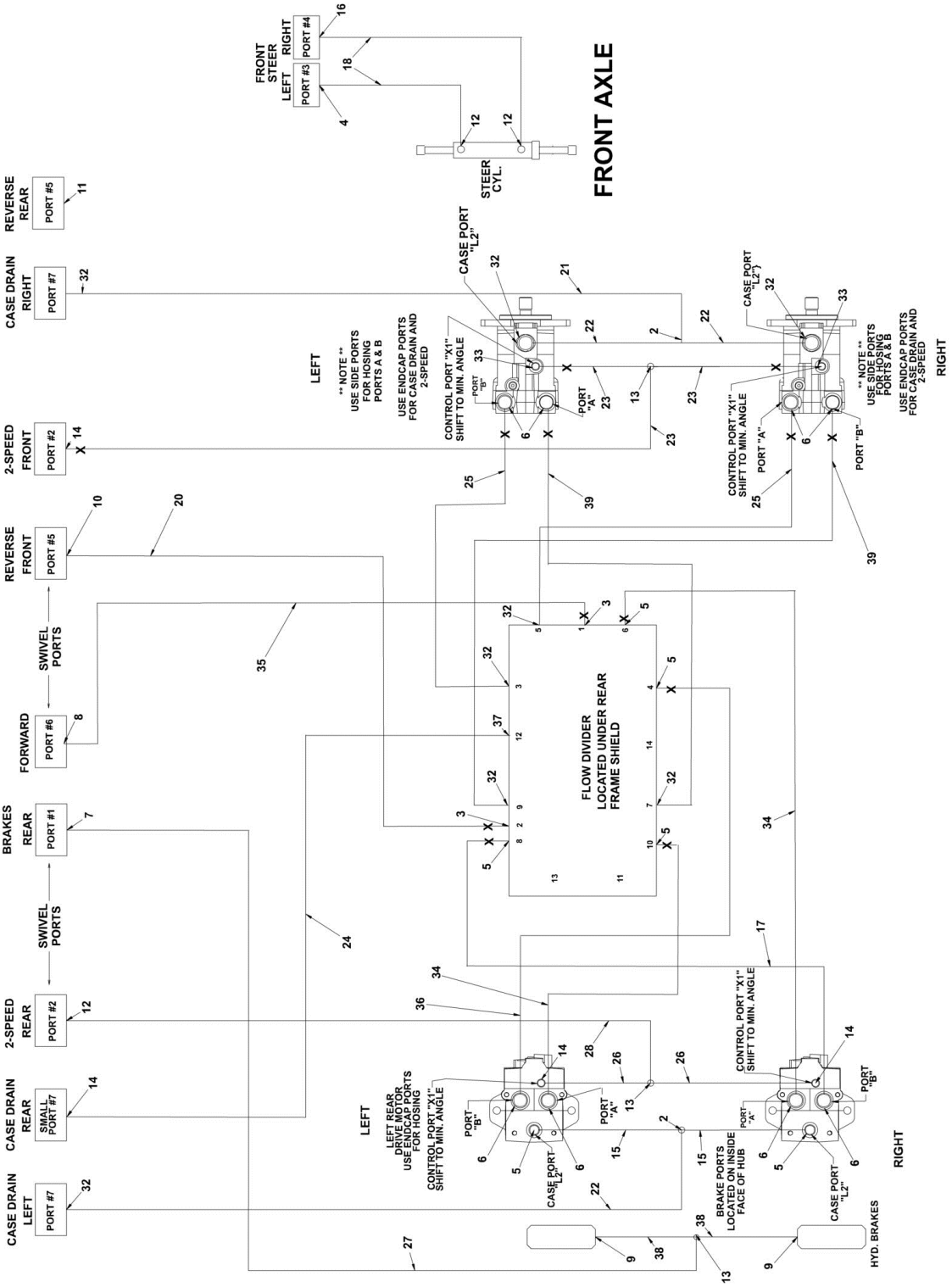

FIGURE 6-10. DRIVE HYDRAULIC DIAGRAM - 4WD (SN 0300140365 through 0300203770)

ITEM	PART NUMBER	QTY	DESCRIPTION	REV
		Ref	**DRIVE HYDRAULIC DIAGRAM - 4WD**	
	1001108464	Ref	**Without Arctic Package**	B
	1001108465	Ref	**With Arctic Package**	A
2	2220362	2	Fitting, Tee	
3	2220451	2	Fitting, Straight	
4	2220371	1	Fitting, Straight	
5	2220373	6	Fitting, Straight	
6	2220375	8	Fitting, Straight	
7	2220468	1	Fitting, Straight	
8	2220435	1	Fitting, Straight	
9	2220466	2	Fitting, Elbow	
10	2220465	1	Fitting, Elbow	
11	2220237	1	Plug	
12	2220501	3	Fitting, Elbow	
13	2220504	3	Fitting, Tee	
14	2220582	4	Fitting, Straight	
15	2752492	2	Hose	
16	2220473	1	Fitting, Elbow	
17	2753343	1	Hose	
18	2752466	2	Hose	
20	1001108480	1	Hose	
21	2753196	1	Hose	
22	2753416	3	Hose	
23		Ref	Hose Options:	
23	2752594	3	Without Arctic Package	
23	1001093933	3	With Arctic Package	
24	1001108476	1	Hose	
25		Ref	Hose Options:	
25	2753345	2	Without Arctic Package	
25	1001093935	2	With Arctic Package	
26	2752908	2	Hose	
27	1001108477	1	Hose	
28	1001108478	1	Hose	
32	2220596	8	Fitting, Elbow	
33	2220472	2	Fitting, Elbow	
34	1001096168	2	Hose	
35	1001108481	1	Hose	
36	1001096167	1	Hose	
37	2220415	1	Fitting, Straight	
38	2754229	2	Hose	
39		Ref	Hose Options:	
39	1001099161	2	Without Arctic Package	
39	1001099162	2	With Arctic Package	

FIGURE 6-11. STANDARD HYDRAULIC DIAGRAM

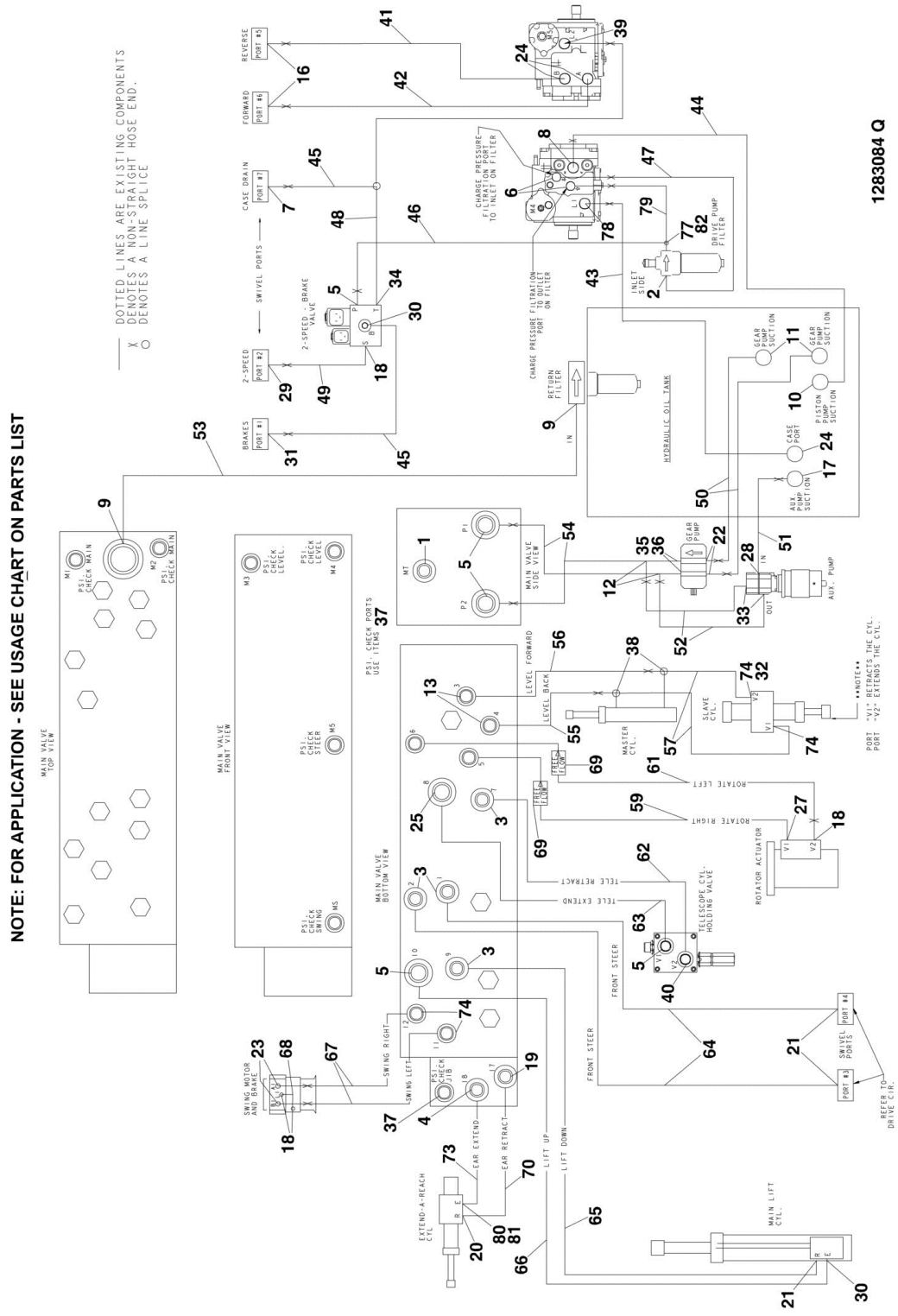

FIGURE 6-11. STANDARD HYDRAULIC DIAGRAM

ITEM	PART NUMBER	QTY	DESCRIPTION	REV
		Ref	**Usage Chart:**	
		Ref	**Machines With Caterpillar, Deutz D2011, GM and Perkins Engines (SN 0300096000 through 0300115395)**	
		Ref	**STANDARD HYDRAULIC DIAGRAM**	
	2792704	Ref	**Standard Hydraulic Diagram 400S**	2
	1283084	Ref	**Standard Hydraulic Diagram 400S**	Q
	2792705	Ref	**Standard Hydraulic Diagram 460SJ**	2
	1283084	Ref	**Standard Hydraulic Diagram 460SJ**	Q
1	2220237	1	Fitting, Plug	
2	2221042	1	Fitting, Elbow	
3	2220371	4	Fitting, Straight	
4	2220372	1	Fitting, Straight (460SJ Only)	
5	2220373	7	Fitting, Straight	
6	2220947	2	Fitting, Straight (Fitting moved to Pump Assembly)	
7	2220375	1	Fitting, Straight	
8	2220376	1	Fitting, Straight (Fitting moved to Pump Assembly)	
9	2220377	2	Fitting, Straight	
10	2220379	1	Fitting, Straight	
11	2220380	2	Fitting, Straight	
12	2220385	2	Fitting, Tee (Fitting moved to Pump Assembly)	
13	2220415	AR	Fitting, Straight	
16	2220435	2	Fitting, Straight	
17	2220451	1	Fitting, Straight	
18	2220466	4	Fitting, Elbow	
19	2220468	1	Fitting, Straight (460SJ Only)	
20	2220472	1	Fitting, Elbow (460SJ Only)	
21	2220473	3	Fitting, Elbow	
22	2220479	2	Fitting, Straight (Fitting moved to Pump Assembly)	
23	2220497	2	Fitting, Straight	
24	2220498	Ref	Fitting, Elbow	
24	2220498	3	Pump Assy without Fittings	
24	2220498	1	Pump Assy with Fittings	
25	2220500	1	Fitting, Elbow	
27	2220502	AR	Fitting, Elbow	
28	2220567	1	Fitting, Elbow	
29	2220582	1	Fitting, Straight	
30	2220596	2	Fitting, Elbow	
31	2220600	1	Fitting, Straight	
32	4567139	1	Tube	
33	2221045	2	Fitting, Elbow	
34	2220775	1	Fitting, Elbow	
35	2220810	2	Fitting, Reducer (Fitting moved to Pump Assembly)	
36	4640744	2	Fitting, Check Valve (Fitting moved to Pump Assembly)	
37	2221086	6	Fitting, Pressure Check	
38	2220899	2	Fitting, Tee	
39	2221041	1	Fitting, Tee (Fitting moved to Pump Assembly)	
40	2221044	1	Fitting, Elbow	
41	2753352	1	Hose	
42	2753353	1	Hose	
43	2753354	1	Hose	

ITEM	PART NUMBER	QTY	DESCRIPTION	REV
44	2753357	1	Hose	
45	2753351	2	Hose	
46	2752942	1	Hose	
47	2752763	1	Hose	
48	2753350	1	Hose	
49	2752430	1	Hose	
50	2753358	2	Hose	
51	2753355	1	Hose	
52	2753349	2	Hose	
53	2753356	1	Hose	
54	2752519	2	Hose	
55	2753360	1	Hose	
56	2753359	1	Hose	
57	2753514	2	Hose	
59		Ref	Hose Options:	
59	2753517	1	Hose 400S	
59	2753512	1	Hose 460SJ	
61		Ref	Hose Options:	
61	2753516	1	Hose 400S	
61	2753513	1	Hose 460SJ	
62	2753368	1	Hose	
63	2753372	1	Hose	
64	2753348	2	Hose	
65	2753369	1	Hose	
66	2753373	1	Hose	
67	2752471	2	Hose	
68	2752443	1	Hose	
69	4641282	2	Valve, Restrictor (.020)	
70	2753511	1	Hose (460SJ Only)	
73	2753515	1	Hose (460SJ Only)	
74	2220603	4	Fitting, Straight	
77	2221063	1	Fitting, Tee	
78	2220578	1	Fitting, Straight (Fitting moved to Pump Assembly)	
79	2753502	1	Hose	
80	2180724	1	Fitting, Modified Elbow (460SJ Only)	
81	2180422	1	Fitting, Plug (460SJ Only)	
82	2221216	1	Fitting, Straight	

FIGURE 6-12. STANDARD HYDRAULIC DIAGRAM

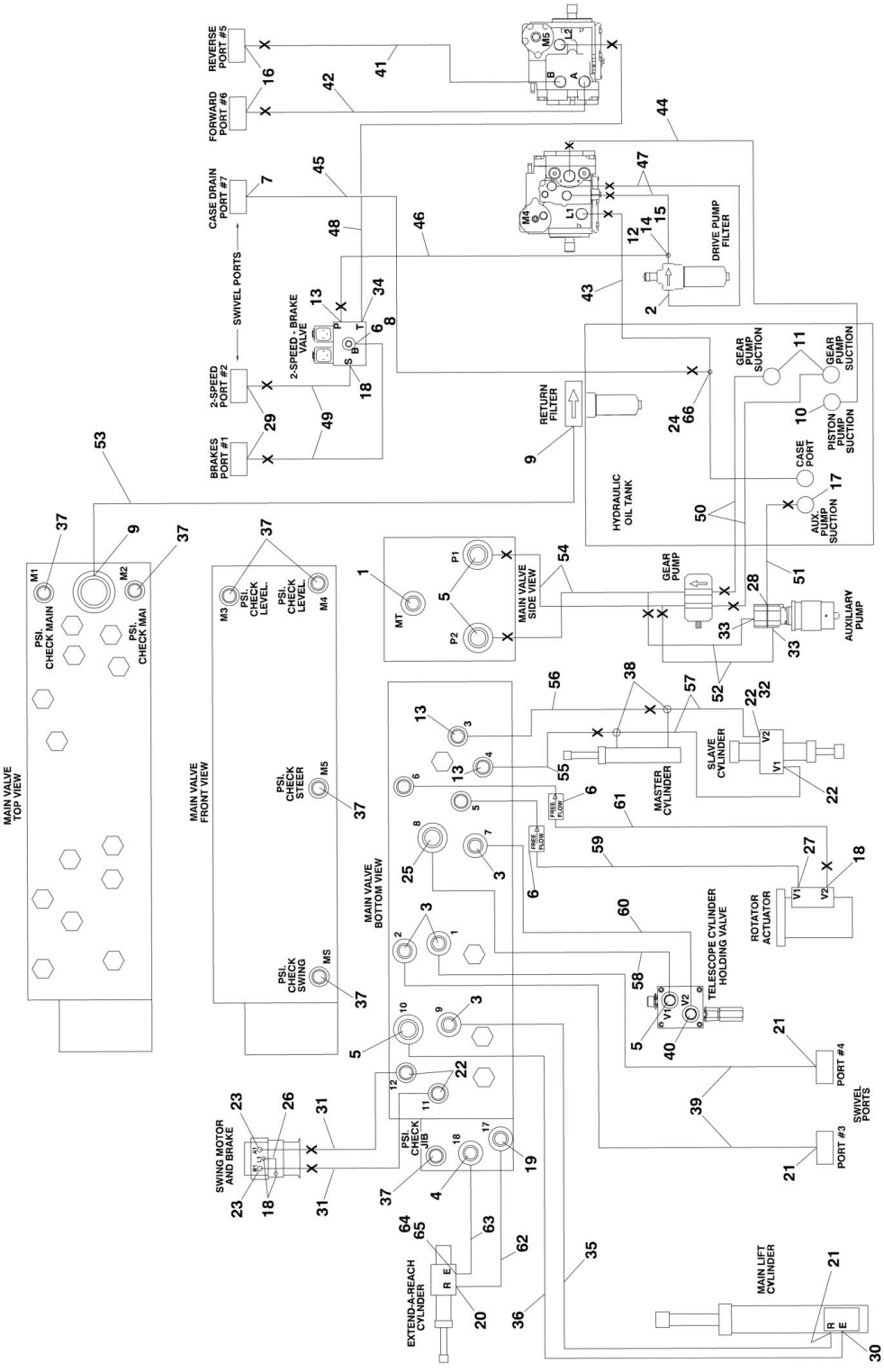

FIGURE 6-12. STANDARD HYDRAULIC DIAGRAM

ITEM	PART NUMBER	QTY	DESCRIPTION	REV
		Ref	**Usage Chart:**	
		Ref	**Machines With Caterpillar, Deutz D2011, GM and Perkins Engines (SN 0300115396 through 0300140364)**	
		Ref	**STANDARD HYDRAULIC DIAGRAM**	
	1001093359	Ref	**Standard Hydraulic Diagram 400S**	4
	1001091687	Ref	**Standard Hydraulic Diagram 400S**	F
	1001093360	Ref	**Standard Hydraulic Diagram 460SJ**	5
	1001091687	Ref	**Standard Hydraulic Diagram 460SJ**	F
1	2220237	1	Fitting, Plug	
2	2221042	1	Fitting, Elbow	
3	2220371	4	Fitting, Straight	
4	2220372	1	Fitting, Straight (460SJ Only)	
5	2220373	4	Fitting, Straight	
6	4641282	3	Valve, Restrictor (.020)	
7	2220375	1	Fitting, Straight	
8	2220654	1	Fitting, Elbow	
9	2220377	2	Fitting, Straight	
10	2220379	1	Fitting, Straight	
11	2220380	2	Fitting, Straight	
12	2220949	1	Fitting, Reducer	
13	2220415	3	Fitting, Straight	
14	2220852	1	Fitting, Straight	
15	2220948	1	Fitting, Tee	
16	2220435	2	Fitting, Straight	
17	2220451	1	Fitting, Straight	
18	2220466	4	Fitting, Elbow	
19	2220468	1	Fitting, Straight (460SJ Only)	
20	2220472	1	Fitting, Elbow (460SJ Only)	
21	2220473	3	Fitting, Elbow	
22	2220603	4	Fitting, Straight	
23	2220497	2	Fitting, Straight	
24	2220738	1	Fitting, Tee	
25	2220500	1	Fitting, Elbow	
26	2752443	1	Hose	
27	2220502	1	Fitting, Elbow	
28	2220567	1	Fitting, Elbow	
29	2220582	2	Fitting, Straight	
30	2220596	1	Fitting, Elbow	
31	2752471	2	Hose	
32	4567139	1	Tube	
33	2221045	2	Fitting, Elbow	
34	2220775	1	Fitting, Elbow	
35	2753369	1	Hose	
36	2753373	1	Hose	
37	2221086	6	Fitting, Pressure Check	
38	2220899	2	Fitting, Tee	
39	2753348	2	Hose	
40	2221044	1	Fitting, Elbow	
41	2753352	1	Hose	
42	2753353	1	Hose	

ITEM	PART NUMBER	QTY	DESCRIPTION	REV
43	2753354	1	Hose	
44	2753357	1	Hose	
45	2753351	1	Hose	
46	2752433	1	Hose	
47	2752763	2	Hose	
48	2753350	1	Hose	
49	2752430	2	Hose	
50	2753358	2	Hose	
51	2753355	1	Hose	
52	2753349	2	Hose	
53	2753356	1	Hose	
54	2752519	2	Hose	
55	2753360	1	Hose	
56	2753359	1	Hose	
57	2753514	2	Hose	
58	2753372	1	Hose	
59		Ref	Hose Options:	
59	2753517	1	Hose 400S	
59	2753512	1	Hose 460SJ	
60	2753368	1	Hose	
61		Ref	Hose Options:	
61	2753516	1	Hose 400S	
61	2753513	1	Hose 460SJ	
62	2753511	1	Hose (460SJ Only)	
63	2753515	1	Hose (460SJ Only)	
64	2180724	1	Fitting, Modified Elbow (460SJ Only)	
65	2180422	1	Fitting, Plug (460SJ Only)	
66	2220622	1	Fitting, Adapter	

FIGURE 6-13. STANDARD HYDRAULIC DIAGRAM

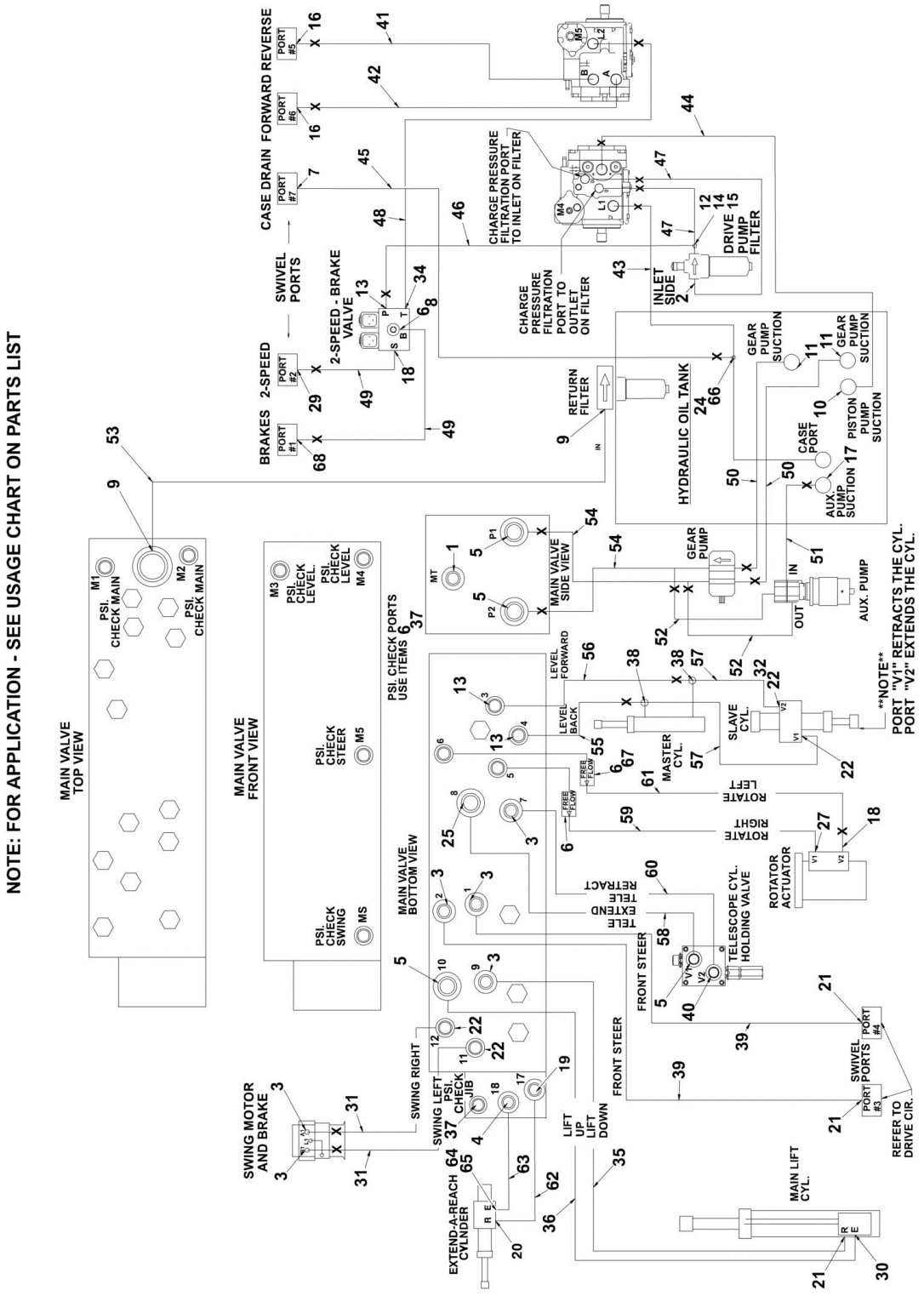

FIGURE 6-13. STANDARD HYDRAULIC DIAGRAM

ITEM	PART NUMBER	QTY	DESCRIPTION	REV
		Ref	**Usage Chart:**	
		Ref	**Machines With Caterpillar, Deutz D2011, GM and Perkins Engines (SN 0300140365 through 0300203770)**	
		Ref	**STANDARD HYDRAULIC DIAGRAM**	
	1001108462	Ref	**Standard Hydraulic Diagram 400S**	F
	1001108463	Ref	**Standard Hydraulic Diagram 460SJ**	D
1	2220237	1	Fitting, Plug	
2	2221042	1	Fitting, Elbow	
3	2220371	6	Fitting, Straight	
4	2220372	1	Fitting, Straight (460SJ Only)	
5	2220373	4	Fitting, Straight	
6	4641282	3	Valve, Restrictor (.020)	
7	2220375	1	Fitting, Straight	
8	2220654	1	Fitting, Elbow	
9	2220377	2	Fitting, Straight	
10	2220379	1	Fitting, Straight	
11	2220380	2	Fitting, Straight	
12	2220949	1	Fitting, Reducer	
13	2220415	3	Fitting, Straight	
14	2220852	1	Fitting, Straight	
15	2220948	1	Fitting, Tee	
16	2220435	2	Fitting, Straight	
17	2220451	1	Fitting, Straight	
18	2220466	2	Fitting, Elbow	
19	2220468	1	Fitting, Straight (460SJ Only)	
20	2220472	1	Fitting, Elbow (460SJ Only)	
21	2220473	3	Fitting, Elbow	
22	2220603	4	Fitting, Straight	
24	2220738	1	Fitting, Tee	
25	2220500	1	Fitting, Elbow	
27	2220502	1	Fitting, Elbow	
29	2220582	1	Fitting, Straight	
30	2220596	1	Fitting, Elbow	
31	2752471	2	Hose	
32	4567139	1	Tube	
34	2220775	1	Fitting, Elbow	
35	2753369	1	Hose	
36	2753373	1	Hose	
37	2221086	6	Fitting, Pressure Check	
38	2220899	2	Fitting, Tee	
39	2753348	2	Hose	
40	2221044	1	Fitting, Elbow	
41	2753352	1	Hose	
42	2753353	1	Hose	
43	2753354	1	Hose	
44	2753357	1	Hose	
45	2753351	1	Hose	
46	2752433	1	Hose	
47	2752763	2	Hose	
48	2753350	1	Hose	

ITEM	PART NUMBER	QTY	DESCRIPTION	REV
49	2752430	2	Hose	
50	2753358	2	Hose	
51	2753355	1	Hose	
52	2753349	2	Hose	
53	2753356	1	Hose	
54	2752519	2	Hose	
55	2753360	1	Hose	
56	2753359	1	Hose	
57	2753514	2	Hose	
58	2753372	1	Hose	
59		Ref	Hose Options:	
59	2753517	1	Hose 400S	
59	2753512	1	Hose 460SJ	
60	2753368	1	Hose	
61		Ref	Hose Options:	
61	2753516	1	Hose 400S	
61	2753513	1	Hose 460SJ	
62	2753511	1	Hose (460SJ Only)	
63	2753515	1	Hose (460SJ Only)	
64	2180724	1	Fitting, Modified Elbow (460SJ Only)	
65	2180422	1	Fitting, Plug (460SJ Only)	
66	2220622	1	Fitting, Adapter	
67	2220677	1	Fitting, Elbow	
68	2220468	1	Fitting, Adapter (400S Only)	

FIGURE 6-14. STANDARD HYDRAULIC DIAGRAM

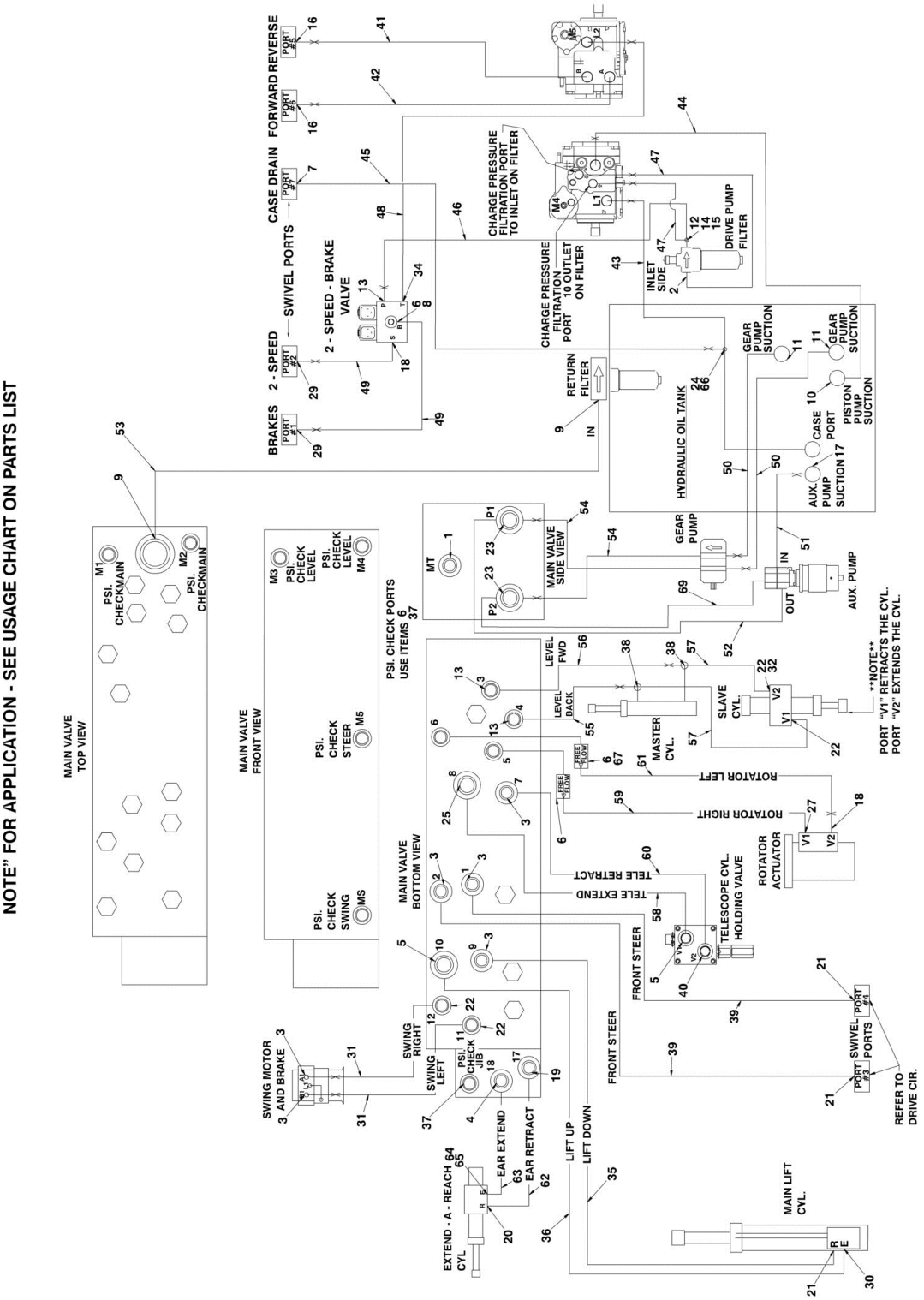

FIGURE 6-14. STANDARD HYDRAULIC DIAGRAM

ITEM	PART NUMBER	QTY	DESCRIPTION	REV
		Ref	**USAGE CHART:**	
		Ref	**Machines With Deutz TD2.9L4 Engines**	
		Ref	**STANDARD HYDRAULIC DIAGRAM**	
	1001155126	Ref	**Standard Hydraulic Diagram 400S**	A
	1001155127	Ref	**Standard Hydraulic Diagram 460SJ**	B
1	2220237	1	Fitting, Plug	
2	2221042	1	Fitting, Elbow	
3	2220371	6	Fitting, Straight	
4	2220372	1	Fitting, Straight (460SJ Only)	
5	2220373	2	Fitting, Straight	
6	4641282	3	Valve, Restrictor (.020)	
7	2220375	1	Fitting, Straight	
8	2220654	1	Fitting, Elbow	
9	2220377	2	Fitting, Straight	
10	2220379	1	Fitting, Straight	
11	2220380	2	Fitting, Straight	
12	2220949	1	Fitting, Reducer	
13	2220415	3	Fitting, Straight	
14	2220852	1	Fitting, Straight	
15	2220948	1	Fitting, Tee	
16	2220435	2	Fitting, Straight	
17	2220451	1	Fitting, Straight	
18	2220466	2	Fitting, Elbow	
19	2220468	1	Fitting, Straight (460SJ Only)	
20	2220472	1	Fitting, Elbow (460SJ Only)	
21	2220473	3	Fitting, Elbow	
22	2220603	4	Fitting, Straight	
23	2220999	2	Fitting, Tee	
24	2220738	1	Fitting, Tee	
25	2220500	1	Fitting, Elbow	
27	2220502	1	Fitting, Elbow	
29	2220582	1	Fitting, Straight	
30	2220596	1	Fitting, Elbow	
31	2752471	2	Hose	
32	4567139	1	Tube	
34	2220775	1	Fitting, Elbow	
35	2753369	1	Hose	
36	2753373	1	Hose	
37	2221086	6	Fitting, Pressure Check	
38	2220899	2	Fitting, Tee	
39	2753348	2	Hose	
40	2221044	1	Fitting, Elbow	
41	2753352	1	Hose	
42	2753353	1	Hose	
43	2753354	1	Hose	
44	2753357	1	Hose	
45	2753351	1	Hose	
46	2752437	1	Hose	
47	2752763	2	Hose	
48	2753350	1	Hose	

ITEM	PART NUMBER	QTY	DESCRIPTION	REV
49	2752430	2	Hose	
50	2753358	2	Hose	
51	1001155129	1	Hose	
52	1001155135	1	Hose	
53	2753356	1	Hose	
54	2752519	2	Hose	
55	2753360	1	Hose	
56	2753359	1	Hose	
57	2753514	2	Hose	
58	2753372	1	Hose	
59		Ref	Hose Options:	
59	2753517	1	Hose 400S	
59	2753512	1	Hose 460SJ	
60	2753368	1	Hose	
61		Ref	Hose Options:	
61	2753516	1	Hose 400S	
61	2753513	1	Hose 460SJ	
62	2753511	1	Hose (460SJ Only)	
63	2753515	1	Hose (460SJ Only)	
64	2180724	1	Fitting, Modified Elbow (460SJ Only)	
65	2180422	1	Fitting, Plug (460SJ Only)	
66	2220622	1	Fitting, Adapter	
67	2220677	1	Fitting, Elbow	
68	2220468	1	Fitting, Adapter (400S Only)	
69	1001155135	1	Hose	

FIGURE 6-15. HYDRAULIC DIAGRAM LIST

ITEM	PART NUMBER	QTY	DESCRIPTION	REV
		Ref	**Note: Information on diagrams not shown is available from JLG Service/Parts Departments.**	
		Ref	**Axle Lockout Hydraulic Diagram**	
		Ref	Axle Lockout Hydraulic Diagram **(SN 0300096000 through 0300115395)**	
	2792398	Ref	ANSI Spec	
	2792455	Ref	CE Spec	
		Ref	Axle Lockout Hydraulic Diagram **(SN 0300115396 through 0300140364)**	
	1001091926	Ref	2WD - ANSI Spec	
	1001091927	Ref	2WD - CE Spec	
	1001091729	Ref	4WD - ANSI Spec	
	1001091730	Ref	4WD - CE Spec	
		Ref	Axle Lockout Hydraulic Diagram **(SN 0300140365 through 0300203770)**	
	1001106966	Ref	ANSI and CE Spec	
	1001092140	Ref	**Axle Fixed Hydraulic Diagram**	
		Ref	**Drive Hydraulic Diagrams:**	
		Ref	2WD Machines	
	2792385	Ref	2WD Machines **(SN 0300096000 through 0300115395)**	
	1283084	Ref	2WD Machines **(SN 0300096000 through 0300115395)**	
	1001092120	Ref	2WD Machines **(SN 0300115396 through 0300140364)**	
	1001091687	Ref	2WD Machines **(SN 0300115396 through 0300140364)**	
	1001108466	Ref	2WD Machines **(SN 0300140365 through 0300203770)**	
		Ref	4WD Machines without Arctic Package	
	2792386	Ref	4WD Machines without Arctic Package **(SN 0300096000 through 0300115395)**	
	1283084	Ref	4WD Machines without Arctic Package **(SN 0300096000 through 0300115395)**	
	1001091986	Ref	4WD Machines without Arctic Package **(SN 0300115396 through 0300140364)**	
	1001091687	Ref	4WD Machines without Arctic Package **(SN 0300115396 through 0300140364)**	
	1001108464	Ref	4WD Machines without Arctic Package **(SN 0300140365 through 0300203770)**	
		Ref	4WD Machines with Arctic Package	
	1001093930	Ref	4WD Machines with Arctic Package **(SN 0300096000 through 0300115395)**	
	1001094684	Ref	4WD Machines with Arctic Package **(SN 0300115396 through 0300140364)**	
	1001091687	Ref	4WD Machines with Arctic Package **(SN 0300115396 through 0300140364)**	
	1001108465	Ref	4WD Machines with Arctic Package **(SN 0300140365 through 0300203770)**	
		Ref	**Standard Hydraulic Diagrams:**	
		Ref	Standard Hydraulic Diagrams 400S	
		Ref	Caterpillar, Deutz D2011, GM and Perkins Engines	
	2792704	Ref	Caterpillar, Deutz D2011, GM and Perkins Engines **(SN 0300096000 through 0300115395)**	
	1283084	Ref	Caterpillar, Deutz D2011, GM and Perkins Engines **(SN 0300096000 through 0300115395)**	
	1001093359	Ref	Caterpillar, Deutz D2011, GM and Perkins Engines **(SN**	

ITEM	PART NUMBER	QTY	DESCRIPTION	REV
			0300115396 through 0300140364)	
	1001091687	Ref	Caterpillar, Deutz D2011, GM and Perkins Engines **(SN 0300115396 through 0300140364)**	
	1001108462	Ref	Caterpillar, Deutz D2011, GM and Perkins Engines **(SN 0300140365 through 0300203770)**	
	1001155126	Ref	Deutz TD2.9L4 Engines	
		Ref	Deutz TD2.9L4 Engines 460SJ	
		Ref	Caterpillar, Deutz D2011, GM and Perkins Engines	
	2792705	Ref	Caterpillar, Deutz D2011, GM and Perkins Engines **(SN 0300096000 through 0300115395)**	
	1283084	Ref	Caterpillar, Deutz D2011, GM and Perkins Engines **(SN 0300096000 through 0300115395)**	
	1001093360	Ref	Caterpillar, Deutz D2011, GM and Perkins Engines **(SN 0300115396 through 0300140364)**	
	1001091687	Ref	Caterpillar, Deutz D2011, GM and Perkins Engines **(SN 0300115396 through 0300140364)**	
	1001108463	Ref	Caterpillar, Deutz D2011, GM and Perkins Engines **(SN 0300140365 through 0300203770)**	
	1001155127	Ref	Deutz TD2.9L4 Engines	
		Ref	**Standard Hydraulic Schematic**	
	2792387	Ref	Standard Hydraulic Schematic **(SN 0300096000 through 0300115395)**	
	1001093691	Ref	Standard Hydraulic Schematic **(SN 0300115396 through 0300140364)**	
	1001108461	Ref	Standard Hydraulic Schematic **(SN 0300140365 through 0300203770)**	
	2792432	Ref	**SkyWelder Hydraulic Diagram (Optional)**	
		Ref	**Tow Hydraulic Diagram**	
	2792598	Ref	Tow Hydraulic Diagram **(SN 0300096000 through 0300115395)**	
	1283084	Ref	Tow Hydraulic Diagram **(SN 0300096000 through 0300115395)**	
	1001093941	Ref	Tow Hydraulic Diagram **(SN 0300115396 through 0300140364)**	
	1001091687	Ref	Tow Hydraulic Diagram **(SN 0300115396 through 0300140364)**	
	1001108467	Ref	Tow Hydraulic Diagram **(SN 0300140365 through 0300203770)**	

SECTION 7 - ELECTRICAL

FIGURE 7-1. ELECTRICAL DIAGRAM LIST

ITEM	PART NUMBER	QTY	DESCRIPTION	REV
		Ref	**Note: Diagrams are available from the JLG Service Department.**	
		Ref	**ALARM ELECTRICAL DIAGRAMS**	
	4933025	Ref	**Motion Alarm**	
	1282937	Ref	**Motion Alarm**	
	4933026	Ref	**Travel Alarm**	
	1282937	Ref	**Travel Alarm**	
	1283002	Ref	**COLD WEATHER KITS WIRING DIAGRAM**	
	2902393	Ref	**DRIVE/STEER CUTOUT WIRING DIAGRAM**	
	4933307	Ref	**DRIVE/STEER CUTOUT WIRING DIAGRAM**	
	0270649	Ref	**ETHER START WIRING DIAGRAM (DEUTZ ENGINE MACHINES)**	
		Ref	**GENERATOR ELECTRICAL DIAGRAMS (2500W & 7500W GENERATORS)**	
		Ref	**(Note: See JLG Supplement p/n 3124242 for SkyPower Miller 7500W Generator)**	
	4933300	Ref	**CATERPILLAR ENGINES (WITHOUT UGM)**	
	1001112588	Ref	**CATERPILLAR ENGINES (WITH UGM)**	
	4933300	Ref	**Deutz D2011 Engines (All Specs) (SN 0300096000 through 0300131126)**	
	4933300	Ref	**Deutz D2011 Engines (60Hz) (SN 0300131127 through 0300203770)**	
	1001100027	Ref	**Deutz D2011 Engines (50Hz) (SN 0300131127 through 0300203770)**	
	1001180050	Ref	**Deutz TD2.9L4 Engines (All Specs Except Japanese Spec)**	
	1001199437	Ref	**Deutz TD2.9L4 Engines (Japanese Spec)**	
	1001100027	Ref	**Perkins Engines (50Hz without UGM)**	
	1001112743	Ref	**Perkins Engines (50Hz with UGM)**	
	4933350	Ref	**GM Engines**	
		Ref	**GENERATOR ELECTRICAL DIAGRAMS (4000W GENERATORS)**	
	1001159648	Ref	**Australian Spec**	
	1001153025	Ref	**CE Spec except UK Spec**	
	1001160271	Ref	**UK Spec Only**	
	4933217	Ref	**GLOW PLUG WIRING DIAGRAM (DEUTZ ENGINE MACHINES)**	
	4933219	Ref	**LIGHTS ELECTRICAL DIAGRAM**	
	3740049	1	Relay	
	4922665	Ref	**PLATFORM ELECTRICAL DIAGRAM**	
	4933313	Ref	**PLATFORM FLOODLIGHTS ELECTRICAL DIAGRAM**	
	0270814	Ref	**PLATFORM WORKLIGHTS ELECTRICAL DIAGRAM**	
	4933304	Ref	**SKYAIR ELECTRICAL DIAGRAM**	
		Ref	**STANDARD ELECTRICAL DIAGRAMS**	
		Ref	**Without UGM:**	
	4933353	Ref	**Caterpillar Engine Machines (SN 0300096000 through 0300099083)**	
	4933380	Ref	**Caterpillar/Perkins Engine Machines (SN 0300099084 through 0300203770)**	
	4933325	Ref	**Deutz Engine Machines (SN 0300096000 through 0300099083)**	
	4933379	Ref	**Deutz Engine Machines (SN 0300099084 through 0300203770)**	

ITEM	PART NUMBER	QTY	DESCRIPTION	REV
	4933348	Ref	**GM Engine Machines (SN 0300096000 through 0300099083)**	
	4933378	Ref	**GM Engine Machines (SN 0300099084 through 0300203770)**	
		Ref	**With UGM:**	
	1001102901	Ref	**Caterpillar/Perkins Engine Machines**	
		Ref	**Deutz Engine Machines**	
	1001109121	Ref	**Deutz Engine Machines (SN 0300069000 through 0300176737)**	
	1001150927	Ref	**Deutz Engine Machines (SN 0300176738 through 0300203770)**	
		Ref	**GM Engine Machines**	
	1001109200	Ref	**GM Engine Machines (SN 0300069000 through 0300176737)**	
	1001151230	Ref	**GM Engine Machines (SN 0300176738 through 0300203770)**	
		Ref	**STANDARD ELECTRICAL SCHEMATICS**	
		Ref	**Without UGM:**	
	1870132	Ref	**Caterpillar Engine Machines (SN 0300096000 through 0300099083)**	
	1870191	Ref	**Deutz and GM Engine Machines (SN 0300096000 through 0300099083)**	
	1870215	Ref	**GM Engine Machines (SN 0300099084 through 0300203770)**	
	1870215	Ref	**Caterpillar, Deutz and Perkins Engine Machines (SN 0300099084 through 0300203770)**	
		Ref	**With UGM:**	
	1001108879	Ref	**Caterpillar and Perkins Engine Machines**	
		Ref	**Deutz and GM Engine Machines**	
	1001108879	Ref	**Deutz and GM Engine Machines (SN 0300069000 through 0300177682)**	
	1001141989	Ref	**Deutz and GM Engine Machines (SN 0300177683 through 0300203770)**	
	1001131992	Ref	**GM Engine Schematic (Engine Schematic Only. P/N 1001110345 is schematic for complete machine)**	
	4933237	Ref	**SOFT TOUCH ELECTRICAL DIAGRAM**	
	4933240	Ref	**SKYWELDER ELECTRICAL DIAGRAM (OPTIONAL)**	

FIGURE 7-2. HARNESS COMPONENTS INSTALLATION (MACHINES WITHOUT UGM)

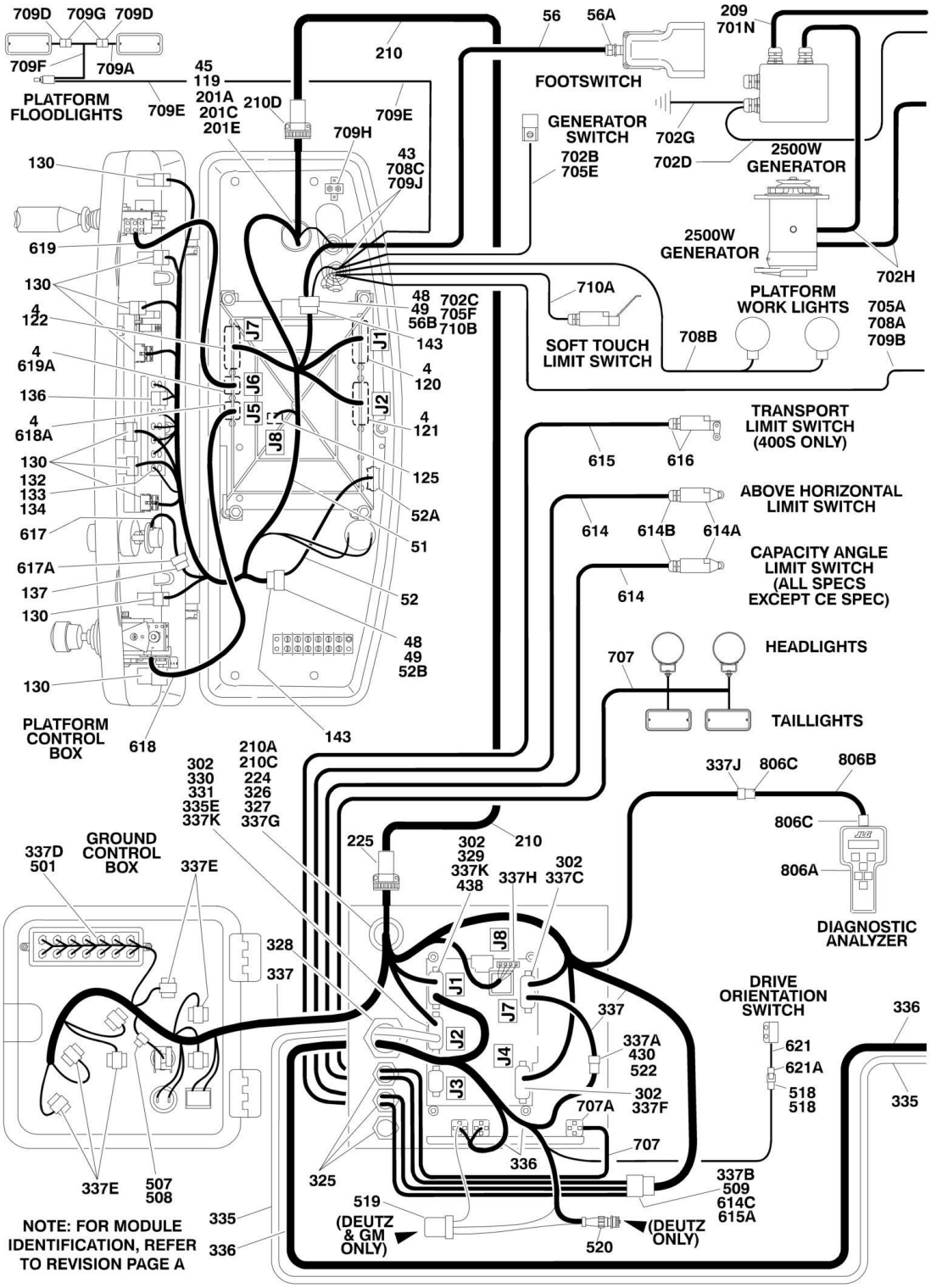

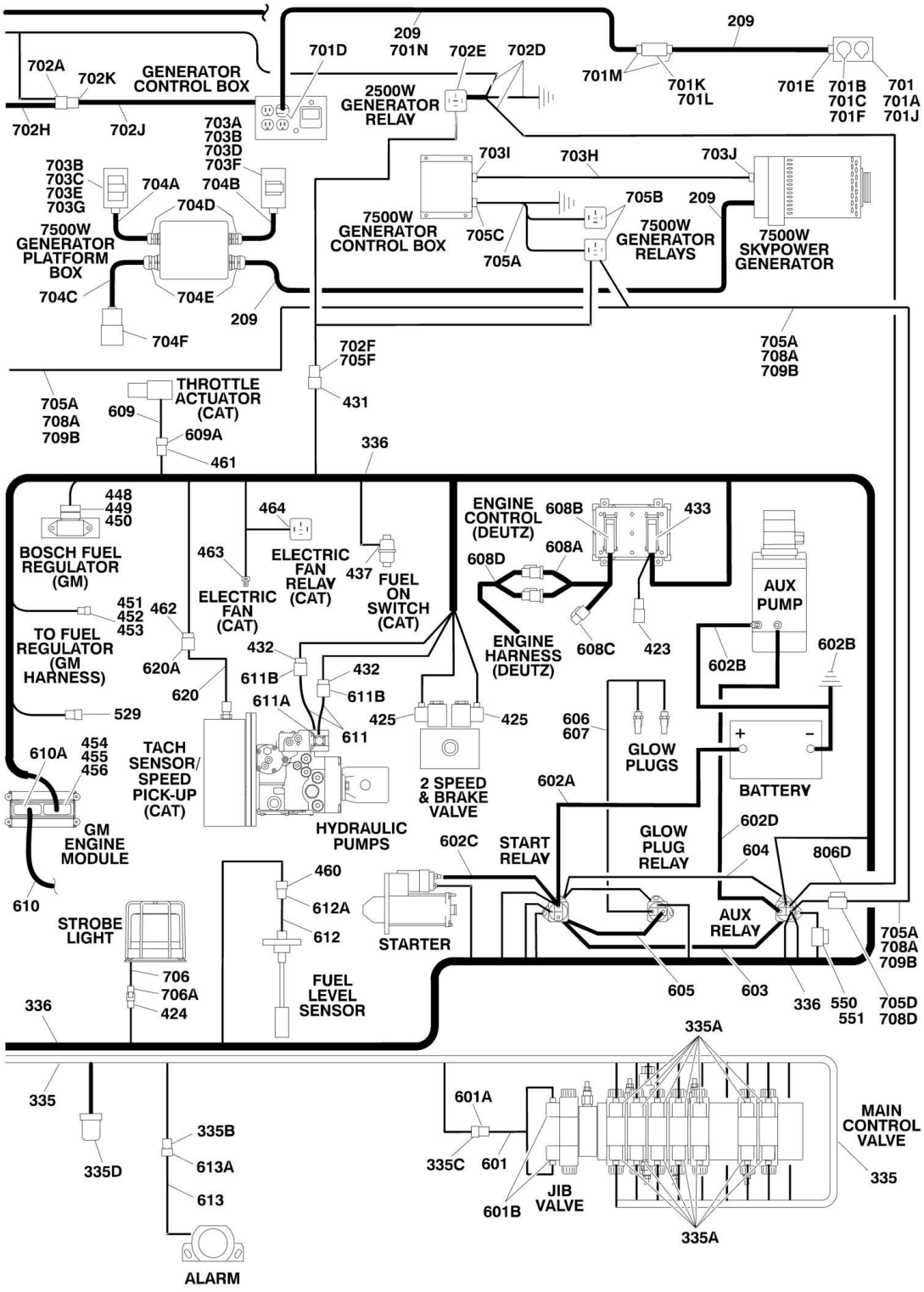
209
209
701D
209
701N
702E
702D
702A
702K
GENERATOR CONTROL BOX
701M
701K
701L
701E
701B
701C
701F
701
701A
701J
2500W GENERATOR RELAY
702H
702J
703A
703B
703D
703F
703I
703H
703J
703B
703C
703E
703G
704A
704B
704D
705B
209
7500W GENERATOR CONTROL BOX
705C
7500W GENERATOR RELAYS
7500W SKYPOWER GENERATOR
705A
7500W GENERATOR PLATFORM BOX
704C
704E
209
704F
705A
708A
709B
702F
705F
THROTTLE ACTUATOR (CAT)
705A
708A
709B
609
609A
431
461
336
448
449
450
464
ENGINE CONTROL (DEUTZ)
608B
433
608A
BOSCH FUEL REGULATOR (GM)
463
ELECTRIC FAN RELAY (CAT)
437
FUEL ON SWITCH (CAT)
608D
AUX PUMP
451
452
453
462
ELECTRIC FAN (CAT)
ENGINE HARNESS (DEUTZ)
608C
423
602B
602B
TO FUEL REGULATOR (GM HARNESS)
620A
432
611B
432
620
611B
611A
425
425
606
607
529
611
GLOW PLUGS
610A
454
455
456
TACH SENSOR/ SPEED PICK-UP (CAT)
2 SPEED & BRAKE VALVE
602A
BATTERY
GM ENGINE MODULE
HYDRAULIC PUMPS
602C
START RELAY
GLOW PLUG RELAY
602D
604
806D
610
STROBE LIGHT
460
612A
612
STARTER
AUX RELAY
705A
708A
709B
706
706A
424
FUEL LEVEL SENSOR
605
603
336
550
551
705D
708D
336
335A
335
601A
MAIN CONTROL VALVE
335B
613A
335C
601
335
335D
613
601B
JIB VALVE
335A
ALARM

FIGURE 7-2. HARNESS COMPONENTS INSTALLATION (MACHINES WITHOUT UGM)

ITEM	PART NUMBER	QTY	DESCRIPTION	REV
		Ref	**NOTE: FOR MODULE IDENTIFICATION, REFER TO REVISION LOG PAGE A.**	
		Ref	**PLATFORM CONSOLE BOX COMPONENTS**	
4	0100048	AR	Grease, Dielectric	
43	4460428	2	Connector, Strain Relief	
45	4460470	1	Nut, Terminal	
46	4460471	1	Locknut, Terminal	
48	4460708	2	Connector - 15 Position	
49	4460905	5	Seal, Plug	
51		Ref	Harness, Platform Box Options (See Items 101-143 for Breakdown):	
51	4922665	1	Harness, Platform Box **(SN 0300096000 through 0300137200)**	
51	1001107440	1	Harness, Platform Box **(SN 0300137201 through 0300203770)**	
52	4922666	1	Harness, Analyzer Cable	2-B
52A	4460761	1	Connector - 4 Position	
52A	4460227	4	Pin, Male	
52B	4460226	4	Socket, Female	
56	0272970	1	Footswitch Harness (Includes Footswitch)	A
56	1060918	7 ft/2.1m	Cable, Electrical - 18/3	
56A	4460071	1	Connector, Strain Relief	
56B	4460226	2	Socket, Female	
56B	4460464	1	Pin, Male	
		Ref	**PLATFORM BOX HARNESS ASSEMBLY**	
	4922665	Ref	**Platform Box Harness Assembly (SN 0300096000 through 03000137200)**	4-D
	1001107440	Ref	**Platform Box Harness Assembly (SN 03000137201 through 0300203770)**	C
119	4460866	1	Connector - 19 Position	
119	4460464	7	Pin, Male Deutsch 16 Ga	
119	4460508	3	Pin, Male Deutsch 12 Ga	
120	4460874	1	Connector - 35 Position (Natural)	
120	4460871	22	Socket, Female	
121	4460875	1	Connector - 35 Position (Gray)	
121	4460871	21	Socket, Female	
122	4460873	1	Connector - 35 Position (Black)	
122	4460871	18	Socket, Female	
125	4460879	1	Connector 2 Position	
125	4460887	2	Terminal (12 Gauge)	
130	4460418	6	Connector - 6 Position	
130	4460419	18	Socket, Female	
132	4120035	10	Base, Light	
133	4460634	10	Terminal (16 Gauge) (Use p/n 4460226)	
134	4460635	10	Terminal (12 Gauge)	
136	4460225	2	Connector - 6 Position	
136	4460268	5	Socket, Female	
137	4460225	2	Connector - 6 Position	
137	4460227	5	Pin, Male	
143	4460434	2	Connector - 15 Position	
143	4460227	18	Pin	
		Ref	**BOOM CABLES INSTALLATION**	

ITEM	PART NUMBER	QTY	DESCRIPTION	REV
	0271160	Ref	**Boom Cables Installation 400S (ANSI and ANSI Export Specs)**	9
	1001093916	Ref	**Boom Cables Installation 400S with Arctic Package (ANSI and ANSI Export Specs)**	B
	0271162	Ref	**Boom Cables Installation 400S (Australian and CE Specs)**	9
	0272612	Ref	**Boom Cables Installation 400S with 7500w SkyPower Generator**	5
	1001093922	Ref	**Boom Cables Installation 400S with 7500w SkyPower Generator and Arctic Package**	C
	0271159	Ref	**Boom Cables Installation 460SJ (ANSI and ANSI Export Specs)**	9
	1001093919	Ref	**Boom Cables Installation 460SJ with Arctic Package (ANSI and ANSI Export Specs)**	A
	0271161	Ref	**Boom Cables Installation 460SJ (Australian and CE Specs)**	9
	0272613	Ref	**Boom Cables Installation 460SJ with 7500w SkyPower Generator**	5
	1001093924	Ref	**Boom Cables Installation 460SJ with 7500w SkyPower Generator and Arctic Package**	B
209		Ref	Cable, Electrical Options:	
209	1060985	1	Cable, Electrical - 12/3 (400S without Arctic Package ANSI and ANSI Export Specs) (57ft/17.4m)	
209	1001093917	1	Cable, Electrical - 12/3 (400S with Arctic Package ANSI and ANSI Export Specs) (57ft/17.4m)	
209	1060986	1	Cable, Electrical - 12/3 (400S Australian and CE Specs) (57ft/17.4m)	
209	4922802	1	Cable, Electrical - 8/5 (400S with 7500W SkyPower Generator) (62ft/18.9m)	
	1001093923	1	Cable, Electrical - 8/5 (400S with Arctic Package and 7500w SkyPower Generator) (62ft/18.9m)	
209	1060983	1	Cable, Electrical - 12/3 (460SJ without Arctic Package ANSI and ANSI Export Specs) (63ft/19.2m)	
209	1001093920	1	Cable, Electrical - 12/3 (460SJ with Arctic Package ANSI and ANSI Export Specs) (63ft/19.2m)	
209	1060984	1	Cable, Electrical - 12/3 (460SJ Australian and CE Specs) (63ft/19.2m)	
209	4922803	1	Cable, Electrical - 8/5 (460SJ) (With 7500w SkyPower Generator) (68ft/20.7m)	
209	1001093925	1	Cable, Electrical - 8/5 (460SJ with Arctic Package and 7500w SkyPower Generator) (68ft/20.7m)	
210		Ref	Harness Assembly (12/4 - 18/8)	
210	4922548	1	Harness Assembly 400S without Arctic Package	3-C
210	1001093918	1	Harness Assembly 400S with Arctic Package	A
210	4922547	1	Harness Assembly 460SJ without Arctic Package	3-C
210	1001093921	1	Harness Assembly 460SJ with Arctic Package	A
210		Ref	Cable, Electrical - 12/4 & 18/8 Options:	
210	1060896	54 ft/16.5m	Cable, Electrical 400S without Arctic Package	
210	4923462	54 ft/16.5m	Cable, Electrical 400S with Arctic Package	
210	1060896	60 ft/18.3m	Cable, Electrical 460SJ without Arctic Package	
210	4923462	60 ft/18.3m	Cable, Electrical 460SJ with Arctic Package	
210A	4460465	22	Socket, Female 18 Gauge	
210B	4460865	1	Connector Deutsch - 19 Position	
210C	4460509	8	Socket, Female 12 Gauge	
210D	4460473	1	Clamp, Cable	

ITEM	PART NUMBER	QTY	DESCRIPTION	REV
210E	4460466	4	Seal, Plug	
224	4460865	1	Connector Deutsch - 19 Position	
225	4460473	1	Clamp, Cable	
		Ref	**GROUND CONTROL BOX COMPONENTS**	
302	0100048	AR	Grease, Dielectric	
325	4460428	3	Connector, Strain Relief	
326	4460470	1	Nut, Terminal	
327	4460471	1	Locknut, Terminal	
328	4460526	1	Connector, Strain Relief	
329	4460874	1	Connector (Natural)	
330	4460875	1	Connector (Gray)	
331	4460905	4	Seal, Plug	
335	4922538	1	Valve Harness Assembly	4-D
335A	4460880	14	DIN Connector	
335B	4460320	1	Connector, Female - 2 Position	
335B	4460267	2	Pin, Male	
335C	4460445	1	Connector - 3 Position	
335C	4460268	3	Pin, Female	
335D	4460836	2	Connector, Deutsch - 12 Position	
335D	4460837	2	Housing, Terminal Connector	
335D	4460465	22	Socket, Female	
335E	4460871	21	Socket, Female	
336		Ref	Engine Harness Assembly (See Items 401-464 for Breakdown)	
336	4923356	1	Caterpillar Engine Machines **(SN 0300096000 through 0300099083)**	
336	4923580	1	Caterpillar and Perkins Engine Machines **(SN 0300099084 through 0300119201)**	
336	1001098839	1	Caterpillar and Perkins Engine Machines	
336	4923260	1	Deutz Engine Machines	
336	4923419	1	GM Engine Machines	
337		Ref	Ground Control Box Harness Assembly	
337	4923456	1	Caterpillar Engine Machines **(SN 0300096000 through 0300099083)**	C
337	4923261	1	Deutz and GM Engine Machines **(SN 0300096000 through 0300099083)**	D
337	4923583	1	Caterpillar, Deutz, GM and Perkins Engine Machines **(SN 0300099084 through 0300203770)**	B
337	3990010	2	Diode 6 Amp	
337A	4460536	1	Connector - 3 Position (All Deutz, GM and Perkins Engines Caterpillar Engine) **(SN 0300099084 through 0300203770)**	
337A	4460943	3	Socket, Female (All Deutz, GM and Perkins Engines Caterpillar Engine) **(SN 0300099084 through 0300203770)**	
337B	4460434	1	Connector - 15 Position	
337B	4460227	14	Pin	
337C	4460873	1	Connector - 35 Position (Black)	
337C	4460871	AR	Socket, Female	
337C	4460905	1	Seal, Plug	
337D	4120035	AR	Base, Light	
337D	4460634	AR	Terminal (16 Gauge)	
337D	4460635	AR	Terminal (12 Gauge)	
337E	4460418	7	Connector - 6 Position	
337E	4460419	21	Socket, Female	
337F	4460876	1	Connector - 35 Position (Blue)	

ITEM	PART NUMBER	QTY	DESCRIPTION	REV
337F	4460871	22	Socket, Female	
337F	4460905	1	Seal, Plug	
337G	4460866	1	Connector - 19 Pin	
337G	4460464	7	Pin, Male Deutsch 16 Ga	
337G	4460508	3	Pin, Male (12 Gauge)	
337H	4460878	1	Housing, Terminal - 4 Position	
337H	4460887	3	Terminal (12 Gauge)	
337J	4460761	1	Connector - 4 Position	
337J	4460227	4	Pin, Male	
337K	4460871	11	Socket, Female	
339		Ref	Ground Control Box Wiring Diagram (Not Shown - See Items 501-522 for Breakdown)	
339	4933353	Ref	Caterpillar Engine Machines **(SN 0300096000 through 0300099083)**	
339	4933380	Ref	Caterpillar and Perkins Engine Machines **(SN 0300099084 through 0300141405)**	
339	4933325	Ref	Deutz Engine Machines **(SN 0300096000 through 0300099083)**	
339	4933379	Ref	Deutz Engine Machines **(SN 0300099084 through 0300203770)**	
339	4933348	Ref	GM Engine Machines **(SN 0300096000 through 0300099083)**	
339	4933378	Ref	GM Engine Machines **(SN 0300099084 through 0300203770)**	
		Ref	**ENGINE HARNESS ASSEMBLY**	
	4923356	Ref	**Caterpillar Engine (SN 0300096000 through 0300099083)**	2-B
	4923580	Ref	**Caterpillar and Perkins Engine (SN 0300099084 through 0300119201)**	B
	1001098839	Ref	**Caterpillar and Perkins Engine**	B
	4923260	Ref	**Deutz Engine**	E
	4923419	Ref	**GM Engine**	E
423	4461070	1	Connector - 3 Position with Resistor (Deutz Engine Only)	
423	4460944	3	Socket, Female (Deutz Engine Only)	
423	4461095	1	Connector - 3 Position (Deutz Engine Only)	
424	4460424	1	Connector - 2 Position	
424	4460268	2	Socket, Female	
425	4460880	2	DIN Connector without Diode	
430	4460539	1	Connector 3 Position (Deutz and GM Engines Only)	
430	4460944	3	Socket, Female (Gold)	
431	4461157	1	Connector - 2 Position (GM Engines Only)	
431	4460979	2	Pin, Male	
431	4460458	2	Seal	
432	4460742	AR	Connector - 2 Position	
432	4460457	AR	Terminal, Female	
432	4460458	AR	Seal, Terminal	
433	4461052	1	Connector - 25 Position (Deutz Engine Only)	
433	4461053	1	Cover, Receptacle (Deutz Engine Only)	
433	4461005	5	Terminal (Deutz Engine Only)	
433	4461006	5	Seal (Used with p/n 4461005) (Deutz Engine Only)	
433	4461060	2	Terminal (Deutz Engine Only)	
433	4461054	2	Seal (Used with p/n 4461060) (Deutz Engine Only)	
433	4461008	18	Plug, Hole (Deutz Engine Only)	
437		Ref	Housing - 2 Position Options: (Caterpillar Engines Only)	
437		Ref	Housing - 2 Position **(SN 0300096000 through 0300119200)**	
437	4460890	1	Housing - 2 Position (Caterpillar Engines Only)	
437	4460889	2	Terminal (All Caterpillar Engines Only)	

ITEM	PART NUMBER	QTY	DESCRIPTION	REV
437		Ref	Housing - 2 Position **(SN 0300119201 through 0300203770)**	
437	1001098923	1	Housing - 2 Position (Caterpillar Engines Only)	
437	4460465	2	Socket, Female (All Caterpillar Engines Only)	
438	4460871	AR	Socket, Female	
438	3990001	1	Diode 6 Amp (Caterpillar Engine Only)	
438	3730125	1	Resistor 120 Ohm 4 Watt (Caterpillar and Perkins Engine Only)	
448	4461121	1	Connector - 4 Position (GM Engine Only)	
449	4461122	4	Terminal, Female (GM Engine Only)	
450	4461123	4	Seal (GM Engine Only)	
451	4461124	1	Connector - 4 Position (GM Engine Only)	
452	4460693	4	Terminal, Male (GM Engine Only)	
452	4461161	1	Lock, Terminal (GM Engine Only)	
453	4460608	4	Seal (GM Engine Only)	
454	4461109	1	Connector, Plug - 16 Position (GM Engine Only)	
455	4461111	7	Pin, Male (GM Engine Only)	
456	4461113	7	Seal (GM Engine Only)	
456	4461222	9	Plug (GM Engine Only)	
460	4460834	1	Connector - 2 Position	
460	4460842	2	Terminal, Female	
461	4460891	1	Connector - 2 Position (Caterpillar and Perkins Engine Only)	
461	4460465	2	Socket, Female (Caterpillar and Perkins Engine Only)	
462	4460539	1	Connector 3 Position (Caterpillar and Perkins Engine Only)	
462	4460465	3	Socket, Female (Caterpillar and Perkins Engine Only)	
463	4460993	2	Terminal, Spade (Caterpillar and Perkins Engine Only)	
463	4460994	1	Connector - 2 Position (Caterpillar and Perkins Engine Only)	
464	4460374	1	Plug, Relay (Caterpillar and Perkins Engine Only)	
464	4460375	4	Terminal (Caterpillar and Perkins Engine Only)	
		Ref	**GROUND CONTROL BOX WIRING DIAGRAM**	
	4933353	Ref	**Caterpillar Engine Machines (SN 0300096000 through 0300099083)**	2-B
	4933380	Ref	**Caterpillar and Perkins Engine Machines (SN 0300099084 through 0300203770)**	C
	4933325	Ref	**Deutz Engine Machines (SN 0300096000 through 0300099083)**	E
	4933379	Ref	**Deutz Engine Machines (SN 0300099084 through 0300203770)**	D
	4933348	Ref	**GM Engine Machines (SN 0300096000 through 0300099083)**	C
	4933378	Ref	**GM Engine Machines (SN 0300099084 through 0300203770)**	D
501	2920129	AR	Bulb, Light	
507	2400065	1	Fuse, 30Amp	
508	2400066	1	Fuse, Holder	
509	4460708	1	Connector - 15 Position	
509	4460226	AR	Socket, Female	
509	4922637	1	Harness, Jumper (Not Shown)	
509	4922636	1	Harness, Jumper (Not Shown)	
515	4460424	1	Connector - 2 Position **(SN 0300137201 through 0300203770)**	
516	4460226	AR	Socket, Female **(SN 0300137201 through 0300203770)**	
519	4460894	1	Connector - 6 Position (Deutz and GM Only)	
519	4460892	1	Connector, Bussbar - 6 Position (Deutz and GM Only)	
520	2902443	1	Receptacle Kit (Deutz Only)	
520	4461072		Connector - 12 Position (Deutz Only)	
520	4461074	1	Shell, Receptacle (Deutz Only)	
520	4461071	4	Socket, Female (Gold) (Deutz Only)	
520	4461073	1	Cap, Dust (Deutz Only)	

ITEM	PART NUMBER	QTY	DESCRIPTION	REV
521	4923591	1	Harness, Jumper (Not Shown - Located on Module J7-6 to J7-17 Caterpillar and Perkins Only) **(SN 0300099084 through 0300203770)**	
522	4460539	1	Connector 3 Position (Caterpillar and Perkins Engines Only) **(SN 0300099084 through 0300203770)**	
		Ref	**STANDARD HARNESS COMPONENTS**	
601	4921927	1	Jib Valve Harness (460SJ Only)	
601A	4460326	1	Connector - 3 Position	
601A	4460267	3	Pin, Male	
601B	4460499	2	Connector, DIN with Diode	
602		Ref	Battery Cable Kit Options:	
602	2901880	1	Caterpillar, Deutz and Perkins Engines Machines	D
602	2902511	1	GM Engine Machines	C
602A		Ref	Cable, Battery (Red) Options:	
602A	7016843	1	Caterpillar, Deutz and Perkins Engines Machines (Battery + to Start Relay)	
602A	7027012	1	GM Engine Machines (Battery + to Auxiliary Relay)	
602B		Ref	Cable, Battery (Battery - and Auxiliary Pump to Ground) (Black) Options:	
602B	7016835	1	Caterpillar, Deutz and Perkins Engines Machines	
602B	7027013	1	GM Engine Machines	
602C		Ref	Cable, Battery (Red) Options:	
602C	7016834	1	Caterpillar, Deutz and Perkins Engines Machines (Starter Relay to Starter)	
602C	7016808	1	GM Engine Machines (Auxiliary Relay to Starter)	
602D		Ref	Cable, Battery (Auxiliary Relay to Auxiliary Pump) (Red) Options:	
602D	7016820	1	Caterpillar, Deutz and Perkins Engines Machines	
602D	7027020	1	GM Engines Machines	
603	1060904	1	Cable, Battery (Caterpillar and Perkins Engine Machines Only)	
604	14922737	1	Harness, Relay Ground (Caterpillar and Perkins Engine Machines Only)	
605	1060904	1	Cable, Jumper (Deutz Engine Machines Only)	
606	4923451	1	Harness, Glow Plug (Deutz Engine Machines Only)	
607	70000345	1	Harness, Glow Plug (Deutz Engine Machines Only)	
608		Ref	Deutz Engine Harness Components (Deutz Engine Machines Only)	
608A	7027796	1	Deutz Engine Harness	
608B	See Note	1	Connector - 25 Position (Deutz Engine Only) (Note: Not Available for Purchase)	
608C	7027793	1	Plug-In, Connector	
608D	70001872	1	Deutz Engine Harness (For other replacement parts refer to Deutz engine dealer) (was p/n 7027794)	
609	1001099927	1	Throttle Actuator Harness (Includes Actuator) (Caterpillar and Perkins Engines Only)	
609A	4460897	1	Connector -2 Position (Caterpillar and Perkins Engines Only)	
609A	4460464	2	Pin, Male (Caterpillar and Perkins Engines Only)	
609A	2820018	AR	Heat Shrink	
610	7027991	1	GM Engine Harness (GM Engine Only)	
610A	4461110	1	Connector - 16 Position (GM Engine Only)	
610A	4461112	1	Socket, Female (GM Engine Only)	
610A	4461113	16	Seal, Terminal (GM Engine Only)	
611	See Note	2	Pump Harness (Note: Not Available for Purchase)	
611A	7007497	2	Plug (Pump)	

ITEM	PART NUMBER	QTY	DESCRIPTION	REV
611B	7007498	2	Plug (Valve Harness)	
612	See Note	1	Fuel Sender Harness (Note: Not Available for Purchase)	
612	See Note	1	Connector - 2 Position (Note: Not Available for Purchase)	
612	See Note	2	Terminal, Male (Note: Not Available for Purchase)	
613	0257887	1	Alarm Harness (Includes Alarm)	
613A	4460424	1	Connector - 2 Position	
613A	4460268	2	Socket, Female	
614		Ref	Capacity/Elevation Cut-out Switch Harness Options (Includes Electrical Cable and Items 614A-614C):	
614	4922714	2	Capacity/Elevation Cut-out Switch Harness 400S (Includes Items 8.5ft/2.6m of p/n 1060902 18/2 Electrical Cable) (All Specs Except CE Spec)	B
614	1001093914	2	Capacity/Elevation Cut-out Switch Harness 400S with Arctic Package (Includes Items 8.5ft/2.6m of p/n 4923466 18/2 Polar Electrical Cable) (All Specs Except CE Spec)	A
614	4922714	1	Capacity/Elevation Cut-out Switch Harness 400S (Includes Items 8.5ft/2.6m of p/n 1060902 18/2 Electrical Cable) (CE Spec Only)	B
614	4922714	1	Capacity/Elevation Cut-out Switch Harness 460SJ (Includes Items 8.5ft/2.6m of p/n 1060902 18/2 Electrical Cable) (All Specs Except CE Spec)	B
614	1001093914	1	Capacity/Elevation Cut-out Switch Harness 460SJ with Arctic Package (Includes Items 8.5ft/2.6m of p/n 4923466 18/2 Polar Electrical Cable) (All Specs Except CE Spec)	A
614	4922714	1	Capacity/Elevation Cut-out Switch Harness 460SJ (Includes Items 8.5ft/2.6m of p/n 1060902 18/2 Electrical Cable) (CE Spec Only)	B
614A	4360548	1	Switch, Limit	
614B	4460968	1	Connector, Strain Relief	
614C	4460226	2	Socket, Female	
615	4922769	1	Transport Limit Switch Harness - 18/2 (Note: Does NOT include Limit Switch - Purchase Item 616 Separately)	
615	4922769	1	Transport Limit Switch Harness 400S (Includes Items 26.5ft/8.1m of p/n 1060680 18/2 Electrical Cable and 2 Sockets)	B
615	1001093915	1	Transport Limit Switch Harness 400S with Arctic Package (Includes Items 26.5ft/8.1m of p/n 4923466 18/2 Polar Electrical Cable and 2 Sockets)	A
615	Not Required	0	Transport Limit Switch Harness 400S with Arctic Package (Includes Items 26.5ft/8.1m of p/n 4923466 18/2 Polar Electrical Cable and 2 Sockets) 460SJ	
615A	4460226	2	Socket, Female	
616		Ref	Switch, Limit Options:	
616	4360549	1	Switch, Limit 400S (All Specs Except CE Spec)	
616	4360578	1	Switch, Limit 400S (CE Specs)	
616	Not Required	0	Switch, Limit 460SJ (All Specs Except CE Spec)	
616	4360578	1	Switch, Limit 460SJ (CE Specs)	
616	4460968	1	Connector, Strain Relief	
617	See Note	1	Speed Control Harness (Note: Not Available for Purchase)	
617A	4460224	1	Connector - 6 Position	
617A	4460226	6	Socket, Female	
618	See Note	1	Controller Harness Assembly (Lift and Swing) (Note: Not Available for Purchase)	
618A	7022819	1	Connector - 8 Position (Natural)	
618A	4460871	8	Socket, Female	
619	7022824	1	Controller Harness/Circuit Board Assembly (Drive and Steer)	
619A	7022825	1	Connector - 8 Position Black	

ITEM	PART NUMBER	QTY	DESCRIPTION	REV
619A	4460871	7	Socket, Female	
620	1001099926	1	Speed Sensor Harness (Includes Speed Sensor) (Caterpillar and Perkins Engine Only)	
620A	4460536	1	Connector - 3 Position	
620A	4460464	3	Pin, Male	
620A	2820018	AR	Heat Shrink	
621	4360517	1	Switch, Proximity	
621A	4460320	1	Connector - 2 Position	
621A	4460227	2	Pin, Male	
		Ref	**OPTIONAL HARNESS COMPONENTS**	
701		Ref	AC to Platform Receptacle Components Options:	
701	0270022	Ref	110V GFI Receptacle (All Specs Except CE Spec)	4
701	0270024	Ref	220V GFI Receptacle (All Specs Except CE Spec)	3
701		Ref	CE Specs Options:	
701		Ref	Without Generator:	
701	1001091969	Ref	110V with IEC Yellow Receptacle and Plug	C
701	1001091970	Ref	220V with IEC Blue Receptacle and Plug	C
701	1001091975	Ref	220V with AFSINT 107 Keyed Ground Receptacle and Plug	D
701	1001091973	Ref	220V with CEE 7 Post Ground Receptacle and Plug (2x4 Box)	D
701	1001091971	NLA	220V with CEE 7 Post Ground Receptacle and Plug (70x70 Box)	C
701	1001091974	Ref	220V with CEE 7 Side Ground Receptacle and Plug (2x4 Box)	D
701	1001091972	NLA	220V with CEE 7 Side Ground Receptacle and Plug (70x70 Box)	C
701		Ref	With 2500W Generator:	
701	1001100326	Ref	110V with IEC Yellow Receptacle and Plug	D
701	1001100327	Ref	220V with IEC Blue Receptacle and Plug	D
701	1001100337	Ref	220V with AFSINT 107 Keyed Ground Receptacle and Plug	D
701	1001100331	Ref	220V with CEE 7 Post Ground Receptacle and Plug (2x4 Box)	D
701	1001100329	NLA	220V with CEE 7 Post Ground Receptacle and Plug (70x70 Box)	D
701	1001100333	Ref	220V with CEE 7 Side Ground Receptacle and Plug (2x4 Box)	D
701	1001100328	NLA	220V with CEE 7 Side Ground Receptacle and Plug (70x70 Box)	D
701	1001093275	Ref	Breaker Box Installation (Required on CE Spec Machines without Powermite Generator Control Box)	B
701	1001109863	Ref	Breaker Box Installation (Required on CE Spec Machines with Powermite Generator Control Box)	A
701A		Ref	Box, Switch Options:	
701A	0860038	AR	0270022 & 0270024 Installations	
701A	0861781	AR	1001091969, 1001091970, 1001100326 & 100110327 Installations	
701A	0861782	NLA	1001091971, 1001091972, 1001100328 & 100110329 Installations (Note: Was p/n 0861782 which is no longer available. Use p/n 1001100344 CEE 7 Side Ground Service Kit or p/n 1001100343 CEE 7 Post Ground Service Kit. Kit include Box p/n 1001141967 & Items 701B, 701C & 701D.)	
701A	0861731	AR	1001091975, 1001091973, 1001091974, 1001100337 1001100331 & 100110333 Installations	
701A	1001141967	AR	1001100343, 1001100344, 1001141970 & 1001141971 Kits	
701B		Ref	Receptacle Options:	
701B	4460346	1	0270022 Installation	
701B	4460125	1	0270024 Installation	
701B	4461198	1	1001091969 & 1001100326 Installations (Includes Cvr)	

ITEM	PART NUMBER	QTY	DESCRIPTION	REV
701B	4461201	1	1001091970 & 1001100327 Installations (Includes Cvr)	
701B	4461204	NLA	1001091971 & 1001100328 Installations (Includes Cvr) (Use p/n 1001100343)	
701B	4461207	NLA	1001091972 & 1001100329 Installations (Includes Cvr) (Use p/n 1001100344)	
701B	4461244	1	1001091973 & 1001100331 Installations (Includes Cvr)	
701B	4461245	1	1001091974 & 1001100333 Installations (Includes Cvr)	
701B	4461246	1	1001091975 & 1001100337 Installations (Includes Cvr)	
701B	1001141968	1	1001100343 & 1001141971 Kits	
701B	1001141969	1	1001100344 & 1001141970 Kits	
701C		Ref	Cover Options:	
701C	4060700	1	0270022 Installation (Side Hinged)	
701C	1001110873	1	0270022 Installation (Top Hinged)	
701C	4060092	1	0270024 Installation	
701C	4461198	1	1001091969 & 1001100326 Installations (Includes Receptacle)	
701C	4461201	1	1001091970 & 1001100327 Installations (Includes Receptacle)	
701C	4461204	NLA	1001091971 & 1001100328 Installations (Includes Receptacle) (Use p/n 1001100343)	
701C	4461207	NLA	1001091972 & 1001100329 Installations (Includes Receptacle) (Use p/n 1001100344)	
701C	4461244	1	1001091973 & 1001100331 Installations (Includes Receptacle)	
701C	4461245	1	1001091974 & 1001100333 Installations (Includes Receptacle)	
701C	4461246	1	1001091975 & 1001100337 Installations (Includes Receptacle)	
701C	1001141968	1	1001100343 & 1001141971 Kits	
701C	1001141969	1	1001100344 & 1001141970 Kits	
701D		Ref	Plug Options (With 2500W Generator Only):	
701D	4460205	1	0270022 Installation (Male)	
701D	4460233	1	0270024 Installation (Male)	
701D	4461196	1	1001091969 & 1001100326 Installations (Male)	
701D	4461197	1	1001091969 & 1001100326 Installations (Female)	
701D	4461199	1	1001091970 & 1001100327 Installations (Male)	
701D	4461200	1	1001091970 & 1001100327 Installations (Female)	
701D	4461202	1	1001091973, 1001091971, 1001100331 & 1001100328 Installations &1001100343 & 1001141971 Kits (Male)	
701D	4461203	1	1001091973, 1001091971, 1001100331 & 1001100328 Installations & 1001100343 & 1001141971 Kits (Female)	
701D	4461205	1	1001091974, 1001901972, 1001100333 & 1001100329 Installations & 1001100344 & 1001141970 Kits (Male)	
701D	4461206	1	1001091974, 1001901972, 1001100333 & 1001100329 Installations & 1001100344 & 1001141970 Kits (Female)	
701D	4461249	1	1001091975 & 1001100337 Installations (Male)	
701D	4461250	1	1001091975 & 1001100337 Installations (Female)	
701E		Ref	Connector, Strain Relief Options:	
701E	4460071	1	0270022 & 0270024 Installations	
701E	4460968	1	1001091969, 1001091970, 1001091971, 1001091972, 1001100326, 1001100327, 1001100328 & 1001100329 Installations **(SN 0300096000 through 0300127204)**	
701E	1001101191	1	1001091969, 1001091970, 1001091971, 1001091972, 1001100326, 1001100327, 1001100328 & 1001100329 Installations **(SN 0300127205 through 0300203770)**	

ITEM	PART NUMBER	QTY	DESCRIPTION	REV
701E	4460662	1	1001091975, 1001091973, 1001091974, 1001100337, 1001100331 & 1001100333 Installations **(SN 0300096000 through 0300108584)**	
701E	4460968	1	1001091975, 1001091973, 1001091974, 1001100337, 1001100331 & 1001100333 Installations **(SN 0300108585 through 0300127204)**	
701E	1001101191	1	1001091975, 1001091973, 1001091974, 1001100337, 1001100331 & 1001100333 Installations **(SN 0300127205 through 0300203770)**	
701E	Not Required	0	0270022 & 0270024 Installations	
701E	Not Required	0	1001091969, 1001091970, 1001091971, 1001091972, 1001100326, 1001100327, 1001100328 & 1001100329 Installations **(SN 0300096000 through 0300127204)**	
701E	1001101196	1	1001091969, 1001091970, 1001091971, 1001091972, 1001100326, 1001100327, 1001100328 & 1001100329 Installations **(SN 0300127205 through 0300203770)**	
701E	Not Required	0	1001091975, 1001091973, 1001091974, 1001100337, 1001100331 & 1001100333 Installations **(SN 0300096000 through 0300127204)**	
701E	1001101196	1	1001091975, 1001091973, 1001091974, 1001100337, 1001100331 & 1001100333 Installations **(SN 0300127205 through 0300203770)**	
701E	0100020	AR	Sealant	
701F	3960422	1	Gasket (0270022 & 0270024 Installations Only)	
701G	4460315	1	Terminal, Spade (0270022 & 0270024 Installations Only) (Not Shown)	
701H		Ref	Decal - AC Power (Not Shown)	
701H	1703464	1	110V	
701H	3252507	1	220V	
701J	0903484	AR	Bracket, Receptacle Box Mounting (Only Required on CE Spec Installations	
701K	0903566	1	Bracket, Circuit Breaker Mounting (Only Required on CE Spec Installations)	
701L		Ref	Breaker, Circuit Kit Options (Only Required on CE Spec Installations):	
701L	2902549	AR	Kit (Without Powermite Generator Control Box)	E
701L	1001109864	AR	Kit (With Powermite Generator Control Box)	B
701L		Ref	Circuit Breaker Options:	
		Ref	**Note: For machines with Powermite Generator Control Box use p/n 1001181046. For machines without Powermite Generator Control Box use p/n 1001181045.**	
701L	1001109477	NLA	Breaker 10A (Use p/n 1001181046)	
701L	1001109475	NLA	Breaker 16A (Use p/n 1001181045)	
701L	1001109482	NLA	Breaker 30mA (Use p/n 1001181046 for 10A/30mA combination or p/n 1001181045 for 16A/30mA combination)	
701L	0861880	1	Breaker Box	
701L	4460957	1	Terminal Block	
701L	4460956	1	Barrier, Terminal Block	
701M		Ref	Connector, Strain Relief Options (Only Required on CE Spec Installations):	
701M	4460633	2	Connector, Strain Relief **(SN 0300096000 through 0300117541)**	
701M	1001097150	2	Connector, Strain Relief **(SN 0300117542 through 0300203770)**	
701N	1060908	Ref	Cable, Extension Options (Only Required on CE Spec Installations):	

ITEM	PART NUMBER	QTY	DESCRIPTION	REV
701N	1060908	6 ft/1.8m	Without Powermite Generator Control Box	
701N	1060908	10 ft/3m	With Powermite Generator Control Box	
	0275216	1	Receptacle, Box and Plug Kit (110V IEC Yellow) (Includes Items 701A-701C & Male 701D Plug End) (1001091969 Installation)	1-A
	1001100341	1	Receptacle and Box Kit (110V IEC Yellow) (Includes Items 701A-701C & Male 701D Plug End) (1001100326 Installation)	2-A
	0275217	1	Receptacle, Box and Plug Kit (220V IEC Blue) (Includes Items 701A-701C & Male 701D Plug End) (1001091970 Installation)	1-A
	1001100342	1	Receptacle and Box Kit (220V IEC Blue) (Includes Items 701A-701C & Male 701D Plug End) (1001100327 Installation)	2-A
	0275218	NLA	Receptacle, Box and Plug Kit (220V CEE 7 Post Ground with 70x70 Box) (Includes Items 701A-701C & Male 701D Plug End) (1001091971 Installation) (Use p/n 1001100343)	B-B
	1001100343	1	Receptacle and Box Kit (220V CEE 7 Post Ground with 70x70 Box) (Includes Items 701A-701C & Male 701D Plug End) (1001100328 Installation)	2-A
	0275219	NLA	Receptacle, Box and Plug Kit (220V CEE 7 Side Ground with 70x70 Box) (Includes Items 701A-701C & Male 701D Plug End) (1001091972 Installation) (Use p/n 1001100344)	B-B
	1001100344	1	Receptacle and Box Kit (220V CEE 7 Side Ground with 70x70 Box) (Includes Items 701A-701C & Male 701D Plug End) (1001100329 Installation)	2-A
	0275452	1	Receptacle, Box and Plug Kit (220V CEE 7 Post Ground with 2x4 Box) (Includes Items 701A-701C & Male 701D Plug End) (1001091973 Installation)	1-A
	1001100345	1	Receptacle and Box Kit (220V CEE 7 Post Ground with 2x4 Box) (Includes Items 701A-701C & Male 701D Plug End) (1001100331 Installation)	2-A
	0275453	1	Receptacle, Box and Plug Kit (220V CEE 7 Side Ground with 2x4 Box) (Includes Items 701A-701C & Male 701D Plug End) (1001091974 Installation)	1-A
	1001100347	1	Receptacle and Box Kit (220V CEE 7 Side Ground with 2x4 Box) (Includes Items 701A-701C & Male 701D Plug End) (1001100333 Installation)	2-A
	0275454	1	Receptacle, Box and Plug Kit (220V AFSINT 107 Keyed Ground) (Includes Items 701A-701C & Male 701D Plug End) (1001091975 Installation)	1-A
	1001100346	1	Receptacle and Box Kit (220V AFSINT 107 Keyed Ground) (Includes Items 701A-701C & Male 701D Plug End) (1001100337 Installation)	2-A
	2902549	1	Circuit Breaker Box Kit (Includes Items 701L-701N) (Only Required on CE Spec Installations)	C
702		Ref	Generator Electrical Components	
702	4933300	Ref	110V (Caterpillar/Ford/Perkins Engines)	B
702	4933300	Ref	110V (Deutz Engines All Specs) **(SN 0300096000 through 0300131126)**	1-A
702	4933300	Ref	110V (Deutz Engines 60Hz) **(SN 0300131127 through 0300203770)**	1-A
702	1001100027	Ref	110V (Deutz Engines 50Hz) **(SN 0300131127 through 0300203770)**	4-D
702	4933350	Ref	110V (GM Engines)	B
702	4933300	Ref	220V (Except Deutz 50Hz) **(SN 0300131127 through 0300203770)**	2-A
702	1001100027	Ref	220V (Deutz 50Hz Only) **(SN 0300131127 through 0300203770)**	4-D
702A	4460321	1	Connector - 4 Position	
702A	4460906	4	Socket, Female	
702B	4922641	1	Harness - On/Off Switch	1-A

ITEM	PART NUMBER	QTY	DESCRIPTION	REV
702C	4460226	2	Socket, Female	
702D		Ref	Powermite Control Box to Relay Harness Options:	
702D	4922970	1	110V (Caterpillar/ Deutz/ Ford/ Perkins Engines) Options:	1-A
702D	4923445	1	110V (GM Engines)	A
702D	4922970	1	220V	1-A
702E	4460374	1	Plug, Relay Only **(SN 0300096000 through 0300131127)**	
702E	4460375	3	Terminal	
702F	4460742	1	Connector - 2 Position (GM Engines	
702F	4460743	2	Socket, Female (GM Engines)	
702F	4460458	2	Seal, Wire (GM Engines)	
702G	1001100305	1	Harness, Ground (50Hz Generators with Junction Box Used Only) **(SN 0300096000 through 0300136081)**	
702H	7020193	1	2500W Generator Power Cable	
702J	See Note	1	Control Box Harness (Note: Not Available for Purchase)	
702K	4460961	1	Connector - 4 Position	
702K	4460705	4	Pin, Male	
703		Ref	7500W SKYPOWER GENERATOR INSTALLATION	
703	0273003	Ref	60Hz and Caterpillar Engine	K
703	0273004	Ref	50Hz Spec and Caterpillar Engine	G
703	0272597	Ref	60Hz and Deutz Engine	L
703	0272596	Ref	50Hz Spec and Deutz Engine	I
703	0275057	Ref	60Hz Spec and GM Engine	F
703	1001097331	Ref	60Hz and Perkins Engine	D
703	1001097332	Ref	50Hz Spec and Perkins Engine	C
703A		Ref	Connector Twist-Lock Options:	
703A	4460958	1	60Hz Spec	
703A	See Note	1	50Hz Spec (Note: Not Available - Purchase Locally)	
703B		Ref	Gasket Options:	
703B	3960422	2	60Hz Spec	
703B	See Note	2	50Hz Spec (Note: Not Available - Purchase Locally)	
703C		Ref	Cover, Receptacle Options:	
703C	4060700	1	60Hz Spec (Side Hinged)	
703C	1001110873	1	60Hz Spec (Top Hinged)	
703C	See Note	1	50Hz Spec (Note: Not Available - Purchase Locally)	
703D		Ref	Cover, Receptacle Options:	
703D	4061043	1	60Hz Spec (Side Hinged)	
703D	1001110872	1	60Hz Spec (Top Hinged)	
703D	See Note	1	50Hz Spec (Note: Not Available - Purchase Locally)	
703E		Ref	Receptacle Options:	
703E	4460346	1	60Hz Spec	
703E	See Note	1	50Hz Spec (Note: Not Available - Purchase Locally)	
703F	4460051	1	Connector, Strain Relief	
703G	4460071	1	Connector, Strain Relief	
703H	4922925	1	Harness, Generator	
703I	77363233	1	Connector - 6 Position	
703I	4460465	6	Socket, Female	
703J	4460225	1	Connector - 6 Position	
703J	4460226	6	Socket, Female	
704		Ref	7500W SkyPower Generator Junction Box Components	
704	0861542	Ref	60HZ SPEC	D
704	0861567	Ref	50Hz Specs	B
704A		Ref	Cable, Electrical 12/3	

ITEM	PART NUMBER	QTY	DESCRIPTION	REV
704A	1060494	2 ft/.6m	60Hz Spec	
704A	See Note	2 ft/.6m	50Hz Spec (Note: Not Available - Purchase Locally)	
704B		Ref	Cable, Electrical 10/3	
704B	1060708	2.5 ft/.76m	60Hz Spec	
704B	See Note	2.5 ft/.76m	50Hz Spec (Note: Not Available - Purchase Locally)	
704C	1060343	1.5 ft/.46m	Cable, Electrical 10/4 (60Hz Spec Only)	
704D	4460425	2	Connector, Strain Relief	
704E		Ref	Component Options:	
704E	4460426	2	Connector, Strain Relief (60Hz Spec Only)	
704E	4460426	1	Connector, Strain Relief (50Hz Spec Only)	
704E	3520189	1	Plug (50Hz Spec Only)	
704F	1671092	1	Cover (60Hz Spec Only)	
704F	4460963	1	Connector (60Hz Spec Only)	
705		Ref	7500W Generator Electrical Diagram Components	
705	4933264	Ref	Caterpillar, Deutz and Perkins Engine Machines	C
705	4933349	Ref	GM Engine Machines **(SN 0300177683 through 0300182510)**	B
705	1001157768	Ref	GM Engine Machines **(SN 0300182511 through 0300203770)**	A
705A		Ref	Generator Harness Options:	
705A	4922757	1	Caterpillar, Deutz and Perkins Engine Machines	3-C
705A	4923420	1	GM Engine Machines	A
705B	4460374	2	Plug, Sealed Relay	
705B	4460375	7	Terminal	
705C	4460967	1	Connector - 3 Position	
705C	4460465	3	Socket, Female	
705D	2400060	1	Fuseholder	
705D	2400064	1	Fuse - 5 Amp	
705E	4922641	1	Switch Harness	
705F	4460742	1	Connector - 2 Position (Caterpillar and Perkins Engines)	
705F	4460743	2	Socket, Female (Caterpillar and Perkins Engines)	
705F	4460458	2	Seal, Wire (Caterpillar and Perkins Engines)	
706	0255917	1	Strobe Light Harness (Includes Strobe Light)	C
706A	4460320	1	Connector - 2 Position	
706A	4460267	2	Pin, Male	
707	See Note	1	Lights Harness (Note: Not Available for Purchase)	
707	1060341	37 ft/11.3m	Cable, Electrical - 16/2	
707A	3740049	1	Relay	
707A	4922643	1	Harness, Bag (Located at Ground Control Box) (Not Shown)	
708		Ref	Platform Worklights Components	
708A		Ref	Harness, Console Box to Aux Relay Options:	
708A	1060983	1	400S (63ft/19.2m of 12/3 Cable P/N 1060494)	
708A	4922965	1	460SJ (69ft/21m of 12/3 Cable P/N 1060494)	
708B	2920140	2	Platform Worklights External Harness (Includes Light and Wire Only)	
708C	4460426	1	Connector, Strain Relief	
708D	2400070	1	Fuse	
708D	2400066	1	Holder, Fuse	
709		Ref	Platform Floodlights Components	
709A	2920157	2	Platform Floodlights External Harness (Includes Lights and Wire Only) (Not Shown)	

ITEM	PART NUMBER	QTY	DESCRIPTION	REV
709B		Ref	Harness, Console Box to Aux Relay Options:	
709B	1060983	1	400S (63ft/19.2m of 12/3 Cable P/N 1060494)	
709B	4922965	1	460SJ (69ft/21m of 12/3 Cable P/N 1060494)	
709C	4933313	Ref	Platform Floodlight Wiring Diagram Components	1-A
709D	4460320	2	Connector - 2 Position	
709D	4460227	4	Pin, Male	
709E	1060977	1	Cord, 2 Wire Coiled (Console Box Circuit Breaker to Switch)	
709F	4922764	2	Platform Floodlights Harness (Lights to Switch) (Not Shown)	1-A
709G	4460424	2	Connector - 2 Position	
709G	4460226	4	Socket, Female	
709H	4360232	1	Circuit Breaker, 15Amp	
709J	4460425	1	Connector, Strain Relief	
710	4933218	1	Soft-Touch System Wiring Diagram	1-B
710A	1060902	23 ft/7m	Cable, Electrical - 18/2	
710B	4460871	2	Socket, Female	
		Ref	**TOOLS**	
801	7002821	1	Crimper (For Wire to Pin/Socket Connections) (Not Shown)	
802	7002823	1	Extractor (For Removal of Pin/Socket from Connectors) (Not Shown)	
803	4460467	1	Extractor, Pin (Blue 16-18 Gauge) (For Removal of Pin/Socket from Connectors) (Not Shown)	
804	4460510	1	Extractor, Pin (Yellow 12-14 Gauge) (For Removal of Pin/Socket from Connectors) (Not Shown)	
805	7002828	1	Stripper, Wire (Not Shown)	
806	2901443	1	Analyzer Kit (Not Shown)	1-A
806A	1600244	1	Analyzer	
806B	1060633	1	Cable, Analyzer	
806C	4460321	2	Plug, Male	
806C	4460226	8	Socket, Female	

FIGURE 7-3. HARNESS COMPONENTS INSTALLATION (MACHINES WITH UGM) (SN 0300069000 through 0300177682)

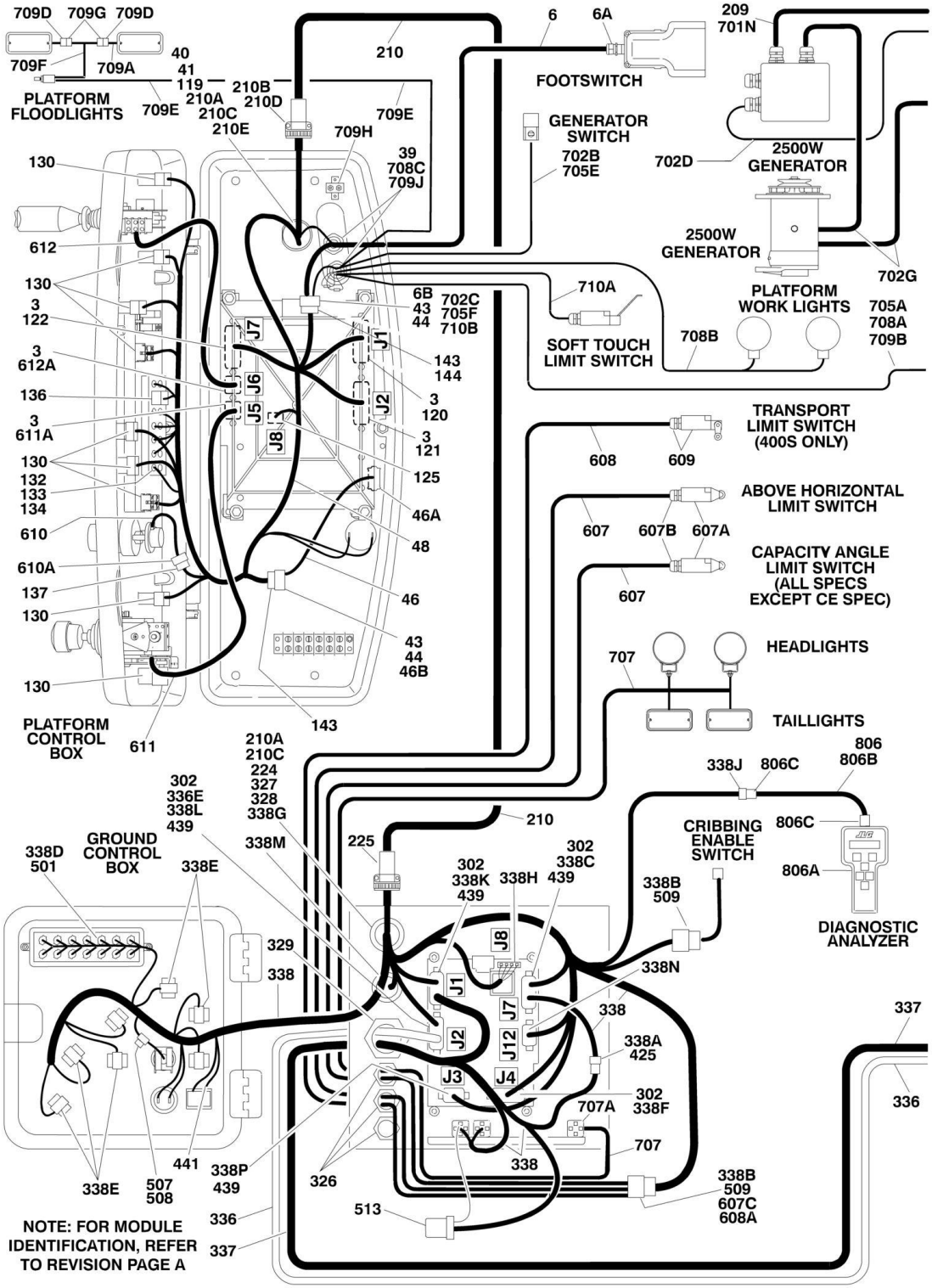

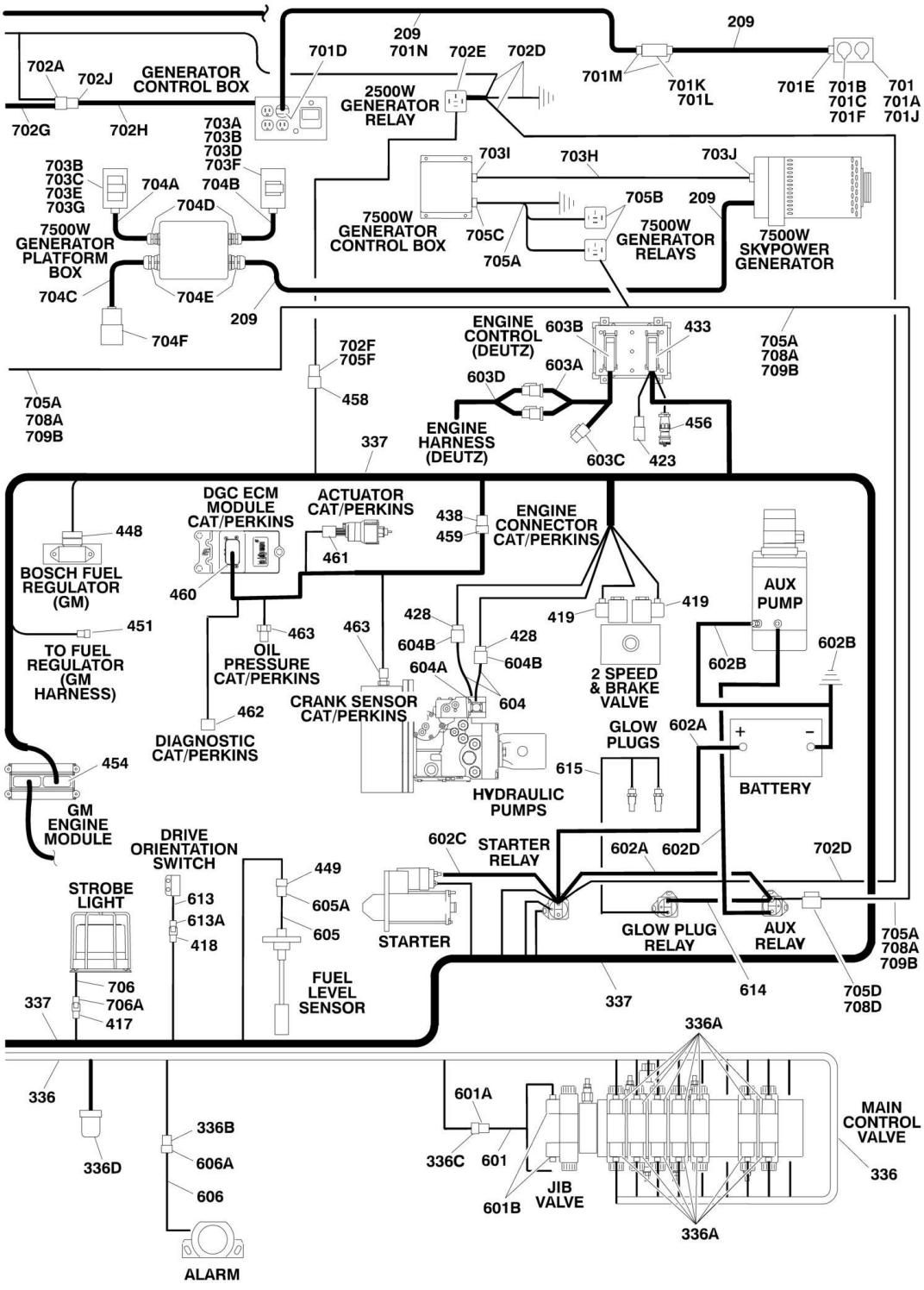
209
701D
209
701N
702E
702D
209
702A
702J
GENERATOR CONTROL BOX
2500W GENERATOR RELAY
701M
701K
701L
701E
701B
701C
701F
701
701A
701J
702G
702H
703A
703B
703D
703F
703I
703H
703J
703B
703C
703E
703G
704A
704B
704D
705B
209
7500W GENERATOR CONTROL BOX
705C
705A
7500W GENERATOR RELAYS
7500W SKYPOWER GENERATOR
7500W GENERATOR PLATFORM BOX
704C
704E
209
704F
ENGINE CONTROL (DEUTZ)
603B
433
705A
708A
709B
702F
705F
603A
603D
458
705A
708A
709B
ENGINE HARNESS (DEUTZ)
456
337
603C
423
DGC ECM MODULE CAT/PERKINS
ACTUATOR CAT/PERKINS
438
459
ENGINE CONNECTOR CAT/PERKINS
448
461
AUX PUMP
BOSCH FUEL REGULATOR (GM)
460
419
419
428
463
463
428
602B
451
604B
604B
602B
TO FUEL REGULATOR (GM HARNESS)
OIL PRESSURE CAT/PERKINS
604A
2 SPEED & BRAKE VALVE
462
CRANK SENSOR CAT/PERKINS
604
GLOW PLUGS
602A
DIAGNOSTIC CAT/PERKINS
454
615
BATTERY
HYDRAULIC PUMPS
GM ENGINE MODULE
602C
STARTER RELAY
602A
602D
702D
DRIVE ORIENTATION SWITCH
449
STROBE LIGHT
613
605A
613A
605
STARTER
GLOW PLUG RELAY
AUX RELAY
705A
708A
709B
418
706
FUEL LEVEL SENSOR
614
705D
708D
337
706A
337
337
417
336A
336
601A
MAIN CONTROL VALVE
336B
336C
601
336
336D
606A
606
JIB VALVE
601B
336A
ALARM

FIGURE 7-3. HARNESS COMPONENTS INSTALLATION (MACHINES WITH UGM) (SN 0300069000 through 0300177682)

ITEM	PART NUMBER	QTY	DESCRIPTION	REV
		Ref	**NOTE: FOR MODULE IDENTIFICATION, REFER TO REVISION LOG PAGE A.**	
		Ref	**PLATFORM CONSOLE BOX COMPONENTS**	
3	0100048	AR	Grease, Dielectric	
6		Ref	Footswitch Harness Options (Includes Footswitch):	
6	0272970	1	Footswitch Harness **(SN 0300096000 through 0300167707)**	B
6	1001117174	1	Footswitch Harness **(SN 0300167708 through 0300203770)**	B
6	1060918	7 ft/2.1m	Cable, Electrical - 18/3	
6A	4460071	1	Connector, Strain Relief	
6B	4460226	2	Socket, Female	
6B	4460464	1	Pin, Male	
39	4460428	2	Connector, Strain Relief	
40	4460470	1	Nut, Terminal	
41	4460471	1	Locknut, Terminal	
43	4460708	2	Connector - 15 Position	
44	4460905	5	Seal, Plug	
46	4922666	1	Harness, Analyzer Cable	2-B
46A	4460761	1	Connector - 4 Position	
46A	4460227	4	Pin, Male	
46B	4460226	4	Socket, Female	
48	1001107440	1	Harness, Platform Box (See Items 101-143 for Breakdown)	
	1001107440	Ref	**PLATFORM BOX HARNESS ASSEMBLY**	D
119	4460866	1	Connector - 19 Position	
119	4460464	7	Pin, Male Deutsch 16 Ga	
119	4460508	3	Pin, Male Deutsch 12 Ga	
120	4460874	1	Connector - 35 Position (Natural)	
120	4460871	22	Socket, Female	
121	4460875	1	Connector - 35 Position (Gray)	
121	4460871	21	Socket, Female	
122	4460873	1	Connector - 35 Position (Black)	
122	4460871	18	Socket, Female	
125	4460879	1	Connector 2 Position	
125	4460887	2	Terminal (12 Gauge)	
130	4460418	6	Connector - 6 Position	
130	4460419	18	Socket, Female	
132	4120035	10	Base, Light	
133	4460226	10	Terminal (16 Gauge)	
134	4460635	10	Terminal (12 Gauge)	
136	4460225	1	Connector - 6 Position	
136	4460268	5	Socket, Female	
137	4460225	1	Connector - 6 Position	
137	4460227	5	Pin, Male	
143	4460434	2	Connector - 15 Position	
143	4460227	18	Pin	
		Ref	**BOOM CABLES INSTALLATION**	
	0271160	Ref	**400S (ANSI and ANSI Export Specs)**	9
	1001093916	Ref	**400S with Arctic Package (ANSI and ANSI Export Specs)**	D
	0271162	Ref	**400S (Australian and CE Specs)**	9
	0272612	Ref	**400S with 7500w SkyPower Generator**	5

ITEM	PART NUMBER	QTY	DESCRIPTION	REV
	1001093922	Ref	**400S with 7500w SkyPower Generator and Arctic Package**	E
	0271159	Ref	**460SJ (ANSI and ANSI Export Specs)**	9
	1001093919	Ref	**460SJ with Arctic Package (ANSI and ANSI Export Specs)**	C
	0271161	Ref	**460SJ (Australian and CE Specs)**	9
	0272613	Ref	**460SJ with 7500w SkyPower Generator**	5
	1001093924	Ref	**460SJ with 7500w SkyPower Generator and Arctic Package**	D
209		Ref	Cable, Electrical Options:	
209	1060985	1	Cable, Electrical - 12/3 (400S without Arctic Package ANSI and ANSI Export Specs) (57ft/17.4m)	
209	1001093917	1	Cable, Electrical - 12/3 (400S with Arctic Package ANSI and ANSI Export Specs) (57ft/17.4m)	
209	1060986	1	Cable, Electrical - 12/3 (400S Australian and CE Specs) (57ft/17.4m)	
209	4922802	1	Cable, Electrical - 8/5 (400S with 7500w SkyPower Generator) (62ft/18.9m)	
209	4922802	1	Cable, Electrical - 8/5 (400S with Arctic Package and 7500w SkyPower Generator) (62ft/18.9m)	
209	1060983	1	Cable, Electrical - 12/3 (460SJ without Arctic Package ANSI and ANSI Export Specs) (63ft/19.2m)	
209	1001093920	1	Cable, Electrical - 12/3 (460SJ with Arctic Package ANSI and ANSI Export Specs) (63ft/19.2m)	
209	1060984	1	Cable, Electrical - 12/3 (460SJ Australian and CE Specs) (63ft/19.2m)	
209	4922803	1	Cable, Electrical - 8/5 (460SJ) (With 7500w SkyPower Generator) (68ft/20.7m)	
209	4922803	1	Cable, Electrical - 8/5 (460SJ with Arctic Package and 7500w SkyPower Generator) (68ft/20.7m)	
210		Ref	Harness Assembly (12/4 - 18/8)	
210	4922548	1	400S without Arctic Package	3-C
210	1001093918	1	400S with Arctic Package	A
210	4922547	1	460SJ without Arctic Package	3-C
210	1001093921	1	460SJ with Arctic Package	A
210		Ref	Cable, Electrical - 12/4 & 18/8 Options:	
210	1060896	54 ft/16.5m	400S without Arctic Package	
210	4923462	54 ft/16.5m	400S with Arctic Package	
210	1060896	60 ft/18.3m	460SJ without Arctic Package	
210	4923462	60 ft/18.3m	460SJ with Arctic Package	
210A	4460465	22	Socket, Female 18 Gauge	
210B	4460865	1	Connector Deutsch - 19 Position	
210C	4460509	8	Socket, Female 12 Gauge	
210D	4460473	1	Clamp, Cable	
210E	4460466	4	Seal, Plug	
224	4460865	1	Connector Deutsch - 19 Position	
225	4460473	1	Clamp, Cable	
		Ref	**GROUND CONTROL BOX COMPONENTS**	
302	0100048	AR	Grease, Dielectric	
326	4460428	3	Connector, Strain Relief	
327	4460470	1	Nut, Terminal	
328	4460471	1	Locknut, Terminal	
329	4460526	1	Connector, Strain Relief	

ITEM	PART NUMBER	QTY	DESCRIPTION	REV
336	4922538	1	Valve Harness Assembly	4-E
336A	4460880	14	DIN Connector	
336B	4460320	1	Connector - 2 Position	
336B	4460267	2	Pin, Male	
336C	4460445	1	Connector - 3 Position	
336C	4460268	3	Pin, Female	
336D	4460836	2	Connector, Deutsch - 12 Position	
336D	4460837	2	Housing, Terminal Connector	
336D	4460465	22	Socket, Female	
336E	4460871	21	Socket, Female	
337		Ref	Engine Harness Assembly (See Items 401-463 for Breakdown)	
337	1001102798	1	Caterpillar and Perkins Engine Machines	
337	1001109114	1	Deutz Engine Machines	
337	1001109089	1	GM Engine Machines	
338		Ref	Ground Control Box Harness Assembly	
338	1001106999	1	Deutz D2011, Caterpillar and Perkins Engine Machines **(Prior to SN 0300200773)**	E
338	1001187856	1	Deutz D2011, Caterpillar and Perkins Engine Machines **(SN 0300200773 through 0300203770)**	A
338	1001147013	1	Deutz DTD2.9L4 Engine Machines	C
338	3990010	2	Diode 6 Amp	
338A	4460536	1	Connector - 3 Position	
338A	4460943	3	Socket, Female	
338B	4460434	2	Connector - 15 Position	
338B	4460227	16	Pin	
338C	4460873	1	Connector - 35 Position (Black)	
338C	4460871	15	Socket, Female	
338C	4460905	1	Seal, Plug	
338D	4120035	6	Base, Light	
338D	4460634	7	Terminal (16 Gauge)	
338D	4460635	5	Terminal (12 Gauge)	
338E	4460418	7	Connector - 6 Position	
338E	4460419	21	Socket, Female	
338F	4460876	1	Connector - 35 Position (Blue)	
338F	4460871	22	Socket, Female	
338F	4460905	1	Seal, Plug	
338G	4460866	1	Connector - 19 Pin	
338G	4460464	7	Pin, Male Deutsch 16 Ga	
338G	4460508	3	Pin, Male (12 Gauge)	
338H	4460878	1	Housing, Terminal - 4 Position	
338H	4460887	3	Terminal (12 Gauge)	
338J	4460761	1	Connector - 4 Position	
338J	4460227	4	Pin, Male	
338K	4460874	1	Connector (Natural)	
338K	4460871	8	Socket, Female	
338L	4460875	1	Connector (Gray)	
338L	4460871	2	Socket, Female	
338M	1001112612	1	Connector	
338M	4460943	4	Pin, Male (Gold)	
338N	1001106340	1	Connector	
338N	4460871	5	Socket, Female	
338P	1001106339	1	Connector	

ITEM	PART NUMBER	QTY	DESCRIPTION	REV
338P	4460871	2	Socket, Female	
340		Ref	Ground Control Box Wiring Diagram (Not Shown - See Items 501 to 513 for Breakdown)	
340	1001102901	Ref	Caterpillar and Perkins Engine Machines	
340	1001109121	Ref	Deutz Engine Machines	
340	1001109200	Ref	GM Engine Machines	
		Ref	**ENGINE HARNESS ASSEMBLY**	
	1001102798	Ref	**Caterpillar and Perkins Engine**	E
	1001109114	Ref	**Deutz Engine**	B
	1001109089	Ref	**GM ENGINE**	A
417	4460424	1	Connector - 2 Position	
417	4460268	2	Socket, Female	
418	4460424	1	Connector - 2 Position	
418	4460226	2	Socket, Female	
419	4460880	2	DIN Connector without Diode	
423	4461070	1	Connector - 3 Position with Resistor (Deutz Engine Only)	
423	4460944	3	Socket, Female (Deutz Engine Only)	
423	4461095	1	Connector - 3 Position (Deutz Engine Only)	
425	4460539	1	Connector 3 Position	
425	4460944	3	Socket, Female (Gold)	
428	4460742	AR	Connector - 2 Position	
428	4460457	AR	Terminal, Female	
428	4460458	AR	Seal, Terminal	
433	4461052	1	Connector - 25 Position (Deutz Engine Only)	
433	4461053	1	Cover, Receptacle (Deutz Engine Only)	
433	4461005	5	Terminal (Deutz Engine Only)	
433	4461006	5	Seal (Used with p/n 4461005) (Deutz Engine Only)	
433	4461060	2	Terminal (Deutz Engine Only)	
433	4461054	2	Seal (Used with p/n 4461060) (Deutz Engine Only)	
433	4461008	18	Plug, Hole (Deutz Engine Only)	
433	4461053	1	Plug, Cover (Deutz Engine Only)	
438	4460899	1	Connector - 6 Position (Caterpillar Engines Only)	
438	4460464	2	Pin, Male (Caterpillar Engines Only)	
438	4460466	1	Seal, Plug (Caterpillar Engines Only)	
439	4460871	AR	Socket, Female	
441	3730125	1	Resistor 120 Ohm 4 Watt (Caterpillar and Perkins Engine Only)	
448	4461121	1	Plug, Male - 4 Position (GM Engine Only)	
448	4461122	4	Socket, Female (GM Engine Only)	
448	4461123	4	Seal, Terminal (GM Engine Only)	
449	4460834	1	Connector - 2 Position	
449	4460842	2	Terminal, Female	
451	4461124	1	Receptacle, Female - 4 Position (GM Engine Only)	
451	4460693	4	Pin, Male (GM Engine Only)	
451	4460608	4	Seal, Terminal (GM Engine Only)	
451	4461161	1	Lock, Terminal (GM Engine Only)	
454	4461109	1	Plug, Male - 16 Position (GM Engine Only)	
454	4461111	7	Pin, Male (GM Engine Only)	
454	4461113	7	Seal, Terminal (GM Engine Only)	
454	4461222	9	Plug, Terminal (GM Engine Only)	
456	2902443	1	Kit, Receptacle (Deutz Engine Only)	
456	4461071	8	Terminal, Female (Gold) (Deutz Engine Only)	
456	4461072	1	Connector, Flange Mount (Deutz Engine Only)	

ITEM	PART NUMBER	QTY	DESCRIPTION	REV
456	4461073	1	Connector, Dust Cap (Deutz Engine Only)	
456	4461074	1	Connector, Shell (Deutz Engine Only)	
458	4461157	1	Connector - 2 Position	
458	4460458	2	Seal, Terminal	
458	4460979	2	Pin, Male	
459	91504088	1	Connector - 6 Position (Caterpillar and Perkins Engine Only)	
459	77363229	5	Terminal (Caterpillar and Perkins Engine Only)	
459	4460466	AR	Plug (Caterpillar and Perkins Engine Only)	
460	70020808	1	Connector 23 Position (Caterpillar and Perkins Engine Only)	
460	4460871	16	Socket, Female (Caterpillar and Perkins Engine Only)	
461	91503103	1	Connector - 6 Position (Caterpillar and Perkins Engine Only)	
461	77363228	6	Terminal (Caterpillar and Perkins Engine Only)	
461	91504107	1	Lock, Connector (Caterpillar and Perkins Engine Only)	
461	4460466	AR	Plug (Caterpillar and Perkins Engine Only)	
462	See Note	1	Connector - 8 Position (Caterpillar and Perkins Engine Only) (Note: Not Available for Purchase)	
463	7026408	2	Connector - 2 Position (Caterpillar and Perkins Engine Only)	
463	77363229	4	Terminal (Caterpillar and Perkins Engine Only)	
463	80604018	2	Lock, Connector (Caterpillar and Perkins Engine Only)	
		Ref	**GROUND CONTROL BOX WIRING DIAGRAM**	
	1001102901	Ref	**Caterpillar and Perkins Engine Machines**	I
	1001109121	Ref	**Deutz Engine Machines**	E
	1001109200	Ref	**GM Engine Machines**	D
501	2920129	AR	Bulb, Light	
507	2400065	1	Fuse, 30Amp	
508	2400066	1	Fuse, Holder	
509	4460708	2	Receptacle, Female - 15 Position	
509	4460226	11	Socket, Female	
509	4922637	1	Harness, Jumper (Not Shown)	
509	4922636	1	Harness, Jumper (Not Shown)	
513	4460894	1	Connector - 6 Position	
513	4460892	1	Connector, Bussbar - 6 Position	
		Ref	**STANDARD HARNESS COMPONENTS**	
601	4921927	1	Jib Valve Harness (460SJ Only)	
601A	4460326	1	Plug, Male - 3 Position	
601A	4460267	3	Pin, Male	
601B	4460499	2	Connector, DIN with Diode	
602		Ref	Battery Cable Kits	
602	1001102859	1	Caterpillar/Perkins Engine Machines	A
602	2901880	1	Deutz Engine Machines	E
602	2902511	1	GM Engine Machines	C
602A	7027021	1	Caterpillar/Perkins Engine Machines - Cable, Battery (Red) (Battery to Auxiliary Power Relay)	
602A	7016843	1	Deutz Engine Machines - Cable, Battery (Red) (Battery to Starter and Auxiliary Power Relays)	
602A	7027012	1	GM Engine Machines - Cable, Battery (Red) (Battery to Auxiliary Power Relay)	
602B	7027022	1	Caterpillar/Perkins Engine Machines - Cable, Battery (Battery - and Auxiliary Pump to Ground) (Black)	
602B	7016835	1	Deutz Engine Machines - Cable, Battery (Battery - and Auxiliary Pump to Ground) (Black)	
602B	7027013	1	GM Engine Machines - Cable, Battery (Battery - to Front Engine Mounting Bolt/Auxiliary Pump/Auxiliary Power Relay Ground)	

ITEM	PART NUMBER	QTY	DESCRIPTION	REV
			(Black)	
602C	7027024	1	Caterpillar/Perkins Engine Machines - Cable, Battery (Red) (Auxiliary Power Relay to Starter)	
602C	7016834	1	Deutz Engine Machines - Cable, Battery (Starter Relay to Starter) (Red)	
602C	7016808	1	GM Engine Machines - Cable, Battery (Auxiliary Power Relay to Starter) (Red)	
602D	7027023	1	Caterpillar/Perkins Engine Machines - Cable, Battery (Auxiliary Relay to Auxiliary Pump) (Red)	
602D	7016820	1	Deutz Engine Machines - Cable, Battery (Auxiliary Relay to Auxiliary Pump) (Red)	
602D	7016820	1	GM Engine Machines - Cable, Battery (Auxiliary Relay to Auxiliary Pump) (Red)	
603	See Note	AR	Deutz Engine Harness Components (Deutz Engine Machines Only) (Note: Not Available for Purchase)	
603A	7027796	1	Deutz Engine Harness	
603B	See Note	1	Connector - 25 Position (Deutz Engine Only) (Note: Not Available for Purchase)	
603C	7027793	1	Plug-In, Connector	
603D	70001872	1	Deutz Engine Harness (For other replacement parts refer to Deutz Engine Dealer) (was p/n 7027794)	
604	See Note	2	Pump Harness (Note: Not Available for Purchase)	
604A	7007497	2	Plug (Pump)	
604B	7007498	2	Plug (Valve Harness)	
605	See Note	1	Fuel Sender Harness (Note: Not Available for Purchase)	
605A	See Note	1	Connector - 2 Position (Note: Not Available for Purchase)	
605A	See Note	2	Terminal, Male (Note: Not Available for Purchase)	
606	0257887	1	Alarm Harness (Includes Alarm)	
606A	4460424	1	Connector - 2 Position	
606A	4460268	2	Socket, Female	
607		Ref	Capacity/Elevation Cut-out Switch Harness Options (Includes Electrical Cable and Items 614A-614C):	
607	4922714	2	400S (Includes Items 8.5ft/2.6m of p/n 1060902 18/2 Electrical Cable) (All Specs Except CE Spec)	B
607	1001093914	2	400S with Arctic Package (Includes Items 8.5ft/2.6m of p/n 4923466 18/2 Polar Electrical Cable) (All Specs Except CE Spec)	A
607	4922714	1	400S (Includes Items 8.5ft/2.6m of p/n 1060902 18/2 Electrical Cable) (CE Spec Only)	B
607	4922714	1	460SJ (Includes Items 8.5ft/2.6m of p/n 1060902 18/2 Electrical Cable) (All Specs Except CE Spec)	B
607	1001093914	1	460SJ with Arctic Package (Includes Items 8.5ft/2.6m of p/n 4923466 18/2 Polar Electrical Cable) (All Specs Except CE Spec)	A
607	4922714	1	460SJ (Includes Items 8.5ft/2.6m of p/n 1060902 18/2 Electrical Cable) (CE Spec Only)	B
607A	4360548	1	Switch, Limit	
607B	4460968	1	Connector, Strain Relief	
607C	4460226	2	Socket, Female	
608		Ref	Transport Limit Switch Harness - 18/2 (Note: Does NOT include Limit Switch - Purchase Item 609 Separately)	
608	4922769	1	400S (Includes Items 26.5ft/8.1m of p/n 1060680 18/2 Electrical Cable and 2 Sockets)	B
608	1001093915	1	400S with Arctic Package (Includes Items 26.5ft/8.1m of p/n 4923466 18/2 Polar Electrical Cable and 2 Sockets)	A
608	Not Required	0	460SJ	
608A	4460226	2	Socket, Female	

ITEM	PART NUMBER	QTY	DESCRIPTION	REV
609		Ref	Switch, Limit Options:	
609	4360549	1	400S (All Specs Except CE Spec)	
609	4360578	1	400S (CE Specs)	
609	Not Required	0	460SJ (All Specs Except CE Spec)	
609	4360578	1	460SJ (CE Specs)	
609	4460968	1	Connector, Strain Relief	
610	See Note	1	Speed Control Harness (Note: Not Available for Purchase)	
610A	4460224	1	Connector - 6 Position	
610A	4460226	6	Socket, Female	
611	See Note	1	Controller Harness Assembly (Lift and Swing) (Note: Not Available for Purchase)	
611A	7022819	1	Connector - 8 Position (Natural)	
611A	4460871	8	Socket, Female	
612	7022824	1	Controller Harness/Circuit Board Assembly (Drive and Steer)	
612A	7022825	1	Connector - 8 Position Black	
612A	4460871	7	Socket, Female	
613	4360517	1	Switch, Proximity	
613A	4460320	1	Connector - 2 Position	
613A	4460227	2	Pin, Male	
614	1060904	1	Cable, Jumper (Deutz Engine Machines Only)	
615	4923451	1	Harness, Glow Plug (Deutz Engine Machines Only)	
		Ref	**OPTIONAL HARNESS COMPONENTS**	
701		Ref	AC to Platform Receptacle Components Options:	
701	0270022	Ref	110V GFI Receptacle (All Specs Except CE Spec)	4
701	0270024	Ref	220V GFI Receptacle (All Specs Except CE Spec)	3
701		Ref	CE Specs Options:	
701		Ref	Without Generator:	
701	1001091969	Ref	110V with IEC Yellow Receptacle and Plug	C
701	1001091970	Ref	220V with IEC Blue Receptacle and Plug	C
701	1001091975	Ref	220V with AFSINT 107 Keyed Ground Receptacle and Plug	D
701	1001091973	Ref	220V with CEE 7 Post Ground Receptacle and Plug (2x4 Box)	D
701	1001091971	NLA	220V with CEE 7 Post Ground Receptacle and Plug (70x70 Box)	C
701	1001091974	Ref	220V with CEE 7 Side Ground Receptacle and Plug (2x4 Box)	D
701	1001091972	NLA	220V with CEE 7 Side Ground Receptacle and Plug (70x70 Box)	C
701		Ref	With 2500W Generator:	
701	1001100326	Ref	110V with IEC Yellow Receptacle and Plug	D
701	1001100327	Ref	220V with IEC Blue Receptacle and Plug	D
701	1001100337	Ref	220V with AFSINT 107 Keyed Ground Receptacle and Plug	D
701	1001100331	Ref	220V with CEE 7 Post Ground Receptacle and Plug (2x4 Box)	D
701	1001100329	NLA	220V with CEE 7 Post Ground Receptacle and Plug (70x70 Box)	D
701	1001100333	Ref	220V with CEE 7 Side Ground Receptacle and Plug (2x4 Box)	D
701	1001100328	NLA	220V with CEE 7 Side Ground Receptacle and Plug (70x70 Box)	D
701	1001093275	Ref	Breaker Box Installation (Required on CE Spec Machines without Powermite Generator Control Box)	B
701	1001109863	Ref	Breaker Box Installation (Required on CE Spec Machines with Powermite Generator Control Box)	A
701A		Ref	Box, Switch Options:	
701A	0860038	AR	0270022 & 0270024 Installations	
701A	0861781	AR	1001091969, 1001091970, 1001100326 & 100110327	

ITEM	PART NUMBER	QTY	DESCRIPTION	REV
			Installations	
701A	0861782	NLA	1001091971, 1001091972, 1001100328 & 100110329 Installations (Note: Was p/n 0861782 which is no longer available. Use p/n 1001100344 CEE 7 Side Ground Service Kit or p/n 1001100343 CEE 7 Post Ground Service Kit. Kit include Box p/n 1001141967 and Items 701B, 701C & 701D.)	
701A	0861731	AR	1001091975, 1001091973, 1001091974, 1001100337 1001100331 & 100110333 Installations	
701A	1001141967	AR	1001100343, 1001100344, 1001141970 & 1001141971 Kits	
701B		Ref	Receptacle Options:	
701B	4460346	1	0270022 Installation	
701B	4460125	1	0270024 Installation	
701B	4461198	1	1001091969 & 1001100326 Installations (Includes Cvr)	
701B	4461201	1	1001091970 & 1001100327 Installations (Includes Cvr)	
701B	4461204	NLA	1001091971 & 1001100328 Installations (Includes Cvr) (Use p/n 1001100343)	
701B	4461207	NLA	1001091972 & 1001100329 Installations (Includes Cvr) (Use p/n 1001100344)	
701B	4461244	1	1001091973 & 1001100331 Installations (Includes Cvr)	
701B	4461245	1	1001091974 & 1001100333 Installations (Includes Cvr)	
701B	4461246	1	1001091975 & 1001100337 Installations (Includes Cvr)	
701B	1001141968	1	1001100343 & 1001141971 Kits	
701B	1001141969	1	1001100344 & 1001141970 Kits	
701C		Ref	Cover Options:	
701C	4060700	1	0270022 Installation (Side Hinged)	
701C	1001110873	1	0270022 Installation (Top Hinged)	
701C	4060092	1	0270024 Installation	
701C	4461198	1	1001091969 & 1001100326 Installations (Includes Receptacle)	
701C	4461201	1	1001091970 & 1001100327 Installations (Includes Receptacle)	
701C	4461204	NLA	001091971 & 1001100328 Installations (Includes Cvr) (Use p/n 1001100343)	
701C	4461207	NLA	1001091972 & 1001100329 Installations (Includes Cvr) (Use p/n 1001100344)	
701C	4461244	1	1001091973 & 1001100331 Installations (Includes Receptacle)	
701C	4461245	1	1001091974 & 1001100333 Installations (Includes Receptacle)	
701C	4461246	1	1001091975 & 1001100337 Installations (Includes Receptacle)	
701C	1001141968	1	1001100343 & 1001141971 Kits	
701C	1001141969	1	1001100344 & 1001141970 Kits	
701D		Ref	Plug Options (With 2500W Generator Only):	
701D	4460205	1	0270022 Installation (Male)	
701D	4460233	1	0270024 Installation (Male)	
701D	4461196	1	1001091969 & 1001100326 Installations (Male)	
701D	4461197	1	1001091969 & 1001100326 Installations (Female)	
701D	4461199	1	1001091970 & 1001100327 Installations (Male)	
701D	4461200	1	1001091970 & 1001100327 Installations (Female)	
701D	4461202	1	1001091973, 1001091971, 1001100331 & 1001100328 Installations & 1001100343 & 1001141971 Kits (Male)	
701D	4461203	1	1001091973, 1001091971, 1001100331 & 1001100328	

ITEM	PART NUMBER	QTY	DESCRIPTION	REV
			Installations & 1001100343 & 1001141971 Kits (Female)	
701D	4461205	1	1001091974, 1001901972, 1001100333 & 1001100329 Installation & 1001100344 & 1001141970 Kits (Male)	
701D	4461206	1	1001091974, 1001901972, 1001100333 & 1001100329 Installation & 1001100344 & 1001141970 Kits (Female)	
701D	4461249	1	1001091975 & 1001100337 Installations (Male)	
701D	4461250	1	1001091975 & 1001100337 Installations (Female)	
701E		Ref	Connector, Strain Relief Options:	
701E	4460071	1	0270022 & 0270024 Installations	
701E	4460968	1	1001091969, 1001091970, 1001091971, 1001091972, 1001100326, 1001100327, 1001100328 & 1001100329 Installations **(SN 0300096000 through 0300127205)**	
701E	1001101191	1	1001091969, 1001091970, 1001091971, 1001091972, 1001100326, 1001100327, 1001100328 & 1001100329 Installations	
701E	4460662	1	1001091975, 1001091973, 1001091974, 1001100337, 1001100331 & 1001100333 Installations	
701E	4460968	1	1001091975, 1001091973, 1001091974, 1001100337, 1001100331 & 1001100333 Installations	
701E	1001101191	1	1001091975, 1001091973, 1001091974, 1001100337, 1001100331 & 1001100333 Installations	
701E		Ref	Adapter, Strain Relief Options:	
701E	Not Required	0	0270022 & 0270024 Installations	
701E	Not Required	0	1001091969, 1001091970, 1001091971, 1001091972, 1001100326, 1001100327, 1001100328 & 1001100329 Installations	
701E	1001101196	1	1001091969, 1001091970, 1001091971, 1001091972, 1001100326, 1001100327, 1001100328 & 1001100329 Installations	
701E	Not Required	0	1001091975, 1001091973, 1001091974, 1001100337, 1001100331 & 1001100333 Installations	
701E	1001101196	1	1001091975, 1001091973, 1001091974, 1001100337, 1001100331 & 1001100333 Installations	
701E	0100020	AR	Sealant	
701F	3960422	1	Gasket (0270022 & 0270024 Installations Only)	
701G	4460315	1	Terminal, Spade (0270022 & 0270024 Installations Only) (Not Shown)	
701H		Ref	Decal - AC Power (Not Shown)	
701H	1703464	1	110V	
701H	3252507	1	220V	
701J	0903484	AR	Bracket, Receptacle Box Mounting (Only Required on CE Spec Installations)	
701K	0903566	1	Bracket, Circuit Breaker Mounting (Only Required on CE Spec Installations)	
701L		Ref	Breaker, Circuit Kit Options (Only Required on CE Spec Installations):	
701L	2902549	AR	Kit (Without Powermite Generator Control Box)	E
701L	1001109864	AR	Kit (With Powermite Generator Control Box)	B
701L		Ref	Circuit Breaker Options:	
		Ref	**Note: For machines with Powermite Generator Control Box use p/n 1001181046. For machines without Powermite Generator Control Box use p/n 1001181045.**	
701L	1001109477	NLA	Breaker 10A (Use p/n 1001181046)	
701L	1001109475	NLA	Breaker 16A (Use p/n 1001181045)	
701L	1001109482	NLA	Breaker 30mA (Use p/n 1001181046 for 10A/30mA combination or p/n 1001181045 for 16A/30mA	

ITEM	PART NUMBER	QTY	DESCRIPTION	REV
			combination)	
701L	0861880	1	Breaker Box	
701L	4460957	1	Terminal Block	
701L	4460956	1	Barrier, Terminal Block	
701M	1001097150	2	Connector, Strain Relief (Only Required on CE Spec Installations)	
701N	1060908	Ref	Cable, Extension Options (Only Required on CE Spec Installations):	
701N	1060908	6 ft/1.8m	Without Powermite Generator Control Box	
701N	1060908	10 ft/3m	With Powermite Generator Control Box	
	0275216	1	Receptacle, Box and Plug Kit (110V IEC Yellow) (Includes Items 701A-701C and Male 701D Plug End) (1001091969 Installation)	1-A
	1001100341	1	Receptacle and Box Kit (110V IEC Yellow) (Includes Items 701A-701C and Male 701D Plug End) (1001100326 Installation)	2-A
	0275217	1	Receptacle, Box and Plug Kit (220V IEC Blue) (Includes Items 701A-701C and Male 701D Plug End) (1001091970 Installation)	1-A
	1001100342	1	Receptacle and Box Kit (220V IEC Blue) (Includes Items 701A-701C and Male 701D Plug End) (1001100327 Installation)	2-A
	0275218	NLA	Receptacle, Box and Plug Kit (220V CEE 7 Post Ground with 70x70 Box) (Includes Items 701A-701C and Male 701D Plug End) (1001091971 Installation) (Use p/n 1001100343)	B-B
	1001100343	1	Receptacle and Box Kit (220V CEE 7 Post Ground with 70x70 Box) (Includes Items 701A-701C and Male 701D Plug End) (1001100328 Installation)	2-A
	0275219	NLA	Receptacle, Box and Plug Kit (220V CEE 7 Side Ground with 70x70 Box) (Includes Items 701A-701C and Male 701D Plug End) (1001091972 Installation) (Use p/n 1001100344)	B-B
	1001100344	1	Receptacle and Box Kit (220V CEE 7 Side Ground with 70x70 Box) (Includes Items 701A-701C and Male 701D Plug End) (1001100329 Installation)	2-A
	0275452	1	Receptacle, Box and Plug Kit (220V CEE 7 Post Ground with 2x4 Box) (Includes Items 701A-701C and Male 701D Plug End) (1001091973 Installation)	1-A
	1001100345	1	Receptacle and Box Kit (220V CEE 7 Post Ground with 2x4 Box) (Includes Items 701A-701C and Male 701D Plug End) (1001100331 Installation)	2-A
	0275453	1	Receptacle, Box and Plug Kit (220V CEE 7 Side Ground with 2x4 Box) (Includes Items 701A-701C and Male 701D Plug End) (1001091974 Installation)	1-A
	1001100347	1	Receptacle and Box Kit (220V CEE 7 Side Ground with 2x4 Box) (Includes Items 701A-701C and Male 701D Plug End) (1001100333 Installation)	2-A
	0275454	1	Receptacle, Box and Plug Kit (220V AFSINT 107 Keyed Ground) (Includes Items 701A-701C and Male 701D Plug End) (1001091975 Installation)	1-A
	1001100346	1	Receptacle and Box Kit (220V AFSINT 107 Keyed Ground) (Includes Items 701A-701C and Male 701D Plug End) (1001100337 Installation)	2-A
	2902549	1	Circuit Breaker Box Kit (Includes Items 701L-701N) (Only Required on CE Spec Installations)	C
702		Ref	Generator Electrical Components	
702	1001112588	Ref	110V (Caterpillar, Deutz and Perkins Engines)	A
702	1001100027	Ref	110V (Deutz Engines 50Hz	5-E
702	1001112743	Ref	110V (Perkins Engines 50Hz	B

SECTION 7 - ELECTRICAL

ITEM	PART NUMBER	QTY	DESCRIPTION	REV
702	4933350	Ref	110V (GM Engines)	B
702	1001100027	Ref	220V (Deutz 50Hz)	5-E
702	1001112743	Ref	220V (Perkins 50Hz)	B
702A	4460321	1	Connector - 4 Position	
702A	4460906	4	Socket, Female	
702B	4922641	1	Harness - On/Off Switch	1-A
702C	4460226	2	Socket, Female	
702D		Ref	Powermite Control Box to Relay Harness Options:	
702D	1001112589	1	110V (Caterpillar/Deutz/Perkins Engines)	A
702D	4922970	1	110V/220V (Deutz Engines)	B
702D	1001112589	1	220V (Perkins Engines)	A
702E	4460375	3	Terminal	
702F	4460742	1	Connector - 2 Position (Caterpillar/Perkins Engines)	
702F	4460743	2	Socket, Female (Caterpillar/Perkins Engines)	
702F	4460458	2	Seal, Wire (Caterpillar/Perkins Engines)	
702G	7020193	1	2500W Generator Power Cable	
702H	See Note	1	Control Box Harness (Note: Not Available for Purchase)	
702J	4460961	1	Connector, Female - 4 Position	
702J	4460705	4	Pin, Male	
703		Ref	7500W SkyPower Generator Installation	
703	1001112101	Ref	60Hz and Caterpillar/Perkins Engine	A
703	1001112408	Ref	50Hz Spec and Caterpillar/Perkins Engine	A
703	1001115390	Ref	60Hz and Deutz Engine	A
703	1001115721	Ref	50Hz Spec and Deutz Engine	A
703	0275057	Ref	60Hz Spec and GM Engine	F
703A		Ref	Connector Twist-Lock Options:	
703A	4460958	1	60Hz Spec	
703A	See Note	1	50Hz Spec (Note: Not Available - Purchase Locally)	
703B		Ref	Gasket Options:	
703B	3960422	2	60Hz Spec	
703B	See Note	2	50Hz Spec (Note: Not Available - Purchase Locally)	
703C		Ref	Cover, Receptacle Options:	
703C	4060700	1	60Hz Spec (Side Hinged)	
703C	1001110873	1	60Hz Spec (Top Hinged)	
703C	See Note	1	50Hz Spec (Note: Not Available - Purchase Locally)	
703D		Ref	Cover, Receptacle Options:	
703D	4061043	1	60Hz Spec (Side Hinged)	
703D	1001110872	1	60Hz Spec (Top Hinged)	
703D	See Note	1	50Hz Spec (Note: Not Available - Purchase Locally)	
703E		Ref	Receptacle Options:	
703E	4460346	1	60Hz Spec	
703E	See Note	1	50Hz Spec (Note: Not Available - Purchase Locally)	
703F	4460051	1	Connector, Strain Relief	
703G	4460071	1	Connector, Strain Relief	
703H	4922925	1	Harness, Generator	
703I	77363233	1	Connector - 6 Position	
703I	4460465	6	Socket, Female	
703J	4460225	1	Plug, Male - 6 Position	
703J	4460226	6	Socket, Female	
704		Ref	7500W SkyPower Generator Junction Box Components	
704	0861542	Ref	60HZ SPEC	D

ITEM	PART NUMBER	QTY	DESCRIPTION	REV
704	0861567	Ref	50Hz Specs	B
704A		Ref	Cable, Electrical 12/3	
704A	1060494	2 ft/.6m	60Hz Spec	
704A	See Note	2 ft/.6m	50Hz Spec (Note: Not Available - Purchase Locally)	
704B		Ref	Cable, Electrical 10/3	
704B	1060708	2.5 ft/.76m	60Hz Spec	
704B	See Note	2.5 ft/.76m	50Hz Spec (Note: Not Available - Purchase Locally)	
704C	1060343	1.5 ft/.46m	Cable, Electrical 10/4 (60Hz Spec Only)	
704D	4460425	2	Connector, Strain Relief	
704E		Ref	Component Options:	
704E	4460426	2	Connector, Strain Relief (60Hz Spec Only)	
704E	4460426	1	Connector, Strain Relief (50Hz Spec Only)	
704E	3520189	1	Plug (50Hz Spec Only)	
704F	1671092	1	Cover (60Hz Spec Only)	
704F	4460963	1	Connector (60Hz Spec Only)	
705		Ref	7500W Generator Electrical Diagram Components Options:	
705	1001112586	Ref	Caterpillar, Deutz and Perkins Engine Machines	A
705	4933349	Ref	GM Engine Machines **(SN 0300177683 through 0300182510)**	B
705	1001157768	Ref	GM Engine Machines **(SN 0300182511 through 0300203770)**	A
705A		Ref	Generator Harness Options:	
705A	1001112587	1	Caterpillar, Deutz and Perkins Engine Machines	A
705A	4923420	1	GM Engine Machines	A
705B	4460374	2	Plug, Sealed Relay	
705B	4460375	7	Terminal	
705C	4460967	1	Plug, Male - 3 Position	
705C	4460465	3	Socket, Female	
705D	2400060	1	Fuseholder	
705D	2400064	1	Fuse - 5 Amp	
705E	4922641	1	Switch Harness	
705F	4460742	1	Connector - 2 Position (Caterpillar, Deutz and Perkins Engines)	
705F	4460743	2	Socket, Female (Caterpillar, Deutz and Perkins Engines)	
705F	4460458	2	Seal, Wire (Caterpillar, Deutz and Perkins Engines)	
706	0255917	1	Strobe Light Harness (Includes Strobe Light)	C
706A	4460320	1	Connector, Female - 2 Position	
706A	4460267	2	Pin, Male	
707	See Note	1	Lights Harness (Note: Not Available for Purchase)	
707	1060341	37 ft/11.3m	Cable, Electrical - 16/2	
707A	3740049	1	Relay	
707A	4922643	1	Harness, Bag (Located at Ground Control Box) (Not Shown)	
708		Ref	Platform Worklights Components	
708A		Ref	Harness, Console Box to Aux Relay Options:	
708A	1060983	1	Harness, Console Box to Aux Relay 400S (63ft/19.2m of 12/3 Cable p/n 1060494)	
708A	4922965	1	Harness, Console Box to Aux Relay 460SJ (69ft/21m of 12/3 Cable P/N 1060494)	
708B	2920140	2	Platform Worklights External Harness (Includes Light and Wire Only)	
708C	4460426	1	Connector, Strain Relief	

ITEM	PART NUMBER	QTY	DESCRIPTION	REV
708D	2400070	1	Fuse	
708D	2400066	1	Holder, Fuse	
709		Ref	Platform Floodlights Components	
709A	2920157	2	Platform Floodlights External Harness (Includes Lights and Wire Only) (Not Shown)	
709B		Ref	Harness, Console Box to Aux Relay Options:	
709B	1060983	1	Harness, Console Box to Aux Relay 400S (63ft/19.2m of 12/3 Cable P/N 1060494)	
709B	4922965	1	Harness, Console Box to Aux Relay 460SJ (69ft/21m of 12/3 Cable P/N 1060494)	
709C	4933313	Ref	Platform Floodlight Wiring Diagram Components	1-A
709D	4460320	2	Connector - 2 Position	
709D	4460227	4	Pin, Male	
709E	1060977	1	Cord, 2 Wire Coiled (Console Box Circuit Breaker to Switch)	
709F	4922764	2	Platform Floodlights Harness (Lights to Switch) (Not Shown)	1-A
709G	4460424	2	Connector - 2 Position	
709G	4460226	4	Socket, Female	
709H	4360232	1	Circuit Breaker, 15Amp	
709J	4460425	1	Connector, Strain Relief	
710	4933218	1	Soft-Touch System Wiring Diagram	1-B
710A	1060902	23 ft/7m	Cable, Electrical - 18/2	
710B	4460871	2	Socket, Female	
		Ref	**TOOLS**	
801	7002821	1	Crimper (For Wire to Pin/Socket Connections) (Not Shown)	
802	7002823	1	Extractor (For Removal of Pin/Socket from Connectors) (Not Shown)	
803	4460467	1	Extractor, Pin (Blue 16-18 Gauge) (For Removal of Pin/Socket from Connectors) (Not Shown)	
804	4460510	1	Extractor, Pin (Yellow 12-14 Gauge) (For Removal of Pin/Socket from Connectors) (Not Shown)	
805	7002828	1	Stripper, Wire (Not Shown)	
806	2901443	1	Analyzer Kit	1-A
806A	1600244	1	Analyzer	
806B	1060633	1	Cable, Analyzer	
806C	4460321	2	Plug, Male	
806C	4460226	8	Socket, Female	

FIGURE 7-4. HARNESS COMPONENTS INSTALLATION (MACHINES WITH UGM) (SN 0300177683 through 0300203770)

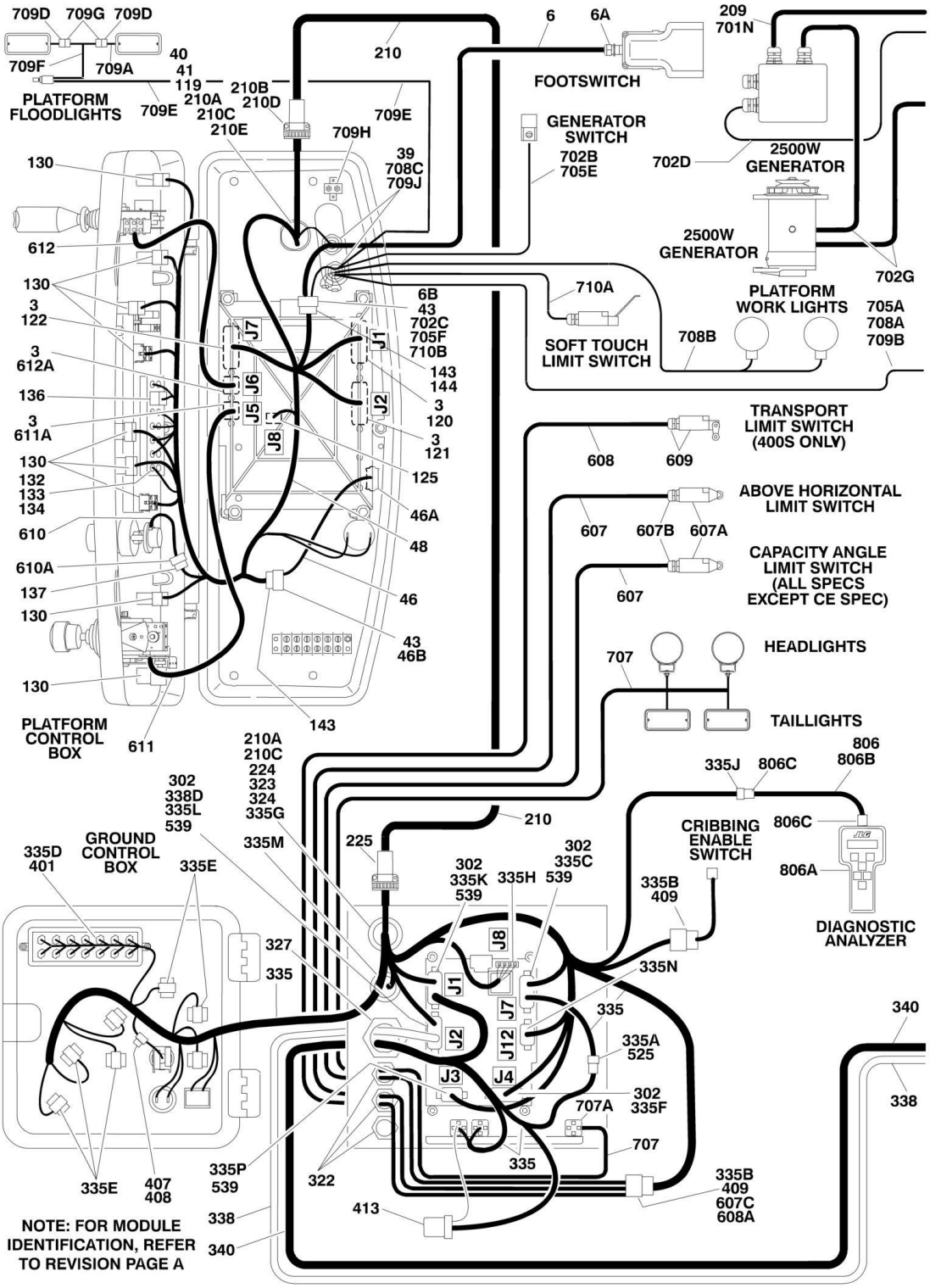

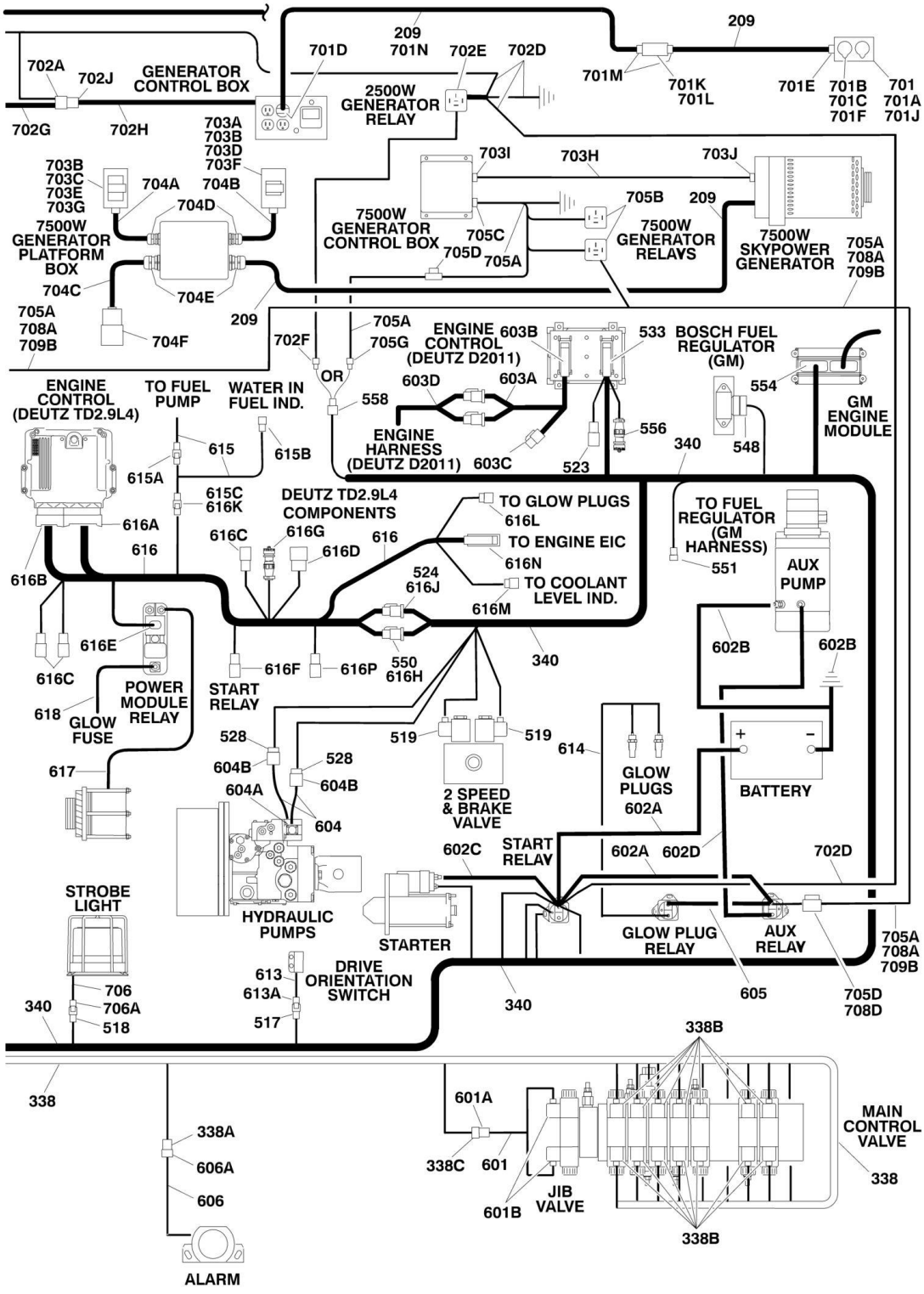
209
701D
209
701N
702E
702D
209
702A
702J
GENERATOR CONTROL BOX
2500W GENERATOR RELAY
701M
701K
701L
701E
701B
701C
701F
701
701A
701J
702G
702H
703A
703B
703D
703F
703I
703H
703J
703B
703C
703E
703G
704A
704B
704D
7500W GENERATOR CONTROL BOX
705B
209
7500W GENERATOR RELAYS
7500W SKYPOWER GENERATOR
705A
708A
709B
7500W GENERATOR PLATFORM BOX
705C
705D
705A
704C
704E
705A
708A
709B
704F
209
702F
705A
705G
OR
ENGINE CONTROL (DEUTZ D2011)
603B
533
BOSCH FUEL REGULATOR (GM)
554
603D
603A
558
ENGINE CONTROL (DEUTZ TD2.9L4)
TO FUEL PUMP
WATER IN FUEL IND.
556
340
548
GM ENGINE MODULE
ENGINE HARNESS (DEUTZ D2011)
603C
523
615
615B
615A
615C
616K
DEUTZ TD2.9L4 COMPONENTS
TO GLOW PLUGS
616L
TO FUEL REGULATOR (GM HARNESS)
616A
616C
616G
616D
616
TO ENGINE EIC
616N
551
AUX PUMP
616B
616
524
616J
TO COOLANT LEVEL IND.
616M
616E
602B
602B
616C
340
616F
616P
550
616H
POWER MODULE RELAY
START RELAY
618
GLOW FUSE
528
519
519
614
GLOW PLUGS
602A
617
604B
528
604B
604A
604
2 SPEED & BRAKE VALVE
BATTERY
602C
START RELAY
602A
602D
702D
STROBE LIGHT
HYDRAULIC PUMPS
STARTER
GLOW PLUG RELAY
AUX RELAY
705A
708A
709B
613
DRIVE ORIENTATION SWITCH
706
340
706A
518
613A
517
340
605
705D
708D
338B
338
601A
338A
606A
606
338C
601
MAIN CONTROL VALVE
338
601B
JIB VALVE
338B
ALARM

FIGURE 7-4. HARNESS COMPONENTS INSTALLATION (MACHINES WITH UGM) (SN 0300177683 through 0300203770)

ITEM	PART NUMBER	QTY	DESCRIPTION	REV
		Ref	**NOTE: FOR MODULE IDENTIFICATION, REFER TO REVISION LOG PAGE A.**	
		Ref	**PLATFORM CONSOLE BOX COMPONENTS**	
3	0100048	AR	Grease, Dielectric	
6	1001117174	1	Footswitch Harness (Includes Footswitch)	B
6	1060918	7 ft/2.1m	Cable, Electrical - 18/3	
6A	4460071	1	Connector, Strain Relief	
6B	4460226	2	Socket, Female	
6B	4460464	1	Pin, Male	
39	4460428	2	Connector, Strain Relief	
40	4460470	1	Nut, Terminal	
41	4460471	1	Locknut, Terminal	
43	4460708	2	Connector - 15 Position	
46	4922666	1	Harness, Analyzer Cable	2-B
46A	4460761	1	Connector - 4 Position	
46A	4460227	4	Pin, Male	
46B	4460226	4	Socket, Female	
48	1001107440	1	Harness, Platform Box (Without SkyGuard) (See Items 101-147 for Breakdown)	
48	1001187752	1	Harness, Platform Box (With SkyGuard) (See Items 101-147 for Breakdown)	
	1001107440	Ref	**PLATFORM BOX HARNESS ASSEMBLY (WITHOUT SKYGUARD)**	E
	1001187752	Ref	**PLATFORM BOX HARNESS ASSEMBLY (WITH SKYGUARD)**	D
119	4460866	1	Connector - 19 Position	
119	4460464	7	Pin, Male Deutsch 16 Ga	
119	4460508	3	Pin, Male Deutsch 12 Ga	
120	4460874	1	Connector - 35 Position (Natural)	
120	4460871	22	Socket, Female	
120	4460905	12	Plug, Terminal	
121	4460875	1	Connector - 35 Position (Gray)	
121	4460871	21	Socket, Female	
121	4460905	11	Plug, Terminal	
122	4460873	1	Connector - 35 Position (Black)	
122	4460871	18	Socket, Female	
122	4460905	16	Plug, Terminal	
125	4460879	1	Connector 2 Position	
125	4460887	2	Terminal (12 Gauge)	
130	4460418	6	Connector - 6 Position	
130	4460419	18	Socket, Female	
132	4120035	10	Base, Light	
133	4460226	10	Terminal (16 Gauge)	
134	4460635	10	Terminal (12 Gauge)	
136	4460225	1	Connector - 6 Position	
136	4460268	5	Socket, Female	
137	4460225	1	Connector - 6 Position	
137	4460227	5	Pin, Male	
143	4460434	2	Connector - 15 Position	
143	4460227	18	Pin	
144	4460708	1	Connector - 15 Position (With SkyGuard)	

ITEM	PART NUMBER	QTY	DESCRIPTION	REV
144	4460227	AR	Pin, Male (With SkyGuard)	
145	4460884	1	Connector - 4 Position (With SkyGuard) (Not Shown)	
145	4460944	4	Socket, Female (With SkyGuard) (Not Shown)	
146	4460536	1	Receptacle - 3 Position (With SkyGuard) (Not Shown)	
146	4460943	3	Pin, Male (With SkyGuard) (Not Shown)	
147	4460539	1	Plug, Male - 3 Position (With SkyGuard) (Not Shown)	
147	4460944	3	Socket, Female (With SkyGuard) (Not Shown)	
		Ref	**BOOM CABLES INSTALLATION**	
	0271160	Ref	**Boom Cables Installation 400S (ANSI and ANSI Export Specs)**	A
	1001093916	Ref	**Boom Cables Installation 400S with Arctic Package (ANSI and ANSI Export Specs)**	D
	0271162	Ref	**Boom Cables Installation 400S (Australian and CE Specs)**	A
	0272612	Ref	**Boom Cables Installation 400S with 7500w SkyPower Generator**	A
	1001093922	Ref	**Boom Cables Installation 400S with 7500w SkyPower Generator and Arctic Package**	E
	0271159	Ref	**Boom Cables Installation 460SJ (ANSI and ANSI Export Specs)**	A
	1001093919	Ref	**Boom Cables Installation 460SJ with Arctic Package (ANSI and ANSI Export Specs)**	C
	0271161	Ref	**Boom Cables Installation 460SJ (Australian and CE Specs)**	A
	0272613	Ref	**Boom Cables Installation 460SJ with 7500w SkyPower Generator**	A
	1001093924	Ref	**Boom Cables Installation 460SJ with 7500w SkyPower Generator and Arctic Package**	D
		Ref	**NOTE: For 4000W Generator Components, See SPECIAL OPTIONS Section.**	
209		Ref	Cable, Electrical Options:	
209	1060985	1	Cable, Electrical - 12/3 (400S without Arctic Package ANSI and ANSI Export Specs) (57ft/17.4m)	
209	1001093917	1	Cable, Electrical - 12/3 (400S with Arctic Package ANSI and ANSI Export Specs) (57ft/17.4m)	
209	1060986	1	Cable, Electrical - 12/3 (400S Australian and CE Specs) (57ft/17.4m)	
209	4922802	1	Cable, Electrical - 8/5 (400S with 7500w SkyPower Generator) (62ft/18.9m)	
209	4922802	1	Cable, Electrical - 8/5 (400S with Arctic Package and 7500w SkyPower Generator) (62ft/18.9m)	
209	1060983	1	Cable, Electrical - 12/3 (460SJ without Arctic Package ANSI and ANSI Export Specs) (63ft/19.2m)	
209	1001093920	1	Cable, Electrical - 12/3 (460SJ with Arctic Package ANSI and ANSI Export Specs) (63ft/19.2m)	
209	1060984	1	Cable, Electrical - 12/3 (460SJ Australian and CE Specs) (63ft/19.2m)	
209	4922803	1	Cable, Electrical - 8/5 (460SJ) (With 7500w SkyPower Generator) (68ft/20.7m)	
209	4922803	1	Cable, Electrical - 8/5 (460SJ with Arctic Package and 7500w SkyPower Generator) (68ft/20.7m)	
210		Ref	Harness Assembly (12/4 - 18/8)	
210	4922548	1	Harness Assembly (12/4 - 18/8) 400S without Arctic Package	3-C
210	1001093918	1	Harness Assembly (12/4 - 18/8) 400S with Arctic Package	A
210	4922547	1	Harness Assembly (12/4 - 18/8) 460SJ without Arctic Package	3-C
210	1001093921	1	Harness Assembly (12/4 - 18/8) 460SJ with Arctic Package	A
210		Ref	Cable, Electrical - 12/4 & 18/8 Options:	
210	1060896	54	Cable, Electrical - 12/4 & 18/8 400S without Arctic Package	

ITEM	PART NUMBER	QTY	DESCRIPTION	REV
		ft/16.5m		
210	4923462	54 ft/16.5m	Cable, Electrical - 12/4 & 18/8 400S with Arctic Package	
210	1060896	60 ft/18.3m	Cable, Electrical - 12/4 & 18/8 460SJ without Arctic Package	
210	4923462	60 ft/18.3m	Cable, Electrical - 12/4 & 18/8 460SJ with Arctic Package	
210A	4460465	22	Socket, Female 18 Gauge	
210B	4460865	1	Connector Deutsch - 19 Position	
210C	4460509	8	Socket, Female 12 Gauge	
210D	4460473	1	Clamp, Cable	
210E	4460466	4	Seal, Plug	
224	4460865	1	Connector Deutsch - 19 Position	
225	4460473	1	Clamp, Cable	
		Ref	**GROUND CONTROL BOX COMPONENTS**	
302	0100048	AR	Grease, Dielectric	
322	4460428	3	Connector, Strain Relief	
323	4460470	1	Nut, Terminal	
324	4460471	1	Locknut, Terminal	
327	4460526	1	Connector, Strain Relief	
335		Ref	Ground Control Box Harness Assembly	
335	1001106999	1	Deutz D2011, Caterpillar and Perkins Engine Machines **(Prior to SN 0300200773)**	F
	1001187856	1	Deutz D2011, Caterpillar and Perkins Engine Machines **(SN 0300200773 through 0300203770)**	A
335	3990010	2	Diode 6 Amp	
335A	4460536	1	Connector - 3 Position	
335A	4460943	3	Socket, Female	
335B	4460434	2	Connector - 15 Position	
335B	4460227	16	Pin	
335C	4460873	1	Connector - 35 Position (Black)	
335C	4460871	15	Socket, Female	
335C	4460905	22	Seal, Plug	
335D	4120035	6	Base, Light	
335D	4460634	7	Terminal (16 Gauge)	
335D	4460635	5	Terminal (12 Gauge)	
335E	4460418	7	Connector - 6 Position	
335E	4460419	21	Socket, Female	
335F	4460876	1	Connector - 35 Position (Blue)	
335F	4460871	22	Socket, Female	
335F	4460905	12	Seal, Plug	
335G	4460866	1	Connector - 19 Pin	
335G	4460464	7	Pin, Male Deutsch 16 Ga	
335G	4460508	3	Pin, Male (12 Gauge)	
335H	4460878	1	Housing, Terminal - 4 Position	
335H	4460887	3	Terminal (12 Gauge)	
335J	4460761	1	Connector - 4 Position	
335J	4460227	4	Pin, Male	
335K	4460874	1	Connector (Natural)	
335K	4460871	8	Socket, Female	
335K	4460905	20	Plug, Terminal	
335L	4460875	1	Connector (Gray)	

ITEM	PART NUMBER	QTY	DESCRIPTION	REV
335L	4460871	2	Socket, Female	
335L	4460905	10	Plug, Terminal	
335M	1001112612	1	Connector	
335M	4460943	4	Pin, Male (Gold)	
335N	1001106340	1	Connector	
335N	4460871	5	Socket, Female	
335P	1001106339	1	Connector	
335P	4460871	2	Socket, Female	
335P	4460905	11	Plug, Terminal	
338	1001142939	1	Valve Harness Assembly	A
338A	4460539	1	Connector 3 Position	
338A	4460465	2	Socket, Female	
338A	4460466	1	Seal, Plug	
338B	4460880	14	DIN Connector	
338C	4460445	1	Connector - 3 Position	
338C	4460268	3	Pin, Female	
338D	4460871	21	Socket, Female	
339		Ref	Ground Control Box Wiring Diagram (Not Shown - See Items 401-421 for Breakdown)	
339	1001150927	Ref	Deutz D2011 Engine Machines	
339	1001147015	1	Deutz TD2.9L4 Engine Machines	
339	1001151230	Ref	GM Engine Machines	
340		Ref	Engine Harness Assembly (See Items 501-558 for Breakdown)	
340	1001151211	1	Deutz D2011 Engine Machines	
340	1001147012	1	Deutz TD2.9L4 Engine Machines	
340	1001151212	1	GM Engine Machines	
		Ref	**GROUND CONTROL BOX WIRING DIAGRAM**	
	1001150927	Ref	**Deutz Engine Machines**	A
	1001147015	Ref	**Deutz TD2.9L4 Engine Machines**	C
	1001151231	Ref	**CAT / Perkins Engine Machines**	A
	1001151230	Ref	**GM Engine Machines**	A
401	2920129	AR	Bulb, Light	
406	1001173590	1	Fuse, Assembly (Includes Items 407 & 408)	
407	2400065	1	Fuse, 30Amp	
408	2400066	1	Fuse, Holder	
409	4460708	2	Receptacle, Female - 15 Position	
409	4460226	11	Socket, Female	
409	4922637	1	Harness, Jumper (Not Shown)	
409	4922636	1	Harness, Jumper (Not Shown)	
413	4460894	1	Connector - 6 Position	
413	4460892	1	Connector, Bussbar - 6 Position	
421	4460905	AR	Seal, Plug (Not Shown)	
		Ref	**ENGINE HARNESS ASSEMBLY**	
	1001151211	Ref	**Deutz D2011 Engine**	A
	1001147012	Ref	**Deutz TD2.9L4 Engine**	C
	1001151210	Ref	**CAT / Perkins Engine**	A
	1001151212	Ref	**GM Engine**	A
517	4460424	1	Connector - 2 Position	
517	4460268	2	Socket, Female	
518	4460897	1	Connector -2 Position	
518	4460464	2	Pin, Male	
519	4460880	2	DIN Connector without Diode	

ITEM	PART NUMBER	QTY	DESCRIPTION	REV
523	4461070	1	Connector - 3 Position with Resistor (Deutz D2011 Engine Only)	
523	4460944	3	Socket, Female (Deutz D2011 Engine Only)	
523	4461095	1	Connector - 3 Position (Deutz D2011 Engine Only)	
524	4460931	1	Connector, Male - 8 Position (Deutz TD2.9L4 Engines Only	
524	4460464	4	Pin, Male	
524	4460466	4	Seal, Plug	
525	4460539	1	Connector 3 Position	
525	4460944	3	Socket, Female (Gold)	
528	4460742	AR	Connector - 2 Position	
528	4460457	AR	Terminal, Female	
528	4460458	AR	Seal, Terminal	
533	4461052	1	Connector - 25 Position (Deutz D2011 Engine Only)	
533	4461053	1	Cover, Receptacle (Deutz D2011 Engine Only)	
533	4461005	5	Terminal (Deutz D2011 Engine Only)	
533	4461006	5	Seal (Used with p/n 4461005) (Deutz D2011 Engine Only)	
533	4461060	2	Terminal (Deutz D2011 Engine Only)	
533	4461054	2	Seal (Used with p/n 4461060) (Deutz D2011 Engine Only)	
533	4461008	18	Plug, Hole (Deutz D2011 Engine Only)	
533	4461053	1	Plug, Cover (Deutz D2011 Engine Only)	
539	4460871	AR	Socket, Female	
548	4461121	1	Plug, Male - 4 Position (GM Engine Only)	
548	4461122	4	Socket, Female (GM Engine Only)	
548	4461123	4	Seal, Terminal (GM Engine Only)	
550	4460899	1	Connector, Male - 6 Position (Deutz TD2.9L4 Engines Only	
550	4460464	5	Pin, Male	
550	4460943	5	Pin, Male (Gold)	
550	4460466	1	Seal, Plug	
551	4461124	1	Receptacle, Female - 4 Position (GM Engine Only)	
551	4460693	4	Pin, Male (GM Engine Only)	
551	4460608	4	Seal, Terminal (GM Engine Only)	
551	4461161	1	Lock, Terminal (GM Engine Only)	
554	4461109	1	Plug, Male - 16 Position (GM Engine Only)	
554	4461111	7	Pin, Male (GM Engine Only)	
554	4461113	7	Seal, Terminal (GM Engine Only)	
554	4461222	9	Plug, Terminal (GM Engine Only)	
556	2902443	1	Kit, Receptacle (Deutz D2011 Engine Only)	
556	4461071	8	Terminal, Female (Gold) (Deutz D2011 Engine Only)	
556	4461072	1	Connector, Flange Mount (Deutz D2011 Engine Only)	
556	4461073	1	Connector, Dust Cap (Deutz D2011 Engine Only)	
556	4461074	1	Connector, Shell (Deutz D2011 Engine Only)	
558	4461157	1	Connector - 2 Position	
558	4460458	2	Seal, Terminal	
558	4460979	2	Pin, Male	
		Ref	**STANDARD HARNESS COMPONENTS**	
601	4921927	1	Jib Valve Harness (460SJ Only)	
601A	4460326	1	Plug, Male - 3 Position	
601A	4460267	3	Pin, Male	
601B	4460499	2	Connector, DIN with Diode	
602		Ref	Battery Cable Kit Options:	
602	2901880	1	Deutz D2011 Engine Machines	B
602	1001147701	1	Deutz TD2.9L4 Engine Machines	C

ITEM	PART NUMBER	QTY	DESCRIPTION	REV
602	2902511	1	GM Engine Machines	C
602A	7016843	1	Deutz D2011 Engines - Cable, Battery (Red) (Battery to Starter Relay and Auxiliary Power Relay)	
602A	7027059	1	Deutz TD2.9L4 Engines - Cable, Battery (Red) (Battery to Power Relay to Starter Relay and Starter)	
602A	7027012	1	GM Engines - Cable, Battery (Red) (Battery to Auxiliary Power Relay)	
602B	7016835	1	Deutz D2011 Engines - Cable, Battery (Black) (Battery - and Auxiliary Pump to Ground)	
602B	7027061	1	Deutz TD2.9L4 Engines - Cable, Battery (Black) (Battery to Pivot Bolt Ground to Starter Relay and Engine Ground)	
602B	7027062	1	Deutz TD2.9L4 Engines - Cable, Battery (Black) (Auxiliary Pump to Pivot Bolt Ground)	
602B	7027013	1	GM Engines - Cable, Battery (Black) (Battery - and Auxiliary Pump to Ground)	
602C	7016834	1	Deutz D2011 Engines - Cable, Battery (Red) (Starter Relay to Starter)	
602C	See Note	1	Deutz TD2.9L4 Engines - Cable, Battery (Red) (Battery to Power Relay to Starter Relay and Starter) (Note: Use Item 602A)	
602C	7016808	1	GM Engines - Cable, Battery (Red) (Auxiliary Power Relay to Starter)	
602D	7016820	1	Deutz D2011 and GM Engines - Cable, Battery (Auxiliary Relay to Auxiliary Pump) (Red)	
602D	7027060	1	Deutz TD2.9L4 Engines - Cable, Battery (Auxiliary Relay to Auxiliary Pump) (Red)	
603	See Note	AR	Deutz D2011 Engine Harness Components (Deutz Engine Machines Only) (Note: Not Available for Purchase)	
603A	7027796	1	Deutz D2011 Engine Harness	
603B	See Note	AR	Deutz D2011 Engine Harness Components (Deutz Engine Machines Only) (Note: Not Available for Purchase)	
603C	7027793	1	Plug-In, Connector	
603D	70001872	1	Deutz D2011 Engine Harness (For other replacement parts refer to Deutz engine dealer)	
604	See Note	2	Pump Harness (Note: Not Available for Purchase)	
604A	7007497	2	Plug (Pump)	
604B	7007498	2	Plug (Valve Harness)	
605	1060904	1	Cable, Jumper (Deutz D2011 Engine Machines Only)	
606	0140044	1	Alarm Harness (Includes Alarm)	
606A	4460536	1	Connector - 2 Position	
606A	4460464	2	Socket, Female	
607		Ref	Capacity/Elevation Cut-out Switch Harness Options (Includes Electrical Cable and Items 614A-614C):	
607	4922714	2	Capacity/Elevation Cut-out Switch Harness 400S (Includes Items 8.5ft/2.6m of p/n 1060902 18/2 Electrical Cable) (All Specs Except CE Spec)	B
607	1001093914	2	Capacity/Elevation Cut-out Switch Harness 400S with Arctic Package (Includes Items 8.5ft/2.6m of p/n 4923466 18/2 Polar Electrical Cable) (All Specs Except CE Spec)	A
607	4922714	1	Capacity/Elevation Cut-out Switch Harness 400S (Includes Items 8.5ft/2.6m of p/n 1060902 18/2 Electrical Cable) (CE Spec Only)	B
607	4922714	1	Capacity/Elevation Cut-out Switch Harness 460SJ (Includes Items 8.5ft/2.6m of p/n 1060902 18/2 Electrical Cable) (All Specs Except CE Spec)	B
607	1001093914	1	Capacity/Elevation Cut-out Switch Harness 460SJ with Arctic Package (Includes Items 8.5ft/2.6m of p/n 4923466 18/2 Polar Electrical Cable) (All Specs Except CE Spec)	A

ITEM	PART NUMBER	QTY	DESCRIPTION	REV
607	4922714	1	Capacity/Elevation Cut-out Switch Harness 460SJ (Includes Items 8.5ft/2.6m of p/n 1060902 18/2 Electrical Cable) (CE Spec Only)	B
607A	4360548	1	Switch, Limit	
607B	4460968	1	Connector, Strain Relief	
607C	4460226	2	Socket, Female	
608		Ref	Transport Limit Switch Harness - 18/2 (Note: Does NOT include Limit Switch - Purchase Item 609 Separately)	
608	4922769	1	Transport Limit Switch Harness - 18/2 400S (Includes Items 26.5ft/8.1m of p/n 1060680 18/2 Electrical Cable and 2 Sockets)	B
608	1001093915	1	Transport Limit Switch Harness - 18/2 400S with Arctic Package (Includes Items 26.5ft/8.1m of p/n 4923466 18/2 Polar Electrical Cable and 2 Sockets)	A
608	Not Required	0	Transport Limit Switch Harness - 18/2 460SJ	
608A	4460226	2	Socket, Female	
609		Ref	Switch, Limit Options:	
609	4360549	1	Switch, Limit 400S (All Specs Except CE Spec)	
609	4360578	1	Switch, Limit 400S (CE Specs)	
609	Not Required	0	Switch, Limit 460SJ (All Specs Except CE Spec)	
609	4360578	1	Switch, Limit 460SJ (CE Specs)	
609	4460968	1	Connector, Strain Relief	
610	See Note	1	Speed Control Harness (Note: Not Available for Purchase)	
610A	4460224	1	Connector - 6 Position	
610A	4460226	6	Socket, Female	
611	See Note	1	Controller Harness Assembly (Lift and Swing) (Note: Not Available for Purchase)	
611A	7022819	1	Connector - 8 Position (Natural)	
611A	4460871	8	Socket, Female	
612	7022824	1	Controller Harness/Circuit Board Assembly (Drive and Steer)	
612A	7022825	1	Connector - 8 Position Black	
612A	4460871	7	Socket, Female	
613	4360517	1	Switch, Proximity	
613A	4460320	1	Connector - 2 Position	
613A	4460227	2	Pin, Male	
614	4923451	1	Harness, Glow Plug (Deutz D2011 Engine Machines Only)	
615	1001138491	1	Fuel Harness (Deutz TD2.9L4 Engines Only)	
615A	4460897	1	Receptacle, Female - 2 Position	
615A	4460941	2	Pin, Male	
615A	4460891	1	Plug, Male - 2 Position	
615A	4460942	2	Socket, Female	
615B	1001116983	1	Receptacle, Female - 2 Position	
615B	1001116710	2	Terminal	
615B	4461054	2	Seal	
615C	4460932	1	Receptacle, Female - 4 Position	
615C	4460941	2	Pin, Male	
615C	4460464	2	Pin, Male	
616	1001146268	1	Deutz TD2.9L4 Engine Harness	D
616A	1001133956	1	Connector (Includes Cover, Locks and Retention Plate)	
616A	1001126352	6	Terminal	
616A	1001126353	6	Seal, Terminal	
616A	1001126384	19	Terminal	
616A	1001126351	3	Terminal	
616A	1001126356	63	Plug, Seal	

ITEM	PART NUMBER	QTY	DESCRIPTION	REV
616A	1001126357	2	Plug, Seal	
616B	1001133957	1	Connector (Includes Cover, Locks and Retention Plate)	
616B	1001126384	17	Terminal	
616B	1001126351	13	Terminal	
616B	1001126356	19	Plug, Seal	
616B	1001126357	11	Plug, Seal	
616C	4461070	3	Receptacle, Female with Resistor (3 Position)	
616C	4461095	6	Plug, Male - 3 Position	
616C	4460944	6	Socket, Female	
616C	4460466	2	Seal, Plug	
616D	80484084	1	Receptacle, Female - 8 Position	
616D	8229242	1	Fuse - 5A	
616D	80983191	1	Fuse - 10A	
616D	1001147264	1	Cap	
616D	1001116727	8	Plug	
616D	4460458	4	Seal	
616E	1001116952	1	Plug, Male - 2 Position	
616E	4460465	2	Socket, Female	
616F	1001138110	1	Plug, Male - 2 Position	
616F	1001138111	2	Socket, Female	
616F	1001138113	2	Seal	
616G	2902443	1	Kit, Receptacle	
616G	4461071	8	Terminal, Female (Gold)	
616G	4461072	1	Connector, Flange Mount	
616G	4461073	1	Connector, Dust Cap	
616G	4461074	1	Connector, Shell	
616H	4460894	1	Plug, Male - 6 Position	
616H	4460465	3	Socket, Female	
616H	4460944	2	Socket, Female	
616H	4460466	1	Seal, Plug	
616J	4460930	1	Plug, Male - 8 Position	
616J	4460465	1	Socket, Female	
616J	4460466	7	Seal, Plug	
616K	4460884	1	Plug, Male - 4 Position	
616K	4460465	2	Socket, Female	
616K	4460942	2	Socket, Female	
616L	1001142938	1	Plug, Male - 2 Position	
616L	1001142940	2	Terminal, Female	
616L	1001142941	2	Seal	
616M	1001133714	1	Plug, Male - 4 Position	
616M	1001133715	3	Terminal, Female	
616M	1001135650	3	Seal	
616M	4461008	1	Plug, Cavity	
616N	1001126362	1	Receptacle, Female - 62 Position	
616N	1001126363	33	Terminal	
616N	1001126364	33	Seal	
616N	1001126391	23	Plug	
616N	4461008	4	Plug, Cavity	
616N	1001126365	2	Terminal	
616N	4461054	2	Seal	
616P	4460891	1	Connector - 2 Position	

ITEM	PART NUMBER	QTY	DESCRIPTION	REV
616P	4460465	2	Socket, Female	
616P	4460897	1	Connector -2 Position	
616P	See Note	1	Resistor (Note: Not Available for Purchase)	
617	1001143907	1	Alternator Power Cable (Deutz TD2.9L4 Engines)	
617	1001098764	1	Boot, Red (Deutz TD2.9L4 Engines)	
618	1001141304	1	Harness, Glow Fuse (Deutz TD2.9L4 Engine Machines Only)	
		Ref	**OPTIONAL HARNESS COMPONENTS**	
701		Ref	AC to Platform Receptacle Components Options:	
		Ref	NOTE: For 240V GFI Receptacle used with 7500W SkyPower Generator, See SPECIAL OPTIONS SECTION.	
701	0270022	Ref	110V GFI Receptacle (All Specs Except CE Spec)	4
701	0270024	Ref	220V GFI Receptacle (All Specs Except CE Spec)	3
701		Ref	CE Specs Options:	
701		Ref	Without Generator:	
701	1001091969	Ref	110V with IEC Yellow Receptacle and Plug	C
701	1001091970	Ref	220V with IEC Blue Receptacle and Plug	C
701	1001091975	Ref	220V with AFSINT 107 Keyed Ground Receptacle and Plug	C
701	1001091973	Ref	220V with CEE 7 Post Ground Receptacle and Plug (2x4 Box)	D
701	1001091971	NLA	220V with CEE 7 Post Ground Receptacle and Plug (70x70 Box)	C
701	1001091974	Ref	220V with CEE 7 Side Ground Receptacle and Plug (2x4 Box)	D
701	1001091972	NLA	220V with CEE 7 Side Ground Receptacle and Plug (70x70 Box)	C
701		Ref	With 2500W Generator:	
701	1001100326	Ref	110V with IEC Yellow Receptacle and Plug	D
701	1001100327	Ref	220V with IEC Blue Receptacle and Plug	D
701	1001100337	Ref	220V with AFSINT 107 Keyed Ground Receptacle and Plug	D
701	1001100331	Ref	220V with CEE 7 Post Ground Receptacle and Plug (2x4 Box)	D
701	1001100329	NLA	220V with CEE 7 Post Ground Receptacle and Plug (70x70 Box)	C
701	1001100333	Ref	220V with CEE 7 Side Ground Receptacle and Plug (2x4 Box)	C
701	1001100328	NLA	220V with CEE 7 Side Ground Receptacle and Plug (70x70 Box)	C
701	1001093275	Ref	Breaker Box Installation (Required on CE Spec Machines without Powermite Generator Control Box)	B
701	1001109863	Ref	Breaker Box Installation (Required on CE Spec Machines with Powermite Generator Control Box)	A
701A		Ref	Box, Switch Options:	
701A	0860038	AR	0270022 & 0270024 Installations	
701A	0861781	AR	1001091969, 1001091970, 1001100326 & 100110327 Installations	
701A	0861782	NLA	1001091971, 1001091972, 1001100328 & 100110329 Installations (Note: Was p/n 0861782 which is no longer available. Use p/n 1001100344 CEE 7 Side Ground Service Kit or p/n 1001100343 CEE 7 Post Ground Service Kit. Kit include Box p/n 1001141967 and Items 701B, 701C & 701D.)	
701A	0861731	AR	1001091975, 1001091973, 1001091974, 1001100337 1001100331 & 100110333 Installations	
701A	1001141967	AR	1001100343, 1001100344, 1001141970 & 1001141971 Kits	
701B		Ref	Receptacle Options:	
701B	4460346	1	0270022 Installation	
701B	4460125	1	0270024 Installation	
701B	4461198	1	1001091969 & 1001100326 Installations (Includes Cvr)	

ITEM	PART NUMBER	QTY	DESCRIPTION	REV
701B	4461201	1	1001091970 & 1001100327 Installations (Includes Cvr)	
701B	4461204	NLA	1001091971 & 1001100328 Installations (Includes Cvr) (Use p/n 1001100343)	
701B	4461207	NLA	1001091972 & 1001100329 Installations (Includes Cvr) (Use p/n 1001100344)	
701B	4461244	1	1001091973 & 1001100331 Installations (Includes Cvr)	
701B	4461245	1	1001091974 & 1001100333 Installations (Includes Cvr)	
701B	4461246	1	1001091975 & 1001100337 Installations (Includes Cvr)	
701B	1001141968	1	1001100343 & 1001141971 Kits	
701B	1001141969	1	1001100344 & 1001141970 Kits	
701C		Ref	Cover Options:	
701C	4060700	1	0270022 Installation (Side Hinged)	
701C	1001110873	1	0270022 Installation (Top Hinged)	
701C	4060092	1	0270024 Installation	
701C	4461198	1	1001091969 & 1001100326 Installations (Includes Receptacle)	
701C	4461201	1	1001091970 & 1001100327 Installations (Includes Receptacle)	
701C	4461204	NLA	1001091971 & 1001100328 Installations (Includes Cvr) (Use p/n 1001100343)	
701C	4461207	NLA	1001091972 & 1001100329 Installations (Includes Cvr) (Use p/n 1001100344)	
701C	4461244	1	1001091973 & 1001100331 Installations (Includes Receptacle)	
701C	4461245	1	1001091974 & 1001100333 Installations (Includes Receptacle)	
701C	4461246	1	1001091975 & 1001100337 Installations (Includes Receptacle)	
701C	1001141968	1	1001100343 & 1001141971 Kits	
701C	1001141969	1	1001100344 & 1001141970 Kits	
701D		Ref	Plug Options (With 2500W Generator Only):	
701D	4460205	1	0270022 Installation (Male)	
701D	4460233	1	0270024 Installation (Male)	
701D	4461196	1	1001091969 & 1001100326 Installations (Male)	
701D	4461197	1	1001091969 & 1001100326 Installations (Female)	
701D	4461199	1	1001091970 & 1001100327 Installations (Male)	
701D	4461200	1	1001091970 & 1001100327 Installations (Female)	
701D	4461202	1	1001091973, 1001091971, 1001100331 & 1001100328 Installations & 1001100343 & 1001141971 Kits (Male)	
701D	4461203	1	1001091973, 1001091971, 1001100331 & 1001100328 Installations & 1001100343 & 1001141971 Kits (Female)	
701D	4461205	1	1001091974, 1001901972, 1001100333 & 1001100329 Installation & 1001100344 & 1001141970 Kits (Male)	
701D	4461206	1	1001091974, 1001901972, 1001100333 & 1001100329 Installation & 1001100344 & 1001141970 Kits (Female)	
701D	4461249	1	1001091975 & 1001100337 Installations (Male)	
701D	4461250	1	1001091975 & 1001100337 Installations (Female)	
701E		Ref	Connector, Strain Relief Options:	
701E	4460071	1	0270022 & 0270024 Installations	
701E	4460968	1	1001091969, 1001091970, 1001091971, 1001091972, 1001100326, 1001100327, 1001100328 & 1001100329 Installations **(SN 0300096000 through 0300127205)**	
701E	1001101191	1	1001091969, 1001091970, 1001091971, 1001091972, 1001100326, 1001100327, 1001100328 & 1001100329 Installations	

ITEM	PART NUMBER	QTY	DESCRIPTION	REV
701E	4460662	1	1001091975, 1001091973, 1001091974, 1001100337, 1001100331 & 1001100333 Installations	
701E	4460968	1	1001091975, 1001091973, 1001091974, 1001100337, 1001100331 & 1001100333 Installations	
701E	1001101191	1	1001091975, 1001091973, 1001091974, 1001100337, 1001100331 & 1001100333 Installations	
701E		Ref	Adapter, Strain Relief Options:	
701E	Not Required	0	0270022 & 0270024 Installations	
701E	Not Required	0	1001091969, 1001091970, 1001091971, 1001091972, 1001100326, 1001100327, 1001100328 & 1001100329 Installations	
701E	1001101196	1	1001091969, 1001091970, 1001091971, 1001091972, 1001100326, 1001100327, 1001100328 & 1001100329 Installations	
701E	Not Required	0	1001091975, 1001091973, 1001091974, 1001100337, 1001100331 & 1001100333 Installations	
701E	1001101196	1	1001091975, 1001091973, 1001091974, 1001100337, 1001100331 & 1001100333 Installations	
701E	0100020	AR	Sealant	
701F	3960422	1	Gasket (0270022 & 0270024 Installations Only)	
701G	4460315	1	Terminal, Spade (0270022 & 0270024 Installations Only) (Not Shown)	
701H		Ref	Decal - AC Power (Not Shown)	
701H	1703464	1	110V	
701H	3252507	1	220V	
701J	0903484	AR	Bracket, Receptacle Box Mounting (Only Required on CE Spec Installations	
701K	0903566	1	Bracket, Circuit Breaker Mounting (Only Required on CE Spec Installations)	
701L		Ref	Breaker, Circuit Kit Options (Only Required on CE Spec Installations):	
701L	2902549	AR	Kit (Without Powermite Generator Control Box)	E
701L	1001109864	AR	Kit (With Powermite Generator Control Box)	B
701L		Ref	Circuit Breaker Options:	
		Ref	**Note: For machines with Powermite Generator Control Box use p/n 1001181046. For machines without Powermite Generator Control Box use p/n 1001181045.**	
701L	1001109477	NLA	Breaker 10A (Use p/n 1001181046)	
701L	1001109475	NLA	Breaker 16A (Use p/n 1001181045)	
701L	1001109482	NLA	Breaker 30mA (Use p/n 1001181046 for 10A/30mA combination or use p/n 1001181045 for 16A/30mA combination)	
701L	0861880	1	Breaker Box	
701L	4460957	1	Terminal Block	
701L	4460956	1	Barrier, Terminal Block	
701M	1001097150	2	Connector, Strain Relief (Only Required on CE Spec Installations)	
701N	1060908	Ref	Cable, Extension Options (Only Required on CE Spec Installations):	
701N	1060908	6 ft/1.8m	Without Powermite Generator Control Box	
701N	1060908	10 ft/3m	With Powermite Generator Control Box	
	0275216	1	Receptacle, Box and Plug Kit (110V IEC Yellow) (Includes Items 701A-701C and Male 701D Plug End) (1001091969 Installation)	1-A
	1001100341	1	Receptacle and Box Kit (110V IEC Yellow) (Includes Items 701A-701C and Male 701D Plug End) (1001100326	2-A

ITEM	PART NUMBER	QTY	DESCRIPTION	REV
			Installation)	
	0275217	1	Receptacle, Box and Plug Kit (220V IEC Blue) (Includes Items 701A-701C and Male 701D Plug End) (1001091970 Installation)	1-A
	1001100342	1	Receptacle and Box Kit (220V IEC Blue) (Includes Items 701A-701C and Male 701D Plug End) (1001100327 Installation)	2-A
	0275218	NLA	Receptacle, Box and Plug Kit (220V CEE 7 Post Ground with 70x70 Box) (Includes Items 701A-701C and Male 701D Plug End) (1001091971 Installation) (Use p/n 1001100343)	B-B
	1001100343	1	Receptacle and Box Kit (220V CEE 7 Post Ground with 70x70 Box) (Includes Items 701A-701C and Male 701D Plug End) (1001100328 Installation)	2-A
	0275219	NLA	Receptacle, Box and Plug Kit (220V CEE 7 Side Ground with 70x70 Box) (Includes Items 701A-701C and Male 701D Plug End) (1001091972 Installation) (Use p/n 1001100344)	B-B
	1001100344	1	Receptacle and Box Kit (220V CEE 7 Side Ground with 70x70 Box) (Includes Items 701A-701C and Male 701D Plug End) (1001100329 Installation)	2-A
	0275452	1	Receptacle, Box and Plug Kit (220V CEE 7 Post Ground with 2x4 Box) (Includes Items 701A-701C and Male 701D Plug End) (1001091973 Installation)	1-A
	1001100345	1	Receptacle and Box Kit (220V CEE 7 Post Ground with 2x4 Box) (Includes Items 701A-701C and Male 701D Plug End) (1001100331 Installation)	2-A
	0275453	1	Receptacle, Box and Plug Kit (220V CEE 7 Side Ground with 2x4 Box) (Includes Items 701A-701C and Male 701D Plug End) (1001091974 Installation)	1-A
	1001100347	1	Receptacle and Box Kit (220V CEE 7 Side Ground with 2x4 Box) (Includes Items 701A-701C and Male 701D Plug End) (1001100333 Installation)	2-A
	0275454	1	Receptacle, Box and Plug Kit (220V AFSINT 107 Keyed Ground) (Includes Items 701A-701C and Male 701D Plug End) (1001091975 Installation)	1-A
	1001100346	1	Receptacle and Box Kit (220V AFSINT 107 Keyed Ground) (Includes Items 701A-701C and Male 701D Plug End) (1001100337 Installation)	2-A
	2902549	1	Circuit Breaker Box Kit (Includes Items 701L-701N) (Only Required on CE Spec Installations)	C
702		Ref	2500W Generator Electrical Components	
702	1001112588	Ref	110V (Deutz Engines)	A
702	4933350	Ref	110V (GM Engines)	B
702	1001112743	Ref	220V (Deutz 50Hz)	B
		Ref	NOTE: For 4000W Generator Installations, See SPECIAL OPTIONS SECTION.	
702A	4460321	1	Connector - 4 Position	
702A	4460906	4	Socket, Female	
702B	4922641	1	Harness - On/Off Switch	1-A
702C	4460226	2	Socket, Female	
702D		Ref	Powermite Control Box to Relay Harness Options:	
702D	1001112589	1	110V (Deutz Engines)	A
702D	1001112589	1	220V (Deutz Engines)	A
702D	4923445	1	110V (GM Engines)	A
702E	4460375	3	Terminal	
702F	4460742	1	Connector - 2 Position	
702F	4460743	2	Socket, Female	
702F	4460458	2	Seal, Wire	

ITEM	PART NUMBER	QTY	DESCRIPTION	REV
702G	7020193	1	2500W Generator Power Cable	
702H	See Note	1	Control Box Harness (Note: Not Available for Purchase)	
702J	4460961	1	Connector, Female - 4 Position	
702J	4460705	4	Pin, Male	
703		Ref	7500W SKYPOWER GENERATOR INSTALLATION	
703	1001147018	Ref	60Hz and Deutz TD2.9L4 Engine	C
703	1001115390	Ref	60Hz and Deutz D2011 Engine	C
703	1001115721	Ref	50Hz Spec and Deutz D2011 Engine	C
703	0275057	Ref	60Hz Spec and GM Engine	I
		Ref	NOTE: For 4000W Generator Installations, See SPECIAL OPTIONS SECTION.	
703A		Ref	Connector Twist-Lock Options (Machines with Deutz D2011 and GM Engines Only):	
703A	4460958	1	60Hz Spec **(SN 0300177683 through 0300182510)**	
703A	See Note	1	50Hz Spec (Note: Not Available - Purchase Locally)	
703B		Ref	Gasket Options:	
703B	3960422	AR	60Hz Spec	
703B	See Note	AR	50Hz Spec (Note: Not Available - Purchase Locally)	
703C		Ref	Cover, Receptacle Options:	
703C	1001110873	1	60Hz Spec (Top Hinged)	
703C	See Note	1	50Hz Spec (Note: Not Available - Purchase Locally)	
703D		Ref	Cover, Receptacle Options (Machines with Deutz D2011 and GM Engines Only): **(SN 0300177683 through 0300182510)**	
703D	4061043	1	60Hz Spec (Side Hinged)	
703D	1001110872	1	60Hz Spec (Top Hinged)	
703D	See Note	1	50Hz Spec (Note: Not Available - Purchase Locally)	
703E		Ref	Receptacle Options:	
		Ref	NOTE: For 240V GFI Receptacle, See SPECIAL OPTIONS SECTION.	
703E	4460346	1	60Hz Spec	
703E	See Note	1	50Hz Spec (Note: Not Available - Purchase Locally)	
703F	4460051	1	Connector, Strain Relief (Machines with Deutz D2011 and GM Engines Only) **(SN 0300177683 through 0300182510)**	
703G	4460071	1	Connector, Strain Relief	
703H	4922925	1	Harness, Generator	
703I	77363233	1	Connector - 6 Position	
703I	4460465	6	Socket, Female	
703J	4460225	1	Plug, Male - 6 Position	
703J	4460226	6	Socket, Female	
704		Ref	7500W SkyPower Generator Junction Box Components	
704	0861542	Ref	60Hz Spec (Deutz D2011 Engines) **(SN 0300177683 through 0300182510)**	E
	1001157592	Ref	60Hz Spec (Deutz D2011 Engines) **(SN 0300182511 through 0300203770)**	C
704	1001157592	Ref	60Hz Spec (Deutz TD2.9L4 Engines)	C
704	0861542	Ref	60Hz Spec (GM Engines) **(SN 0300177683 through 0300182510)**	E
	1001157592	Ref	60Hz Spec (GM Engines) **(SN 0300182511 through 0300203770)**	C
704	0861567	Ref	50Hz Specs **(SN 0300177683 through 0300182510)**	B
	1001157592	Ref	50Hz Specs **(SN 0300182511 through 0300203770)**	C
704A		Ref	Cable, Electrical 12/3	
704A	1060494	2 ft/.6m	60Hz Spec	

ITEM	PART NUMBER	QTY	DESCRIPTION	REV
704A	See Note	2 ft/.6m	50Hz Spec (Note: Not Available - Purchase Locally)	
704B		Ref	Cable, Electrical 10/3 (Machines with Deutz D2011 and GM Engines Only)	
704B	1060708	2.5 ft/.76m	60Hz Spec	
704B	See Note	2.5 ft/.76m	50Hz Spec (Note: Not Available - Purchase Locally)	
704C	1060343	1.5 ft/.46m	Cable, Electrical 10/4 (60Hz Spec Only)	
704D	4460425	AR	Connector, Strain Relief	
704D	1001152525	1	Plug, Hole (Machines with Deutz TD2.9L4 Engines Only)	
704E		Ref	Component Options:	
704E	4460426	2	Connector, Strain Relief (60Hz Spec Only)	
704E	4460426	1	Connector, Strain Relief (50Hz Spec Only)	
704E	3520189	1	Plug (50Hz Spec Only)	
704F	1671092	1	Cover (60Hz Spec Only)	
704F	4460963	1	Connector (60Hz Spec Only)	
705		Ref	7500W Generator Electrical Diagram Components Options:	
705	1001112586	Ref	Deutz D2011 Engine Machines **(SN 0300177683 through 0300182510)**	B
705	1001157769	Ref	Deutz D2011 Engine Machines **(SN 0300182511 through 0300203770)**	C
705	1001157770	Ref	Deutz TD2.9L4 Engine Machines	A
705	4933349	Ref	GM Engine Machines **(SN 0300177683 through 0300182510)**	B
705	1001157768	Ref	GM Engine Machines **(SN 0300182511 through 0300203770)**	A
705A		Ref	Generator Harness Options:	
705A	1001112587	1	Deutz D2011 Engine Machines **(SN 0300177683 through 0300182510)**	B
705A	1001152429	1	Deutz D2011 Engine Machines **(SN 0300182511 through 0300203770)**	C
705A	1001119968	1	Deutz TD2.9L4 Engine Machines	C
705A	4923420	1	GM Engine Machines	A
705B	4460374	2	Plug, Sealed Relay (Machines with Deutz D2011 Engines Only) **(SN 0300177683 through 0300182510)**	
705B	4460374	2	Plug, Sealed Relay (Machines with GM Engines Only)	
705B	4460375	7	Terminal	
705C	4460967	1	Plug, Male - 3 Position	
705C	4460465	3	Socket, Female	
705D	2400060	1	Fuseholder	
705D	2400064	1	Fuse - 5 Amp	
705E	4922641	1	Switch Harness	
705F	4460226	2	Socket, Female	
705G	4460742	1	Connector - 2 Position	
705G	4460743	2	Socket, Female	
705G	4460458	2	Seal, Wire	
706	2920161	1	Strobe Light Harness (Includes Strobe Light)	B
706A	4460891	1	Connector - 2 Position	
706A	4460465	2	Socket, Female	
707	See Note	1	Lights Harness (Note: Not Available for Purchase)	
707	1060341	37 ft/11.3m	Cable, Electrical - 16/2	
707A	3740049	1	Relay	
707A	4922643	1	Harness, Bag (Located at Ground Control Box) (Not Shown)	
708		Ref	Platform Worklights Components	

ITEM	PART NUMBER	QTY	DESCRIPTION	REV
708A		Ref	Harness, Console Box to Aux Relay Options:	
708A	1060983	1	400S (63ft/19.2m of 12/3 Cable P/N 1060494)	
708A	4922965	1	460SJ (69ft/21m of 12/3 Cable P/N 1060494)	
708B	2920140	2	Platform Worklights External Harness (Includes Light and Wire Only)	
708C	4460426	1	Connector, Strain Relief	
708D	2400070	1	Fuse	
708D	2400066	1	Holder, Fuse	
709		Ref	Platform Floodlights Components	
709A	2920157	2	Platform Floodlights External Harness (Includes Lights and Wire Only) (Not Shown)	
709B		Ref	Harness, Console Box to Aux Relay Options:	
709B	1060983	1	400S (63ft/19.2m of 12/3 Cable P/N 1060494)	
709B	4922965	1	460SJ (69ft/21m of 12/3 Cable P/N 1060494)	
709C	4933313	Ref	Platform Floodlight Wiring Diagram Components	1/A
709D	4460320	2	Connector - 2 Position	
709D	4460227	4	Pin, Male	
709E	1060977	1	Cord, 2 Wire Coiled (Console Box Circuit Breaker to Switch)	
709F	4922764	2	Platform Floodlights Harness (Lights to Switch) (Not Shown)	1/A
709G	4460424	2	Connector - 2 Position	
709G	4460226	4	Socket, Female	
709H	4360232	1	Circuit Breaker, 15Amp	
709J	4460425	1	Connector, Strain Relief	
710	4933218	1	Soft-Touch System Wiring Diagram	1/B
710A	1060902	23 ft/7m	Cable, Electrical - 18/2	
710B	4460871	2	Socket, Female	
		Ref	**TOOLS**	
801	7002821	1	Crimper (For Wire to Pin/Socket Connections) (Not Shown)	
802	7002823	1	Extractor (For Removal of Pin/Socket from Connectors) (Not Shown)	
803	4460467	1	Extractor, Pin (Blue 16-18 Gauge) (For Removal of Pin/Socket from Connectors) (Not Shown)	
804	4460510	1	Extractor, Pin (Yellow 12-14 Gauge) (For Removal of Pin/Socket from Connectors) (Not Shown)	
805	7002828	1	Stripper, Wire (Not Shown)	
806	2901443	1	Analyzer Kit	1/A
806A	1600244	1	Analyzer	
806B	1060633	1	Cable, Analyzer	
806C	4460321	2	Plug, Male	
806C	4460226	8	Socket, Female	

SECTION 8 - DECALS

SECTION 8 - DECALS

FIGURE 8-1. DECAL INSTALLATION (ANSI SPEC)

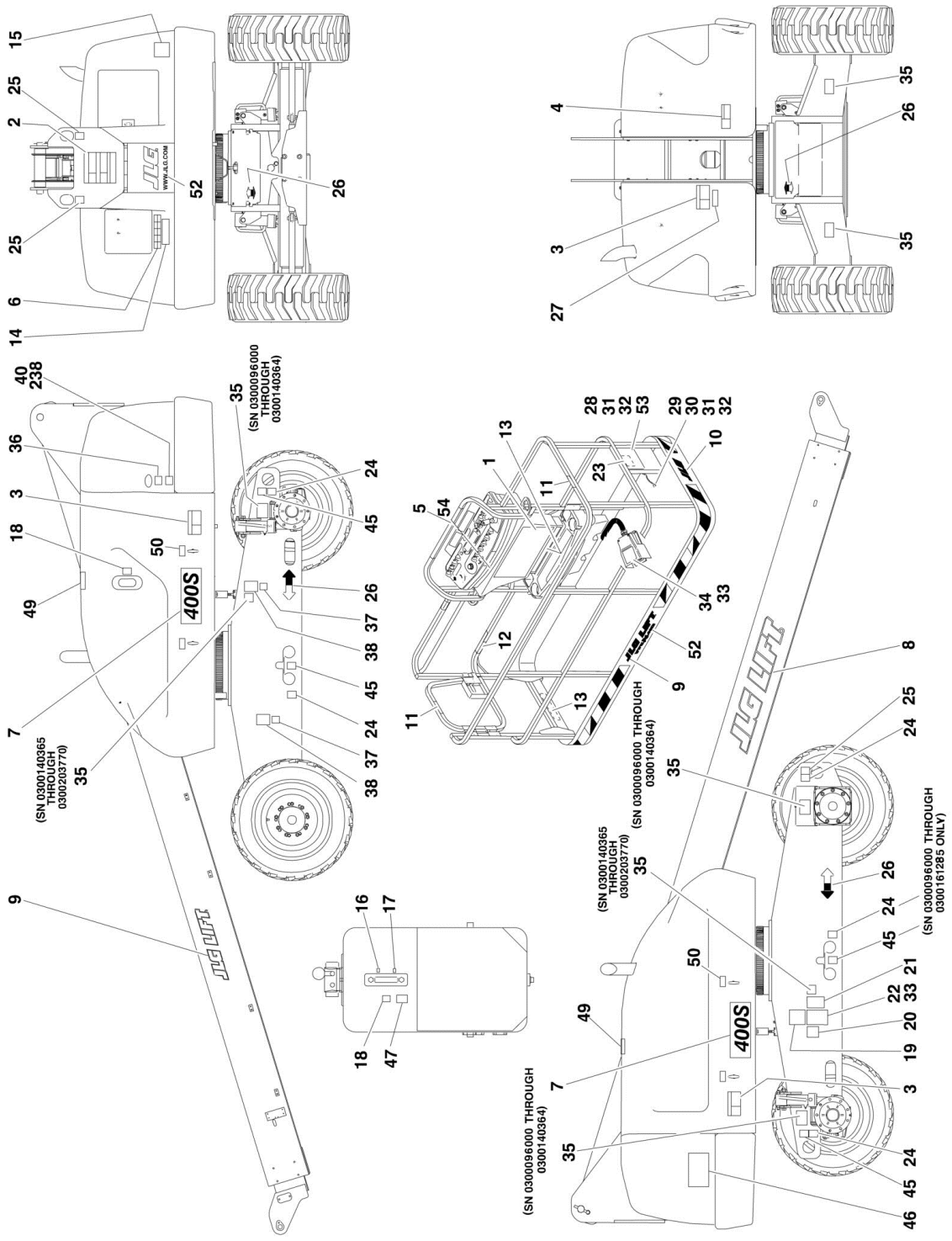

FIGURE 8-1. DECAL INSTALLATION (ANSI SPEC)

ITEM	PART NUMBER	QTY	DESCRIPTION	REV
		Ref	**STANDARD DECAL INSTALLATIONS**	
	0270398	Ref	**Decals JLG**	B
	0259159	Ref	**Decals JLG Model 400S with 500LB Capacity**	C
	0259981	Ref	**Decals JLG Model 400S with 750LB Capacity**	D
	0259160	Ref	**Decals JLG Model 460SJ**	C
1	1703797	1	Decal - Danger/Warning (Platform)	
2	1703798	1	Decal - Danger/Warning (Ground Control)	
3	1703805	2	Decal - Danger/Electrocution	
4	1703804	3	Decal - Warning Crushing	
5		Ref	Decal - Legend (Platform) Options:	
5	1706708	1	Decal - Legend (Platform) **(SN 0300096000 through 0300140364)**	
5	1001108492	1	Decal - Legend (Platform) **(SN 0300140365 through 0300203770)**	
6		Ref	Decal - Legend (Ground Control) Options:	
6	1706709	1	Decal - Legend (Ground Control) **(SN 0300096000 through 0300099083)**	
6	1706941	1	Decal - Legend (Ground Control) **(SN 0300099084 through 0300203770)**	
7		Ref	Decal - Model Designation Options:	
7	1704472	2	Decal - Model Designation Model 400S	
7	1704473	2	Decal - Model Designation Model 460SJ	
8	1702861	2	Decal - JLG Lift (8in)	
9	1702774	1	Decal - JLG Lift (3.5in)	
10	1702773	1	Decal - JLG (5in)	
11	1702868	2	Decal - No Hands	
12	1704277	3	Decal - Attach Lanyard Here	
13		Ref	Decal - Capacity (Platform) Options:	
13		Ref	Decal - Capacity (Platform) 400S with 500lbs. Maximum Capacity Options:	
13	1704096	2	Decal - Capacity (Platform) **(SN 0300096000 through 0300142869)**	
13	1001121800	2	Decal - Capacity (Platform) **(SN 0300142870 through 0300203770)**	
13		Ref	Decal - Capacity (Platform)	
13	1704488	2	Decal - Capacity (Platform) **(SN 0300096000 through 0300142869)**	
13	1001125322	2	Decal - Capacity (Platform) **(SN 0300142870 through 0300203770)**	
13		Ref	Decal - Capacity (Platform) 460SJ Options:	
13	1701645	2	Decal - Capacity (Platform) **(SN 0300096000 through 0300142869)**	
13	1001121801	2	Decal - Capacity (Platform) **(SN 0300142870 through 0300203770)**	
14		Ref	Decal - Capacity (Ground Control) Options:	
14		Ref	Decal - Capacity (Ground Control) 400S with 500lbs. Maximum Capacity Options:	
14	1704104	1	Decal - Capacity (Ground Control) **(SN 0300096000 through 0300100314)**	
14	1707014	1	Decal - Capacity (Ground Control) **(SN 0300100315 through 0300142869)**	
14	1001121813	1	Decal - Capacity (Ground Control) **(SN 0300142870 through 0300203770)**	

SECTION 8 - DECALS

ITEM	PART NUMBER	QTY	DESCRIPTION	REV
14		Ref	Decal - Capacity (Ground Control) 400S with 750lbs. Maximum Capacity Options:	
14	1704489	1	Decal - Capacity (Ground Control) **(SN 0300096000 through 0300100314)**	
14	1707129	1	Decal - Capacity (Ground Control) **(SN 0300100315 through 0300142869)**	
14	1001125331	1	Decal - Capacity (Ground Control) **(SN 0300142870 through 0300203770)**	
14		Ref	Decal - Capacity (Ground Control) 460SJ Options:	
14	1702688	1	Decal - Capacity (Ground Control) **(SN 0300096000 through 0300100314)**	
14	1707013	1	Decal - Capacity (Ground Control) **(SN 0300100315 through 0300142869)**	
14	1001121814	1	Decal - Capacity (Ground Control) **(SN 0300142870 through 0300203770)**	
15	3251813	1	Decal - USA	
16	1701502	1	Decal - High Oil Level **(SN 0300096000 through 0300128256)**	
17	1701503	1	Decal - Low Oil Level **(SN 0300096000 through 0300128256)**	
18	1701504	2	Decal - Hydraulic Oil	
19	1702153	1	Decal - Inspection **(SN 0300096000 through 0300128256)**	
20	See Note	1	Decal - Bar Code (Note: Not Available for Purchase)	
21		Ref	Decal - Patent Options:	
21	1700584	1	Decal - Patent **(SN 0300096000 through 0300161239)**	
21	1001131269	1	Decal - Patent **(SN 0300161240 through 0300203770)**	
22	See Note	1	Nameplate - Serial Number (Note: Not Available for Purchase))	
23	1701509	1	Decal - Manual	
24	1702300	AR	Decal - Tie Down	
25	1701500	4	Decal - Lift	
26	1701529	4	Decal - Arrow	
27	3251243	1	Nameplate - 120V-60Hz	
28	0860520	1	Box, Manual Storage	
29	1060279	1	Cable, Lanyard **(SN 0300096000 through 0300181170)**	
30	0641408	1	Bolt 1/4in-20NC x 1in **(SN 0300096000 through 0300181170)**	
31	4751400	AR	Flatwasher 1/4in Regular	
32	3311405	AR	Locknut 1/4in-20NC	
33	3820001	AR	Rivet	
34	3252347	1	Decal - Footswitch	
35		Ref	Decal - Maximum Tire Load Options:	
35		Ref	Decal - Maximum Tire Load **(SN 0300096000 through 0300140364)**	
35	1706126	4	Decal - Maximum Tire Load Model 400S with 500LB Capacity	
35	1704829	4	Decal - Maximum Tire Load Model 400S With 750LB Capacity	
35	1704828	4	Decal - Maximum Tire Load MODEL 460SJ	
35		Ref	Decal - Maximum Tire Load **(SN 0300140365 through 0300203770)**	
35	1706126	2	Decal - Maximum Tire Load Model 400S with 500LB Capacity	
35	1704829	2	Decal - Maximum Tire Load Model 400S with 750LB Capacity	
35	1704828	2	Decal - Maximum Tire Load MODEL 460SJ	
36		Ref	Decal - Fuel	
36	1701542	1	GM Engine Machines	
36	1701505	1	Caterpillar, Deutz and Perkins Engine Machines	
37		Ref	Decal - LPG Gas	
37	Not Required	0	Non-Dual Fuel Machines	

ITEM	PART NUMBER	QTY	DESCRIPTION	REV
37	1701543	1	Dual Fuel Machines	
38		Ref	Decal - LP Gas Liquid Withdrawal System	
38	Not Required	0	Non-Dual Fuel Machines	
38	1700818	1	Dual Fuel Machines	
40	1001108923	1	Decal - EPA/Carb Spec (Diesel Machines) (Caterpillar, Deutz D2011 and Perkins Engine Machine)	
45	1701499	AR	Decal - No Lift	
46		Ref	Decal - Lift Diagram Options:	
46	3252672	1	Decal - Lift Diagram **(SN 0300096000 through 0300161284)**	
46	1001145140	1	Decal - Lift Diagram **(SN 0300161285 through 0300203770)**	
47	1704412	1	Decal - Hydraulic Oil Chart	
49	1701691	4	Decal - No Step	
50	1704726	4	Decal - Lock Latch	
52	1704885	AR	Decal - WWW.JLG.COM Options:	
52		Ref	Decal **(SN 0300096000 through 0300173675)**	
52		Ref	Decal **(SN 0300173676 through 0300203770)**	
53	0641406	4	Bolt 1/4in-20NC x 3/4in	
54	1705351	1	Decal - Drive/Steer Instructions **(SN 0300140365 through 0300203770)**	
	1001160080	Ref	**ADDITIONAL DECAL COMPONENTS**	
238	1001125387	1	Decal - Ultra Low Sulfur Fuel (Machines with Deutz TD2.9L4 Engines Only)	

SECTION 8 - DECALS

FIGURE 8-2. DECAL INSTALLATION (ANSI EXPORT SPECS)

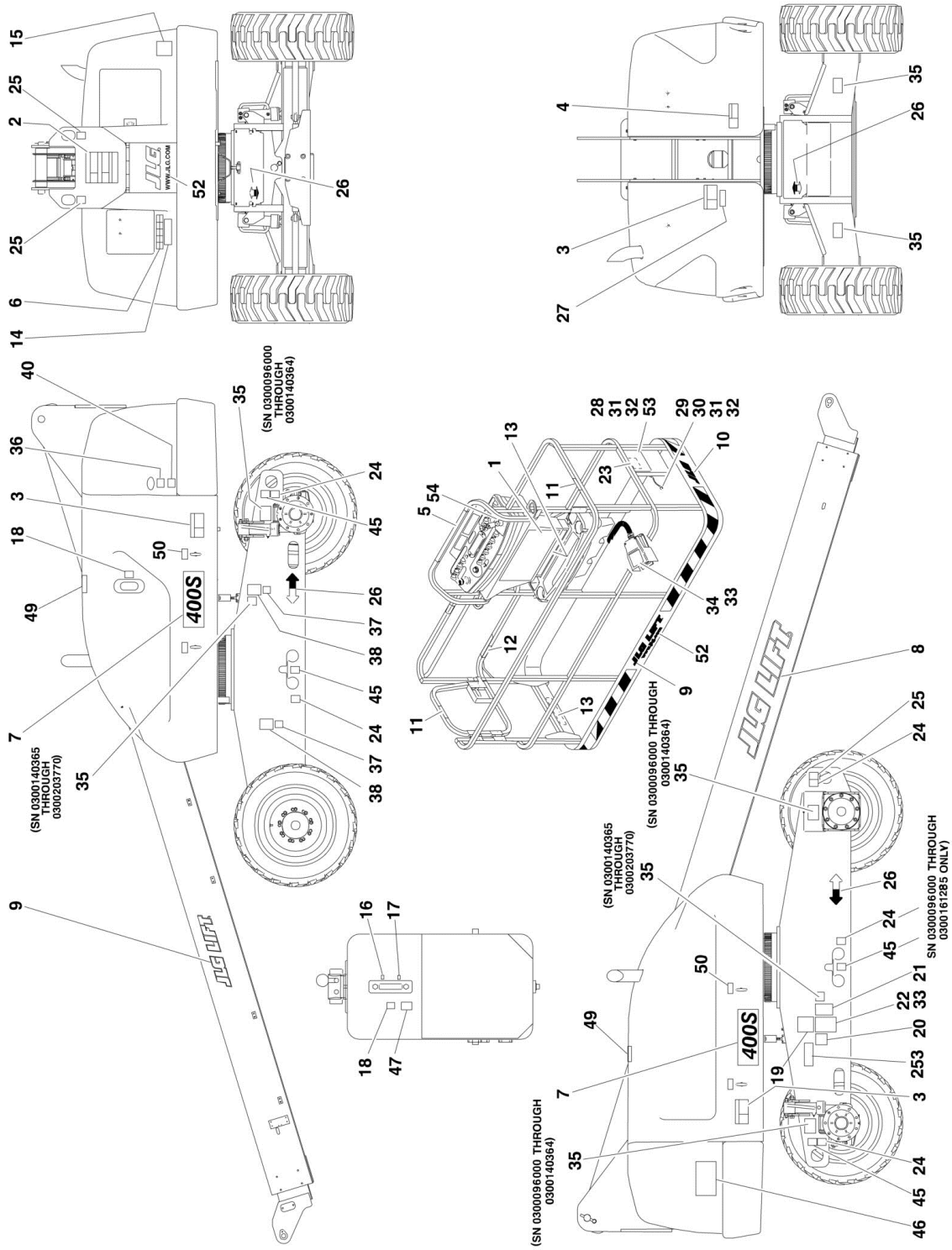

FIGURE 8-2. DECAL INSTALLATION (ANSI EXPORT SPECS)

ITEM	PART NUMBER	QTY	DESCRIPTION	REV
		Ref	**DECAL INSTALLATIONS**	
	0270398	Ref	**Decals JLG**	B
		Ref	**Decal Installations Model 400S with 500LB Capacity**	
	0259185	Ref	**Brazilian Spec (Dual Language - Portuguese/Spanish)**	D
	0259183	Ref	**Chinese Spec (Dual Language - Chinese/English)**	D
	0259181	Ref	**CSA Spec (Dual Language - English/French)**	D
	0259175	Ref	**Japanese Spec**	D
	0259177	Ref	**Korean Spec**	D
	0259179	Ref	**Latin American Spec (Dual Language - English/Spanish)**	D
		Ref	**Decal Installations Model 400S with 750LB Capacity**	
	0259994	Ref	**Brazilian Spec (Dual Language - Portuguese/Spanish)**	D
	0259993	Ref	**Chinese Spec (Dual Language - Chinese/English)**	D
	0259992	Ref	**CSA Spec (Dual Language - English/French)**	D
	0259989	Ref	**Japanese Spec**	D
	0259990	Ref	**Korean Spec**	D
	0259991	Ref	**Latin American Spec (Dual Language - English/Spanish)**	D
		Ref	**Decal Installations Model 460SJ**	
	0259186	Ref	**Brazilian Spec (Dual Language - Portuguese/Spanish)**	D
	0259184	Ref	**Chinese Spec (Dual Language - Chinese/ English)**	D
	0259182	Ref	**CSA Spec (Dual Language - English/French)**	D
	0259176	Ref	**Japanese Spec**	D
	0259178	Ref	**Korean Spec**	D
	0259180	Ref	**Latin American Spec (Dual Language - English/Spanish)**	D
1		Ref	Decal - Danger/Warning (Platform) Options:	
1	1703928	1	Brazilian Spec	
1	1703925	1	Chinese Spec	
1	1703924	1	CSA Spec	
1	1703926	1	Japanese Spec	
1	1703927	1	Korean Spec	
1	1703923	1	Latin American Spec	
2		Ref	Decal - Danger/Warning (Ground Control) Options	
2	1703934	1	Brazilian Spec	
2	1703931	1	Chinese Spec	
2	1703930	1	CSA Spec	
2	1703932	1	Japanese Spec	
2	1703933	1	Korean Spec	
2	1703929	1	Latin American Spec	
3		Ref	Decal - Danger/Electrocution Options:	
3	1703940	2	Brazilian Spec	
3	1703937	2	Chinese Spec	
3	1703936	2	CSA Spec	
3	1703938	2	Japanese Spec	
3	1703939	2	Korean Spec	
3	1703935	2	Latin American Spec	
4		Ref	Decal - Warning Crushing Options:	
4	1703952	3	Brazilian Spec	
4	1703949	3	Chinese Spec	
4	1703948	3	CSA Spec	
4	1703950	3	Japanese Spec	
4	1703951	3	Korean Spec	

SECTION 8 - DECALS

ITEM	PART NUMBER	QTY	DESCRIPTION	REV
4	1703947	3	Latin American Spec	
5		Ref	Decal - Legend (Platform) Options:	
5	1706708	1	Decal - Legend (Platform) **(SN 0300096000 through 0300140364)**	
5	1001108492	1	Decal - Legend (Platform) **(SN 0300140365 through 0300203770)**	
6		Ref	Decal - Legend (Ground Control) Options:	
6	1706709	1	Decal - Legend (Ground Control) **(SN 0300096000 through 0300099083)**	
6	1706941	1	Decal - Legend (Ground Control) **(SN 0300099084 through 0300203770)**	
7		Ref	Decal - Model Designation Options:	
7	1704472	2	Decal - Model Designation Model 400S	
7	1704473	2	Decal - Model Designation Model 460SJ	
8	1702861	2	Decal - JLG Lift (8in)	
9	1702774	1	Decal - JLG Lift (3.5in)	
10	1702773	1	Decal - JLG (5in)	
11		Ref	Decal - No Hands Options:	
11	1704002	2	Brazilian Spec	
11	Not Required	0	Chinese/Japanese/Korean Specs	
11	1704000	2	CSA Spec	
11	1704001	2	Latin American Spec	
12		Ref	Decal - Attach Lanyard Here Options:	
12	1704005	3	Brazilian Spec	
12	1704003	3	CSA Spec	
12	1704277	3	Chinese/Japanese/Korean Spec	
12	1704004	3	Latin American Spec	
13		Ref	Decal - Capacity (Platform) Options:	
13		Ref	230kg/500lb Maximum Capacity Options:	
13		Ref	Decal - Capacity (Platform) **(SN 0300096000 through 0300100314)**	
13	1703996	2	Brazilian Spec - 460SJ	
13	1703996	2	Chinese Spec - 460SJ	
13	1703996	2	CSA Spec - 460SJ	
13	1703996	1	Japanese Spec - 460SJ	
13		Ref	Decal - Capacity (Platform) **(SN 0300096000 through 0300142869)**	
13	1704100	2	Brazilian Spec - 400S	
13	1704101	2	Chinese Spec - 400S	
13	1704099	2	CSA Spec - 400S	
13	1704102	2	Japanese Spec - 400S	
13	1704103	2	Korean Spec - 400S	
13	1704098	2	Latin American Spec - 400S	
13	1701645	2	Latin American Spec - 460SJ	
13		Ref	Decal - Capacity (Platform) **(SN 0300096000 through 0300103507)**	
13	1703996	1	Korean Spec - 460SJ	
13		Ref	Decal - Capacity (Platform) **(SN 0300100315 through 0300142870)**	
13	1707134	2	Brazilian Spec - 460SJ	
13	1707060	2	Chinese Spec - 460SJ	
13	1707055	2	CSA Spec - 460SJ	
13	1707059	2	Japanese Spec - 460SJ	

ITEM	PART NUMBER	QTY	DESCRIPTION	REV
13		Ref	Decal - Capacity (Platform) **(SN 0300103508 through 0300142869)**	
13	1707058	2	Korean Spec - 460SJ	
13		Ref	Decal - Capacity (Platform) **(SN 0300142870 through 0300203770)**	
13	1001125330	2	Brazilian Spec - 400S	
13	1001121920	2	Brazilian Spec - 460SJ	
13	1001121809	2	Chinese Spec - 400S	
13	1001121812	2	Chinese Spec - 460SJ	
13	1001121802	2	CSA Spec - 400S	
13	1001121803	2	CSA Spec - 460SJ	
13	1001121807	2	Japanese Spec - 400S	
13	1001121808	2	Japanese Spec - 460SJ	
13	1001122200	2	Korean Spec - 400S	
13	1001121918	2	Korean Spec - 460SJ	
13	1001121804	2	Latin American Spec - 400S	
13	1001121801	2	Latin American Spec - 460SJ	
13		Ref	340kg/750lb Maximum Capacity Options:	
13		Ref	Decal - Capacity (Platform) **(SN 0300096000 through 0300142869)**	
13	1705070	2	Brazilian Spec - 400S	
13	1705069	2	Chinese Spec - 400S	
13	1705068	2	CSA Spec - 400S	
13	1705065	2	Japanese Spec - 400S	
13	1705066	2	Korean Spec - 400S	
13	1705067	2	Latin American Spec - 400S	
13		Ref	Decal - Capacity (Platform) **(SN 0300142870 through 0300203770)**	
13	1001125329	2	Brazilian Spec - 400S	
13	1001125328	2	Chinese Spec - 400S	
13	1001125327	2	CSA Spec - 400S	
13	1001125323	2	Japanese Spec - 400S	
13	1001125324	2	Korean Spec - 400S	
13	1001125325	2	Latin American Spec - 400S	
14		Ref	Decal - Capacity (Ground Control) Options:	
14		Ref	230kg/500lb Maximum Capacity Options:	
14		Ref	Decal - Capacity (Ground Control) **(SN 0300096000 through 0300100314)**	
14	1704108	1	Brazilian Spec - 400S	
14	1704112	1	Brazilian Spec - 460SJ	
14	1704109	1	Chinese Spec - 400S	
14	1704107	1	CSA Spec - 400S	
14	1704112	1	CSA Spec - 460SJ	
14	1704110	1	Japanese Spec - 400S	
14	1704111	1	Korean Spec - 400S	
14	1704106	1	Latin American Spec - 400S	
14	1702688	1	Latin American Spec - 460SJ	
14		Ref	Decal - Capacity (Ground Control) **(SN 0300100315 through 0300142869)**	
14	1707131	1	Brazilian Spec - 400S	
14	1707133	1	Brazilian Spec - 460SJ	
14	1707045	1	Chinese Spec - 400S	
14	1707046	1	CSA Spec - 400S	

SECTION 8 - DECALS

ITEM	PART NUMBER	QTY	DESCRIPTION	REV
14	1707047	1	CSA Spec - 460SJ	
14	1707053	1	Japanese Spec - 400S	
14	1707043	1	Korean Spec - 400S	
14	1707048	1	Latin American Spec - 400S	
14	1707013	1	Latin American Spec - 460SJ	
14		Ref	Decal - Capacity (Ground Control) **(SN 0300103508 through 0300142869)**	
14	1707044	1	Chinese Spec - 460SJ	
14	1707054	1	Japanese Spec - 460SJ	
14	1707042	1	Korean Spec - 460SJ	
14		Ref	Decal - Capacity (Ground Control) **(SN 0300142870 through 0300203770)**	
14	1001125338	1	Brazilian Spec - 400S	
14	1001121923	1	Brazilian Spec - 460SJ	
14	1001121822	1	Chinese Spec - 400S	
14	1001121825	1	Chinese Spec - 460SJ	
14	1001121815	1	CSA Spec - 400S	
14	1001121816	1	CSA Spec - 460SJ	
14	1001121820	1	Japanese Spec - 400S	
14	1001121821	1	Japanese Spec - 460SJ	
14	1001122201	1	Korean Spec - 400S	
14	1001121921	1	Korean Spec - 460SJ	
14	1001121817	1	Latin American Spec - 400S	
14	1001121814	1	Latin American Spec - 460SJ	
14		Ref	340kg/750lb Maximum Capacity Options:	
14		Ref	Decal - Capacity (Ground Control) **(SN 0300096000 through 0300100314)**	
14	1705076	1	Brazilian Spec - 400S	
14	1705075	1	Chinese Spec - 400S	
14	1705074	1	CSA Spec - 400S	
14	1705071	1	Japanese Spec - 400S	
14	1705072	1	Korean Spec - 400S	
14	1705073	1	Latin American Spec - 400S	
14		Ref	Decal - Capacity (Ground Control) **(SN 0300100315 through 0300142869)**	
14	1707130	1	Brazilian Spec - 400S	
14	1707128	1	Chinese Spec - 400S	
14	1707127	1	CSA Spec - 400S	
14	1707125	1	Japanese Spec - 400S	
14	1707126	1	Korean Spec - 400S	
14	1707132	1	Latin American Spec - 400S	
14		Ref	Decal - Capacity (Ground Control) **(SN 0300142870 through 0300203770)**	
14	1001125337	1	Brazilian Spec - 400S	
14	1001125336	1	Chinese Spec - 400S	
14	1001125335	1	CSA Spec - 400S	
14	1001125332	1	Japanese Spec - 400S	
14	1001125333	1	Korean Spec - 400S	
14	1001125334	1	Latin American Spec - 400S	
15		Ref	Decal - USA Options:	
15	3251813	1	Brazilian/CSA/Latin American Specs	
15	Not Required	0	Chinese/Japanese/Korean Specs	

ITEM	PART NUMBER	QTY	DESCRIPTION	REV
16	1701502	1	Decal - High Oil Level **(SN 0300096000 through 0300128256)**	
17	1701503	1	Decal - Low Oil Level **(SN 0300096000 through 0300128256)**	
18	1701504	2	Decal - Hydraulic Oil	
19		Ref	Decal - Inspection Options:	
19	1704008	1	Brazilian Spec	
19	Not Required	0	Chinese Spec	
19	1704006	1	CSA Spec **(SN 0300096000 through 0300151379)**	
19	Not Required	0	Japanese Spec	
19	Not Required	0	Korean Spec	
19	1704007	1	Latin American Spec **(SN 0300096000 through 0300151379)**	
20	See Note	1	Decal - Bar Code (Note: Not Available for Purchase)	
21		Ref	Decal - Patent Options:	
21	1700584	1	Decal - Patent **(SN 0300096000 through 0300161239)**	
21	Not Required	0	All Specs except CSA Specs **(SN 0300161240 through 0300203770)**	
21	1001131269	1	CSA Spec (Dual Language - English/French) **(SN 0300161240 through 0300203770)**	
22	See Note	1	Nameplate - Serial Number (Note: Not Available for Purchase)	
23	1701509	1	Decal - Manual	
24	1702300	AR	Decal - Tie Down	
25	1701500	4	Decal - Lift	
26	1701529	4	Decal - Arrow	
27		Ref	Nameplate - 120V-60Hz Options:	
27	3251243	1	Brazilian/CSA/Latin American Specs	
27	Not Required	0	Chinese/Japanese/Korean Specs	
28	0860520	1	Box, Manual Storage	
29	1060279	1	Cable, Lanyard **(SN 0300096000 through 0300181170)**	
30	0641408	1	Bolt 1/4in-20NC x 1in **(SN 0300096000 through 0300181170)**	
31	4751400	AR	Flatwasher 1/4in Regular	
32	3311405	AR	Locknut 1/4in-20NC	
33	3820001	AR	Rivet	
34		Ref	Decal - Footswitch Options:	
34	1703985	1	Brazilian Spec	
34	1703982	1	Chinese Spec	
34	1703984	1	CSA Spec	
34	1703980	1	Japanese Spec	
34	1703981	1	Korean Spec	
34	1703983	1	Latin American Spec	
35		Ref	Decal - Maximum Tire Load Options:	
35		Ref	Decal - Maximum Tire Load **(SN 0300096000 through 0300140364)**	
35	Not Required	0	Brazilian/Latin American Specs	
35		Ref	Chinese/ CSA/ Japanese/ Korean Spec Options:	
35	1706126	4	Decal - Maximum Tire Load 400S with 230kg/500lb Capacity	
35	1704829	4	Decal - Maximum Tire Load 400S with 340kg/750LB Capacity	
35	1704828	4	Decal - Maximum Tire Load 460SJ	
35		Ref	Decal - Maximum Tire Load **(SN 0300140365 through 0300203770)**	
35	Not Required	0	Brazilian/Latin American Specs	
35		Ref	Chinese/ CSA/ Japanese/Korean Spec Options:	
35	1706126	2	Decal - Maximum Tire Load 400S with 230kg/500lb	

ITEM	PART NUMBER	QTY	DESCRIPTION	REV
			Capacity	
35	1704829	2	Decal - Maximum Tire Load 400S with 340kg/750LB Capacity	
35	1704828	2	Decal - Maximum Tire Load 460SJ	
36		Ref	Decal - Fuel	
36	1701542	1	GM Engine Machines	
36	1701505	1	Caterpillar, Deutz and Perkins Engine Machines	
37		Ref	Decal - LPG Gas	
37	Not Required	0	Non-Dual Fuel Machines	
37	1701543	1	Dual Fuel Machines	
38		Ref	Decal - LP Gas Liquid Withdrawal System	
38	Not Required	0	Non-Dual Fuel Machines	
38	1700818	1	Dual Fuel Machines (English Language)	
38	1704271	1	Dual Fuel Machines (CSA Spec)	
38	1702720	1	Dual Fuel Machines (Spanish Language)	
38	1001119661	1	DUAL FUEL MACHINES (ENGLISH/LATIN AMERICAN LANGUAGE)	
39		Ref	Decal - CSA Options:	
39	3252221	1	CSA Specs	
39	Not Required	0	Brazilian/ Chinese/ Japanese/ Korean/ Latin American Specs	
40	1001108923	1	Decal - EPA/Carb Spec (Diesel Machines)	
45	1701499	AR	Decal - No Lift	
46		Ref	Decal - Lift Diagram Options:	
46		Ref	Decal - Lift Diagram Options: **(SN 0300096000 through 0300161284)**	
46	3252685	1	Brazilian Spec	
46	3252684	1	Chinese Spec	
46	3252683	1	CSA Spec	
46	3252680	1	Japanese Spec	
46	3252681	1	Korean Spec	
46	3252682	1	Latin American Spec	
46	1001145140	1	Decal - Lift Diagram- All Specs **(SN 0300161285 through 0300203770)**	
47	1704412	1	Decal - Hydraulic Oil Chart	
49	1701691	4	Decal - No Step	
50	1704726	4	Decal - Lock Latch	
52	1704885	AR	Decal - WWW.JLG.COM Options:	
52		Ref	Decal **(SN 0300096000 through 0300173675)**	
52		Ref	Decal **(SN 0300173676 through 0300203770)**	
53	0641406	4	Bolt 1/4in-20NC x 3/4in	
54		Ref	Decal - Drive/Steer Instruction Options: **(SN 0300140365 through 0300203770)**	
54	1705905	1	Brazilian Spec	
54	1705430	1	Chinese Spec	
54	1705429	1	CSA Spec	
54	1705426	1	Japanese Spec	
54	1705427	1	Korean Spec	
54	1705910	1	Latin American Spec	
	1001160080	Ref	**ADDITIONAL DECAL COMPONENTS**	
253	1001125387	1	Decal - Emission Compliance	

SECTION 8 - DECALS

FIGURE 8-3. DECAL INSTALLATION (AUSTRALIAN AND CE SPECS)

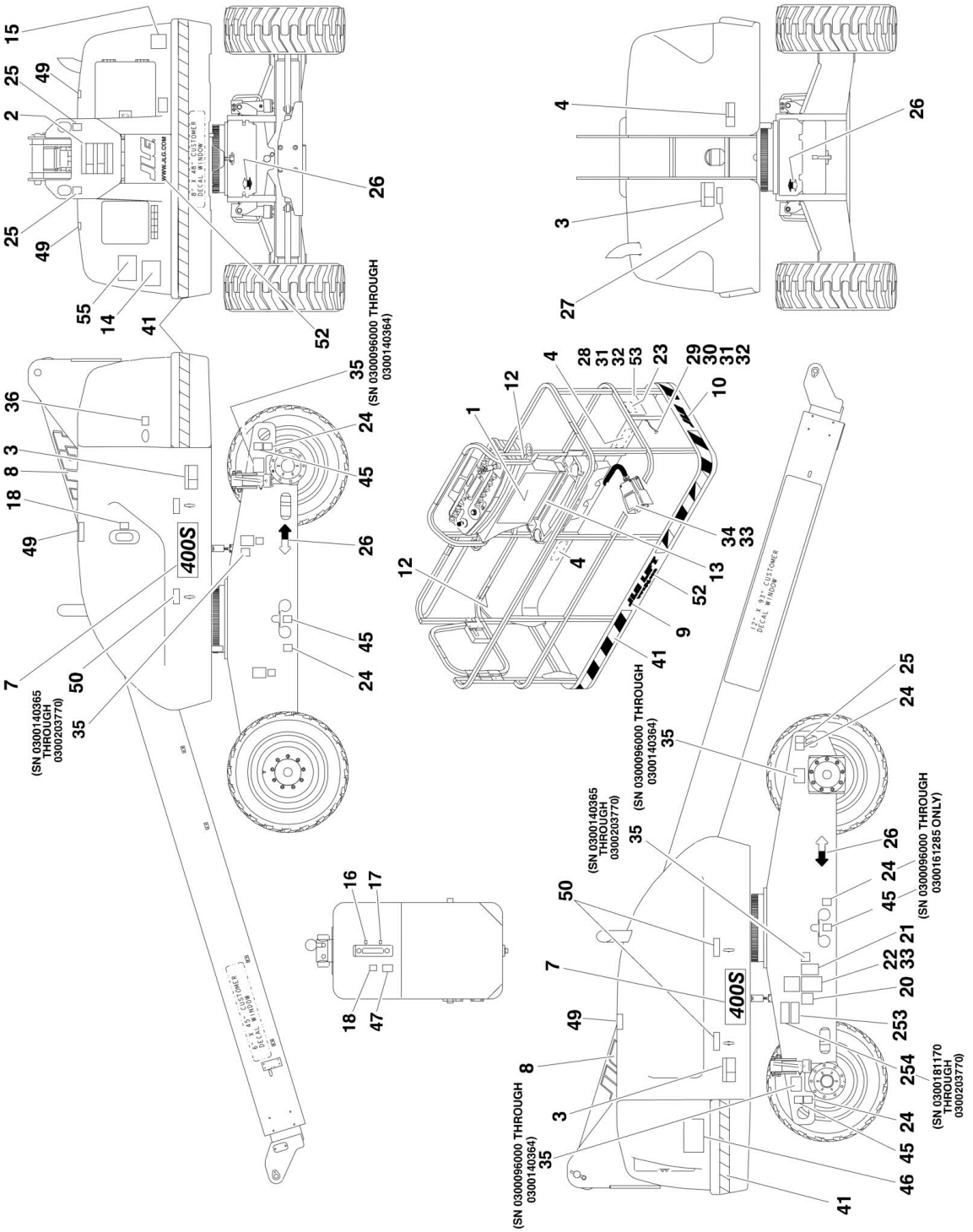

FIGURE 8-3. DECAL INSTALLATION (AUSTRALIAN AND CE SPECS)

ITEM	PART NUMBER	QTY	DESCRIPTION	REV
		Ref	**STANDARD DECAL INSTALLATIONS**	
	0270398	Ref	**JLG Decals**	B
		Ref	**CE Specs:**	
	0275066	Ref	**Standard Decal Installations 400S with 230kg/500lb Capacity**	D
	0275068	Ref	**Standard Decal Installations 400S with 340kg/750lbB Capacity**	D
	0275067	Ref	**Standard Decal Installations 460SJ**	D
		Ref	**Australian Specs:**	
	0275066	Ref	**Standard Decal Installations 400S with 230kg/500lb Capacity (SN 0300096000 through 0300140364)**	D
	1001114404	Ref	**Standard Decal Installations 400S with 230kg/500lb Capacity (SN 0300140365 through 0300203770)**	C
	0275068	Ref	**Standard Decal Installations 400S with 340kg/750lbB Capacity (SN 0300096000 through 0300140365)**	D
	0275067	Ref	**Standard Decal Installations (460SJ SN 0300096000 through 0300140364)**	D
	1001114405	Ref	**Standard Decal Installations (460SJ SN 0300140365 through 0300203770)**	D
1	1705921	1	Decal - Tipping/Electrocution (Platform) Options:	
2	1705822	1	Decal - Electrocution/Safety Manual	
3	1705961	3	Decal - Electrocution	
4	1701518	3	Decal - Warning Crushing	
7		Ref	Decal - Model Designation Options:	
7	1704472	2	Decal - Model Designation Model 400S	
7	1704473	2	Decal - Model Designation Model 460SJ	
8	1702861	2	Decal - JLG Lift (8in)	
9	1702774	1	Decal - JLG Lift (3.5in)	
10	1702773	1	Decal - JLG (5in)	
12	1704277	3	Decal - Attach Lanyard Here	
13		Ref	Decal - Capacity Options:	
13	1705978	1	Decal - Capacity 400S with 230kg/500lb Capacity	
13	1706382	1	Decal - Capacity 400S with 340kg/750LB Capacity	
13	1705978	1	Decal - Capacity 460SJ	
14		Ref	Decal - Capacity Options:	
14	1705978	1	Decal - Capacity 400S with 230kg/500lb Capacity	
14	1706382	1	Decal - Capacity 400S with 340kg/750LB Capacity	
14	1705978	1	Decal - Capacity 460SJ	
15	1705084	1	Decal - Sound Power Level	
16	1701502	1	Decal - High Oil Level **(SN 0300096000 through 0300128256)**	
17	1701503	1	Decal - Low Oil Level **(SN 0300096000 through 0300128256)**	
18	1701504	2	Decal - Hydraulic Oil	
20	See Note	1	Decal - Bar Code (Note: Not Available for Purchase)	
21		Ref	Decal - Patent Options:	
21	1700584	1	Decal - Patent **(SN 0300096000 through 0300161239)**	
21	Not Required	0	Decal - Patent **(SN 0300161240 through 0300203770)**	
22	See Note	1	Nameplate - Serial Number (Note: Not Available for Purchase)	
23	1701509	1	Decal - Manual	
24	1702300	AR	Decal - Tie Down	
25	1701500	4	Decal - Lift	
26	1701529	4	Decal - Arrow	
27	3251242	1	Nameplate - 240V-50Hz	

SECTION 8 - DECALS

ITEM	PART NUMBER	QTY	DESCRIPTION	REV
28	0860520	1	Box, Manual Storage	
29	1060279	1	Cable, Lanyard **(SN 0300096000 through 0300181170)**	
30	0641408	1	Bolt 1/4in-20NC x 1in **(SN 0300096000 through 0300181170)**	
31	4751400	AR	Flatwasher 1/4in Regular	
32	3311405	AR	Locknut 1/4in-20NC	
33	3820001	4	Rivet	
34	1705828	1	Decal - Footswitch	
35		Ref	Decal - Maximum Tire Load Options:	
35		Ref	Decal - Maximum Tire Load **(SN 0300096000 through 0300140364)**	
35	1706126	4	Decal - Maximum Tire Load 400S with 230kg/500lb Capacity	
35	1704829	4	Decal - Maximum Tire Load 400S with 340kg/750LB Capacity	
35	1704828	4	Decal - Maximum Tire Load 460SJ	
35		Ref	Decal - Maximum Tire Load **(SN 0300140365 through 0300203770)**	
35	1706126	2	Decal - Maximum Tire Load 400S with 230kg/500lb Capacity	
35	1704829	2	Decal - Maximum Tire Load 400S with 340kg/750LB Capacity	
35	1704828	2	Decal - Maximum Tire Load 460SJ	
36	1701505	1	Decal - Fuel	
41	4420051	209 in/5.3m	Decal - Warning Stripes	
45	1701499	AR	Decal - No Lift	
46		Ref	Decal - Lift Diagram Options:	
46	1705276	1	Decal - Lift Diagram **(SN 0300096000 through 0300096581)**	
46	1707031	1	Decal - Lift Diagram **(SN 0300096582 through 0300161284)**	
46	1001145140	1	Decal - Lift Diagram **(SN 0300161285 through 0300203770)**	
47	1704412	1	Decal - Hydraulic Oil Chart	
49	1701691	4	Decal - No Step	
50	1704726	4	Decal - Lock Latch	
52	1704885	AR	Decal - WWW.JLG.COM Options:	
52		Ref	Decal **(SN 0300096000 through 0300173675)**	
52		Ref	Decal **(SN 0300173676 through 0300203770)**	
53	0641406	4	Bolt 1/4in-20NC x 3/4in	
55	1001112551	1	Decal - Emergency Controls (Australian Spec Only) **(SN 0300140365 through 0300203770)**	
	1001160080	Ref	**ADDITIONAL DECAL COMPONENTS**	
253	1001125387	1	Decal - Emission Compliance	
254	1001143852	1	Decal - Emission Compliance (Diesel) **(SN 0300181170 through 0300203770)**	

SECTION 9 - RECOMMENDED SERVICE PARTS STOCK

SECTION 9 - RECOMMENDED SERVICE PARTS STOCK

FIGURE 9-1. MODEL 400S/460SJ STANDARD PARTS

ITEM	PART NUMBER	QTY	DESCRIPTION	REV
		Ref	**Note: The following list will service one machine (built to current production per date on the front cover) with emergency repair parts which can be installed in the field. Parts from the list should be replaced when inventory is depleted to keep service parts stock supplied. For further information, contact your JLG dealer or the JLG Industries Parts Department.**	
		Ref	**STANDARD PARTS**	
	2120210	4	Element, Filter	
	7012944	1	Coil	
	7012943	1	Coil	
	7018991	1	Coil	
	7012772	1	Coil	
	3740067	1	Relay	
	70001960	4	Filter	
	7024444	1	Filler/Breather Cap	
	3740049	1	Relay	
	4360328	1	Switch, Toggle	
	2860030	1	Key, Replacement	
	4360475	1	Switch, Mushroom	
	4360476	1	Contact, Switch Block	
	4360387	1	Switch, Push Button	
	4360517	1	Switch, Proximity	
	2940074	1	Latch	
	1001166539	1	Controller (Lift and Swing)	
	1001166538	1	Controller (Drive and Steer)	
	4360331	1	Switch, Toggle	
	4360330	1	Switch, Toggle	
	4360407	1	Controller, Speed	
	3990010	2	Diode	
	2400065	2	Fuse	

FIGURE 9-2. MODEL 400S/460SJ VARIABLE PARTS

ITEM	PART NUMBER	QTY	DESCRIPTION	REV
		Ref	**Note: The following list will service one machine (built to current production per date on the front cover) with emergency repair parts which can be installed in the field. Parts from the list should be replaced when inventory is depleted to keep service parts stock supplied. For further information, contact your JLG dealer or the JLG Industries Parts Department.**	
		Ref	**VARIABLE PARTS**	
	70001403	1 Doz	Filter, Oil (Caterpillar Engine Machines)	
	70003791	4	Filter, Fuel (Caterpillar Engine Machines)	
	70002377	4	Filter, Fuel/Water Separator (Caterpillar Engine Machines)	
	7012664	4	Element, Air Cleaner (Caterpillar, Deutz D2011, and Perkins Engine Machines)	
	7016331	1 Doz	Filter, Oil (Deutz D2011 and Deutz TD2.9L4 Engine Machines)	
	7020023	4	Filter, Fuel (Deutz D2011 Engine Machines)	
	7027795	1	Module, Deutz EMR2 (Deutz D2011 Engine Machines)	
	70025153	1 Doz	Filter, Fuel (Deutz TD2.9L4 Engine Machines)	
	70025161	1 Doz	Filter, Fuel (Deutz TD2.9L4 Engine Machines)	
	1001117308	1	Relay (Deutz TD2.9L4 Engine Machines)	
	1001138228	1	Relay (Deutz TD2.9L4 Engine Machines)	
	70025210	1	Module, Control (Deutz D2011 Engine Machines)	
	91403102	1 Doz	Element, Air Cleaner (Deutz TD2.9L4 Engine Machines)	
	7027965	1 Doz	Filter, Oil (GM Engine Machines)	
	7027972	4	Filter, Fuel (GM Engine Machines)	
	4360336	1	Switch, Toggle (GM Machines)	
	70002895	1	Module, GM Engine (GM Engine Machines)	
	70001403	1 Doz	Filter, Oil (Perkins Engine)	
	70002450	4	Filter, Fuel (Perkins Engine Machines)	
	70002377	4	Filter, Fuel/Water Separator (Perkins Engine Machines)	
	70002451	1	Module, Perkins Engine (Perkins Engine Machines)	
	1001103667	1	Module, Controller (Ground Control)	
	4360469	1	Switch, Key (ANSI, Australian and ANSI Export Specs)	
	4360470	1	Switch, Key (CE Specs)	
	4360522	1	Switch, Push Button (Headlights/Taillights Option)	
	4360548	1	Switch, Limit	
	4360578	1	Switch, Limit (CE Spec)	
	4360057	1	Switch, Limit (Soft-Touch Option)	
	1001106355	1	Module, Controller (Platform Control)	
	4360232	1	Breaker, Circuit (Platform Worklights Options)	
	4360336	1	Switch, Toggle (Machines with Generator Option)	
	4360549	1	Switch, Limit (All Specs Except CE Specs)	
	4360232	1	Breaker, Circuit (Platform Floodlights Options)	
	2400070	2	Fuse (Platform Worklights Options)	

SECTION 10 - SPECIAL OPTIONS

SECTION 10 - SPECIAL OPTIONS

FIGURE 10-1. SPECIAL OPTIONS LIST

ITEM	PART NUMBER	QTY	DESCRIPTION	REV
		Ref	**Note: This list is to accommodate machines ordered with special equipment. Options may not be applicable to all models. For more specific parts information contact JLG Parts Department.**	
		Ref	**MISCELLANEOUS SPECIAL OPTIONS**	
	1340061	Ref	**Air Cleaner with Dust Evacuator Valve**	
		Ref	**Air Line at Platform Installations**	
	0271239	Ref	**Air Line at Platform Installations 400S without Arctic Package**	
	1001093936	Ref	**Air Line at Platform Installations 400S with Arctic Package**	
	0271445	Ref	**Air Line at Platform Installations 460SJ without Arctic Package**	
	1001093938	Ref	**Air Line at Platform Installations 460SJ with Arctic Package**	
	1001204997	Ref	**Arctic Package Add-on Kit 400S (Deutz TD2.9L4 without SkyPower Generator)**	
	1001204996	Ref	**Arctic Package Add-on Kit 400S (Deutz TD2.9L4 with SkyPower Generator)**	
	1001205009	Ref	**Arctic Package Add-on Kit 460SJ (Deutz TD2.9L4 without SkyPower Generator)**	
	1001205008	Ref	**Arctic Package Add-on Kit 460SJ (Deutz TD2.9L4 with SkyPower Generator)**	
	1001166227	Ref	**Axle Kingpin Kit (SN 0300161285 through 0300203770)**	
		Ref	**Bellows Installations**	
		Ref	**400S with Oscillating Axle**	
	0259194	Ref	**400S with Oscillating Axle (SN 0300096000 through 0300115395)**	
	1001094001	Ref	**400S with Oscillating Axle (SN 0300115396 through 0300161284)**	
	1001147513	Ref	**400S with Oscillating Axle (SN 0300161285 through 0300203770)**	
		Ref	**400S with Fixed Axle**	
	0259193	Ref	**400S with Fixed Axle (SN 0300096000 through 0300161284)**	
	1001147513	Ref	**400S with Fixed Axle (SN 0300161285 through 0300203770)**	
		Ref	**460SJ with Oscillating Axle**	
	0259196	Ref	**460SJ with Oscillating Axle (SN 0300096000 through 0300115395)**	
	1001093897	Ref	**460SJ with Oscillating Axle (SN 0300115396 through 0300161284)**	
	1001147514	Ref	**460SJ with Oscillating Axle (SN 0300161285 through 0300203770)**	
		Ref	**460SJ with Fixed Axle**	
	0259195	Ref	**460SJ with Fixed Axle (SN 0300096000 through 0300161284)**	
	1001147514	Ref	**460SJ with Fixed Axle (SN 0300161285 through 0300203770)**	
		Ref	**Boom Cables Installation (Machines with 4000W Generators)**	
	1001153335	Ref	**Boom Cables Installation (400S with 4000W Generators)**	
	1001220154	Ref	**Boom Cables Add-on Kit (400S with 4000W Generators)**	
	1001153336	Ref	**Boom Cables Installation (460SJ with 4000W Generators)**	
	1001106689	Ref	**Boom Wear Pad Kit**	
		Ref	**Boom Hose Service Kits**	
	1001187481	Ref	**Boom Hose Service Kit 400S**	

ITEM	PART NUMBER	QTY	DESCRIPTION	REV
	1001187482	Ref	**Boom Hose Service Kit 460SJ**	
	1001106689	Ref	**Boom Wear Pad Kit**	
	0259197	Ref	**Boom Wiper Installation**	
		Ref	**ClearSky (Telematics) Installations**	
		Ref	**Without UGM**	
	1001106616	Ref	**ANSI Spec**	
	1001106617	Ref	**ANSI Export/CE/Japanese Specs**	
	1001139128	Ref	**Australian Spec**	
	1001106618	Ref	**CSA Spec**	
		Ref	**With UGM**	
	1001112975	Ref	**ANSI Spec**	
	1001132726	Ref	**Australian Specs**	
	1001127088	Ref	**ANSI Export, Brazil and New Zealand Specs**	
	1001112977	Ref	**CSA Spec**	
		Ref	**ClearSky (Telematics) Kits**	
		Ref	**Without UGM**	
	1001117253	1	ANSI Spec	
	1001121609	1	ANSI Export/CE/Japanese Specs	
	1001139128	1	Australian Spec	
	1001117260	1	CSA Spec	
		Ref	**With UGM**	
	1001119943	1	ANSI Spec	
	See Note	1	ANSI Export/CE/Japanese Specs (Note: Not Available for Purchase)	
	1001139147	1	Australian Spec	
	1001119949	1	CSA Spec	
		Ref	**Note: For Breakdown of Kits Refer to ClearSky Telematics Manual p/n 3128499.**	
		Ref	**Cold Weather Start Kits**	
	0273064	Ref	**Caterpillar/Perkins Engine Machines**	
	0271912	Ref	**Deutz D2011 Engine Machines**	
	1001151901	Ref	**Deutz TD2.9L4 Engine Machines**	
	0275056	Ref	**GM Engine Machines**	
		Ref	**Container Shipment Preparation Instructions**	
	0272031	Ref	**2WD**	
	1001148145	Ref	**4WD with 12 x 16.5 Tires and Wheels**	
	1001148146	Ref	**4WD with 14 x 17.5 Tires and Wheels**	
	0272031	Ref	**4WD with 33/16Ll x 16.1 Foam Filled Sand Tires**	
		Ref	**Decal Installations**	
	1001196610	Ref	Decal - Ahearn Rentals	
	1702788	Ref	Decal - Biodegradable Hydraulic Fluid (All except German Spec)	
	1704174	Ref	Decal - Biodegradable Synthetic Hydraulic Fluid (All except German Spec)	
	1703479	Ref	Decal - Biodegradable Hydraulic Fluid (German Spec Only)	
	1704175	Ref	Decal - Biodegradable Synthetic Hydraulic Fluid (German Spec Only)	
	1001196717	Ref	Decal - Blueline Rentals	
	1001154505	Ref	Decal - Boels	
		Ref	Decal - Clear Sky Options:	
	1001116245	Ref	ANSI Spec Only **(SN 0300069000 through 0300144689)**	
	1001116246	Ref	CSA Spec Only **(SN 0300069000 through 0300144689)**	
	1001127093	Ref	ANSI Spec, ANSI Export Spec and CSA Spec Only **(SN**	

ITEM	PART NUMBER	QTY	DESCRIPTION	REV
			0300144690 through 0300203770)	
	0274529	Ref	Decal - Head and Engquist Equipment L.L.C (H and E)	
	0273250	Ref	Decal - Hertz **(SN 0300096000 through 0300147213)**	
	1001128940	Ref	Decal - Hertz **(SN 0300147214 through 0300203770)**	
	1001143073	Ref	Decal - Hewitt the Rental Store (English)	
	1001143508	Ref	Decal - Hewitt the Rental Store (French)	
	1703175	Ref	Decal - Lanyard Attach (GM K-1 Spec)	
	1001140622	Ref	Decal - Leavitt	
	0273370	Ref	Decal - Nations Rent	
	0274247	Ref	Decal - National Equipment Services (NES)	
	1702868	Ref	Decal - No Hands (English Language) (Used with Mesh to Top Rail Platform)	
	1704000	Ref	Decal - No Hands (English and French Dual Language) (Used with Mesh to Top Rail Platform)	
	1702962	Ref	Decal - Prop 65 Warning (Diesel Machines) (California Spec)	
	1702961	Ref	Decal - Prop 65 Warning (Gasoline Machines) (California Spec)	
	1001095409	Ref	Decal - RSC	
	0270575	Ref	Decal - Sunbelt (Prior to June 1, 2015)	
	1001197847	Ref	Decal - Sunbelt (June 1, 2015 to Present)	
	1001151096	Ref	Decal - Titan Rentals	
	0271892	Ref	Decal - United Rentals	
	1001141473	Ref	Decal - Volvo Rents	
	0257733	Ref	Decal - Warning Stripes	
		Ref	**Decal Kits**	
	2910478	Ref	Decal Kit - Machine	
	1001108717	Ref	Decal Kit - Platform	
	2910865	Ref	Decal Kit - Platform Console Box	
	1001130749	Ref	**Electric to Mechanical Fan Kit (Perkins Engines)**	
		Ref	**Electrical Connector Kits**	
	1001148902	Ref	Amp/Tyco Electrical Connector Kit	
	1001148903	Ref	Deutsch DT Electrical Connector Kit	
	1001148904	Ref	Deutsch HD Electrical Connector Kit	
	1001148905	Ref	Packard Electrical Connector Kit	
	1001148906	Ref	Various Electrical Connectors Kit	
		Ref	**Engine Block Heater Installation**	
	0275055	Ref	**GM Engines**	
		Ref	**Engine Replacement Kits**	
	1001145837	Ref	Engine Kit - Replace Perkins Tier II with Deutz D2011L03 Tier II	
	1001139890	Ref	Engine Kit - Replace Perkins Tier II with Perkins Tier IVi	
	1001145192	Ref	**Fan Cover (Deutz TD2.9L4 Engine)**	
		Ref	**Filter Kits:**	
		Ref	Combined Filter Kit (Hydraulic/Air and Fuel/Engine Oil)	
	1001114034	NLA	Caterpillar Engine (Use p/n 1001111000)	
	1001110999	Ref	Deutz D2011 Engine **(SN 0300096000 through 0300161284)**	
	1001156539	Ref	Deutz D2011 Engine **(SN 0300161285 through 0300181723, SN 0300182240 through 0300203770)**	
	1001181146	Ref	Deutz TD2.9L4 Engine	
	1001114059	NLA	GM Engine (Use p/n 1001114131)	
	1001114063	NLA	Perkins Engine (Without UGM) (Use p/n 1001111001)	
	1001114122	Ref	Perkins Engine (With UGM)	
		Ref	Hydraulic/Air Filter	
	1001109698	Ref	Caterpillar and Perkins Engines	

ITEM	PART NUMBER	QTY	DESCRIPTION	REV
	1001109698	Ref	Deutz D2011 Engines **(SN 0300096000 through 0300161284)**	
	1001182238	Ref	Deutz D2011 Engines **(SN 0300161285 to Present)**	
	1001204451	Ref	Deutz DT2.9L4 Engines	
		Ref	Engine - Fuel/Engine Oil Filter	
	1001110139	Ref	Caterpillar Engine	
	1001110138	Ref	Deutz D2011 Engine	
	1001204461	Ref	Deutz DT2.9L4 Engine	
	1001110143	Ref	Perkins Engine	
		Ref	**Fluids:**	
	2300004	Ref	Coolant, Standard	
	2300041	Ref	Coolant, Arctic	
	3020040	Ref	Conditioner, Diesel Fuel	
	3020016	Ref	Engine Oil	
	3020044	Ref	Engine Oil, Arctic (0W-40)	
	1001115930	Ref	Engine Oil, (10W-30)	
		Ref	Hydraulic Fluids Options:	
	2300039	Ref	Exxon Univis HVI 26 (Use with Arctic Package)	
	2300014	Ref	Mobil 424	
	2300027	Ref	Mobil EAL 224H Bio	
	2300029	Ref	Mobil EAL Envirosyn H46 Bio	
	2300016	Ref	Mobil DTE 10 EXCEL 32	
	2300021	Ref	Union Carbide Ucon Hydrolube HP-5046D (Fire Resistant)	
		Ref	**Footswitch Shield Installation**	
	3380652	Ref	**Footswitch Shield Installation (SN 0300096000 through 0300167707)**	
	1001117294	Ref	**Footswitch Shield Installation (SN 0300167708 through 0300203770)**	
	1001213609	Ref	**Generator Add-on Kit (4000W/60Hz) (Deutz D2011 Engines)**	
	1001213608	Ref	**Generator Add-on Kit (4000W/60Hz) (Deutz TD2.9L4 Engines)**	
		Ref	**Hose Kits**	
	1001187481	Ref	**Hose Kit - Boom (400S)**	
	1001187482	Ref	**Hose Kit - Boom (460SJ)**	
	1001204921	Ref	**Hostile Environment Kit, 400S**	
	1001204922	Ref	**Hostile Environment Kit, 400SJ**	
	1001094475	Ref	**Hourmeter, Generator**	
		Ref	**Hydraulic Oil Cooler Installations**	
	1001109766	Ref	**Caterpillar/Perkins Engines**	
	0271607	Ref	**Deutz D2011/GM Engines**	
	1001147367	Ref	**Deutz TD2.9L4 Engines**	
	1001148971	Ref	**Lanyard (Bolt-on) Kit Installation**	
	1001183407	Ref	**Low Temperature Cutout Installation**	
		Ref	**Platform Cover Installations**	
	0258703	Ref	**Clear Plastic Construction (SN 0300096000 through 0300200772)**	
	1670870	1	Cover	
	0271675	Ref	**Steel Construction (SN 0300096000 through 0300200772)**	
	4846506	1	Cover Weldment	
	1670894	1	Cover, Rubber	
	1001195304	Ref	**Cover (SN 0300200773 through 0300203770)**	
		Ref	**Platform Entry Kit**	
	1001142504	Ref	**Kit, Replace Swing Gate with Drop Bar**	
	1001142505	Ref	**Kit, Replace Drop Bar with Swing Gate**	

SECTION 10 - SPECIAL OPTIONS

ITEM	PART NUMBER	QTY	DESCRIPTION	REV
		Ref	**Platform Ladder Carrier Installation Options (Australian Spec Only):**	
	1001116419	Ref	**30in Platform**	
	1001116420	Ref	**36in Platform**	
		Ref	**Platform Mesh to Top Rail Add-on Kits**	
	1001214552	Ref	30in x 4ft (76cm x 1.22m) with Gate	
	1001214559	Ref	30in x 5ft (76cm x 1.52m) with Gate	
	1001214561	Ref	36in x 6ft (91.5cm x 1.83m) with Gate	
	1001214562	Ref	36in x 8ft (91.5cm x 2.44m) with Gate	
		Ref	**Platform Mesh to Top Rail Installations**	
	0273147	Ref	30in x 4ft (76cm x 1.22m)	
	0273146	Ref	30in x 5ft (76cm x 1.52m)	
	0273149	Ref	36in x 6ft (91.5cm x 1.83m)	
	0273145	Ref	36in x 8ft (91.5cm x 2.44m)	
		Ref	**Platform Mesh to Mid Rail Add-on Kits**	
	1001214478	Ref	30in x 4ft (76cm x 1.22m) with Gate	
	1001214515	Ref	30in x 5ft (76cm x 1.52m) with Gate	
	1001214540	Ref	36in x 6ft (91.5cm x 1.83m) with Gate	
	1001214548	Ref	36in x 8ft (91.5cm x 2.44m) with Gate	
		Ref	**Platform Mesh to Mid Rail Installation**	
	1001140318	Ref	30in x 4ft (76cm x 1.22m)	
	1001140315	Ref	30in x 5ft (76cm x 1.52m)	
	1001138772	Ref	36in x 6ft (91.5cm x 1.83m)	
	1001138773	Ref	36in x 8ft (91.5cm x 2.44m)	
	1001149730	Ref	**Platform Mid Rail Repair Kit**	
		Ref	**Platform Rail Extension Installations**	
	0272733	Ref	**36in x 6ft Platforms**	
	0272725	Ref	**36in x 8ft Platforms**	
	0257728	Ref	**Platform Tubing Rack Installations**	
	0258918	Ref	**Platform Utility Rack Assembly (Michigan OSHA Spec)**	
		Ref	**Receptacle (240V) Installation Options: (ANSI, CSA and Japanese Spec):**	
	1001159121	Ref	**Receptacle-240V (7500W SkyPower Generator)**	
	1001171131	Ref	**Receptacle-240V (4000W Generator)**	
		Ref	**SkyGuard Component Options:**	
	1001188649	Ref	SkyGuard Installation (Blue Beacon) **(SN 0300200773 through 0300203770)**	
	1001149560	Ref	SkyGuard Complete Add-on Kit (Non - UGM Machines) (Blue Beacon)	
	1001143669	Ref	SkyGuard Complete Add-on Kit (UGM Machines) (Blue Beacon)	
	1001210025	Ref	SkyGuard Complete Add-on Kit (Red Beacon)	
	1001137672	Ref	SkyGuard Platform Sensor Kit	
	1001143256	Ref	SkyGuard Blue Beacon Kit	
	1001210037	Ref	SkyGuard Red Beacon Kit	
	1001176372	Ref	SkyGuard Plug Removal (Service Kit)	
		Ref	**SkyPower Add-on Kit - 7500W Generator Options:**	
	See Note	Ref	SkyPower Add-on Kit (Caterpillar and Perkins) (Note: Not Available for Purchase)	
	1001116162	Ref	SkyPower Add-on Kit (Deutz D2011) (60Hz)	
	See Note	Ref	SkyPower Add-on Kit (Deutz D2011) (50Hz) (Note: Not Available for Purchase)	
	1001118105	Ref	SkyPower Add-on Kit (GM)	

ITEM	PART NUMBER	QTY	DESCRIPTION	REV
		Ref	**Strobe Light Installations (Amber)**	
	1001152965	Ref	**Platform Mounted**	
	1001154231	Ref	**Platform/Ground Mounted**	
	1001200269	Ref	**Telematics Installation (Customer Supplied)**	
	1001195610	Ref	**Telematics - United Rentals**	
	1001228357	Ref	**Telematics Retrofit Harness Kit (Machines with UGM)**	
		Ref	**Tire Sealant Installations (ANSI Spec Only)**	
	0272307	Ref	12 x 16.5	
	0272301	Ref	14 x 17.5	
		Ref	**Tools for Service**	
	2901443	1	Analyzer Kit	
	8896941	1	Wire Stripper	
	7002821	1	Wire Crimper (To install wire ends to wires)	
	7002823	1	Pin/Socket Extractor - Universal (To Remove Pins/Sockets from Connectors)	
	4460467	1	Extractor - 16-18 Gauge (For Removal of Pin/Sockets from Deutsch Connectors)	
	4460510	1	Extractor - 12-14 Gauge (For Removal of Pin/Sockets from Deutsch Connectors)	
	7002822	1	Screwdriver, Potentiometer (To Adjust Drive Controllers)	
	7016654	1	Screwdriver, Magnetic	
	7004275	1	Seal Installation Tool - 1in	
	7004276	1	Seal Installation Tool - 1 1/2in	
	7002826	1	Seal Installation Tool - 2in	
	7016655	1	Wire Rope Sheave Gauge	
	4922012	1	Horsepower Card Service Harness	
	1001137005	1	Software Cable Kit	
		Ref	**Weld Leads at Platform Installations**	
	0271240	Ref	**Weld Leads at Platform Installations 400S**	
	0271446	Ref	**Weld Leads at Platform Installations 460SJ**	

PART NUMBER INDEX

PART NUMBER INDEX

0020006.....55
0060048.....271, 275
0060059.....267, 275
0080163.....112, 123
0080181 84, 92, 100, 142, 152, 160
0080201 84, 92, 100, 131, 137, 142, 152, 160
0080231.....110
0080241.....199
0100009.....297
0100011....13, 14, 15, 19, 20, 25, 26, 29, 33, 49, 51, 55, 59, 63, 71, 84, 86, 92, 94, 100, 101, 103, 108, 109, 110, 119, 120, 121, 125, 126, 130, 131, 136, 137, 142, 145, 146, 152, 154, 156, 160, 161, 163, 175, 179, 183, 185, 189, 191, 195, 200, 203, 207, 213, 218,221, 225, 229, 233, 237, 241, 247, 251, 263, 264, 267, 268, 271, 272, 273, 279, 283, 288, 295, 317, 326, 329, 331, 333, 345, 349, 353, 359, 361, 369
0100019....15, 19, 21, 26, 33, 71, 221, 229, 233, 238, 241, 247, 251, 257
0100020....84, 86, 92, 94, 101, 108, 110, 119, 123, 130, 131, 136, 138, 142, 145, 152, 154, 161, 175, 230, 238, 257, 260, 326, 337, 427, 442, 460
0100035.....200, 297
0100038....15, 20, 26, 29, 345, 349, 353, 359, 361, 369
0100048....130, 136, 187, 191, 195, 199, 200, 233, 247, 279, 283, 297, 418, 420, 434, 435, 450, 452
0100062.....123
0100063.....369
0100071.....319
0100079.....233, 247
0100081.....265, 297, 321
0140001.....63
0140011.....297
0140032.....200
0140044.....200, 455
0181949.....175
0200048.....295
0200742.....213, 218
0240047.....56
0240049.....56
0240050.....56
0240152.....56
0255917.... 199, 430, 445
0256847.... 112, 121, 123
0257728..... 341, 490
0257733..... 488
0257887..... 424, 439
0258308..... 200
0258703..... 489
0258918..... 490
0259141..... 203, 207
0259144..... 175
0259147..... 72
0259148..... 15
0259155..... 183
0259156..... 71
0259158..... 72
0259159..... 467
0259160..... 467
0259175..... 471
0259176..... 471
0259177..... 471
0259178..... 471
0259179..... 471
0259180..... 471
0259181..... 471
0259182..... 471
0259183..... 471
0259184..... 471
0259185..... 471
0259186..... 471
0259193..... 486
0259194..... 486
0259195..... 486
0259196..... 486
0259197..... 487
0259962..... 299
0259963..... 299
0259964..... 299
0259965..... 299
0259968..... 299
0259981..... 467
0259989..... 471
0259990..... 471
0259991..... 471
0259992..... 471
0259993..... 471
0259994..... 471
0270022.... 425, 440, 458
0270024.... 425, 440, 458
0270029..... 55
0270030..... 55
0270074..... 34
0270075..... 34
0270076..... 34
0270077..... 34
0270078..... 34
0270079..... 34
0270091..... 33
0270092..... 34
0270093..... 34
0270094..... 34
0270180..... 56
0270186..... 56
0270187..... 56
0270192..... 55
0270193..... 55, 56
0270213..... 263
0270326..... 71
0270354..... 204, 210
0270398.... 467, 471, 479
0270575..... 488
0270649..... 414
0270650..... 33
0270651..... 34
0270652..... 34
0270653..... 34
0270654..... 34
0270655..... 34
0270659..... 175
0270814..... 300, 414
0271159... 264, 272, 419, 435, 451
0271160... 264, 419, 434, 451
0271161... 264, 272, 419, 435, 451
0271162... 264, 419, 434, 451
0271163..... 200
0271164..... 200
0271165..... 200
0271166..... 200
0271211..... 55
0271212..... 55
0271213..... 55
0271215..... 55
0271218..... 55
0271239..... 486
0271240..... 491
0271246..... 300
0271340..... 300
0271342..... 199
0271445..... 486
0271446..... 491
0271607..... 489
0271657..... 189
0271658..... 189
0271660..... 189
0271661..... 189
0271675..... 489
0271892..... 488
0271912..... 487
0271993..... 34
0271994..... 34
0271995..... 34
0271996..... 34
0271997..... 34
0271998..... 34
0272018..... 199, 300
0272031..... 487
0272070..... 268, 272
0272254..... 331
0272301..... 491
0272307..... 491
0272310..... 33
0272311..... 34
0272336..... 34
0272337..... 34
0272352..... 34
0272353..... 34
0272384..... 283
0272418..... 322
0272427..... 295
0272435.....244, 249, 253
0272444.....295
0272448.....326, 331
0272521.....329
0272588.....329
0272589.....244
0272593.....271
0272596.....241, 429
0272597.....241, 429
0272599.....326, 337
0272607.....337
0272609.....288
0272612....264, 419, 434, 451
0272613....264, 272, 419, 435, 451
0272703.....279
0272725.....490
0272731.....179
0272733.....490
0272804.....20
0272805.....59
0272828.....59
0272897.....263
0272900.....13, 49
0272901.....25, 49
0272902.....13, 49
0272903.....25, 49
0272904.....13, 49
0272905.....25, 49
0272906.....20, 49
0272923.....34
0272924.....33
0272925.....33, 49
0272926.....33, 49
0272927.....26
0272948.....321
0272949.....321
0272950.....321
0272951.....321
0272952.....321
0272970.....289, 418, 434
0272999.....263
0273003.....241, 429
0273004.....241, 429
0273064.....487
0273065.....263
0273145.....490
0273146.....490
0273147.....490
0273149.....490
0273250.....488
0273353.....326
0273370.....488
0273473.....19, 49
0273493.....289
0273494.....289
0273512.....257
0273710.....257
0274016.....203, 207
0274079.....217
0274084.....213
0274085.....217
0274088.....213
0274089.....217
0274247.....488

0274334 108
0274415 189
0274416 189
0274417 189
0274418 189
0274529 488
0274570 290
0274574 ..... 199, 300
0274584 290
0274600 63
0274601 63
0274605 86
0274661 341
0275032 130
0275039 225
0275055 488
0275056 487
0275057 ... 251, 429, 444, 462
0275059 189
0275060 189
0275066 479
0275067 479
0275068 479
0275112 25
0275113 25
0275216 .... 428, 443, 460
0275217 .... 428, 443, 461
0275218 .... 428, 443, 461
0275219 .... 428, 443, 461
0275452 .... 428, 443, 461
0275453 .... 428, 443, 461
0275454 .... 428, 443, 461
0340041 84, 92, 100, 110, 131, 137, 142, 152, 160
0340046 84, 92, 100, 142, 152, 160
0360406 59
0361810 86, 94, 102, 108, 119, 130, 136, 145, 154, 162
0362519 175
0362528 200
0362610 200
0362909 200
0362932 ..... 13, 20
0362936 49
0362954 ..... 13, 20, 25
0362965 25
0363012 51
0363019 59
0370024 365
0370026 347
0400075 86, 94, 102, 108, 119, 130, 136, 145, 154, 162
0440162 ..... 15, 20
0440240 71
0440271 ..... 26, 29
0440274 27
0440291 ..... 27, 29
0480100 341
0480120 ..... 213, 218
0480121 213
0480122 218
0480126 241
0480128 ..... 230, 241
0480129 ..... 230, 241
0480142 .... 225, 237, 251
0561185 ..... 267, 271
0561237 272
0561300 ... 13, 14, 19, 20, 25, 26
0630462 295
0630464 297
0630491 199
0630518 ... 187, 191, 195, 326, 329, 331, 333, 337
0630534 ..... 353, 357
0630535 ... 349, 359, 361, 369
0630541 86, 94, 102, 108, 119, 130, 136, 145, 154, 162
0630548 .... 187, 191, 195
0630566 264
0630568 299
0630569 84, 92, 100, 103, 142, 152, 160, 163
0641403 241
0641404 ..... 37, 200, 218, 229, 233, 237, 241, 247, 251, 297
0641405 ..... 95, 101, 102, 161, 162, 225, 279, 283
0641406 84, 92, 100, 110, 121, 131, 137, 142, 152, 160, 189, 193, 197, 200, 233, 247, 259, 267, 271, 288, 469, 476, 480
0641407 ... 121, 192, 195, 241, 279, 283
0641408 . 55, 84, 92, 100, 142, 145, 152, 155, 160, 241, 288, 468, 475, 480
0641409 110
0641410 ... 84, 87, 92, 94, 102, 108, 119, 130, 136, 142, 145, 152, 154, 162
0641412 .... 119, 130, 136
0641414 14, 25, 289, 295, 297, 317, 319
0641416 ... 203, 207, 272, 279, 283
0641418 ..... 95, 102, 162, 288
0641420 ..... 63, 146, 155
0641422 ..... 130, 136
0641424 ..... 14, 19, 25
0641504 59
0641505 ..... 241, 251
0641506 84, 92, 100, 142, 152, 160, 259
0641507 84, 92, 100, 110, 131, 137, 142, 152, 160
0641508 21, 49, 213, 218, 221, 241
0641510 ..... 63, 110, 112, 120, 123, 225
0641511 .... 110, 130, 136
0641512 110
0641514 ..... 225, 341
0641516 .... 119, 229, 233, 237, 241, 247, 251, 265
0641518 290
0641530 49
0641538 49
0641542 51
0641560 51
0641604 ..... 264, 369
0641605 ..... 263, 265, 267
0641606 .... 15, 20, 26, 29, 51, 175, 263, 267, 271, 326, 329, 331, 333
0641607 .... 14, 19, 25, 29, 49, 121
0641608 84, 92, 103, 112, 119, 121, 131, 137, 146, 156, 163, 179, 203, 207, 263, 267, 271, 272
0641609 86, 94, 100, 110, 131, 137, 142, 152, 160, 264
0641610 .... 63, 84, 86, 92, 100, 103, 110, 120, 121, 125, 126, 131, 137, 142, 144, 152, 160, 163, 175, 201, 203, 207, 213, 218, 221, 243, 259, 263, 267, 271, 272, 288
0641611 .... 100, 110, 121, 131, 137, 142, 152, 160
0641612 .. 29, 86, 94, 131, 137, 144, 154, 203, 207
0641614 .... 100, 160, 241, 252
0641615 175
0641616 .... 13, 20, 86, 94, 102, 108, 119, 130, 136, 145, 154, 162, 230, 233, 247, 259, 267, 271
0641618 49, 51, 242, 247, 272
0641620 25
0641626 ..... 13, 20
0641707 121
0641710 225
0641772 ..... 213, 218, 221
0641806 119
0641808 ..... 55, 229, 233, 237, 241, 247, 251
0641810 ..... 183, 247, 257
0641812 84, 92, 103, 109, 120, 131, 137, 146, 156, 163, 185, 221, 268, 273
0641814 .... 15, 20, 26, 29, 175
0641820 84, 92, 100, 110, 131, 137, 142, 152, 160, 230
0641822 ..... 279, 283
0641826 ..... 183, 185
0641828 185
0641832 238
0642010 ... 14, 19, 25, 86, 94, 102, 108, 119, 130, 136, 145, 154, 162
0642012 ... 13, 14, 19, 20, 25, 29, 263, 321
0642024 279
0642026 321
0642034 283
0642212 321
0642684 ... 268, 273, 279, 283
0651406 63
0681608 ..... 29, 268, 273, 279, 283
0681632 263
0681810 33
0681814 293
0681820 29
0681822 . 15, 20, 55, 121, 221, 233, 247, 293
0681824 20
0681828 ..... 15, 27
0681832 71
0681856 55
0681872 55
0682014 33
0682018 71
0682026 71
0682034 72
0682040 59
0682048 71
0682248 ..... 14, 19, 26
0700808 .84, 92, 147, 157
0700810 ... 112, 124, 131, 137
0700816 110
0700820 .... 225, 237, 251
0701016 .... 225, 237, 251
0701217 ..... 213, 241
0711014 110
0711214 121
0711414 ..... 110, 230
0720805 .... 189, 193, 197
0721003 300
0721004 ..... 84, 142, 187, 191, 195, 243
0721005 175
0721006 ..... 84, 125, 142, 218, 221
0721008 ..... 213, 299
0731005 ..... 179, 295
0731007 179
0741605 ..... 268, 271
0741606 121
0741607 .... 230, 233, 247
0741610 84, 92, 100, 110, 131, 137, 142, 152, 160
0750808 ..... 204, 208
0760410 199
0760612 ..... 143, 153
0760808 119
0760810 .... 121, 143, 153
0760815 ..... 92, 100, 152, 160
0761210 ..... 120, 123
0771012 ..... 110, 121

PART NUMBER INDEX

0771414....121, 221, 233, 247
0771415.....230, 241
0791512.....123
0801213.....267
0801214.....271
0801215.....267
0801216.....271
0801359.....263, 267
0801360.....263, 271
0811608.....238
0840055.....279, 283, 284
0860038....230, 233, 237, 243, 247, 251, 425, 440, 458
0860520.....468, 475, 480
0861537.....297, 299
0861538.....241, 247, 251
0861541.....243, 252
0861542....241, 243, 251, 252, 429, 444, 462
0861567....241, 243, 429, 445, 462
0861571.....288, 297
0861572.....241
0861642.....257
0861706.....187
0861707.....187
0861708.....187
0861709.....187
0861731.....425, 441, 458
0861736.....187
0861737.....187
0861738.....187
0861739.....187
0861773.....187
0861774.....187
0861781.....425, 440, 458
0861782.....425, 441, 458
0861880.....427, 443, 460
0902556.....183
0902668.....203, 208
0902669.....203, 207
0902673.....204, 209
0902674.....204, 209
0902733.....59
0902734.....59
0902740.....110
0902751.....297
0902888....229, 233, 237, 241, 247, 251
0902894.....279, 283
0902919.....279, 283
0902920.....279, 283
0903063.....110
0903484.....427, 442, 460
0903566....230, 427, 442, 460
0920119.....71
0940049 87, 94, 102, 108, 119, 130, 136, 145, 154, 162, 203, 207
0940071.....203, 207
0940102.....321
0940103.....295
0940177.....295
0941611.....86, 94
0961845..... 288
0961893..... 353, 357
0961894..... 349, 361
0961896..... 369
0961897..... 359
0961947..... 272, 275
0961948..... 55
0961950... 13, 14, 19, 20, 25, 26, 29, 267, 271, 359
096195115, 21, 267, 271, 275, 349, 351, 361, 363
0962140... 15, 21, 27, 29, 345
096217284, 92, 100, 110, 121, 131, 137, 142, 152, 160
0962270..... 293
0962292..... 20
0962293..... 55
0962335..... 272
0962336.... 353, 355, 357
0962348..... 20
0962449..... 218
0962450..... 279
0962474..... 345
0962520... 230, 233, 237, 242, 247, 251
0962521..... 251
1001091102..... 199
1001091179..... 111
1001091559..... 179
1001091566..... 179
1001091583..... 132
1001091587..... 131, 137
1001091627..... 131
1001091628..... 131
1001091629..... 130
1001091687..... 383, 391, 399, 410, 411
1001091729..... 375, 410
1001091730..... 377, 410
1001091794..... 133, 138
1001091892..... 111, 132
1001091926..... 375, 410
1001091927..... 377, 410
1001091969..... 425, 440, 458
1001091970..... 425, 440, 458
1001091971..... 425, 440, 458
1001091972..... 425, 440, 458
1001091973..... 425, 440, 458
1001091974..... 425, 440, 458
1001091975..... 425, 440, 458
1001091986..... 391, 410
1001092120..... 383, 410
1001092140..... 410
1001092723..... 110, 112
1001093275..... 425, 440, 458
1001093359..... 399, 410
1001093360..... 399, 411
1001093380..... 25, 26
1001093381..... 13, 14
1001093434..... 63
1001093435..... 63
1001093691..... 411
1001093747..... 33, 51
1001093749..... 33, 51
1001093844..... 13
1001093845..... 13
1001093846..... 13, 20
1001093851... 13, 20, 25, 29
1001093856..... 51
1001093861..... 51
1001093876..... 59
1001093879..... 19, 20
1001093889..... 51
1001093890..... 51
1001093894..... 108
1001093895..... 109
1001093896..... 110
1001093897..... 486
1001093898..... 84
1001093899..... 86
1001093910..... 200
1001093912..... 200
1001093913..... 200
1001093914..... 201, 424, 439, 455
1001093915..... 201, 424, 439, 456
1001093916..... 264, 419, 434, 451
1001093917..... 419, 435, 451
1001093918..... 419, 435, 451
1001093919..... 264, 272, 419, 435, 451
1001093920..... 419, 435, 451
1001093921..... 419, 435, 451
1001093922..... 264, 419, 435, 451
1001093923..... 419
1001093924..... 264, 272, 419, 435, 451
1001093925..... 419
1001093928..... 20
1001093929..... 19
1001093930..... 387, 410
1001093932..... 387
1001093933..... 387, 391, 393
1001093934..... 387
1001093935..... 387, 391, 393
1001093936..... 486
1001093938..... 486
1001093941..... 411
1001093972..... 25
1001093973..... 13
1001094001..... 486
1001094003..... 59
1001094475..... 489
1001094608..87, 95, 102, 108, 119, 130, 137, 145, 155, 162
1001094684.....391, 410
1001095198.....71
1001095203.....145
1001095204.....142
1001095205.....143, 144, 146
1001095206.....145
1001095207.....142
1001095409.....488
1001095879.....146
1001095880.....146
1001096070.....230
1001096160.....391
1001096161.....391
1001096167.....391, 393
1001096168.....391, 393
1001096191.....375, 377, 379
1001096192.....375, 377
1001096193.....375, 377, 379
1001096556.....383, 385
1001096557.....375, 377
1001097150.....427, 443, 460
1001097331.....241, 429
1001097332.....241, 429
1001097551.....144
1001097552.....144
1001097553.....144, 154
1001097554..88, 96, 144, 154
1001097555.....144, 154
1001097588..86, 94, 101, 144, 154, 161
1001097893.....144, 154
1001098012.....326, 337, 339
1001098130.....29
1001098149.....337
1001098525..85, 93, 101, 143, 153, 161
1001098764.....458
1001098839.....188, 420, 421
1001098923.....422
1001099161.....391, 393
1001099162.....391, 393
1001099366.....321
1001099367.....321
1001099370.....161, 163
1001099376.....321
1001099421.....321
1001099422.....321
1001099436.....321
1001099437.....321
1001099439.....321
1001099830.....263
1001099869.....218
1001099926.....144, 154, 425
1001099927.....144, 154, 423

1001100027 ..... 414, 428, 443, 444
1001100233 218
1001100234 218
1001100305 429
1001100321 ..... 213, 217
1001100326 ..... 425, 440, 458
1001100327 ..... 425, 440, 458
1001100328 ..... 425, 440, 458
1001100329 ..... 425, 440, 458
1001100331 ..... 425, 440, 458
1001100333 ..... 425, 440, 458
1001100337 ..... 425, 440, 458
1001100341 ..... 428, 443, 460
1001100342 ..... 428, 443, 461
1001100343 ..... 428, 443, 461
1001100344 ..... 428, 443, 461
1001100345 ..... 428, 443, 461
1001100346 ..... 428, 443, 461
1001100347 ..... 428, 443, 461
1001100424 ... 13, 14, 19, 20, 25, 26
1001100469 160
1001100577 93, 101, 152, 161
1001100732 217
1001100749 217
1001100818 93, 101, 153, 161
1001100825 . 86, 94, 101, 144, 154, 161
1001100837 93, 101, 153, 161
1001100857 95, 102, 146, 155, 162
1001101062 .... 71, 80, 81
1001101191 ..... 426, 427, 442, 459, 460
1001101196 ..... 427, 442, 460
1001101201 93, 101, 153, 161
1001101228 ..... 86, 144
1001101232 ..... 84, 144
1001101233 ..... 84, 144
1001101408 93, 101, 153, 161
1001101421 321
1001101422 321
1001101681 93, 101, 153, 161
1001101733 ..... 101, 161
1001101835 209
1001101836..... 204, 209, 210
1001101950 93, 101, 153, 161
1001102131..... 144, 146, 154, 156
1001102270..... 154, 156
1001102354..... 56
1001102585..... 101, 161
1001102595..... 187, 191, 196
1001102596..... 187, 191, 196
1001102647..... 321
1001102706 93, 101, 153, 161
1001102798..... 192, 436, 437
1001102859..... 103, 163, 438
1001102896..... 191
1001102897..... 191
1001102898..... 191
1001102899..... 191
1001102901..... 415, 437, 438
1001102991..... 142
1001102992..... 146
1001102993..... 145
1001103478..... 34
1001103479..... 34
1001103667..... 191, 196, 484
1001103769..... 163
1001103770..... 161
1001104308..... 112
1001104689..... 87, 92, 95
1001105872..... 132
1001106339..... 436, 453
1001106340..... 436, 453
1001106355..... 297, 484
1001106426..... 101, 103
1001106460..... 163
1001106461..... 161
1001106467..... 100
1001106468..... 103
1001106469..... 101
1001106470..... 103
1001106471..... 101
1001106616..... 487
1001106617..... 487
1001106618..... 487
1001106689..... 486, 487
1001106736..... 192, 196
1001106761..... 16, 22, 27
1001106762..... 16, 22, 27
1001106763..... 16, 22, 27
1001106764..... 16, 22, 27
1001106837..... 185
1001106910..... 13
1001106911..... 25
1001106966..... 379, 410
1001106974..... 185
1001106999..... 192, 196, 436, 452
1001107107..... 191, 196
1001107116. 93, 100, 153
1001107440..... 298, 418, 434, 450
1001107527..... 298
1001107626..... 192
1001107627..... 192
1001107628..... 192
1001107629..... 192
1001107677..... 298
1001107849..... 300
1001107850..... 300
1001107851..... 300
1001108256..... 295
1001108382..... 19
1001108461..... 411
1001108462..... 403, 411
1001108463..... 403, 411
1001108464..... 393, 410
1001108465..... 393, 410
1001108466..... 385, 410
1001108467..... 411
1001108476..... 393
1001108477..... 385, 393
1001108478..... 385, 393
1001108480..... 393
1001108481..... 393
1001108482..... 379
1001108492..... 467, 472
1001108717..... 488
1001108877..... 289, 297
1001108878..... 288
1001108879..... 415
1001108881..... 288
1001108923..... 469, 476
1001108978..... 191
1001108979..... 191
1001108980..... 191
1001108981..... 191
1001108982..... 191
1001108983..... 191
1001108995..... 299
1001108996..... 299
1001108997..... 299
1001109039..... 192
1001109040..... 193
1001109041..... 192
1001109042..... 192
1001109043..... 192
1001109044..... 192, 193
1001109089..... 192, 436, 437
1001109114..... 192, 436, 437
1001109121..... 415, 437, 438
1001109200..... 415, 437, 438
1001109402..... 204, 210
1001109403..... 204, 210
1001109475..... 427, 442, 460
1001109477..... 427, 442, 460
1001109482..... 427, 442, 460
1001109503..... 196
1001109542..... 185
1001109545 ..... 187, 191, 196
1001109698 ..... 488, 489
1001109766 489
1001109863 ..... 425, 440, 458
1001109864 ..... 427, 442, 460
1001110138 489
1001110139 489
1001110143 489
1001110425 119
1001110434 298
1001110872 ..... 243, 252, 429, 444, 462
1001110873 ..... 229, 234, 237, 243, 248, 252, 426, 429, 441, 444, 459, 462
1001110999 488
1001111285 213
1001111341 123
1001112101 ..... 241, 444
1001112408 ..... 241, 444
1001112551 480
1001112586 ..... 244, 445, 463
1001112587 ..... 244, 445, 463
1001112588 ..... 414, 443, 461
1001112589 ..... 444, 461
1001112607 120
1001112612 ..... 436, 453
1001112743 ..... 414, 443, 444, 461
1001112975 487
1001112977 487
1001113307 34
1001113308 34
1001113366 34
1001113483 ..... 279, 283
1001113961 ..... 311, 313
1001114034 488
1001114059 488
1001114063 488
1001114122 488
1001114404 479
1001114405 479
1001114595 138
1001114605 137
1001114606 137
1001114607 136
1001115390 ..... 241, 444, 462
1001115403 217
1001115412 217
1001115721 ..... 241, 444, 462
1001115930 ..... 137, 489
1001116162 490
1001116245 487
1001116246 487
1001116419 490
1001116420 490
1001116710 456
1001116727 457

PART NUMBER INDEX

1001116867.....30
1001116952.....457
1001116983.....456
1001117037.....208
1001117041.....208
1001117078.....249
1001117139.....209, 210
1001117140.....210
1001117172.....289
1001117174.....289, 434, 450
1001117253.....487
1001117260.....487
1001117294.....489
1001117308.....122, 484
1001117320.....289
1001118105.....490
1001118416.....297, 313
1001118417.....297, 305
1001119661.....476
1001119943.....487
1001119949.....487
1001119968.....249, 463
1001120328.....317
1001121115.....101, 161
1001121340.....244, 245, 253
1001121592.....295
1001121593.....295
1001121609.....487
1001121800.....467
1001121801.....467, 473
1001121802.....473
1001121803.....473
1001121804.....473
1001121807.....473
1001121808.....473
1001121809.....473
1001121812.....473
1001121813.....467
1001121814.....468, 474
1001121815.....474
1001121816.....474
1001121817.....474
1001121820.....474
1001121821.....474
1001121822.....474
1001121825.....474
1001121918.....473
1001121920.....473
1001121921.....474
1001121923.....474
1001122200.....473
1001122201.....474
1001125322.....467
1001125323.....473
1001125324.....473
1001125325.....473
1001125327.....473
1001125328.....473
1001125329.....473
1001125330.....473
1001125331.....468
1001125332.....474
1001125333.....474
1001125334.....474
1001125335.....474
1001125336..... 474
1001125337..... 474
1001125338..... 474
1001125387..... 469, 476, 480
1001125957..... 51
1001125958..... 51
1001125978..... 154
1001126351..... 456, 457
1001126352..... 456
1001126353..... 456
1001126356..... 456, 457
1001126357..... 457
1001126362..... 457
1001126363..... 457
1001126364..... 457
1001126365..... 457
1001126384..... 456, 457
1001126391..... 457
1001127088..... 487
1001127093..... 487
1001128125..... 94, 154
1001128527..... 333
1001128556..... 333
1001128940..... 488
1001129858..... 229, 237
1001130294..... 152
1001130295..... 152
1001130296..... 152
1001130446..... 92
1001130447..... 92
1001130543..... 156
1001130544..... 156
1001130545..... 156
1001130546..... 94
1001130547..... 94
1001130548..... 154
1001130549..... 154
1001130550..... 154
1001130749..... 488
1001131269..... 468, 475
1001131992..... 415
1001132726..... 487
1001133714..... 457
1001133715..... 457
1001133956..... 456
1001133957..... 457
1001134488..... 122
1001135650..... 457
1001135679..... 221, 234, 248
1001136079..... 122
1001136172..... 122
1001136834..... 122
1001136988..... 248
1001137005..... 491
1001137672..... 490
1001137673..... 317
1001137828..... 111, 112
1001137829..... 110
1001137830..... 109
1001137831..... 108
1001137832..... 110
1001137833..... 109
1001137834..... 108
1001138110..... 457
1001138111..... 457
1001138113..... 457
1001138135..... 112
1001138228..... 122, 484
1001138248..... 123
1001138430..... 287
1001138431..... 287
1001138491..... 119, 456
1001138494..... 288
1001138514..... 288
1001138565..... 229
1001138566..... 230, 233, 237
1001138717..... 122
1001138772..... 490
1001138773..... 490
1001138780..... 30
1001138795..... 357
1001138827..... 122
1001139048..... 30
1001139049..... 29
1001139128..... 487
1001139141..... 29, 30
1001139147..... 487
1001139240..... 122
1001139357..... 230
1001139409..... 121
1001139476..... 30
1001139586..... 30
1001139616..... 29
1001139617..... 29
1001139645..... 29, 30
1001139697..... 15
1001139699..... 13, 14
1001139700..... 13
1001139704..... 13, 14
1001139705..... 19, 20
1001139742..... 20
1001139743..... 19
1001139819..... 112
1001139877..... 21
1001139890..... 488
1001139892..... 30
1001139901..... 20
1001139935..... 29
1001139943..... 30
1001140312..... 123
1001140315..... 490
1001140318..... 490
1001140334..... 111
1001140346..... 233
1001140429..... 288
1001140535..... 122
1001140564..... 122
1001140570..... 15, 21
1001140586..... 267, 351
1001140587..... 263, 363
1001140609..... 122, 124
1001140622..... 488
1001141045..... 16, 22, 30
1001141058..... 16, 22, 30
1001141065..... 16, 22, 30
1001141139..... 138
1001141181..... 238
1001141300..... 300
1001141302..... 300
1001141304..... 122, 458
1001141445..... 225
1001141473.....488
1001141546.....122
1001141693.....110
1001141694.....110
1001141708.....111
1001141748.....112
1001141870.....125
1001141967.....425, 441, 458
1001141968.....426, 441, 459
1001141969.....426, 441, 459
1001141989.....415
1001142454.....51
1001142455.....51
1001142456.....51
1001142501.....120, 122, 125
1001142504.....489
1001142505.....489
1001142643.....234, 248
1001142646.....234, 248
1001142826.....111
1001142903.....197
1001142904.....197
1001142915.....196
1001142916.....197
1001142917.....196
1001142918.....197
1001142920.....197
1001142924.....195
1001142925.....195
1001142926.....195
1001142927.....195
1001142929.....195
1001142930.....195
1001142932.....195
1001142938.....457
1001142939.....196, 453
1001142940.....457
1001142941.....457
1001142963.....51
1001142964.....51
1001143073.....488
1001143234.....71
1001143256.....490
1001143393.....175
1001143434.....15, 21, 30, 367
1001143508.....488
1001143571.....16, 22, 30
1001143604.....179
1001143605.....179
1001143669.....490
1001143797.....122
1001143852.....480
1001143872.....110
1001143873.....109
1001143874.....110
1001143875.....109
1001143907.....123, 458
1001144018.....288
1001144019.....288
1001144021.....288
1001144022.....287
1001144023.....287

1001144024 287
1001144026 287
1001144027 287
1001144089 122
1001144112 122
1001144113 122
1001144115 122
1001144116 122
1001144476 ..... 111, 112
1001144534 122
1001144535 122
1001144536 122
1001144537 122
1001144568 123
1001144569 122
1001144597 293
1001144629 287
1001144664 122
1001144687 122
1001145006 123
1001145007 123
1001145016 123
1001145140 ..... 469, 476, 480
1001145192 488
1001145405 ..... 326, 337
1001145837 488
1001145875 288
1001145877 ..... 288, 289, 297
1001146268 ..... 123, 456
1001146494 121
1001146495 120
1001146496 119
1001146497 121
1001146498 120
1001146499 119
1001146670 ..... 221, 234, 248
1001146714 126
1001146715 125
1001146870 123
1001146884 208
1001146885 207
1001146886 207
1001146956 207
1001146992 207
1001147007 197
1001147008 197
1001147011 195
1001147012 ..... 196, 453
1001147013 ..... 196, 436
1001147015 453
1001147018 ..... 247, 462
1001147045 208
1001147073 123
1001147118 ..... 179, 180
1001147264 457
1001147367 489
1001147424 123
1001147437 123
1001147438 123
1001147454 121
1001147513 486
1001147514 486
1001147701 ..... 120, 454
1001148138 222
1001148145 487
1001148146 487
1001148607 179
1001148641 123
1001148902 488
1001148903 488
1001148904 488
1001148905 488
1001148906 488
1001148971 489
1001149036 ..... 267, 271
1001149038 ..... 267, 271
1001149039 ..... 268, 271
1001149540 207
1001149560 490
1001149730 490
1001149924 321
1001149953 35
1001150927 ..... 415, 453
1001150998 111
1001151096 488
1001151210 ..... 196, 453
1001151211 ..... 196, 453
1001151212 ..... 196, 453
1001151230 ..... 415, 453
1001151231 453
1001151344 199
1001151393 196
1001151901 487
1001152327 200
1001152429 463
1001152456 238
1001152457 ..... 229, 234, 237, 238
1001152489 122
1001152525 ..... 238, 249, 463
1001152530 238
1001152532 ..... 230, 234, 238
1001152566 ..... 209, 210
1001152836 209
1001152837 209
1001152838 209
1001152839 210
1001152840 210
1001152965 491
1001153025 414
1001153260 238
1001153267 229
1001153268 229
1001153269 237
1001153335 486
1001153336 486
1001154231 491
1001154405 ..... 119, 121, 125
1001154505 487
1001154852 126
1001155024 ..... 120, 125
1001155045 298
1001155126 ..... 407, 411
1001155127 ..... 407, 411
1001155129 408
1001155135 408
1001155339 122
1001155367 123
1001155375 123
1001155554 122
1001155555 123
1001155823 119
1001156539 488
1001156819 137
1001156822 136
1001156823 136
1001156824 136
1001157520 ..... 244, 249, 253
1001157521 ..... 243, 249, 252
1001157525 ..... 241, 243, 252
1001157528 249
1001157592 ..... 241, 243, 248, 251, 462
1001157768 ..... 430, 445, 463
1001157769 463
1001157770 ..... 249, 463
1001158007 ..... 244, 249, 253
1001158008 ..... 238, 244, 249, 253
1001158363 238
1001159121 490
1001159256 299
1001159648 414
1001160080 ..... 469, 476, 480
1001160271 414
1001160560 179
1001160571 179
1001161709 298
1001162335 ..... 120, 125
1001163131 322
1001163287 322
1001163293 322
1001163296 322
1001163297 322
1001163298 322
1001163579 ..... 120, 123
1001163599 ..... 221, 233, 247
1001165035 119
1001166227 486
1001166538 ..... 297, 315, 482
1001166539 ..... 297, 307, 482
1001166668 ..... 288, 289, 297
1001167170 123
1001167172 123
1001167302 123
1001169384 272
1001170435 123
1001170571 123
1001171129 233
1001171131 490
1001172760 297
1001173590 453
1001174093 137
1001174486 136
1001176372 490
1001176469 196
1001178708 207
1001179154 238
1001179747 221
1001179836 221
1001179837 221
1001179893 222
1001180001 221
1001180050 414
1001180561 196
1001180568 196
1001181050 ..... 267, 277
1001181051 ..... 272, 277
1001181146 488
1001181243 222
1001181895 123
1001181899 123
1001182138 319
1001182238 489
1001183407 489
1001185281 299
1001186333 293
1001186375 288
1001186377 288
1001186379 288
1001186382 287
1001186383 287
1001186384 287
1001186386 287
1001186387 287
1001186517 317
1001187481 ..... 486, 489
1001187482 ..... 487, 489
1001187508 317
1001187752 ..... 298, 450
1001187856 ..... 196, 436, 452
1001188020 197
1001188021 197
1001188022 197
1001188023 197
1001188033 195
1001188034 195
1001188035 195
1001188043 196
1001188052 195
1001188649 490
1001188889 317
1001189116 ..... 297, 299
1001189882 300
1001190082 ..... 289, 297
1001190083 288
1001191708 319
1001195304 489
1001195610 491
1001196610 487
1001196717 487
1001197847 488
1001199437 414
1001200269 491
1001204451 489
1001204461 489
1001204921 489
1001204922 489
1001204996 486
1001204997 486
1001205008 486

PART NUMBER INDEX

1001205009 486
1001210025 490
1001210037 490
1001213608 489
1001213609 489
1001214478 490
1001214515 490
1001214540 490
1001214548 490
1001214552 490
1001214559 490
1001214561 490
1001214562 490
1001216630 280
1001220154 486
1001225901 263
1001228012 ..... 272, 355
1001228357 491
1001248012 ..... 272, 357
1060279 ..... 468, 475, 480
1060341 ..... 295, 430, 445, 463
1060343 ..... 244, 248, 252, 430, 445, 463
1060379 341
1060494 ..... 243, 248, 252, 430, 445, 462
1060625 120
1060626 87, 95, 102, 109, 120, 146, 155, 162
1060633 ..... 431, 446, 464
1060708 ..... 243, 252, 430, 445, 463
1060896 ..... 419, 435, 451, 452
1060902 ..... 431, 446, 464
1060903 295
1060904 84, 92, 112, 142, 152, 423, 440, 455
1060908 ..... 427, 428, 443, 460
1060918 ..... 289, 418, 434, 450
1060919 293
1060977 ..... 431, 446, 464
1060983 ..... 290, 419, 430, 431, 435, 445, 446, 451, 464
1060984 ..... 419, 435, 451
1060985 ..... 419, 435, 451
1060986 ..... 419, 435, 451
10702077 ..... 244, 249, 253
10702082 ..... 244, 249, 253
1100118 ..... 14, 19, 26
1100123 ..... 14, 19, 26
1120484 180
1120532 179
1120552 35
1120555 321
1180336 263
1180379 264
1260017 72
1271538 ..... 279, 283
1282937 414
1283002 414
1283084 ..... 381, 387, 395, 410, 411
1300019 35
1320012 84, 92, 100, 132, 137, 142, 152, 160
1320016 84, 92, 100, 110, 132, 137, 142, 152, 160
1320022 ..... 84, 86, 92, 94, 100, 102, 108, 109, 110, 130, 132, 137, 142, 145, 152, 154, 160, 162
1320058 ..... 92, 100, 152, 160
1320126 175
1320127 175
1320136 ..... 279, 283
1320176 ..... 111, 114
1320177 ..... 326, 337
1320218 175
1320220 175
1320223 86, 94, 100, 102, 108, 110, 130, 145, 154, 160, 162
1320224 ..... 279, 283
1320302 ..... 326, 329, 331, 333
1320318 ..... 95, 100, 102, 146, 155, 160, 162, 230, 233, 237, 243, 247, 252
1320323 ..... 130, 136
1321716 123
1340060 84, 92, 100, 110, 132, 137, 142, 152, 160
1340061 486
14922737 423
1580011 84, 92, 100, 132, 138, 142, 152, 160
1580012 290
1580013 290
1600244 ..... 431, 446, 464
1600317 ..... 297, 303
1600318 ..... 297, 311
1600375 297
1600387 ..... 279, 283
1600411 187
1660219 183
1660219RR 183
1660234 ..... 112, 123
1660255 84, 92, 100, 142, 152, 160
1670769 272
1670824 200
1670829 ..... 187, 191, 195, 297
1670836 ..... 268, 271
1670870 489
1670894 489
1670956 201
1671037 298
1671092 ..... 244, 248, 253, 430, 445, 463
1671093 ..... 326, 331
1671170 ..... 203, 207
1671311 251
1683053 353
1683054 369
1683055 ..... 349, 361
1683063 359
1683076 345
1683261 353
1683572 345
1683609 ..... 272, 353
1683658 365
1683687 353
1683776 ..... 263, 359
1683778 ..... 267, 349
1683844 359
1683846 359
1683861 349
1683950 361
1683952 349
1684012 349
1684013 ..... 271, 349
1684138 345
1684139 ..... 14, 19, 26, 345
1684193 369
1684194 ..... 267, 271, 369
1684283 361
1684284 ..... 263, 361
1684290 347
1684312 369
1684412 ..... 15, 21, 27, 365
1684465 ..... 14, 19, 26, 29, 347
1700584 ..... 468, 475, 479
1700818 ..... 469, 476
1701499 ..... 469, 476, 480
1701500 ..... 468, 475, 479
1701502 ..... 468, 475, 479
1701503 ..... 468, 475, 479
1701504 ..... 468, 475, 479
1701505 87, 94, 102, 108, 119, 145, 154, 162, 468, 476, 480
1701509 ..... 322, 468, 475, 479
1701518 479
1701529 ..... 468, 475, 479
1701542 ..... 130, 136, 468, 476
1701543 ..... 130, 136, 469, 476
1701645 ..... 467, 472
1701691 ..... 469, 476, 480
1702153 468
1702300 ..... 468, 475, 479
1702565 298
1702566 298
1702567 298
1702676 298
1702688 ..... 468, 473
1702720 476
1702738 34
1702740 34
1702773 ..... 293, 467, 472, 479
1702774 ..... 467, 472, 479
1702788 487
1702861 ..... 467, 472, 479
1702868 ..... 326, 331, 333, 337, 467, 488
1702938 ..... 295, 300
1702941 87, 95, 102, 109, 120, 146, 155, 162
1702942 86, 94, 103, 109, 120, 145, 154, 163
1702943 87, 95, 102, 109, 120, 146, 155, 163
1702944 87, 95, 102, 109, 120, 146, 155, 163
1702961 488
1702962 488
1702968 59
1703067 34
1703162 84, 92, 100, 110, 121, 132, 138, 142, 152, 160
1703175 488
1703450 59
1703464 ..... 427, 442, 460
1703479 487
1703683 341
1703797 467
1703798 467
1703804 467
1703805 467
1703923 471
1703924 471
1703925 471
1703926 471
1703927 471
1703928 471
1703929 471
1703930 471
1703931 471
1703932 471
1703933 471
1703934 471
1703935 471
1703936 471
1703937 471
1703938 471
1703939 471
1703940 471
1703947 472
1703948 471
1703949 471
1703950 471
1703951 471
1703952 471
1703980 475
1703981 475
1703982 475
1703983 475
1703984 475
1703985 475
1703996 472
1704000 ..... 472, 488
1704001 472
1704002 472
1704003 472
1704004 472
1704005 472
1704006 475
1704007 475
1704008 475
1704096 467
1704098 472
1704099 472
1704100 472
1704101 472

1704102 472
1704103 472
1704104 467
1704106 473
1704107 473
1704108 473
1704109 473
1704110 473
1704111 473
1704112 473
1704174 487
1704175 487
1704260 298
1704271 476
1704277 .... 467, 472, 479
1704412 .... 469, 476, 480
1704465 187
1704466 187
1704472 .... 467, 472, 479
1704473 .... 467, 472, 479
1704484 299
1704485 300
1704486 300
1704487 299
1704488 467
1704489 468
1704514 300
1704578 59
1704586 55
1704726 .... 469, 476, 480
1704828 ... 468, 475, 476, 480
1704829 ... 468, 475, 476, 480
1704885 .... 469, 476, 480
1704972 ..... 109, 120
1704997 298
1705014 293
1705065 473
1705066 473
1705067 473
1705068 473
1705069 473
1705070 473
1705071 474
1705072 474
1705073 474
1705074 474
1705075 474
1705076 474
1705084 479
1705132 ..... 189, 298
1705170 300
1705276 480
1705305 ... 326, 329, 331, 333, 337
1705325 218
1705351 469
1705355 .... 326, 329, 331
1705358 322
1705364 35
1705374 ... 230, 234, 238, 244, 249, 253
1705375 ... 244, 249, 253, 326, 331, 333
1705376 ..... 243, 252
1705387 ... 230, 234, 238, 244, 249, 253
1705389 230
1705426 476
1705427 476
1705429 476
1705430 476
1705460 .... 244, 249, 253
1705461 244
1705466 ... 326, 329, 331, 333, 337
1705489 244
1705490 ..... 326, 337
1705822 479
1705828 480
1705836 257
1705837 257
1705886 257
1705905 476
1705910 476
1705921 479
1705961 479
1705978 479
1706059 ..... 109, 120
1706060 ..... 109, 120
1706061 ..... 109, 120
1706062 ..... 109, 120
1706063 ..... 109, 120
1706064 ..... 109, 120
1706098 ..... 109, 120
1706126 .... 468, 475, 480
1706382 479
1706385 293
1706510 341
1706708 ..... 467, 472
1706709 ..... 467, 472
1706712 .... 187, 191, 195
1706941 ..... 467, 472
1706945 187
1706946 187
1707013 ..... 468, 474
1707014 467
1707031 480
1707042 474
1707043 474
1707044 474
1707045 473
1707046 473
1707047 474
1707048 474
1707053 474
1707054 474
1707055 472
1707058 473
1707059 472
1707060 472
1707125 474
1707126 474
1707127 474
1707128 474
1707129 468
1707130 474
1707131 473
1707132 474
1707133 473
1707134 472
1780307 187
1810108 187
1810109 187
1810110 187
1810111 187
1810112 187
1810113 187
1810114 187
1810115 187
1810116 187
1810117 187
1870132 415
1870191 415
1870215 415
2000195 84
2000286 109
2000313 84
2000338 ..... 110, 112
2000347 110
2000354 132
2000358 131
2000359 131
2030010 .... 326, 329, 331, 333, 337
2060025 ..... 111, 132, 138
2060032 ..... 84, 142
2080040 ..... 287, 289
2080044 272
2120209 63
2120210 ..... 63, 482
2160002 72
2180125 175
2180344 72
2180348 ..... 108, 130, 136
2180387 175
2180388 175
2180389 175
2180418 175
2180422 .... 396, 400, 404, 408
2180482 ..... 84, 142
2180504 176
2180536 86, 94, 102, 145, 155, 162
2180724 .... 396, 400, 404, 408
2180832 ..... 119, 326, 337
2180877 ..... 133, 138
2200221 111
2200222 .. 75, 87, 94, 102, 108, 119, 130, 136, 145, 155, 162
2220001 72
2220005 175
2220082 175
2220124 72
2220237 .... 381, 383, 385, 387, 391, 393, 395, 399, 403, 407
2220240 381
2220242 .... 381, 383, 387, 391
2220250 87, 94, 102, 145, 155, 162
2220252 257
2220261 175
2220273 .. 72, 87, 94, 102, 108, 145, 155, 162
2220290 176
2220313 87, 94, 102, 108, 119, 130, 145, 155, 162
2220362 ... 381, 383, 385, 387, 391, 393
2220366 387
2220371 ... 126, 375, 377, 379, 381, 383, 385, 387, 391, 393, 395, 399, 403, 407
2220372 ... 395, 399, 403, 407
2220373 ... 381, 383, 385, 387, 391, 393, 395, 399, 403, 407
2220375 ... 168, 373, 381, 383, 385, 387, 391, 393, 395, 399, 403, 407
2220376 ..... 168, 395
2220377 ... 395, 399, 403, 407
2220379 ... 395, 399, 403, 407
2220380 ... 395, 399, 403, 407
2220385 89, 96, 103, 114, 133, 139, 146, 156, 163, 373, 375, 377, 391, 395
2220415 ... 373, 375, 377, 379, 381, 387, 391, 393, 395, 399, 403, 407
2220435 ... 381, 383, 385, 387, 393, 395, 399, 403, 407
2220451 ... 111, 391, 393, 395, 399, 403, 407
2220459 87, 94, 102, 145, 155, 162
2220465 ... 381, 383, 385, 387, 391, 393
2220466 ... 381, 383, 385, 388, 391, 393, 395, 399, 403, 407
2220468 ... 379, 393, 395, 399, 403, 404, 407, 408
2220472 ... 388, 391, 393, 395, 399, 403, 407
2220473 ... 385, 393, 395, 399, 403, 407
2220479 89, 96, 103, 114, 125, 133, 139, 146, 156, 163, 395
2220481 .... 381, 383, 385
2220490 ... 373, 375, 377, 379
2220497 ..... 395, 399
2220498 ..... 168, 395
2220500 ... 395, 399, 403, 407
2220501 ... 373, 381, 383, 385, 387, 391, 393
2220502 ... 395, 399, 403, 407
2220504 ... 375, 377, 379, 381, 383, 385, 387, 391, 393

PART NUMBER INDEX

2220567 84, 92, 103, 109, 126, 131, 137, 142, 152, 163, 395, 399
2220568 ..... 381, 383, 391
2220578 ..... 168, 387, 396
2220582 .... 375, 377, 381, 383, 385, 387, 391, 393, 395, 399, 403, 407
2220596 .... 381, 385, 387, 391, 393, 395, 399, 403, 407
2220600 .... 381, 383, 385, 387, 395
2220602 388
2220603 .... 373, 375, 377, 396, 399, 403, 407
2220605 ..... 375, 377
2220618 391
2220622 ..... 400, 404, 408
2220635 ..... 373, 377
2220648 175
2220654 ..... 399, 403, 407
2220677 ..... 404, 408
2220711 373
2220738 ..... 399, 403, 407
2220750 257
2220775 .... 375, 377, 395, 399, 403, 407
2220794 87, 94, 102, 108, 145, 155, 162
2220810 89, 96, 103, 114, 125, 133, 139, 146, 156, 163, 395
2220852 ..... 399, 403, 407
2220883 45, 46, 349, 353, 355, 357, 359
2220885 .... 345, 349, 353, 355, 357, 361, 369
2220886 . 45, 46, 359, 369
2220888 45
2220890 347
2220899 .... 395, 399, 403, 407
2220919 ..... 375, 377
2220947 ..... 168, 395
2220948 ..... 399, 403, 407
2220949 ..... 399, 403, 407
2220999 407
2221018 175
2221019 175
2221024 175
2221034 373
2221040 373
2221041 ..... 168, 395
2221042 .... 395, 399, 403, 407
2221043 373
2221044 .... 395, 399, 403, 407
2221045 84, 92, 103, 109, 126, 131, 137, 142, 152, 163, 395, 399
2221063 396
2221086 .... 395, 399, 403, 407
2221176 ..... 108, 130, 136
2221216 396
2300004 87, 95, 102, 121, 136, 146, 155, 162, 489
2300014 489
2300016 ..... 33, 489
2300021 489
2300027 489
2300029 489
2300039 489
2300041 ... 86, 87, 94, 95, 102, 121, 146, 155, 162, 489
2360650 ..... 16, 22, 27
2360651 ..... 16, 22, 27
2360652 ..... 16, 22, 27
2360653 ..... 16, 22, 27
2360756 ..... 16, 22, 27
2360794 ..... 16, 22, 27
2360795 ..... 16, 22, 27
2360796 ..... 16, 22, 27
2400060 ... 244, 253, 430, 445, 463
2400064 ... 244, 249, 253, 430, 445, 463
2400065 ... 422, 438, 453, 482
2400066 ... 422, 430, 438, 446, 453, 464
2400070 ... 430, 446, 464, 484
2410014 293
2420172 .... 188, 191, 195
2420191 179
2420197 298
2420202 ..... 279, 283
2420203 ... 213, 218, 222, 225
2460048 ..... 242, 251
2460049 217
2460051 225
2460055 ..... 213, 217
2460056 ..... 213, 217
2460057 217
2540035 ..... 203, 207
2540038 ..... 279, 284
2560136 298
2560173 290
2570008 365
2580024 87, 95, 103, 109, 120, 146, 155, 163
2580050 87, 95, 103, 109, 120, 146, 155, 163
2580054 86, 94, 103, 145, 154, 163
2580062 112
2600209 ..... 203, 207
2600258 ..... 203, 207
2600281 287
2680463 ..... 203, 207
2680464 ..... 203, 207
2680465 ..... 203, 208
2680471 ..... 203, 208
2680516 ..... 203, 208
2720015 121
2720058 ... 84, 87, 92, 94, 100, 102, 109, 131, 132, 138, 142, 145, 152, 155, 160, 162
2720144 175
2720149 176
2720160 ..... 326, 337
2720271 . 86, 87, 94, 101, 102, 133, 138, 144, 145, 154, 155, 161, 162
2720340 121
2720392 175
2720398 111
2720434 111
2720449 111
2720474 130
2720507 ..... 84, 144
2720508 ..... 85, 142
2720514 ..... 132, 138
2720563 ..... 132, 138
2720564 ..... 132, 138
2720565 ..... 130, 136
2720566 ..... 130, 136
2720567 ..... 130, 136
2720615 ..... 101, 161
2750532 ... 85, 87, 92, 94, 102, 108, 111, 132, 138, 142, 145, 152, 155, 162
2750888 ..... 375, 377
2751013 ..... 373, 377
2751015 377
2751095 72
2752430 ... 396, 400, 404, 408
2752433 .... 391, 400, 403
2752437 .... 383, 385, 407
2752442 381
2752443 .... 387, 396, 399
2752445 ..... 375, 377
2752466 ... 381, 383, 385, 387, 391, 393
2752469 373
2752471 ... 373, 377, 396, 399, 403, 407
2752487 .... 375, 377, 379
2752492 ... 383, 385, 391, 393
2752495 ..... 381, 387
2752496 ..... 381, 388
2752502 387
2752506 ... 381, 383, 388, 391
2752514 391
2752519 ... 396, 400, 404, 408
2752594 ... 383, 387, 391, 393
2752632 373
2752763 ... 396, 400, 403, 407
2752908 ... 381, 383, 385, 387, 391, 393
2752942 396
2752944 387
2752977 ... 381, 383, 387, 391
2753035 ..... 373, 387
2753118 373
2753162 388
2753196 393
2753339 373
2753342 373
2753343 .... 381, 383, 385, 388, 391, 393
2753344 ..... 381, 383, 385
2753345 ..... 387, 391, 393
2753346 ..... 381, 387
2753347 ..... 381, 383, 385
2753348 .... 396, 399, 403, 407
2753349 ..... 396, 400, 404
2753350 .... 396, 400, 403, 407
2753351 .... 396, 400, 403, 407
2753352 .... 395, 399, 403, 407
2753353 .... 395, 399, 403, 407
2753354 .... 395, 400, 403, 407
2753355 ..... 396, 400, 404
2753356 .... 396, 400, 404, 408
2753357 .... 396, 400, 403, 407
2753358 .... 396, 400, 404, 408
2753359 .... 396, 400, 404, 408
2753360 .... 396, 400, 404, 408
2753368 .... 396, 400, 404, 408
2753369 .... 396, 399, 403, 407
2753372 .... 396, 400, 404, 408
2753373 .... 396, 399, 403, 407
2753416 .... 385, 387, 391, 393
2753417 387
2753502 396
2753511 .... 396, 400, 404, 408
2753512 .... 396, 400, 404, 408
2753513 .... 396, 400, 404, 408
2753514 .... 396, 400, 404, 408
2753515 .... 396, 400, 404, 408
2753516 .... 396, 400, 404, 408
2753517 .... 396, 400, 404, 408
2754229 .... 381, 383, 385, 387, 391, 393
2760105 ..... 188, 191, 195
2760109 298
2780221 ..... 55, 56
2780230 ..... 15, 21
2780247 ..... 71, 75
2780267 ..... 33, 37
2780268 ..... 33, 37

2792385 ..... 381, 410
2792386 ..... 387, 410
2792387 411
2792398 ..... 373, 410
2792432 411
2792455 ..... 373, 410
2792598 411
2792704 ..... 395, 410
2792705 ..... 395, 411
2820018 ..... 423, 425
2820031 ... 214, 218, 221, 225, 230, 233, 237, 243, 247, 248, 251
2820035 ..... 200, 290
2820099 ..... 204, 210
2820128 204
2820129 .... 204, 208, 209
2820181 ..... 204, 209
2820182 ..... 204, 209
2860012 218
2860030 ... 188, 192, 195, 482
2900733 77
2900756 ..... 51, 52
2900770 345
2900792 ... 349, 351, 353, 355, 357, 359
2900804 56
2901301 ..... 349, 361
2901303 353
2901443 ... 431, 446, 464, 491
2901548 345
2901841 359
2901861 369
2901880 85, 92, 109, 142, 152, 423, 438, 454
2902085 218
2902212 321
2902217 .... 326, 329, 331
2902266 347
2902393 414
2902400 27
2902409 365
2902443 ... 422, 437, 454, 457
2902511 ... 131, 137, 423, 438, 455
2902549 ... 427, 428, 442, 443, 460, 461
2910478 488
2910865 488
2920028 ..... 299, 300
2920029 ..... 299, 300
2920110 199
2920113 199
2920129 ... 280, 284, 298, 422, 438, 453
2920130 199
2920140 ... 289, 430, 445, 464
2920157 ... 199, 290, 430, 446, 464
2920161 ..... 199, 463
2920214 199
2920215 199
2940073 .... 188, 191, 196
2940074 ..... 287, 482
2940117 ..... 203, 208
3020008 33
3020016 ... 103, 146, 156, 163, 489
3020021 ..... 112, 124
3020029 ..... 27, 29
3020037 120
3020040 489
3020043 365
3020044 86, 94, 103, 112, 146, 156, 163, 489
3160266 ..... 33, 41
3160280 ..... 71, 77
3160298 ..... 33, 41
3160348 ..... 33, 45
3160351 ..... 33, 45
3200378 85, 93, 100, 143, 153, 160
3200406 .... 111, 132, 138
3220110 111
3220112 111
3220113 85, 93, 100, 143, 153, 160
3220154 ..... 85, 143, 160
3250585 290
3250872 59
3251102 ... 214, 218, 221, 225, 229, 233, 237, 300
3251242 479
3251243 ... 218, 225, 230, 234, 238, 468, 475
3251813 ..... 468, 474
3252221 476
3252347 468
3252507 ... 218, 427, 442, 460
3252672 469
3252680 476
3252681 476
3252682 476
3252683 476
3252684 476
3252685 476
3252764 .... 243, 247, 252
3271501 123
3271801 ... 121, 221, 233, 247
3271805 ..... 55, 293
3272201 ..... 14, 19, 26
3272205 21
3272605 ..... 279, 283
3290405 .... 130, 136, 199
3290501 87, 95, 146, 155
3290505 .... 130, 136, 218
3290601 87, 95, 146, 155
3290605 ... 144, 154, 326, 337
3290606 288
3290801 ..... 144, 154
3300106 33
3300151 ... 288, 326, 329, 331, 333
3300220 ..... 85, 93, 143
3300243 ..... 268, 273
3300255 55
3300353 298
3300396 .... 229, 234, 238, 243, 248, 252
3300408 ..... 188, 191, 195
3300430 ..... 317, 319
3300441 ..... 203, 208
3310401 121
3310601 ..... 244, 252
3310805 .... 175, 189, 193, 197
3311001 .... 125, 238, 244, 248, 253, 299, 300
3311005 ..... 85, 143, 176, 199, 200, 214, 218, 221, 225, 230, 234, 238, 242, 248, 326, 329, 331, 333, 337
3311401 ..... 188, 295
3311405 .... 63, 85, 87, 93, 95, 100, 102, 108, 111, 119, 121, 130, 132, 136, 138, 143, 145, 153, 155, 160, 162, 189, 193, 197, 203, 208, 225, 242, 248, 252, 259, 279, 283, 289, 468, 475, 480
3311501 87, 95, 102, 108, 119, 130, 136, 144, 145, 155, 162, 203, 208, 295
3311505 .... 49, 51, 63, 85, 93, 100, 111, 120, 123, 130, 132, 136, 138, 143, 153, 160, 203, 208, 225, 242, 247, 252, 264, 341
3311508 .... 229, 233, 237, 247
3311601 .... 175, 179, 201, 203, 208, 252, 263, 264, 299
3311605 .... 49, 85, 87, 93, 94, 100, 102, 108, 111, 119, 121, 125, 130, 132, 136, 138, 143, 145, 153, 155, 160, 162, 176, 203, 208, 214, 218, 221, 242, 259, 263, 272, 289, 293, 326, 329, 331, 333
3311608 264
3311705 ..... 214, 218, 221
3311801 33, 59, 183, 221, 230, 233, 247
3311805 85, 93, 100, 111, 132, 138, 143, 153, 160, 176, 185, 230, 238, 243, 268, 273, 279, 283
3312005 .. 59, 87, 94, 102, 108, 119, 130, 136, 145, 155, 162, 279, 283, 321
3312008 ..... 15, 21, 27, 30
3312205 321
3322201 ... 15, 21, 27, 185
3323003 ..... 15, 21
3340399 ... 85, 87, 93, 95, 100, 102, 108, 111, 121, 130, 132, 136, 138, 143, 145, 153, 155, 160, 162
3340453 264
3340608 369
3340853 263
3340861 265
3340867 ..... 267, 271
3340868 ..... 267, 271
3340869 ..... 267, 271
3340870 .... 267, 268, 271
3340897 265
3340898 49
3340911 51
3340942 265
3340956 321
3380434 289
3380569 ..... 204, 207
3380652 489
3380741 ..... 130, 136
3420352 59
3420372 59
3421453 ..... 326, 337
3421565 72
3422457 ..... 267, 271
3422561 ..... 263, 271
3422564 263
3422566 263
3422582 267
3422592 ... 13, 14, 19, 20, 25, 26, 29
3422661 341
3422692 ..... 15, 21
3422786 55
3422848 21
3422851 263
3422859 ..... 267, 271
3422860 272
3422861 272
3422865 267
3422867 272
3422936 ..... 14, 19, 26
3423081 ..... 27, 29
3450608 ..... 16, 22
3450808 ..... 15, 21
3460334 322
3460375 ..... 204, 208
3470003 299
3480188 ..... 349, 361
3480210 353
3480253 359
3480274 369
3480288 347
3510822 287
3510830 287
3510831 287
3510833 287
3510884 293
3520028 ... 213, 214, 218, 222, 225
3520034 272
3520054 298
3520071 322
3520072 .... 287, 288, 293
3520182 319

PART NUMBER INDEX

3520189....244, 430, 445, 463
3520190.....283
3520192.....244
3520198.....287, 288
3536089.....289
3539275.....188, 191, 195
3539662.....59
3570808.....111, 132, 138
3571019.....85, 132, 138, 143
3571692.....85, 111, 132, 138, 143
3571795.....369
3571818.....55
3571833.....55
3572032.....55, 56
3572041.....71
3572165.....264
3572200.....264
3572345.....264, 265
3572502 85, 93, 100, 132, 138, 143, 153, 160
3572503 85, 93, 100, 132, 138, 143, 153, 160
3572504 87, 95, 102, 130, 136, 145, 155, 162
3572506.....59
3572827.....188
3573400....326, 329, 331, 333
3573642....326, 329, 331, 333
3573667 85, 93, 100, 111, 132, 138, 143, 153, 160
3573785.....283
3574091.....295
3574163.....242
3574210.....49, 51
3574235.....21
3574253 85, 93, 100, 143, 153, 160
3574254.....49
3574259 85, 93, 100, 143, 153, 160
3574264.....85, 143
3574282.....144, 153
3574523.....242, 252
3575359.....295
3576799.....326, 337
3576939.....56
3577121....326, 329, 331, 333
3580134.....214, 218
3580158.....217
3580276.....214, 218
3580312.....225, 237, 252
3580314.....237, 252
3580315.....214
3580316.....242
3580317....230, 233, 242, 247
3580318....229, 233, 242, 247
3580319.....229, 242
3580320....221, 230, 233, 242, 247
3580324..... 225
3580348.... 225, 237, 252
3600279..... 85, 111, 132, 171
3600368 89, 96, 103, 114, 125, 133, 139, 146, 156, 163
3600385..... 167, 168
3600399..... 257, 259
3600404 85, 93, 103, 109, 120, 131, 137, 146, 156, 163, 168
3600405... 85, 89, 93, 96, 103, 109, 114, 131, 133, 137, 139, 146, 156, 163
3600423 85, 93, 103, 111, 126, 132, 137, 143, 153, 163, 171
3620033..... 111
3620040..... 132, 138
3620046..... 85, 143
3641533..... 245, 254
3641569..... 295
3720021..... 257
3730125..... 422, 437
3740049... 188, 191, 195, 414, 430, 445, 463, 482
3740067 85, 93, 101, 111, 121, 132, 138, 143, 153, 161, 482
3740080 85, 92, 143, 154, 214, 218, 221, 225, 242, 252
3760133..... 267, 271
3760170..... 59, 72
3760367..... 345
3760368..... 353
3760369..... 349, 361
3760371..... 359
3780182..... 27, 29
3790012... 130, 136, 189, 192, 196, 200, 298, 300
3790045..... 33
3790152 85, 93, 103, 109, 120, 131, 137, 146, 156, 163
3820001..... 59, 468, 475, 480
3820020..... 287
3841143..... 21, 263, 267, 271, 272
3841203..... 55
3841258... 13, 14, 19, 20, 25, 26, 29, 263
3841340..... 49, 265
3841367..... 15, 21, 27
3841442..... 15
3841517..... 15, 21, 27
3841520.... 15, 19, 26, 29
3841619..... 21
3900054..... 293
3900109..... 15, 21, 27
3900232..... 203, 208
3900255. 30, 87, 94, 102, 108, 119, 130, 136, 145, 155, 162
3900267..... 238
3900283.... 264, 279, 283
3900295..... 21
3900296..... 21
3900300..... 238
3900327..... 21
3910408..... 121
3910606... 229, 233, 237, 243, 247, 252
3910610..... 244, 252
3910804.... 188, 191, 195
3910808..... 175
3911040..... 199
3930816..... 200
3931016... 229, 233, 237, 247
3931028..... 201
3931424..... 317
3931432..... 121
3931448..... 369
3931512..... 121
3931516.... 345, 353, 369
3931616..... 109, 120
3931620..... 349, 361
3931628.... 221, 233, 247
3931824..... 359
3932224..... 71
3960389... 85, 87, 93, 95, 102, 130, 131, 136, 137, 143, 145, 153, 155, 162, 203, 208
3960407..... 111
3960422... 229, 233, 237, 243, 247, 252, 427, 429, 442, 444, 460, 462
3960438... 101, 161, 189, 193, 197
3960461..... 199
3960469 87, 94, 102, 130, 136, 145, 155, 162
3960525..... 179
3960526..... 33
3980007 87, 95, 103, 109, 120, 146, 155, 163
3990001..... 422
3990010... 420, 436, 452, 482
4010608..... 326, 337
4010618..... 288
4031608..... 218
4031711..... 92, 101, 152, 161
4031914..... 121
4032014.... 221, 233, 247
4032015..... 230, 241
4060092.... 426, 441, 459
4060700... 243, 252, 426, 429, 441, 444, 459
4060802... 214, 218, 221, 225, 229, 233, 237, 242, 247, 252, 290, 300
4060803..... 180
4060804..... 123
4060805.... 203, 208, 265
4060808..... 265
4060906.... 188, 191, 195
4060907..... 199
4060919.....264
4060995.....267, 271
4061010.....204
4061012.....176
4061043....243, 252, 429, 444, 462
4061054.....279, 283
4070450.....59
4070497....85, 87, 93, 95, 101, 102, 108, 111, 119, 121, 130, 132, 136, 138, 143, 145, 153, 155, 161, 162, 267, 271
4070498....85, 87, 93, 95, 101, 102, 108, 111, 119, 121, 130, 132, 136, 138, 143, 145, 153, 155, 161, 162, 267, 271
4070501.....267, 271
4070502.....267, 271
4070503.....267, 271
4070504.....267, 271
4070560.....59
4070561.....59
4070929.....267, 271
4070972.....25
4070973.....13, 20, 25
4070987.....188, 191
4071002.....13, 20, 25
4071007.....268, 271
4071009.....71
4071101.....29
4071119.....25
4071121.....13, 20, 25, 29
4100025 86, 94, 101, 144, 154, 161
4100099.....359
4100100.....353
4120035....418, 420, 434, 436, 450, 452
4130405.....27, 29
4130406.....27, 30
4160143.....208
4160182.....203, 208
4240018....218, 225, 229, 237, 243, 248, 252
4240032.....199
4240033.....279, 283, 317
4240099....123, 290, 295, 326, 329, 331
4240135.....179
4240149.....321
4280295.....179
4300048.....59
4300111.....252
4300157.....230, 243
4340749.....257
4360031.....289
4360057.....295, 484
4360070....229, 234, 238, 244, 249, 253
4360232....300, 431, 446, 464, 484
4360328....188, 192, 195, 298, 300, 482

4360330 ..... 299, 482
4360331 ..... 298, 482
4360336 ... 131, 136, 199, 214, 218, 221, 225, 229, 233, 237, 242, 248, 252, 290, 300, 484
4360387 ... 295, 298, 300, 482
4360407 ..... 298, 482
4360469 ... 188, 192, 195, 484
4360470 ... 188, 192, 195, 484
4360475 ... 188, 192, 195, 298, 482
4360476 ... 188, 192, 195, 298, 482
4360517 ... 185, 425, 440, 456, 482
4360522 .... 199, 300, 484
4360542 ... 213, 217, 222, 225
4360548 ... 201, 424, 439, 456, 484
4360549 ... 424, 440, 456, 484
4360578 ... 201, 424, 440, 456, 484
4400275 175
4400420 175
4400429 179
4400450 ..... 179, 180
4420014 321
4420037 ... 290, 326, 329, 331, 333
4420038 179
4420051 ..... 59, 480
4420060 ..... 201, 218
4420062 341
4420066 322
4420068 295
4460007 299
4460023 214
4460027 ... 213, 217, 222, 225
4460049 295
4460051 ... 243, 252, 429, 444, 462
4460071 ... 230, 233, 237, 243, 248, 252, 289, 418, 426, 429, 434, 442, 444, 450, 459, 462
4460121 ..... 92, 154
4460125 .... 425, 441, 458
4460190 ... 213, 217, 222, 225
4460205 .... 426, 441, 459
4460224 .... 424, 440, 456
4460225 ... 418, 429, 434, 444, 450, 462
4460226 ... 279, 283, 289, 308, 315, 418, 422, 424, 429, 431, 434, 437, 438, 439, 440, 444, 446, 450, 453, 456, 461, 462, 463, 464
4460227 ... 418, 420, 421, 425, 431, 434, 436, 440, 446, 450, 451, 452, 456, 464
4460233 .... 426, 441, 459
4460234 ... 188, 192, 196, 199, 295, 298
4460265 ..... 308, 315
4460267 ... 420, 423, 430, 436, 438, 445, 454
4460268 ... 200, 418, 420, 421, 424, 434, 436, 437, 439, 450, 453
4460315 .... 427, 442, 460
4460320 ... 420, 425, 430, 431, 436, 440, 445, 446, 456, 464
4460321 ... 428, 431, 444, 446, 461, 464
4460326 .... 423, 438, 454
4460346 ... 229, 233, 237, 243, 248, 252, 425, 429, 441, 444, 458, 462
4460374 ... 244, 253, 422, 429, 430, 445, 463
4460375 ... 244, 253, 422, 429, 430, 444, 445, 461, 463
4460411 ..... 245, 253
4460412 ..... 245, 253
4460413 ..... 245, 253
4460414 ..... 245, 253
4460415 ..... 245, 254
4460418 ... 418, 420, 434, 436, 450, 452
4460419 ... 418, 420, 434, 436, 450, 452
4460424 ... 200, 421, 422, 424, 431, 437, 439, 446, 453, 464
4460425 ... 229, 234, 238, 244, 249, 253, 295, 430, 431, 445, 446, 463, 464
4460426 ... 229, 234, 238, 244, 249, 253, 430, 445, 463, 464
4460428 ... 188, 192, 196, 257, 298, 418, 420, 434, 435, 450, 452
4460434 ... 418, 420, 434, 436, 450, 452
4460445 .... 420, 436, 453
4460457 .... 421, 437, 454
4460458 ... 244, 253, 421, 429, 430, 437, 438, 444, 445, 454, 457, 461, 463
4460464 ... 200, 289, 418, 421, 423, 425, 434, 436, 437, 450, 452, 453, 454, 455, 456
4460465 ... 244, 249, 253, 279, 283, 419, 420, 422, 429, 430, 435, 436, 444, 445, 452, 453, 457, 458, 462, 463
4460466 .... 279, 283, 284, 420, 435, 437, 438, 452, 453, 454, 457
4460467 .... 431, 446, 464, 491
4460470 .... 188, 192, 196, 298, 418, 420, 434, 435, 450, 452
4460471 .... 188, 192, 196, 298, 418, 420, 434, 435, 450, 452
4460473 .... 419, 420, 435, 452
4460488 298
4460496 ..... 192, 196
4460497 ..... 192, 196
4460499 ..... 69, 423, 438, 454
4460508 .... 418, 421, 434, 436, 450, 452
4460509 ..... 419, 435, 452
4460510 .... 431, 446, 464, 491
4460526 .... 188, 192, 196, 420, 435, 452
4460536 .... 200, 420, 425, 436, 451, 452, 455
4460539 .... 421, 422, 423, 437, 451, 453, 454
4460598 ..... 290, 300
4460607 ..... 245, 254
4460608 ..... 422, 437, 454
4460633 ..... 257, 427
4460634 .... 418, 420, 436, 452
4460635 .... 418, 420, 434, 436, 450, 452
4460662 ..... 427, 442, 460
4460693 ..... 422, 437, 454
4460705 ..... 429, 444, 462
4460708 .... 298, 418, 422, 434, 438, 450, 453
4460742 .... 244, 253, 421, 429, 430, 437, 444, 445, 454, 461, 463
4460743 .... 244, 253, 429, 430, 444, 445, 461, 463
4460761 .... 279, 283, 418, 421, 434, 436, 450, 452
4460834 ..... 422, 437
4460836 .... 279, 283, 420, 436
4460837 ..... 420, 436
4460842 ..... 422, 437
4460865 .... 419, 420, 435, 452
4460866 .... 418, 421, 434, 436, 450, 452
4460871 .... 303, 305, 311, 313, 418, 420, 421, 422, 424, 425, 431, 434, 436, 437, 438, 440, 446, 450, 452, 453, 454, 456, 464
4460873 .... 418, 420, 434, 436, 450, 452
4460874 ... 188, 418, 420, 434, 436, 450, 452
4460875 ... 188, 418, 420, 434, 436, 450, 452
4460876 .... 420, 436, 452
4460878 .... 421, 436, 452
4460879 .... 418, 434, 450
4460880 ... 420, 421, 436, 437, 453
4460884 ..... 451, 457
4460887 ... 418, 421, 434, 436, 450, 452
4460889 421
4460890 421
4460891 ... 422, 456, 457, 463
4460892 .... 422, 438, 453
4460894 ... 422, 438, 453, 457
4460897 ... 423, 453, 456, 458
4460899 ..... 437, 454
4460905 ... 188, 298, 418, 420, 421, 434, 436, 450, 452, 453
4460906 ... 225, 428, 444, 461
4460930 457
4460931 454
4460932 456
4460933 ..... 279, 283
4460941 456
4460942 ..... 456, 457
4460943 ... 420, 436, 451, 452, 453, 454
4460944 ... 421, 437, 451, 454, 457
4460956 ... 245, 254, 427, 443, 460
4460957 ... 245, 254, 427, 443, 460
4460958 ... 243, 252, 429, 444, 462
4460961 .... 429, 444, 462
4460962 ..... 326, 331
4460963 ... 244, 249, 253, 430, 445, 463
4460967 ... 244, 249, 253, 430, 445, 463
4460968 ... 201, 218, 424, 426, 427, 439, 440, 442, 456, 459, 460
4460971 ..... 326, 337
4460979 .... 421, 438, 454
4460993 422
4460994 422
4461001 ..... 245, 254
4461005 .... 421, 437, 454
4461006 .... 421, 437, 454
4461008 ... 421, 437, 454, 457
4461052 .... 421, 437, 454
4461053 .... 421, 437, 454
4461054 ... 421, 437, 454, 456, 457
4461060 .... 421, 437, 454

PART NUMBER INDEX

4461070....421, 437, 454, 457
4461071....422, 437, 454, 457
4461072....422, 437, 454, 457
4461073....422, 438, 454, 457
4461074....422, 438, 454, 457
4461095....421, 437, 454, 457
4461109.....422, 437, 454
4461110.....423
4461111.....422, 437, 454
4461112.....423
4461113....422, 423, 437, 454
4461121.....422, 437, 454
4461122.....422, 437, 454
4461123.....422, 437, 454
4461124.....422, 437, 454
4461157.....421, 438, 454
4461161.....422, 437, 454
4461196.....426, 441, 459
4461197.....426, 441, 459
4461198....425, 426, 441, 458, 459
4461199.....426, 441, 459
4461200.....426, 441, 459
4461201.....426, 441, 459
4461202.....426, 441, 459
4461203.....426, 441, 459
4461204.....426, 441, 459
4461205.....426, 442, 459
4461206.....426, 442, 459
4461207.....426, 441, 459
4461222.....422, 437, 454
4461244.....426, 441, 459
4461245.....426, 441, 459
4461246.....426, 441, 459
4461249.....426, 442, 459
4461250.....426, 442, 459
4461265.....121
4461266.....120
4520212.....34, 35
4520216.....34
4520224.....56
4520234.....56
4520240.....34
4520259.....34
4520266.....34
4530028....326, 329, 331, 335
4566425.....369
4566468.....349, 361
4567139....395, 399, 403, 407
4567462.....14, 19, 26
4567495.....112
4568735.....226, 237, 252
4568743 86, 93, 101, 143, 153, 161
4569176 86, 92, 101, 143, 152, 161
4569342.....132, 138
4569345.....132, 138
4640113..... 35, 56
4640261..... 59
4640509... 349, 351, 353, 355, 357, 359
4640744 89, 96, 103, 114, 125, 133, 139, 146, 156, 163, 395
4640751.... 112, 121, 153
4640858..... 345, 347
4640871..... 14, 19, 26
4640921..... 63, 69
4640932..... 349, 351
4640952..... 132, 138
4641033..... 369
4641108..... 63
4641122..... 35
4641144..... 359
4641162..... 345
4641207..... 49
4641208..... 49
4641272 86, 93, 104, 143, 153
4641282... 381, 388, 396, 399, 403, 407
4641317..... 63
4641390..... 347
4641499..... 63, 65
4641509..... 51
4641510..... 52
4711000... 125, 221, 238, 244, 249, 253
4711400... 14, 19, 26, 55, 92, 95, 101, 102, 108, 112, 119, 121, 131, 132, 136, 138, 146, 152, 155, 161, 162, 200, 226, 229, 233, 237, 242, 248, 252, 279, 283, 288, 289, 317, 319
4711500. 59, 86, 93, 101, 119, 121, 131, 136, 143, 153, 161, 229, 242, 248, 252, 299
4711600 86, 93, 101, 119, 121, 125, 133, 138, 143, 153, 161, 201, 221, 230, 233, 242, 248, 263, 264, 267, 279, 283
4711700..... 221, 226
4711800... 119, 185, 229, 237, 242, 252, 293
4712000..... 321
4712200..... 321
4712400..... 21
4713000..... 15, 21
4740076..... 199
4740086.... 15, 21, 27, 30
4740120..... 204, 208
4740155..... 21
4740158... 13, 14, 19, 20, 25, 26, 29
4740229..... 29
4740274 86, 93, 101, 112, 133, 138, 143, 153, 161, 199
4740362... 199, 203, 208, 289
4740397... 218, 226, 242, 300
4740439..... 272
4740491..... 21
4740500..... 204, 209
4740537..... 26
4740538..... 26
4740539..... 26
4740540..... 26
4740546..... 199
4750400..... 121
4750600..... 244, 253
4750800... 175, 189, 193, 197
4751000..... 86, 143, 176, 179, 188, 192, 196, 199, 214, 218, 226, 229, 233, 237, 242, 248, 326, 329, 331, 333, 337
4751400... 63, 86, 87, 93, 95, 101, 102, 108, 112, 119, 131, 133, 137, 138, 143, 145, 153, 155, 161, 162, 188, 189, 192, 193, 196, 197, 201, 203, 208, 267, 271, 279, 283, 289, 295, 298, 319, 326, 329, 331, 333, 468, 475, 480
4751500... 49, 52, 63, 86, 87, 93, 95, 101, 108, 112, 123, 131, 133, 138, 143, 145, 153, 155, 161, 162, 203, 208, 214, 218, 221, 226, 233, 238, 248, 264, 295, 341
4751600... 13, 20, 25, 29, 49, 51, 52, 63, 86, 87, 93, 94, 101, 102, 103, 108, 112, 119, 121, 126, 131, 133, 137, 138, 143, 144, 145, 153, 155, 161, 162, 163, 175, 176, 179, 203, 208, 214, 218, 252, 259, 267, 271, 289, 326, 329, 331, 333, 369
4751700..... 122, 214
4751800... 15, 21, 27, 59, 86, 93, 101, 103, 112, 133, 138, 143, 153, 161, 163, 176, 183, 257, 290, 293, 295
4752000... 14, 19, 26, 59, 87, 94, 102, 108, 119, 131, 137, 145, 155, 162
4752200 87, 94, 102, 108, 119, 131, 137, 145, 155, 162
4760600..... 244, 253
4761000..... 300
4761400....188, 192, 196, 267, 271
4761500.....243, 252
4761600.....179, 252, 259
4791400....101, 112, 122, 133, 144, 154, 161, 229, 233, 243, 248
4791500.....63
4791600....108, 112, 119, 131, 133, 137, 138
4811600.....218
4811700.....288, 326, 337
4811900....122, 226, 237, 252
4812100.....120, 122
4812200....112, 122, 221, 230, 233, 248
4821397.....295
4831900....112, 124, 133, 138, 144, 154
4844815.....272
4844816.....272
4844817.....272
4844958.....72
4845395.....112
4845582.....341
4846070.....27
4846092.....203, 208
4846095.....203, 208
4846096.....87, 108, 130, 145
4846100.....204, 208
4846110.....204, 208
4846111.....204, 208
4846112.....55
4846113.....55
4846186.....264
4846216.....264
4846310.....176
4846393.....55
4846394.....55
4846426.....20
4846452.....287
4846506.....489
4846550.....25, 26
4846551.....13, 14
4846561.....290
4846567.....112, 230
4846573....268, 273, 279, 283
4846627....326, 329, 331, 333
4846651.....283
4846673.....295
4846801.....19
4846802.....21
4846809.....112, 133, 138
4846821 86, 94, 101, 143, 153, 161
4846852 86, 94, 101, 143, 153, 161
4860198.....35
4860213.....35
4860214.....35
4860215.....56
4860218.....56

4891500 ..... 93, 101, 152, 161
4891600 86, 94, 101, 103, 109, 120, 131, 137, 144, 146, 154, 156, 161, 163, 175, 226, 238, 252, 268, 273, 279, 283
4891800 ... 15, 20, 26, 29, 30, 33, 55, 71, 122, 221, 233, 248, 268, 273, 279, 283
4892000 . 33, 71, 72, 279, 283
4892200 ..... 14, 20, 26
4892600 ... 268, 273, 279, 283
4920385 ..... 133, 138
4921927 ..... 63, 423, 438, 454
4922012 491
4922538 ... 188, 192, 420, 436
4922547 .... 419, 435, 451
4922548 .... 419, 435, 451
4922636 .... 422, 438, 453
4922637 .... 422, 438, 453
4922641 ... 244, 249, 253, 428, 430, 444, 445, 461, 463
4922643 .... 430, 445, 463
4922665 .... 298, 414, 418
4922666 ... 299, 418, 434, 450
4922705 ..... 279, 283
4922714 ... 201, 424, 439, 455, 456
4922737 86, 94, 143, 153
4922757 ..... 244, 430
4922764 .... 431, 446, 464
4922769 ... 201, 424, 439, 456
4922802 .... 419, 435, 451
4922803 .... 419, 435, 451
4922869 ..... 279, 283
4922925 ... 243, 248, 252, 429, 444, 462
4922965 ... 290, 430, 431, 445, 446, 464
4922970 ..... 429, 444
4923260 .... 188, 420, 421
4923261 ..... 188, 420
4923356 .... 188, 420, 421
4923419 .... 188, 420, 421
4923420 ... 253, 430, 445, 463
4923445 ..... 429, 461
4923451 ... 112, 423, 440, 456
4923456 ..... 188, 420
4923462 .... 419, 435, 452
4923580 .... 188, 420, 421
4923583 .... 188, 189, 420
4923591 423
4933025 414
4933026 414
4933217 414
4933218 .... 431, 446, 464
4933219 414
4933237 415
4933240 415
4933264 ..... 244, 430
4933300 ..... 414, 428
4933304 414
4933307 414
4933313 ... 414, 431, 446, 464
4933325 .... 414, 421, 422
4933348 .... 415, 421, 422
4933349 ... 253, 430, 445, 463
4933350 ... 414, 428, 444, 461
4933353 .... 414, 421, 422
4933378 .... 415, 421, 422
4933379 .... 414, 421, 422
4933380 .... 414, 421, 422
5240600 ..... 144, 154
5240800 ..... 144, 154
6000394 ..... 204, 210
70000122 217
70000123 .. 213, 217, 225
70000124 ..... 213, 217
70000125 ..... 213, 217
70000126 ..... 213, 217
70000127 213
70000164 138
70000264 114
70000342 ..... 275, 277
70000345 .. 114, 124, 423
70000544 ..... 88, 96
70000619 .. 242, 247, 251
70000781 ..... 51, 52
70000782 80
70000797 45
70000800 114
70000863 ..... 242, 251
70000912 113
70000913 113
70000914 113
70000915 113
70000916 113
70000917 113
70000918 113
70000919 113
70000969 171
70000970 171
70000971 171
70000972 171
70000973 171
70000975 171
70000976 171
70000977 172
70000978 171
70001002 112
70001017 ..... 85, 93, 100, 143, 153, 160
70001100 .. 242, 248, 251
70001103 180
70001180 ..... 88, 96
70001248 185
70001256 65
70001257 ..... 88, 96
70001384 .. 242, 248, 251
70001385 ..... 242, 251
70001386 ..... 146, 156
70001387 ..... 147, 156
70001388 ... 146, 156, 163
70001389 ... 147, 156, 164
70001390 ... 147, 156, 164
70001391 ... 147, 156, 164
70001392 ... 147, 156, 164
70001393 ... 147, 156, 164
70001394 ... 147, 156, 164
70001395 ... 147, 156, 164
70001396 ..... 147, 156
70001397 ..... 147, 156
70001398 ..... 147, 156
70001399 ... 147, 156, 164
70001400 ..... 147, 156
70001401 ... 147, 156, 164
70001402 ..... 147, 156
70001403 ..... 88, 95, 104, 147, 156, 164, 484
70001404 ... 147, 156, 164
70001405 ... 147, 156, 164
70001406 ... 147, 156, 163
70001407 ... 147, 156, 163
70001408 ..... 147, 156
70001409 ..... 147, 156
70001410 ..... 147, 157
70001411 ... 147, 157, 164
70001412 ... 147, 157, 164
70001413 ... 147, 157, 164
70001414 ... 147, 157, 164
70001415 ..... 147, 157
70001416 ... 147, 157, 164
70001417 ... 147, 157, 164
70001418 ... 147, 157, 164
70001419 ... 147, 157, 164
70001423 113
70001424 339
70001425 339
70001427 339
70001428 339
70001429 339
70001430 339
70001431 339
70001432 339
70001435 113
70001663 259
70001695 ..... 88, 96
70001696 ... 242, 248, 251
70001697 ..... 275, 277
70001792 ..... 147, 157
70001793 ..... 147, 157
70001794 ..... 147, 157
70001796 ..... 147, 157
70001844 111
70001850 113
70001863 180
70001866 114
70001868 114
70001871 113
70001872 .. 114, 423, 439, 455
70001941 199
70001953 ... 242, 248, 251
70001959 180
70001960 ..... 180, 482
70001966 . 229, 234, 237, 242, 248, 251
70001973 .. 242, 248, 251
70001974 .. 242, 248, 251
70001976 65
70001990 ..... 88, 96
70001994 264
70001995 264
7000206 37
70002065 80
70002066 80
70002067 80
70002068 80
70002070 80
70002071 80
70002072 80
70002073 80
70002074 81
70002075 ..... 80, 81
70002088 ..... 242, 251
7000209 75
70002098 ..... 147, 157
70002099 .. 147, 157, 164
70002100 .. 147, 157, 164
70002101 .. 147, 157, 164
70002102 .. 147, 157, 164
70002103 .. 147, 157, 164
70002104 ..... 147, 157
70002105 ..... 147, 156
70002106 ..... 147, 156
70002107 144
70002108 .. 147, 157, 164
70002109 ..... 147, 157
7000213 81
7000217 ..... 75, 80
70002200 113
70002224 ..... 351, 363
70002234 ..... 147, 157
70002255 ..... 242, 251
70002257 168
7000228 ..... 75, 80
7000229 ..... 37, 75, 80
70002290 ..... 242, 251
70002297 .. 242, 248, 251
7000230 ..... 37, 75, 80
7000232 37
70002377 ... 95, 102, 146, 155, 162, 484
70002378 ... 95, 102, 146, 155, 162
70002390 51
70002433 ..... 147, 157
70002436 163
70002437 164
70002438 164
70002439 164
70002440 164
70002441 164
70002442 164
70002443 164
70002444 164
70002445 164
70002446 164
70002447 164
70002448 164
70002449 164
70002450 ..... 164, 484

PART NUMBER INDEX

70002451.....164, 484
70002452.....164
70002453.....164
70002454.....164
70002455.....164
70002456.....164
70002457.....164
70002458.....164
70002459.....163
7000246.....37, 75, 80
70002460.....242, 251
70002461.....147, 157
70002462.....148, 157
70002463.....148, 157
7000248.....37, 80
7000253.....37, 75, 80
7000255.....75, 80
7000256.....75
7000257.....37, 75, 80
7000258.....37, 75
7000261.....37
7000262.....37
7000263.....37, 80
7000264.....124
7000269.....75
7000270.....75
70002704.....148, 157
70002705.....85, 93, 100, 143, 153, 160
70002706.....85, 93, 100, 143, 153, 160
70002718.....113, 124
70002724.....313
70002725.....313
70002726.....313
70002727.....313
70002728.....313
70002729.....313
70002730.....305
70002731.....305
70002732.....305
70002733.....305
70002734.....305
70002735.....305
70002768.....180
7000281.....75, 80
70002818.....245, 253
70002819.....245, 253
70002820.....245, 253
70002821.....245, 253
70002822.....245, 254
70002823.....245, 254
70002824.....245, 254
70002825.....245, 254
70002826.....245, 254
70002895.....138, 484
70002902.....289
70002903.....289
70002904.....289
70002905.....289
70002906.....305
70002948.....257
70002962.....52
70003033.....148, 157
70003034.....157
70003098.....367
70003099.....367
70003136 114
70003454 185
70003463 113
70003464 113
70003472 113
70003473 113
70003475 114
70003478 114
70003479 113
70003480 113
70003481 113
70003483 289
70003541 104
70003631 .. 242, 248, 251
70003708 . 229, 233, 237, 242, 248, 251
70003709 . 229, 233, 237, 242, 248, 251
70003758 104
70003759 104
70003760 104
70003761 104
70003763 104
70003764 104
70003765 104
70003766 104
70003767 104
70003768 104
70003769 104
70003770 104
70003783 110
70003784 298
70003791 ..... 104, 484
70003838 ..... 351, 363
70003839 ..... 351, 363
70003848 ..... 351, 363
70003856 ..... 351, 363
70003932 114
70003933 367
70003934 367
70003937 122
70003952 ..... 120, 121
70004056 114
70004057 114
70004058 114
70004059 113
70004060 113
70004062 114
70004091 ... 93, 101, 153, 161
70004092 .. 229, 234, 237
70004093 248
70004094 248
70004095 248
70004096 248
70004098 . 229, 234, 237, 248
70004099 ..... 234, 248
70004102 113
70004103 114
70004128 351
70004129 363
70004136 ..... 351, 363
70004137 351
70004138 351
70004139 363
70004140 363
70004171 . 229, 237, 242, 251
70004274 124
70004275 124
70004277 125
70004279 124
70004281 124
70004283 125
70004284 125
70004286 125
70004414 180
70004676 .. 229, 234, 237
70004677 229
70004678 .. 229, 234, 237
70004679 .. 229, 234, 237
70004680 .. 229, 234, 237
70004681 229
70004682 .. 229, 234, 237
70004683 229
70004684 ..... 229, 237
70004685 .. 229, 234, 237
70004687 234
70004738 315
70004739 315
70004740 315
70004741 315
70004742 315
70004743 315
70004744 315
70004745 315
70004746 315
70004747 315
70004748 315
70004749 315
70004750 315
70004751 315
70004752 307
70004753 307
70004754 307
70004755 307
70004756 307
70004757 307
70004758 307
70004759 307
70004760 307
70004761 307
70004762 307
70004763 307
70004764 307
70004765 307
70004766 307
70004767 307
70004768 307
70004769 307
70004770 307
70004771 307
70004772 307
70004773 307
70004774 308
70004775 308
70005230 315
70005483 38
70005771 157
70005772 157
7000625 289
70006268 264
70006277 264
70006568.....355
70006569.....355
70006570.....355
70006571.....355
70006572.....355
7000663.....114
70006649.....357
70006650.....357
70006734.....357
70006735.....357
70006736.....357
7000731.....38
7000754.....172
7000974.....171
7001481.....168
7001485.....167
7001909.....80
7001911.....80
7001912.....80
7001931.....80
7001985.....80
7001988.....75
7001998.....37
70020808.....438
7002107.....77
7002110.....77
7002111.....77
7002112.....77
7002117.....77
7002125.....77
70023056....93, 101, 153, 161
70023915.....355
70024473.....125
70024486.....124
70024488.....124
70024503.....125
70024504.....125
70024513.....124
70024905.....124
70024906.....124
70024907.....124
70024910.....125
70024912.....124
70024914.....125
70024915.....125
70024917.....125
70024918.....125
70024919.....125
70024920.....125
70024921.....125
70024924.....124
70024925.....124
70025076.....124
7002508.....124
70025082.....124
70025084.....125
70025088.....124
70025091.....124
70025120.....125
70025135.....124
70025136.....124
70025140.....124
70025142.....125
70025143.....125
70025144.....124
70025146.....124

70025149 125
70025151 125
70025152 124
70025153 ..... 124, 484
70025154 124
70025160 124
70025161 ..... 124, 484
70025164 124
70025176 124
70025177 125
70025179 ..... 124, 125
70025180 124
70025200 125
70025202 124
70025206 124
70025207 124
70025210 ..... 125, 484
70025231 124
70025235 125
70025239 124
70025416 124
70025477 125
7002821 ... 431, 446, 464, 491
7002822 491
7002823 ... 431, 446, 464, 491
7002826 491
7002828 .... 431, 446, 464
7002840 ..... 14, 19, 26
7003928 ..... 303, 305
7003933 311
7003935 311
7003941 ..... 311, 313
7003946 311
7003953 303
7003969 311
7003972 ..... 311, 313
7003973 ..... 311, 313
7003976 303
7003977 303
7003980 ..... 311, 313
7003982 313
7003983 ..... 311, 313
7003986 311
7003989 ..... 311, 313
7003992 ..... 303, 311
7003993 ..... 303, 311
7003994 311
7004035 81
7004043 81
7004044 81
7004275 491
7004276 491
7006137 264
7006140 263
7006151 263
7006152 264
7007289 168
7007412 168
7007419 167
7007437 ..... 42, 46
7007438 ..... 41, 45
7007439 ..... 41, 45
7007446 ..... 41, 45
7007470 167
7007497 .... 423, 439, 455
7007498 .... 424, 439, 455
7007601 37
7007633 ..... 75, 80
7007640 37
7007933 71
7007990 71
7009992 77
7009996 77
7009998 77
7010429 37
7010474 80
7010488 75
7010494 75
7010542 ..... 49, 65
7010543 ..... 49, 63, 65
7011016 171
7011044 171
7011067 171
7011112 ..... 349, 351
7012513 ... 213, 217, 221, 225
7012514 ... 213, 217, 221, 225
7012518 ..... 63, 65
7012519 56
7012520 56
7012521 56
7012522 56
7012523 56
7012540 65
7012558 ... 213, 217, 221, 225
7012664 84, 92, 100, 110, 132, 137, 142, 152, 160, 484
7012693 ..... 14, 19, 26
7012770 69
7012772 ..... 66, 69, 482
7012773 ..... 65, 66, 69
7012775 66
7012776 69
7012777 69
7012914 65
7012918 65
7012941 63
7012943 ..... 63, 482
7012944 ..... 63, 65, 482
7012953 69
7012965 69
7012967 ..... 65, 359
7012975 65
7012995 63
7012998 ..... 65, 69
7013187 183
7013711 171
7013757 171
7013766 171
7013771 171
7014900 77
7016314 180
7016319 199
7016331 .... 113, 124, 484
7016360 56
7016372 199
7016380 199
7016399 289
7016505 264
7016524 264
7016628 199
7016654 491
7016655 491
7016680 179
7016701 172
7016744 171
7016745 171
7016746 171
7016768 171
7016769 171
7016808 .... 131, 137, 423, 439, 455
7016820 85, 93, 109, 131, 137, 142, 152, 423, 439, 455
7016834 85, 92, 109, 142, 152, 423, 439, 455
7016835 85, 92, 109, 142, 152, 423, 438, 455
7016843 85, 92, 109, 142, 152, 423, 438, 455
7017023 80
7017028 81
7017059 37
7017064 ..... 75, 80
7017065 75
7017066 75
7017067 37
7017070 ..... 37, 80
7017072 80
7017080 ..... 37, 80
7017081 80
7017082 80
7017085 80
7017090 37
7017091 37
7017092 37
7017093 37
7017094 37
7017095 37
7017097 37
7017142 ..... 275, 277
7017150 277
7017158 275
7017159 ..... 275, 277
7017162 ..... 275, 277
7017163 ..... 275, 277
7017164 ..... 275, 277
7017172 ..... 275, 277
7017192 ..... 275, 277
7017195 ..... 275, 277
7017406 52
7017410 65
7017411 65
7017421 69
7017422 ..... 65, 69
7017427 65
7017428 65
7017496 347
7018612 71
7018900 66
7018912 ..... 66, 69
7018942 ..... 66, 69
7018945 69
7018991 ..... 65, 66, 482
7019103 311
7019110 311
7019111 ..... 303, 311
7019112 311
7019114 311
7019115 311
7019122 303
7019123 303
7019141 303
7019142 303
7019143 303
7019144 303
7019145 303
7019147 303
7019149 303
7019150 303
7019151 311
7019154 311
7019155 311
7019160 311
7019161 311
7019162 ..... 311, 313
7019164 ..... 311, 313
7019165 ..... 311, 313
7019166 311
7019167 ..... 311, 313
7019168 311
7019171 303
7019174 303
7019177 303
7019194 ..... 311, 313
7019197 303
7019680 ... 213, 217, 221, 225
7020020 63
7020023 ..... 113, 484
7020026 112
7020033 ..... 15, 21
7020034 ..... 15, 21
7020035 ..... 15, 21
7020036 ..... 15, 21
7020037 ..... 15, 21
7020038 ..... 15, 21
7020039 ..... 15, 21
7020040 ..... 15, 22
7020041 ..... 15, 22
7020042 ..... 15, 22
7020043 180
7020054 ..... 16, 22
7020055 ..... 16, 22
7020108 ... 213, 217, 221, 225
7020109 ... 213, 217, 221, 225
7020110 ... 213, 217, 221, 225
7020111 ... 213, 217, 221, 225
7020169 114
7020175 ... 188, 192, 195, 298
7020176 ... 188, 192, 195, 298
7020190 ... 213, 217, 221, 225
7020192 ..... 213, 218
7020193 ... 213, 429, 444, 462

PART NUMBER INDEX

7020352 77
7020353 77
7020357 77
7020359 77
7020362 77
7020404 124
7020408 113
7020411 113
7020430 113
7020447 113
7020455 111
7020460 114
7020464 114
7020465 ..... 112, 124
7020468 113
7020471 113
7020479 114
7020492 125
7020495 113
7021237 167
7021238 167
7021239 167
7021240 167
7021242 167
7021243 167
7021248 167
7021249 ..... 41, 45, 167
7021250 167
7021251 167
7021255 167
7021257 167
7021258 167
7021259 167
7021260 167
7021263 167
7021265 167
7021268 167
7021269 167
7021270 168
7021271 168
7021272 168
7021273 168
7021274 168
7021275 ..... 41, 45, 168
7021276 ..... 41, 45, 168
7021277 ..... 41, 45, 168
7021278 168
7021279 168
7021280 ..... 167, 168
7021281 168
7021290 168
7021294 168
7021296 168
7021297 168
7021298 168
7021299 168
7021374 65
7021375 65
7021625 ..... 49, 51, 52
7021639 ..... 51, 52
7021647 65
7021648 65
7021655 ..... 49, 52
7022302 ..... 41, 45
7022305 ..... 41, 45
7022310 ..... 41, 45
7022311 ..... 41, 45
7022312 ..... 41, 45
7022314 ..... 41, 45
7022318 41
7022321 41
7022326 ..... 42, 46
7022328 ..... 42, 46
7022340 167
7022341 167
7022342 167
7022346 168
7022347 168
7022367 41
7022368 ..... 41, 45
7022370 41
7022371 ..... 42, 46
7022372 ..... 41, 46
7022377 167
7022378 167
7022380 167
7022381 167
7022382 167
7022385 168
7022386 168
7022387 168
7022397 ..... 49, 51, 52
7022399 ..... 49, 51, 52
7022808 ..... 303, 305
7022812 311
7022814 303
7022815 ..... 303, 305
7022816 303
7022817 303
7022818 303
7022819 ... 303, 305, 424, 440, 456
7022822 311
7022823 311
7022824 ... 311, 424, 440, 456
7022825 .... 424, 440, 456
7023205 180
7023306 180
7023821 66
7023822 66
7023823 66
7023824 66
7023907 ..... 41, 45
7023908 ..... 41, 45
7023910 ..... 41, 45
7023917 ..... 49, 51, 52
7023934 ..... 49, 52
7023935 49
7023936 49
7024100 ..... 75, 81
7024182 38
7024189 38
7024190 38
7024191 38
7024192 38
7024193 38
7024194 38
7024195 38
7024196 38
7024197 38
7024319 .... 188, 191, 196
7024320 .... 188, 191, 196
7024379 81
7024380 81
7024381 81
7024390 81
7024396 81
7024404 185
7024439 180
7024440 180
7024441 180
7024442 180
7024443 180
7024444 ..... 180, 482
7024445 180
7024446 180
7024452 199
7024453 81
7024454 81
7024455 81
7024456 81
7024458 81
7024462 335
7024463 335
7024467 335
7024469 335
7024470 335
7024471 ..... 335, 339
7024472 335
7024473 335
7024474 335
7024475 335
7024478 335
7024485 .... 242, 248, 251
7024488 .... 241, 247, 251
7024489 .... 242, 247, 251
7024508 369
7024530 339
7024531 339
7024532 339
7024533 339
7024534 339
7024535 339
7024536 339
7024537 339
7024565 114
7024579 ..... 114, 124
7024704 80
7024705 38
7024712 37
7024713 37
7024714 37
7024715 37
7024716 38
7024717 38
7024718 38
7024763 80
7024784 80
7024800 167
7024804 168
7024844 51
7024852 41
7024853 ..... 41, 45
7024854 ..... 42, 46
7024855 167
7024856 167
7024857 167
7024858 167
7024868 ..... 41, 45
7024881 ..... 51, 52
7024962 ..... 89, 96, 103, 114, 125, 133, 139, 146, 156, 163
7026113 363
7026188 ..... 242, 251
7026197 185
7026199 .... 213, 217, 221, 225
7026408 438
7026503 185
7026504 185
7026505 185
7026506 185
7026507 185
7026509 185
7026597 ..... 242, 248, 251
7026608 114
7026632 259
7026633 259
7026634 259
7026635 259
7026636 259
7026637 259
7026638 259
7026639 259
7026640 259
7026641 260
7026642 260
7026643 260
7026644 260
7026645 260
7026646 260
7026647 260
7026648 260
7026649 260
7026650 260
7026651 259
7026652 259
7026653 259
7026654 259
7026655 259
7026656 259
7026658 260
7026659 259
7026660 259
7026661 259
7026835 ..... 89, 96
7026836 ..... 88, 96
7026840 ..... 88, 96
7026843 ..... 89, 96, 144, 154
7026846 ..... 87, 95, 103
7026847 ..... 87, 95, 103, 144, 154
7026848 ..... 87, 95, 103
7026849 ..... 88, 95, 103
7026850 ..... 88, 95, 103
7026851 ..... 88, 96, 103
7026852 ..... 88, 95, 103
7026853 ..... 88, 95, 103
7026854 ..... 88, 96, 104
7026856 ..... 88, 95, 104
7026857 ..... 88, 95, 104
7026858 ..... 88, 95, 104
7026859 ..... 88, 96, 104
7026860 ..... 88, 95, 104
7026861 ..... 88, 96, 104
7026862 ..... 88, 96, 104

7026863 ..... 88, 95, 104
7026864 ..... 88, 95, 104
7026865 ..... 88, 95, 104
7026866 ..... 88, 95, 104
7026867 ..... 88, 95, 104
7026868 ..... 88, 95, 104
7026869 ..... 88, 96, 104
7026870 ..... 88, 96, 104
7026871 ..... 88, 96
7026872 ..... 88, 96, 104
7026873 ..... 88, 96, 104
7026874 ..... 88, 96, 104
7026875 ..... 88, 96, 104
7026878 ..... 88, 96, 104
7026879 ..... 88, 96
7026880 ..... 88, 96
7026881 88, 96, 144, 154
7026882 ..... 88, 96
7026883 ..... 88, 96
7026884 ..... 89, 96
7026885 88, 96, 144, 154
7026886 88, 96, 144, 154
7027012 ... 131, 137, 423, 438, 455
7027013 ... 131, 137, 423, 438, 455
7027020 423
7027021 .... 103, 163, 438
7027022 .... 103, 163, 438
7027023 .... 103, 163, 439
7027024 .... 103, 163, 439
7027059 455
7027059] 121
7027060 ..... 120, 455
7027061 ..... 120, 455
7027062 ..... 120, 455
7027236 113
7027239 114
7027245 114
7027276 114
7027412 ..... 93, 101, 153, 161
7027419 ..... 41, 45
7027769 114
7027773 335
7027774 335
7027775 335
7027776 335
7027777 335
7027778 335
7027779 335
7027780 335
7027781 257
7027782 257
7027783 257
7027784 257
7027790 114
7027791 114
7027792 114
7027793 .... 113, 423, 439, 455
7027795 ..... 113, 484
7027796 .... 113, 423, 439, 455
7027799 ..... 242, 248, 251
7027858 ..... 203, 208
7027887 ..... 214, 218, 225
7027965 ..... 132, 138, 484
7027972 ..... 132, 138, 484
7027991 423
7027994 132
7027996 132
77143013 ..... 191, 196
77363228 438
77363229 438
77363233 ... 429, 444, 462
80424002 80
80484084 457
80604018 438
80934561 185
80983191 457
8180311 ..... 85, 132, 138, 143
8229242 457
8310129 321
8310230 321
8405006 ... 101, 119, 122, 125, 161
8405007 122
8405009 122
8405104 122
8405201 123
8405202 122
8405204 122
8406101 119
8406102 122
8406110 122
8406112 119
8406302 119
8410011 122
8410013 ..... 119, 122
85941018 ..... 101, 161
8896941 491
8902175 ..... 375, 377
91403102 484
91503103 438
91504088 438
91504107 438



3121236

JLG®

An Oshkosh Corporation Company

Corporate Office
JLG Industries, Inc.
1 JLG Drive
McConnellsburg, PA 17233-9533 USA
(717) 485-5161 (Corporate)
(877) 554-5438 (Customer Support)
(717) 485-6417

Visit our website for JLG Worldwide Locations.
www.jlg.com